GENERAL NOTES

1. THIS DRAWING IS DIAGRAMMATIC AND IS TO BE USED FOR GENERAL INFORMATION AND SAMPLE LOCATIONS.
2. SEE THE SPECIFICATIONS DOCUMENT FOR THE HAZARDOUS MITIGATION PLAN, DIVISION 02 ABATEMENT SPECIFICATIONS 02 82 00, 02 83 00, 02 84 10, AND 02 85 00 AND THE ASBESTOS CONTAINING MATERIALS SURVEY REPORT BY OAK GROUP FROM THE MASON AND HANGER PDR FOR MORE INFORMATION.
3. ACCESSIBLE SPACES WERE SURVEYED FOR SUSPECT ASBESTOS MATERIALS AND LEAD BASED PAINT. WHERE OBSERVED, THE MATERIALS ARE NOTED ON THE PLANS.
4. ALL ASBESTOS AND LEAD BASED PAINT LOCATIONS AND TESTING RESULTS WERE SUPPLIED BY A THIRD PARTY ENTITY. PLEASE REFER TO "FINAL PROJECT DEFINITION REPORT, CULLUM HALL US MILITARY ACADEMY, WEST POINT, NY. 20 MAY 2019" FOR CLARIFICATION OR OTHER ASBESTOS OR LEAD BASED PAINT INFORMATION.

SYMBOL KEY

- DESIGNATION FOR ASBESTOS CONTAINING MATERIALS
- DESIGNATION FOR LEAD BASED PAINT CONTAINING MATERIALS, SEE ARCHITECTURAL DRAWINGS FOR LEVEL OF ABATEMENT.
- CA — DESIGNATION FOR LEAD BASED PAINT CONTAINING MATERIALS REQUIRING COMPLETE ABATEMENT (CA). SEE GENERAL NOTE 4.
- EXIST WALLS, DOORS TO REMAIN (SHOWN SCREENED)
- DEMOLITION WALLS, DOORS TO BE DEMOLISHED (SHOWN DASHED)

ASBESTOS NOTES

1. NOT ALL OF THE ACMS DEPICTED ON THE DRAWINGS WILL REQUIRE ABATEMENT. REFER TO THE ARCHITECTURAL, MECHANICAL, PLUMBING, AND ELECTRICAL DRAWINGS FOR ALL ITEMS THAT WILL REQUIRE REMOVAL.

ASBESTOS SAMPLE SYMBOLS

KEY	MATERIAL	EST. QTY.
A	Fire Doors (Assumed)	
B	Gray 12"x12" Floor Tile	25 SF
C	Black 12"x12" Floor Tile	373 SF
D	Black Tar Paper Under Gray 12"x12" Floor Tile	398 SF

LEAD BASED PAINT NOTES

1. OSHA'S LEAD IN CONSTRUCTION STANDARD APPLIES TO ALL DISTURBANCES OF LEAD BASED PAINT. IN ADDITION, THE CONTRACTOR SHALL USE METHODS TO LIMIT THE AMOUNT OF DUST PRODUCED DURING DEMOLITION OF ANY WALL AND CEILINGS CONTAINING LEAD BASED PAINT. ICRA DUST CONTROLS SHALL BE UTILIZED AT ALL TIMES.

LEAD-BASED PAINT SAMPLE KEY

CODE	RECOMMENDATION
HR	It is recommended that these surfaces be periodically observed for chalking, peeling, or cracking. If the surface is chalking, it can be cleaned with a trisodium phosphate and repainted. If the surface is peeling or cracking, it should be repaired or abated.
AR	A strategy of abatement that entails the removal of the building components coated with lead-based paint and installation of new components free of lead-based paint.
A ENCP	"Encapsulant" means a coatingor rigid material that relies on adhesion to a lead-based paint surface and is not mechanically fastened ot the substrate with a 20 year warrantly. "Encapsulation" means a process to make a lead-based paint inaccessible by providing a barrier between the lead-based paint and the environment, where the primary means of attachement for the encapsulant is bonding of a product to the surfce covered either by the product itself of through the use of an adhesive.
A ENCL	"Enclosure" means the installation of a rigid, durable, barrier that is mechanically attached to building components, with all the edges and seams sealed with caulk or other sealant having a design life of at least 20 years.
CA	A process designed whether to permenantly eliminate lead-based paint hazards on a component and includes but is not limited to: The removal of lead-bawed paint and lead-contaminated dust.
OSHA	Any painted surface that has lead content should not be sanded, demolished, or disturbed without the proper engineering controls and work methods. As spelled out under OSHA's CFR Part 1926 Lead Exposure in Construction, Interim Rule. Improper disturbance of any paint with lead content can cause lead to become airborne.
NA	X-Ray Floursecence Spectrometer (XRF) results indicated 0.0 or below, which indictes no lead detected by the XRF Spectrometer.

LEAD BASED PAINT SAMPLE SYMBOLS

KEY	COLOR / SUBSTRATE / COMPONENT	SURFACE / CONDITION	RECOMMENDATION CODE
1	Off White / Plaster / Wall	Non-Friction / Fair	HR, OSHA, A Encp
2	Off White / Wood / Chair Rail	Non-Friction / Intact	HR, OSHA
3	Gray / Plaster / Baseboard	Non-Friction / Intact	HR, OSHA
4	Off White / Plaster / Column	Non-Friction / Intact	HR, OSHA
5	BROWN / Plaster / Column	Non-Friction / Intact	HR, OSHA
6	Off White / Plaster / Ceiling	Non-Friction / Intact	HR, OSHA
7	BROWN / Plaster / Picture Rail	Non-Friction / Intact	HR, OSHA
8	BROWN / Plaster / Crown Molding	Non-Friction / Intact	HR, OSHA
9	Off White / Wood / Window Sill	Non-Friction / Intact	HR, OSHA
10	Off White / Wood / Door	Friction / Intact	HR, OSHA
11	Off White / Wood / Door Jamb	Friction / Intact	HR, OSHA
12	White / Wood / Window Casing	Non-Friction / Intact	HR, OSHA, A Encp, CA
13	Green / Concrete / Baseboard	Non-Friction / Intact	HR, OSHA
14	Gray / Metal / Spindle	Non-Friction / Intact	HR, OSHA
15	Gray / Metal / Stair Stringer	Non-Friction / Intact	HR, OSHA
16	Gray / Metal / Wall Cap	Non-Friction / Intact	HR, OSHA
17	Green / Plaster / Column BASE	Non-Friction / Intact	HR, OSHA
18	Green / Plaster / Baseboard	Non-Friction / Intact	HR, OSHA
19	BROWN / Wood / Door	Friction / Intact	HR, OSHA
20	BROWN / Wood / Door Casing	Non-Friction / Intact	HR, OSHA
21	Gray / Concrete / Floor	Friction / Intact	HR, OSHA
22	Gray / Concrete / Stair Tred	Friction / Intact	HR, OSHA
23	DARK Green / Metal / Hand Rail	Friction / Intact	HR, OSHA
24	DARK Green / Metal / Spindle	Non-Friction / Intact	HR, OSHA
25	DARK Green / Metal / Stair Riser	Non-Friction / Intact	HR, OSHA
26	DARK Gray / Metal / Stair Stringer	Non-Friction / Intact	HR, OSHA
27	White / Wood / Door	Friction / Intact	HR, OSHA, A Encp, CA
28	White / Wood / Door Casing	Non-Friction / Intact	HR, OSHA, A Encp, CA
29	Green / Metal / Stair Stringer	Non-Friction / Intact	HR, OSHA
30	Green / Metal / Stair Spindle	Non-Friction / Intact	HR, OSHA
31	Gray / Metal / Heater	Non-Friction / Intact	HR, OSHA
32	DK. Green / Plaster / Baseboard	Non-Friction / Intact	HR, OSHA
33	Off White / Wood / Door Casing	Non-Friction / Intact	HR, OSHA
34	Dk. Green / Plaster / Baseboard	Non-Friction / Intact	HR, OSHA
35	Off White / Plaster / Crown Molding	Non-Friction / Intact	HR, OSHA
36	Off White / Plaster / Baseboards	Non-Friction / Intact	HR, OSHA
37	White / Wood / Wall Molding	Non-Friction / Intact	HR, OSHA
10	Off White / Wood / Door	Friction / Intact	HR, OSHA
33	Off White / Wood / Door Casing	Non-Friction / Intact	HR, OSHA
38	Off White / Wood / Door Jamb	Friction / Intact	HR, OSHA
39	DK. Green / Plaster / Baseboard	Non-Friction / Intact	HR, OSHA
40	Off White / Wood / Pocket Doors	Friction / Intact	HR, OSHA
41	Off White / Wood / Pocket Door Casing	Non-Friction / Intact	HR, OSHA
42	LT. Green / Metal / Stair Spindle	Non-Friction / Intact	HR, OSHA
43	Lt. Green / Metal / Stair Stringer	Non-Friction / Intact	HR, OSHA
44	Lt. Green / Metal / Wall Cap	Non-Friction / Intact	HR, OSHA
45	Lt. Green / Wood / Baseboard	Non-Friction / Intact	HR, OSHA
46	Lt. Green / Wood / Chair Rail	Non-Friction / Intact	HR, OSHA
47	White / Plaster / Wall	Non-Friction / Intact	HR, OSHA, A Encp, CA
48	Gray / Wood / Baseboard	Non-Friction / Intact	HR, OSHA
49	Gray / Wood / Chair Rail	Non-Friction / Intact	HR, OSHA
50	Gray / Wood / Door	Friction / Intact	HR, OSHA
51	Gray / Wood / Door Casing	Non-Friction / Intact	HR, OSHA
52	White / Wood / Baseboard	Non-Friction / Intact	HR, OSHA, A Encp, CA
53	White / Wood / Chair Rail	Non-Friction / Intact	HR, OSHA, A Encp, CA
54	White / Plaster / Ceiling	Non-Friction / Intact	HR, OSHA, A Encp, CA
55	White / Wood / Window Sill	Non-Friction / Intact	HR, OSHA, A Encp, CA
56	White / Sheetrock / Wall	Non-Friction / Intact	HR, OSHA
57	BLACK / Metal / Hand Rail	Friction / Intact	HR, OSHA
58	Lt. Green / Concrete / Baseboard	Non-Friction / Intact	HR, OSHA
59	LT. Green / Metal / Door	Friction / Intact	HR, OSHA
60	Lt. Green / Metal / Door Casing	Non-Friction / Intact	HR, OSHA
61	White / Metal / Hand Rail	Friction / Fair	HR, OSHA, A Encp
62	Yellow / Metal / Hand Rail	Friction / Fair	HR, OSHA, A Encp
63	DK. Gray / Brick / Wall	Non-Friction / Fair	HR, OSHA, A Encp
64	Yellow / Metal / Duct	Non-Friction / Fair	HR, OSHA, A Encp
65	LT. Green / Wood / Door	Friction / Fair	HR, OSHA, A Encp
66	DK. Green / Brick / Column	Non-Friction / Fair	HR, OSHA, A Encp
67	Yellow / Metal / PIPE	Non-Friction / Intact	HR, OSHA, A Encp

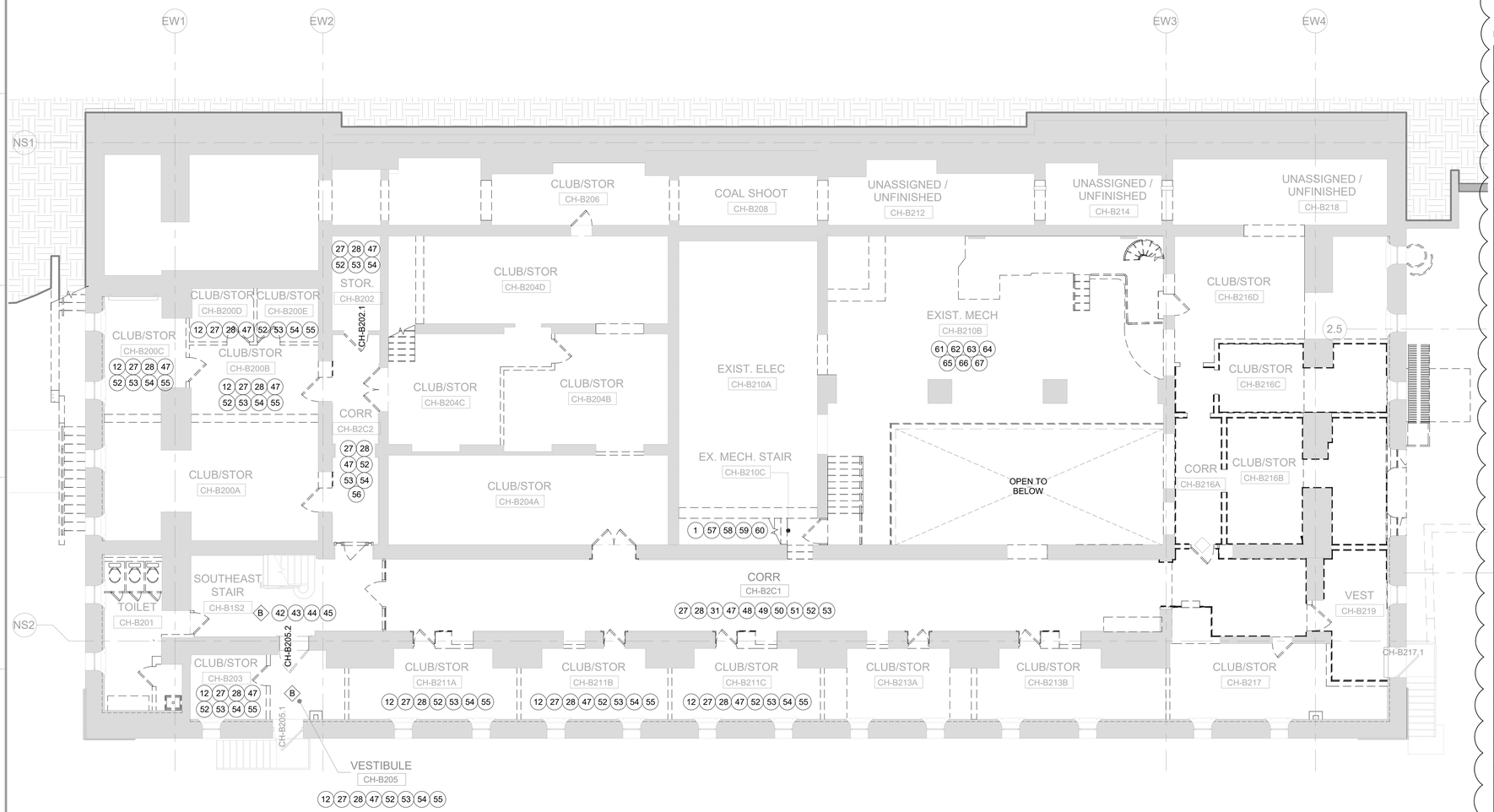

A1 H-1B2 HAZMAT PLAN - BASEMENT LEVEL B2
SCALE: 1/8" = 1'-0"

8 4 0 8 16
SCALE: 1/8"=1'-0"

PLAN NORTH

US Army Corps of Engineers ®

MARK	DESCRIPTION	DATE
1	AMENDMENT 7	5/21/21

ISSUE DATE: 2/11/2021
SOLICITATION NO.: W912DS-19-R-0014
CONTRACT NO.: W912DS-19-C0031
PROJECT NO: 20190494

DESIGNED BY: LRS
DRAWN BY: AT
CHECKED BY: KG
SUBMITTED BY: LRS
SIZE: ANSI D

US ARMY CORPS OF ENGINEERS

JACOBS / EWING COLE A Joint Venture

WEST POINT, NY
USMA BUILDING 605 CULLUM HALL RENOVATION

HAZMAT PLAN - BASEMENT LEVEL 2

SHEET ID
H-1B2

RTA SUBMISSION 2/11/2021

GENERAL NOTES

1. THIS DRAWING IS DIAGRAMMATIC AND IS TO BE USED FOR GENERAL INFORMATION AND SAMPLE LOCATIONS.
2. SEE THE SPECIFICATIONS DOCUMENT FOR THE HAZARDOUS MITIGATION PLAN, DIVISION 02 ABATEMENT SPECIFICATIONS 02 82 00, 02 83 00, 02 84 10, AND 02 85 00 AND THE ASBESTOS CONTAINING MATERIALS SURVEY REPORT BY OAK GROUP FROM THE MASON AND HANGER PDR FOR MORE INFORMATION.
3. ACCESSIBLE SPACES WERE SURVEYED FOR SUSPECT ASBESTOS MATERIALS AND LEAD BASED PAINT. WHERE OBSERVED, THE MATERIALS ARE NOTED ON THE PLANS.
4. ALL ASBESTOS AND LEAD BASED PAINT LOCATIONS AND TESTING RESULTS WERE SUPPLIED BY A THIRD PARTY ENTITY. PLEASE REFER TO "FINAL PROJECT DEFINITION REPORT, CULLUM HALL US MILITARY ACADEMY, WEST POINT, NY. 20 MAY 2019" FOR CLARIFICATION OR OTHER ASBESTOS OR LEAD BASED PAINT INFORMATION.

SYMBOL KEY

- DESIGNATION FOR ASBESTOS CONTAINING MATERIALS
- DESIGNATION FOR LEAD BASED PAINT CONTAINING MATERIALS, SEE ARCHITECTURAL DRAWINGS FOR LEVEL OF ABATEMENT.
- CA — DESIGNATION FOR LEAD BASED PAINT CONTAINING MATERIALS REQUIRING COMPLETE ABATEMENT (CA). SEE GENERAL NOTE 4.
- EXIST WALLS, DOORS TO REMAIN (SHOWN SCREENED)
- DEMOLITION WALLS, DOORS TO BE DEMOLISHED (SHOWN DASHED)

ASBESTOS NOTES

1. NOT ALL OF THE ACMS DEPICTED ON THE DRAWINGS WILL REQUIRE ABATEMENT. REFER TO THE ARCHITECTURAL, MECHANICAL, PLUMBING, AND ELECTRICAL DRAWINGS FOR ALL ITEMS THAT WILL REQUIRE REMOVAL.

ASBESTOS SAMPLE SYMBOLS

KEY	MATERIAL	EST. QTY.
A	Fire Doors (Assumed)	
B	Gray 12"x12" Floor Tile	25 SF
C	Black 12"x12" Floor Tile	373 SF
D	Black Tar Paper Under Gray 12"x12" Floor Tile	398 SF

LEAD BASED PAINT NOTES

1. OSHA'S LEAD IN CONSTRUCTION STANDARD APPLIES TO ALL DISTURBANCES OF LEAD BASED PAINT. IN ADDITION, THE CONTRACTOR SHALL USE METHODS TO LIMIT THE AMOUNT OF DUST PRODUCED DURING DEMOLITION OF ANY WALL AND CEILINGS CONTAINING LEAD BASED PAINT. ICRA DUST CONTROLS SHALL BE UTILIZED AT ALL TIMES.

LEAD-BASED PAINT SAMPLE KEY

CODE	RECOMMENDATION
HR	It is recommended that these surfaces be periodically observed for chalking, peeling, or cracking. If the surface is chalking, it can be cleaned with a trisodium phosphate and repainted. If the surface is peeling or cracking, it should be repaired or abated.
AR	A strategy of abatement that entails the removal of the building components coated with lead-based paint and installation of new components free of lead-based paint.
A ENCP	"Encapsulant" means a coatingor rigid material that relies on adhesion to a lead-based paint surface and is not mechanically fastened ot the substrate with a 20 year warrantly. "Encapsulation" means a process to make a lead-based paint inaccessible by providing a barrier between the lead-based paint and the environment, where the primary means of attachement for the encapsulant is bonding of a product to the surfce covered either by the product itself of through the use of an adhesive.
A ENCL	"Enclosure" means the installation of a rigid, durable, barrier that is mechanically attached to building components, with all the edges and seams sealed with caulk or other sealant having a design life of at least 20 years.
CA	A process designed whether to permenantly eliminate lead-based paint hazards on a component and includes but is not limited to: The removal of lead-bawed paint and lead-contaminated dust.
OSHA	Any painted surface that has lead content should not be sanded, demolished, or disturbed without the proper engineering controls and work methods. As spelled out under OSHA's CFR Part 1926 Lead Exposure in Construction, Interim Rule. Improper disturbance of any paint with lead content can cause lead to become airborne.
NA	X-Ray Floursecence Spectrometer (XRF) results indicated 0.0 or below, which indictes no lead detected by the XRF Spectrometer.

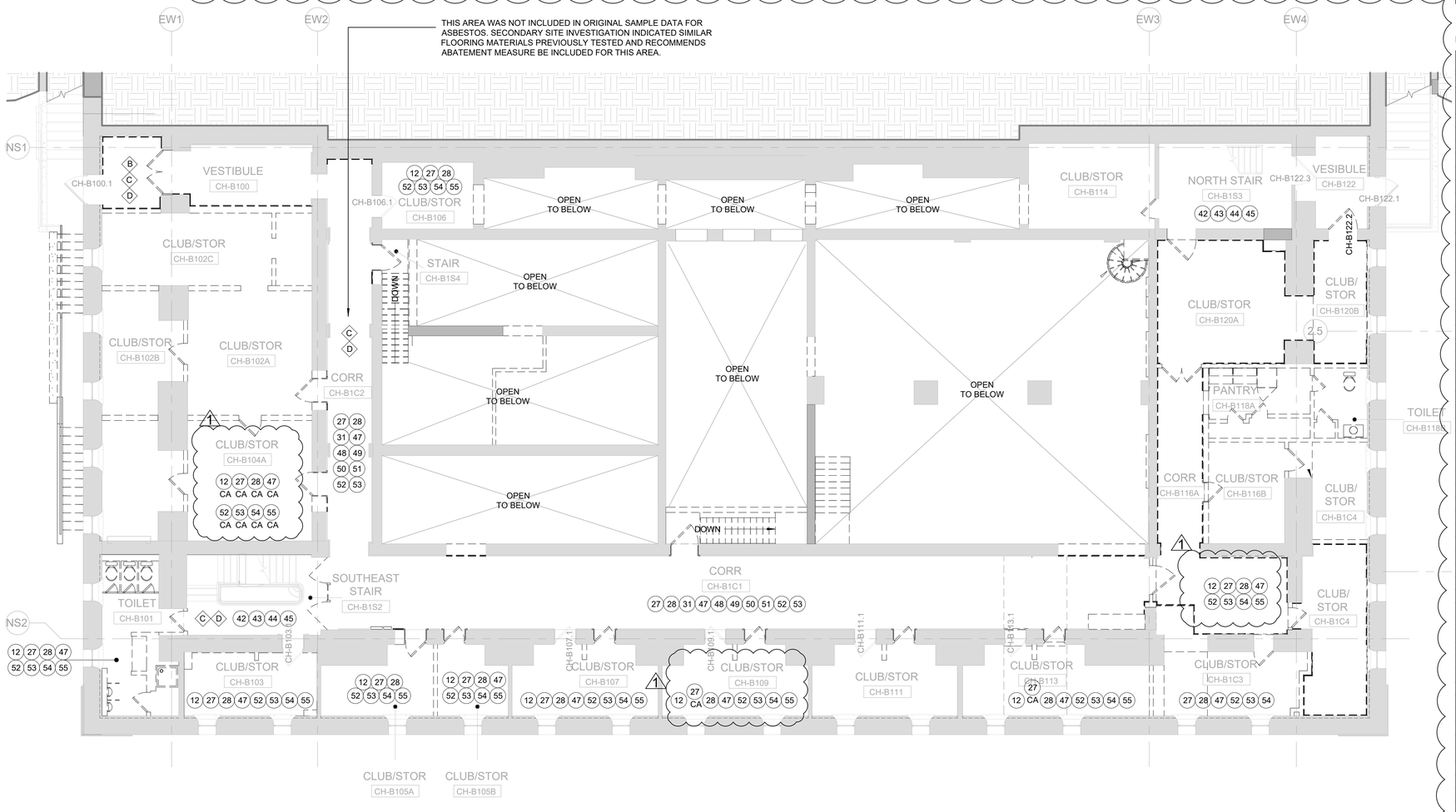

LEAD BASED PAINT SAMPLE SYMBOLS

KEY	COLOR / SUBSTRATE / COMPONENT	SURFACE / CONDITION	RECOMMENDATION CODE
1	Off White / Plaster / Wall	Non-Friction / Fair	HR, OSHA, A Encp
2	Off White / Wood / Chair Rail	Non-Friction / Intact	HR, OSHA
3	Gray / Plaster / Baseboard	Non-Friction / Intact	HR, OSHA
4	Off White / Plaster / Column	Non-Friction / Intact	HR, OSHA
5	BROWN / Plaster / Column	Non-Friction / Intact	HR, OSHA
6	Off White / Plaster / Ceiling	Non-Friction / Intact	HR, OSHA
7	BROWN / Plaster / Picture Rail	Non-Friction / Intact	HR, OSHA
8	BROWN / Plaster / Crown Molding	Non-Friction / Intact	HR, OSHA
9	Off White / Wood / Window Sill	Non-Friction / Intact	HR, OSHA
10	Off White / Wood / Door	Friction / Intact	HR, OSHA
11	Off White / Wood / Door Jamb	Friction / Intact	HR, OSHA
12	White / Wood / Window Casing	Non-Friction / Intact	HR, OSHA, A Encp, CA
13	Green / Concrete / Baseboard	Non-Friction / Intact	HR, OSHA
14	Gray / Metal / Spindle	Non-Friction / Intact	HR, OSHA
15	Gray / Metal / Stair Stringer	Non-Friction / Intact	HR, OSHA
16	Gray / Metal / Wall Cap	Non-Friction / Intact	HR, OSHA
17	Green / Plaster / Column BASE	Non-Friction / Intact	HR, OSHA
18	Green / Plaster / Baseboard	Non-Friction / Intact	HR, OSHA
19	BROWN / Wood / Door	Friction / Intact	HR, OSHA
20	BROWN / Wood / Door Casing	Non-Friction / Intact	HR, OSHA
21	Gray / Concrete / Floor	Friction / Intact	HR, OSHA
22	Gray / Concrete / Stair Tred	Friction / Intact	HR, OSHA
23	DARK Green / Metal / Hand Rail	Friction / Intact	HR, OSHA
24	DARK Green / Metal / Spindle	Non-Friction / Intact	HR, OSHA
25	DARK Green / Metal / Stair Riser	Non-Friction / Intact	HR, OSHA
26	DARK Gray / Metal / Stair Stringer	Non-Friction / Intact	HR, OSHA
27	White / Wood / Door	Friction / Intact	HR, OSHA, A Encp, CA
28	White / Wood / Door Casing	Non-Friction / Intact	HR, OSHA, A Encp, CA
29	Green / Metal / Stair Stringer	Non-Friction / Intact	HR, OSHA
30	Green / Metal / Stair Spindle	Non-Friction / Intact	HR, OSHA
31	Gray / Metal / Heater	Non-Friction / Intact	HR, OSHA
32	DK. Green / Plaster / Baseboard	Non-Friction / Intact	HR, OSHA
33	Off White / Wood / Door Casing	Non-Friction / Intact	HR, OSHA
34	Dk. Green / Plaster / Baseboard	Non-Friction / Intact	HR, OSHA
35	Off White / Plaster / Crown Molding	Non-Friction / Intact	HR, OSHA
36	Off White / Plaster / Baseboards	Non-Friction / Intact	HR, OSHA
37	White / Wood / Wall Molding	Non-Friction / Intact	HR, OSHA
10	Off White / Wood / Door	Friction / Intact	HR, OSHA
33	Off White / Wood / Door Casing	Non-Friction / Intact	HR, OSHA
38	Off White / Wood / Door Jamb	Friction / Intact	HR, OSHA
39	DK. Green / Plaster / Baseboard	Non-Friction / Intact	HR, OSHA
40	Off White / Wood / Pocket Doors	Friction / Intact	HR, OSHA
41	Off White / Wood / Pocket Door Casing	Non-Friction / Intact	HR, OSHA
42	LT. Green / Metal / Stair Spindle	Non-Friction / Intact	HR, OSHA
43	Lt. Green / Metal / Stair Stringer	Non-Friction / Intact	HR, OSHA
44	Lt. Green / Metal / Wall Cap	Non-Friction / Intact	HR, OSHA
45	Lt. Green / Wood / Baseboard	Non-Friction / Intact	HR, OSHA
46	Lt. Green / Wood / Chair Rail	Non-Friction / Intact	HR, OSHA
47	White / Plaster / Wall	Non-Friction / Intact	HR, OSHA, A Encp, CA
48	Gray / Wood / Baseboard	Non-Friction / Intact	HR, OSHA
49	Gray / Wood / Chair Rail	Non-Friction / Intact	HR, OSHA
50	Gray / Wood / Door	Friction / Intact	HR, OSHA
51	Gray / Wood / Door Casing	Non-Friction / Intact	HR, OSHA
52	White / Wood / Baseboard	Non-Friction / Intact	HR, OSHA, A Encp, CA
53	White / Wood / Chair Rail	Non-Friction / Intact	HR, OSHA, A Encp, CA
54	White / Plaster / Ceiling	Non-Friction / Intact	HR, OSHA, A Encp, CA
55	White / Wood / Window Sill	Non-Friction / Intact	HR, OSHA, A Encp, CA
56	White / Sheetrock / Wall	Non-Friction / Intact	HR, OSHA
57	BLACK / Metal / Hand Rail	Friction / Intact	HR, OSHA
58	Lt. Green / Concrete / Baseboard	Non-Friction / Intact	HR, OSHA
59	LT. Green / Metal / Door	Friction / Intact	HR, OSHA
60	Lt. Green / Metal / Door Casing	Non-Friction / Intact	HR, OSHA
61	White / Metal / Hand Rail	Friction / Fair	HR, OSHA, A Encp
62	Yellow / Metal / Hand Rail	Friction / Fair	HR, OSHA, A Encp
63	DK. Gray / Brick / Wall	Non-Friction / Fair	HR, OSHA, A Encp
64	Yellow / Metal / Duct	Non-Friction / Fair	HR, OSHA, A Encp
65	LT. Green / Wood / Door	Friction / Fair	HR, OSHA, A Encp
66	DK. Green / Brick / Column	Non-Friction / Fair	HR, OSHA, A Encp
67	Yellow / Metal / PIPE	Non-Friction / Intact	HR, OSHA, A Encp

A1 / H-1B1 HAZMAT PLAN - BASEMENT LEVEL B1
SCALE: 1/8" = 1'-0"

SCALE: 1/8"=1'-0"

PLAN NORTH

US Army Corps of Engineers ®

MARK	DESCRIPTION	DATE
1	AMENDMENT 7	5/21/21

ISSUE DATE: 2/11/2021
SOLICITATION NO.: W912DS-19-R-0014
CONTRACT NO.: W912DS-19-C0031
PROJECT NO: 20190494

DESIGNED BY: LRS
DRAWN BY: AT
CHECKED BY: KG
SUBMITTED BY: LRS
SIZE: JASS D

US ARMY CORPS OF ENGINEERS

JACOBS / EWING COLE A Joint Venture

WEST POINT, NY
USMA BUILDING 605 CULLUM HALL RENOVATION

HAZMAT PLAN - BASEMENT LEVEL B1

SHEET ID
H-1B1

RTA SUBMISSION 2/11/2021

GENERAL NOTES

1. THIS DRAWING IS DIAGRAMMATIC AND IS TO BE USED FOR GENERAL INFORMATION AND SAMPLE LOCATIONS.
2. SEE THE SPECIFICATIONS DOCUMENT FOR THE HAZARDOUS MITIGATION PLAN, DIVISION 02 ABATEMENT SPECIFICATIONS 02 82 00, 02 83 00, 02 84 10, AND 02 85 00 AND THE ASBESTOS CONTAINING MATERIALS SURVEY REPORT BY OAK GROUP FROM THE MASON AND HANGER PDR FOR MORE INFORMATION.
3. ACCESSIBLE SPACES WERE SURVEYED FOR SUSPECT ASBESTOS MATERIALS AND LEAD BASED PAINT. WHERE OBSERVED, THE MATERIALS ARE NOTED ON THE PLANS.
4. ALL ASBESTOS AND LEAD BASED PAINT LOCATIONS AND TESTING RESULTS WERE SUPPLIED BY A THIRD PARTY ENTITY. PLEASE REFER TO "FINAL PROJECT DEFINITION REPORT, CULLUM HALL US MILITARY ACADEMY, WEST POINT, NY. 20 MAY 2019" FOR CLARIFICATION OR OTHER ASBESTOS OR LEAD BASED PAINT INFORMATION.

SYMBOL KEY

- DESIGNATION FOR ASBESTOS CONTAINING MATERIALS
- DESIGNATION FOR LEAD BASED PAINT CONTAINING MATERIALS, SEE ARCHITECTURAL DRAWINGS FOR LEVEL OF ABATEMENT.
- CA — DESIGNATION FOR LEAD BASED PAINT CONTAINING MATERIALS REQUIRING COMPLETE ABATEMENT (CA). SEE GENERAL NOTE 4.
- EXIST WALLS, DOORS TO REMAIN (SHOWN SCREENED)
- DEMOLITION WALLS, DOORS TO BE DEMOLISHED (SHOWN DASHED)

ASBESTOS NOTES

1. NOT ALL OF THE ACMS DEPICTED ON THE DRAWINGS WILL REQUIRE ABATEMENT. REFER TO THE ARCHITECTURAL, MECHANICAL, PLUMBING, AND ELECTRICAL DRAWINGS FOR ALL ITEMS THAT WILL REQUIRE REMOVAL.

ASBESTOS SAMPLE SYMBOLS

KEY	MATERIAL	EST. QTY.
A	Fire Doors (Assumed)	
B	Gray 12"x12" Floor Tile	25 SF
C	Black 12"x12" Floor Tile	373 SF
D	Black Tar Paper Under Gray 12"x12" Floor Tile	398 SF

LEAD BASED PAINT NOTES

1. OSHA'S LEAD IN CONSTRUCTION STANDARD APPLIES TO ALL DISTURBANCES OF LEAD BASED PAINT. IN ADDITION, THE CONTRACTOR SHALL USE METHODS TO LIMIT THE AMOUNT OF DUST PRODUCED DURING DEMOLITION OF ANY WALL AND CEILINGS CONTAINING LEAD BASED PAINT. ICRA DUST CONTROLS SHALL BE UTILIZED AT ALL TIMES.

LEAD-BASED PAINT SAMPLE KEY

CODE	RECOMMENDATION
HR	It is recommended that these surfaces be periodically observed for chalking, peeling, or cracking. If the surface is chalking, it can be cleaned with a trisodium phosphate and repainted. If the surface is peeling or cracking, it should be repaired or abated.
AR	A strategy of abatement that entails the removal of the building components coated with lead-based paint and installation of new components free of lead-based paint.
A ENCP	"Encapsulant" means a coatingor rigid material that relies on adhesion to a lead-based paint surface and is not mechanically fastened ot the substrate with a 20 year warrantly. "Encapsulation" means a process to make a lead-based paint inaccessible by providing a barrier between the lead-based paint and the environment, where the primary means of attachement for the encapsulant is bonding of a product to the surfce covered either by the product itself of through the use of an adhesive.
A ENCL	"Enclosure" means the installation of a rigid, durable, barrier that is mechanically attached to building components, with all the edges and seams sealed with caulk or other sealant having a design life of at least 20 years.
CA	A process designed whether to permenantly eliminate lead-based paint hazards on a component and includes but is not limited to: The removal of lead-bawed paint and lead-contaminated dust.
OSHA	Any painted surface that has lead content should not be sanded, demolished, or disturbed without the proper engineering controls and work methods. As spelled out under OSHA's CFR Part 1926 Lead Exposure in Construction, Interim Rule. Improper disturbance of any paint with lead content can cause lead to become airborne.
NA	X-Ray Floursecence Spectrometer (XRF) results indicated 0.0 or below, which indictes no lead detected by the XRF Spectrometer.

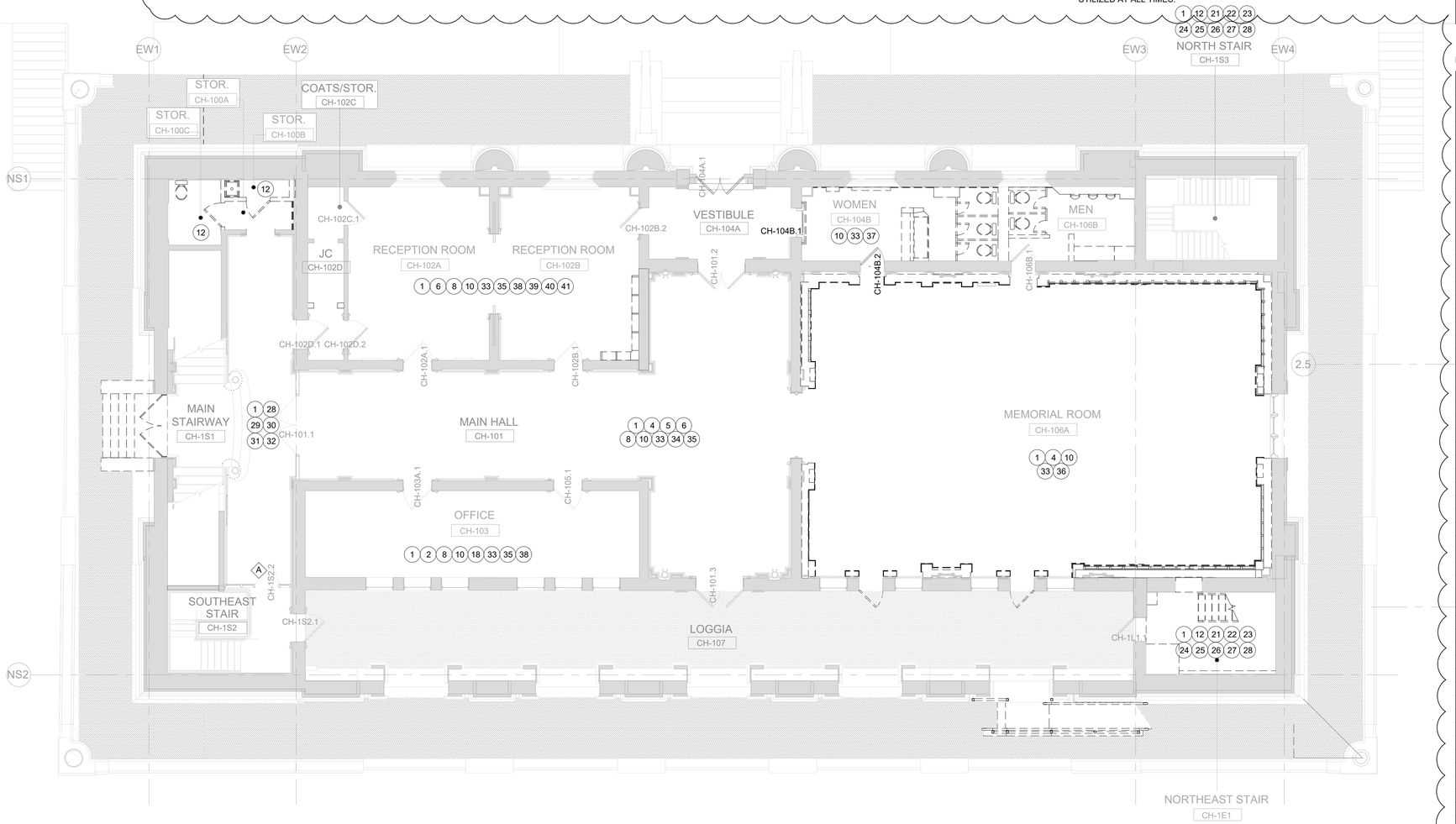

LEAD BASED PAINT SAMPLE SYMBOLS

KEY	COLOR / SUBSTRATE / COMPONENT	SURFACE / CONDITION	RECOMMENDATION CODE
1	Off White / Plaster / Wall	Non-Friction / Fair	HR, OSHA, A Encp
2	Off White / Wood / Chair Rail	Non-Friction / Intact	HR, OSHA
3	Gray / Plaster / Baseboard	Non-Friction / Intact	HR, OSHA
4	Off White / Plaster / Column	Non-Friction / Intact	HR, OSHA
5	BROWN / Plaster / Column	Non-Friction / Intact	HR, OSHA
6	Off White / Plaster / Ceiling	Non-Friction / Intact	HR, OSHA
7	BROWN / Plaster / Picture Rail	Non-Friction / Intact	HR, OSHA
8	BROWN / Plaster / Crown Molding	Non-Friction / Intact	HR, OSHA
9	Off White / Wood / Window Sill	Non-Friction / Intact	HR, OSHA
10	Off White / Wood / Door	Friction / Intact	HR, OSHA
11	Off White / Wood / Door Jamb	Friction / Intact	HR, OSHA
12	White / Wood / Window Casing	Non-Friction / Intact	HR, OSHA, A Encp, CA
13	Green / Concrete / Baseboard	Non-Friction / Intact	HR, OSHA
14	Gray / Metal / Spindle	Non-Friction / Intact	HR, OSHA
15	Gray / Metal / Stair Stringer	Non-Friction / Intact	HR, OSHA
16	Gray / Metal / Wall Cap	Non-Friction / Intact	HR, OSHA
17	Green / Plaster / Column BASE	Non-Friction / Intact	HR, OSHA
18	Green / Plaster / Baseboard	Non-Friction / Intact	HR, OSHA
19	BROWN / Wood / Door	Friction / Intact	HR, OSHA
20	BROWN / Wood / Door Casing	Non-Friction / Intact	HR, OSHA
21	Gray / Concrete / Floor	Friction / Intact	HR, OSHA
22	Gray / Concrete / Stair Tred	Friction / Intact	HR, OSHA
23	DARK Green / Metal / Hand Rail	Friction / Intact	HR, OSHA
24	DARK Green / Metal / Spindle	Non-Friction / Intact	HR, OSHA
25	DARK Green / Metal / Stair Riser	Non-Friction / Intact	HR, OSHA
26	DARK Gray / Metal / Stair Stringer	Non-Friction / Intact	HR, OSHA
27	White / Wood / Door	Friction / Intact	HR, OSHA, A Encp, CA
28	White / Wood / Door Casing	Non-Friction / Intact	HR, OSHA, A Encp, CA
29	Green / Metal / Stair Stringer	Non-Friction / Intact	HR, OSHA
30	Green / Metal / Stair Spindle	Non-Friction / Intact	HR, OSHA
31	Gray / Metal / Heater	Non-Friction / Intact	HR, OSHA
32	DK. Green / Plaster / Baseboard	Non-Friction / Intact	HR, OSHA
33	Off White / Wood / Door Casing	Non-Friction / Intact	HR, OSHA
34	Dk. Green / Plaster / Baseboard	Non-Friction / Intact	HR, OSHA
35	Off White / Plaster / Crown Molding	Non-Friction / Intact	HR, OSHA
36	Off White / Plaster / Baseboards	Non-Friction / Intact	HR, OSHA
37	White / Wood / Wall Molding	Non-Friction / Intact	HR, OSHA
10	Off White / Wood / Door	Friction / Intact	HR, OSHA
33	Off White / Wood / Door Casing	Non-Friction / Intact	HR, OSHA
38	Off White / Wood / Door Jamb	Friction / Intact	HR, OSHA
39	DK. Green / Plaster / Baseboard	Non-Friction / Intact	HR, OSHA
40	Off White / Wood / Pocket Doors	Friction / Intact	HR, OSHA
41	Off White / Wood / Pocket Door Casing	Non-Friction / Intact	HR, OSHA
42	LT. Green / Metal / Stair Spindle	Non-Friction / Intact	HR, OSHA
43	Lt. Green / Metal / Stair Stringer	Non-Friction / Intact	HR, OSHA
44	Lt. Green / Metal / Wall Cap	Non-Friction / Intact	HR, OSHA
45	Lt. Green / Wood / Baseboard	Non-Friction / Intact	HR, OSHA
46	Lt. Green / Wood / Chair Rail	Non-Friction / Intact	HR, OSHA
47	White / Plaster / Wall	Non-Friction / Intact	HR, OSHA, A Encp, CA
48	Gray / Wood / Baseboard	Non-Friction / Intact	HR, OSHA
49	Gray / Wood / Chair Rail	Non-Friction / Intact	HR, OSHA
50	Gray / Wood / Door	Friction / Intact	HR, OSHA
51	Gray / Wood / Door Casing	Non-Friction / Intact	HR, OSHA
52	White / Wood / Baseboard	Non-Friction / Intact	HR, OSHA, A Encp, CA
53	White / Wood / Chair Rail	Non-Friction / Intact	HR, OSHA, A Encp, CA
54	White / Plaster / Ceiling	Non-Friction / Intact	HR, OSHA, A Encp, CA
55	White / Wood / Window Sill	Non-Friction / Intact	HR, OSHA, A Encp, CA
56	White / Sheetrock / Wall	Non-Friction / Intact	HR, OSHA
57	BLACK / Metal / Hand Rail	Friction / Intact	HR, OSHA
58	Lt. Green / Concrete / Baseboard	Non-Friction / Intact	HR, OSHA
59	LT. Green / Metal / Door	Friction / Intact	HR, OSHA
60	Lt. Green / Metal / Door Casing	Non-Friction / Intact	HR, OSHA
61	White / Metal / Hand Rail	Friction / Fair	HR, OSHA, A Encp
62	Yellow / Metal / Hand Rail	Friction / Fair	HR, OSHA, A Encp
63	DK. Gray / Brick / Wall	Non-Friction / Fair	HR, OSHA, A Encp
64	Yellow / Metal / Duct	Non-Friction / Fair	HR, OSHA, A Encp
65	LT. Green / Wood / Door	Friction / Fair	HR, OSHA, A Encp
66	DK. Green / Brick / Column	Non-Friction / Fair	HR, OSHA, A Encp
67	Yellow / Metal / PIPE	Non-Friction / Intact	HR, OSHA, A Encp

A1 / H-100 HAZMAT PLAN - FIRST LEVEL
SCALE: 1/8" = 1'-0"

8 4 0 8 16
SCALE: 1/8"=1'-0"

PLAN NORTH

US Army Corps of Engineers ®

MARK	DESCRIPTION	DATE
1	AMENDMENT 7	5/21/21

ISSUE DATE: 2/11/2021
SOLICITATION NO.: W912DS-19-R-0014
CONTRACT NO.: W912DS-19-C0031
PROJECT NO: 20190494

DESIGNED BY:
DRAWN BY: AT
CHECKED BY: KG
SUBMITTED BY: LRS
SIZE: ANSI D

US ARMY CORPS OF ENGINEERS

JACOBS / EWING COLE A Joint Venture

WEST POINT, NY
USMA BUILDING 605 CULLUM HALL RENOVATION

HAZMAT PLAN - FIRST LEVEL

SHEET ID
H-100

RTA SUBMISSION 2/11/2021

GENERAL NOTES

1. THIS DRAWING IS DIAGRAMMATIC AND IS TO BE USED FOR GENERAL INFORMATION AND SAMPLE LOCATIONS.
2. SEE THE SPECIFICATIONS DOCUMENT FOR THE HAZARDOUS MITIGATION PLAN, DIVISION 02 ABATEMENT SPECIFICATIONS 02 82 00, 02 83 00, 02 84 10, AND 02 85 00 AND THE ASBESTOS CONTAINING MATERIALS SURVEY REPORT BY OAK GROUP FROM THE MASON AND HANGER PDR FOR MORE INFORMATION.
3. ACCESSIBLE SPACES WERE SURVEYED FOR SUSPECT ASBESTOS MATERIALS AND LEAD BASED PAINT. WHERE OBSERVED, THE MATERIALS ARE NOTED ON THE PLANS.
4. ALL ASBESTOS AND LEAD BASED PAINT LOCATIONS AND TESTING RESULTS WERE SUPPLIED BY A THIRD PARTY ENTITY. PLEASE REFER TO "FINAL PROJECT DEFINITION REPORT, CULLUM HALL US MILITARY ACADEMY, WEST POINT, NY. 20 MAY 2019" FOR CLARIFICATION OR OTHER ASBESTOS OR LEAD BASED PAINT INFORMATION.

SYMBOL KEY

- DESIGNATION FOR ASBESTOS CONTAINING MATERIALS
- DESIGNATION FOR LEAD BASED PAINT CONTAINING MATERIALS, SEE ARCHITECTURAL DRAWINGS FOR LEVEL OF ABATEMENT.
- CA — DESIGNATION FOR LEAD BASED PAINT CONTAINING MATERIALS REQUIRING COMPLETE ABATEMENT (CA). SEE GENERAL NOTE 4.
- EXIST WALLS, DOORS TO REMAIN (SHOWN SCREENED)
- DEMOLITION WALLS, DOORS TO BE DEMOLISHED (SHOWN DASHED)

ASBESTOS NOTES

1. NOT ALL OF THE ACMS DEPICTED ON THE DRAWINGS WILL REQUIRE ABATEMENT. REFER TO THE ARCHITECTURAL, MECHANICAL, PLUMBING, AND ELECTRICAL DRAWINGS FOR ALL ITEMS THAT WILL REQUIRE REMOVAL.

ASBESTOS SAMPLE SYMBOLS

KEY	MATERIAL	EST. QTY.
A	Fire Doors (Assumed)	
B	Gray 12"x12" Floor Tile	25 SF
C	Black 12"x12" Floor Tile	373 SF
D	Black Tar Paper Under Gray 12"x12" Floor Tile	398 SF

LEAD BASED PAINT NOTES

1. OSHA'S LEAD IN CONSTRUCTION STANDARD APPLIES TO ALL DISTURBANCES OF LEAD BASED PAINT. IN ADDITION, THE CONTRACTOR SHALL USE METHODS TO LIMIT THE AMOUNT OF DUST PRODUCED DURING DEMOLITION OF ANY WALL AND CEILINGS CONTAINING LEAD BASED PAINT. ICRA DUST CONTROLS SHALL BE UTILIZED AT ALL TIMES.

LEAD-BASED PAINT SAMPLE KEY

CODE	RECOMMENDATION
HR	It is recommended that these surfaces be periodically observed for chalking, peeling, or cracking. If the surface is chalking, it can be cleaned with a trisodium phosphate and repainted. If the surface is peeling or cracking, it should be repaired or abated.
AR	A strategy of abatement that entails the removal of the building components coated with lead-based paint and installation of new components free of lead-based paint.
A ENCP	"Encapsulant" means a coatingor rigid material that relies on adhesion to a lead-based paint surface and is not mechanically fastened ot the substrate with a 20 year warrantly. "Encapsulation" means a process to make a lead-based paint inaccessible by providing a barrier between the lead-based paint and the environment, where the primary means of attachement for the encapsulant is bonding of a product to the surfce covered either by the product itself of through the use of an adhesive.
A ENCL	"Enclosure" means the installation of a rigid, durable, barrier that is mechanically attached to building components, with all the edges and seams sealed with caulk or other sealant having a design life of at least 20 years.
CA	A process designed whether to permenantly eliminate lead-based paint hazards on a component and includes but is not limited to: The removal of lead-bawed paint and lead-contaminated dust.
OSHA	Any painted surface that has lead content should not be sanded, demolished, or disturbed without the proper engineering controls and work methods. As spelled out under OSHA's CFR Part 1926 Lead Exposure in Construction, Interim Rule. Improper disturbance of any paint with lead content can cause lead to become airborne.
NA	X-Ray Floursecence Spectrometer (XRF) results indicated 0.0 or below, which indictes no lead detected by the XRF Spectrometer.

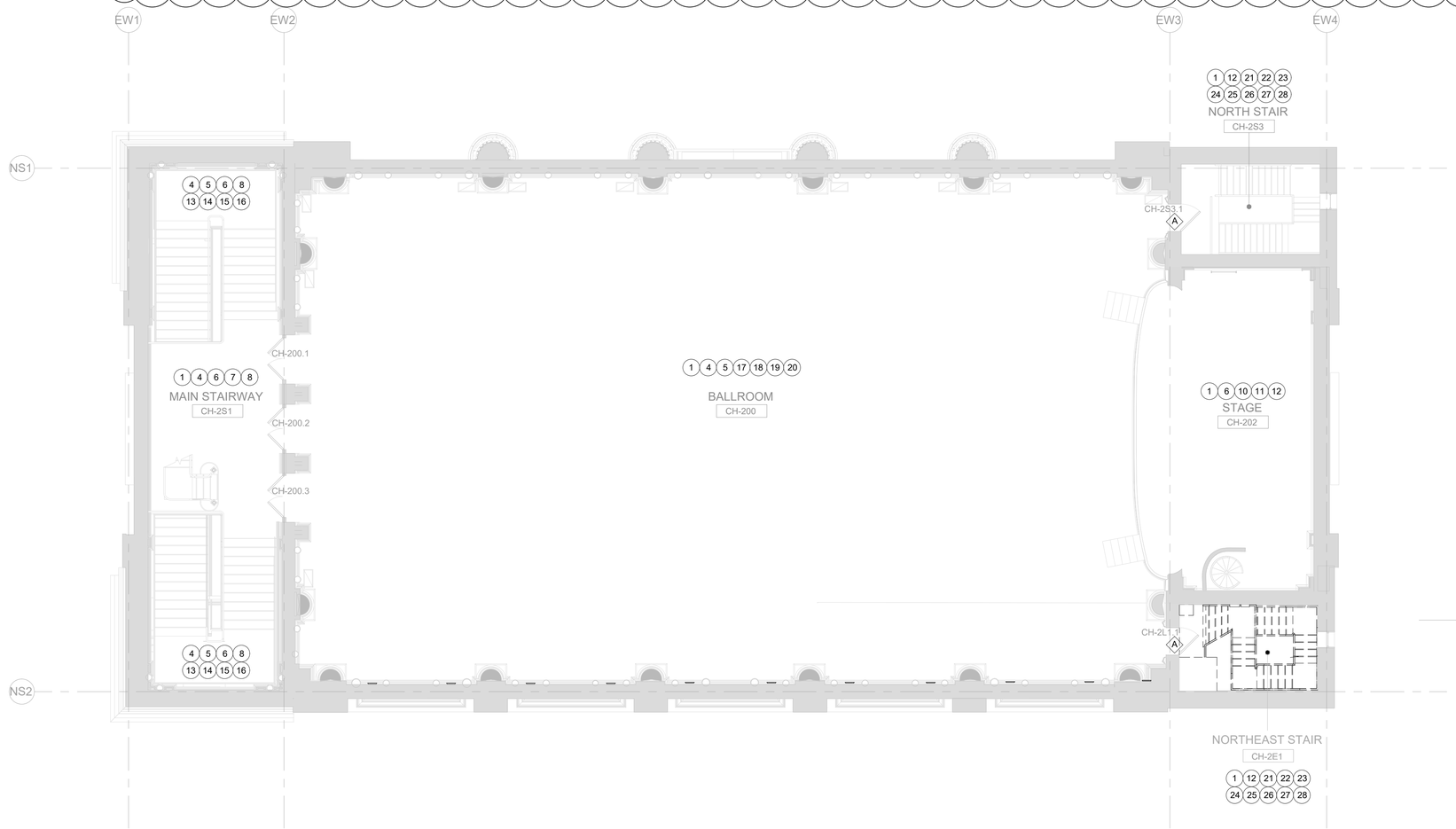

LEAD BASED PAINT SAMPLE SYMBOLS

KEY	COLOR / SUBSTRATE / COMPONENT	SURFACE / CONDITION	RECOMMENDATION CODE
1	Off White / Plaster / Wall	Non-Friction / Fair	HR, OSHA, A Encp
2	Off White / Wood / Chair Rail	Non-Friction / Intact	HR, OSHA
3	Gray / Plaster / Baseboard	Non-Friction / Intact	HR, OSHA
4	Off White / Plaster / Column	Non-Friction / Intact	HR, OSHA
5	BROWN / Plaster / Column	Non-Friction / Intact	HR, OSHA
6	Off White / Plaster / Ceiling	Non-Friction / Intact	HR, OSHA
7	BROWN / Plaster / Picture Rail	Non-Friction / Intact	HR, OSHA
8	BROWN / Plaster / Crown Molding	Non-Friction / Intact	HR, OSHA
9	Off White / Wood / Window Sill	Non-Friction / Intact	HR, OSHA
10	Off White / Wood / Door	Friction / Intact	HR, OSHA
11	Off White / Wood / Door Jamb	Friction / Intact	HR, OSHA
12	White / Wood / Window Casing	Non-Friction / Intact	HR, OSHA, A Encp, CA
13	Green / Concrete / Baseboard	Non-Friction / Intact	HR, OSHA
14	Gray / Metal / Spindle	Non-Friction / Intact	HR, OSHA
15	Gray / Metal / Stair Stringer	Non-Friction / Intact	HR, OSHA
16	Gray / Metal / Wall Cap	Non-Friction / Intact	HR, OSHA
17	Green / Plaster / Column BASE	Non-Friction / Intact	HR, OSHA
18	Green / Plaster / Baseboard	Non-Friction / Intact	HR, OSHA
19	BROWN / Wood / Door	Friction / Intact	HR, OSHA
20	BROWN / Wood / Door Casing	Non-Friction / Intact	HR, OSHA
21	Gray / Concrete / Floor	Friction / Intact	HR, OSHA
22	Gray / Concrete / Stair Tred	Friction / Intact	HR, OSHA
23	DARK Green / Metal / Hand Rail	Friction / Intact	HR, OSHA
24	DARK Green / Metal / Spindle	Non-Friction / Intact	HR, OSHA
25	DARK Green / Metal / Stair Riser	Non-Friction / Intact	HR, OSHA
26	DARK Gray / Metal / Stair Stringer	Non-Friction / Intact	HR, OSHA
27	White / Wood / Door	Friction / Intact	HR, OSHA, A Encp, CA
28	White / Wood / Door Casing	Non-Friction / Intact	HR, OSHA, A Encp, CA
29	Green / Metal / Stair Stringer	Non-Friction / Intact	HR, OSHA
30	Green / Metal / Stair Spindle	Non-Friction / Intact	HR, OSHA
31	Gray / Metal / Heater	Non-Friction / Intact	HR, OSHA
32	DK. Green / Plaster / Baseboard	Non-Friction / Intact	HR, OSHA
33	Off White / Wood / Door Casing	Non-Friction / Intact	HR, OSHA
34	Dk. Green / Plaster / Baseboard	Non-Friction / Intact	HR, OSHA
35	Off White / Plaster / Crown Molding	Non-Friction / Intact	HR, OSHA
36	Off White / Plaster / Baseboards	Non-Friction / Intact	HR, OSHA
37	White / Wood / Wall Molding	Non-Friction / Intact	HR, OSHA
10	Off White / Wood / Door	Friction / Intact	HR, OSHA
33	Off White / Wood / Door Casing	Non-Friction / Intact	HR, OSHA
38	Off White / Wood / Door Jamb	Friction / Intact	HR, OSHA
39	DK. Green / Plaster / Baseboard	Non-Friction / Intact	HR, OSHA
40	Off White / Wood / Pocket Doors	Friction / Intact	HR, OSHA
41	Off White / Wood / Pocket Door Casing	Non-Friction / Intact	HR, OSHA
42	LT. Green / Metal / Stair Spindle	Non-Friction / Intact	HR, OSHA
43	Lt. Green / Metal / Stair Stringer	Non-Friction / Intact	HR, OSHA
44	Lt. Green / Metal / Wall Cap	Non-Friction / Intact	HR, OSHA
45	Lt. Green / Wood / Baseboard	Non-Friction / Intact	HR, OSHA
46	Lt. Green / Wood / Chair Rail	Non-Friction / Intact	HR, OSHA
47	White / Plaster / Wall	Non-Friction / Intact	HR, OSHA, A Encp, CA
48	Gray / Wood / Baseboard	Non-Friction / Intact	HR, OSHA
49	Gray / Wood / Chair Rail	Non-Friction / Intact	HR, OSHA
50	Gray / Wood / Door	Friction / Intact	HR, OSHA
51	Gray / Wood / Door Casing	Non-Friction / Intact	HR, OSHA
52	White / Wood / Baseboard	Non-Friction / Intact	HR, OSHA, A Encp, CA
53	White / Wood / Chair Rail	Non-Friction / Intact	HR, OSHA, A Encp, CA
54	White / Plaster / Ceiling	Non-Friction / Intact	HR, OSHA, A Encp, CA
55	White / Wood / Window Sill	Non-Friction / Intact	HR, OSHA, A Encp, CA
56	White / Sheetrock / Wall	Non-Friction / Intact	HR, OSHA
57	BLACK / Metal / Hand Rail	Friction / Intact	HR, OSHA
58	Lt. Green / Concrete / Baseboard	Non-Friction / Intact	HR, OSHA
59	LT. Green / Metal / Door	Friction / Intact	HR, OSHA
60	Lt. Green / Metal / Door Casing	Non-Friction / Intact	HR, OSHA
61	White / Metal / Hand Rail	Friction / Fair	HR, OSHA, A Encp
62	Yellow / Metal / Hand Rail	Friction / Fair	HR, OSHA, A Encp
63	DK. Gray / Brick / Wall	Non-Friction / Fair	HR, OSHA, A Encp
64	Yellow / Metal / Duct	Non-Friction / Fair	HR, OSHA, A Encp
65	LT. Green / Wood / Door	Friction / Fair	HR, OSHA, A Encp
66	DK. Green / Brick / Column	Non-Friction / Fair	HR, OSHA, A Encp
67	Yellow / Metal / PIPE	Non-Friction / Intact	HR, OSHA, A Encp

A1 / H-200 HAZMAT PLAN - SECOND LEVEL
SCALE: 1/8" = 1'-0"

8 4 0 8 16
SCALE: 1/8"=1'-0"

PLAN NORTH

US Army Corps of Engineers ®

MARK	DESCRIPTION	DATE
1	AMENDMENT 7	5/21/21

ISSUE DATE: 2/11/2021
SOLICITATION NO.: W912DS-19-R-0014
CONTRACT NO.: W912DS-19-C0031
PROJECT NO: 20190494

DESIGNED BY: LRS
DRAWN BY: AT
CHECKED BY: KG
SUBMITTED BY: LRS
SIZE: JASS D

US ARMY CORPS OF ENGINEERS
JACOBS / EWING COLE A Joint Venture

WEST POINT, NY
USMA BUILDING 605 CULLUM HALL RENOVATION

HAZMAT PLAN - SECOND LEVEL

SHEET ID
H-200

RTA SUBMISSION 2/11/2021

GENERAL NOTES

1. THIS DRAWING IS DIAGRAMMATIC AND IS TO BE USED FOR GENERAL INFORMATION AND SAMPLE LOCATIONS.
2. SEE THE SPECIFICATIONS DOCUMENT FOR THE HAZARDOUS MITIGATION PLAN, DIVISION 02 ABATEMENT SPECIFICATIONS 02 82 00, 02 83 00, 02 84 10, AND 02 85 00 AND THE ASBESTOS CONTAINING MATERIALS SURVEY REPORT BY OAK GROUP FROM THE MASON AND HANGER PDR FOR MORE INFORMATION.
3. ACCESSIBLE SPACES WERE SURVEYED FOR SUSPECT ASBESTOS MATERIALS AND LEAD BASED PAINT. WHERE OBSERVED, THE MATERIALS ARE NOTED ON THE PLANS.
4. ALL ASBESTOS AND LEAD BASED PAINT LOCATIONS AND TESTING RESULTS WERE SUPPLIED BY A THIRD PARTY ENTITY. PLEASE REFER TO "FINAL PROJECT DEFINITION REPORT, CULLUM HALL US MILITARY ACADEMY, WEST POINT, NY. 20 MAY 2019" FOR CLARIFICATION OR OTHER ASBESTOS OR LEAD BASED PAINT INFORMATION.

SYMBOL KEY

- DESIGNATION FOR ASBESTOS CONTAINING MATERIALS
- DESIGNATION FOR LEAD BASED PAINT CONTAINING MATERIALS, SEE ARCHITECTURAL DRAWINGS FOR LEVEL OF ABATEMENT.
- CA — DESIGNATION FOR LEAD BASED PAINT CONTAINING MATERIALS REQUIRING COMPLETE ABATEMENT (CA). SEE GENERAL NOTE 4.
- EXIST WALLS, DOORS TO REMAIN (SHOWN SCREENED)
- DEMOLITION WALLS, DOORS TO BE DEMOLISHED (SHOWN DASHED)

ASBESTOS NOTES

1. NOT ALL OF THE ACMS DEPICTED ON THE DRAWINGS WILL REQUIRE ABATEMENT. REFER TO THE ARCHITECTURAL, MECHANICAL, PLUMBING, AND ELECTRICAL DRAWINGS FOR ALL ITEMS THAT WILL REQUIRE REMOVAL.

ASBESTOS SAMPLE SYMBOLS

KEY	MATERIAL	EST. QTY.
A	Fire Doors (Assumed)	
B	Gray 12"x12" Floor Tile	25 SF
C	Black 12"x12" Floor Tile	373 SF
D	Black Tar Paper Under Gray 12"x12" Floor Tile	398 SF

LEAD BASED PAINT NOTES

1. OSHA'S LEAD IN CONSTRUCTION STANDARD APPLIES TO ALL DISTURBANCES OF LEAD BASED PAINT. IN ADDITION, THE CONTRACTOR SHALL USE METHODS TO LIMIT THE AMOUNT OF DUST PRODUCED DURING DEMOLITION OF ANY WALL AND CEILINGS CONTAINING LEAD BASED PAINT. ICRA DUST CONTROLS SHALL BE UTILIZED AT ALL TIMES.

LEAD-BASED PAINT SAMPLE KEY

CODE	RECOMMENDATION
HR	It is recommended that these surfaces be periodically observed for chalking, peeling, or cracking. If the surface is chalking, it can be cleaned with a trisodium phosphate and repainted. If the surface is peeling or cracking, it should be repaired or abated.
AR	A strategy of abatement that entails the removal of the building components coated with lead-based paint and installation of new components free of lead-based paint.
A ENCP	"Encapsulant" means a coatingor rigid material that relies on adhesion to a lead-based paint surface and is not mechanically fastened ot the substrate with a 20 year warrantly. "Encapsulation" means a process to make a lead-based paint inaccessible by providing a barrier between the lead-based paint and the environment, where the primary means of attachement for the encapsulant is bonding of a product to the surfce covered either by the product itself of through the use of an adhesive.
A ENCL	"Enclosure" means the installation of a rigid, durable, barrier that is mechanically attached to building components, with all the edges and seams sealed with caulk or other sealant having a design life of at least 20 years.
CA	A process designed whether to permenantly eliminate lead-based paint hazards on a component and includes but is not limited to: The removal of lead-bawed paint and lead-contaminated dust.
OSHA	Any painted surface that has lead content should not be sanded, demolished, or disturbed without the proper engineering controls and work methods. As spelled out under OSHA's CFR Part 1926 Lead Exposure in Construction, Interim Rule. Improper disturbance of any paint with lead content can cause lead to become airborne.
NA	X-Ray Floursecence Spectrometer (XRF) results indicated 0.0 or below, which indictes no lead detected by the XRF Spectrometer.

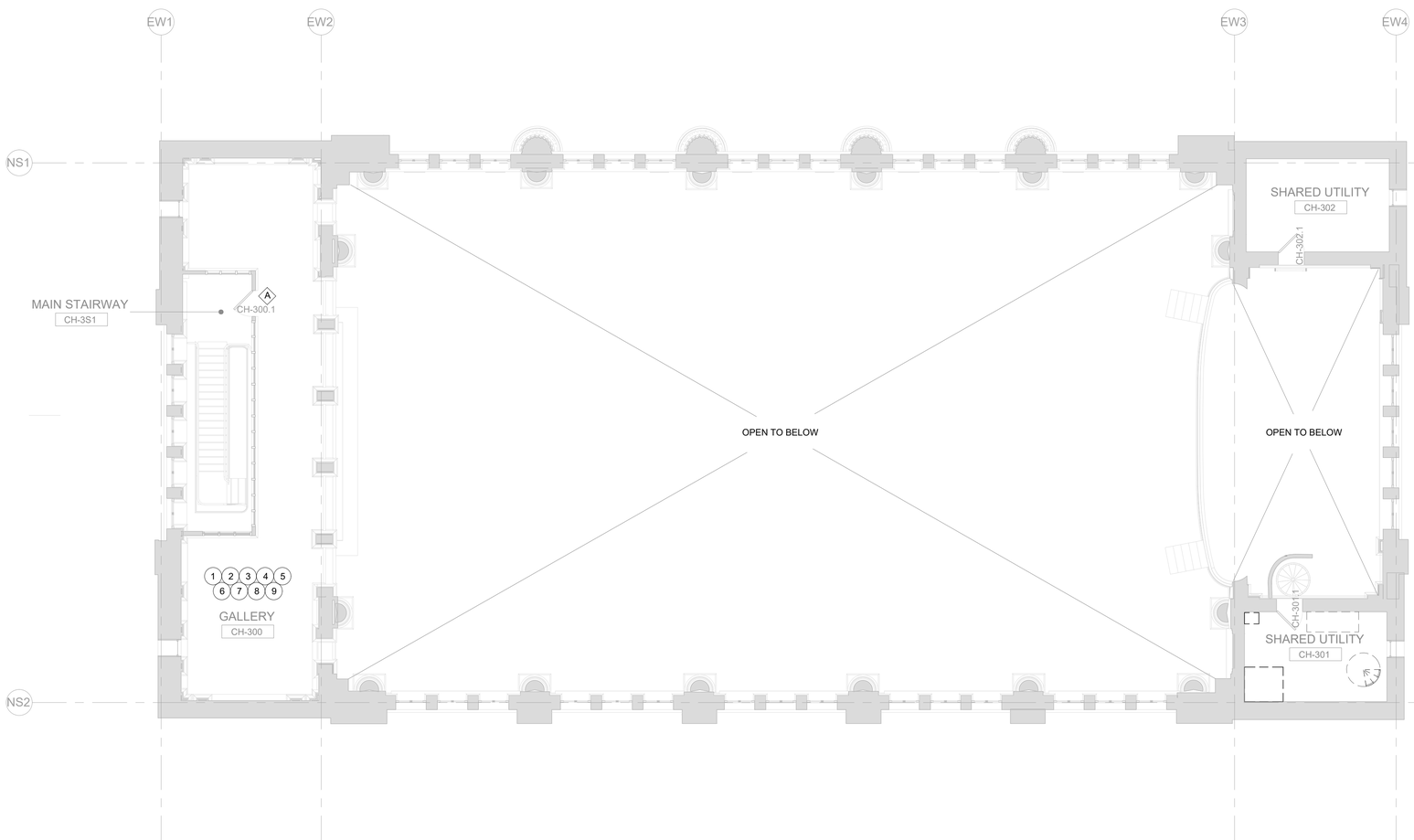

LEAD BASED PAINT SAMPLE SYMBOLS

KEY	COLOR / SUBSTRATE / COMPONENT	SURFACE / CONDITION	RECOMMENDATION CODE
1	Off White / Plaster / Wall	Non-Friction / Fair	HR, OSHA, A Encp
2	Off White / Wood / Chair Rail	Non-Friction / Intact	HR, OSHA
3	Gray / Plaster / Baseboard	Non-Friction / Intact	HR, OSHA
4	Off White / Plaster / Column	Non-Friction / Intact	HR, OSHA
5	BROWN / Plaster / Column	Non-Friction / Intact	HR, OSHA
6	Off White / Plaster / Ceiling	Non-Friction / Intact	HR, OSHA
7	BROWN / Plaster / Picture Rail	Non-Friction / Intact	HR, OSHA
8	BROWN / Plaster / Crown Molding	Non-Friction / Intact	HR, OSHA
9	Off White / Wood / Window Sill	Non-Friction / Intact	HR, OSHA
10	Off White / Wood / Door	Friction / Intact	HR, OSHA
11	Off White / Wood / Door Jamb	Friction / Intact	HR, OSHA
12	White / Wood / Window Casing	Non-Friction / Intact	HR, OSHA, A Encp, CA
13	Green / Concrete / Baseboard	Non-Friction / Intact	HR, OSHA
14	Gray / Metal / Spindle	Non-Friction / Intact	HR, OSHA
15	Gray / Metal / Stair Stringer	Non-Friction / Intact	HR, OSHA
16	Gray / Metal / Wall Cap	Non-Friction / Intact	HR, OSHA
17	Green / Plaster / Column BASE	Non-Friction / Intact	HR, OSHA
18	Green / Plaster / Baseboard	Non-Friction / Intact	HR, OSHA
19	BROWN / Wood / Door	Friction / Intact	HR, OSHA
20	BROWN / Wood / Door Casing	Non-Friction / Intact	HR, OSHA
21	Gray / Concrete / Floor	Friction / Intact	HR, OSHA
22	Gray / Concrete / Stair Tred	Friction / Intact	HR, OSHA
23	DARK Green / Metal / Hand Rail	Friction / Intact	HR, OSHA
24	DARK Green / Metal / Spindle	Non-Friction / Intact	HR, OSHA
25	DARK Green / Metal / Stair Riser	Non-Friction / Intact	HR, OSHA
26	DARK Gray / Metal / Stair Stringer	Non-Friction / Intact	HR, OSHA
27	White / Wood / Door	Friction / Intact	HR, OSHA, A Encp, CA
28	White / Wood / Door Casing	Non-Friction / Intact	HR, OSHA, A Encp, CA
29	Green / Metal / Stair Stringer	Non-Friction / Intact	HR, OSHA
30	Green / Metal / Stair Spindle	Non-Friction / Intact	HR, OSHA
31	Gray / Metal / Heater	Non-Friction / Intact	HR, OSHA
32	DK. Green / Plaster / Baseboard	Non-Friction / Intact	HR, OSHA
33	Off White / Wood / Door Casing	Non-Friction / Intact	HR, OSHA
34	Dk. Green / Plaster / Baseboard	Non-Friction / Intact	HR, OSHA
35	Off White / Plaster / Crown Molding	Non-Friction / Intact	HR, OSHA
36	Off White / Plaster / Baseboards	Non-Friction / Intact	HR, OSHA
37	White / Wood / Wall Molding	Non-Friction / Intact	HR, OSHA
10	Off White / Wood / Door	Friction / Intact	HR, OSHA
33	Off White / Wood / Door Casing	Non-Friction / Intact	HR, OSHA
38	Off White / Wood / Door Jamb	Friction / Intact	HR, OSHA
39	DK. Green / Plaster / Baseboard	Non-Friction / Intact	HR, OSHA
40	Off White / Wood / Pocket Doors	Friction / Intact	HR, OSHA
41	Off White / Wood / Pocket Door Casing	Non-Friction / Intact	HR, OSHA
42	LT. Green / Metal / Stair Spindle	Non-Friction / Intact	HR, OSHA
43	Lt. Green / Metal / Stair Stringer	Non-Friction / Intact	HR, OSHA
44	Lt. Green / Metal / Wall Cap	Non-Friction / Intact	HR, OSHA
45	Lt. Green / Wood / Baseboard	Non-Friction / Intact	HR, OSHA
46	Lt. Green / Wood / Chair Rail	Non-Friction / Intact	HR, OSHA
47	White / Plaster / Wall	Non-Friction / Intact	HR, OSHA, A Encp, CA
48	Gray / Wood / Baseboard	Non-Friction / Intact	HR, OSHA
49	Gray / Wood / Chair Rail	Non-Friction / Intact	HR, OSHA
50	Gray / Wood / Door	Friction / Intact	HR, OSHA
51	Gray / Wood / Door Casing	Non-Friction / Intact	HR, OSHA
52	White / Wood / Baseboard	Non-Friction / Intact	HR, OSHA, A Encp, CA
53	White / Wood / Chair Rail	Non-Friction / Intact	HR, OSHA, A Encp, CA
54	White / Plaster / Ceiling	Non-Friction / Intact	HR, OSHA, A Encp, CA
55	White / Wood / Window Sill	Non-Friction / Intact	HR, OSHA, A Encp, CA
56	White / Sheetrock / Wall	Non-Friction / Intact	HR, OSHA
57	BLACK / Metal / Hand Rail	Friction / Intact	HR, OSHA
58	Lt. Green / Concrete / Baseboard	Non-Friction / Intact	HR, OSHA
59	LT. Green / Metal / Door	Friction / Intact	HR, OSHA
60	Lt. Green / Metal / Door Casing	Non-Friction / Intact	HR, OSHA
61	White / Metal / Hand Rail	Friction / Fair	HR, OSHA, A Encp
62	Yellow / Metal / Hand Rail	Friction / Fair	HR, OSHA, A Encp
63	DK. Gray / Brick / Wall	Non-Friction / Fair	HR, OSHA, A Encp
64	Yellow / Metal / Duct	Non-Friction / Fair	HR, OSHA, A Encp
65	LT. Green / Wood / Door	Friction / Fair	HR, OSHA, A Encp
66	DK. Green / Brick / Column	Non-Friction / Fair	HR, OSHA, A Encp
67	Yellow / Metal / PIPE	Non-Friction / Intact	HR, OSHA, A Encp

A1 H-300 HAZMAT PLAN - THIRD LEVEL
SCALE: 1/8" = 1'-0"

8 4 0 8 16
SCALE: 1/8"=1'-0"

PLAN NORTH

US Army Corps of Engineers ®

MARK	DESCRIPTION	DATE
1	AMENDMENT 7	5/21/21

DESIGNED BY:
DRAWN BY: AT
CHECKED BY: KG
SUBMITTED BY: LRS
SIZE: ANSI D
ISSUE DATE: 2/11/2021
SOLICITATION NO.: W912DS-19-R-0014
CONTRACT NO.: W912DS-19-C0031
PROJECT NO: 20190494

US ARMY CORPS OF ENGINEERS

JACOBS / EWING COLE A Joint Venture

WEST POINT, NY
USMA BUILDING 605 CULLUM HALL RENOVATION

HAZMAT PLAN - THIRD FLOOR

SHEET ID
H-300

RTA SUBMISSION 2/11/2021

ABBREVIATIONS

A.B.	ANCHOR BOLT	INCL.	INCLUSIVE
ACI	AMERICAN CONCRETE INSTITUTE	INFO.	INFORMATION
		INS.	INSULATION
ADJMT.	ADJUSTMENT	JST.	JOIST
ADDTL.	ADDITIONAL	JT.	JOINT
ADH.	ADHESIVE	K.	KIPS (1000 LB.)
ANCH.	ANCHOR	KSF	KIPS PER SQUARE FOOT
ARCH.	ARCHITECTURAL	KSI	KIPS PER SQUARE INCH
ASTM	AMERICAN SOCIETY FOR TESTING AND MATERIALS	L.L.	LIVE LOAD
		LLH	LONG LEG HORIZONTAL
BLDG.	BUILDING	LLV	LONG LEG VERTICAL
BLKG.	BLOCKING	LSH	LONG SIDE HORIZONTAL
BM.	BEAM	LSV	LONG SIDE VERTICAL
BOT.	BOTTOM	L.P.	LOW POINT
BPL.	BASEPLATE	LW	LIGHT WEIGHT
BRCG.	BRACING	MAS.	MASONRY
BRG.	BEARING	MAX.	MAXIMUM
BRK.	BRICK	MECH.	MECHANICAL
BRKT.	BRACKET	MTL.	METAL
B.S.	BOTH SIDE (USED W/ REINF)	MFR.	MANUFACTURER
B.S.	BRICK SHELF	MIN.	MINIMUM
BSMT.	BASEMENT	N.A.	NEUTRAL AXIS
BTWN.	BETWEEN	NO.	NUMBER
B.W.	BOTH WAYS	N.S.	NEAR SIDE
C&C	COMPONENTS & CLADDING	N-S	NORTH-SOUTH
CANT.	CANTILEVER	NW	NORMAL WEIGHT
C.B.	CONCRETE BEAM	O.C.	ON CENTER
CFMF	COLD FORMED METAL FRAMING	O.F.	OUTSIDE FACE
C.J.	CONTROL JOINT	OPNG.	OPENING
CL.	CENTERLINE	OPP.HD.	OPPOSITE HAND
CLR.	CLEAR	ORIENT.	ORIENTATION
CMU	CONCRETE MASONRY UNIT	PC.	PRECAST
COL.	COLUMN	P.C.	PRECAST CONCRETE
COMP.	COMPRESSIBLE	PCF	POUNDS PER CUBIC FOOT
CONC.	CONCRETE	PED.	PEDESTAL
CONN.	CONNECTION	PENET.	PENETRATION
CONST.	CONSTRUCTION	PERIM.	PERIMETER
CONT.	CONTINUOUS	PL.	PLATE
CONTR.	CONTRACTOR	PLUMB.	PLUMBING
COORD.	COORDINATE	PW.	PLYWOOD
COR	CONTRACTING OFFICER'S REPRESENTATIVE	PNL.	PANEL
		PREM.	PREMOLDED
CR.	CRIPPLED	PSF	POUNDS PER SQUARE FOOT
DBL.	DOUBLE	PSI	POUNDS PER SQUARE INCH
DET.	DETAIL	REINF.	REINFORCING
DEV.	DEVELOP, DEVELOPMENT	REQD.	REQUIRED
DIAG.	DIAGONAL	RET.	RETAINING
DIST.	DISTANCE	REV.	REVISION
DISCONT.	DISCONTINUOUS	RF.	ROOF
DK.	DECK	R.O.	ROUGH OPENING
D.L.	DEAD LOAD	SCHED.	SCHEDULE
DN.	DOWN	SECT.	SECTION
DWG.	DRAWING	SIM	SIMILAR
DWL.	DOWEL	SL.	SLOTTED
EA.	EACH	SPAN.	SPANDREL
E. E.	EACH END	SPEC.	SPECIFICATIONS
E.F.	EACH FACE	STAGG.	STAGGERED
EL.	ELEVATION	STD.	STANDARD
ELEC.	ELECTRICAL	STIFF.	STIFFENER
ELEV.	ELEVATOR	STL.	STEEL
EMB.	EMBED, EMBEDMENT	STRU.	STRUCTURAL
E.O.R.	ENGINEER OF RECORD	SUPP.	SUPPORT
EQ.	EQUAL	T.&B.	TOP AND BOTTOM
ETC.	ETCETERA	TEMP.	TEMPORARY
E.W.	EACH WAY	THK.	THICK, THICKNESS
E-W	EAST-WEST	T.O.C.	TOP OF CONCRETE
EXIST., (E)	EXISTING	TOL.	TOLERANCE
EXP.	EXPANSION	T.O.P.	TOP OF PEDESTAL
EXP. JT.	EXPANSION JOINT	T.O.S.	TOP OF STEEL
FCTD.	FACTORED	T.O.W.	TOP OF WALL
FDN.	FOUNDATION	TYP.	TYPICAL
FIN.	FINISH	U.N.O.	UNLESS NOTED OTHERWISE
FLG.	FLANGE	V.	VERTICAL (USED W/ REINF.)
FLR.	FLOOR	VERT.	VERTICAL
FRMG.	FRAMING	V.I.F.	VERIFY IN FIELD
F.S.	FAR SIDE	WD.	WOOD
FTG.	FOOTING	W.P.	WORK POINT
GA.	GAGE	W.S.	WATER STOP
GALV.	GALVANIZED	WWF	WELDED WIRE FABRIC
GB	GRADE BEAM		
G.C.	GENERAL CONTRACTOR		
GRAN.	GRANULAR		
H.	HORIZONTAL (USED W/ REINF.)		
HK.	HOOK		
HORIZ.	HORIZONTAL		
H.P.	HIGH POINT		
I.E.	INVERT ELEVATION		
I.F.	INSIDE FACE		

GENERAL NOTES

GENERAL NOTES

1. VERIFY ALL EXISTING CONDITIONS AND DIMENSIONS AT THE SITE BEFORE ORDERING ANY MATERIALS AND BEGINNING ANY WORK. FIELD SURVEY AND ESTABLISH THE EXISTING BUILDING DIMENSIONS WHERE NEW CONSTRUCTION ABUTS EXISTING BUILDINGS. THIS FIELD SURVEY MUST INCLUDE, BUT MUST NOT BE LIMITED TO THE FOLLOWING: DIMENSIONS OF EXISTING BUILDING FACE INCLUDING ALL FENESTRATIONS, PROJECTIONS, ETC, PLUMBNESS OF WALLS, FLOOR AND ROOF ELEVATIONS, AND ALL OTHER PERTINENT DIMENSIONS. SUBMIT THE SURVEY TO THE COR FOR INFORMATION ONLY AND MAKE THE SURVEY AVAILABLE TO SUBCONTRACTORS.
2. THE CONTRACTOR MUST BE RESPONSIBLE FOR ALL WORK AND COORDINATION INVOLVED TO PROVIDE ALL OPENINGS SHOWN ON THE ARCHITECTURAL, STRUCTURAL, MECHANICAL, PLUMBING, AND ELECTRICAL DRAWINGS. PROVIDE FRAMING AND ALL CONNECTIONS AND COORDINATE THE SIZE AND LOCATION OF ALL OPENINGS. (NOTE - NOT ALL OPENINGS ARE SHOWN ON THE STRUCTURAL DRAWINGS.)
3. ALL CONTRACTORS MUST BE RESPONSIBLE TO ENSURE PROPER STORAGE OF MATERIAL IS MAINTAINED SO AS NOT TO CAUSE OVERLOADING OF THE EXISTING OR NEW STRUCTURE DURING PERFORMANCE OF THIS WORK. GENERAL CONTRACTOR TO COORDINATE.
4. ALL CONTRACTORS MUST VERIFY AND/OR ESTABLISH ALL EXISTING CONDITIONS AND DIMENSIONS AT THE SITE BEFORE ORDERING ANY MATERIAL AND COMMENCEMENT OF ANY WORK.
5. IF THE EXISTING CONDITIONS DO NOT PERMIT THE INSTALLATION OF THE WORK IN ACCORDANCE WITH THE DETAILS AS SHOWN, NOTIFY THE COR IMMEDIATELY AND PROVIDE A SKETCH OF THE CONDITION WITH A PROPOSED MODIFICATION TO THE DETAILS GIVEN ON THE CONTRACT DOCUMENTS. THE FINAL INSTALLATION MUST BE DONE AS REQUIRED BY THE ARCHITECT AS DIRECTED BY THE COR.
6. WHERE ALTERATIONS INVOLVE THE EXISTING SUPPORTING STRUCTURE, PROVIDE ALL SHORING, BRACING, GUYS AND PROTECTION REQUIRED TO ENSURE THE STRUCTURAL INTEGRITY OF THE EXISTING BUILDING.
7. COORDINATE ALL RELATED TRADE ACTIVITY REGARDING SHUT DOWNS, RE-ROUTING, TEMPORARY INSTALLATION, ETC. NECESSARY FOR THIS INSTALLATION WITH THE COR.
8. ESTABLISH SPECIFIC MEANS AND METHODS FOR INSTALLATION AND COORDINATE THE WORK FOR ALL CONTRACTORS AND COMPLY WITH THE GOVERNMENT'S GENERAL REQUIREMENTS.
9. COORDINATE THE LOCATION AND DIMENSIONS OF ELEVATOR PITS, WALLS, POSTS, HOISTWAY AND OPENINGS WITH ELEVATOR MANUFACTURER.
10. COORDINATE WITH EQUIPMENT MANUFACTURERS FOR EXACT SIZE, LOCATION, ETC. OF PITS, CAST-IN ITEMS, WALLS, ETC. BEFORE LAYOUT, ORDERING ANY MATERIAL OR COMMENCEMENT OF ANY WORK.

FOUNDATION NOTES

1. FOUNDATIONS LOCATED OUTSIDE THE FOOTPRINT OF THE BUILDING MUST BEAR ON SUBGRADE HAVING A MINIMUM ALLOWABLE BEARING PRESSURE OF 3,000 PSF. FOUNDATIONS LOCATED WITHIN THE FOOTPRINT OF THE BUILDING MUST BEAR ON BEDROCK HAVING A MINIMUM ALLOWABLE BEARING PRESSURE OF 10,000 PSF. BEARING CAPACITY MUST BE VERIFIED IN THE FIELD BY A LICENSED GEOTECHNICAL INSPECTOR HIRED BY THE CONTRACTOR. ROCK RECEIVING FOUNDATIONS MUST BE SOUND, FREE OF SHATTERED OR SPLINTERED FRAGMENTS, AND APPROXIMATELY LEVEL. CONCRETE-ROCK SLIDING COEFFICIENT OF 0.5 SHALL BE USED.
2. BASED ON EXISTING BUILDING INFORMATION AND GEOTECHNICAL INVESTIGATION, IT IS ASSUMED THAT EXISTING BUILDING FOUNDATIONS BEAR ON BEDROCK. CONTRACTOR MUST FIELD VERIFY THIS PRESUMPTION. IF ROCK IS NOT ENCOUNTERED WHEN EXCAVATIONS REACH THE BOTTOM ELEVATION OF EXISTING ADJACENT FOOTINGS, THE EXISTING FOOTINGS MUST BE REINFORCED BY AN UNDERPINNING METHOD, TO A DEPTH DETERMINED BY THE GEOTECHNICAL ENGINEER, NECESSARY TO PROVIDE THE DESIGN BEARING CAPACITY OF 10,000 PSF. IN THE EVENT THIS CONDITION IS FOUND, THE CONTRACTOR SHALL FOLLOW THE CONTRACT REQUIREMENTS FOR SEEKING DIRECTION AND RESOLUTION OF THIS CONDITION AND ANY ASSOCIATED REMEDIES. CONTRACTOR IS NOT PERMITTED TO EXCAVATE LOWER THAN EXISTING FOOTINGS OR PROCEEDING FURTHER WITHOUT APPROVAL OF CONTRACTING OFFICER.
3. ALL COLUMN FOOTINGS MUST BE CENTERED ON THE COLUMN CENTERLINES, UNLESS OTHERWISE NOTED.
4. PROVIDE DEWATERING DURING EARTHWORK OPERATIONS INCLUDING PREVENTIVE MEASURES RELATED TO EXCAVATION STABILITY. DEWATER TO PREVENT SLOUGHING OF EXCAVATION SLOPES AND WALLS, BOILS, UPLIFT, AND HEAVE IN THE EXCAVATION AND TO ELIMINATE INTERFERENCE WITH ORDERLY PROGRESS OF CONSTRUCTION. CONTROL MEASURES MUST BE TAKEN TO MAINTAIN THE INTEGRITY OF THE IN SITU MATERIAL. THE DEWATERING SYSTEM MUST BE CONTINUOUSLY OPERATED UNTIL CONSTRUCTION WORK BELOW EXISTING WATER LEVEL IS COMPLETE. CONTRACTOR TO SUBMIT WEEKLY PERFORMANCE RECORDS. CARE MUST BE TAKEN TO IMMEDIATELY CONTROL ANY WATER SEEPAGE TO PREVENT SATURATION OF THE SUBGRADE.
5. BOTTOM OF FOOTING GIVEN IN THE FOUNDATION PLAN MARKED THUS (...) ARE APPROXIMATE AND MUST BE VERIFIED IN THE FIELD IN ACCORDANCE WITH NOTES ABOVE. IT IS ASSUMED THAT EXISTING BUILDING FOOTINGS BEAR ON BEDROCK. IF EXCAVATION OF A NEW FOOTING REACHES THE BOTTOM OF AN ADJACENT EXISTING FOOTING AND NO ROCK IS ENCOUNTERED, STOP EXCAVATING AND NOTIFY THE COR IMMEDIATELY.
6. ALL EXISTING UNDERGROUND UTILITIES IN THE AREA OF THE NEW CONSTRUCTION MUST BE RELOCATED UNLESS OTHERWISE NOTED ON THE DRAWINGS BEFORE ANY NEW FOUNDATION WORK IS STARTED. PROVIDE PROTECTION FOR NEW AND EXISTING UTILITIES, ACCESS HOLES, CATCH BASINS, ETC, USING SHEETING AND SHORING DESIGNED BY THE CONTRACTOR'S DELEGATED REGISTERED PROFESSIONAL ENGINEER LICENSED IN THE STATE OF NEW YORK.
7. COORDINATE ALL FOUNDATION WORK WITH ALL UNDERGROUND UTILITIES. DO NOT PLACE UTILITIES BELOW SPREAD FOOTINGS UNLESS APPROVED BY THE ARCHITECT. IF ANY SUCH CONDITION OCCURS, THE CONTRACTOR MUST NOTIFY THE COR AND DROP THE BOTTOM OF FOOTING.
8. COORDINATE ALL FOUNDATION WORK WITH ALL UNDERGROUND UTILITIES. EXTREME CARE MUST BE TAKEN DURING EXCAVATION AND CONSTRUCTION OF NEW FOUNDATION WORK SO AS NOT TO DISTURB THE EXISTING CONSTRUCTION AND UTILITIES.
9. BACKFILL AGAINST WALLS MUST FOLLOW THE CRITERIA NOTED. AS A MINIMUM, WALLS MUST HAVE REACHED THEIR 28 DAY DESIGN STRENGTH OR BE IN PLACE 14 DAYS, WHICHEVER IS LONGER. EQUIPMENT USED TO COMPACT THE BACKFILL WILL BE SUCH AS TO LIMIT PRESSURES ON THE WALLS TO THE DESIGN VALUES AND TO BE REVIEWED AND ACCEPTED BY THE GEOTECHNICAL ENGINEER. BACKFILL EVENLY ON BOTH SIDES OF FOUNDATION WALLS FOR GREATEST HEIGHT POSSIBLE.
10. PROVIDE STANDARD STEEL PIPE SLEEVES FOR PIPES PASSING THROUGH CONCRETE WALLS AND NEATLY CORED HOLES A MINIMUM OF ONE PIPE SIZE LARGER THAN PIPE THROUGH EXISTING CONCRETE WALLS WHERE SHOWN ON THE DRAWINGS. COORDINATE CORED HOLES WITH SEALANT, ETC., REQUIREMENTS WITH RELATED SPECIFICATIONS. SEE TYPICAL DETAIL ON DRAWING S-501.
11. WHERE EXCAVATION FOR UTILITY TRENCHES IS LOWER THAN AND CLOSER THAN A 1.5H:1V SLOPE TO THE BOTTOM OF A NEW OR EXISTING COLUMN OR WALL FOOTING, BACKFILL THE EXCAVATION WITH LEAN MIX CONCRETE. TOP OF FILL TO BE ON A 1.5H:1V SLOPE FROM BOTTOM OF ADJACENT FOUNDATIONS.
12. FOUNDATION DESIGN IS BASED ON THE GEOTECHNICAL REPORT BY TERRACON CONSULTANTS - GEOCONCEPTS ENGINEERING, INC. DATED JUNE 16, 2020 (& OCTOBER 26, 2020 ADDENDUM).

    TERRACON CONSULTANTS-GEOCONCEPTS ENGINEERING, INC.
    19955 HIGHLAND VISTA DRIVE
    SUITE 170
    ASHBURN, VA 20147

    A COPY OF THE SOILS AND FOUNDATION INVESTIGATION ANALYSIS REPORT IS INCLUDED IN THE SPECIFICATION FOR INFORMATION ONLY.
13. FOR ADDITIONAL REQUIREMENTS SEE TYPICAL DETAILS AND THE SPECIFICATIONS.

CONCRETE NOTES

1. CONCRETE MUST HAVE THE FOLLOWING MINIMUM COMPRESSIVE STRENGTH AT 28 DAYS:

INTERIOR FOUNDATIONS, PIERS AND PEDESTALS	4000 PSI
EXTERIOR SLAB ON GRADE	4500 PSI
INTERIOR SLAB ON GRADE (NOTED S1 IN PLAN)	4000 PSI
INTERIOR SLAB ON GRADE (NOTED S2 IN PLAN)	3000 PSI
LIGHTWEIGHT SLAB ON METAL DECK	3000 PSI
NORMAL WEIGHT SLAB ON METAL DECK	3500 PSI
EXTERIOR EQUIPMENT PADS	4500 PSI
EXTERIOR CONCRETE AND FOUNDATIONS	4500 PSI
TERRACE LIGHTWEIGHT SLAB ON METAL DECK	4500 PSI
EXTERIOR LIGHTWEIGHT TOPPING SLAB	4500 PSI
ALL CONCRETE EXPOSED TO FREEZE-THAW CONDITIONS	4500 PSI
ALL OTHER CONCRETE	4000 PSI

2. REINFORCING TO BE ASTM A615 GRADE 60. ALL MESH SHALL BE ASTM A1064. ALL REINFORCING STEEL PLACED IN CONCRETE LOCATED WITHIN OR BELOW THE WATER TABLE MUST BE EPOXY COATED.
3. PROVIDE SYNTHETIC POLYPROPYLENE FIBERS (FIBERMESH) IN ALL CONCRETE SLABS ON GRADE AND ELEVATED CONCRETE SLABS. FIBERS WILL CONFORM TO ASTM C1116, TYPE III AND ICC ES AC32 SECTIONS 3.1.1 AND 3.1.2.
4. ALL CONCRETE WORK MUST BE CURED FOR A MINIMUM OF 7 DAYS IN ACCORDANCE WITH ACI STANDARDS.
5. CONTRACTOR MUST VERIFY THE DIMENSIONS OF AND INSTALL IN THE FORMS ALL SLOTS, SLEEVES, ANCHOR BOLTS, MASONRY ANCHORS, POCKETS, ETC. AS REQUIRED FOR OTHER TRADES.
6. SEE MECHANICAL AND ELECTRICAL DRAWINGS FOR CONCRETE EQUIPMENT PADS AND FOUNDATIONS REQUIRED.
7. ALL SHORING AND/OR RESHORING FOR SUPPORTED CONCRETE SLABS MUST BE LEFT IN PLACE UNTIL THE CONCRETE HAS REACHED ITS 28 DAY STRENGTH AND A MINIMUM OF 14 DAYS.
8. SEE SECTIONS AND DETAILS FOR ALL EQUIPMENT OPENINGS, DEPRESSIONS, ETC. CONTRACTOR MUST COORDINATE EQUIPMENT REQUIREMENTS WITH ARCHITECTURAL, MECHANICAL, ELECTRICAL, AND PLUMBING CONTRACTORS.
9. FOR ADDITIONAL REQUIREMENTS, SEE TYPICAL DETAILS AND THE SPECIFICATIONS.

STRUCTURAL STEEL NOTES

1. STRUCTURAL STEEL MUST CONFORM TO THE FOLLOWING ASTM SPECIFICATIONS.

WIDE FLANGE AND WT SHAPES	ASTM A992/A992M GRADE 50
BASE PLATES, COLUMN CAPS, MOMENT PLATES, GUSSET PLATES, WEB PLATES, AND SPLICE PLATES	ASTM A572/A572M GRADE 50
HOLLOW STRUCTURAL STEEL MEMBERS	ASTM A500/A500M GRADE B
STEEL PIPES	ASTM A53/A53M GRADE B
ANGLES, CHANNELS, AND PLATES	ASTM A36/A36M

2. VERIFY IN THE FIELD, BY A SURVEY, ALL EXISTING CONDITIONS CONNECTED WITH STRUCTURAL STEEL WORK INCLUDING ANCHOR BOLT LOCATIONS PRIOR TO ORDERING ANY MATERIAL OR COMMENCEMENT OF ANY WORK.
3. PROVIDE SATISFACTORY BRACING OF THE EXISTING AND NEW STEEL FRAME UNTIL ALL NEW FRAMING AND THE METAL DECK IS ERECTED AND FINAL CONNECTIONS ARE COMPLETE AND THE CONCRETE SLABS ON METAL DECK ARE PLACED.
4. ALL STRUCTURAL STEEL DIRECTLY EXPOSED TO THE WEATHER MUST BE HOT DIPPED GALVANIZED AND TOUCHED UP WITH TWO COATS OF HIGH SOLIDS ZINC RICH PRIMER WHERE ABRADED OR AFTER WELDING (SEE SPECIFICATIONS).
5. MAIN SUPPORT MEMBERS FOR THE METAL DECK ARE SHOWN ON THE CONTRACT DRAWINGS. PROVIDE ADDITIONAL SECONDARY FRAMING AS REQUIRED AT NO ADDITIONAL COST TO THE GOVERNMENT.

WHERE WELDING STAINLESS STEEL COMPONENTS, CONTRACTOR MUST COMPLY WITH REQUIREMENTS OF AWS D1.6. WELDER QUALIFICATIONS FOR STAINLESS STEEL ARE REQUIRED.

6. BEAM TO BEAM AND/OR BEAM TO COLUMN CONNECTIONS MARKED Mc MUST BE DETAILED TO DEVELOP FULL MOMENT CAPACITY AT THE CONNECTION IN ADDITION TO STANDARD SHEAR CONNECTION. THESE MOMENT CONNECTIONS ARE TO BE MADE BY FULL PENETRATION WELDS OF BOTH BEAM FLANGES. COORDINATE THESE DETAILS WITH OTHER FRAMING ELEMENTS AS REQUIRED.
7. SEQUENCE OF ERECTION FOR STRUCTURAL STEEL TO BE COORDINATED AS REQUIRED FOR AREAS SUPPORTED BY CANTILEVERS. ALL MOMENT CONNECTIONS AND/OR OTHER CONNECTIONS FOR CANTILEVERED FRAMING MUST HAVE TEMPORARY BRACING AND SUPPORT OF CANTILEVER FRAMING UNTIL ALL FINAL CONNECTIONS ARE COMPLETED AND INSPECTED BY THE TESTING AND INSPECTION AGENCY, AND THE RESULTS ACCEPTED PRIOR TO ERECTING FRAMING SUPPORTED BY THE CANTILEVER ENDS.
8. ANY FIELD WELDING TO ANY EXISTING THIN MEMBER MUST BE PERFORMED WITH EXTREME CARE SO AS TO AVOID EXCESSIVE DAMAGE TO THE BASE METAL.
9. EQUALLY SPACE BEAMS BETWEEN COLUMNS/GIRDERS UNLESS OTHERWISE NOTED.
10. FOR ADDITIONAL REQUIREMENTS, SEE TYPICAL DETAILS AND THE SPECIFICATIONS.

METAL DECK NOTES

1. METAL DECK MUST CONFORM TO THE REQUIREMENTS OF THE STEEL DECK INSTITUTE (SDI).
2. COMPOSITE METAL FLOOR DECK SUPPORTING LIGHT WEIGHT CONCRETE SLAB MUST BE CONTINUOUS OVER A MINIMUM OF TWO OR MORE SPANS UNLESS INDICATED OTHERWISE.
3. FOR ADDITIONAL INFORMATION SEE THE SPECIFICATIONS.

STRUCTURAL DRAWING INDEX

		100% SET 12/22/2020	RTA SET 02/11/2021	AMENDMENT 1 04/07/2021 (1)	AMENDMENT 1 04/07/2021 (2)
S-001	STRUCTURAL NOTES AND INDEX SHEET	X	X	X	X
S-002	STRUCTURAL NOTES	X	X		
S-003	WIND AND LIVE LOAD DIAGRAMS	X	X		
SD-100	LEVEL B3 / FOUNDATION DEMOLITION PLAN	X	X	X	
SD-101	LEVEL B2 STRUCTURAL DEMOLITION PLAN	X	X		
SD-102	LEVEL B1 STRUCTURAL DEMOLITION PLAN	X	X		
SD-110	LEVEL 1 STRUCTURAL DEMOLITION PLAN	X	X		
SD-120	LEVEL 2 STRUCTURAL DEMOLITION PLAN	X	X		
SD-130	ATTIC LEVEL STRUCTURAL DEMOLITION PLAN	X	X		
S-100	LEVEL B3 + B2 ARCHIVE / FOUNDATION PLAN	X	X		
S-100.1	UNDERSLAB DRAINAGE PLAN	X	X		
S-101	LEVEL B2 FLOOR FRAMING PLAN	X	X		
S-102	LEVEL B1 FLOOR FRAMING PLAN	X	X		X
S-110	LEVEL 1 FLOOR FRAMING PLAN	X	X		
S-120	LEVEL 2 FLOOR AND STAGE FRAMING PLAN	X	X		
S-130	ATTIC LEVEL FRAMING PLANS	X	X	X	
S-140	ROOF FRAMING PLAN AND ADD ALT NO. 1 ROOF REPLACEMENT	X	X		
S-301	SECTIONS	X	X		
S-302	SECTIONS	X	X		X
S-303	SECTIONS	X	X		
S-304	SECTIONS	X	X		
S-305	SECTIONS	X	X		
S-306	SECTIONS	X	X		
S-307	SECTIONS	X	X		
S-401	BEARING WALL ELEVATIONS	X	X		
S-402	BEARING WALL ELEVATIONS	X	X		
S-403	BEARING WALL ELEVATIONS	X	X		
S-404	SCREEN WALL ELEVATIONS	X	X		
S-501	TYPICAL DETAILS	X	X		
S-502	TYPICAL DETAILS	X	X		
S-503	TYPICAL DETAILS	X	X		
S-504	TYPICAL DETAILS	X	X		
S-601	COLUMN SCHEDULE AND DETAILS	X	X	X	

DESIGN CRITERIA UFC 3-301-01 / ASCE 7-16 / IBC 2018

FLOOR DESIGN LIVE LOADS (SEE DIAGRAMS ON S-003)

CATWALKS / DUNNAGE PLATFORMS (AROUND EQUIPMENT)	40 PSF
OFFICE PLUS PARTITIONS	50 PSF+20 PSF
CORRIDOR	80 PSF
LIBRARY STACK ROOMS	150 PSF
BALCONY / TERRACE	100 PSF
MECHANICAL / ELECTRICAL ROOMS (TYPICAL)	150 PSF*
MECHANICAL / ELECTRICAL ROOMS (HEAVY)	250 PSF*
STAIRS	100 PSF
HIGH DENSITY STORAGE	300 PSF
ASSEMBLY AREAS	100 PSF
BALLROOM STAGE	150 PSF

*LIVE LOADS INCLUDE EQUIPMENT WEIGHT. LOCALIZED PRESSURES BENEATH EQUIPMENT MAY EXCEED THE STATED LIVE LOAD, BUT THE OVERALL FRAMING SYSTEM IS ADEQUATE.

COLLATERAL LOADS (SUPERIMPOSED DEAD LOADS)*

BALCONY/TERRACE	125 PSF
LIBRARY STACK ROOMS	15 PSF
EXISTING FLOORS	15 PSF
CATWALKS	5 PSF
DUNNAGE PLATFORMS	15 PSF
MECHANICAL / ELECTRICAL ROOMS	20 PSF
HIGH DENSITY STORAGE	35 PSF
ASSEMBLY AREAS	15 PSF

*COLLATERAL LOADS DO NOT INCLUDE SELF WEIGHT OF SLAB, DECK, OR FRAMING ELEMENTS.

ROOF DESIGN LIVE LOADS

ROOF	20 PSF

DEFLECTION CRITERIA

DEAD LOAD: EXISTING BUILDING DEAD LOAD DEFLECTIONS HAVE BEEN FULLY EXPERIENCED AND HAVE NOT BEEN CONSIDERED FOR DESIGN. NEW FLOOR FRAMING IS DESIGNED FOR L/240.
LIVE LOAD: IT IS ASSUMED THAT EXISTING FRAMING WAS DESIGNED FOR LIVE LOAD DEFLECTIONS OF L/360. NEW FLOOR FRAMING IS DESIGNED FOR L/360. HIGH-DENSITY STORAGE COMPONENTS MUST BE COORDINATED WITH THE SCOPE OF WORK FOR THOSE AREAS WHERE THEY ARE TO BE INSTALLED. (1)

SNOW LOADS (CRITERIA IDENTIFIED IN STRUCTURAL LOAD DATA TOOL, HOSTED ON WHOLE BUILDING DESIGN GUIDE WEBSITE (https://www.wbdg.org/additional-resources/tools/ufcsldt))

GROUND SNOW LOAD,	Pg=30 PSF
FLAT ROOF SNOW LOAD (USED FOR DESIGN)	Pf=30 PSF*
MAXIMUM DRIFT LOAD (FOR AREAS OF SNOW BUILD UP)*	80 PSF
SNOW EXPOSURE FACTOR,	Ce=0.9
SNOW LOAD IMPORTANCE FACTOR	I=1.10
THERMAL FACTOR,	Ct=1.00
DEPTH TO FROST	54 INCHES

LATERAL LOADS - WIND (CRITERIA IDENTIFIED IN STRUCTURAL LOAD DATA TOOL, HOSTED ON WHOLE BUILDING DESIGN GUIDE WEBSITE (https://www.wbdg.org/additional-resources/tools/ufcsldt))

WIND LOAD DESIGN PARAMETERS

BASIC WIND SPEED,	V=122 MPH
WIND EXPOSURE	D
INTERNAL PRESSURE COEFFICIENT,	GCpi=±0.18

WIND LOAD ON MAIN WIND FORCE RESISTING SYSTEM (FACTORED) - SEE DIAGRAMS ON S-003
WIND LOADS ON COMPONENTS AND CLADDING (FACTORED) - SEE DIAGRAMS ON S-003

LATERAL LOADS - SEISMIC (CRITERIA IDENTIFIED IN STRUCTURAL LOAD DATA TOOL, HOSTED ON WHOLE BUILDING DESIGN GUIDE WEBSITE (https://www.wbdg.org/additional-resources/tools/ufcsldt))

RISK CATEGORY	III
SEISMIC IMPORTANCE FACTOR,	I=1.25
SHORT PERIOD MAPPED SPECTRAL RESPONSE ACCELERATION	S_S=0.26g
1-SECOND MAPPED SPECTRAL RESPONSE ACCELERATION	S_1=0.06g
LONG PERIOD TRANSITION PERIOD	T_L=6
SITE CLASS	C
SHORT PERIOD SPECTRAL RESPONSE COEFFICIENT	S_{DS}=0.226
1-SECOND PERIOD SPECTRAL RESPONSE COEFFICIENT	S_{D1}=0.059
SEISMIC DESIGN CATEGORY,	B
ANALYSIS PROCEDURE	EQUIV. LAT. FORCE
BASIC SEISMIC-FORCE-RESISTING SYSTEM	ORDINARY PLAIN MASONRY SHEAR WALLS
RESPONSE MODIFICATION FACTOR,	R=1.5

US Army Corps of Engineers ®

MARK	DESCRIPTION	DATE
2	AMENDMENT 7	5/21/2021
1	AMENDMENT 1	4/7/2021
0	RTA SUBMISSION	2/11/2021

DESIGNED BY: KMK
DRAWN BY: ZBW
CHECKED BY: PC
SUBMITTED BY: PC
APPROVED BY: ANSLD
ISSUE DATE: 02/11/2021
SOLICITATION NO.: W912DS-19-R-0014
CONTRACT NO.: W912DS-19-C0031
PROJECT NO: 201904394

US ARMY CORPS OF ENGINEERS

JACOBS / EWING COLE A Joint Venture

WEST POINT, NY
USMA BUILDING 605 CULLUM HALL RENOVATION

STRUCTURAL NOTES AND INDEX SHEET

SHEET ID
S-001

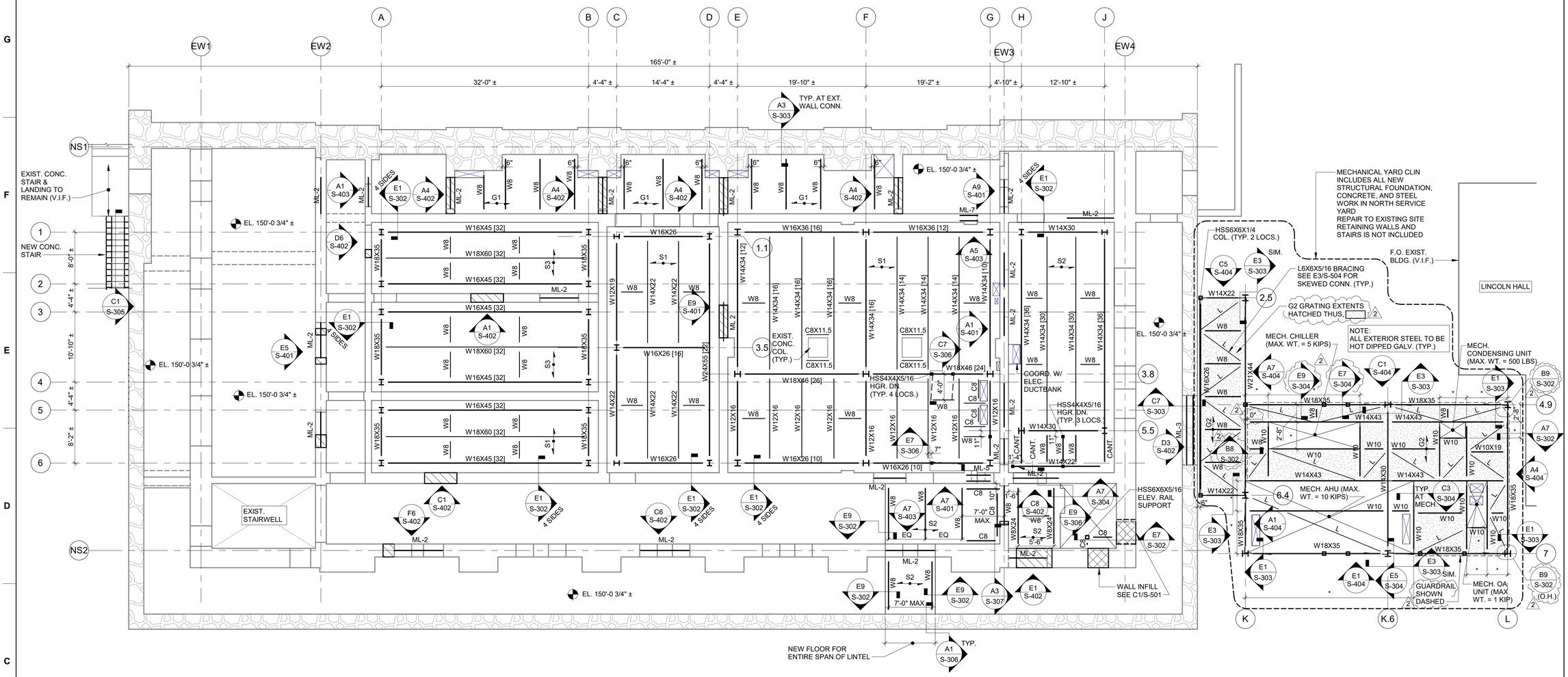

LEVEL B1 FRAMING PLAN

C1 / S-102

1/8" = 1'-0"

LEVEL B1 / FRAMING PLAN LEGEND

- DENOTES NEW OPENING OR EXISTING OPENING TO BE ENLARGED/MODIFIED IN EXISTING WALL.
- DENOTES INFILL EXISTING WALL OPENING SEE DETAIL C1/S-501.
- DENOTES EXISTING STONE WALL.
- S1 — DENOTES SPAN OF 3-1/4 INCH LIGHTWEIGHT CONCRETE SLAB ON 2-INCH BY 20-GAUGE GALVANIZED COMPOSITE METAL DECK. PROVIDE 2" LIGHT WEIGHT CONCRETE TOPPING SLAB ON STRUCTURAL SLAB ON DECK. (TOTAL SLAB THICKNESS = 5-1/4 INCHES STRUCTURAL SLAB + 2" TOPPING SLAB = 7-1/4 INCHES). BOTH SLABS ARE REINFORCED WITH 6x6-W1.4xW1.4 W.W.F. MAINTAIN WELDED WIRE MESH LEVEL TO ACHIEVE MINIMUM COVER. TOP OF TOPPING SLAB EL. 150'-0 3/4"± TO MATCH EXISTING ADJACENT TOP OF FINISHED FLOOR. TOP OF STRUCTURAL SLAB EL. 149'-10 3/4"±. TOP OF STEEL EL. = 149'-5 1/2"±.
- S2 — DENOTES SPAN OF 3-1/4 INCH LIGHTWEIGHT CONCRETE SLAB ON 2-INCH BY 20-GAUGE GALVANIZED COMPOSITE METAL DECK, REINFORCED WITH 6x6-W1.4xW1.4 W.W.F. (TOTAL SLAB THICKNESS = 5-1/4 INCHES). MAINTAIN WELDED WIRE MESH LEVEL TO ACHIEVE MINIMUM COVER. TOP OF SLAB EL. 150'-0 3/4"± TO MATCH EXISTING ADJACENT TOP OF FINISHED FLOOR. TOP OF STEEL EL. = 149'-7 1/2"±.
- S3 — DENOTES SPAN OF 3-1/4 INCH LIGHTWEIGHT CONCRETE SLAB ON 2-INCH BY 20-GAUGE GALVANIZED COMPOSITE METAL DECK, REINFORCED WITH 6x6-W1.4xW1.4 W.W.F. (TOTAL SLAB THICKNESS = 5-1/4 INCHES). MAINTAIN WELDED WIRE MESH LEVEL TO ACHIEVE MINIMUM COVER TOP OF SLAB EL. 149'-10 3/4"± TO MATCH EXISTING ADJACENT TOP OF FINISHED FLOOR. TOP OF STEEL EL. = 149'-5 1/2"±.
- G1 — DENOTES SPAN OF 1-1/2"x3/16" BAR GRATING. SEE ARCHITECTURAL DRAWINGS FOR EXTENTS. TOP OF GRATING EL. 150'-0 3/4"± TO MATCH EXISTING ADJACENT TOP OF FLOOR. TOP OF STEEL EL. 149'-11 1/4"±.
- G2 — DENOTES SPAN OF 1-1/2"x3/16" GALVANIZED BAR GRATING. TOP OF DUNNAGE STEEL EL. 147'-5".
- DENOTES TOP OF EXISTING FINISHED FLOOR ELEVATION.

LEVEL B1 NOTES:

1. TOP OF EXISTING FINISHED FLOOR ELEVATIONS ARE NOTED IN PLAN. EXISTING FLOOR CONSISTS OF STRUCTURAL FLAT CLAY TILE ARCH CONSTRUCTION. THE FLAT TILE ARCH CONSTRUCTION IS ASSUMED TO BE SUPPORTED BY STEEL WIDE FLANGE BEAMS OF UNKNOWN SIZE AND SPACING. A CONCRETE TOPPING SLAB PROVIDES A SUBSTRATE FOR THE FLOORING. BEAMS SPAN TO MULTI-WYTHE BRICK AND STONE BEARING WALLS. EXISTING DEPTH OF STRUCTURE IS ESTIMATED TO BE 16". FLOOR CONSTRUCTION MUST BE VERIFIED IN FIELD. TAKE CARE NOT TO DAMAGE EXISTING CLAY TILE FLOOR CONSTRUCTION OR CONCRETE TOPPING DURING DEMOLITION OR CONSTRUCTION OPERATIONS.

2. TEXT INDICATED THUS [...] IN PLAN INDICATES THE NUMBER OF EQUALLY SPACED 3/4-INCH DIAMETER x 4-INCH TYP. LONG HEADED SHEAR STUDS WELDED TO THE TOP FLANGE ALONG CENTERLINE OF BEAMS. PROVIDE (2) ROWS OF EQUALLY SPACED STUDS CENTERED ON BEAM WHEN QUANTITY IS GREATER THAN ONE STUD PER DECK FLUTE. SEE A5/S-503 FOR MORE INFORMATION.

3. COORDINATE SIZE AND LOCATION OF ALL FLOOR AND WALL OPENINGS WITH ARCHITECTURAL, MECHANICAL, ELECTRICAL, AND PLUMBING DRAWINGS AND TYPICAL DETAILS. FRAME SLAB OPENINGS IN ACCORDANCE WITH TYPICAL DETAIL E7/S-503 AND DETAILS ON S-504. SEE S-401-S-403 AND RELATED SECTIONS FOR LINTELS AT WALL OPENINGS. REFER TO TYPICAL DETAILS FOR LINTELS NOT SPECIFICALLY SHOWN ON WALL ELEVATIONS. NOT ALL OPENINGS ARE SHOWN ON THE STRUCTURAL DRAWINGS.

4. DESIGN BASIS DUNNAGE PLATFORM EQUIPMENT WEIGHTS ARE INDICATED ON PLAN. NOTIFY COR IF ACTUAL EQUIPMENT PURCHASED EXCEEDS THE DESIGN WEIGHTS.

5. COORDINATE ALL DIMENSIONS INDICATED THUS (*) WITH EQUIPMENT MANUFACTURER.

6. W8 DENOTES W8x18. W10 DENOTES W10x33. C8 DENOTES C8x11.5. L DENOTES L6x6x5/16 BRACING.

7. IT IS PERMITTED TO SPLICE STEEL BEAMS AND COLUMNS TO INSTALL FRAMING AND CONSTRUCT NEW FLOOR INFILLS. SEE DETAILS ON DRAWING S-503 FOR MORE INFORMATION.

8. IT IS NOT PERMITTED TO ANCHOR TO, OR SUPPORT FROM, THE EXISTING CLAY TILE ARCH FLOOR CONSTRUCTION. UTILITIES, DUCTWORK, LIGHTING, ARCHITECTURAL ELEMENTS, ETC. MUST BE SUPPORTED BY SECONDARY FRAMING, ATTACHED TO THE EXISTING PRIMARY STEEL FLOOR FRAMING. DESIGN OF SECONDARY FRAMING AND CONNECTIONS TO STEEL MUST BE PERFORMED BY THE CONTRACTOR'S LICENSED ENGINEER. REFER TO TYPICAL DETAIL E5/S-504 AND RELATED SPECIFICATIONS.

9. SEE DRAWINGS S-001 AND S-002 FOR ADDITIONAL NOTES AND LINTEL SCHEDULE, S-601 FOR COLUMN SCHEDULE AND S-501 FOR TYPICAL DETAILS.

SCALE: 1/8"=1'-0"

PLAN NORTH

US Army Corps of Engineers ®

MARK	DESCRIPTION	DATE
2	AMENDMENT 7	5/21/2021
1	RTA SUBMISSION	2/11/2021

ISSUE DATE: 02/11/2021
SOLICITATION NO.: W912DS-19-R-0014
CONTRACT NO.: W912DS-19-C0031
PROJECT NO: 20190494
SIZE: ANSI D

DESIGNED BY: KMK
DRAWN BY: ZBW
CHECKED BY: PC
SUBMITTED BY: RL

US ARMY CORPS OF ENGINEERS

JACOBS / EWING COLE A Joint Venture

WEST POINT, NY
USMA BUILDING 605 CULLUM HALL RENOVATION

LEVEL B1 FLOOR FRAMING PLAN

SHEET ID

S-102

File Path: C:\Revit Local Files\C0031C-S-18-CENTRAL_kkearns@ewingcole.com.rvt
Plot Date: 5/27/2021 12:58:19 PM

RTA SUBMISSION 02/11/2021

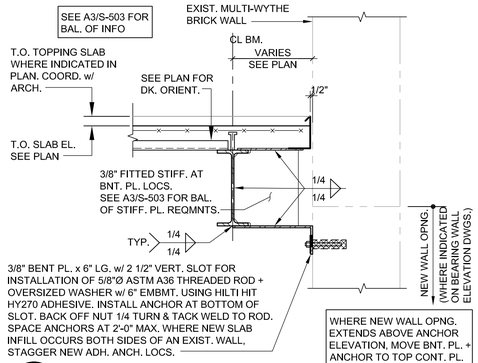

E1 SECTION S-302 3/4"=1'-0"

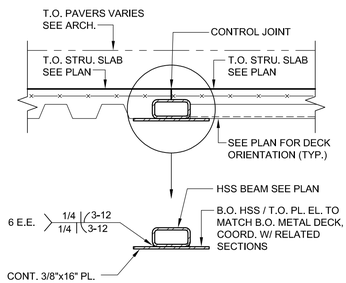

E3 SECTION S-302 3/4"=1'-0"

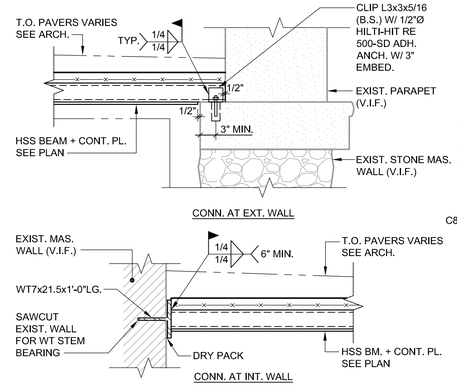

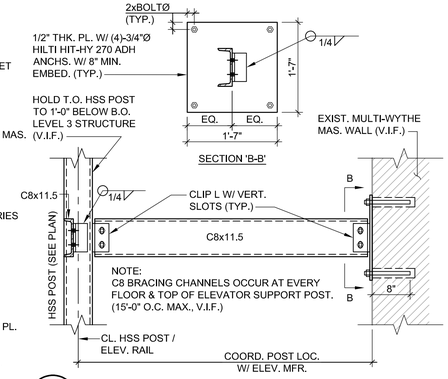

E7 SECTION S-302 3/4"=1'-0"

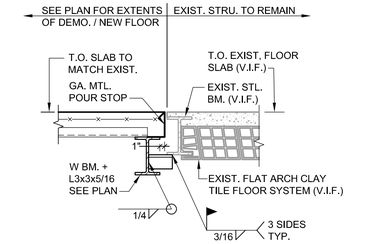

NOTES:
1. COORDINATE AREA OF EXISTING FLOOR SYSTEM TO BE DEMOLISHED WITH STRUCTURAL AND ARCHITECTURAL DRAWINGS (TYP.).
2. DEMOLISH EXISTING FLOOR SYSTEM UP TO NEAREST EXISTING STEEL FLOOR BEAM, REMOVING CLAY TILES CAREFULLY SO AS TO NOT DISRUPT ADJACENT TILES TO REMAIN.
3. AS INDICATED, PROVIDE BRACING ANGLE BETWEEN NEW AND EXISTING STEEL BEAMS TO ACCOMMODATE FOR THRUST FROM ARCHING ACTION.

E9 SECTION S-302 3/4"=1'-0"

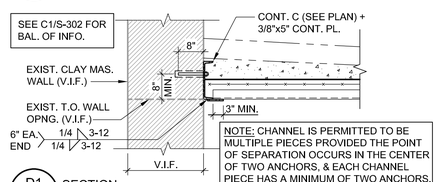

NOTE: CHANNEL IS PERMITTED TO BE MULTIPLE PIECES PROVIDED THE POINT OF SEPARATION OCCURS IN THE CENTER OF TWO ANCHORS, & EACH CHANNEL PIECE HAS A MINIMUM OF TWO ANCHORS.

D1 SECTION S-302 1/2"=1'-0"

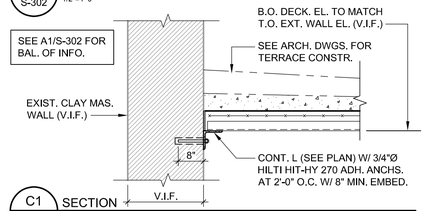

C1 SECTION S-302 1/2"=1'-0"

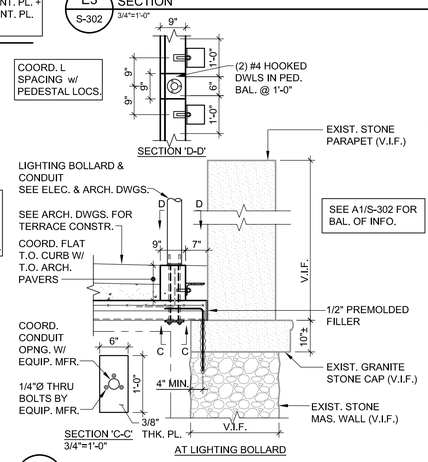

C3 SECTION S-302 1/2"=1'-0"

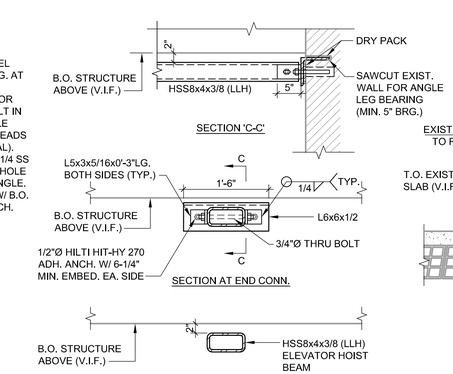

C7 SECTION S-302 3/4"=1'-0"

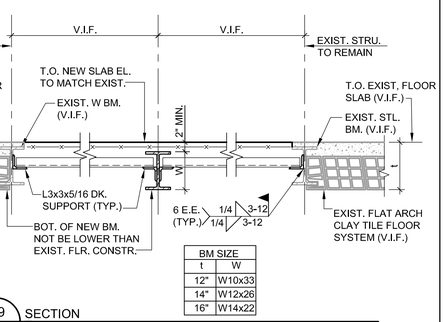

BM SIZE	
t	W
12"	W10x33
14"	W12x26
16"	W14x22

C9 SECTION S-302 3/4"=1'-0"

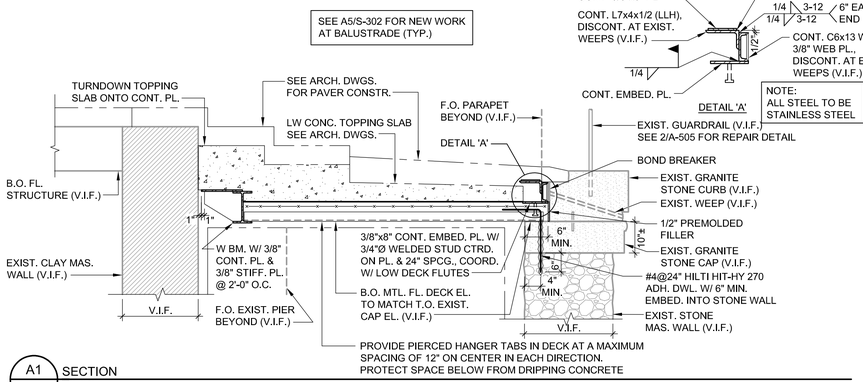

A1 SECTION S-302 1/2"=1'-0"

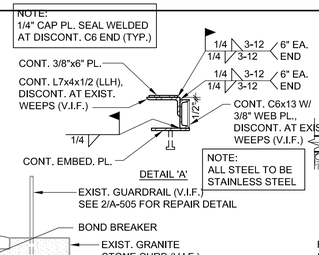

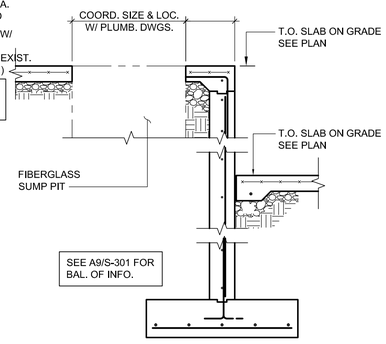

A5 SECTION S-302 3/4"=1'-0"

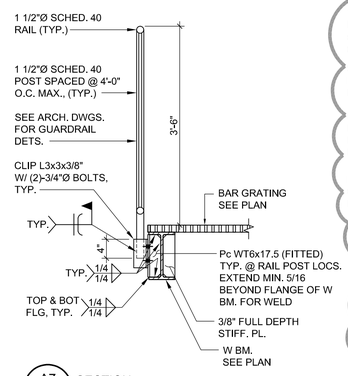

A7 SECTION S-302 3/4"=1'-0"

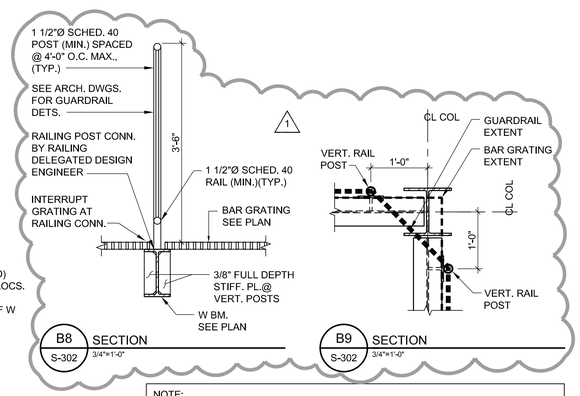

B8 SECTION S-302 3/4"=1'-0"

B9 SECTION S-302 3/4"=1'-0"

NOTE:
PRIOR TO WELDING TO EXISTING FRAMING, PERFORM MATERIAL TESTING TO DETERMINE WELDABILITY OF MEMBERS. CONFIRM BEAMS ARE MEDIUM STEEL WITH Fy>35 KSI AND Fu>55 KSI AS NOTED IN THE EXISTING BUILDING SPECIFICATIONS (ATTACHED TO DESIGN ANALYSIS HANDBOOK IN VOLUME 8.)

TEXT IN EXISTING SPECIFICATIONS IS WRITTEN THUS, "ALL ROLLED OR RIVETED GIRDERS, BEAMS, ROOF TRUSSES, RATERS, PURLINS, FURRING FOR CEILINGS, OR OTHER STRUCTURAL WORK, UNLESS OTHERWISE DIRECTED OR SHOWN ON PLANS, TO BE MADE TO DIMENSIONS GIVEN, OF MEDIUM STEEL OF SUCH QUALITY AS WILL FILL THE REQUIREMENTS GIVEN BELOW: ULTIMATE TENSILE STRENGTH 55,000 TO 65,000 LBS. PER SQUARE INCH. ELASTIC LIMIT NOT LESS THAN 35,000 LBS. PER SQUARE INCH."

US Army Corps of Engineers ®

MARK	DESCRIPTION	DATE
1	AMENDMENT 7	5/21/2021
0	RTA SUBMISSION	2/11/2021

ISSUE DATE: 02/11/2021
SOLICITATION NO.: W912DS-19-R-0014
CONTRACT NO.: W912DS-19-C0031
PROJECT NO: 201904/34

DESIGNED BY: KMK
DRAWN BY: ZBW
CHECKED BY: AP
SUBMITTED BY: PC
SIZE: ANSI D

US ARMY CORPS OF ENGINEERS

JACOBS / EWING COLE A Joint Venture

WEST POINT, NY
USMA BUILDING 605 CULLUM HALL RENOVATION

SECTIONS

SHEET ID
S-302

RTA SUBMISSION 02/11/2021

THIS DRAWING IS FOR MOUNTING LOCATION INFORMATION ONLY. SOME ITEMS OR CONDITIONS MAY BE SHOWN WHICH ARE NOT INCLUDED IN THIS PROJECT, THEY MAY BE DISREGARDED.

IF WITHIN THE DOCUMENTS THERE ARE CONDITIONS OR STATEMENTS WHICH CONFLICT WITH THESE GUIDELINES, NOTIFY THE ARCHITECTURAL REPRESENTATIVE IMMEDIATELY FOR FURTHER DIRECTIONS.

ACCESSORY LEGEND

TA-1 SURFACE TOILET TISSUE DISPENSER ROLL TYPE
TA-2 **NOT USED**
TA-3 SURFACE PAPER TOWEL DISPENSER C FOLD - LARGE
TA-4 **NOT USED**
TA-5 **NOT USED**
TA-6 ELECTRIC HAND DRYER
TA-7 **NOT USED**
TA-8 SURFACE NAPKIN / TAMPON VENDOR
TA-9 **NOT USED**
TA-10 SURFACE NAPKIN DISPOSAL
TA-11 **NOT USED**
TA-12 **NOT USED**
TA-13 SURFACE SOAP DISPENSER
TA-14 **NOT USED**
TA-15 **NOT USED**
TA-16 SURFACE SEAT COVER DISPENSER
TA-17 **NOT USED**
TA-18 **NOT USED**
TA-19 MOP STRIP (TAG NOT SHOWN, PROVIDE AT ALL MOP SINKS.)
TA-20 FRAMED MIRROR
TA-21 **NOT USED**
TA-22 **NOT USED**
TA-23 SURFACE BABY CHANGING STATION HORIZONTAL
TA-24 **NOT USED**
TA-25 **NOT USED**
TA-26 **NOT USED**
TA-27 **NOT USED**
TA-28 GRAB BAR STRAIGHT HORIZONTAL
TA-29 GRAB BAR STRAIGHT VERTICAL
TA-30 **NOT USED**
TA-31 **NOT USED**

NOTES:
1. DIMENSIONS ARE TO FACE OF WALL FINISH.
2. WARM AIR DRYERS ARE LISTED SEPARATELY

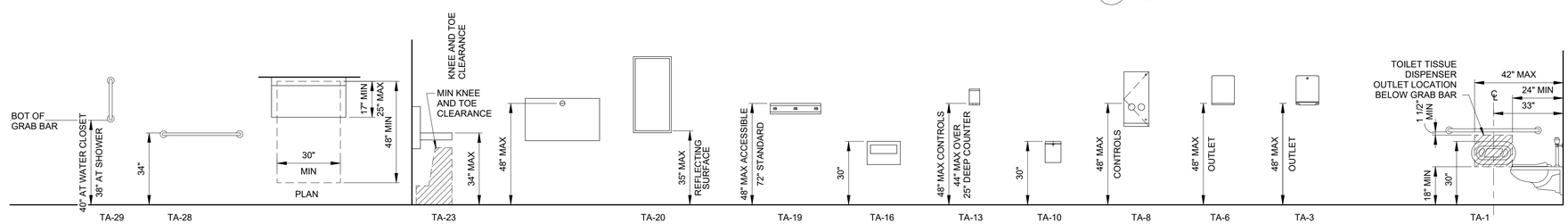

E ACCESSORY MOUNTING HEIGHTS
SCALE: 3/8" = 1'-0"

1. 48" MAX HEIGHT IS FOR UNOBSTRUCTED FORWARD REACH. 2. ALL OF AN OPERABLE PART IS TO BE WITHIN MOUNTING HEIGHT. 3. RECESSED FIXTURES SHOULD NOT BE LOCATED IN FIRE RATED PARTITIONS.
4. FOR SURFACE MOUNTED ACCESSORIES AND RECESSED ACCESSORIES PROJECTING MORE THAN 1/4" MAX, COORDINATE CLEARANCE AROUND GRAB BARS. SEE DETAIL G.

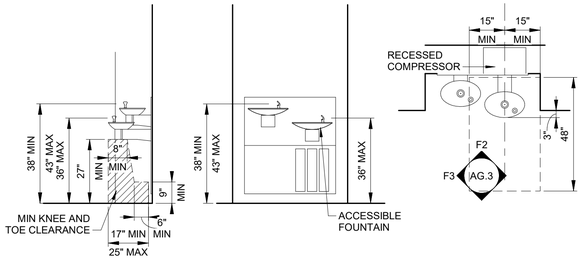

F ACCESSIBLE AND NON-ACCESSIBLE RECESSED DRINKING FOUNTAIN
SCALE: 3/8" = 1'-0"

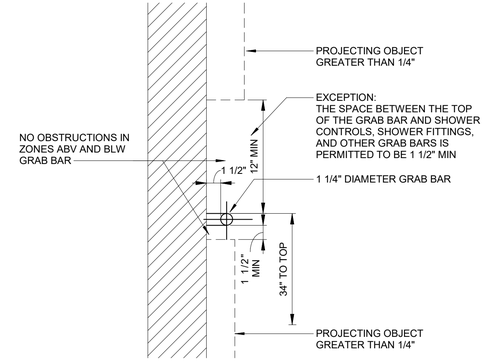

D GRAB BAR SPACING
SCALE: 1 1/2" = 1'-0"

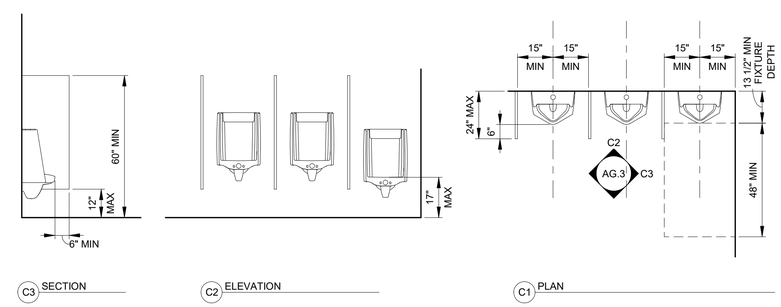

C ACCESSIBLE AND NON-ACCESSIBLE URINALS
SCALE: 3/8" = 1'-0"

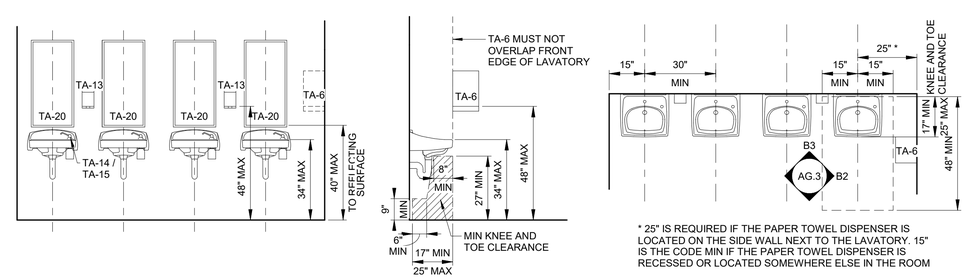

B3 ELEVATION AT BACK WALL
B2 ELEVATION AT SIDE WALL
B1 PLAN

* 25" IS REQUIRED IF THE PAPER TOWEL DISPENSER IS LOCATED ON THE SIDE WALL NEXT TO THE LAVATORY. 15" IS THE CODE MIN IF THE PAPER TOWEL DISPENSER IS RECESSED OR LOCATED SOMEWHERE ELSE IN THE ROOM

B ACCESSIBLE AND NON-ACCESSIBLE LAVATORIES
SCALE: 3/8" = 1'-0"

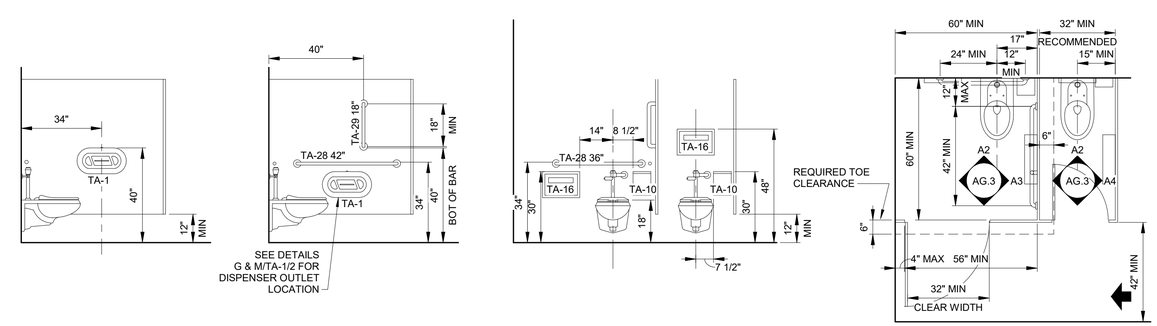

A4 ELEVATION @ SIDE WALL
A3 ELEVATION @ SIDE WALL
A2 ELEVATION @ REAR WALL
A1 PLAN

A ACCESSIBLE AND NON-ACCESSIBLE TOILET COMPARTMENTS
SCALE: 3/8" = 1'-0"

US Army Corps of Engineers ®

MARK	DESCRIPTION	DATE
1	AMENDMENT 7	5/21/2021
0	RTA SUBMISSION	2/11/2021

ISSUE DATE: 2/11/2021
SOLICITATION NO.: W912DS-19-R-0014
CONTRACT NO.: W912DS-19-C0031
PROJECT NO: 20190494
DESIGNED BY: LBY
DRAWN BY: DB
CHECKED BY: RM
SUBMITTED BY:
SIZE: ANSI D
-

US ARMY CORPS OF ENGINEERS
JACOBS / EWING COLE A Joint Venture

WEST POINT, NY
USMA BUILDING 605 CULLUM HALL RENOVATION

MOUNTING HEIGHTS & CLEARANCES

SHEET ID
A-003

RTA SUBMISSION 2/11/2021

GENERAL NOTES

1. SEE A-005 HISTORIC DIAGRAMS FOR NOTES ON THE DESIGN APPROACH FOR RENOVATION IN HISTORIC SPACES.
2. ELEVATIONS ARE FINISH FLOOR ELEVATIONS AND ARE SET TO MATCH EXISTING FINISH FLOOR ELEVATIONS.
3. VERIFY ALL EXISTING TO REMAIN FINISH FLOOR ELEVATIONS IN MULTIPLE LOCATIONS.
4. COORDINATE EXISTING TO REMAIN WORK WITH NEW WORK AT ALL LOCATIONS INCLUDING THRESHOLDS, SILLS, AND FLOOR TRANSITIONS. SEE EXTERIOR DOOR DETAILS AND INTERIOR THRESHOLD DETAILS.
5. SEE EXTERIOR ELEVATION SHEETS FOR EXTERIOR ELEVATION SCOPE
6. SEE SHEET A-111 FOR TERRACE SCOPE.
7. SEE SHEET A-501 FOR EXISTING TO REMAIN HISTORIC STONE STAIRS
8. SEE STRUCTURAL DRAWINGS NEW FOUNDATIONS, UNDERSLAB DRAINAGE, NEW CONCRETE SLABS, DUNNAGE, AND SITE WALL IN THE NORTH SERVICE YARD.
9. SEE CIVIL DRAWINGS FOR SITE UTILITIES.
10. SEE LANDSCAPE DRAWINGS FOR LANDSCAPING.

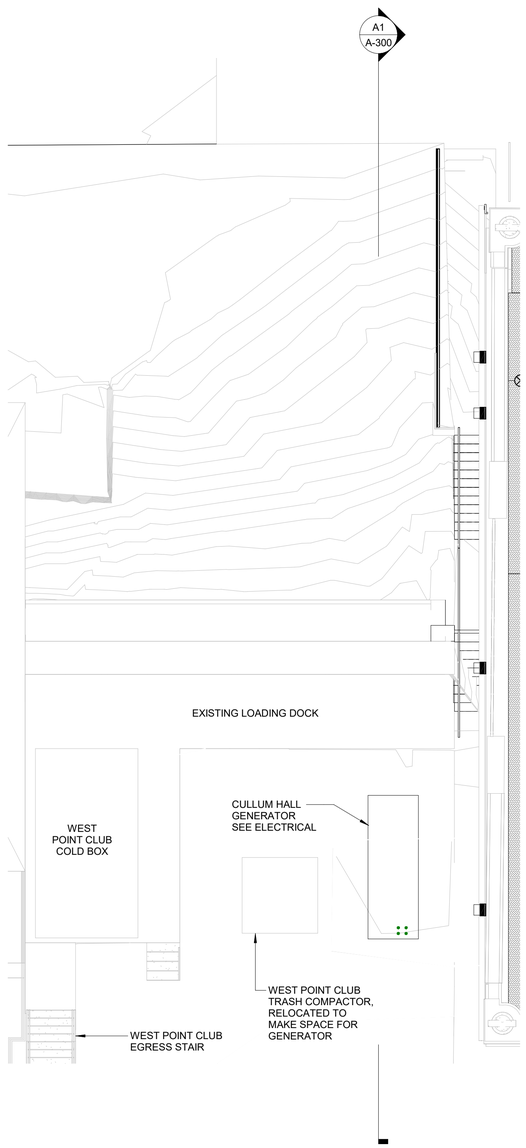

A1 / A-109 SOUTH SERVICE YARD EQUIPMENT PLAN
SCALE: 1/8" = 1'-0"
REF SHEET: A-108

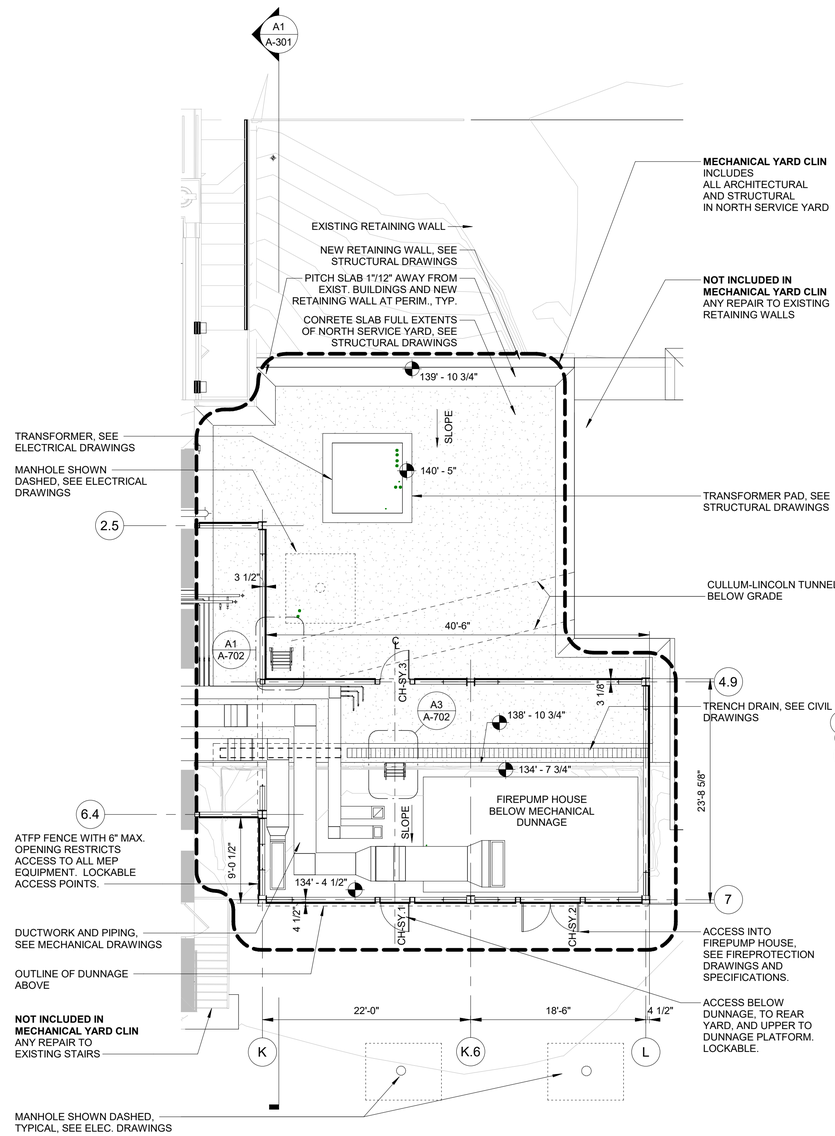

A4 / A-109 NORTH SERVICE YARD EQUIPMENT PLAN - LOWER ELEVATION
SCALE: 1/8" = 1'-0"
REF SHEET: A-1B2

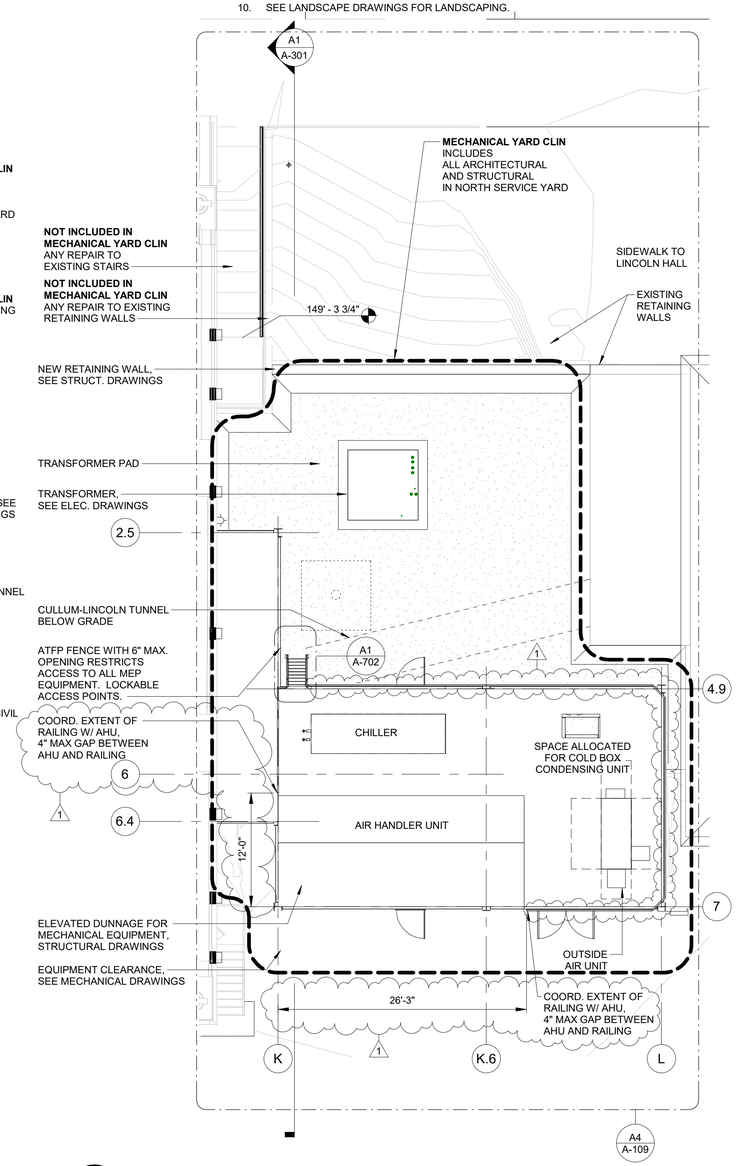

A8 / A-109 NORTH SERVICE YARD EQUIPMENT PLAN - UPPER ELEVATION
SCALE: 1/8" = 1'-0"
REF SHEET: A-1B1

8 4 0 8 16
SCALE: 1/8"=1'-0"

PLAN NORTH

US Army Corps of Engineers ®

MARK	DESCRIPTION	DATE
1	AMENDMENT 7	5/21/2021
0	RTA SUBMISSION	2/11/2021

DESIGNED BY: LBY	ISSUE DATE: 2/11/2021
DRAWN BY: DB	SOLICITATION NO.: W912DS-19-R-0014
CHECKED BY: RM	CONTRACT NO.: W912DS-19-C0031
SUBMITTED BY: BK	PROJECT NO: 20190494
SIZE: ANSI D	-

US ARMY CORP'S OF ENGINEERS

JACOBS / EWING COLE A Joint Venture

WEST POINT, NY
USMA BUILDING 605 CULLUM HALL RENOVATION

ENLARGED SITE PLANS - SERVICE YARDS

SHEET ID
A-109

RTA SUBMISSION 2/11/2021

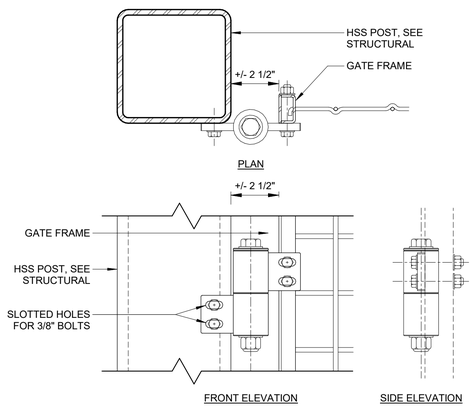

HEAVY DUTY SELF-CLOSING BARREL HINGE.
B.O.D. = SHUT IT CI3950

E1 / A-109.2 GATE HINGE DETAILS

SCALE: 3" = 1'-0"
REF SHEET: A-109.2

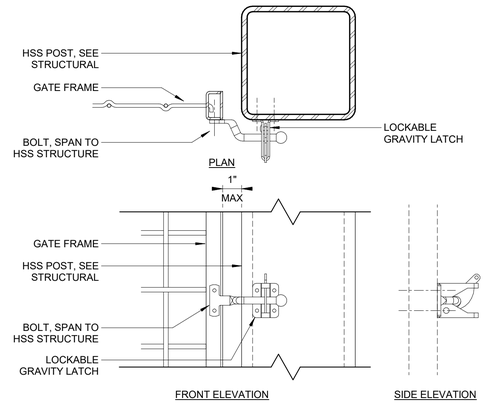

E3 / A-109.2 GATE LATCH DETAILS

SCALE: 3" = 1'-0"
REF SHEET: A-109.2

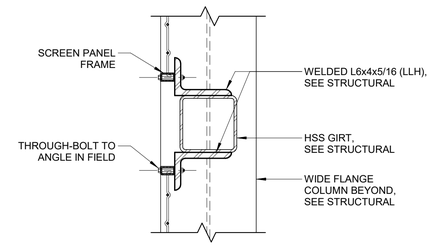

E5 / A-109.2 SCREEN PANEL FASTENING CONNECTION

SCALE: 1 1/2" = 1'-0"
REF SHEET: A-109.2

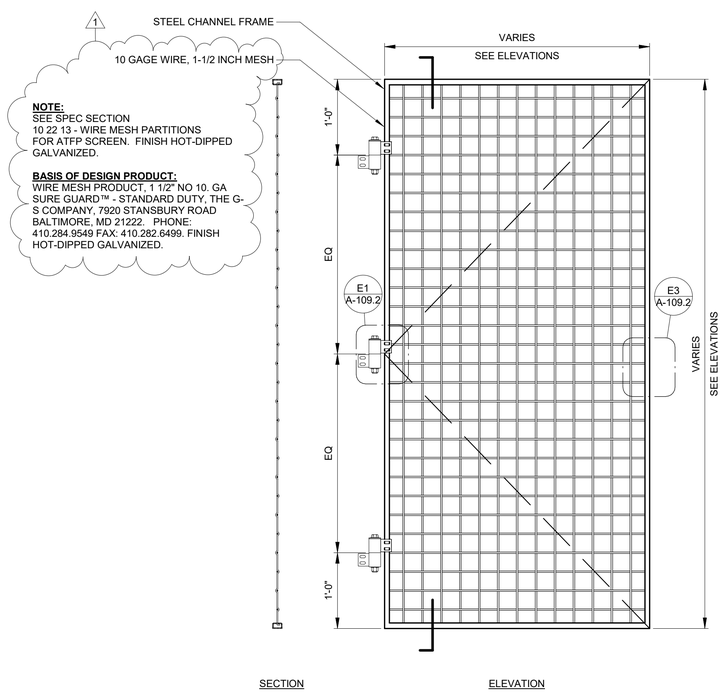

NOTE:
SEE SPEC SECTION
10 22 13 - WIRE MESH PARTITIONS
FOR ATFP SCREEN. FINISH HOT-DIPPED GALVANIZED.

BASIS OF DESIGN PRODUCT:
WIRE MESH PRODUCT, 1 1/2" NO 10. GA
SURE GUARD™ - STANDARD DUTY, THE G-S COMPANY, 7920 STANSBURY ROAD
BALTIMORE, MD 21222. PHONE:
410.284.9549 FAX: 410.282.6499. FINISH HOT-DIPPED GALVANIZED.

A2 / A-109.2 ATFP SCREEN GATE PANEL

SCALE: 1" = 1'-0"
REF SHEET: A-109.1

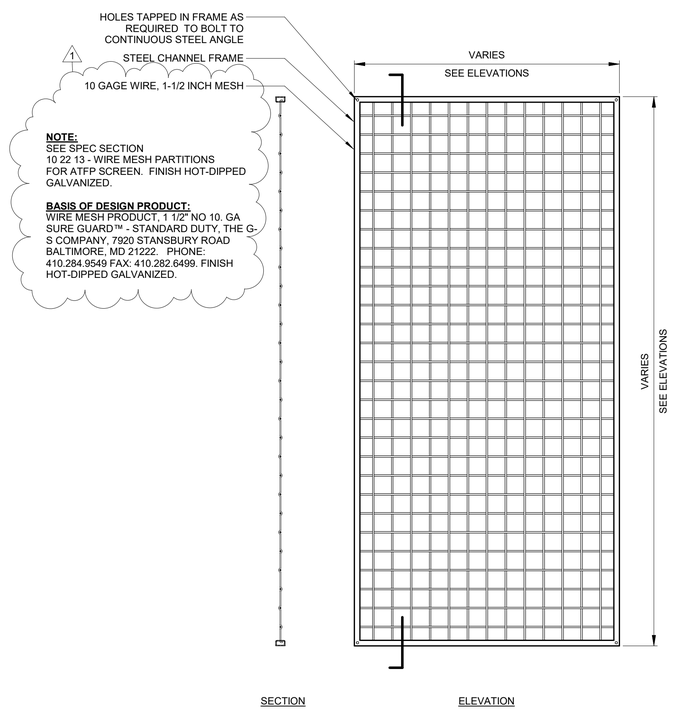

NOTE:
SEE SPEC SECTION
10 22 13 - WIRE MESH PARTITIONS
FOR ATFP SCREEN. FINISH HOT-DIPPED GALVANIZED.

BASIS OF DESIGN PRODUCT:
WIRE MESH PRODUCT, 1 1/2" NO 10. GA
SURE GUARD™ - STANDARD DUTY, THE G-S COMPANY, 7920 STANSBURY ROAD
BALTIMORE, MD 21222. PHONE:
410.284.9549 FAX: 410.282.6499. FINISH HOT-DIPPED GALVANIZED.

A5 / A-109.2 ATFP SCREEN STANDARD PANEL

SCALE: 1" = 1'-0"
REF SHEET: A-109.1

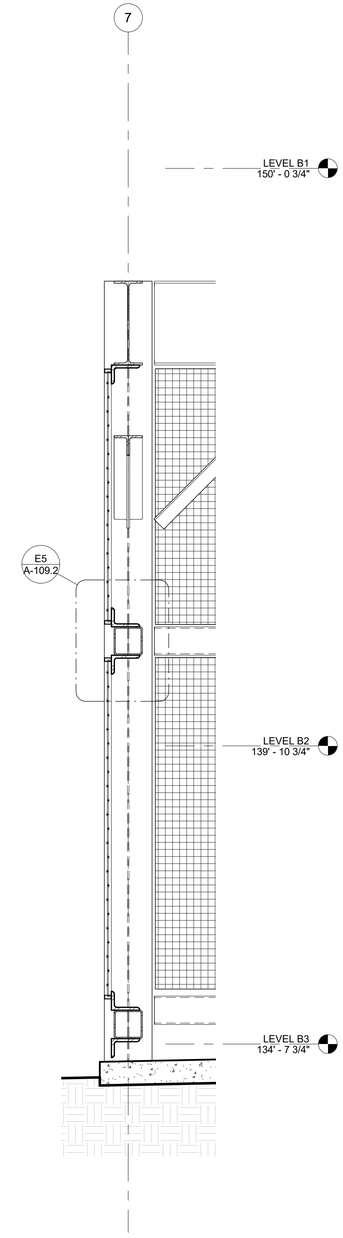

B7 / A-109.2 ATFP SCREEN SECTION 2

SCALE: 3/4" = 1'-0"
REF SHEET: A-109.1

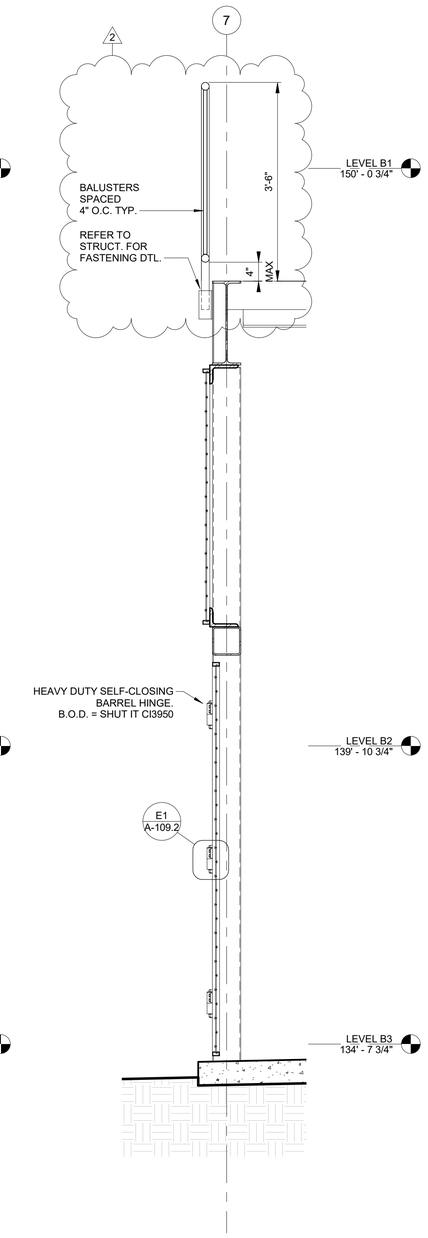

B9 / A-109.2 ATFP SCREEN SECTION 1

SCALE: 3/4" = 1'-0"
REF SHEET: A-109.1

MECHANICAL YARD CLIN INCLUDES ALL ARCHITECTURAL AND STRUCTURAL IN NORTH SERVICE YARD

SCALE: 3" = 1'-0" | SCALE: 1 1/2" = 1'-0" | SCALE: 1" = 1'-0" | SCALE: 3/4" = 1'-0"

US Army Corps of Engineers ®

MARK	DESCRIPTION	DATE
2	AMENDMENT 7	5/21/2021
1	AMENDMENT 4	5/12/2021
0	RTA SUBMISSION	2/11/2021

ISSUE DATE: 2/11/2021
SOLICITATION NO.: W912DS-19-R-0014
CONTRACT NO.: W912DS-19-C0031
PROJECT NO: 20190494

DESIGNED BY: LBY
DRAWN BY: DB
CHECKED BY: RM
SUBMITTED BY: BK
SIZE: ANSI D
-

US ARMY CORPS OF ENGINEERS

JACOBS / EWING COLE A Joint Venture

WEST POINT, NY
USMA BUILDING 605 CULLUM HALL RENOVATION

ATFP SCREEN DETAILS

SHEET ID
A-109.2

RTA SUBMISSION 2/11/2021

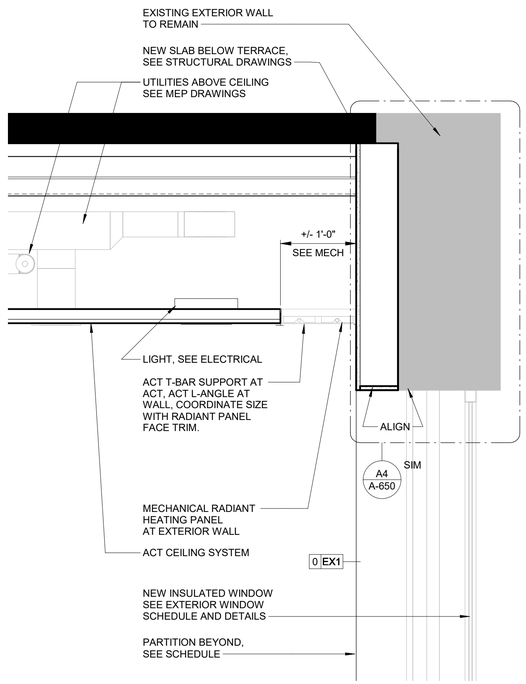

D1 / A-560 RCP DETAIL @ B1 AND B2 BATHROOM
SCALE: 1" = 1'-0"

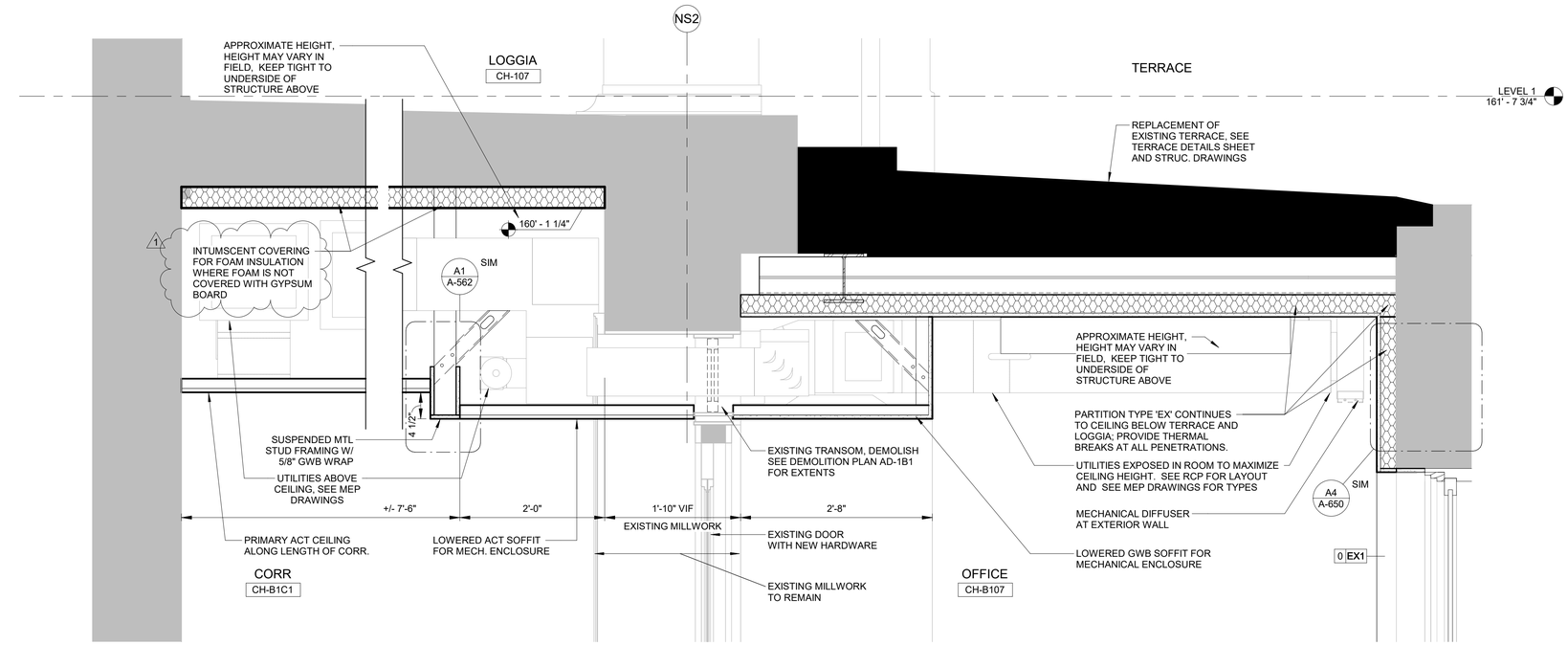

D4 / A-560 RCP DETAIL @ B1 PERIMETER OFFICES
SCALE: 1" = 1'-0"

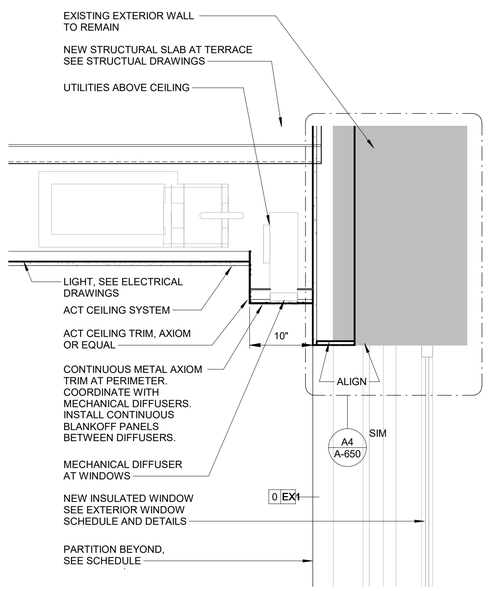

A1 / A-560 RCP DETAIL @ B1 CORRIDOR
SCALE: 1" = 1'-0"

1 1/2 0 1 2
SCALE: 1" = 1'-0"

US Army Corps of Engineers ®

MARK	DESCRIPTION	DATE
1	AMENDMENT 7	5/21/2021
0	RTA SUBMISSION	2/11/2021

ISSUE DATE: 2/11/2021
SOLICITATION NO.: W912DS-19-R-0014
CONTRACT NO.: W912DS-19-C0031
PROJECT NO: 20190494

DESIGNED BY: LBY
DRAWN BY: LBY
CHECKED BY: RM
SUBMITTED BY: BK
SIZE: ANSI D
-
-

US ARMY CORPS OF ENGINEERS
JACOBS / EWING COLE A Joint Venture

WEST POINT, NY
USMA BUILDING 605 CULLUM HALL RENOVATION

RCP DETAILS - BASEMENT FLOORS (PERIMETER)

SHEET ID
A-560

RTA SUBMISSION 2/11/2021

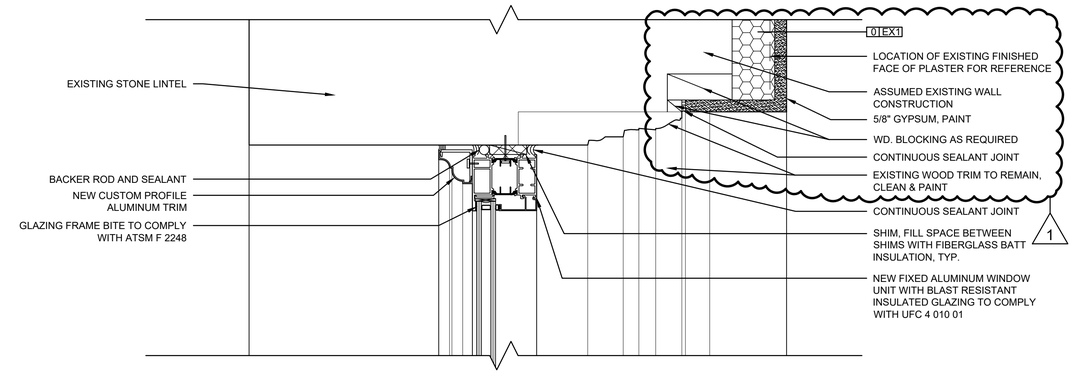

3 A-611 WINDOW HEAD
3" = 1'-0"

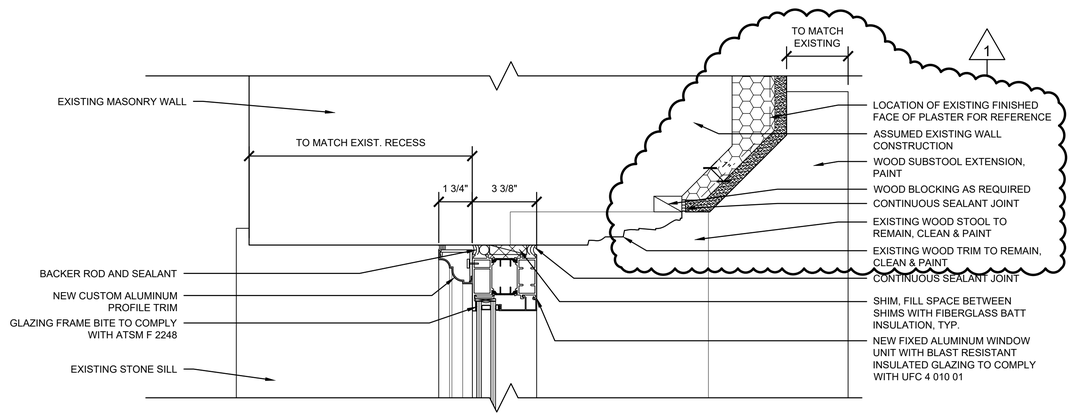

2 A-611 WINDOW JAMB
3" = 1'-0"

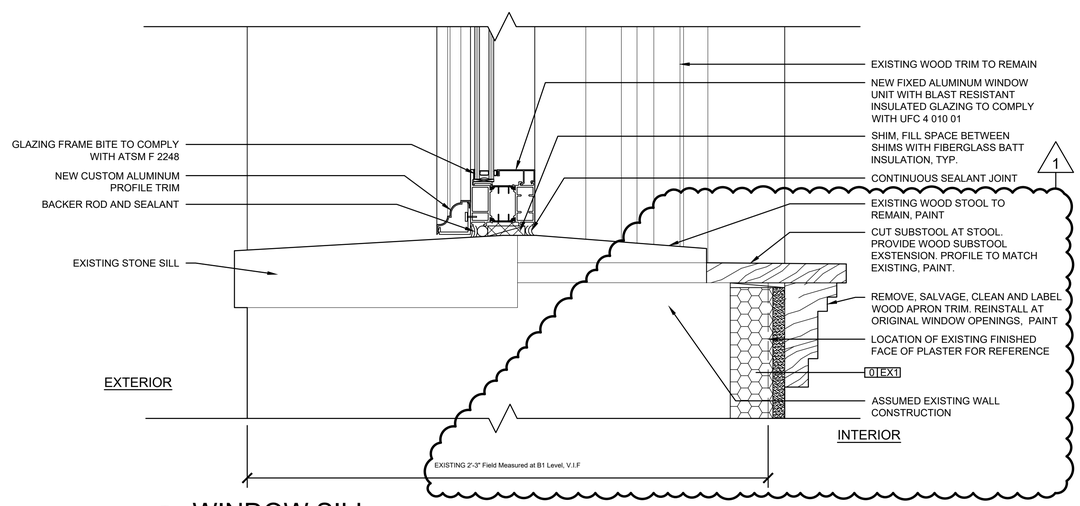

1 A-611 WINDOW SILL
3" = 1'-0"

B1 & B2 LEVEL WINDOWS

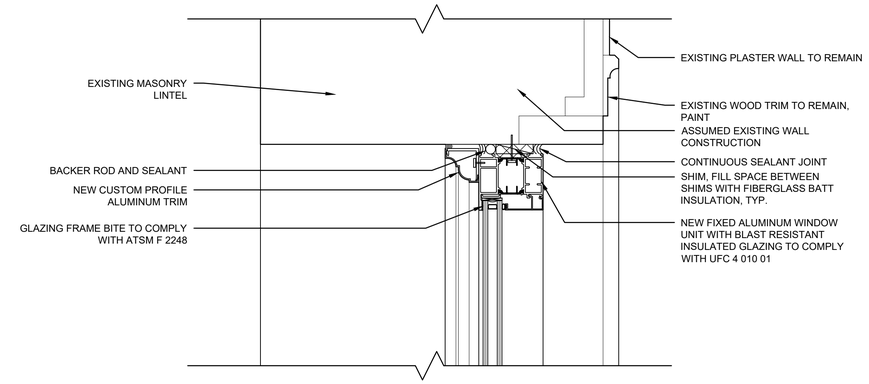

6 A-611 WINDOW HEAD
3" = 1'-0"

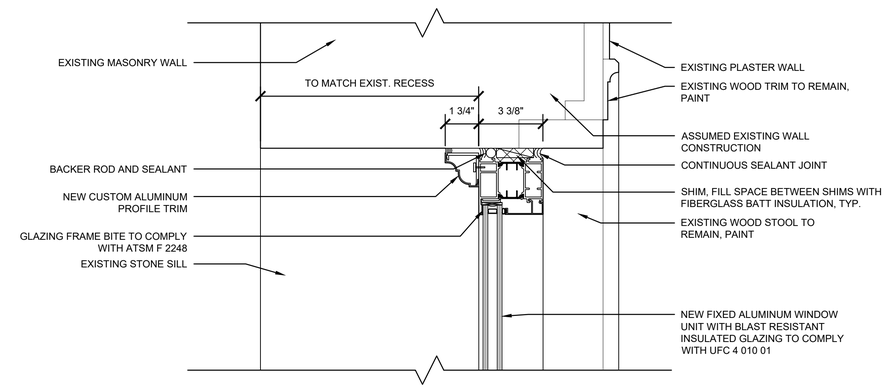

5 A-611 WINDOW JAMB
3" = 1'-0"

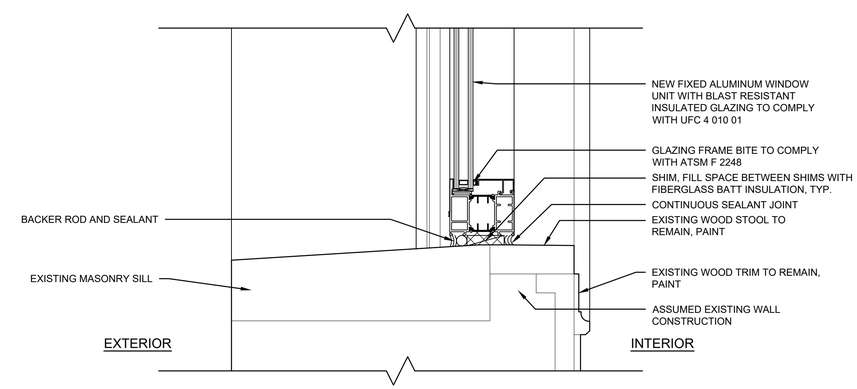

4 A-611 WINDOW SILL
3" = 1'-0"

NORTH AND SOUTH FIXED WINDOWS

6 3 0 6
SCALE: 3"=1'-0" INCHES

US Army Corps of Engineers ®

MARK	DESCRIPTION	DATE
1	AMENDMENT 7	5/21/2021
0	RTA SUBMISSION	2/11/2021

DESIGNED BY: JN
DRAWN BY: LK
CHECKED BY: JN
SUBMITTED BY:
SIZE: ANSI D
ISSUE DATE: 2/11/2021
SOLICITATION NO.: W912DS-19-R-0014
CONTRACT NO.: W912DS-19-R-0014
PROJECT NO: 20190434

US ARMY CORPS OF ENGINEERS

JACOBS / EWING COLE A Joint Venture

WEST POINT, NY
USMA BUILDING 605 CULLUM HALL RENOVATION

EXTERIOR WINDOW DETAILS

SHEET ID
A-611

RTA SUBMISSION 2/11/2021

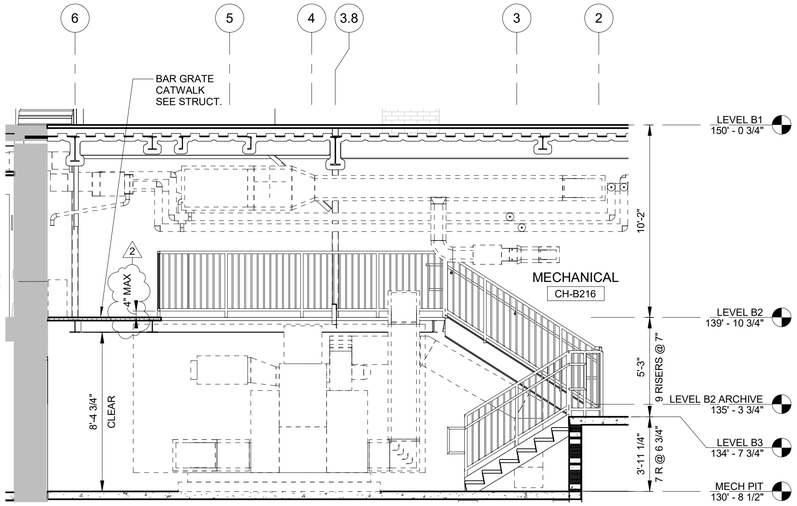

E1 A-701 MECH ROOM SOUTH STAIR SECTION
SCALE: 1/4" = 1'-0"
REF SHEET: A-701

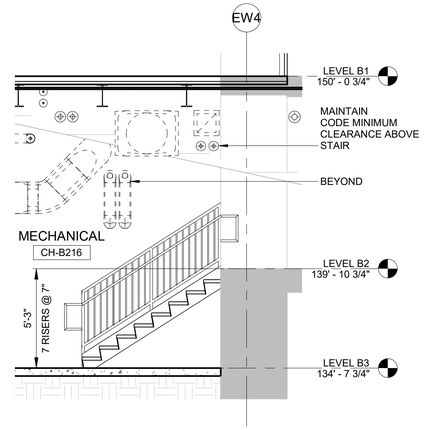

E4 A-701 MECH ROOM NORTH STAIR SECTION
SCALE: 1/4" = 1'-0"
REF SHEET: A-701

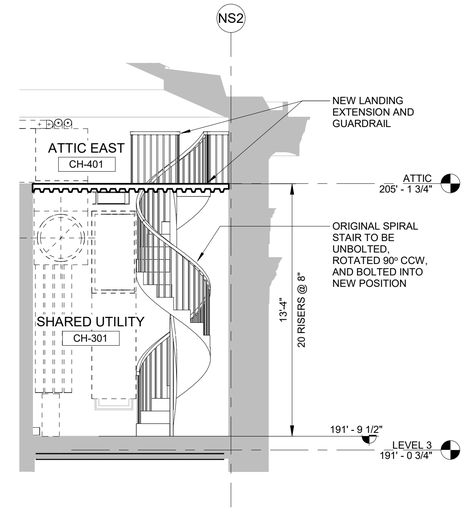

E6 A-701 SPIRAL STAIR SECTION
SCALE: 1/4" = 1'-0"
REF SHEET: A-701

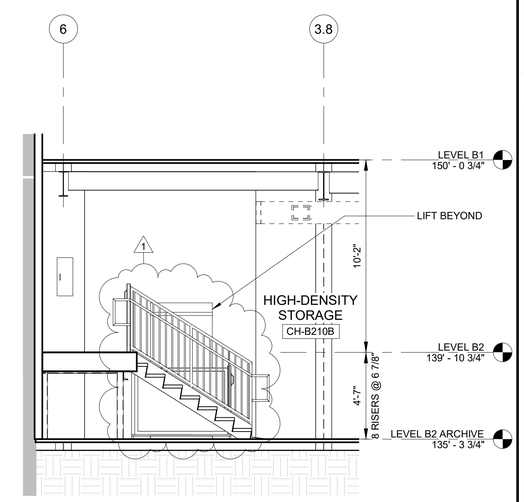

E8 A-701 STAIR & LIFT SECTION - ARCHIVE
SCALE: 1/4" = 1'-0"
REF SHEET: A-701

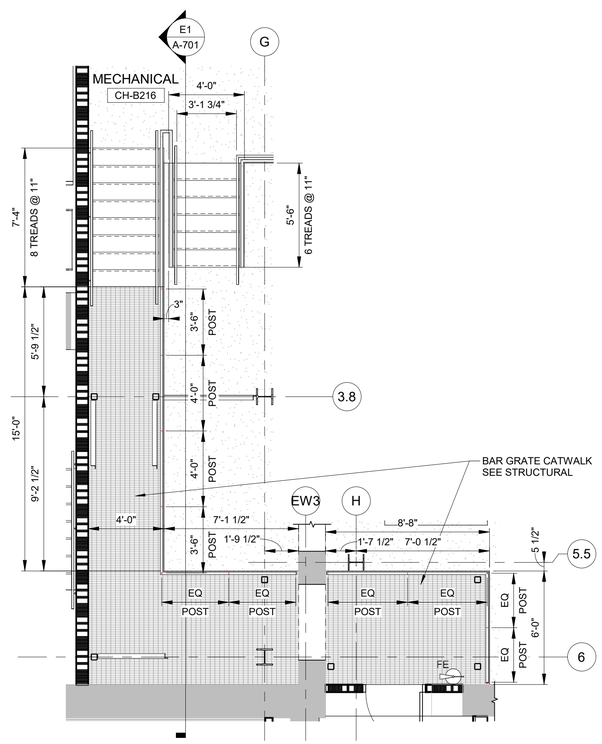

A1 A-701 MECH ROOM SOUTH STAIR PLAN
SCALE: 1/4" = 1'-0"
REF SHEET: A-1B2

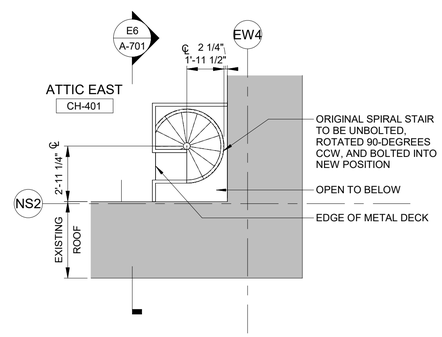

C6 A-701 SPIRAL STAIR PLAN - ATTIC
SCALE: 1/4" = 1'-0"
REF SHEET: A-140

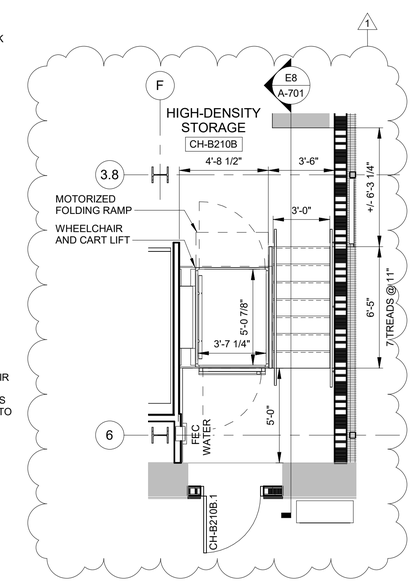

A8 A-701 STAIR & LIFT PLAN - ARCHIVE
SCALE: 1/4" = 1'-0"
REF SHEET: A-1B2

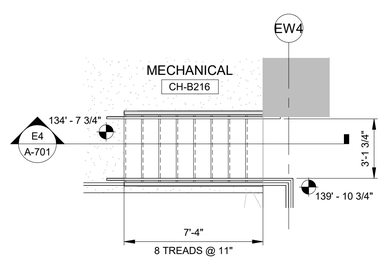

A4 A-701 MECH ROOM NORTH STAIR PLAN
SCALE: 1/4" = 1'-0"
REF SHEET: A-1B2

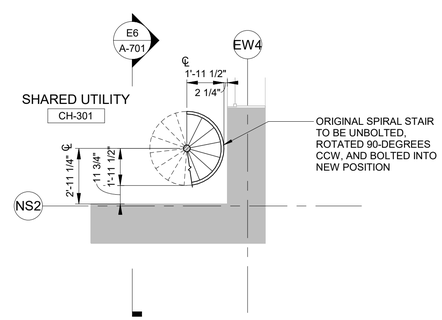

A6 A-701 SPIRAL STAIR PLAN - THIRD FLOOR
SCALE: 1/4" = 1'-0"
REF SHEET: A-130

4 2 0 4 8
SCALE: 1/4"=1'-0"

US Army Corps of Engineers ®

MARK	DESCRIPTION	DATE
1	AMENDMENT 7	5/21/2021
0	RTA SUBMISSION	2/11/2021

ISSUE DATE: 2/11/2021
SOLICITATION NO.: W912DS-19-R-0014
CONTRACT NO.: W912DS-19-C0031
PROJECT NO: 20190494
DESIGNED BY: LBY
DRAWN BY: DB
CHECKED BY: RM
SUBMITTED BY: BK
SIZE: ANSI D
-

US ARMY CORPS OF ENGINEERS

JACOBS / EWING COLE A Joint Venture

WEST POINT, NY
USMA BUILDING 605 CULLUM HALL RENOVATION

VERTICAL CIRCULATION - STAIRS

SHEET ID
A-701

RTA SUBMISSION 2/11/2021

MECHANICAL / PLUMBING EQUIPMENT COORDINATION SCHEDULE

EQUIPMENT IDENTIFICATION									LOCAL DISCONNECT DEVICE				STARTER											
													TYPE			COMBINATION			ACCESSORIES					
EQUIPMENT TAG	DESCRIPTION	PHYSICAL LOCATION	AREA / SPACE SERVED	ELECTRICAL PANEL/SOURCE	HP	FLA	KW	VOLTS-Ø	UNFUSED SWITCH	FUSED SWITCH	FHP MAN. MOTOR SWITCH	PROVIDED BY	MAN.	MAG.	VFD	MCP	SW UNF	SW FU	ON/OFF SW	PB	HOA SW	PILOT	PROVIDED BY	REMARKS (E.G. SKID MOUNTED, PACKAGED, ETC.)
AHU-1	SUPPLY FANS	BASEMENT MER	LEVELS B1 & B2 - ARCHIVES	DP-OS	(4) 5	30		460/3							X								DIV 23	EMERGENCY POWER
AHU-2	SUPPLY FANS	NORTH SERVICE YARD	LEVELS B1 & B2 - BUFFER ZONES	DP-M-1	(4) 5	30		460/3							X								DIV 23	
	RETURN FANS	NORTH SERVICE YARD	LEVELS B1 & B2 - BUFFER ZONES	DP-M-1	(4) 3	19		460/3							X								DIV 23	
AHU-3	SUPPLY FANS	ABOVE STAGE	LEVELS 1 & 2 - BALL ROOM & MEMORIAL ROOM	DP-M-2	(4) 7.5	44		460/3							X								DIV 23	
B-1	BOILER	BASEMENT MER	EMERGENCY HEATING	AP-OS-B1			1.7	120/1																EMERGENCY POWER / CP BY DIV 23
CH-1	AIR-COOLED CHILLER	NORTH SERVICE YARD	EMERGENCY COOLING	DP-OS			31.86	460/3							X								DIV 23	EMERGENCY POWER
CP-1	CONDENSATE PUMP	SEE DRAWINGS	FCU 2M-1 & FCU B3-1 & FCU B3-2		1/5		0.6	120/1																
CUH-1-1	CABINET UNIT HEATER	CH-103A	CH-103A	AP-M-B2	0.25		0.48	120/1	X			DIV 23												
CUH-1-2	CABINET UNIT HEATER	CH-105	CH-105	AP-M-B2	0.25		0.48	120/1	X			DIV 23												
CUH-B2-1	CABINET UNIT HEATER	B205	B205	AP-M-B2	0.13		0.3	120/1	X			DIV 23												
CUH-B2-2	CABINET UNIT HEATER	B217	B217	AP-M-B2	0.13		0.3	120/1	X			DIV 23												
CUH-B1-1	CABINET UNIT HEATER	B100	B100	AP-M-B2	0.13		0.3	120/1	X			DIV 23												
CUH-B1-2	CABINET UNIT HEATER	B122	B122	AP-M-B2	0.13		0.3	120/1	X			DIV 23												
CUH-B1-3	CABINET UNIT HEATER	NW STAIR	NW STAIR	AP-M-B2	0.13		0.3	120/1	X			DIV 23												
CR-1	CONDENSATE RECEIVER	BASEMENT MER	CULLUM CONDENSATE RETURN	DP-M-1	(2) 0.5	2		460/3	X			DIV 23		X							X		DIV 23	CP BY DIV 23
CR-2	CONDENSATE RECEIVER	TUNNEL	CULLUM/LINCOLN CONDENSATE RETURN	DP-M-1	(2) 0.5	2		460/3	X			DIV 23		X							X		DIV 23	CP BY DIV 23
CRU-B1-1	COMPUTER ROOM UNIT	MAIN TELECOM	MAIN TELECOM	AP-OS-B1		30		208/1	X			DIV 26												EMERGENCY POWER
CRU-B1-2	COMPUTER ROOM UNIT	MAIN TELECOM	MAIN TELECOM	AP-OS-B1		30		208/1	X			DIV 26												EMERGENCY POWER
DHU-1	DEHUMIDIFIER	BASEMENT MER	ARCHIVES	DP-OS		5		460/3	X			DIV 26												EMERGENCY POWER
DHU-2	DEHUMIDIFIER	BASEMENT MER	COLD STORAGE	AP-OS-B1			2.35	208/1	X			DIV 26												EMERGENCY POWER
EF-1	EXHAUST FAN	TUNNEL (EAST)	GENERAL EXHAUST	DP-M-1	1.5	3		460/3	X			DIV 23												
EWH-1	ELECTRIC WATER HEATER	SEE DRAWINGS	RESTROOM SINKS	AP-M-B2			3.5	120/1																
EWH-2	ELECTRIC WATER HEATER	SEE DRAWINGS	GENERAL HOT WATER	AP-M-B2			1.5	120/1			X	DIV 26												
FCU-B3-1	FAN COIL UNIT	TUNNEL NE	TUNNEL NE	AP-M-B2	0.03		0.5	208/1	X			DIV 23												
FCU-B3-2	FAN COIL UNIT	TUNNEL SE	TUNNEL SE	AP-M-B2	0.03		0.5	208/1	X			DIV 23												
FCU-B2-1	FAN COIL UNIT	B219	B219	AP-M-B2	0.23		0.6	208/1	X			DIV 23												
FCU-B1-1	FAN COIL UNIT	B120	B120	AP-M-B2	0.16		0.6	208/1	X			DIV 23												
FCU-B1-2	FAN COIL UNIT	B118	B118	AP-M-B2	0.23		0.6	208/1	X			DIV 23												
FCU-B1-3	FAN COIL UNIT	B118	B118	AP-M-B2	0.23		0.6	208/1	X			DIV 23												
FCU-1-1	FAN COIL UNIT	CH-100	CH-100	AP-M-B2	0.16		0.6	208/1	X			DIV 23												
FCU-1-2	FAN COIL UNIT	CH-1S1	CH-1S1	AP-M-B2	0.04		0.3	208/1	X			DIV 23												
FCU-1-3	FAN COIL UNIT	CH-1S1	CH-1S1	AP-M-B2	0.04		0.3	208/1	X			DIV 23												
FCU-1-4	FAN COIL UNIT	CH-102A	CH-102A	AP-M-B2	0.22		0.6	208/1	X			DIV 23												
FCU-1-5	FAN COIL UNIT	CH-102B	CH-102B	AP-M-B2	0.22		0.6	208/1	X			DIV 23												
FCU-1-6	FAN COIL UNIT	CH-104B	CH-104B, CH-106B	AP-M-B2	0.24		0.6	208/1	X			DIV 23												
FCU-1-7	FAN COIL UNIT	CH-103A	CH-101	AP-M-B2	0.09		0.6	208/1	X			DIV 23												
FCU-2-1	FAN COIL UNIT	ATTIC SOUTH	CH-2S1, CH-3S1	AP-M-B2	0.32		0.6	208/1	X			DIV 23												
FCU-2M-1	FAN COIL UNIT	ATTIC SOUTH	CH-300	AP-M-B2	0.24		0.6	208/1	X			DIV 23												
FCU-3-1	FAN COIL UNIT	CH-301	CH-301	AP-M-B2	0.08		0.6	208/1	X			DIV 23												
FCU-3-2	FAN COIL UNIT	CH-302	CH-302	AP-M-B2	0.16		0.6	208/1	X			DIV 23												
FZP-2A	CHW FREEZE PROTECTION PUMP	AHU-2 SERVICE VESTIBULE	AHU-2 SYSTEM	DP-M-1	1.5	3		460/3																
FZP-2B	HW FREEZE PROTECTION PUMP	AHU-2 SERVICE VESTIBULE	AHU-2 SYSTEM	AP-M-B2	0.5	4		120/1																
FZP-3	HW FREEZE PROTECTION PUMP	ATTIC NORTH	AHU-3 SYSTEM	AP-M-B2	0.5	4		120/1																
GFT-1	GLYCOL FILL STATION	BASEMENT MER	EMERGENCY CHILLED WATER SYSTEM	DP-OS	3/4	2		460/3	X															EMERGENCY POWER
HUM-1-1	HUMIDIFIER	BASEMENT MER	AHU-1 SYSTEM	DP-OS			56.1	460/3		X		DIV 23												EMERGENCY POWER
HUM-2-1	HUMIDIFIER	BASEMENT MER	VAV 2-2	DP-M-1			3.7	460/1		X		DIV 23												
HUM-2-2	HUMIDIFIER	TUNNEL	VAV 2-5	DP-M-1			7.5	460/3		X		DIV 23												
HUM-2-3	HUMIDIFIER	TUNNEL	VAV 2-17	DP-M-1			7.5	460/3		X		DIV 23												
OAU-1	OUTSIDE AIR UNIT	NORTH SERVICE YARD	AHU-1 SYSTEM	DP-OS		9.5		460/3	X			DIV 23												EMERGENCY POWER
P-1	CHILLED WATER PUMP	BASEMENT MER	CHILLED WATER SYSTEM	DP-OS	7.5	11		460/3							X								DIV 23	EMERGENCY POWER
P-2	CHILLED WATER PUMP	BASEMENT MER	CHILLED WATER SYSTEM	DP-OS	7.5	11		460/3							X								DIV 23	EMERGENCY POWER
P-3	HOT WATER PUMP	BASEMENT MER	HOT WATER SYSTEM	DP-OS	5	8		460/3							X								DIV 23	EMERGENCY POWER
P-4	HOT WATER PUMP	BASEMENT MER	HOT WATER SYSTEM	DP-OS	5	8		460/3							X								DIV 23	EMERGENCY POWER
SP-1	SUMP PUMP	ELEVATOR PIT	ELEVATOR	AP-OS-B1	3/10		1.2	120/1																EMERGENCY POWER
SP-2	DUPLEX SUMP PUMP	MECH SERVICE																						
RF-1	RETURN FAN (AHU-1)	BASEMENT MER	AHU-1 SYSTEM	DP-OS	7.5	11		460/3							X								DIV 23	EMERGENCY POWER
RF-3A	RETURN FAN (AHU-3)	CH-302	AHU-3 SYSTEM	DP-M-2	7.5	11		460/3							X								DIV 23	
RF-3B	RETURN FAN (AHU-3)	CH-301	AHU-3 SYSTEM	DP-M-2	7.5	11		460/3							X								DIV 23	
UH-B2-1	UNIT HEATER	BASEMENT MER	BASEMENT MER	AP-M-B2			16W	120/1	X			DIV 23												
UH-B1-1	UNIT HEATER	AHU-2 SERVICE VESTIBULE	AHU-2 SERVICE VESTIBULE	AP-M-B2			16W	120/1	X			DIV 23												
VAV-X-X	VARIABLE AIR VOLUME CONTROL BOX	REFER TO DRAWINGS	REFER TO DRAWINGS				0.1	120/1																
VF-B3-1	VENTILATION FAN	TUNNEL (NORTH)	TUNNEL (NORTH)	AP-M-B2	0.5	4		120/1	X			DIV 23												
VF-B3-2	VENTILATION FAN	TUNNEL (SOUTH)	TUNNEL (SOUTH)	AP-M-B2	0.5	4		120/1	X			DIV 23												

US Army Corps of Engineers ®

MARK	DESCRIPTION	DATE
1	AMENDMENT 7	5/21/2021

ISSUE DATE: 2/11/2021
SOLICITATION NO.: W912DS-19-R-0014
CONTRACT NO.: W912DS-19-C-0031
PROJECT NO: 20190494

DESIGNED BY: CR
DRAWN BY: MJP
CHECKED BY:
SUBMITTED BY:
SIZE: ANSI D

US ARMY CORPS OF ENGINEERS

JACOBS / EWING COLE A Joint Venture

WEST POINT, NY
USMA BUILDING 605 CULLUM HALL RENOVATION

HVAC, PLUMBING, AND ELECTRICAL COORDINATION SCHEDULE

SHEET ID

HPE-801