MOTT MACDONALD

BENAKA INC.
7 LAWRENCE STREET
NEW BRUNSWICK, NJ 08901
Ph: 732-246 7060 FAX: 732 246 7073
www.benakainc.com

Training Center Full Facility Revitalization Orangeburg, NY

Corrected Final Submission- Building

July 29, 2021

BENAKA INC.
7 LAWRENCE STREET
NEW BRUNSWICK, NJ 08901
Ph: 732-246 7060 FAX: 732 246 7073
www.benakainc.com

Mott MacDonald
111 Wood Avenue South
Iselin
NJ 08830-4112
United States of America

T +1 (800) 832 3272
mottmac.com

U. S. ARMY ENGINEER
DISTRICT, LOUISVILLE
600 DR. MARTIN LUTHER
KING, JR. PLACE
ROOM 821
LOUISVILLE KY 40202-2239U.

Training Center Full Facility Revitalization Orangeburg, NY

Corrected Final Submission- Building

July 29, 2021

Issue and revision record

Revision	Date	Originator	Checker	Approver	Description
0	02-02-2021	KDA	DLH	RKF	Interim Submission- Building
1	05-28-2021	KDA	DLH	RFK	Final Design Submission- Building Internal
2	06-02-2021	KDA	DLH	RFK	Final Design Submission- Building
3	07-29-21-021	KDA	DLH	RFK	Corrected Final Submission

Document reference: 505100403 | 3 |

Information class: **Standard**

This document is issued for the party which commissioned it and for specific purposes connected with the above-captioned project only. It should not be relied upon by any other party or used for any other purpose.

We accept no responsibility for the consequences of this document being relied upon by any other party, or being used for any other purpose, or containing any error or omission which is due to an error or omission in data supplied to us by other parties.

This document contains confidential information and proprietary intellectual property. It should not be shown to other parties without consent from us and from the party which commissioned it.

Contents

1 General 1
1.1 Scope of Work 1
1.2 Expedited Work 2
1.3 Specifications Format 2
1.4 Drawings Format 2

2 Environmental 3

3 Structural 4
3.1 General 4
3.2 Foundations 4
3.3 Vertical Framing Members 4
3.4 Horizontal Framing Members 4
3.5 Exterior Walls 4
3.6 Arms Vault 4

4 Architectural 5
4.1 Applicable Codes 5
4.2 Space Organization and Programming Narrative 5
4.3 Construction Materials and Finishes Narrative 5
4.3.1 Exterior design 5
4.3.2 Roof 5
4.3.3 Exterior walls 6
4.3.4 Exterior Openings 7
4.3.5 Interior Doors 7

5 Interior Design 9
5.1 General 9
5.1.1 Lobby: 9
5.1.2 Main Corridors: 9
5.1.3 Public Toilets: 9
5.1.4 Kitchen: 10
5.1.5 Assembly Hall: 10
5.1.6 Locker Rooms 10
5.1.7 Offices 10
5.2 Arms Vault 10
5.2.1 Caging 10

6 Mechanical 11

6.1 General 11

7 Electrical 14

7.1 Electrical Design Standards 14
7.2 Electric Service and Distribution for Training Building 14
7.3 Interior Power 15
7.4 Interior Lighting 16
7.5 Lightning Protection System 16

8 Communications and Special Systems 17

8.1 Communications Outside Plant (OSP) 17
8.2 Communications Inside Plant (ISP) 17
8.3 Public Address System 19
8.4 Access Control System 20

9 Plumbing 21

9.1 General 21
9.1.1 Fixtures 21
9.1.2 Hot Water 21
9.1.3 Kitchen 21
9.1.4 Services 21

10 Fire Protection 23

10.1 General 23
10.2 Fire Suppression 23
10.3 Sprinkler System 24
10.4 Fire Alarm/Mass Notification 25
10.4.1 Notification Devices 26

11 Life Safety, Fire Protection, and Antiterrorism/Force Protection 27

11.1 Criteria 27
11.2 Applicable Codes 27
11.3 ATFP Requirements 28

12 Room by Room Requirements 29

Room Data Sheets 29

APPENDICES 62

A. Code Analysis 63

B. Space Allocation Table 64

C. CID and FF&E 65

D. Electrical Calculations and Data Sheets- Building 66

E. Mechanical Calculations and Data Sheets- Building 67

F. Plumbing Calculations and Data Sheets- Building 68

G. Fire Protection Data Sheets- Building 69

H. Structural Calculations - Building 70

I. Hazmat Report 71

J. LEED Implementation Plan 72

K. Unit Plan 73

1 General

1.1 Scope of Work

The Orangeburg USARC facility is located at Orangeburg, New York.
This project consists of the design and renovation of the existing Army Reserve Center, the construction of two additions to the building, the construction of a Wash rack and the construction of a slab for Mobile Kitchen Trailer. This project includes modifications to required utilities, storm drainage, communications, electrical, HVAC, fire protection/alarm systems, paving, walks, curbs, parking, access roads, exterior lighting, site improvements, grading and landscaping. All building and room signage shall be new, except for the existing minuteman plaque and building lettering which will be relocated to new entrance.
The scope includes but is not limited to:

1. North and West additions: North: Locker and Training area and West, Offices.
2. North addition for Weapons Simulator is **NOT included.**
3. Wash Rack- This work includes new building and site work including extension of all utilities. Provide wash rack as Pre-Engineered Metal Building (PEMB). Refer to Fast Track Submission package.
4. Repair - Replace Existing Roofing with New Roofing. This work includes work required to replace existing roofing and insulation with new insulation and roofing. This work also includes demolition and removal of existing roofing and integration of roofing at existing roof with new roofing above proposed building additions
5. Repair - Existing Parking Lot Mill and Overlay includes work to mill existing paving and overlay bituminous paving on top. Refer to Section 01 02 00 00 48 Part 03 Site Civil Engineering. Refer to Fast Track Submission package.
6. New Work - MKT Pad. This work includes demolition of existing paving and construction of a concrete pad for MKT functions including extension of required utilities to the location near to the existing Kitchen and Mechanical Room. Water service lines to the MKT Pad. The existing service to the Training Center will remain, however, a portion of the water line will need re-routed at the south west corner of the building to accommodate the proposed addition. Refer to Fast Track Submission package.
7. Refer to Section 01 02 00 00 48 Part03 Site Civil Engineering. Provide concrete pad and extension of all utilities for MKT functions. Refer to Fast Track Submission package.
8. AT/FP Upgrades – Window Replacement. This includes work required to furnish and install new AT/FP - Compliant Exterior Windows and Glazing in existing openings.
9. Window treatments, part of the CFCI Bonafide, which **has not been awarded yet. It will be included in the design.**
10. Site work as shown on drawings including the antiterrorism gate. Refer to Fast Track Submission package.
11. Exterior signage: Refer to Fast Track Submission package.
12. Arms Vault- walls and enclosure to be cast-in-place reinforced concrete construction. Reinforcement of the Arms Vault floor will comply with DoD Standard AR 190-11. 1, Physical Security of Arms, Ammunition, and Explosives and other Applicable Criteria of the RFP
13. Interior signage will comply with requirements of UFC 3-120-01, ADAAG and UFAS. Interior room identification signage will be provided for all rooms, directional signage, Army Reserve Minuteman plaque, and building directory in corridor at main entry. Locations and content will be coordinated with User.

14. Food Service Equipment Replacement- CFCI **(Not yet awarded). Included in the design**
15. LEED project registration and Commissioning
16. Environmental- Hazmat report
17. Verification of existing utilities. Refer to Fast Track Submission package.
18. FF&E and SID package
19. Existing windows will be replaced and new windows will be added as follows:

    - Two (2) 48” x 48” at Physical Readiness West Façade, and one (1) 30” x 48” for each of the following spaces:
        - Private Office 1010
        - Unit Commons 1008
        - Shared Offices 1011
        - Private Office 1013, and
        - Private Office 1012

20. New Accordion partition will be provided between Classrooms 1017 and 1018. Existing accordion partitions will remain.

Varying levels of renovation or new work are as indicated at associated plans and Room by Room Supplemental Instructions provided as part of the RFP package.
At the time of this report, the Weapons Simulator addition is not an approved Option and therefore not included in the design.
The RFP does not include any scope for the removal of the earth berms around the building.
Based on the Government approval for Main Façade re-design, the berms will be removed at west elevation.

1.2 Expedited Work

Benaka intends to expedite sitework, Wash rack Building, and MKT pad. Refer to Fast Track Certified Submission package submitted on April 26, 2021.

1.3 Specifications Format

Specifications will be provided in format as called for in Section 01 03 00.00 48 DESIGN SUBMISSIONS AFTER AWARD, paragraph "General Design Requirements", subparagraph "Specifications and reports."
Per subsequent request by USACE, the .00 48 extension will only be used for Telecommunications specifications.
SpecsIntact will be used for preparing standardized facility construction specifications.

1.4 Drawings Format

Drawings and As-Builts will be prepared in Revit, per Volume 2 Specification 01 03 00.00 48, part 1.5.4.1, using a Revit template downloaded from the CAD BIM Center https://cadbimcenter.erdc.dren.mil/

2 Environmental

The Orangeburg ARC Training Center has been inspected for HAZMAT by the Government; no asbestos-containing materials (ACM) were identified during limited non-destructive surveys. Benaka- Mott MacDonald performed a thorough demolition-level asbestos inspection in accordance with applicable Federal, State, and local regulations. The goal of the inspection was to identify ACM, including that which may be located inside walls, above ceilings, under floors, and other inaccessible areas. The inspection was conducted by an accredited asbestos building inspector.
Mirror Mastic was determined to be asbestos containing and shall be abated in accordance with Paragraph 3.2.11.2 Sealants and Mastics, of Specification section 02 82 00. Work shall be performed utilizing the OSHA specified engineering and safety controls.
See Appendix I for Hazmat report.

3 Structural

3.1 General

The Structural Design will be in compliance with the requirements of, but not limited to, the following standards:

- UFC 1-200-01 General Building Requirements
- UFC 3-301-01 Structural Engineering
- UFC 4-010-01, DoD Minimum Antiterrorism Standards
- DoD Standard AR 190-11, Physical Security of Arms, Ammunition, and Explosive
- 2018 IBC - International Building Code
- ASCE 7-16 - Minimum Design Loads and Associated Criteria for Buildings and Other Structures
- ACI 318-14 - Building Code Requirements for Structural Concrete
- AISC 360-16 – Specification for Structural Steel Buildings

3.2 Foundations

At proposed additions A & B, the foundations are spread footings based on Geotechnical report recommendations. The depth of new footings will match existing foundation depth per the 1986 Original Building Design Drawings. New ground floor at proposed additions will consist of 6” slab on grades bearing on subgrade prepared per the Geotechnical report.

3.3 Vertical Framing Members

New building additions will be supported by new steel columns, or existing columns which have been verified for adequacy and reinforced as required. Bottom of new steel columns will bear on new concrete pedestals and spread footings.

3.4 Horizontal Framing Members

At the new building additions, the new roof will be framed using open web steel joists and steel girders with 1½” un-topped corrugated steel roof deck. The existing building expansion joint will be extended through the new north building addition. All existing roof slopes and drains are to remain, and new slopes and drains will be provided at new additions.

3.5 Exterior Walls

All exterior walls will be constructed of 6” LTGA designed by delegated engineer. LTGA walls are non-load bearing and minimum sizes for LTGA studs have been provided.

3.6 Arms Vault

The new walls of the arms vault will be constructed using 8” cast in place walls which will bear on new strip wall footings based on geotechnical report recommendations. The top of the new strip footings will match the top of concrete elevation at the existing foundations. The new foundations will not bear on the existing foundations, and wall loads will span over the existing foundations.

4 Architectural

4.1 Applicable Codes

Refer to Appendix A.

4.2 Space Organization and Programming Narrative

The space organization was defined by the USACE's team and is product of an intense design process which resulted in an optimal layout. For the Charette submission, and based on RFP drawings, the design team assumed no substantial changes were necessary. This direction was confirmed during the Charette meeting and per comments received to the same, to design the Toilet/ Locker Rooms for able-bodied only. Per recent discussions and pending response to RFI, ABA accessibility requirements was added to the scope of work for employee Locker Rooms.
The existing Toilet Rooms will be accessible, therefore minor changes related to door approach and stall width were made.

4.3 Construction Materials and Finishes Narrative

The following paragraphs describe materials for major building systems. Exterior materials, roof forms, and detailing will comply with the provisions of this RFP and will be compatible with the existing building.

4.3.1 Exterior design

The project includes a main entry aligning with the existing main corridor. This work will include partial demolition of existing building exterior wall and reconstruction of this section as entry, to include aluminum and glass storefront system at exterior wall and vestibule. New glazing at exterior storefronts and doors will meet all current AT/FP requirements. The design for the additions mimics the existing building for materials, and style. The roofline remains the same as adjacent structures.
The West Façade will include removal of existing earth berms and new EIFS cladding over existing CMU, along the bottom portion of the west wall.
Berms along the North and South facades will be sloped towards the west for termination.

4.3.2 Roof

The roofing system of the Training Center will be low-slope, single-ply EPDM membrane. Roofing system will be Class A rating for fire resistance, UL 90 wind resistance rating, and Factory Mutual (FM) l-90 fire and wind resistance rating. Roof system assembly for this project will be a complete system, tested and approved in accordance with FM l-90, UL 580 and local building code requirements.

Minimum insulation value to be provided per project requirements.

All roof systems will have 20-year material, finish, and weathertightness warranties.
Rooftop walkways to and around any rooftop equipment requiring maintenance will be provided.

Trim and Flashing. Gutters, downspouts, and fascia will be prefinished metal and will comply with SMACNA Architectural Sheet Metal Manual.

The existing deck and structure are sloped towards the drains at ¼" per foot. Adding another ¼" slope would increase the parapet heigh substantially, therefore the roofing replacement will add flat insulation keeping the existing slope.

The typical roof assembly for the additions will be composed of:

- Metal deck
- Vapor barrier
- Roof Insulation
- Cover board
- Fully adhered EPDM membrane

For the renovation portion, the existing roofing and insulation will be removed and replaced. The existing deck will remain.

For the additions, scuppers, leaders, splash blocks and other roof drainage elements will be provided as appropriate to direct runoff away from the building without damage or erosion to landscaping or paving.

Where the required R-value cannot be provided due to thickness limitations presented by existing rooftop conditions, including heating, ventilating and air-conditioning equipment, low door or glazing heights, parapet heights, proper roof flashing heights, the maximum thickness of insulation compatible with the available space and existing uses shall be installed.

4.3.3 Exterior walls

Existing building walls are composed of EIFS system.
The scope of the work will include patching and repairs to the existing exterior walls and re-surfacing with a skim coat for uniform appearance. The exterior walls of additions to the Training Center will be Exterior insulation Finish System (EIFS) cladding with steel stud backup.
The exterior walls for both the West addition and the North addition will match the exterior finish system construction to be fully integrated with the existing building, per Specification 01 02 00.00 48, part 6-3 of 126.2.1.1.
Exterior CMU walls at Unit Storage/ Staging (old OMS) will be cladded with EIFS to match existing.

Exterior walls, and roof assemblies for the new additions will be provided with thermal transmittance (U-values) required to comply with the energy calculations for the facilities. The building envelope will comply with ASHRAE Standard 90.1. Minimum insulation value for exterior walls is R-13 batts in stud cavity with R-10 continuous insulation outside cavity; Air barrier is not required per RFP Vol 1-Specification 01 02 00.00 48 section 8.4.

The typical exterior wall assembly will be composed of:

- 2" drainable EIFS
- Vapor barrier
- 5/8" dense glass sheathing
- Batt Insulation- R13

- 6” metal studs
- 5/8” Gypsum board

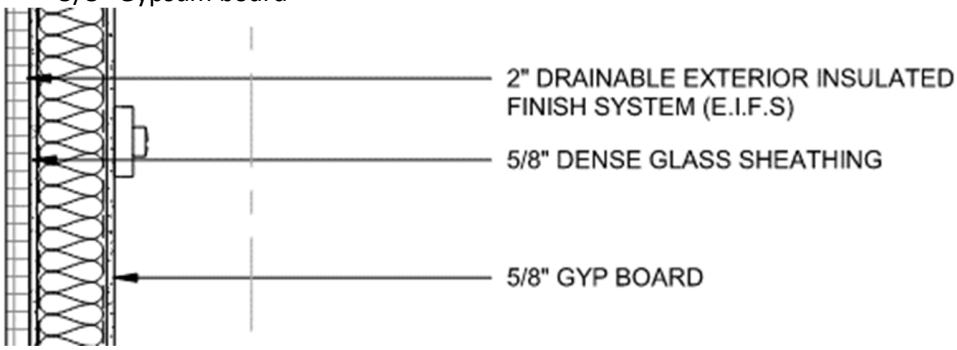

4.3.4 Exterior Openings

Exterior openings shall receive steel frame and door systems with full glazing, and aluminum windows, Existing louvers above the windows at North elevation which will be no longer in use, will be blanked off and sealed from the interior of the building.
Existing blank-off panels below existing windows will remain, except those in the west façade which will be removed and infilled as part of the Front Entrance design.

Exterior Windows. Aluminum windows will be provided complying with American Architectural Manufacturers Association AAMA/NWWDA 101 / I.S. 2. Minimum performance class shall be Heavy Commercial (HC).
Existing windows will be replaced in existing openings, and new windows will be provided as follows:

- Two (2) 48” x 48” at Physical Readiness West Façade, and one (1) 30” x 48” for each of the following spaces:
    - Private Office 1010
    - Unit Commons 1008
    - Shared Offices 1011
    - Private Office 1013, and
    - Private Office 1012

Windows will be aluminum of a minimum performance class Heavy Commercial (HC). Windows will be provided with insulating glass and thermal break necessary to achieve a minimum Condensation Resistance Factor (CRF) of 45. Finish will be Architectural Class I anodic coating or AAMA 2605 organic coating. Operable windows will have locks and fiberglass or aluminum insect screens removable from the inside. New windows will be also provided in the renovation portion, as a replacement in kind. Spandrel glass will be provided in sections of windows where intersects with walls.

Main Entrance Doors. Main entrance doors will be an aluminum storefront system, full glazed;

Other Exterior Non-Entrance Doors. Exterior doors and frames opening to spaces other than corridors or lobbies will be hollow metal- flush; Commercial Steel, Type B, minimum A40 coating weight; factory primed.

4.3.5 Interior Doors

Doors to offices, unit commons, classrooms, toilets, and other typically occupied spaces will be wood; doors to more utilitarian spaces will be hollow metal.
Solid core flush wood door with staved lumber or particleboard core, Type II flush doors for interior use conforming to WWDA I.S.1-A with faces of premium grade hardwood veneer. Fire Rated Wood Doors will conform to the requirements of UL 10B, ASTM E 152, or NFPA 252 for the class of door indicated and will be provided with hardware reinforcement blocking in compliance with the manufacturer's labeling requirements and shall not be mineral material similar to the core.

5 Interior Design

5.1 General

(From Vol 1) The Conceptual Plans provided were used to the maximum extent. Per the pre-work conference, the existing and new spaces have been arranged in an efficient, functional manner and it is the intention of USACE to maintain.

From the four basic color palettes of AR facilities, the Green color palette included in the RFP was selected. The Charette submission included finishes and color selections listed in the RFP.
Per a subsequent Interior Design meeting held on December 16, 2020 at Mott MacDonald Offices, a new selection of materials and colors was presented and approved via RFI response. The finishes and color selections were further revised and finalized per the Final Design Meeting held on July 8, 2021 at the Mott MacDonald office.

The general requirements outlined in this section are specific from the specification 01 02 00.00 48 provided as part of the solicitation package. Additional requirements are outlined in Section 12 of this report following the guidelines per UFC 4-171-05.

Samples were be presented loose at the Interim Design meeting held on March 4, 2021 at the United States Army Reserve Center in Orangeburg, NY and submitted in binders for the Final Design Submission. The Corrected Final Design Submission includes revised binders with printed reports and drawings per the requirements of the Army Reserve Design Process and Submittal Requirements - Part C.

5.1.1 Lobby:

The lobby area will serve as the formal entry to the facility. Finishes in this area shall be of higher quality and aesthetics than in the other spaces, but durability and maintainability shall remain important. Rubber tiles will be used for floors, and walls will be of abuse-resistant gypsum board. The Lobby in this building is a niche off the Corridor, therefore it was determined that a different material would not blend naturally and would render awkward transitions.

Rubber floor tile was subsequently approved during the Interior Design meeting held on Dec, 16 2020. Corner guards will be provided at outside corners and chair rail shall be provided for the walls. Bulletin boards and/or whiteboards will be provided; The minimum ceiling height will be 9 feet.

5.1.2 Main Corridors:

Floor finish: Rubber tile and the colors/pattern was selected during the Interior Design meeting held on December 16, 2020, as the final product to provide visual continuity. Corner guards will be provided at outside corners and chair rail shall be provided for the walls.

5.1.3 Public Toilets:

The existing ceramic tile flooring and wall tile will be removed and replaced. Existing countertop, lavatories, water closets and toilet partitions will be removed and replaced. Public Toilets will be ADA-ABA accessible. New matching ceramic floor and wall tile will be provided, with paint will above the termination point of the wall tile.

5.1.4 Kitchen:

The Kitchen will be fully renovated. Existing food service equipment will be removed as part of the work. New equipment will be installed once the CFCI option is awarded by the USACE at a later date. Utilities will be installed and coordinated around kitchen equipment specifications provided in the solicitation package. Ceramic tile will be installed at kitchen walls, 6'-0" above the finished floor. Quarry tile will be installed on floor surfaces.

5.1.5 Assembly Hall:

Assembly shall be expanded back to the main corridor to incorporate the original Assembly Hall spaces. Provide new finishes as required at combined space to be fully renovated. Epoxy based poured resin flooring surfaces at expansion area will be provided. The new portion of the Assembly Hall will have a matching epoxy color.

5.1.6 Locker Rooms

In Training Center locker rooms a total of 12 full height lockers for full-time personnel will be provided, and the remainder provided will be half height. The number of half-height lockers shall be based on the largest drill weekend consisting of approximately 163 reservists. The layout contains the following:

- Male locker room: (6) LKR-1, (62) LKR-2 and (4) accessible lockers.
- Female locker room (6) LKR-1, (15) LKR-2 and (2) accessible lockers.

Count and male/female ratio were confirmed by USACE via emails 4-15-21.

5.1.7 Offices

The office areas will have a carpet tile floor finish and painted wall finish.

5.2 Arms Vault

Arms Vault walls and enclosure to be cast-in-place reinforced concrete**.**
The reinforcement of the Arms Vault floor (if any) will comply with DoD Standard AR 190-11 as referenced below and be tied to the walls or foundations are required by AR 190-11.
The following note will be included on the arms vault construction documents: "Concrete placement for arms vault floor, walls and roof may not proceed until written security certification and Contracting Officer acceptance is received."

The Arms vault sprinkler heads will be provided with head guards.
A floor drain will be provided.

5.2.1 Caging

Spaces with caging such as Unit Storage will have the number and size of cages shown on the RFP drawings or noted in the Room by Room Supplemental requirements as a minimum. All cages will be new. Aisle widths shall be as shown on RFP drawings; aisle widths in Unit Storage shall be 7'-0" minimum in width to accommodate movement of materials on pallet jacks.

6 Mechanical

6.1 General

The Mechanical design will be in compliance with the requirements of, but not limited to, the following standards:

- IMC – International Mechanical Code
- UFC 1-200-01 General Building Requirements
- UFC 1-200-02 High Performance and Sustainable Building Requirements
- UFC 3-400-02 Design: Engineering Weather Data
- UFC 3-410-01 Heating, Ventilation, and Air Conditioning Systems
- UFC 3-450-01 Noise and Vibration Control
- UFC 4-010-01 DoD Minimum Antiterrorism Standards for Buildings
- UFC 4-171-05 Design Guide for US Army Reserve Facilities, Nov. 15, 2012.
- No number: Army Reserve Network Enterprise Center (ARNEC) Infrastructure Technical Criteria
- Air Conditioning and Refrigeration Institute (ARI)
- Air Movement and Control Association (AMCA)
- American Boiler Manufacturers Association (ABMA)
- ASHRAE 90.1 Energy Standard for Buildings Except Low-Rise Residential Buildings
- ASHRAE Advanced Energy Design Guide for Small Office Buildings ASHRAE Guideline 1, The HVAC Commissioning Process
- ASHRAE Hdbk-IP Handbook, Fundamentals I-P Edition
- ASHRAE HVAC Applications Hdbk – Handbook, HVAC Applications ASHRAE Standard 15
- ASHRAE Standard 55 Thermal Environmental Conditions for Human Occupancy
- ASHRAE Standard 62.1 Ventilation for Acceptable Indoor Air Quality
- American Society of Mechanical Engineers International (ASME)
- American Society for Testing and Materials (ASTM)
- American Welding Society, Welding Handbook
- Associated Air Balance Council (AABC)
- LEED: Leadership in Energy and Environmental Design Green Building Rating System, as developed by the U.S. Green Building Council (USGBC)
- National Environmental Balancing Bureau (NEBB)
- National Fire Protection Association (NFPA)
- Occupational Safety and Health Administration (OSHA)
- Sheet Metal and Air Conditioning Contractor's National Association (SMACNA)

Heating and cooling load calculations will be performed for all spaces in the building by utilizing Carrier's Hourly Analysis Program (HAP) version 5.11, and in compliance with the ASHRAE Handbook - Fundamentals and the latest edition of the ASHRAE Cooling and Heating Load Calculation Manual. Indoor design conditions, outdoor design conditions, occupant loads, and ventilation requirements will comply with ASHRAE Handbook – Fundamentals and UFC 4-171-05 "Design

Guide for Army Reserve Facilities". The capacity of all HVAC equipment will be selected based on the output of the heating and cooling load calculations. Systems and equipment will be selected to comply with the design guide as well as LEED v4 Silver requirements.

All existing HVAC equipment will be demolished, including all HVAC units, ductwork, piping, controls, etc. The existing roof top units and boilers will be removed and set aside for reuse by the Government. No existing systems will be abandoned in place.

The new HVAC system will be comprised of water source heat pumps (WSHP's), Dedicated Outside Air System (DOAS) unit(s), energy efficient hot water condensing boilers and a closed-circuit evaporative fluid cooler.

WSHP's will be dedicated to individual zones. Each zone will contain spaces with similar occupancies, heating/cooling loads, wall exposures, etc. The WSHP's will provide all the required heating and cooling as determined by the calculations. WSHP's will be located above the ceilings and will be fully ducted with no plenum returns. Ducted returns shall be provided with filtered return grilles to allow for filter changing at ceiling level.

Ductwork will be provided for each WSHP for proper air distribution within each zone. The kitchen, classrooms, and conference rooms will have dedicated WSHPs. Offices may be grouped such that one WSHP serves a maximum of 4 individual offices with similar heat loads. Other building spaces with similar heat loads, occupancies, and schedules may be grouped together with control areas not to exceed 2000 sq. ft.

Code required outside air will be provided by water source heat pump type DOAS units located on the roof. The DOAS units will supply tempered and dehumidified air to each thermal zone and space as per ASHRAE 62.1 and UFC 3-410-01 requirements. Hot gas reheat coils will be provided in each DOAS unit to prevent overcooling of the dehumidified air. DOAS units will also be provided with total (sensible and latent) energy recovery wheels to precondition the incoming outside air using the collected exhaust/relief air from the building. The exhaust air from the toilets, showers, locker rooms and janitor's closets will be exhausted through the DOAS units to capture the exhaust energy/preconditioning the outside air.

Quantity and location of DOAS units will take into account the maximum allowable main duct sizes permissible to accommodate maintaining ceiling heights as well as zoning of functional areas within the building to allow for shutting down unoccupied areas of the building.

High efficiency condensing boilers will provide the required hot water for all water source heat pumps and DOAS units which have the water source heat pump technology. The condensing boilers will be natural gas fired and a minimum of two boilers will be provided, each sized for 80% of the total calculated heating load.

A closed-circuit evaporative cooler will provide the required cooling and heat rejection for all WSHP's. The closed-circuit evaporative cooler will be located where the existing chiller is located. All exterior piping will be located aboveground.

HVAC equipment will be served by a common condenser water loop routed throughout the building. The condenser water loop will maintain the operating temperature range as required by the WSHP manufacturer by means of the central boiler plant for winter operation (condenser loop heat injection) and a closed-circuit evaporative fluid cooler for summer operation (condenser loop heat extraction). Propylene glycol will be provided to prevent freezing of the condenser water loop serving the closed-circuit evaporative cooler and the roof mounted DOAS and WSHP units. Glycol makeup unit will be located in the mechanical room.

A dedicated ductless split system air conditioning unit with direct expansion (DX) cooling coil will be provided for each of the Entrance Facility Room (EF), Telecommunications Equipment Room (TER) and Telecommunications Room (TR) rooms. The evaporator section for each of the units will be installed inside the rooms. Evaporated section of the split system in the EF room. The associated air-cooled condensing units will be located either on grade or the roof. Per Charette meeting, no humidifiers will be provided in this area. Filtered/tempered outside air from the DOAS units will be provided to these rooms to maintain positive pressure and reduce infiltration.

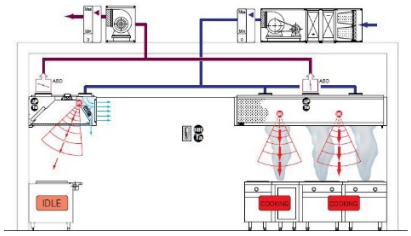

The kitchen will be provided with a dedicated kitchen ventilation system consisting of roof mounted exhaust fans for the hood and a dedicated WSHP. Makeup air for the hood will be primarily through a DOAS unit which serves the adjacent dining/assembly room air. If required, additional makeup air will be provided through a separate gas fired makeup air unit located on the roof.

The unit storage areas, mechanical room, etc. will be heated by WSHP's units and ventilated by the supply or exhaust fan.

The air distribution system will include supply, return, outside air and exhaust ducts. The ductwork system to all spaces throughout the building will be constructed from galvanized steel except for the exhaust ducts from Toilets and Lockers. The exhaust ducts from Toilets and Lockers will be aluminum. All accessories including diffusers, registers, manual volume dampers, and access doors will be of aluminum construction. All air distribution systems will be directly ducted to the spaces and equipment. Plenums will not be used for return air. Thermal insulation will be provided on all supply, return and outside air intake ducts and for all ducts passing through unconditioned spaces.

A new Direct Digital Control (DDC) system will be provided in order to control and monitor all mechanical equipment. All utilities will be monitored, including a dedicated water meter for the closed-circuit evaporative cooler. The DDC system will be capable of direct connection to ARCNET and will be BACnet/Niagara Tridium compatible.

The HVAC design will comply with all requirements of UFC 4-010-01 "DoD Minimum Antiterrorism Standards for Buildings".

The HVAC systems will be designed in order to achieve a LEED v4 Silver rating.

7 Electrical

7.1 Electrical Design Standards

The electrical design will be in compliance with the requirements of, but not limited to, the following standards:
ARNEC CHG3
ANSI/TIA 607
UFC 3-520-01, Interior Electrical Systems
UFC 3-530-01, Interior, Exterior Lighting and Controls
UFC 3-560-01, Operation and Maintenance: Electrical Safety
UFC 3-575-01, Lightning and Static Electricity Protection Systems
UFC 3-580-01, Telecommunications Interior Infrastructure Planning and Design, with Change 1
UFC 3-600-01, Fire Protection Engineering for Facilities
UFC 4-010-01, DoD Minimum Antiterrorism Standards
UFC 4-021-01, Design and O&M: Mass Notification Systems
UFC 4-171-05, Army Reserve Facilities, with Change 3
Louisville District Military Design Guide – Chapter 8 – Electrical
NFPA 70, National Electrical Code
NFPA 72, National Fire Alarm and Signaling Code

7.2 Electric Service and Distribution for Training Building

The internal primary medium voltage power distribution system consists of the existing 4,160V underground power line to an existing 225kVA, three-phase pad mounted transformer. The transformer is providing 208Y/120 volt, three phase, four wire power to an 800A rated switchboard (fused at 600A) for electrical distribution to the Army Reserve Center (ARC) Building. At some point in the future, and not part of this contract, the existing will be replaced with a new 225kVA (13.2 KV primary) 3 phase transformer. The transformer and incoming 13.2kVA service will be installed by the local Utility. In the future the existing 4.16KV underground feeders will be disconnected and abandoned in place. Under this project, new secondary feeders (replacing the old) shall be installed from the transformer to the location of the relocated service entrance Main Distribution Panelboard (MDP). Based on the requirements of the project RFP, the existing MDP is to be relocated and be reused. Existing MDP is manufactured by Square D, I-line. According to the manufacturer, this particular MDP has an AIC rating of 35kA. It is proposed that the existing electrical equipment be removed and relocated in the new electrical space. It should be noted, based on the new building electrical loading calculations, the existing panelboard 600A fuses will be replaced with 800A fuses and the secondary incoming feeders will be upgraded to 800 Amps. In the future it is highly recommended that the Army Corp. work with the utility and upgrade the transformer to a 300kVA unit.

Based on the requirements of the design and relocations of the internal wall structures, new or relocated secondary distribution branch panels shall be provided throughout (208Y/120 Volts). These panels will supply power to receptacles, interior lighting, HVAC systems, fire alarm, Kitchen equipment and various other loads both to the interior and exterior of the building. All secondary panels will derive power from the existing relocated MDP. It is proposed that all new conduit, wire, receptacles, switches, etc. shall be provided.

As part of this design, special attention shall be made to comply with the appropriate Louisville Standard for the placement of receptacles in the secured and classroom areas. This include all required needed circuiting.

In addition to the design a report shall be generated providing for load study, short circuit calculations, arc flash hazard analysis and coordination analysis. Calculations will be performed utilizing commercially available SKM software.

7.3 Interior Power

The ARC Building distribution system will be 208/120V, 3 phase, 4 wire. The existing MDP panel (upgraded to 800 Amps) will be installed in the new Electrical Room and will be used to serve mechanical equipment, lighting, power outlets and fire alarm and security equipment. General purpose receptacle outlets will be provided throughout the building as required. All power and branch circuit wiring will be run in electrical metallic tubing, where allowed, and in rigid conduit where required. Flexible conduits will be installed in locations where subject to vibration. Nonmetallic sheath (NM or NMS) cable will not be allowed. Copper conductor with THWN and THHN insulation will be used. Voltage Drop- 3% total from feeder to farthest outlet on branch circuit. All existing or new panels will be provided with typed panel schedules.

The electrical main distribution system will be grounded at the point of entrance. An equipment grounding conductor will be provided for every branch circuit. The main distribution system panel of each building and all panels serving sensitive electronic equipment (fire alarms, intrusion detections systems, etc.), communication equipment and interior lighting will be equipped with metal oxide varistor (MOV) type surge protective devices (SPDs). Copper lines shall be provided for GFGI IDS system.- Intrusion Detection System is GFGI.

All new electrical components for the renovated spaces will be per the Room by Room Supplemental Instructions and as required by UFC 4-171-05 & 3-520-01. Receptacles shall be controlled per the requirements of ASHRAE 90.1. Additionally, dedicated power will be provided for data, TV's, Multi-function devices, projectors, etc. It should be noted that select receptacle outlets will have the capability of being automatically turned off during no personnel occupancy in the room. This shut/off capability will be via occupancy sensors located in the space and/or room. This will be tied into the control of the lighting as well.

The new Kitchen Equipment shall be provided with new power from a new panelboard (to replace the existing). This new panel will be in the same location as the existing one.

Rooms EF, TER, and TR shall be provided with new power receptacles via a new power panel in each room. Panels will be labeled PP-EF, PP-TER, and PP-TR, respectively. New receptacles will be designed to power rack-mounted equipment, wall-mounted equipment, and convenience outlets. Additionally, each room associated CRAC/CRACC units shall be powered via the corresponding panel. Each panel shall be provided feeder power from a dedicated circuit breaker out of the Main Distribution Panelboard.

7.4 Interior Lighting

Lighting calculations shall be provided to determine proper lighting levels and configuration for the new layout of the ARC building. Lighting calculations shall be based on photometric analysis of the lighting

model using Visual Lighting Modeling software. The interior lighting in the building will be designed in accordance with the Illumination Engineering Society of North America's (IESNA) recommended lighting levels as well as UFC 4-171-05, UFC 3-530-01 and the Room-by-Room documentation that makes up a portion of this narrative.

The lighting design will incorporate energy-efficient LED luminaries with CCT of 3500 and CRI 80, and the lighting control system will comply with the requirements of UFC 4-171-05 and ASHRAE 90.1.

Emergency lighting will be provided for the facility. The system will consist of battery pack ballast integral with the light fixtures. The emergency lighting fixtures will provide a minimum 90 minutes of illumination. All existing Exit sign units shall be replaced with LED type exit lights, integral backup battery and self-diagnostic switch. New exit signs shall be provided in the path(s) of egress.

7.5 Lightning Protection System

A lightning protection system will be provided for the ARC building. The lightning protection system will consist of air terminals and conductors on the roof, down conductors to the lightning protection ground rods and connection to the copper ground loops required by UFC 3-575-01 and NFPA 780. A risk assessment will be provided as required by the RFP. The design will require for the system UL96A Master Label to be obtained.

8 Communications and Special Systems

Communications for the facilities will comply with I3A, Network Enterprise Center Infrastructure Technical Criteria (ARNEC Infrastructure Change 3 Feb 2020), the UFC 3-580-01 "Telecommunications Interior Infrastructure Planning and Design", all applicable ANSI/TIA standards and Louisville District Army Reserve specifications 27 05 28.36 48, 27 10 00.00 48 and 33 82 00.00 48 requirements.

8.1 Communications Outside Plant (OSP)

New Outside Plant (OSP) telecommunication infrastructure will be installed from the service provider to the new Entrance Facility (EF) room in the ARC building. Two (2) 4" Schedule 40 PVC conduits will be installed from the EF to the Utility Demarcation point near New York State Route 303. The conduits will be provided with pull-strings for the installation of the backbone cabling to be installed by others. The final demarcation infrastructure will be coordinated with the Utility provider (Verizon). Manholes will be provided along the pathway to support the installation of the new cabling infrastructure. The Manholes will be 6 FT. Long x 6 FT. Wide x 7 FT. Deep precast concrete type with a 12 Inch sump.

Communications infrastructure will be extended to the new gate at the fenced entrance to the site and this will include a two-way video/voice intercom station with a CAC reader and keyboard at high and low positions. This station will be in a weatherproof enclosure and include a 1.23-megapixel fixed color video camera, power over ethernet (PoE) cable for power and connectivity. A single 2" conduit will be run in parallel with the 2-4" conduits provided for the Verizon conduits.

8.2 Communications Inside Plant (ISP)

Telecommunications Spaces:

Entrance Facility (EF): The EF will be 6 FT. x 8 FT. with a door opening to the exterior of the building.

Telecommunications Equipment Room (TER): The TER will be 8 FT. x 10 FT. with a door opening out into the building corridor.

Telephone Room (TR): The TR will be 8 FT. x 6 FT. with a door opening out into the building corridor.

No equipment or cabling that does not directly serve the telecommunications spaces will pass through or be located within, above or below (under floor) the rooms. All motors, transformers or other electromagnetic producing equipment above 5 KVA shall not be located within 47" of the walls of the telecommunications spaces. The telecommunications spaces are to be provided with open to structure ceilings. Windows will not be provided within the spaces.

Horizontal Backbone Cabling:

Backbone cabling will consist of :

12 Strands of 9/125 Micrometer OS2 single mode fiber optic cabling installed between the EF and the TER , 12 Strands of 9/125 Micrometer OS2 single mode fiber optic cabling installed between the TER and TR. These fiber optic cables will be installed into a rack mounted fiber termination panel with SC connectors.

The existing fiber optic cable and copper backbone cable will be re-routed and re-used between the training building and the OMS building. The cables will be pulled back and the conduit will be intercepted with a junction box and the conduit will then be re-routed to the new TER room. The cabling will be pulled through the re-routed conduit and then terminated on the new racks in the TER. The existing cabling between the OMS building is 12 Strands of 9/125 OS2 single mode fiber optic cable and 25 pair Category 3 copper. The copper backbone cabling will be rack mounted on BET's.

Copper backbone cabling will be 25 Pair Category 3 rated cables installed between the TER and TR Rooms. The cables will be terminated to 110 Stye IDC type termination devices.

24 Category 6A cables will be provided will be installed between the TER and the EF. These cables will be terminated to RJ45 Category 6A patch panels.

Work Area Outlets and Horizontal Cabling:

A typical work area outlet will consist of a two (4) port wall mounted faceplate with (1) Four Pair telecommunications Category 6A cable installed from the wall mounted faceplate to the TR or TER. The plate will have 3 spare/blank ports. The cables will be terminated on a rack mounted modular patch panel. The length of the Category 6A horizontal permanent link cable will not exceed 295 FT (90 Meters).

Work area outlets will be installed in accordance with USARC G-6 Addendum to ARNEC CHG3.

Wireless Access Point (WAP) and Wireless Intrusion Detection (WID) outlets will be installed per ARNEC Section 2.4.9. In general, these will be located on a 40 FT x 40 FT Grid throughout the building. In the unit storage area they will be located every 40 FT on the wall at approximately 8 Ft. above the floor on the wall adjacent to the adjoining administrative area.

Pathways:

A combination of wire basket tray and conduits will be utilized to route horizontal and backbone cabling throughout the building. Wire basket tray will be routed in corridor spaces with conduit sleeves from the tray routed to and penetrating the TER and TR spaces. Within the spaces a ladder rack system will be deployed above the equipment racks.

For the horizontal cabling pathways from the work area outlets to the cable tray a minimum of 1-inch conduit will be utilized. In addition, for applications where larger conduits are required the fill ratio for the conduits will not exceed 40%. For floor box applications a minimum 1-inch conduit will be routed directly from the floor box to the TR or TER.

Pathways will not be routed through mechanical or electrical rooms unless it is unavoidable and if they do route through those rooms the cables will be contained within EMT conduit for the entire route.

J-hooks will be utilized only when the installation of cable tray is not feasible and if used will be rated for Category 6a cabling and not be spaced any further apart that 5 Ft.

Racks and Cabinets

All equipment racks in the telecommunications spaces will be 2 Post heavy duty type. The racks will meet the following requirements:

- EIA-310D Compliant with universal hole pattern
- Static load capacity of 1000 lbs
- 19" Wide, 45U, 7 FT in Height
- Integral bonding connection point

Grounding, Labeling and Testing

Grounding requirements shall meet or exceed all requirement of ANSI / TIA-607 and NFPA 70 and the additional requirements listed in Infrastructure Technical Criteria Change 3 dated Feb 2020.

Labeling shall be in accordance with requirements listed in ANSI / TIA 606 (Class 3) and per the Infrastructure Technical Criteria Diagrams and Details in Appendix B.

Testing shall be performed in accordance with the requirements listed in I3A, UFC 3-580-01 and ANSI / TIA – 568. In addition to requirements listed in the Infrastructure Technical Criteria.

SIPRNET Communications

All secure communications will follow the SIPR-In-A-Box requirements. No additional requirements to the IT infrastructure other than what is listed above is expected. A typical telecom outlet will be provided in the team room adjacent to the IPS Container location.

Intrusion Detection System (IDS)

Two (2) Category 6a cables will be routed to each IDS control panel from the TR or TER spaces. The cables will be terminated inside each IDS panel with RJ-45 (8P8C) Jacks. Copper lines shall be provided for GFGI IDS System. Intrusion Detection System is GFGI.

8.3 Public Address System

The Public Address System for the facility will comply with UFC 4-171-05 "Army Reserve Facilities, With Change 3" and Louisville District Army Reserve specifications 27 51 16.00.48 requirements.

The PA system will be provided for the assembly area of the building only. It will consist of a wall mounted equipment rack in the chair storage room. The rack will contain an amplifier, mixer, AM/FM

Tuner, and a compact disc player. There will be a AM/FM antenna located on the roof with a lightning arrester and coaxial cable extending down to the chair storage room.

Speakers will be located within the space in compliance with the manufacturer's recommendations for coverage. A wired microphone with a floor stand assembly and a wireless clip-on style microphone will be provided.

Microphone cabling will consist of 1 pair 20 AWG stranded, shielded with overall foil shield and drain wire. The wire insulation will be plenum rated.

Speaker cabling will consist of minimum 18 AWG twisted pair will plenum jacket.

8.4 Access Control System

The Access Control System for the facility will comply with UFC 4-171-05 "Army Reserve Facilities, With Change 3" and Louisville District Army Reserve specifications 28 13 00.00 48 requirements.

The existing Common Access Card (CAC) head end system will be re-used to serve the remodeled facility. The CAC access card readers will need to be located at the following entries:

- Main Entrance
- Man Door Closest to the OMS Building
- North Corridor Exit adjacent to the Physical Readiness area
- Double Door at the south side of the Unit Storage Area

Note the existing CAC reader at the existing main entrance will be relocated and re-used. Additional door access readers which are compatible with the existing head end equipment will be provide for additional doors. Door contact switches will be provided for the remaining exterior doors to monitor position.

The new entrance gate will be provided with a two-way video/intercom station and CAC reader at both the high and low positions. The devices will be housed in a weatherproof enclosure. The camera will have a minimum 1.23 mega pixel fixed color camera and utilize Power over Ethernet for both power and communications.

The infrastructure for an Intrusion Detection System will be provided at the Arms Vault. Conduit and junction boxes will be provided for a Government Installed System.

9 Plumbing

9.1 General

Plumbing systems shall be in accordance with the following codes and standards.

- UFC 3-420-01 United Facilities Criteria - Plumbing Systems
- UFC 4-171-05 Army Reserve Facilities
- IBC International Building Code
- IPC International Plumbing Code
- IFGC International Fuel Gas Code
- ASPE American Society of Plumbing Engineers

UFC 3-420-01 supplements the requirements listed in UFC 1-200-01. Per UFC 1-200-01 8 October 2019 Change 1, 1 Oct 2020- 2-29 CHAPTER 29 – PLUMBING SYSTEMS [SUPPLEMENT]:Use IBC Chapter 29 except as modified by UFC 3-420-01.

9.1.1 Fixtures

New plumbing fixtures will be provided for all renovated spaces. Fixtures will be water conservation type with automatic controls. Fixtures in the existing restrooms will be replaced. Freezeproof wall hydrants will be provided along the building exterior at approximately 100’ intervals as required and on either side of the main entrance.

9.1.2 Hot Water

The existing water heater shall be demolished. A new domestic water heater will be in the mechanical room and will be sized to adequately serve all fixtures and equipment within the building. The storage type water heater will be gas fired. Hot water will be stored at 140 deg F. The Kitchen dishwasher will be supplied with 180 degrees F water, while the rest of the building will be supplied with 120 deg F water by a mixing valve assembly. Scald protection will be provided at each fixture or group of fixtures. A recirculation system will be provided to ensure hot water is continuously available during occupied periods. Point-of-use instantaneous electric water heaters will be provided in the Break Room for the pantry sink. All domestic hot water heaters will comply with energy code requirements.

9.1.3 Kitchen

The fixtures, equipment and appliances in the kitchen will be removed and replaced. Water, sanitary, and vent connections will be provided for the new fixtures. The existing floor drains and grease interceptor shall remain in service.

9.1.4 Services

The existing 3” domestic water service is adequate for the modified building. No change is required for domestic water service. There is an existing backflow preventer in the mechanical room. It is on the

boiler make-up water line and it will remain in service. There is no backflow preventer on the main domestic water service. A new RPZ backflow preventer will be provided in the Mechanical Room. A water meter will be provided for LEED sub-metering requirement.

A new sanitary drain will be provided on the north side of the building for the locker room addition. The existing 6” sanitary drain on the south side of the building will remain in service.

The existing 3” natural gas service will be reused; no change is required. The existing gas service that runs underground into the mechanical room does not comply with IFGC section 404.6. The gas service will be changed to an above ground routing into the mechanical room to comply with code. A gas meter will be provided for LEED sub-metering requirement.

Floor drain will be added to the Arms Vault.

Drain pump will be provided for the pantry sink in the Break Room.

Service for the mobilized kitchen trailer (MKT) pad shall include a sanitary and domestic water connection. RFP section 9.4.4.1 requires the sanitary line from the MKT pad to be routed to the existing kitchen grease interceptor. The MKT pad has a gravity drain line and will not be able to connect to the existing grease interceptor. The proposed grease interceptor is rated for a 50 gpm flowrate and 60-gal grease capacity. It will be located outside near the MKT pad. It has a heavy-duty H-20 cover and 4” connections. The water connection will include a yard hydrant with a back-flow preventer and will be installed in a below grade cabinet. The equipment for the MKT pad is shown on the civil drawings.

Service for the wash rack will include a sanitary connection with oil water separator and a domestic water connection. The oil separator to be “Highland” brand. Equipment for the wash rack is shown on the civil drawings,

The existing roof drains are adequately sized for this building. The roof drain dome shall be replaced. The plumbing system will be designed in order to achieve a LEED v4 Silver rating.

10 Fire Protection

10.1 General

Fire Protection systems shall be in accordance with the following codes and standards:

- UFC 3-600-01. Fire Protection Engineering for Facilities, With Change 5, 24 September 2020
- IBC 2018 International Building Code
- IPC International Plumbing Code

UFC 3-600-01 supplements the requirements listed in UFC 1-200-01. UFC 3-600-01 supersedes NFPA and other industry standards, except where not specifically addressed by this UFC. Per UFC 3-600-01 Table 9-3, the sprinkler design for Ordinary Hazard (OH) Classification shall be used for OH groups 1 and 2.

Where the IBC references the International Fire Code (IFC), the IFC must be replaced with NFPA 1, except where superseded by this UFC.

Where criteria are not included in this UFC, fire protection criteria must conform to the requirements of the latest editions of the National Fire Codes. Where criteria are not available from the National Fire Codes, a fire protection design analysis must be submitted to the DFPE for approval.

For general building requirements comply with UFC 1-200-01, general building requirements. UFC 1-200-01 which provides applicability of model building codes and government unique criteria for typical design disciplines and building systems, as well as for accessibility, antiterrorism, security, high performance and sustainability requirements, and safety. Use UFC 3-600-01 in addition to UFC 1-200-01 and the UFCs and government criteria referenced therein.

10.2 Fire Suppression

A fully automatic fire suppression sprinkler system will be provided, which will comply with the latest edition of NFPA, International Building Codes and UFC 3-600-01.

Per Hydrant Flow Test data (Attachment B, Volume 1):

- Hydrant 1: Static Pressure: 165 psi, Residual Pressure: 148 psi, Total Flow: 1,365 gpm
- Hydrant 2: Static Pressure: 160 psi, Residual Pressure: 149 psi, Total Flow: 1,365 gpm

“Per 01 02 00.00 48 part 13.2.3 (page 207 of 713), “The contractor shall perform a water flow test. A fire protection engineer or an engineer experienced in water flow testing shall perform or witness the required flow testing.” The flow test will be performed by the water company, Suez. The contractor is not permitted to witness the flow test because the safety policy of Suez does not permit unauthorized personnel on job sites. Suez will provide a test report after performing the flow test.

A new 6” fire service will be provided into a sprinkler valve room on the north side of the building. There will be a post indicator valve on the new fire service. The new fire service will connect to the existing 8”

site fire main. There is an existing backflow preventer on the site fire main near the street connection. A backflow preventer is not required in the Training center.

There is enough pressure and capacity on the fire service to supply the sprinkler system. A fire pump is not required. Storage tank is not required. The existing fire hydrants for the site comply with UFC 3-600-01. A fire hydrant will be relocated due to conflict with building addition.

An hydraulic calculation for the sprinkler system was done. The design data and results are provided in following table. Storage area shall be protected by ESFR sprinklers. The design is based on class IV commodities. There are no pallets and combustible liquids stored inside the building. The sprinkler design is based on the max storage height available (1'-6" below the deck). The are no racks/ shelves over 12 ft in height. Rack sprinklers are not required.

Sprinkler System – Water Flow Analysis	
Classification	Extra Hazard
Density	1.0 gpm/sf
Area of Operation	1,200 sf
Sprinkler K factor	16.8
Hose Stream (at source)	250 gpm
Ceiling height	Less than 30 ft
Required Pressure	112 psi
Available Pressure	138 psi
Sprinkler flowrate	1,205 gpm
Quantity of active sprinklers	12
Total fire flowrate	1,456 gpm

10.3 Sprinkler System

The sprinkler system design will be based on NFPA 13. Offices and meeting rooms will be based on light hazard classification. The arms vault, storage rooms and mechanical rooms will be based on ordinary hazard classification. Rooms that contain flammable materials (extra hazard classification) are not expected in this building.
Recessed or concealed heads will be used in areas with ceilings. Upright or pendant heads will be used in exposed areas with no ceilings. In the Arms vault sprinkler heads will be provided with head guards regardless of configuration (upright or pendant).
Sprinkler heads in telecommunications rooms will have guards over them, sprinkler piping in telecommunications rooms will have drainage troughs. Piping will be limited through these rooms to only that required for the room. There will be a Siamese fire department connection near the new sprinkler valve room. The sprinkler system will include flow switches and tamper switches. These devices will be monitored by the building fire alarm system.

A wet chemical fire protection system will be provided for the kitchen hoods and exhaust ventilation system in accordance with NFPA 17A. The system will include a manual pull station at the kitchen exits.

All Fire protection equipment will be seismically restrained in accordance with UFC 3-600-01 and NFPA 13.

10.4 Fire Alarm/Mass Notification

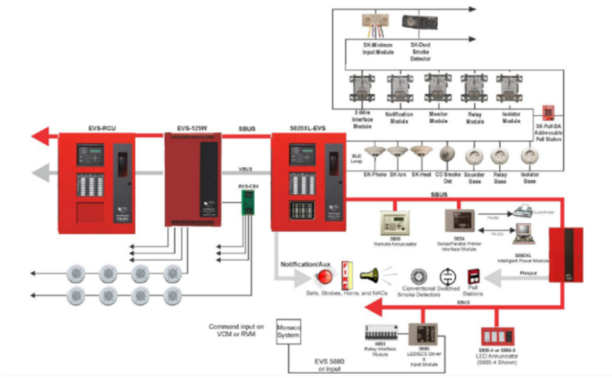

The presently installed Fire Alarm System will be removed in its entirety with the exception of the existing EST-3 main Fire Alarm Control Panel. This panel will be upgraded, reprogrammed and relocated for use in the renovated facility. All other components, devices, strobes, horns, etc. shall be removed. A new Fire Alarm/Mass notification system shall be installed and extended (via two strand fiber optic cables) to the existing EST-3 fire alarm control panel located in the existing OMS building. The new extended system will be fully addressable, with mass notification in accordance with UFC 3-600-01, UFC 4-021-01, and NFPA 72 requirements. This OMS located fire alarm panel will perform as the “master” panel. A Fire Alarm Remote Annunciator Panel (FAA) will be located at the entrance of the ARC building lobby or in location preferred by the owner. Additionally, a Mass Notification Local Operator Console (LOC) shall be provided.

Signal and control shall:

1. Provide all initiation, notification, signal, and control wiring in conduit (EMT minimum).
2. Connect alarm initiating devices to Signal Line Circuits (SLC), Class B, in accordance with NFPA 72.
3. Connect alarm notification appliances to notification appliances (NAC), Class B, in accordance with NFPA 72.

In general, since the building will have complete coverage of a Fire Protection System (sprinklers), smoke detectors will not be installed except in location as required by NFPA 72, the UFC/project requirements and the Project RFP.

Fire alarm/mass notification strobes, speakers and speaker/strobes will be provided for occupant notification. All devices will be spaced to provide voice audible (EVAC) and visual coverage per NFPA 72. Manual pull stations will be provided at building exits. Break glass or break-glass rod types will be prohibited. Only photoelectric types shall be used. Sprinkler system valve supervisory and water-flow switches will be monitored by the fire alarm system. Photoelectric duct smoke detectors will be provided in all HVAC main supply and return ducts as required by NFPA 72. A complete UL listed addressable fire alarm and mass notification system with full control, supervisory, alarm, signal, display, and battery backup features in compliance with NFPA 72, UFC 3-600-01 and UFC 4-021-01 will be provided.

The Fire Alarm Remote Annunciator (FAA) Panel will indicate alarm conditions by device and with alarm silence control will be provided unless directed otherwise by the local fire department.
The Mass Notification System LOC in accordance with UFC 4-021-01 will be provided.
An addressable alarm initiating devices in compliance with NFPA 72 will be provided.
CO detection per UFC 3-600-01 and NFPA 72 will be provided as required.

10.4.1 Notification Devices

A weatherproof fire alarm bell or horn located on the outside of the building will be provided at the fire protection water service fire department connection in accordance with NFPA 13.
Audible notification devices (speakers) throughout the ARC Training building will be provided in accordance with UFC 4-021-01. Multiple audible/strobe notification appliances (speakers/strobes) on the exterior of buildings will be provided in accordance with UFC 4-021-01.
Visual notification appliances throughout the Training Center will be provided in accordance with the ADA-AG and UFC 4-021-01. Clear strobes marked “ALERT” for fire alarm notification and mass notification will be provided.
The existing OMS Building located transmitter is to remain.

11 Life Safety, Fire Protection, and Antiterrorism/Force Protection

11.1 Criteria

Per the Louisville District Military Design Guide (LDMDG) Chapter 9, applicable reference shall be UFC 1-200-01 General Building Requirements which adopts and modifies the International Building Code. UFC 3-600-01 Fire Protection Engineering is the applicable criteria for life safety and fire protection. The UFC adopt National Fire Protection Association codes in lieu of the International Fire Code. UFC 4-010-01 DoD Minimum Antiterrorism Standards for Buildings is the applicable criteria for antiterrorism and force protection requirements, superseded by memorandum : UFC 4-010-01 12 December 2018 Change 1, 19 August 2020 and MEMORANDUM FOR PPMD (Sharon Raque, Chief, Reserve Branch) SUBJECT: Implementation of UFC 4-010-01 revision dated 12 Dec 2018 with references to Unified Facilities Criteria 4-020-01, DoD Security Engineering Facilities Planning Manual, 11 Sep 2008 and Memorandum from Army Reserve Installation Management Directorate, 22 May 2012

11.2 Applicable Codes

a. UFC 1-200-01: DoD Building Code, 8 Oct 2019
b. UFC 3-490-06: Elevators, 8 June 2018
c. UFC 3-600-01: Design: Fire Protection Engineering for Facilities, with Change 5, 12 August 2020.
d. UFC 4-021-01: Design and O&M: Mass Notification Systems, with Change 1, January 2010
e. IBC 2018: International Building Code for fire resistance requirements, allowable floor area, building height limits, and building separation distance, except as modified by UFC 3-600-01
f. NFPA 1, 2018: Fire Code, for determining vehicle access requirements
g. NFPA 101, 2018: Life Safety Code, for building egress and life safety except as modified in UFC 3-600-01
h. NFPA 10, 2018: Standard for Portable Fire Extinguishers
i. NFPA 13, 2019: Standard for Installation of Sprinkler Systems, minimum requirements for design and installation of automatic fire sprinkler systems and exposure protection
j.
k.
l. NFPA 30, 2018: Flammable and Combustible Liquids Code, for construction requirements and fire resistance ratings for liquid storage areas
m. NFPA 30A, 2018: Code for Motor Fuel Dispensing Facilities and Repair Garages, for occupancy classification, construction requirements and means of egress for repair garages and organizational maintenance shops
n. NFPA 70, 2020: National Electrical Code (NEC) - Article 500 Hazardous Locations & Article 511 Commercial Garages, Repair & Storage
o. NFPA 80, 2019: Standard for Fire Doors and Other Opening Protectives
p. NFPA 72, 2019: National Fire Alarm and Signaling Code
q. NFPA 90A, 2018: Standard Installation of Air Conditioning & Ventilation Systems, for protection of openings, shafts, fire dampers, smoke dampers, penetrations and fan control
r. NFPA 96, 2017: Standard for Ventilation Control and Fire Protection of Commercial Cooking
s. NFPA 291, 2019: Recommended Practice for Fire Flow Testing and Marking of Hydrants
t. ASME A17.1, 2019: Safety Code for Elevators and Escalators

u. ABA (Architectural Barriers Act) Accessibility Standards, as directed by DoD Policy Memo "Access for People with Disabilities" dated 31 Oct 2008.
v. ECB 2018-17: New Requirements for Visual Notification for Mass Notification Systems

11.3 ATFP Requirements

Reference: UFC 4-010-01 12 December 2018 Change 1, 19 August 2020 and MEMORANDUM FOR PPMD (Sharon Raque, Chief, Reserve Branch) SUBJECT: Implementation of UFC 4-010-01 revision dated 12 Dec 2018 with references to Unified Facilities Criteria 4-020-01, DoD Security Engineering Facilities Planning Manual, 11 Sep 2008 and Memorandum from Army Reserve Installation Management Directorate, 22 May 2012.

Per Memorandum for PPMD, UFC 4-010-01, 3-2, Standard 1 for standoff distance, applies to distance of the building to the installation perimeter rather than a “controlled” or “uncontrolled” perimeter. Installation perimeter is defined in Appendix D of said standard, as “any demarcation identifying the limit of DoD property and directly or indirectly indicating that unauthorized access is prohibited. The landside perimeter may be established with fences, walls, signage, natural barriers or other means.” Designers will assume that no more than the DoD property line is required to designate the installation perimeter.

1. The new standoff requirement is a 50’ clear zone at the installation perimeter, of which 20’ must be inside the installation perimeter.
2. **Standoff distances do not apply to facilities greater than 50’ inside the installation perimeter.**

Per UFC 4-010-01, *1-5.2.3 Window, Skylight, Glazing, and Door Replacement Projects, and per r*evision per Memorandum: *UFC 4-010-01, 3-11, Standard 10 only includes requirement for laminated glazing in windows and 3-13, Standard 12 includes requirement for laminated glazing in glazed doors.* ***Blast mitigation design for windows, doors and supporting structures is removed from the minimum ATFP requirements. Therefore the only applicable requirement will be for windows and doors to have laminated glazing.***

12 Room by Room Requirements

Room Data Sheets

Vestibule V1001

ARCHITECTURAL	FLOOR FINISH	Walk- off mat
	BASE FINISH	Rubber Base
	WALL FINISH	Paint
	DOOR FINISH	Hollow Metal
	CEILING FINISH	2' x 2' Acoustic Ceiling Tile
	CEILING HEIGHT	9'-0" A.F.F. Minimum
HVAC		• Heating, occupied – 68°F (20°C); unoccupied– 55°F (13°C) • Cooling, occupied – 78°F (25°C); unoccupied– ambient
PLUMBING		None
FIRE PROTECTION		Sprinkler System
FIRE ALARM		• Fire alarm / mass notification • Fire alarm visual notification appliance • Fire alarm audible notification appliance
ELECTRICAL		• Lighting: 10 fc at floor • Receptacles: Convenience receptacles as described in Chapter 3
COMMUNICATION		None
OTHER REQUIREMENTS		• Building directory • Concealed sprinkler heads for aesthetics • Provide walk-off mat in vestibule between entry doors

Corridors C1001 and C1003

ARCHITECTURAL	*FLOOR FINISH*	*Rubber tile*
	BASE FINISH	*Rubber base*
	WALL FINISH	*GWB Painted*
	DOOR FINISH	*Solid core flush wood door with staved lumber or particleboard core*
	CEILING FINISH	*2' x 2' Acoustic Ceiling Tile*
	CEILING HEIGHT	*9'-0" A.F.F. Minimum*
HVAC		• *Heating, occupied – 68°F (20°C); unoccupied– 55°F (13°C)* • *Cooling, occupied – 78°F (25°C); unoccupied– ambient*
PLUMBING		*None*
FIRE PROTECTION		*Sprinkler System*
FIRE ALARM		• *Fire alarm / mass notification* • *Fire alarm visual notification appliance* • *Fire alarm audible notification appliance*
ELECTRICAL		• *Lighting: 10 fc at floor* • *Receptacles: Convinience receptacles as described in Chapter 3*
COMMUNICATION		*None*
OTHER REQUIREMENTS		• *Concealed sprinkler heads for aesthetics* • *Trim – corner guards and chair rail*

Lobby C1002		
ARCHITECTURAL	FLOOR FINISH	Rubber tile
	BASE FINISH	Rubber base
	WALL FINISH	GWB Painted
	DOOR FINISH	N/A
	CEILING FINISH	2' x 2' Acoustic Ceiling Tile
	CEILING HEIGHT	9'-0" A.F.F. Minimum
HVAC		• Heating, occupied – 68°F (20°C); unoccupied– 55°F (13°C) • Cooling, occupied – 78°F (25°C); unoccupied– ambient
PLUMBING		None
FIRE PROTECTION		Sprinkler System
FIRE ALARM		Fire alarm / mass notification Fire alarm visual notification appliance Fire alarm audible notification appliance
ELECTRICAL		• Lighting: 10 fc at floor • Receptacles: Convenience receptacles as described in Chapter 3
COMMUNICATION		None
OTHER REQUIREMENTS		• Concealed sprinkler heads for aesthetics • Trim – corner guards and chair rail

EF (Entrance Facility) G1001

ARCHITECTURAL	*FLOOR FINISH*	*Static-Dissipitive VCT*
	BASE FINISH	*Rubber Base*
	WALL FINISH	*GWB Painted*
	DOOR FINISH	*Hollow Metal*
	CEILING FINISH	*Existing exposed structure*
	CEILING HEIGHT	*9'-0" A.F.F. Minimum*
HVAC		• *Dedicated HVAC unit* • *Heating: Maintain 64° F* • *Cooling – maintain 78ºF (25ºC)* • *Humidity – maintain between 30 and 55 percent relative humidity*
PLUMBING		*None*
FIRE PROTECTION		*Sprinkler System*
FIRE ALARM		• *Fire alarm / mass notification* • *Fire alarm visual notification appliance* • *Fire alarm audible notification appliance*
ELECTRICAL		• *Lighting: 50 fc vertical on racks* • *Receptacles: Convenience receptacles as described in Chapter 3 and quad power receptacles for service entrance equipment as required*
COMMUNICATION		• *Voice/Data - One wall telephone jack*
OTHER REQUIREMENTS		*Provide wire cages over sprinkler heads and drainage troughs below sprinkler pipes.* *6'x8' room size with single door swing out to building exterior*

TER (Telecommunications Equipment Room) G1002

ARCHITECTURAL	*FLOOR FINISH*	*Static-Dissipitive VCT*
	BASE FINISH	*Rubber Base*
	WALL FINISH	*GWB Painted*
	DOOR FINISH	*Hollow Metal*
	CEILING FINISH	*Existing Exposed Structure*
	CEILING HEIGHT	*9'-0" A.F.F. Minimum*
HVAC		• *Heating: Maintain 64° F* • *Cooling – maintain 78°F (25°C)* • *Humidity – maintain between 30 and 55 percent relative humidity*
PLUMBING		*None*
FIRE PROTECTION		*Sprinkler System*
FIRE ALARM		• *Fire alarm / mass notification* • *Fire alarm visual notification appliance* • *Fire alarm audible notification appliance*
ELECTRICAL		• *Lighting: 30 fc on Racks* • *Receptacles: Convenience receptacles as described in Chapter 3 and power to racks as described in the Army Reserve IT Manual*
COMMUNICATION		• *Voice/Data - One wall telephone jack*
OTHER REQUIREMENTS		• *Fire-resistant plywood backboards on two adjacent walls for service punch-down and termination* • *Provide wire cages over sprinkler heads and drainage troughs below sprinkler pipes.* • *TER room to be 8'x 10', that is a fixed dimension (cannot be bigger or smaller) and door needs to swing outward*

Men Toilet G1003 and Women Toilet G1005

ARCHITECTURAL	*FLOOR FINISH*	*Ceramic Tile*
	BASE FINISH	*N/A*
	WALL FINISH	*5' high Ceramic Tile, Paint above*
	DOOR FINISH	*Solid core flush wood door with staved lumber or particleboard core*
	CEILING FINISH	2' x 2' Acoustic Ceiling Tile
	CEILING HEIGHT	*Existing 9'-0" A.F.F. to remain*
HVAC		• *Heating - passive, from transfer air* • *Cooling - passive, from transfer air* • *Ventilation – Use the largest of 2 cfm/sf (10 l/s/sq m), 10 airchanges/hour, or ASHRAE 62.1; negative air pressure.*
PLUMBING		• *Commercial grade, flush valve, low-flow water closets* • *Solid surface countertop with backsplash and undermount sink bowls*
FIRE PROTECTION		*Sprinkler System*
FIRE ALARM		• *Fire alarm / mass notification* • *Fire alarm visual notification appliance* • *Fire alarm audible notification appliance*

ELECTRICAL		• *Lighting:*
		  ○ *10 fc at floor in toilet areas*
		  ○ *10 fc at floor in showers*
		  ○ *Recessed downlights at wet location*
		• *Receptacles:*
		  ○ *Convenience receptacles as described in Chapter 3*
		  ○ *GFCI in wet areas*
		  ○ *GFCI Duplex at sinks*

COMMUNICATION		• *Voice/Data - None*

OTHER REQUIREMENTS		• *Equipment:*
		  ○ *All water closet stalls to receive coat hook*
		• *Special features/requirements:*
		  ○ *Darker grout to be used for ease of maintenance*
		  ○ *Provide high capacity trash cans, toilet paper dispensers, and paper towel dispensers to accommodate heavy weekend use without service;*
		  ○ *Countertop mounted soap dispensers.*

Janitor G1004

ARCHITECTURAL	FLOOR FINISH	Sealed concrete
	BASE FINISH	Rubber base
	WALL FINISH	Epoxy -painted water resistant gypsum board; Water resistant wainscot, such as FRP, to 4 ft AFF on the walls adjacent to the mop sink
	DOOR FINISH	Hollow Metal
	CEILING FINISH	Exposed existing structure
	CEILING HEIGHT	Existing to remain
HVAC		• Heating - passive, from transfer air • Cooling - passive, from transfer air • Ventilation – ventilate withexhaust at 10 air changes per hour, maintain negative air pressure
PLUMBING		• Floor sink with spout with pail hook
FIRE PROTECTION		Sprinkler System
FIRE ALARM		Fire alarm / mass notification Fire alarm visual notification appliance Fire alarm audible notification appliance
ELECTRICAL		• Lighting: 10 fc at floor on floor
COMMUNICATION		• Voice/Data - None
OTHER REQUIREMENTS		Mop hooks over the mop sink

TR (Telecom Room) G1006

ARCHITECTURAL	*FLOOR FINISH*	*Static-Dissipitive VCT*
	BASE FINISH	*Rubber Base*
	WALL FINISH	*GWB Painted*
	DOOR FINISH	*Hollow Metal*
	CEILING FINISH	*Exposed Structure*
	CEILING HEIGHT	*Existing to remain*
HVAC		• *Heating: Maintain 64° F* • *Cooling – maintain 78ºF (25ºC)* • *Humidity – maintain between 30 and 55 percent relative humidity*
PLUMBING		*None*
FIRE PROTECTION		*Sprinkler System*
FIRE ALARM		*Fire alarm / mass notification* *Fire alarm visual notification appliance* *Fire alarm audible notification appliance*

ELECTRICAL		• *Lighting:*
		  ○ *30 fc on Racks*
		• *Receptacles:*
		  ○ *Convenience receptacles as described in Chapter 3 and power to racks as described in the Army Reserve IT Manual*

COMMUNICATION		
OTHER REQUIREMENTS		• *Fire-resistant plywood backboards on two adjacent walls for service punch-down and termination* • *Provide wire cages over sprinkler heads and drainage troughs below sprinkler pipes.* • *6'x8' room size with door swing out to corridor.*

Men Shower/Locker G1007 and Women Shower/Locker G1008

ARCHITECTURAL	*FLOOR FINISH*	*Ceramic Tile*
	BASE FINISH	*Ceramic Tile*
	WALL FINISH	• *Ceramic tile at shower and toilet areas* • *Painted gypsum wall board at locker areas* • *Moisture resistant GWB behind epoxy paint*
	DOOR FINISH	*Solid core flush wood door with staved lumber or particleboard core*
	CEILING FINISH	• *In shower areas - cement board with a skim coat and epoxy-paint* • *In toilet and locker areas – mold-resistant suspended acoustical ceiling tile (ACT) with an aluminum grid*
	CEILING HEIGHT	*9'-0" A.F.F. Minimum*
HVAC		• *Heating - passive, from transfer air* • *Cooling - passive, from transfer air* • *Ventilation – Use the largest of 2 cfm/sf (10 l/s/sq m), 10 airchanges/hour, or ASHRAE 62.1; negative air pressure.*
PLUMBING		• *Commercial grade, flush valve, low-flow water closets* • *Provide floor drains outside of shower areas* • *Solid surface countertop with backsplash and undermount sink bowls* • *Shower head & valve*
FIRE PROTECTION		*Sprinkler System*
FIRE ALARM		*Fire alarm / mass notification* *Fire alarm visual notification appliance* *Fire alarm audible notification appliance*

ELECTRICAL		• *Lighting:*
		  ○ *10 fc at floor in toilet areas*
		  ○ *10 fc at floor in showers*
		  ○ *Recessed downlights at wet locations*
		• *Receptacles:*
		  ○ *Convenience receptacles as described in Chapter 3*
		  ○ *GFCI in wet areas*
		  ○ *GFCI Duplex at sinks*

COMMUNICATION		• *Voice/Data – Wall telephone outlet*

OTHER REQUIREMENTS		• *Equipment:*
		  ○ *Towel hooks or racks at showers*
		  ○ *All water closet stalls to receive coat hook*
		  ○ *Soap dish in showers*
		• *Special features/requirements:*
		  ○ *Darker grout to be used for ease of maintenance*
		  ○ *Provide high capacity trash cans, toilet paper dispensers, and paper towel dispensers to accommodate heavy weekend use without service;*
		  ○ *Countertop mounted soap dispensers*
		  ○ *Per Room-by-Room Supplemental requirements, Fire Protection Riser Closet*
		  ○ *Benches at drying areas*

Electrical Room G1009

ARCHITECTURAL	*FLOOR FINISH*	Existing to remain-*apply topcoat after cleaning*
	BASE FINISH	*Rubber Base*
	WALL FINISH	*GWB Painted*
	DOOR FINISH	*Hollow Metal*
	CEILING FINISH	*Existing Structure to remain*
	CEILING HEIGHT	*10' minimum height to structure*
HVAC		• *Heating: 55° F* • *Cooling – Ventilate sufficient to remove excess equipment heat* • *Ventilation – Sufficient to maintain suibtable temperatures for equipment*
PLUMBING		*None*
FIRE PROTECTION		*Sprinkler System:* *Provide Ordinary Hazard Group 2 sprinklers if electrical room includes switchgear, and Ordinary Hazard Group 1 sprinklers otherwise*
FIRE ALARM		*Fire alarm / mass notification* *Fire alarm visual notification appliance* *Fire alarm audible notification appliance*

ELECTRICAL		• *Lighting:*
		  ○ *30 fc on floor*
		• *Receptacles:*
		  ○ *Convenience receptacles as described in Chapter 3 and receptacle for for building temperature control system*

COMMUNICATION		• *Voice/Data – wall telephone outlet and data outlet for building temperature control system*
OTHER REQUIREMENTS		• *Maintain required clearances at electrical equipment* • *Provide electrical service equipment*

Mechanical Room G1010

ARCHITECTURAL	*FLOOR FINISH*	Existing to remain-*apply top coat after cleaning*
	BASE FINISH	*Rubber Base*
	WALL FINISH	*GWB Painted*
	DOOR FINISH	*Hollow Metal*
	CEILING FINISH	*Exposed Structure to remain*
	CEILING HEIGHT	*10' minimum height to structure*
HVAC		• *Heating: 55° F* • *Cooling – Ventilate sufficient to remove excess equipment heat* • *Ventilation – Sufficient to maintain suibtable temperatures for equipment*
PLUMBING		• *Domestic water heater* • *HW circulating pump* • *Temperature Mixing Valve*
FIRE PROTECTION		*Sprinkler System:*
FIRE ALARM		*Fire alarm / mass notification* *Fire alarm visual notification appliance* *Fire alarm audible notification appliance*

ELECTRICAL		• *Lighting:*
		  ○ *30 fc on floor*
		• *Receptacles:*
		  ○ *Convenience receptacles as described in Chapter 3*

COMMUNICATION		• *Voice/Data – wall telephone outlet*
OTHER REQUIREMENTS		• *Connections to flow switches, tamper switches, and fire alarm* • *Provide Ordinary Hazard Group 2 sprinklers if mechanical room includes gas-fired equipment, and Ordinary Hazard Group 1 sprinklers otherwise.* • *Floor drains for relief valves and condensate, hose bibb, eyewash if water treatment chemicals in room* • *Power and data connections for DDC computer-Contractor to provide laptop for DDC*

Family Support 1001

ARCHITECTURAL	FLOOR FINISH	Carpet Tile
	BASE FINISH	Rubber Base
	WALL FINISH	GWB Painted
	DOOR FINISH	Solid core flush wood door with staved lumber or particleboard core
	CEILING FINISH	2' x 2' Acoustic Ceiling Tile
	CEILING HEIGHT	9'-0" A.F.F. Minimum
HVAC		• Heating, occupied – 68°F (20°C); unoccupied– 55°F (13°C) • Cooling, occupied – 78°F (25°C); unoccupied– ambient
PLUMBING		None
FIRE PROTECTION		Sprinkler System
FIRE ALARM		Fire alarm / mass notification Fire alarm visual notification appliance Fire alarm audible notification appliance

ELECTRICAL		• Lighting:
		  ○ 30 fc ambient
		  ○ 50 fc at desktop
		• Receptacles:
		  ○ Convenience receptacles as described in Chapter 3 and quad receptacles as described in Paragraph 4-2.1.5
		  ○ At least 50% of receptacles to be provided with automatic receptable control per ASHRAE 90.1 standard

COMMUNICATION		• Voice/Data – One telephone/data outlet per workstation and one at each visitor seating location
OTHER REQUIREMENTS		• None

Team Room 1002		
ARCHITECTURAL	FLOOR FINISH	Carpet Tile
	BASE FINISH	Rubber Base
	WALL FINISH	GWB Painted
	DOOR FINISH	Solid core flush wood door with staved lumber or particleboard core
	CEILING FINISH	2' x 2' Acoustic Ceiling Tile
	CEILING HEIGHT	9'-0" A.F.F. Minimum
HVAC		• Heating, occupied – 68°F (20°C); unoccupied– 55°F (13°C) • Cooling, occupied – 78°F (25°C) maintained – ambient
PLUMBING		None
FIRE PROTECTION		Sprinkler System
FIRE ALARM		Fire alarm / mass notification Fire alarm visual notification appliance Fire alarm audible notification appliance
ELECTRICAL		• Lighting – LED-30 fc at table top with dual-level switching and dimmers • Receptacles – convenience receptacles (Chapter 3) ○ At least 50% of receptacles to be provided with automatic receptable control per ASHRAE 90.1 standard
COMMUNICATION		• Voice/data – wall outlets
OTHER REQUIREMENTS		• 4' x 4' markerboard • (1) GFGI TV monitor • Trim – chair rail

Private Offices 1003, 1012, 1013, 1015, 1016, 1021, 1027 and 1028

ARCHITECTURAL	*FLOOR FINISH*	*Carpet Tile*
	BASE FINISH	*Rubber Base*
	WALL FINISH	*GWB Painted*
	DOOR FINISH	*Solid core flush wood door with staved lumber or particleboard core*
	CEILING FINISH	*2' x 2' Acoustic Ceiling Tile*
	CEILING HEIGHT	*9'-0" A.F.F. Minimum*
HVAC		• *Heating, occupied – 68°F (20°C); unoccupied– 55°F (13°C)* • *Cooling, occupied – 78°F (25°C) maintained – ambient*
PLUMBING		*None*
FIRE PROTECTION		*Sprinkler System*
FIRE ALARM		*Fire alarm / mass notification* *Fire alarm visual notification appliance* *Fire alarm audible notification appliance*
ELECTRICAL		• *Lighting – LED-30 fc at desktop* • *Receptacles – convenience receptacles and quad receptacles (refer to UFC 4-171-05 part 4-2.1.5 for more information)* ○ *At least 50% of receptacles to be provided with automatic receptable control per ASHRAE 90.1 standard*
COMMUNICATION		• *Voice/data – one voice/data outlet at each desk location and one at the visitor seating location*
OTHER REQUIREMENTS		• *Trim – coat rack mounted on the wall behind door* • *Lockset – office*

Retention 1004

ARCHITECTURAL	*FLOOR FINISH*	*Carpet Tile*
	BASE FINISH	*Rubber Base*
	WALL FINISH	*GWB Painted*
	DOOR FINISH	*Solid core flush wood door with staved lumber or particleboard core*
	CEILING FINISH	*2' x 2' Acoustic Ceiling Tile*
	CEILING HEIGHT	*9'-0" A.F.F. Minimum*
HVAC		• *Heating, occupied – 68°F (20°C); unoccupied– 55°F (13°C)* • *Cooling, occupied – 78°F (25°C) maintained – ambient*
PLUMBING		*None*
FIRE PROTECTION		*Sprinkler System*
FIRE ALARM		*Fire alarm / mass notification* *Fire alarm visual notification appliance* *Fire alarm audible notification appliance*
ELECTRICAL		• *Lighting – LED-30 fc at desktop* • *Receptacles – convenience receptacles and quad receptacles (refer to UFC 4-171-05 part 4-2.1.5 for more information)* ○ *At least 50% of receptacles to be provided with automatic receptable control per ASHRAE 90.1 standard*
COMMUNICATION		• *Voice/data – one voice/data outlet at each desk location and one at each visitor seating location*
OTHER REQUIREMENTS		• *Trim – coat rack mounted on the wall behind door* • *Lockset – office*

Break Room 1005

ARCHITECTURAL	*FLOOR FINISH*	*Rubber Tile*
	BASE FINISH	*Rubber Base*
	WALL FINISH	*GWB Painted*
	DOOR FINISH	*Solid core flush wood door with staved lumber or particleboard core*
	CEILING FINISH	*2' x 2' Acoustic Ceiling Tile*
	CEILING HEIGHT	*9'-0" A.F.F. Minimum*
HVAC		• *Heating, occupied – 68°F (20°C); unoccupied– 55°F (13°C)* • *Cooling, occupied – 78°F (25°C) maintained – ambient* • *Ventilation exhaust with local control for intermittent ventilation*
PLUMBING		*Two-compartment stainless steel sink and gooseneck faucet*
FIRE PROTECTION		*Sprinkler System*
FIRE ALARM		*Fire alarm / mass notification* *Fire alarm visual notification appliance* *Fire alarm audible notification appliance*
ELECTRICAL		• *Lighting – LED-30 fc at desktop* • *Receptacles – convenience duplex; dedicated 20A for appliances; GFCI duplex at sink* ○ *At least 50% of receptacles to be provided with automatic receptable control per ASHRAE 90.1 standard*
COMMUNICATION		*None*
OTHER REQUIREMENTS		• *Solid Surface countertop and lower cabinets (6 ft length min)* • *Lockset – passage* • *Refrigerator (without ice maker) and Microwave is part of the CFCI not awarded yet.* • *4' x 4' Bulletin board*

Learning Center 1006

ARCHITECTURAL	*FLOOR FINISH*	*Carpet Tile*
	BASE FINISH	*Rubber Base*
	WALL FINISH	*GWB Painted*
	DOOR FINISH	*Solid core flush wood door with staved lumber or particleboard core*
	CEILING FINISH	*2' x 2' Acoustic Ceiling Tile*
	CEILING HEIGHT	*9'-0" A.F.F. Minimum*
HVAC		• *Heating, occupied – 68°F (20°C); unoccupied– 55°F (13°C)* • *Cooling, occupied – 78°F (25°C) maintained – ambient*
PLUMBING		*None*
FIRE PROTECTION		*Sprinkler System*
FIRE ALARM		*Fire alarm / mass notification* *Fire alarm visual notification appliance* *Fire alarm audible notification appliance*
ELECTRICAL		• *Lighting – LED-50 fc at desktop, dimmable overhead lighting* • *Receptacles – convenience receptacles (Chapter 3) and duplex power receptacles at each workstation* ○ *At least 50% of receptacles to be provided with automatic receptable control per ASHRAE 90.1 standard*
COMMUNICATION		• *Data outlet at each table work station*
OTHER REQUIREMENTS		• *Lockset – classroom*

Team Room w/ SIPRNET 1007

ARCHITECTURAL	*FLOOR FINISH*	*Carpet Tile*
	BASE FINISH	*Rubber Base*
	WALL FINISH	*GWB Painted*
	DOOR FINISH	*Solid core flush wood door with staved lumber or particleboard core*
	CEILING FINISH	*2' x 2' Acoustic Ceiling Tile*
	CEILING HEIGHT	*9'-0" A.F.F. Minimum*
HVAC		• *Heating, occupied – 68°F (20°C); unoccupied– 55°F (13°C)* • *Cooling, occupied – 78°F (25°C) maintained – ambient*
PLUMBING		*None*
FIRE PROTECTION		*Sprinkler System*
FIRE ALARM		*Fire alarm / mass notification* *Fire alarm visual notification appliance* *Fire alarm audible notification appliance*
ELECTRICAL		• *Lighting – LED-30 fc at desktop* • *Receptacles – See Army Reserve IT Manual Chapter 3* ○ *At least 50% of receptacles to be provided with automatic receptable control per ASHRAE 90.1 standard*
COMMUNICATION		*ARTNET with change 3*
OTHER REQUIREMENTS		• ***SIPR in a box to be GFGI with dedicated power and IT*** • *Video Conference System* • *(1) GFGI TV Monitor* • *Termination and control for power gate located in 1008* • *Marker board with 2" map rail with end stops and hangerclips* • *Trim – chair rail*

Unit Commons 1008, Admin Support 1009, and Shared Offices 1011 and 1014

ARCHITECTURAL	*FLOOR FINISH*	*Carpet Tile*
	BASE FINISH	*Rubber Base*
	WALL FINISH	*GWB Painted*
	DOOR FINISH	*Solid core flush wood door with staved lumber or particleboard core*
	CEILING FINISH	*2' x 2' Acoustic Ceiling Tile*
	CEILING HEIGHT	*9'-0" A.F.F. Minimum*
HVAC		• *Heating, occupied – 68°F (20°C); unoccupied– 55°F (13°C)* • *Cooling, occupied – 78°F (25°C) maintained – ambient*
PLUMBING		*None*
FIRE PROTECTION		*Sprinkler System*
FIRE ALARM		*Fire alarm / mass notification* *Fire alarm visual notification appliance* *Fire alarm audible notification appliance*
ELECTRICAL		• *Lighting – LED-50 fc* • *Receptacles – convenience receptacles as described in Chapter 3 and quad power receptacles as described in Paragraph 4- 2.1.5. A dedicated 20A circuits for Multi-functional devices* ○ *At least 50% of receptacles to be provided with automatic receptable control per ASHRAE 90.1 standard* • *Dedicated IT and 20A power circuits for large Multi-functional devices*
COMMUNICATION		• *Voice/data- one telephone/data outlet per workstation, wall phone outlet for common use areas, voice/data outlet for common area copiers, printers and fax machines as required*
OTHER REQUIREMENTS		• *Trim – coat racks mounted on wall and wall-mounted door stop* • *Lockset – office* • *Multi-Function Device (Unit Commons and Admin Support only)*

Private Office 1010

ARCHITECTURAL	*FLOOR FINISH*	*Carpet Tile*
	BASE FINISH	*Rubber Base*
	WALL FINISH	*GWB Painted*
	DOOR FINISH	*Solid core flush wood door with staved lumber or particleboard core*
	CEILING FINISH	*2' x 2' Acoustic Ceiling Tile*
	CEILING HEIGHT	*9'-0" A.F.F. Minimum*
HVAC		• *Heating, occupied – 68°F (20°C); unoccupied– 55°F (13°C)* • *Cooling, occupied – 78°F (25°C) maintained – ambient*
PLUMBING		*None*
FIRE PROTECTION		*Sprinkler System*
FIRE ALARM		*Fire alarm / mass notification* *Fire alarm visual notification appliance* *Fire alarm audible notification appliance*
ELECTRICAL		• *Lighting – LED-30 fc ambient; 50 fc at desktop* • *Receptacles – convenience receptacles as described in Chapter 3 and quad receptacles as described in part 4-2.1.5* ○ *At least 50% of receptacles to be provided with automatic receptable control per ASHRAE 90.1 standard*
COMMUNICATION		• *Voice/data – one telephone/data outlet per workstation and one at each visitor seating location*
OTHER REQUIREMENTS		• *Trim – coat rack mounted on the wall behind door and wall-mounted door stop* • *Lockset – office*

Classrooms 1017 and 1018

ARCHITECTURAL	*FLOOR FINISH*	*Carpet tile*
	BASE FINISH	*Rubber Base*
	WALL FINISH	*GWB Painted*
	DOOR FINISH	*Solid core flush wood door with staved lumber or particleboard core*
	CEILING FINISH	*2' x 2' Acoustic Ceiling Tile*
	CEILING HEIGHT	*9'-0" A.F.F. Minimum*
HVAC		• *Heating, occupied – 68°F (20°C); unoccupied – 55°F (13°C)* • *Cooling, occupied – 78°F (25°C); unoccupied – ambient*
PLUMBING		*None*
FIRE PROTECTION		*Sprinkler System*
FIRE ALARM		*Fire alarm / mass notification* *Fire alarm visual notification appliance* *Fire alarm audible notification appliance*
ELECTRICAL		• *Lighting – LED-50 fc; dual-level switching throughout and broken down into two zones, front one-third and rear two-thirds of the room; provide additional controls at markerboard* • *Receptacles – convenience receptacles as described in Chapter 3 and duplex power receptacles at each data outlet* ○ *At least 50% of receptacles to be provided with automatic receptable control per ASHRAE 90.1 standard* • *Wall receptacles* • *Receptacle at the instructor table* • *Receptacle for ceiling-mounted projector* • • *Two conduits, with pull strings, from the overhead projector location - one to the instructors location, the other to center of the wall at the rear of the classroom (if rear of classroom is a moveable partition locate outlet box in wall at either end of the partition)*
COMMUNICATION		• *Voice/data – two voice/data outlets at the instructor location* • one data wall outlet on the wall for every student seat
OTHER REQUIREMENTS		• *This space is used primarily for instructional training of unit personnel, but may also be used as a conference/meeting room on occasion.* • *Rroom-darkening shades or blinds for classrooms with windows- This option has not been awarded* • *Existing accordion partitions to remain. One additional accordion partition will be installed* • *Lockset – classroom* • *(2) GFGI TV Monitors per supplemental instructions*

Assembly 1019

ARCHITECTURAL	*FLOOR FINISH*	*Epoxy will be installed for additional Assembly space to match existing Assembly area.*
	BASE FINISH	*Match Existing*
	WALL FINISH	*Paint at existing and GWB Painted at new partitions*
	DOOR FINISH	• *Solid core flush wood door with staved lumber or particleboard core* (Interior doors) • *HM at exterior*
	CEILING FINISH	*2' x 2' Acoustic Ceiling Tile*
	CEILING HEIGHT	*As high as mechanical design allows*
HVAC		• *Heating, occupied – 68°F (20°C); unoccupied– 55°F (13°C)* • *Cooling, occupied – none; unoccupied– none*
PLUMBING		*None*
FIRE PROTECTION		*Ordinary hazard sprinkler system*
FIRE ALARM		*Fire alarm / mass notification* *Fire alarm visual notification appliance* *Fire alarm audible notification appliance*
ELECTRICAL		• *Lighting – LED 30 fc at table tops; dual-level switching* • *Receptacles – convenience receptacles as described in Chapter 3* • *Provide power for projectors with conduit to instructor location for video*
COMMUNICATION		• Voice/data – two telephone/data outlets per wall
OTHER REQUIREMENTS		• *Lockset – panic hardware* • *Public address system speakers and microphone outlets – CFCI*

Chair Storage 1020

ARCHITECTURAL	*FLOOR FINISH*	*Existing to remain*-apply top coat after cleaning
	BASE FINISH	*Rubber Base*
	WALL FINISH	*GWB Painted*
	DOOR FINISH	*Solid core flush wood door with staved lumber or particleboard core*
	CEILING FINISH	*2' x 2' Acoustic Ceiling Tile*
	CEILING HEIGHT	*9'-0" A.F.F. Minimum*
HVAC		• *Heating, occupied – 68°F (20°C); unoccupied– 55°F (13°C)* • *Cooling, occupied – none; unoccupied– none*
PLUMBING		*None*
FIRE PROTECTION		*Sprinkler System*
FIRE ALARM		*Fire alarm / mass notification* *Fire alarm visual notification appliance* *Fire alarm audible notification appliance*
ELECTRICAL		• *Lighting: 10 fc at floor* • *Receptacles – one convenience receptacle and a quad receptacle on a dedicated power circuit for PA*
COMMUNICATION		*None*
OTHER REQUIREMENTS		• *Double doors - ensure that the door into chair storage is wide and tall enough to accommodate the height of furniture items in their mobile configuration* • *Doors should swing outward to allow full capacity for storage of chairs, consider hold-opens*

Storage 1022 (Kitchen Storage), Scullery 1024, and Can Wash 1039*		
ARCHITECTURAL	*FLOOR FINISH*	*Quarry Tile for Kitchen and Scullery. Sealed Concrete at Can Wash*
	BASE FINISH	*N/A*
	WALL FINISH	*6' height white ceramic tile, paint above*
	DOOR FINISH	• *Solid core flush wood door with staved lumber or particleboard core* at Scullery Interior • N/A at Storage • *Hollow Metal at Can Wash exterior door*
	CEILING FINISH	• *2' x 2' Acoustic Ceiling Tile at Kitchen and Scullery* • *Water Resistant Gypsum Board painted at Can Wash*
	CEILING HEIGHT	*Existing 9'-0" A.F.F. to remain*
HVAC		• *Heating, occupied – 68°F (20°C); unoccupied– 55°F (13°C)* • *Cooling, occupied – 80°F (27°C); unoccupied – ambient* • *Ventilation – comply with ASHRAE 62.1 and NFPA 96*
PLUMBING		• *Three compartment sink* • *Pre-rinse sprayer* • *Water heater booster* • *Ice maker & bin* • *Waste Disposer* • *Dish washing machine* • *Refer to Other Equipment*
FIRE PROTECTION		*Sprinkler System*
FIRE ALARM		*Fire alarm / mass notification* *Fire alarm visual notification appliance* *Fire alarm audible notification appliance*
ELECTRICAL		• *Lighting – 30 fc ambient, 50 fc on desk top for office; 50 fc for kitchen; 30 fc for scullery and food storage* • *Receptacles – convenience receptacles as described in Chapter 3 in addition to any equipment requirements*
COMMUNICATION		• *Voice/data – one voice/data outlet for office workstation and one at the visitor seating location*
OTHER EQUIPMENT		*Per RFP, Attachement V- Kitchen Layout*

Kitchen 1023

ARCHITECTURAL	*FLOOR FINISH*	*Quarry Tile*
	BASE FINISH	*N/A*
	WALL FINISH	*6' height white ceramic tile, paint above*
	DOOR FINISH	*Solid core flush wood door with staved lumber or particleboard core*
	CEILING FINISH	*2' x 2' Acoustic Ceiling Tile*
	CEILING HEIGHT	*Existing 9'-0" A.F.F. to remain*
HVAC		• *Heating, occupied – 68°F (20°C); unoccupied– 55°F (13°C)* • *Cooling, occupied – 80°F (27°C); unoccupied – ambient* • *Ventilation – comply with ASHRAE 62.1 and NFPA 96*
PLUMBING		• *Two compartment sink* • *Hand wash sink* • *See Other Equipment*
FIRE PROTECTION		• *Sprinkler System* • *Wet Chemical Extinguishing System* • *Locate fire suppression pull station along path of egress*
FIRE ALARM		*Fire alarm / mass notification* *Fire alarm visual notification appliance* *Fire alarm audible notification appliance*
ELECTRICAL		• *Lighting – 30 fc ambient, 50 fc on desk top for office; 50 fc for kitchen; 30 fc for scullery and food storage* • *Receptacles – convenience receptacles as described in Chapter 3 in addition to any equipment requirements*
COMMUNICATION		• None
OTHER REQUIREMENTS		• *Exhaust hood over cooking equipment, limited to wet chemical* fire protection • *Direct-fired makeup air unit per NFPA96 wet location light fixtures*
OTHER EQUIPMENT		• *Per RFP, Attachement V- Kitchen Layout*

Secure Storage 1025

ARCHITECTURAL	*FLOOR FINISH*	*Existing to remain*-apply top coat after cleaning
	BASE FINISH	*Rubber Base*
	WALL FINISH	*Paint*
	DOOR FINISH	*Hollow Metal*
	CEILING FINISH	*Existing exposed structure to remain*
	CEILING HEIGHT	*9'-0" A.F.F. Minimum*
HVAC		• *Heating, occupied – 68°F (20°C); unoccupied– 55°F (13°C)* • *Cooling: none* • *Ventilation – outdoor air ventilation, one air change per hour (only when occupied)*
PLUMBING		*None*
FIRE PROTECTION		*Ordinary hazard group 2 sprinkler system with storage below 12 ft*
FIRE ALARM		*Fire alarm / mass notification* *Fire alarm visual notification appliance* *Fire alarm audible notification appliance*
ELECTRICAL		• *Lighting – 10 fc at floor; motion sensors for aisles* • *Locate lights at cage ceilings, as well as in aisles, to provide sufficient light for cages and allow for ease of bulb replacement – provide guards for lights in cages* • *Receptacles – convenience duplex receptacle in each cage; convenience duplex receptacles along aisles*
COMMUNICATION		• *Voice/data – wall telephone outlet*
OTHER REQUIREMENTS		• *Steel shelving (CFCI)* ***Option Not awarded*** • *Wire mesch partitions and gates* • *Padlocks for all cage door hasps*

Lactation 1026

ARCHITECTURAL	*FLOOR FINISH*	*Carpet Tile*
	BASE FINISH	*Rubber Base*
	WALL FINISH	*GWB Painted*
	DOOR FINISH	*Solid core flush wood door with staved lumber or particleboard core- no light vision panel*
	CEILING FINISH	2' x 2' Acoustic Ceiling Tile
	CEILING HEIGHT	*9'-0" A.F.F. Minimum*
HVAC		• *Heating, occupied – 68°F (20°C); unoccupied – 55°F (13°C)* • *Cooling, occupied – 78°F (25°C); unoccupied – ambient*
PLUMBING		*Sink*
FIRE PROTECTION		*Sprinkler System*
FIRE ALARM		*Fire alarm / mass notification* *Fire alarm visual notification appliance* *Fire alarm audible notification appliance*
ELECTRICAL		• *Lighting: More subdued than office spaces; consider direct/indirect ceiling fixtures, wall sconces, or lensed ceiling troffer with switch for table lamp* • *Receptacles: At each chair, the refrigerator and the counter minimum*
COMMUNICATION		• *Voice/Data – One telephone/data outlet*

OTHER REQUIREMENTS		• *Equipment:*
		  ○ *Under-counter refrigerator w/ countertop & base / upper cabinets*
		  ○ *Solid surface counter with lower cabinets, and stainless steel sink and gooseneck faucet*
		  ○ *Provide wing or screen wall at room entry to ensure no lines of sight from adjacent spaces or corridors*
		• *Lactation room shall have an "occupied/unoccupied" thumb switch/lock and a passage door lever. Locks shall be compatible with Best cores.*
		• Refrigerator (Part of Government package)

Armorer 1029

ARCHITECTURAL	*FLOOR FINISH*	*Rubber Tile*
	BASE FINISH	*Rubber Base*
	WALL FINISH	*GWB Painted*
	DOOR FINISH	*Hollow Metal*
	CEILING FINISH	*2' x 2' Acoustic Ceiling Tile*
	CEILING HEIGHT	*9'-0" A.F.F. Minimum*
HVAC		• *Heating, occupied – 68°F (20°C); unoccupied– 55°F (13°C)* • *Cooling, occupied – 78°F (25°C); unoccupied– ambient*
PLUMBING		*None*
FIRE PROTECTION		*Sprinkler System*
FIRE ALARM		*Fire alarm / mass notification* *Fire alarm visual notification appliance* *Fire alarm audible notification appliance*
ELECTRICAL		• *Lighting – 30 fc on work surface; surface mount light on ceiling* • *Receptacles: onvenience receptacles as described in Chapter 3 and quad power receptacles as described in Paragraph 4-2.1.5* • *Continuous 110-volt power strip above the workbenches* • *Vault door security lighting – see Paragraph 4-2.12.5*
COMMUNICATION		• *Voice/data - one voice/data outlet per workstation*
OTHER REQUIREMENTS		• *A physical security light is required outside the armorer's room door* • *4 ft (1220 mm) wide door from the access corridor into the armorer's room* • *a pathway from the armorer's room to the staging area that maintains a minimum 4 ft (1220 mm) clear width* • *Lockset: Office* • *Provide battery backup, vandal-resistant fluorescent fixtures above the armorer's room door. These lights will be connected directly to the panel board* • *42" door to room per Room by Room Supplemental Instructions*

Arms Vault 1030

ARCHITECTURAL	*FLOOR FINISH*	*Sealed Concrete*
	BASE FINISH	*N/A*
	WALL FINISH	*Sealed Concrete*
	DOOR FINISH	*N/A*
	CEILING FINISH	*Sealed Concrete*
	CEILING HEIGHT	*9'-0" A.F.F. Minimum*
HVAC		• *Heating and cooling – none* • *Ventilation –0.5 cfm/sf through transfer ducts; duct openings must comply with AR 190-11*
PLUMBING		*Floor drain*
FIRE PROTECTION		*Sprinkler System- See other requirements.*
FIRE ALARM		*Fire alarm / mass notification* *Fire alarm visual notification appliance* *Fire alarm audible notification appliance*
ELECTRICAL		• *Lighting – 30 fc on floor* • *Receptacles – one convenience receptacle outside cages; one dedicated 20A circuit for dehumidifier and one for IDS panel* • *Provide emergency light inside vault Vault door security lighting – see Paragraph 4-2.12.5* • *Power, conduit and boxes for intrusion detection system (IDS)*
COMMUNICATION		• *Voice/data – one telephone and one data wall outlet and dedicated telephone/data connection to IDS panel, in conduit*
OTHER REQUIREMENTS		• *Cast in place* • *The arms vault requires wire mesh partitions and gates. The partitions will be 10-gauge steel wire, 1 in by 2 in mesh panels welded to a frame of steel angles. Provide framing at structural steel, pipes, ducts and other obstructions running through the partition to provide security and to prevent intrusion.* • *Provide a wall mounted dehumidifier and 2" floor drain outside the caged area, with hard piping to a floor drain. Locate a fire extinguisher adjacent to the motion detection control box; both outside caged areas.* • *Anchors for securing racks ans rack shelving is GFGI* • *Lockset – by vault door supplier (Fed Spec FF-L-2937 combination lock)* • *Guards shall be provided for sprinkler heads within the vault; provide note on sprinkler drawings to coordinate sprinkler design with weapons rack layout* • *Wiremesch partition and gates* • *Day gate*

Physical Readiness 1031

ARCHITECTURAL	*FLOOR FINISH*	*Athletic Floor Tile*
	BASE FINISH	*Rubber Base*
	WALL FINISH	*GWB Painted*
	DOOR FINISH	*Solid core flush wood door with staved lumber or particleboard core*
	CEILING FINISH	*2' x 2' Acoustic Ceiling Tile*
	CEILING HEIGHT	*9'-0" A.F.F. Minimum*
HVAC		• *Heating, occupied – 68°F; unoccupied– 55°F* • *Cooling, occupied – 78°F; unoccupied– ambient* • *Ventilation – 20 cu ft per minute (10 L/S) per person minimum; sufficient ventilation for rigorous activity – do not recirculate to other spaces*
PLUMBING		*None*
FIRE PROTECTION		*Sprinkler System- See other requirements.*
FIRE ALARM		*Fire alarm / mass notification* *Fire alarm visual notification appliance* *Fire alarm audible notification appliance*
ELECTRICAL		• *Lighting – 30 fc on floor* • *Receptacles – convenience receptacles as described in Chapter 3; outlets for powered equipment* • *Electrical outlet and data outlet, at TV mounting bracket* • *A dedicated 20A/120V electrical receptacle is required for each treadmill*
COMMUNICATION		• *Voice/data – wall telephone outlet*
OTHER REQUIREMENTS		• *Furniture, including physical readiness equipment, will be procured and installed by the overnment (Government-furnished, Government-installed or GFGI) using OMAR funding. The design team is responsible for the design of the furniture, and for including the design "for information only" in the construction documents.* • *Lockset – classroom*
FURNITURE		• *10 gal trash can* • *Equipment: Mirror on one wall and excersise bar, ankle height and floor mounted. One generic TV wall mount bracket, with appropriate mounting support. TV monitors by Government .*

Unit Storage 1032, 1036 and 1037

ARCHITECTURAL	*FLOOR FINISH*	*Existing to remain*-apply top coat after cleaning
	BASE FINISH	*None*
	WALL FINISH	*Painted existing CMU- Painted GWB at new partitions with plywood wainscot*
	DOOR FINISH	*Hollow Metal*
	CEILING FINISH	*Existing exposed ceiling to remain*
	CEILING HEIGHT	*Existing*
HVAC		• *Heating, occupied – 68°F (20°C); unoccupied– 55°F (13°C)* • *Cooling – none; outdoor air ventilation* • *Ventilation – one air change per hour*
PLUMBING		*None*
FIRE PROTECTION		*Sprinkler System- See other requirements.*
FIRE ALARM		*Fire alarm / mass notification* *Fire alarm visual notification appliance* *Fire alarm audible notification appliance*
ELECTRICAL		• *Lighting – 10 fc on floor; motion sensors for aisles* • *Receptacles – convenience duplex receptacle in each cage; convenience duplex receptacles along aisles*
COMMUNICATION		• *Voice/data – wall telephone outlet*

OTHER REQUIREMENTS		• *Lockset – classroom; padlocks at cages*
		• *Very limited occupancy; ventilation required only when occupied Ordinary hazard group 2 sprinklers with storage below 12 ft (3.7 m)*
		• *Locate lights at cage ceilings, as well as in aisles, to provide sufficient light for cages and allow for ease of bulb replacement – provide guards for lights in cages Provide padlocks for all cage door hasps*
		• *Steel shelving is CFCI not awarded*
		• *-Wire Fabric Cages as follows: (Per Room by Room Supplemental Instructions)- CFCI not awarded*
		  ○ *(13) for Room 1032*
		  ○ *(14) for Room 1036*
		  ○ *(10) for Room 1037*

Storage 1034 and Office 1033		
ARCHITECTURAL	*FLOOR FINISH*	*Existing to remain*-apply top coat after cleaning
	BASE FINISH	*Rubber Base*
	WALL FINISH	*GWB Painted*
	DOOR FINISH	*Solid core flush wood door with staved lumber or particleboard core*
	CEILING FINISH	*2' x 2' Acoustic Ceiling Tile*
	CEILING HEIGHT	*9'-0" A.F.F. Minimum*
HVAC		• *Heating, occupied – 68°F (20°C); unoccupied– 55°F (13°C)* • *Cooling, occupied – 78°F (25°C) maintained – ambient*
PLUMBING		*None*
FIRE PROTECTION		*Sprinkler System*
FIRE ALARM		*Fire alarm / mass notification* *Fire alarm visual notification appliance* *Fire alarm audible notification appliance*
ELECTRICAL		• *Lighting – LED-30 fc ambient* • *Receptacles – convenience receptacles and quad receptacles (refer to UFC 4-171-05 part 4-2.1.5 for more information)* ○ *At least 50% of receptacles to be provided with automatic receptable control per ASHRAE 90.1 standard in Office 1033*
COMMUNICATION		*None*

Staging 1035

ARCHITECTURAL	*FLOOR FINISH*	*Existing to remain*-apply top coat after cleaning
	BASE FINISH	*N/A*
	WALL FINISH	*Painted existing CMU*
	DOOR FINISH	*Hollow Metal for exterior door only*
	CEILING FINISH	*Existing exposed structure to remain*
	CEILING HEIGHT	*Existing*
HVAC		• *Heating, occupied – 68°F (20°C); unoccupied– 55°F (13°C)* • *Cooling – none; outdoor air ventilation* • *Ventilation – one air change per hour*
PLUMBING		*None*
FIRE PROTECTION		*Sprinkler System- See other requirements.*
FIRE ALARM		*Fire alarm / mass notification* *Fire alarm visual notification appliance* *Fire alarm audible notification appliance*
ELECTRICAL		• *Lighting – 30 fc on floor* • *Receptacles – convenience receptacle*
COMMUNICATION		• *Voice/data – wall telephone outlet*
OTHER REQUIREMENTS		• *Existing Overhead doors to remain* • *Ordinary hazard sprinklers* • *Very limited occupancy; ventilation required only when occupied*

APPENDICES

A. Code Analysis

Fire Protection / Life Safety / Accessibility Code Review

Form version 27 dated 8 October 2020

Applicability: *A Fire Protection/Life Safety/Accessibility Code Review shall be developed and included in ALL project submittals for government review and comment, including unoccupied facilities. Fire Protection/Life Safety/Accessibility Floor Plan(s) drawings shall be developed and included in ALL project submittals for government review and comment.*

Instructions: *The Designer of Record (DOR) shall use this form to record Fire Protection, Life Safety and Accessibility features for all building projects, including unoccupied facilities. The form shall be edited. This includes the addition of criteria/standards followed on the left with actual method to meet criteria on the right. The information on the right are the minimum requirements and DOR is required to provide all the information as indicated below. The DOR must also sign the form where indicated. The signed form shall be provided in the Design Analysis and same review text shall be included on a Code Review drawing.*

Fire Protection/Life Safety/Accessibility drawings shall be developed, graphically showing all features of fire protection/ life safety/accessibility in plan. These drawings shall include note, " This drawing is for reference only. It is not part of the construction contract and all information contained here is located on construction documents ". Drawings shall illustrate features from all disciplines including longest travel distance, longest dead-end distance, longest common path, accessible means of egress, wall ratings, emergency lights, exit signs, manual alarm pulls, detectors, strobes, speakers, horns, FACP, and fire extinguishers, .

This Fire Protection/Life Safety/Accessibility Code Review Worksheet is only a portion of the required Life Safety documentation.
Projects that meets the Fire Protection UFC definition of "Major Project" shall comply with UFC 3-600-01, 1-7. Provide submittals i.a.w. referenced UFC including:
a) QFPE signed and stamped Code Compliance Site Plan. Refer to UFC 3-600-01, 1-7.2.4.2.
b) QFPE signed and sealed final design analysis and life safety plans. Refer to UFC 3-600-01, 1-7.2.1.
c) Compliance letter signed and stamped by the QFPE at final or corrected final. Refer to UFC 3-600-01, 1-7.3. This Fire Protection/Life Safety/Accessibility Code Review Worksheet when stamped and signed by the QFPE may be used meet this requirement.

UFC 1-200-01 DOD BUILDING CODE (GENERAL REQUIREMENTS) provides requirements for incorporating fire protection and life safety codes into military construction, particularly in paragraphs 1-4.1 and Chapter 3 which dictates use of UFC 3-600-01 and IBC. UFC 3-600-01, FIRE PROTECTION ENGINEERING FOR FACILITIES, paragraph 1-4.2.6 indicates application of NFPA.

ARC FFR Training Center Full Facility Revitalization - Orangeburg, NY

1. PROJECT'S APPLIED CODES & STANDARDS *(Edit to indicate actual dates, codes, & standards used for this project.)*

a. UFC 1-200-01: *DoD Building Code* , 8 Oct 2019
b. UFC 3-490-06: *Elevators* , 8 June 2018
c. UFC 3-600-01: *Design: Fire Protection Engineering for Facilities* , with Change 5, 12 August 2020.
d. UFC 4-021-01: *Design and O&M: Mass Notification Systems* , with Change 1, January 2010
e. IBC 2018: *International Building Code* for fire resistance requirements, allowable floor area, building height limits, and building separation distance, except as modified by UFC 3-600-01
f. NFPA 1, 2018: *Fire Code* , for determining vehicle access requirements
g. NFPA 101, 2018: *Life Safety Code* , for building egress and life safety except as modified in UFC 3-600-01
h. NFPA 10, 2018: *Standard for Portable Fire Extinguishers*
i. NFPA 13, 2019: *Standard for Installation of Sprinkler Systems* , minimum requirements for design and installation of automatic fire sprinkler systems and exposure protection
j. NFPA 20, 2019: *Standard for the Installation of Stationary Pumps for Fire Protection,* for construction & installation requirements for fire pumps
k. NFPA 22, 2019: *Standard for Water Tanks for Private Fire Protection*
l. NFPA 30, 2018: *Flammable and Combustible Liquids Code* , for construction requirements and fire resistance ratings for liquid storage areas
m. NFPA 30A, 2018: *Code for Motor Fuel Dispensing Facilities and Repair Garages* , for occupancy classification, construction requirements and means of egress for repair garages and organizational maintenance shops
n. NFPA 70, 2020: *National Electrical Code* (NEC) - Article 500 Hazardous Locations & Article 511 Commercial Garages, Repair & Storage
o. NFPA 80, 2019: *Standard for Fire Doors and Other Opening Protectives*
p. NFPA 72, 2019: *National Fire Alarm and Signaling Code*
q. NFPA 90A, 2018: *Standard Installation of Air Conditioning & Ventilation Systems* , for protection of openings, shafts, fire dampers, smoke dampers, penetrations and fan control
r. NFPA 96, 2017: *Standard for Ventilation Control and Fire Protection of Commercial Cooking*
s. NFPA 291, 2019: *Recommended Practice for Fire Flow Testing and Marking of Hydrants*
t. ASME A17.1, 2019: *Safety Code for Elevators and Escalators*
u. ABA (Architectural Barriers Act) Accessibility Standards, as directed by DoD Policy Memo "Access for People with Disabilities" dated 31 Oct 2008.
v. ECB 2018-17: *New Requirements for Visual Notification for Mass Notification Systems*

1. BUILDING CODE REQUIREMENTS:

a. Occupancy Classification: IBC Chapter 3	*Indicate project's occupancy classification information based on IBC for building code requirements. Exception For Repair Garage, UFC 3-600-01: 4-43.1.2 to use NFPA 30A(3.3.12.2 & NFPA 101 40-1.2.1)* **USE OCCUPANCY B (BUSINESS)** ***STORAGE (S2)***
b. Construction Type:	*Indicate project's building code (IBC) construction type.* ***TYPE II B***

IBC Chapter 6
Table 601

c. Mixed Use & Occupancy Separations
UFC 3-600-01: 5-4, 5-5
IBC Section 508

Indicate project's intention for mixed use or separated occupancy. Per UFC 3-600-01: 5-5, IBC Section 509 does not apply. Include equations proving the area allowances for separated occupancy per 508.4.2 if it applies. For example:

B ***S-2***

$$\frac{19{,}072\ sf}{92{,}000 sf} + \frac{8{,}684\ sf}{104{,}000\ sf} = .207 + .084 = .291 < 1 \quad (okay)$$

d. Area Limitations / Modifications:
UFC 3-600-01: 5-3
IBC Section 503, 506, 507

Indicate project's area limitations, Table 506.2. Describe area modifications taken. Include equations proving allowable area increases using frontage and automatic sprinkler factors. Only need to show increases if needed to increase allowable area. For example:

Area Determination Business
At = 92,000 > actual = 19,072 sf
Is = 2 for sprinkler increase
If = 0
Aa = 92,000 + [92,000(0)] + [92,000(2)] = 276,000 > actual 19,072 sf okay
Area Determination Storage
At = 104,000 > actual = 8,684 sf
Is = 2 for sprinkler increase
If = 0
Aa = 104,000 + [104,000(0)] + [104,000(2)] = 312,000 > actual 8,684 sf okay

e. Height Limitations:
IBC Section 503
Tables 504.3 & 504.4

Indicate specific project's height limitations, providing maximum height allowed and actual height per building height definition in Section 502.
MAXIMUM HEIGHT ALLOWED = 75'-0" As per Table 504.3 IBC 2018
Actual Height (Existing) = 14'-2" +/- & 18'-9"+/-

f. Vertical Enclosures, Continuity, Protection:
UFC 3-600-01: 3-3.1.1
NFPA 101: 7.1.3, 8.6
NFPA 90A: 4.3.1.2, 5.3.4

Indicate fire protection provisions for stair enclosures, utility shafts, elevators, laundry chutes, etc. Indicate vertical enclosure requirements & provisions based on number of building stories for stairways, elevator hoistways, light shafts, building expansion joints, etc. List required fire resistance ratings of shafts, for example: 2-Story Shaft Enclosures - ( ) hour rating; 3-Story Laundry Chute Enclosure - ( ) hour rating.
Enclosures in New Construction: 1 Hour Not Required (NFPA 101 8.6.5.2) 1 Story Structure
Existing Enclosures in Existing Buildings: 1/2 Hour Not Required (NFPA 101 8.6.5.3) 1 Story Structure
Air Duct Enclosure Not Required when Air Duct Only Penetrates 1 Floor and Fire Damper is provided at floor penetration (NFPA 90A 5.3.4.3.1) See NFPA 90A 5.3.4.6.2 For Fire Damper Requirements

g. Opening Protectives & Thru-Penetrations
NFPA 101: 8.3 thru 8.6
NFPA 90A

Indicate requirements & provisions for fire barriers, smoke partitions, smoke barriers, vertical openings, and special
Existing Building provides 1 Hour protection for Mechanical Room G-1010 & Electrical Room G-1009
NFPA 101 8.7.1.1 Allows smoke partitions if an Automatic Sprinkler system is provided - Existing 1 Hour Protection will be maintained

NFPA 80
NFPA 13

h. Horizontal Separations:
IBC: Table 508.4

Indicate location for horizontal separation and provision such as fire or smoke rated floors between occupancies or exit enclosures.
1 Story Building - No Occupancy Horizontal Separation requirement between B (Business) and S-2 (Storage) As Per IBC Table 508.4

i. Fire Resistive Requirements:
IBC: Table 601 and Section 602

Indicate requirements based on construction type:
Primary Structural Frame - (0) hour rating
Exterior Bearing Walls - (0) hour rating
Interior Bearing Walls - (0) hour rating
Exterior Nonbearing partitions - (0) hour rating
Interior Nonbearing partitions - (0) hour rating
Floor Construction & Secondary Members - (0) hour rating
Roof Construction & Secondary Members - (0) hour rating
As per IBC: Table 601 and Section 602

j. Enclosure Protection:
NFPA 101: Specific Occupancy Chapters

Indicate enclosure protection requirement for specific spaces and what is actually provided, example:
Mechanical Room G1010 Existing 1 Hour Protection - Smoke Partition provided with Automatic Sprinkler System as per NFPA 101 8.7.1.1

ASME A17.1

Electrical Room G1009 Existing 1 Hour Protection - Smoke Partition provided with Automatic Sprinkler System as per NFPA 101 8.7.1.1

UFC 3-600-01; 4-46.5.2.2	*Warehouse and storage area must separated from offices and shops by a minimum of 1hr fired construction.* **Storage Areas: 1025 - 1032 - 1034 - 1036 - 1037 1 Hr Fire Rated Construction Provided as per UFC 3-600-01; 4-46.5.2.2**
NFPA 30, 9.9.1	*Indicate the total floor area for flammable liquid , combustible liquid & control waste liquid storage room. The flammable liquid, combustible liquid and control waste room must be less than 500sf and provide 1hr fired rated wall and ceiling for room floor area less than 150sf and 2hr fire rated wall and ceiling for >150sf but ≤ 500sf.* **N/A**
k. Fire Protection System: UFC 3-600-01: Chapters 4 & 9 UFC 3-600-01: Appendix B	*Determine the requirement for fire protection systems, stating which systems are required and criteria to which they are designed.* **Fire Alarm System Provided as per UFC 3-600-01:34-1.2.8 & 9-18** *Indicate the hazard category based on occupancy for various rooms, using UFC 3-600-01, Appendix "B". Consider classifying the entire building and noting exceptions for differing rooms. For example, for a light hazard (LH) building, the mechanical, electrical and storage rooms are classified as ordinary hazard (OH).* **Ordinary Hazard Categories as Per UFC 3-600-01: Appendix B** **Kitchen 1023 - Arms Vault 1030 - Physical Readiness 1031 - Mechanical Room G1010 - Electrical Room G-1009** **Storage 1022 - Secure Storage 1025 - Storage 1034 - Unit Storage 1032, 1036 & 1037** **Rooms Above are Protected with an Automatic Sprinkler System & 1 Hour Fire Protection**
UFC 3-600-01; 9-7, except as modified in Chapter 4 of UFC for specific facility types	*For each occupancy hazard category based on Tables 9-3 & 9-4 for non-storage applications, indicate Sprinkler Design Density, Sprinkler Design Area, Water Demand for Hose Streams, providing supply pressure and source requirements.* **Ordinary Hazard Categories as Per UFC 3-600-01: Appendix B (Not Storage)** **Kitchen 1023 - Arms Vault 1030 - Physical Readiness 1031 - Mechanical Room G1010 - Electrical Room G-1009** **For All spaces above:** **Sprinkler Design Density = 0.2/2500 - Hose Demand = 250 -** **Sprinkler Design Area as per NFPA 13 - Light Hazard (Business) = 225 SF - Ordinary Hazard (Storage) = 130 SF**
UFC 3-600-01; 1-12.12, 9-7.3.1.2, 4-46 NFPA 13	*For warehouse and storage facilities indicate the commodity classification, maximum potential storage height must be based on roof or ceiling height, storage configuration (racks, shelves, palletized, bin box, and solid-piled), aisle width, clearance to ceiling, and sprinklers type and temperature rating. The roof slope must be less than or equal to 2 on 12.* **N/A**
UFC 3-600-01: Chapter 9-7.4 NFPA 13	*Coverage per sprinkler must be in accordance with NFPA 13, not exceeding 225 sf for light hazard, 130 sf for ordinary hazard, or 100sf for extra hazard. Extended coverage heads are not permitted.* **Sprinkler coverage provided as per NFPA 13 Light Hazard (Busines) = 225 SF - Ordinary Hazard (Storage) = 130 SF**
l. Available Water Supply Testing UFC 3-600-01: 1-12.5, 9-6.4 NFPA 291	*Provide results of water flow tests per the UFC which requiring QFPE to witness the flow testing per NFPA 291. Water supply data shall show available water supply, static pressure, & residual pressure at flow. Based on this data & estimated flow & pressure required for the building sprinkler system(s), determine the need for a fire pump. Indicate test & flow hydrant locations, elevations, & water flow data on contract drawings..* **Orangeburg Hydrant Flow Test Provided in Documentation - No Fire Pump Required as per NFPA 291** **See Plumbing Drawings for location Hydrant locations, Elevations & Water Flow.**
UFC 3-600-01: 9-2.2 NFPA 1: Table 18.4.5.2.1	*For non-sprinklered facilities, fire flow & duration must meet minimum requirement in NFPA 1, Table 18.4.5.2.1.* **N/A**
UFC 3-600-01: 1-12.10, 4-40	*For range and remote facilities, provide capacity & fire flow information requirement per NFPA 1142. Provide information indicating how the local fire department will meet the fire flow requirement. Provide code analysis and calculation per NFPA 1142 to District Fire Protection Engineer (DFPE) to get AHJ concurrence.* **N/A**
m. Water Storage Tank Requirements UFC 3-600-01: 1-12.4, Chapter 9-4 NFPA 22	*Provide water storage requirements including capacity, type of storage tank and storage tank monitoring.* **N/A**
n. Backflow Preventer & Testing NFPA 13: 8.16.4.6.1 UFC 3-600-01; 9-6.3.5, 9-6.6	*Provide backflow preventer valves as required by local authority or water surveyor. On contract drawings show and provide test piping and valve located downstream of the backflow preventer for flow testing of the backflow preventer at full system demand flow. Route the discharge to an appropriate location outside the building. Minimum pressure drop across reduced pressure backflow preventer is 12 psi and 8psi for double check backflow preventer. Assure that backflow preventer is 8 psi for hydraulic calculations for double check and 12 psi for reduce pressure.* **Existing Backflow Preventer Provided by Utility Company - See Contract Plumbing Drawings for locations**
o. Fire Pump(s) UFC 3-600-01: Chapter 9-5 NFPA 20 UFC 3-600-01: 9-5.1.4	*Provide information regarding project site reliable power. Provide fire pump(s) flow and pressure requirements, locations, construction enclosure, fire pump and fire pump controller maintenance access.* **N/A**

2. LIFE SAFETY REQUIREMENTS:

a. Classification of Occupancy:
NFPA 101: Ch. 6

Indicate project's occupancy classification information based on NFPA 101 for life safety code requirements. Exception For Repair Garage, UFC 3-600-01: 4-43.1.2 to use NFPA 30A (3.3.12.2 & NFPA 101 40-1.2.1)

Mixed Occupancy - Business Occupancy & Storage as Per NFPA 101 Chapter 6

NFPA 101 Storage Occupancy = 8,684 SF

b. Occupant Load:
NFPA 101: 7.3.1.2 & Chapters 12-42
UFC 3-600-01: 10-3.1

Indicate total occupant load, showing occupant load factors and subtotals of various occupancies for each floor, for example:

Actual floor area Business: 19,072 GSF = Occupant Load = 506 for Life Safety Purposes - Current estimated use as per UFC = 175 Employees

Actual Floor Area Storage = 8,684 GSF = Occupant Load = 19 for Life Safety

USACE To Confirm what is the Maximum Problable Number of Occupants as per NFPA 101 Table 7.3.1.2
See Contact Drawings for Occupant Load Information

c. Capacity of Means of Egress:
NFPA 101: 7.3.3 & Chapters 12-42

Indicate egress capacity for components of all means of egress including stairs, corridors, ramps, and doors. Include total egress capacity needed.

Means of Egress - Minimum Width = 44 in (for occupant load more than 50) as per NFPA 101 39.2.3.2 (Existing Business Occupancy)

Means of Egress = Occupant Load / Required Number of Exits NFPA 101 7.3.3.3 (Storage Occupancy)
Provided Egress Width = Corridor C1001 Minimum Width = 72"

d. Number of Exits:
NFPA 101: 7.4 & Chapters 12-42

Indicate number of exits required based on egress capacity needed. Indicate number of exits provided.

Two Exits Required for Occupant load < 500 (NFPA 101 7.4.1.1 & 39.2.4.1)
Two Exits Provided for Corridor C1001 for an Occupant Load of 428
One Exit Provided for Assembly 1019 for an Occupant Load of 59
Three Exits Provided for Unit Storage 1032, 1036, 1037 for an Occupant Load of

e. Arrangement of Means of Egress
NFPA 101: 7.5 & Chapters 12-42

Indicate requirements for means of egress arrangement, including project's provisions to comply.

Exit Acess Corridors shall Provide Access to not less than two Approved Exits (Complies) (NFPA 101 7.5.1.1.2 & 39.2.4.1.2

Exit Remoteness = not < 1/3rd Length of Max Overall Diagonal Dimension = 283.33' x 1/3 = 94' Min Required - 230.24' Provided

f. Accessible Means of Egress
NFPA 101: 7.5.4

Indicate requirements for accessible means of egress with project's provisions to comply.

Accessible Means of Egress = Required = 2 - Provided = 2

g. Travel Distance to Exits:
NFPA 101: 7.6 & Chapters 12-42

Indicate travel distance requirements and project's provisions to comply using worst case distance. Include common path, dead end, and travel distance limits for each occupancy.

Travel Distance for Existing Business Occupancy (Automatic Sprinkler System Provided) = 300'-0" Max
Common Path of Travel Requirement Max 100'-0" (NFPA 39.2.5.2) (See Arch Drawings in Interim Submission for compliance)

Dead End Corridors = 50' Max (NFPA 39.2.5.3 = 50'-0") (See Arch Drawings in Interim Submission for compliance)

h. Illumination of Means of Egress:
NFPA 101: 7.8 & Chapters 12-42

Indicate required and provided provisions for means of egress illumination.

Continous Illumination Of Means of Egress Provided (NFPA 101 7.8.1.2)
Automatic Lighting Control Devices Not Provided (NFPA 101 7.81.2.2)
Energy-Saving Sensors, switches, timers or controllers Not Provided (NFPA 101 7.8.1.2.3)
Minimum Illumination for floors and other walking surfaces < 1 Foot Candle - Provided (NFPA 7.8.1.2)

i. Emergency Lighting:
NFPA 101: 7.9 & Chapters 12-42

Indicate required and provided provisions for emergency lighting.

Emergency Lighting Provided as per NFPA 101 - See Contract Documents for locations & information

j. Marking of Means of Egress:
NFPA 101: 7.10 & Chapters 12-42

Indicate required and provided provisions for marking of egress lighting.

Exits Provided with signs as per 7.10.2.1 (See Architectural Drawings for Compliance)

k. Interior Finish Classification Limits:
NFPA 101: Table A.10.2.2

Indicate required and provided provisions for interior finish classification limitations.

Interior Wall And Ceiling Finishes Materials requirements: (Provided See Specifications) (NFPA 39.3.3.2.2 - Table A.10.2.2)

(Business Occupancy) Exit = Class A or B - Exit Access Corridors = Class A or B - Other Spaces = Class A, B, or C

(Storage Occupancy) Exit = Class A or B / I or II - Exit Access Corridors = Class A, B, or C - Other Spaces = Class A, B, or C

l. Detection, Alarm, & Communications:
UFC 3-600-01: Chapter 9-18
NFPA 101: 9.6 & Chapters 12-42

Indicate requirements for manual alarm initiation, automatic detection, and alarm notification. Include location to which notification is sent.
Manual Pull Stations located at all exist doors for manual alarm initiation. Sprinkler Flow Switches, Smoke Detectors, Duct Smoke Detectors and Heat Detectors for automatic detection.
Alarm Notification via Emergency Voice Alarm Communication and Mass Notification.
Fire Alarm notification sent to Main Fire Alarm Control Panel in OMS Building.

m. Portable Fire Extinguishers:
UFC 3-600-01, 9-17
NFPA 10

Indicate requirements for FE and project provision. See provision in Draft AR DG Pamphlet, 3-4.1.5 for Arms Vaults.

Fire Extinguisher Required in Arms Vault 1030 (Provided - See Arch Drawings Interim Submission AR DG Pamphlet 3-41.5

n. Corridors:
NFPA 101: Chapters 12-42

Indicate requirement and provisions for corridor protection including any fire and smoke ratings and door ratings.

Corridors Exempt from 1 HR Fire Resistance rating as per NFPA 101 38.3.6.1.3 (Automatic Sprinkler System Provided)
Corridors No Required Fire Resistance as per NFPA 101 42.3.4.3

o. Fire Dampers:
NFPA 90A: 5.3.1, 5.4.1 & 5.4.2

Fire dampers shall be dynamic type, rated for 3,000 ft./min or greater. Edit the following or insert other requirements for this project:

Fire rated dampers shall be installed in ducts passing through partitions or walls having a fire resistance rating of 2 hours or greater.
No 2 Hour Fire Resistance Rating Walls Present (N/A)
Fire dampers shall be installed in ducts passing through fire resistance rated shafts.
Fire Dampers provided as required per NFPA 90A Refer to Mech and Architectural Drawings for locations
Fire dampers shall be installed in air transfer openings in fire resistance rated partitions.
Fire Dampers provided as required per NFPA 90A Refer to Mech and Architectural Drawings for locations
Fire dampers shall be installed in ducts passing through floors except where the floor penetration is within a fire rated shaft.
1 Story Building Fire Damper through floor not applicable

p. Smoke Dampers:
IBC: Section 716
NFPA 90A: 4.3.10.2, 5.3.5.1

Indicate requirements & project's provision for dynamic smoke dampers. Provide isolation smoke damper when air handling equipment systems have a capacity greater than 15,000 cfm to isolate the air-handling equipment, including filters, from the remainder of the system on both the building supply and return sides, in order to restrict the circulation of smoke.
Smoke Dampers are not required (N/A)

q. Duct Smoke Detectors
NFPA 90A: 6.4.2.1

Indicate type of duct smoke detectors required & provided, for example: Duct smoke detectors installed downstream of the air filters and ahead of any branch connections in air supply systems having a capacity greater than 2,000 cfm.

Duct Smoke Detectors Provided as Per NFPA 90A: 6.4.2.1 (Refer to Interim Mechanical Drawings for location)

r. Elevators
UFC 3-600-01: 4-13
IBC Chapter 30
ASME A17.1
NFPA 13
UFC 3-490-06: 3-3.1

Indicate elevator type, construction, detection systems, and sprinkler requirements & provisions, for example: A holeless hydraulic type elevator is provided with 1 hr. rated shaft walls, sprinklers, smoke detectors, flow switches and necessary appurtenances for elevator machine room, top and pit of hoistway, see figure 4-4, UFC 3-600-01. See contract drawings for figure for type of elevator used. The elevator is not considered an egress component. Hoistway vent and elevator lobby not required for shaft penetrating up to 3 stories. Include hoistway pit entrapment protection per UFC 3-490-06: 3-3.1 requiring a door to an exit area.

Elevators are not provided (N/A)

s. Roof Access:
UFC 3-600-01: 10-4
IBC Chapter 1011.12

Indicate requirements & provisions for roof access. If not required by code, user may request roof access from interior for convenience and in compliance with UFC 4-010-01 DoD Minimum Antiterrorism Standards for Bldgs.

Existing Roof Hatch and Roof Ladder to Remain

t. Hazardous Locations in Commercial Garages
NFPA 70: NEC Articles 500 & 511

Indicate class and division of hazardous locations within the work bays, pits, and adjacent rooms. Indicate methods used to unclassify areas adjacent to classified locations such as corridors, offices, stockrooms, mechanical rooms, and electrical rooms. Indicate use of positive pressure or cut-off wall (to include door seals) to declassify areas adjacent to hazardous work areas.
No Commercial Garage present (N/A)

u. Fire Dept. Vehicle Access
UFC 3-600-01: 9-1
NFPA 1: 18.2.3.4.1

Indicate requirements and provisions for vehicle access to the building, for example: All weather ground access provided with widened/thickened sidewalks at 30 ft. from the building on two sides of the of all facilities more than two story bldg.

30'-0" Ground Access not required
Access Requirement Provided (Refer to Interim Civil Drawings)

v. Fire Hydrant Installation
UFC 3-600-01: 9-3.5

Indicate hydrant installation requirements and provisions including spacing based on building type.
Existing Hydrants meet UFC 3-600-01: 9-3.5 requirements

w. Kitchen Cooking Exhaust Equipment
NFPA 101: 9.2.3, Chapters 12-42

Indicate provision for kitchen cooking equipment in the project. Indicate extinguishing system required and provided. On contract drawings, show all interlocks with manual release switches, fuel shutoff valves, electrical shunt trips, exhaust fans,

NFPA 96

and building alarms.

Kitchen Equipment as per provided layout by USACE - See Contract Drawings for locations of FMEP Equipment

3. EXISTING FACILITIES:

a. Existing Facility Deficiency Upgrade:
UFC 3-600-01: 34-1.1
NFPA 101: Chapters 12-42

Facilities as they exist prior to project, must meet NFPA 101 for existing occupancy. Indicate what deficiencies must be upgraded as part of the project or establish management protocols with AHJ. Entire facility must comply with the applicable existing occupancy chapter of NFPA 101 before beginning the project for work in existing facilities.

As per NFPA Chapter 43 Building Rehabilitation - Multiple Rehabilitation Work Categories 43.1.3
Rehabilitation Categories: Addition & Reconstruction as per NFPA 101 43.1.1
Means of Egress (Illumination, Emergency Lighting & Markings) requirements as per New Construction NFPA 101 43.6.2.2.2

Automatic Sprinkler System to be Provided as per New Construction NFPA 101 43.6.4.1

b. Work in Existing Facilities:
UFC 3-600-01: 34-1.2.1

Conform to the requirements of the Building Rehabilitation chapter of NFPA 101 for design and construction of the project except as specified in UFC 3-600-01.
Requirements are provided as per Chapter 39 Existing Building Facilities
Entire Building must be brought up to new construction requirements as per UFC 3-600-01 and NFPA 101

NFPA 101, Chapter 43, Repair

Identify the project area that apply to Repair, indicating how area meets NFPA 101 requirements.
N/A

NFPA 101, Chapter 43, Renovation

Identify the project area that apply to Renovation, indicating how area meets NFPA 101 requirements.
N/A

NFPA 101, Chapter 43, Modification

Identify the project area that apply to Modification, indicating how area meets NFPA 101 requirements.
N/A

NFPA 101, Chapter 43, Reconstruction

Identify project areas that apply to Reconstruction, indicating how area meets UFC and NFPA 101 requirements.
Reconstruction Area = 15,693 S.F. (Business Ocupancy)
Reconstruction Area = 8,684 S.F. (Storage Occupancy S-2)
Business Ocupancy Requirements for Reconstruction:
Emergency Lighting Not Required as per NFPA 101 38.2.9.1 but Provided
Means of Egress Markings Provided as per NFPA 101 Section 7.10
Detection, Alarm and Communication system not required as per NFPA 38.3.4.1 but Provided
Storage Occupancy Requirements for Reconstruction
Emergency Lighting Provided as per NFPA 101 42.2.9 & 7.9
Means of Egress Markings Provided as per NFPA 101 Section 7.10
Fire Alarm System Provided as per UFC 3-600-01:34-1.2.8 & 9-18 (system not required as per NFPA 42.3.4.1)

UFC 3-600-01: 34-1.2.8

Determine the total floor area will be reconfigured. If the total reconfigured floor plan exceed 50% of the total floor area, the entire floor must be brought up to the requirements for new construction in UFC 3-600-01 and NFPA 101.

Category	List Affected Rm Nos.	Category's Total SqFt (x)	Total Gross Area 1 (y)	Affected Percent (x divided by y)
Existing Space To Remain	101,102	5,174		
Reconfigured Floor Plan	111-120	22,582	27,756	81%
Reconstruction	>50% Reconstruction Category as per NFPA 101 & UFC			

If the floor plan reconfigurations that exceed 50%, the entire floor must be brought up to the requirements for New Construction.

UFC 3-600-01:34-1.2.9

Determine if the total project cost exceed of the building total replacement value. If the total project cost exceed 50% of the total replacement value, the entire building must be brought up to the requirements for new construction in this UFC 3-600-01 and NFPA 101.

Total Project cost exceeds 50% of the replacement value therefore Entire Building must be brought up to the requirements for new construction in UFC 3-600-01 and NFPA 101

NFPA 101, Chapter 43, Addition

Identify project areas that apply to Addition, indicating how area meets UFC and NFPA 101 requirements.

Addition Area #1 = 1,115 S.F. (Business Occupancy)
Addition Area #2 = 2,262 S.F. (Business Occupancy)
Total Addition Area = 3,377 S.F.
Emergency Lighting Provided as per NFPA 101 42.2.9 & 7.9
Means of Egress Markings Provided as per NFPA 101 Section 7.10
Fire Alarm System Provided as per UFC 3-600-01:34-1.2.8 & 9-18 ***(system not required as per NFPA 42.3.4.1)***

c. Change in Use Category: UFC 3-600-01:34-1.3	*Identify project areas that apply to Change in Use including change in occupancy, indicating how area meets UFC and NFPA 101 requirements.* **N/A**
d. Vacant Bldg. Category: UFC 3-600-01:34-1.4	*Identify project areas that apply to Vacant Bldg. category, indicating how area meets UFC and NFPA 101 requirements.* **N/A**
e. Phased Projects: UFC 3-600-01:34-2	*Indicate if this project includes multiple phases (potentially executed as separate projects) to the same existing facility within 5 years involving floor plan reconfiguration that will encompass more than 50% of the floor area or project cost exceeding 50% replacement value, triggering requirement for compliance with Reconstruction.* **N/A**
f. Cooking Areas: UFC 3-600-01:34-3	*Indicate if cooking areas are included and provision for compliance with UFC.* **Cooking areas will be provided with an Automatic Sprinkler System as per UFC 3-600-01: 9-7**
g. Electronic Equipment Areas: UFC 3-600-01:34-5	*Indicate if non-plenum rated cables exist under raised floors having no FE system and provision for compliance with UFC.* **N/A**
h. Automatic Sprinkler Systems: UFC 3-600-01: 34-1.2.6 & 9-7.2	*Indicate compliance requirement and project's provision to meet the UFC.* **Automatic Sprinkler System Provided as per UFC 3-600-01: 9-7**
i. Fire Alarm System: UFC 3-600-01:34-1.2.8 & 9-18	*Indicate compliance requirement and project's provision to meet the UFC. The notification appliances for the fire alarm and mass notification required to upgrade throughout the facility if reconfiguration exceed 50% of the floor plan.* **Fire Alarm System Provided as per UFC 3-600-01:34-1.2.8 & 9-18**

4. MASS NOTIFICATION:

UFC 4-021-01 ECB 2018-17	*Indicate mass notification system requirements and provisions including type of base-wide mass notification / communication system.* **Mass Notification System Provided as per NFPA 72 & UFC-3-600-01**

5. ACCESSIBILITY REQUIREMENTS:

ABA Chapters 1-10	*Indicate accessiblity requirements for the project, for example: "Facility shall be completely accessible in accordance with ABA. Fire alarm annunciators shall be in accordance with ABA." or "Facility is considered as being for able-bodied persons only, therefore, is not required to be fully accessible".* **Accesibility requirements as per ABA F202.2 & F202.3 -** **Minimum UFAS Requirements of Alteration & Addition 4.1.1 to 4.1.4 of 4.1**

CERTIFICATION OF FIRE PROTECTION & LIFE SAFETY CODE REQUIREMENTS

Preparers of this document certify the accuracy and completeness of the Fire Protection and Life Safety features for this project indicated with the attached, completed signature forms.

Architect-Engineer Design
Certification of Fire Protection / Life Safety / Accessibility Code Requirements

ARC FFR Training Center Full Facility Revitalization - Orangeburg, NY

Final Design

Preparers of this document certify the accuracy, completeness, and incorporation of the all required fire protection, life safety, and accessibility features in this project for the indicated milestone review.

Qualified Fire Protection Engineer (QFPE) of Record - **Colum Keough**

5/21/2021

Signature Date

Architect of Record - **Leonardo Afanador**

5/21/2021

Signature Date

Mechanical Engineer of Record - **Gregory Botvinnikov**

5/21/202

Signature 1 Date

Electrical Engineer of Record - **Keith Craven**

5/21/2021

Signature Date

Civil Engineer of Record -**David Heber**

David Heber 5/21/2021

Signature Date

LOUISVILLE DISTRICT IN-HOUSE DESIGN
FIRE PROTECTION / LIFE SAFETY / ACCESSIBILITLY CODE REVIEW

ARC FFR Training Center Full Facility Revitalization - Orangeburg, NY

Final Design

Preparers of this document certify the accuracy, completeness, and incorporation of the all required fire protection, life safety, and accessibility features in this project for the indicated milestone review.

Signatures below indicated the project drawings, specifications and design analysis have been reviewed and shown to be incompliance with the UFC 3-600-01 and references code on this FP&LS sheet.

Qualified Fire Protection Engineer (QFPE)ITR- **Ian Ong**

5/28/2021

Signature Date

Project Design Team Leader -**Karina D'Agostino**

6/1/2021

Signature Date

Architectural ITR - **Robert Fritz**

5-28-2021

Signature Date

Mechanical Engineer ITR- **Michael LaPilusa**

5/28/2021

Signature Date

Electrical Engineer ITR -**Steve Martino**

6/2/21

Signature Date

Civil Engineer ITR -**Anthony Pedro**

5/28/2021

Signature Date

B. Space Allocation Table

ROOM NUMBER	ROOM NAME	AREA IN SFAS PROGRAMMED	AREA IN SF AS SHOWN	VARIANCE greater than 10% highlighted %	UFC DESIGN GUIDE	RENOVATION LEVEL - SEE SPEC			NOTES
						LT / MED	FULL	NEW	1 - Fire Protection Riser Closet 2 - SIPR in a box 3 - Multi-function Device 4 - Video Conference system 5- GFGI TV Monitor (number) 6 - Wire Fabric Cages (number) 7 - 42" door to room 8- GFGI Shelves and cabinets 9 - Wire fabric partitions and gates 10 - Termination and control for power gate
						1	2		
V1001	VESTIBULE	0	56		DG 4-2.9		X		
L1001	LOBBY	0	352		DG 4-2.9		X		
C1001	CORRIDOR	0	139		DG 4-2.45		X		
C1002	CORRIDOR	0	1103		DG 4-2.45	X			
G1001	EF	80	72	90%	DG 4-2.8.2		X		
G1002	TER	0	85		DG 4-2.8.4		X		
G1003	MALE TOILET	262	267	102%	DG 4-2.39		X		
G1004	JANITOR	0	21		DG 4-2.24	X			
G1005	FEMALE TOILET	192	192	100%	DG 4-2.39		X		
G1006	TR	0	54		DG 4-2.8.4		X		
G1007	MALE SHOWER / LOCKER	1096	803	73%	DG 4-2.39 / DG 4-2.40		X	X	1
G1008	FEMALE SHOWER / LOCKER	604	443	73%	DG 4-2.39 / DG 4-2.40		X	X	
G1010	ELECTRICAL	0	198		DG 4-2.44		X		
G1011	MECHANICAL	906	906	100%	DG 4-2.43	X			
1001	FAMILY SUPPORT OFFICE	120	200	167%	DG 4-2.6		X		
1002	TEAM ROOM	480	480	100%	DG 4-2.47		X		4, 5 (1)
1003	PRIVATE OFFICE	120	118	98%	DG 4-2.1		X		
1004	RETENTION	120	278	232%	DG 4-2.4		X		
1005	BREAK ROOM	0	285		DG 4-2.42		X		
1006	LEARNING CENTER	400	313	78%	DG 4-2.18		X		
1007	TEAM ROOM W/ SIPRNET	0	279		DG 4-2.47		X		2, 4, 5 (1), 10
1008	UNIT COMMONS	780	1133	145%	DG 4-2.3		X	X	3
1009	ADMIN SUPPORT	240	177	74%	DG 4-2.7		X		3
1010	PRIVATE OFFICE	200	205	103%	DG 4-2.1		X		
1011	SHARED OFFICE	480	481	100%	DG 4-2.1		X	X	
1012	PRIVATE OFFICE	120	120	100%	DG 4-2.1			X	
1013	PRIVATE OFFICE	150	150	100%	DG 4-2.1			X	
1014	SHARED OFFICE	480	481	100%	DG 4-2.1		X	X	
1015	PRIVATE OFFICE	150	150	100%	DG 4-2.1		X	X	
1016	PRIVATE OFFICE	120	120	100%	DG 4-2.1		X		
1017	CLASSROOM	800	878	110%	DG 4-2.15	X			5 (2)
1018	CLASSROOM	800	878	110%	DG 4-2.15	X			5 (2)
1019	ASSEMBLY	1993	2559	128%	DG 4-2.10	X			5 (1)
1020	CHAIR STORAGE	205	278	136%	DG 4-2.11		X		
1021	OFFICE		81		DG 4-2.1		X		
1022	STORAGE		141		DG 4-2.12		X		
1023	KITCHEN		288		DG 4-2.12		X		
1024	SCULLERY		180		DG 4-2.12		X		
1025	SECURE STORAGE	0	481		DG 4-2.21	X			8, 9
1026	LACTATION	100	180	180%	DG 4-2.48		X		
1027	PRIVATE OFFICE	120	143	119%	DG 4-2.4		X		
1028	PRIVATE OFFICE	120	150	125%	DG 4-2.4		X		
1029	ARMORER	100	163	163%	DG 4-2.14		X		7
1030	ARMS VAULT	910	909	100%	DG 4-2.13		X		8, 9
1031	PHYSICAL READINESS TRAINING	1600	1602	100%	DG 4-2.36		X	X	
1032	UNIT STORAGE		2441		DG 4-2.21	X			6 (13)
1033	PRIVATE OFFICE	120	122	102%	DG 4-2.4		X		
1034	STORAGE	200	198	99%	DG 4-2.4		X		
1035	STAGING		537		DG 4-2.21	X			
1036	UNIT STORAGE		1584		DG 4-2.21	X			6 (14)
1037	UNIT STORAGE		2160		DG 4-2.21	X			6 (10)
~~1038~~	~~WEAPONS SIMULATOR~~	~~800~~	~~624~~	~~78%~~	~~DG 4-2.28~~			~~X~~	OPTION NOT IN SCOPE
1039	CAN WASH		82		DG 4-2.12	X			RENUMBERED ROOM

C. CID and FF&E

SID and FF&E binders are submitted separately as physical document packages.

D. Electrical Calculations and Data Sheets- Building

1 LIGHTING FLOOR PLAN
1/8" = 1'-0"

Current View

3. ALL EMERGENCY EGRESS FIX SUPPLIED WITH UNSWITCHED INTEGRAL BATTERY SYSTEM

KEYNOTES

1. CONNECT AL NL-20 LIGHTING T CONSTANT 120 VOLT POWER, CONTROLLED AND WITH INTEG

Schedule

Symbol	Label	Image	QTY	Manufacturer	Catalog Number	Description	Lamp	Number Lamps	Filename	Lumens per Lamp	Lumen Multiplier	LLF	Wattage	Efficiency	Distribution	Polar Plot	Notes
	NL-3C		4	Lithonia Lighting	2GTL2 20L SWL LP835	GTL 2X2, 2000 NOMINAL LUMENS, SWL LENS, 3500K		1	2GTL2_20L_SWL_LP835.ies	2023	1	0.5	18.39	100%	DIRECT, SC-0=1.24, SC-90=1.24	Max: 710cd	
	NL-1A		1	Holophane	HVT 2X4 DOP 3900LM 35K MVOLT MIN10 80CRI ZT	HOLOPHANE 2ftX4ft LED 3900LM, LOW PROFILE TROFFER W/OPAL BASKET DIFFUSER	LED 3500K 80CRI	1	HVT_2X4_DOP_3900LM_35K_MVOLT_MIN10_80CRI_ZT.ies	4016	1	0.25	36	100%	DIRECT, SC-0=1.24, SC-90=1.28	Max: 1311cd	
	NL-1B		2	Holophane	HVT 2X4 DOP 5500LM 35K MVOLT MIN10 80CRI ZT	HOLOPHANE 2ftX4ft LED 5500LM, LOW PROFILE TROFFER W/OPAL BASKET DIFFUSER	LED 3500K 80CRI	1	HVT_2X4_DOP_5500LM_35K_MVOLT_MIN10_80CRI_ZT.ies	5931	1	0.17	52	100%	DIRECT, SC-0=1.24, SC-90=1.28	Max: 1930cd	
	NL-3B		4	Lithonia Lighting	2GTL4 48L SWL LP835	GTL 2X4, 4800 NOMINAL LUMENS, SWL LENS, 3500K		1	2GTL4_48L_SWL_LP835.ies	4377	1	0.25	35.79	100%	DIRECT, SC-0=1.24, SC-90=1.25	Max: 1528cd	

Statistics

Description	Symbol	Avg	Max	Min	Max/Min	Avg/Min
Assembly	+	2.4 fc	5.1 fc	0.6 fc	8.5:1	4.0:1
Corridor	+	2.9 fc	5.4 fc	0.3 fc	18.0:1	9.7:1
Shared Office	+	2.2 fc	4.2 fc	0.6 fc	7.0:1	3.7:1
Unit Commons	+	1.7 fc	4.4 fc	0.3 fc	14.7:1	5.7:1

Designer
Date 6/15/2021
Scale Not to Scale
Drawing No.
Summary

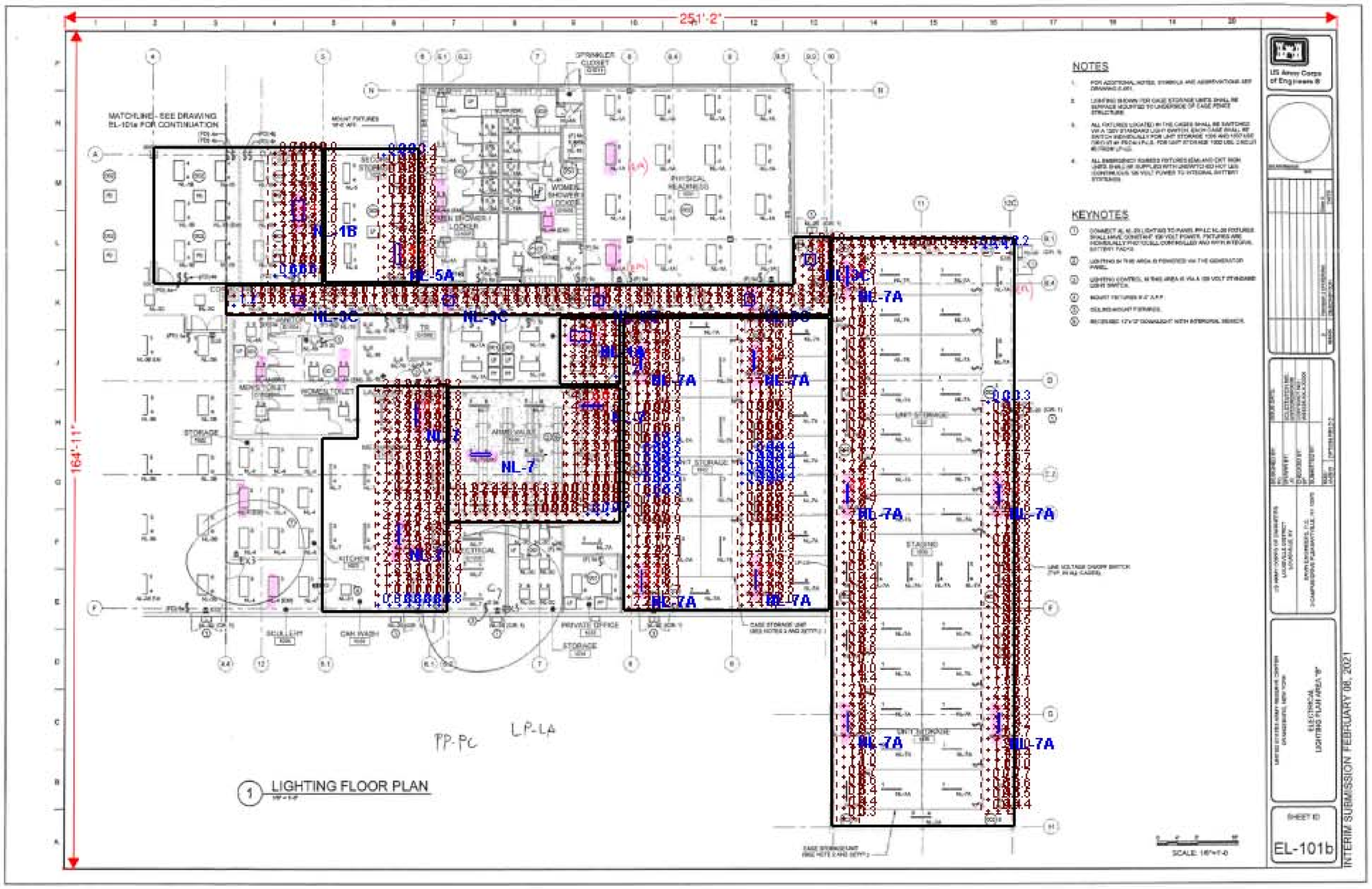

Statistics

Description	Symbol	Avg	Max	Min	Max/Min	Avg/Min
Armorer	+	3.3 fc	5.1 fc	1.7 fc	3.0:1	1.9:1
Arms Vault	+	2.2 fc	6.3 fc	0.7 fc	9.0:1	3.1:1
Class room	+	2.0 fc	4.1 fc	0.6 fc	6.8:1	3.3:1
Corridor	+	3.3 fc	5.9 fc	1.2 fc	4.9:1	2.8:1
Mechanical	+	2.9 fc	6.2 fc	0.8 fc	7.8:1	3.6:1
Secure Storage	+	2.3 fc	5.5 fc	0.3 fc	18.3:1	7.7:1
Unit Storage 1	+	1.7 fc	3.7 fc	0.5 fc	7.4:1	3.4:1
Unit Storage 2	+	1.6 fc	3.6 fc	0.4 fc	9.0:1	4.0:1
Unit storage 3	+	1.3 fc	3.6 fc	0.2 fc	18.0:1	6.5:1
Unit Storage 4	+	1.3 fc	3.8 fc	0.3 fc	12.7:1	4.3:1

Schedule

Symbol	Label	Image	QTY	Manufacturer	Catalog Number	Description	Lamp	Number Lamps	Filename	Lumens per Lamp	Lumen Multiplier	LLF	Wattage	Efficiency	Distribution	Polar Plot	Notes
	NL-3C		5	Lithonia Lighting	2GTL2 20L SWL LP835	GTL 2X2, 2000 NOMINAL LUMENS, SWL LENS, 3500K		1	2GTL2_20L_SWL_LP835.ies	2023	1	0.5	18.39	100%	DIRECT, SC-0=1.24, SC-90=1.24	Max: 710cd	
	NL-7		4	Holophane	HRTC L48 5000LM MVOLT GZ10 40K 80CRI WH	4ft HRTC 5000 LUMENS 40K 80CRI		1	HRTC_L48_5000LM_MVOLT_GZ10_40K_80CRI_WH.ies	5000	1	0.3	27.4	100%	DIRECT, SC-0=1.22, SC-90=1.29	Max: 1563cd	
	NL-1B		1	Holophane	HVT 2X4 DOP 5500LM 35K MVOLT MIN10 80CRI ZT	HOLOPHANE 2ftX4ft LED 5500LM, LOW PROFILE TROFFER W/OPAL BASKET DIFFUSER	LED 3500K 80CRI	1	HVT_2X4_DOP_5500LM_35K_MVOLT_MIN10_80CRI_ZT.ies	5931	1	0.17	52	100%	DIRECT, SC-0=1.24, SC-90=1.28	Max: 1930cd	
	NL-1A		1	Holophane	HVT 2X4 DOP 3900LM 35K MVOLT MIN10 80CRI ZT	HOLOPHANE 2ftX4ft LED 3900LM, LOW PROFILE TROFFER W/OPAL BASKET DIFFUSER	LED 3500K 80CRI	1	HVT_2X4_DOP_3900LM_35K_MVOLT_MIN10_80CRI_ZT.ies	4016	1	0.25	36	100%	DIRECT, SC-0=1.24, SC-90=1.28	Max: 1311cd	
	NL-7A		9	Lithonia Lighting	ZL1D L48 3000LM FST MVOLT 35K 90 CRI	ZL1D 48" 3,000 Lumens Frosted Diffuser MVOLT 3,500 K 90CRI	LED	1	ZL1D_L48_3000LM_FST_MVOLT_35K_90_CRI.ies	3274	1	0.3	29.85	100%	SEMI-DIRECT, SC-0=1.17, SC-90=1.34	Max: 908cd	
	NL-5A		1	Lithonia Lighting	LBL4 3000LM 80CRI 35K	LBL4 3000 lumen, 80CRI, 3500K	LED	1	LBL4_3000LM_80CRI_35K.ies	3237	1	0.35	25.56	100%	SEMI-DIRECT, SC-0=1.2, SC-90=1.2	Max: 1235cd	

Designer
Date 6/29/2021
Scale Not to Scale
Drawing No.
Summary

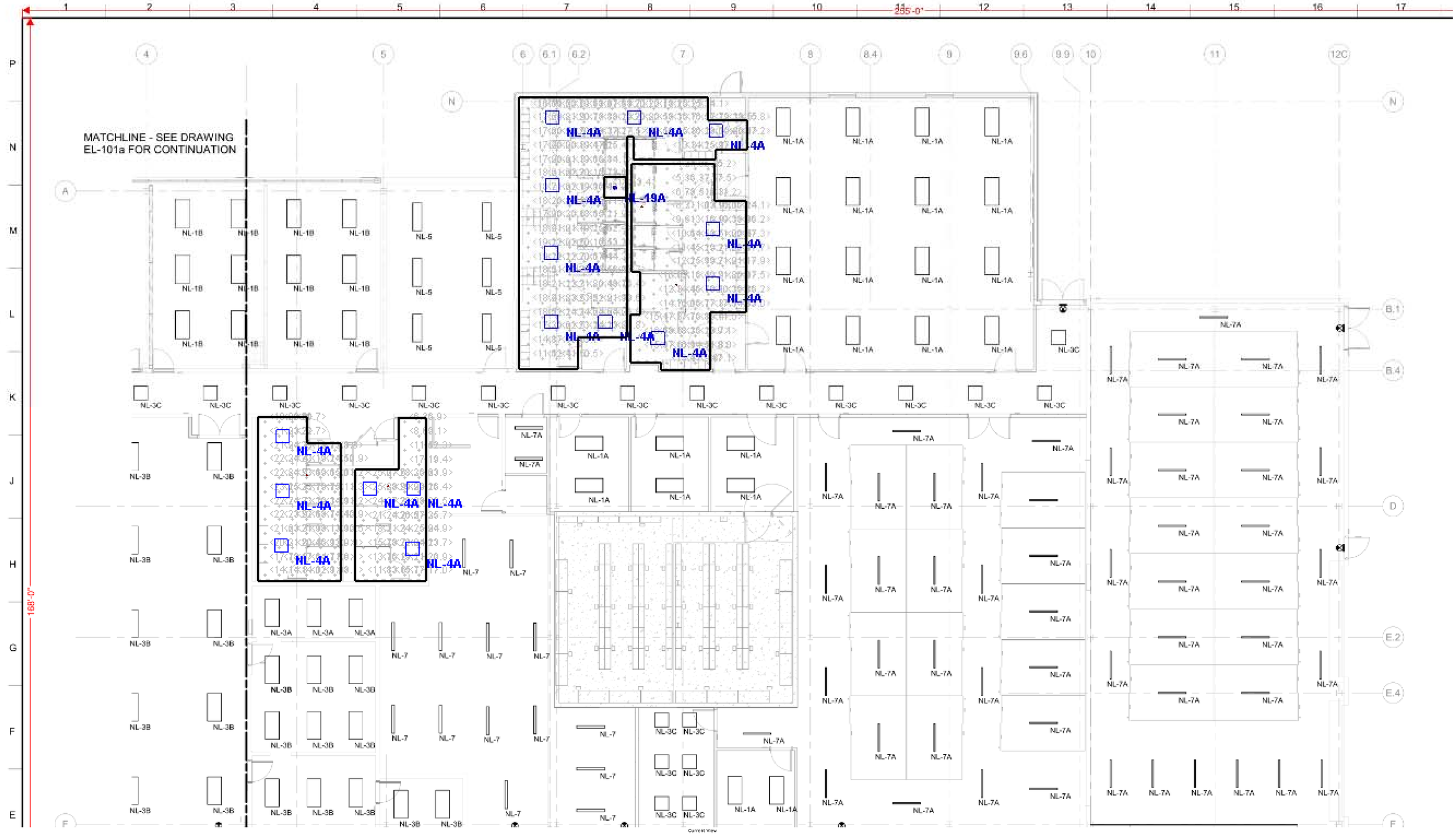

Schedule

Symbol	Label	Image	QTY	Manufacturer	Catalog Number	Description	Lamp	Number Lamps	Filename	Lumens per Lamp	Lumen Multiplier	LLF	Wattage	Efficiency	Distribution	Polar Plot	Notes
	NL-4A		16	Lithonia Lighting	2WRTL XX L24 3000LM XX AFL XX 35K 80CRI	2WRTL L24 3000LM AFL 35K 80CRI		1	2WRTL_XX_L24_3000LM_XX_AFL_XX_35K_80CRI.ies	2912	1	0.9	26.55	100%	DIRECT, SC-0=1.19, SC-90=1.19	Max: 1178cd	
	NL-19A		1	Gotham Architectural Lighting	EVO6SH 35/10 DFF SOL	EVO 6IN SHOWER, 3500K, 1000LM, FLUSH SOLITE, 80CRI		1	EVO6SH_35_10_DFF_SOL.ies	839	1	0.8	14.7	100%	DIRECT, SC-0=0.9, SC-90=0.89	Max: 878cd	

Statistics

Description	Symbol	Avg	Max	Min	Max/Min	Avg/Min
Mens Room	+	18.0 fc	25.1 fc	8.1 fc	3.1:1	2.2:1
Mens Shower/Locker	+	18.7 fc	24.6 fc	10.5 fc	2.3:1	1.8:1
Shower	+	13.4 fc	13.5 fc	13.4 fc	1.0:1	1.0:1
Womens Room	+	21.0 fc	29.9 fc	6.3 fc	4.7:1	3.3:1
Womens Shower/Locker	+	14.5 fc	21.9 fc	4.2 fc	5.2:1	3.5:1

Designer
Date
5/17/2021
Scale
Not to Scale
Drawing No.
Summary

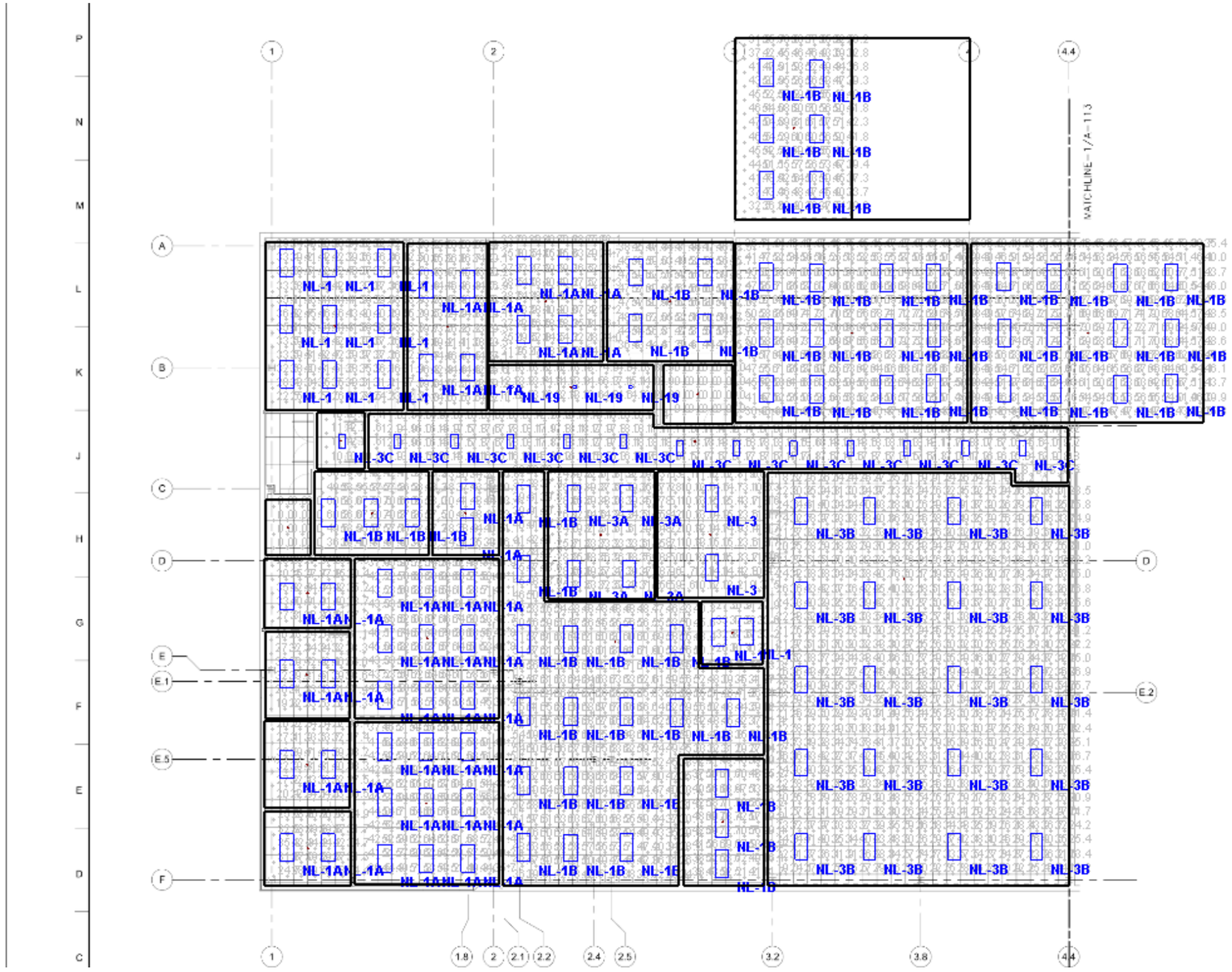

Current View

VISUAL

Designer

Date
12/30/2020
Scale
Not to Scale
Drawing No.

Summary

Schedule

Symbol	Label	Image	QTY	Manufacturer	Catalog Number	Description	Lamp	Number Lamps	Filename	Lumens per Lamp	Lumen Multiplier	LLF	Wattage	Efficiency	Distribution	Polar Plot	Notes
	NL-1		11	Holophane	HVT 2X4 DOP 2600LM 35K MVOLT MIN10 80CRI ZT	HOLOPHANE 2ftX4ft LED 2600LM, LOW PROFILE TROFFER W/OPAL BASKET DIFFUSER	LED 3500K 80CRI	1	HVT_2X4_DOP_2600LM_35K_MVOLT_MIN10_80CRI_ZT.ies	2826	1	0.9	27	100%	DIRECT, SC-0=1.23, SC-90=1.28		
	NL-1A		36	Holophane	HVT 2X4 DOP 3900LM 35K MVOLT MIN10 80CRI ZT	HOLOPHANE 2ftX4ft LED 3900LM, LOW PROFILE TROFFER W/OPAL BASKET DIFFUSER	LED 3500K 80CRI	1	HVT_2X4_DOP_3900LM_35K_MVOLT_MIN10_80CRI_ZT.ies	4016	1	0.9	36	100%	DIRECT, SC-0=1.24, SC-90=1.28		
	NL-1B		57	Holophane	HVT 2X4 DOP 5500LM 35K MVOLT MIN10 80CRI ZT	HOLOPHANE 2ftX4ft LED 5500LM, LOW PROFILE TROFFER W/OPAL BASKET DIFFUSER	LED 3500K 80CRI	1	HVT_2X4_DOP_5500LM_35K_MVOLT_MIN10_80CRI_ZT.ies	5931	1	0.9	52	100%	DIRECT, SC-0=1.24, SC-90=1.28		
	NL-3A		4	Lithonia Lighting	2GTL4 40L SWL LP835	GTL 2X4, 4000 NOMINAL LUMENS, SWL LENS, 3500K		1	2GTL4_40L_SWL_LP835.ies	3593	1	0.9	29.83	100%	DIRECT, SC-0=1.24, SC-90=1.25		
	NL-3		2	Lithonia Lighting	2GTL4 30L SWL LP835	GTL 2X4, 3000 NOMINAL LUMENS, SWL LENS, 3500K		1	2GTL4_30L_SWL_LP835 .ies	2733	1	0.9	23.3	100%	DIRECT, SC-0=1.24, SC-90=1.25		
	NL-3B		20	Lithonia Lighting	2GTL4 48L SWL LP835	GTL 2X4, 4800 NOMINAL LUMENS, SWL LENS, 3500K		1	2GTL4_48L_SWL_LP835.ies	4377	1	0.9	35.79	100%	DIRECT, SC-0=1.24, SC-90=1.25		
	NL-3C		13	Lithonia Lighting	2GTL2 20L SWL LP835	GTL 2X2, 2000 NOMINAL LUMENS, SWL LENS, 3500K		1	2GTL2_20L_SWL_LP835.ies	2023	1	0.9	18.39	100%	DIRECT, SC-0=1.24, SC-90=1.24		
	NL-19		3	Gotham Architectural Lighting	EVO6 35/15 AR MWD LD 90CRI	EVO 6IN ROUND, 90 CRI, 3500K, 1500LM, MED WIDE DIST, CLEAR, MATTE DIFFUSE		1	EVO6_35_15_AR_MWD_LD__90CRI.ies	1065	1	0.9	14.7	100%	DIRECT, SC-0=1.03, SC-90=1.03		

Statistics

Description	Symbol	Avg	Max	Min	Max / Min	Avg / Min
Assembly 1019	+	30.9 fc	45.6 fc	13.2 fc	3.5:1	2.3:1
Break Room 1005	+	31.7 fc	40.5 fc	21.1 fc	1.9:1	1.5:1
Chair Storage 1020	+	11.3 fc	15.4 fc	6.9 fc	2.2:1	1.6:1
Class Room Part.	+	47.5 fc	61.6 fc	28.2 fc	2.2:1	1.7:1
Classroom 1017	+	58.3 fc	73.5 fc	35.0 fc	2.1:1	1.7:1
Classroom 1018	+	58.4 fc	73.3 fc	35.3 fc	2.1:1	1.7:1
Corridor C1001 and Corridor C1003	+	16.5 fc	18.7 fc	7.6 fc	2.5:1	2.2:1
Family Support 1001	+	53.1 fc	70.6 fc	35.3 fc	2.0:1	1.5:1
Learning Center 1006	+	51.4 fc	62.2 fc	35.9 fc	1.7:1	1.4:1
Lobby C1002	+	13.6 fc	17.1 fc	11.8 fc	1.4:1	1.2:1
Office 1021	+	32.2 fc	38.2 fc	26.8 fc	1.4:1	1.2:1
Private Office 1003	+	35.2 fc	48.3 fc	23.9 fc	2.0:1	1.5:1
Private Office 1010	+	51.3 fc	73.4 fc	30.5 fc	2.4:1	1.7:1
Private Office 1012	+	33.7 fc	44.2 fc	24.4 fc	1.8:1	1.4:1
Private Office 1013	+	30.6 fc	41.9 fc	20.2 fc	2.1:1	1.5:1
Private Office 1015	+	30.6 fc	42.1 fc	19.8 fc	2.1:1	1.5:1
Private Office 1016	+	34.0 fc	44.3 fc	23.3 fc	1.9:1	1.5:1
Rentation 1004	+	35.4 fc	46.6 fc	22.1 fc	2.1:1	1.6:1
Shared Office 1011	+	54.9 fc	69.5 fc	35.7 fc	1.9:1	1.5:1
Shared Office 1014	+	55.2 fc	69.7 fc	35.9 fc	1.9:1	1.5:1
Team Room 1002	+	36.7 fc	46.1 fc	22.0 fc	2.1:1	1.7:1
Team Room w/ Spirnet	+	32.6 fc	39.5 fc	23.6 fc	1.7:1	1.4:1
Unit Commons 1008	+	52.7 fc	69.2 fc	23.3 fc	3.0:1	2.3:1
Vestibule V1001	+	11.1 fc	12.2 fc	10.2 fc	1.2:1	1.1:1

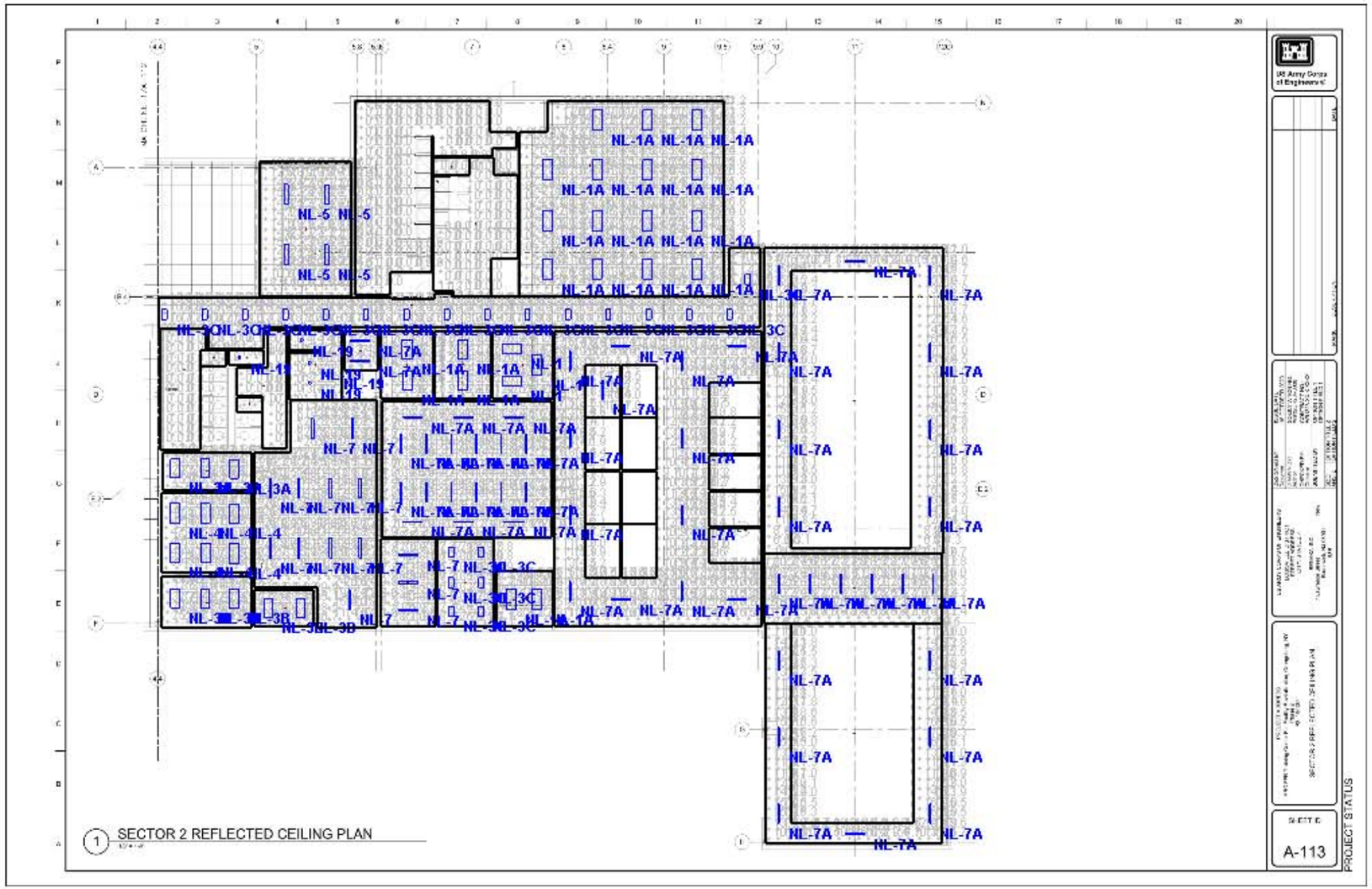

Current View

Designer

Date
12/30/2020
Scale
Not to Scale
Drawing No.

Summary

Schedule

Symbol	Label	Image	Quantity	Manufacturer	Catalog Number	Description	Number Lamps	Lumens Per Lamp	Light Loss Factor	Wattage	Plot
	NL-3A		3	Lithonia Lighting	2GTL4 40L SWL LP835	GTL 2X4, 4000 NOMINAL LUMENS, SWL LENS, 3500K	1	3593	0.9	29.83	Max: 1254cd
	NL-3B		5	Lithonia Lighting	2GTL4 48L SWL LP835	GTL 2X4, 4800 NOMINAL LUMENS, SWL LENS, 3500K	1	4377	0.9	35.79	Max: 1528cd
	NL-1A		21	Holophane	HVT 2X4 DOP 3900LM 35K MVOLT MIN10 80CRI ZT	HOLOPHANE 2ftX4ft LED 3900LM, LOW PROFILE TROFFER W/OPAL BASKET DIFFUSER	1	4016	0.9	36	Max: 1311cd
	NL-7		14	Holophane	HRTC L48 5000LM MVOLT GZ10 40K 80CRI WH	4ft HRTC 5000 LUMENS 40K 80CRI	1	5000	0.9	27.4	Max: 1563cd
	NL-3C		22	Lithonia Lighting	2GTL2 20L SWL LP835	GTL 2X2, 2000 NOMINAL LUMENS, SWL LENS, 3500K	1	2023	0.9	18.39	Max: 710cd
	NL-1		3	Holophane	HVT 2X4 DOP 2600LM 35K MVOLT MIN10 80CRI ZT	HOLOPHANE 2ftX4ft LED 2600LM, LOW PROFILE TROFFER W/OPAL BASKET DIFFUSER	1	2826	0.9	27	Max: 935cd
	NL-7A		55	Holophane	HZL1D L48 3000LM FST MVOLT 35K 80CRI	HZL1D 48" 3,000 Lumens Frosted Diffuser MVOLT 3,500 K 80CRI	1	3966	0.9	29.85	Max: 1100cd
	NL-19		5	Gotham Architectural Lighting	EVO6 35/15 AR MWD LD 90CRI	EVO 6IN ROUND, 90 CRI, 3500K, 1500LM, MED WIDE DIST, CLEAR, MATTE DIFFUSE	1	1065	0.9	14.7	Max: 1047cd
	NL-4		6	Lithonia Lighting	2WRTL XX L48 5000LM XX AFL XX 35K 80CRI	2WRTL L48 5000LM AFL 35K 80CRI	1	4735	0.8	38.72	Max: 1915cd
	NL-5		4	Lithonia Lighting	LBL4 3000LM 80CRI 35K	LBL4 3000 lumen, 80CRI, 3500K	1	3237	0.9	25.56	Max: 1235cd

Statistics

Description	Symbol	Avg	Max	Min	Max / Min	Avg / Min
Armorer 1029	+	29.4 fc	40.7 fc	16.9 fc	2.4:1	1.7:1
Arms Vault 1030	+	35.9 fc	46.2 fc	17.0 fc	2.7:1	2.1:1
Can Wash 1039	+	34.5 fc	38.4 fc	29.9 fc	1.3:1	1.2:1
Corridor C1003	+	17.3 fc	19.5 fc	8.5 fc	2.3:1	2.0:1
Electrical Room G1009	+	37.2 fc	46.5 fc	28.1 fc	1.7:1	1.3:1
Janitor G1004	+	13.9 fc	15.5 fc	11.8 fc	1.3:1	1.2:1
Kitchen 1023	+	50.7 fc	61.9 fc	34.8 fc	1.8:1	1.5:1
Lactation 1026	+	19.1 fc	32.9 fc	4.6 fc	7.2:1	4.2:1
Mechanical Room G1010	+	30.5 fc	43.9 fc	11.4 fc	3.9:1	2.7:1
Physical Readness 1031	+	30.8 fc	37.6 fc	15.3 fc	2.5:1	2.0:1
Private Office 1027	+	31.9 fc	44.0 fc	21.8 fc	2.0:1	1.5:1
Private Office 1028	+	31.3 fc	43.4 fc	20.9 fc	2.1:1	1.5:1
Private Office 1033	+	36.6 fc	48.5 fc	26.1 fc	1.9:1	1.4:1
Scullery 1024	+	34.4 fc	42.2 fc	24.4 fc	1.7:1	1.4:1
Secure storage 1025	+	18.1 fc	24.5 fc	8.4 fc	2.9:1	2.2:1
Staging 1035	+	24.6 fc	32.2 fc	12.9 fc	2.5:1	1.9:1
Storage 1022	+	31.7 fc	37.2 fc	24.5 fc	1.5:1	1.3:1
Storage 1034	+	29.7 fc	34.5 fc	23.6 fc	1.5:1	1.3:1
TR G1006	+	36.1 fc	42.2 fc	31.2 fc	1.4:1	1.2:1
Unit Storage	+	14.2 fc	18.7 fc	11.0 fc	1.7:1	1.3:1
Unit Storage 1032	+	14.8 fc	21.3 fc	9.2 fc	2.3:1	1.6:1
Unit Storage 1036	+	13.3 fc	17.9 fc	6.5 fc	2.8:1	2.0:1
Unit Storage 1037	+	13.4 fc	17.9 fc	6.1 fc	2.9:1	2.2:1

VISUAL

Designer

Date
12/30/2020
Scale
Not to Scale
Drawing No.

Summary

July 29, 2021

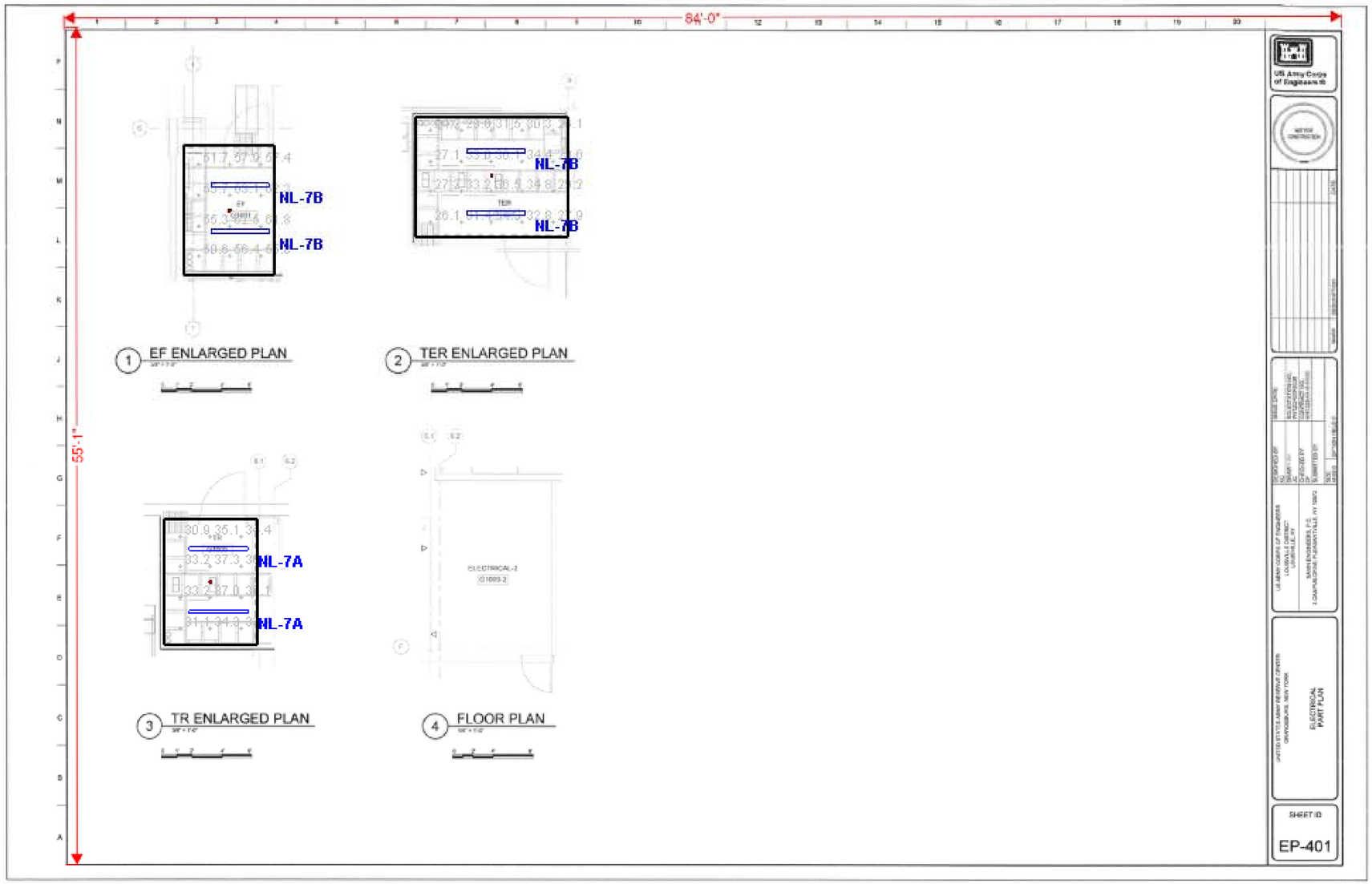

Current View

Schedule

Symbol	Label	Image	QTY	Manufacturer	Catalog Number	Description	Lamp	Number Lamps	Filename	Lumens per Lamp	Lumen Multiplier	LLF	Wattage	Efficiency	Distribution	Polar Plot	Notes
	NL-7		0	Holophane	HRTC L48 5000LM MVOLT GZ10 40K 80CRI WH	4ft HRTC 5000 LUMENS 40K 80CRI		1	HRTC_L48_5000LM_MVOLT_GZ10_40K_80CRI_WH.ies	5000	1	0.9	27.4	100%	DIRECT, SC-0=1.22, SC-90=1.29	Max: 1563cd	
	NL-7A		2	Lithonia Lighting	ZL1D L48 3000LM FST MVOLT 35K 90 CRI	ZL1D 48" 3,000 Lumens Frosted Diffuser MVOLT 3,500 K 90CRI	LED	1	ZL1D_L48_3000LM_FST_MVOLT_35K_90_CRI.ies	3274	1	0.9	29.85	100%	SEMI-DIRECT, SC-0=1.17, SC-90=1.34	Max: 908cd	
	NL-7B		4	Lithonia Lighting	ZL1D L48 5000LM FST MVOLT 35K 80 CRI	ZL1D 48" 5,000 Lumens Frosted Diffuser MVOLT 3,500 K 80CRI		1	ZL1D_L48_5000LM_FST_MVOLT_35K_80_CRI.ies	5456	1	0.9	40.56	100%	SEMI-DIRECT, SC-0=1.17, SC-90=1.34	Max: 1514cd	

Statistics

Description	Symbol	Avg	Max	Min	Max/Min	Avg/Min
EF	+	57.5 fc	63.1 fc	50.6 fc	1.2:1	1.1:1
TER	+	30.7 fc	36.5 fc	24.2 fc	1.5:1	1.3:1
TR	+	34.4 fc	37.3 fc	30.9 fc	1.2:1	1.1:1

Designer
Date 4/21/2021
Scale Not to Scale
Drawing No.
Summary

SAVIN ENGINEERS, P.C.

Short Circuit and Arc Flash Study for the United States Army Reserve Center, Orangeburg, NY

By: Mihir Murthy,

07/22/2021

Savin Engineers, P.C.

1 Executive Summary

1.1 Scope 1

1.2 Results 1

2 Power System Analysis

2.1 System Input Data 3

2.1.1 System One Line Diagrams 5

2.1.2 System Input Data Report 7

2.2 Short Circuit Analysis 12

2.2.1 Scope 12

2.2.2 Objectives 12

2.2.3 Short Circuit Study Output Data 13

2.3 Device Evaluation 20

2.3.1 Scope 20

2.3.2 Methodology 20

2.3.3 Device Evaluation Output Data Report 21

2.4 Arc Flash Hazard Analysis 23

2.4.1 Introduction 23

2.4.2 Study Procedure and Scope 24

2.4.3 Results 25

2.4.4 Arc Flash Analysis Summary Table Heading Descriptions 26

2.4.5 Additional Definitions 28

2.4.6 Arc Flash Analysis Summary Table 29

3 Recommendations

3.1 Device Evaluation Study Recommendations 31

3.2 Suggested Settings 31

3.3 Arc Flash Hazard Analysis Recommendations 35

1 Executive Summary

1.1 Scope

This report contains the results of the analysis performed for the United States Army Reserve Center in Orangeburg, NY electrical distribution system. The purpose of this study is to evaluate short circuit availability, device evaluation and arc flash hazard analysis for the Army Reserve Center electrical distribution system, including equipment withstand ratings, and sample arc flash labeling.

A full list of the major equipment included in the study model is as follows:

1. Existing Utility Transformer
2. Existing Low Voltage 208V Distribution Switchboard
3. All existing and new 208V panelboards fed by existing switchboard.

Complete one-line diagrams of the system included in the study can be found in *Section 2.1.1, System One Line Diagrams*.

All Short Circuit, Device Evaluation and Arc Flash Hazard Analysis calculations included in this study were performed using SKM's Power*Tools for Windows, by SKM Systems Analysis, Inc.

1.2 Results

Input Data – Input data for new equipment used in this study was obtained from Contract Drawings EP-602 thru EP-606, site field visits, and manufacturer information and is detailed in *Section 2.1, System Input Data*.

Short Circuit Study – Short circuit currents were calculated for three phase bolted faults and single phase to ground faults (where applicable) at each system bus. Worst case short circuit system configuration has been studied in this report. The full short circuit report is provided in *Section 2.2, Short Circuit Analysis.*

Device Evaluation – Short circuit ratings of all protective devices are compared to the results of the worst-case Short Circuit Study and analyzed on a pass/fail basis. The full device evaluation report is provided in *Section 2.3, Device Evaluation.*

Protective Device Settings – All recommended protective device settings determined in *Section 3.2.1, Protective Device Suggested Settings*.

Arc Flash Hazard Analysis – Arc Flash Hazard Analysis Results are reported in a tabular format and include a proposed sample Arc Flash label. Report and

sample labels can be found in *Section 3.3, Arc Flash Hazard Analysis Recommendations.*

2 Power System Analysis

2.1 System Input Data

System One Line - The system architecture including interconnecting cables and protective devices is modeled as shown on Contract Drawing EP-606, and any pertinent information obtained from field site visits. Existing utility information was not made available from Orangeburg Rockland Electric. The study is based on the available short circuit let-thru from the existing utility transformer.

See *Section 2.1.1, System One Line Diagrams* and *Section 2.1.2, System Input Data Report*.

Equipment data was taken from the existing field model number obtain thru site field visits all existing switchboards, panelboards. All new panelboards were modeled with equipment matching the existing equipment manufacturer (Square D).

Generation – Utility three phase available short circuit data was taken from upstream pad mounted utility low voltage 225kVA transformer. Unsuccessful attempts were made to reach out the Orangeburg and Rockland Electric to obtain data for the utility transformer and service. Therefore, the utility transformer impedance is based from typical pad mounted data provided by the computer program and IEEE standards. The assumed impedance is 3.8%.

Utilities

Contribution From Name	Bus Name	In/Out Service	Nominal Voltage		-------- Contribution Data -------- DutyUnits		X/R	PU (100 MVA Base) R PU	X PU
UTIL-0001	BUS-0001	In	4,160	3P:	40	MVA	8.00	Pos: 0.310	2.481
				SLG:	0	MVA	8.00	Zero:00.000	000.000

Name 1 / 3Phase	In/Out	Phases	Bus	Conn.	Volts	FLA	Nominal kVA		Percent Z in % R	jX
EXISTING XFMR-01	In	ABC	BUS-0001	D	4,160	31	225.0	Pos:	1.46	3.51
3Phase			BUS-0002	WG	208	625		Zero:	1.46	3.51

Figure 1

Cables - Cable lengths were estimated based on the proposed locations shown Contract Drawings EP-101A and EP-101B. Note that the low voltage cables listed in *Section 2.1.2, System Input Data Report*, The cable impedance data used for these cables is taken from NFPA 70 (National Electric Code) Table 310.15(B)(16) The cable insulation type selected in SKM was XHHW-2 however it should be noted insulation type does not affect the impedance of the cable.

Properties which can affect cable impedance, such as cable shielding and conduit type (magnetic or non-magnetic), are accounted for in the table, and have been reflected in the study where applicable.

Loads (motor contribution) - System motor loads are not significant and have been estimated in the model. Motor load estimates were based on connected kVA values found in contract drawings EP-602, EP-603, EP-604 and EP-605.

2.1.1 System One Line Diagrams

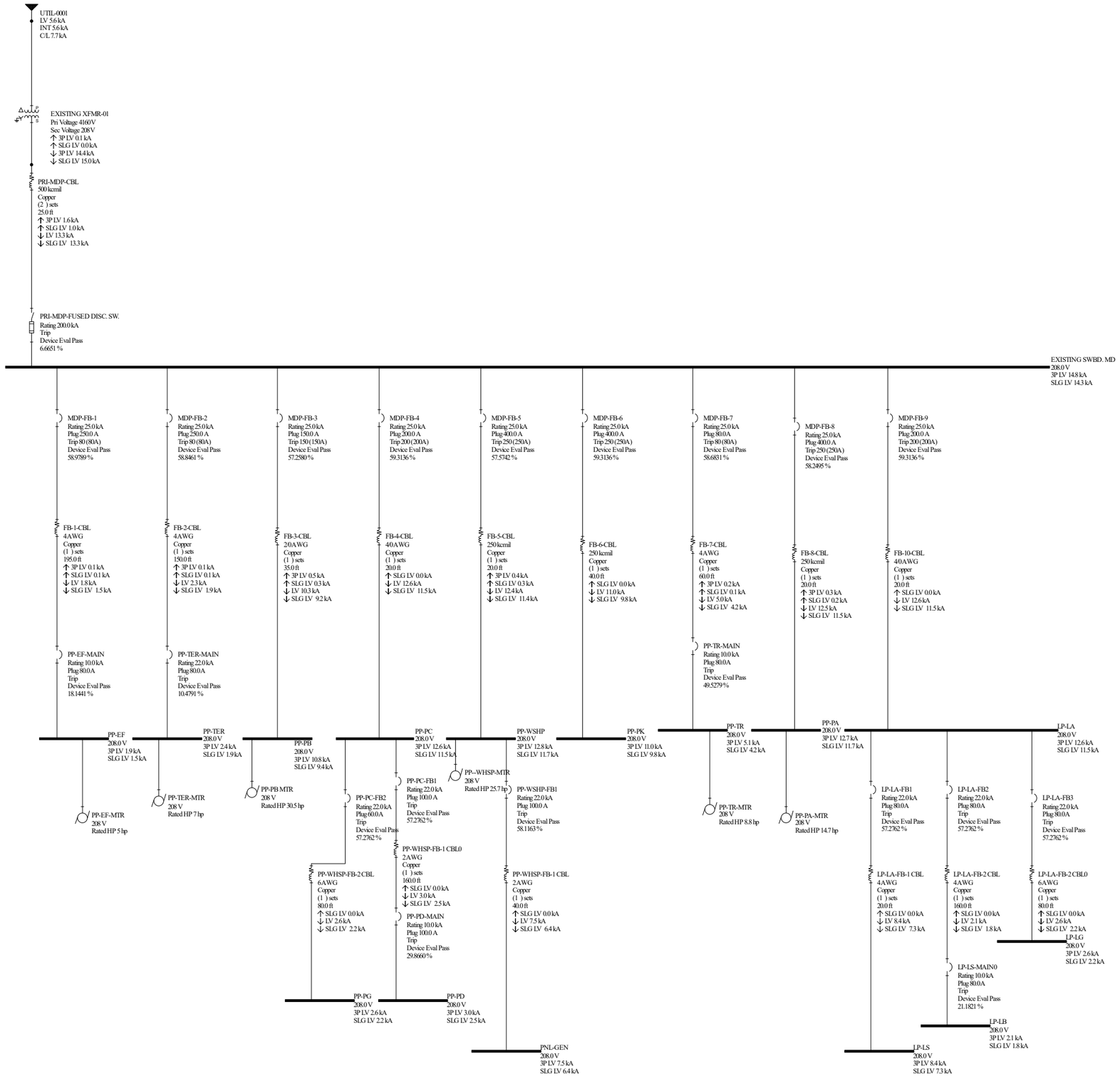
UTIL-0001
LV 5.6 kA
INT 5.6 kA
C/L 7.7 kA
EXISTING XFMR-01
Pri Voltage 4160 V
Sec Voltage 208 V
3P LV 0.1 kA
SLG LV 0.0 kA
3P LV 14.4 kA
SLG LV 15.0 kA
PRI-MDP-CBL
500 kcmil
Copper
(2) sets
25.0 ft
3P LV 1.6 kA
SLG LV 1.0 kA
LV 13.3 kA
SLG LV 13.3 kA
PRI-MDP-FUSED DISC. SW.
Rating 200.0 kA
Trip
Device Eval Pass
6.6651 %
EXISTING SWBD. MD
208.0 V
3P LV 14.8 kA
SLG LV 14.3 kA
MDP-FB-1
Rating 25.0 kA
Plug 250.0 A
Trip 80 (80A)
Device Eval Pass
58.9789 %
MDP-FB-2
Rating 25.0 kA
Plug 250.0 A
Trip 80 (80A)
Device Eval Pass
58.8461 %
MDP-FB-3
Rating 25.0 kA
Plug 150.0 A
Trip 150 (150A)
Device Eval Pass
57.2580 %
MDP-FB-4
Rating 25.0 kA
Plug 200.0 A
Trip 200 (200A)
Device Eval Pass
59.3136 %
MDP-FB-5
Rating 25.0 kA
Plug 400.0 A
Trip 250 (250A)
Device Eval Pass
57.5742 %
MDP-FB-6
Rating 25.0 kA
Plug 400.0 A
Trip 250 (250A)
Device Eval Pass
59.3136 %
MDP-FB-7
Rating 25.0 kA
Plug 80.0A
Trip 80 (80A)
Device Eval Pass
58.6831 %
MDP-FB-8
Rating 25.0 kA
Plug 400.0 A
Trip 250 (250A)
Device Eval Pass
58.2495 %
MDP-FB-9
Rating 25.0 kA
Plug 200.0 A
Trip 200 (200A)
Device Eval Pass
59.3136 %
FB-1-CBL
4AWG
Copper
(1) sets
195.0 ft
3P LV 0.1 kA
SLG LV 0.1 kA
LV 1.8 kA
SLG LV 1.5 kA
FB-2-CBL
4AWG
Copper
(1) sets
150.0 ft
3P LV 0.1 kA
SLG LV 0.1 kA
LV 2.3 kA
SLG LV 1.9 kA
FB-3-CBL
20AWG
Copper
(1) sets
35.0 ft
3P LV 0.5 kA
SLG LV 0.3 kA
LV 10.3 kA
SLG LV 9.2 kA
FB-4-CBL
40AWG
Copper
(1) sets
20.0 ft
SLG LV 0.0 kA
LV 12.6 kA
SLG LV 11.5 kA
FB-5-CBL
250 kcmil
Copper
(1) sets
20.0 ft
3P LV 0.4 kA
SLG LV 0.3 kA
LV 12.4 kA
SLG LV 11.4 kA
FB-6-CBL
250 kcmil
Copper
(1) sets
40.0 ft
SLG LV 0.0 kA
LV 11.0 kA
SLG LV 9.8 kA
FB-7-CBL
4AWG
Copper
(1) sets
60.0 ft
3P LV 0.2 kA
SLG LV 0.1 kA
LV 5.0 kA
SLG LV 4.2 kA
FB-8-CBL
250 kcmil
Copper
(1) sets
20.0 ft
3P LV 0.3 kA
SLG LV 0.2 kA
LV 12.5 kA
SLG LV 11.5 kA
FB-10-CBL
40AWG
Copper
(1) sets
20.0 ft
SLG LV 0.0 kA
LV 12.6 kA
SLG LV 11.5 kA
PP-EF-MAIN
Rating 10.0 kA
Plug 80.0A
Trip
Device Eval Pass
18.1441 %
PP-TER-MAIN
Rating 22.0 kA
Plug 80.0A
Trip
Device Eval Pass
10.4791 %
PP-TR-MAIN
Rating 10.0 kA
Plug 80.0A
Trip
Device Eval Pass
49.5279 %
PP-EF
208.0 V
3P LV 1.9 kA
SLG LV 1.5 kA
PP-TER
208.0 V
3P LV 2.4 kA
SLG LV 1.9 kA
PP-PB
208.0 V
3P LV 10.8 kA
SLG LV 9.4 kA
PP-PC
208.0 V
3P LV 12.6 kA
SLG LV 11.5 kA
PP-WSHP
208.0 V
3P LV 12.8 kA
SLG LV 11.7 kA
PP-PK
208.0 V
3P LV 11.0 kA
SLG LV 9.8 kA
PP-TR
208.0 V
3P LV 5.1 kA
SLG LV 4.2 kA
PP-PA
208.0 V
3P LV 12.7 kA
SLG LV 11.7 kA
LP-LA
208.0 V
3P LV 12.6 kA
SLG LV 11.5 kA
PP-EF-MTR
208 V
Rated HP 5 hp
PP-TER-MTR
208 V
Rated HP 7 hp
PP-PB MTR
208 V
Rated HP 30.5 hp
PP-PC-FB2
Rating 22.0 kA
Plug 60.0A
Trip
Device Eval Pass
57.2762 %
PP-PC-FB1
Rating 22.0 kA
Plug 100.0 A
Trip
Device Eval Pass
57.2762 %
PP--WHSP-MTR
208 V
Rated HP 25.7 hp
PP-WSHP-FB1
Rating 22.0 kA
Plug 100.0 A
Trip
Device Eval Pass
58.1163 %
PP-TR-MTR
208 V
Rated HP 8.8 hp
PP-PA-MTR
208 V
Rated HP 14.7 hp
LP-LA-FB1
Rating 22.0 kA
Plug 80.0A
Trip
Device Eval Pass
57.2762 %
LP-LA-FB2
Rating 22.0 kA
Plug 80.0A
Trip
Device Eval Pass
57.2762 %
LP-LA-FB3
Rating 22.0 kA
Plug 80.0A
Trip
Device Eval Pass
57.2762 %
PP-WHSP-FB-2 CBL
6AWG
Copper
(1) sets
80.0 ft
SLG LV 0.0 kA
LV 2.6 kA
SLG LV 2.2 kA
PP-WHSP-FB-1 CBL0
2AWG
Copper
(1) sets
160.0 ft
SLG LV 0.0 kA
LV 3.0 kA
SLG LV 2.5 kA
PP-PD-MAIN
Rating 10.0 kA
Plug 100.0 A
Trip
Device Eval Pass
29.8660 %
PP-WHSP-FB-1 CBL
2AWG
Copper
(1) sets
40.0 ft
SLG LV 0.0 kA
LV 7.5 kA
SLG LV 6.4 kA
LP-LA-FB-1 CBL
4AWG
Copper
(1) sets
20.0 ft
SLG LV 0.0 kA
LV 8.4 kA
SLG LV 7.3 kA
LP-LA-FB-2 CBL
4AWG
Copper
(1) sets
160.0 ft
SLG LV 0.0 kA
LV 2.1 kA
SLG LV 1.8 kA
LP-LA-FB-2 CBL0
6AWG
Copper
(1) sets
80.0 ft
SLG LV 0.0 kA
LV 2.6 kA
SLG LV 2.2 kA
LP-LG
208.0 V
3P LV 2.6 kA
SLG LV 2.2 kA
LP-LS-MAIN0
Rating 10.0 kA
Plug 80.0A
Trip
Device Eval Pass
21.1821 %
LP-LB
208.0 V
3P LV 2.1 kA
SLG LV 1.8 kA
LP-LS
208.0 V
3P LV 8.4 kA
SLG LV 7.3 kA
PP-PG
208.0 V
3P LV 2.6 kA
SLG LV 2.2 kA
PP-PD
208.0 V
3P LV 3.0 kA
SLG LV 2.5 kA
PNL-GEN
208.0 V
3P LV 7.5 kA
SLG LV 6.4 kA

2.1.2 System Input Data Report

Input Report (English)

Utilities

Contribution From Name	Bus Name	In/Out Service	Nominal Voltage	-------- Contribution Data --------				PU (100 MVA Base)		
					DutyUnits		X/R		R PU	X PU
UTIL-0001	BUS-0001	In	4,160	3P:	40	MVA	8.00	Pos:	0.310	2.481
				SLG:	0	MVA	8.00	Zero:	00.000	000.000

Induction Motors

Name Phases	# of Motors	Bus Name Connection	In/Out Service	L-L Volts	Status	# of Poles	------- Contribution Data -------		
							Base kVA	Xd"	X/R
PP-EF-MTR	1	PP-EF	In	208	Running	4	4.72	0.151	4.9
ABC		Wye							
PP-PA-MTR	1	PP-PA	In	208	Running	4	14.78	0.151	4.9
ABC		Wye							
PP-PB MTR	1	PP-PB	In	208	Running	4	28.80	0.151	4.9
ABC		Wye							
PP-TER-MTR	1	PP-TER	In	208	Running	4	6.60	0.151	4.9
ABC		Wye							

Name Phases	# of Motors	Bus Name Connection	In/Out Service	L-L Volts	Status	# of Poles	------- Contribution Data ------- Base kVA	Xd"	X/R
PP-TR-MTR	1	PP-TR	In	208	Running	4	8.82	0.151	4.9
ABC		Wye							
PP--WHSP-MTR	1	PP-WSHP	In	208	Running	4	24.21	0.151	4.9
ABC		Wye							

Cables

Name Phases	From Bus To Bus	In/Out Service	Qty /Ph	Length Feet	Size	------ Cable Description ------ Cond. Type	Duct Type	Insul	Ohms/ 1000 feet R	jX
FB-10-CBL	EXISTING SWBD. MDP	In	1	20	4/0	Copper	Magnetic	Pos:	0.060	0.051
ABC	LP-LA							Zero:	0.100	0.130
FB-1-CBL	EXISTING SWBD. MDP	In	1	195	4	Copper	Magnetic	Pos:	0.310	0.060
ABC	PP-EF							Zero:	0.493	0.153
FB-2-CBL	EXISTING SWBD. MDP	In	1	150	4	Copper	Magnetic	Pos:	0.310	0.060
ABC	PP-TER							Zero:	0.493	0.153
FB-3-CBL	EXISTING SWBD. MDP	In	1	35	2/0	Copper	Magnetic	Pos:	0.100	0.054
ABC	PP-PB							Zero:	0.159	0.137

Name Phases	From Bus To Bus	In/Out Service	Qty /Ph	Length Feet	Size	------ Cable Description ------ Cond. Type	Duct Type	Insul		Ohms/ 1000 feet R	jX
FB-4-CBL	EXISTING SWBD. MDP	In	1	20	4/0	Copper	Magnetic		Pos:	0.060	0.051
ABC	PP-PC								Zero:	0.100	0.130
FB-5-CBL	EXISTING SWBD. MDP	In	1	20	250	Copper	Magnetic		Pos:	0.050	0.052
ABC	PP-WSHP								Zero:	0.086	0.132
FB-6-CBL	EXISTING SWBD. MDP	In	1	40	250	Copper	Magnetic		Pos:	0.050	0.052
ABC	PP-PK								Zero:	0.086	0.132
FB-7-CBL	EXISTING SWBD. MDP	In	1	60	4	Copper	Magnetic		Pos:	0.310	0.060
ABC	PP-TR								Zero:	0.493	0.153
FB-8-CBL	EXISTING SWBD. MDP	In	1	20	250	Copper	Magnetic		Pos:	0.050	0.052
ABC	PP-PA								Zero:	0.086	0.132
LP-LA-FB-1 CBL	LP-LA	In	1	20	4	Copper	Magnetic		Pos:	0.310	0.060
ABC	LP-LS								Zero:	0.493	0.153
LP-LA-FB-2 CBL	LP-LA	In	1	160	4	Copper	Magnetic		Pos:	0.310	0.060
ABC	LP-LB								Zero:	0.493	0.153

Name Phases	From Bus To Bus	In/Out Service	Qty /Ph	Length Feet	Size	------ Cable Description ------ Cond. Type	Duct Type	Insul		Ohms/ 1000 feet R	jX
LP-LA-FB-2 CBL0	LP-LA	In	1	80	6	Copper	Magnetic		Pos:	0.490	0.064
ABC	LP-LG								Zero:	0.779	0.163
PP-WHSP-FB-1 CBL	PP-WSHP	In	1	40	2	Copper	Magnetic		Pos:	0.200	0.057
ABC	PNL-GEN								Zero:	0.318	0.145
PP-WHSP-FB-1 CBL0	PP-PC	In	1	160	2	Copper	Magnetic		Pos:	0.200	0.057
ABC	PP-PD								Zero:	0.318	0.145
PP-WHSP-FB-2 CBL	PP-PC	In	1	80	6	Copper	Magnetic		Pos:	0.490	0.064
ABC	PP-PG								Zero:	0.779	0.163
PRI-MDP-CBL	BUS-0002	In	2	25	500	Copper	Magnetic		Pos:	0.030	0.048
ABC	EXISTING SWBD. MDP								Zero:	0.046	0.122

2-Winding Transformers

Name 1 / 3Phase	In/Out	----------Primary & Secondary---------- Phases	Bus	Conn.	Volts	FLA	Nominal kVA		Percent Z in % R	jX
EXISTING XFMR-01	In	ABC	BUS-0001	D	4,160	31	225.0	Pos:	1.46	3.51
3Phase			BUS-0002	WG	208	625		Zero:	1.46	3.51

2.2 Short Circuit Analysis

2.2.1 Scope

Purpose – The purpose of the short circuit study is to determine fault current levels that flow in the electrical system during various fault conditions. These calculated fault currents are used in the device evaluation, and arc flash studies.

The short circuit studies performed in this analysis were created using A-FAULT, which is part of the computer based software package SKM Power*Tools, by SKM Systems Analysis, Inc. The A_FAULT Study follows the specifications of the American National Standards Institute (ANSI) C37.010, C37.5, and C37.13, and IEEE Standard 141, also known as the IEEE *Red Book.*

The A_FAULT Study is capable of generating three types of short circuit reports for both balanced (three phase bolted) and unbalanced (line to ground) faults. These reports include:

1. Fault Report (for low voltage systems)
2. Momentary Duty Report (for medium and high voltage systems) (Not relevant to this power study)
3. Interrupting Duty Report (for medium and high voltage systems) (Not relevant to this power study)

Fault Report – The results of this report are applied to low voltage circuit breakers and equipment and is used to evaluate the equipment's *interrupting rating.*

Momentary Duty Report – This report contains calculated fault currents that occur during the first half cycle of a fault. These values are used to evaluate the *momentary* (or "close and latch") capability of medium and high voltage fuses and circuit breakers. (Not relevant to this power study)

Interrupting Duty Report – This report is used to evaluate low voltage circuit breakers in terms of their capability to positively *interrupt* fault level currents to isolate faulted equipment in accordance with applicable ANSI C37 standards. (Not relevant to this power study)

2.2.2 Objectives

The system was modeled for Utility operation in terms of maximum fault currents produced at each bus as shown in the single line diagrams in *Section 2.1.1, System One Line Diagrams*. The minimum expected short circuit available currents are synonymous with the calculated maximum values.

2.2.3 Short Circuit Study Output Data

ANSI Complete Fault Report

A_FAULT Settings

Fault Type	3 Phase+Unbalanced	**LV Duty**	Yes	**Int Duty**	Yes
Faulted Bus	All Buses	**LV Report**	Complete	**Int Report**	Complete
Include Tap	No	**Mom Duty**	Yes	**Solution Method**	E/Z
Pre-fault Voltage	1.0000	**Mom Report**	Complete	**NACD Option**	Interpolated

Low Voltage 3 Phase and Unbalanced

Fault Location Bus Name	Bus Voltage		Fault Duty kA	Fault Duty MVA	X/R	-----Asym kA----- Max RMS	Avg RMS	Sequence Impedance pu		Equivalent R	+jX
EXISTING SWBD. MDP	208	3 Phase:	14.83	5.3	2.76	16.28	15.56	Z1:	18.72	0.00	0.01
		SLG:	14.33	3.0	2.64	15.60	---	Z2:	18.72	---	---
		LL:	12.84	2.7	---	---	---	Z0:	20.66	---	---
LLG Gnd Return kA:	13.869	LLG:	14.72	3.1	---	---	---				
LP-LA	208	3 Phase:	12.60	4.5	2.14	13.26	12.93	Z1:	22.03	0.00	0.01
		SLG:	11.55	2.4	2.09	12.11	---	Z2:	22.03	---	---
		LL:	10.91	2.3	---	---	---	Z0:	28.04	---	---
LLG Gnd Return kA:	10.660	LLG:	12.20	2.5	---	---	---				
LP-LB	208	3 Phase:	2.12	0.8	0.34	2.12	2.12	Z1:	131.04	0.05	0.02
		SLG:	1.76	0.4	0.37	1.76	---	Z2:	131.04	---	---
		LL:	1.83	0.4	---	---	---	Z0:	211.11	---	---
LLG Gnd Return kA:	1.506	LLG:	1.95	0.4	---	---	---				
LP-LG	208	3 Phase:	2.64	1.0	0.32	2.64	2.64	Z1:	104.97	0.04	0.01
		SLG:	2.22	0.5	0.33	2.22	---	Z2:	104.97	---	---
		LL:	2.29	0.5	---	---	---	Z0:	165.96	---	---
LLG Gnd Return kA:	1.906	LLG:	2.46	0.5	---	---	---				
LP-LS	208	3 Phase:	8.45	3.0	0.96	8.46	8.45	Z1:	32.86	0.01	0.01
		SLG:	7.34	1.5	0.94	7.35	---	Z2:	32.86	---	---
		LL:	7.32	1.5	---	---	---	Z0:	47.72	---	---
LLG Gnd Return kA:	6.491	LLG:	8.05	1.7	---	---	---				

Low Voltage 3 Phase and Unbalanced

Fault Location Bus Name	Bus Voltage		Fault Duty kA	Fault Duty MVA	X/R	-----Asym kA----- Max RMS	Avg RMS	Sequence Impedance pu		Equivalent R	+jX
PNL-GEN	208	3 Phase:	7.48	2.7	0.93	7.49	7.48	Z1:	37.11	0.01	0.01
		SLG:	6.37	1.3	0.93	6.38	---	Z2:	37.11	---	---
		LL:	6.48	1.3	---	---	---	Z0:	56.48	---	---
LLG Gnd Return kA:	5.549	LLG:	7.02	1.5	---	---	---				
PP-EF	208	3 Phase:	1.86	0.7	0.37	1.86	1.86	Z1:	149.51	0.06	0.02
		SLG:	1.53	0.3	0.38	1.53	---	Z2:	149.51	---	---
		LL:	1.61	0.3	---	---	---	Z0:	246.18	---	---
LLG Gnd Return kA:	1.297	LLG:	1.72	0.4	---	---	---				
PP-PA	208	3 Phase:	12.74	4.6	2.29	13.54	13.14	Z1:	21.78	0.00	0.01
		SLG:	11.66	2.4	2.23	12.33	---	Z2:	21.78	---	---
		LL:	11.04	2.3	---	---	---	Z0:	27.86	---	---
LLG Gnd Return kA:	10.745	LLG:	12.33	2.6	---	---	---				
PP-PB	208	3 Phase:	10.76	3.9	1.66	11.00	10.88	Z1:	25.80	0.01	0.01
		SLG:	9.44	2.0	1.57	9.61	---	Z2:	25.80	---	---
		LL:	9.32	1.9	---	---	---	Z0:	36.64	---	---
LLG Gnd Return kA:	8.405	LLG:	10.31	2.1	---	---	---				
PP-PC	208	3 Phase:	12.60	4.5	2.14	13.26	12.93	Z1:	22.03	0.00	0.01
		SLG:	11.55	2.4	2.09	12.11	---	Z2:	22.03	---	---
		LL:	10.91	2.3	---	---	---	Z0:	28.04	---	---
LLG Gnd Return kA:	10.660	LLG:	12.20	2.5	---	---	---				
PP-PD	208	3 Phase:	2.99	1.1	0.49	2.99	2.99	Z1:	92.94	0.04	0.02
		SLG:	2.47	0.5	0.54	2.47	---	Z2:	92.94	---	---
		LL:	2.59	0.5	---	---	---	Z0:	152.04	---	---
LLG Gnd Return kA:	2.099	LLG:	2.73	0.6	---	---	---				
PP-PG	208	3 Phase:	2.64	1.0	0.32	2.64	2.64	Z1:	104.97	0.04	0.01
		SLG:	2.22	0.5	0.33	2.22	---	Z2:	104.97	---	---
		LL:	2.29	0.5	---	---	---	Z0:	165.96	---	---
LLG Gnd Return kA:	1.906	LLG:	2.46	0.5	---	---	---				
PP-PK	208	3 Phase:	11.04	4.0	1.97	11.48	11.26	Z1:	25.15	0.00	0.01
		SLG:	9.75	2.0	1.98	10.15	---	Z2:	25.15	---	---
		LL:	9.56	2.0	---	---	---	Z0:	35.09	---	---
LLG Gnd Return kA:	8.735	LLG:	10.48	2.2	---	---	---				
PP-TER	208	3 Phase:	2.37	0.9	0.41	2.37	2.37	Z1:	117.24	0.05	0.02
		SLG:	1.95	0.4	0.41	1.95	---	Z2:	117.24	---	---
		LL:	2.05	0.4	---	---	---	Z0:	192.67	---	---
LLG Gnd Return kA:	1.657	LLG:	2.20	0.5	---	---	---				

Low Voltage 3 Phase and Unbalanced

Fault Location Bus Name	Bus Voltage		Fault Duty kA	Fault Duty MVA	X/R	-----Asym kA----- Max RMS	Avg RMS	Sequence Impedance pu		Equivalent R	+jX
PP-TR	208	3 Phase:	5.05	1.8	0.59	5.06	5.06	Z1:	54.91	0.02	0.01
		SLG:	4.25	0.9	0.56	4.25	---	Z2:	54.91	---	---
		LL:	4.38	0.9	---	---	---	Z0:	86.17	---	---
LLG Gnd Return kA:	3.664	LLG:	4.77	1.0	---	---	---				
PP-WSHP	208	3 Phase:	12.79	4.6	2.31	13.60	13.20	Z1:	21.71	0.00	0.01
		SLG:	11.68	2.4	2.24	12.37	---	Z2:	21.71	---	---
		LL:	11.07	2.3	---	---	---	Z0:	27.86	---	---
LLG Gnd Return kA:	10.755	LLG:	12.37	2.6	---	---	---				

Momentary 3 Phase

Fault Location Bus Name	Bus Voltage	-----Sym Fault Duty----- kA	MVA	X/R	---------Mom kA--------- Sym*1.6	Based on X/R	--------Crest kA-------- Sym*2.7	Based on X/R	Equivalent R	+jX

Momentary Unbalanced

Fault Location Bus Name	Bus Voltage	---Sym Fault Duty--- kA	MVA	X/R	--Mom. Fault Duty-- kA*1.6	Based on X/R	Sequence Impedance pu

Interrupting 3 Phase and Unbalanced

Fault Location Bus Name	Bus Voltage	-----Init Sym Fault----- kA	X/R	Equivalent R +jX	Seq. Imp. pu	-------Interrupting Fault kA----- 2 cyc.	3 cyc.	5 cyc.	8 cyc.

2.3 Device Evaluation

2.3.1 Scope

Purpose – The purpose of the device evaluation is to compare the short circuit currents calculated under *Section 2.2, Short Circuit Analysis* to the published and tested short circuit ratings of various protective devices and equipment. This comparison will determine if the selected equipment is properly rated to withstand and/or interrupt the short circuit currents available in the system at that equipment location. The device evaluation study follows the procedures outlined in ANSI Standards C37.13, C37.010, C37.41 and IEEE Standard 1015 as well as other applicable ANSI, NEMA and UL standards.

2.3.2 Methodology

The results of the device evaluation study are provided in the table in *Section 2.3.3, Device Evaluation Output Data Report*. The table reflects a pass/fail/marginal status applied to each device listed in the table, rated in terms of a percentage of Short Circuit duty vs. Device Short Circuit Rating. Devices listed at or under 90% are listed as “pass”, devices between 90% and 100% are listed as “marginal”, and devices greater than 100% are listed as “fail”.

Low Voltage Device – The calculated short circuit current is reported under “INT kA Calc” and the device rating is reported under “INT kA Dev”. The calculated duty is adjusted accordingly based on the system calculated X/R ratio and the device test X/R ratio, in accordance with applicable standards.

Note that the current limiting effects of protective devices (i.e. current limiting fuses and breakers) are not considered by the software. Where a panel is found to be overdutied (“failed”) in the output report, the engineer may determine that a current limiting device located upstream will protect the overdutied equipment. Where this is the case, the failed equipment is specifically addressed in the results section of the report.

2.3.3 Device Evaluation Output Data Report

Device/Bus Manufacturer	Status	Type	Description	Voltage (V) Bus/Device	Calc Isc kA	Dev Isc kA	Isc Rating%
EXISTING SWBD. MDP	SQUARE [	Passed	LV Panelboard	208	14.83	35.00	42.37
LP-LA	SQUARE [	Passed	LV Panelboard	208	12.60	25.00	50.40
LP-LB	SQUARE [	Passed	LV Panelboard	208	2.12	10.00	21.18
LP-LG	SQUARE [	Passed	LV Panelboard	208	2.64	10.00	26.44
LP-LS	SQUARE [	Passed	LV Panelboard	208	8.45	10.00	84.48
PNL-GEN	SQUARE [	Passed	LV Panelboard	208	7.48	10.00	74.79
PP-EF	SQUARE [	Passed	LV Panelboard	208	1.86	10.00	18.57
PP-PA	SQUARE [	Passed	LV Panelboard	208	12.74	22.00	57.92
PP-PB	SQUARE [	Passed	LV Panelboard	208	10.76	22.00	48.90
PP-PC	SQUARE [	Passed	LV Panelboard	208	12.60	22.00	57.28
PP-PD	SQUARE [	Passed	LV Panelboard	208	2.99	10.00	29.87
PP-PG	SQUARE [	Passed	LV Panelboard	208	2.64	10.00	26.44
PP-PK	SQUARE [	Passed	LV Panelboard	208	11.04	22.00	50.17
PP-TER	SQUARE [	Passed	LV Panelboard	208	2.37	22.00	10.76
PP-TR	SQUARE [	Passed	LV Panelboard	208	5.05	10.00	50.55
PP-WSHP	SQUARE [	Passed	LV Panelboard	208	12.79	22.00	58.12

(*N1) System X/R higher than Test X/R, Calc INT kA modified based on low voltage factor.

(*Calc Isc kA) Device did not pass. Device is either Marginal (90%) or Failed (100%) of device library Isc rating.

2.4 Arc Flash Hazard Analysis

2.4.1 Introduction

The Arc Flash Hazard Analysis, herein referred to as Arc Flash, follows the NFPA 70E-2018 (Annex D) and IEEE 1584 methods for determining the arc-flash hazard distance and the incident energy that workers may be exposed to when working on or near electrical equipment. The arc flash study combines short circuit calculations, empirical equations and protective device operating times to estimate incident energy and protective clothing requirements at typical working distances.

The IEEE 1584 standard provides a procedure for determining the incident energy to which a worker may be exposed. The equations used in the 1584 standard were developed from tests of arc flash incidents initiated in a lab environment. While it is not feasible to include every combination of environmental factors in the tests, the tests and resulting empirical equations provide the best means currently available for estimating arc flash hazard levels. It is important to recognize the limitations of these tests and to use engineering judgment when interpreting the calculations. Refer to the IEEE 1584 standard for a complete description of the assumptions, limitations and application guidelines for arc flash analysis.

The goal of the Arc Flash Analysis is to determine the minimum level of PPE required to limit operating personnel injury to a second degree burn in the presence of an arc flash event while avoiding the use of PPE that introduces additional hazards resulting in limited mobility, reduced visibility and heat stress.

Only qualified electricians who are familiar with and trained in the operation of electrical distribution equipment should maintain, operate or otherwise perform work on such products. All recommendations of the equipment manufacturer, warnings and cautions related to personnel and equipment safety should be followed. All applicable health and safety laws, codes, standards, guidelines and published procedures should be adhered to, including but not limited to OSHA and the NFPA. All guidelines contained in NFPA 70E should be adhered to, and in particular the appropriate prescribed PPE must be provided and worn by operating and maintenance personnel performing operations on and about electrical equipment. Equipment shall be de-energized and made safe where exposure to live parts is possible. It is the incumbent upon the employer to ensure that work which must be performed on or near live parts is necessary due to increased risk hazards introduced by

de-energizing such equipment or that working on equipment in a de-energized state is not feasible or possible due to equipment design or operational limitations. The results of this arc flash hazard analysis are not intended to imply that personnel be permitted to work on or near exposed, energized equipment or circuits.

2.4.2 Study Procedure and Scope

Arc flash calculations and results should be viewed as a sensitivity study rather than a single fixed calculation. Since the calculated incident energy is based on a combination of a calculated arcing fault current and protective device trip time, it is not possible to predict whether a higher fault current or a lower fault current will produce the worst-case (highest, or most conservative in terms of PPE requirements) incident energy. The arcing fault current may be below the instantaneous trip setting of a device and therefore, a lower fault current will result in a longer trip time and a more energy release.

SKM's Power Tools for Windows (herein referred to as "PTW") uses the formulae and guidelines established by IEEE 1584 to perform incident energy calculations and NFPA 70E to determine required PPE for those given levels of incident energy. The short circuit and protective device coordination study results must be based on accurate input data, as the arc flash results are dependent on the result of these two studies.

An effort is made to make conservative assumptions where arc flash calculations are required. In the case of arc flash, conservative implies lower arc fault current levels resulting in longer protective device operating times, which typically result in higher levels of calculated incident energies and thus higher levels of required PPE. For a short circuit study, conservative assumptions usually imply higher short circuit levels than can be expected in the real world (which may provide the least conservative assumption from an arc flash perspective). This creates a balancing act that must be performed between the interpretation of arc flash and short circuit results. Protective device settings must be carefully considered so that protective device tripping occurs in a manner that attempts to simultaneously maintain distribution system selectivity and reducing arc flash energy levels.

Various levels PPE are prescribed based on the Hazard Risk Category determined by the calculated incident energies at each piece of electrical equipment studied. The following table lists the four HRC categories (1-4) and their associated maximum energy exposure levels. Note that while PPE exists with heat ratings higher than 40 cal/cm^2, this PPE cannot protect the user against pressure shock waves that may be created by energies above 40 cal/cm^2. Energies above 40 cal/cm^2 are listed in the study as "Dangerous" and imply that the equipment should not be opened unless de-energized, locked and tagged out.

Arc Flash HRC Summary Table

Minimum Calculated Incident Energy (cal/cm^2)	Maximum Calculated Incident Energy (cal/cm^2)	Hazard Risk Category
0	4.0	1
>4.0	8.0	2
>8.0	25.0	3
>25.0	40.0	4
>40.0	N/A	Dangerous (no safe PPE exists)

This arc flash analysis considers all low voltage equipment in the distribution system model.

Maximum Device Clearing Time - The results of this study are based on a maximum interrupting time of 2.0s. This means that if the arcing fault current is not high enough to trip a protective device within this time, then 2s will be used as the time for the arc duration used to calculate the incident energy. This cap is based on Annex B.1.2 of IEEE 1584 which states "*If the [protective device operating] time is longer than two seconds, consider how long a person is likely to remain in the location of the arc flash. It is likely that a person exposed to an arc flash will move away quickly if it is physically possible and two seconds is a reasonable maximum time for calculations. A person in a bucket truck or a person who has crawled into equipment will need more time to move away."* For the purposes of this study in relation to the 2.0s maximum operating time, it is assumed that personnel have a clear path of egress (i.e. are not operating in a confined space) away from the faulted equipment.

2.4.3 Results

Arc Flash results are tabulated in *Section 2.4.6, Arc Flash Analysis Summary Table*. The table reports the worst case calculated incident energy of the two scenarios. The table headings are described in *Section 2.4.4, Arc Flash Analysis Summary* Table Heading Descriptions.

Line-Side-of-Main Faults – For each bus studied, a line-side-of-main calculation was also performed. This calculation uses the next upstream device from a bus main breaker (or device which can act as a main, such as a tie breaker) to trip for a bus fault. This is done to simulate a fault on the line side terminals of a main device which will not sense the full fault current present at its terminals (i.e., main source of fault current is upstream of said main device). For all "Main" devices (including ties where relevant) a special arc flash label is provided for that breaker cubicle. The remainder of the bus is labeled in accordance with the calculations for a load-side-of-main arc fault.

Arc Flash Labels – Each arc flash label indicates the bus location (indicated after "Bus:") and the final protective device which interrupts the arcing fault (indicated after "Prot:", this is not necessarily the bus main device). Where a line-side-of-main calculation was performed, the label will also indicate "Line Side" with the device upstream of the Bus Main listed below. For line-side-of-main calculations, this is the upstream device from the main device which interrupts the arcing fault current.

Arc Flash labeling has been developed to meet the requirements defined in NFPA 70E, article 130.5.H equipment labeling. Labels shall consist of the equipments, nominal voltage, arc flash boundaries, the available incident energy levels at a corresponding working distance, minimum arc rating of clothing, and site-specific level of PPE. It should be noted that the hazard risk categories can not be displayed on labeling already displaying calculated incident energy per NFPA 70E, article 130.5.

All panelboards shall be provided with "Line Side" arc flash labels once the new equipment has been installed by the Contractor.

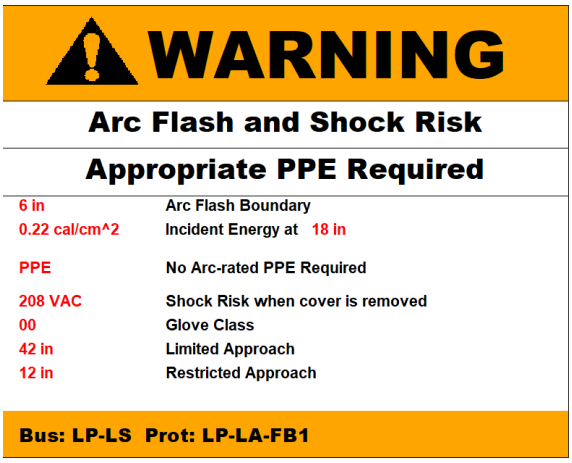

2.4.4 Arc Flash Analysis Summary Table Heading Descriptions

Bus Name: Fault location for bus report. For line side and load side report options the bus refers to the equipment where the line side and load side protective devices are connected.

Protective Device Name: Refers to the protective device that clears the arcing fault or portion of the total arcing fault current.

Bus kV: Bus voltage at the fault location.

Bus Bolted Fault (kA): The current flowing to a bus fault that occurs between two or more conductors or bus bars, where the impedance between the conductors is zero.

Bus Arcing Fault (kA): The calculated arcing current on the faulted bus

Protective Device Bolted Fault (kA): The portion of the total bolted fault current that flows through a given protective device.

Protective Device Arcing Fault (kA): The arc current flowing through each protective device feeding the electric arc fault. Note that the total arc fault current may flow through several parallel sources to the arc location.

Trip / Delay Time: The time required for the protective device to operate for the given fault condition. In the case of a relay, the breaker opening time is entered separately from the relay trip time. For low voltage breakers and fuses, the trip time is assumed to be the total clearing curve or high tolerance of the published trip curve.

Breaker Opening Time: The time required for a breaker to open after receiving a signal from the trip unit to operate. The combination of the Trip/Delay time and the Breaker Opening time determines the total time required to clear the fault. For low voltage circuit breakers, the total clearing time displayed on the Manufacturer's operating curves is assumed to include the breaker opening time.

Ground: Indicates whether the fault location includes a path to ground. Systems with high-resistance grounds are assumed to be ungrounded in the Arc Flash calculations.

Equip Type: Indicates whether the equipment is Switchgear, Panel, Cable or Open Air. The equipment type provides a default Gap value and a distance exponent used in the IEEE incident energy equations. The equipment type provides a default Gap value and a distance exponent used in the IEEE incident energy equations.

Gap: IEEE 1584 defined spacing between bus bars or conductors at the arc location.

Arc Flash Boundary: The distance from exposed live parts within which a person could receive a 2nd degree burn.

Working Distance: The distance between the arc source and the worker's face or chest.

Incident Energy (cal/cm^2): This will report an incident energy value of the bus, if the incident energy on the bus meets the low marginal criteria value entered in

the PPE. Incident energy is the amount of energy on a surface at a specific distance from an arc flash event.

2.4.5 Additional Definitions

Limited Approach Boundary: An approach limit at a distance from an exposed energized electrical conductor or circuit part within which a shock hazard exists.

Prohibited Approach Boundary: An approach limit at a distance from an exposed energized electrical conductor or circuit part within which work is considered the same as making contact with the electrical conductor or circuit part.

Restricted Approach Boundary: An approach limit at a distance from an exposed energized electrical conductor or circuit part within which there is an increased risk of shock, due to electrical arc over combined with inadvertent movement, for personnel working in close proximity to the energized electrical conductor or circuit part.

2.4.6 Arc Flash Analysis Summary Table

Bus Name	Protective Device Name	Bus kV	Bus Bolted Fault (kA)	Bus Arcing Fault (kA)	Prot Dev Bolted Fault (kA)	Prot Dev Arcing Fault (kA)2	Trip/ Delay Time (sec.)	Breaker OpeningTime/Tol (sec.)	Ground	Equip Type	Gap (mm)	Arc Flash Boundary (in)	Working Distance (in)	Incident Energy (cal/cm2)	Notes
EXISTING SWBD. MDP	PRI-MDP-FUSED DISC. SW.	0.208	14.83	5.74	13.27	5.13	2	0.0000	Yes	PNL	25	137	18	33.6	(*N9)
LP-LA	MDP-FB-9	0.208	12.60	4.35	12.60	4.35	0.0706	0.0000	Yes	PNL	25	16	18	0.95	(*N3)
LP-LB	LP-LA-FB2	0.208	2.12	1.24	2.12	1.24	0.7534	0.0000	Yes	PNL	25	29	18	2.60	(*N3)
LP-LG	LP-LA-FB3	0.208	2.64	1.45	2.64	1.45	0.5481	0.0000	Yes	PNL	25	26	18	2.24	(*N3)
LP-LS	LP-LA-FB1	0.208	8.45	3.86	8.45	3.86	0.0167	0.0000	Yes	PNL	25	6	18	0.20	
PNL-GEN	PP-WSHP-FB1	0.208	7.48	3.55	7.48	3.55	0.0167	0.0000	Yes	PNL	25	6	18	0.18	
PP-EF	MDP-FB-1	0.208	1.86	1.33	1.81	1.30	2	0.0000	Yes	PNL	25	54	18	7.34	(*N9)
PP-PA	MDP-FB-8	0.208	12.74	5.16	12.48	5.05	0.05	0.0000	Yes	PNL	25	14	18	0.81	
PP-PB	MDP-FB-3	0.208	10.76	4.58	10.28	4.37	0.05	0.0000	Yes	PNL	25	13	18	0.71	
PP-PC	MDP-FB-4	0.208	12.60	4.35	12.60	4.35	0.0706	0.0000	Yes	PNL	25	16	18	0.95	(*N3)
PP-PD (PP-PD-MAIN LineSide)	PP-PC-FB1	0.208	2.99	1.58	2.99	1.58	0.7261	0.0000	Yes	PNL	25	33	18	3.24	(*N3)
PP-PG	PP-PC-FB2	0.208	2.64	1.45	2.64	1.45	0.1908	0.0000	Yes	PNL	25	14	18	0.78	(*N3)
PP-PK	MDP-FB-6	0.208	11.04	4.66	11.04	4.66	0.05	0.0000	Yes	PNL	25	13	18	0.73	
PP-TER (PP-TER-MAIN LineSide)	MDP-FB-2	0.208	2.37	1.34	2.31	1.31	2	0.0000	Yes	PNL	25	55	18	7.37	(*N3) (*N9)
PP-TR (PP-TR-MAIN LineSide)	MDP-FB-7	0.208	5.05	2.69	4.95	2.64	0.5	0.0000	Yes	PNL	25	37	18	3.89	
PP-WSHP	MDP-FB-5	0.208	12.79	5.17	12.36	5.00	0.08	0.0000	Yes	PNL	25	19	18	1.30	

NFPA 70E 2012 Annex D.7 - IEEE 1584 Bus + Line Side80% Cleared Fault Threshold.

(*N3) - Arcing Current Low Tolerances Used

(*N9) - Max Arcing Duration Reached

3 Recommendations

3.1 Device Evaluation Study Recommendations

Device Results

All low voltage devices passed the short circuit device evaluation as shown in the table in *Section 2.3.3, Device Evaluation Output Data Report*.

3.2 Suggested Settings

Overcurrent settings for all devices are listed by device type and name in *Section 3.2.1, 50/51 Function Protective Device Suggested Settings*.

3.2.1 50/51 Function Protective Device Suggested Settings

Project: 08604.09_MM Orangeburg Power Study
Scenario: Base Project
Savin Engineers P.C.
Mihir Murthy

LV Breakers

Name/Type	Description	Frame/Model	Frame/Sensor/Plug	Settings
LP-LA-FB1	SQUARE D	QO-VH	80.0A	Fixed (730-8)
Thermal Magnetic	QO-VH, 3-Pole		80.0A	
			80.0A	
LP-LA-FB2	SQUARE D	QO-VH	80.0A	Fixed (730-8)
Thermal Magnetic	QO-VH, 3-Pole		80.0A	
			80.0A	
LP-LA-FB3	SQUARE D	QO-VH	80.0A	Fixed (730-8)
Thermal Magnetic	QO-VH, 3-Pole		80.0A	
			80.0A	
LP-LS-MAIN0	SQUARE D	QO	80.0A	Fixed (730-7, 80A)
Thermal Magnetic	QO, 3-Pole		80.0A	
			80.0A	
MDP-FB-1	SQUARE D	JD	250.0A	Ir (70-250A); tr (0.5-16s) 80 (80A); 16
Static Trip	PowerPact J-Frame, 3.2		250.0A	Ii (1.5 - 12 x In) 12 (3000A)
			250.0A	
MDP-FB-2	SQUARE D	JD	250.0A	Ir (70-250A); tr (0.5-16s) 80 (80A); 16
Static Trip	PowerPact J-Frame, 3.2		250.0A	Ii (1.5 - 12 x In) 12 (3000A)
			250.0A	
MDP-FB-3	SQUARE D	HD	150.0A	Ir (50-150A); tr (Fixed) 150 (150A); Fixed
Static Trip	PowerPact H-Frame, 3.2S		150.0A	Isd (1.5 - 10 x Ir); tsd 1.5 (225A); Fixed
			150.0A	Ii (1.5 - 15 x In) 1.5 (225A)
MDP-FB-4	SQUARE D	JD	250.0A	Ir (70-250A); tr(0.5-16s) 200 (200A); 2
Static Trip	Powerpact J Frame, 5.2A/E & 6.2A/E		250.0A	Isd (1.5 - 10 x Ir) 10 (2000A)
			200.0A	tsd (0 - 0.4) 0.4 (I^s T On)
				Ii (1.5 - 12 x In) 12 (3000A)
MDP-FB-5	SQUARE D	LD	400.0A	Ir (125-400A); tr (Fixed) 250 (250A); Fixed
Static Trip	PowerPact L-Frame, 3.3S		400.0A	Isd (1.5 - 10 x Ir); tsd 8 (2000A); Fixed
			400.0A	Ii (1.5 - 12 x In) 12 (4800A)
MDP-FB-6	SQUARE D	LD	400.0A	Ir (125-400A); tr (Fixed) 250 (250A); Fixed
Static Trip	PowerPact L-Frame, 3.3S		400.0A	Isd (1.5 - 10 x Ir); tsd 1.5 (375A); Fixed
			400.0A	Ii (1.5 - 12 x In) 1.5 (600A)
MDP-FB-7	SQUARE D	JD	250.0A	Ir (70-250A); tr(0.5-16s) 80 (80A); 16
Static Trip	Powerpact J Frame, 5.2A/E & 6.2A/E		250.0A	Isd (1.5 - 10 x Ir) 10 (800A)
			80.0A	tsd (0 - 0.4) 0.4 (I^s T On)
				Ii (1.5 - 12 x In) 12 (3000A)
MDP-FB-8	SQUARE D	LD	400.0A	Ir (125-400A); tr (Fixed) 250 (250A); Fixed
Static Trip	PowerPact L-Frame, 3.3S		400.0A	Isd (1.5 - 10 x Ir); tsd 1.5 (375A); Fixed
			400.0A	Ii (1.5 - 12 x In) 1.5 (600A)
MDP-FB-9	SQUARE D	JD	250.0A	Ir (70-250A); tr(0.5-16s) 200 (200A); 4
Static Trip	Powerpact J Frame, 5.2A/E & 6.2A/E		250.0A	Isd (1.5 - 10 x Ir) 10 (2000A)
			200.0A	tsd (0 - 0.4) 0.4 (I^s T Off)
				Ii (1.5 - 12 x In) 12 (3000A)

PP-EF-MAIN Thermal Magnetic	SQUARE D QB	QB	80.0A 80.0A 80.0A	Fixed
PP-PC-FB1 Thermal Magnetic	SQUARE D QO-VH, 3-Pole	QO-VH	100.0A 100.0A 100.0A	Fixed (730-8)
PP-PC-FB2 Thermal Magnetic	SQUARE D QO-VH, 3-Pole	QO-VH	60.0A 60.0A 60.0A	Fixed (730-13)
PP-PD-MAIN Thermal Magnetic	SQUARE D QO, 3-Pole	QO	100.0A 100.0A 100.0A	Fixed (730-7, 100A)
PP-TER-MAIN Thermal Magnetic	SQUARE D QO-VH, 3-Pole	QO-VH	80.0A 80.0A 80.0A	Fixed (730-8)
PP-TR-MAIN Thermal Magnetic	SQUARE D QO, 3-Pole	QO	80.0A 80.0A 80.0A	Fixed (730-7, 80A)
PP-WSHP-FB1 Thermal Magnetic	SQUARE D QO-VH, 3-Pole	QO-VH	100.0A 100.0A 100.0A	Fixed (730-8)

LV Fuses

Name/Type	Description	Frame/Model	Cartridge/Trip
PRI-MDP-FUSED DISC. SW.	GOULD SHAWMUT A4BT, 600V Class L	A4BT	800.0A 800.0A

July 29, 2021

Catalog Number	
Notes	Type NL-1

NL-1EM

HVT
1X4, 2X2 and 2X4
LED, LOW-PROFILE, RECESSED LUMINAIRE WITH BASKET DIFFUSER

Intended Use
The HVT is a general lighting luminaire ideal for many commercial applications including open offices, circulation areas, wait areas, and numerous other commercial applications. Ideal for new construction and remodel applications.

Construction
Cold rolled steel or electro galvanized substrate with a highly reflective white finish on phosphate-free, multi-staged pretreated metal.

Optics
Diffuser — Specially formulated high transmission optic features a textured opal or perforated round surface and a unique combination of high light diffusion and high light transmission. The combination of optimized surface texture and advanced diffuser technology enhances fixture aesthetics while maximizing performance.

Certain airborne contaminants can diminish the integrity of acrylic and/or polycarbonate. Click here for Acrylic-Polycarbonate Compatibility table for suitable uses.

Electrical
High-performance LEDs deliver constant high-quality white light and uniform illumination without pixilation. The HVT is available in multiple lumen packages and four color temperatures.
The LED driver is dimmable to 1% through both generic and ELDOLED drivers. Optional 33% and 66% step level dimming is available. Power Factor >0.9. 80% LED Lumen Maintenance at 60,000 Hours (L80/60,000).

Mounting
Lightweight and easy to install in any standard T-Bar or screw slot grids. Drywall frame available for plaster/drywall ceilings, surface mount kits also available, see accessories below. Recommended to use LFC clips on all 9/16" grids.

Packaging
For large jobs, order with Job Pack option to reduce labor and packaging waste. 2x4 units are packed 10 per pallet.
1x4 and 2x4 are packed 22 per pallet.

Listings
CSA Certified to meet U.S. and Canadian standards. IC rated.
DesignLights Consortium® (DLC) qualified product. Not all versions of this product may be DLC qualified. Please check the DLC Qualified Products List at www.designlights.org/QPL to confirm which versions are qualified.

Warranty
5-year limited warranty. Complete warranty terms located at: www.acuitybrands.com/support/customer-support/terms-and-conditions

NOTE: Actual performance may differ as a result of end-user environment and application.
All values are design or typical values, measured under laboratory conditions at 25 °C.

DIMENSIONS

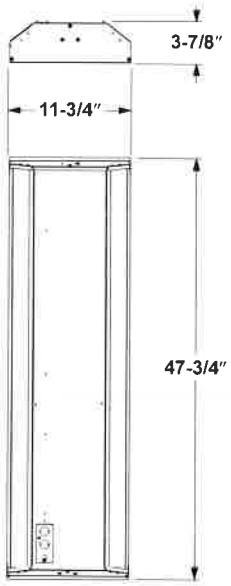

HVT 1X4

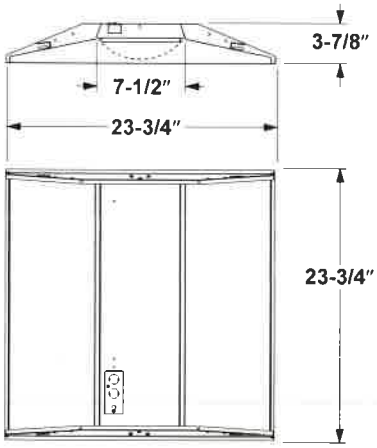

HVT 2X2

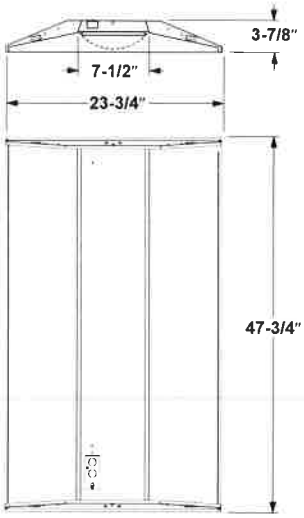

HVT 2X4

ands Lighting, Inc. All rights reserved. Rev. 03/04/20 Specifications subject to change without notice.

HVT

LED, LOW-PROFILE, RECESSED LUMINAIRE WITH BASKET DIFFUSER

ORDERING INFORMATION

Example: HVT 2X4 DOP 5500LM 40K MVOLT MIN1 NLTAIR2 RIO 80CRI

Series	Size	Diffuser	Lumens [1]	Color temperature	Voltage	Dimming
HVT Low Profile LED	1X4 1X4 2X2 2X2 2X4 2X4	DOP Opal	2600LM 2600 lumens 3900LM 3900 lumens 5500LM 5500 lumens [2] 6500LM 6500 lumens [2]	30K 3000K 35K 3500K 40K 4000K 50K 5000K	MVOLT 120-277V 347V 347V [3]	MIN1 Dims to 1% SLD Step-level dimming [4]
		PR Perforated Round	2100LM 2100 lumens 3100LM 3100 lumens 4400LM 4400 lumens [2] 5200LM 5200 lumens [2]			

CRI	Control Input		Options			
80CRI 80 CRI	ZT	Generic 0-10V Dimming	PWS1836	6' pre-wire, 3/8" diameter, 18 gauge, 1 circuit	BR	Emergency Battery Pack w/ remote test switch (Non-CEC compliant)
	EZT	eldoLED 0-10V Dimming	PWS1846	6' pre-wire, 3/8" diameter, 18 gauge, 2 circuit [6]	E10WLCP	EM Self-Diagnostic battery pack, 10W Constant Power, CEC compliant
	NLIGHT	nLight enabled (Wired) no constant lumen management [5]	PWS1846PWSLV	Two cables: 6' pre-wire, 3/8" diameter, 18 gauge, 2 circuit; one 6' pre-wire, 3/8" diameter, 18 gauge, purple and gray [7]	DWAM	Anti-Microbial Paint
	NLTAIR2 RIO	nLight AIR Generation 2 enabled with radio module [5]	PWS1856LV	6' pre-wire, 3/8" diameter, 18 gauge, 1 circuit w/ low voltage purple and gray wires [8]	CP	Chicago Plenum
					JP10	Job Pack qty 10 [9]
					JP22	Job Pack qty 22 [10]

Accessories/Description			
LFC	Fixture Clips for Armstrong 9/16" T	1X4SMKSHP PAF	Surface Mount Troffer Kit Post Paint
DGA14	1' X 4' Drywall Frame Adapter	2X2SMKSHP PAF	Surface Mount Troffer Kit Post Paint
DGA22	2' X 2' Drywall Frame Adapter	2X4SMKSHP PAF	Surface Mount Troffer Kit Post Paint
DGA24	2' X 4' Drywall Frame Adapter		

Notes

1. Approximate lumen output
2. Only available with 1X4 and 2X4
3. Not available with SLD, EZT, NLIGHT, NLTAIR2 RIO, BR or E10WLCP
4. Not available with 6500LM, 5200LM, ZT, EZT, NLIGHT, or NLTAIR2 RIO
5. Not available with CP
6. For use with SLD or BR or E10WLCP
7. For use with BR or E10WLCP only
8. Not available with SLD or BR or E10WLCP
9. Only available with 2X4
10. Only available with 1X4 and 2X2

Performance Data

Catalog Number	Input Watts	Lumens	LPW
HVT 1X4 DOP 2600LM 30K MVOLT MIN1 80CRI ZT	27	2716	100.5
HVT 1X4 DOP 2600LM 35K MVOLT MIN1 80CRI ZT	27	2757	102.1
HVT 1X4 DOP 2600LM 40K MVOLT MIN1 80CRI ZT	27	2838	105.1
HVT 1X4 DOP 2600LM 50K MVOLT MIN1 80CRI ZT	27	2879	106.6
HVT 1X4 DOP 3900LM 30K MVOLT MIN1 80CRI ZT	36	3881	107.8
HVT 1X4 DOP 3900LM 35K MVOLT MIN1 80CRI ZT	36	3939	109.4
HVT 1X4 DOP 3900LM 40K MVOLT MIN1 80CRI ZT	36	4056	112.6
HVT 1X4 DOP 3900LM 50K MVOLT MIN1 80CRI ZT	36	4114	114.2
HVT 1X4 DOP 5500LM 30K MVOLT MIN1 80CRI ZT	53	5578	105.25
HVT 1X4 DOP 5500LM 35K MVOLT MIN1 80CRI ZT	53	5713	107.79
HVT 1X4 DOP 5500LM 40K MVOLT MIN1 80CRI ZT	53	5831	110.02
HVT 1X4 DOP 5500LM 50K MVOLT MIN1 80CRI ZT	53	6140	115.85
HVT 2X2 DOP 2600LM 30K MVOLT MIN1 80CRI ZT	27	2654	98.2
HVT 2X2 DOP 2600LM 35K MVOLT MIN1 80CRI ZT	27	2694	99.7
HVT 2X2 DOP 2600LM 40K MVOLT MIN1 80CRI ZT	27	2774	102.7
HVT 2X2 DOP 2600LM 50K MVOLT MIN1 80CRI ZT	27	2814	104.2
HVT 2X2 DOP 3900LM 30K MVOLT MIN1 80CRI ZT	36	3982	110.6
HVT 2X2 DOP 3900LM 35K MVOLT MIN1 80CRI ZT	36	4041	112.2
HVT 2X2 DOP 3900LM 40K MVOLT MIN1 80CRI ZT	36	4161	115.5
HVT 2X2 DOP 3900LM 50K MVOLT MIN1 80CRI ZT	36	4221	117.2
HVT 2X4 DOP 2600LM 30K MVOLT MIN1 80CRI ZT	27	2782	103.0
HVT 2X4 DOP 2600LM 35K MVOLT MIN1 80CRI ZT	27	2824	104.5
HVT 2X4 DOP 2600LM 40K MVOLT MIN1 80CRI ZT	27	2908	107.7
HVT 2X4 DOP 2600LM 50K MVOLT MIN1 80CRI ZT	27	2949	109.2
HVT 2X4 DOP 3900LM 30K MVOLT MIN1 80CRI ZT	36	3954	109.8
HVT 2X4 DOP 3900LM 35K MVOLT MIN1 80CRI ZT	36	4013	111.4
HVT 2X4 DOP 3900LM 40K MVOLT MIN1 80CRI ZT	36	4132	114.7
HVT 2X4 DOP 3900LM 50K MVOLT MIN1 80CRI ZT	36	4191	116.4
HVT 2X4 DOP 5500LM 30K MVOLT MIN1 80CRI ZT	52	5840	112.3
HVT 2X4 DOP 5500LM 35K MVOLT MIN1 80CRI ZT	52	5928	114
HVT 2X4 DOP 5500LM 40K MVOLT MIN1 80CRI ZT	52	6103	117.3
HVT 2X4 DOP 5500LM 50K MVOLT MIN1 80CRI ZT	52	6191	119.0

How to Estimate Delivered Lumens in Emergency Mode

Use the formula below to determine the delivered lumens in emergency mode

Delivered Lumens = 1.25 x P x LPW

P = Ouput power of emergency driver. P = 10W for E10WLCP option.

LPW = Lumen per watt rating of the luminaire. This information is available on the ABL luminaire spec sheet. LPW = Lumen per watt rating of the luminaire. LPW information available in Performance Data section.

Acuity Brands Lighting, Inc. All rights reserved. Rev. 03/04/20 Specifications subject to change without notice.

HOLOPHANE®
LEADER IN LIGHTING SOLUTIONS

Catalog Number	
Notes	Type NL-1A

NL-1AEm

HVT
1X4, 2X2 and 2X4

LED, LOW-PROFILE, RECESSED LUMINAIRE WITH BASKET DIFFUSER

Intended Use
The HVT is a general lighting luminaire ideal for many commercial applications including open offices, circulation areas, wait areas, and numerous other commercial applications. Ideal for new construction and remodel applications.

Construction
Cold rolled steel or electro galvanized substrate with a highly reflective white finish on phosphate-free, multi-staged pretreated metal.

Optics
Diffuser — Specially formulated high transmission optic features a textured opal or perforated round surface and a unique combination of high light diffusion and high light transmission. The combination of optimized surface texture and advanced diffuser technology enhances fixture aesthetics while maximizing performance.

Certain airborne contaminants can diminish the integrity of acrylic and/or polycarbonate. Click here for Acrylic-Polycarbonate Compatibility table for suitable uses.

Electrical
High-performance LEDs deliver constant high-quality white light and uniform illumination without pixilation. The HVT is available in multiple lumen packages and four color temperatures.
The LED driver is dimmable to 1% through both generic and ELDOLED drivers. Optional 33% and 66% step level dimming is available. Power Factor >0.9. 80% LED Lumen Maintenance at 60,000 Hours (L80/60,000).

Mounting
Lightweight and easy to install in any standard T-Bar or screw slot grids. Drywall frame available for plaster/drywall ceilings, surface mount kits also available, see accessories below. Recommended to use LFC clips on all 9/16" grids.

Packaging
For large jobs, order with Job Pack option to reduce labor and packaging waste. 2x4 units are packed 10 per pallet.
1x4 and 2x4 are packed 22 per pallet.

Listings
CSA Certified to meet U.S. and Canadian standards. IC rated.
DesignLights Consortium® (DLC) qualified product. Not all versions of this product may be DLC qualified. Please check the DLC Qualified Products List at www.designlights.org/QPL to confirm which versions are qualified.

Warranty
5-year limited warranty. Complete warranty terms located at: www.acuitybrands.com/support/customer-support/terms-and-conditions

NOTE: Actual performance may differ as a result of end-user environment and application.
All values are design or typical values, measured under laboratory conditions at 25 °C.

DIMENSIONS

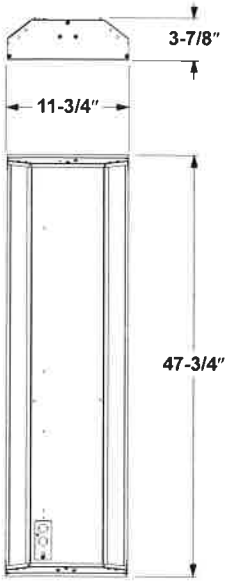

HVT 1X4

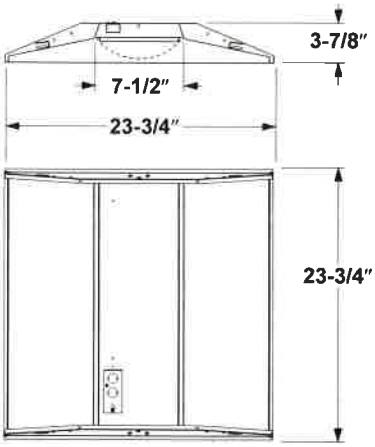

HVT 2X2

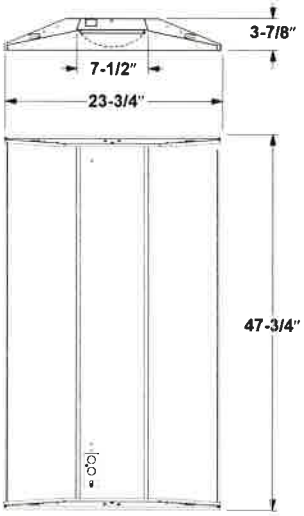

HVT 2X4

HVT

LED, LOW-PROFILE, RECESSED LUMINAIRE WITH BASKET DIFFUSER

ORDERING INFORMATION

Example: HVT 2X4 DOP 5500LM 40K MVOLT MIN1 NLTAIR2 RIO 80CRI

Series	Size	Diffuser	Lumens[1]	Color temperature	Voltage	Dimming
HVT Low Profile LED	1X4 1X4 2X2 2X2 2X4 2X4	DOP Opal	2600LM 2600 lumens 3900LM 3900 lumens 5500LM 5500 lumens[2] 6500LM 6500 lumens[2]	30K 3000K 35K 3500K 40K 4000K 50K 5000K	MVOLT 120-277V 347V 347V[3]	MIN1 Dims to 1% SLD Step-level dimming[4]
		PR Perforated Round	2100LM 2100 lumens 3100LM 3100 lumens 4400LM 4400 lumens[2] 5200LM 5200 lumens[2]			

CRI	Control Input		Options			
80CRI 80 CRI	ZT	Generic 0-10V Dimming	PWS1836	6' pre-wire, 3/8" diameter, 18 gauge, 1 circuit	BR	Emergency Battery Pack w/ remote test switch (Non-CEC compliant)
	EZT	eldoLED 0-10V Dimming	PWS1846	6' pre-wire, 3/8" diameter, 18 gauge, 2 circuit[6]	E10WLCP	EM Self-Diagnostic battery pack, 10W Constant Power, CEC compliant
	NLIGHT	nLight enabled (Wired) no constant lumen management[5]	PWS1846PWSLV	Two cables: 6' pre-wire, 3/8" diameter, 18 gauge, 2 circuit; one 6' pre-wire, 3/8" diameter, 18 gauge, purple and gray[7]	DWAM	Anti-Microbial Paint
	NLTAIR2 RIO	nLight AIR Generation 2 enabled with radio module[5]	PWS1856LV	6' pre-wire, 3/8" diameter, 18 gauge, 1 circuit w/ low voltage purple and gray wires[8]	CP	Chicago Plenum
					JP10	Job Pack qty 10[9]
					JP22	Job Pack qty 22[10]

Accessories/Description			
LFC	Fixture Clips for Armstrong 9/16" T	1X4SMKSHP PAF	Surface Mount Troffer Kit Post Paint
DGA14	1' X 4' Drywall Frame Adapter	2X2SMKSHP PAF	Surface Mount Troffer Kit Post Paint
DGA22	2' X 2' Drywall Frame Adapter	2X4SMKSHP PAF	Surface Mount Troffer Kit Post Paint
DGA24	2' X 4' Drywall Frame Adapter		

Notes

1. Approximate lumen output
2. Only available with 1X4 and 2X4
3. Not available with SLD, EZT, NLIGHT, NLTAIR2 RIO, BR or E10WLCP
4. Not available with 6500LM, 5200LM, ZT, EZT, NLIGHT, or NLTAIR2 RIO
5. Not available with CP
6. For use with SLD or BR or E10WLCP
7. For use with BR or E10WLCP only
8. Not available with SLD or BR or E10WLCP
9. Only available with 2X4
10. Only available with 1X4 and 2X2

Performance Data

Catalog Number	Input Watts	Lumens	LPW
HVT 1X4 DOP 2600LM 30K MVOLT MIN1 80CRI ZT	27	2716	100.5
HVT 1X4 DOP 2600LM 35K MVOLT MIN1 80CRI ZT	27	2757	102.1
HVT 1X4 DOP 2600LM 40K MVOLT MIN1 80CRI ZT	27	2838	105.1
HVT 1X4 DOP 2600LM 50K MVOLT MIN1 80CRI ZT	27	2879	106.6
HVT 1X4 DOP 3900LM 30K MVOLT MIN1 80CRI ZT	36	3881	107.8
HVT 1X4 DOP 3900LM 35K MVOLT MIN1 80CRI ZT	36	3939	109.4
HVT 1X4 DOP 3900LM 40K MVOLT MIN1 80CRI ZT	36	4056	112.6
HVT 1X4 DOP 3900LM 50K MVOLT MIN1 80CRI ZT	36	4114	114.2
HVT 1X4 DOP 5500LM 30K MVOLT MIN1 80CRI ZT	53	5578	105.25
HVT 1X4 DOP 5500LM 35K MVOLT MIN1 80CRI ZT	53	5713	107.79
HVT 1X4 DOP 5500LM 40K MVOLT MIN1 80CRI ZT	53	5831	110.02
HVT 1X4 DOP 5500LM 50K MVOLT MIN1 80CRI ZT	53	6140	115.85
HVT 2X2 DOP 2600LM 30K MVOLT MIN1 80CRI ZT	27	2654	98.2
HVT 2X2 DOP 2600LM 35K MVOLT MIN1 80CRI ZT	27	2694	99.7
HVT 2X2 DOP 2600LM 40K MVOLT MIN1 80CRI ZT	27	2774	102.7
HVT 2X2 DOP 2600LM 50K MVOLT MIN1 80CRI ZT	27	2814	104.2
HVT 2X2 DOP 3900LM 30K MVOLT MIN1 80CRI ZT	36	3982	110.6
HVT 2X2 DOP 3900LM 35K MVOLT MIN1 80CRI ZT	36	4041	112.2
HVT 2X2 DOP 3900LM 40K MVOLT MIN1 80CRI ZT	36	4161	115.5
HVT 2X2 DOP 3900LM 50K MVOLT MIN1 80CRI ZT	36	4221	117.2
HVT 2X4 DOP 2600LM 30K MVOLT MIN1 80CRI ZT	27	2782	103.0
HVT 2X4 DOP 2600LM 35K MVOLT MIN1 80CRI ZT	27	2824	104.5
HVT 2X4 DOP 2600LM 40K MVOLT MIN1 80CRI ZT	27	2908	107.7
HVT 2X4 DOP 2600LM 50K MVOLT MIN1 80CRI ZT	27	2949	109.2
HVT 2X4 DOP 3900LM 30K MVOLT MIN1 80CRI ZT	36	3954	109.8
HVT 2X4 DOP 3900LM 35K MVOLT MIN1 80CRI ZT	36	4013	111.4
HVT 2X4 DOP 3900LM 40K MVOLT MIN1 80CRI ZT	36	4132	114.7
HVT 2X4 DOP 3900LM 50K MVOLT MIN1 80CRI ZT	36	4191	116.4
HVT 2X4 DOP 5500LM 30K MVOLT MIN1 80CRI ZT	52	5840	112.3
HVT 2X4 DOP 5500LM 35K MVOLT MIN1 80CRI ZT	52	5928	114
HVT 2X4 DOP 5500LM 40K MVOLT MIN1 80CRI ZT	52	6103	117.3
HVT 2X4 DOP 5500LM 50K MVOLT MIN1 80CRI ZT	52	6191	119.0

How to Estimate Delivered Lumens in Emergency Mode

Use the formula below to determine the delivered lumens in emergency mode

Delivered Lumens = 1.25 x P x LPW

P = Ouput power of emergency driver. P = 10W for E10WLCP option.

LPW = Lumen per watt rating of the luminaire. This information is available on the ABL luminaire spec sheet. LPW = Lumen per watt rating of the luminaire. LPW information available in Performance Data section.

rands Lighting, Inc. All rights reserved. Rev. 03/04/20 Specifications subject to change without notice.

HOLOPHANE®
LEADER IN LIGHTING SOLUTIONS

Catalog Number	
Notes	Type NL-1B NL-1BEM

HVT
1X4, 2X2 and 2X4

LED, LOW-PROFILE, RECESSED LUMINAIRE WITH BASKET DIFFUSER

Intended Use
The HVT is a general lighting luminaire ideal for many commercial applications including open offices, circulation areas, wait areas, and numerous other commercial applications. Ideal for new construction and remodel applications.

Construction
Cold rolled steel or electro galvanized substrate with a highly reflective white finish on phosphate-free, multi-staged pretreated metal.

Optics
Diffuser — Specially formulated high transmission optic features a textured opal or perforated round surface and a unique combination of high light diffusion and high light transmission. The combination of optimized surface texture and advanced diffuser technology enhances fixture aesthetics while maximizing performance.

Certain airborne contaminants can diminish the integrity of acrylic and/or polycarbonate. Click here for Acrylic-Polycarbonate Compatibility table for suitable uses.

Electrical
High-performance LEDs deliver constant high-quality white light and uniform illumination without pixilation. The HVT is available in multiple lumen packages and four color temperatures.
The LED driver is dimmable to 1% through both generic and ELDOLED drivers. Optional 33% and 66% step level dimming is available. Power Factor >0.9. 80% LED Lumen Maintenance at 60,000 Hours (L80/60,000).

Mounting
Lightweight and easy to install in any standard T-Bar or screw slot grids. Drywall frame available for plaster/drywall ceilings, surface mount kits also available, see accessories below. Recommended to use LFC clips on all 9/16" grids.

Packaging
For large jobs, order with Job Pack option to reduce labor and packaging waste. 2x4 units are packed 10 per pallet.
1x4 and 2x4 are packed 22 per pallet.

Listings
CSA Certified to meet U.S. and Canadian standards. IC rated.
DesignLights Consortium® (DLC) qualified product. Not all versions of this product may be DLC qualified. Please check the DLC Qualified Products List at www.designlights.org/QPL to confirm which versions are qualified.

Warranty
5-year limited warranty. Complete warranty terms located at: www.acuitybrands.com/support/customer-support/terms-and-conditions

NOTE: Actual performance may differ as a result of end-user environment and application.
All values are design or typical values, measured under laboratory conditions at 25 °C.

DIMENSIONS

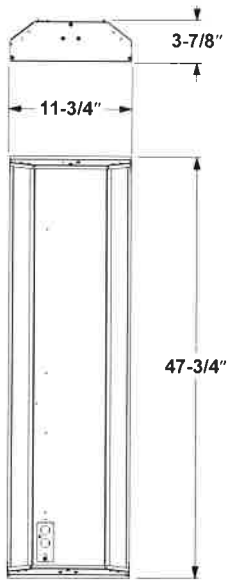

HVT 1X4

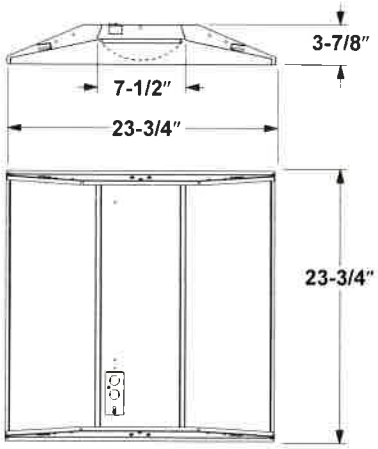

HVT 2X2

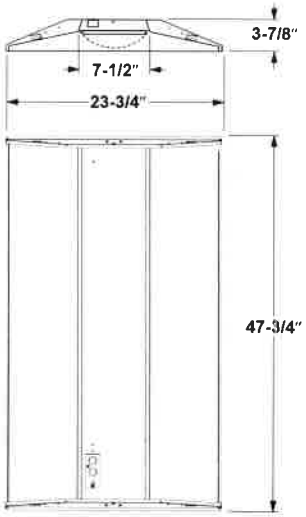

HVT 2X4

HVT

LED, LOW-PROFILE, RECESSED LUMINAIRE WITH BASKET DIFFUSER

HOLOPHANE
LEADER IN LIGHTING SOLUTIONS

ORDERING INFORMATION

Example: HVT 2X4 DOP 5500LM 40K MVOLT MIN1 NLTAIR2 RIO 80CRI

Series	Size	Diffuser	Lumens [1]	Color temperature	Voltage	Dimming
HVT Low Profile LED	1X4 1X4 2X2 2X2 2X4 2X4	DOP Opal	2600LM 2600 lumens 3900LM 3900 lumens 5500LM 5500 lumens [2] 6500LM 6500 lumens [2]	30K 3000K 35K 3500K 40K 4000K 50K 5000K	MVOLT 120-277V 347V 347V [3]	MIN1 Dims to 1% SLD Step-level dimming [4]
		PR Perforated Round	2100LM 2100 lumens 3100LM 3100 lumens 4400LM 4400 lumens [2] 5200LM 5200 lumens [2]			

CRI	Control Input	Options	
80CRI 80 CRI	ZT Generic 0-10V Dimming EZT eldoLED 0-10V Dimming NLIGHT nLight enabled (Wired) no constant lumen management [5] NLTAIR2 RIO nLight AIR Generation 2 enabled with radio module [5]	PWS1836 6' pre-wire, 3/8" diameter, 18 gauge, 1 circuit PWS1846 6' pre-wire, 3/8" diameter, 18 gauge, 2 circuit [6] PWS1846PWSLV Two cables: 6' pre-wire, 3/8" diameter, 18 gauge, 2 circuit; one 6' pre-wire, 3/8" diameter, 18 gauge, purple and gray [7] PWS1856LV 6' pre-wire, 3/8" diameter, 18 gauge, 1 circuit w/ low voltage purple and gray wires [8]	BR Emergency Battery Pack w/ remote test switch (Non-CEC compliant) E10WLCP EM Self-Diagnostic battery pack, 10W Constant Power, CEC compliant DWAM Anti-Microbial Paint CP Chicago Plenum JP10 Job Pack qty 10 [9] JP22 Job Pack qty 22 [10]

Accessories/Description			
LFC	Fixture Clips for Armstrong 9/16" T	1X4SMKSHP PAF	Surface Mount Troffer Kit Post Paint
DGA14	1' X 4' Drywall Frame Adapter	2X2SMKSHP PAF	Surface Mount Troffer Kit Post Paint
DGA22	2' X 2' Drywall Frame Adapter	2X4SMKSHP PAF	Surface Mount Troffer Kit Post Paint
DGA24	2' X 4' Drywall Frame Adapter		

Notes

1. Approximate lumen output
2. Only available with 1X4 and 2X4
3. Not available with SLD, EZT, NLIGHT, NLTAIR2 RIO, BR or E10WLCP
4. Not available with 6500LM, 5200LM, ZT, EZT, NLIGHT, or NLTAIR2 RIO
5. Not available with CP
6. For use with SLD or BR or E10WLCP
7. For use with BR or E10WLCP only
8. Not available with SLD or BR or E10WLCP
9. Only available with 2X4
10. Only available with 1X4 and 2X2

Performance Data

Catalog Number	Input Watts	Lumens	LPW
HVT 1X4 DOP 2600LM 30K MVOLT MIN1 80CRI ZT	27	2716	100.5
HVT 1X4 DOP 2600LM 35K MVOLT MIN1 80CRI ZT	27	2757	102.1
HVT 1X4 DOP 2600LM 40K MVOLT MIN1 80CRI ZT	27	2838	105.1
HVT 1X4 DOP 2600LM 50K MVOLT MIN1 80CRI ZT	27	2879	106.6
HVT 1X4 DOP 3900LM 30K MVOLT MIN1 80CRI ZT	36	3881	107.8
HVT 1X4 DOP 3900LM 35K MVOLT MIN1 80CRI ZT	36	3939	109.4
HVT 1X4 DOP 3900LM 40K MVOLT MIN1 80CRI ZT	36	4056	112.6
HVT 1X4 DOP 3900LM 50K MVOLT MIN1 80CRI ZT	36	4114	114.2
HVT 1X4 DOP 5500LM 30K MVOLT MIN1 80CRI ZT	53	5578	105.25
HVT 1X4 DOP 5500LM 35K MVOLT MIN1 80CRI ZT	53	5713	107.79
HVT 1X4 DOP 5500LM 40K MVOLT MIN1 80CRI ZT	53	5831	110.02
HVT 1X4 DOP 5500LM 50K MVOLT MIN1 80CRI ZT	53	6140	115.85
HVT 2X2 DOP 2600LM 30K MVOLT MIN1 80CRI ZT	27	2654	98.2
HVT 2X2 DOP 2600LM 35K MVOLT MIN1 80CRI ZT	27	2694	99.7
HVT 2X2 DOP 2600LM 40K MVOLT MIN1 80CRI ZT	27	2774	102.7
HVT 2X2 DOP 2600LM 50K MVOLT MIN1 80CRI ZT	27	2814	104.2
HVT 2X2 DOP 3900LM 30K MVOLT MIN1 80CRI ZT	36	3982	110.6
HVT 2X2 DOP 3900LM 35K MVOLT MIN1 80CRI ZT	36	4041	112.2
HVT 2X2 DOP 3900LM 40K MVOLT MIN1 80CRI ZT	36	4161	115.5
HVT 2X2 DOP 3900LM 50K MVOLT MIN1 80CRI ZT	36	4221	117.2
HVT 2X4 DOP 2600LM 30K MVOLT MIN1 80CRI ZT	27	2782	103.0
HVT 2X4 DOP 2600LM 35K MVOLT MIN1 80CRI ZT	27	2824	104.5
HVT 2X4 DOP 2600LM 40K MVOLT MIN1 80CRI ZT	27	2908	107.7
HVT 2X4 DOP 2600LM 50K MVOLT MIN1 80CRI ZT	27	2949	109.2
HVT 2X4 DOP 3900LM 30K MVOLT MIN1 80CRI ZT	36	3954	109.8
HVT 2X4 DOP 3900LM 35K MVOLT MIN1 80CRI ZT	36	4013	111.4
HVT 2X4 DOP 3900LM 40K MVOLT MIN1 80CRI ZT	36	4132	114.7
HVT 2X4 DOP 3900LM 50K MVOLT MIN1 80CRI ZT	36	4191	116.4
HVT 2X4 DOP 5500LM 30K MVOLT MIN1 80CRI ZT	52	5840	112.3
HVT 2X4 DOP 5500LM 35K MVOLT MIN1 80CRI ZT	52	5928	114
HVT 2X4 DOP 5500LM 40K MVOLT MIN1 80CRI ZT	52	6103	117.3
HVT 2X4 DOP 5500LM 50K MVOLT MIN1 80CRI ZT	52	6191	119.0

How to Estimate Delivered Lumens in Emergency Mode

Use the formula below to determine the delivered lumens in emergency mode

Delivered Lumens = 1.25 x P x LPW

P = Ouput power of emergency driver. P = 10W for E10WLCP option.

LPW = Lumen per watt rating of the luminaire. This information is available on the ABL luminaire spec sheet. LPW = Lumen per watt rating of the luminaire. LPW information available in Performance Data section.

LITHONIA LIGHTING®

Catalog Number	
Notes	
Type NO EM	NL-3

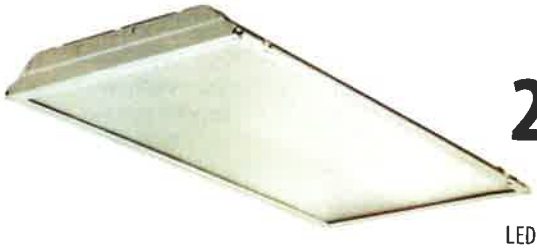

GTL Series

2GTL

2' x 4'
LED Recessed Troffer

FEATURES & SPECIFICATIONS

INTENDED USE — The 2GTL LED recessed troffer offers a wide range of lumen packages, color temperatures, and lens options to meet the lighting needs for a wide range of applications such as schools, offices, and hospitals. The light engine delivers long life and excellent color to ensure a sound quality, low-maintenance lighting installation. **Certain airborne contaminants can diminish the integrity of acrylic and/or polycarbonate.** Click here for Acrylic-Polycarbonate Compatibility table for suitable uses.

CONSTRUCTION — Housing formed from 22 gauge cold-rolled steel. Smooth hemmed sides and smooth inward formed end flanges for safe handling. Includes integral T-bar clips. Lighter-weight fixture allows for safe, easy installation.

OPTICS — Highly transmissive pattern #12 lens diffuses the light source without compromising output. Pattern # 19 and satin white lens options also available.

ELECTRICAL — Long-life LEDs, coupled with high-efficiency drivers, provide extended service life. 80% LED lumen maintenance at 72,000 hours (L80/72,000).

eldoLED driver options deliver choice of dimming range, and choices for control, while assuring flicker-free, low-current inrush, 89% efficiency and low EMI.

Optional nLight® embedded controls make each luminaire addressable - allowing it to digitally communicate with other nLight enabled controls such as dimmers, switches, occupancy sensors and photocontrols. Simply connect all the nLight enabled control devices and the GTL luminaires using standard Cat-5 cabling. Unique plug-and-play convenience as devices and luminaires automatically discover each other and self-commission.

Lumen Management: Unique lumen management system (option N80) provides onboard intelligence that actively manages the LED light source so that constant lumen output is maintained over the system life, preventing the energy waste created by the traditional practice of over-lighting.

The step-level dimming option (SLD) allows the system to be switched to 50% power for compliance with common energy codes while maintaining fixture appearance.

Ballast disconnect is provided where required to comply with U.S. and Canadian codes.

INSTALLATION — LED boards include plug-in connectors for easy of upgradeability. Suitable for direct insulation contact. Suitable for damp location.

LISTINGS — CSA certified to meet U.S. and Canadian standards. IC rated. DesignLights Consortium® (DLC) Premium qualified product. Not all versions of this product may be DLC Premium qualified. Please check the DLC Qualified Products List at www.designlights.org/QPL to confirm which versions are qualified.

WARRANTY — 5-year limited warranty. Complete warranty terms located at www.acuitybrands.com/CustomerResources/Terms_and_conditions.aspx

Note: Actual performance may differ as a result of end-user environment and application.
All values are design or typical values, measured under laboratory conditions at 25 °C.
Specifications subject to change without notice.

CHAIN STOP.

Specifications

Length: 48 (122.0)
Width: 24 (61.0)
Depth: 3-1/4 (8.2)

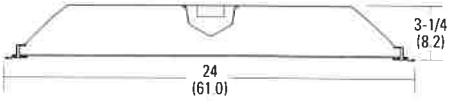

All dimensions are inches (centimeters) unless otherwise indicated.

A+ Capable Luminaire

This item is an A+ capable luminaire, which has been designed and tested to provide consistent color appearance and out-of-the-box control compatibility with simple commissioning.

- All configurations of this luminaire meet the Acuity Brands' specification for chromatic consistency
- This luminaire is part of an A+ Certified solution for nLight® control networks when ordered with drivers marked by a shaded background*
- This luminaire is part of an A+ Certified solution for nLight control networks, providing advanced control functionality at the luminaire level, when selection includes driver and control options marked by a shaded background*

To learn more about A+, visit www.acuitybrands.com/aplus.

*See ordering tree for details

2GTL LED Troffer

A+ Capable options indicated by this color background.

ORDERING INFORMATION Lead times will vary depending on options selected. Consult with your sales representative.

Example: 2GTL 4 48L GZ10 LP835

2GTL						
Series	**Trim type**	**Length**	**Lumens[1]**	**Door**	**Lens**	**Voltage**
2GTL 2' wide recessed LED luminaire	(blank) Grid F Overlapping flange	4 4'	30L 3000 lumens 40L 4000 lumens 48L 4800 lumens 60L 6000 lumens 72L 7200 lumens 88L 8800 lumens 100L 10000 lumens 140L 14000 lumens[2]	(blank) Flush steel, white FN Flush aluminum, natural FM Flush aluminum, matte black FW Flush aluminum, white RN Regressed aluminum, natural RM Regressed aluminum, matte black RW Regressed aluminum, white	(blank) #12 pattern acrylic, 0.110" thick A12125 #12 pattern acrylic, frosted, .125" thick A19 #19 pattern acrylic, 0.156" thick SWL Satin white	(blank) MVOLT (120-277V) 120 120V 277 277V 347 347V[3]

Driver	**Color temperature**	**Controls[8]**	**Options**
EZ1 eldoLED dims to 1 % GZ10 Dims to 10% (0-10V dimming) GZ1 Dims to 1% (0-10V dimming) SLD Step-level dimming[4,5]	LP830 3000 K LP835 3500 K LP840 4000 K LP850 5000 K	(blank) No controls **N80 nLight with 80% (L80) lumen management** N80EMG nLight with 80% (L80) lumen management for use with generator supply emergency power N100 nLight without lumen management **N100EMG nLight without lumen management for use with generator supply emergency power**	EL7L 700 lumen emergency battery (Noncompliant with CA T20) [5,7,8] EL14L 1400 lumen emergency battery (Noncompliant with CA T20) [5,7,8] E10WLCP EM Self-Diagnostic battery pack, 10W Constant Power, Certified in CA Title 20 MAEDBS [5,7,8] BGTD Bodine Generator Transfer Device [9,10,11] CP Chicago plenum PWS1836 6' pre-wire, 3/8" diameter, 18-gauge, 1-circuit PWS1846 6' pre-wire, 3/8" diameter, 18-gauge, 2-circuit ABC Door frame gasketing [12] GLR Fast-blowing fuse [13] GMF Slow-blowing fuse [13] LATC Earthquake clip NPLT Narrow pallet PAF Paint after fab

Accessories: *Order as separate catalog number.*

DGA24	Drywall grid adapter for 2x4 recessed fixture.
2X4SMKSHP PAF	Surface Mount Troffer Kit Post Paint

Notes

1. Approximate lumen output. Lumen output will vary depending upon lens option chosen.
2. Not available with GZ10.
3. Not available with SLD, EL7L, EL14L, E10WLCP or BGTD.
4. Not available with 100L and 140L.
5. When using pre-wire option, use PWS1846.
6. Not available with SLD, GZ1, GZ10.
7. Not available with SLD or GZ1 or GZ10 when combined with any of the following lumen packages: 72L, 88L,100L or 140L.
8. Not available with EZ1 when combined with 100L or 140L lumen packages.
9. Not Available with SLD.
10. Not Available with Controls options when ordered in combination with 100L or 140L lumen packages.
11. Must specify voltage. Requires BSE labeling, voltage specific. Consult factory for options. Example: BGTD BSE10.
12. Only available with aluminum door.
13. Must specify voltage, 120 or 277.
14. For CEC (T20) compliant option, substitute EL14L option with E10WLCP "EM self- diagnostic battery pack 10W constant power, CEC compliant".

Stock/Non-configurable models are offered for shorter lead times:

ORDERING INFORMATION

Catalog Number	UPC	Description	Lumens	Color Temprature	Voltage	Wattage	Pallet qty.	Standard carton qty.
2GTL4 4400LM LP835	889804706598	2x4 LED lay-in troffer	4391	3500K	120-277	34.10	28	1
2GTL4 4400LM LP840	889804706956	2x4 LED lay-in troffer	4567	4000K	120-277	34.10	28	1
2GTL4 4400LM 347 LP835	889804710243	2x4 LED lay-in troffer, 347v	4391	3500K	347	38.11	28	1
2GTL4 4400LM 347 LP840	889804710359	2x4 LED lay-in troffer, 347v	4567	4000K	347	38.11	28	1
2GTL4 4400LM EL14L LP835 [14]	889804710045	2x4 LED lay-in troffer, emergency battery	4391	3500K	120-277	34.10	28	1
2GTL4 4400LM EL14L LP840 [14]	889804710205	2x4 LED lay-in troffer, emergency battery	4567	4000K	120-277	34.10	28	1
2GTL4 5000LM LP835	889804710366	2x4 LED lay-in troffer	4867	3500K	120-277	38.79	28	1
2GTL4 5000LM LP840	889804710458	2x4 LED lay-in troffer	5062	4000K	120-277	38.79	28	1
2GTL4 5000LM 347 LP835	889804710489	2x4 LED lay-in troffer, 347v	4867	3500K	347	42.78	28	1
2GTL4 5000LM 347 LP840	889804710595	2x4 LED lay-in troffer, 347v	5062	4000K	347	42.78	28	1
2GTL4 5000LM EL14L LP835 [14]	889804710625	2x4 LED lay-in troffer, emergency battery	4867	3500K	120-277	38.79	28	1
2GTL4 5000LM EL14L LP840 [14]	889804710700	2x4 LED lay-in troffer, emergency battery	5062	4000K	120-277	38.79	28	1

LITHONIA LIGHTING®

Catalog Number	
Notes	
Type	NO EM NL-3A

FEATURES & SPECIFICATIONS

INTENDED USE — The 2GTL LED recessed troffer offers a wide range of lumen packages, color temperatures, and lens options to meet the lighting needs for a wide range of applications such as schools, offices, and hospitals. The light engine delivers long life and excellent color to ensure a sound quality, low-maintenance lighting installation. **Certain airborne contaminants can diminish the integrity of acrylic and/or polycarbonate.** Click here for Acrylic-Polycarbonate Compatibility table for suitable uses.

CONSTRUCTION — Housing formed from 22 gauge cold-rolled steel. Smooth hemmed sides and smooth inward formed end flanges for safe handling. Includes integral T-bar clips. Lighter-weight fixture allows for safe, easy installation.

OPTICS — Highly transmissive pattern #12 lens diffuses the light source without compromising output. Pattern # 19 and satin white lens options also available.

ELECTRICAL — Long-life LEDs, coupled with high-efficiency drivers, provide extended service life. 80% LED lumen maintenance at 72,000 hours (L80/72,000).

eldoLED driver options deliver choice of dimming range, and choices for control, while assuring flicker-free, low-current inrush, 89% efficiency and low EMI.

Optional nLight® embedded controls make each luminaire addressable - allowing it to digitally communicate with other nLight enabled controls such as dimmers, switches, occupancy sensors and photocontrols. Simply connect all the nLight enabled control devices and the GTL luminaires using standard Cat-5 cabling. Unique plug-and-play convenience as devices and luminaires automatically discover each other and self-commission.

Lumen Management: Unique lumen management system (option N80) provides onboard intelligence that actively manages the LED light source so that constant lumen output is maintained over the system life, preventing the energy waste created by the traditional practice of over-lighting.

The step-level dimming option (SLD) allows the system to be switched to 50% power for compliance with common energy codes while maintaining fixture appearance.

Ballast disconnect is provided where required to comply with U.S. and Canadian codes.

INSTALLATION — LED boards include plug-in connectors for easy of upgradeability. Suitable for direct insulation contact. Suitable for damp location.

LISTINGS — CSA certified to meet U.S. and Canadian standards. IC rated. DesignLights Consortium® (DLC) Premium qualified product. Not all versions of this product may be DLC Premium qualified. Please check the DLC Qualified Products List at www.designlights.org/QPL to confirm which versions are qualified.

WARRANTY — 5-year limited warranty. Complete warranty terms located at www.acuitybrands.com/CustomerResources/Terms_and_conditions.aspx

Note: Actual performance may differ as a result of end-user environment and application.
All values are design or typical values, measured under laboratory conditions at 25 °C.
Specifications subject to change without notice.

TEAM SIPRNET RM

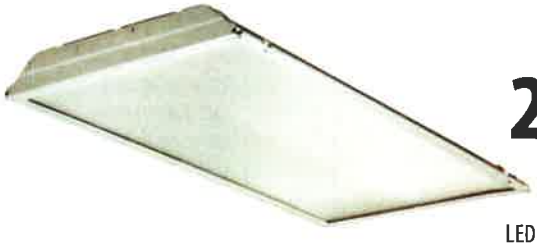

GTL Series

2GTL

2' x 4'
LED Recessed Troffer

Specifications

Length: 48 (122.0)
Width: 24 (61.0)
Depth: 3-1/4 (8.2)

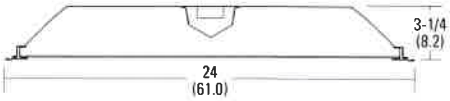

All dimensions are inches (centimeters) unless otherwise indicated.

A+ Capable Luminaire

This item is an A+ capable luminaire, which has been designed and tested to provide consistent color appearance and out-of-the-box control compatibility with simple commissioning.

- All configurations of this luminaire meet the Acuity Brands' specification for chromatic consistency
- This luminaire is part of an A+ Certified solution for nLight® control networks when ordered with drivers marked by a shaded background*
- This luminaire is part of an A+ Certified solution for nLight control networks, providing advanced control functionality at the luminaire level, when selection includes driver and control options marked by a shaded background*

To learn more about A+, visit www.acuitybrands.com/aplus.

*See ordering tree for details

2GTL LED Troffer

A+ Capable options indicated by this color background.

ORDERING INFORMATION Lead times will vary depending on options selected. Consult with your sales representative.

Example: 2GTL 4 48L GZ10 LP835

2GTL						
Series	**Trim type**	**Length**	**Lumens[1]**	**Door**	**Lens**	**Voltage**
2GTL 2' wide recessed LED luminaire	(blank) Grid F Overlapping flange	4 4'	30L 3000 lumens 40L 4000 lumens 48L 4800 lumens 60L 6000 lumens 72L 7200 lumens 88L 8800 lumens 100L 10000 lumens 140L 14000 lumens[2]	(blank) Flush steel, white FN Flush aluminum, natural FM Flush aluminum, matte black FW Flush aluminum, white RN Regressed aluminum, natural RM Regressed aluminum, matte black RW Regressed aluminum, white	(blank) #12 pattern acrylic, 0.110" thick A12125 #12 pattern acrylic, frosted, .125" thick A19 #19 pattern acrylic, 0.156" thick SWL Satin white	(blank) MVOLT (120-277V) 120 120V 277 277V 347 347V[3]

Driver	**Color temperature**	**Controls[8]**	**Options**
EZ1 eldoLED dims to 1 % GZ10 Dims to 10% (0-10V dimming) GZ1 Dims to 1% (0-10V dimming) SLD Step-level dimming[4,5]	LP830 3000 K LP835 3500 K LP840 4000 K LP850 5000 K	(blank) No controls N80 nLight with 80% (L80) lumen management N80EMG nLight with 80% (L80) lumen management for use with generator supply emergency power N100 nLight without lumen management N100EMG nLight without lumen management for use with generator supply emergency power	EL7L 700 lumen emergency battery (Noncompliant with CA T20) [5,7,8] EL14L 1400 lumen emergency battery (Noncompliant with CA T20) [5,7,8] E10WLCP EM Self-Diagnostic battery pack, 10W Constant Power, Certified in CA Title 20 MAEDBS [5,7,8] BGTD Bodine Generator Transfer Device[9,10,11] CP Chicago plenum PWS1836 6' pre-wire, 3/8" diameter, 18-gauge, 1-circuit PWS1846 6' pre-wire, 3/8" diameter, 18-gauge, 2-circuit ABC Door frame gasketing [12] GLR Fast-blowing fuse [13] GMF Slow-blowing fuse [13] LATC Earthquake clip NPLT Narrow pallet PAF Paint after fab

Accessories: *Order as separate catalog number.*	
DGA24	Drywall grid adapter for 2x4 recessed fixture.
2X4SMKSHP PAF	Surface Mount Troffer Kit Post Paint

Notes

1 Approximate lumen output. Lumen output will vary depending upon lens option chosen.
2 Not available with GZ10.
3 Not available with SLD, EL7L, EL14L, E10WLCP or BGTD.
4 Not available with 100L and 140L.
5 When using pre-wire option, use PWS1846.
6 Not available with SLD, GZ1, GZ10.
7 Not available with SLD or GZ1 or GZ10 when combined with any of the following lumen packages: 72L, 88L, 100L or 140L.
8 Not available with EZ1 when combined with 100L or 140L lumen packages.
9 Not Available with SLD.
10 Not Available with Controls options when ordered in combination with 100L or 140L lumen packages.
11 Must specify voltage. Requires BSE labeling, voltage specific. Consult factory for options. Example: BGTD BSE10.
12 Only available with aluminum door.
13 Must specify voltage, 120 or 277.
14 For CEC (T20) compliant option, substitute EL14L option with E10WLCP "EM self- diagnostic battery pack 10W constant power, CEC compliant".

Stock/Non-configurable models are offered for shorter lead times:

ORDERING INFORMATION

Catalog Number	UPC	Description	Lumens	Color Temprature	Voltage	Wattage	Pallet qty.	Standard carton qty.
2GTL4 4400LM LP835	889804706598	2x4 LED lay-in troffer	4391	3500K	120-277	34.10	28	1
2GTL4 4400LM LP840	889804706956	2x4 LED lay-in troffer	4567	4000K	120-277	34.10	28	1
2GTL4 4400LM 347 LP835	889804710243	2x4 LED lay-in troffer, 347v	4391	3500K	347	38.11	28	1
2GTL4 4400LM 347 LP840	889804710359	2x4 LED lay-in troffer, 347v	4567	4000K	347	38.11	28	1
2GTL4 4400LM EL14L LP835 [14]	889804710045	2x4 LED lay-in troffer, emergency battery	4391	3500K	120-277	34.10	28	1
2GTL4 4400LM EL14L LP840 [14]	889804710205	2x4 LED lay-in troffer, emergency battery	4567	4000K	120-277	34.10	28	1
2GTL4 5000LM LP835	889804710366	2x4 LED lay-in troffer	4867	3500K	120-277	38.79	28	1
2GTL4 5000LM LP840	889804710458	2x4 LED lay-in troffer	5062	4000K	120-277	38.79	28	1
2GTL4 5000LM 347 LP835	889804710489	2x4 LED lay-in troffer, 347v	4867	3500K	347	42.78	28	1
2GTL4 5000LM 347 LP840	889804710595	2x4 LED lay-in troffer, 347v	5062	4000K	347	42.78	28	1
2GTL4 5000LM EL14L LP835 [14]	889804710625	2x4 LED lay-in troffer, emergency battery	4867	3500K	120-277	38.79	28	1
2GTL4 5000LM EL14L LP840 [14]	889804710700	2x4 LED lay-in troffer, emergency battery	5062	4000K	120-277	38.79	28	1

LITHONIA LIGHTING®

Catalog Number	
Notes	
Type	NL-3B NL-3BEM

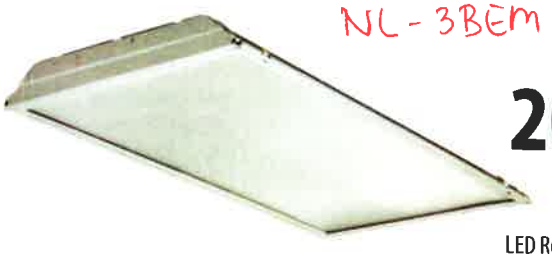

GTL Series

2GTL

2' x 4'
LED Recessed Troffer

FEATURES & SPECIFICATIONS

INTENDED USE — The 2GTL LED recessed troffer offers a wide range of lumen packages, color temperatures, and lens options to meet the lighting needs for a wide range of applications such as schools, offices, and hospitals. The light engine delivers long life and excellent color to ensure a sound quality, low-maintenance lighting installation. **Certain airborne contaminants can diminish the integrity of acrylic and/or polycarbonate.** Click here for Acrylic-Polycarbonate Compatibility table for suitable uses.

CONSTRUCTION — Housing formed from 22 gauge cold-rolled steel. Smooth hemmed sides and smooth inward formed end flanges for safe handling. Includes integral T-bar clips. Lighter-weight fixture allows for safe, easy installation.

OPTICS — Highly transmissive pattern #12 lens diffuses the light source without compromising output. Pattern # 19 and satin white lens options also available.

ELECTRICAL — Long-life LEDs, coupled with high-efficiency drivers, provide extended service life. 80% LED lumen maintenance at 72,000 hours (L80/72,000).

eldoLED driver options deliver choice of dimming range, and choices for control, while assuring flicker-free, low-current inrush, 89% efficiency and low EMI.

Optional nLight® embedded controls make each luminaire addressable - allowing it to digitally communicate with other nLight enabled controls such as dimmers, switches, occupancy sensors and photocontrols. Simply connect all the nLight enabled control devices and the GTL luminaires using standard Cat-5 cabling. Unique plug-and-play convenience as devices and luminaires automatically discover each other and self-commission.

Lumen Management: Unique lumen management system (option N80) provides onboard intelligence that actively manages the LED light source so that constant lumen output is maintained over the system life, preventing the energy waste created by the traditional practice of over-lighting.

The step-level dimming option (SLD) allows the system to be switched to 50% power for compliance with common energy codes while maintaining fixture appearance.

Ballast disconnect is provided where required to comply with U.S. and Canadian codes.

INSTALLATION — LED boards include plug-in connectors for easy of upgradeability. Suitable for direct insulation contact. Suitable for damp location.

LISTINGS — CSA certified to meet U.S. and Canadian standards. IC rated. DesignLights Consortium® (DLC) Premium qualified product. Not all versions of this product may be DLC Premium qualified. Please check the DLC Qualified Products List at www.designlights.org/QPL to confirm which versions are qualified.

WARRANTY — 5-year limited warranty. Complete warranty terms located at www.acuitybrands.com/CustomerResources/Terms_and_conditions.aspx

Note: Actual performance may differ as a result of end-user environment and application.
All values are design or typical values, measured under laboratory conditions at 25 °C.
Specifications subject to change without notice.

ASSEMBLY DUAL LEVEL SWITCH

Specifications

Length:	48 (122.0)
Width:	24 (61.0)
Depth:	3-1/4 (8.2)

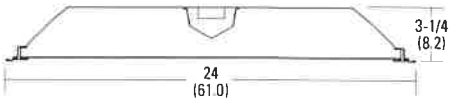

All dimensions are inches (centimeters) unless otherwise indicated.

A+ Capable Luminaire

This item is an A+ capable luminaire, which has been designed and tested to provide consistent color appearance and out-of-the-box control compatibility with simple commissioning.

- All configurations of this luminaire meet the Acuity Brands' specification for chromatic consistency
- This luminaire is part of an A+ Certified solution for nLight® control networks when ordered with drivers marked by a shaded background*
- This luminaire is part of an A+ Certified solution for nLight control networks, providing advanced control functionality at the luminaire level, when selection includes driver and control options marked by a shaded background*

To learn more about A+, visit www.acuitybrands.com/aplus.

*See ordering tree for details

2GTL LED Troffer

A+ Capable options indicated by this color background.

ORDERING INFORMATION Lead times will vary depending on options selected. Consult with your sales representative.

Example: 2GTL 4 48L GZ10 LP835

2GTL						
Series	**Trim type**	**Length**	**Lumens[1]**	**Door**	**Lens**	**Voltage**
2GTL 2' wide recessed LED luminaire	(blank) Grid F Overlapping flange	4 4'	30L 3000 lumens 40L 4000 lumens 48L 4800 lumens 60L 6000 lumens 72L 7200 lumens 88L 8800 lumens 100L 10000 lumens 140L 14000 lumens[2]	(blank) Flush steel, white FN Flush aluminum, natural FM Flush aluminum, matte black FW Flush aluminum, white RN Regressed aluminum, natural RM Regressed aluminum, matte black RW Regressed aluminum, white	(blank) #12 pattern acrylic, 0.110" thick A12125 #12 pattern acrylic, frosted, .125" thick A19 #19 pattern acrylic, 0.156" thick SWL Satin white	(blank) MVOLT (120-277V) 120 120V 277 277V 347 347V[3]

Driver	Color temperature	Controls[6]	Options
EZ1 eldoLED dims to 1 % GZ10 Dims to 10% (0-10V dimming) GZ1 Dims to 1% (0-10V dimming) SLD Step-level dimming[4,5]	LP830 3000 K LP835 3500 K LP840 4000 K LP850 5000 K	(blank) No controls N80 nLight with 80% (L80) lumen management N80EMG nLight with 80% (L80) lumen management for use with generator supply emergency power N100 nLight without lumen management N100EMG nLight without lumen management for use with generator supply emergency power	EL7L 700 lumen emergency battery (Noncompliant with CA T20) [5,7,8] EL14L 1400 lumen emergency battery (Noncompliant with CA T20) [5,7,8] E10WLCP EM Self-Diagnostic battery pack, 10W Constant Power, Certified in CA Title 20 MAEDBS [5,7,8] BGTD Bodine Generator Transfer Device [9,10,11] CP Chicago plenum PWS1836 6' pre-wire, 3/8" diameter, 18-gauge, 1-circuit PWS1846 6' pre-wire, 3/8" diameter, 18-gauge, 2-circuit ABC Door frame gasketing [12] GLR Fast-blowing fuse [13] GMF Slow-blowing fuse [13] LATC Earthquake clip NPLT Narrow pallet PAF Paint after fab

Accessories: *Order as separate catalog number.*

DGA24	Drywall grid adapter for 2x4 recessed fixture.
2X4SMKSHP PAF	Surface Mount Troffer Kit Post Paint

Notes

1 Approximate lumen output. Lumen output will vary depending upon lens option chosen.
2 Not available with GZ10.
3 Not available with SLD, EL7L, EL14L, E10WLCP or BGTD.
4 Not available with 100L and 140L.
5 When using pre-wire option, use PWS1846.
6 Not available with SLD, GZ1, GZ10.
7 Not available with SLD or GZ1 or GZ10 when combined with any of the following lumen packages: 72L, 88L, 100L or 140L.
8 Not available with EZ1 when combined with 100L or 140L lumen packages.
9 Not Available with SLD.
10 Not Available with Controls options when ordered in combination with 100L or 140L lumen packages.
11 Must specify voltage. Requires BSE labeling, voltage specific. Consult factory for options. Example: BGTD BSE10.
12 Only available with aluminum door.
13 Must specify voltage, 120 or 277.
14 For CEC (T20) compliant option, substitute EL14L option with E10WLCP "EM self- diagnostic battery pack 10W constant power, CEC compliant".

Stock/Non-configurable models are offered for shorter lead times:

ORDERING INFORMATION

Catalog Number	UPC	Description	Lumens	Color Temprature	Voltage	Wattage	Pallet qty.	Standard carton qty.
2GTL4 4400LM LP835	889804706598	2x4 LED lay-in troffer	4391	3500K	120-277	34.10	28	1
2GTL4 4400LM LP840	889804706956	2x4 LED lay-in troffer	4567	4000K	120-277	34.10	28	1
2GTL4 4400LM 347 LP835	889804710243	2x4 LED lay-in troffer, 347v	4391	3500K	347	38.11	28	1
2GTL4 4400LM 347 LP840	889804710359	2x4 LED lay-in troffer, 347v	4567	4000K	347	38.11	28	1
2GTL4 4400LM EL14L LP835 [14]	889804710045	2x4 LED lay-in troffer, emergency battery	4391	3500K	120-277	34.10	28	1
2GTL4 4400LM EL14L LP840 [14]	889804710205	2x4 LED lay-in troffer, emergency battery	4567	4000K	120-277	34.10	28	1
2GTL4 5000LM LP835	889804710366	2x4 LED lay-in troffer	4867	3500K	120-277	38.79	28	1
2GTL4 5000LM LP840	889804710458	2x4 LED lay-in troffer	5062	4000K	120-277	38.79	28	1
2GTL4 5000LM 347 LP835	889804710489	2x4 LED lay-in troffer, 347v	4867	3500K	347	42.78	28	1
2GTL4 5000LM 347 LP840	889804710595	2x4 LED lay-in troffer, 347v	5062	4000K	347	42.78	28	1
2GTL4 5000LM EL14L LP835 [14]	889804710625	2x4 LED lay-in troffer, emergency battery	4867	3500K	120-277	38.79	28	1
2GTL4 5000LM EL14L LP840 [14]	889804710700	2x4 LED lay-in troffer, emergency battery	5062	4000K	120-277	38.79	28	1

LITHONIA LIGHTING®

Catalog Number	
Notes	
Type	NL-3C NL-3CEM

GTL Series

2GTL

2' x 2'
LED Recessed Troffer

FEATURES & SPECIFICATIONS

INTENDED USE — The 2GTL LED recessed troffer offers a wide range of lumen packages, color temperatures, and lens options to meet the lighting needs for a wide range of applications such as schools, offices, and hospitals. The light engine delivers long life and excellent color to ensure a sound quality, low-maintenance lighting installation. **Certain airborne contaminants can diminish the integrity of acrylic and/or polycarbonate.** Click here for Acrylic-Polycarbonate Compatibility table for suitable uses.

CONSTRUCTION — Housing formed from 22 gauge cold-rolled steel. Smooth hemmed sides and smooth inward formed end flanges for safe handling. Includes integral T-bar clips. Lighter-weight fixture allows for safe, easy installation.

OPTICS — Highly transmissive pattern #12 lens diffuses the light source without compromising output. Pattern # 19 and satin white lens options also available.

ELECTRICAL — Long-life LEDs, coupled with high-efficiency drivers, provide extended service life. 80% LED lumen maintenance at 72,000 hours (L80/72,000).

eldoLED driver options deliver choice of dimming range, and choices for control, while assuring flicker-free, low-current inrush, 89% efficiency and low EMI.

Optional nLight® embedded controls make each luminaire addressable - allowing it to digitally communicate with other nLight enabled controls such as dimmers, switches, occupancy sensors and photocontrols. Simply connect all the nLight enabled control devices and the GTL luminaires using standard Cat-5 cabling. Unique plug-and-play convenience as devices and luminaires automatically discover each other and self-commission.

Lumen Management: Unique lumen management system (option N80) provides onboard intelligence that actively manages the LED light source so that constant lumen output is maintained over the system life, preventing the energy waste created by the traditional practice of over-lighting.

The step-level dimming option (SLD) allows the system to be switched to 50% power for compliance with common energy codes while maintaining fixture appearance.

Ballast disconnect is provided where required to comply with U.S. and Canadian codes.

INSTALLATION — LED boards include plug-in connectors for easy of upgradeability. Suitable for direct insulation contact. Suitable for damp location.

LISTINGS — CSA certified to meet U.S. and Canadian standards. IC rated. DesignLights Consortium® (DLC) Premium qualified product. Not all versions of this product may be DLC Premium qualified. Please check the DLC Qualified Products List at www.designlights.org/QPL to confirm which versions are qualified.

WARRANTY — 5-year limited warranty. Complete warranty terms located at www.acuitybrands.com/CustomerResources/Terms_and_conditions.aspx

Note: Actual performance may differ as a result of end-user environment and application.
All values are design or typical values, measured under laboratory conditions at 25 °C.
Specifications subject to change without notice.

Coordinate

Specifications

Length: 24 (61.0)
Width: 24 (61.0)
Depth: 3-1/4 (8.2)

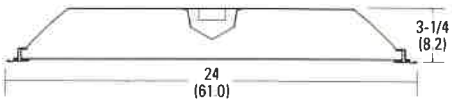

All dimensions are inches (centimeters) unless otherwise indicated.

A+ Capable Luminaire

This item is an A+ capable luminaire, which has been designed and tested to provide consistent color appearance and out-of-the-box control compatibility with simple commissioning.

- All configurations of this luminaire meet the Acuity Brands' specification for chromatic consistency
- This luminaire is part of an A+ Certified solution for nLight® control networks when ordered with drivers marked by a shaded background*
- This luminaire is part of an A+ Certified solution for nLight control networks, providing advanced control functionality at the luminaire level, when selection includes driver and control options marked by a shaded background*

To learn more about A+, visit www.acuitybrands.com/aplus.

*See ordering tree for details

2GTL LED Troffer

A+ Capable options indicated by this color background.

ORDERING INFORMATION Lead times will vary depending on options selected. Consult with your sales representative.

Example: 2GTL 2 33L GZ10 LP835

2GTL						
Series	**Trim type**	**Length**	**Lumens**[1]	**Door**	**Lens**	**Voltage**
2GTL 2' wide recessed LED luminaire	(blank) Grid F Overlapping flange	2 2'	20L 2000 lumens 33L 3300 lumens 40L 4000 lumens 48L 4800 lumens	(blank) Flush steel, white FN Flush aluminum, natural FM Flush aluminum, matte black FW Flush aluminum, white RN Regressed aluminum, natural RM Regressed aluminum, matte black RW Regressed aluminum, white	(blank) #12 pattern acrylic, 0.110" thick A12125 #12 pattern acrylic, frosted, .125" thick A19 #19 pattern acrylic, 0.156" thick SWL Satin white	(blank) MVOLT (120-277V) 120 120V 277 277V 347 347V[2]

Driver	Color temperature	Controls[4]	Options
EZ1 eldoLED dims to 1 % GZ10 Dims to 10% (0-10V dimming) GZ1 Dims to 1% (0-10V dimming) SLD Step-level dimming[3]	LP830 3000 K LP835 3500 K LP840 4000 K LP850 5000 K	(blank) No controls N80 nLight with 80% (L80) lumen management N80EMG nLight with 80% (L80) lumen management for use with generator supply emergency power N100 nLight without lumen management N100EMG nLight without lumen management for use with generator supply emergency power	EL7L 700 lumen emergency battery (Noncompliant with CA T20) [3,5,6] EL14L 1400 lumen emergency battery (Noncompliant with CA T20) [3,5,6] E10WLCP EM Self-Diagnostic battery pack, 10W Constant Power, Certified in CA Title 20 MAEDBS[3] BGTD Bodine Generator Transfer Device[7,8] CP Chicago plenum PWS1836 6' pre-wire, 3/8" diameter, 18-gauge, 1-circuit PWS1846 6' pre-wire, 3/8" diameter, 18-gauge, 2-circuit ABC Door frame gasketing[9] GLR Fast-blowing fuse[10] GMF Slow-blowing fuse[10] LATC Earthquake clip NPLT Narrow pallet PAF Paint after fab

Accessories: *Order as separate catalog number.*	
DGA22	Drywall grid adapter for 2x2 recessed fixture.
2X2SMKSHP PAF	Surface Mount Troffer Kit Post Paint

Notes

1. Approximate lumen output. Lumen output will vary depending upon lens option chosen.
2. Not available with SLD, EL7L, EL14L, E10WLCP, or BGTD.
3. When using pre-wire option, use PWS1846.
4. Not available with SLD, GZ1, GZ10.
5. Not available with EZ1, and SLD when combined with 40L or 48L lumen packages.
6. Not available with GZ1 or GZ10 when combined with 48L lumen package.
7. Not available with SLD.
8. Must specify voltage. Requires BSE labeling, voltage specific. Consult factory for options. Example: BGTD BSE10.
9. Only available with aluminum door.
10. Must specify voltage, 120 or 277.
11. For CEC (T20) compliant option, substitute EL14L option with E10WLCP "EM self- diagnostic battery pack 10W constant power, CEC compliant".

Stock/Non-configurable models are offered for shorter lead times:

ORDERING INFORMATION

Catalog Number	UPC	Description	Lumens	Color Temprature	Voltage	Wattage	Pallet qty.	Standard carton qty.
2GTL2 3300LM LP835	889804702637	2x2 LED lay-in troffer	3277	3500K	120-277	27.61	56	1
2GTL2 3300LM LP840	889804702460	2x2 LED lay-in troffer	3408	4000K	120-277	27.61	56	1
2GTL2 3300LM 347 LP835	889804703634	2x2 LED lay-in troffer, 347v	3277	3500K	347	30.76	56	1
2GTL2 3300LM 347 LP840	889804703900	2x2 LED lay-in troffer, 347v	3408	4000K	347	30.76	56	1
2GTL2 3300LM EL14L LP835[11]	889804704440	2x2 LED lay-in troffer, emergency battery	3277	3500K	120-277	27.61	12	1
2GTL2 3300LM EL14L LP840[11]	889804706246	2x2 LED lay-in troffer, emergency battery	3408	4000K	120-277	27.61	12	1
2GTL2 3700LM LP835	889804704143	2x2 LED lay-in troffer	3702	3500K	120-277	30.96	56	1
2GTL2 3700LM LP840	889804704242	2x2 LED lay-in troffer	3850	4000K	120-277	30.96	56	1
2GTL2 3700LM 347 LP835	889804704303	2x2 LED lay-in troffer, 347v	3702	3500K	347	34.99	56	1
2GTL2 3700LM 347 LP840	889804704365	2x2 LED lay-in troffer, 347v	3850	4000K	347	34.99	56	1
2GTL2 3700LM EL14L LP835[11]	889804706307	2x2 LED lay-in troffer, emergency battery	3702	3500K	120-277	30.96	12	1
2GTL2 3700LM EL14L LP840[11]	889804706352	2x2 LED lay-in troffer, emergency battery	3850	4000K	120-277	30.96	12	1

LED: One Lithonia Way Conyers, GA 30012 Phone: 800 958-7763 Fax: 770-929-8789 www.lithonia.com

© 2012-2019 Acuity Brands Lighting, Inc. All rights reserved. Rev. 03/22/19

July 29, 2021

LITHONIA LIGHTING®

Catalog Number	
Notes	
Type	NL-4 NL-4EM

LED Recessed Wet Location Troffer

WRTL

FEATURES & SPECIFICATIONS

INTENDED USE — Wet location, recessed LED troffer for general illumination of demanding environments subject to dust and moisture. Typical applications include shower areas, bathrooms, recreational facilities and canopies.

Certain airborne contaminants may adversely affect the functioning of LEDs and other electronic components, depending on various factors such as concentrations of the contaminants, ventilation, and temperature at the end-user location. Click here for a list of substances that may not be suitable for interaction with LEDs and other electronic components.

CONSTRUCTION — Housing is made from 20-gauge cold rolled steel. Door frame is .060 painted aluminum and lens is diffused acrylic. Gasket is closed cell neoprene.

Finish: All CRS (cold rolled steel) and aluminum parts are finished with electrostatically deposited, thermally set, polyester powder paint after fabrication. Door frame finish available in black, white and silver colors. Enclosure finish available in white, Antimicrobial white and super-durable white.

OPTICS — Long-life LEDs, coupled with high-efficiency drivers, provide extended service life. Lumen maintenance of L80/60,000 hours, L70>100,000 hours.

ELECTRICAL — Thermally protected, resetting, Class P, HPF, non-PCB, UL listed, CSA certified driver is standard.

LED driver delivers dimming from a 0-10V control signal. Dims to 1% standard.

Luminaire Surge Protection Level: Designed to withstand up to 6kV/3kA per ANSI C82.77-5-2015.

INSTALLATION — Lay-in grid or in-ceiling sheet rock installation using swing-arms with range from 1" to 2" grid height. See drawings for other critical dimensions. Swing-arms are not intended to secure fixture without additional support. Line voltage supply wiring entrance opening is 7/8".

LISTINGS — CSA certified to meet U.S. and Canadian standards (UL1598 and UL8750) or NOM Certified. IC rated, see footnote 5 for non-compliant configurations. Wet location listed. FPA option: NSF Splash Zone 2 (overlap door only).

For use in ambient temperatures ranging from -4°F (-20°C) to 104°F (40°C) with the exception of 10000LM(1X4) 12000LM(2X2) and 24000LM(2X4). These lumen packages are for use in ambient temperatures ranging from -4°F (-20°C) to 77°F (25°C).

DesignLights Consortium® (DLC) qualified product. Not all versions of this product may be DLC qualified. Please check the DLC Qualified Products List at www.designlights.org/QPL to confirm which versions are qualified.

WARRANTY — 5-year limited warranty. Complete warranty terms located at:
www.acuitybrands.com/resources/terms-and-conditions

Note: Actual performance may differ as a result of end-user environment and application.

All values are design or typical values, measured under laboratory conditions at 25 °C.

Specifications subject to change without notice.

Capable Luminaire

This item is an A+ capable luminaire, which has been designed and tested to provide consistent color appearance and out-of-the-box control compatibility with simple commissioning.

- All configurations of this luminaire meet the Acuity Brands' specification for chromatic consistency
- This luminaire is part of an A+ Certified solution for nLight® or XPoint™ Wireless control networks marked by a shaded background*

To learn more about A+, visit www.acuitybrands.com/aplus.

*See ordering tree for details

WRTL LED Recessed Wet Location Troffer

A+ Capable options indicated by this color background.

ORDERING INFORMATION Lead times will vary depending on options selected. Consult with your sales representative. **Example:** 2WRTL G L48 18000LM IAW AFL MVOLT EZ1 40K 80CRI WH

Series		Trim type		Length		Nominal Lumens[2]					
WRTL	Recessed wet location troffer, 1' wide[1]	G	Grid (9/16" - 1 1/2" W x 2" H)	L24	24"	1x4:		2x2:		2x4:	
2WRTL	Recessed wet location troffer, 2' wide	F	Flange	L48	48"	3000LM	3,000 lumens	3000LM	3,000 lumens	3000LM	3,000 lumens
						5000LM	5,000 lumens	5000LM	5,000 lumens	5000LM	5,000 lumens
						7000LM	7,000 lumens[3,4]	7000LM	7,000 lumens	7000LM	7,000 lumens
						10000LM	10,000 lumens[3,5]	10000LM	10,000 lumens[5,6]	10000LM	10,000 lumens[5,6]
								12000LM	12,000 lumens[4]	15000LM	15,000 lumens[4,6]
										18000LM	18,000 lumens[4,6]
										24000LM	24,000 lumens[4,6]

Door frame		Diffuser type		Voltage		Driver		Color temperature		Color rendering index	
OAW	Overlapping aluminum, white	AFL	Acrylic, frosted (.080" Thick)	MVOLT	120-277V	EZ1	eldoLED 0-10V ECOdrive. Linear dimming to 1% min.	30K	3000 K	80CRI	80 CRI
OAN	Overlapping aluminum, silver			120	120V	GZ1	0-10V dimming	35K	3500 K	90CRI	90 CRI
OAM	Overlapping aluminum, black			277	277V			40K	4000 K		
IAW	Inset aluminum, white			347	347V[7]			50K	5000 K		
IAN	Inset aluminum, silver										
IAM	Inset aluminum, black										

Options				Finish	
BGTD	Generator tranfser device[5,8]	Individual Controls:[6,12]		WH	White[14]
PS1050	Emergency battery pack, 10W, CA Title 20 noncompliant (not available with 1x4 7000LM or 10000LM)[5,8,9]	MSE6NWL	Embedded high mount 360° motion sensor, wet location, On/Off operation	DWAM	Antimicrobial, white[14]
E10WLCP	EM Self-diagnostics battery pack, 10W, Constant Power Certified in CA Title 20 MAEDBS[10]	MSE62L3VWL	Embedded high mount 360° motion sensor, wet location, High/Low operation (2-level)	DWHXD	Super durable, white
SF	Single fusing	MSE6NWL DSCNWL	Embedded high mount 360° motion sensor, wet location, On/Off operation from motion sensing, Override Off due to daylight		
FPA	Food processing area[11]	MSE10NWL	Embedded low mount 360° motion sensor, wet location, On/Off operation		
ST3	Constructed with US steel	MSE102L3VWL	Embedded low mount 360° motion sensor, wet location, High/Low operation (2-level)		
USPOM	Assembled in the USA	MSE10NWL DSCNWL	Embedded low mount 360° motion sensor, wet location, On/Off operation from motion sensing, Override Off due to daylight		
		Xpoint Wireless:[12]			
		MSE6XAWL	XPoint™ wireless high mount 360° motion sensor embedded, on/off, wet location (white only)[6,13]		
		MSE10XAWL	XPoint™ wireless low mount 360° motion sensor embedded, on/off, wet location (white only)[6,13]		
		XAD	XPoint™ wireless 0-10V relay		
		XAD924	XPoint™ wireless 0-10V relay with emergency relay[5]		
		nLight:[6,12]			
		nPS80EZ	nLight® dimming pack controls, 0-10V eldoLED driver		

CONFIGURATIONS

Lumens	1' X 4'	2' X 2'	2' X 4'
3,000LM	X	X	X
5,000LM	X	X	X
7,000LM	X	X	X
10,000LM	X	X	X
12,000LM		X	
15,000LM			X
18,000LM			X
24,000LM			X

Notes

1 Only available with L48.
2 Not all lumen packages are available with every length/width combination. See configuration chart for availability.
3 Not available with E10WLCP.
4 Not available with MVOLT.
5 Must specify voltage, non-IC.
6 Not available with GZ1 driver.
7 Utilizes step-down transformer. Refer to back box table on page 4.
8 Not available with 347V. For use with ambient temperatures ranging from -4°F (-20°C) to 77°F (25°C).
9 Refer to PS1050 specification sheet for more information. Utilizes back box . Not available with 1x4 10000LM.
10 Not available with MVOLT, 347V or BGTD. See specification sheet for PS1055 for more information.
11 Provides NSF labeling for Splash Zone 1 (non-food contact). Only available with OAW overlapping door frame and WH or DWAM finish.
12 Cannot be used with other Sensor options - MSE, Xpoint, or nLight.
13 Sensor is white only.
14 Only DWAM and WH paint finish are NSF Certified for non-food contact.

INDUSTRIAL: One Lithonia Way, Conyers, GA 30012 Phone: 1-800-705-SERV (7378) www.lithonia.com

© 2016-2020 Acuity Brands Lighting, Inc. All rights reserved.

Rev. 01/02/20

July 29, 2021

LITHONIA LIGHTING

Catalog Number	
Notes	
Type	NL-4A NL-4AEM

FEATURES & SPECIFICATIONS

INTENDED USE — Wet location, recessed LED troffer for general illumination of demanding environments subject to dust and moisture. Typical applications include shower areas, bathrooms, recreational facilities and canopies.

Certain airborne contaminants may adversely affect the functioning of LEDs and other electronic components, depending on various factors such as concentrations of the contaminants, ventilation, and temperature at the end-user location. Click here for a list of substances that may not be suitable for interaction with LEDs and other electronic components.

CONSTRUCTION — Housing is made from 20-gauge cold rolled steel. Door frame is .060 painted aluminum and lens is diffused acrylic. Gasket is closed cell neoprene.

Finish: All CRS (cold rolled steel) and aluminum parts are finished with electrostatically deposited, thermally set, polyester powder paint after fabrication. Door frame finish available in black, white and silver colors. Enclosure finish available in white, Antimicrobial white and super-durable white.

OPTICS — Long-life LEDs, coupled with high-efficiency drivers, provide extended service life. Lumen maintenance of L90/60,000 hours, L70>100,000 hours.

ELECTRICAL — Thermally protected, resetting, Class P, HPF, non-PCB, UL listed, CSA certified driver is standard.

LED driver delivers dimming from a 0-10V control signal. Dims to 1% standard.

Luminaire Surge Protection Level: Designed to withstand up to 6kV/3kA per ANSI C82.77-5-2015.

INSTALLATION — Lay-in grid or in-ceiling sheet rock installation using swing-arms with range from 1" to 2" grid height. See drawings for other critical dimensions. Swing-arms are not intended to secure fixture without additional support. Line voltage supply wiring entrance opening is 7/8".

LISTINGS — CSA certified to meet U.S. and Canadian standards (UL1598 and UL8750) or NOM Certified. IC rated, see footnote 5 for non-compliant configurations. Wet location listed. FPA option: NSF Splash Zone 2 (overlap door only).

For use in ambient temperatures ranging from -4°F (-20°C) to 104°F (40°C) with the exception of 10000LM(1X4) 12000LM(2X2) and 24000LM(2X4). These lumen packages are for use in ambient temperatures ranging from -4°F (-20°C) to 77°F (25°C).

DesignLights Consortium® (DLC) qualified product. Not all versions of this product may be DLC qualified. Please check the DLC Qualified Products List at www.designlights.org/QPL to confirm which versions are qualified.

WARRANTY — 5-year limited warranty. Complete warranty terms located at:

www.acuitybrands.com/support/terms-and-conditions

Note: Actual performance may differ as a result of end-user environment and application.

All values are design or typical values, measured under laboratory conditions at 25 °C.

Specifications subject to change without notice.

LED Recessed Wet Location Troffer

WRTL

A+ Capable Luminaire

This item is an A+ capable luminaire, which has been designed and tested to provide consistent color appearance and out-of-the-box control compatibility with simple commissioning.

- All configurations of this luminaire meet the Acuity Brands' specification for chromatic consistency
- This luminaire is part of an A+ Certified solution for nLight® or XPoint™ Wireless control networks marked by a **shaded background***

To learn more about A+, visit www.acuitybrands.com/aplus.

*See ordering tree for details

WRTL LED Recessed Wet Location Troffer

A+ Capable options indicated by this color background.

ORDERING INFORMATION Lead times will vary depending on options selected. Consult with your sales representative.

Example: 2WRTL G L48 18000LM IAW AFL MVOLT EZ1 40K 80CRI WH

Series		Trim type		Length		Nominal Lumens[2]					
						1x4:		2x2:		2x4:	
WRTL	Recessed wet location troffer, 1' wide[1]	G	Grid (9/16" - 1 1/2" W x 2" H)	L24	24"	3000LM	3,000 lumens	3000LM	3,000 lumens	3000LM	3,000 lumens
2WRTL	Recessed wet location troffer, 2' wide	F	Flange	L48	48"	5000LM	5,000 lumens	5000LM	5,000 lumens	5000LM	5,000 lumens
						7000LM	7,000 lumens[3,4]	7000LM	7,000 lumens	7000LM	7,000 lumens
						10000LM	10,000 lumens[3,5]	10000LM	10,000 lumens[5,6]	10000LM	10,000 lumens[5,6]
								12000LM	12,000 lumens[4]	15000LM	15,000 lumens[4,6]
										18000LM	18,000 lumens[4,6]
										24000LM	24,000 lumens[4,6]

Door frame		Diffuser type		Voltage		Driver		Color temperature		Color rendering index	
OAW	Overlapping aluminum, white	AFL	Acrylic, frosted (.080" Thick)	MVOLT	120-277V	EZ1	eldoLED 0-10V ECOdrive. Linear dimming to 1% min.	30K	3000 K	80CRI	80 CRI
OAN	Overlapping aluminum, silver			120	120V	GZ1	0-10V dimming	35K	3500 K	90CRI	90 CRI
OAM	Overlapping aluminum, black			277	277V			40K	4000 K		
IAW	Inset aluminum, white			347	347V[7]			50K	5000 K		
IAN	Inset aluminum, silver										
IAM	Inset aluminum, black										

Options				Finish	
BGTD	Generator tranfser device[5,8]	Individual Controls:[6,12]		WH	White[14]
PS1050	Emergency battery pack, 10W, CA Title 20 noncompliant (not available with 1x4 7000LM or 10000LM)[5,8,9]	MSE6NWL	Embedded high mount 360° motion sensor, wet location, On/Off operation	DWAM	Antimicrobial, white[14]
E10WLCP	EM Self-diagnostics battery pack, 10W, Constant Power Certified in CA Title 20 MAEDBS[10]	MSE62L3VWL	Embedded high mount 360° motion sensor, wet location, High/Low operation (2-level)	DWHXD	Super durable, white
SF	Single fusing	MSE6NWL DSCNWL	Embedded high mount 360° motion sensor, wet location, On/Off operation from motion sensing, Override Off due to daylight		
FPA	Food processing area[11]	MSE10NWL	Embedded low mount 360° motion sensor, wet location, On/Off operation		
ST3	Constructed with US steel	MSE102L3VWL	Embedded low mount 360° motion sensor, wet location, High/Low operation (2-level)		
USPOM	Assembled in the USA	MSE10NWL DSCNWL	Embedded low mount 360° motion sensor, wet location, On/Off operation from motion sensing, Override Off due to daylight		
		Xpoint Wireless:[12]			
		MSE6XAWL	XPoint™ wireless high mount 360° motion sensor embedded, on/off, wet location (white only)[6,13]		
		MSE10XAWL	XPoint™ wireless low mount 360° motion sensor embedded, on/off, wet location (white only)[6,13]		
		XAD	XPoint™ wireless 0-10V relay		
		XAD924	XPoint™ wireless 0-10V relay with emergency relay[5]		
		nLight:[6,12]			
		nPS80EZ	nLight® dimming pack controls, 0-10V eldoLED driver		

CONFIGURATIONS

Lumens	1'X4'	2'X2'	2'X4'
3,000LM	X	X	X
5,000LM	X	X	X
7,000LM	X	X	X
10,000LM	X	X	X
12,000LM		X	
15,000LM			X
18,000LM			X
24,000LM			X

Notes

1 Only available with L48.
2 Not all lumen packages are available with every length/width combination. See configuration chart for availability.
3 Not available with E10WLCP.
4 Not available with MVOLT.
5 Must specify voltage, non-IC.
6 Not available with GZ1 driver.
7 Utilizes step-down transformer. Refer to back box table on page 4.
8 Not available with 347V. For use with ambient temperatures ranging from -4°F (-20°C) to 77°F (25°C).
9 Refer to PS1050 specification sheet for more information. Utilizes back box. Not available with 1x4 10000LM.
10 Not available with MVOLT, 347V or BGTD. See specification sheet for PS1055 for more information.
11 Provides NSF labeling for Splash Zone 1 (non-food contact). Only available with OAW overlapping door frame and WH or DWAM finish.
12 Cannot be used with other Sensor options - MSE, Xpoint, or nLight.
13 Sensor is white only.
14 Only DWAM and WH paint finish are NSF Certified for non-food contact.

© 2016-2020 Acuity Brands Lighting, Inc. All rights reserved. Rev. 01/02/20

LITHONIA LIGHTING®

Catalog Number	
Notes	
Type	NL-5

FEATURES & SPECIFICATIONS

INTENDED USE — LBL LED wraparound provides a digital lighting platform to deliver general ambient lighting for surface-mount applications. The LED system delivers long life and excellent color to ensure a quality, low-maintenance lighting installation. Ideal for closets, storage rooms, hallways, stairwells and offices.

CONSTRUCTION — Metal parts are die formed from pre-painted code-gauge steel. Prismatic diffuser is 100% acrylic with sonically welded luminous ends. Continuous side flanges on fixture body provide light trap and continuous diffuser support to prevent accidental opening and simplify maintenance.

OPTICS — Curved prismatic diffuser with linear side prisms and highly transmissive overlay minimizes lamp image and provides high-angle brightness control. Luminous end plates soften appearance for improved aesthetics.

ELECTRICAL — Long-life LEDs, coupled with high-efficiency drivers, provide superior quantity and quality of illumination for extended service life. 90% LED lumen maintenance at 50,000 hours (L90/50,000). The LEDs have a CRI of 82.

eldoLED driver options deliver choice of dimming range and choices for control, while assuring flicker-free, low-current inrush, 89% efficiency and low EMI.

Step-level dimming option allows system to be switched to 50% power for compliance with common energy codes while maintaining fixture appearance.

CONTROLS — Pair the LBL with the fixture mount Sensor Switch LSXR sensor for additional energy savings when the space is unoccupied. The LSXRHL sensor dims the fixture down to a low-level setting when there is no occupancy. This option is ideal for stairwells, back rooms, and closets due to the low occupancy level in those spaces.

Optional nLight® embedded controls continuously monitor system performance, allow for constant lumen management / compensation function, facilitate simple "plug-and-play" network and controls upgrading via Cat-5 cable. Ballast disconnect provided where required to comply with US and Canadian codes.

LISTINGS — CSA certified to meet U.S. and Canadian standards. Damp listed.

DesignLights Consortium® (DLC) Premium qualified product. Not all versions of this product may be DLC Premium qualified. Please check the DLC Qualified Products List at www.designlights.org/QPL to confirm which versions are qualified.

BUY AMERICAN — Product with the BAA option is assembled in the USA and meets the Buy America(n) government procurement requirements under FAR, DFARS and DOT. Please refer to www.acuitybrands.com/buy-american for additional information.

WARRANTY — 5-year limited warranty. Complete warranty terms located at:
www.acuitybrands.com/support/customer-support/terms-and-conditions

Note: Actual performance may differ as a result of end-user environment and application.

All values are design or typical values, measured under laboratory conditions at 25 °C.

Specifications subject to change without notice.

Low-Profile Curved-Basket LED Wraparound

LBL4

4' LENGTH, NARROW HOUSING

LED

Buy American

A+ Capable Luminaire

This item is an A+ capable luminaire, which has been designed and tested to provide consistent color appearance and out-of-the-box control compatibility with simple commissioning.

- All configurations of this luminaire meet the Acuity Brands' specification for chromatic consistency
- This luminaire is part of an A+ Certified solution for nLight® control networks when ordered with drivers marked by a shaded background*
- This luminaire is part of an A+ Certified solution for nLight control networks, providing advanced control functionality at the luminaire level, when selection includes driver and control options marked by a shaded background*

To learn more about A+, visit www.acuitybrands.com/aplus.

*See ordering tree for details

LBL4 LED Wraparound

A+ Capable options indicated by this color background.

ORDERING INFORMATION

Lead times will vary depending on options selected. Consult with your sales representative.

Example: LBL4 4000LM 80CRI 35K MIN10 GZT MVOLT

LBL4						
Series	**Lumens[1]**	**CRI**	**Color temperature**	**Minimum Dimming Level**	**Dimming**	**Voltage**
LBL4 4' LED wrap	3000LM 3000 lumens 4000LM 4000 lumens 4800LM 4800 lumens 6000LM 6000 lumens 7200LM 7200 lumens	80CRI 80 CRI	30K 3000 K 35K 3500 K 40K 4000 K 50K 5000 K	MIN10 Dims to 10%[2] MIN1 Dims to 1%[3] NODIM On/off, non-dimming[4] SLD Step-level dimming[4]	(blank) None[13] GZT Generic 0-10V Dimming ZT eldoLED 0-10V dimming	MVOLT 120-277V 347 347V[5]

Emergency Options	**Control Input/ Lumen Management Options[13]**	**Occupancy Control Options**	**Occupancy Sensor Technology Option**	**Options**
EL7L 700 nominal lumen battery pack (Noncompliant with CA T20)[6] EL14L 1400 nominal lumen battery pack (Noncompliant with CA T20)[6] E10WLCP EM Self-Diagnostic battery pack, 10W Constant Power, Certified in CA Title 20 MAEDBS[6] EMG for use with nLight on generator supply EM power[7]	NLIGHT nLight enabled CL80 NLIGHT nLight enabled, Constant lumen output, 80%	LSXRHL Sensor Switch® fixture mount sensor with High/Low occupancy operation[8,9] LSXR10 Sensor Switch® fixture mount sensor with on/off occupancy operation[8]	PIR Passive Infrared[11]	USPOM US Point of Manufacture GLR Fast-blowing fuse[12] GMF Slow-blowing fuse[12] BAA Buy America(n) Act Compliant

ORDERING INFORMATION

Catalog number	UPC	Description	Lumens	Color temperature	Lens type	Voltage	Wattage[2]	Pallet qty	Standard carton qty.
LBL4 LP835[10]	190887819199	4' LED Wraparound	4,188	3500 K	Patterned #12 acrylic	120-277	32	56	1
LBL4 LP840[10]	190887819359	4' LED Wraparound	4,253	4000 K	Patterned #12 acrylic	120-277	32	56	1
LBL4 347 LP835	190887856682	4' LED Wraparound	4,188	3500 K	Patterned #12 acrylic	347	32	56	1
LBL4 347 LP840	190887856705	4' LED Wraparound	4,253	4000 K	Patterned #12 acrylic	347	32	56	1

Replacement Part

Fixture: LBL4 & Contractor Select
Description: LBL 4' DIFFUSER
Part Number: DLBL48

Notes

1. Approximate lumen output.
2. Requires GZT control option.
3. Requires GZT, ZT, or NLIGHT control.
4. Not available with Control or Sensor Options.
5. Not available with SLD option.
6. Not available with 7200LM option.
7. nLight EMG option requires a conection to existing nLight network. Power is provided from a separate N80 or N100 enabled fixture. Requires NLIGHT.
8. Requires MIN1, ZT and PIR options.
9. Dims to approximately 10% light output when unoccupied.
10. Product in stock.
11. Only available with Occupany Control option.
12. Must specify voltage. 120 or 277, with GLR and GMF fusing.
13. When Control Input/ Lumen Management option specified leave Dimming section blank.

© 2015-2021 Acuity Brands Lighting, Inc. All rights reserved. Rev. 06/08/21

HOLOPHANE®
LEADER IN LIGHTING SOLUTIONS

Catalog Number	
Notes	
Type	NL-7 NL-7EM

LED Striplight

HRTC

48" and 96" Lengths

FEATURES & SPECIFICATIONS

INTENDED USE — Built on the classic C-Strip chassis, HRTC is an extremely efficient high output strip light. HRTC is ideal for new construction or retrofit and can be used in industrial, commercial, manufacturing, warehouse or display applications. **Certain airborne contaminants can diminish the integrity of acrylic and/or polycarbonate.** Click here for Acrylic-Polycarbonate Compatibility table for suitable uses.

CONSTRUCTION — Cold rolled steel housing and cover, gloss finish, is easy to install and maintain.

4.5" wide acrylic lens provides uniform light distribution without creating a glare.

OPTICS — L70>100k hrs.

Multiple lumen packages are available to match the application.

LEDs provide nominal 80CRI and 4000K or 5000K lumens.

ELECTRICAL — Utilizes high output LEDs integrated into a cool running LED board. Multivolt drivers and 0-10V analog dimming comes standard. Meets commercial standard ANSI surge protection of 2.5kV at 0.75kA.

INSTALLATION — Tool-less channel cover for easy installation. Fixture may be surface mounted or suspended using the included Y hanger with 36" chain.

LISTINGS — UL listed for use in damp locations. Refer to ambient temperature rating table for surface and suspended mounting listing.

Please check the DLC Qualified Products List at www.designlights.org to confirm which versions are qualified.

WARRANTY — 5-year limited warranty. Complete warranty terms located at:
www.acuitybrands.com/support/customer-support/terms-and-conditions

NOTE: Actual performance may differ as a result of end-user environment and application. All values are design or typical values, measured under laboratory conditions at 25 °C. Specifications subject to change without notice.

LED

UL LISTED

ORDERING INFORMATION

Example: HRTC L48 5000LM MVOLT GZ10 40K 80CRI WH

Series	Length	Nominal lumens	Voltage	Driver	CCT	CRI	Options	Finish
HRTC	L48 48"	5000LM 5,000 lumens 8000LM 8,000 lumens	MVOLT 120- 277V 120 120V 277 277V	GZ10 0-10V dimming	40K 4000 K 50K 5000 K	80CRI 80 CRI	CNPW Cord no plug, 15 amp, 18 gauge, 3 conductor, white, damp location, 6 feet CPTLW Cord plug, locking type, 15 amp, 18 gauge, 3 conductor, white, damp location, 6 feet[1] CPSBW Cord w/ Straight Blade Plug, 15 amp, 18 gauge, 3 conductor, white, damp location, 6 feet[1] CPTL20W Cord plug, locking type, 20 amp, 18 gauge, 3 conductor, white, damp location, 6 feet[2]	WH White
	L96 96"	10000LM 10,000 lumens 16000LM 16,000 lumens						

Notes

1 Must specify voltage. Not available with MVOLT.

2 CPTL20W only available with 277V.

UL LISTED AMBIENT RATING*

		Surface	Suspended
L48	5000LM	55°C	55°C
	8000LM	45°C	50°C
L96	10000LM	55°C	55°C
	16000LM	45°C	50°C

*Minimum Ambient is -20°C unless noted

HOLOPHANE LEADER IN LIGHTING SOLUTIONS
3825 Columbus Road Granville, OH 43023 Phone: 740-345-9631 www.holophane.com

© 2019-2020 Acuity Brands Lighting, Inc. All rights reserved. Rev. 03/09/20

OPERATIONAL DATA				
Length	Nominal Lumens	Input Wattage	CCT	Lumens (LPW)
L48	5000LM	27.4	40K	4700 (172)
			50K	4784 (174)
	8000LM	46.0	40K	7847 (170)
			50K	7987 (174)
L96	10000LM	64.3	40K	10658 (166)
			50K	10848 (169)
	16000LM	92.0	40K	16000 (174)
			50K	16285 (177)

LUMEN MAINTENANCE*							
		Operating Hours					
		0	15,000	30,000	45,000	60,000	100,000
L48	5000LM	100.0%	97.0%	94.0%	91.0%	89.0%	83.0%
	8000LM	100.0%	97.0%	94.0%	91.0%	89.0%	83.0%
L96	10000LM	100.0%	97.0%	94.0%	91.0%	89.0%	83.0%
	16000LM	100.0%	97.0%	94.0%	91.0%	89.0%	83.0%

*Data projected for 25°C ambient

HRTC L48

HRTC L96

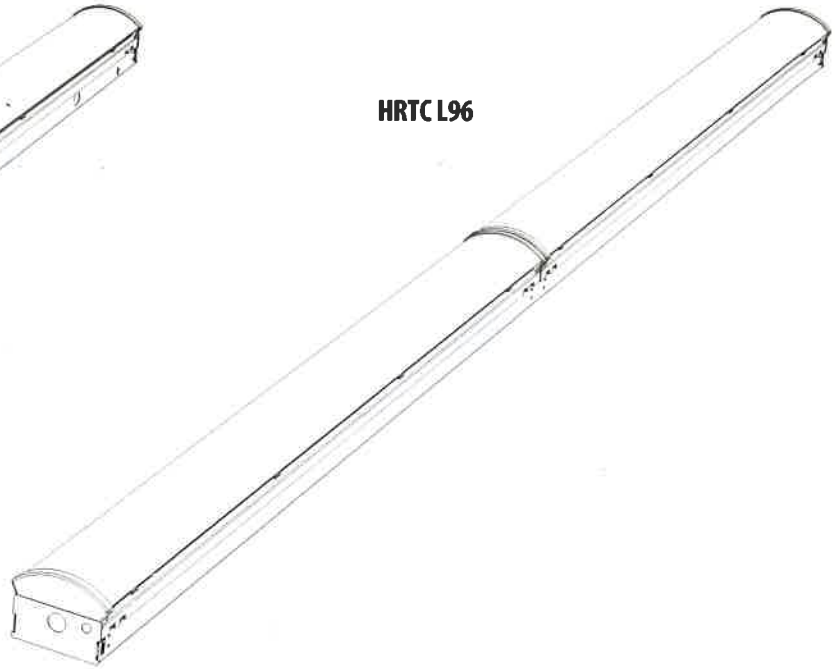

All dimensions are inches (centimeters) unless otherwise indicated.

	Length	Width	Height	Max Weight*
HRTC L48	48	4.71	3.65	8 lbs.
HRTC L96	96	4.71	3.65	16 lbs.

*adding options, weight will vary

HOLOPHANE
LEADER IN LIGHTING SOLUTIONS
3825 Columbus Road, Crawville, OH 43923 Phone: 740-345-9631 www.holophane.com

© 2019-2020 Acuity Brands Lighting, Inc. All rights reserved. Rev. 03/09/20

HOLOPHANE®
LEADER IN LIGHTING SOLUTIONS

Catalog Number	
Notes	
Type	NL-7A NL-7AEM

LED Striplight

HZL1D

24", 48" and 96" Lengths

FEATURES & SPECIFICATIONS

INTENDED USE — Built on the compact, low-profile Z strip channel, this LED strip offers long maintenance-free life, several color temperatures, lumen outputs and lengths. Ideal for new construction and retrofit applications in T8 lengths. Ideal for use in commercial, retail, manufacturing, warehouse, and display applications.**Certain airborne contaminants can diminish the integrity of acrylic and/or polycarbonate.** Click here for Acrylic-Polycarbonate Compatibility table for suitable uses.

CONSTRUCTION — Compact-design channel and cover are formed from code-gauge cold-rolled steel. Easy to install six-point row aligner included for continuous row mounting.

Finish: Paint options include high-gloss, baked white enamel (WH), or matte black (MB). After fabrication, five-stage iron phosphate pre-treatment ensures superior paint adhesion and rust resistance.

OPTICS — Standard diffuse snap on/snap off lens eliminates pixels, improves uniformity and minimizes glare.

ELECTRICAL — Utilizes high-output LEDs integrated on a two-layer circuit board, ensuring coolrunning operation. Optional internal pluggable wiring harness for reduced labor cost in row mounting applications (see PLR_ ordering information on page 3). Electronic LED driver is rated for 75 input watts maximum (see Operational Data on page two for actual wattage consumption), **multi-volt input and 0-10V dimming standard.** This fixture is designed to withstand a maximum line surge of 2.5kV at 0.75kA combination wave for indoor locations, for applications requiring higher level of protection additional surge protection must be provided.

LEDs provide 80CRI or 90 CRI at 3000 K, 3500 K, 4000 K or 5000 K.

Lumen output up to 1,500 lumens per foot. Luminaire should be installed in applications where ambient temperatures do not exceed 86 °F (30 °C).

INSTALLATION — Fixture may be surface mounted (with or without ZSPRG hanger), pendant or stem mounted with appropriate mounting options. Six-point aligner locks in place for easy continuous row mounting.

LISTINGS — CSA certified to US and Canadian safety standards. For use in damp locations between -40 °F (-40 °C) and 86 °F (30 °C).

DesignLights Consortium® (DLC) qualified product. Not all versions of this product may be DLC qualified. Please check the DLC Qualified Products List at www.designlights.org to confirm which versions are qualified.

WARRANTY — 5-year limited warranty. Complete warranty terms located at:
www.acuitybrands.com/support/warranty/terms-and-conditions

Note: Actual performance may differ as a result of end-user environment and application.
All values are design or typical values, measured under laboratory conditions at 25 °C.
Specifications subject to change without notice.

A+ Capable Luminaire

This item is an A+ capable luminaire, which has been designed and tested to provide consistent color appearance and out-of-the-box control compatibility with simple commissioning.

- All configurations of this luminaire meet the Acuity Brands' specification for chromatic consistency
- This luminaire is part of an A+ Certified solution for nLight® or XPoint™ Wireless control networks marked by a shaded background*

To learn more about A+, visit www.acuitybrands.com/aplus.

*See ordering tree for details

gotham® | E V O®

Multiple Layers of Light

Luminaire Type:

Catalog Number: NL-19

General Illumination Round Downlight 6"

250 - 8,000 lumens

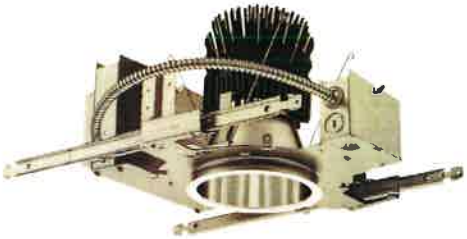

10,000 - 17,500 lumens

OVERVIEW

Feature Set

- Bounding Ray™ optical design
- Unitized optics mechanically attach the light engine to the lower reflector for complete optical alignment.
- 45° cutoff to source and source image
- Fully serviceable and upgradeable lensed LED light engine
- 70% lumen maintenance at 60,000 hours
- 2.5 SDCM; 85 CRI typical, 90+ CRI optional
- Fixtures are wet location, covered ceiling
- Available with 10% dimming, 1% dimming, or dim to dark
- Batwing distribution with feathered edges provides even illumination on horizontal and vertical surfaces
- ENERGY STAR® certified product

Distribution

Superior Performance

Nominal Lumens	250	500	750	1000	1500	2000	2500	3000	3500	4000	4500	5000	6000	8000	10,000	12,000	15,000	17,500
Delivered Lumens	297	519	776	994	1471	2006	2537	3077	3542	4027	4533	5256	6371	8247	10637	12332	15776	17801
Wattage	3.4	6.2	8.2	9.6	14.7	19.7	24.7	29.5	33.8	39.0	47.3	48.7	57.6	74.9	97.1	115.0	150.9	175.3
Lumens per Watt	87.4	83.7	94.6	103.5	100.1	101.8	102.7	104.3	104.8	103.3	95.8	107.9	110.6	110.1	109.5	107.2	104.5	101.5

COMPLIMENTARY PRODUCTS

Coordinated Apertures | Multiple Layers of Light

General Illumination Layer | EVO

High Center Beam Layer | Incito

EVO + Incito — Multiple Layers of Light

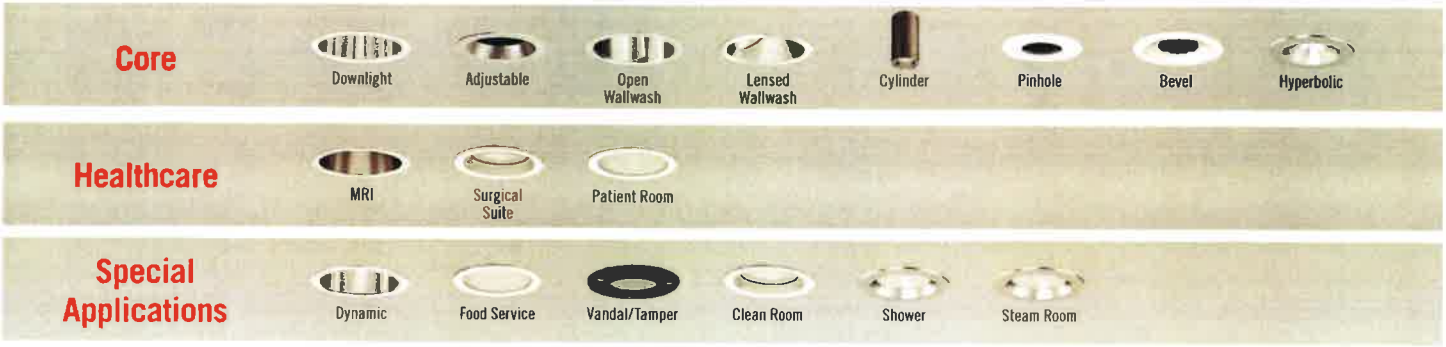

GOTHAM ARCHITECTURAL DOWNLIGHTING | 1400 Lester Road Conyers, GA 30012 | P 800-705-SERV (7378) | gothamlighting.com

ity Brands Lighting Inc. All Rights Reserved. Rev. 04/16/20 Specifications subject to change without notice.

July 29, 2021

gotham® | E V O®

Multiple Layers of Light

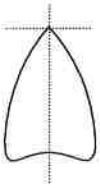

Luminaire Type:

Catalog Number: NL-19A

66 IP RATED

General Illumination Shower Downlight 6"

OVERVIEW

Feature Set

- Wipe down flush or regressed lens
- NSF2 Splash/Non-food Zone
- Fully serviceable and upgradeable lensed LED light engine
- 70% lumen maintenance at 60,000 hours
- 2.5 SDCM; 85 CRI typical, 90+ CRI optional
- IP66 rated room-side, Fixtures are wet location, covered ceiling
- Anti-microbial paint finish, optional
- Non-conductive dead-front trim
- Suitable for steam room application

Distribution

medium wide
1.0 S:MH

NL-19A

Superior Performance (Flush, Clear Lens)

Nominal Lumens	250	500	750	1000	1500	2000	2500	3000	3500	4000
Delivered	219	437	656	857	1274	1729	2187	2624	3062	3499
Wattage	3.4	6.2	8.2	9.6	14.7	19.7	24.7	29.5	33.8	39.0
Efficacy	64.4	70.5	80.0	89.3	86.7	87.8	88.5	88.9	90.6	89.7

*Lumen output for 80CRI - 3500K

COMPLIMENTARY PRODUCTS

Coordinated Apertures | Multiple Layers of Light

General Illumination Layer | EVO

High Center Beam Layer | Incito

EVO + Incito — Multiple Layers of Light

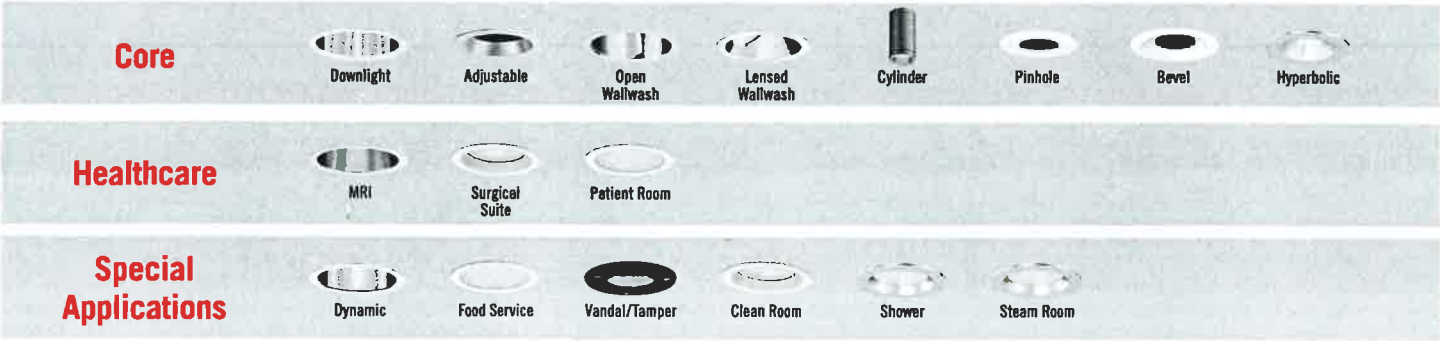

| GOTHAM ARCHITECTURAL DOWNLIGHTING | 1400 Lester Road Conyers, GA 30012 | P 800-705-SERV (7378) | gothamlighting.com

July 29, 2021 ity Brands Lighting Inc. All Rights Reserved. Rev. 04/20/20 Specifications subject to change without notice.

HOLOPHANE®
LEADER IN LIGHTING SOLUTIONS

Catalog Number	
Notes	
Type	NL-20

Cortez™

Premium Die-Cast Architectural Emergency Light

CZAFP

without photocell (black)

without photocell (natural aluminum)

with photocell (white)

without photocell (dark bronze)

FEATURES & SPECIFICATIONS

INTENDED USE — Ideal for applications requiring low-profile, attractive emergency lighting with Optional normally-off or normally-on with photocell control. Provides a minimum of 90 minutes of illumination both indoors and outdoors upon loss of AC power. **Certain airborne contaminants can diminish the integrity of acrylic and/or polycarbonate. Click here for Acrylic-Polycarbonate Compatibility table for suitable uses.**

CONSTRUCTION — Compact, low-profile, architectural design with die-cast aluminum housing. Finishes are texturized powder coat paint for dark bronze, white, black and non-texturized for natural aluminum. Test switch indicator light and remote enabled are located on the bottom of the housing and are easily accessible and visible from the floor.

OPTICS —LEDs with L70 of 55,000 hours. Delivers 635 lumens in Normal-On and Emergency operation. Optional field configurable for wide and forward throw distribution **(US Patent Pending)**. Outdoor wide throw distribution: 70' (3' path of egress) at a 7.5' mounting height with 1 FC Average.

4,000K correlated color temperature (CCT).

70 CRI.

ELECTRICAL — UVOLT (120 thru 347V, 50/60hz). Current-limiting charger maximizes battery life and minimizes energy consumption to provide low operating costs. Small battery chargers Certified in the CA Title 20 Appliance Efficiency Database

Short-circuit protection — current-limiting charger circuitry protects printed circuit board from shorts. Regulated charge voltage maintains a stable charge voltage over a wide range of line voltages.

Prevents over/undercharging that shortens battery life and reduces capacity. Filtered charger input minimizes charge voltage ripple and extends battery life.

Photocell option (PEL) for normally on product in order to discontinue illumination during periods when ambient light is present.

Remote units (OELR) are normally off. Emergency only functionality with DC power from an external battery.

BATTERY: Sealed, maintenance-free Lithium Iron Phosphate battery.

SELF-DIAGNOSTICS AND REMOTE TEST (SDRT OPTION): Automatic 24-hour recharge after a 90-minute discharge. Advanced electrical design provides constant light output throughout the entire discharge period for non-CW batteries. (For cold weather and cold temperature applications, the light may diminish though the discharge cycle). Brownout protection is automatically switched to emergency mode when supply voltage drops below approximately 80 percent nominal of 120, 220, 277 or 347. Other input voltages may vary. AC/LVD re-set allows battery connection before AC power is applied and prevents battery damage from deep discharge.

Self-Diagnostics: Continuously monitors AC functionality. Standard derangement monitoring will indicate disconnected battery, charger failure and displays green flashing indicator light while in emergency mode. Single multi-chromatic LED indicator to display two-state charging, test activation and three-state self-diagnostics.

Self-diagnostic testing: Five minutes every 30 days and 90 minutes annually. Diagnostic evaluation of lamps, AC to DC transfer, battery charging and condition of microprocessor. Automatic test is easily postponed for eight hours by activating manual test switch or use of remote tester (RTKITHLP accessory).

Manual testing: Test switch and remote tester (RTKITHLP accessory) provides manual activation of 60-second diagnostic testing for on-demand visual inspection. 90 minute manual testing can be enabled by pressing the test switch again while in test mode.

INSTALLATION — Wall mount: typically meets 7.5' to 14' mounting height from ground or floor. Power supplied by either mounting directly to a 4" square or 4" octagon j-box (wall mount) and accepts rigid or flex conduit.

LISTINGS — UL wet location listed standard at 32-122°F (0-50°C). Unit with CW battery(cold weather) listed for -22°F to 122°F (-30° to 50°C). Remote listed for -40°F to 122°F (-40° to 50°C). Meets or exceeds all applicable requirements for UL 924, NFPA 101 (current Life Safety code), NFPA 70 (NEC), NOM (Norma Oficial Mexicana), California Energy Commission Title 20 section 1605.3 (W)(4), FCC Title 47, Part 15, Subpart B and OSHA. List and labeled to comply with Canadian Standards C22.2 No. 141-10.

BUY AMERICAN — Product with the BAA option is assembled in the USA and meets the Buy America(n) government procurement requirements under FAR, DFARS and DOT. Please refer to www.acuitybrands.com/buy-american for additional information.

WARRANTY — 5-year limited warranty. Complete warranty terms located at: www.acuitybrands.com/support/customer-support/terms-and-conditions

Note: Actual performance may differ as a result of end-user environment and application.

All values are design or typical values, measured under laboratory conditions at 25 °C.

Specifications subject to change without notice.

† Small Battery Chargers Certified in the CA Title 20 Appliance Efficiency Database.

MOUNTING

All dimensions are inches (centimeters).
Shipping weight: 3.5 lbs. (1.59 kgs.)

Length: 6 1/2 (16.51)
Depth: 3 27/100 (8.30)
Height: 10 (25.45)
Weight : 3.5 lbs (1.59kg)

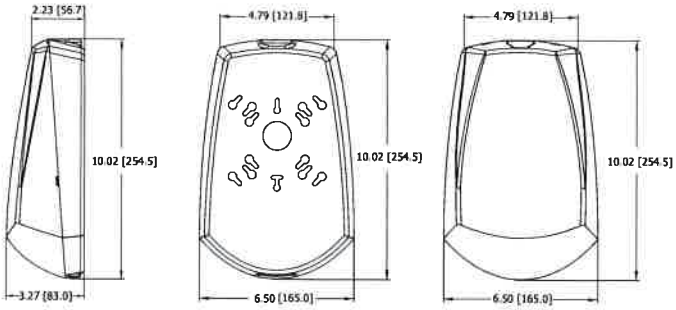

c UL us LISTED

HOLOPHANE®
LEADER IN LIGHTING SOLUTIONS

Catalog Number	
Notes	Type NL-21

Parkpak® LED

Mechanical
- Heavy grade A360 cast aluminum coupled with a rigorous 5-stage pretreatment, epoxy basecoat and polyester topcoat yield a finish that achieves a scribe creepage rating of 8 after 5,000 hours of salt spray.
- Mounts to a standard junction box
- Provide a swivel kit for pendant mount applications that is secured to a 4 inch square electrical box
- Wet location listed
- IP66 rating
- ¾" threaded plug(¾" - 14 NPT) on each side, accepts ¾" and ½" conduit.
- Vibe rating for surface mount: 3G
- Vibe rating for pendant mount: 3G at 1.5 feet, excludes swivel kit
- Pendant mount: ¾" - 14 NPT in center of housing
- Bird Shroud (Accessory)

Electrical
- Electrical harness for quick and safe disconnect / connect of power and options
- Rated for -40°C / -40°F minimum ambient
- Programmable electronic driver with 0-10V control leads
- Available in: 120-277V 50/60 Hz and 347-480V 50/60 Hz
- Standard: 3000K, 4000K and 5000K CCT (>70 CRI)
- Optional >80 CRI, 8 week lead-time
- Internal mounted emergency battery backup for operation in an ambient temperature ranging from -20°C / -4°F to 30°C / 86°F for P10 thru P40 performance packages, non CEC compliant
- All surge protection meets ANSI/IEEE C62.41.2 10kV/10kA
- Standard surge protection is 20kV/10kA with indicator light per ANSI C136.2
- Optional surge protection is 10kV/5kA per ANSI C136.2
- The emergency battery option surge protection is 10kV/5kA per ANSI C136.2

Optical
- The light engine shall be IP66
- Type V: E (entry), M (medium), R (rectangle) & W(wide)
- Asymmetric

Optical Material Options
- Borosilicate glass lens (GL)
- Polycarbonate lens (PY)
- Zero uplight option (FC)

Controls
- Field adjustable output
- Button style photocontrol
- XPoint™ Wireless control
- Motion Sensor / Ambient Photocontrol with mounting options ranging from (8-15') and (15-30')
- Title 24 compliance options available

Certification and Standards
- Luminaire is CSA listed, US and Canada
- Suitable for operation in an ambient temperature up to 40°C / 104°F for standard product
- Designlights Consortium® (DLC) qualified product. Not all versions of this product may be DLC qualified. Please check the DLC Qualified Products List at www.designlights.org/QPL to confirm which versions are qualified.
- LM-79 compliant
- The projected LED Lumen Maintenance shall be based only on IES LM-80-08 and TM-21

Warranty
5-year limited warranty. Complete warranty terms located at: www.acuitybrands.com/resources/terms-and-conditions

Note: Actual performance may differ as a result of end-user environment and application.
All values are design or typical values, measured under laboratory conditions at 25 °C.
Specifications subject to change without notice.

DIMENSIONAL DATA

Maximum weight: 24 lbs.

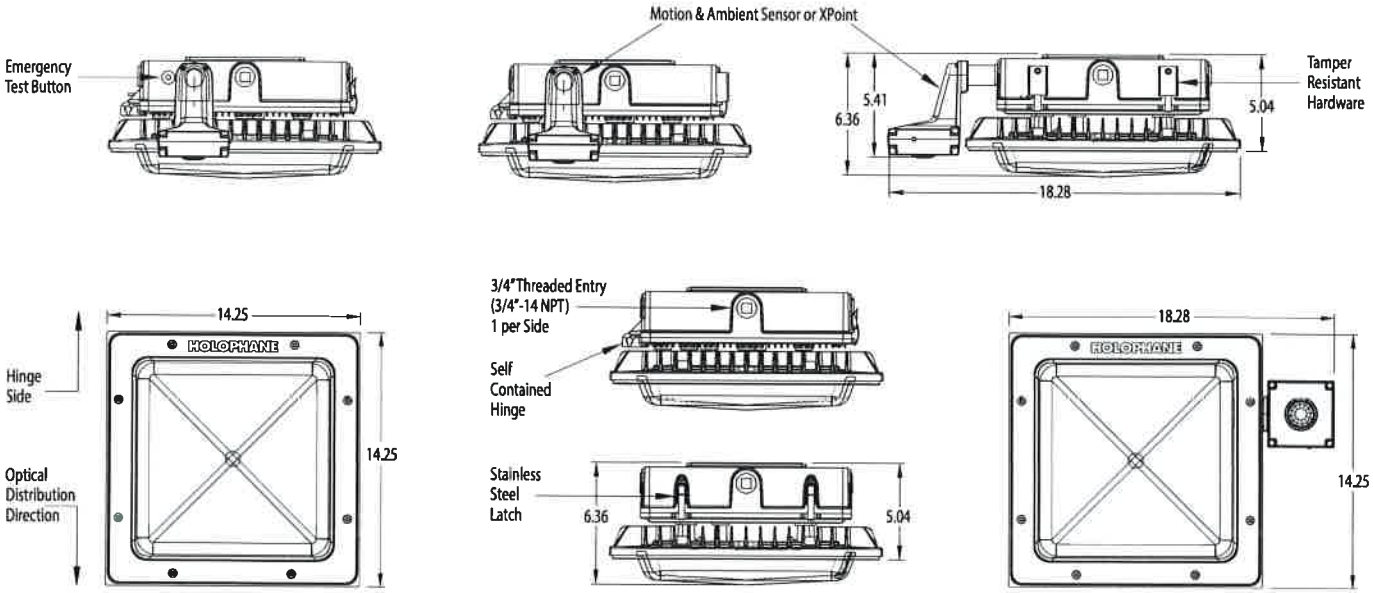

ghting, Inc. All rights reserved. Rev. 10/03/19 Specifications are subject to change without notice.

Parkpak LED

ORDERING INFORMATION

Example: PPSQL2 P40 40K AS GL T5M STM WHSDP 10KV

Series	LED Performance Package	Color Temperature	Voltage	Optics Material	Optics
PPSQL2 Parkpak LED	1 LEM Package P10 LED Package P20 LED Package P30 LED Package P40 LED Package 2 LEM Package P50 LED Package P60 LED Package P70 LED Package P80 LED Package (Refer to page 3 for performance details)	30K 3,000 K CCT 40K 4,000 K CCT 50K 5,000 K CCT	AS Auto-Sensing Voltage (120V-277V) 50/60HZ AH Auto-Sensing Voltage (347V-480V) 50/60HZ 12 120V 20 208V 24 240V 27 277V 34 347V 48 480V	GL Borosilicate Glass Lens (Standard) PY Polycarbonate Lens FC No uplight	T5E Type 5 Entry T5M Type 5 Medium T5R Type 5 Rectangular T5W Type 5 Wide ASY Asymmetric

Mounting	Super Durable Paint	SPD	CRI
STM Surface Mount, Top Feed, 12" Leads SSM Surface Mount, Side Feed, 12" Leads PSM Pendant Swivel Mount, 36" Leads (See page 8 for details)	BKSDP Black BZSDP Bronze GHSDP Graphite GYSDP Grey WHSDP White	(Blank) 20kV/10kA 10KV 10kV/5kA	(Blank) 70 CRI (STD) 80CRI 80 CRI

Options:

Adjustable/Programmable Options

AO Field Adjustable Output (for lumen/wattage outputs, refer to page 3 for details)

Control Options for 8-15' Mounting Height
(refer to page 7 for default settings)

MASL Motion / Ambient Sensor

MASL3FC3V924 Motion I Ambient Sensor, Title 24 Compliance, for use on Emergency Lighting Circuit

MASL3FC3V Motion I Ambient Sensor, Title 24 Compliance - Contact Holophane TSG for this option

XPoint Control Options
(refer to page 5 for default settings)

XAD MASL XPoint™ Wireless Enabled, Motion / Ambient Sensor, 8-15' Mounting Height

XAD924 MASL XPoint™ Wireless Enabled, Motion / Ambient Sensor, for use on Emergency Lighting Circuit

Control Options for 15-30' Mounting Height
(refer to page 7 for default settings)

MASH Motion / Ambient Sensor

MASH3FC3V924 Motion I Ambient Sensor, Title 24 Compliance, for use on Emergency Lighting Circuit

MASH3FC3V Motion I Ambient Sensor, Title 24 Compliance - Contact Holophane TSG for this option

XPoint Control Options
(refer to page 5 for default settings)

XAD MASH XPoint™ Wireless Enabled, Motion / Ambient Sensor, 8-15' Mounting Height

XAD924 MASH XPoint™ Wireless Enabled, Motion / Ambient Sensor, for use on Emergency Lighting Circuit

XPoint Control Options

XAD XPoint™ Wireless Enabled

XAD924 XPoint™ Wireless Enabled, for use on Emergency Lighting Circuit

Button Style Photocontrol Option

PE Button Style Photocontrol

Fuse Option

SF Single Fuse

DF Dual Fuse

Safety Option

EM Integral Emergency Battery Backup, non CEC compliant

TP Tamper Resistant Hardware

Accessories *(Ordered & Shipped Separately)*

Bird Shroud

BSPPSQL2 Field Installed, (Specify Paint Color)
Ex. BSPPSQL2 WHSDP

PPSQ2 P80 40K/50K AS PY T5E PSM GYSDP

Note:
Designlights Consortium® (DLC) qualified product. Not all versions of this product may be DLC qualified. Please check the DLC Qualified Products List at www.designlights.org/QPL to confirm which versions are qualified.

.ighting, Inc. All rights reserved. Rev. 10/03/19 Specifications are subject to change without notice.

HOLOPHANE
LEADER IN LIGHTING SOLUTIONS

Catalog Number	
Notes	
Type	EX

Die-Cast Aluminum Exits

MAGELLAN MEX

LED Lamps

FEATURES & SPECIFICATIONS

INTENDED USE — Ideal for applications requiring attractive die-cast aluminum signage, superior illumination and low energy consumption.

CONSTRUCTION — Precision-molded, die-cast aluminum construction — ultra-slim, compact housing. Fine-grain brushed aluminum faceplate with matte black electrostatic polymeric trim. Clear lacquer finish on brushed face inhibits fingerprints and other surface contaminants. Available in white or black housing finishes.

Electronics located inside housing (including battery for EL N models).

Fully overlapping light seal prevents light leaks. Universal directional chevron knockouts are completely concealed and easily removed. Hinged faceplate and spring latches for easy lamp compartment access.

Letters 6" high with 3/4" stroke, with 100 ft viewing distance rating, based upon UL924 standards.

U.S. Patent No. 5,739,639, 5,954,423 and 6,502,044.

OPTICS — Lamp is constructed using new LED technology. Provides perfectly uniform illumination to meet 3/4" letter stroke required by code.

The typical life of the exit LED lamp is 10 years, based on continuous operation. Unique LED lamp platform accommodates both single-face and double-face exits.

ELECTRICAL — Universal input voltage capabilities (120V through 277V, 50 or 60 Hz).

Solid-state electronic elements to eliminate risk of electromechanical failures.

Surge protection meets ANSI/IEEE C62.41 category B and IEC 1000 immunity standards for high voltage surges, electrostatic discharges, high frequency electrical fast transients and line voltage dips/swells.

Battery (EL N models): Sealed, maintenance-free nickel-cadmium battery delivers 90 minutes capacity to lamp.

Low voltage disconnect prevents excessive deep discharge that can permanently damage the battery.

Single-point microcomputer control for all electronic features.

Crystal oscillator timing system with watchdog protection for precision accuracy.

AC/LVD reset allows battery connection before AC power is applied and prevents battery damage from deep discharge.

Brownout protection is automatically switched to emergency mode when supply voltage drops below 80% of nominal.

Single multi-chromatic LED indicator to display two-state charging, test activation and three-state diagnostic status.

Test switch provides manual activation of 30-second diagnostic testing for on-demand visual inspection.

Diagnostics (SD option only): Two-state constant-current charger maximizes battery life and automatically recharges after battery discharge.

Self-diagnostic testing for five minutes every 30 days and 30 minutes every six months.

Diagnostic evaluation of LED light source, AC to DC transfer, charging and battery condition.

Continuously monitors AC functionality.

INSTALLATION — Universal mounting (top, end or back). Double face available with top or end mounting only (canopy included). Completely concealed, easily removable mounting knockouts. No exposed hardware.

Die-cast aluminum canopy provided for surface mount only.

LISTINGS — UL damp location listed 50°F - 104°F (10°C - 40°C). Meets UL 924, NFPA 101 (current Life Safety Code), NEC and OSHA illumination standards, and State of Minnesota energy-efficiency legislation requiring less than 20W consumption. North Carolina Department of Insurance.

WARRANTY — 5-year limited warranty. (Battery is prorated.) Complete warranty terms located at: www.acuitybrands.com/support/warranty/terms-and-conditions

Note: Actual performance may differ as a result of end-user environment and application.
All values are design or typical values, measured under laboratory conditions at 25 °C.
Specifications subject to change without notice.

ORDERING INFORMATION

For shortest lead times, configure products using **bolded options**.

Example: MEX S 1 R SD

MEX											
Family		**Face type**	**Housing color**		**Number of faces**		**Letter color**		**Input voltage**	**Operation**		**Options**	
MEX	LED, surface mount	**S** Stencil	**(blank)**	Brushed aluminum faceplate, black housing	**1**	Single face	**R**	Red	**(blank)** Universal input voltage (120-277V, 50 or 60 HZ)	**(blank)**	AC only	**(blank)**	None
			W	White faceplate, white housing	**2**	Double face	**G**	Green		X2	Lamp wired on two separate circuits	VR	Vandal-resistant shield (1/8" thick polycarbonate) with two tamper proof Torx-head screws
			B	Black faceplate, black housing						**EL N**	Nickel-cadmium battery	FI	Fire alarm flashing interface[1]
										SD	Nickel-cadmium battery with self-diagnostics	FIFA	Flashing fire alarm, emergency operation and intermittent audible alarm (one flash per minute)[2,3]
												FA	Flashing emergency operation and intermittent audible alarm.[4]

Accessories: *Order as separate catalog number.*	
ELA US12	12" stem kit[5]
ELA WG1	Back-mount wireguard (13 3/4"H x 15 1/4"W x 6"D)
ELA WGEXT	Top-mount wireguard (11"H x 18"W x 11"D)
ELA WGEXE	End-mount wireguard (11"H x 15"W x 4-3/4"D)

Notes

1. Only available with AC only or EL N operation only.
2. Available with SD operation only.
3. Either FA or FI function enabled with selector switch.
4. Available with EL N operation only.
5. See spec sheet HLP-ELA-StemKits.

3.3 Arc Flash Hazard Analysis Recommendations

As can be seen in the results table in *Section 2.4.6, Arc Flash Analysis Summary Table*, all buses in the system are rated at a Hazard Risk Category 3 or less with the exception of the main Existing Switchboard, which incident energy level falls into the HRC 4.

It is recommended that if any changes in the system impedance model such as utility available short circuit currents or connected loads are revised that the arc flash analysis be re-evaluated for potential changes in HRC levels and thus arc flash labeling.

E. Mechanical Calculations and Data Sheets- Building

MECHANICAL CALCULATIONS

IN COMPLIANCE WITH THE ARMY RESERVE DESIGN PROCESS AND SUBMITTAL REQUIREDMENTS - PART C, SECTION 7.4.1.2

July 29, 2021

GENERAL CALCULATIONS INPUT USING CARRIER HOURLY ANALYSIS PROGRAM HAP 5.11

Table of Contents:

1. Design Weather Parameter & MSHGs
2. Wall Constructions
3. Roof Construction
4. Window Construction
5. Door Construction

Design Weather Parameters & MSHGs

505100403 ORANGEBURG_ DESIGN MODEL_WSHP 05/20/2021
Mott MacDonald 09:15PM

Design Parameters:

City Name	**Orangeburg**	
Location	**New York**	
Latitude	**40.8**	Deg.
Longitude	**73.9**	Deg.
Elevation	**30.0**	ft
Summer Design Dry-Bulb	**92.0**	°F
Summer Coincident Wet-Bulb	**74.0**	°F
Summer Daily Range	**14.6**	°F
Winter Design Dry-Bulb	**13.0**	°F
Winter Design Wet-Bulb	**10.4**	°F
Atmospheric Clearness Number	**1.00**	
Average Ground Reflectance	**0.20**	
Soil Conductivity	**0.800**	BTU/(hr·ft·°F)
Local Time Zone (GMT +/- N hours)	**5.0**	hours
Consider Daylight Savings Time	**Yes**	
Daylight Savings Begins	**March, 9**	
Daylight Savings Ends	**November, 2**	
Simulation Weather Data	**(TM2)**	
Current Data is	**User Modified**	
Design Cooling Months	**January to December**	

Design Day Maximum Solar Heat Gains

(The MSHG values are expressed in BTU/(hr·ft²))

Month	N	NNE	NE	ENE	E	ESE	SE	SSE	S
January	19.0	19.0	19.0	80.4	145.5	206.1	236.0	250.8	252.6
February	23.5	23.5	45.4	126.5	189.3	229.4	249.0	246.9	241.2
March	28.4	28.4	100.8	163.2	215.6	239.7	237.1	219.5	207.0
April	33.4	71.1	137.1	193.8	220.9	224.9	201.5	172.8	156.1
May	36.8	103.7	159.8	204.5	220.7	206.8	175.1	134.4	115.4
June	44.7	115.0	166.8	206.7	216.7	198.2	161.4	118.2	97.9
July	37.7	102.4	159.2	202.0	214.7	203.7	169.5	131.7	111.4
August	35.0	68.5	135.0	187.0	210.8	217.5	195.6	167.4	150.4
September	29.6	29.6	92.3	157.1	201.0	228.9	225.9	211.3	201.6
October	24.4	24.4	49.9	116.3	181.0	223.0	240.0	238.5	234.8
November	19.4	19.4	19.4	76.7	146.9	198.4	235.2	248.4	249.7
December	17.0	17.0	17.0	61.9	126.2	190.7	225.4	246.9	250.4
Month	**SSW**	**SW**	**WSW**	**W**	**WNW**	**NW**	**NNW**	**HOR**	**Mult**
January	252.3	237.9	204.6	146.4	80.6	19.0	19.0	126.9	1.00
February	247.1	249.6	230.4	190.1	118.8	52.5	23.5	174.9	1.00
March	219.2	236.3	240.3	213.8	166.0	100.1	28.4	217.6	1.00
April	173.6	203.3	225.6	218.5	193.3	139.8	67.7	247.9	1.00
May	135.9	174.6	208.8	218.1	205.7	162.4	101.8	262.5	1.00
June	118.8	160.6	198.9	216.0	207.3	167.8	114.5	264.8	1.00
July	131.4	169.8	203.3	215.3	201.8	158.3	102.9	258.9	1.00
August	167.6	196.1	217.6	210.6	186.7	135.7	67.3	243.1	1.00
September	212.0	227.8	225.3	205.6	154.4	92.4	29.6	211.3	1.00
October	237.6	237.6	223.2	176.4	122.1	44.3	24.4	172.7	1.00
November	246.1	234.4	201.3	146.5	74.7	19.4	19.4	127.4	1.00
December	245.0	228.1	190.0	130.1	59.0	17.0	17.0	106.4	1.00

Mult. = User-defined solar multiplier factor.

CMU Wall Existing

Wall Details

Outside Surface Color ..... **Dark**
Absorptivity **0.900**
Overall U-Value ..... **0.222** BTU/(hr·ft²·°F)

Wall Layers Details (Inside to Outside)

Layers	Thickness in	Density lb/ft³	Specific Ht. BTU / (lb·°F)	R-Value (hr·ft²·°F)/BTU	Weight lb/ft²
Inside surface resistance	0.000	0.0	0.00	0.68500	0.0
Gypsum board	0.625	50.0	0.26	0.56022	2.6
Air space	0.000	0.0	0.00	0.91000	0.0
LW concrete block	8.000	38.0	0.20	2.02020	25.3
Outside surface resistance	0.000	0.0	0.00	0.33300	0.0
Totals	**8.625**	**-**		**4.50842**	**27.9**

Concrete Slab

Wall Details

Outside Surface Color ..... **Dark**
Absorptivity **0.900**
Overall U-Value ..... **0.176** BTU/(hr·ft²·°F)

Wall Layers Details (Inside to Outside)

Layers	Thickness in	Density lb/ft³	Specific Ht. BTU / (lb·°F)	R-Value (hr·ft²·°F)/BTU	Weight lb/ft²
Inside surface resistance	0.000	0.0	0.00	0.68500	0.0
LW concrete	6.000	40.0	0.20	5.00000	20.0
Outside surface resistance	0.000	0.0	0.00	0.00006	0.0
Totals	**6.000**	**-**		**5.68506**	**20.0**

Concrete Wall below grade existing

Wall Details

Outside Surface Color ..... **Dark**
Absorptivity **0.900**
Overall U-Value ..... **0.065** BTU/(hr·ft²·°F)

Wall Layers Details (Inside to Outside)

Layers	Thickness in	Density lb/ft³	Specific Ht. BTU / (lb·°F)	R-Value (hr·ft²·°F)/BTU	Weight lb/ft²
Inside surface resistance	0.000	0.0	0.00	0.00006	0.0
Gypsum board	0.875	50.0	0.26	0.78405	3.6
Air space	1.125	0.0	0.00	0.91000	0.0
LW concrete block	10.000	38.0	0.20	3.78788	31.7
board insulation	2.000	2.0	0.22	10.00000	0.3
Outside surface resistance	0.000	0.0	0.00	0.00006	0.0
Totals	**14.000**	**-**		**15.48205**	**35.6**

Concrete Wall Existing

Wall Details

Outside Surface Color ..... **Dark**
Absorptivity **0.900**
Overall U-Value ..... **0.061** BTU/(hr·ft²·°F)

Wall Layers Details (Inside to Outside)

Layers	Thickness in	Density lb/ft³	Specific Ht. BTU / (lb·°F)	R-Value (hr·ft²·°F)/BTU	Weight lb/ft²
Inside surface resistance	0.000	0.0	0.00	0.68500	0.0
Gypsum board	0.875	50.0	0.26	0.78405	3.6
Air space	1.125	0.0	0.00	0.91000	0.0
LW concrete block	10.000	38.0	0.20	3.77500	31.7
Board insulation	2.000	2.0	0.22	10.00000	0.3
Outside surface resistance	0.000	0.0	0.00	0.33300	0.0
Totals	**14.000**	**-**		**16.48705**	**35.6**

Securty Wall Existing

Wall Details

Outside Surface Color ..... **Dark**
Absorptivity **0.900**
Overall U-Value ..... **0.064** BTU/(hr·ft²·°F)

Wall Layers Details (Inside to Outside)

Layers	Thickness in	Density lb/ft³	Specific Ht. BTU / (lb·°F)	R-Value (hr·ft²·°F)/BTU	Weight lb/ft²
Inside surface resistance	0.000	0.0	0.00	0.68500	0.0
LW concrete block	8.000	38.0	0.20	3.03030	25.3
Air space	1.375	0.0	0.00	0.91000	0.0
6" metal studs	6.000	489.0	0.12	0.01908	244.5
5/8" gypsum Sheating	0.625	50.0	0.26	0.56004	2.6
board insulation	2.000	2.0	0.22	10.00000	0.3
Outside surface resistance	0.000	0.0	0.00	0.33300	0.0
Totals	**18.000**	**-**		**15.53742**	**272.8**

Steel frame Wall Existing

Wall Details

Outside Surface Color ..... **Dark**
Absorptivity **0.900**
Overall U-Value ..... **0.036** BTU/(hr·ft²·°F)

Wall Layers Details (Inside to Outside)

Layers	Thickness in	Density lb/ft³	Specific Ht. BTU / (lb·°F)	R-Value (hr·ft²·°F)/BTU	Weight lb/ft²
Inside surface resistance	0.000	0.0	0.00	0.68500	0.0
5/8" Gypsum board	0.625	50.0	0.26	0.56022	2.6
Air space	0.750	0.0	0.00	0.91000	0.0
Board insulation	6.000	2.0	0.22	15.00000	1.0
6" metal framing	6.000	489.0	0.12	0.01908	244.5
5/8" gypsum Sheating	0.625	50.0	0.26	0.56004	2.6
Board insulation	2.000	2.0	0.22	10.00000	0.3
Outside surface resistance	0.000	0.0	0.00	0.33300	0.0
Totals	**16.000**	**-**		**28.06734**	**251.0**

Steel frame Wall New

Wall Details

Outside Surface Color ..... **Dark**
Absorptivity **0.900**
Overall U-Value ..... **0.032** BTU/(hr·ft²·°F)

Wall Layers Details (Inside to Outside)

Layers	Thickness in	Density lb/ft³	Specific Ht. BTU / (lb·°F)	R-Value (hr·ft²·°F)/BTU	Weight lb/ft²
Inside surface resistance	0.000	0.0	0.00	0.68500	0.0
5/8" Gypsum board	0.625	50.0	0.26	0.56022	2.6
Air space	0.750	0.0	0.00	0.91000	0.0
Board insulation	6.000	2.0	0.22	21.00000	1.0
5/8" gypsum Sheating	0.625	50.0	0.26	0.56004	2.6
EIF	2.000	2.0	0.22	7.50000	0.3
Outside surface resistance	0.000	0.0	0.00	0.33300	0.0
Totals	**10.000**	**-**		**31.54826**	**6.5**

Roof

Roof Details

Outside Surface Color ..... **Dark**
Absorptivity **0.900**
Overall U-Value ..... **0.032** BTU/(hr·ft²·°F)

Roof Layers Details (Inside to Outside)

Layers	Thickness in	Density lb/ft³	Specific Ht. BTU / (lb·°F)	R-Value (hr·ft²·°F)/BTU	Weight lb/ft²
Inside surface resistance	0.000	0.0	0.00	0.68500	0.0
Steel deck	0.034	489.0	0.12	0.00011	1.4
Board insulation	6.000	2.0	0.22	30.00000	1.0
EPDM	0.375	70.0	0.35	0.33245	2.2
Outside surface resistance	0.000	0.0	0.00	0.33300	0.0
Totals	**6.409**	**-**		**31.35055**	**4.6**

Window Assembly

Window Details:

Detailed Input	**No**	
Height	**1.00**	ft
Width	**1.00**	ft
Overall U-Value	**0.320**	BTU/(hr·ft²·°F)
Overall Shade Coefficient	**0.460**	

Sample Door Assembly

Door Details:

Gross Area	**1.0**	ft²
Door U-Value	**0.300**	BTU/(hr·ft²·°F)

Glass Details:

Glass Area	**0.0**	ft²
Glass U-Value	**0.580**	BTU/(hr·ft²·°F)
Glass Shade Coefficient	**0.880**	
Glass Shaded All Day?	**No**	

DOAS CALCULATIONS INPUT USING CARRIER HOURLY ANALYSIS PROGRAM HAP 5.11

Table of Contents:

1. Space Input
2. Air System Input

1001 FAMILY SUPPORT

1. General Details:

Floor Area	**199.0**	ft²
Avg. Ceiling Height	**9.0**	ft
Building Weight	**70.0**	lb/ft²

1.1. OA Ventilation Requirements:

Space Usage	**User-Defined**	
OA Requirement 1	**35.0**	CFM
OA Requirement 2	**0.00**	CFM/ft²
Space Usage Defaults	**ASHRAE Std 62.1-2010**	

2. Internals:

2.1. Overhead Lighting:

Fixture Type	**Recessed (Unvented)**	
Wattage	**0.00**	W/ft²
Ballast Multiplier	**1.15**	
Schedule	**None**	

2.2. Task Lighting:

Wattage	**0.00**	W/ft²
Schedule	**None**	

2.3. Electrical Equipment:

Wattage	**0.0**	Watts
Schedule	**None**	

2.4. People:

Occupancy	**1.0**	Person
Activity Level	**User defined**	
Sensible	**0.0**	BTU/hr/person
Latent	**205.0**	BTU/hr/person
Schedule	**Office Occupancy Schedule**	

2.5. Miscellaneous Loads:

Sensible	**0**	BTU/hr
Schedule	**None**	
Latent	**0**	BTU/hr
Schedule	**None**	

3. Walls, Windows, Doors:

(No Wall, Window, Door data).

4. Roofs, Skylights:

(No Roof or Skylight data).

5. Infiltration:

Design Cooling	**0.00**	ACH
Design Heating	**0.00**	ACH
Energy Analysis	**0.00**	ACH

Infiltration occurs at all hours.

6. Floors:

Type	**Slab Floor On Grade**	
Floor Area	**0.0**	ft²
Total Floor U-Value	**0.087**	BTU/(hr·ft²·°F)
Exposed Perimeter	**0.0**	ft
Edge Insulation R-Value	**0.00**	(hr·ft²·°F)/BTU

7. Partitions:

(No partition data).

1002 TEAM RM

1. General Details:

Floor Area	**476.0**	ft²
Avg. Ceiling Height	**9.0**	ft
Building Weight	**70.0**	lb/ft²

1.1. OA Ventilation Requirements:

Space Usage	**User-Defined**	
OA Requirement 1	**90.0**	CFM
OA Requirement 2	**0.00**	CFM/ft²
Space Usage Defaults	**ASHRAE Std 62.1-2010**	

2. Internals:

2.1. Overhead Lighting:

Fixture Type	**Recessed (Unvented)**	
Wattage	**0.00**	W/ft²
Ballast Multiplier	**1.15**	
Schedule	**None**	

2.2. Task Lighting:

Wattage	**0.00**	W/ft²
Schedule	**None**	

2.3. Electrical Equipment:

Wattage	**0.0**	Watts
Schedule	**None**	

2.4. People:

Occupancy	**8.0**	People
Activity Level	**User defined**	
Sensible	**0.0**	BTU/hr/person
Latent	**205.0**	BTU/hr/person
Schedule	**Office Occupancy Schedule**	

2.5. Miscellaneous Loads:

Sensible	**0**	BTU/hr
Schedule	**None**	
Latent	**0**	BTU/hr
Schedule	**None**	

3. Walls, Windows, Doors:

(No Wall, Window, Door data).

4. Roofs, Skylights:

(No Roof or Skylight data).

5. Infiltration:

Design Cooling	**0.00**	CFM
Design Heating	**0.00**	CFM
Energy Analysis	**0.00**	CFM

Infiltration occurs only when the fan is off.

6. Floors:

Type	**Slab Floor On Grade**	
Floor Area	**0.0**	ft²
Total Floor U-Value	**0.087**	BTU/(hr·ft²·°F)
Exposed Perimeter	**47.0**	ft
Edge Insulation R-Value	**10.00**	(hr·ft²·°F)/BTU

7. Partitions:

(No partition data).

1003 PRIVATE OFFICE

1. General Details:

Floor Area	**112.0**	ft²
Avg. Ceiling Height	**9.0**	ft
Building Weight	**70.0**	lb/ft²

1.1. OA Ventilation Requirements:

Space Usage	**User-Defined**	
OA Requirement 1	**30.0**	CFM
OA Requirement 2	**0.00**	CFM/ft²
Space Usage Defaults	**ASHRAE Std 62.1-2010**	

2. Internals:

2.1. Overhead Lighting:

Fixture Type	**Recessed (Unvented)**	
Wattage	**0.00**	W/ft²
Ballast Multiplier	**1.15**	
Schedule	**None**	

2.2. Task Lighting:

Wattage	**0.00**	W/ft²
Schedule	**None**	

2.3. Electrical Equipment:

Wattage	**0.0**	Watts
Schedule	**None**	

2.4. People:

Occupancy	**1.0**	Person
Activity Level	**User defined**	
Sensible	**0.0**	BTU/hr/person
Latent	**205.0**	BTU/hr/person
Schedule	**Office Occupancy Schedule**	

2.5. Miscellaneous Loads:

Sensible	**0**	BTU/hr
Schedule	**None**	
Latent	**0**	BTU/hr
Schedule	**None**	

3. Walls, Windows, Doors:

(No Wall, Window, Door data).

4. Roofs, Skylights:

(No Roof or Skylight data).

5. Infiltration:

Design Cooling	**0.00**	ACH
Design Heating	**0.00**	ACH
Energy Analysis	**0.00**	ACH

Infiltration occurs only when the fan is off.

6. Floors:

Type	**Slab Floor On Grade**	
Floor Area	**0.0**	ft²
Total Floor U-Value	**0.087**	BTU/(hr·ft²·°F)
Exposed Perimeter	**0.0**	ft
Edge Insulation R-Value	**0.00**	(hr·ft²·°F)/BTU

7. Partitions:

(No partition data).

1004 RETENTION

1. General Details:

Floor Area	**278.0**	ft²
Avg. Ceiling Height	**9.0**	ft
Building Weight	**70.0**	lb/ft²

1.1. OA Ventilation Requirements:

Space Usage	**User-Defined**	
OA Requirement 1	**30.0**	CFM
OA Requirement 2	**0.00**	CFM/ft²
Space Usage Defaults	**ASHRAE Std 62.1-2010**	

2. Internals:

2.1. Overhead Lighting:

Fixture Type	**Recessed (Unvented)**	
Wattage	**0.00**	W/ft²
Ballast Multiplier	**1.15**	
Schedule	**None**	

2.2. Task Lighting:

Wattage	**0.00**	W/ft²
Schedule	**None**	

2.3. Electrical Equipment:

Wattage	**0.0**	Watts
Schedule	**None**	

2.4. People:

Occupancy	**1.0**	Person
Activity Level	**User defined**	
Sensible	**0.0**	BTU/hr/person
Latent	**205.0**	BTU/hr/person
Schedule	**Office Occupancy Schedule**	

2.5. Miscellaneous Loads:

Sensible	**0**	BTU/hr
Schedule	**None**	
Latent	**0**	BTU/hr
Schedule	**None**	

3. Walls, Windows, Doors:

(No Wall, Window, Door data).

4. Roofs, Skylights:

(No Roof or Skylight data).

5. Infiltration:

Design Cooling	**0.00**	CFM
Design Heating	**0.00**	CFM
Energy Analysis	**0.00**	CFM

Infiltration occurs only when the fan is off.

6. Floors:

Type	**Slab Floor On Grade**	
Floor Area	**0.0**	ft²
Total Floor U-Value	**0.087**	BTU/(hr·ft²·°F)
Exposed Perimeter	**12.0**	ft
Edge Insulation R-Value	**10.00**	(hr·ft²·°F)/BTU

7. Partitions:

(No partition data).

1005 BREAK RM

1. General Details:

Floor Area	**285.0**	ft²
Avg. Ceiling Height	**9.0**	ft
Building Weight	**70.0**	lb/ft²

1.1. OA Ventilation Requirements:

Space Usage	**User-Defined**	
OA Requirement 1	**85.0**	CFM
OA Requirement 2	**0.00**	CFM/ft²
Space Usage Defaults	**ASHRAE Std 62.1-2010**	

2. Internals:

2.1. Overhead Lighting:

Fixture Type	**Recessed (Unvented)**	
Wattage	**0.00**	W/ft²
Ballast Multiplier	**1.15**	
Schedule	**None**	

2.2. Task Lighting:

Wattage	**0.00**	W/ft²
Schedule	**None**	

2.3. Electrical Equipment:

Wattage	**0.0**	Watts
Schedule	**Office Equipment Schedule**	

2.4. People:

Occupancy	**6.0**	People
Activity Level	**User defined**	
Sensible	**0.0**	BTU/hr/person
Latent	**205.0**	BTU/hr/person
Schedule	**Office Occupancy Schedule**	

2.5. Miscellaneous Loads:

Sensible	**0**	BTU/hr
Schedule	**Office Equipment Schedule**	
Latent	**1540**	BTU/hr
Schedule	**Office Equipment Schedule**	

3. Walls, Windows, Doors:

(No Wall, Window, Door data).

4. Roofs, Skylights:

(No Roof or Skylight data).

5. Infiltration:

Design Cooling	**0.00**	CFM
Design Heating	**0.00**	CFM
Energy Analysis	**0.00**	CFM

Infiltration occurs only when the fan is off.

6. Floors:

Type	**Slab Floor On Grade**	
Floor Area	**0.0**	ft²
Total Floor U-Value	**0.087**	BTU/(hr·ft²·°F)
Exposed Perimeter	**17.0**	ft
Edge Insulation R-Value	**10.00**	(hr·ft²·°F)/BTU

7. Partitions:

(No partition data).

1006 LEARNING CENTER

1. General Details:

Floor Area	**308.0**	ft²
Avg. Ceiling Height	**9.0**	ft
Building Weight	**70.0**	lb/ft²

1.1. OA Ventilation Requirements:

Space Usage	**User-Defined**	
OA Requirement 1	**160.0**	CFM
OA Requirement 2	**0.00**	CFM/ft²
Space Usage Defaults	**ASHRAE Std 62.1-2010**	

2. Internals:

2.1. Overhead Lighting:

Fixture Type	**Recessed (Unvented)**	
Wattage	**0.00**	W/ft²
Ballast Multiplier	**1.15**	
Schedule	**None**	

2.2. Task Lighting:

Wattage	**0.00**	W/ft²
Schedule	**None**	

2.3. Electrical Equipment:

Wattage	**0.0**	Watts
Schedule	**None**	

2.4. People:

Occupancy	**9.0**	People
Activity Level	**User defined**	
Sensible	**0.0**	BTU/hr/person
Latent	**205.0**	BTU/hr/person
Schedule	**Office Occupancy Schedule**	

2.5. Miscellaneous Loads:

Sensible	**0**	BTU/hr
Schedule	**None**	
Latent	**0**	BTU/hr
Schedule	**None**	

3. Walls, Windows, Doors:

(No Wall, Window, Door data).

4. Roofs, Skylights:

(No Roof or Skylight data).

5. Infiltration:

Design Cooling	**0.00**	CFM
Design Heating	**0.00**	CFM
Energy Analysis	**0.00**	CFM

Infiltration occurs only when the fan is off.

6. Floors:

Type	**Slab Floor On Grade**	
Floor Area	**0.0**	ft²
Total Floor U-Value	**0.087**	BTU/(hr·ft²·°F)
Exposed Perimeter	**18.6**	ft
Edge Insulation R-Value	**10.00**	(hr·ft²·°F)/BTU

7. Partitions:

(No partition data).

1007 TEAM RM/ SIPRNET

1. General Details:

Floor Area	**279.0**	ft²
Avg. Ceiling Height	**9.0**	ft
Building Weight	**70.0**	lb/ft²

1.1. OA Ventilation Requirements:

Space Usage	**User-Defined**	
OA Requirement 1	**60.0**	CFM
OA Requirement 2	**0.00**	CFM/ft²
Space Usage Defaults	**ASHRAE Std 62.1-2010**	

2. Internals:

2.1. Overhead Lighting:

Fixture Type	**Recessed (Unvented)**	
Wattage	**0.00**	W/ft²
Ballast Multiplier	**1.15**	
Schedule	**None**	

2.2. Task Lighting:

Wattage	**0.00**	W/ft²
Schedule	**None**	

2.3. Electrical Equipment:

Wattage	**0.0**	Watts
Schedule	**None**	

2.4. People:

Occupancy	**6.0**	People
Activity Level	**User defined**	
Sensible	**0.0**	BTU/hr/person
Latent	**205.0**	BTU/hr/person
Schedule	**Office Occupancy Schedule**	

2.5. Miscellaneous Loads:

Sensible	**0**	BTU/hr
Schedule	**None**	
Latent	**0**	BTU/hr
Schedule	**None**	

3. Walls, Windows, Doors:

(No Wall, Window, Door data).

4. Roofs, Skylights:

(No Roof or Skylight data).

5. Infiltration:

Design Cooling	**0.00**	ACH
Design Heating	**0.00**	ACH
Energy Analysis	**0.00**	ACH

Infiltration occurs only when the fan is off.

6. Floors:

Type	**Slab Floor On Grade**	
Floor Area	**0.0**	ft²
Total Floor U-Value	**0.087**	BTU/(hr·ft²·°F)
Exposed Perimeter	**0.0**	ft
Edge Insulation R-Value	**0.00**	(hr·ft²·°F)/BTU

7. Partitions:

(No partition data).

1008 UNIT COMMONS

1. General Details:

Floor Area	**1029.0**	ft²
Avg. Ceiling Height	**9.0**	ft
Building Weight	**70.0**	lb/ft²

1.1. OA Ventilation Requirements:

Space Usage	**User-Defined**	
OA Requirement 1	**160.0**	CFM
OA Requirement 2	**0.00**	CFM/ft²
Space Usage Defaults	**ASHRAE Std 62.1-2010**	

2. Internals:

2.1. Overhead Lighting:

Fixture Type	**Recessed (Unvented)**	
Wattage	**0.00**	W/ft²
Ballast Multiplier	**1.15**	
Schedule	**None**	

2.2. Task Lighting:

Wattage	**0.00**	W/ft²
Schedule	**None**	

2.3. Electrical Equipment:

Wattage	**0.0**	Watts
Schedule	**None**	

2.4. People:

Occupancy	**13.0**	People
Activity Level	**User defined**	
Sensible	**0.0**	BTU/hr/person
Latent	**205.0**	BTU/hr/person
Schedule	**Office Occupancy Schedule**	

2.5. Miscellaneous Loads:

Sensible	**0**	BTU/hr
Schedule	**None**	
Latent	**0**	BTU/hr
Schedule	**None**	

3. Walls, Windows, Doors:

(No Wall, Window, Door data).

4. Roofs, Skylights:

(No Roof or Skylight data).

5. Infiltration:

Design Cooling	**0.00**	CFM
Design Heating	**0.00**	CFM
Energy Analysis	**0.00**	CFM

Infiltration occurs only when the fan is off.

6. Floors:

Type	**Slab Floor On Grade**	
Floor Area	**0.0**	ft²
Total Floor U-Value	**0.087**	BTU/(hr·ft²·°F)
Exposed Perimeter	**25.8**	ft
Edge Insulation R-Value	**10.00**	(hr·ft²·°F)/BTU

7. Partitions:

(No partition data).

1009 ADMIN SUPPORT

1. General Details:

Floor Area	**177.0**	ft²
Avg. Ceiling Height	**9.0**	ft
Building Weight	**70.0**	lb/ft²

1.1. OA Ventilation Requirements:

Space Usage	**User-Defined**	
OA Requirement 1	**40.0**	CFM
OA Requirement 2	**0.00**	CFM/ft²
Space Usage Defaults	**ASHRAE Std 62.1-2010**	

2. Internals:

2.1. Overhead Lighting:

Fixture Type	**Recessed (Unvented)**	
Wattage	**0.00**	W/ft²
Ballast Multiplier	**1.15**	
Schedule	**None**	

2.2. Task Lighting:

Wattage	**0.00**	W/ft²
Schedule	**None**	

2.3. Electrical Equipment:

Wattage	**0.0**	Watts
Schedule	**None**	

2.4. People:

Occupancy	**4.0**	People
Activity Level	**User defined**	
Sensible	**0.0**	BTU/hr/person
Latent	**205.0**	BTU/hr/person
Schedule	**Office Occupancy Schedule**	

2.5. Miscellaneous Loads:

Sensible	**0**	BTU/hr
Schedule	**None**	
Latent	**0**	BTU/hr
Schedule	**None**	

3. Walls, Windows, Doors:

(No Wall, Window, Door data).

4. Roofs, Skylights:

(No Roof or Skylight data).

5. Infiltration:

Design Cooling	**0.00**	ACH
Design Heating	**0.00**	ACH
Energy Analysis	**0.00**	ACH

Infiltration occurs only when the fan is off.

6. Floors:

Type	**Slab Floor On Grade**	
Floor Area	**0.0**	ft²
Total Floor U-Value	**0.087**	BTU/(hr·ft²·°F)
Exposed Perimeter	**0.0**	ft
Edge Insulation R-Value	**0.00**	(hr·ft²·°F)/BTU

7. Partitions:

(No partition data).

1010 PRIVATE OFFICE

1. General Details:

Floor Area	**210.0**	ft²
Avg. Ceiling Height	**9.0**	ft
Building Weight	**70.0**	lb/ft²

1.1. OA Ventilation Requirements:

Space Usage	**User-Defined**	
OA Requirement 1	**30.0**	CFM
OA Requirement 2	**0.00**	CFM/ft²
Space Usage Defaults	**ASHRAE Std 62.1-2010**	

2. Internals:

2.1. Overhead Lighting:

Fixture Type	**Recessed (Unvented)**	
Wattage	**0.00**	W/ft²
Ballast Multiplier	**1.15**	
Schedule	**None**	

2.2. Task Lighting:

Wattage	**0.00**	W/ft²
Schedule	**None**	

2.3. Electrical Equipment:

Wattage	**0.0**	Watts
Schedule	**None**	

2.4. People:

Occupancy	**1.0**	Person
Activity Level	**User defined**	
Sensible	**0.0**	BTU/hr/person
Latent	**205.0**	BTU/hr/person
Schedule	**Office Occupancy Schedule**	

2.5. Miscellaneous Loads:

Sensible	**0**	BTU/hr
Schedule	**None**	
Latent	**0**	BTU/hr
Schedule	**None**	

3. Walls, Windows, Doors:

(No Wall, Window, Door data).

4. Roofs, Skylights:

(No Roof or Skylight data).

5. Infiltration:

Design Cooling	**0.00**	CFM
Design Heating	**0.00**	CFM
Energy Analysis	**0.00**	CFM

Infiltration occurs only when the fan is off.

6. Floors:

Type	**Slab Floor On Grade**	
Floor Area	**0.0**	ft²
Total Floor U-Value	**0.087**	BTU/(hr·ft²·°F)
Exposed Perimeter	**12.0**	ft
Edge Insulation R-Value	**10.00**	(hr·ft²·°F)/BTU

7. Partitions:

(No partition data).

1011 SHARED OFFICE

1. General Details:

Floor Area	**493.0**	ft²
Avg. Ceiling Height	**9.0**	ft
Building Weight	**70.0**	lb/ft²

1.1. OA Ventilation Requirements:

Space Usage	**User-Defined**	
OA Requirement 1	**80.0**	CFM
OA Requirement 2	**0.00**	CFM/ft²
Space Usage Defaults	**ASHRAE Std 62.1-2010**	

2. Internals:

2.1. Overhead Lighting:

Fixture Type	**Recessed (Unvented)**	
Wattage	**0.00**	W/ft²
Ballast Multiplier	**1.15**	
Schedule	**None**	

2.2. Task Lighting:

Wattage	**0.00**	W/ft²
Schedule	**None**	

2.3. Electrical Equipment:

Wattage	**0.0**	Watts
Schedule	**None**	

2.4. People:

Occupancy	**4.0**	People
Activity Level	**User defined**	
Sensible	**0.0**	BTU/hr/person
Latent	**205.0**	BTU/hr/person
Schedule	**Office Occupancy Schedule**	

2.5. Miscellaneous Loads:

Sensible	**0**	BTU/hr
Schedule	**None**	
Latent	**0**	BTU/hr
Schedule	**None**	

3. Walls, Windows, Doors:

(No Wall, Window, Door data).

4. Roofs, Skylights:

(No Roof or Skylight data).

5. Infiltration:

Design Cooling	**0.00**	CFM
Design Heating	**0.00**	CFM
Energy Analysis	**0.00**	CFM

Infiltration occurs only when the fan is off.

6. Floors:

Type	**Slab Floor On Grade**	
Floor Area	**0.0**	ft²
Total Floor U-Value	**0.087**	BTU/(hr·ft²·°F)
Exposed Perimeter	**21.5**	ft
Edge Insulation R-Value	**10.00**	(hr·ft²·°F)/BTU

7. Partitions:

(No partition data).

1012 PRIVATE OFFICE

1. General Details:

Floor Area	**130.0**	ft²
Avg. Ceiling Height	**9.0**	ft
Building Weight	**70.0**	lb/ft²

1.1. OA Ventilation Requirements:

Space Usage	**User-Defined**	
OA Requirement 1	**25.0**	CFM
OA Requirement 2	**0.00**	CFM/ft²
Space Usage Defaults	**ASHRAE Std 62.1-2010**	

2. Internals:

2.1. Overhead Lighting:

Fixture Type	**Recessed (Unvented)**	
Wattage	**0.00**	W/ft²
Ballast Multiplier	**1.15**	
Schedule	**None**	

2.2. Task Lighting:

Wattage	**0.00**	W/ft²
Schedule	**None**	

2.3. Electrical Equipment:

Wattage	**0.0**	Watts
Schedule	**None**	

2.4. People:

Occupancy	**1.0**	Person
Activity Level	**User defined**	
Sensible	**0.0**	BTU/hr/person
Latent	**205.0**	BTU/hr/person
Schedule	**Office Occupancy Schedule**	

2.5. Miscellaneous Loads:

Sensible	**0**	BTU/hr
Schedule	**None**	
Latent	**0**	BTU/hr
Schedule	**None**	

3. Walls, Windows, Doors:

(No Wall, Window, Door data).

4. Roofs, Skylights:

(No Roof or Skylight data).

5. Infiltration:

Design Cooling	**0.00**	CFM
Design Heating	**0.00**	CFM
Energy Analysis	**0.00**	CFM

Infiltration occurs only when the fan is off.

6. Floors:

Type	**Slab Floor On Grade**	
Floor Area	**0.0**	ft²
Total Floor U-Value	**0.087**	BTU/(hr·ft²·°F)
Exposed Perimeter	**24.7**	ft
Edge Insulation R-Value	**10.00**	(hr·ft²·°F)/BTU

7. Partitions:

(No partition data).

1013 PRIVATE OFFICE

1. General Details:

Floor Area	**154.0**	ft²
Avg. Ceiling Height	**9.0**	ft
Building Weight	**70.0**	lb/ft²

1.1. OA Ventilation Requirements:

Space Usage	**User-Defined**	
OA Requirement 1	**20.0**	CFM
OA Requirement 2	**0.00**	CFM/ft²
Space Usage Defaults	**ASHRAE Std 62.1-2010**	

2. Internals:

2.1. Overhead Lighting:

Fixture Type	**Recessed (Unvented)**	
Wattage	**0.00**	W/ft²
Ballast Multiplier	**1.15**	
Schedule	**None**	

2.2. Task Lighting:

Wattage	**0.00**	W/ft²
Schedule	**None**	

2.3. Electrical Equipment:

Wattage	**0.0**	Watts
Schedule	**None**	

2.4. People:

Occupancy	**1.0**	Person
Activity Level	**User defined**	
Sensible	**0.0**	BTU/hr/person
Latent	**205.0**	BTU/hr/person
Schedule	**Office Occupancy Schedule**	

2.5. Miscellaneous Loads:

Sensible	**0**	BTU/hr
Schedule	**None**	
Latent	**0**	BTU/hr
Schedule	**None**	

3. Walls, Windows, Doors:

(No Wall, Window, Door data).

4. Roofs, Skylights:

(No Roof or Skylight data).

5. Infiltration:

Design Cooling	**0.00**	CFM
Design Heating	**0.00**	CFM
Energy Analysis	**0.00**	CFM

Infiltration occurs only when the fan is off.

6. Floors:

Type	**Slab Floor On Grade**	
Floor Area	**0.0**	ft²
Total Floor U-Value	**0.087**	BTU/(hr·ft²·°F)
Exposed Perimeter	**13.0**	ft
Edge Insulation R-Value	**10.00**	(hr·ft²·°F)/BTU

7. Partitions:

(No partition data).

1014 SHARE OFFICE

1. General Details:

Floor Area	**481.0**	ft²
Avg. Ceiling Height	**9.0**	ft
Building Weight	**70.0**	lb/ft²

1.1. OA Ventilation Requirements:

Space Usage	**User-Defined**	
OA Requirement 1	**75.0**	CFM
OA Requirement 2	**0.00**	CFM/ft²
Space Usage Defaults	**ASHRAE Std 62.1-2010**	

2. Internals:

2.1. Overhead Lighting:

Fixture Type	**Recessed (Unvented)**	
Wattage	**0.00**	W/ft²
Ballast Multiplier	**1.15**	
Schedule	**None**	

2.2. Task Lighting:

Wattage	**0.00**	W/ft²
Schedule	**None**	

2.3. Electrical Equipment:

Wattage	**0.0**	Watts
Schedule	**None**	

2.4. People:

Occupancy	**4.0**	People
Activity Level	**User defined**	
Sensible	**0.0**	BTU/hr/person
Latent	**205.0**	BTU/hr/person
Schedule	**Office Occupancy Schedule**	

2.5. Miscellaneous Loads:

Sensible	**0**	BTU/hr
Schedule	**None**	
Latent	**0**	BTU/hr
Schedule	**None**	

3. Walls, Windows, Doors:

(No Wall, Window, Door data).

4. Roofs, Skylights:

(No Roof or Skylight data).

5. Infiltration:

Design Cooling	**0.00**	ACH
Design Heating	**0.00**	ACH
Energy Analysis	**0.00**	ACH

Infiltration occurs only when the fan is off.

6. Floors:

Type	**Slab Floor On Grade**	
Floor Area	**0.0**	ft²
Total Floor U-Value	**0.087**	BTU/(hr·ft²·°F)
Exposed Perimeter	**0.0**	ft
Edge Insulation R-Value	**0.00**	(hr·ft²·°F)/BTU

7. Partitions:

(No partition data).

1015 PRIVATE OFFICE

1. General Details:

Floor Area	**151.0**	ft²
Avg. Ceiling Height	**9.0**	ft
Building Weight	**70.0**	lb/ft²

1.1. OA Ventilation Requirements:

Space Usage	**User-Defined**	
OA Requirement 1	**25.0**	CFM
OA Requirement 2	**0.00**	CFM/ft²
Space Usage Defaults	**ASHRAE Std 62.1-2010**	

2. Internals:

2.1. Overhead Lighting:

Fixture Type	**Recessed (Unvented)**	
Wattage	**0.00**	W/ft²
Ballast Multiplier	**1.15**	
Schedule	**Office Occupancy Schedule**	

2.2. Task Lighting:

Wattage	**0.00**	W/ft²
Schedule	**Office Occupancy Schedule**	

2.3. Electrical Equipment:

Wattage	**0.0**	Watts
Schedule	**None**	

2.4. People:

Occupancy	**1.0**	Person
Activity Level	**User defined**	
Sensible	**0.0**	BTU/hr/person
Latent	**205.0**	BTU/hr/person
Schedule	**Office Occupancy Schedule**	

2.5. Miscellaneous Loads:

Sensible	**0**	BTU/hr
Schedule	**None**	
Latent	**0**	BTU/hr
Schedule	**None**	

3. Walls, Windows, Doors:

(No Wall, Window, Door data).

4. Roofs, Skylights:

(No Roof or Skylight data).

5. Infiltration:

Design Cooling	**0.00**	CFM
Design Heating	**0.00**	CFM
Energy Analysis	**0.00**	CFM

Infiltration occurs only when the fan is off.

6. Floors:

Type	**Slab Floor On Grade**	
Floor Area	**0.0**	ft²
Total Floor U-Value	**0.087**	BTU/(hr·ft²·°F)
Exposed Perimeter	**13.0**	ft
Edge Insulation R-Value	**10.00**	(hr·ft²·°F)/BTU

7. Partitions:

(No partition data).

1016 PRIVATE OFFICE

1. General Details:

Floor Area	**119.0**	ft²
Avg. Ceiling Height	**9.0**	ft
Building Weight	**70.0**	lb/ft²

1.1. OA Ventilation Requirements:

Space Usage	**User-Defined**	
OA Requirement 1	**25.0**	CFM
OA Requirement 2	**0.00**	CFM/ft²
Space Usage Defaults	**ASHRAE Std 62.1-2010**	

2. Internals:

2.1. Overhead Lighting:

Fixture Type	**Recessed (Unvented)**	
Wattage	**0.00**	W/ft²
Ballast Multiplier	**1.15**	
Schedule	**None**	

2.2. Task Lighting:

Wattage	**0.00**	W/ft²
Schedule	**None**	

2.3. Electrical Equipment:

Wattage	**0.0**	Watts
Schedule	**None**	

2.4. People:

Occupancy	**1.0**	Person
Activity Level	**User defined**	
Sensible	**0.0**	BTU/hr/person
Latent	**205.0**	BTU/hr/person
Schedule	**Office Occupancy Schedule**	

2.5. Miscellaneous Loads:

Sensible	**0**	BTU/hr
Schedule	**None**	
Latent	**0**	BTU/hr
Schedule	**None**	

3. Walls, Windows, Doors:

(No Wall, Window, Door data).

4. Roofs, Skylights:

(No Roof or Skylight data).

5. Infiltration:

Design Cooling	**0.00**	CFM
Design Heating	**0.00**	CFM
Energy Analysis	**0.00**	CFM

Infiltration occurs only when the fan is off.

6. Floors:

Type	**Slab Floor On Grade**	
Floor Area	**0.0**	ft²
Total Floor U-Value	**0.087**	BTU/(hr·ft²·°F)
Exposed Perimeter	**10.7**	ft
Edge Insulation R-Value	**10.00**	(hr·ft²·°F)/BTU

7. Partitions:

(No partition data).

1017A CLASSROOM

1. General Details:

Floor Area	**439.5**	ft²
Avg. Ceiling Height	**9.0**	ft
Building Weight	**70.0**	lb/ft²

1.1. OA Ventilation Requirements:

Space Usage	**User-Defined**	
OA Requirement 1	**295.0**	CFM
OA Requirement 2	**0.00**	CFM/ft²
Space Usage Defaults	**ASHRAE Std 62.1-2010**	

2. Internals:

2.1. Overhead Lighting:

Fixture Type	**Recessed (Unvented)**	
Wattage	**0.00**	W/ft²
Ballast Multiplier	**1.15**	
Schedule	**None**	

2.2. Task Lighting:

Wattage	**0.00**	W/ft²
Schedule	**None**	

2.3. Electrical Equipment:

Wattage	**0.0**	Watts
Schedule	**None**	

2.4. People:

Occupancy	**18.0**	People
Activity Level	**User defined**	
Sensible	**0.0**	BTU/hr/person
Latent	**205.0**	BTU/hr/person
Schedule	**Office Occupancy Schedule**	

2.5. Miscellaneous Loads:

Sensible	**0**	BTU/hr
Schedule	**None**	
Latent	**0**	BTU/hr
Schedule	**None**	

3. Walls, Windows, Doors:

(No Wall, Window, Door data).

4. Roofs, Skylights:

(No Roof or Skylight data).

5. Infiltration:

Design Cooling	**0.00**	CFM
Design Heating	**0.00**	CFM
Energy Analysis	**0.00**	CFM

Infiltration occurs only when the fan is off.

6. Floors:

Type	**Slab Floor On Grade**	
Floor Area	**0.0**	ft²
Total Floor U-Value	**0.087**	BTU/(hr·ft²·°F)
Exposed Perimeter	**17.0**	ft
Edge Insulation R-Value	**10.00**	(hr·ft²·°F)/BTU

7. Partitions:

(No partition data).

1017B CLASSROOM

1. General Details:

Floor Area	**439.5**	ft²
Avg. Ceiling Height	**9.0**	ft
Building Weight	**70.0**	lb/ft²

1.1. OA Ventilation Requirements:

Space Usage	**User-Defined**	
OA Requirement 1	**295.0**	CFM
OA Requirement 2	**0.00**	CFM/ft²
Space Usage Defaults	**ASHRAE Std 62.1-2010**	

2. Internals:

2.1. Overhead Lighting:

Fixture Type	**Recessed (Unvented)**	
Wattage	**0.00**	W/ft²
Ballast Multiplier	**1.15**	
Schedule	**None**	

2.2. Task Lighting:

Wattage	**0.00**	W/ft²
Schedule	**None**	

2.3. Electrical Equipment:

Wattage	**0.0**	Watts
Schedule	**None**	

2.4. People:

Occupancy	**18.0**	People
Activity Level	**User defined**	
Sensible	**0.0**	BTU/hr/person
Latent	**205.0**	BTU/hr/person
Schedule	**Office Occupancy Schedule**	

2.5. Miscellaneous Loads:

Sensible	**0**	BTU/hr
Schedule	**None**	
Latent	**0**	BTU/hr
Schedule	**None**	

3. Walls, Windows, Doors:

(No Wall, Window, Door data).

4. Roofs, Skylights:

(No Roof or Skylight data).

5. Infiltration:

Design Cooling	**0.00**	CFM
Design Heating	**0.00**	CFM
Energy Analysis	**0.00**	CFM

Infiltration occurs only when the fan is off.

6. Floors:

Type	**Slab Floor On Grade**	
Floor Area	**0.0**	ft²
Total Floor U-Value	**0.087**	BTU/(hr·ft²·°F)
Exposed Perimeter	**17.0**	ft
Edge Insulation R-Value	**10.00**	(hr·ft²·°F)/BTU

7. Partitions:

(No partition data).

1018A CLASSROOM

1. General Details:

Floor Area	**439.5**	ft²
Avg. Ceiling Height	**9.0**	ft
Building Weight	**70.0**	lb/ft²

1.1. OA Ventilation Requirements:

Space Usage	**User-Defined**	
OA Requirement 1	**295.0**	CFM
OA Requirement 2	**0.00**	CFM/ft²
Space Usage Defaults	**ASHRAE Std 62.1-2010**	

2. Internals:

2.1. Overhead Lighting:

Fixture Type	**Recessed (Unvented)**	
Wattage	**0.00**	W/ft²
Ballast Multiplier	**1.15**	
Schedule	**None**	

2.2. Task Lighting:

Wattage	**0.00**	W/ft²
Schedule	**None**	

2.3. Electrical Equipment:

Wattage	**0.0**	Watts
Schedule	**None**	

2.4. People:

Occupancy	**18.0**	People
Activity Level	**User defined**	
Sensible	**0.0**	BTU/hr/person
Latent	**205.0**	BTU/hr/person
Schedule	**Office Occupancy Schedule**	

2.5. Miscellaneous Loads:

Sensible	**0**	BTU/hr
Schedule	**None**	
Latent	**0**	BTU/hr
Schedule	**None**	

3. Walls, Windows, Doors:

(No Wall, Window, Door data).

4. Roofs, Skylights:

(No Roof or Skylight data).

5. Infiltration:

Design Cooling	**0.00**	CFM
Design Heating	**0.00**	CFM
Energy Analysis	**0.00**	CFM

Infiltration occurs only when the fan is off.

6. Floors:

Type	**Slab Floor On Grade**	
Floor Area	**0.0**	ft²
Total Floor U-Value	**0.087**	BTU/(hr·ft²·°F)
Exposed Perimeter	**17.0**	ft
Edge Insulation R-Value	**10.00**	(hr·ft²·°F)/BTU

7. Partitions:

(No partition data).

1018B CLASSROOM

1. General Details:

Floor Area	**439.5**	ft²
Avg. Ceiling Height	**9.0**	ft
Building Weight	**70.0**	lb/ft²

1.1. OA Ventilation Requirements:

Space Usage	**User-Defined**	
OA Requirement 1	**295.0**	CFM
OA Requirement 2	**0.00**	CFM/ft²
Space Usage Defaults	**ASHRAE Std 62.1-2010**	

2. Internals:

2.1. Overhead Lighting:

Fixture Type	**Recessed (Unvented)**	
Wattage	**0.00**	W/ft²
Ballast Multiplier	**1.15**	
Schedule	**None**	

2.2. Task Lighting:

Wattage	**0.00**	W/ft²
Schedule	**None**	

2.3. Electrical Equipment:

Wattage	**0.0**	Watts
Schedule	**None**	

2.4. People:

Occupancy	**18.0**	People
Activity Level	**User defined**	
Sensible	**0.0**	BTU/hr/person
Latent	**205.0**	BTU/hr/person
Schedule	**Office Occupancy Schedule**	

2.5. Miscellaneous Loads:

Sensible	**0**	BTU/hr
Schedule	**None**	
Latent	**0**	BTU/hr
Schedule	**None**	

3. Walls, Windows, Doors:

(No Wall, Window, Door data).

4. Roofs, Skylights:

(No Roof or Skylight data).

5. Infiltration:

Design Cooling	**0.00**	CFM
Design Heating	**0.00**	CFM
Energy Analysis	**0.00**	CFM

Infiltration occurs only when the fan is off.

6. Floors:

Type	**Slab Floor On Grade**	
Floor Area	**0.0**	ft²
Total Floor U-Value	**0.087**	BTU/(hr·ft²·°F)
Exposed Perimeter	**17.0**	ft
Edge Insulation R-Value	**10.00**	(hr·ft²·°F)/BTU

7. Partitions:

(No partition data).

1019 ASSEMBLY

1. General Details:

Floor Area	**2561.0**	ft²
Avg. Ceiling Height	**9.3**	ft
Building Weight	**70.0**	lb/ft²

1.1. OA Ventilation Requirements:

Space Usage	**User-Defined**	
OA Requirement 1	**1480.0**	CFM
OA Requirement 2	**0.00**	CFM/ft²
Space Usage Defaults	**ASHRAE Std 62.1-2010**	

2. Internals:

2.1. Overhead Lighting:

Fixture Type	**Recessed (Unvented)**	
Wattage	**0.00**	W/ft²
Ballast Multiplier	**1.15**	
Schedule	**None**	

2.2. Task Lighting:

Wattage	**0.00**	W/ft²
Schedule	**None**	

2.3. Electrical Equipment:

Wattage	**0.0**	Watts
Schedule	**None**	

2.4. People:

Occupancy	**166.0**	People
Activity Level	**User defined**	
Sensible	**0.0**	BTU/hr/person
Latent	**205.0**	BTU/hr/person
Schedule	**Assembly Schedule**	

2.5. Miscellaneous Loads:

Sensible	**0**	BTU/hr
Schedule	**None**	
Latent	**0**	BTU/hr
Schedule	**None**	

3. Walls, Windows, Doors:

(No Wall, Window, Door data).

4. Roofs, Skylights:

(No Roof or Skylight data).

5. Infiltration:

Design Cooling	**0.00**	CFM
Design Heating	**0.00**	CFM
Energy Analysis	**0.00**	CFM

Infiltration occurs only when the fan is off.

6. Floors:

Type	**Slab Floor On Grade**	
Floor Area	**0.0**	ft²
Total Floor U-Value	**0.087**	BTU/(hr·ft²·°F)
Exposed Perimeter	**44.0**	ft
Edge Insulation R-Value	**10.00**	(hr·ft²·°F)/BTU

7. Partitions:

(No partition data).

1020 CHAIR STORAGE

1. General Details:

Floor Area	**279.0**	ft²
Avg. Ceiling Height	**9.0**	ft
Building Weight	**70.0**	lb/ft²

1.1. OA Ventilation Requirements:

Space Usage	**User-Defined**	
OA Requirement 1	**30.0**	CFM
OA Requirement 2	**0.00**	CFM/ft²
Space Usage Defaults	**ASHRAE Std 62.1-2010**	

2. Internals:

2.1. Overhead Lighting:

Fixture Type	**Recessed (Unvented)**	
Wattage	**0.00**	W/ft²
Ballast Multiplier	**1.15**	
Schedule	**None**	

2.2. Task Lighting:

Wattage	**0.00**	W/ft²
Schedule	**None**	

2.3. Electrical Equipment:

Wattage	**0.0**	Watts
Schedule	**None**	

2.4. People:

Occupancy	**0.0**	Person
Activity Level	**User defined**	
Sensible	**0.0**	BTU/hr/person
Latent	**205.0**	BTU/hr/person
Schedule	**None**	

2.5. Miscellaneous Loads:

Sensible	**0**	BTU/hr
Schedule	**None**	
Latent	**0**	BTU/hr
Schedule	**None**	

3. Walls, Windows, Doors:

(No Wall, Window, Door data).

4. Roofs, Skylights:

(No Roof or Skylight data).

5. Infiltration:

Design Cooling	**0.00**	ACH
Design Heating	**0.00**	ACH
Energy Analysis	**0.00**	ACH

Infiltration occurs only when the fan is off.

6. Floors:

Type	**Slab Floor On Grade**	
Floor Area	**0.0**	ft²
Total Floor U-Value	**0.087**	BTU/(hr·ft²·°F)
Exposed Perimeter	**0.0**	ft
Edge Insulation R-Value	**0.00**	(hr·ft²·°F)/BTU

7. Partitions:

(No partition data).

1021 OFFICE

1. General Details:

Floor Area	**81.0**	ft²
Avg. Ceiling Height	**9.0**	ft
Building Weight	**70.0**	lb/ft²

1.1. OA Ventilation Requirements:

Space Usage	**User-Defined**	
OA Requirement 1	**30.0**	CFM
OA Requirement 2	**0.00**	CFM/ft²
Space Usage Defaults	**ASHRAE Std 62.1-2010**	

2. Internals:

2.1. Overhead Lighting:

Fixture Type	**Recessed (Unvented)**	
Wattage	**0.00**	W/ft²
Ballast Multiplier	**1.15**	
Schedule	**None**	

2.2. Task Lighting:

Wattage	**0.00**	W/ft²
Schedule	**None**	

2.3. Electrical Equipment:

Wattage	**0.0**	Watts
Schedule	**None**	

2.4. People:

Occupancy	**1.0**	Person
Activity Level	**User defined**	
Sensible	**0.0**	BTU/hr/person
Latent	**205.0**	BTU/hr/person
Schedule	**Office Occupancy Schedule**	

2.5. Miscellaneous Loads:

Sensible	**0**	BTU/hr
Schedule	**None**	
Latent	**0**	BTU/hr
Schedule	**None**	

3. Walls, Windows, Doors:

(No Wall, Window, Door data).

4. Roofs, Skylights:

(No Roof or Skylight data).

5. Infiltration:

Design Cooling	**0.00**	ACH
Design Heating	**0.00**	ACH
Energy Analysis	**0.00**	ACH

Infiltration occurs only when the fan is off.

6. Floors:

Type	**Slab Floor On Grade**	
Floor Area	**0.0**	ft²
Total Floor U-Value	**0.087**	BTU/(hr·ft²·°F)
Exposed Perimeter	**0.0**	ft
Edge Insulation R-Value	**0.00**	(hr·ft²·°F)/BTU

7. Partitions:

(No partition data).

1022 STORAGE (KITCHEN)

1. General Details:

Floor Area	**137.0**	ft²
Avg. Ceiling Height	**9.0**	ft
Building Weight	**70.0**	lb/ft²

1.1. OA Ventilation Requirements:

Space Usage	**User-Defined**	
OA Requirement 1	**20.0**	CFM
OA Requirement 2	**0.00**	CFM/ft²
Space Usage Defaults	**ASHRAE Std 62.1-2010**	

2. Internals:

2.1. Overhead Lighting:

Fixture Type	**Recessed (Unvented)**	
Wattage	**0.00**	W/ft²
Ballast Multiplier	**1.15**	
Schedule	**None**	

2.2. Task Lighting:

Wattage	**0.00**	W/ft²
Schedule	**None**	

2.3. Electrical Equipment:

Wattage	**0.0**	Watts
Schedule	**None**	

2.4. People:

Occupancy	**0.0**	Person
Activity Level	**User defined**	
Sensible	**0.0**	BTU/hr/person
Latent	**205.0**	BTU/hr/person
Schedule	**None**	

2.5. Miscellaneous Loads:

Sensible	**0**	BTU/hr
Schedule	**None**	
Latent	**0**	BTU/hr
Schedule	**None**	

3. Walls, Windows, Doors:

(No Wall, Window, Door data).

4. Roofs, Skylights:

(No Roof or Skylight data).

5. Infiltration:

Design Cooling	**0.00**	ACH
Design Heating	**0.00**	ACH
Energy Analysis	**0.00**	ACH

Infiltration occurs only when the fan is off.

6. Floors:

Type	**Slab Floor On Grade**	
Floor Area	**0.0**	ft²
Total Floor U-Value	**0.087**	BTU/(hr·ft²·°F)
Exposed Perimeter	**0.0**	ft
Edge Insulation R-Value	**0.00**	(hr·ft²·°F)/BTU

7. Partitions:

(No partition data).

1023 KITCHEN

1. General Details:

Floor Area	**284.0**	ft²
Avg. Ceiling Height	**9.0**	ft
Building Weight	**70.0**	lb/ft²

1.1. OA Ventilation Requirements:

Space Usage	**User-Defined**	
OA Requirement 1	**90.0**	CFM
OA Requirement 2	**0.00**	CFM/ft²
Space Usage Defaults	**ASHRAE Std 62.1-2010**	

2. Internals:

2.1. Overhead Lighting:

Fixture Type	**Recessed (Unvented)**	
Wattage	**0.00**	W/ft²
Ballast Multiplier	**1.15**	
Schedule	**None**	

2.2. Task Lighting:

Wattage	**0.00**	W/ft²
Schedule	**None**	

2.3. Electrical Equipment:

Wattage	**0.0**	Watts
Schedule	**None**	

2.4. People:

Occupancy	**4.0**	People
Activity Level	**User defined**	
Sensible	**0.0**	BTU/hr/person
Latent	**455.0**	BTU/hr/person
Schedule	**Kitchen Occupancy Schedule**	

2.5. Miscellaneous Loads:

Sensible	**0**	BTU/hr
Schedule	**None**	
Latent	**0**	BTU/hr
Schedule	**None**	

3. Walls, Windows, Doors:

(No Wall, Window, Door data).

4. Roofs, Skylights:

(No Roof or Skylight data).

5. Infiltration:

Design Cooling	**0.00**	ACH
Design Heating	**0.00**	ACH
Energy Analysis	**0.00**	ACH

Infiltration occurs only when the fan is off.

6. Floors:

Type	**Slab Floor On Grade**	
Floor Area	**0.0**	ft²
Total Floor U-Value	**0.087**	BTU/(hr·ft²·°F)
Exposed Perimeter	**0.0**	ft
Edge Insulation R-Value	**0.00**	(hr·ft²·°F)/BTU

7. Partitions:

(No partition data).

1024 SCULLERY

1. General Details:

Floor Area	**184.0**	ft²
Avg. Ceiling Height	**9.0**	ft
Building Weight	**70.0**	lb/ft²

1.1. OA Ventilation Requirements:

Space Usage	**User-Defined**	
OA Requirement 1	**50.0**	CFM
OA Requirement 2	**0.00**	CFM/ft²
Space Usage Defaults	**ASHRAE Std 62.1-2010**	

2. Internals:

2.1. Overhead Lighting:

Fixture Type	**Recessed (Unvented)**	
Wattage	**0.00**	W/ft²
Ballast Multiplier	**1.15**	
Schedule	**None**	

2.2. Task Lighting:

Wattage	**0.00**	W/ft²
Schedule	**None**	

2.3. Electrical Equipment:

Wattage	**0.0**	Watts
Schedule	**None**	

2.4. People:

Occupancy	**0.0**	Person
Activity Level	**User defined**	
Sensible	**0.0**	BTU/hr/person
Latent	**455.0**	BTU/hr/person
Schedule	**None**	

2.5. Miscellaneous Loads:

Sensible	**0**	BTU/hr
Schedule	**None**	
Latent	**0**	BTU/hr
Schedule	**None**	

3. Walls, Windows, Doors:

(No Wall, Window, Door data).

4. Roofs, Skylights:

(No Roof or Skylight data).

5. Infiltration:

Design Cooling	**0.00**	CFM
Design Heating	**0.00**	CFM
Energy Analysis	**0.00**	CFM

Infiltration occurs only when the fan is off.

6. Floors:

Type	**Slab Floor On Grade**	
Floor Area	**0.0**	ft²
Total Floor U-Value	**0.087**	BTU/(hr·ft²·°F)
Exposed Perimeter	**18.4**	ft
Edge Insulation R-Value	**10.00**	(hr·ft²·°F)/BTU

7. Partitions:

(No partition data).

1025 SECURE STORAGE

1. General Details:

Floor Area	**491.0**	ft²
Avg. Ceiling Height	**8.5**	ft
Building Weight	**70.0**	lb/ft²

1.1. OA Ventilation Requirements:

Space Usage	**User-Defined**	
OA Requirement 1	**90.0**	CFM
OA Requirement 2	**0.00**	CFM/ft²
Space Usage Defaults	**ASHRAE Std 62.1-2010**	

2. Internals:

2.1. Overhead Lighting:

Fixture Type	**Recessed (Unvented)**	
Wattage	**0.00**	W/ft²
Ballast Multiplier	**1.15**	
Schedule	**None**	

2.2. Task Lighting:

Wattage	**0.00**	W/ft²
Schedule	**None**	

2.3. Electrical Equipment:

Wattage	**0.0**	Watts
Schedule	**None**	

2.4. People:

Occupancy	**0.0**	Person
Activity Level	**User defined**	
Sensible	**0.0**	BTU/hr/person
Latent	**205.0**	BTU/hr/person
Schedule	**None**	

2.5. Miscellaneous Loads:

Sensible	**0**	BTU/hr
Schedule	**None**	
Latent	**0**	BTU/hr
Schedule	**None**	

3. Walls, Windows, Doors:

(No Wall, Window, Door data).

4. Roofs, Skylights:

(No Roof or Skylight data).

5. Infiltration:

Design Cooling	**0.00**	CFM
Design Heating	**0.00**	CFM
Energy Analysis	**0.00**	CFM

Infiltration occurs only when the fan is off.

6. Floors:

Type	**Slab Floor On Grade**	
Floor Area	**0.0**	ft²
Total Floor U-Value	**0.087**	BTU/(hr·ft²·°F)
Exposed Perimeter	**18.8**	ft
Edge Insulation R-Value	**10.00**	(hr·ft²·°F)/BTU

7. Partitions:

(No partition data).

1026 LACTATION

1. General Details:

Floor Area	**143.0**	ft²
Avg. Ceiling Height	**9.0**	ft
Building Weight	**70.0**	lb/ft²

1.1. OA Ventilation Requirements:

Space Usage	**User-Defined**	
OA Requirement 1	**20.0**	CFM
OA Requirement 2	**0.00**	CFM/ft²
Space Usage Defaults	**ASHRAE Std 62.1-2010**	

2. Internals:

2.1. Overhead Lighting:

Fixture Type	**Recessed (Unvented)**	
Wattage	**0.00**	W/ft²
Ballast Multiplier	**1.15**	
Schedule	**None**	

2.2. Task Lighting:

Wattage	**0.00**	W/ft²
Schedule	**None**	

2.3. Electrical Equipment:

Wattage	**0.0**	Watts
Schedule	**None**	

2.4. People:

Occupancy	**1.0**	Person
Activity Level	**User defined**	
Sensible	**0.0**	BTU/hr/person
Latent	**205.0**	BTU/hr/person
Schedule	**Office Occupancy Schedule**	

2.5. Miscellaneous Loads:

Sensible	**0**	BTU/hr
Schedule	**None**	
Latent	**0**	BTU/hr
Schedule	**None**	

3. Walls, Windows, Doors:

(No Wall, Window, Door data).

4. Roofs, Skylights:

(No Roof or Skylight data).

5. Infiltration:

Design Cooling	**0.00**	ACH
Design Heating	**0.00**	ACH
Energy Analysis	**0.00**	ACH

Infiltration occurs only when the fan is off.

6. Floors:

Type	**Slab Floor On Grade**	
Floor Area	**0.0**	ft²
Total Floor U-Value	**0.087**	BTU/(hr·ft²·°F)
Exposed Perimeter	**0.0**	ft
Edge Insulation R-Value	**0.00**	(hr·ft²·°F)/BTU

7. Partitions:

(No partition data).

1026A STORAGE

1. General Details:

Floor Area	**33.0**	ft²
Avg. Ceiling Height	**9.0**	ft
Building Weight	**70.0**	lb/ft²

1.1. OA Ventilation Requirements:

Space Usage	**User-Defined**	
OA Requirement 1	**20.0**	CFM
OA Requirement 2	**0.00**	CFM/ft²
Space Usage Defaults	**ASHRAE Std 62.1-2010**	

2. Internals:

2.1. Overhead Lighting:

Fixture Type	**Recessed (Unvented)**	
Wattage	**0.00**	W/ft²
Ballast Multiplier	**1.15**	
Schedule	**None**	

2.2. Task Lighting:

Wattage	**0.00**	W/ft²
Schedule	**None**	

2.3. Electrical Equipment:

Wattage	**0.0**	Watts
Schedule	**None**	

2.4. People:

Occupancy	**0.0**	Person
Activity Level	**User defined**	
Sensible	**0.0**	BTU/hr/person
Latent	**0.0**	BTU/hr/person
Schedule	**None**	

2.5. Miscellaneous Loads:

Sensible	**0**	BTU/hr
Schedule	**None**	
Latent	**0**	BTU/hr
Schedule	**None**	

3. Walls, Windows, Doors:

(No Wall, Window, Door data).

4. Roofs, Skylights:

(No Roof or Skylight data).

5. Infiltration:

Design Cooling	**0.00**	ACH
Design Heating	**0.00**	ACH
Energy Analysis	**0.00**	ACH

Infiltration occurs only when the fan is off.

6. Floors:

Type	**Slab Floor On Grade**	
Floor Area	**0.0**	ft²
Total Floor U-Value	**0.087**	BTU/(hr·ft²·°F)
Exposed Perimeter	**0.0**	ft
Edge Insulation R-Value	**0.00**	(hr·ft²·°F)/BTU

7. Partitions:

(No partition data).

1027 PRIVATE OFFICE

1. General Details:

Floor Area	**144.0**	ft²
Avg. Ceiling Height	**9.0**	ft
Building Weight	**70.0**	lb/ft²

1.1. OA Ventilation Requirements:

Space Usage	**User-Defined**	
OA Requirement 1	**20.0**	CFM
OA Requirement 2	**0.00**	CFM/ft²
Space Usage Defaults	**ASHRAE Std 62.1-2010**	

2. Internals:

2.1. Overhead Lighting:

Fixture Type	**Recessed (Unvented)**	
Wattage	**0.00**	W/ft²
Ballast Multiplier	**1.15**	
Schedule	**None**	

2.2. Task Lighting:

Wattage	**0.00**	W/ft²
Schedule	**None**	

2.3. Electrical Equipment:

Wattage	**0.0**	Watts
Schedule	**None**	

2.4. People:

Occupancy	**1.0**	Person
Activity Level	**User defined**	
Sensible	**0.0**	BTU/hr/person
Latent	**205.0**	BTU/hr/person
Schedule	**Office Occupancy Schedule**	

2.5. Miscellaneous Loads:

Sensible	**0**	BTU/hr
Schedule	**None**	
Latent	**0**	BTU/hr
Schedule	**None**	

3. Walls, Windows, Doors:

(No Wall, Window, Door data).

4. Roofs, Skylights:

(No Roof or Skylight data).

5. Infiltration:

Design Cooling	**0.00**	ACH
Design Heating	**0.00**	ACH
Energy Analysis	**0.00**	ACH

Infiltration occurs only when the fan is off.

6. Floors:

Type	**Slab Floor On Grade**	
Floor Area	**0.0**	ft²
Total Floor U-Value	**0.087**	BTU/(hr·ft²·°F)
Exposed Perimeter	**0.0**	ft
Edge Insulation R-Value	**0.00**	(hr·ft²·°F)/BTU

7. Partitions:

(No partition data).

1028 PRIVATE OFFICE

1. General Details:

Floor Area	**151.0**	ft²
Avg. Ceiling Height	**9.0**	ft
Building Weight	**70.0**	lb/ft²

1.1. OA Ventilation Requirements:

Space Usage	**User-Defined**	
OA Requirement 1	**20.0**	CFM
OA Requirement 2	**0.00**	CFM/ft²
Space Usage Defaults	**ASHRAE Std 62.1-2010**	

2. Internals:

2.1. Overhead Lighting:

Fixture Type	**Recessed (Unvented)**	
Wattage	**0.00**	W/ft²
Ballast Multiplier	**1.15**	
Schedule	**None**	

2.2. Task Lighting:

Wattage	**0.00**	W/ft²
Schedule	**None**	

2.3. Electrical Equipment:

Wattage	**0.0**	Watts
Schedule	**None**	

2.4. People:

Occupancy	**1.0**	Person
Activity Level	**User defined**	
Sensible	**0.0**	BTU/hr/person
Latent	**205.0**	BTU/hr/person
Schedule	**Office Occupancy Schedule**	

2.5. Miscellaneous Loads:

Sensible	**0**	BTU/hr
Schedule	**None**	
Latent	**0**	BTU/hr
Schedule	**None**	

3. Walls, Windows, Doors:

(No Wall, Window, Door data).

4. Roofs, Skylights:

Exp.	Roof Gross Area (ft²)	Roof Slope (deg.)	Skylight Qty.
H	151.0	0	0

4.1. Construction Types for Exposure H

Roof Type	**Roof**

5. Infiltration:

Design Cooling	**0.00**	ACH
Design Heating	**0.00**	ACH
Energy Analysis	**0.00**	ACH

Infiltration occurs only when the fan is off.

6. Floors:

Type	**Slab Floor On Grade**	
Floor Area	**0.0**	ft²
Total Floor U-Value	**0.087**	BTU/(hr·ft²·°F)
Exposed Perimeter	**0.0**	ft
Edge Insulation R-Value	**0.00**	(hr·ft²·°F)/BTU

7. Partitions:

(No partition data).

1029 ARMORER

1. General Details:

Floor Area	**163.0**	ft²
Avg. Ceiling Height	**9.0**	ft
Building Weight	**70.0**	lb/ft²

1.1. OA Ventilation Requirements:

Space Usage	**User-Defined**	
OA Requirement 1	**30.0**	CFM
OA Requirement 2	**0.00**	CFM/ft²
Space Usage Defaults	**ASHRAE Std 62.1-2010**	

2. Internals:

2.1. Overhead Lighting:

Fixture Type	**Recessed (Unvented)**	
Wattage	**0.00**	W/ft²
Ballast Multiplier	**1.15**	
Schedule	**None**	

2.2. Task Lighting:

Wattage	**0.00**	W/ft²
Schedule	**None**	

2.3. Electrical Equipment:

Wattage	**0.0**	Watts
Schedule	**None**	

2.4. People:

Occupancy	**2.0**	People
Activity Level	**User defined**	
Sensible	**0.0**	BTU/hr/person
Latent	**205.0**	BTU/hr/person
Schedule	**Office Occupancy Schedule**	

2.5. Miscellaneous Loads:

Sensible	**0**	BTU/hr
Schedule	**None**	
Latent	**0**	BTU/hr
Schedule	**None**	

3. Walls, Windows, Doors:

(No Wall, Window, Door data).

4. Roofs, Skylights:

(No Roof or Skylight data).

5. Infiltration:

Design Cooling	**0.00**	ACH
Design Heating	**0.00**	ACH
Energy Analysis	**0.00**	ACH

Infiltration occurs only when the fan is off.

6. Floors:

Type	**Slab Floor On Grade**	
Floor Area	**0.0**	ft²
Total Floor U-Value	**0.087**	BTU/(hr·ft²·°F)
Exposed Perimeter	**0.0**	ft
Edge Insulation R-Value	**0.00**	(hr·ft²·°F)/BTU

7. Partitions:

(No partition data).

1030 ARNS VAULT

1. General Details:

Floor Area	**910.0**	ft²
Avg. Ceiling Height	**9.0**	ft
Building Weight	**70.0**	lb/ft²

1.1. OA Ventilation Requirements:

Space Usage	**User-Defined**	
OA Requirement 1	**465.0**	CFM
OA Requirement 2	**0.00**	CFM/ft²
Space Usage Defaults	**ASHRAE Std 62.1-2010**	

2. Internals:

2.1. Overhead Lighting:

Fixture Type	**Recessed (Unvented)**	
Wattage	**0.00**	W/ft²
Ballast Multiplier	**1.15**	
Schedule	**None**	

2.2. Task Lighting:

Wattage	**0.00**	W/ft²
Schedule	**None**	

2.3. Electrical Equipment:

Wattage	**0.0**	Watts
Schedule	**None**	

2.4. People:

Occupancy	**0.0**	Person
Activity Level	**User defined**	
Sensible	**0.0**	BTU/hr/person
Latent	**205.0**	BTU/hr/person
Schedule	**None**	

2.5. Miscellaneous Loads:

Sensible	**0**	BTU/hr
Schedule	**None**	
Latent	**0**	BTU/hr
Schedule	**None**	

3. Walls, Windows, Doors:

(No Wall, Window, Door data).

4. Roofs, Skylights:

(No Roof or Skylight data).

5. Infiltration:

Design Cooling	**0.00**	ACH
Design Heating	**0.00**	ACH
Energy Analysis	**0.00**	ACH

Infiltration occurs only when the fan is off.

6. Floors:

Type	**Slab Floor On Grade**	
Floor Area	**0.0**	ft²
Total Floor U-Value	**0.087**	BTU/(hr·ft²·°F)
Exposed Perimeter	**0.0**	ft
Edge Insulation R-Value	**0.00**	(hr·ft²·°F)/BTU

7. Partitions:

(No partition data).

1031 PHYSICAL READINESS

1. General Details:

Floor Area	**1602.0**	ft²
Avg. Ceiling Height	**9.0**	ft
Building Weight	**70.0**	lb/ft²

1.1. OA Ventilation Requirements:

Space Usage	**User-Defined**	
OA Requirement 1	**875.0**	CFM
OA Requirement 2	**0.00**	CFM/ft²
Space Usage Defaults	**ASHRAE Std 62.1-2010**	

2. Internals:

2.1. Overhead Lighting:

Fixture Type	**Recessed (Unvented)**	
Wattage	**0.00**	W/ft²
Ballast Multiplier	**1.15**	
Schedule	**None**	

2.2. Task Lighting:

Wattage	**0.00**	W/ft²
Schedule	**None**	

2.3. Electrical Equipment:

Wattage	**0.0**	Watts
Schedule	**None**	

2.4. People:

Occupancy	**30.0**	People
Activity Level	**User defined**	
Sensible	**0.0**	BTU/hr/person
Latent	**455.0**	BTU/hr/person
Schedule	**Physical Occupancy Schedule**	

2.5. Miscellaneous Loads:

Sensible	**0**	BTU/hr
Schedule	**None**	
Latent	**0**	BTU/hr
Schedule	**None**	

3. Walls, Windows, Doors:

(No Wall, Window, Door data).

4. Roofs, Skylights:

(No Roof or Skylight data).

5. Infiltration:

Design Cooling	**0.00**	CFM
Design Heating	**0.00**	CFM
Energy Analysis	**0.00**	CFM

Infiltration occurs only when the fan is off.

6. Floors:

Type	**Slab Floor On Grade**	
Floor Area	**0.0**	ft²
Total Floor U-Value	**0.087**	BTU/(hr·ft²·°F)
Exposed Perimeter	**71.8**	ft
Edge Insulation R-Value	**10.00**	(hr·ft²·°F)/BTU

7. Partitions:

(No partition data).

1032 UNIT STORAGE

1. General Details:

Floor Area	**2526.0**	ft²
Avg. Ceiling Height	**13.0**	ft
Building Weight	**70.0**	lb/ft²

1.1. OA Ventilation Requirements:

Space Usage	**User-Defined**	
OA Requirement 1	**550.0**	CFM
OA Requirement 2	**0.00**	CFM/ft²
Space Usage Defaults	**ASHRAE Std 62.1-2010**	

2. Internals:

2.1. Overhead Lighting:

Fixture Type	**Recessed (Unvented)**	
Wattage	**0.00**	W/ft²
Ballast Multiplier	**1.15**	
Schedule	**None**	

2.2. Task Lighting:

Wattage	**0.00**	W/ft²
Schedule	**None**	

2.3. Electrical Equipment:

Wattage	**0.0**	Watts
Schedule	**None**	

2.4. People:

Occupancy	**0.0**	Person
Activity Level	**User defined**	
Sensible	**0.0**	BTU/hr/person
Latent	**205.0**	BTU/hr/person
Schedule	**None**	

2.5. Miscellaneous Loads:

Sensible	**0**	BTU/hr
Schedule	**None**	
Latent	**0**	BTU/hr
Schedule	**None**	

3. Walls, Windows, Doors:

(No Wall, Window, Door data).

4. Roofs, Skylights:

(No Roof or Skylight data).

5. Infiltration:

Design Cooling	**0.00**	CFM
Design Heating	**0.00**	CFM
Energy Analysis	**0.00**	CFM

Infiltration occurs only when the fan is off.

6. Floors:

Type	**Slab Floor On Grade**	
Floor Area	**0.0**	ft²
Total Floor U-Value	**0.087**	BTU/(hr·ft²·°F)
Exposed Perimeter	**41.3**	ft
Edge Insulation R-Value	**10.00**	(hr·ft²·°F)/BTU

7. Partitions:

(No partition data).

1033 PRIVATE OFFICE

1. General Details:

Floor Area	**127.0**	ft²
Avg. Ceiling Height	**9.0**	ft
Building Weight	**70.0**	lb/ft²

1.1. OA Ventilation Requirements:

Space Usage	**User-Defined**	
OA Requirement 1	**30.0**	CFM
OA Requirement 2	**0.00**	CFM/ft²
Space Usage Defaults	**ASHRAE Std 62.1-2010**	

2. Internals:

2.1. Overhead Lighting:

Fixture Type	**Recessed (Unvented)**	
Wattage	**0.00**	W/ft²
Ballast Multiplier	**1.15**	
Schedule	**None**	

2.2. Task Lighting:

Wattage	**0.00**	W/ft²
Schedule	**None**	

2.3. Electrical Equipment:

Wattage	**0.0**	Watts
Schedule	**None**	

2.4. People:

Occupancy	**1.0**	Person
Activity Level	**User defined**	
Sensible	**0.0**	BTU/hr/person
Latent	**205.0**	BTU/hr/person
Schedule	**Office Occupancy Schedule**	

2.5. Miscellaneous Loads:

Sensible	**0**	BTU/hr
Schedule	**None**	
Latent	**0**	BTU/hr
Schedule	**None**	

3. Walls, Windows, Doors:

(No Wall, Window, Door data).

4. Roofs, Skylights:

(No Roof or Skylight data).

5. Infiltration:

Design Cooling	**0.00**	CFM
Design Heating	**0.00**	CFM
Energy Analysis	**0.00**	CFM

Infiltration occurs only when the fan is off.

6. Floors:

Type	**Slab Floor On Grade**	
Floor Area	**0.0**	ft²
Total Floor U-Value	**0.087**	BTU/(hr·ft²·°F)
Exposed Perimeter	**11.6**	ft
Edge Insulation R-Value	**10.00**	(hr·ft²·°F)/BTU

7. Partitions:

(No partition data).

1034 STORAGE

1. General Details:

Floor Area	**207.0**	ft²
Avg. Ceiling Height	**13.0**	ft
Building Weight	**70.0**	lb/ft²

1.1. OA Ventilation Requirements:

Space Usage	**User-Defined**	
OA Requirement 1	**20.0**	CFM
OA Requirement 2	**0.00**	CFM/ft²
Space Usage Defaults	**ASHRAE Std 62.1-2010**	

2. Internals:

2.1. Overhead Lighting:

Fixture Type	**Recessed (Unvented)**	
Wattage	**0.00**	W/ft²
Ballast Multiplier	**1.15**	
Schedule	**None**	

2.2. Task Lighting:

Wattage	**0.00**	W/ft²
Schedule	**None**	

2.3. Electrical Equipment:

Wattage	**0.0**	Watts
Schedule	**None**	

2.4. People:

Occupancy	**0.0**	Person
Activity Level	**User defined**	
Sensible	**0.0**	BTU/hr/person
Latent	**205.0**	BTU/hr/person
Schedule	**None**	

2.5. Miscellaneous Loads:

Sensible	**0**	BTU/hr
Schedule	**None**	
Latent	**0**	BTU/hr
Schedule	**None**	

3. Walls, Windows, Doors:

(No Wall, Window, Door data).

4. Roofs, Skylights:

(No Roof or Skylight data).

5. Infiltration:

Design Cooling	**0.00**	CFM
Design Heating	**0.00**	CFM
Energy Analysis	**0.00**	CFM

Infiltration occurs only when the fan is off.

6. Floors:

Type	**Slab Floor On Grade**	
Floor Area	**0.0**	ft²
Total Floor U-Value	**0.087**	BTU/(hr·ft²·°F)
Exposed Perimeter	**12.0**	ft
Edge Insulation R-Value	**10.00**	(hr·ft²·°F)/BTU

7. Partitions:

(No partition data).

1035 STAGING

1. General Details:

Floor Area	**1394.0**	ft²
Avg. Ceiling Height	**17.0**	ft
Building Weight	**70.0**	lb/ft²

1.1. OA Ventilation Requirements:

Space Usage	**User-Defined**	
OA Requirement 1	**400.0**	CFM
OA Requirement 2	**0.00**	CFM/ft²
Space Usage Defaults	**ASHRAE Std 62.1-2010**	

2. Internals:

2.1. Overhead Lighting:

Fixture Type	**Recessed (Unvented)**	
Wattage	**0.00**	W/ft²
Ballast Multiplier	**1.15**	
Schedule	**None**	

2.2. Task Lighting:

Wattage	**0.00**	W/ft²
Schedule	**None**	

2.3. Electrical Equipment:

Wattage	**0.0**	Watts
Schedule	**None**	

2.4. People:

Occupancy	**0.0**	Person
Activity Level	**User defined**	
Sensible	**0.0**	BTU/hr/person
Latent	**205.0**	BTU/hr/person
Schedule	**None**	

2.5. Miscellaneous Loads:

Sensible	**0**	BTU/hr
Schedule	**None**	
Latent	**0**	BTU/hr
Schedule	**None**	

3. Walls, Windows, Doors:

(No Wall, Window, Door data).

4. Roofs, Skylights:

(No Roof or Skylight data).

5. Infiltration:

Design Cooling	**0.00**	ACH
Design Heating	**0.00**	ACH
Energy Analysis	**0.00**	ACH

Infiltration occurs at all hours.

6. Floors:

Type	**Slab Floor On Grade**	
Floor Area	**0.0**	ft²
Total Floor U-Value	**0.087**	BTU/(hr·ft²·°F)
Exposed Perimeter	**38.4**	ft
Edge Insulation R-Value	**10.00**	(hr·ft²·°F)/BTU

7. Partitions:

(No partition data).

1036 UNIT STORAGE

1. General Details:

Floor Area	**1629.0**	ft²
Avg. Ceiling Height	**17.0**	ft
Building Weight	**70.0**	lb/ft²

1.1. OA Ventilation Requirements:

Space Usage	**User-Defined**	
OA Requirement 1	**470.0**	CFM
OA Requirement 2	**0.00**	CFM/ft²
Space Usage Defaults	**ASHRAE Std 62.1-2010**	

2. Internals:

2.1. Overhead Lighting:

Fixture Type	**Recessed (Unvented)**	
Wattage	**0.00**	W/ft²
Ballast Multiplier	**1.15**	
Schedule	**None**	

2.2. Task Lighting:

Wattage	**0.00**	W/ft²
Schedule	**None**	

2.3. Electrical Equipment:

Wattage	**0.0**	Watts
Schedule	**None**	

2.4. People:

Occupancy	**0.0**	Person
Activity Level	**User defined**	
Sensible	**0.0**	BTU/hr/person
Latent	**205.0**	BTU/hr/person
Schedule	**None**	

2.5. Miscellaneous Loads:

Sensible	**0**	BTU/hr
Schedule	**None**	
Latent	**0**	BTU/hr
Schedule	**None**	

3. Walls, Windows, Doors:

(No Wall, Window, Door data).

4. Roofs, Skylights:

(No Roof or Skylight data).

5. Infiltration:

Design Cooling	**0.00**	ACH
Design Heating	**0.00**	ACH
Energy Analysis	**0.00**	ACH

Infiltration occurs at all hours.

6. Floors:

Type	**Slab Floor On Grade**	
Floor Area	**0.0**	ft²
Total Floor U-Value	**0.087**	BTU/(hr·ft²·°F)
Exposed Perimeter	**144.0**	ft
Edge Insulation R-Value	**10.00**	(hr·ft²·°F)/BTU

7. Partitions:

(No partition data).

1037 UNIT STORAGE

1. General Details:

Floor Area	**1332.0**	ft²
Avg. Ceiling Height	**17.0**	ft
Building Weight	**70.0**	lb/ft²

1.1. OA Ventilation Requirements:

Space Usage	**User-Defined**	
OA Requirement 1	**380.0**	CFM
OA Requirement 2	**0.00**	CFM/ft²
Space Usage Defaults	**ASHRAE Std 62.1-2010**	

2. Internals:

2.1. Overhead Lighting:

Fixture Type	**Recessed (Unvented)**	
Wattage	**0.00**	W/ft²
Ballast Multiplier	**1.15**	
Schedule	**None**	

2.2. Task Lighting:

Wattage	**0.00**	W/ft²
Schedule	**None**	

2.3. Electrical Equipment:

Wattage	**0.0**	Watts
Schedule	**None**	

2.4. People:

Occupancy	**0.0**	Person
Activity Level	**User defined**	
Sensible	**0.0**	BTU/hr/person
Latent	**205.0**	BTU/hr/person
Schedule	**None**	

2.5. Miscellaneous Loads:

Sensible	**0**	BTU/hr
Schedule	**None**	
Latent	**0**	BTU/hr
Schedule	**None**	

3. Walls, Windows, Doors:

(No Wall, Window, Door data).

4. Roofs, Skylights:

(No Roof or Skylight data).

5. Infiltration:

Design Cooling	**0.00**	CFM
Design Heating	**0.00**	CFM
Energy Analysis	**0.00**	CFM

Infiltration occurs at all hours.

6. Floors:

Type	**Slab Floor On Grade**	
Floor Area	**0.0**	ft²
Total Floor U-Value	**0.087**	BTU/(hr·ft²·°F)
Exposed Perimeter	**74.0**	ft
Edge Insulation R-Value	**10.00**	(hr·ft²·°F)/BTU

7. Partitions:

(No partition data).

C1001 CORRIDOR

1. General Details:

Floor Area	**448.0**	ft²
Avg. Ceiling Height	**9.0**	ft
Building Weight	**70.0**	lb/ft²

1.1. OA Ventilation Requirements:

Space Usage	**User-Defined**	
OA Requirement 1	**40.0**	CFM
OA Requirement 2	**0.00**	CFM/ft²
Space Usage Defaults	**ASHRAE Std 62.1-2010**	

2. Internals:

2.1. Overhead Lighting:

Fixture Type	**Recessed (Unvented)**	
Wattage	**0.00**	W/ft²
Ballast Multiplier	**1.15**	
Schedule	**None**	

2.2. Task Lighting:

Wattage	**0.00**	W/ft²
Schedule	**None**	

2.3. Electrical Equipment:

Wattage	**0.00**	W/ft²
Schedule	**None**	

2.4. People:

Occupancy	**0.0**	Person
Activity Level	**User defined**	
Sensible	**0.0**	BTU/hr/person
Latent	**205.0**	BTU/hr/person
Schedule	**None**	

2.5. Miscellaneous Loads:

Sensible	**0**	BTU/hr
Schedule	**None**	
Latent	**0**	BTU/hr
Schedule	**None**	

3. Walls, Windows, Doors:

(No Wall, Window, Door data).

4. Roofs, Skylights:

(No Roof or Skylight data).

5. Infiltration:

Design Cooling	**0.00**	ACH
Design Heating	**0.00**	ACH
Energy Analysis	**0.00**	ACH

Infiltration occurs only when the fan is off.

6. Floors:

Type	**Slab Floor On Grade**	
Floor Area	**0.0**	ft²
Total Floor U-Value	**0.087**	BTU/(hr·ft²·°F)
Exposed Perimeter	**0.0**	ft
Edge Insulation R-Value	**0.00**	(hr·ft²·°F)/BTU

7. Partitions:

(No partition data).

C1002 LOBBY

1. General Details:

Floor Area	**165.0**	ft²
Avg. Ceiling Height	**9.0**	ft
Building Weight	**70.0**	lb/ft²

1.1. OA Ventilation Requirements:

Space Usage	**User-Defined**	
OA Requirement 1	**40.0**	CFM
OA Requirement 2	**0.00**	CFM/ft²
Space Usage Defaults	**ASHRAE Std 62.1-2010**	

2. Internals:

2.1. Overhead Lighting:

Fixture Type	**Recessed (Unvented)**	
Wattage	**0.00**	W/ft²
Ballast Multiplier	**1.15**	
Schedule	**None**	

2.2. Task Lighting:

Wattage	**0.00**	W/ft²
Schedule	**None**	

2.3. Electrical Equipment:

Wattage	**0.00**	W/ft²
Schedule	**None**	

2.4. People:

Occupancy	**4.0**	People
Activity Level	**User defined**	
Sensible	**0.0**	BTU/hr/person
Latent	**205.0**	BTU/hr/person
Schedule	**Office Occupancy Schedule**	

2.5. Miscellaneous Loads:

Sensible	**0**	BTU/hr
Schedule	**None**	
Latent	**0**	BTU/hr
Schedule	**None**	

3. Walls, Windows, Doors:

(No Wall, Window, Door data).

4. Roofs, Skylights:

(No Roof or Skylight data).

5. Infiltration:

Design Cooling	**0.00**	ACH
Design Heating	**0.00**	ACH
Energy Analysis	**0.00**	ACH

Infiltration occurs only when the fan is off.

6. Floors:

Type	**Slab Floor On Grade**	
Floor Area	**0.0**	ft²
Total Floor U-Value	**0.087**	BTU/(hr·ft²·°F)
Exposed Perimeter	**0.0**	ft
Edge Insulation R-Value	**0.00**	(hr·ft²·°F)/BTU

7. Partitions:

(No partition data).

C1003 CORRIDOR_1

1. General Details:

Floor Area	**855.0**	ft²
Avg. Ceiling Height	**9.0**	ft
Building Weight	**70.0**	lb/ft²

1.1. OA Ventilation Requirements:

Space Usage	**User-Defined**	
OA Requirement 1	**85.0**	CFM
OA Requirement 2	**0.00**	CFM/ft²
Space Usage Defaults	**ASHRAE Std 62.1-2010**	

2. Internals:

2.1. Overhead Lighting:

Fixture Type	**Recessed (Unvented)**	
Wattage	**0.00**	W/ft²
Ballast Multiplier	**1.15**	
Schedule	**None**	

2.2. Task Lighting:

Wattage	**0.00**	W/ft²
Schedule	**None**	

2.3. Electrical Equipment:

Wattage	**0.00**	W/ft²
Schedule	**None**	

2.4. People:

Occupancy	**0.0**	Person
Activity Level	**User defined**	
Sensible	**0.0**	BTU/hr/person
Latent	**205.0**	BTU/hr/person
Schedule	**None**	

2.5. Miscellaneous Loads:

Sensible	**0**	BTU/hr
Schedule	**None**	
Latent	**0**	BTU/hr
Schedule	**None**	

3. Walls, Windows, Doors:

(No Wall, Window, Door data).

4. Roofs, Skylights:

(No Roof or Skylight data).

5. Infiltration:

Design Cooling	**0.00**	ACH
Design Heating	**0.00**	ACH
Energy Analysis	**0.00**	ACH

Infiltration occurs only when the fan is off.

6. Floors:

Type	**Slab Floor On Grade**	
Floor Area	**0.0**	ft²
Total Floor U-Value	**0.087**	BTU/(hr·ft²·°F)
Exposed Perimeter	**0.0**	ft
Edge Insulation R-Value	**0.00**	(hr·ft²·°F)/BTU

7. Partitions:

(No partition data).

C1003 CORRIDOR_2

1. General Details:

Floor Area	**367.0**	ft²
Avg. Ceiling Height	**9.0**	ft
Building Weight	**70.0**	lb/ft²

1.1. OA Ventilation Requirements:

Space Usage	**User-Defined**	
OA Requirement 1	**70.0**	CFM
OA Requirement 2	**0.00**	CFM/ft²
Space Usage Defaults	**ASHRAE Std 62.1-2010**	

2. Internals:

2.1. Overhead Lighting:

Fixture Type	**Recessed (Unvented)**	
Wattage	**0.00**	W/ft²
Ballast Multiplier	**1.15**	
Schedule	**None**	

2.2. Task Lighting:

Wattage	**0.00**	W/ft²
Schedule	**None**	

2.3. Electrical Equipment:

Wattage	**0.00**	W/ft²
Schedule	**None**	

2.4. People:

Occupancy	**0.0**	Person
Activity Level	**User defined**	
Sensible	**0.0**	BTU/hr/person
Latent	**205.0**	BTU/hr/person
Schedule	**None**	

2.5. Miscellaneous Loads:

Sensible	**0**	BTU/hr
Schedule	**None**	
Latent	**0**	BTU/hr
Schedule	**None**	

3. Walls, Windows, Doors:

(No Wall, Window, Door data).

4. Roofs, Skylights:

(No Roof or Skylight data).

5. Infiltration:

Design Cooling	**0.00**	CFM
Design Heating	**0.00**	CFM
Energy Analysis	**0.00**	CFM

Infiltration occurs only when the fan is off.

6. Floors:

Type	**Slab Floor On Grade**	
Floor Area	**0.0**	ft²
Total Floor U-Value	**0.087**	BTU/(hr·ft²·°F)
Exposed Perimeter	**7.0**	ft
Edge Insulation R-Value	**0.00**	(hr·ft²·°F)/BTU

7. Partitions:

(No partition data).

G1001 EF

1. General Details:

Floor Area	**50.0**	ft²
Avg. Ceiling Height	**13.0**	ft
Building Weight	**70.0**	lb/ft²

1.1. OA Ventilation Requirements:

Space Usage	**User-Defined**	
OA Requirement 1	**20.0**	CFM
OA Requirement 2	**0.00**	CFM/ft²
Space Usage Defaults	**ASHRAE Std 62.1-2010**	

2. Internals:

2.1. Overhead Lighting:

Fixture Type	**Recessed (Unvented)**	
Wattage	**0.00**	W/ft²
Ballast Multiplier	**1.15**	
Schedule	**None**	

2.2. Task Lighting:

Wattage	**0.00**	W/ft²
Schedule	**None**	

2.3. Electrical Equipment:

Wattage	**0.00**	W/ft²
Schedule	**None**	

2.4. People:

Occupancy	**0.0**	Person
Activity Level	**Office Work**	
Sensible	**245.0**	BTU/hr/person
Latent	**205.0**	BTU/hr/person
Schedule	**None**	

2.5. Miscellaneous Loads:

Sensible	**0**	BTU/hr
Schedule	**None**	
Latent	**0**	BTU/hr
Schedule	**None**	

3. Walls, Windows, Doors:

(No Wall, Window, Door data).

4. Roofs, Skylights:

(No Roof or Skylight data).

5. Infiltration:

Design Cooling	**0.00**	CFM
Design Heating	**0.00**	CFM
Energy Analysis	**0.00**	CFM

Infiltration occurs only when the fan is off.

6. Floors:

Type	**Slab Floor On Grade**	
Floor Area	**0.0**	ft²
Total Floor U-Value	**0.087**	BTU/(hr·ft²·°F)
Exposed Perimeter	**16.0**	ft
Edge Insulation R-Value	**10.00**	(hr·ft²·°F)/BTU

7. Partitions:

(No partition data).

G1002 TER (TELECOM.)

1. General Details:

Floor Area	**88.0**	ft²
Avg. Ceiling Height	**13.0**	ft
Building Weight	**70.0**	lb/ft²

1.1. OA Ventilation Requirements:

Space Usage	**User-Defined**	
OA Requirement 1	**30.0**	CFM
OA Requirement 2	**0.00**	CFM/ft²
Space Usage Defaults	**ASHRAE Std 62.1-2010**	

2. Internals:

2.1. Overhead Lighting:

Fixture Type	**Recessed (Unvented)**	
Wattage	**0.00**	W/ft²
Ballast Multiplier	**1.15**	
Schedule	**None**	

2.2. Task Lighting:

Wattage	**0.00**	W/ft²
Schedule	**None**	

2.3. Electrical Equipment:

Wattage	**0.00**	W/ft²
Schedule	**None**	

2.4. People:

Occupancy	**0.0**	Person
Activity Level	**Office Work**	
Sensible	**245.0**	BTU/hr/person
Latent	**205.0**	BTU/hr/person
Schedule	**None**	

2.5. Miscellaneous Loads:

Sensible	**0**	BTU/hr
Schedule	**None**	
Latent	**0**	BTU/hr
Schedule	**None**	

3. Walls, Windows, Doors:

(No Wall, Window, Door data).

4. Roofs, Skylights:

(No Roof or Skylight data).

5. Infiltration:

Design Cooling	**0.00**	CFM
Design Heating	**0.00**	CFM
Energy Analysis	**0.00**	CFM

Infiltration occurs only when the fan is off.

6. Floors:

Type	**Slab Floor On Grade**	
Floor Area	**0.0**	ft²
Total Floor U-Value	**0.087**	BTU/(hr·ft²·°F)
Exposed Perimeter	**0.0**	ft
Edge Insulation R-Value	**0.00**	(hr·ft²·°F)/BTU

7. Partitions:

(No partition data).

G1003 MEN TOILET

1. General Details:

Floor Area	**280.0**	ft²
Avg. Ceiling Height	**9.0**	ft
Building Weight	**70.0**	lb/ft²

1.1. OA Ventilation Requirements:

Space Usage	**User-Defined**	
OA Requirement 1	**450.0**	CFM
OA Requirement 2	**0.00**	CFM/ft²
Space Usage Defaults	**ASHRAE Std 62.1-2010**	

2. Internals:

2.1. Overhead Lighting:

Fixture Type	**Recessed (Unvented)**	
Wattage	**0.85**	W/ft²
Ballast Multiplier	**1.15**	
Schedule	**Lighting Schedule**	

2.2. Task Lighting:

Wattage	**0.00**	W/ft²
Schedule	**None**	

2.3. Electrical Equipment:

Wattage	**0.00**	W/ft²
Schedule	**None**	

2.4. People:

Occupancy	**0.0**	Person
Activity Level	**Office Work**	
Sensible	**245.0**	BTU/hr/person
Latent	**205.0**	BTU/hr/person
Schedule	**None**	

2.5. Miscellaneous Loads:

Sensible	**0**	BTU/hr
Schedule	**None**	
Latent	**0**	BTU/hr
Schedule	**None**	

3. Walls, Windows, Doors:

(No Wall, Window, Door data).

4. Roofs, Skylights:

Exp.	Roof Gross Area (ft²)	Roof Slope (deg.)	Skylight Qty.
H	280.0	0	0

4.1. Construction Types for Exposure H

Roof Type	**Roof**	

5. Infiltration:

Design Cooling	**0.00**	CFM
Design Heating	**0.00**	CFM
Energy Analysis	**0.00**	CFM

Infiltration occurs only when the fan is off.

6. Floors:

Type	**Slab Floor On Grade**	
Floor Area	**280.0**	ft²
Total Floor U-Value	**0.087**	BTU/(hr·ft²·°F)
Exposed Perimeter	**0.0**	ft
Edge Insulation R-Value	**0.00**	(hr·ft²·°F)/BTU

7. Partitions:

(No partition data).

G1004 JANITOR

1. General Details:

Floor Area	**21.0**	ft²
Avg. Ceiling Height	**9.0**	ft
Building Weight	**70.0**	lb/ft²

1.1. OA Ventilation Requirements:

Space Usage	**User-Defined**	
OA Requirement 1	**0.0**	CFM
OA Requirement 2	**0.00**	CFM/ft²
Space Usage Defaults	**ASHRAE Std 62.1-2010**	

2. Internals:

2.1. Overhead Lighting:

Fixture Type	**Recessed (Unvented)**	
Wattage	**0.85**	W/ft²
Ballast Multiplier	**1.15**	
Schedule	**Lighting Schedule**	

2.2. Task Lighting:

Wattage	**0.00**	W/ft²
Schedule	**None**	

2.3. Electrical Equipment:

Wattage	**0.00**	W/ft²
Schedule	**None**	

2.4. People:

Occupancy	**0.0**	Person
Activity Level	**User defined**	
Sensible	**0.0**	BTU/hr/person
Latent	**0.0**	BTU/hr/person
Schedule	**None**	

2.5. Miscellaneous Loads:

Sensible	**0**	BTU/hr
Schedule	**None**	
Latent	**0**	BTU/hr
Schedule	**None**	

3. Walls, Windows, Doors:

(No Wall, Window, Door data).

4. Roofs, Skylights:

(No Roof or Skylight data).

5. Infiltration:

Design Cooling	**0.00**	ACH
Design Heating	**0.00**	ACH
Energy Analysis	**0.00**	ACH

Infiltration occurs only when the fan is off.

6. Floors:

Type	**Slab Floor On Grade**	
Floor Area	**21.0**	ft²
Total Floor U-Value	**0.087**	BTU/(hr·ft²·°F)
Exposed Perimeter	**0.0**	ft
Edge Insulation R-Value	**0.00**	(hr·ft²·°F)/BTU

7. Partitions:

(No partition data).

G1005 WOMEN TOILET

1. General Details:

Floor Area ..... **191.0** ft²
Avg. Ceiling Height ..... **9.0** ft
Building Weight ..... **70.0** lb/ft²

1.1. OA Ventilation Requirements:

Space Usage ..... **User-Defined**
OA Requirement 1 ..... **135.0** CFM
OA Requirement 2 ..... **0.00** CFM/ft²
Space Usage Defaults ..... **ASHRAE Std 62.1-2010**

2. Internals:

2.1. Overhead Lighting:

Fixture Type ..... **Recessed (Unvented)**
Wattage ..... **0.85** W/ft²
Ballast Multiplier **1.15**
Schedule ..... **Lighting Schedule**

2.2. Task Lighting:

Wattage ..... **0.00** W/ft²
Schedule ..... **None**

2.3. Electrical Equipment:

Wattage ..... **0.00** W/ft²
Schedule ..... **None**

2.4. People:

Occupancy ..... **0.0** Person
Activity Level ..... **User defined**
Sensible ..... **245.0** BTU/hr/person
Latent ..... **0.0** BTU/hr/person
Schedule ..... **None**

2.5. Miscellaneous Loads:

Sensible ..... **0** BTU/hr
Schedule ..... **None**
Latent ..... **0** BTU/hr
Schedule ..... **None**

3. Walls, Windows, Doors:

(No Wall, Window, Door data).

4. Roofs, Skylights:

Exp.	Roof Gross Area (ft²)	Roof Slope (deg.)	Skylight Qty.
H	191.0	0	0

4.1. Construction Types for Exposure H

Roof Type ..... **Roof**

5. Infiltration:

Design Cooling ..... **0.00** CFM
Design Heating ..... **0.00** CFM
Energy Analysis ..... **0.00** CFM
Infiltration occurs only when the fan is off.

6. Floors:

Type ..... **Slab Floor On Grade**
Floor Area ..... **191.0** ft²
Total Floor U-Value ..... **0.087** BTU/(hr·ft²·°F)
Exposed Perimeter ..... **0.0** ft
Edge Insulation R-Value ..... **0.00** (hr·ft²·°F)/BTU

7. Partitions:

(No partition data).

G1006 TR (TELECM RM)

1. General Details:

Floor Area	**54.0**	ft²
Avg. Ceiling Height	**9.0**	ft
Building Weight	**70.0**	lb/ft²

1.1. OA Ventilation Requirements:

Space Usage	**User-Defined**	
OA Requirement 1	**30.0**	CFM
OA Requirement 2	**0.00**	CFM/ft²
Space Usage Defaults	**ASHRAE Std 62.1-2010**	

2. Internals:

2.1. Overhead Lighting:

Fixture Type	**Recessed (Unvented)**	
Wattage	**0.00**	W/ft²
Ballast Multiplier	**1.15**	
Schedule	**None**	

2.2. Task Lighting:

Wattage	**0.00**	W/ft²
Schedule	**None**	

2.3. Electrical Equipment:

Wattage	**0.00**	W/ft²
Schedule	**None**	

2.4. People:

Occupancy	**0.0**	Person
Activity Level	**Office Work**	
Sensible	**245.0**	BTU/hr/person
Latent	**205.0**	BTU/hr/person
Schedule	**None**	

2.5. Miscellaneous Loads:

Sensible	**0**	BTU/hr
Schedule	**None**	
Latent	**0**	BTU/hr
Schedule	**None**	

3. Walls, Windows, Doors:

(No Wall, Window, Door data).

4. Roofs, Skylights:

(No Roof or Skylight data).

5. Infiltration:

Design Cooling	**0.00**	CFM
Design Heating	**0.00**	CFM
Energy Analysis	**0.00**	CFM

Infiltration occurs only when the fan is off.

6. Floors:

Type	**Slab Floor On Grade**	
Floor Area	**0.0**	ft²
Total Floor U-Value	**0.087**	BTU/(hr·ft²·°F)
Exposed Perimeter	**0.0**	ft
Edge Insulation R-Value	**0.00**	(hr·ft²·°F)/BTU

7. Partitions:

(No partition data).

G1007 MEN SHOWER LOCK

1. General Details:

Floor Area ..... **702.0** ft²
Avg. Ceiling Height ..... **9.0** ft
Building Weight ..... **70.0** lb/ft²

1.1. OA Ventilation Requirements:

Space Usage ..... **User-Defined**
OA Requirement 1 ..... **550.0** CFM
OA Requirement 2 ..... **0.00** CFM/ft²
Space Usage Defaults ..... **ASHRAE Std 62.1-2010**

2. Internals:

2.1. Overhead Lighting:

Fixture Type ..... **Recessed (Unvented)**
Wattage ..... **0.48** W/ft²
Ballast Multiplier **1.15**
Schedule ..... **Lighting Schedule**

2.2. Task Lighting:

Wattage ..... **0.00** W/ft²
Schedule ..... **None**

2.3. Electrical Equipment:

Wattage ..... **0.00** W/ft²
Schedule ..... **None**

2.4. People:

Occupancy ..... **0.0** Person
Activity Level ..... **User defined**
Sensible ..... **245.0** BTU/hr/person
Latent ..... **205.0** BTU/hr/person
Schedule ..... **None**

2.5. Miscellaneous Loads:

Sensible ..... **0** BTU/hr
Schedule ..... **None**
Latent ..... **0** BTU/hr
Schedule ..... **None**

3. Walls, Windows, Doors:

Exp.	Wall Gross Area (ft²)	Window 1 Qty.	Window 2 Qty.	Door 1 Qty.
N	299.0	0	0	0
W	112.5	0	0	0

3.1. Construction Types for Exposure N

Wall Type ..... **Steel frame Wall New**

3.2. Construction Types for Exposure W

Wall Type ..... **Steel frame Wall New**

4. Roofs, Skylights:

Exp.	Roof Gross Area (ft²)	Roof Slope (deg.)	Skylight Qty.
H	702.0	0	0

4.1. Construction Types for Exposure H

Roof Type ..... **Roof**

5. Infiltration:

Design Cooling ..... **0.25** CFM/ft²
Design Heating ..... **0.25** CFM/ft²
Energy Analysis ..... **0.25** CFM/ft²
Infiltration occurs only when the fan is off.

6. Floors:

Type ..... **Slab Floor On Grade**
Floor Area ..... **702.0** ft²
Total Floor U-Value ..... **0.087** BTU/(hr·ft²·°F)
Exposed Perimeter ..... **45.8** ft
Edge Insulation R-Value ..... **10.00** (hr·ft²·°F)/BTU

7. Partitions:

(No partition data).

G1008 WOMEN SHOWER LOC

1. General Details:

Floor Area	**388.0**	ft²
Avg. Ceiling Height	**9.0**	ft
Building Weight	**70.0**	lb/ft²

1.1. OA Ventilation Requirements:

Space Usage	**User-Defined**	
OA Requirement 1	**345.0**	CFM
OA Requirement 2	**0.00**	CFM/ft²
Space Usage Defaults	**ASHRAE Std 62.1-2010**	

2. Internals:

2.1. Overhead Lighting:

Fixture Type	**Recessed (Unvented)**	
Wattage	**0.48**	W/ft²
Ballast Multiplier	**1.15**	
Schedule	**Lighting Schedule**	

2.2. Task Lighting:

Wattage	**0.00**	W/ft²
Schedule	**None**	

2.3. Electrical Equipment:

Wattage	**0.00**	W/ft²
Schedule	**None**	

2.4. People:

Occupancy	**0.0**	Person
Activity Level	**User defined**	
Sensible	**245.0**	BTU/hr/person
Latent	**0.0**	BTU/hr/person
Schedule	**None**	

2.5. Miscellaneous Loads:

Sensible	**0**	BTU/hr
Schedule	**None**	
Latent	**0**	BTU/hr
Schedule	**None**	

3. Walls, Windows, Doors:

(No Wall, Window, Door data).

4. Roofs, Skylights:

Exp.	Roof Gross Area (ft²)	Roof Slope (deg.)	Skylight Qty.
H	388.0	0	0

4.1. Construction Types for Exposure H

Roof Type	**Roof**	

5. Infiltration:

Design Cooling	**0.00**	CFM
Design Heating	**0.00**	CFM
Energy Analysis	**0.00**	CFM

Infiltration occurs only when the fan is off.

6. Floors:

Type	**Slab Floor On Grade**	
Floor Area	**388.0**	ft²
Total Floor U-Value	**0.087**	BTU/(hr·ft²·°F)
Exposed Perimeter	**0.0**	ft
Edge Insulation R-Value	**0.00**	(hr·ft²·°F)/BTU

7. Partitions:

(No partition data).

G1009 ELECTRICAL

1. General Details:

Floor Area ..... **206.0** ft²
Avg. Ceiling Height ..... **13.0** ft
Building Weight ..... **70.0** lb/ft²

1.1. OA Ventilation Requirements:

Space Usage ..... **User-Defined**
OA Requirement 1 ..... **100.0** CFM
OA Requirement 2 ..... **0.00** CFM/ft²
Space Usage Defaults ..... **ASHRAE Std 62.1-2010**

2. Internals:

2.1. Overhead Lighting:

Fixture Type ..... **Recessed (Unvented)**
Wattage ..... **0.43** W/ft²
Ballast Multiplier **1.15**
Schedule ..... **Lighting Schedule**

2.2. Task Lighting:

Wattage ..... **0.00** W/ft²
Schedule ..... **None**

2.3. Electrical Equipment:

Wattage ..... **0.00** W/ft²
Schedule ..... **None**

2.4. People:

Occupancy ..... **0.0** Person
Activity Level ..... **Office Work**
Sensible ..... **245.0** BTU/hr/person
Latent ..... **205.0** BTU/hr/person
Schedule ..... **None**

2.5. Miscellaneous Loads:

Sensible ..... **0** BTU/hr
Schedule ..... **None**
Latent ..... **0** BTU/hr
Schedule ..... **None**

3. Walls, Windows, Doors:

Exp.	Wall Gross Area (ft²)	Window 1 Qty.	Window 2 Qty.	Door 1 Qty.
S	60.0	0	0	3
S	96.0	0	0	21

3.1. Construction Types for Exposure S

Wall Type ..... **Steel frame Wall Existing**
Door Type ..... **Louver**

3.2. Construction Types for Exposure S

Wall Type ..... **CMU Wall Existing**
Door Type ..... **Sample Door Assembly**

4. Roofs, Skylights:

Exp.	Roof Gross Area (ft²)	Roof Slope (deg.)	Skylight Qty.
H	206.0	0	0

4.1. Construction Types for Exposure H

Roof Type ..... **Roof**

5. Infiltration:

Design Cooling ..... **0.25** CFM/ft²
Design Heating ..... **0.25** CFM/ft²
Energy Analysis ..... **0.25** CFM/ft²
Infiltration occurs only when the fan is off.

6. Floors:

Type ..... **Slab Floor On Grade**
Floor Area ..... **206.0** ft²
Total Floor U-Value ..... **0.087** BTU/(hr·ft²·°F)
Exposed Perimeter ..... **12.0** ft
Edge Insulation R-Value ..... **10.00** (hr·ft²·°F)/BTU

7. Partitions:

(No partition data).

G1010 MECHANICAL

1. General Details:

Floor Area ..... **913.0** ft²
Avg. Ceiling Height ..... **13.0** ft
Building Weight ..... **70.0** lb/ft²

1.1. OA Ventilation Requirements:

Space Usage ..... **User-Defined**
OA Requirement 1 ..... **260.0** CFM
OA Requirement 2 ..... **0.00** CFM/ft²
Space Usage Defaults ..... **ASHRAE Std 62.1-2010**

2. Internals:

2.1. Overhead Lighting:

Fixture Type ..... **Recessed (Unvented)**
Wattage ..... **0.43** W/ft²
Ballast Multiplier **1.15**
Schedule ..... **Lighting Schedule**

2.2. Task Lighting:

Wattage ..... **0.00** W/ft²
Schedule ..... **None**

2.3. Electrical Equipment:

Wattage ..... **0.00** W/ft²
Schedule ..... **None**

2.4. People:

Occupancy ..... **0.0** Person
Activity Level ..... **Office Work**
Sensible ..... **245.0** BTU/hr/person
Latent ..... **205.0** BTU/hr/person
Schedule ..... **None**

2.5. Miscellaneous Loads:

Sensible ..... **0** BTU/hr
Schedule ..... **None**
Latent ..... **0** BTU/hr
Schedule ..... **None**

3. Walls, Windows, Doors:

Exp.	Wall Gross Area (ft²)	Window 1 Qty.	Window 2 Qty.	Door 1 Qty.
S	60.0	0	0	6
S	96.0	0	0	42

3.1. Construction Types for Exposure S

Wall Type ..... **Steel frame Wall Existing**
Door Type ..... **Louver**

3.2. Construction Types for Exposure S

Wall Type ..... **CMU Wall Existing**
Door Type ..... **Sample Door Assembly**

4. Roofs, Skylights:

Exp.	Roof Gross Area (ft²)	Roof Slope (deg.)	Skylight Qty.
H	913.0	0	0

4.1. Construction Types for Exposure H

Roof Type ..... **Roof**

5. Infiltration:

Design Cooling ..... **0.25** CFM/ft²
Design Heating ..... **0.25** CFM/ft²
Energy Analysis ..... **0.25** CFM/ft²
Infiltration occurs only when the fan is off.

6. Floors:

Type ..... **Slab Floor On Grade**
Floor Area ..... **913.0** ft²
Total Floor U-Value ..... **0.087** BTU/(hr·ft²·°F)
Exposed Perimeter ..... **12.0** ft
Edge Insulation R-Value ..... **10.00** (hr·ft²·°F)/BTU

7. Partitions:

(No partition data).

DOAS-1 Input Data

Project Name: 505100403 ORANGEBURG_DESIGN MODEL_DOAS 05/20/2021
Prepared by: Mott MacDonald 11:05PM

1. General Details:

Air System Name **DOAS-1**
Equipment Type ..... **Terminal Units**
Air System Type ..... **Water Source Heat Pump**
Number of zones **1**
Ventilation ..... **Dedicated Outdoor Air System**

2. Dedicated Outdoor Air System Components:

Ventilation Air Data:

Airflow Control ..... **Constant Ventilation Airflow**
Ventilation Sizing Method ..... **Sum of Space OA Airflows**
Unocc. Damper Position ..... **Closed**
Damper Leak Rate ..... **0** %
Outdoor Air CO2 Level ..... **400** ppm

Ventilation Reclaim Data:

Reclaim Type ..... **Sensible and Latent Heat**
Thermal Efficiency ..... **80** %
Input kW ..... **0.370** kW
Schedule ..... **JFMAMJJASOND**

Cooling Coil Data:

Setpoint ..... **73.0** °F
Coil Bypass Factor **0.100**
Cooling Source ..... **Water-Cooled DX**
Schedule ..... **JFMAMJJASOND**

Heating Coil Data:

Setpoint ..... **68.0** °F
Heating Source ..... **Water Source Heat Pump**
Schedule ..... **JFMAMJJASOND**

Dehumidification Data:

Maximum RH Setpoint ..... **50** %

Ventilation Fan Data:

Fan Type ..... **Forward Curved with Variable Frequency Drive**
Configuration ..... **Draw-thru**
Fan Performance ..... **0.72** BHP
Motor Efficiency ..... **90** %

% Airflow	100	90	80	70	60	50
% kW	100	77	60	44	35	25

% Airflow	40	30	20	10	0
% kW	19	13	9	7	6

Duct System Data:

Return Duct or Plenum Data:

Return Air Via ..... **Ducted Return**

Exhaust Fan Data:

Fan Type ..... **Forward Curved with Variable Frequency Drive**
Fan Performance ..... **0.63** BHP
Motor Efficiency ..... **90** %

% Airflow	100	90	80	70	60	50
% kW	100	77	60	44	35	25

% Airflow	40	30	20	10	0
% kW	19	13	9	7	6

3. Zone Components:

Space Assignments:

Zone 1: DOAS-1	
1002 TEAM RM	x1

1004 RETENTION	x1
1006 LEARNING CENTER	x1
C1001 CORRIDOR	x1
C1002 LOBBY	x1
1005 BREAK RM	x1
1001 FAMILY SUPPORT	x1
1003 PRIVATE OFFICE	x1
1011 SHARED OFFICE	x1
1012 PRIVATE OFFICE	x1
1013 PRIVATE OFFICE	x1
1014 SHARE OFFICE	x1
1015 PRIVATE OFFICE	x1
1016 PRIVATE OFFICE	x1
1008 UNIT COMMONS	x1
1009 ADMIN SUPPORT	x1
1021 OFFICE	x1
1007 TEAM RM/ SIPRNET	x1
1010 PRIVATE OFFICE	x1
G1001 EF	x1

Thermostats and Zone Data:

Zone	Cooling T-Stat Occ. (°F)	Cooling T-Stat Unocc. (°F)	Heating T-Stat Occ. (°F)	Heating T-Stat Unocc. (°F)	T-Stat Throttling Range (°F)
1	78.0	80.0	68.0	65.0	1.50

Thermostat Schedule ..... **Thermostat Schedule**
Unoccupied Cooling is ..... **Available**

Common Terminal Unit Data:

Cooling Coil:

Design Supply Temp. ..... **55.0** °F
Coil Bypass Factor **0.100**
Cooling Source ..... **Water-Cooled DX**
Schedule ..... **JFMAMJJASOND**

Heating Coil:

Design Supply Temp. ..... **95.0** °F
Heating Source ..... **Water Source Heat Pump**
Schedule ..... **JFMAMJJASOND**

Fan Control ..... **Fan On**

Terminal Units Data:

Zone	Terminal Type	Air Distribution	Air Distribution Effectiveness Specification	Air Distribution Effectiveness	Minimum Airflow	Fan Performance	Fan Efficiency	Design Supply Temp.
1	Fan coil	Ceiling supply / ceiling return	Not Used	-	0.00 CFM/person	1.00 in wg	70 %	-

4. Sizing Data (Computer-Generated):

System Sizing Data:

Sizing Data:

Cooling Supply Temperature ..... **55.0** °F
Heating Supply Temperature ..... **95.0** °F

Hydronic Sizing Specifications:

Chilled Water Delta-T ..... **10.0** °F
Hot Water Delta-T ..... **10.0** °F

Safety Factors:

Cooling Sensible ..... **10** %
Cooling Latent ..... **10** %

Heating ..... **25** %

Zone Sizing Data:

Zone Airflow Sizing Method ..... **Sum of space airflow rates**
Space Airflow Sizing Method ..... **Individual peak space loads**

Zone	Supply Airflow (CFM)	Zone Htg Unit (MBH)	Reheat Coil (MBH)	Ventilation (CFM)
1	1100.0	-	-	1100.0

5. Equipment Data

DOAS Cooling Unit - Water-Cooled DX

Estimated Maximum Load ..... **52.3** MBH
Design EWT ..... **85.0** °F
Equipment Sizing ..... **Auto-Sized**
Capacity Oversizing Factor ..... **0** %
ISO/ARI Performance Rating ..... **19.500** EER

DOAS Heating Unit - WSHP

Estimated Maximum Load ..... **15.1** MBH
Design EWT ..... **62.0** °F
Equipment Sizing ..... **Auto-Sized**
Capacity Oversizing Factor ..... **0** %
ISO/ARI Performance Rating ..... **5.500** COP

Terminal Cooling Units - WSHP

Zone	Estimated Maximum Load (MBH)	Design EWT (°F)	Equipment Sizing	Gross Cooling Capacity (MBH)	Capacity Oversizing Factor (%)	Compressor Power (kW)	ISO / ARI Performance Rating	Units
1	0.6	85.0	Auto-Sized	-	0	-	17.300	EER

Terminal Heating Units - WSHP

Zone	Estimated Maximum Load (MBH)	Design EWT (°F)	Equipment Sizing	Gross Heating Capacity (MBH)	Capacity Oversizing Factor (%)	Compressor Power (kW)	ISO / ARI Performance Rating	Units
1	11.2	62.0	Auto-Sized	-	0	-	5.800	COP

Misc. Components - WSHP

Cooling Tower ..... **Proposed Cooling Tower**
Auxiliary Boiler ..... **Proposed Boilers**

Closed Loop:

Circulation Pump Performance ..... **19.0** W/gpm
Circulation Pump Mechanical Efficiency ..... **76.0** %
Circulation Pump Motor Electrical Efficiency ..... **94.0** %
Maximum Setpoint ..... **85.0** °F
Minimum Setpoint ..... **62.0** °F

1. General Details:

Air System Name **DOAS-2**
Equipment Type ..... **Terminal Units**
Air System Type ..... **Water Source Heat Pump**
Number of zones **1**
Ventilation ..... **Dedicated Outdoor Air System**

2. Dedicated Outdoor Air System Components:

Ventilation Air Data:

Airflow Control ..... **Constant Ventilation Airflow**
Ventilation Sizing Method ..... **Sum of Space OA Airflows**
Unocc. Damper Position ..... **Closed**
Damper Leak Rate ..... **0** %
Outdoor Air CO2 Level ..... **400** ppm

Ventilation Reclaim Data:

Reclaim Type ..... **Sensible and Latent Heat**
Thermal Efficiency ..... **68** %
Input kW ..... **0.370** kW
Schedule ..... **JFMAMJJASOND**

Cooling Coil Data:

Setpoint ..... **73.0** °F
Coil Bypass Factor **0.100**
Cooling Source ..... **Water-Cooled DX**
Schedule ..... **JFMAMJJASOND**

Heating Coil Data:

Setpoint ..... **68.0** °F
Heating Source ..... **Water Source Heat Pump**
Schedule ..... **JFMAMJJASOND**

Dehumidification Data:

Maximum RH Setpoint ..... **50** %

Ventilation Fan Data:

Fan Type ..... **Forward Curved with Variable Frequency Drive**
Configuration ..... **Draw-thru**
Fan Performance ..... **2.40** BHP
Motor Efficiency ..... **90** %

% Airflow	100	90	80	70	60	50
% kW	100	77	60	44	35	25

% Airflow	40	30	20	10	0
% kW	19	13	9	7	6

Duct System Data:

Return Duct or Plenum Data:

Return Air Via ..... **Ducted Return**

Exhaust Fan Data:

Fan Type ..... **Forward Curved with Variable Frequency Drive**
Fan Performance ..... **1.62** BHP
Motor Efficiency ..... **90** %

% Airflow	100	90	80	70	60	50
% kW	100	77	60	44	35	25

% Airflow	40	30	20	10	0
% kW	19	13	9	7	6

3. Zone Components:

Space Assignments:

Zone 1: DOAS-2	
1017A CLASSROOM	x1
1017B CLASSROOM	x1

1018A CLASSROOM	x1
1018B CLASSROOM	x1
1019 ASSEMBLY	x1
1020 CHAIR STORAGE	x1
1022 STORAGE (KITCHEN)	x1
1023 KITCHEN	x1
1024 SCULLERY	x1
G1002 TER (TELECOM.)	x1

Thermostats and Zone Data:

Zone	Cooling T-Stat Occ. (°F)	Cooling T-Stat Unocc. (°F)	Heating T-Stat Occ. (°F)	Heating T-Stat Unocc. (°F)	T-Stat Throttling Range (°F)
1	78.0	80.0	68.0	65.0	1.50

Thermostat Schedule ..... **Thermostat Schedule**
Unoccupied Cooling is ..... **Available**

Common Terminal Unit Data:

Cooling Coil:
Design Supply Temp. ..... **55.0** °F
Coil Bypass Factor **0.100**
Cooling Source ..... **Water-Cooled DX**
Schedule ..... **JFMAMJJASOND**

Heating Coil:
Design Supply Temp. ..... **95.0** °F
Heating Source ..... **Water Source Heat Pump**
Schedule ..... **JFMAMJJASOND**

Fan Control ..... **Fan On**

Terminal Units Data:

Zone	Terminal Type	Air Distribution	Air Distribution Effectiveness Specification	Air Distribution Effectiveness	Minimum Airflow	Fan Performance	Fan Efficiency	Design Supply Temp.
1	Fan coil	Ceiling supply / ceiling return	Not Used	-	0.00 CFM/person	1.00 in wg	70 %	-

4. Sizing Data (Computer-Generated):

System Sizing Data:

Sizing Data:
Cooling Supply Temperature ..... **55.0** °F
Heating Supply Temperature ..... **95.0** °F

Hydronic Sizing Specifications:
Chilled Water Delta-T ..... **10.0** °F
Hot Water Delta-T ..... **20.0** °F

Safety Factors:
Cooling Sensible ..... **10** %
Cooling Latent ..... **10** %
Heating ..... **25** %

Zone Sizing Data:
Zone Airflow Sizing Method ..... **Sum of space airflow rates**
Space Airflow Sizing Method ..... **Individual peak space loads**

Zone	Supply Airflow (CFM)	Zone Htg Unit (MBH)	Reheat Coil (MBH)	Ventilation (CFM)
1	2880.0	-	-	2880.0

5. Equipment Data

DOAS Cooling Unit - Water-Cooled DX

Estimated Maximum Load	**145.1**	MBH
Design EWT	**85.0**	°F
Equipment Sizing	**Auto-Sized**	
Capacity Oversizing Factor	**0**	%
ISO/ARI Performance Rating	**17.500**	EER

DOAS Heating Unit - WSHP

Estimated Maximum Load	**44.8**	MBH
Design EWT	**62.0**	°F
Equipment Sizing	**Auto-Sized**	
Capacity Oversizing Factor	**0**	%
ISO/ARI Performance Rating	**5.500**	COP

Terminal Cooling Units - WSHP

Zone	Estimated Maximum Load (MBH)	Design EWT (°F)	Equipment Sizing	Gross Cooling Capacity (MBH)	Capacity Oversizing Factor (%)	Compressor Power (kW)	ISO / ARI Performance Rating	Units
1	1.6	85.0	Auto-Sized	-	0	-	17.300	EER

Terminal Heating Units - WSHP

Zone	Estimated Maximum Load (MBH)	Design EWT (°F)	Equipment Sizing	Gross Heating Capacity (MBH)	Capacity Oversizing Factor (%)	Compressor Power (kW)	ISO / ARI Performance Rating	Units
1	29.4	62.0	Auto-Sized	-	0	-	5.800	COP

Misc. Components - WSHP

Cooling Tower	**Proposed Cooling Tower**	
Auxiliary Boiler	**Proposed Boilers**	

Closed Loop:

Circulation Pump Performance	**19.0**	W/gpm
Circulation Pump Mechanical Efficiency	**70.0**	%
Circulation Pump Motor Electrical Efficiency	**94.0**	%
Maximum Setpoint	**85.0**	°F
Minimum Setpoint	**62.0**	°F

DOAS-3 Input Data

Project Name: 505100403 ORANGEBURG_DESIGN MODEL_DOAS 05/20/2021
Prepared by: Mott MacDonald 11:05PM

1. General Details:

Air System Name **DOAS-3**
Equipment Type ..... **Terminal Units**
Air System Type ..... **Water Source Heat Pump**
Number of zones **1**
Ventilation ..... **Dedicated Outdoor Air System**

2. Dedicated Outdoor Air System Components:

Ventilation Air Data:

Airflow Control ..... **Constant Ventilation Airflow**
Ventilation Sizing Method ..... **Sum of Space OA Airflows**
Unocc. Damper Position ..... **Closed**
Damper Leak Rate ..... **0** %
Outdoor Air CO2 Level ..... **400** ppm

Cooling Coil Data:

Setpoint ..... **73.0** °F
Coil Bypass Factor **0.100**
Cooling Source ..... **Water-Cooled DX**
Schedule ..... **JFMAMJJASOND**

Heating Coil Data:

Setpoint ..... **68.0** °F
Heating Source ..... **Water Source Heat Pump**
Schedule ..... **JFMAMJJASOND**

Dehumidification Data:

Maximum RH Setpoint ..... **50** %

Ventilation Fan Data:

Fan Type ..... **Forward Curved with Variable Frequency Drive**
Configuration ..... **Draw-thru**
Fan Performance ..... **0.58** BHP
Motor Efficiency ..... **90** %

% Airflow	100	90	80	70	60	50
% kW	100	77	60	44	35	25

% Airflow	40	30	20	10	0
% kW	19	13	9	7	6

Duct System Data:

Return Duct or Plenum Data:

Return Air Via ..... **Ducted Return**

Exhaust Fan Data:

Fan Type ..... **Forward Curved with Variable Frequency Drive**
Fan Performance ..... **0.55** BHP
Motor Efficiency ..... **90** %

% Airflow	100	90	80	70	60	50
% kW	100	77	60	44	35	25

% Airflow	40	30	20	10	0
% kW	19	13	9	7	6

3. Zone Components:

Space Assignments:

Zone 1: DOAS -3	
1025 SECURE STORAGE	x1
1027 PRIVATE OFFICE	x1
1028 PRIVATE OFFICE	x1
C1003 CORRIDOR_1	x1
1026 LACTATION	x1
1033 PRIVATE OFFICE	x1
1034 STORAGE	x1

1029 ARMORER	x1
C1003 CORRIDOR_2	x1
1030 ARNS VAULT	x1
1026A STORAGE	x1
G1006 TR (TELECM RM)	x1

Thermostats and Zone Data:

Zone	Cooling T-Stat Occ. (°F)	Cooling T-Stat Unocc. (°F)	Heating T-Stat Occ. (°F)	Heating T-Stat Unocc. (°F)	T-Stat Throttling Range (°F)
1	78.0	80.0	68.0	65.0	1.50

Thermostat Schedule ..... **Thermostat Schedule**
Unoccupied Cooling is ..... **Available**

Common Terminal Unit Data:

Cooling Coil:
Design Supply Temp. ..... **55.0** °F
Coil Bypass Factor **0.100**
Cooling Source ..... **Water-Cooled DX**
Schedule ..... **JFMAMJJASOND**

Heating Coil:
Design Supply Temp. ..... **95.0** °F
Heating Source ..... **Water Source Heat Pump**
Schedule ..... **JFMAMJJASOND**

Fan Control ..... **Fan On**

Terminal Units Data:

Zone	Terminal Type	Air Distribution	Air Distribution Effectiveness Specification	Air Distribution Effectiveness	Minimum Airflow	Fan Performance	Fan Efficiency	Design Supply Temp.
1	Fan coil	Ceiling supply / ceiling return	Not Used	-	0.00 CFM/person	1.00 in wg	70 %	-

4. Sizing Data (Computer-Generated):

System Sizing Data:

Sizing Data:
Cooling Supply Temperature ..... **55.0** °F
Heating Supply Temperature ..... **95.0** °F

Hydronic Sizing Specifications:
Chilled Water Delta-T ..... **10.0** °F
Hot Water Delta-T ..... **20.0** °F

Safety Factors:
Cooling Sensible ..... **10** %
Cooling Latent ..... **10** %
Heating ..... **25** %

Zone Sizing Data:
Zone Airflow Sizing Method ..... **Sum of space airflow rates**
Space Airflow Sizing Method ..... **Individual peak space loads**

Zone	Supply Airflow (CFM)	Zone Htg Unit (MBH)	Reheat Coil (MBH)	Ventilation (CFM)
1	900.0	-	-	900.0

5. Equipment Data

DOAS Cooling Unit - Water-Cooled DX

Estimated Maximum Load	**60.0**	MBH
Design EWT	**86.0**	°F
Equipment Sizing	**Auto-Sized**	
Capacity Oversizing Factor	**0**	%
ISO/ARI Performance Rating	**20.500**	EER

DOAS Heating Unit - WSHP

Estimated Maximum Load	**51.8**	MBH
Design EWT	**68.0**	°F
Equipment Sizing	**Auto-Sized**	
Capacity Oversizing Factor	**0**	%
ISO/ARI Performance Rating	**5.600**	COP

Terminal Cooling Units - WSHP

Zone	Estimated Maximum Load (MBH)	Design EWT (°F)	Equipment Sizing	Gross Cooling Capacity (MBH)	Capacity Oversizing Factor (%)	Compressor Power (kW)	ISO / ARI Performance Rating	Units
1	0.0	85.0	Auto-Sized	-	0	-	14.000	EER

Terminal Heating Units - WSHP

Zone	Estimated Maximum Load (MBH)	Design EWT (°F)	Equipment Sizing	Gross Heating Capacity (MBH)	Capacity Oversizing Factor (%)	Compressor Power (kW)	ISO / ARI Performance Rating	Units
1	9.2	62.0	Auto-Sized	-	0	-	4.800	COP

Misc. Components - WSHP

Cooling Tower	**Proposed Cooling Tower**	
Auxiliary Boiler	**Proposed Boilers**	

Closed Loop:

Circulation Pump Performance	**19.0**	W/gpm
Circulation Pump Mechanical Efficiency	**70.0**	%
Circulation Pump Motor Electrical Efficiency	**94.0**	%
Maximum Setpoint	**85.0**	°F
Minimum Setpoint	**62.0**	°F

DOAS-4 Input Data

Project Name: 505100403 ORANGEBURG_DESIGN MODEL_DOAS 05/20/2021
Prepared by: Mott MacDonald 11:05PM

1. General Details:

Air System Name **DOAS-4**
Equipment Type ..... **Terminal Units**
Air System Type ..... **Water Source Heat Pump**
Number of zones **1**
Ventilation ..... **Dedicated Outdoor Air System**

2. Dedicated Outdoor Air System Components:

Ventilation Air Data:

Airflow Control ..... **Constant Ventilation Airflow**
Ventilation Sizing Method ..... **Sum of Space OA Airflows**
Unocc. Damper Position ..... **Closed**
Damper Leak Rate ..... **0** %
Outdoor Air CO2 Level ..... **400** ppm

Heating Coil Data:

Setpoint ..... **68.0** °F
Heating Source ..... **Water Source Heat Pump**
Schedule ..... **JFM* * * * * * ND**

Ventilation Fan Data:

Fan Type ..... **Forward Curved with Variable Frequency Drive**
Configuration ..... **Draw-thru**
Fan Performance ..... **0.18** BHP
Motor Efficiency ..... **90** %

% Airflow	100	90	80	70	60	50
% kW	100	77	60	44	35	25

% Airflow	40	30	20	10	0
% kW	19	13	9	7	6

Duct System Data:

Return Duct or Plenum Data:

Return Air Via ..... **Ducted Return**

Exhaust Fan Data:

Fan Type ..... **Forward Curved with Variable Frequency Drive**
Fan Performance ..... **0.16** BHP
Motor Efficiency ..... **90** %

% Airflow	100	90	80	70	60	50
% kW	100	77	60	44	35	25

% Airflow	40	30	20	10	0
% kW	19	13	9	7	6

3. Zone Components:

Space Assignments:

Zone 1: DOAS- 4	
G1010 MECHANICAL	x1
G1009 ELECTRICAL	x1

Thermostats and Zone Data:

Zone	Cooling T-Stat Occ. (°F)	Cooling T-Stat Unocc. (°F)	Heating T-Stat Occ. (°F)	Heating T-Stat Unocc. (°F)	T-Stat Throttling Range (°F)
1	78.0	80.0	55.0	50.0	1.50

Thermostat Schedule ..... **Thermostat Schedule**
Unoccupied Cooling is ..... **Available**

Common Terminal Unit Data:

Cooling Coil:

Design Supply Temp. ..... **55.0** °F
Coil Bypass Factor **0.100**
Cooling Source ..... **Water-Cooled DX**
Schedule ..... **Off all year**

Heating Coil:
Design Supply Temp. ..... **95.0** °F
Heating Source ..... **Water Source Heat Pump**
Schedule ..... **Off all year**

Fan Control ..... **Fan On**

Terminal Units Data:

Zone	Terminal Type	Air Distribution	Air Distribution Effectiveness Specification	Air Distribution Effectiveness	Minimum Airflow	Fan Performance	Fan Efficiency	Design Supply Temp.
1	Fan coil	Ceiling supply / ceiling return	Not Used	-	0.00 CFM/person	0.50 in wg	50 %	-

4. Sizing Data (Computer-Generated):

System Sizing Data:

Sizing Data:
Cooling Supply Temperature ..... **55.0** °F
Heating Supply Temperature ..... **95.0** °F

Hydronic Sizing Specifications:
Chilled Water Delta-T ..... **10.0** °F
Hot Water Delta-T ..... **20.0** °F

Safety Factors:
Cooling Sensible ..... **10** %
Cooling Latent ..... **10** %
Heating ..... **25** %

Zone Sizing Data:
Zone Airflow Sizing Method ..... **Sum of space airflow rates**
Space Airflow Sizing Method ..... **Individual peak space loads**

Zone	Supply Airflow (CFM)	Zone Htg Unit (MBH)	Reheat Coil (MBH)	Ventilation (CFM)
1	360.0	-	-	360.0

5. Equipment Data

Terminal Cooling Units - WSHP

Zone	Estimated Maximum Load (MBH)	Design EWT (°F)	Equipment Sizing	Gross Cooling Capacity (MBH)	Capacity Oversizing Factor (%)	Compressor Power (kW)	ISO / ARI Performance Rating	Units
1	0.0	85.0	Auto-Sized	-	0	-	14.000	EER

Terminal Heating Units - WSHP

Zone	Estimated Maximum Load (MBH)	Design EWT (°F)	Equipment Sizing	Gross Heating Capacity (MBH)	Capacity Oversizing Factor (%)	Compressor Power (kW)	ISO / ARI Performance Rating	Units
1	0.0	62.0	Auto-Sized	-	0	-	4.800	COP

Misc. Components - WSHP

Cooling Tower	**Proposed Cooling Tower**	
Auxiliary Boiler	**Proposed Boilers**	
Closed Loop:		
Circulation Pump Performance	**19.0**	W/gpm
Circulation Pump Mechanical Efficiency	**70.0**	%
Circulation Pump Motor Electrical Efficiency	**94.0**	%
Maximum Setpoint	**85.0**	°F
Minimum Setpoint	**62.0**	°F

DOAS-5 Input Data

Project Name: 505100403 ORANGEBURG_DESIGN MODEL_DOAS 05/20/2021
Prepared by: Mott MacDonald 11:05PM

1. General Details:

Air System Name **DOAS-5**
Equipment Type ..... **Terminal Units**
Air System Type ..... **Water Source Heat Pump**
Number of zones **1**
Ventilation ..... **Dedicated Outdoor Air System**

2. Dedicated Outdoor Air System Components:

Ventilation Air Data:

Airflow Control ..... **Constant Ventilation Airflow**
Ventilation Sizing Method ..... **Sum of Space OA Airflows**
Unocc. Damper Position ..... **Closed**
Damper Leak Rate ..... **0** %
Outdoor Air CO2 Level ..... **400** ppm

Ventilation Reclaim Data:

Reclaim Type ..... **Sensible and Latent Heat**
Thermal Efficiency ..... **71** %
Input kW ..... **0.370** kW
Schedule ..... **JFMAMJJASOND**

Heating Coil Data:

Setpoint ..... **68.0** °F
Heating Source ..... **Water Source Heat Pump**
Schedule ..... **JFM* * * * * * * ND**

Ventilation Fan Data:

Fan Type ..... **Forward Curved with Variable Frequency Drive**
Configuration ..... **Draw-thru**
Fan Performance ..... **1.15** BHP
Motor Efficiency ..... **90** %

% Airflow	100	90	80	70	60	50
% kW	100	77	60	44	35	25

% Airflow	40	30	20	10	0
% kW	19	13	9	7	6

Duct System Data:

Return Duct or Plenum Data:

Return Air Via ..... **Ducted Return**

Exhaust Fan Data:

Fan Type ..... **Forward Curved with Variable Frequency Drive**
Fan Performance ..... **0.89** BHP
Motor Efficiency ..... **90** %

% Airflow	100	90	80	70	60	50
% kW	100	77	60	44	35	25

% Airflow	40	30	20	10	0
% kW	19	13	9	7	6

3. Zone Components:

Space Assignments:

Zone 1: DOAS - 5	
1032 UNIT STORAGE	x1
1035 STAGING	x1
1036 UNIT STORAGE	x1
1037 UNIT STORAGE	x1

Thermostats and Zone Data:

Zone	Cooling T-Stat Occ.	Cooling T-Stat Unocc.	Heating T-Stat Occ.	Heating T-Stat Unocc.	T-Stat Throttling Range

	(°F)	(°F)	(°F)	(°F)	(°F)
1	78.0	80.0	68.0	65.0	1.50

Thermostat Schedule ..... **Thermostat Schedule**
Unoccupied Cooling is ..... **Available**

Common Terminal Unit Data:

Cooling Coil:
Design Supply Temp. ..... **55.0** °F
Coil Bypass Factor **0.100**
Cooling Source ..... **Water-Cooled DX**
Schedule ..... **Off all year**

Heating Coil:
Design Supply Temp. ..... **95.0** °F
Heating Source ..... **Water Source Heat Pump**
Schedule ..... **JFMAMJJASOND**

Fan Control ..... **Fan On**

Terminal Units Data:

Zone	Terminal Type	Air Distribution	Air Distribution Effectiveness Specification	Air Distribution Effectiveness	Minimum Airflow	Fan Performance	Fan Efficiency	Design Supply Temp.
1	Fan coil	Ceiling supply / ceiling return	Not Used	-	0.00 CFM/person	1.00 in wg	70 %	-

4. Sizing Data (Computer-Generated):

System Sizing Data:

Sizing Data:
Cooling Supply Temperature ..... **55.0** °F
Heating Supply Temperature ..... **95.0** °F

Hydronic Sizing Specifications:
Chilled Water Delta-T ..... **10.0** °F
Hot Water Delta-T ..... **20.0** °F

Safety Factors:
Cooling Sensible ..... **10** %
Cooling Latent ..... **10** %
Heating ..... **25** %

Zone Sizing Data:
Zone Airflow Sizing Method ..... **Sum of space airflow rates**
Space Airflow Sizing Method ..... **Individual peak space loads**

Zone	Supply Airflow (CFM)	Zone Htg Unit (MBH)	Reheat Coil (MBH)	Ventilation (CFM)
1	1800.0	-	-	1800.0

5. Equipment Data

Terminal Cooling Units - WSHP

Zone	Estimated Maximum Load (MBH)	Design EWT (°F)	Equipment Sizing	Gross Cooling Capacity (MBH)	Capacity Oversizing Factor (%)	Compressor Power (kW)	ISO / ARI Performance Rating	Units
1	0.0	85.0	Auto-Sized	-	0	-	16.500	EER

Terminal Heating Units - WSHP

Zone	Estimated Maximum Load (MBH)	Design EWT (°F)	Equipment Sizing	Gross Heating Capacity (MBH)	Capacity Oversizing Factor (%)	Compressor Power (kW)	ISO / ARI Performance Rating	Units
1	18.4	62.0	Auto-Sized	-	0	-	5.900	COP

Misc. Components - WSHP

Cooling Tower ..... **Proposed Cooling Tower**
Auxiliary Boiler ..... **Proposed Boilers**

Closed Loop:

Circulation Pump Performance ..... **19.0** W/gpm
Circulation Pump Mechanical Efficiency ..... **70.0** %
Circulation Pump Motor Electrical Efficiency ..... **94.0** %
Maximum Setpoint ..... **85.0** °F
Minimum Setpoint ..... **62.0** °F

1. General Details:

Air System Name **DOAS-6**
Equipment Type ..... **Terminal Units**
Air System Type ..... **Water Source Heat Pump**
Number of zones **1**
Ventilation ..... **Dedicated Outdoor Air System**

2. Dedicated Outdoor Air System Components:

Ventilation Air Data:

Airflow Control ..... **Constant Ventilation Airflow**
Ventilation Sizing Method ..... **Sum of Space OA Airflows**
Unocc. Damper Position ..... **Closed**
Damper Leak Rate ..... **0** %
Outdoor Air CO2 Level ..... **400** ppm

Ventilation Reclaim Data:

Reclaim Type ..... **Sensible and Latent Heat**
Thermal Efficiency ..... **73** %
Input kW ..... **0.370** kW
Schedule ..... **JFMAMJJASOND**

Cooling Coil Data:

Setpoint ..... **73.0** °F
Coil Bypass Factor **0.100**
Cooling Source ..... **Water-Cooled DX**
Schedule ..... **JFMAMJJASOND**

Heating Coil Data:

Setpoint ..... **68.0** °F
Heating Source ..... **Water Source Heat Pump**
Schedule ..... **JFMAMJJASOND**

Dehumidification Data:

Maximum RH Setpoint ..... **50** %

Ventilation Fan Data:

Fan Type ..... **Forward Curved with Variable Frequency Drive**
Configuration ..... **Draw-thru**
Fan Performance ..... **1.40** BHP
Motor Efficiency ..... **90** %

% Airflow	100	90	80	70	60	50
% kW	100	77	60	44	35	25

% Airflow	40	30	20	10	0
% kW	19	13	9	7	6

Duct System Data:

Return Duct or Plenum Data:

Return Air Via ..... **Ducted Return**

Exhaust Fan Data:

Fan Type ..... **Forward Curved with Variable Frequency Drive**
Fan Performance ..... **1.31** BHP
Motor Efficiency ..... **90** %

% Airflow	100	90	80	70	60	50
% kW	100	77	60	44	35	25

% Airflow	40	30	20	10	0
% kW	19	13	9	7	6

3. Zone Components:

Space Assignments:

Zone 1: DOAS - 6	
G1007 MEN SHOWER LOCK	x1
G1008 WOMEN SHOWER LOC	x1

G1003 MEN TOILET	x1
G1004 JANITOR	x1
G1005 WOMEN TOILET	x1
1031 PHYSICAL READINESS	x1

Thermostats and Zone Data:

Zone	Cooling T-Stat Occ. (°F)	Cooling T-Stat Unocc. (°F)	Heating T-Stat Occ. (°F)	Heating T-Stat Unocc. (°F)	T-Stat Throttling Range (°F)
1	78.0	80.0	68.0	65.0	1.50

Thermostat Schedule ..... **Thermostat Schedule**
Unoccupied Cooling is ..... **Available**

Common Terminal Unit Data:

Cooling Coil:
Design Supply Temp. ..... **55.0** °F
Coil Bypass Factor **0.100**
Cooling Source ..... **Water-Cooled DX**
Schedule ..... **Off all year**

Heating Coil:
Design Supply Temp. ..... **95.0** °F
Heating Source ..... **Water Source Heat Pump**
Schedule ..... **Off all year**

Fan Control ..... **Fan On**

Terminal Units Data:

Zone	Terminal Type	Air Distribution	Air Distribution Effectiveness Specification	Air Distribution Effectiveness	Minimum Airflow	Fan Performance	Fan Efficiency	Design Supply Temp.
1	Fan coil	Ceiling supply / ceiling return	Not Used	-	0.00 CFM/person	0.50 in wg	50 %	-

4. Sizing Data (Computer-Generated):

System Sizing Data:

Sizing Data:
Cooling Supply Temperature ..... **55.0** °F
Heating Supply Temperature ..... **95.0** °F

Hydronic Sizing Specifications:
Chilled Water Delta-T ..... **10.0** °F
Hot Water Delta-T ..... **20.0** °F

Safety Factors:
Cooling Sensible ..... **10** %
Cooling Latent ..... **10** %
Heating ..... **25** %

Zone Sizing Data:
Zone Airflow Sizing Method ..... **Sum of space airflow rates**
Space Airflow Sizing Method ..... **Individual peak space loads**

Zone	Supply Airflow (CFM)	Zone Htg Unit (MBH)	Reheat Coil (MBH)	Ventilation (CFM)
1	2357.6	-	-	2355.0

5. Equipment Data

DOAS Cooling Unit - Water-Cooled DX

Estimated Maximum Load	**109.6**	MBH
Design EWT	**85.0**	°F
Equipment Sizing	**Auto-Sized**	
Capacity Oversizing Factor	**0**	%
ISO/ARI Performance Rating	**18.200**	EER

DOAS Heating Unit - WSHP

Estimated Maximum Load	**38.3**	MBH
Design EWT	**62.0**	°F
Equipment Sizing	**Auto-Sized**	
Capacity Oversizing Factor	**0**	%
ISO/ARI Performance Rating	**5.200**	COP

Terminal Cooling Units - WSHP

Zone	Estimated Maximum Load (MBH)	Design EWT (°F)	Equipment Sizing	Gross Cooling Capacity (MBH)	Capacity Oversizing Factor (%)	Compressor Power (kW)	ISO / ARI Performance Rating	Units
1	0.0	85.0	Auto-Sized	-	0	-	12.000	EER

Terminal Heating Units - WSHP

Zone	Estimated Maximum Load (MBH)	Design EWT (°F)	Equipment Sizing	Gross Heating Capacity (MBH)	Capacity Oversizing Factor (%)	Compressor Power (kW)	ISO / ARI Performance Rating	Units
1	0.0	62.0	Auto-Sized	-	0	-	4.200	COP

Misc. Components - WSHP

Cooling Tower	**Proposed Cooling Tower**	
Auxiliary Boiler	**Proposed Boilers**	

Closed Loop:

Circulation Pump Performance	**19.0**	W/gpm
Circulation Pump Mechanical Efficiency	**70.0**	%
Circulation Pump Motor Electrical Efficiency	**94.0**	%
Maximum Setpoint	**85.0**	°F
Minimum Setpoint	**62.0**	°F

DOAS CALCULATIONS OUTPUT USING CARRIER HOURLY ANALYSIS PROGRAM HAP 5.11

Table of Contents:

1. System Outputs

Dedicated Outdoor Air System (DOAS) Sizing Summary for DOAS-1

Project Name: 505100403 ORANGEBURG_DESIGN MODEL_DOAS 05/20/2021
Prepared by: Mott MacDonald 11:05PM

Air System Information

Air System Name	**DOAS-1**		Number of zones	**1**	
Equipment Class	**TERM**		Floor Area	**5625.0**	ft²
Air System Type	**WSHP**		Location	**Orangeburg, New York**	

Sizing Calculation Information

Calculation Months	**Jan to Dec**	Zone CFM Sizing	**Sum of space airflow rates**
Sizing Data	**Calculated**	Space CFM Sizing	**Individual peak space loads**

Cooling Coil Sizing Data

Total coil load	**4.4**	Tons	Load occurs at	**Jul 1600**	
Total coil load	**52.3**	MBH	OA DB / WB	**92.0 / 74.0**	°F
Total coil load	**252.5**	CFM/Ton	Entering DB / WB	**82.0 / 69.1**	°F
Sensible coil load	**33.3**	MBH	Leaving DB / WB	**53.9 / 53.6**	°F
Coil CFM at Jul 1600	**1100**	CFM	Bypass Factor	**0.100**	
Max coil CFM	**1100**	CFM			
Sensible heat ratio	**0.637**				
Water flow @ 10.0 °F rise	**N/A**				

Heating Coil Sizing Data

Max coil load	**15.1**	MBH	Load occurs at	**Oct 0700**	
Coil CFM at Oct 0700	**1100**	CFM	Ent. DB / Lvg DB	**53.6 / 66.3**	°F
Max coil CFM	**1100**	CFM			
Water flow @ 10.0 °F drop	**N/A**				

Ventilation Fan Sizing Data

Actual max CFM	**1100**	CFM	Fan motor BHP	**0.72**	BHP
Standard CFM	**1099**	CFM	Fan motor kW	**0.60**	kW
Actual max CFM/ft²	**0.20**	CFM/ft²			

Exhaust Fan Sizing Data

Actual max CFM	**1100**	CFM	Fan motor BHP	**0.63**	BHP
Standard CFM	**1099**	CFM	Fan motor kW	**0.52**	kW
Actual max CFM/ft²	**0.20**	CFM/ft²			

Outdoor Ventilation Air Data

Design airflow CFM	**1100**	CFM	CFM/person	**16.42**	CFM/person
CFM/ft²	**0.20**	CFM/ft²			

Dedicated Outdoor Air System (DOAS) Sizing Summary for DOAS-2

Project Name: 505100403 ORANGEBURG_DESIGN MODEL_DOAS 05/20/2021
Prepared by: Mott MacDonald 11:05PM

Air System Information

Air System Name	**DOAS-2**		Number of zones	**1**	
Equipment Class	**TERM**		Floor Area	**5291.0**	ft²
Air System Type	**WSHP**		Location	**Orangeburg, New York**	

Sizing Calculation Information

Calculation Months	**Jan to Dec**		Zone CFM Sizing	**Sum of space airflow rates**
Sizing Data	**Calculated**		Space CFM Sizing	**Individual peak space loads**

Cooling Coil Sizing Data

Total coil load	**12.1**	Tons	Load occurs at	**Jul 1500**	
Total coil load	**145.1**	MBH	OA DB / WB	**91.6 / 73.9**	°F
Total coil load	**238.1**	CFM/Ton	Entering DB / WB	**83.3 / 69.8**	°F
Sensible coil load	**91.8**	MBH	Leaving DB / WB	**53.8 / 53.5**	°F
Coil CFM at Jul 1500	**2880**	CFM	Bypass Factor	**0.100**	
Max coil CFM	**2880**	CFM			
Sensible heat ratio	**0.633**				
Water flow @ 10.0 °F rise	**N/A**				

Heating Coil Sizing Data

Max coil load	**44.8**	MBH	Load occurs at	**Des Htg**	
Coil CFM at Des Htg	**2880**	CFM	Ent. DB / Lvg DB	**51.4 / 65.8**	°F
Max coil CFM	**2880**	CFM			
Water flow @ 20.0 °F drop	**N/A**				

Ventilation Fan Sizing Data

Actual max CFM	**2880**	CFM	Fan motor BHP	**2.40**	BHP
Standard CFM	**2877**	CFM	Fan motor kW	**1.99**	kW
Actual max CFM/ft²	**0.54**	CFM/ft²			

Exhaust Fan Sizing Data

Actual max CFM	**2880**	CFM	Fan motor BHP	**1.62**	BHP
Standard CFM	**2877**	CFM	Fan motor kW	**1.34**	kW
Actual max CFM/ft²	**0.54**	CFM/ft²			

Outdoor Ventilation Air Data

Design airflow CFM	**2880**	CFM	CFM/person	**14.98**	CFM/person
CFM/ft²	**0.54**	CFM/ft²			

Dedicated Outdoor Air System (DOAS) Sizing Summary for DOAS-3

Project Name: 505100403 ORANGEBURG_DESIGN MODEL_DOAS — 05/20/2021
Prepared by: Mott MacDonald — 11:05PM

Air System Information

Air System Name	**DOAS-3**		Number of zones	**1**	
Equipment Class	**TERM**		Floor Area	**3645.0**	ft²
Air System Type	**WSHP**		Location	**Orangeburg, New York**	

Sizing Calculation Information

Calculation Months	**Jan to Dec**		Zone CFM Sizing	**Sum of space airflow rates**
Sizing Data	**Calculated**		Space CFM Sizing	**Individual peak space loads**

Cooling Coil Sizing Data

Total coil load	**5.0**	Tons	Load occurs at	**Jul 1600**	
Total coil load	**60.0**	MBH	OA DB / WB	**92.0 / 74.0**	°F
Total coil load	**180.0**	CFM/Ton	Entering DB / WB	**92.0 / 74.0**	°F
Sensible coil load	**37.5**	MBH	Leaving DB / WB	**53.4 / 53.3**	°F
Coil CFM at Jul 1600	**900**	CFM	Bypass Factor	**0.100**	
Max coil CFM	**900**	CFM			
Sensible heat ratio	**0.625**				
Water flow @ 10.0 °F rise	**N/A**				

Heating Coil Sizing Data

Max coil load	**51.8**	MBH	Load occurs at	**Des Htg**	
Coil CFM at Des Htg	**900**	CFM	Ent. DB / Lvg DB	**13.0 / 66.3**	°F
Max coil CFM	**900**	CFM			
Water flow @ 20.0 °F drop	**N/A**				

Ventilation Fan Sizing Data

Actual max CFM	**900**	CFM	Fan motor BHP	**0.58**	BHP
Standard CFM	**899**	CFM	Fan motor kW	**0.48**	kW
Actual max CFM/ft²	**0.25**	CFM/ft²			

Exhaust Fan Sizing Data

Actual max CFM	**900**	CFM	Fan motor BHP	**0.55**	BHP
Standard CFM	**899**	CFM	Fan motor kW	**0.46**	kW
Actual max CFM/ft²	**0.25**	CFM/ft²			

Outdoor Ventilation Air Data

Design airflow CFM	**900**	CFM	CFM/person	**150.00**	CFM/person
CFM/ft²	**0.25**	CFM/ft²			

Dedicated Outdoor Air System (DOAS) Sizing Summary for DOAS-4

Project Name: 505100403 ORANGEBURG_DESIGN MODEL_DOAS 05/20/2021
Prepared by: Mott MacDonald 11:05PM

Air System Information

Air System Name	**DOAS-4**		Number of zones	**1**	
Equipment Class	**TERM**		Floor Area	**1119.0**	ft²
Air System Type	**WSHP**		Location	**Orangeburg, New York**	

Sizing Calculation Information

Calculation Months	**Jan to Dec**	Zone CFM Sizing	**Sum of space airflow rates**
Sizing Data	**Calculated**	Space CFM Sizing	**Individual peak space loads**

Heating Coil Sizing Data

Max coil load	**20.9**	MBH	Load occurs at	**Des Htg**	
Coil CFM at Des Htg	**360**	CFM	Ent. DB / Lvg DB	**13.0 / 66.7**	°F
Max coil CFM	**360**	CFM			
Water flow @ 20.0 °F drop	**N/A**				

Ventilation Fan Sizing Data

Actual max CFM	**360**	CFM	Fan motor BHP	**0.18**	BHP
Standard CFM	**360**	CFM	Fan motor kW	**0.15**	kW
Actual max CFM/ft²	**0.32**	CFM/ft²			

Exhaust Fan Sizing Data

Actual max CFM	**360**	CFM	Fan motor BHP	**0.16**	BHP
Standard CFM	**360**	CFM	Fan motor kW	**0.13**	kW
Actual max CFM/ft²	**0.32**	CFM/ft²			

Outdoor Ventilation Air Data

Design airflow CFM	**360**	CFM	CFM/person	**0.00**	CFM/person
CFM/ft²	**0.32**	CFM/ft²			

Dedicated Outdoor Air System (DOAS) Sizing Summary for DOAS-5

Project Name: 505100403 ORANGEBURG_DESIGN MODEL_DOAS 05/20/2021
Prepared by: Mott MacDonald 11:05PM

Air System Information

Air System Name	**DOAS-5**		Number of zones	**1**	
Equipment Class	**TERM**		Floor Area	**6881.0**	ft²
Air System Type	**WSHP**		Location	**Orangeburg, New York**	

Sizing Calculation Information

Calculation Months	**Jan to Dec**	Zone CFM Sizing	**Sum of space airflow rates**
Sizing Data	**Calculated**	Space CFM Sizing	**Individual peak space loads**

Heating Coil Sizing Data

Max coil load	**25.9**	MBH	Load occurs at	**Des Htg**	
Coil CFM at Des Htg	**1800**	CFM	Ent. DB / Lvg DB	**53.0 / 66.3**	°F
Max coil CFM	**1800**	CFM			
Water flow @ 20.0 °F drop	**N/A**				

Ventilation Fan Sizing Data

Actual max CFM	**1800**	CFM	Fan motor BHP	**1.15**	BHP
Standard CFM	**1798**	CFM	Fan motor kW	**0.95**	kW
Actual max CFM/ft²	**0.26**	CFM/ft²			

Exhaust Fan Sizing Data

Actual max CFM	**1800**	CFM	Fan motor BHP	**0.89**	BHP
Standard CFM	**1798**	CFM	Fan motor kW	**0.74**	kW
Actual max CFM/ft²	**0.26**	CFM/ft²			

Outdoor Ventilation Air Data

Design airflow CFM	**1800**	CFM	CFM/person	**0.00**	CFM/person
CFM/ft²	**0.26**	CFM/ft²			

Dedicated Outdoor Air System (DOAS) Sizing Summary for DOAS-6

Project Name: 505100403 ORANGEBURG_DESIGN MODEL_DOAS 05/20/2021
Prepared by: Mott MacDonald 11:05PM

Air System Information

Air System Name	**DOAS-6**		Number of zones	**1**	
Equipment Class	**TERM**		Floor Area	**3184.0**	ft²
Air System Type	**WSHP**		Location	**Orangeburg, New York**	

Sizing Calculation Information

Calculation Months	**Jan to Dec**		Zone CFM Sizing	**Sum of space airflow rates**
Sizing Data	**Calculated**		Space CFM Sizing	**Individual peak space loads**

Cooling Coil Sizing Data

Total coil load	**9.1**	Tons	Load occurs at	**Jul 1600**	
Total coil load	**109.6**	MBH	OA DB / WB	**92.0 / 74.0**	°F
Total coil load	**257.9**	CFM/Ton	Entering DB / WB	**86.9 / 69.0**	°F
Sensible coil load	**82.7**	MBH	Leaving DB / WB	**54.3 / 53.7**	°F
Coil CFM at Jul 1600	**2355**	CFM	Bypass Factor	**0.100**	
Max coil CFM	**2355**	CFM			
Sensible heat ratio	**0.755**				
Water flow @ 10.0 °F rise	**N/A**				

Heating Coil Sizing Data

Max coil load	**38.3**	MBH	Load occurs at	**Des Htg**	
Coil CFM at Des Htg	**2355**	CFM	Ent. DB / Lvg DB	**51.4 / 66.4**	°F
Max coil CFM	**2355**	CFM			
Water flow @ 20.0 °F drop	**N/A**				

Ventilation Fan Sizing Data

Actual max CFM	**2355**	CFM	Fan motor BHP	**1.40**	BHP
Standard CFM	**2352**	CFM	Fan motor kW	**1.16**	kW
Actual max CFM/ft²	**0.74**	CFM/ft²			

Exhaust Fan Sizing Data

Actual max CFM	**2355**	CFM	Fan motor BHP	**1.31**	BHP
Standard CFM	**2352**	CFM	Fan motor kW	**1.09**	kW
Actual max CFM/ft²	**0.74**	CFM/ft²			

Outdoor Ventilation Air Data

Design airflow CFM	**2355**	CFM	CFM/person	**78.50**	CFM/person
CFM/ft²	**0.74**	CFM/ft²			

WATER SOURCE HEAT PUMP (WSHP) CALCULATIONS INPUT USING CARRIER HOURLY ANALYSIS PROGRAM HAP 5.11

Table of Contents:

1. Space Inputs
2. System Inputs

1001 FAMILY SUPPORT

1. General Details:

Floor Area ..... **199.0** ft²
Avg. Ceiling Height ..... **9.0** ft
Building Weight ..... **70.0** lb/ft²

1.1. OA Ventilation Requirements:

Space Usage ..... **User-Defined**
OA Requirement 1 ..... **0.0** CFM
OA Requirement 2 ..... **0.00** CFM/ft²
Space Usage Defaults ..... **ASHRAE Std 62.1-2010**

2. Internals:

2.1. Overhead Lighting:

Fixture Type ..... **Recessed (Unvented)**
Wattage ..... **0.81** W/ft²
Ballast Multiplier **1.15**
Schedule ..... **Office Ligthing Schedule**

2.2. Task Lighting:

Wattage ..... **0.80** W/ft²
Schedule ..... **Office Ligthing Schedule**

2.3. Electrical Equipment:

Wattage ..... **200.0** Watts
Schedule ..... **Office Equipment Schedule**

2.4. People:

Occupancy ..... **1.0** Person
Activity Level ..... **User defined**
Sensible ..... **245.0** BTU/hr/person
Latent ..... **0.0** BTU/hr/person
Schedule ..... **Office Occupancy Schedule**

2.5. Miscellaneous Loads:

Sensible ..... **0** BTU/hr
Schedule ..... **None**
Latent ..... **0** BTU/hr
Schedule ..... **None**

3. Walls, Windows, Doors:

Exp.	Wall Gross Area (ft²)	Window 1 Qty.	Window 2 Qty.	Door 1 Qty.
W	40.5	0	0	0

3.1. Construction Types for Exposure W

Wall Type ..... **Steel frame Wall New**

4. Roofs, Skylights:

Exp.	Roof Gross Area (ft²)	Roof Slope (deg.)	Skylight Qty.
H	199.0	0	0

4.1. Construction Types for Exposure H

Roof Type ..... **Roof**

5. Infiltration:

Design Cooling ..... **0.25** CFM/ft²
Design Heating ..... **0.25** CFM/ft²
Energy Analysis ..... **0.25** CFM/ft²
Infiltration occurs at all hours.

6. Floors:

Type ..... **Slab Floor On Grade**
Floor Area ..... **199.0** ft²
Total Floor U-Value ..... **0.176** BTU/(hr·ft²·°F)
Exposed Perimeter ..... **0.0** ft
Edge Insulation R-Value ..... **0.00** (hr·ft²·°F)/BTU

7. Partitions:

(No partition data).

1002 TEAM RM

1. General Details:

Floor Area ..... **476.0** ft²
Avg. Ceiling Height ..... **9.0** ft
Building Weight ..... **70.0** lb/ft²

1.1. OA Ventilation Requirements:

Space Usage ..... **User-Defined**
OA Requirement 1 ..... **0.0** CFM
OA Requirement 2 ..... **0.00** CFM/ft²
Space Usage Defaults ..... **ASHRAE Std 62.1-2010**

2. Internals:

2.1. Overhead Lighting:

Fixture Type ..... **Recessed (Unvented)**
Wattage ..... **1.07** W/ft²
Ballast Multiplier **1.15**
Schedule ..... **Office Ligthing Schedule**

2.2. Task Lighting:

Wattage ..... **0.80** W/ft²
Schedule ..... **Office Ligthing Schedule**

2.3. Electrical Equipment:

Wattage ..... **850.0** Watts
Schedule ..... **Office Equipment Schedule**

2.4. People:

Occupancy ..... **8.0** People
Activity Level ..... **User defined**
Sensible ..... **245.0** BTU/hr/person
Latent ..... **0.0** BTU/hr/person
Schedule ..... **Office Occupancy Schedule**

2.5. Miscellaneous Loads:

Sensible ..... **0** BTU/hr
Schedule ..... **None**
Latent ..... **0** BTU/hr
Schedule ..... **None**

3. Walls, Windows, Doors:

Exp.	Wall Gross Area (ft²)	Window 1 Qty.	Window 2 Qty.	Door 1 Qty.
N	84.0	0	0	0
N	14.3	0	0	0
N	90.7	52	0	0
W	12.0	0	0	0
W	119.2	0	0	0
W	111.6	48	0	0
S	67.5	0	0	0

3.1. Construction Types for Exposure N

Wall Type ..... **Concrete Wall below grade existing**

3.2. Construction Types for Exposure N

Wall Type ..... **Concrete Wall Existing**

3.3. Construction Types for Exposure N

Wall Type ..... **Steel frame Wall Existing**
1st Window Type ..... **Window Assembly**

3.4. Construction Types for Exposure W

Wall Type ..... **Steel frame Wall New**

3.5. Construction Types for Exposure W

Wall Type ..... **Concrete Wall Existing**

3.6. Construction Types for Exposure W

Wall Type ..... **Steel frame Wall Existing**
1st Window Type ..... **Window Assembly**

3.7. Construction Types for Exposure S

Wall Type ..... **Concrete Wall Existing**

4. Roofs, Skylights:

Exp.	Roof Gross Area (ft²)	Roof Slope (deg.)	Skylight Qty.
H	476.0	0	0

4.1. Construction Types for Exposure H

Roof Type ..... **Roof**

5. Infiltration:

Design Cooling	**0.25**	CFM/ft²
Design Heating	**0.25**	CFM/ft²
Energy Analysis	**0.25**	CFM/ft²

Infiltration occurs only when the fan is off.

6. Floors:

Type	**Slab Floor On Grade**	
Floor Area	**476.0**	ft²
Total Floor U-Value	**0.176**	BTU/(hr·ft²·°F)
Exposed Perimeter	**47.0**	ft
Edge Insulation R-Value	**10.00**	(hr·ft²·°F)/BTU

7. Partitions:

(No partition data).

1003 PRIVATE OFFICE

1. General Details:

Floor Area	**112.0**	ft²
Avg. Ceiling Height	**9.0**	ft
Building Weight	**70.0**	lb/ft²

1.1. OA Ventilation Requirements:

Space Usage	**User-Defined**	
OA Requirement 1	**0.0**	CFM
OA Requirement 2	**0.00**	CFM/ft²
Space Usage Defaults	**ASHRAE Std 62.1-2010**	

2. Internals:

2.1. Overhead Lighting:

Fixture Type	**Recessed (Unvented)**	
Wattage	**0.81**	W/ft²
Ballast Multiplier	**1.15**	
Schedule	**Office Ligthing Schedule**	

2.2. Task Lighting:

Wattage	**0.80**	W/ft²
Schedule	**Office Ligthing Schedule**	

2.3. Electrical Equipment:

Wattage	**200.0**	Watts
Schedule	**Office Equipment Schedule**	

2.4. People:

Occupancy	**1.0**	Person
Activity Level	**User defined**	
Sensible	**245.0**	BTU/hr/person
Latent	**0.0**	BTU/hr/person
Schedule	**Office Occupancy Schedule**	

2.5. Miscellaneous Loads:

Sensible	**0**	BTU/hr
Schedule	**None**	
Latent	**0**	BTU/hr
Schedule	**None**	

3. Walls, Windows, Doors:

(No Wall, Window, Door data).

4. Roofs, Skylights:

Exp.	Roof Gross Area (ft²)	Roof Slope (deg.)	Skylight Qty.
H	112.0	0	0

4.1. Construction Types for Exposure H

Roof Type	**Roof**

5. Infiltration:

Design Cooling	**0.00**	ACH
Design Heating	**0.00**	ACH
Energy Analysis	**0.00**	ACH

Infiltration occurs only when the fan is off.

6. Floors:

Type	**Slab Floor On Grade**	
Floor Area	**112.0**	ft²
Total Floor U-Value	**0.176**	BTU/(hr·ft²·°F)
Exposed Perimeter	**0.0**	ft
Edge Insulation R-Value	**0.00**	(hr·ft²·°F)/BTU

7. Partitions:

(No partition data).

1004 RETENTION

1. General Details:

Floor Area ..... **278.0** ft²
Avg. Ceiling Height ..... **9.0** ft
Building Weight ..... **70.0** lb/ft²

1.1. OA Ventilation Requirements:

Space Usage ..... **User-Defined**
OA Requirement 1 ..... **0.0** CFM
OA Requirement 2 ..... **0.00** CFM/ft²
Space Usage Defaults ..... **ASHRAE Std 62.1-2010**

2. Internals:

2.1. Overhead Lighting:

Fixture Type ..... **Recessed (Unvented)**
Wattage ..... **0.93** W/ft²
Ballast Multiplier **1.15**
Schedule ..... **Office Ligthing Schedule**

2.2. Task Lighting:

Wattage ..... **0.80** W/ft²
Schedule ..... **Office Ligthing Schedule**

2.3. Electrical Equipment:

Wattage ..... **200.0** Watts
Schedule ..... **Office Equipment Schedule**

2.4. People:

Occupancy ..... **1.0** Person
Activity Level ..... **User defined**
Sensible ..... **245.0** BTU/hr/person
Latent ..... **0.0** BTU/hr/person
Schedule ..... **Office Occupancy Schedule**

2.5. Miscellaneous Loads:

Sensible ..... **0** BTU/hr
Schedule ..... **None**
Latent ..... **0** BTU/hr
Schedule ..... **None**

3. Walls, Windows, Doors:

Exp.	Wall Gross Area (ft²)	Window 1 Qty.	Window 2 Qty.	Door 1 Qty.
N	48.0	0	0	0
N	8.2	0	0	0
N	51.8	30	0	0

3.1. Construction Types for Exposure N

Wall Type ..... **Concrete Wall below grade existing**

3.2. Construction Types for Exposure N

Wall Type ..... **Concrete Wall Existing**

3.3. Construction Types for Exposure N

Wall Type ..... **Steel frame Wall Existing**
1st Window Type ..... **Window Assembly**

4. Roofs, Skylights:

Exp.	Roof Gross Area (ft²)	Roof Slope (deg.)	Skylight Qty.
H	278.0	0	0

4.1. Construction Types for Exposure H

Roof Type ..... **Roof**

5. Infiltration:

Design Cooling ..... **0.25** CFM/ft²
Design Heating ..... **0.25** CFM/ft²
Energy Analysis ..... **0.25** CFM/ft²
Infiltration occurs only when the fan is off.

6. Floors:

Type ..... **Slab Floor On Grade**
Floor Area ..... **278.0** ft²
Total Floor U-Value ..... **0.176** BTU/(hr·ft²·°F)
Exposed Perimeter ..... **12.0** ft
Edge Insulation R-Value ..... **10.00** (hr·ft²·°F)/BTU

7. Partitions:

(No partition data).

1005 BREAK RM

1. General Details:
Floor Area ..... **285.0** ft²
Avg. Ceiling Height ..... **9.0** ft
Building Weight ..... **70.0** lb/ft²

1.1. OA Ventilation Requirements:
Space Usage ..... **User-Defined**
OA Requirement 1 ..... **0.0** CFM
OA Requirement 2 ..... **0.00** CFM/ft²
Space Usage Defaults ..... **ASHRAE Std 62.1-2010**

2. Internals:

2.1. Overhead Lighting:
Fixture Type ..... **Recessed (Unvented)**
Wattage ..... **0.51** W/ft²
Ballast Multiplier **1.15**
Schedule ..... **Office Ligthing Schedule**

2.2. Task Lighting:
Wattage ..... **0.00** W/ft²
Schedule ..... **None**

2.3. Electrical Equipment:
Wattage ..... **2302.0** Watts
Schedule ..... **Office Equipment Schedule**

2.4. People:
Occupancy ..... **6.0** People
Activity Level ..... **User defined**
Sensible ..... **245.0** BTU/hr/person
Latent ..... **0.0** BTU/hr/person
Schedule ..... **Office Occupancy Schedule**

2.5. Miscellaneous Loads:
Sensible ..... **0** BTU/hr
Schedule ..... **Office Equipment Schedule**
Latent ..... **0** BTU/hr
Schedule ..... **None**

3. Walls, Windows, Doors:

Exp.	Wall Gross Area (ft²)	Window 1 Qty.	Window 2 Qty.	Door 1 Qty.
N	68.0	0	0	0
N	11.6	0	0	0
N	73.4	42	0	0

3.1. Construction Types for Exposure N
Wall Type ..... **Concrete Wall below grade existing**

3.2. Construction Types for Exposure N
Wall Type ..... **Concrete Wall Existing**

3.3. Construction Types for Exposure N
Wall Type ..... **Steel frame Wall Existing**
1st Window Type ..... **Window Assembly**

4. Roofs, Skylights:

Exp.	Roof Gross Area (ft²)	Roof Slope (deg.)	Skylight Qty.
H	285.0	0	0

4.1. Construction Types for Exposure H
Roof Type ..... **Roof**

5. Infiltration:
Design Cooling ..... **0.25** CFM/ft²
Design Heating ..... **0.25** CFM/ft²
Energy Analysis ..... **0.25** CFM/ft²
Infiltration occurs only when the fan is off.

6. Floors:
Type ..... **Slab Floor On Grade**
Floor Area ..... **285.0** ft²
Total Floor U-Value ..... **0.176** BTU/(hr·ft²·°F)
Exposed Perimeter ..... **17.0** ft
Edge Insulation R-Value ..... **10.00** (hr·ft²·°F)/BTU

7. Partitions:
(No partition data).

1006 LEARNING CENTER

1. General Details:

Floor Area ..... **308.0** ft²
Avg. Ceiling Height ..... **9.0** ft
Building Weight ..... **70.0** lb/ft²

1.1. OA Ventilation Requirements:

Space Usage ..... **User-Defined**
OA Requirement 1 ..... **0.0** CFM
OA Requirement 2 ..... **0.00** CFM/ft²
Space Usage Defaults ..... **ASHRAE Std 62.1-2010**

2. Internals:

2.1. Overhead Lighting:

Fixture Type ..... **Recessed (Unvented)**
Wattage ..... **0.92** W/ft²
Ballast Multiplier **1.15**
Schedule ..... **Office Ligthing Schedule**

2.2. Task Lighting:

Wattage ..... **0.00** W/ft²
Schedule ..... **None**

2.3. Electrical Equipment:

Wattage ..... **1800.0** Watts
Schedule ..... **Office Equipment Schedule**

2.4. People:

Occupancy ..... **9.0** People
Activity Level ..... **User defined**
Sensible ..... **245.0** BTU/hr/person
Latent ..... **0.0** BTU/hr/person
Schedule ..... **Office Occupancy Schedule**

2.5. Miscellaneous Loads:

Sensible ..... **0** BTU/hr
Schedule ..... **None**
Latent ..... **0** BTU/hr
Schedule ..... **None**

3. Walls, Windows, Doors:

Exp.	Wall Gross Area (ft²)	Window 1 Qty.	Window 2 Qty.	Door 1 Qty.
N	74.3	0	0	0
N	12.6	0	0	0
N	80.3	46	0	0

3.1. Construction Types for Exposure N

Wall Type ..... **Concrete Wall below grade existing**

3.2. Construction Types for Exposure N

Wall Type ..... **Concrete Wall Existing**

3.3. Construction Types for Exposure N

Wall Type ..... **Steel frame Wall Existing**
1st Window Type ..... **Window Assembly**

4. Roofs, Skylights:

Exp.	Roof Gross Area (ft²)	Roof Slope (deg.)	Skylight Qty.
H	308.0	0	0

4.1. Construction Types for Exposure H

Roof Type ..... **Roof**

5. Infiltration:

Design Cooling ..... **0.25** CFM/ft²
Design Heating ..... **0.25** CFM/ft²
Energy Analysis ..... **0.25** CFM/ft²
Infiltration occurs only when the fan is off.

6. Floors:

Type ..... **Slab Floor On Grade**
Floor Area ..... **308.0** ft²
Total Floor U-Value ..... **0.176** BTU/(hr·ft²·°F)
Exposed Perimeter ..... **18.6** ft
Edge Insulation R-Value ..... **10.00** (hr·ft²·°F)/BTU

7. Partitions:

(No partition data).

1007 TEAM RM/ SIPRNET

1. General Details:

Floor Area ..... **279.0** ft²
Avg. Ceiling Height ..... **9.0** ft
Building Weight ..... **70.0** lb/ft²

1.1. OA Ventilation Requirements:

Space Usage ..... **User-Defined**
OA Requirement 1 ..... **0.0** CFM
OA Requirement 2 ..... **0.00** CFM/ft²
Space Usage Defaults ..... **ASHRAE Std 62.1-2010**

2. Internals:

2.1. Overhead Lighting:

Fixture Type ..... **Recessed (Unvented)**
Wattage ..... **0.81** W/ft²
Ballast Multiplier **1.15**
Schedule ..... **Office Ligthing Schedule**

2.2. Task Lighting:

Wattage ..... **0.80** W/ft²
Schedule ..... **Office Ligthing Schedule**

2.3. Electrical Equipment:

Wattage ..... **1608.0** Watts
Schedule ..... **Office Equipment Schedule**

2.4. People:

Occupancy ..... **6.0** People
Activity Level ..... **User defined**
Sensible ..... **245.0** BTU/hr/person
Latent ..... **0.0** BTU/hr/person
Schedule ..... **Office Occupancy Schedule**

2.5. Miscellaneous Loads:

Sensible ..... **0** BTU/hr
Schedule ..... **None**
Latent ..... **0** BTU/hr
Schedule ..... **None**

3. Walls, Windows, Doors:

(No Wall, Window, Door data).

4. Roofs, Skylights:

Exp.	Roof Gross Area (ft²)	Roof Slope (deg.)	Skylight Qty.
H	279.0	0	0

4.1. Construction Types for Exposure H

Roof Type ..... **Roof**

5. Infiltration:

Design Cooling ..... **0.00** ACH
Design Heating ..... **0.00** ACH
Energy Analysis ..... **0.00** ACH
Infiltration occurs only when the fan is off.

6. Floors:

Type ..... **Slab Floor On Grade**
Floor Area ..... **279.0** ft²
Total Floor U-Value ..... **0.176** BTU/(hr·ft²·°F)
Exposed Perimeter ..... **0.0** ft
Edge Insulation R-Value ..... **0.00** (hr·ft²·°F)/BTU

7. Partitions:

(No partition data).

1008 UNIT COMMONS

1. General Details:

Floor Area ..... **1029.0** ft²
Avg. Ceiling Height ..... **9.0** ft
Building Weight ..... **70.0** lb/ft²

1.1. OA Ventilation Requirements:

Space Usage ..... **User-Defined**
OA Requirement 1 ..... **0.0** CFM
OA Requirement 2 ..... **0.00** CFM/ft²
Space Usage Defaults ..... **ASHRAE Std 62.1-2010**

2. Internals:

2.1. Overhead Lighting:

Fixture Type ..... **Recessed (Unvented)**
Wattage ..... **0.81** W/ft²
Ballast Multiplier **1.15**
Schedule ..... **Office Ligthing Schedule**

2.2. Task Lighting:

Wattage ..... **0.80** W/ft²
Schedule ..... **Office Ligthing Schedule**

2.3. Electrical Equipment:

Wattage ..... **4144.0** Watts
Schedule ..... **Office Equipment Schedule**

2.4. People:

Occupancy ..... **13.0** People
Activity Level ..... **User defined**
Sensible ..... **245.0** BTU/hr/person
Latent ..... **0.0** BTU/hr/person
Schedule ..... **Office Occupancy Schedule**

2.5. Miscellaneous Loads:

Sensible ..... **0** BTU/hr
Schedule ..... **None**
Latent ..... **0** BTU/hr
Schedule ..... **None**

3. Walls, Windows, Doors:

Exp.	Wall Gross Area (ft²)	Window 1 Qty.	Window 2 Qty.	Door 1 Qty.
S	28.0	0	0	0
S	90.5	0	0	0
S	109.4	0	0	0

3.1. Construction Types for Exposure S

Wall Type ..... **Concrete Wall Existing**

3.2. Construction Types for Exposure S

Wall Type ..... **Concrete Wall below grade existing**

3.3. Construction Types for Exposure S

Wall Type ..... **Steel frame Wall Existing**

4. Roofs, Skylights:

Exp.	Roof Gross Area (ft²)	Roof Slope (deg.)	Skylight Qty.
H	1029.0	0	0

4.1. Construction Types for Exposure H

Roof Type ..... **Roof**

5. Infiltration:

Design Cooling ..... **0.25** CFM/ft²
Design Heating ..... **0.25** CFM/ft²
Energy Analysis ..... **0.25** CFM/ft²
Infiltration occurs only when the fan is off.

6. Floors:

Type ..... **Slab Floor On Grade**
Floor Area ..... **1029.0** ft²
Total Floor U-Value ..... **0.176** BTU/(hr·ft²·°F)
Exposed Perimeter ..... **25.0** ft
Edge Insulation R-Value ..... **10.00** (hr·ft²·°F)/BTU

7. Partitions:

(No partition data).

1009 ADMIN SUPPORT

1. General Details:

Floor Area ..... **177.0** ft²
Avg. Ceiling Height ..... **9.0** ft
Building Weight ..... **70.0** lb/ft²

1.1. OA Ventilation Requirements:

Space Usage ..... **User-Defined**
OA Requirement 1 ..... **0.0** CFM
OA Requirement 2 ..... **0.00** CFM/ft²
Space Usage Defaults ..... **ASHRAE Std 62.1-2010**

2. Internals:

2.1. Overhead Lighting:

Fixture Type ..... **Recessed (Unvented)**
Wattage ..... **0.59** W/ft²
Ballast Multiplier **1.15**
Schedule ..... **Office Ligthing Schedule**

2.2. Task Lighting:

Wattage ..... **0.80** W/ft²
Schedule ..... **Office Ligthing Schedule**

2.3. Electrical Equipment:

Wattage ..... **666.0** Watts
Schedule ..... **Office Equipment Schedule**

2.4. People:

Occupancy ..... **4.0** People
Activity Level ..... **User defined**
Sensible ..... **245.0** BTU/hr/person
Latent ..... **0.0** BTU/hr/person
Schedule ..... **Office Occupancy Schedule**

2.5. Miscellaneous Loads:

Sensible ..... **0** BTU/hr
Schedule ..... **None**
Latent ..... **0** BTU/hr
Schedule ..... **None**

3. Walls, Windows, Doors:

(No Wall, Window, Door data).

4. Roofs, Skylights:

Exp.	Roof Gross Area (ft²)	Roof Slope (deg.)	Skylight Qty.
H	177.0	0	0

4.1. Construction Types for Exposure H

Roof Type ..... **Roof**

5. Infiltration:

Design Cooling ..... **0.00** ACH
Design Heating ..... **0.00** ACH
Energy Analysis ..... **0.00** ACH
Infiltration occurs only when the fan is off.

6. Floors:

Type ..... **Slab Floor On Grade**
Floor Area ..... **177.0** ft²
Total Floor U-Value ..... **0.176** BTU/(hr·ft²·°F)
Exposed Perimeter ..... **0.0** ft
Edge Insulation R-Value ..... **0.00** (hr·ft²·°F)/BTU

7. Partitions:

(No partition data).

1010 PRIVATE OFFICE

1. General Details:

Floor Area ..... **210.0** ft²
Avg. Ceiling Height ..... **9.0** ft
Building Weight ..... **70.0** lb/ft²

1.1. OA Ventilation Requirements:

Space Usage ..... **User-Defined**
OA Requirement 1 ..... **0.0** CFM
OA Requirement 2 ..... **0.00** CFM/ft²
Space Usage Defaults ..... **ASHRAE Std 62.1-2010**

2. Internals:

2.1. Overhead Lighting:

Fixture Type ..... **Recessed (Unvented)**
Wattage ..... **0.93** W/ft²
Ballast Multiplier **1.15**
Schedule ..... **Office Ligthing Schedule**

2.2. Task Lighting:

Wattage ..... **0.80** W/ft²
Schedule ..... **Office Ligthing Schedule**

2.3. Electrical Equipment:

Wattage ..... **200.0** Watts
Schedule ..... **Office Equipment Schedule**

2.4. People:

Occupancy ..... **1.0** Person
Activity Level ..... **User defined**
Sensible ..... **245.0** BTU/hr/person
Latent ..... **0.0** BTU/hr/person
Schedule ..... **Office Occupancy Schedule**

2.5. Miscellaneous Loads:

Sensible ..... **0** BTU/hr
Schedule ..... **None**
Latent ..... **0** BTU/hr
Schedule ..... **None**

3. Walls, Windows, Doors:

Exp.	Wall Gross Area (ft²)	Window 1 Qty.	Window 2 Qty.	Door 1 Qty.
S	56.6	0	0	0
S	52.3	0	0	0

3.1. Construction Types for Exposure S

Wall Type ..... **Concrete Wall below grade existing**

3.2. Construction Types for Exposure S

Wall Type ..... **Steel frame Wall Existing**

4. Roofs, Skylights:

Exp.	Roof Gross Area (ft²)	Roof Slope (deg.)	Skylight Qty.
H	210.0	0	0

4.1. Construction Types for Exposure H

Roof Type ..... **Roof**

5. Infiltration:

Design Cooling ..... **0.25** CFM/ft²
Design Heating ..... **0.25** CFM/ft²
Energy Analysis ..... **0.25** CFM/ft²
Infiltration occurs only when the fan is off.

6. Floors:

Type ..... **Slab Floor On Grade**
Floor Area ..... **210.0** ft²
Total Floor U-Value ..... **0.176** BTU/(hr·ft²·°F)
Exposed Perimeter ..... **12.0** ft
Edge Insulation R-Value ..... **10.00** (hr·ft²·°F)/BTU

7. Partitions:

(No partition data).

1011 SHARED OFFICE

1. General Details:

Floor Area ..... **493.0** ft²
Avg. Ceiling Height ..... **9.0** ft
Building Weight ..... **70.0** lb/ft²

1.1. OA Ventilation Requirements:

Space Usage ..... **User-Defined**
OA Requirement 1 ..... **0.0** CFM
OA Requirement 2 ..... **0.00** CFM/ft²
Space Usage Defaults ..... **ASHRAE Std 62.1-2010**

2. Internals:

2.1. Overhead Lighting:

Fixture Type ..... **Recessed (Unvented)**
Wattage ..... **0.81** W/ft²
Ballast Multiplier **1.15**
Schedule ..... **Office Ligthing Schedule**

2.2. Task Lighting:

Wattage ..... **0.80** W/ft²
Schedule ..... **Office Ligthing Schedule**

2.3. Electrical Equipment:

Wattage ..... **1540.0** Watts
Schedule ..... **Office Equipment Schedule**

2.4. People:

Occupancy ..... **4.0** People
Activity Level ..... **User defined**
Sensible ..... **245.0** BTU/hr/person
Latent ..... **0.0** BTU/hr/person
Schedule ..... **Office Occupancy Schedule**

2.5. Miscellaneous Loads:

Sensible ..... **0** BTU/hr
Schedule ..... **None**
Latent ..... **0** BTU/hr
Schedule ..... **None**

3. Walls, Windows, Doors:

Exp.	Wall Gross Area (ft²)	Window 1 Qty.	Window 2 Qty.	Door 1 Qty.
S	14.0	0	0	0
S	13.0	0	0	0
S	166.5	20	0	0

3.1. Construction Types for Exposure S

Wall Type ..... **Concrete Wall Existing**

3.2. Construction Types for Exposure S

Wall Type ..... **Steel frame Wall Existing**

3.3. Construction Types for Exposure S

Wall Type ..... **Steel frame Wall New**
1st Window Type ..... **Window Assembly**

4. Roofs, Skylights:

Exp.	Roof Gross Area (ft²)	Roof Slope (deg.)	Skylight Qty.
H	493.0	0	0

4.1. Construction Types for Exposure H

Roof Type ..... **Roof**

5. Infiltration:

Design Cooling ..... **0.25** CFM/ft²
Design Heating ..... **0.25** CFM/ft²
Energy Analysis ..... **0.25** CFM/ft²
Infiltration occurs only when the fan is off.

6. Floors:

Type ..... **Slab Floor On Grade**
Floor Area ..... **493.0** ft²
Total Floor U-Value ..... **0.176** BTU/(hr·ft²·°F)
Exposed Perimeter ..... **21.5** ft
Edge Insulation R-Value ..... **10.00** (hr·ft²·°F)/BTU

7. Partitions:

(No partition data).

1012 PRIVATE OFFICE

1. General Details:

Floor Area ..... **130.0** ft²
Avg. Ceiling Height ..... **9.0** ft
Building Weight ..... **70.0** lb/ft²

1.1. OA Ventilation Requirements:

Space Usage ..... **User-Defined**
OA Requirement 1 ..... **0.0** CFM
OA Requirement 2 ..... **0.00** CFM/ft²
Space Usage Defaults ..... **ASHRAE Std 62.1-2010**

2. Internals:

2.1. Overhead Lighting:

Fixture Type ..... **Recessed (Unvented)**
Wattage ..... **0.93** W/ft²
Ballast Multiplier **1.15**
Schedule ..... **Office Ligthing Schedule**

2.2. Task Lighting:

Wattage ..... **0.80** W/ft²
Schedule ..... **Office Ligthing Schedule**

2.3. Electrical Equipment:

Wattage ..... **200.0** Watts
Schedule ..... **Office Equipment Schedule**

2.4. People:

Occupancy ..... **1.0** Person
Activity Level ..... **User defined**
Sensible ..... **245.0** BTU/hr/person
Latent ..... **0.0** BTU/hr/person
Schedule ..... **Office Occupancy Schedule**

2.5. Miscellaneous Loads:

Sensible ..... **0** BTU/hr
Schedule ..... **None**
Latent ..... **0** BTU/hr
Schedule ..... **None**

3. Walls, Windows, Doors:

Exp.	Wall Gross Area (ft²)	Window 1 Qty.	Window 2 Qty.	Door 1 Qty.
W	103.5	10	0	0
S	119.5	0	0	0

3.1. Construction Types for Exposure W

Wall Type ..... **Steel frame Wall New**
1st Window Type ..... **Window Assembly**

3.2. Construction Types for Exposure S

Wall Type ..... **Steel frame Wall New**

4. Roofs, Skylights:

Exp.	Roof Gross Area (ft²)	Roof Slope (deg.)	Skylight Qty.
H	130.0	0	0

4.1. Construction Types for Exposure H

Roof Type ..... **Roof**

5. Infiltration:

Design Cooling ..... **0.25** CFM/ft²
Design Heating ..... **0.25** CFM/ft²
Energy Analysis ..... **0.25** CFM/ft²
Infiltration occurs only when the fan is off.

6. Floors:

Type ..... **Slab Floor On Grade**
Floor Area ..... **130.0** ft²
Total Floor U-Value ..... **0.176** BTU/(hr·ft²·°F)
Exposed Perimeter ..... **24.7** ft
Edge Insulation R-Value ..... **10.00** (hr·ft²·°F)/BTU

7. Partitions:

(No partition data).

1013 PRIVATE OFFICE

1. General Details:

Floor Area ..... **154.0** ft²
Avg. Ceiling Height ..... **9.0** ft
Building Weight ..... **70.0** lb/ft²

1.1. OA Ventilation Requirements:

Space Usage ..... **User-Defined**
OA Requirement 1 ..... **0.0** CFM
OA Requirement 2 ..... **0.00** CFM/ft²
Space Usage Defaults ..... **ASHRAE Std 62.1-2010**

2. Internals:

2.1. Overhead Lighting:

Fixture Type ..... **Recessed (Unvented)**
Wattage ..... **0.93** W/ft²
Ballast Multiplier **1.15**
Schedule ..... **Office Ligthing Schedule**

2.2. Task Lighting:

Wattage ..... **0.80** W/ft²
Schedule ..... **Office Ligthing Schedule**

2.3. Electrical Equipment:

Wattage ..... **200.0** Watts
Schedule ..... **Office Equipment Schedule**

2.4. People:

Occupancy ..... **1.0** Person
Activity Level ..... **User defined**
Sensible ..... **245.0** BTU/hr/person
Latent ..... **0.0** BTU/hr/person
Schedule ..... **Office Occupancy Schedule**

2.5. Miscellaneous Loads:

Sensible ..... **0** BTU/hr
Schedule ..... **None**
Latent ..... **0** BTU/hr
Schedule ..... **None**

3. Walls, Windows, Doors:

Exp.	Wall Gross Area (ft²)	Window 1 Qty.	Window 2 Qty.	Door 1 Qty.
W	117.0	10	0	0

3.1. Construction Types for Exposure W

Wall Type ..... **Steel frame Wall New**
1st Window Type ..... **Window Assembly**

4. Roofs, Skylights:

Exp.	Roof Gross Area (ft²)	Roof Slope (deg.)	Skylight Qty.
H	154.0	0	0

4.1. Construction Types for Exposure H

Roof Type ..... **Roof**

5. Infiltration:

Design Cooling ..... **0.25** CFM/ft²
Design Heating ..... **0.25** CFM/ft²
Energy Analysis ..... **0.25** CFM/ft²
Infiltration occurs only when the fan is off.

6. Floors:

Type ..... **Slab Floor On Grade**
Floor Area ..... **154.0** ft²
Total Floor U-Value ..... **0.176** BTU/(hr·ft²·°F)
Exposed Perimeter ..... **13.0** ft
Edge Insulation R-Value ..... **10.00** (hr·ft²·°F)/BTU

7. Partitions:

(No partition data).

1014 SHARE OFFICE

1. General Details:

Floor Area	**481.0**	ft²
Avg. Ceiling Height	**9.0**	ft
Building Weight	**70.0**	lb/ft²

1.1. OA Ventilation Requirements:

Space Usage	**User-Defined**	
OA Requirement 1	**0.0**	CFM
OA Requirement 2	**0.00**	CFM/ft²
Space Usage Defaults	**ASHRAE Std 62.1-2010**	

2. Internals:

2.1. Overhead Lighting:

Fixture Type	**Recessed (Unvented)**	
Wattage	**0.81**	W/ft²
Ballast Multiplier	**1.15**	
Schedule	**Office Ligthing Schedule**	

2.2. Task Lighting:

Wattage	**0.80**	W/ft²
Schedule	**Office Ligthing Schedule**	

2.3. Electrical Equipment:

Wattage	**1522.0**	Watts
Schedule	**Office Equipment Schedule**	

2.4. People:

Occupancy	**4.0**	People
Activity Level	**User defined**	
Sensible	**245.0**	BTU/hr/person
Latent	**0.0**	BTU/hr/person
Schedule	**Office Occupancy Schedule**	

2.5. Miscellaneous Loads:

Sensible	**0**	BTU/hr
Schedule	**None**	
Latent	**0**	BTU/hr
Schedule	**None**	

3. Walls, Windows, Doors:

(No Wall, Window, Door data).

4. Roofs, Skylights:

Exp.	Roof Gross Area (ft²)	Roof Slope (deg.)	Skylight Qty.
H	481.0	0	0

4.1. Construction Types for Exposure H

Roof Type	**Roof**	

5. Infiltration:

Design Cooling	**0.00**	ACH
Design Heating	**0.00**	ACH
Energy Analysis	**0.00**	ACH

Infiltration occurs only when the fan is off.

6. Floors:

Type	**Slab Floor On Grade**	
Floor Area	**481.0**	ft²
Total Floor U-Value	**0.176**	BTU/(hr·ft²·°F)
Exposed Perimeter	**0.0**	ft
Edge Insulation R-Value	**0.00**	(hr·ft²·°F)/BTU

7. Partitions:

(No partition data).

1015 PRIVATE OFFICE

1. General Details:

Floor Area ..... **151.0** ft²
Avg. Ceiling Height ..... **9.0** ft
Building Weight ..... **70.0** lb/ft²

1.1. OA Ventilation Requirements:

Space Usage ..... **User-Defined**
OA Requirement 1 ..... **0.0** CFM
OA Requirement 2 ..... **0.00** CFM/ft²
Space Usage Defaults ..... **ASHRAE Std 62.1-2010**

2. Internals:

2.1. Overhead Lighting:

Fixture Type ..... **Recessed (Unvented)**
Wattage ..... **0.93** W/ft²
Ballast Multiplier **1.15**
Schedule ..... **Office Occupancy Schedule**

2.2. Task Lighting:

Wattage ..... **0.80** W/ft²
Schedule ..... **Office Occupancy Schedule**

2.3. Electrical Equipment:

Wattage ..... **200.0** Watts
Schedule ..... **Office Equipment Schedule**

2.4. People:

Occupancy ..... **1.0** Person
Activity Level ..... **User defined**
Sensible ..... **245.0** BTU/hr/person
Latent ..... **0.0** BTU/hr/person
Schedule ..... **Office Occupancy Schedule**

2.5. Miscellaneous Loads:

Sensible ..... **0** BTU/hr
Schedule ..... **None**
Latent ..... **0** BTU/hr
Schedule ..... **None**

3. Walls, Windows, Doors:

Exp.	Wall Gross Area (ft²)	Window 1 Qty.	Window 2 Qty.	Door 1 Qty.
W	69.0	0	0	0
W	21.0	0	0	0
W	25.0	12	0	0

3.1. Construction Types for Exposure W

Wall Type ..... **Steel frame Wall New**

3.2. Construction Types for Exposure W

Wall Type ..... **Concrete Wall Existing**

3.3. Construction Types for Exposure W

Wall Type ..... **Steel frame Wall Existing**
1st Window Type ..... **Window Assembly**

4. Roofs, Skylights:

Exp.	Roof Gross Area (ft²)	Roof Slope (deg.)	Skylight Qty.
H	151.0	0	0

4.1. Construction Types for Exposure H

Roof Type ..... **Roof**

5. Infiltration:

Design Cooling ..... **0.25** CFM/ft²
Design Heating ..... **0.25** CFM/ft²
Energy Analysis ..... **0.25** CFM/ft²
Infiltration occurs only when the fan is off.

6. Floors:

Type ..... **Slab Floor On Grade**
Floor Area ..... **151.0** ft²
Total Floor U-Value ..... **0.176** BTU/(hr·ft²·°F)
Exposed Perimeter ..... **13.0** ft
Edge Insulation R-Value ..... **10.00** (hr·ft²·°F)/BTU

7. Partitions:

(No partition data).

1016 PRIVATE OFFICE

1. General Details:

Floor Area ..... **119.0** ft²
Avg. Ceiling Height ..... **9.0** ft
Building Weight ..... **70.0** lb/ft²

1.1. OA Ventilation Requirements:

Space Usage ..... **User-Defined**
OA Requirement 1 ..... **0.0** CFM
OA Requirement 2 ..... **0.00** CFM/ft²
Space Usage Defaults ..... **ASHRAE Std 62.1-2010**

2. Internals:

2.1. Overhead Lighting:

Fixture Type ..... **Recessed (Unvented)**
Wattage ..... **0.93** W/ft²
Ballast Multiplier **1.15**
Schedule ..... **Office Ligthing Schedule**

2.2. Task Lighting:

Wattage ..... **0.80** W/ft²
Schedule ..... **Office Ligthing Schedule**

2.3. Electrical Equipment:

Wattage ..... **200.0** Watts
Schedule ..... **Office Equipment Schedule**

2.4. People:

Occupancy ..... **1.0** Person
Activity Level ..... **User defined**
Sensible ..... **245.0** BTU/hr/person
Latent ..... **0.0** BTU/hr/person
Schedule ..... **Office Occupancy Schedule**

2.5. Miscellaneous Loads:

Sensible ..... **0** BTU/hr
Schedule ..... **None**
Latent ..... **0** BTU/hr
Schedule ..... **None**

3. Walls, Windows, Doors:

Exp.	Wall Gross Area (ft²)	Window 1 Qty.	Window 2 Qty.	Door 1 Qty.
W	6.0	0	0	0
W	44.0	0	0	0
W	46.0	27	0	0

3.1. Construction Types for Exposure W

Wall Type ..... **Steel frame Wall New**

3.2. Construction Types for Exposure W

Wall Type ..... **Concrete Wall Existing**

3.3. Construction Types for Exposure W

Wall Type ..... **Steel frame Wall Existing**
1st Window Type ..... **Window Assembly**

4. Roofs, Skylights:

Exp.	Roof Gross Area (ft²)	Roof Slope (deg.)	Skylight Qty.
H	119.0	0	0

4.1. Construction Types for Exposure H

Roof Type ..... **Roof**

5. Infiltration:

Design Cooling ..... **0.25** CFM/ft²
Design Heating ..... **0.25** CFM/ft²
Energy Analysis ..... **0.25** CFM/ft²
Infiltration occurs only when the fan is off.

6. Floors:

Type ..... **Slab Floor On Grade**
Floor Area ..... **119.0** ft²
Total Floor U-Value ..... **0.176** BTU/(hr·ft²·°F)
Exposed Perimeter ..... **10.7** ft
Edge Insulation R-Value ..... **10.00** (hr·ft²·°F)/BTU

7. Partitions:

(No partition data).

1017A CLASSROOM

1. General Details:

Floor Area ..... **439.5** ft²
Avg. Ceiling Height ..... **9.0** ft
Building Weight ..... **70.0** lb/ft²

1.1. OA Ventilation Requirements:

Space Usage ..... **User-Defined**
OA Requirement 1 ..... **0.0** CFM
OA Requirement 2 ..... **0.00** CFM/ft²
Space Usage Defaults ..... **ASHRAE Std 62.1-2010**

2. Internals:

2.1. Overhead Lighting:

Fixture Type ..... **Recessed (Unvented)**
Wattage ..... **0.92** W/ft²
Ballast Multiplier **1.15**
Schedule ..... **Office Ligthing Schedule**

2.2. Task Lighting:

Wattage ..... **0.00** W/ft²
Schedule ..... **None**

2.3. Electrical Equipment:

Wattage ..... **1800.0** Watts
Schedule ..... **Office Equipment Schedule**

2.4. People:

Occupancy ..... **18.0** People
Activity Level ..... **User defined**
Sensible ..... **245.0** BTU/hr/person
Latent ..... **0.0** BTU/hr/person
Schedule ..... **Office Occupancy Schedule**

2.5. Miscellaneous Loads:

Sensible ..... **0** BTU/hr
Schedule ..... **None**
Latent ..... **0** BTU/hr
Schedule ..... **None**

3. Walls, Windows, Doors:

Exp.	Wall Gross Area (ft²)	Window 1 Qty.	Window 2 Qty.	Door 1 Qty.
N	68.0	0	0	0
N	11.5	0	0	0
N	73.5	42	0	0

3.1. Construction Types for Exposure N

Wall Type ..... **Concrete Wall below grade existing**

3.2. Construction Types for Exposure N

Wall Type ..... **Concrete Wall Existing**

3.3. Construction Types for Exposure N

Wall Type ..... **Steel frame Wall Existing**
1st Window Type ..... **Window Assembly**

4. Roofs, Skylights:

Exp.	Roof Gross Area (ft²)	Roof Slope (deg.)	Skylight Qty.
H	439.5	0	0

4.1. Construction Types for Exposure H

Roof Type ..... **Roof**

5. Infiltration:

Design Cooling ..... **0.25** CFM/ft²
Design Heating ..... **0.25** CFM/ft²
Energy Analysis ..... **0.25** CFM/ft²
Infiltration occurs only when the fan is off.

6. Floors:

Type ..... **Slab Floor On Grade**
Floor Area ..... **439.5** ft²
Total Floor U-Value ..... **0.176** BTU/(hr·ft²·°F)
Exposed Perimeter ..... **17.0** ft
Edge Insulation R-Value ..... **10.00** (hr·ft²·°F)/BTU

7. Partitions:

(No partition data).

1017B CLASSROOM

1. General Details:

Floor Area ..... **439.5** ft²
Avg. Ceiling Height ..... **9.0** ft
Building Weight ..... **70.0** lb/ft²

1.1. OA Ventilation Requirements:

Space Usage ..... **User-Defined**
OA Requirement 1 ..... **0.0** CFM
OA Requirement 2 ..... **0.00** CFM/ft²
Space Usage Defaults ..... **ASHRAE Std 62.1-2010**

2. Internals:

2.1. Overhead Lighting:

Fixture Type ..... **Recessed (Unvented)**
Wattage ..... **0.92** W/ft²
Ballast Multiplier **1.15**
Schedule ..... **Office Ligthing Schedule**

2.2. Task Lighting:

Wattage ..... **0.00** W/ft²
Schedule ..... **None**

2.3. Electrical Equipment:

Wattage ..... **1800.0** Watts
Schedule ..... **Office Equipment Schedule**

2.4. People:

Occupancy ..... **18.0** People
Activity Level ..... **User defined**
Sensible ..... **245.0** BTU/hr/person
Latent ..... **0.0** BTU/hr/person
Schedule ..... **Office Occupancy Schedule**

2.5. Miscellaneous Loads:

Sensible ..... **0** BTU/hr
Schedule ..... **None**
Latent ..... **0** BTU/hr
Schedule ..... **None**

3. Walls, Windows, Doors:

Exp.	Wall Gross Area (ft²)	Window 1 Qty.	Window 2 Qty.	Door 1 Qty.
N	68.0	0	0	0
N	11.5	0	0	0
N	73.5	42	0	0

3.1. Construction Types for Exposure N

Wall Type ..... **Concrete Wall below grade existing**

3.2. Construction Types for Exposure N

Wall Type ..... **Concrete Wall Existing**

3.3. Construction Types for Exposure N

Wall Type ..... **Steel frame Wall Existing**
1st Window Type ..... **Window Assembly**

4. Roofs, Skylights:

Exp.	Roof Gross Area (ft²)	Roof Slope (deg.)	Skylight Qty.
H	439.5	0	0

4.1. Construction Types for Exposure H

Roof Type ..... **Roof**

5. Infiltration:

Design Cooling ..... **0.25** CFM/ft²
Design Heating ..... **0.25** CFM/ft²
Energy Analysis ..... **0.25** CFM/ft²
Infiltration occurs only when the fan is off.

6. Floors:

Type ..... **Slab Floor On Grade**
Floor Area ..... **439.5** ft²
Total Floor U-Value ..... **0.176** BTU/(hr·ft²·°F)
Exposed Perimeter ..... **17.0** ft
Edge Insulation R-Value ..... **10.00** (hr·ft²·°F)/BTU

7. Partitions:

(No partition data).

1018A CLASSROOM

1. General Details:

Floor Area ..... **439.5** ft²
Avg. Ceiling Height ..... **9.0** ft
Building Weight ..... **70.0** lb/ft²

1.1. OA Ventilation Requirements:

Space Usage ..... **User-Defined**
OA Requirement 1 ..... **0.0** CFM
OA Requirement 2 ..... **0.00** CFM/ft²
Space Usage Defaults ..... **ASHRAE Std 62.1-2010**

2. Internals:

2.1. Overhead Lighting:

Fixture Type ..... **Recessed (Unvented)**
Wattage ..... **0.92** W/ft²
Ballast Multiplier **1.15**
Schedule ..... **Office Ligthing Schedule**

2.2. Task Lighting:

Wattage ..... **0.00** W/ft²
Schedule ..... **None**

2.3. Electrical Equipment:

Wattage ..... **1800.0** Watts
Schedule ..... **Office Equipment Schedule**

2.4. People:

Occupancy ..... **18.0** People
Activity Level ..... **User defined**
Sensible ..... **245.0** BTU/hr/person
Latent ..... **0.0** BTU/hr/person
Schedule ..... **Office Occupancy Schedule**

2.5. Miscellaneous Loads:

Sensible ..... **0** BTU/hr
Schedule ..... **None**
Latent ..... **0** BTU/hr
Schedule ..... **None**

3. Walls, Windows, Doors:

Exp.	Wall Gross Area (ft²)	Window 1 Qty.	Window 2 Qty.	Door 1 Qty.
N	68.0	0	0	0
N	11.5	0	0	0
N	73.5	42	0	0

3.1. Construction Types for Exposure N

Wall Type ..... **Concrete Wall below grade existing**

3.2. Construction Types for Exposure N

Wall Type ..... **Concrete Wall Existing**

3.3. Construction Types for Exposure N

Wall Type ..... **Steel frame Wall Existing**
1st Window Type ..... **Window Assembly**

4. Roofs, Skylights:

Exp.	Roof Gross Area (ft²)	Roof Slope (deg.)	Skylight Qty.
H	439.5	0	0

4.1. Construction Types for Exposure H

Roof Type ..... **Roof**

5. Infiltration:

Design Cooling ..... **0.25** CFM/ft²
Design Heating ..... **0.25** CFM/ft²
Energy Analysis ..... **0.25** CFM/ft²
Infiltration occurs only when the fan is off.

6. Floors:

Type ..... **Slab Floor On Grade**
Floor Area ..... **439.5** ft²
Total Floor U-Value ..... **0.176** BTU/(hr·ft²·°F)
Exposed Perimeter ..... **17.0** ft
Edge Insulation R-Value ..... **10.00** (hr·ft²·°F)/BTU

7. Partitions:

(No partition data).

1018B CLASSROOM

1. General Details:

Floor Area ..... **439.5** ft²
Avg. Ceiling Height ..... **9.0** ft
Building Weight ..... **70.0** lb/ft²

1.1. OA Ventilation Requirements:

Space Usage ..... **User-Defined**
OA Requirement 1 ..... **0.0** CFM
OA Requirement 2 ..... **0.00** CFM/ft²
Space Usage Defaults ..... **ASHRAE Std 62.1-2010**

2. Internals:

2.1. Overhead Lighting:

Fixture Type ..... **Recessed (Unvented)**
Wattage ..... **0.92** W/ft²
Ballast Multiplier **1.15**
Schedule ..... **Office Ligthing Schedule**

2.2. Task Lighting:

Wattage ..... **0.00** W/ft²
Schedule ..... **None**

2.3. Electrical Equipment:

Wattage ..... **1800.0** Watts
Schedule ..... **Office Equipment Schedule**

2.4. People:

Occupancy ..... **18.0** People
Activity Level ..... **User defined**
Sensible ..... **245.0** BTU/hr/person
Latent ..... **0.0** BTU/hr/person
Schedule ..... **Office Occupancy Schedule**

2.5. Miscellaneous Loads:

Sensible ..... **0** BTU/hr
Schedule ..... **None**
Latent ..... **0** BTU/hr
Schedule ..... **None**

3. Walls, Windows, Doors:

Exp.	Wall Gross Area (ft²)	Window 1 Qty.	Window 2 Qty.	Door 1 Qty.
N	68.0	0	0	0
N	11.5	0	0	0
N	73.5	42	0	0

3.1. Construction Types for Exposure N

Wall Type ..... **Concrete Wall below grade existing**

3.2. Construction Types for Exposure N

Wall Type ..... **Concrete Wall Existing**

3.3. Construction Types for Exposure N

Wall Type ..... **Steel frame Wall Existing**
1st Window Type ..... **Window Assembly**

4. Roofs, Skylights:

Exp.	Roof Gross Area (ft²)	Roof Slope (deg.)	Skylight Qty.
H	439.5	0	0

4.1. Construction Types for Exposure H

Roof Type ..... **Roof**

5. Infiltration:

Design Cooling ..... **0.25** CFM/ft²
Design Heating ..... **0.25** CFM/ft²
Energy Analysis ..... **0.25** CFM/ft²
Infiltration occurs only when the fan is off.

6. Floors:

Type ..... **Slab Floor On Grade**
Floor Area ..... **439.5** ft²
Total Floor U-Value ..... **0.176** BTU/(hr·ft²·°F)
Exposed Perimeter ..... **17.0** ft
Edge Insulation R-Value ..... **10.00** (hr·ft²·°F)/BTU

7. Partitions:

(No partition data).

1019 ASSEMBLY

1. General Details:

Floor Area ..... **2561.0** ft²
Avg. Ceiling Height ..... **9.3** ft
Building Weight ..... **70.0** lb/ft²

1.1. OA Ventilation Requirements:

Space Usage ..... **User-Defined**
OA Requirement 1 ..... **0.0** CFM
OA Requirement 2 ..... **0.00** CFM/ft²
Space Usage Defaults ..... **ASHRAE Std 62.1-2010**

2. Internals:

2.1. Overhead Lighting:

Fixture Type ..... **Recessed (Unvented)**
Wattage ..... **1.07** W/ft²
Ballast Multiplier **1.15**
Schedule ..... **Office Ligthing Schedule**

2.2. Task Lighting:

Wattage ..... **0.00** W/ft²
Schedule ..... **None**

2.3. Electrical Equipment:

Wattage ..... **308.0** Watts
Schedule ..... **Office Equipment Schedule**

2.4. People:

Occupancy ..... **166.0** People
Activity Level ..... **User defined**
Sensible ..... **245.0** BTU/hr/person
Latent ..... **0.0** BTU/hr/person
Schedule ..... **Assembly Schedule**

2.5. Miscellaneous Loads:

Sensible ..... **0** BTU/hr
Schedule ..... **None**
Latent ..... **0** BTU/hr
Schedule ..... **None**

3. Walls, Windows, Doors:

Exp.	Wall Gross Area (ft²)	Window 1 Qty.	Window 2 Qty.	Door 1 Qty.
S	205.9	0	0	28
S	205.0	0	0	14

3.1. Construction Types for Exposure S

Wall Type ..... **Concrete Wall below grade existing**
Door Type ..... **Sample Door Assembly**

3.2. Construction Types for Exposure S

Wall Type ..... **Steel frame Wall Existing**
Door Type ..... **Sample Door Assembly**

4. Roofs, Skylights:

Exp.	Roof Gross Area (ft²)	Roof Slope (deg.)	Skylight Qty.
H	2561.0	0	0

4.1. Construction Types for Exposure H

Roof Type ..... **Roof**

5. Infiltration:

Design Cooling ..... **0.25** CFM/ft²
Design Heating ..... **0.25** CFM/ft²
Energy Analysis ..... **0.25** CFM/ft²
Infiltration occurs only when the fan is off.

6. Floors:

Type ..... **Slab Floor On Grade**
Floor Area ..... **2561.0** ft²
Total Floor U-Value ..... **0.176** BTU/(hr·ft²·°F)
Exposed Perimeter ..... **44.0** ft
Edge Insulation R-Value ..... **10.00** (hr·ft²·°F)/BTU

7. Partitions:

(No partition data).

1020 CHAIR STORAGE

1. General Details:

Floor Area	**279.0**	ft²
Avg. Ceiling Height	**9.0**	ft
Building Weight	**70.0**	lb/ft²

1.1. OA Ventilation Requirements:

Space Usage	**User-Defined**	
OA Requirement 1	**0.0**	CFM
OA Requirement 2	**0.00**	CFM/ft²
Space Usage Defaults	**ASHRAE Std 62.1-2010**	

2. Internals:

2.1. Overhead Lighting:

Fixture Type	**Recessed (Unvented)**	
Wattage	**0.46**	W/ft²
Ballast Multiplier	**1.15**	
Schedule	**Office Ligthing Schedule**	

2.2. Task Lighting:

Wattage	**0.00**	W/ft²
Schedule	**None**	

2.3. Electrical Equipment:

Wattage	**0.00**	W/ft²
Schedule	**None**	

2.4. People:

Occupancy	**0.0**	Person
Activity Level	**User defined**	
Sensible	**245.0**	BTU/hr/person
Latent	**0.0**	BTU/hr/person
Schedule	**None**	

2.5. Miscellaneous Loads:

Sensible	**0**	BTU/hr
Schedule	**None**	
Latent	**0**	BTU/hr
Schedule	**None**	

3. Walls, Windows, Doors:

(No Wall, Window, Door data).

4. Roofs, Skylights:

Exp.	Roof Gross Area (ft²)	Roof Slope (deg.)	Skylight Qty.
H	279.0	0	0

4.1. Construction Types for Exposure H

Roof Type	**Roof**	

5. Infiltration:

Design Cooling	**0.00**	ACH
Design Heating	**0.00**	ACH
Energy Analysis	**0.00**	ACH

Infiltration occurs only when the fan is off.

6. Floors:

Type	**Slab Floor On Grade**	
Floor Area	**279.0**	ft²
Total Floor U-Value	**0.176**	BTU/(hr·ft²·°F)
Exposed Perimeter	**0.0**	ft
Edge Insulation R-Value	**0.00**	(hr·ft²·°F)/BTU

7. Partitions:

(No partition data).

1021 OFFICE

1. General Details:

Floor Area ..... **81.0** ft²
Avg. Ceiling Height ..... **9.0** ft
Building Weight ..... **70.0** lb/ft²

1.1. OA Ventilation Requirements:

Space Usage ..... **User-Defined**
OA Requirement 1 ..... **0.0** CFM
OA Requirement 2 ..... **0.00** CFM/ft²
Space Usage Defaults ..... **ASHRAE Std 62.1-2010**

2. Internals:

2.1. Overhead Lighting:

Fixture Type ..... **Recessed (Unvented)**
Wattage ..... **0.67** W/ft²
Ballast Multiplier **1.15**
Schedule ..... **Office Ligthing Schedule**

2.2. Task Lighting:

Wattage ..... **0.80** W/ft²
Schedule ..... **Office Ligthing Schedule**

2.3. Electrical Equipment:

Wattage ..... **200.0** Watts
Schedule ..... **Office Equipment Schedule**

2.4. People:

Occupancy ..... **1.0** Person
Activity Level ..... **User defined**
Sensible ..... **245.0** BTU/hr/person
Latent ..... **0.0** BTU/hr/person
Schedule ..... **Office Occupancy Schedule**

2.5. Miscellaneous Loads:

Sensible ..... **0** BTU/hr
Schedule ..... **None**
Latent ..... **0** BTU/hr
Schedule ..... **None**

3. Walls, Windows, Doors:

(No Wall, Window, Door data).

4. Roofs, Skylights:

Exp.	Roof Gross Area (ft²)	Roof Slope (deg.)	Skylight Qty.
H	81.0	0	0

4.1. Construction Types for Exposure H

Roof Type ..... **Roof**

5. Infiltration:

Design Cooling ..... **0.00** ACH
Design Heating ..... **0.00** ACH
Energy Analysis ..... **0.00** ACH
Infiltration occurs only when the fan is off.

6. Floors:

Type ..... **Slab Floor On Grade**
Floor Area ..... **81.0** ft²
Total Floor U-Value ..... **0.176** BTU/(hr·ft²·°F)
Exposed Perimeter ..... **0.0** ft
Edge Insulation R-Value ..... **0.00** (hr·ft²·°F)/BTU

7. Partitions:

(No partition data).

1022 STORAGE (KITCHEN)

1. General Details:

Floor Area ..... **137.0** ft²
Avg. Ceiling Height ..... **9.0** ft
Building Weight ..... **70.0** lb/ft²

1.1. OA Ventilation Requirements:

Space Usage ..... **User-Defined**
OA Requirement 1 ..... **0.0** CFM
OA Requirement 2 ..... **0.00** CFM/ft²
Space Usage Defaults ..... **ASHRAE Std 62.1-2010**

2. Internals:

2.1. Overhead Lighting:

Fixture Type ..... **Recessed (Unvented)**
Wattage ..... **0.46** W/ft²
Ballast Multiplier **1.15**
Schedule ..... **Office Ligthing Schedule**

2.2. Task Lighting:

Wattage ..... **0.00** W/ft²
Schedule ..... **None**

2.3. Electrical Equipment:

Wattage ..... **2503.0** Watts
Schedule ..... **Kitchen Equipment Schedule**

2.4. People:

Occupancy ..... **0.0** Person
Activity Level ..... **User defined**
Sensible ..... **245.0** BTU/hr/person
Latent ..... **0.0** BTU/hr/person
Schedule ..... **None**

2.5. Miscellaneous Loads:

Sensible ..... **0** BTU/hr
Schedule ..... **None**
Latent ..... **0** BTU/hr
Schedule ..... **None**

3. Walls, Windows, Doors:

(No Wall, Window, Door data).

4. Roofs, Skylights:

Exp.	Roof Gross Area (ft²)	Roof Slope (deg.)	Skylight Qty.
H	137.0	0	0

4.1. Construction Types for Exposure H

Roof Type ..... **Roof**

5. Infiltration:

Design Cooling ..... **0.00** ACH
Design Heating ..... **0.00** ACH
Energy Analysis ..... **0.00** ACH
Infiltration occurs only when the fan is off.

6. Floors:

Type ..... **Slab Floor On Grade**
Floor Area ..... **137.0** ft²
Total Floor U-Value ..... **0.176** BTU/(hr·ft²·°F)
Exposed Perimeter ..... **0.0** ft
Edge Insulation R-Value ..... **0.00** (hr·ft²·°F)/BTU

7. Partitions:

(No partition data).

1023 KITCHEN

1. General Details:

Floor Area ..... **284.0** ft²
Avg. Ceiling Height ..... **9.0** ft
Building Weight ..... **70.0** lb/ft²

1.1. OA Ventilation Requirements:

Space Usage ..... **User-Defined**
OA Requirement 1 ..... **0.0** CFM
OA Requirement 2 ..... **0.00** CFM/ft²
Space Usage Defaults ..... **ASHRAE Std 62.1-2010**

2. Internals:

2.1. Overhead Lighting:

Fixture Type ..... **Recessed (Unvented)**
Wattage ..... **1.06** W/ft²
Ballast Multiplier **1.15**
Schedule ..... **Office Ligthing Schedule**

2.2. Task Lighting:

Wattage ..... **0.00** W/ft²
Schedule ..... **None**

2.3. Electrical Equipment:

Wattage ..... **1966.0** Watts
Schedule ..... **Kitchen Equipment Schedule**

2.4. People:

Occupancy ..... **4.0** People
Activity Level ..... **User defined**
Sensible ..... **295.0** BTU/hr/person
Latent ..... **0.0** BTU/hr/person
Schedule ..... **Kitchen Occupancy Schedule**

2.5. Miscellaneous Loads:

Sensible ..... **0** BTU/hr
Schedule ..... **None**
Latent ..... **0** BTU/hr
Schedule ..... **None**

3. Walls, Windows, Doors:

(No Wall, Window, Door data).

4. Roofs, Skylights:

Exp.	Roof Gross Area (ft²)	Roof Slope (deg.)	Skylight Qty.
H	284.0	0	0

4.1. Construction Types for Exposure H

Roof Type ..... **Roof**

5. Infiltration:

Design Cooling ..... **0.00** ACH
Design Heating ..... **0.00** ACH
Energy Analysis ..... **0.00** ACH
Infiltration occurs only when the fan is off.

6. Floors:

Type ..... **Slab Floor On Grade**
Floor Area ..... **284.0** ft²
Total Floor U-Value ..... **0.176** BTU/(hr·ft²·°F)
Exposed Perimeter ..... **0.0** ft
Edge Insulation R-Value ..... **0.00** (hr·ft²·°F)/BTU

7. Partitions:

(No partition data).

1024 SCULLERY

1. General Details:

Floor Area ..... **184.0** ft²
Avg. Ceiling Height ..... **9.0** ft
Building Weight ..... **70.0** lb/ft²

1.1. OA Ventilation Requirements:

Space Usage ..... **User-Defined**
OA Requirement 1 ..... **0.0** CFM
OA Requirement 2 ..... **0.00** CFM/ft²
Space Usage Defaults ..... **ASHRAE Std 62.1-2010**

2. Internals:

2.1. Overhead Lighting:

Fixture Type ..... **Recessed (Unvented)**
Wattage ..... **1.06** W/ft²
Ballast Multiplier **1.15**
Schedule ..... **Office Ligthing Schedule**

2.2. Task Lighting:

Wattage ..... **0.00** W/ft²
Schedule ..... **None**

2.3. Electrical Equipment:

Wattage ..... **6193.0** Watts
Schedule ..... **Kitchen Equipment Schedule**

2.4. People:

Occupancy ..... **0.0** Person
Activity Level ..... **User defined**
Sensible ..... **295.0** BTU/hr/person
Latent ..... **0.0** BTU/hr/person
Schedule ..... **None**

2.5. Miscellaneous Loads:

Sensible ..... **0** BTU/hr
Schedule ..... **None**
Latent ..... **0** BTU/hr
Schedule ..... **None**

3. Walls, Windows, Doors:

Exp.	Wall Gross Area (ft²)	Window 1 Qty.	Window 2 Qty.	Door 1 Qty.
S	18.5	0	0	0
S	148.0	0	0	0

3.1. Construction Types for Exposure S

Wall Type ..... **Steel frame Wall Existing**

3.2. Construction Types for Exposure S

Wall Type ..... **CMU Wall Existing**

4. Roofs, Skylights:

Exp.	Roof Gross Area (ft²)	Roof Slope (deg.)	Skylight Qty.
H	184.0	0	0

4.1. Construction Types for Exposure H

Roof Type ..... **Roof**

5. Infiltration:

Design Cooling ..... **0.25** CFM/ft²
Design Heating ..... **0.25** CFM/ft²
Energy Analysis ..... **0.25** CFM/ft²
Infiltration occurs only when the fan is off.

6. Floors:

Type ..... **Slab Floor On Grade**
Floor Area ..... **184.0** ft²
Total Floor U-Value ..... **0.176** BTU/(hr·ft²·°F)
Exposed Perimeter ..... **18.4** ft
Edge Insulation R-Value ..... **10.00** (hr·ft²·°F)/BTU

7. Partitions:

(No partition data).

1025 SECURE STORAGE

1. General Details:

Floor Area ..... **491.0** ft²
Avg. Ceiling Height ..... **8.5** ft
Building Weight ..... **70.0** lb/ft²

1.1. OA Ventilation Requirements:

Space Usage ..... **User-Defined**
OA Requirement 1 ..... **0.0** CFM
OA Requirement 2 ..... **0.00** CFM/ft²
Space Usage Defaults ..... **ASHRAE Std 62.1-2010**

2. Internals:

2.1. Overhead Lighting:

Fixture Type ..... **Recessed (Unvented)**
Wattage ..... **0.46** W/ft²
Ballast Multiplier **1.15**
Schedule ..... **Office Ligthing Schedule**

2.2. Task Lighting:

Wattage ..... **0.00** W/ft²
Schedule ..... **None**

2.3. Electrical Equipment:

Wattage ..... **0.00** W/ft²
Schedule ..... **None**

2.4. People:

Occupancy ..... **0.0** Person
Activity Level ..... **User defined**
Sensible ..... **245.0** BTU/hr/person
Latent ..... **0.0** BTU/hr/person
Schedule ..... **None**

2.5. Miscellaneous Loads:

Sensible ..... **0** BTU/hr
Schedule ..... **None**
Latent ..... **0** BTU/hr
Schedule ..... **None**

3. Walls, Windows, Doors:

Exp.	Wall Gross Area (ft²)	Window 1 Qty.	Window 2 Qty.	Door 1 Qty.
N	161.0	0	0	0

3.1. Construction Types for Exposure N

Wall Type ..... **Securty Wall Existing**

4. Roofs, Skylights:

Exp.	Roof Gross Area (ft²)	Roof Slope (deg.)	Skylight Qty.
H	491.0	0	0

4.1. Construction Types for Exposure H

Roof Type ..... **Roof**

5. Infiltration:

Design Cooling ..... **0.25** CFM/ft²
Design Heating ..... **0.25** CFM/ft²
Energy Analysis ..... **0.25** CFM/ft²
Infiltration occurs only when the fan is off.

6. Floors:

Type ..... **Slab Floor On Grade**
Floor Area ..... **491.0** ft²
Total Floor U-Value ..... **0.176** BTU/(hr·ft²·°F)
Exposed Perimeter ..... **18.8** ft
Edge Insulation R-Value ..... **10.00** (hr·ft²·°F)/BTU

7. Partitions:

(No partition data).

1026 LACTATION

1. General Details:

Floor Area ..... **143.0** ft²
Avg. Ceiling Height ..... **9.0** ft
Building Weight ..... **70.0** lb/ft²

1.1. OA Ventilation Requirements:

Space Usage ..... **User-Defined**
OA Requirement 1 ..... **0.0** CFM
OA Requirement 2 ..... **0.00** CFM/ft²
Space Usage Defaults ..... **ASHRAE Std 62.1-2010**

2. Internals:

2.1. Overhead Lighting:

Fixture Type ..... **Recessed (Unvented)**
Wattage ..... **0.93** W/ft²
Ballast Multiplier **1.15**
Schedule ..... **Office Ligthing Schedule**

2.2. Task Lighting:

Wattage ..... **0.00** W/ft²
Schedule ..... **None**

2.3. Electrical Equipment:

Wattage ..... **430.0** Watts
Schedule ..... **Office Equipment Schedule**

2.4. People:

Occupancy ..... **1.0** Person
Activity Level ..... **User defined**
Sensible ..... **245.0** BTU/hr/person
Latent ..... **0.0** BTU/hr/person
Schedule ..... **Office Occupancy Schedule**

2.5. Miscellaneous Loads:

Sensible ..... **0** BTU/hr
Schedule ..... **None**
Latent ..... **0** BTU/hr
Schedule ..... **None**

3. Walls, Windows, Doors:

(No Wall, Window, Door data).

4. Roofs, Skylights:

Exp.	Roof Gross Area (ft²)	Roof Slope (deg.)	Skylight Qty.
H	143.0	0	0

4.1. Construction Types for Exposure H

Roof Type ..... **Roof**

5. Infiltration:

Design Cooling ..... **0.00** ACH
Design Heating ..... **0.00** ACH
Energy Analysis ..... **0.00** ACH
Infiltration occurs only when the fan is off.

6. Floors:

Type ..... **Slab Floor On Grade**
Floor Area ..... **143.0** ft²
Total Floor U-Value ..... **0.176** BTU/(hr·ft²·°F)
Exposed Perimeter ..... **0.0** ft
Edge Insulation R-Value ..... **0.00** (hr·ft²·°F)/BTU

7. Partitions:

(No partition data).

1027 PRIVATE OFFICE

1. General Details:

Floor Area ..... **144.0** ft²
Avg. Ceiling Height ..... **9.0** ft
Building Weight ..... **70.0** lb/ft²

1.1. OA Ventilation Requirements:

Space Usage ..... **User-Defined**
OA Requirement 1 ..... **0.0** CFM
OA Requirement 2 ..... **0.00** CFM/ft²
Space Usage Defaults ..... **ASHRAE Std 62.1-2010**

2. Internals:

2.1. Overhead Lighting:

Fixture Type ..... **Recessed (Unvented)**
Wattage ..... **0.93** W/ft²
Ballast Multiplier **1.15**
Schedule ..... **Office Ligthing Schedule**

2.2. Task Lighting:

Wattage ..... **0.80** W/ft²
Schedule ..... **Office Ligthing Schedule**

2.3. Electrical Equipment:

Wattage ..... **200.0** Watts
Schedule ..... **Office Equipment Schedule**

2.4. People:

Occupancy ..... **1.0** Person
Activity Level ..... **User defined**
Sensible ..... **245.0** BTU/hr/person
Latent ..... **0.0** BTU/hr/person
Schedule ..... **Office Occupancy Schedule**

2.5. Miscellaneous Loads:

Sensible ..... **0** BTU/hr
Schedule ..... **None**
Latent ..... **0** BTU/hr
Schedule ..... **None**

3. Walls, Windows, Doors:

(No Wall, Window, Door data).

4. Roofs, Skylights:

Exp.	Roof Gross Area (ft²)	Roof Slope (deg.)	Skylight Qty.
H	144.0	0	0

4.1. Construction Types for Exposure H

Roof Type ..... **Roof**

5. Infiltration:

Design Cooling ..... **0.00** ACH
Design Heating ..... **0.00** ACH
Energy Analysis ..... **0.00** ACH
Infiltration occurs only when the fan is off.

6. Floors:

Type ..... **Slab Floor On Grade**
Floor Area ..... **144.0** ft²
Total Floor U-Value ..... **0.176** BTU/(hr·ft²·°F)
Exposed Perimeter ..... **0.0** ft
Edge Insulation R-Value ..... **0.00** (hr·ft²·°F)/BTU

7. Partitions:

(No partition data).

1028 PRIVATE OFFICE

1. General Details:

Floor Area ..... **151.0** ft²
Avg. Ceiling Height ..... **9.0** ft
Building Weight ..... **70.0** lb/ft²

1.1. OA Ventilation Requirements:

Space Usage ..... **User-Defined**
OA Requirement 1 ..... **0.0** CFM
OA Requirement 2 ..... **0.00** CFM/ft²
Space Usage Defaults ..... **ASHRAE Std 62.1-2010**

2. Internals:

2.1. Overhead Lighting:

Fixture Type ..... **Recessed (Unvented)**
Wattage ..... **0.93** W/ft²
Ballast Multiplier **1.15**
Schedule ..... **Office Ligthing Schedule**

2.2. Task Lighting:

Wattage ..... **0.80** W/ft²
Schedule ..... **Office Ligthing Schedule**

2.3. Electrical Equipment:

Wattage ..... **200.0** Watts
Schedule ..... **Office Equipment Schedule**

2.4. People:

Occupancy ..... **1.0** Person
Activity Level ..... **User defined**
Sensible ..... **245.0** BTU/hr/person
Latent ..... **0.0** BTU/hr/person
Schedule ..... **Office Occupancy Schedule**

2.5. Miscellaneous Loads:

Sensible ..... **0** BTU/hr
Schedule ..... **None**
Latent ..... **0** BTU/hr
Schedule ..... **None**

3. Walls, Windows, Doors:

(No Wall, Window, Door data).

4. Roofs, Skylights:

Exp.	Roof Gross Area (ft²)	Roof Slope (deg.)	Skylight Qty.
H	151.0	0	0

4.1. Construction Types for Exposure H

Roof Type ..... **Roof**

5. Infiltration:

Design Cooling ..... **0.00** ACH
Design Heating ..... **0.00** ACH
Energy Analysis ..... **0.00** ACH
Infiltration occurs only when the fan is off.

6. Floors:

Type ..... **Slab Floor On Grade**
Floor Area ..... **151.0** ft²
Total Floor U-Value ..... **0.176** BTU/(hr·ft²·°F)
Exposed Perimeter ..... **0.0** ft
Edge Insulation R-Value ..... **0.00** (hr·ft²·°F)/BTU

7. Partitions:

(No partition data).

1029 ARMORER

1. General Details:

Floor Area ..... **163.0** ft²
Avg. Ceiling Height ..... **9.0** ft
Building Weight ..... **70.0** lb/ft²

1.1. OA Ventilation Requirements:

Space Usage ..... **User-Defined**
OA Requirement 1 ..... **0.0** CFM
OA Requirement 2 ..... **0.00** CFM/ft²
Space Usage Defaults ..... **ASHRAE Std 62.1-2010**

2. Internals:

2.1. Overhead Lighting:

Fixture Type ..... **Recessed (Unvented)**
Wattage ..... **0.81** W/ft²
Ballast Multiplier **1.15**
Schedule ..... **Office Ligthing Schedule**

2.2. Task Lighting:

Wattage ..... **0.80** W/ft²
Schedule ..... **Office Ligthing Schedule**

2.3. Electrical Equipment:

Wattage ..... **645.0** Watts
Schedule ..... **Office Equipment Schedule**

2.4. People:

Occupancy ..... **2.0** People
Activity Level ..... **User defined**
Sensible ..... **245.0** BTU/hr/person
Latent ..... **0.0** BTU/hr/person
Schedule ..... **Office Occupancy Schedule**

2.5. Miscellaneous Loads:

Sensible ..... **0** BTU/hr
Schedule ..... **None**
Latent ..... **0** BTU/hr
Schedule ..... **None**

3. Walls, Windows, Doors:

(No Wall, Window, Door data).

4. Roofs, Skylights:

Exp.	Roof Gross Area (ft²)	Roof Slope (deg.)	Skylight Qty.
H	163.0	0	0

4.1. Construction Types for Exposure H

Roof Type ..... **Roof**

5. Infiltration:

Design Cooling ..... **0.00** ACH
Design Heating ..... **0.00** ACH
Energy Analysis ..... **0.00** ACH
Infiltration occurs only when the fan is off.

6. Floors:

Type ..... **Slab Floor On Grade**
Floor Area ..... **163.0** ft²
Total Floor U-Value ..... **0.176** BTU/(hr·ft²·°F)
Exposed Perimeter ..... **0.0** ft
Edge Insulation R-Value ..... **0.00** (hr·ft²·°F)/BTU

7. Partitions:

(No partition data).

1030 ARNS VAULT

1. General Details:

Floor Area ..... **910.0** ft²
Avg. Ceiling Height ..... **9.0** ft
Building Weight ..... **70.0** lb/ft²

1.1. OA Ventilation Requirements:

Space Usage ..... **User-Defined**
OA Requirement 1 ..... **0.0** CFM
OA Requirement 2 ..... **0.00** CFM/ft²
Space Usage Defaults ..... **ASHRAE Std 62.1-2010**

2. Internals:

2.1. Overhead Lighting:

Fixture Type ..... **Recessed (Unvented)**
Wattage ..... **0.46** W/ft²
Ballast Multiplier **1.15**
Schedule ..... **Office Ligthing Schedule**

2.2. Task Lighting:

Wattage ..... **0.00** W/ft²
Schedule ..... **None**

2.3. Electrical Equipment:

Wattage ..... **0.00** W/ft²
Schedule ..... **None**

2.4. People:

Occupancy ..... **0.0** Person
Activity Level ..... **User defined**
Sensible ..... **245.0** BTU/hr/person
Latent ..... **0.0** BTU/hr/person
Schedule ..... **None**

2.5. Miscellaneous Loads:

Sensible ..... **0** BTU/hr
Schedule ..... **None**
Latent ..... **0** BTU/hr
Schedule ..... **None**

3. Walls, Windows, Doors:

(No Wall, Window, Door data).

4. Roofs, Skylights:

Exp.	Roof Gross Area (ft²)	Roof Slope (deg.)	Skylight Qty.
H	910.0	0	0

4.1. Construction Types for Exposure H

Roof Type ..... **Roof**

5. Infiltration:

Design Cooling ..... **0.00** ACH
Design Heating ..... **0.00** ACH
Energy Analysis ..... **0.00** ACH
Infiltration occurs only when the fan is off.

6. Floors:

Type ..... **Slab Floor On Grade**
Floor Area ..... **910.0** ft²
Total Floor U-Value ..... **0.176** BTU/(hr·ft²·°F)
Exposed Perimeter ..... **0.0** ft
Edge Insulation R-Value ..... **0.00** (hr·ft²·°F)/BTU

7. Partitions:

(No partition data).

1031 PHYSICAL READINESS

1. General Details:

Floor Area ..... **1602.0** ft²
Avg. Ceiling Height ..... **9.0** ft
Building Weight ..... **70.0** lb/ft²

1.1. OA Ventilation Requirements:

Space Usage ..... **User-Defined**
OA Requirement 1 ..... **0.0** CFM
OA Requirement 2 ..... **0.00** CFM/ft²
Space Usage Defaults ..... **ASHRAE Std 62.1-2010**

2. Internals:

2.1. Overhead Lighting:

Fixture Type ..... **Recessed (Unvented)**
Wattage ..... **0.55** W/ft²
Ballast Multiplier **1.15**
Schedule ..... **Office Ligthing Schedule**

2.2. Task Lighting:

Wattage ..... **0.00** W/ft²
Schedule ..... **None**

2.3. Electrical Equipment:

Wattage ..... **4208.0** Watts
Schedule ..... **Physical Equipment Schedule**

2.4. People:

Occupancy ..... **30.0** People
Activity Level ..... **User defined**
Sensible ..... **295.0** BTU/hr/person
Latent ..... **0.0** BTU/hr/person
Schedule ..... **Physical Occupancy Schedule**

2.5. Miscellaneous Loads:

Sensible ..... **0** BTU/hr
Schedule ..... **None**
Latent ..... **0** BTU/hr
Schedule ..... **None**

3. Walls, Windows, Doors:

Exp.	Wall Gross Area (ft²)	Window 1 Qty.	Window 2 Qty.	Door 1 Qty.
N	378.0	32	0	0
E	270.0	0	0	0

3.1. Construction Types for Exposure N

Wall Type ..... **Steel frame Wall New**
1st Window Type ..... **Window Assembly**

3.2. Construction Types for Exposure E

Wall Type ..... **Steel frame Wall New**

4. Roofs, Skylights:

Exp.	Roof Gross Area (ft²)	Roof Slope (deg.)	Skylight Qty.
H	1602.0	0	0

4.1. Construction Types for Exposure H

Roof Type ..... **Roof**

5. Infiltration:

Design Cooling ..... **0.25** CFM/ft²
Design Heating ..... **0.25** CFM/ft²
Energy Analysis ..... **0.25** CFM/ft²
Infiltration occurs only when the fan is off.

6. Floors:

Type ..... **Slab Floor On Grade**
Floor Area ..... **1602.0** ft²
Total Floor U-Value ..... **0.176** BTU/(hr·ft²·°F)
Exposed Perimeter ..... **71.8** ft
Edge Insulation R-Value ..... **10.00** (hr·ft²·°F)/BTU

7. Partitions:

(No partition data).

1032 UNIT STORAGE

1. General Details:

Floor Area ..... **2526.0** ft²
Avg. Ceiling Height ..... **13.0** ft
Building Weight ..... **70.0** lb/ft²

1.1. OA Ventilation Requirements:

Space Usage ..... **User-Defined**
OA Requirement 1 ..... **0.0** CFM
OA Requirement 2 ..... **0.00** CFM/ft²
Space Usage Defaults ..... **ASHRAE Std 62.1-2010**

2. Internals:

2.1. Overhead Lighting:

Fixture Type ..... **Recessed (Unvented)**
Wattage ..... **0.46** W/ft²
Ballast Multiplier **1.15**
Schedule ..... **Office Ligthing Schedule**

2.2. Task Lighting:

Wattage ..... **0.00** W/ft²
Schedule ..... **None**

2.3. Electrical Equipment:

Wattage ..... **0.00** W/ft²
Schedule ..... **None**

2.4. People:

Occupancy ..... **0.0** Person
Activity Level ..... **User defined**
Sensible ..... **245.0** BTU/hr/person
Latent ..... **0.0** BTU/hr/person
Schedule ..... **None**

2.5. Miscellaneous Loads:

Sensible ..... **0** BTU/hr
Schedule ..... **None**
Latent ..... **0** BTU/hr
Schedule ..... **None**

3. Walls, Windows, Doors:

Exp.	Wall Gross Area (ft²)	Window 1 Qty.	Window 2 Qty.	Door 1 Qty.
S	207.0	0	0	0
S	330.0	0	0	42

3.1. Construction Types for Exposure S

Wall Type ..... **Steel frame Wall Existing**

3.2. Construction Types for Exposure S

Wall Type ..... **CMU Wall Existing**
Door Type ..... **Sample Door Assembly**

4. Roofs, Skylights:

Exp.	Roof Gross Area (ft²)	Roof Slope (deg.)	Skylight Qty.
H	2526.0	0	0

4.1. Construction Types for Exposure H

Roof Type ..... **Roof**

5. Infiltration:

Design Cooling ..... **0.25** CFM/ft²
Design Heating ..... **0.25** CFM/ft²
Energy Analysis ..... **0.25** CFM/ft²
Infiltration occurs only when the fan is off.

6. Floors:

Type ..... **Slab Floor On Grade**
Floor Area ..... **2526.0** ft²
Total Floor U-Value ..... **0.176** BTU/(hr·ft²·°F)
Exposed Perimeter ..... **41.3** ft
Edge Insulation R-Value ..... **10.00** (hr·ft²·°F)/BTU

7. Partitions:

(No partition data).

1033 PRIVATE OFFICE

1. General Details:

Floor Area ..... **127.0** ft²
Avg. Ceiling Height ..... **9.0** ft
Building Weight ..... **70.0** lb/ft²

1.1. OA Ventilation Requirements:

Space Usage ..... **User-Defined**
OA Requirement 1 ..... **0.0** CFM
OA Requirement 2 ..... **0.00** CFM/ft²
Space Usage Defaults ..... **ASHRAE Std 62.1-2010**

2. Internals:

2.1. Overhead Lighting:

Fixture Type ..... **Recessed (Unvented)**
Wattage ..... **0.93** W/ft²
Ballast Multiplier **1.15**
Schedule ..... **Office Ligthing Schedule**

2.2. Task Lighting:

Wattage ..... **0.80** W/ft²
Schedule ..... **Office Ligthing Schedule**

2.3. Electrical Equipment:

Wattage ..... **200.0** Watts
Schedule ..... **Office Equipment Schedule**

2.4. People:

Occupancy ..... **1.0** Person
Activity Level ..... **User defined**
Sensible ..... **245.0** BTU/hr/person
Latent ..... **0.0** BTU/hr/person
Schedule ..... **Office Occupancy Schedule**

2.5. Miscellaneous Loads:

Sensible ..... **0** BTU/hr
Schedule ..... **None**
Latent ..... **0** BTU/hr
Schedule ..... **None**

3. Walls, Windows, Doors:

Exp.	Wall Gross Area (ft²)	Window 1 Qty.	Window 2 Qty.	Door 1 Qty.
S	12.0	0	0	0
S	93.0	0	0	0

3.1. Construction Types for Exposure S

Wall Type ..... **Steel frame Wall Existing**

3.2. Construction Types for Exposure S

Wall Type ..... **CMU Wall Existing**

4. Roofs, Skylights:

Exp.	Roof Gross Area (ft²)	Roof Slope (deg.)	Skylight Qty.
H	127.0	0	0

4.1. Construction Types for Exposure H

Roof Type ..... **Roof**

5. Infiltration:

Design Cooling ..... **0.25** CFM/ft²
Design Heating ..... **0.25** CFM/ft²
Energy Analysis ..... **0.25** CFM/ft²
Infiltration occurs only when the fan is off.

6. Floors:

Type ..... **Slab Floor On Grade**
Floor Area ..... **127.0** ft²
Total Floor U-Value ..... **0.176** BTU/(hr·ft²·°F)
Exposed Perimeter ..... **11.6** ft
Edge Insulation R-Value ..... **10.00** (hr·ft²·°F)/BTU

7. Partitions:

(No partition data).

1034 STORAGE

1. General Details:

Floor Area ..... **207.0** ft²
Avg. Ceiling Height ..... **13.0** ft
Building Weight ..... **70.0** lb/ft²

1.1. OA Ventilation Requirements:

Space Usage ..... **User-Defined**
OA Requirement 1 ..... **0.0** CFM
OA Requirement 2 ..... **0.00** CFM/ft²
Space Usage Defaults ..... **ASHRAE Std 62.1-2010**

2. Internals:

2.1. Overhead Lighting:

Fixture Type ..... **Recessed (Unvented)**
Wattage ..... **0.46** W/ft²
Ballast Multiplier **1.15**
Schedule ..... **Office Ligthing Schedule**

2.2. Task Lighting:

Wattage ..... **0.00** W/ft²
Schedule ..... **None**

2.3. Electrical Equipment:

Wattage ..... **0.00** W/ft²
Schedule ..... **None**

2.4. People:

Occupancy ..... **0.0** Person
Activity Level ..... **User defined**
Sensible ..... **245.0** BTU/hr/person
Latent ..... **0.0** BTU/hr/person
Schedule ..... **None**

2.5. Miscellaneous Loads:

Sensible ..... **0** BTU/hr
Schedule ..... **None**
Latent ..... **0** BTU/hr
Schedule ..... **None**

3. Walls, Windows, Doors:

Exp.	Wall Gross Area (ft²)	Window 1 Qty.	Window 2 Qty.	Door 1 Qty.
S	60.0	0	0	0
S	96.0	0	0	0

3.1. Construction Types for Exposure S

Wall Type ..... **Steel frame Wall Existing**

3.2. Construction Types for Exposure S

Wall Type ..... **CMU Wall Existing**

4. Roofs, Skylights:

Exp.	Roof Gross Area (ft²)	Roof Slope (deg.)	Skylight Qty.
H	207.0	0	0

4.1. Construction Types for Exposure H

Roof Type ..... **Roof**

5. Infiltration:

Design Cooling ..... **0.25** CFM/ft²
Design Heating ..... **0.25** CFM/ft²
Energy Analysis ..... **0.25** CFM/ft²
Infiltration occurs only when the fan is off.

6. Floors:

Type ..... **Slab Floor On Grade**
Floor Area ..... **207.0** ft²
Total Floor U-Value ..... **0.176** BTU/(hr·ft²·°F)
Exposed Perimeter ..... **12.0** ft
Edge Insulation R-Value ..... **10.00** (hr·ft²·°F)/BTU

7. Partitions:

(No partition data).

1035 STAGING

1. General Details:

Floor Area ..... **1394.0** ft²
Avg. Ceiling Height ..... **17.0** ft
Building Weight ..... **70.0** lb/ft²

1.1. OA Ventilation Requirements:

Space Usage ..... **User-Defined**
OA Requirement 1 ..... **0.0** CFM
OA Requirement 2 ..... **0.00** CFM/ft²
Space Usage Defaults ..... **ASHRAE Std 62.1-2010**

2. Internals:

2.1. Overhead Lighting:

Fixture Type ..... **Recessed (Unvented)**
Wattage ..... **0.46** W/ft²
Ballast Multiplier **1.15**
Schedule ..... **Office Ligthing Schedule**

2.2. Task Lighting:

Wattage ..... **0.00** W/ft²
Schedule ..... **None**

2.3. Electrical Equipment:

Wattage ..... **0.00** W/ft²
Schedule ..... **None**

2.4. People:

Occupancy ..... **0.0** Person
Activity Level ..... **User defined**
Sensible ..... **245.0** BTU/hr/person
Latent ..... **0.0** BTU/hr/person
Schedule ..... **None**

2.5. Miscellaneous Loads:

Sensible ..... **0** BTU/hr
Schedule ..... **None**
Latent ..... **0** BTU/hr
Schedule ..... **None**

3. Walls, Windows, Doors:

Exp.	Wall Gross Area (ft²)	Window 1 Qty.	Window 2 Qty.	Door 1 Qty.
E	345.0	0	0	168
E	307.0	0	0	224

3.1. Construction Types for Exposure E

Wall Type ..... **Steel frame Wall Existing**
Door Type ..... **Sample Door Assembly**

3.2. Construction Types for Exposure E

Wall Type ..... **CMU Wall Existing**
Door Type ..... **Sample Door Assembly**

4. Roofs, Skylights:

Exp.	Roof Gross Area (ft²)	Roof Slope (deg.)	Skylight Qty.
H	1394.0	0	0

4.1. Construction Types for Exposure H

Roof Type ..... **Roof**

5. Infiltration:

Design Cooling ..... **1.00** ACH
Design Heating ..... **1.00** ACH
Energy Analysis ..... **1.00** ACH
Infiltration occurs at all hours.

6. Floors:

Type ..... **Slab Floor On Grade**
Floor Area ..... **1394.0** ft²
Total Floor U-Value ..... **0.176** BTU/(hr·ft²·°F)
Exposed Perimeter ..... **38.4** ft
Edge Insulation R-Value ..... **10.00** (hr·ft²·°F)/BTU

7. Partitions:

(No partition data).

1036 UNIT STORAGE

1. General Details:

Floor Area ..... **1629.0** ft²
Avg. Ceiling Height ..... **17.0** ft
Building Weight ..... **70.0** lb/ft²

1.1. OA Ventilation Requirements:

Space Usage ..... **User-Defined**
OA Requirement 1 ..... **0.0** CFM
OA Requirement 2 ..... **0.00** CFM/ft²
Space Usage Defaults ..... **ASHRAE Std 62.1-2010**

2. Internals:

2.1. Overhead Lighting:

Fixture Type ..... **Recessed (Unvented)**
Wattage ..... **0.46** W/ft²
Ballast Multiplier **1.15**
Schedule ..... **Office Ligthing Schedule**

2.2. Task Lighting:

Wattage ..... **0.00** W/ft²
Schedule ..... **None**

2.3. Electrical Equipment:

Wattage ..... **0.00** W/ft²
Schedule ..... **None**

2.4. People:

Occupancy ..... **0.0** Person
Activity Level ..... **User defined**
Sensible ..... **245.0** BTU/hr/person
Latent ..... **0.0** BTU/hr/person
Schedule ..... **None**

2.5. Miscellaneous Loads:

Sensible ..... **0** BTU/hr
Schedule ..... **None**
Latent ..... **0** BTU/hr
Schedule ..... **None**

3. Walls, Windows, Doors:

Exp.	Wall Gross Area (ft²)	Window 1 Qty.	Window 2 Qty.	Door 1 Qty.
S	342.0	0	0	0
S	304.0	0	0	0
W	392.0	0	0	168
W	348.0	0	0	224
E	405.0	0	0	168
E	360.0	0	0	224

3.1. Construction Types for Exposure S

Wall Type ..... **Steel frame Wall Existing**

3.2. Construction Types for Exposure S

Wall Type ..... **CMU Wall Existing**

3.3. Construction Types for Exposure W

Wall Type ..... **Steel frame Wall Existing**
Door Type ..... **Sample Door Assembly**

3.4. Construction Types for Exposure W

Wall Type ..... **CMU Wall Existing**
Door Type ..... **Sample Door Assembly**

3.5. Construction Types for Exposure E

Wall Type ..... **Steel frame Wall Existing**
Door Type ..... **Sample Door Assembly**

3.6. Construction Types for Exposure E

Wall Type ..... **CMU Wall Existing**
Door Type ..... **Sample Door Assembly**

4. Roofs, Skylights:

Exp.	Roof Gross Area (ft²)	Roof Slope (deg.)	Skylight Qty.
H	1629.0	0	0

4.1. Construction Types for Exposure H

Roof Type ..... **Roof**

5. Infiltration:

Design Cooling	**1.50**	ACH
Design Heating	**1.50**	ACH
Energy Analysis	**1.50**	ACH

Infiltration occurs at all hours.

6. Floors:

Type	**Slab Floor On Grade**	
Floor Area	**1629.0**	ft^2
Total Floor U-Value	**0.176**	BTU/(hr·ft^2·°F)
Exposed Perimeter	**144.0**	ft
Edge Insulation R-Value	**10.00**	(hr·ft^2·°F)/BTU

7. Partitions:

(No partition data).

1037 UNIT STORAGE

1. General Details:

Floor Area ..... **1332.0** ft²
Avg. Ceiling Height ..... **17.0** ft
Building Weight ..... **70.0** lb/ft²

1.1. OA Ventilation Requirements:

Space Usage ..... **User-Defined**
OA Requirement 1 ..... **0.0** CFM
OA Requirement 2 ..... **0.00** CFM/ft²
Space Usage Defaults ..... **ASHRAE Std 62.1-2010**

2. Internals:

2.1. Overhead Lighting:

Fixture Type ..... **Recessed (Unvented)**
Wattage ..... **0.46** W/ft²
Ballast Multiplier **1.15**
Schedule ..... **Office Ligthing Schedule**

2.2. Task Lighting:

Wattage ..... **0.00** W/ft²
Schedule ..... **None**

2.3. Electrical Equipment:

Wattage ..... **0.00** W/ft²
Schedule ..... **None**

2.4. People:

Occupancy ..... **0.0** Person
Activity Level ..... **User defined**
Sensible ..... **245.0** BTU/hr/person
Latent ..... **0.0** BTU/hr/person
Schedule ..... **None**

2.5. Miscellaneous Loads:

Sensible ..... **0** BTU/hr
Schedule ..... **None**
Latent ..... **0** BTU/hr
Schedule ..... **None**

3. Walls, Windows, Doors:

Exp.	Wall Gross Area (ft²)	Window 1 Qty.	Window 2 Qty.	Door 1 Qty.
E	329.0	0	0	0
E	292.0	0	0	63
N	337.5	0	0	0
N	300.0	0	0	21

3.1. Construction Types for Exposure E

Wall Type ..... **Steel frame Wall Existing**

3.2. Construction Types for Exposure E

Wall Type ..... **CMU Wall Existing**
Door Type ..... **Sample Door Assembly**

3.3. Construction Types for Exposure N

Wall Type ..... **Steel frame Wall Existing**

3.4. Construction Types for Exposure N

Wall Type ..... **CMU Wall Existing**
Door Type ..... **Sample Door Assembly**

4. Roofs, Skylights:

Exp.	Roof Gross Area (ft²)	Roof Slope (deg.)	Skylight Qty.
H	1332.0	0	0

4.1. Construction Types for Exposure H

Roof Type ..... **Roof**

5. Infiltration:

Design Cooling ..... **0.25** CFM/ft²
Design Heating ..... **0.25** CFM/ft²
Energy Analysis ..... **0.25** CFM/ft²
Infiltration occurs at all hours.

6. Floors:

Type	**Slab Floor On Grade**	
Floor Area	**1332.0**	ft^2
Total Floor U-Value	**0.176**	BTU/(hr·ft^2·°F)
Exposed Perimeter	**74.0**	ft
Edge Insulation R-Value	**10.00**	(hr·ft^2·°F)/BTU

7. Partitions:

(No partition data).

C1001 CORRIDOR

1. General Details:

Floor Area	**448.0**	ft²
Avg. Ceiling Height	**9.0**	ft
Building Weight	**70.0**	lb/ft²

1.1. OA Ventilation Requirements:

Space Usage	**User-Defined**	
OA Requirement 1	**0.0**	CFM
OA Requirement 2	**0.00**	CFM/ft²
Space Usage Defaults	**ASHRAE Std 62.1-2010**	

2. Internals:

2.1. Overhead Lighting:

Fixture Type	**Recessed (Unvented)**	
Wattage	**0.36**	W/ft²
Ballast Multiplier	**1.15**	
Schedule	**Office Ligthing Schedule**	

2.2. Task Lighting:

Wattage	**0.00**	W/ft²
Schedule	**None**	

2.3. Electrical Equipment:

Wattage	**0.00**	W/ft²
Schedule	**None**	

2.4. People:

Occupancy	**0.0**	Person
Activity Level	**User defined**	
Sensible	**245.0**	BTU/hr/person
Latent	**0.0**	BTU/hr/person
Schedule	**None**	

2.5. Miscellaneous Loads:

Sensible	**0**	BTU/hr
Schedule	**None**	
Latent	**0**	BTU/hr
Schedule	**None**	

3. Walls, Windows, Doors:

(No Wall, Window, Door data).

4. Roofs, Skylights:

Exp.	Roof Gross Area (ft²)	Roof Slope (deg.)	Skylight Qty.
H	448.0	0	0

4.1. Construction Types for Exposure H

Roof Type	**Roof**	

5. Infiltration:

Design Cooling	**0.00**	ACH
Design Heating	**0.00**	ACH
Energy Analysis	**0.00**	ACH

Infiltration occurs only when the fan is off.

6. Floors:

Type	**Slab Floor On Grade**	
Floor Area	**448.0**	ft²
Total Floor U-Value	**0.176**	BTU/(hr·ft²·°F)
Exposed Perimeter	**0.0**	ft
Edge Insulation R-Value	**0.00**	(hr·ft²·°F)/BTU

7. Partitions:

(No partition data).

C1002 LOBBY

1. General Details:

Floor Area ..... **165.0** ft²
Avg. Ceiling Height ..... **9.0** ft
Building Weight ..... **70.0** lb/ft²

1.1. OA Ventilation Requirements:

Space Usage ..... **User-Defined**
OA Requirement 1 ..... **0.0** CFM
OA Requirement 2 ..... **0.00** CFM/ft²
Space Usage Defaults ..... **ASHRAE Std 62.1-2010**

2. Internals:

2.1. Overhead Lighting:

Fixture Type ..... **Recessed (Unvented)**
Wattage ..... **0.50** W/ft²
Ballast Multiplier **1.15**
Schedule ..... **Office Ligthing Schedule**

2.2. Task Lighting:

Wattage ..... **0.00** W/ft²
Schedule ..... **None**

2.3. Electrical Equipment:

Wattage ..... **0.00** W/ft²
Schedule ..... **None**

2.4. People:

Occupancy ..... **4.0** People
Activity Level ..... **User defined**
Sensible ..... **245.0** BTU/hr/person
Latent ..... **0.0** BTU/hr/person
Schedule ..... **Office Occupancy Schedule**

2.5. Miscellaneous Loads:

Sensible ..... **0** BTU/hr
Schedule ..... **None**
Latent ..... **0** BTU/hr
Schedule ..... **None**

3. Walls, Windows, Doors:

(No Wall, Window, Door data).

4. Roofs, Skylights:

Exp.	Roof Gross Area (ft²)	Roof Slope (deg.)	Skylight Qty.
H	165.0	0	0

4.1. Construction Types for Exposure H

Roof Type ..... **Roof**

5. Infiltration:

Design Cooling ..... **0.00** ACH
Design Heating ..... **0.00** ACH
Energy Analysis ..... **0.00** ACH
Infiltration occurs only when the fan is off.

6. Floors:

Type ..... **Slab Floor On Grade**
Floor Area ..... **165.0** ft²
Total Floor U-Value ..... **0.176** BTU/(hr·ft²·°F)
Exposed Perimeter ..... **0.0** ft
Edge Insulation R-Value ..... **0.00** (hr·ft²·°F)/BTU

7. Partitions:

(No partition data).

C1003 CORRIDOR_1

1. General Details:

Floor Area ..... **855.0** ft²
Avg. Ceiling Height ..... **9.0** ft
Building Weight ..... **70.0** lb/ft²

1.1. OA Ventilation Requirements:

Space Usage ..... **User-Defined**
OA Requirement 1 ..... **0.0** CFM
OA Requirement 2 ..... **0.00** CFM/ft²
Space Usage Defaults ..... **ASHRAE Std 62.1-2010**

2. Internals:

2.1. Overhead Lighting:

Fixture Type ..... **Recessed (Unvented)**
Wattage ..... **0.36** W/ft²
Ballast Multiplier **1.15**
Schedule ..... **Office Ligthing Schedule**

2.2. Task Lighting:

Wattage ..... **0.00** W/ft²
Schedule ..... **None**

2.3. Electrical Equipment:

Wattage ..... **0.00** W/ft²
Schedule ..... **None**

2.4. People:

Occupancy ..... **0.0** Person
Activity Level ..... **User defined**
Sensible ..... **245.0** BTU/hr/person
Latent ..... **0.0** BTU/hr/person
Schedule ..... **None**

2.5. Miscellaneous Loads:

Sensible ..... **0** BTU/hr
Schedule ..... **None**
Latent ..... **0** BTU/hr
Schedule ..... **None**

3. Walls, Windows, Doors:

(No Wall, Window, Door data).

4. Roofs, Skylights:

Exp.	Roof Gross Area (ft²)	Roof Slope (deg.)	Skylight Qty.
H	1152.0	0	0

4.1. Construction Types for Exposure H

Roof Type ..... **Roof**

5. Infiltration:

Design Cooling ..... **0.00** ACH
Design Heating ..... **0.00** ACH
Energy Analysis ..... **0.00** ACH
Infiltration occurs only when the fan is off.

6. Floors:

Type ..... **Slab Floor On Grade**
Floor Area ..... **855.0** ft²
Total Floor U-Value ..... **0.176** BTU/(hr·ft²·°F)
Exposed Perimeter ..... **0.0** ft
Edge Insulation R-Value ..... **0.00** (hr·ft²·°F)/BTU

7. Partitions:

(No partition data).

C1003 CORRIDOR_2

1. General Details:

Floor Area ..... **367.0** ft²
Avg. Ceiling Height ..... **9.0** ft
Building Weight ..... **70.0** lb/ft²

1.1. OA Ventilation Requirements:

Space Usage ..... **User-Defined**
OA Requirement 1 ..... **0.0** CFM
OA Requirement 2 ..... **0.00** CFM/ft²
Space Usage Defaults ..... **ASHRAE Std 62.1-2010**

2. Internals:

2.1. Overhead Lighting:

Fixture Type ..... **Recessed (Unvented)**
Wattage ..... **0.36** W/ft²
Ballast Multiplier **1.15**
Schedule ..... **Office Ligthing Schedule**

2.2. Task Lighting:

Wattage ..... **0.00** W/ft²
Schedule ..... **None**

2.3. Electrical Equipment:

Wattage ..... **0.00** W/ft²
Schedule ..... **None**

2.4. People:

Occupancy ..... **0.0** Person
Activity Level ..... **User defined**
Sensible ..... **245.0** BTU/hr/person
Latent ..... **0.0** BTU/hr/person
Schedule ..... **None**

2.5. Miscellaneous Loads:

Sensible ..... **0** BTU/hr
Schedule ..... **None**
Latent ..... **0** BTU/hr
Schedule ..... **None**

3. Walls, Windows, Doors:

Exp.	Wall Gross Area (ft²)	Window 1 Qty.	Window 2 Qty.	Door 1 Qty.
N	63.0	0	0	21

3.1. Construction Types for Exposure N

Wall Type ..... **Steel frame Wall New**
Door Type ..... **Sample Door Assembly**

4. Roofs, Skylights:

Exp.	Roof Gross Area (ft²)	Roof Slope (deg.)	Skylight Qty.
H	448.0	0	0

4.1. Construction Types for Exposure H

Roof Type ..... **Roof**

5. Infiltration:

Design Cooling ..... **0.25** CFM/ft²
Design Heating ..... **0.25** CFM/ft²
Energy Analysis ..... **0.25** CFM/ft²
Infiltration occurs only when the fan is off.

6. Floors:

Type ..... **Slab Floor On Grade**
Floor Area ..... **70.0** ft²
Total Floor U-Value ..... **0.176** BTU/(hr·ft²·°F)
Exposed Perimeter ..... **7.0** ft
Edge Insulation R-Value ..... **0.00** (hr·ft²·°F)/BTU

7. Partitions:

(No partition data).

V1001 VESTIBULE

1. General Details:

Floor Area ..... **56.0** ft²
Avg. Ceiling Height ..... **9.0** ft
Building Weight ..... **70.0** lb/ft²

1.1. OA Ventilation Requirements:

Space Usage ..... **User-Defined**
OA Requirement 1 ..... **0.0** CFM/person
OA Requirement 2 ..... **0.00** CFM/ft²
Space Usage Defaults ..... **ASHRAE Std 62.1-2010**

2. Internals:

2.1. Overhead Lighting:

Fixture Type ..... **Recessed (Unvented)**
Wattage ..... **0.42** W/ft²
Ballast Multiplier **1.15**
Schedule ..... **Office Ligthing Schedule**

2.2. Task Lighting:

Wattage ..... **0.00** W/ft²
Schedule ..... **None**

2.3. Electrical Equipment:

Wattage ..... **0.00** W/ft²
Schedule ..... **None**

2.4. People:

Occupancy ..... **0.0** Person
Activity Level ..... **User defined**
Sensible ..... **0.0** BTU/hr/person
Latent ..... **0.0** BTU/hr/person
Schedule ..... **None**

2.5. Miscellaneous Loads:

Sensible ..... **0** BTU/hr
Schedule ..... **None**
Latent ..... **0** BTU/hr
Schedule ..... **None**

3. Walls, Windows, Doors:

Exp.	Wall Gross Area (ft²)	Window 1 Qty.	Window 2 Qty.	Door 1 Qty.
W	67.5	0	0	45

3.1. Construction Types for Exposure W

Wall Type ..... **Concrete Wall Existing**
Door Type ..... **Sample Door Assembly**

4. Roofs, Skylights:

Exp.	Roof Gross Area (ft²)	Roof Slope (deg.)	Skylight Qty.
H	56.0	0	0

4.1. Construction Types for Exposure H

Roof Type ..... **Roof**

5. Infiltration:

Design Cooling ..... **0.25** CFM/ft²
Design Heating ..... **0.25** CFM/ft²
Energy Analysis ..... **0.25** CFM/ft²
Infiltration occurs only when the fan is off.

6. Floors:

Type ..... **Slab Floor On Grade**
Floor Area ..... **56.0** ft²
Total Floor U-Value ..... **0.176** BTU/(hr·ft²·°F)
Exposed Perimeter ..... **8.0** ft
Edge Insulation R-Value ..... **10.00** (hr·ft²·°F)/BTU

7. Partitions:

(No partition data).

WSHPS Input Data

Project Name: 505100403 ORANGEBURG_ DESIGN MODEL_WSHP 05/20/2021
Prepared by: Mott MacDonald 09:24PM

1. General Details:

Air System Name ..... **WSHPS**
Equipment Type ..... **Terminal Units**
Air System Type ..... **Water Source Heat Pump**
Number of zones **24**
Ventilation ..... **Direct Ventilation**

2. Dedicated Outdoor Air System Components:

(Dedicated Outdoor Air System not used: no inputs)

3. Zone Components:

Space Assignments:

Zone 1: WSHP-1	
1002 TEAM RM	x1
1004 RETENTION	x1
Zone 2: WSHP-2	
1006 LEARNING CENTER	x1
Zone 3: WSHP-3	
V1001 VESTIBULE	x1
C1001 CORRIDOR	x1
C1002 LOBBY	x1
1005 BREAK RM	x1
Zone 4: WSHP-4	
1001 FAMILY SUPPORT	x1
1003 PRIVATE OFFICE	x1
Zone 5: WSHP-5	
1014 SHARE OFFICE	x1
1015 PRIVATE OFFICE	x1
1016 PRIVATE OFFICE	x1
Zone 6: WSHP-6	
1011 SHARED OFFICE	x1
1012 PRIVATE OFFICE	x1
1013 PRIVATE OFFICE	x1
Zone 7: WSHP-7	
1008 UNIT COMMONS	x1
1009 ADMIN SUPPORT	x1
1021 OFFICE	x1
1010 PRIVATE OFFICE	x1
Zone 8: WSHP-8	
1017A CLASSROOM	x1
Zone 9: WSHP-9	
1017B CLASSROOM	x1
Zone 10: WSHP-10	
1018A CLASSROOM	x1
Zone 11: WSHP-11	
1018B CLASSROOM	x1
Zone 12: WSHP-12	
1019 ASSEMBLY	x1
1020 CHAIR STORAGE	x1
Zone 13: WSHP-13	
1022 STORAGE (KITCHEN)	x1
1023 KITCHEN	x1
1024 SCULLERY	x1
Zone 14: WSHP-14	
1025 SECURE STORAGE	x1
Zone 15: WSHP-15	
1027 PRIVATE OFFICE	x1
1028 PRIVATE OFFICE	x1
Zone 16: WSHP-16	
1007 TEAM RM/ SIPRNET	x1

Zone 17: WSHP-17	
1033 PRIVATE OFFICE	x1
1034 STORAGE	x1
Zone 18: WSHP-18	
1029 ARMORER	x1
Zone 19: WSHP-19	
1031 PHYSICAL READINESS	x1
Zone 20: WSHP-20	
1026 LACTATION	x1
C1003 CORRIDOR_1	x1
C1003 CORRIDOR_2	x1
Zone 21: WSHP-21	
1032 UNIT STORAGE	x1
Zone 22: WSHP-22	
1035 STAGING	x1
Zone 23: WSHP-23	
1036 UNIT STORAGE	x1
Zone 24: WSHP-24	
1037 UNIT STORAGE	x1

Thermostats and Zone Data:

Zone	Cooling T-Stat Occ. (°F)	Cooling T-Stat Unocc. (°F)	Heating T-Stat Occ. (°F)	Heating T-Stat Unocc. (°F)	T-Stat Throttling Range (°F)
1	78.0	80.0	68.0	55.0	1.50
2	78.0	80.0	68.0	55.0	1.50
3	78.0	80.0	68.0	55.0	1.50
4	78.0	80.0	68.0	55.0	1.50
5	78.0	80.0	68.0	55.0	1.50
6	78.0	80.0	68.0	55.0	1.50
7	78.0	80.0	68.0	55.0	1.50
8	78.0	80.0	68.0	55.0	1.50
9	78.0	80.0	68.0	55.0	1.50
10	78.0	80.0	68.0	55.0	1.50
11	78.0	80.0	68.0	55.0	1.50
12	78.0	80.0	68.0	55.0	1.50
13	78.0	80.0	68.0	55.0	1.50
14	78.0	80.0	68.0	55.0	1.50
15	78.0	80.0	68.0	55.0	1.50
16	78.0	80.0	68.0	55.0	1.50
17	78.0	80.0	68.0	55.0	1.50
18	78.0	80.0	68.0	55.0	1.50
19	78.0	80.0	68.0	55.0	1.50
20	78.0	80.0	68.0	55.0	1.50
21	78.0	80.0	68.0	55.0	1.50
22	78.0	80.0	68.0	55.0	1.50
23	78.0	80.0	68.0	55.0	1.50
24	78.0	80.0	68.0	55.0	1.50

Thermostat Schedule ..... **Thermostat Schedule**
Unoccupied Cooling is ..... **Available**

Common Terminal Unit Data:

Cooling Coil:

Design Supply Temp. ..... **55.0** °F
Coil Bypass Factor **0.100**

Cooling Source ..... **Water-Cooled DX**
Schedule ..... **JFMAMJJASOND**

Heating Coil:
Design Supply Temp. ..... **95.0** °F
Heating Source ..... **Water Source Heat Pump**
Schedule ..... **JFMAMJJASOND**

Fan Control ..... **Fan On**
Ventilation Sizing Method ..... **Sum of Space OA Airflows**

Terminal Units Data:

Zone	Terminal Type	Air Distribution	Air Distribution Effectiveness Specification	Air Distribution Effectiveness	Minimum Airflow	Fan Performance	Fan Efficiency	Design Supply Temp.
1	Fan coil	Ceiling supply / ceiling return	Not Used	-	0.00 CFM/person	1.00 in wg	70 %	-
2	Fan coil	Ceiling supply / ceiling return	Not Used	-	0.00 CFM/person	0.90 in wg	70 %	-
3	Fan coil	Ceiling supply / ceiling return	Not Used	-	0.00 CFM/person	0.90 in wg	70 %	-
4	Fan coil	Ceiling supply / ceiling return	Not Used	-	0.00 CFM/person	0.90 in wg	70 %	-
5	Fan coil	Ceiling supply / ceiling return	Not Used	-	0.00 CFM/person	1.00 in wg	70 %	-
6	Fan coil	Ceiling supply / ceiling return	Not Used	-	0.00 CFM/person	1.00 in wg	70 %	-
7	Fan coil	Ceiling supply / ceiling return	Not Used	-	0.00 CFM/person	0.75 in wg	70 %	-
8	Fan coil	Ceiling supply / ceiling return	Not Used	-	0.00 CFM/person	0.90 in wg	70 %	-
9	Fan coil	Ceiling supply / ceiling return	Not Used	-	0.00 CFM/person	1.00 in wg	70 %	-
10	Fan coil	Ceiling supply / ceiling return	Not Used	-	0.00 CFM/person	1.00 in wg	70 %	-
11	Fan coil	Ceiling supply / ceiling return	Not Used	-	0.00 CFM/person	1.00 in wg	70 %	-
12	Fan coil	Ceiling supply / ceiling return	Not Used	-	0.00 CFM/person	1.00 in wg	70 %	-
13	Fan coil	Ceiling supply / ceiling return	Not Used	-	0.00 CFM/person	1.00 in wg	70 %	-
14	Fan coil	Ceiling supply / ceiling return	Not Used	-	0.00 CFM/person	1.00 in wg	70 %	-
15	Fan coil	Ceiling supply / ceiling return	Not Used	-	0.00 CFM/person	1.00 in wg	70 %	-
16	Fan coil	Ceiling supply / ceiling return	Not Used	-	0.00 CFM/person	1.00 in wg	70 %	-
17	Fan coil	Ceiling supply / ceiling return	Not Used	-	0.00 CFM/person	1.00 in wg	70 %	-
18	Fan coil	Ceiling supply / ceiling return	Not Used	-	0.00 CFM/person	1.00 in wg	70 %	-
19	Fan coil	Ceiling supply / ceiling return	Not Used	-	0.00 CFM/person	1.00 in wg	70 %	-
20	Fan coil	Ceiling supply / ceiling return	Not Used	-	0.00 CFM/person	1.00 in wg	70 %	-
21	Fan coil	Ceiling supply / ceiling return	Not Used	-	0.00 CFM/person	1.00 in wg	70 %	-
22	Fan coil	Ceiling supply / ceiling return	Not Used	-	0.00 CFM/person	1.00 in wg	70 %	-
23	Fan coil	Ceiling supply / ceiling return	Not Used	-	0.00 CFM/person	1.00 in wg	70 %	-
24	Fan coil	Ceiling supply / ceiling return	Not Used	-	0.00 CFM/person	1.00 in wg	70 %	-

4. Sizing Data (Computer-Generated):

System Sizing Data:

Sizing Data:
Cooling Supply Temperature ..... **55.0** °F
Heating Supply Temperature ..... **95.0** °F

Hydronic Sizing Specifications:

Chilled Water Delta-T ..... **10.0** °F
Hot Water Delta-T ..... **10.0** °F

Safety Factors:

Cooling Sensible ..... **10** %
Cooling Latent ..... **10** %
Heating ..... **25** %

Zone Sizing Data:

Zone Airflow Sizing Method ..... **Sum of space airflow rates**
Space Airflow Sizing Method ..... **Individual peak space loads**

Zone	Supply Airflow (CFM)	Zone Htg Unit (MBH)	Reheat Coil (MBH)	Ventilation (CFM)
1	755.8	-	-	0.0
2	459.7	-	-	0.0
3	682.6	-	-	0.0
4	182.5	-	-	0.0
5	689.0	-	-	0.0
6	748.3	-	-	0.0
7	1437.3	-	-	0.0
8	563.5	-	-	0.0
9	563.5	-	-	0.0
10	563.5	-	-	0.0
11	563.5	-	-	0.0
12	1835.2	-	-	0.0
13	1695.0	-	-	0.0
14	109.3	-	-	0.0
15	174.4	-	-	0.0
16	367.3	-	-	0.0
17	230.4	-	-	0.0
18	160.2	-	-	0.0
19	1172.6	-	-	0.0
20	390.3	-	-	0.0
21	594.4	-	-	0.0
22	1497.6	-	-	0.0
23	2912.8	-	-	0.0
24	1354.8	-	-	0.0

5. Equipment Data

Terminal Cooling Units - WSHP

Zone	Estimated Maximum Load (MBH)	Design EWT (°F)	Equipment Sizing	Gross Cooling Capacity (MBH)	Capacity Oversizing Factor (%)	Compressor Power (kW)	ISO / ARI Performance Rating	Units
1	18.4	85.0	Auto-Sized	-	0	-	17.900	EER
2	11.5	85.0	Auto-Sized	-	0	-	15.500	EER
3	18.1	85.0	Auto-Sized	-	0	-	16.500	EER
4	5.3	85.0	Auto-Sized	-	0	-	14.000	EER
5	17.7	85.0	Auto-Sized	-	0	-	17.900	EER
6	18.3	85.0	Auto-Sized	-	0	-	17.900	EER
7	37.7	85.0	Auto-Sized	-	0	-	17.200	EER
8	14.2	85.0	Auto-Sized	-	0	-	16.500	EER
9	14.2	85.0	Auto-Sized	-	0	-	16.500	EER
10	14.2	85.0	Auto-Sized	-	0	-	16.500	EER
11	14.2	85.0	Auto-Sized	-	0	-	16.500	EER
12	50.4	85.0	Auto-Sized	-	0	-	15.000	EER
13	44.4	85.0	Auto-Sized	-	0	-	15.700	EER
14	2.9	85.0	Auto-Sized	-	0	-	14.000	EER
15	5.1	85.0	Auto-Sized	-	0	-	14.000	EER
16	9.9	85.0	Auto-Sized	-	0	-	15.500	EER
17	5.4	85.0	Auto-Sized	-	0	-	14.000	EER
18	4.4	85.0	Auto-Sized	-	0	-	14.000	EER
19	28.3	85.0	Auto-Sized	-	0	-	17.200	EER
20	12.1	85.0	Auto-Sized	-	0	-	15.500	EER
21	16.1	85.0	Auto-Sized	-	0	-	17.300	EER
22	15.9	85.0	Auto-Sized	-	0	-	17.300	EER
23	28.8	85.0	Auto-Sized	-	0	-	17.300	EER
24	15.7	85.0	Auto-Sized	-	0	-	17.300	EER

Terminal Heating Units - WSHP

Zone	Estimated Maximum Load (MBH)	Design EWT (°F)	Equipment Sizing	Gross Heating Capacity (MBH)	Capacity Oversizing Factor (%)	Compressor Power (kW)	ISO / ARI Performance Rating	Units
1	7.1	62.0	Auto-Sized	-	0	-	6.100	COP
2	2.4	62.0	Auto-Sized	-	0	-	5.300	COP
3	4.4	62.0	Auto-Sized	-	0	-	5.900	COP
4	1.5	62.0	Auto-Sized	-	0	-	4.800	COP
5	3.2	62.0	Auto-Sized	-	0	-	6.100	COP
6	4.7	62.0	Auto-Sized	-	0	-	6.100	COP
7	5.3	62.0	Auto-Sized	-	0	-	5.200	COP
8	2.7	62.0	Auto-Sized	-	0	-	5.900	COP
9	2.6	62.0	Auto-Sized	-	0	-	5.900	COP
10	2.6	62.0	Auto-Sized	-	0	-	5.900	COP
11	2.6	62.0	Auto-Sized	-	0	-	5.900	COP
12	9.4	62.0	Auto-Sized	-	0	-	5.000	COP
13	3.2	62.0	Auto-Sized	-	0	-	5.100	COP
14	2.3	62.0	Auto-Sized	-	0	-	4.800	COP
15	0.6	62.0	Auto-Sized	-	0	-	4.800	COP
16	0.4	62.0	Auto-Sized	-	0	-	5.300	COP
17	4.0	62.0	Auto-Sized	-	0	-	4.800	COP
18	0.2	62.0	Auto-Sized	-	0	-	4.800	COP
19	7.1	62.0	Auto-Sized	-	0	-	5.200	COP
20	4.5	62.0	Auto-Sized	-	0	-	5.300	COP
21	12.6	62.0	Auto-Sized	-	0	-	5.300	COP
22	41.8	62.0	Auto-Sized	-	0	-	6.000	COP
23	80.4	62.0	Auto-Sized	-	0	-	5.000	COP
24	37.8	62.0	Auto-Sized	-	0	-	5.900	COP

Misc. Components - WSHP

Cooling Tower ..... **Proposed Cooling Tower**
Auxiliary Boiler ..... **Proposed Boilers**

Closed Loop:

Circulation Pump Performance ..... **19.0** W/gpm
Circulation Pump Mechanical Efficiency ..... **76.0** %
Circulation Pump Motor Electrical Efficiency ..... **94.0** %
Maximum Setpoint ..... **85.0** °F
Minimum Setpoint ..... **62.0** °F

WATER SOURCE HEAT PUMP (WSHP) CALCULATIONS OUTPUT USING CARRIER HOURLY ANALYSIS PROGRAM HAP 5.11

Table of Contents:

1. System Outputs

Zone Sizing Summary for WSHPS

Project Name: 505100403 ORANGEBURG_ DESIGN MODEL_WSHP 05/20/2021
Prepared by: Mott MacDonald 10:21PM

Air System Information

Air System Name ..... **WSHPS**
Equipment Class ..... **TERM**
Air System Type ..... **WSHP**

Number of zones **24**
Floor Area ..... **21965.0** ft²
Location ..... **Orangeburg, New York**

Sizing Calculation Information

Calculation Months ..... **Jan to Dec**
Sizing Data ..... **Calculated**

Zone CFM Sizing ..... **Sum of space airflow rates**
Space CFM Sizing ..... **Individual peak space loads**

Terminal Unit Sizing Data - Cooling

Zone Name	Total Coil Load (MBH)	Sens Coil Load (MBH)	Coil Entering DB / WB (°F)	Coil Leaving DB / WB (°F)	Water Flow @ 10.0 °F (gpm)	Time of Peak Coil Load	Zone CFM/ft²
WSHP-1	17.7	16.5	79.9 / 64.4	56.7 / 55.2	-	Jul 1700	0.87
WSHP-2	11.4	10.9	79.9 / 64.1	56.6 / 55.1	-	Jul 1500	1.40
WSHP-3	16.9	15.5	79.8 / 64.5	56.8 / 55.4	-	Jul 1600	0.66
WSHP-4	5.2	4.7	79.8 / 64.1	55.7 / 54.2	-	Jul 1600	0.59
WSHP-5	18.1	16.9	79.8 / 64.0	55.9 / 54.5	-	Jul 1700	0.87
WSHP-6	18.4	17.1	79.7 / 63.9	55.9 / 54.4	-	Aug 1600	0.86
WSHP-7	38.5	36.0	79.5 / 63.6	55.4 / 53.9	-	Jul 1600	0.92
WSHP-8	14.2	13.5	80.0 / 64.3	56.8 / 55.3	-	Jul 1700	1.23
WSHP-9	14.2	13.6	80.1 / 64.3	56.8 / 55.3	-	Jul 1700	1.23
WSHP-10	14.2	13.6	80.1 / 64.3	56.8 / 55.3	-	Jul 1700	1.23
WSHP-11	14.2	13.6	80.1 / 64.3	56.8 / 55.3	-	Jul 1700	1.23
WSHP-12	50.8	46.2	79.9 / 64.1	55.6 / 54.2	-	Jul 1600	0.62
WSHP-13	44.5	43.4	79.6 / 63.4	55.9 / 54.4	-	Aug 1400	2.80
WSHP-14	2.8	2.2	79.9 / 65.7	56.1 / 54.8	-	Jul 1500	0.18
WSHP-15	5.0	4.6	79.9 / 64.1	55.6 / 54.2	-	Jul 1500	0.59
WSHP-16	9.9	9.5	79.7 / 63.7	55.9 / 54.4	-	Jul 1700	1.32
WSHP-17	5.3	4.8	79.7 / 64.9	57.5 / 56.1	-	Aug 1700	0.60
WSHP-18	4.4	4.1	79.7 / 63.9	56.0 / 54.5	-	Jul 1400	0.98
WSHP-19	28.9	26.6	79.9 / 64.7	57.1 / 55.6	-	Jul 1800	0.67
WSHP-20	10.5	8.6	80.0 / 65.2	55.9 / 54.5	-	Jul 1500	0.24
WSHP-21	16.4	13.2	79.9 / 65.6	56.4 / 55.1	-	Aug 1600	0.21
WSHP-22	15.8	15.8	79.0 / 70.0	69.2 / 67.0	-	Jul 1600	1.07
WSHP-23	28.7	28.7	78.8 / 69.4	69.7 / 66.6	-	Aug 1600	1.79
WSHP-24	15.7	15.7	79.0 / 70.0	68.3 / 66.7	-	Jul 1500	1.02

Terminal Unit Sizing Data - Heating, Fan, Ventilation

Zone Name	Heating Coil Load (MBH)	Heating Coil Ent/Lvg DB (°F)	Htg Coil Water Flow @10.0 °F (gpm)	Fan Design Airflow (CFM)	Fan Motor (BHP)	Fan Motor (kW)	OA Vent Design Airflow (CFM)
WSHP-1	7.1	67.9 / 77.8	-	659	0.139	0.110	0
WSHP-2	2.6	68.4 / 73.9	-	433	0.082	0.065	0
WSHP-3	4.7	68.1 / 75.1	-	627	0.119	0.095	0
WSHP-4	1.5	68.2 / 75.6	-	183	0.035	0.028	0
WSHP-5	2.9	68.2 / 72.3	-	655	0.138	0.110	0
WSHP-6	4.6	68.3 / 74.8	-	667	0.141	0.112	0
WSHP-7	4.8	68.1 / 71.3	-	1381	0.219	0.174	0
WSHP-8	2.6	68.5 / 73.0	-	539	0.102	0.081	0
WSHP-9	2.6	68.5 / 73.0	-	539	0.114	0.090	0
WSHP-10	2.6	68.5 / 73.0	-	539	0.114	0.090	0
WSHP-11	2.6	68.5 / 73.0	-	539	0.114	0.090	0
WSHP-12	9.5	68.2 / 73.2	-	1769	0.374	0.296	0
WSHP-13	3.2	68.7 / 70.4	-	1695	0.358	0.284	0

Zone Name	Heating Coil Load (MBH)	Heating Coil Ent/Lvg DB (°F)	Htg Coil Water Flow @10.0 °F (gpm)	Fan Design Airflow (CFM)	Fan Motor (BHP)	Fan Motor (kW)	OA Vent Design Airflow (CFM)
WSHP-14	2.2	67.2 / 91.0	-	88	0.018	0.015	0
WSHP-15	0.6	68.5 / 71.9	-	174	0.037	0.029	0
WSHP-16	0.4	68.7 / 69.8	-	367	0.078	0.062	0
WSHP-17	4.1	67.5 / 86.3	-	202	0.043	0.034	0
WSHP-18	0.2	68.2 / 69.4	-	160	0.034	0.027	0
WSHP-19	6.8	68.1 / 73.9	-	1079	0.228	0.181	0
WSHP-20	4.4	67.9 / 80.3	-	331	0.070	0.055	0
WSHP-21	12.3	67.3 / 89.0	-	523	0.110	0.088	0
WSHP-22	41.8	67.0 / 92.8	-	1498	0.316	0.251	0
WSHP-23	80.4	66.9 / 92.5	-	2913	0.615	0.488	0
WSHP-24	37.8	67.0 / 92.8	-	1355	0.286	0.227	0

Zone Peak Sensible Loads

Zone Name	Zone Cooling Sensible (MBH)	Time of Peak Sensible Cooling Load	Zone Heating Load (MBH)	Zone Floor Area (ft²)
WSHP-1	16.3	Jul 1700	7.7	754.0
WSHP-2	10.7	Jul 1700	2.7	308.0
WSHP-3	14.8	Jul 1600	5.1	954.0
WSHP-4	4.5	Jul 1600	1.5	311.0
WSHP-5	16.2	Jul 1700	3.5	751.0
WSHP-6	16.4	Jul 1700	5.0	777.0
WSHP-7	34.3	Jul 1600	5.8	1497.0
WSHP-8	13.4	Jul 1700	2.9	439.5
WSHP-9	13.4	Jul 1700	2.9	439.5
WSHP-10	13.4	Jul 1700	2.9	439.5
WSHP-11	13.4	Jul 1700	2.9	439.5
WSHP-12	43.8	Jul 1600	10.4	2840.0
WSHP-13	41.9	Aug 1400	4.0	605.0
WSHP-14	2.2	Jul 1500	2.4	491.0
WSHP-15	4.3	Jul 1600	0.6	295.0
WSHP-16	9.1	Jul 1700	0.6	279.0
WSHP-17	4.8	Sep 1600	4.4	334.0
WSHP-18	4.0	Jul 1600	0.4	163.0
WSHP-19	26.8	Jul 1800	7.8	1602.0
WSHP-20	8.2	Jul 1500	4.6	1365.0
WSHP-21	13.0	Aug 1600	13.2	2526.0
WSHP-22	14.6	Jul 1600	43.6	1394.0
WSHP-23	26.1	Aug 1600	84.8	1629.0
WSHP-24	14.4	Jul 1600	39.5	1332.0

Space Loads and Airflows

Zone Name / Space Name	Mult.	Cooling Sensible (MBH)	Time of Peak Sensible Load	Air Flow (CFM)	Heating Load (MBH)	Floor Area (ft²)	Space CFM/ft²
WSHP-1							
1002 TEAM RM	1	12.5	Jul 1700	506	5.7	476.0	1.06
1004 RETENTION	1	3.8	Jul 1600	153	2.0	278.0	0.55
WSHP-2							
1006 LEARNING CENTER	1	10.7	Jul 1700	433	2.7	308.0	1.40
WSHP-3							
V1001 VESTIBULE	1	0.5	Jul 1900	44	1.3	56.0	0.78
C1001 CORRIDOR	1	1.7	Jul 1500	69	1.0	448.0	0.15
C1002 LOBBY	1	1.6	Jul 1600	63	0.4	165.0	0.38
1005 BREAK RM	1	11.2	Jul 1700	451	2.4	285.0	1.58
WSHP-4							
1001 FAMILY SUPPORT	1	2.7	Jul 1600	110	1.3	199.0	0.55
1003 PRIVATE OFFICE	1	1.8	Jul 1600	73	0.2	112.0	0.65
WSHP-5							
1014 SHARE OFFICE	1	10.0	Jul 1600	403	1.1	481.0	0.84
1015 PRIVATE OFFICE	1	2.9	Jul 1700	117	1.2	151.0	0.77
1016 PRIVATE OFFICE	1	3.3	Jul 1700	135	1.3	119.0	1.13
WSHP-6							
1011 SHARED OFFICE	1	11.0	Sep 1500	444	2.6	493.0	0.90
1012 PRIVATE OFFICE	1	2.7	Jul 1700	110	1.3	130.0	0.85
1013 PRIVATE OFFICE	1	2.8	Jul 1700	114	1.1	154.0	0.74
WSHP-7							
1008 UNIT COMMONS	1	25.5	Jul 1600	1030	4.1	1029.0	1.00
1009 ADMIN SUPPORT	1	4.5	Jul 1700	179	0.4	177.0	1.01
1021 OFFICE	1	1.5	Jul 1600	61	0.2	81.0	0.76
1010 PRIVATE OFFICE	1	2.7	Jul 1600	111	1.2	210.0	0.53
WSHP-8							
1017A CLASSROOM	1	13.4	Jul 1700	539	2.9	439.5	1.23
WSHP-9							
1017B CLASSROOM	1	13.4	Jul 1700	539	2.9	439.5	1.23
WSHP-10							
1018A CLASSROOM	1	13.4	Jul 1700	539	2.9	439.5	1.23
WSHP-11							
1018B CLASSROOM	1	13.4	Jul 1700	539	2.9	439.5	1.23
WSHP-12							
1019 ASSEMBLY	1	42.7	Jul 1700	1722	9.8	2561.0	0.67
1020 CHAIR STORAGE	1	1.2	Jul 1500	47	0.6	279.0	0.17
WSHP-13							
1022 STORAGE (KITCHEN)	1	9.1	Jul 1400	368	0.3	137.0	2.68
1023 KITCHEN	1	9.4	Jul 1400	378	0.6	284.0	1.33
1024 SCULLERY	1	23.6	Sep 1400	950	3.1	184.0	5.16
WSHP-14							
1025 SECURE STORAGE	1	2.2	Jul 1500	88	2.4	491.0	0.18
WSHP-15							
1027 PRIVATE OFFICE	1	2.1	Jul 1600	86	0.3	144.0	0.60
1028 PRIVATE OFFICE	1	2.2	Jul 1600	88	0.3	151.0	0.59
WSHP-16							
1007 TEAM RM/ SIPRNET	1	9.1	Jul 1700	367	0.6	279.0	1.32
WSHP-17							
1033 PRIVATE OFFICE	1	3.0	Sep 1700	119	2.0	127.0	0.94
1034 STORAGE	1	1.8	Sep 1600	82	2.4	207.0	0.40
WSHP-18							
1029 ARMORER	1	4.0	Jul 1600	160	0.4	163.0	0.98
WSHP-19							
1031 PHYSICAL READINESS	1	26.8	Jul 1800	1079	7.8	1602.0	0.67

Zone Sizing Summary for WSHPS

Project Name: 505100403 ORANGEBURG_ DESIGN MODEL_WSHP 05/20/2021
Prepared by: Mott MacDonald 10:21PM

Zone Name / Space Name	Mult.	Cooling Sensible (MBH)	Time of Peak Sensible Load	Air Flow (CFM)	Heating Load (MBH)	Floor Area (ft²)	Space CFM/ft²
WSHP-20							
1026 LACTATION	1	2.5	Jul 1600	102	0.3	143.0	0.71
C1003 CORRIDOR_1	1	4.0	Jul 1500	161	2.5	855.0	0.19
C1003 CORRIDOR_2	1	1.7	Jul 1500	68	1.7	367.0	0.19
WSHP-21							
1032 UNIT STORAGE	1	13.0	Aug 1600	523	13.2	2526.0	0.21
WSHP-22							
1035 STAGING	1	14.6	Jul 1600	1498	43.6	1394.0	1.07
WSHP-23							
1036 UNIT STORAGE	1	26.1	Aug 1600	2913	84.8	1629.0	1.79
WSHP-24							
1037 UNIT STORAGE	1	14.4	Jul 1600	1355	39.5	1332.0	1.02

9074277

VENTILATION INPUT & OUTPUT CALCULATIONS

Table of Contents:

1. Ventilation Calculations Inputs

2. Ventilation Sizing Summary Outputs

100% Outdoor air

DOAS-1

☐ Show simple view

System name and number	DOAS-1
Condition analyzed (impacts Ez)	Heating

Zone Name and Number	Occupancy Category	Zone Floor Area *Az* (sq ft)	Are you using default value for zone population?	Zone Population *Pz* (people)	People Outdoor Air Rate *Rp* (cfm per person)	Area Outdoor Air Rate *Ra* (cfm per sq ft)	Breathing Zone Outdoor Airflow (people related portion) (cfm)	Breathing Zone Outdoor Airflow (area related portion) (cfm)	Breathing Zone Outdoor Airflow *Vbz* (cfm)	Zone Air Distribution Effectiveness *Ez*	Zone Outdoor Airflow *Voz* (cfm)	Zone Outdoor Airflow Provided *(measured or design)* (cfm)
1001 FAMILY SUPPORT	Office space	199	No	1.00	5.00	0.06	5.00	11.94	16.94	0.80	21.17	35
1002 TEAM RM	Conference / meeting	476	No	8.00	5.00	0.06	40.00	28.56	68.56	0.80	85.70	90
1003 PRIVATE OFFICE	Office space	112	No	1.00	5.00	0.06	5.00	6.72	11.72	0.80	14.65	30
1004 RETENTION	Office space	278	No	1.00	5.00	0.06	5.00	16.68	21.68	0.80	27.10	30
1005 BREAK RM	Breakrooms (office buildings)	285	No	6.00	5.00	0.12	30.00	34.20	64.20	0.80	80.25	85
1006 LEARNING CENTER	Classrooms (age 9 plus)	308	No	9.00	10.00	0.12	90.00	36.96	126.96	0.80	158.70	160
1007 TEAM RM/ SIPRNET	Office space	279	No	6.00	5.00	0.06	30.00	16.74	46.74	0.80	58.42	60
1008 UNIT COMMONS	Office space	1,029	No	13.00	5.00	0.06	65.00	61.74	126.74	0.80	158.42	160
1009 ADMIN SUPPORT	Office space	177	No	4.00	5.00	0.06	20.00	10.62	30.62	0.80	38.27	40
1010 PRIVATE OFFICE	Office space	210	No	1.00	5.00	0.06	5.00	12.60	17.60	0.80	22.00	30
1011 SHARED OFFICE	Office space	493	No	4.00	5.00	0.06	20.00	29.58	49.58	0.80	61.97	80
1012 PRIVATE OFFICE	Office space	130	No	1.00	5.00	0.06	5.00	7.80	12.80	0.80	16.00	25
1013 PRIVATE OFFICE	Office space	154	No	1.00	5.00	0.06	5.00	9.24	14.24	0.80	17.80	20
1014 SHARE OFFICE	Office space	481	No	4.00	5.00	0.06	20.00	28.86	48.86	0.80	61.07	75
1015 PRIVATE OFFICE	Office space	151	No	1.00	5.00	0.06	5.00	9.06	14.06	0.80	17.57	25
1016 PRIVATE OFFICE	Office space	119	No	1.00	5.00	0.06	5.00	7.14	12.14	0.80	15.17	25
1021 OFFICE	Office space	81	No	1.00	5.00	0.06	5.00	4.86	9.86	0.80	12.32	30
C1001 CORRIDOR	Corridors	448	No	0.00	0.00	0.06	0.00	26.88	26.88	0.80	33.60	40
C1002 LOBBY	Lobbies	165	No	4.00	5.00	0.06	20.00	9.90	29.90	0.80	37.37	40
G 1001 EF	Occupiable storage rooms for dry materials	50	No	0.00	5.00	0.06	0.00	3.00	3.00	0.80	3.75	20
					0.00	0.00	0.00	0.00	0.00		0.00	
					0.00	0.00	0.00	0.00	0.00		0.00	
					0.00	0.00	0.00	0.00	0.00		0.00	
					0.00	0.00	0.00	0.00	0.00		0.00	
					0.00	0.00	0.00	0.00	0.00		0.00	

System area (sq ft)	*As*	(sq ft)	5,625.00	∑Az
System population	*Ps*	(people)	67.00	∑Pz
Outdoor air intake flow (required by 62.1)	*Vot*	(cfm)	941	∑Voz

Outdoor air intake flow provided (measured or design)	(cfm)	1,100

100% Outdoor air

DOAS-2

☐ Show simple view

System name and number	DOAS-2
Condition analyzed (impacts Ez)	Heating

Zone Name and Number	Occupancy Category	Zone Floor Area *Az* (sq ft)	Are you using default value for zone population?	Zone Population *Pz* (people)	People Outdoor Air Rate *Rp* (cfm per person)	Area Outdoor Air Rate *Ra* (cfm per sq ft)	Breathing Zone Outdoor Airflow (people related portion) (cfm)	Breathing Zone Outdoor Airflow (area related portion) (cfm)	Breathing Zone Outdoor Airflow *Vbz* (cfm)	Zone Air Distribution Effectiveness *Ez*	Zone Outdoor Airflow *Voz* (cfm)	Zone Outdoor Airflow Provided *(measured or design)* (cfm)
1017 CLASSROOM	Classrooms (age 9 plus)	439	No	18.00	10.00	0.12	180.00	52.68	232.68	0.80	291	295
1017 CLASSROOM	Classrooms (age 9 plus)	439	No	18.00	10.00	0.12	180.00	52.68	232.68	0.80	291	295
1018 CLASSROOM	Classrooms (age 9 plus)	439	No	18.00	10.00	0.12	180.00	52.68	232.68	0.80	291	295
1018 CLASSROOM	Classrooms (age 9 plus)	439	No	18.00	10.00	0.12	180.00	52.68	232.68	0.80	291	295
1019 ASSEMBLY	Multi-purpose assembly	2,561	No	166.00	5.00	0.06	830.00	153.66	983.66	0.80	1,230	1,480
1020 CHAIR STORAGE	Occupiable storage rooms for dry materials	279	No	0.00	5.00	0.06	0.00	16.74	16.74	0.80	21	30
1022 STORAGE (KITCHEN)	Occupiable storage rooms for dry materials	137	No	0.00	5.00	0.06	0.00	8.22	8.22	0.80	10	20
1023 KITCHEN	Kitchen (cooking)	284	No	4.00	7.50	0.12	30.00	34.08	64.08	0.80	80	90
1024 SCULLERY	Kitchen (cooking)	184	No	2.00	7.50	0.12	15.00	22.08	37.08	0.80	46	50
G1002 TER	Occupiable storage rooms for dry materials	88	No	0.00	5.00	0.06	0.00	5.28	5.28	0.80	6.60	30
					0.00	0.00	0.00	0.00	0.00		0.00	
					0.00	0.00	0.00	0.00	0.00		0.00	
					0.00	0.00	0.00	0.00	0.00		0.00	

System area (sq ft)	*As*	(sq ft)	5,289.00	∑Az
System population	*Ps*	(people)	244.00	∑Pz
Outdoor air intake flow (required by 62.1)	*Vot*	(cfm)	2,557	∑Voz

Outdoor air intake flow provided (measured or design)	(cfm)	2,880

100% Outdoor air

DOAS-3

☐ Show simple view

System name and number	DOAS-3
Condition analyzed (impacts Ez)	Heating

Zone Name and Number	Occupancy Category	Zone Floor Area *Az* (sq ft)	Are you using default value for zone population?	Zone Population *Pz* (people)	People Outdoor Air Rate *Rp* (cfm per person)	Area Outdoor Air Rate *Ra* (cfm per sq ft)	Breathing Zone Outdoor Airflow (people related portion) (cfm)	Breathing Zone Outdoor Airflow (area related portion) (cfm)	Breathing Zone Outdoor Airflow *Vbz* (cfm)	Zone Air Distribution Effectiveness *Ez*	Zone Outdoor Airflow *Voz* (cfm)	Zone Outdoor Airflow Provided *(measured or design)* (cfm)
					0.00	0.00	0.00	0.00	0.00		0.00	
1025 SECURE STORAGE	Occupiable storage rooms for dry materials	491	No	0.00	5.00	0.06	0.00	29.46	29.46	0.80	36.82	90
1026 LACTATION	Office space	143	No	1.00	5.00	0.06	5.00	8.58	13.58	0.80	16.97	20
1026A STORAGE	Occupiable storage rooms for dry materials	33	No	0.00	5.00	0.06	0.00	1.98	1.98	0.80	2.47	20
1027 PRIVATE OFFICE	Office space	144	No	1.00	5.00	0.06	5.00	8.64	13.64	0.80	17.05	20
1028 PRIVATE OFFICE	Office space	151	No	1.00	5.00	0.06	5.00	9.06	14.06	0.80	17.57	20
1029 ARMORER	Office space	163	No	2.00	5.00	0.06	10.00	9.78	19.78	0.80	24.72	30
1030 ARNS VAULT	Occupiable storage rooms for dry materials	910	No	0.00	5.00	0.06	0.00	54.60	54.60	0.80	68.25	465
1033 PRIVATE OFFICE	Office space	127	No	1.00	5.00	0.06	5.00	7.62	12.62	0.80	15.77	30
1034 STORAGE	Occupiable storage rooms for dry materials	207	No	0.00	5.00	0.06	0.00	12.42	12.42	0.80	15.52	20
C1003 CORRIDOR	Corridors	1,222	No	0.00	0.00	0.06	0.00	73.32	73.32	0.80	91.65	155
G 1006 TR	Occupiable storage rooms for dry materials	54	No	0.00	5.00	0.06	0.00	3.24	3.24	0.80	4.05	30
					0.00	0.00	0.00	0.00	0.00		0.00	
					0.00	0.00	0.00	0.00	0.00		0.00	
					0.00	0.00	0.00	0.00	0.00		0.00	
					0.00	0.00	0.00	0.00	0.00		0.00	
					0.00	0.00	0.00	0.00	0.00		0.00	
					0.00	0.00	0.00	0.00	0.00		0.00	
					0.00	0.00	0.00	0.00	0.00		0.00	
					0.00	0.00	0.00	0.00	0.00		0.00	

System area (sq ft)	*As*	(sq ft)	3,645.00	∑Az
System population	*Ps*	(people)	6.00	∑Pz
Outdoor air intake flow (required by 62.1)	*Vot*	(cfm)	310	∑Voz

Outdoor air intake flow provided (measured or design)	(cfm)	900

100% Outdoor air

DOAS-4

☐ Show simple view

System name and number	DOAS-4
Condition analyzed (impacts Ez)	Heating

Zone Name and Number	Occupancy Category	Zone Floor Area *Az* (sq ft)	Are you using default value for zone population?	Zone Population *Pz* (people)	People Outdoor Air Rate *Rp* (cfm per person)	Area Outdoor Air Rate *Ra* (cfm per sq ft)	Breathing Zone Outdoor Airflow (people related portion) (cfm)	Breathing Zone Outdoor Airflow (area related portion) (cfm)	Breathing Zone Outdoor Airflow *Vbz* (cfm)	Zone Air Distribution Effectiveness *Ez*	Zone Outdoor Airflow *Voz* (cfm)	Zone Outdoor Airflow Provided *(measured or design)* (cfm)
					0.00	0.00	0.00	0.00	0.00		0.00	
G1009 ELECTRICAL	Occupiable storage rooms for dry materials	913	No	0.00	5.00	0.06	0.00	54.78	54.78	0.80	68.47	100
G1010 MECHANICAL	Occupiable storage rooms for dry materials	206	No	0.00	5.00	0.06	0.00	12.36	12.36	0.80	15.45	260

System area (sq ft)	*As*	(sq ft)	1,119.00	∑Az
System population	*Ps*	(people)	0.00	∑Pz
Outdoor air intake flow (required by 62.1)	*Vot*	(cfm)	83	∑Voz
Outdoor air intake flow provided (measured or design)		(cfm)	360	

100% Outdoor air

DOAS-5

☐ Show simple view

System name and number	DOAS-5
Condition analyzed (impacts Ez)	Heating

Zone Name and Number	Occupancy Category	Zone Floor Area *Az* (sq ft)	Are you using default value for zone population?	Zone Population *Pz* (people)	People Outdoor Air Rate *Rp* (cfm per person)	Area Outdoor Air Rate *Ra* (cfm per sq ft)	Breathing Zone Outdoor Airflow (people related portion) (cfm)	Breathing Zone Outdoor Airflow (area related portion) (cfm)	Breathing Zone Outdoor Airflow *Vbz* (cfm)	Zone Air Distribution Effectiveness *Ez*	Zone Outdoor Airflow *Voz* (cfm)	Zone Outdoor Airflow Provided *(measured or design)* (cfm)
1032 UNIT STORAGE	Occupiable storage rooms for dry materials	2,526	No	0.00	5.00	0.06	0.00	151.56	151.56	0.80	189.45	550
1035 STAGING	Occupiable storage rooms for dry materials	1,394	No	0.00	5.00	0.06	0.00	83.64	83.64	0.80	104.55	400
1036 UNIT STORAGE	Occupiable storage rooms for dry materials	1,629	No	0.00	5.00	0.06	0.00	97.74	97.74	0.80	122.17	470
1037 UNIT STORAGE	Occupiable storage rooms for dry materials	1,332	No	0.00	5.00	0.06	0.00	79.92	79.92	0.80	99.90	380

System area (sq ft)	*As*	(sq ft)	6,881.00	∑Az
System population	*Ps*	(people)	0.00	∑Pz
Outdoor air intake flow (required by 62.1)	*Vot*	(cfm)	516	∑Voz
Outdoor air intake flow provided (measured or design)		(cfm)	1,800	

100% Outdoor air

DOAS-6

☐ Show simple view

System name and number	DOAS-6
Condition analyzed (impacts Ez)	Heating

Zone Name and Number	Occupancy Category	Zone Floor Area *Az* (sq ft)	Are you using default value for zone population?	Zone Population *Pz* (people)	People Outdoor Air Rate *Rp* (cfm per person)	Area Outdoor Air Rate *Ra* (cfm per sq ft)	Breathing Zone Outdoor Airflow (people related portion) (cfm)	Breathing Zone Outdoor Airflow (area related portion) (cfm)	Breathing Zone Outdoor Airflow *Vbz* (cfm)	Zone Air Distribution Effectiveness *Ez*	Zone Outdoor Airflow *Voz* (cfm)	Zone Outdoor Airflow Provided *(measured or design)* (cfm)
					0.00	0.00	0.00	0.00	0.00		0.00	
1031 PHYSICAL READINESS	Health club / weight	1,602	No	30.00	20.00	0.06	600.00	96.12	696.12	0.80	870.15	875
Restrooms & locker/shower rooms					0.00	0.00	0.00	0.00	0.00		0.00	1,370

System area (sq ft)	*As*	(sq ft)	1,602.00	∑Az
System population	*Ps*	(people)	30.00	∑Pz
Outdoor air intake flow (required by 62.1)	*Vot*	(cfm)	870	∑Voz
Outdoor air intake flow provided (measured or design)		(cfm)	2,245	

Ventilation Sizing Summary for DOAS-1

Project Name: 505100403 ORANGEBURG_DESIGN MODEL_DOAS 05/21/2021
Prepared by: Mott MacDonald 11:42AM

1. Summary

Ventilation Sizing Method ..... **Sum of Space OA Airflows**
Design Ventilation Airflow Rate ..... **1100** CFM

2. Space Ventilation Analysis

2.1 Zone: DOAS-1

Zone Name / Space Name	Mult.	Floor Area (ft²)	Maximum Occupants	Maximum Supply Air (CFM)	Required Outdoor Air (CFM/person)	Required Outdoor Air (CFM/ft²)	Required Outdoor Air (CFM)	Required Outdoor Air (% of supply)	Uncorrected Outdoor Air (CFM)
DOAS-1									
1002 TEAM RM	1	476.0	8.0	90.0	0.00	0.00	90.0	0.0	90.0
1004 RETENTION	1	278.0	1.0	30.0	0.00	0.00	30.0	0.0	30.0
1006 LEARNING CENTER	1	308.0	9.0	160.0	0.00	0.00	160.0	0.0	160.0
C1001 CORRIDOR	1	448.0	0.0	40.0	0.00	0.00	40.0	0.0	40.0
C1002 LOBBY	1	165.0	4.0	40.0	0.00	0.00	40.0	0.0	40.0
1005 BREAK RM	1	285.0	6.0	85.0	0.00	0.00	85.0	0.0	85.0
1001 FAMILY SUPPORT	1	199.0	1.0	35.0	0.00	0.00	35.0	0.0	35.0
1003 PRIVATE OFFICE	1	112.0	1.0	30.0	0.00	0.00	30.0	0.0	30.0
1011 SHARED OFFICE	1	493.0	4.0	80.0	0.00	0.00	80.0	0.0	80.0
1012 PRIVATE OFFICE	1	130.0	1.0	25.0	0.00	0.00	25.0	0.0	25.0
1013 PRIVATE OFFICE	1	154.0	1.0	20.0	0.00	0.00	20.0	0.0	20.0
1014 SHARE OFFICE	1	481.0	4.0	75.0	0.00	0.00	75.0	0.0	75.0
1015 PRIVATE OFFICE	1	151.0	1.0	25.0	0.00	0.00	25.0	0.0	25.0
1016 PRIVATE OFFICE	1	119.0	1.0	25.0	0.00	0.00	25.0	0.0	25.0
1008 UNIT COMMONS	1	1029.0	13.0	160.0	0.00	0.00	160.0	0.0	160.0
1009 ADMIN SUPPORT	1	177.0	4.0	40.0	0.00	0.00	40.0	0.0	40.0
1021 OFFICE	1	81.0	1.0	30.0	0.00	0.00	30.0	0.0	30.0
1007 TEAM RM/ SIPRNET	1	279.0	6.0	60.0	0.00	0.00	60.0	0.0	60.0
1010 PRIVATE OFFICE	1	210.0	1.0	30.0	0.00	0.00	30.0	0.0	30.0
G1001 EF	1	50.0	0.0	20.0	0.00	0.00	20.0	0.0	20.0
Totals (incl. Space Multipliers)				**1100.0**					**1100.0**

Ventilation Sizing Summary for DOAS-2

Project Name: 505100403 ORANGEBURG_DESIGN MODEL_DOAS 05/21/2021
Prepared by: Mott MacDonald 11:42AM

1. Summary

Ventilation Sizing Method ..... **Sum of Space OA Airflows**
Design Ventilation Airflow Rate ..... **2880** CFM

2. Space Ventilation Analysis

2.1 Zone: DOAS-2

Zone Name / Space Name	Mult.	Floor Area (ft²)	Maximum Occupants	Maximum Supply Air (CFM)	Required Outdoor Air (CFM/person)	Required Outdoor Air (CFM/ft²)	Required Outdoor Air (CFM)	Required Outdoor Air (% of supply)	Uncorrected Outdoor Air (CFM)
DOAS-2									
1017A CLASSROOM	1	439.5	18.0	295.0	0.00	0.00	295.0	0.0	295.0
1017B CLASSROOM	1	439.5	18.0	295.0	0.00	0.00	295.0	0.0	295.0
1018A CLASSROOM	1	439.5	18.0	295.0	0.00	0.00	295.0	0.0	295.0
1018B CLASSROOM	1	439.5	18.0	295.0	0.00	0.00	295.0	0.0	295.0
1019 ASSEMBLY	1	2561.0	166.0	1480.0	0.00	0.00	1480.0	0.0	1480.0
1020 CHAIR STORAGE	1	279.0	0.0	30.0	0.00	0.00	30.0	0.0	30.0
1022 STORAGE (KITCHEN)	1	137.0	0.0	20.0	0.00	0.00	20.0	0.0	20.0
1023 KITCHEN	1	284.0	4.0	90.0	0.00	0.00	90.0	0.0	90.0
1024 SCULLERY	1	184.0	0.0	50.0	0.00	0.00	50.0	0.0	50.0
G1002 TER (TELECOM.)	1	88.0	0.0	30.0	0.00	0.00	30.0	0.0	30.0
Totals (incl. Space Multipliers)				**2880.0**					**2880.0**

Ventilation Sizing Summary for DOAS-3

Project Name: 505100403 ORANGEBURG_DESIGN MODEL_DOAS 05/21/2021
Prepared by: Mott MacDonald 11:42AM

1. Summary

Ventilation Sizing Method ..... **Sum of Space OA Airflows**
Design Ventilation Airflow Rate ..... **900** CFM

2. Space Ventilation Analysis

2.1 Zone: DOAS -3

Zone Name / Space Name	Mult.	Floor Area (ft²)	Maximum Occupants	Maximum Supply Air (CFM)	Required Outdoor Air (CFM/person)	Required Outdoor Air (CFM/ft²)	Required Outdoor Air (CFM)	Required Outdoor Air (% of supply)	Uncorrected Outdoor Air (CFM)
DOAS -3									
1025 SECURE STORAGE	1	491.0	0.0	90.0	0.00	0.00	90.0	0.0	90.0
1027 PRIVATE OFFICE	1	144.0	1.0	20.0	0.00	0.00	20.0	0.0	20.0
1028 PRIVATE OFFICE	1	151.0	1.0	20.0	0.00	0.00	20.0	0.0	20.0
C1003 CORRIDOR_1	1	855.0	0.0	85.0	0.00	0.00	85.0	0.0	85.0
1026 LACTATION	1	143.0	1.0	20.0	0.00	0.00	20.0	0.0	20.0
1033 PRIVATE OFFICE	1	127.0	1.0	30.0	0.00	0.00	30.0	0.0	30.0
1034 STORAGE	1	207.0	0.0	20.0	0.00	0.00	20.0	0.0	20.0
1029 ARMORER	1	163.0	2.0	30.0	0.00	0.00	30.0	0.0	30.0
C1003 CORRIDOR_2	1	367.0	0.0	70.0	0.00	0.00	70.0	0.0	70.0
1030 ARNS VAULT	1	910.0	0.0	465.0	0.00	0.00	465.0	0.0	465.0
1026A STORAGE	1	33.0	0.0	20.0	0.00	0.00	20.0	0.0	20.0
G1006 TR (TELECM RM)	1	54.0	0.0	30.0	0.00	0.00	30.0	0.0	30.0
Totals (incl. Space Multipliers)				**900.0**					**900.0**

Ventilation Sizing Summary for DOAS-4

Project Name: 505100403 ORANGEBURG_DESIGN MODEL_DOAS 05/21/2021
Prepared by: Mott MacDonald 11:42AM

1. Summary

Ventilation Sizing Method ..... **Sum of Space OA Airflows**
Design Ventilation Airflow Rate ..... **360** CFM

2. Space Ventilation Analysis

2.1 Zone: DOAS- 4

Zone Name / Space Name	Mult.	Floor Area (ft²)	Maximum Occupants	Maximum Supply Air (CFM)	Required Outdoor Air (CFM/person)	Required Outdoor Air (CFM/ft²)	Required Outdoor Air (CFM)	Required Outdoor Air (% of supply)	Uncorrected Outdoor Air (CFM)
DOAS- 4									
G1010 MECHANICAL	1	913.0	0.0	260.0	0.00	0.00	260.0	0.0	260.0
G1009 ELECTRICAL	1	206.0	0.0	100.0	0.00	0.00	100.0	0.0	100.0
Totals (incl. Space Multipliers)				**360.0**					**360.0**

Ventilation Sizing Summary for DOAS-5

Project Name: 505100403 ORANGEBURG_DESIGN MODEL_DOAS 05/21/2021
Prepared by: Mott MacDonald 11:42AM

1. Summary

Ventilation Sizing Method ..... **Sum of Space OA Airflows**
Design Ventilation Airflow Rate ..... **1800** CFM

2. Space Ventilation Analysis

2.1 Zone: DOAS - 5

Zone Name / Space Name	Mult.	Floor Area (ft²)	Maximum Occupants	Maximum Supply Air (CFM)	Required Outdoor Air (CFM/person)	Required Outdoor Air (CFM/ft²)	Required Outdoor Air (CFM)	Required Outdoor Air (% of supply)	Uncorrected Outdoor Air (CFM)
DOAS - 5									
1032 UNIT STORAGE	1	2526.0	0.0	550.0	0.00	0.00	550.0	0.0	550.0
1035 STAGING	1	1394.0	0.0	400.0	0.00	0.00	400.0	0.0	400.0
1036 UNIT STORAGE	1	1629.0	0.0	470.0	0.00	0.00	470.0	0.0	470.0
1037 UNIT STORAGE	1	1332.0	0.0	380.0	0.00	0.00	380.0	0.0	380.0
Totals (incl. Space Multipliers)				**1800.0**					**1800.0**

Ventilation Sizing Summary for DOAS-6

Project Name: 505100403 ORANGEBURG_DESIGN MODEL_DOAS 05/21/2021
Prepared by: Mott MacDonald 11:42AM

1. Summary

Ventilation Sizing Method ..... **Sum of Space OA Airflows**
Design Ventilation Airflow Rate ..... **2355** CFM

2. Space Ventilation Analysis

2.1 Zone: DOAS - 6

Zone Name / Space Name	Mult.	Floor Area (ft²)	Maximum Occupants	Maximum Supply Air (CFM)	Required Outdoor Air (CFM/person)	Required Outdoor Air (CFM/ft²)	Required Outdoor Air (CFM)	Required Outdoor Air (% of supply)	Uncorrected Outdoor Air (CFM)
DOAS - 6									
G1007 MEN SHOWER LOCK	1	702.0	0.0	550.0	0.00	0.00	550.0	0.0	550.0
G1008 WOMEN SHOWER LOC	1	388.0	0.0	345.0	0.00	0.00	345.0	0.0	345.0
G1003 MEN TOILET	1	280.0	0.0	450.0	0.00	0.00	450.0	0.0	450.0
G1004 JANITOR	1	21.0	0.0	2.6	0.00	0.00	0.0	0.0	0.0
G1005 WOMEN TOILET	1	191.0	0.0	135.0	0.00	0.00	135.0	0.0	135.0
1031 PHYSICAL READINESS	1	1602.0	30.0	875.0	0.00	0.00	875.0	0.0	875.0
Totals (incl. Space Multipliers)				**2357.6**					**2355.0**

CRAC/CRACC & HPU/HPCU UNITS CALCULATIONS INPUT USING CARRIER HOURLY ANALYSIS PROGRAM HAP 5.11

Table of Contents:

1. Space Input
2. Air System Input

G1001 EF

1. General Details:

Floor Area ..... **50.0** ft²
Avg. Ceiling Height ..... **9.0** ft
Building Weight ..... **70.0** lb/ft²

1.1. OA Ventilation Requirements:

Space Usage ..... **User-Defined**
OA Requirement 1 ..... **0.0** CFM/person
OA Requirement 2 ..... **0.00** CFM/ft²
Space Usage Defaults ..... **ASHRAE Std 62.1-2010**

2. Internals:

2.1. Overhead Lighting:

Fixture Type ..... **Recessed (Unvented)**
Wattage ..... **0.43** W/ft²
Ballast Multiplier **1.15**
Schedule ..... **Office Ligthing Schedule**

2.2. Task Lighting:

Wattage ..... **0.00** W/ft²
Schedule ..... **None**

2.3. Electrical Equipment:

Wattage ..... **50.00** W/ft²
Schedule ..... **TR_ Equipment Schedule**

2.4. People:

Occupancy ..... **0.0** Person
Activity Level ..... **Office Work**
Sensible ..... **245.0** BTU/hr/person
Latent ..... **205.0** BTU/hr/person
Schedule ..... **None**

2.5. Miscellaneous Loads:

Sensible ..... **0** BTU/hr
Schedule ..... **None**
Latent ..... **0** BTU/hr
Schedule ..... **None**

3. Walls, Windows, Doors:

Exp.	Wall Gross Area (ft²)	Window 1 Qty.	Window 2 Qty.	Door 1 Qty.
W	6.0	0	0	0
W	32.0	0	0	0
W	67.0	19	0	0
N	78.0	0	0	1

3.1. Construction Types for Exposure W

Wall Type ..... **Steel frame Wall New**

3.2. Construction Types for Exposure W

Wall Type ..... **Concrete Wall Existing**

3.3. Construction Types for Exposure W

Wall Type ..... **Steel frame Wall Existing**
1st Window Type ..... **Window Assembly**

3.4. Construction Types for Exposure N

Wall Type ..... **Steel frame Wall New**
Door Type ..... **Sample Door Assembly**

4. Roofs, Skylights:

Exp.	Roof Gross Area (ft²)	Roof Slope (deg.)	Skylight Qty.
H	50.0	0	0

4.1. Construction Types for Exposure H

Roof Type ..... **Roof**

5. Infiltration:

Design Cooling ..... **0.25** CFM/ft²
Design Heating ..... **0.25** CFM/ft²
Energy Analysis ..... **0.25** CFM/ft²
Infiltration occurs only when the fan is off.

6. Floors:

Type	**Slab Floor On Grade**	
Floor Area	**50.0**	ft^2
Total Floor U-Value	**0.176**	BTU/(hr·ft^2·°F)
Exposed Perimeter	**16.0**	ft
Edge Insulation R-Value	**10.00**	(hr·ft^2·°F)/BTU

7. Partitions:

(No partition data).

G1002 TER (TELECOM.)

1. General Details:

Floor Area	**88.0**	ft²
Avg. Ceiling Height	**13.0**	ft
Building Weight	**70.0**	lb/ft²

1.1. OA Ventilation Requirements:

Space Usage	**User-Defined**	
OA Requirement 1	**0.00**	CFM/ft²
OA Requirement 2	**0.00**	CFM/ft²
Space Usage Defaults	**ASHRAE Std 62.1-2010**	

2. Internals:

2.1. Overhead Lighting:

Fixture Type	**Recessed (Unvented)**	
Wattage	**0.43**	W/ft²
Ballast Multiplier	**1.15**	
Schedule	**Office Ligthing Schedule**	

2.2. Task Lighting:

Wattage	**0.00**	W/ft²
Schedule	**None**	

2.3. Electrical Equipment:

Wattage	**44.00**	W/ft²
Schedule	**TR_ Equipment Schedule**	

2.4. People:

Occupancy	**0.0**	Person
Activity Level	**Office Work**	
Sensible	**245.0**	BTU/hr/person
Latent	**205.0**	BTU/hr/person
Schedule	**None**	

2.5. Miscellaneous Loads:

Sensible	**0**	BTU/hr
Schedule	**None**	
Latent	**0**	BTU/hr
Schedule	**None**	

3. Walls, Windows, Doors:

(No Wall, Window, Door data).

4. Roofs, Skylights:

Exp.	Roof Gross Area (ft²)	Roof Slope (deg.)	Skylight Qty.
H	88.0	0	0

4.1. Construction Types for Exposure H

Roof Type	**Roof**

5. Infiltration:

Design Cooling	**0.00**	CFM
Design Heating	**0.00**	CFM
Energy Analysis	**0.00**	CFM

Infiltration occurs only when the fan is off.

6. Floors:

Type	**Slab Floor On Grade**	
Floor Area	**88.0**	ft²
Total Floor U-Value	**0.176**	BTU/(hr·ft²·°F)
Exposed Perimeter	**0.0**	ft
Edge Insulation R-Value	**0.00**	(hr·ft²·°F)/BTU

7. Partitions:

(No partition data).

G1006 TR (TELECM RM)

1. General Details:

Floor Area	**54.0**	ft²
Avg. Ceiling Height	**13.0**	ft
Building Weight	**70.0**	lb/ft²

1.1. OA Ventilation Requirements:

Space Usage	**User-Defined**	
OA Requirement 1	**0.00**	CFM/ft²
OA Requirement 2	**0.00**	CFM/ft²
Space Usage Defaults	**ASHRAE Std 62.1-2010**	

2. Internals:

2.1. Overhead Lighting:

Fixture Type	**Recessed (Unvented)**	
Wattage	**0.43**	W/ft²
Ballast Multiplier	**1.15**	
Schedule	**Office Ligthing Schedule**	

2.2. Task Lighting:

Wattage	**0.00**	W/ft²
Schedule	**None**	

2.3. Electrical Equipment:

Wattage	**65.00**	W/ft²
Schedule	**TR_ Equipment Schedule**	

2.4. People:

Occupancy	**0.0**	Person
Activity Level	**Office Work**	
Sensible	**245.0**	BTU/hr/person
Latent	**205.0**	BTU/hr/person
Schedule	**None**	

2.5. Miscellaneous Loads:

Sensible	**0**	BTU/hr
Schedule	**None**	
Latent	**0**	BTU/hr
Schedule	**None**	

3. Walls, Windows, Doors:

(No Wall, Window, Door data).

4. Roofs, Skylights:

Exp.	Roof Gross Area (ft²)	Roof Slope (deg.)	Skylight Qty.
H	54.0	0	0

4.1. Construction Types for Exposure H

Roof Type	**Roof**

5. Infiltration:

Design Cooling	**0.00**	CFM
Design Heating	**0.00**	CFM
Energy Analysis	**0.00**	CFM

Infiltration occurs only when the fan is off.

6. Floors:

Type	**Slab Floor On Grade**	
Floor Area	**54.0**	ft²
Total Floor U-Value	**0.176**	BTU/(hr·ft²·°F)
Exposed Perimeter	**0.0**	ft
Edge Insulation R-Value	**0.00**	(hr·ft²·°F)/BTU

7. Partitions:

(No partition data).

CRAC-1 Input Data

Project Name: 505100403 ORANGEBURG_ DESIGN MODEL_WSHP 04/18/2021
Prepared by: Mott MacDonald 09:48PM

1. General Details:

Air System Name **CRAC-1**
Equipment Type ..... **Split AHU**
Air System Type ..... **Single Zone CAV**
Number of zones **1**

2. Ventilation System Components:

Ventilation Air Data:

Airflow Control ..... **Constant Ventilation Airflow**
Ventilation Sizing Method ..... **Sum of Space OA Airflows**
Unocc. Damper Position ..... **Closed**
Damper Leak Rate ..... **0** %
Outdoor Air CO2 Level ..... **400** ppm

Humidification Data:

Minimum RH Setpoint ..... **40** %
Humidifier Type ..... **Self-Contained Steam - Electric**
Input Power ..... **0.330** kWh/lb

Dehumidification Data:

Maximum RH Setpoint ..... **50** %

Central Cooling Data:

Supply Air Temperature ..... **58.0** °F
Coil Bypass Factor **0.100**
Cooling Source ..... **Air-Cooled DX**
Schedule ..... **JFMAMJJASOND**
Capacity Control ..... **Cycled or Staged Capacity - Fan On**

Central Heating Data:

Supply Temperature ..... **95.0** °F
Heating Source ..... **Electric Resistance**
Schedule ..... **JFMAMJJASOND**
Capacity Control ..... **Cycled or Staged Capacity - Fan On**

Supply Fan Data:

Fan Type ..... **Forward Curved**
Configuration ..... **Draw-thru**
Fan Performance ..... **0.12** kW
Fan Control ..... **1-speed fan, cooling and heating**

Duct System Data:

Supply Duct Data:

Duct Heat Gain ..... **0** %
Duct Leakage ..... **0** %

Return Duct or Plenum Data:

Return Air Via ..... **Ducted Return**

3. Zone Components:

Space Assignments:

Zone 1: Zone 1	
G1002 TER (TELECOM.)	x1

Thermostats and Zone Data:

Zone	Cooling T-Stat Occ. (°F)	Cooling T-Stat Unocc. (°F)	Heating T-Stat Occ. (°F)	Heating T-Stat Unocc. (°F)	T-Stat Throttling Range (°F)	Diversity Factor (%)	Direct Exhaust Airflow (CFM)	Direct Exhaust Fan (kW)
1	75.0	80.0	70.0	65.0	1.50	100	0.0	0.0

Thermostat Schedule ..... **Thermostat Schedule**
Unoccupied Cooling is ..... **Available**

Supply Terminals Data:

Zone	Terminal Type	Air Distribution	Air Distribution Effectiveness Specification	Air Distribution Effectiveness	Minimum Airflow	Fan Performance	Fan Efficiency	Design Supply Temp.
1	Diffuser (no reheat)	Ceiling supply / ceiling return	Not Used	-	0.00 CFM/person	-	-	-

Zone Heating Units:

Zone Unit Heat Source ..... **Electric Resistance**
Zone Heating Unit Schedule ..... **JFMAMJJASOND**

4. Sizing Data (Computer-Generated):

System Sizing Data:

Sizing Data:

Cooling Supply Temperature ..... **58.0** °F
Supply Fan Airflow ..... **812.2** CFM
Ventilation Airflow ..... **0.0** CFM
Heating Supply Temperature ..... **95.0** °F

Hydronic Sizing Specifications:

Chilled Water Delta-T ..... **10.0** °F
Hot Water Delta-T ..... **20.0** °F

Safety Factors:

Cooling Sensible ..... **10** %
Cooling Latent ..... **10** %
Heating ..... **10** %

Zone Sizing Data:

Zone Airflow Sizing Method ..... **Sum of space airflow rates**
Space Airflow Sizing Method ..... **Individual peak space loads**

Zone	Supply Airflow (CFM)	Zone Htg Unit (MBH)	Reheat Coil (MBH)	- (CFM)
1	812.2	-	-	

5. Equipment Data

Central Cooling Unit - Air-Cooled DX

Estimated Maximum Load ..... **15.8** MBH
Design OAT ..... **95.0** °F
Equipment Sizing ..... **Auto-Sized**
Capacity Oversizing Factor ..... **0** %
Compressor & OD Fan Power ..... **1.930** kW
DX System Configuration ..... **1-stage compression, 1 circuit**
Conventional Cutoff OAT ..... **55.0** °F
Low Temperature Operation ..... **Used**
Low Temperature Cutoff OAT ..... **0.0** °F

CRAC-2 Input Data

Project Name: 505100403 ORANGEBURG_ DESIGN MODEL_WSHP 04/18/2021
Prepared by: Mott MacDonald 09:48PM

1. General Details:

Air System Name **CRAC-2**
Equipment Type ..... **Split AHU**
Air System Type ..... **Single Zone CAV**
Number of zones **1**

2. Ventilation System Components:

Ventilation Air Data:

Airflow Control ..... **Constant Ventilation Airflow**
Ventilation Sizing Method ..... **Sum of Space OA Airflows**
Unocc. Damper Position ..... **Closed**
Damper Leak Rate ..... **0** %
Outdoor Air CO2 Level ..... **400** ppm

Humidification Data:

Minimum RH Setpoint ..... **40** %
Humidifier Type ..... **Self-Contained Steam - Electric**
Input Power ..... **0.330** kWh/lb

Dehumidification Data:

Maximum RH Setpoint ..... **50** %

Central Cooling Data:

Supply Air Temperature ..... **58.0** °F
Coil Bypass Factor **0.100**
Cooling Source ..... **Air-Cooled DX**
Schedule ..... **JFMAMJJASOND**
Capacity Control ..... **Cycled or Staged Capacity - Fan On**

Central Heating Data:

Supply Temperature ..... **95.0** °F
Heating Source ..... **Electric Resistance**
Schedule ..... **JFMAMJJASOND**
Capacity Control ..... **Cycled or Staged Capacity - Fan On**

Supply Fan Data:

Fan Type ..... **Forward Curved**
Configuration ..... **Draw-thru**
Fan Performance ..... **0.12** kW
Fan Control ..... **1-speed fan, cooling and heating**

Duct System Data:

Supply Duct Data:

Duct Heat Gain ..... **0** %
Duct Leakage ..... **0** %

Return Duct or Plenum Data:

Return Air Via ..... **Ducted Return**

3. Zone Components:

Space Assignments:

Zone 1: Zone 1	
G1006 TR (TELECM RM)	x1

Thermostats and Zone Data:

Zone	Cooling T-Stat Occ. (°F)	Cooling T-Stat Unocc. (°F)	Heating T-Stat Occ. (°F)	Heating T-Stat Unocc. (°F)	T-Stat Throttling Range (°F)	Diversity Factor (%)	Direct Exhaust Airflow (CFM)	Direct Exhaust Fan (kW)
1	75.0	80.0	70.0	65.0	1.50	100	0.0	0.0

Thermostat Schedule ..... **Thermostat Schedule**
Unoccupied Cooling is ..... **Available**

Supply Terminals Data:

Zone	Terminal Type	Air Distribution	Air Distribution Effectiveness Specification	Air Distribution Effectiveness	Minimum Airflow	Fan Performance	Fan Efficiency	Design Supply Temp.

1	Diffuser (no reheat)	Ceiling supply / ceiling return	Not Used	-	0.00 CFM/person	-	-	-

Zone Heating Units:

Zone Unit Heat Source ..... **Electric Resistance**
Zone Heating Unit Schedule ..... **JFMAMJJASOND**

4. Sizing Data (Computer-Generated):

System Sizing Data:

Sizing Data:

Cooling Supply Temperature ..... **58.0** °F
Supply Fan Airflow ..... **730.4** CFM
Ventilation Airflow ..... **0.0** CFM
Heating Supply Temperature ..... **95.0** °F

Hydronic Sizing Specifications:

Chilled Water Delta-T ..... **10.0** °F
Hot Water Delta-T ..... **20.0** °F

Safety Factors:

Cooling Sensible ..... **10** %
Cooling Latent ..... **10** %
Heating ..... **10** %

Zone Sizing Data:

Zone Airflow Sizing Method ..... **Sum of space airflow rates**
Space Airflow Sizing Method ..... **Individual peak space loads**

Zone	Supply Airflow (CFM)	Zone Htg Unit (MBH)	Reheat Coil (MBH)	- (CFM)
1	730.4	-	-	

5. Equipment Data

Central Cooling Unit - Air-Cooled DX

Estimated Maximum Load ..... **14.1** MBH
Design OAT ..... **95.0** °F
Equipment Sizing ..... **Auto-Sized**
Capacity Oversizing Factor ..... **0** %
Compressor & OD Fan Power ..... **1.930** kW
DX System Configuration ..... **1-stage compression, 1 circuit**
Conventional Cutoff OAT ..... **55.0** °F
Low Temperature Operation ..... **Used**
Low Temperature Cutoff OAT ..... **0.0** °F

HP-1 Input Data

Project Name: 505100403 ORANGEBURG_ DESIGN MODEL_WSHP 04/18/2021
Prepared by: Mott MacDonald 09:48PM

1. General Details:

Air System Name **HP-1**
Equipment Type ..... **Terminal Units**
Air System Type ..... **Split DX Fan Coil**
Number of zones **1**
Ventilation ..... **Direct Ventilation**

2. Dedicated Outdoor Air System Components:

(Dedicated Outdoor Air System not used: no inputs)

3. Zone Components:

Space Assignments:

Zone 1: Zone 1	
G1001 EF	x1

Thermostats and Zone Data:

Zone	Cooling T-Stat Occ. (°F)	Cooling T-Stat Unocc. (°F)	Heating T-Stat Occ. (°F)	Heating T-Stat Unocc. (°F)	T-Stat Throttling Range (°F)
1	75.0	80.0	70.0	65.0	1.50

Thermostat Schedule ..... **Thermostat Schedule**
Unoccupied Cooling is ..... **Available**

Common Terminal Unit Data:

Cooling Coil:

Design Supply Temp. ..... **58.0** °F
Coil Bypass Factor **0.100**
Cooling Source ..... **Air-Cooled DX**
Schedule ..... **JFMAMJJASOND**

Heating Coil:

Design Supply Temp. ..... **95.0** °F
Heating Source ..... **Air Source Heat Pump**
Schedule ..... **JFMAMJJASOND**

Fan Control ..... **Fan On**
Ventilation Sizing Method ..... **Sum of Space OA Airflows**

Terminal Units Data:

Zone	Terminal Type	Air Distribution	Air Distribution Effectiveness Specification	Air Distribution Effectiveness	Minimum Airflow	Fan Performance	Fan Efficiency	Design Supply Temp.
1	Fan coil	Ceiling supply / ceiling return	Not Used	-	0.00 CFM/person	0.030 kW	-	-

4. Sizing Data (Computer-Generated):

System Sizing Data:

Sizing Data:

Cooling Supply Temperature ..... **58.0** °F
Heating Supply Temperature ..... **95.0** °F

Hydronic Sizing Specifications:

Chilled Water Delta-T ..... **10.0** °F
Hot Water Delta-T ..... **20.0** °F

Safety Factors:

Cooling Sensible ..... **10** %
Cooling Latent ..... **10** %
Heating ..... **10** %

Zone Sizing Data:

Zone Airflow Sizing Method ..... **Sum of space airflow rates**
Space Airflow Sizing Method ..... **Individual peak space loads**

Zone	Supply Airflow (CFM)	Zone Htg Unit (MBH)	Reheat Coil (MBH)	Ventilation (CFM)
1	566.1	-	-	0.0

5. Equipment Data

Terminal Cooling Units - Air-Cooled DX

Zone	Estimated Maximum Load (MBH)	Design OAT (°F)	Equipment Sizing	Gross Cooling Capacity (MBH)	Capacity Oversizing Factor (%)	Compressor + OD Fan Power (kW)	ARI Performance Rating	Units	Conventional Cutoff OAT (°F)
1	10.6	95.0	Auto-Sized	-	0	-	12.500	EER	0.0

Terminal Heating Units - ASHP

Zone	Estimated Maximum Load (MBH)	Design OAT (°F)	Equipment Sizing	Gross Heating Capacity (MBH)	Capacity Oversizing Factor (%)	Compressor + OD Fan Power (kW)	ARI Performance Rating	Units	Cutoff OAT (°F)
1	0.5	47.0	Auto-Sized	-	0	-	3.700	COP	-15.0

Auxiliary Heating Type ..... **Electric Resistance**
Auxiliary Heating Upper Cutoff ..... **40.0** °F

CRAC/CRACC & HPU/HPCU UNITS CALCULATIONS OUTPUT USING CARRIER HOURLY ANALYSIS PROGRAM HAP 5.11

Table of Contents:

1. CRAC-1 Output
2. CRAC-2 Output
3. HP-1 Output

Air System Sizing Summary for CRAC-1

Project Name: 505100403 ORANGEBURG_ DESIGN MODEL_WSHP 04/18/2021
Prepared by: Mott MacDonald 09:53PM

Air System Information

Air System Name	**CRAC-1**		Number of zones	**1**	
Equipment Class	**SPLT AHU**		Floor Area	**88.0**	ft²
Air System Type	**SZCAV**		Location	**Orangeburg, New York**	

Sizing Calculation Information

Calculation Months	**Jan to Dec**		Zone CFM Sizing	**Sum of space airflow rates**
Sizing Data	**Calculated**		Space CFM Sizing	**Individual peak space loads**

Central Cooling Coil Sizing Data

Total coil load	**1.3**	Tons	Load occurs at	**Jun 0700**	
Total coil load	**15.8**	MBH	OA DB / WB	**75.1 / 68.2**	°F
Sensible coil load	**15.8**	MBH	Entering DB / WB	**76.1 / 60.8**	°F
Coil CFM at Jun 0700	**812**	CFM	Leaving DB / WB	**58.2 / 53.9**	°F
Max block CFM	**812**	CFM	Coil ADP	**56.2**	°F
Sum of peak zone CFM	**812**	CFM	Bypass Factor	**0.100**	
Sensible heat ratio	**1.000**		Resulting RH	**41**	%
CFM/Ton	**618.0**		Design supply temp.	**58.0**	°F
ft²/Ton	**67.0**		Zone T-stat Check	**1 of 1**	OK
BTU/(hr·ft²)	**179.2**		Max zone temperature deviation	**0.0**	°F
Water flow @ 10.0 °F rise	**N/A**				

Central Heating Coil Sizing Data

No central heating coil loads occurred during this calculation.

Humidifier Sizing Data

Max steam flow at Des Htg	**0.00**	lb/hr	Air mass flow	**0.00**	lb/hr
Airflow Rate	**0**	CFM	Moisture gain	**.00000**	lb/lb

Supply Fan Sizing Data

Actual max CFM	**812**	CFM	Fan motor BHP	**0.15**	BHP
Standard CFM	**811**	CFM	Fan motor kW	**0.12**	kW
Actual max CFM/ft²	**9.23**	CFM/ft²			

Outdoor Ventilation Air Data

Design airflow CFM	**0**	CFM	CFM/person	**0.00**	CFM/person
CFM/ft²	**0.00**	CFM/ft²			

Zone Sizing Summary for CRAC-1

Project Name: 505100403 ORANGEBURG_ DESIGN MODEL_WSHP 04/18/2021
Prepared by: Mott MacDonald 09:53PM

Air System Information

Air System Name **CRAC-1**
Equipment Class ..... **SPLT AHU**
Air System Type ..... **SZCAV**

Number of zones **1**
Floor Area ..... **88.0** ft²
Location ..... **Orangeburg, New York**

Sizing Calculation Information

Calculation Months ..... **Jan to Dec**
Sizing Data ..... **Calculated**

Zone CFM Sizing ..... **Sum of space airflow rates**
Space CFM Sizing ..... **Individual peak space loads**

Zone Terminal Sizing Data

Zone Name	Design Supply Airflow (CFM)	Minimum Supply Airflow (CFM)	Zone CFM/ft²	Reheat Coil Load (MBH)	Reheat Coil Water gpm @ 20.0 °F	Zone Htg Unit Coil Load (MBH)	Zone Htg Unit Water gpm @ 20.0 °F	Mixing Box Fan Airflow (CFM)
Zone 1	812	812	9.23	0.0	-	0.0	-	0

Zone Peak Sensible Loads

Zone Name	Zone Cooling Sensible (MBH)	Time of Peak Sensible Cooling Load	Zone Heating Load (MBH)	Zone Floor Area (ft²)
Zone 1	14.9	Jul 1500	0.2	88.0

Space Loads and Airflows

Zone Name / Space Name	Mult.	Cooling Sensible (MBH)	Time of Peak Sensible Load	Air Flow (CFM)	Heating Load (MBH)	Floor Area (ft²)	Space CFM/ft²
Zone 1							
G1002 TER (TELECOM.)	1	14.9	Jul 1500	812	0.2	88.0	9.23

Air System Sizing Summary for CRAC-2

Project Name: 505100403 ORANGEBURG_ DESIGN MODEL_WSHP 04/18/2021
Prepared by: Mott MacDonald 09:53PM

Air System Information

Air System Name	**CRAC-2**		Number of zones	**1**	
Equipment Class	**SPLT AHU**		Floor Area	**54.0**	ft²
Air System Type	**SZCAV**		Location	**Orangeburg, New York**	

Sizing Calculation Information

Calculation Months	**Jan to Dec**		Zone CFM Sizing	**Sum of space airflow rates**
Sizing Data	**Calculated**		Space CFM Sizing	**Individual peak space loads**

Central Cooling Coil Sizing Data

Total coil load	**1.2**	Tons	Load occurs at	**Jul 0700**	
Total coil load	**14.1**	MBH	OA DB / WB	**77.7 / 69.9**	°F
Sensible coil load	**14.1**	MBH	Entering DB / WB	**76.1 / 60.9**	°F
Coil CFM at Jul 0700	**730**	CFM	Leaving DB / WB	**58.2 / 54.0**	°F
Max block CFM	**730**	CFM	Coil ADP	**56.2**	°F
Sum of peak zone CFM	**730**	CFM	Bypass Factor	**0.100**	
Sensible heat ratio	**1.000**		Resulting RH	**41**	%
CFM/Ton	**621.7**		Design supply temp.	**58.0**	°F
ft²/Ton	**46.0**		Zone T-stat Check	**1 of 1**	OK
BTU/(hr·ft²)	**261.1**		Max zone temperature deviation	**0.0**	°F
Water flow @ 10.0 °F rise	**N/A**				

Central Heating Coil Sizing Data

No central heating coil loads occurred during this calculation.

Humidifier Sizing Data

Max steam flow at Des Htg	**0.00**	lb/hr	Air mass flow	**0.00**	lb/hr
Airflow Rate	**0**	CFM	Moisture gain	**.00000**	lb/lb

Supply Fan Sizing Data

Actual max CFM	**730**	CFM	Fan motor BHP	**0.15**	BHP
Standard CFM	**730**	CFM	Fan motor kW	**0.12**	kW
Actual max CFM/ft²	**13.53**	CFM/ft²			

Outdoor Ventilation Air Data

Design airflow CFM	**0**	CFM	CFM/person	**0.00**	CFM/person
CFM/ft²	**0.00**	CFM/ft²			

Zone Sizing Summary for CRAC-2

Project Name: 505100403 ORANGEBURG_ DESIGN MODEL_WSHP 04/18/2021
Prepared by: Mott MacDonald 09:53PM

Air System Information

Air System Name **CRAC-2**
Equipment Class ..... **SPLT AHU**
Air System Type ..... **SZCAV**

Number of zones **1**
Floor Area ..... **54.0** ft²
Location ..... **Orangeburg, New York**

Sizing Calculation Information

Calculation Months ..... **Jan to Dec**
Sizing Data ..... **Calculated**

Zone CFM Sizing ..... **Sum of space airflow rates**
Space CFM Sizing ..... **Individual peak space loads**

Zone Terminal Sizing Data

Zone Name	Design Supply Airflow (CFM)	Minimum Supply Airflow (CFM)	Zone CFM/ft²	Reheat Coil Load (MBH)	Reheat Coil Water gpm @ 20.0 °F	Zone Htg Unit Coil Load (MBH)	Zone Htg Unit Water gpm @ 20.0 °F	Mixing Box Fan Airflow (CFM)
Zone 1	730	730	13.53	0.0	-	0.0	-	0

Zone Peak Sensible Loads

Zone Name	Zone Cooling Sensible (MBH)	Time of Peak Sensible Cooling Load	Zone Heating Load (MBH)	Zone Floor Area (ft²)
Zone 1	13.4	Jul 1500	0.1	54.0

Space Loads and Airflows

Zone Name / Space Name	Mult.	Cooling Sensible (MBH)	Time of Peak Sensible Load	Air Flow (CFM)	Heating Load (MBH)	Floor Area (ft²)	Space CFM/ft²
Zone 1							
G1006 TR (TELECM RM)	1	13.4	Jul 1500	730	0.1	54.0	13.53

Zone Sizing Summary for HP-1

Project Name: 505100403 ORANGEBURG_ DESIGN MODEL_WSHP 05/20/2021
Prepared by: Mott MacDonald 09:47PM

Air System Information

Air System Name **HP-1**
Equipment Class ..... **TERM**
Air System Type ..... **SPLT-FC**

Number of zones **1**
Floor Area ..... **50.0** ft²
Location ..... **Orangeburg, New York**

Sizing Calculation Information

Calculation Months ..... **Jan to Dec**
Sizing Data ..... **Calculated**

Zone CFM Sizing ..... **Sum of space airflow rates**
Space CFM Sizing ..... **Individual peak space loads**

Terminal Unit Sizing Data - Cooling

Zone Name	Total Coil Load (MBH)	Sens Coil Load (MBH)	Coil Entering DB / WB (°F)	Coil Leaving DB / WB (°F)	Water Flow @ 10.0 °F (gpm)	Time of Peak Coil Load	Zone CFM/ft²
Zone 1	11.9	10.9	81.2 / 65.5	58.0 / 56.5	-	Jul 1800	12.65

Terminal Unit Sizing Data - Heating, Fan, Ventilation

Zone Name	Heating Coil Load (MBH)	Heating Coil Ent/Lvg DB (°F)	Htg Coil Water Flow @20.0 °F (gpm)	Fan Design Airflow (CFM)	Fan Motor (BHP)	Fan Motor (kW)	OA Vent Design Airflow (CFM)
Zone 1	0.9	70.1 / 71.4	-	633	0.038	0.030	0

Zone Peak Sensible Loads

Zone Name	Zone Cooling Sensible (MBH)	Time of Peak Sensible Cooling Load	Zone Heating Load (MBH)	Zone Floor Area (ft²)
Zone 1	11.6	Jul 1700	1.0	50.0

Space Loads and Airflows

Zone Name / Space Name	Mult.	Cooling Sensible (MBH)	Time of Peak Sensible Load	Air Flow (CFM)	Heating Load (MBH)	Floor Area (ft²)	Space CFM/ft²
Zone 1							
G1001 EF	1	11.6	Jul 1700	633	1.0	50.0	12.65

MUA-1 CALCULATIONS INPUT USING CARRIER HOURLY ANALYSIS PROGRAM HAP 5.11

Table of Contents:

1. Space Input
2. Air System Input

1023 KITCHEN (MUA)

1. General Details:

Floor Area	**284.0**	ft²
Avg. Ceiling Height	**9.0**	ft
Building Weight	**70.0**	lb/ft²

1.1. OA Ventilation Requirements:

Space Usage	**User-Defined**	
OA Requirement 1	**760.0**	CFM
OA Requirement 2	**0.00**	CFM/ft²
Space Usage Defaults	**ASHRAE Std 62.1-2010**	

2. Internals:

2.1. Overhead Lighting:

Fixture Type	**Recessed (Unvented)**	
Wattage	**0.00**	W/ft²
Ballast Multiplier	**1.00**	
Schedule	**None**	

2.2. Task Lighting:

Wattage	**0.00**	W/ft²
Schedule	**None**	

2.3. Electrical Equipment:

Wattage	**0.0**	Watts
Schedule	**None**	

2.4. People:

Occupancy	**0.0**	Person
Activity Level	**Medium Work**	
Sensible	**295.0**	BTU/hr/person
Latent	**455.0**	BTU/hr/person
Schedule	**None**	

2.5. Miscellaneous Loads:

Sensible	**0**	BTU/hr
Schedule	**None**	
Latent	**0**	BTU/hr
Schedule	**None**	

3. Walls, Windows, Doors:

(No Wall, Window, Door data).

4. Roofs, Skylights:

(No Roof or Skylight data).

5. Infiltration:

Design Cooling	**0.00**	ACH
Design Heating	**0.00**	ACH
Energy Analysis	**0.00**	ACH

Infiltration occurs only when the fan is off.

6. Floors:

Type	**Slab Floor On Grade**	
Floor Area	**284.0**	ft²
Total Floor U-Value	**0.176**	BTU/(hr·ft²·°F)
Exposed Perimeter	**0.0**	ft
Edge Insulation R-Value	**0.00**	(hr·ft²·°F)/BTU

7. Partitions:

(No partition data).

MUA-1 Input Data

Project Name: 505100403 ORANGEBURG_ DESIGN MODEL_WSHP 04/18/2021
Prepared by: Mott MacDonald 09:59PM

1. General Details:

Air System Name	**MUA-1**
Equipment Type	**Packaged Rooftop Units**
Air System Type	**Make-up Air / DOAS**
Number of zones	**1**

2. Ventilation System Components:

Ventilation Air Data:

Airflow Control	**Constant Ventilation Airflow**	
Ventilation Sizing Method	**Sum of Space OA Airflows**	
Unocc. Damper Position	**Closed**	
Damper Leak Rate	**0**	%
Outdoor Air CO2 Level	**400**	ppm

Heating Coil Data:

Setpoint	**68.0**	°F
Heating Source	**Combustion - Natural Gas**	
Schedule	**JFMAMJJASOND**	

Ventilation Fan Data:

Fan Type	**Forward Curved with Variable Frequency Drive**	
Configuration	**Draw-thru**	
Fan Performance	**0.75**	kW
Schedule	**Thermostat Schedule**	
Average Zone Temperature	**68.0**	°F

3. Zone Components:

Space Assignments:

Zone 1: Zone 1	
1023 KITCHEN (MUA)	x1

4. Sizing Data (Computer-Generated):

System Sizing Data:

Sizing Data:

Ventilation Fan Airflow	**760.0**	CFM

Hydronic Sizing Specifications:

Chilled Water Delta-T	**10.0**	°F
Hot Water Delta-T	**20.0**	°F

Safety Factors:

Cooling Sensible	**0**	%
Cooling Latent	**0**	%
Heating	**0**	%

Zone Sizing Data:

Zone Data is not available.

5. Equipment Data

DOAS Heating Unit - Combustion

Equipment Sizing	**Auto-Sized**	
Capacity Oversizing Factor	**0**	%
Average Efficiency	**92.0**	%
Misc. Electric	**0.000**	kW

MUA-1 CALCULATIONS OUTPUT USING CARRIER HOURLY ANALYSIS PROGRAM HAP 5.11

Table of Contents:

1. MUA- 1 Output

Air System Sizing Summary for MUA-1

Project Name: 505100403 ORANGEBURG_ DESIGN MODEL_WSHP 04/18/2021
Prepared by: Mott MacDonald 09:59PM

Air System Information

Air System Name	**MUA-1**		Number of zones	**1**	
Equipment Class	**PKG ROOF**		Floor Area	**284.0**	ft²
Air System Type	**MUA/DOAS**		Location	**Orangeburg, New York**	

Sizing Calculation Information

Calculation Months	**Jan to Dec**	Zone CFM Sizing	**Sum of space airflow rates**
Sizing Data	**Calculated**	Space CFM Sizing	**Individual peak space loads**

Preheat Coil Sizing Data

Max coil load	**42.5**	MBH	Load occurs at	**Des Htg**	
Coil CFM at Des Htg	**760**	CFM	Ent. DB / Lvg DB	**13.0 / 64.9**	°F
Max coil CFM	**760**	CFM			
Water flow @ 20.0 °F drop	**N/A**				

Supply Fan Sizing Data

Actual max CFM	**760**	CFM	Fan motor BHP	**0.95**	BHP
Standard CFM	**759**	CFM	Fan motor kW	**0.75**	kW
Actual max CFM/ft²	**2.68**	CFM/ft²			

Outdoor Ventilation Air Data

Design airflow CFM	**760**	CFM	CFM/person	**0.00**	CFM/person
CFM/ft²	**2.68**	CFM/ft²			

CONDENSER WATER PIPING PRESSURE LOSS CALCULATIONS

IN COMPLIANCE WITH THE ARMY RESERVE DESIGN PROCESS AND SUBMITTAL REQUIREDMENTS - PART C, SECTION 7.4.1.3

July 29, 2021

CONDENSER WATER PIPING PRESSURE LOSS CALCULATIONS

4/20/2021

Project Name:
USARC BUILDING RENOVATION
ORANGEBURG, NY

Section	Diameter (in.)	Actual Inside Dia.	Flow (gpm)	Length (ft)	Fitting Count	Fitting Number	Fitting Count	Fitting Number	Fitting Count	Fitting Number	Fitting Count	Fitting Number	Equivalent Feet	Total Feet	Loss per 100 ft.	Miscellaneous Ft. wg.	Total Ft. wg.	Remarks
SUPPLY PIPING FROM PUMP P-1 & P-2																		
1-2	6	6.065	250.0	30	4	4	1	6					55.0	85.0	0.5		0.462	
2-3	4	4.026	134.0	50	2	4	2	6					33.3	83.3	1.3		1.049	
3-4	4	4.026	129.7	9	1	4							6.7	15.7	1.2		0.186	
4-5	4	4.026	125.4	20	1	4	4	6					46.7	66.7	1.1		0.742	
5-6	4	4.026	121.1	20	2	4							13.3	33.3	1.0		0.348	
6-7	3	3.068	113.6	33	1	4	2	6					20.0	53.0	3.5		1.844	
7-8	3	3.068	109.1	19	2	4							10.0	29.0	3.2		0.936	
8-9	3	3.068	104.6	15	1	4	3	6					27.5	42.5	3.0		1.269	
9-10	3	3.068	100.0	8	1	4							5.0	13.0	2.7		0.357	
10-11	3	3.068	87.0	6	1	4							5.0	11.0	2.1		0.234	
11-12	3	3.068	82.7	10	1	4							5.0	15.0	1.9		0.290	
12-13	3	3.068	71.5	11	1	4	2	6					20.0	31.0	1.5		0.458	
13-14	3	3.068	67.2	73	1	4	3	6					27.5	100.5	1.3		1.324	
14-15	2.5	2.469	50.6	25	1	4							4.2	29.2	2.2		0.654	
15-16 (WSHP-13	1.5	1.61	14.6	14	1	4	3	6					13.8	27.8	1.8		0.500	
RETURN PIPING FROM WSHP-14																		
17-18	0.75	0.824	1.4	29	1	4	2	6					5.0	34.0	0.6		0.208	
18-19	1	1.049	5.7	11	1	4							1.7	12.7	2.5		0.322	
19-20	1.5	1.61	10.4	19.5	1	4	4	6					17.5	37.0	1.0		0.356	
20-21	1.5	1.61	14.3	16	1	4							2.5	18.5	1.7		0.321	
21-22	1.5	1.61	18.6	4	1	4							2.5	6.5	2.8		0.183	
22-23	2	2.067	21.8	34	1	4	2	6					13.3	47.3	1.1		0.531	
23-24	2	2.067	26.3	19	1	4							3.3	22.3	1.6		0.354	
24-25	2	2.067	30.8	14	1	4	3	6					18.3	32.3	2.1		0.687	
25-26	2	2.067	35.4	9	1	4							3.3	12.3	2.7		0.339	
26-27	2.5	2.469	48.4	5	1	4							4.2	9.2	2.1		0.189	
27-28	2.5	2.469	52.7	10	1	4							4.2	14.2	2.4		0.343	
28-29	2.5	2.469	63.9	12	1	4	2	6					16.7	28.7	3.5		0.990	
29-30	3	3.068	68.2	70	1	4	3	6					27.5	97.5	1.4		1.320	
30-31	3	3.068	84.8	30	1	4							5.0	35.0	2.0		0.709	
31-32	4	4.026	120.8	28	1	4	2	6					26.7	54.7	1.0		0.568	
32-33	4	4.026	135.4	26	1	4	2	6					26.7	52.7	1.3		0.676	
33-34	6	6.065	250.0	51	2	4	3	6	2	1			73.0	124.0	0.5		0.674	
35-36	6	6.065	250.0	55	2	4	5	6	3	1			107.0	162.0	0.5		0.881	
36-37	6	6.065	250.0	7			1	6					15.0	22.0	0.5		0.120	
37-1	6	6.065	250.0	18	2	4	2	6	2	1	1	8	98.0	116.0	0.5		0.630	
																25.0	25.000	Cooling Tower CT-1
																4.0	4.000	(4) Flex Connectors at CT-1
																4.0	4.000	Air Separator
																5.0	5.000	Suction Diffuser
																2.0	2.000	(2) Flex Connectors at pump
																2.0	2.000	WSHP-14
																2.0	2.000	WSHP-13
																24.0	24.0	Heat Exchanger
															SUBTOTAL		89.1	
															SAFETY FACTOR		20%	
															TOTAL		106.9	USE 110 FT.

FIT. #	1	2	3	4	5	6	7	8	9	10
TYPE	GATE	BALL	BUTT	THRU T	BRCH T	90 ELB	balancing	CHECK	45 ELB	RED T

July 29, 2021

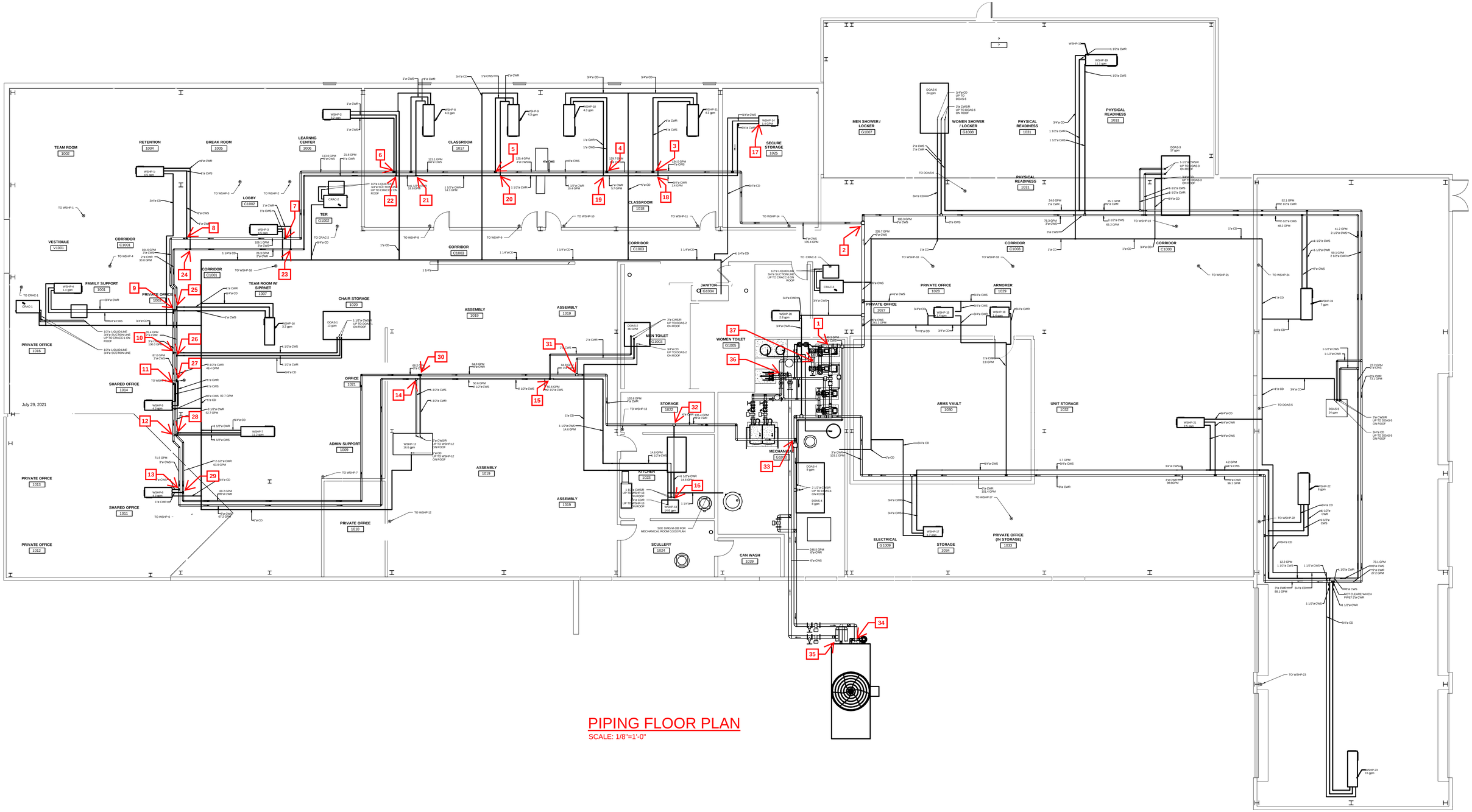

PIPING FLOOR PLAN

SCALE: 1/8"=1'-0"

AIR PRESSURE DROP CALCULATIONS

IN COMPLIANCE WITH THE ARMY RESERVE DESIGN PROCESS AND SUBMITTAL REQUIREDMENTS - PART C, SECTION 7.4.1.4

July 29, 2021

MOTT MACDONALD

JOB	505100403
CALC. BY	CM
CHECKED BY	
DATE	4/20/2021
PROJECT NAME	**Orangeburge Building**

DUCT PRESSURE LOSS CALCULATION

System: DOAS-1
Unit: RETURN/ EXHAUST

Table 1 - Total pressure loss summary[a]

Duct Section Identification Points[b]	Sub Sequent Item	Duct Element	Type	Height (in., rectangular duct only)	Width (in., rectangular duct only)	Diameter (in., circular duct only)	Duct Size, (in., equivalent round)	Duct Area, (sf)	Airflow, (cfm)	Duct Velocity, (fpm)	Velocity Pressure, (in. of water)	Duct Length, (ft)	Summary of Fitting Loss Coefficients, C	Duct Pressure Loss/100', (in. of water)	Total Pressure Loss, (in. of water)	Total Section Pressure Loss, (in. of water)	Sub Sequent Item
1-1	1	Duct	Rectangular	4	8		6.09	0.22	20	90	-	7.00	-	0.004	0.000	-	1
		Fittings					-	-	20	90	0.00	-	4.34	-	0.002	0.002	
1-2	2	Duct	Rectangular	6	10		8.40	0.42	45	108	-	12.00	-	0.004	0.000	-	2
		Fittings					-	-	45	108	0.00	-	3.99	-	0.003	0.003	
1-3	3	Duct	Rectangular	6	10		8.40	0.42	125	300	-	66.00	-	0.022	0.014	-	3
		Fittings					-	-	125	300	0.01	-	7.73	-	0.043	0.058	
1-4	4	Duct	Rectangular	8	10		9.76	0.56	250	450	-	4.00	-	0.037	0.001	-	4
		Fittings					-	-	250	450	0.01	-	2.23	-	0.028	0.030	
1-5	5	Duct	Rectangular	8	10		9.76	0.56	315	567	-	32.00	-	0.057	0.018	-	5
		Fittings					-	-	315	567	0.02	-	1.83	-	0.037	0.055	
1-6	6	Duct	Rectangular	10	14		12.89	0.97	375	386	-	2.00	-	0.020	0.000	-	6
		Fittings					-	-	375	386	0.01	-	0.38	-	0.004	0.004	
1-7	7	Duct	Rectangular	10	14		12.89	0.97	740	761	-	3.00	-	0.070	0.002	-	7
		Fittings					-	-	740	761	0.04	-	2.23	-	0.081	0.083	
1-8	8	Duct	Rectangular	10	14		12.89	0.97	815	838	-	18.00	-	0.083	0.015	-	8
		Fittings					-	-	815	838	0.04	-	0.86	-	0.038	0.053	
1-9	9	Duct	Rectangular	10	20		15.23	1.39	1,075	774	-	5.00	-	0.058	0.003	-	10
		Fittings					-	-	1,075	774	0.04	-	1.50	-	0.06	0.059	

SUBTOTAL	**0.35**

NOTE 1: [a] This table and all calculations are based on Chapter 21 in the 2009 ASHRAE Fundamentals.
NOTE 2: [b] See Drawing MSK-01 for location of duct identification points.

RR	0.1
FLEX	0.1
FLEX	0.1
TOTAL	**0.65**
30%	**0.84**

MOTT MACDONALD

JOB	505100403
CALC. BY	CM
CHECKED BY	
DATE	4/20/2021
PROJECT NAME	**Orangeburge Building**

System: DOAS-1
Unit: RETURN/ EXHAUST

Table 2 - Duct fitting loss coefficient summary

Sub Sequent Item (from Table 1)	Fitting Number	ASHRAE Fitting No.[c]	Type of Fitting[c]	Loss Coefficient, C[c]	Sub Sequent Item
1	1-A	Titus Catalog	Register		1
	1-B	ER4-1	Transition, Rectangular , Two Sides Parallel, Symmetrical, Exhaust/Return Systems	0.69	1
	1-C	CR9-1	Damper, Butterfly	3.30	1
	1-D	ER4-1	Transition, Rectangular , Two Sides Parallel, Symmetrical, Exhaust/Return Systems	0.35	1
			Summation of Section 1 Loss Coefficients	4.34	1
2	2-A	ER5-3	Tee, 45 Degree Entry Branch, Converging	3.74	2
	2-B	CR3-15	Elbow, Mitered, 90 Degree, Double-Thickness Vanes (2.125 in. Vane Spacing)	0.25	2
			Summation of Section 2 Loss Coefficients	3.99	2
3	3-A	CR3-15	Elbow, Mitered, 90 Degree, Double-Thickness Vanes (2.125 in. Vane Spacing)	0.25	3
	3-B	CR3-6	Elbow, Mitered	0.38	3
	3-C	CR3-6	Elbow, Mitered	0.38	3
	3-D	CR3-6	Elbow, Mitered	0.38	3
	3-E	CR3-6	Elbow, Mitered	0.38	3
	3-F	CR3-6	Elbow, Mitered	0.38	3
	3-G	CR3-6	Elbow, Mitered	0.38	3
	3-H	ER5-3	Tee, 45 Degree Entry Branch, Converging	5.20	3
			Summation of Section 3 Loss Coefficients	7.73	3
4	4-A	ER5-3	Tee, 45 Degree Entry Branch, Converging	2.23	4
			Summation of Section 4 Loss Coefficients	2.23	4
5	5-A	ER5-3	Tee, 45 Degree Entry Branch, Converging	0.34	5
	5-B	CR3-15	Elbow, Mitered, 90 Degree, Double-Thickness Vanes (2.125 in. Vane Spacing)	0.38	5
	5-C	CR3-15	Elbow, Mitered, 90 Degree, Double-Thickness Vanes (2.125 in. Vane Spacing)	0.38	5
	5-D	CR3-15	Elbow, Mitered, 90 Degree, Double-Thickness Vanes (2.125 in. Vane Spacing)	0.38	5
	5-E	ER4-1	Transition, Rectangular , Two Sides Parallel, Symmetrical, Exhaust/Return Systems	0.35	5
			Summation of Section 5 Loss Coefficients	1.83	5
6	6-A	ER5-3	Tee, 45 Degree Entry Branch, Converging	0.38	6
			Summation of Section 6 Loss Coefficients	0.38	6
7	7-A	ER5-3	Tee, 45 Degree Entry Branch, Converging	2.23	7
			Summation of Section 7 Loss Coefficients	2.23	7
8	8-A	ER4-1	Transition, Rectangular , Two Sides Parallel, Symmetrical, Exhaust/Return Systems	0.10	8
	8-B	CR3-6	Elbow, Mitered	0.38	8
	8-C	CR3-6	Elbow, Mitered	0.38	8
			Summation of Section 8 Loss Coefficients	0.86	8
9	9-A	ER5-3	Tee, 45 Degree Entry Branch, Converging	0.76	9
	9-B	CR3-16	Elbow, Mitered, 90 Degree, Double-Thickness Vanes (3.25 in. Vane Spacing)	0.41	9
	9-C	ER4-1	Transition, Rectangular , Two Sides Parallel, Symmetrical, Exhaust/Return Systems	0.33	9
			Summation of Section 9 Loss Coefficients	1.50	9

MOTT MACDONALD

JOB	505100403
CALC. BY	CM
CHECKED BY	
DATE	4/20/2021
PROJECT NAME	**Orangeburge Building**

DUCT PRESSURE LOSS CALCULATION

System: DOAS-1
Unit: SUPPLY

Table 1 - Total pressure loss summary[a]

Duct Section Identification Points[b]	Sub Sequent Item	Duct Element	Type	Height (in., rectangular duct only)	Width (in., rectangular duct only)	Diameter (in., circular duct only)	Duct Size, (in., equivalent round)	Duct Area, (sf)	Airflow, (cfm)	Duct Velocity, (fpm)	Velocity Pressure, (in. of water)	Duct Length, (ft)	Summary of Fitting Loss Coefficients, C	Duct Pressure Loss/100', (in. of water)	Total Pressure Loss, (in. of water)	Total Section Pressure Loss, (in. of water)	Sub Sequent Item
1-1	1	Duct	Circular				6.00	0.20	30	153	-	28.00	-	0.01	0.003	-	1
		Fittings					-	-	30	153	0.00	-	17.67	-	0.026	0.029	
1-2	2	Duct	Rectangular	6	10		8.40	0.42	155	372	-	12.00	-	0.03	0.004	-	2
		Fittings					-	-	155	372	0.01	-	0.06	-	0.001	0.004	
1-3	3	Duct	Rectangular	8	12		10.66	0.67	280	420	-	4.00	-	0.03	0.001	-	3
		Fittings					-	-	280	420	0.01	-	0.23	-	0.003	0.004	
1-4	4	Duct	Rectangular	8	12		10.66	0.67	310	465	-	5.00	-	0.04	0.002	-	6
		Fittings					-	-	310	465	0.01	-	0.04	-	0.001	0.002	
1-5	5	Duct	Rectangular	8	12		10.66	0.67	510	765	-	40.00	-	0.09	0.036	-	5
		Fittings					-	-	510	765	0.04	-	1.75	-	0.064	0.099	
1-6	6	Duct	Rectangular	10	18		14.51	1.25	1,040	832	-	5.00	-	0.07	0.004	-	6
		Fittings					-	-	1,040	832	0.04	-	0.04	-	0.002	0.005	
1-7	7	Duct	Rectangular	10	18		14.51	1.25	1,100	880	-	4.00	-	0.08	0.003	-	7
		Fittings					-	-	1,100	880	0.05	-	0.06	-	0.003	0.006	
1-8	8	Duct	Rectangular	26	24		27.30	4.33	1,100	254	-	4.00	-	0.00	0.000	-	8
		Fittings					-	-	1,100	254	0.00	-	0.82	-	0.003	0.003	
SUBTOTAL																**0.15**	

NOTE 1: [a] This table and all calculations are based on Chapter 21 in the 2009 ASHRAE Fundamentals.

NOTE 2: [b] See Drawing MSK-01 for location of duct identification points.

SD	0.1
FLEX	0.1
FLEX	0.1
TOTAL	**0.45**
30%	**0.6**

MOTT MACDONALD

JOB	505100403
CALC. BY	CM
CHECKED BY	
DATE	4/20/2021
PROJECT NAME	**Orangeburge Building**

System: DOAS-1
Unit: SUPPLY

Table 2 - Duct fitting loss coefficient summary

Sub Sequent Item (from Table 1)	Fitting Number	ASHRAE Fitting No.[c]	Type of Fitting[c]	Loss Coefficient, C[c]	Sub Sequent Item
1	1-A	Titus Catalog	Register		1
	1-B	CD3-1	Elbow, Die Stamped, 90 Degree, r/D=1.5	0.14	1
	1-C	CD9-1	Damper, Butterfly	11.20	1
	1-D	CD3-1	Elbow, Die Stamped, 90 Degree, r/D=1.5	0.14	1
	1-E	SR5-11	Tee, Rectangular Main to Round Tap, Diverging	6.19	1
			Summation of Section 1 Loss Coefficients	17.67	1
2	2-A	SR4-1	Transition, Rectangular, Two Sides Parallel, Symmetrical, Supply Air Systems	0.06	2
			Summation of Section 2 Loss Coefficients	0.06	2
3	3-A	SR5-11	Tee, Rectangular Main to Round Tap, Diverging	0.23	3
			Summation of Section 3 Loss Coefficients	0.23	3
4	4-A	SR5-11	Tee, Rectangular Main to Round Tap, Diverging	0.04	4
			Summation of Section 4 Loss Coefficients	0.04	4
5	5-A	SR5-11	Tee, Rectangular Main to Round Tap, Diverging	0.31	5
	5-B	CR3-16	Elbow, Mitered, 90 Degree, Double-Thickness Vanes (3.25 in. Vane Spacing)	0.41	5
	5-C	SR5-13	Tee, 45 Degree Entry Branch, Diverging	1.03	5
			Summation of Section 5 Loss Coefficients	1.75	5
6	6-A	SR5-13	Tee, 45 Degree Entry Branch, Diverging	0.04	6
			Summation of Section 6 Loss Coefficients	0.04	6
7	7-A	SR4-1	Transition, Rectangular, Two Sides Parallel, Symmetrical, Supply Air Systems	0.06	7
			Summation of Section 7 Loss Coefficients	0.06	7
8	8-A	CR3-16	Elbow, Mitered, 90 Degree, Double-Thickness Vanes (3.25 in. Vane Spacing)	0.41	8
	8-B	CR3-16	Elbow, Mitered, 90 Degree, Double-Thickness Vanes (3.25 in. Vane Spacing)	0.41	8
			Summation of Section 8 Loss Coefficients	0.82	8

MOTT MACDONALD

JOB	505100403
CALC. BY	CM
CHECKED BY	
DATE	4/20/2021
PROJECT NAME	**Orangeburge Building**

DUCT PRESSURE LOSS CALCULATION

System: DOAS-2
Unit: RETURN/ EXHAUST

Table 1 - Total pressure loss summary[(a)]

Duct Section Identification Points[(b)]	Sub Sequent Item	Duct Element	Type	Height (in., rectangular duct only)	Width (in., rectangular duct only)	Diameter (in., circular duct only)	Duct Size, (in., equivalent round)	Duct Area, (sf)	Airflow, (cfm)	Duct Velocity, (fpm)	Velocity Pressure, (in. of water)	Duct Length, (ft)	Summary of Fitting Loss Coefficients, C	Duct Pressure Loss/100', (in. of water)	Total Pressure Loss, (in. of water)	Total Section Pressure Loss, (in. of water)	Sub Sequent Item
1-1	1	Duct	Rectangular	8	10		9.76	0.56	295	531	-	36.00	-	0.051	0.018	-	1
		Fittings					-	-	295	531	0.02	-	5.14	-	0.090	0.108	
1-2	2	Duct	Rectangular	10	12		11.96	0.83	590	708	-	7.00	-	0.067	0.005	-	2
		Fittings					-	-	590	708	0.03	-	2.58	-	0.081	0.085	
1-3	3	Duct	Rectangular	10	16		13.73	1.11	885	797	-	14.00	-	0.070	0.010	-	3
		Fittings					-	-	885	797	0.04	-	1.53	-	0.061	0.070	
1-4	4	Duct	Rectangular	10	20		15.23	1.39	1,180	850	-	34.00	-	0.070	0.024	-	4
		Fittings					-	-	1,180	850	0.05	-	3.26	-	0.147	0.170	
1-5	5	Duct	Rectangular	10	26		17.15	1.81	1,570	870	-	12.00	-	0.063	0.008	-	5
		Fittings					-	-	1,570	870	0.05	-	0.86	-	0.041	0.048	
1-6	6	Duct	Rectangular	10	28		17.72	1.94	1,960	1,008	-	12.00	-	0.080	0.010	-	6
		Fittings					-	-	1,960	1,008	0.06	-	0.73	-	0.046	0.056	
1-7	7	Duct	Rectangular	10	46		21.93	3.19	2,360	739	-	24.00	-	0.034	0.008	-	7
		Fittings					-	-	2,360	739	0.03	-	2.01	-	0.068	0.077	
SUBTOTAL																**0.61**	

NOTE 1: [a] This table and all calculations are based on Chapter 21 in the 2009 ASHRAE Fundamentals.
NOTE 2: [b] See Drawing MSK-02 for location of duct identification points.

RR	0.1
FLEX	0.1
FLEX	0.1
TOTAL	**0.91**
30%	**1.2**

MOTT MACDONALD

JOB	505100403
CALC. BY	CM
CHECKED BY	
DATE	4/20/2021
PROJECT NAME	**Orangeburge Building**

System: DOAS-2
Unit: RETURN/ EXHAUST

Table 2 - Duct fitting loss coefficient summary

Sub Sequent Item (from Table 1)	Fitting Number	ASHRAE Fitting No.[c]	Type of Fitting[c]	Loss Coefficient, C[c]	Sub Sequent Item
1	1-A	Titus Catalog	Register		1
	1-B	ER4-1	Transition, Rectangular , Two Sides Parallel, Symmetrical, Exhaust/Return Systems	0.48	1
	1-C	CR9-3	Damper, Parallel and Opposed 3V Blades, Open	3.30	1
	1-D	ER4-1	Transition, Rectangular , Two Sides Parallel, Symmetrical, Exhaust/Return Systems	0.35	1
	1-E	CR3-6	Elbow, Mitered	0.38	1
	1-F	CR3-6	Elbow, Mitered	0.38	1
	1-G	CR3-15	Elbow, Mitered, 90 Degree, Double-Thickness Vanes (2.125 in. Vane Spacing)	0.25	1
			Summation of Section 1 Loss Coefficients	5.14	1
2	2-A	ER5-3	Tee, 45 Degree Entry Branch, Converging	2.23	2
	2-B	ER4-1	Transition, Rectangular , Two Sides Parallel, Symmetrical, Exhaust/Return Systems	0.35	2
			Summation of Section 2 Loss Coefficients	2.58	2
3	3-A	ER5-3	Tee, 45 Degree Entry Branch, Converging	1.33	3
	3-B	ER4-1	Transition, Rectangular , Two Sides Parallel, Symmetrical, Exhaust/Return Systems	0.20	3
			Summation of Section 3 Loss Coefficients	1.53	3
4	4-A	CR3-16	Elbow, Mitered, 90 Degree, Double-Thickness Vanes (3.25 in. Vane Spacing)	0.41	4
	4-B	CR3-16	Elbow, Mitered, 90 Degree, Double-Thickness Vanes (3.25 in. Vane Spacing)	0.41	4
	4-C	CR3-6	Elbow, Mitered	0.38	4
	4-D	CR3-6	Elbow, Mitered	0.38	4
	4-E	CR3-6	Elbow, Mitered	0.38	4
	4-F	CR3-6	Elbow, Mitered	0.38	4
	4-G	ER5-3	Tee, 45 Degree Entry Branch, Converging	0.38	4
	4-H	ER4-1	Transition, Rectangular , Two Sides Parallel, Symmetrical, Exhaust/Return Systems	0.35	4
	4-I	CR9-6	Fire Damper, Curtain Type, Type B, Horizontal Duct	0.19	4
			Summation of Section 4 Loss Coefficients	3.26	4
5	5-A	ER5-3	Tee, 45 Degree Entry Branch, Converging	0.76	5
	5-B	ER4-1	Transition, Rectangular , Two Sides Parallel, Symmetrical, Exhaust/Return Systems	0.10	5
			Summation of Section 5 Loss Coefficients	0.86	5
6	6-A	ER5-3	Tee, 45 Degree Entry Branch, Converging	0.38	6
	6-B	ER4-1	Transition, Rectangular , Two Sides Parallel, Symmetrical, Exhaust/Return Systems	0.35	6
			Summation of Section 6 Loss Coefficients	0.73	6
7	7-A	ER5-3	Tee, 45 Degree Entry Branch, Converging	0.38	7
	7-B	CR3-6	Elbow, Mitered	0.38	7
	7-C	CR3-6	Elbow, Mitered	0.38	7
	7-D	CR3-16	Elbow, Mitered, 90 Degree, Double-Thickness Vanes (3.25 in. Vane Spacing)	0.41	7
	7-E	CR3-16	Elbow, Mitered, 90 Degree, Double-Thickness Vanes (3.25 in. Vane Spacing)	0.41	7
	7-F	ER4-1	Transition, Rectangular , Two Sides Parallel, Symmetrical, Exhaust/Return Systems	0.05	7
			Summation of Section 7 Loss Coefficients	2.01	7

MOTT MACDONALD

JOB	505100403
CALC. BY	CM
CHECKED BY	
DATE	4/20/2021
PROJECT NAME	**Orangeburge Building**

DUCT PRESSURE LOSS CALCULATION

System: DOAS-2
Unit: SUPPLY

Table 1 - Total pressure loss summary[a]

Duct Section Identification Points[b]	Sub Sequent Item	Duct Element	Type	Height (in., rectangular duct only)	Width (in., rectangular duct only)	Diameter (in., circular duct only)	Duct Size, (in., equivalent round)	Duct Area, (sf)	Airflow, (cfm)	Duct Velocity, (fpm)	Velocity Pressure, (in. of water)	Duct Length, (ft)	Summary of Fitting Loss Coefficients, C	Duct Pressure Loss/100', (in. of water)	Total Pressure Loss, (in. of water)	Total Section Pressure Loss, (in. of water)	Sub Sequent Item
1-1	1	Duct	Rectangular	6	12		9.14	0.50	295	590	-	48.00	-	0.07	0.032	-	1
		Fittings					-	-	295	590	0.02	-	11.18	-	0.243	0.275	
1-2	2	Duct	Rectangular	10	12		11.96	0.83	590	708	-	5.00	-	0.07	0.003	-	2
		Fittings					-	-	590	708	0.03	-	0.16	-	0.005	0.008	
1-3	3	Duct	Rectangular	10	16		13.73	1.11	885	797	-	16.00	-	0.07	0.011	-	3
		Fittings					-	-	885	797	0.04	-	1.70	-	0.067	0.078	
1-4	4	Duct	Rectangular	10	20		15.23	1.39	1,180	850	-	12.50	-	0.07	0.009	-	4
		Fittings					-	-	1,180	850	0.05	-	5.00	-	0.225	0.234	
1-5	5	Duct	Rectangular	10	20		15.23	1.39	1,210	871	-	15.00	-	0.07	0.011	-	5
		Fittings					-	-	1,210	871	0.05	-	0.45	-	0.021	0.032	
1-6	6	Duct	Rectangular	24	16		21.31	2.67	1,240	465	-	30.00	-	0.02	0.005	-	6
		Fittings					-	-	1,240	465	0.01	-	1.81	-	0.024	0.029	
1-7	7	Duct	Rectangular	24	16		21.31	2.67	1,515	568	-	3.00	-	0.02	0.001	-	7
		Fittings					-	-	1,515	568	0.02	-	0.07	-	0.001	0.002	
1-8	8	Duct	Rectangular	24	16		21.31	2.67	1,790	671	-	3.00	-	0.03	0.001	-	8
		Fittings					-	-	1,790	671	0.03	-	0.07	-	0.002	0.003	
1-9	9	Duct	Rectangular	24	16		21.31	2.67	2,065	774	-	3.00	-	0.04	0.001	-	9
		Fittings					-	-	2,065	774	0.04	-	0.07	-	0.003	0.004	
1-10	10	Duct	Rectangular	24	16		21.31	2.67	2,340	878	-	7.50	-	0.05	0.004	-	10
		Fittings					-	-	2,340	878	0.05	-	0.04	-	0.002	0.006	
1-11	11	Duct	Rectangular	24	16		21.31	2.67	2,615	981	-	3.00	-	0.06	0.002	-	11
		Fittings					-	-	2,615	981	0.06	-	0.10	-	0.006	0.008	
1-12	12	Duct	Rectangular	24	16		21.31	2.67	2,880	1,080	-	9.00	-	0.07	0.007	-	12
		Fittings					-	-	2,880	1,080	0.07	-	0.41	-	0.030	0.036	
		SUBTOTAL														**0.71**	

NOTE 1: [a] This table and all calculations are based on Chapter 21 in the 2009 ASHRAE Fundamentals.
NOTE 2: [b] See Drawing MSK-02 for location of duct identification points.

FLEX	0.1
FLEX	0.1
TOTAL	**0.91**
30%	**1.19**

MOTT MACDONALD

JOB	505100403
CALC. BY	CM
CHECKED BY	
DATE	4/20/2021
PROJECT NAME	**Orangeburge Building**

System: DOAS-2
Unit: SUPPLY

Table 2 - Duct fitting loss coefficient summary

Sub Sequent Item (from Table 1)	Fitting Number	ASHRAE Fitting No.[c]	Type of Fitting[c]	Loss Coefficient, C[c]	Sub Sequent Item
1	1-A	Titus Catalog	Register		1
	1-B	CR9-1	Damper, Butterfly	9.00	1
	1-C	SR5-13	Tee, 45 Degree Entry Branch, Diverging	0.35	1
	1-D	CR3-15	Elbow, Mitered, 90 Degree, Double-Thickness Vanes (2.125 in. Vane Spacing)	0.25	1
	1-E	CR3-6	Elbow, Mitered	0.38	1
	1-F	CR3-6	Elbow, Mitered	0.38	1
	1-G	CR3-6	Elbow, Mitered	0.38	1
	1-H	CR3-6	Elbow, Mitered	0.38	1
	1-I	SR4-1	Transition, Rectangular, Two Sides Parallel, Symmetrical, Supply Air Systems	0.06	1
			Summation of Section 1 Loss Coefficients	11.18	1
2	2-A	SR5-13	Tee, 45 Degree Entry Branch, Diverging	0.10	2
	2-B	SR4-1	Transition, Rectangular, Two Sides Parallel, Symmetrical, Supply Air Systems	0.06	2
			Summation of Section 2 Loss Coefficients	0.16	2
3	3-A	SR5-13	Tee, 45 Degree Entry Branch, Diverging	1.64	3
	3-B	SR4-1	Transition, Rectangular, Two Sides Parallel, Symmetrical, Supply Air Systems	0.06	3
			Summation of Section 3 Loss Coefficients	1.70	3
4	4-A	SR5-13	Tee, 45 Degree Entry Branch, Diverging	5.00	4
			Summation of Section 4 Loss Coefficients	5.00	4
5	5-A	SR5-13	Tee, 45 Degree Entry Branch, Diverging	0.04	5
	5-B	CR3-16	Elbow, Mitered, 90 Degree, Double-Thickness Vanes (3.25 in. Vane Spacing)	0.41	5
			Summation of Section 5 Loss Coefficients	0.45	5
6	6-A	SR5-11	Tee, Rectangular Main to Round Tap, Diverging	0.04	6
	6-B	CR3-6	Elbow, Mitered	0.38	6
	6-C	CR3-6	Elbow, Mitered	0.38	6
	6-D	CR3-6	Elbow, Mitered	0.38	6
	6-E	CR3-6	Elbow, Mitered	0.38	6
	6-F	SR4-1	Transition, Rectangular, Two Sides Parallel, Symmetrical, Supply Air Systems	0.06	6
	6-G	CR9-6	Fire Damper, Curtain Type, Type B, Horizontal Duct	0.19	6
			Summation of Section 6 Loss Coefficients	1.81	6
7	7-A	SR5-13	Tee, 45 Degree Entry Branch, Diverging	0.07	7
			Summation of Section 7 Loss Coefficients	0.07	7
8	8-A	SR5-13	Tee, 45 Degree Entry Branch, Diverging	0.07	8
			Summation of Section 8 Loss Coefficients	0.07	8
9	9-A	SR5-11	Tee, Rectangular Main to Round Tap, Diverging	0.07	9
			Summation of Section 9 Loss Coefficients	0.07	9
10	10-A	SR5-11	Tee, Rectangular Main to Round Tap, Diverging	0.04	10
			Summation of Section 10 Loss Coefficients	0.04	10
11	11-A	SR5-13	Tee, 45 Degree Entry Branch, Diverging	0.04	11
	11-B	SR4-1	Transition, Rectangular, Two Sides Parallel, Symmetrical, Supply Air Systems	0.06	11
			Summation of Section 11 Loss Coefficients	0.10	11
12	12-A	CR3-16	Elbow, Mitered, 90 Degree, Double-Thickness Vanes (3.25 in. Vane Spacing)	0.41	12
			Summation of Section 12 Loss Coefficients	0.41	12

MOTT MACDONALD

JOB	505100403
CALC. BY	CM
CHECKED BY	
DATE	4/20/2021
PROJECT NAME	**Orangeburge Building**

DUCT PRESSURE LOSS CALCULATION

System: DOAS-3
Unit: RETURN/ EXHAUST

Table 1 - Total pressure loss summary[a]

Duct Section Identification Points[b]	Sub Sequent Item	Duct Element	Type	Height (in., rectangular duct only)	Width (in., rectangular duct only)	Diameter (in., circular duct only)	Duct Size, (in., equivalent round)	Duct Area, (sf)	Airflow, (cfm)	Duct Velocity, (fpm)	Velocity Pressure, (in. of water)	Duct Length, (ft)	Summary of Fitting Loss Coefficients, C	Duct Pressure Loss/100', (in. of water)	Total Pressure Loss, (in. of water)	Total Section Pressure Loss, (in. of water)	Sub Sequent Item
1-1	1	Duct	Rectangular	6	8		7.55	0.33	30	90	-	32.00	-	0.003	0.00	-	1
		Fittings					-	-	30	90	0.00	-	3.79	-	0.00	0.003	
1-2	2	Duct	Rectangular	6	8		7.55	0.33	50	150	-	7.00	-	0.007	0.00	-	2
		Fittings					-	-	50	150	0.00	-	1.87	-	0.00	0.003	
1-3	3	Duct	Rectangular	8	10		9.76	0.56	205	369	-	14.00	-	0.026	0.00	-	3
		Fittings					-	-	205	369	0.01	-	9.50	-	0.08	0.084	
1-4	4	Duct	Rectangular	8	10		9.76	0.56	360	648	-	32.00	-	0.073	0.02	-	4
		Fittings					-	-	360	648	0.03	-	2.41	-	0.06	0.086	
1-5	5	Duct	Rectangular	8	14		11.46	0.78	515	662	-	12.00	-	0.062	0.01	-	5
		Fittings					-	-	515	662	0.03	-	0.95	-	0.03	0.033	
1-6	6	Duct	Rectangular	8	14		11.46	0.78	545	701	-	11.00	-	0.069	0.01	-	6
		Fittings					-	-	545	701	0.03	-	0.10	-	0.00	0.011	
1-7	7	Duct	Rectangular	10	14		12.89	0.97	715	735	-	26.00	-	0.065	0.02	-	7
		Fittings					-	-	715	735	0.03	-	1.28	-	0.04	0.060	
1-8	8	Duct	Rectangular	10	28		17.72	1.94	715	368	-	7.00	-	0.012	0.00	-	8
		Fittings					-	-	715	368	0.01	-	0.76	-	0.01	0.007	
															SUBTOTAL		**0.29**

NOTE 1: [a] This table and all calculations are based on Chapter 21 in the 2009 ASHRAE Fundamentals.
NOTE 2: [b] See Drawing MSK-03 for location of duct identification points.

RR	0.1
FLEX	0.1
FLEX	0.1
TOTAL	**0.59**
30%	**0.76**

MOTT MACDONALD

JOB	505100403
CALC. BY	CM
CHECKED BY	
DATE	4/20/2021
PROJECT NAME	**Orangeburge Building**

System: DOAS-3
Unit: RETURN/ EXHAUST

Table 2 - Duct fitting loss coefficient summary

Sub Sequent Item (from Table 1)	Fitting Number	ASHRAE Fitting No.[c]	Type of Fitting[c]	Loss Coefficient, C[c]	Sub Sequent Item
1	1-A	Titus Catalog	Register		1
	1-B	ER4-1	Transition, Rectangular , Two Sides Parallel, Symmetrical, Exhaust/Return Systems	0.24	1
	1-C	CR9-3	Damper, Parallel and Opposed 3V Blades, Open	3.30	1
	1-D	CR3-15	Elbow, Mitered, 90 Degree, Double-Thickness Vanes (2.125 in. Vane Spacing)	0.25	1
			Summation of Section 1 Loss Coefficients	3.79	1
2	2-A	ER5-3	Tee, 45 Degree Entry Branch, Converging	1.33	2
	2-B	ER4-1	Transition, Rectangular , Two Sides Parallel, Symmetrical, Exhaust/Return Systems	0.35	2
	2-C	CD9-3	Fire Damper, Curtain Type, Type C	0.19	2
			Summation of Section 2 Loss Coefficients	1.87	2
3	3-A	ER5-3	Tee, 45 Degree Entry Branch, Converging	9.50	3
			Summation of Section 3 Loss Coefficients	9.50	3
4	4-A	ER5-3	Tee, 45 Degree Entry Branch, Converging	2.23	4
	4-B	ER4-1	Transition, Rectangular , Two Sides Parallel, Symmetrical, Exhaust/Return Systems	0.18	4
			Summation of Section 4 Loss Coefficients	2.41	4
5	5-A	ER5-3	Tee, 45 Degree Entry Branch, Converging	0.76	5
	5-B	CD9-3	Fire Damper, Curtain Type, Type C	0.19	5
			Summation of Section 5 Loss Coefficients	0.95	5
6	6-A	ER5-3	Tee, 45 Degree Entry Branch, Converging	0.10	6
			Summation of Section 6 Loss Coefficients	0.10	6
7	7-A	ER4-1	Transition, Rectangular , Two Sides Parallel, Symmetrical, Exhaust/Return Systems	0.35	7
	7-B	ER5-3	Tee, 45 Degree Entry Branch, Converging	0.93	7
			Summation of Section 7 Loss Coefficients	1.28	7
8	8-A	CR3-16	Elbow, Mitered, 90 Degree, Double-Thickness Vanes (3.25 in. Vane Spacing)	0.41	8
	8-B	ER4-1	Transition, Rectangular , Two Sides Parallel, Symmetrical, Exhaust/Return Systems	0.35	8
			Summation of Section 8 Loss Coefficients	0.76	8

MOTT MACDONALD

JOB	505100403
CALC. BY	CM
CHECKED BY	
DATE	4/20/2021
PROJECT NAME	**Orangeburge Building**

DUCT PRESSURE LOSS CALCULATION - DIAGRAM 1

System: DOAS-3
Unit: SUPPLY

Table 1 - Total pressure loss summary[(a)]

Duct Section Identification Points[(b)]	Sub Sequent Item	Duct Element	Type	Height (in., rectangular duct only)	Width (in., rectangular duct only)	Diameter (in., circular duct only)	Duct Size, (in., equivalent round)	Duct Area, (sf)	Airflow, (cfm)	Duct Velocity, (fpm)	Velocity Pressure, (in. of water)	Duct Length, (ft)	Summary of Fitting Loss Coefficients, C	Duct Pressure Loss/100', (in. of water)	Total Pressure Loss, (in. of water)	Total Section Pressure Loss, (in. of water)	Sub Sequent Item
1-1	1	Duct	Rectangular	4	6		5.33	0.17	50	300	-	12.00	-	0.038	0.00	-	1
		Fittings					-	-	50	300	0.01	-	10.93	-	0.06	0.07	
1-2	2	Duct	Rectangular	6	12		9.14	0.50	205	410	-	11.00	-	0.034	0.00	-	2
		Fittings					-	-	205	410	0.01	-	3.35	-	0.04	0.04	
1-3	3	Duct	Rectangular	8	12		10.66	0.67	360	540	-	7.00	-	0.047	0.00	-	3
		Fittings					-	-	360	540	0.02	-	0.29	-	0.01	0.01	
1-4	4	Duct	Rectangular	8	14		11.46	0.78	515	662	-	9.00	-	0.062	0.01	-	4
		Fittings					-	-	515	662	0.03	-	0.56	-	0.02	0.02	
1-5	5	Duct	Rectangular	8	14		11.46	0.78	565	726	-	5.00	-	0.074	0.00	-	6
		Fittings					-	-	565	726	0.03	-	0.11	-	0.00	0.01	
1-6	6	Duct	Rectangular	8	16		12.19	0.89	655	737	-	8.00	-	0.070	0.01	-	7
		Fittings					-	-	655	737	0.03	-	0.14	-	0.00	0.01	
1-7	7	Duct	Rectangular	10	14		12.89	0.97	655	674	-	2.00	-	0.056	0.00	-	8
		Fittings					-	-	655	674	0.03	-	0.31	-	0.01	0.01	
1-8	8	Duct	Rectangular	10	14		12.89	0.97	745	766	-	11.00	-	0.070	0.01	-	9
		Fittings					-	-	745	766	0.04	-	0.13	-	0.00	0.01	
1-9	9	Duct	Rectangular	10	16		13.73	1.11	900	810	-	20.00	-	0.072	0.01	-	10
		Fittings					-	-	900	810	0.04	-	0.11	-	0.00	0.02	
1-10	10	Duct	Rectangular	14	20		18.22	1.94	900	463	-	15.00	-	0.018	0.00	-	
		Fittings					-	-	900	463	0.01	-	1.29	-	0.02	0.02	

SUBTOTAL	**0.21**

NOTE 1: [a] This table and all calculations are based on Chapter 21 in the 2009 ASHRAE Fundamentals.
NOTE 2: [b] See Drawing MSK-03 for location of duct identification points.

SD	0.1
FLEX	0.1
FLEX	0.1
TOTAL	**0.51**
30%	**0.67**

MOTT MACDONALD

JOB	505100403
CALC. BY	CM
CHECKED BY	
DATE	4/20/2021
PROJECT NAME	**Orangeburge Building**

System: DOAS-3
Unit: SUPPLY

Table 2 - Duct fitting loss coefficient summary

Sub Sequent Item (from Table 1)	Fitting Number	ASHRAE Fitting No.[c]	Type of Fitting[c]	Loss Coefficient, C[c]	Sub Sequent Item
1	1-A	Titus Catalog	Register		1
	2-B	SR5-13	Tee, 45 Degree Entry Branch, Diverging	0.73	1
	2-C	CR9-1	Damper, Butterfly	9.00	1
	2-D	CR3-15	Elbow, Mitered, 90 Degree, Double-Thickness Vanes (2.125 in. Vane Spacing)	0.25	1
	2-E	CR3-6	Elbow, Mitered	0.38	1
	2-F	CR3-6	Elbow, Mitered	0.38	1
	2-G	CR9-6	Fire Damper, Curtain Type, Type B, Horizontal Duct	0.19	1
			Summation of Section 1 Loss Coefficients	10.93	1
2	2-A	SR5-13	Tee, 45 Degree Entry Branch, Diverging	3.10	2
	2-B	CR3-15	Elbow, Mitered, 90 Degree, Double-Thickness Vanes (2.125 in. Vane Spacing)	0.25	2
			Summation of Section 2 Loss Coefficients	3.35	2
3	3-A	SR5-13	Tee, 45 Degree Entry Branch, Diverging	0.23	3
	3-B	SR4-1	Transition, Rectangular, Two Sides Parallel, Symmetrical, Supply Air Systems	0.06	3
			Summation of Section 3 Loss Coefficients	0.29	3
4	4-A	SR5-13	Tee, 45 Degree Entry Branch, Diverging	0.31	4
	4-B	SR4-1	Transition, Rectangular, Two Sides Parallel, Symmetrical, Supply Air Systems	0.06	4
	4-C	CR9-6	Fire Damper, Curtain Type, Type B, Horizontal Duct	0.19	4
			Summation of Section 4 Loss Coefficients	0.56	4
5	5-A	SR5-13	Tee, 45 Degree Entry Branch, Diverging	0.06	5
	5-B	SR4-1	Transition, Rectangular, Two Sides Parallel, Symmetrical, Supply Air Systems	0.05	5
			Summation of Section 5 Loss Coefficients	0.11	5
6	6-A	SR5-13	Tee, 45 Degree Entry Branch, Diverging	0.07	6
	6-B	SR5-13	Tee, 45 Degree Entry Branch, Diverging	0.07	6
			Summation of Section 6 Loss Coefficients	0.14	6
7	7-A	SR4-1	Transition, Rectangular, Two Sides Parallel, Symmetrical, Supply Air Systems	0.06	7
	7-B	CR3-15	Elbow, Mitered, 90 Degree, Double-Thickness Vanes (2.125 in. Vane Spacing)	0.25	7
			Summation of Section 7 Loss Coefficients	0.31	7
8	8-A	SR5-13	Tee, 45 Degree Entry Branch, Diverging	0.07	8
	8-B	SR4-1	Transition, Rectangular, Two Sides Parallel, Symmetrical, Supply Air Systems	0.06	8
			Summation of Section 8 Loss Coefficients	0.13	8
9	9-A	SR5-13	Tee, 45 Degree Entry Branch, Diverging	0.05	9
	9-B	SR4-1	Transition, Rectangular, Two Sides Parallel, Symmetrical, Supply Air Systems	0.06	9
			Summation of Section 9 Loss Coefficients	0.11	9
10	10-A	CR3-16	Elbow, Mitered, 90 Degree, Double-Thickness Vanes (3.25 in. Vane Spacing)	0.41	10
	10-B	CR3-16	Elbow, Mitered, 90 Degree, Double-Thickness Vanes (3.25 in. Vane Spacing)	0.41	10
	10-C	CR3-16	Elbow, Mitered, 90 Degree, Double-Thickness Vanes (3.25 in. Vane Spacing)	0.41	10
	10-D	SR4-1	Transition, Rectangular, Two Sides Parallel, Symmetrical, Supply Air Systems	0.06	10
			Summation of Section 10 Loss Coefficients	1.29	10

MOTT MACDONALD

JOB	505100403
CALC. BY	CM
CHECKED BY	
DATE	4/20/2021
PROJECT NAME	**Orangeburge Building**

DUCT PRESSURE LOSS CALCULATION - DIAGRAM 1

System: DOAS-4
Unit: RETURN/ EXHAUST

Table 1 - Total pressure loss summary[a]

Duct Section Identification Points[b]	Sub Sequent Item	Duct Element	Type	Height (in., rectangular duct only)	Width (in., rectangular duct only)	Diameter (in., circular duct only)	Duct Size, (in., equivalent round)	Duct Area, (sf)	Airflow, (cfm)	Duct Velocity, (fpm)	Velocity Pressure, (in. of water)	Duct Length, (ft)	Summary of Fitting Loss Coefficients, C	Duct Pressure Loss/100', (in. of water)	Total Pressure Loss, (in. of water)	Total Section Pressure Loss, (in. of water)	Sub Sequent Item
1-1	1	Duct	Rectangular	8	8		8.75	0.44	100	225	-	14.00	-	0.01	0.00	-	1
		Fittings					-	-	100	225	0.00	-	4.02	-	0.01	0.014	
1-2	2	Duct	Rectangular	12	32		20.81	2.67	360	135	-	10.00	-	0.00	0.00	-	2
		Fittings					-	-	360	135	0.00	-	0.41	-	0.00	0.001	

SUBTOTAL	**0.02**

NOTE 1: [a] This table and all calculations are based on Chapter 21 in the 2009 ASHRAE Fundamentals.
NOTE 2: [b] See Drawing MSK-04 for location of duct identification points.

RR	0.1
FLEX	0.1
FLEX	0.1
TOTAL	**0.32**
30%	**0.41**

MOTT MACDONALD

JOB	505100403
CALC. BY	CM
CHECKED BY	
DATE	4/20/2021
PROJECT NAME	**Orangeburge Building**

System: DOAS-4
Unit: RETURN/ EXHAUST

Table 2 - Duct fitting loss coefficient summary

Sub Sequent Item (from Table 1)	Fitting Number	ASHRAE Fitting No.[c]	Type of Fitting[c]	Loss Coefficient, C[c]	Sub Sequent Item
1	1-A	Titus Catalog	Register		1
	1-B	CR9-1	Damper, Butterfly	3.30	1
	1-C	ER5-3	Tee, 45 Degree Entry Branch, Converging	0.53	1
	1-D	CR9-6	Fire Damper, Curtain Type, Type B, Horizontal Duct	0.19	1
			Summation of Section 1 Loss Coefficients	4.02	1
2	2-A	CR3-16	Elbow, Mitered, 90 Degree, Double-Thickness Vanes (3.25 in. Vane Spacing)	0.41	2
			Summation of Section 2 Loss Coefficients	0.41	2

MOTT MACDONALD

JOB	505100403
CALC. BY	CM
CHECKED BY	
DATE	4/20/2021
PROJECT NAME	**Orangeburge Building**

DUCT PRESSURE LOSS CALCULATION

System: DOAS-4
Unit: SUPPLY

Table 1 - Total pressure loss summary[(a)]

Duct Section Identification Points[(b)]	Sub Sequent Item	Duct Element	Type	Height (in., rectangular duct only)	Width (in., rectangular duct only)	Diameter (in., circular duct only)	Duct Size, (in., equivalent round)	Duct Area, (sf)	Airflow, (cfm)	Duct Velocity, (fpm)	Velocity Pressure, (in. of water)	Duct Length, (ft)	Summary of Fitting Loss Coefficients, C	Duct Pressure Loss/100', (in. of water)	Total Pressure Loss, (in. of water)	Total Section Pressure Loss, (in. of water)	Sub Sequent Item
1-1	1	Duct	Rectangular	8	8		8.75	0.44	100	225	-	34.00	-	0.01	0.004	-	1
		Fittings					-	-	100	225	0.003	-	4.74	-	0.015	0.019	
1-2	2	Duct	Rectangular	10	10		10.93	0.69	360	518	-	5.00	-	0.04	0.002	-	2
		Fittings					-	-	360	518	0.017	-	3.16	-	0.053	0.055	
1-3	3	Duct	Rectangular	10	16		13.73	1.11	360	324	-	5.00	-	0.01	0.001	-	3
		Fittings					-	-	360	324	0.007	-	0.41	-	0.003	0.003	
		SUBTOTAL														**0.08**	

NOTE 1: [a] This table and all calculations are based on Chapter 21 in the 2009 ASHRAE Fundamentals.
NOTE 2: [b] See Drawing MSK-04 for location of duct identification points.

SR	0.1
FLEX	0.1
FLEX	0.1
TOTAL	**0.38**
30%	**0.49**

MOTT MACDONALD

JOB	505100403
CALC. BY	CM
CHECKED BY	
DATE	4/20/2021
PROJECT NAME	**Orangeburge Building**

System: DOAS-4
Unit: SUPPLY

Table 2 - Duct fitting loss coefficient summary

Sub Sequent Item (from Table 1)	Fitting Number	ASHRAE Fitting No.[c]	Type of Fitting[c]	Loss Coefficient, C[c]	Sub Sequent Item
1	1-A	Titus Catalog	Register		1
	1-B	CR9-1	Damper, Butterfly	3.30	1
	1-C	CR3-15	Elbow, Mitered, 90 Degree, Double-Thickness Vanes (2.125 in. Vane Spacing)	0.25	1
	1-D	CR3-15	Elbow, Mitered, 90 Degree, Double-Thickness Vanes (2.125 in. Vane Spacing)	0.25	1
	1-E	CR3-15	Elbow, Mitered, 90 Degree, Double-Thickness Vanes (2.125 in. Vane Spacing)	0.25	1
	1-F	CR3-15	Elbow, Mitered, 90 Degree, Double-Thickness Vanes (2.125 in. Vane Spacing)	0.25	1
	1-G	CR3-15	Elbow, Mitered, 90 Degree, Double-Thickness Vanes (2.125 in. Vane Spacing)	0.25	1
	1-H	CR9-6	Fire Damper, Curtain Type, Type B, Horizontal Duct	0.19	1
			Summation of Section 1 Loss Coefficients	4.74	1
2	2-A	SR5-13	Tee, 45 Degree Entry Branch, Diverging	3.10	2
	2-B	SR4-1	Transition, Rectangular, Two Sides Parallel, Symmetrical, Supply Air Systems	0.06	2
			Summation of Section 2 Loss Coefficients	3.16	2
3	3-A	CR3-16	Elbow, Mitered, 90 Degree, Double-Thickness Vanes (3.25 in. Vane Spacing)	0.41	3
			Summation of Section 3 Loss Coefficients	0.41	3

MOTT MACDONALD

JOB	505100403
CALC. BY	CM
CHECKED BY	
DATE	4/20/2021
PROJECT NAME	**Orangeburge Building**

DUCT PRESSURE LOSS CALCULATION

System: DOAS-5
Unit: RETURN/EXHAUST

Table 1 - Total pressure loss summary[a]

Duct Section Identification Points[b]	Sub Sequent Item	Duct Element	Type	Height (in., rectangular duct only)	Width (in., rectangular duct only)	Diameter (in., circular duct only)	Duct Size, (in., equivalent round)	Duct Area, (sf)	Airflow, (cfm)	Duct Velocity, (fpm)	Velocity Pressure, (in. of water)	Duct Length, (ft)	Summary of Fitting Loss Coefficients, C	Duct Pressure Loss/100', (in. of water)	Total Pressure Loss, (in. of water)	Total Section Pressure Loss, (in. of water)	Sub Sequent Item
1-1	1	Duct	Rectangular	10	18		14.51	1.25	550	440	-	4.00	-	0.02	0.001	-	1
		Fittings					-	-	550	440	0.01	-	0.00	-	0.000	0.001	
1-2	2	Duct	Rectangular	8	14		11.46	0.78	550	707	-	21.00	-	0.07	0.015	-	2
		Fittings					-	-	550	707	0.03	-	10.12	-	0.315	0.330	
1-3	3	Duct	Rectangular	12	40		22.95	3.33	1,800	540	-	10.00	-	0.02	0.002	-	3
		Fittings					-	-	1,800	540	0.02	-	1.17	-	0.021	0.023	
SUBTOTAL for Points 30-42																**0.35**	

NOTE 1: [a] This table and all calculations are based on Chapter 21 in the 2009 ASHRAE Fundamentals.
NOTE 2: [b] See Drawing MSK-05 for location of duct identification points.

ER	0.1
FLEX	0.1
FLEX	0.1
TOTAL	**0.65**
30%	**0.85**

MOTT MACDONALD

JOB	505100403
CALC. BY	CM
CHECKED BY	
DATE	4/20/2021
PROJECT NAM	**Orangeburge Building**

System: DOAS-5
Unit: RETURN/EXHAUST

Table 2 - Duct fitting loss coefficient summary

Sub Sequent Item (from Table 1)	Fitting Number	ASHRAE Fitting No.[c]	Type of Fitting[c]	Loss Coefficient, C[c]	Sub Sequent Item
1	1-A	Titus Catalog	Register		1
			Summation of Section 1 Loss Coefficients	0.00	1
2	2-A	CD9-1	Damper, Butterfly	2.20	2
	2-B	CR9-6	Fire Damper, Curtain Type, Type B, Horizontal Duct	0.19	2
	2-C	ER4-1	Transition, Rectangular , Two Sides Parallel, Symmetrical, Exhaust/Return Systems	6.50	2
	2-D	CR3-16	Elbow, Mitered, 90 Degree, Double-Thickness Vanes (3.25 in. Vane Spacing)	0.41	2
	2-E	CR3-16	Elbow, Mitered, 90 Degree, Double-Thickness Vanes (3.25 in. Vane Spacing)	0.41	2
	2-F	CR3-16	Elbow, Mitered, 90 Degree, Double-Thickness Vanes (3.25 in. Vane Spacing)	0.41	2
			Summation of Section 2 Loss Coefficients	10.12	2
3	3-A	CR3-16	Elbow, Mitered, 90 Degree, Double-Thickness Vanes (3.25 in. Vane Spacing)	0.41	3
	3-B	ER5-3	Tee, 45 Degree Entry Branch, Converging	0.76	3
			Summation of Section 3 Loss Coefficients	1.17	3

MOTT MACDONALD

JOB	505100403
CALC. BY	CM
CHECKED BY	
DATE	4/20/2021
PROJECT NAME	**Orangeburge Building**

DUCT PRESSURE LOSS CALCULATION

System: DOAS-5
Unit: SUPPLY

Table 1 - Total pressure loss summary[a]

Duct Section Identification Points[b]	Sub Sequent Item	Duct Element	Type	Height (in., rectangular duct only)	Width (in., rectangular duct only)	Diameter (in., circular duct only)	Duct Size, (in., equivalent round)	Duct Area, (sf)	Airflow, (cfm)	Duct Velocity, (fpm)	Velocity Pressure, (in. of water)	Duct Length, (ft)	Summary of Fitting Loss Coefficients, C	Duct Pressure Loss/100', (in. of water)	Total Pressure Loss, (in. of water)	Total Section Pressure Loss, (in. of water)	Sub Sequent Item
1-1	1	Duct	Rectangular	10	14		12.89	0.97	470	483	-	32.00	-	0.03	0.01	-	1
		Fittings					-	-	470	483	0.01	-	3.30	-	0.05	0.058	
1-2	2	Duct	Rectangular	12	14		14.16	1.17	870	746	-	7.00	-	0.06	0.00	-	2
		Fittings					-	-	870	746	0.03	-	0.84	-	0.03	0.033	
1-3	3	Duct	Rectangular	16	20		19.52	2.22	1,800	810	-	14.00	-	0.05	0.01	-	3
		Fittings					-	-	1,800	810	0.04	-	0.57	-	0.02	0.030	

SUBTOTAL	**0.12**

NOTE 1: [a] This table and all calculations are based on Chapter 21 in the 2009 ASHRAE Fundamentals.
NOTE 2: [b] See Drawing MSK-05 for location of duct identification points.

SR	0.1
FLEX	0.1
FLEX	0.1
TOTAL	**0.42**
30%	**0.55**

MOTT MACDONALD

JOB	505100403
CALC. BY	CM
CHECKED BY	
DATE	4/20/2021
PROJECT NAME	**Orangeburge Building**

System: DOAS-5
Unit: SUPPLY

Table 2 - Duct fitting loss coefficient summary

Sub Sequent Item (from Table 1)	Fitting Number	ASHRAE Fitting No.[c]	Type of Fitting[c]	Loss Coefficient, C[c]	Sub Sequent Item
1	1-A	Titus Catalog	Register		1
	1-B	CR9-11	Fire/Smoke Damper, 3 Hour, Airfoil Blades, Vertical Installation	3.30	1
			Summation of Section 1 Loss Coefficients	3.30	1
2	2-A	SR5-13	Tee, 45 Degree Entry Branch, Diverging	0.43	2
	2-B	CR3-16	Elbow, Mitered, 90 Degree, Double-Thickness Vanes (3.25 in. Vane Spacing)	0.41	2
			Summation of Section 2 Loss Coefficients	0.84	2
3	3-A	SR5-13	Tee, 45 Degree Entry Branch, Diverging	0.51	3
	3-B	SR4-1	Transition, Rectangular, Two Sides Parallel, Symmetrical, Supply Air Systems	0.06	3
			Summation of Section 3 Loss Coefficients	0.57	3

MOTT MACDONALD

JOB	505100403
CALC. BY	CM
CHECKED BY	
DATE	4/20/2021
PROJECT NAME	**Orangeburge Building**

DUCT PRESSURE LOSS CALCULATION

System: DOAS-6
Unit: RETURN/ EXHAUST

Table 1 - Total pressure loss summary[a]

Duct Section Identification Points[b]	Sub Sequent Item	Duct Element	Type	Height (in., rectangular duct only)	Width (in., rectangular duct only)	Diameter (in., circular duct only)	Duct Size, (in., equivalent round)	Duct Area, (sf)	Airflow, (cfm)	Duct Velocity, (fpm)	Velocity Pressure, (in. of water)	Duct Length, (ft)	Summary of Fitting Loss Coefficients, C	Duct Pressure Loss/100', (in. of water)	Total Pressure Loss, (in. of water)	Total Section Pressure Loss, (in. of water)	Sub Sequent Item
1-1	1	Duct	Rectangular	12	12		13.12	1.00	250	250	-	12.00	-	0.01	0.001	-	1
		Fittings					-	-	250	250	0.00	-	3.80	-	0.015	0.02	
1-2	2	Duct	Rectangular	10	14		12.89	0.97	400	411	-	5.00	-	0.02	0.001	-	2
		Fittings					-	-	400	411	0.01	-	1.33	-	0.014	0.02	
1-3	3	Duct	Rectangular	10	14		12.89	0.97	650	669	-	20.00	-	0.05	0.011	-	3
		Fittings					-	-	650	669	0.03	-	1.58	-	0.044	0.05	
1-4	4	Duct	Rectangular	14	10		12.89	0.97	680	699	-	62.00	-	0.06	0.037	-	4
		Fittings					-	-	680	699	0.03	-	1.20	-	0.037	0.07	
1-5	5	Duct	Rectangular	14	22		19.06	2.14	1,555	727	-	5.00	-	0.04	0.002	-	5
		Fittings					-	-	1,555	727	0.03	-	3.98	-	0.131	0.13	
1-6	6	Duct	Rectangular	14	26		20.61	2.53	1,930	764	-	5.00	-	0.04	0.002	-	6
		Fittings					-	-	1,930	764	0.04	-	0.38	-	0.014	0.02	
1-7	7	Duct	Rectangular	14	26		20.61	2.53	2,530	1,001	-	8.00	-	0.07	0.005	-	7
		Fittings					-	-	2,530	1,001	0.06	-	1.33	-	0.083	0.09	
		SUBTOTAL														**0.40**	

NOTE 1: [a] This table and all calculations are based on Chapter 21 in the 2009 ASHRAE Fundamentals.
NOTE 2: [b] See Drawing MSK-06 for location of duct identification points.

RR	0.1
FLEX	0.1
FLEX	0.1
TOTAL	**0.70**
30%	**0.91**

MOTT MACDONALD

JOB	505100403
CALC. BY	CM
CHECKED BY	
DATE	4/20/2021
PROJECT NAME	**Orangeburge Building**

System: DOAS-6
Unit: RETURN/ EXHAUST

Table 2 - Duct fitting loss coefficient summary

Sub Sequent Item (from Table 1)	Fitting Number	ASHRAE Fitting No.[c]	Type of Fitting[c]	Loss Coefficient, C[c]	Sub Sequent Item
1	1-A	Titus Catalog	Register		1
	1-B	CR3-15	Elbow, Mitered, 90 Degree, Double-Thickness Vanes (2.125 in. Vane Spacing)	0.25	1
	1-C	CR3-15	Elbow, Mitered, 90 Degree, Double-Thickness Vanes (2.125 in. Vane Spacing)	0.25	1
	1-D	ER4-1	Transition, Rectangular , Two Sides Parallel, Symmetrical, Exhaust/Return Systems	0.00	1
	1-E	CR9-1	Damper, Butterfly	3.30	1
			Summation of Section 1 Loss Coefficients	3.80	1
2	2-A	ER5-3	Tee, 45 Degree Entry Branch, Converging	1.33	2
			Summation of Section 2 Loss Coefficients	1.33	2
3	3-A	ER5-3	Tee, 45 Degree Entry Branch, Converging	1.33	3
	3-B	ER4-1	Transition, Rectangular , Two Sides Parallel, Symmetrical, Exhaust/Return Systems	0.00	3
	3-C	CR3-15	Elbow, Mitered, 90 Degree, Double-Thickness Vanes (2.125 in. Vane Spacing)	0.25	3
			Summation of Section 3 Loss Coefficients	1.58	3
4	4-A	ER5-3	Tee, 45 Degree Entry Branch, Converging	0.10	4
	4-B	CR3-15	Elbow, Mitered, 90 Degree, Double-Thickness Vanes (2.125 in. Vane Spacing)	0.25	4
	4-C	CR3-15	Elbow, Mitered, 90 Degree, Double-Thickness Vanes (2.125 in. Vane Spacing)	0.25	4
	4-D	CR3-15	Elbow, Mitered, 90 Degree, Double-Thickness Vanes (2.125 in. Vane Spacing)	0.25	4
	4-E	ER4-1	Transition, Rectangular , Two Sides Parallel, Symmetrical, Exhaust/Return Systems	0.35	4
			Summation of Section 4 Loss Coefficients	1.20	4
5	5-A	ER5-3	Tee, 45 Degree Entry Branch, Converging	3.74	5
	5-B	ER4-1	Transition, Rectangular , Two Sides Parallel, Symmetrical, Exhaust/Return Systems	0.24	5
			Summation of Section 5 Loss Coefficients	3.98	5
6	6-A	ER5-3	Tee, 45 Degree Entry Branch, Converging	0.38	6
			Summation of Section 6 Loss Coefficients	0.38	6
7	7-A	CR3-16	Elbow, Mitered, 90 Degree, Double-Thickness Vanes (3.25 in. Vane Spacing)	0.41	7
	7-B	ER5-3	Tee, 45 Degree Entry Branch, Converging	0.57	7
	7-C	ER4-1	Transition, Rectangular , Two Sides Parallel, Symmetrical, Exhaust/Return Systems	0.35	7
			Summation of Section 7 Loss Coefficients	1.33	7

MOTT MACDONALD

JOB	505100403
CALC. BY	CM
CHECKED BY	
DATE	4/20/2021
PROJECT NAME	**Orangeburge Building**

DUCT PRESSURE LOSS CALCULATION

System: DOAS-6
Unit: SUPPLY

Table 1 - Total pressure loss summary[a]

Duct Section Identification Points[b]	Sub Sequent Item	Duct Element	Type	Height (in., rectangular duct only)	Width (in., rectangular duct only)	Diameter (in., circular duct only)	Duct Size, (in., equivalent round)	Duct Area, (sf)	Airflow, (cfm)	Duct Velocity, (fpm)	Velocity Pressure, (in. of water)	Duct Length, (ft)	Summary of Fitting Loss Coefficients, C	Duct Pressure Loss/100', (in. of water)	Total Pressure Loss, (in. of water)	Total Section Pressure Loss, (in. of water)	Sub Sequent Item
1-1	1	Duct	Rectangular	10	12		11.96	0.83	450	540	-	19.00	-	0.04	0.008	-	1
		Fittings					-	-	450	540	0.02	-	4.03	-	0.073	0.081	
1-2	2	Duct	Rectangular	14	8		11.46	0.78	585	752	-	58.00	-	0.08	0.046	-	2
		Fittings					-	-	585	752	0.04	-	1.84	-	0.065	0.111	
1-3	3	Duct	Rectangular	12	22		17.56	1.83	585	319	-	3.00	-	0.01	0.000	-	3
		Fittings					-	-	585	319	0.01	-	0.41	-	0.003	0.003	
1-4	4	Duct	Rectangular	12	22		17.56	1.83	1,805	985	-	25.00	-	0.08	0.019	-	4
		Fittings					-	-	1,805	985	0.06	-	2.97	-	0.179	0.199	
1-5	5	Duct	Rectangular	14	26		20.61	2.53	1,805	714	-	3.00	-	0.03	0.001	-	5
		Fittings					-	-	1,805	714	0.03	-	0.41	-	0.013	0.014	
1-6	6	Duct	Rectangular	14	26		20.61	2.53	2,355	932	-	5.00	-	0.06	0.003	-	6
		Fittings					-	-	2,355	932	0.05	-	0.28	-	0.015	0.018	
															SUBTOTAL	**0.42**	

NOTE 1: [a] This table and all calculations are based on Chapter 21 in the 2009 ASHRAE Fundamentals.
NOTE 2: [b] See Drawing MSK-06 for location of duct identification points.

SD	0.1
FLEX	0.1
FLEX	0.1
TOTAL	**0.72**
30%	**0.94**

MOTT MACDONALD

JOB	505100403
CALC. BY	CM
CHECKED BY	
DATE	4/20/2021
PROJECT NAME	**Orangeburge Building**

System: DOAS-6
Unit: SUPPLY

Table 2 - Duct fitting loss coefficient summary

Sub Sequent Item (from Table 1)	Fitting Number	ASHRAE Fitting No.[c]	Type of Fitting[c]	Loss Coefficient, C[c]	Sub Sequent Item
1	1-A	Titus Catalog	Register		1
	1-B	CR9-1	Damper, Butterfly	3.30	1
	1-C	CR3-15	Elbow, Mitered, 90 Degree, Double-Thickness Vanes (2.125 in. Vane Spacing)	0.25	1
	1-D	CR3-15	Elbow, Mitered, 90 Degree, Double-Thickness Vanes (2.125 in. Vane Spacing)	0.25	1
	1-E	SD4-2	Transition, Rectangular to Round, Supply Air Systems	0.17	1
	1-F	SR4-1	Transition, Rectangular, Two Sides Parallel, Symmetrical, Supply Air Systems	0.06	1
			Summation of Section 1 Loss Coefficients	4.03	1
2	2-A	SR5-13	Tee, 45 Degree Entry Branch, Diverging	1.19	2
	2-B	CR3-15	Elbow, Mitered, 90 Degree, Double-Thickness Vanes (2.125 in. Vane Spacing)	0.25	2
	2-B	CR3-15	Elbow, Mitered, 90 Degree, Double-Thickness Vanes (2.125 in. Vane Spacing)	0.25	2
	2-B	SR4-1	Transition, Rectangular, Two Sides Parallel, Symmetrical, Supply Air Systems	0.15	2
			Summation of Section 2 Loss Coefficients	1.84	2
3	3-A	CR3-16	Elbow, Mitered, 90 Degree, Double-Thickness Vanes (3.25 in. Vane Spacing)	0.41	3
			Summation of Section 3 Loss Coefficients	0.41	3
4	4-A	SR5-13	Tee, 45 Degree Entry Branch, Diverging	0.67	4
	4-B	SR4-1	Transition, Rectangular, Two Sides Parallel, Symmetrical, Supply Air Systems	0.03	4
	4-C	SR5-13	Tee, 45 Degree Entry Branch, Diverging	0.07	4
	4-D	CR9-3	Damper, Parallel and Opposed 3V Blades, Open	2.20	4
			Summation of Section 4 Loss Coefficients	2.97	4
5	5-A	CR3-16	Elbow, Mitered, 90 Degree, Double-Thickness Vanes (3.25 in. Vane Spacing)	0.41	5
			Summation of Section 5 Loss Coefficients	0.41	5
6	6-A	SR5-13	Tee, 45 Degree Entry Branch, Diverging	0.15	6
	6-B	SR4-1	Transition, Rectangular, Two Sides Parallel, Symmetrical, Supply Air Systems	0.13	6
			Summation of Section 6 Loss Coefficients	0.28	6

MOTT MACDONALD

JOB	505100403
CALC. BY	CM
CHECKED BY	
DATE	4/20/2021
PROJECT NAME	**Orangeburge Building**

DUCT PRESSURE LOSS CALCULATION

Equipment: WSHP-1

Table 1 - Total pressure loss summary[a]

Duct Section Identification Points[b]	Sub Sequent Item	Duct Element	Type	Height (in., rectangular duct only)	Width (in., rectangular duct only)	Diameter (in., circular duct only)	Duct Size, (in., equivalent round)	Duct Area, (sf)	Airflow, (cfm)	Duct Velocity, (fpm)	Velocity Pressure, (in. of water)	Duct Length, (ft)	Summary of Fitting Loss Coefficients, C	Duct Pressure Loss/100', (in. of water)	Total Pressure Loss, (in. of water)	Total Section Pressure Loss, (in. of water)	Sub Sequent Item
1-1	1	Duct	Rectangular	8	10		9.76	0.56	260	468	-	19	-	0.04	0.008	-	1
		Fittings					-	-	260	468	0.01	-	2.15	-	0.029	0.04	
1-2	2	Duct	Rectangular	16	12		15.11	1.33	520	390	-	3	-	0.02	0.000	-	2
		Fittings					-	-	520	390	0.01	-	1.18	-	0.011	0.01	
1-3	3	Duct	Rectangular	16	12		15.11	1.33	700	525	-	3	-	0.03	0.001	-	3
		Fittings					-	-	700	525	0.02	-	0.15	-	0.003	0.00	
1-4	4	Duct	Rectangular	8	22		14.06	1.22	430	352	-	4	-	0.02	0.001	-	4
		Fittings					-	-	430	352	0.01	-	2.09	-	0.016	0.02	
1-5	5	Duct	Rectangular	8	22		14.06	1.22	580	475	-	4	-	0.03	0.001	-	5
		Fittings					-	-	580	475	0.01	-	0.98	-	0.014	0.01	
1-6	6	Duct	Rectangular	8	22		14.06	1.22	700	573	-	3.00	-	0.04	0.001	-	6
		Fittings					-	-	700	573	0.02	-	1.30	-	0.027	0.03	

SUBTOTAL	**0.11**

NOTE 1: [a] This table and all calculations are based on Chapter 21 in the 2009 ASHRAE Fundamentals.

NOTE 2: [b] See Drawing MSK-07 for location of duct identification points.

SD	0.05
RR	0.01
FLEX	0.05
FLEX	0.05
MERV-13	0.56
TOTAL	**0.83**
10%	**0.91**

MOTT MACDONALD

JOB	505100403
CALC. BY	CM
CHECKED BY	
DATE	4/20/2021
PROJECT NAME	**Orangeburge Building**

Equipment: WSHP-1

Table 2 - Duct fitting loss coefficient summary

Sub Sequent Item (from Table 1)	Fitting Number	ASHRAE Fitting No.[c]	Type of Fitting[c]	Loss Coefficient, C[c]	Sub Sequent Item
1	1-A	Titus Catalog	Register		1
	1-B	SD4-2	Transition, Rectangular to Round, Supply Air Systems	0.00	1
	1-C	CR9-1	Damper, Butterfly	1.18	1
	1-D	CR3-15	Elbow, Mitered, 90 Degree, Double-Thickness Vanes (2.125 in. Vane Spacing)	0.25	1
	1-E	CR3-6	Elbow, Mitered	0.36	1
		CR3-6	Elbow, Mitered	0.36	1
			Summation of Section 1 Loss Coefficients	2.15	1
2	2-A	SR5-13	Tee, 45 Degree Entry Branch, Diverging	0.51	2
	2-B	SR5-13	Tee, 45 Degree Entry Branch, Diverging	0.67	2
			Summation of Section 2 Loss Coefficients	1.18	2
3	3-A	SR5-11	Tee, Rectangular Main to Round Tap, Diverging	0.15	3
			Summation of Section 3 Loss Coefficients	0.15	3
4	4-A	ER5-3	Tee, 45 Degree Entry Branch, Converging	0.91	4
	4-B	CR9-1	Damper, Butterfly	1.18	4
			Summation of Section 4 Loss Coefficients	2.09	4
5	5-A	ER5-3	Tee, 45 Degree Entry Branch, Converging	0.57	5
	5-B	CR3-16	Elbow, Mitered, 90 Degree, Double-Thickness Vanes (3.25 in. Vane Spacing)	0.41	5
			Summation of Section 5 Loss Coefficients	0.98	5
6	6-A	ER5-3	Tee, 45 Degree Entry Branch, Converging	0.82	6
	6-B	ER4-1	Transition, Rectangular , Two Sides Parallel, Symmetrical, Exhaust/Return Systems	0.48	6
			Summation of Section 6 Loss Coefficients	1.30	6

MOTT MACDONALD

JOB	505100403
CALC. BY	CM
CHECKED BY	
DATE	4/20/2021
PROJECT NAME	**Orangeburge Building**

DUCT PRESSURE LOSS CALCULATION

Equipment: WSHP-2

Table 1 - Total pressure loss summary[a]

Duct Section Identification Points[b]	Sub Sequent Item	Duct Element	Type	Height (in., rectangular duct only)	Width (in., rectangular duct only)	Diameter (in., circular duct only)	Duct Size, (in., equivalent round)	Duct Area, (sf)	Airflow, (cfm)	Duct Velocity, (fpm)	Velocity Pressure, (in. of water)	Duct Length, (ft)	Summary of Fitting Loss Coefficients, C	Duct Pressure Loss/100', (in. of water)	Total Pressure Loss, (in. of water)	Total Section Pressure Loss, (in. of water)	Sub Sequent Item
1-1	1	Duct	Circular			10	10.00	0.55	210	385	-	11	-	0.03	0.003	-	1
		Fittings					-	-	210	385	0.01	-	1.98	-	0.018	0.021	
1-2	2	Duct	Rectangular	16	12		15.11	1.33	420	315	-	3	-	0.01	0.000	-	2
		Fittings					-	-	420	315	0.01	-	0.51	-	0.003	0.003	
1-3	3	Duct	Rectangular	17	28		23.67	3.31	420	127	-	3	-	0.00	0.000	-	3
		Fittings					-	-	420	127	0.00	-	0.91	-	0.001	0.001	
		SUBTOTAL														**0.03**	

NOTE 1: [a] This table and all calculations are based on Chapter 21 in the 2009 ASHRAE Fundamentals.

NOTE 2: [b] See Drawing MSK-07 for location of duct identification points.

SD	0.05
RR	0.01
FLEX	0.05
FLEX	0.05
MERV-13	0.63
TOTAL	**0.82**
10%	**0.90**

MOTT MACDONALD

JOB	505100403
CALC. BY	CM
CHECKED BY	
DATE	4/20/2021
PROJECT NAME	**Orangeburge Building**

Equipment: WSHP-2

Table 2 - Duct fitting loss coefficient summary

Sub Sequent Item (from Table 1)	Fitting Number	ASHRAE Fitting No.[c]	Type of Fitting[c]	Loss Coefficient, C[c]	Sub Sequent Item
1	1-A	Titus Catalog	Register		1
	1-B	CD9-1	Damper, Butterfly	1.76	1
	1-C	CD3-1	Elbow, Die Stamped, 90 Degree, r/D=1.5	0.11	1
	1-D	CD3-1	Elbow, Die Stamped, 90 Degree, r/D=1.5	0.11	1
			Summation of Section 1 Loss Coefficients	1.98	1
2	2-A	SR5-13	Tee, 45 Degree Entry Branch, Diverging	0.51	2
			Summation of Section 2 Loss Coefficients	0.51	2
3	3-A	ER5-3	Tee, 45 Degree Entry Branch, Converging	0.91	3
			Summation of Section 3 Loss Coefficients	0.91	3

MOTT MACDONALD

JOB	505100403
CALC. BY	CM
CHECKED BY	
DATE	4/20/2021
PROJECT NAME	**Orangeburge Building**

DUCT PRESSURE LOSS CALCULATION

Equipment: WSHP-3

Table 1 - Total pressure loss summary[a]

Duct Section Identification Points[b]	Sub Sequent Item	Duct Element	Type	Height (in., rectangular duct only)	Width (in., rectangular duct only)	Diameter (in., circular duct only)	Duct Size, (in., equivalent round)	Duct Area, (sf)	Airflow, (cfm)	Duct Velocity, (fpm)	Velocity Pressure, (in. of water)	Duct Length, (ft)	Summary of Fitting Loss Coefficients, C	Duct Pressure Loss/100', (in. of water)	Total Pressure Loss, (in. of water)	Total Section Pressure Loss, (in. of water)	Sub Sequent Item
1-1	1	Duct	Rectangular	6	12	10	9.14	0.50	220	440	-	9.00	-	0.04	0.004	-	1
		Fittings					-	-	220	440	0.01	-	1.73	-	0.021	0.024	
1-2	2	Duct	Rectangular	16	12		15.11	1.33	440	330	-	12.00	-	0.01	0.001	-	2
		Fittings					-	-	440	330	0.01	-	0.43	-	0.003	0.004	
1-3	3	Duct	Rectangular	12	14		14.16	1.17	605	519	-	4.00	-	0.03	0.001	-	3
		Fittings					-	-	605	519	0.02	-	0.65	-	0.011	0.012	
1-4	4	Duct	Rectangular	12	14		14.16	1.17	650	557	-	5.00	-	0.03	0.002	-	4
		Fittings					-	-	650	557	0.02	-	0.04	-	0.001	0.003	
1-5	5	Duct	Rectangular	6	22		11.95	0.92	440	480	-	7.00	-	0.03	0.002	-	5
		Fittings					-	-	440	480	0.01	-	2.27	-	0.033	0.035	
1-6	6	Duct	Rectangular	8	22		14.06	1.22	650	532	-	4.00	-	0.03	0.001	-	6
		Fittings					-	-	650	532	0.02	-	1.11	-	0.020	0.021	
SUBTOTAL																**0.10**	

NOTE 1: [a] This table and all calculations are based on Chapter 21 in the 2009 ASHRAE Fundamentals.

NOTE 2: [b] See Drawing MSK-07 for location of duct identification points.

SD	0.05
RR	0.01
FLEX	0.05
FLEX	0.05
MERV-13	0.63
TOTAL	**0.89**
10%	**0.98**

MOTT MACDONALD

JOB	505100403
CALC. BY	CM
CHECKED BY	
DATE	4/20/2021
PROJECT NAME	**Orangeburge Building**

Equipment: WSHP-3

Table 2 - Duct fitting loss coefficient summary

Sub Sequent Item (from Table 1)	Fitting Number	ASHRAE Fitting No.[c]	Type of Fitting[c]	Loss Coefficient, C[c]	Sub Sequent Item
1	1-A	Titus Catalog	Register		1
	1-B	CR9-1	Damper, Butterfly	1.18	1
	1-C	CR3-15	Elbow, Mitered, 90 Degree, Double-Thickness Vanes (2.125 in. Vane Spacing)	0.25	1
	1-D	CR3-15	Elbow, Mitered, 90 Degree, Double-Thickness Vanes (2.125 in. Vane Spacing)	0.25	1
	1-E	SR4-3	Transition, Round to Rectangular, Supply Air Systems	0.00	1
	1-F	SR4-1	Transition, Rectangular, Two Sides Parallel, Symmetrical, Supply Air Systems	0.05	1
			Summation of Section 1 Loss Coefficients	1.73	1
2	2-A	SR5-13	Tee, 45 Degree Entry Branch, Diverging	0.38	2
	2-B	SR4-1	Transition, Rectangular, Two Sides Parallel, Symmetrical, Supply Air Systems	0.05	2
			Summation of Section 2 Loss Coefficients	0.43	2
3	3-A	SR5-13	Tee, 45 Degree Entry Branch, Diverging	0.04	3
	3-B	CR3-15	Elbow, Mitered, 90 Degree, Double-Thickness Vanes (2.125 in. Vane Spacing)	0.25	3
	3-C	CR3-6	Elbow, Mitered	0.36	3
			Summation of Section 3 Loss Coefficients	0.65	3
4	4-A	SR5-13	Tee, 45 Degree Entry Branch, Diverging	0.04	4
			Summation of Section 4 Loss Coefficients	0.04	4
5	5-A	ER5-3	Tee, 45 Degree Entry Branch, Converging	0.91	5
	5-B	CR9-1	Damper, Butterfly	1.18	5
	5-C	ER4-1	Transition, Rectangular , Two Sides Parallel, Symmetrical, Exhaust/Return Systems	0.18	5
			Summation of Section 5 Loss Coefficients	2.27	5
6	6-A	ER5-3	Tee, 45 Degree Entry Branch, Converging	0.76	6
	6-B	ER4-1	Transition, Rectangular , Two Sides Parallel, Symmetrical, Exhaust/Return Systems	0.35	6
			Summation of Section 6 Loss Coefficients	1.11	6

MOTT MACDONALD

JOB	505100403
CALC. BY	CM
CHECKED BY	
DATE	4/20/2021
PROJECT NAME	**Orangeburge Building**

DUCT PRESSURE LOSS CALCULATION

Equipment: WSHP-4

Table 1 - Total pressure loss summary[a]

Duct Section Identification Points[b]	Sub Sequent Item	Duct Element	Type	Height (in., rectangular duct only)	Width (in., rectangular duct only)	Diameter (in., circular duct only)	Duct Size, (in., equivalent round)	Duct Area, (sf)	Airflow, (cfm)	Duct Velocity, (fpm)	Velocity Pressure, (in. of water)	Duct Length, (ft)	Summary of Fitting Loss Coefficients, C	Duct Pressure Loss/100', (in. of water)	Total Pressure Loss, (in. of water)	Total Section Pressure Loss, (in. of water)	Sub Sequent Item
1-1	1	Duct	Circular			6	6.00	0.20	75	382	-	11.00	-	0.05	0.006	-	1
		Fittings					-	-	75	382	0.01	-	2.40	-	0.022	0.027	
1-2	2	Duct	Rectangular	8	10		9.76	0.56	180	324	-	7.00	-	0.02	0.001	-	2
		Fittings					-	-	180	324	0.01	-	0.04	-	0.000	0.002	
1-3	3	Duct	Rectangular	8	8		8.75	0.44	45	101	-	11.00	-	0.00	0.000	-	3
		Fittings					-	-	45	101	0.00	-	1.61	-	0.001	0.001	
1-4	4	Duct	Rectangular	8	10		9.76	0.56	115	207	-	7.00	-	0.01	0.001	-	4
		Fittings					-	-	115	207	0.00		3.99	-	0.011	0.011	
1-5	5	Duct	Rectangular	8	10		9.76	0.56	180	324	-	2.00	-	0.02	0.000	-	5
		Fittings					-	-	180	324	0.01	-	1.93	-	0.013	0.01	
SUBTOTAL																**0.05**	

NOTE 1: [a] This table and all calculations are based on Chapter 21 in the 2009 ASHRAE Fundamentals.

NOTE 2: [b] See Drawing MSK-07 for location of duct identification points.

SD	0.05
RR	0.01
FLEX	0.05
FLEX	0.05
MERV-13	0.57
TOTAL	**0.78**
10%	**0.86**

MOTT MACDONALD

JOB	505100403
CALC. BY	CM
CHECKED BY	
DATE	4/20/2021
PROJECT NAME	**Orangeburge Building**

Equipment: WSHP-4

Table 2 - Duct fitting loss coefficient summary

Sub Sequent Item (from Table 1)	Fitting Number	ASHRAE Fitting No.[c]	Type of Fitting[c]	Loss Coefficient, C[c]	Sub Sequent Item
1	1-A	Titus Catalog	Register		1
	1-B	CD9-1	Damper, Butterfly	1.76	1
	1-C	CR3-1	Elbow, Smooth Radius, Without Vanes	0.30	1
	1-D	CR3-1	Elbow, Smooth Radius, Without Vanes	0.30	1
	1-E	SR4-3	Transition, Round to Rectangular, Supply Air Systems	0.04	1
			Summation of Section 1 Loss Coefficients	2.40	1
2	2-A	SR5-13	Tee, 45 Degree Entry Branch, Diverging	0.04	2
			Summation of Section 2 Loss Coefficients	0.04	2
3	3-A	ER4-1	Transition, Rectangular , Two Sides Parallel, Symmetrical, Exhaust/Return Systems	0.18	3
	3-B	CR3-15	Elbow, Mitered, 90 Degree, Double-Thickness Vanes (2.125 in. Vane Spacing)	0.25	3
	3-C	CR9-1	Damper, Butterfly	1.18	3
			Summation of Section 3 Loss Coefficients	1.61	3
4	4-A	SR5-13	Tee, 45 Degree Entry Branch, Diverging	3.74	4
	4-B	CR3-15	Elbow, Mitered, 90 Degree, Double-Thickness Vanes (2.125 in. Vane Spacing)	0.25	4
			Summation of Section 4 Loss Coefficients	3.99	4
5	5-A	ER5-3	Tee, 45 Degree Entry Branch, Converging	1.33	5
	5-B	ER4-1	Transition, Rectangular , Two Sides Parallel, Symmetrical, Exhaust/Return Systems	0.60	5
			Summation of Section 5 Loss Coefficients	1.93	5

MOTT MACDONALD

JOB	505100403
CALC. BY	CM
CHECKED BY	
DATE	4/20/2021
PROJECT NAME	**Orangeburge Building**

DUCT PRESSURE LOSS CALCULATION

Equipment: WSHP-5

Table 1 - Total pressure loss summary[a]

Duct Section Identification Points[b]	Sub Sequent Item	Duct Element	Type	Height (in., rectangular duct only)	Width (in., rectangular duct only)	Diameter (in., circular duct only)	Duct Size, (in., equivalent round)	Duct Area, (sf)	Airflow, (cfm)	Duct Velocity, (fpm)	Velocity Pressure, (in. of water)	Duct Length, (ft)	Summary of Fitting Loss Coefficients, C	Duct Pressure Loss/100', (in. of water)	Total Pressure Loss, (in. of water)	Total Section Pressure Loss, (in. of water)	Sub Sequent Item
1-1	1	Duct	Circular			8	8.00	0.35	150	430	-	18.00	-	0.044	0.008	-	1
		Fittings					-	-	150	430	0.01	-	2.44	-	0.028	0.036	
1-2	2	Duct	Rectangular	10	10		10.93	0.69	280	403	-	3.00	-	0.027	0.001	-	2
		Fittings					-	-	280	403	0.01	-	0.78	-	0.008	0.009	
1-3	3	Duct	Rectangular	16	12		15.11	1.33	700	525	-	6.00	-	0.029	0.002	-	3
		Fittings					-	-	700	525	0.02	-	0.26	-	0.004	0.006	
1-4	4	Duct	Rectangular	8	24		14.61	1.33	125	94	-	17.00	-	0.001	0.000	-	4
		Fittings					-	-	125	94	0.00	-	2.50	-	0.001	0.002	
1-5	5	Duct	Rectangular	8	24		14.61	1.33	230	173	-	11.00	-	0.004	0.000	-	5
		Fittings					-	-	230	173	0.00	-	2.54	-	0.005	0.005	
1-6	6	Duct	Rectangular	8	24		14.61	1.33	575	431	-	12.00	-	0.021	0.003	-	6
		Fittings					-	-	575	431	0.01	-	4.15	-	0.048	0.051	
1-7	7	Duct	Rectangular	8	24		14.61	1.33	700	525	-	4.00	-	0.030	0.001	-	7
		Fittings					-	-	700	525	0.02	-	0.73	-	0.013	0.014	
			SUBTOTAL													**0.12**	

NOTE 1: [a] This table and all calculations are based on Chapter 21 in the 2009 ASHRAE Fundamentals.

NOTE 2: [b] See Drawing MSK-08 for location of duct identification points.

SD	0.05
RR	0.01
FLEX	0.05
FLEX	0.05
MERV-13	0.56
TOTAL	**0.84**
10%	**0.93**

MOTT MACDONALD

JOB	505100403
CALC. BY	CM
CHECKED BY	
DATE	4/20/2021
PROJECT NAME	**Orangeburge Building**

Equipment: WSHP-5

Table 2 - Duct fitting loss coefficient summary

Sub Sequent Item (from Table 1)	Fitting Number	ASHRAE Fitting No.[c]	Type of Fitting[c]	Loss Coefficient, C[c]	Sub Sequent Item
1	1-A	Titus Catalog	Register		1
	1-B	CD9-1	Damper, Butterfly	1.76	1
	1-C	CR3-1	Elbow, Smooth Radius, Without Vanes	0.21	1
	1-D	CR3-1	Elbow, Smooth Radius, Without Vanes	0.21	1
	1-E	CR3-3	Elbow, Smooth Radius, One Splitter Vane	0.13	1
	1-F	CR3-3	Elbow, Smooth Radius, One Splitter Vane	0.13	1
			Summation of Section 1 Loss Coefficients	2.44	1
2	2-A	SR5-13	Tee, 45 Degree Entry Branch, Diverging	0.73	2
	2-B	SR4-1	Transition, Rectangular, Two Sides Parallel, Symmetrical, Supply Air Systems	0.05	2
			Summation of Section 2 Loss Coefficients	0.78	2
3	3-A	SR5-13	Tee, 45 Degree Entry Branch, Diverging	0.13	3
	3-B	SR5-13	Tee, 45 Degree Entry Branch, Diverging	0.13	3
			Summation of Section 3 Loss Coefficients	0.26	3
4	4-A	ER5-3	Tee, 45 Degree Entry Branch, Converging	0.91	4
	4-B	CR9-1	Damper, Butterfly	1.18	4
	4-C	CR3-16	Elbow, Mitered, 90 Degree, Double-Thickness Vanes (3.25 in. Vane Spacing)	0.41	4
			Summation of Section 4 Loss Coefficients	2.50	4
5	5-A	ER5-3	Tee, 45 Degree Entry Branch, Converging	1.78	5
	5-B	CR3-6	Elbow, Mitered	0.38	5
	5-C	CR3-6	Elbow, Mitered	0.38	5
			Summation of Section 5 Loss Coefficients	2.54	5
6	6-A	ER5-3	Tee, 45 Degree Entry Branch, Converging	3.74	6
	6-B	CR3-16	Elbow, Mitered, 90 Degree, Double-Thickness Vanes (3.25 in. Vane Spacing)	0.41	6
			Summation of Section 6 Loss Coefficients	4.15	6
7	7-A	SR5-11	Tee, Rectangular Main to Round Tap, Diverging	0.38	7
	7-B	ER4-1	Transition, Rectangular , Two Sides Parallel, Symmetrical, Exhaust/Return Systems	0.35	7
			Summation of Section 7 Loss Coefficients	0.73	7

MOTT MACDONALD

JOB	505100403
CALC. BY	CM
CHECKED BY	
DATE	4/20/2021
PROJECT NAME	**Orangeburge Building**

DUCT PRESSURE LOSS CALCULATION

Equipment: WSHP-6

Table 1 - Total pressure loss summary[a]

Duct Section Identification Points[b]	Sub Sequent Item	Duct Element	Type	Height (in., rectangular duct only)	Width (in., rectangular duct only)	Diameter (in., circular duct only)	Duct Size, (in., equivalent round)	Duct Area, (sf)	Airflow, (cfm)	Duct Velocity, (fpm)	Velocity Pressure, (in. of water)	Duct Length, (ft)	Summary of Fitting Loss Coefficients, C	Duct Pressure Loss/100', (in. of water)	Total Pressure Loss, (in. of water)	Total Section Pressure Loss, (in. of water)	Sub Sequent Item
1-1	1	Duct	Circular			8	8.00	0.35	130	372	-	15.00	-	0.03	0.005	-	1
		Fittings					-	-	130	372	0.01	-	2.10	-	0.018	0.02	
1-2	2	Duct	Rectangular	10	10		10.93	0.69	250	360	-	3.00	-	0.02	0.001	-	2
		Fittings					-	-	250	360	0.01	-	0.78	-	0.006	0.01	
1-3	3	Duct	Rectangular	16	12		15.11	1.33	700	525	-	4.00	-	0.03	0.001	-	3
		Fittings					-	-	700	525	0.02	-	0.62	-	0.011	0.01	
1-4	4	Duct	Rectangular	8	24		14.61	1.33	105	79	-	19.00	-	0.00	0.000	-	4
		Fittings					-	-	105	79	0.00	-	2.50	-	0.001	0.00	
1-5	5	Duct	Rectangular	8	24		14.61	1.33	205	154	-	11.00	-	0.00	0.000	-	5
		Fittings					-	-	205	154	0.00	-	2.99	-	0.004	0.00	
1-6	6	Duct	Rectangular	8	24		14.61	1.33	575	431	-	14.00	-	0.02	0.003	-	6
		Fittings					-	-	575	431	0.01	-	5.55	-	0.064	0.07	
1-7	7	Duct	Rectangular	8	24		14.61	1.33	700	525	-	4.00	-	0.03	0.001	-	7
		Fittings					-	-	700	525	0.02	-	0.73	-	0.013	0.01	
SUBTOTAL																**0.13**	

NOTE 1: [a] This table and all calculations are based on Chapter 21 in the 2009 ASHRAE Fundamentals.

NOTE 2: [b] See Drawing MSK-08 for location of duct identification points.

SD	0.05
RR	0.01
FLEX	0.05
FLEX	0.05
MERV-13	0.56
TOTAL	**0.85**
10%	**0.93**

MOTT MACDONALD

JOB	505100403
CALC. BY	CM
CHECKED BY	
DATE	4/20/2021
PROJECT NAME	**Orangeburge Building**

Equipment: WSHP-6

Table 2 - Duct fitting loss coefficient summary

Sub Sequent Item (from Table 1)	Fitting Number	ASHRAE Fitting No.[c]	Type of Fitting[c]	Loss Coefficient, C[c]	Sub Sequent Item
1	1-A	Titus Catalog	Register		1
	1-B	CD9-1	Damper, Butterfly	1.76	1
	1-C	CR3-1	Elbow, Smooth Radius, Without Vanes	0.21	1
	1-D	CR3-3	Elbow, Smooth Radius, One Splitter Vane	0.13	1
			Summation of Section 1 Loss Coefficients	2.10	1
2	2-A	SR5-13	Tee, 45 Degree Entry Branch, Diverging	0.73	2
	2-B	SR4-1	Transition, Rectangular, Two Sides Parallel, Symmetrical, Supply Air Systems	0.05	2
			Summation of Section 2 Loss Coefficients	0.78	2
3	3-A	SR5-13	Tee, 45 Degree Entry Branch, Diverging	0.31	3
	3-B	SR5-13	Tee, 45 Degree Entry Branch, Diverging	0.31	3
			Summation of Section 3 Loss Coefficients	0.62	3
4	4-A	ER5-3	Tee, 45 Degree Entry Branch, Converging	0.91	4
	4-B	CR9-1	Damper, Butterfly	1.18	4
	4-C	CR3-16	Elbow, Mitered, 90 Degree, Double-Thickness Vanes (3.25 in. Vane Spacing)	0.41	4
			Summation of Section 4 Loss Coefficients	2.50	4
5	5-A	ER5-3	Tee, 45 Degree Entry Branch, Converging	2.23	5
	5-B	CR3-6	Elbow, Mitered	0.38	5
	5-C	CR3-6	Elbow, Mitered	0.38	5
			Summation of Section 5 Loss Coefficients	2.99	5
6	6-A	ER5-3	Tee, 45 Degree Entry Branch, Converging	5.14	6
	6-B	CR3-16	Elbow, Mitered, 90 Degree, Double-Thickness Vanes (3.25 in. Vane Spacing)	0.41	6
			Summation of Section 6 Loss Coefficients	5.55	6
7	7-A	ER5-3	Tee, 45 Degree Entry Branch, Converging	0.38	7
	7-B	ER4-1	Transition, Rectangular , Two Sides Parallel, Symmetrical, Exhaust/Return Systems	0.35	7
			Summation of Section 7 Loss Coefficients	0.73	7

MOTT MACDONALD

JOB	505100403
CALC. BY	CM
CHECKED BY	
DATE	4/20/2021
PROJECT NAME	**Orangeburge Building**

DUCT PRESSURE LOSS CALCULATION

Equipment: WSHP-7

Table 1 - Total pressure loss summary[a]

Duct Section Identification Points[b]	Sub Sequent Item	Duct Element	Type	Height (in., rectangular duct only)	Width (in., rectangular duct only)	Diameter (in., circular duct only)	Duct Size, (in., equivalent round)	Duct Area, (sf)	Airflow, (cfm)	Duct Velocity, (fpm)	Velocity Pressure, (in. of water)	Duct Length, (ft)	Summary of Fitting Loss Coefficients, C	Duct Pressure Loss/100', (in. of water)	Total Pressure Loss, (in. of water)	Total Section Pressure Loss, (in. of water)	Sub Sequent Item
1-1	1	Duct	Rectangular	8	8		8.75	0.44	110	248	-	15.00	-	0.01	0.002	-	1
		Fittings					-	-	110	248	0.00	-	1.68	-	0.006	0.009	
1-2	2	Duct	Rectangular	10	14		12.89	0.97	405	417	-	3.00	-	0.02	0.001	-	2
		Fittings					-	-	405	417	0.01	-	0.06	-	0.001	0.001	
1-3	3	Duct	Rectangular	12	22		17.56	1.83	700	382	-	4.00	-	0.01	0.001	-	3
		Fittings					-	-	700	382	0.01	-	0.04	-	0.000	0.001	
1-4	4	Duct	Rectangular	12	22		17.56	1.83	995	543	-	19.00	-	0.03	0.005	-	4
		Fittings					-	-	995	543	0.02	-	0.15	-	0.003	0.008	
1-5	5	Duct	Rectangular	18	20		20.73	2.50	1,370	548	-	11.00	-	0.02	0.002	-	5
		Fittings					-	-	1,370	548	0.02	-	0.73	-	0.014	0.016	
1-6	6	Duct	Rectangular	8	24		14.61	1.33	70	53	-	14.00	-	0.00	0.000	-	6
		Fittings					-	-	70	53	0.00	-	2.85	-	0.000	0.001	
1-7	7	Duct	Rectangular	8	24		14.61	1.33	665	499	-	4.00	-	0.03	0.001	-	7
		Fittings					-	-	665	499	0.02	-	5.26	-	0.082	0.083	
1-8	8	Duct	Rectangular	16	16		17.49	1.78	1,370	771	-	4.00	-	0.05	0.002	-	8
		Fittings					-	-	1,370	771	0.04	-	1.94	-	0.072	0.074	
1-9	9	Duct	Rectangular	18	40		28.77	5.00	1,370	274	-	3.00	-	0.00	0.000	-	9
		Fittings					-	-	1,370	274	0.00	-	0.59	-	0.003	0.003	
SUBTOTAL																**0.19**	

NOTE 1: [a] This table and all calculations are based on Chapter 21 in the 2009 ASHRAE Fundamentals.

NOTE 2: [b] See Drawing MSK-08 for location of duct identification points.

SD	0.05
RR	0.01
FLEX	0.05
FLEX	0.05
MERV-13	0.56
TOTAL	**0.91**
10%	**1.0**

MOTT MACDONALD

JOB	505100403
CALC. BY	CM
CHECKED BY	
DATE	4/20/2021
PROJECT NAME	**Orangeburge Building**

Equipment: WSHP-7

Table 2 - Duct fitting loss coefficient summary

Sub Sequent Item (from Table 1)	Fitting Number	ASHRAE Fitting No.[c]	Type of Fitting[c]	Loss Coefficient, C[c]	Sub Sequent Item
1	1-A	Titus Catalog	Register		1
	1-B	CR9-1	Damper, Butterfly	1.18	1
	1-C	CR3-15	Elbow, Mitered, 90 Degree, Double-Thickness Vanes (2.125 in. Vane Spacing)	0.25	1
	1-D	CR3-15	Elbow, Mitered, 90 Degree, Double-Thickness Vanes (2.125 in. Vane Spacing)	0.25	1
	1-E	SR4-3	Transition, Round to Rectangular, Supply Air Systems	0.00	1
			Summation of Section 1 Loss Coefficients	1.68	1
2	2-A	SR5-13	Tee, 45 Degree Entry Branch, Diverging	1.68	2
	2-B	SR4-1	Transition, Rectangular, Two Sides Parallel, Symmetrical, Supply Air Systems	0.06	2
			Summation of Section 2 Loss Coefficients	0.06	2
3	3-A	SR5-13	Tee, 45 Degree Entry Branch, Diverging	0.04	3
			Summation of Section 3 Loss Coefficients	0.04	3
4	4-A	SR5-13	Tee, 45 Degree Entry Branch, Diverging	0.15	4
			Summation of Section 4 Loss Coefficients	0.15	4
5	5-A	SR5-13	Tee, 45 Degree Entry Branch, Diverging	0.73	5
			Summation of Section 5 Loss Coefficients	0.73	5
6	6-A	ER5-3	Tee, 45 Degree Entry Branch, Converging	0.91	6
	6-B	CR3-6	Elbow, Mitered	0.38	6
	6-C	CR3-6	Elbow, Mitered	0.38	6
	6-D	CR9-1	Damper, Butterfly	1.18	6
			Summation of Section 6 Loss Coefficients	2.85	6
7	7-A	ER5-3	Tee, 45 Degree Entry Branch, Converging	2.15	7
	7-B	CR3-9	Elbow, Mitered, 90 Degree, Single-Thickness Vanes (1.5 in. Vane Spacing)	0.41	7
	7-C	CR3-6	Elbow, Mitered	0.38	7
	7-D	CR3-6	Elbow, Mitered	0.38	7
	7-E	CR3-6	Elbow, Mitered	0.38	7
	7-F	CR3-6	Elbow, Mitered	0.38	7
	7-G	CR9-1	Damper, Butterfly	1.18	7
			Summation of Section 7 Loss Coefficients	5.26	7
8	8-A	ER5-3	Tee, 45 Degree Entry Branch, Converging	0.76	8
	8-B	CR9-1	Damper, Butterfly	1.18	8
			Summation of Section 8 Loss Coefficients	1.94	8
9	9-A	ER5-3	Tee, 45 Degree Entry Branch, Converging	0.53	9
	9-B	SR4-1	Transition, Rectangular, Two Sides Parallel, Symmetrical, Supply Air Systems	0.06	9
			Summation of Section 9 Loss Coefficients	0.59	9

MOTT MACDONALD

JOB	505100403
CALC. BY	CM
CHECKED BY	
DATE	4/20/2021
PROJECT NAME	**Orangeburge Building**

DUCT PRESSURE LOSS CALCULATION

Equipment: WSHP-8, 9, 10 & 11

Table 1 - Total pressure loss summary[(a)]

Duct Section Identification Points[(b)]	Sub Sequent Item	Duct Element	Type	Height (in., rectangular duct only)	Width (in., rectangular duct only)	Diameter (in., circular duct only)	Duct Size, (in., equivalent round)	Duct Area, (sf)	Airflow, (cfm)	Duct Velocity, (fpm)	Velocity Pressure, (in. of water)	Duct Length, (ft)	Summary of Fitting Loss Coefficients, C	Duct Pressure Loss/100', (in. of water)	Total Pressure Loss, (in. of water)	Total Section Pressure Loss, (in. of water)	Sub Sequent Item
1-1	1	Duct	Circular			10	10.00	0.55	220	403	-	9.00	-	0.03	0.003	-	1
		Fittings					-	-	220	403	0.01	-	1.93	-	0.020	0.022	
1-2	2	Duct	Rectangular	10	12		11.96	0.83	435	522	-	6.00	-	0.04	0.002	-	2
		Fittings					-	-	435	522	0.02	-	0.29	-	0.005	0.007	
1-3	3	Duct	Rectangular	12	12		13.12	1.00	650	650	-	6.00	-	0.05	0.003	-	3
		Fittings					-	-	650	650	0.03	-	1.14	-	0.030	0.033	
1-4	4	Duct	Rectangular	8	24		14.61	1.33	380	285	-	11.00	-	0.01	0.001	-	4
		Fittings					-	-	380	285	0.01	-	3.00	-	0.015	0.016	
1-5	5	Duct	Rectangular	12	24		18.28	2.00	650	325	-	7.00	-	0.01	0.001	-	5
		Fittings					-	-	650	325	0.01	-	3.48	-	0.023	0.02	
SUBTOTAL																**0.10**	

NOTE 1: [a] This table and all calculations are based on Chapter 21 in the 2009 ASHRAE Fundamentals.

NOTE 2: [b] See Drawing MSK-09 for location of duct identification points.

SD	0.05
RR	0.01
FLEX	0.05
FLEX	0.05
MERV-13	0.56
TOTAL	**0.82**
10%	**0.90**

MOTT MACDONALD

JOB	505100403
CALC. BY	CM
CHECKED BY	
DATE	4/20/2021
PROJECT NAME	**Orangeburge Building**

Equipment: WSHP-8, 9, 10 & 11

Table 2 - Duct fitting loss coefficient summary

Sub Sequent Item (from Table 1)	Fitting Number	ASHRAE Fitting No.[c]	Type of Fitting[c]	Loss Coefficient, C[c]	Sub Sequent Item
1	1-A	Titus Catalog	Register		1
	1-B	CD9-1	Damper, Butterfly	1.76	1
	1-C	CD3-1	Elbow, Die Stamped, 90 Degree, r/D=1.5	0.11	1
	1-D	SD4-2	Transition, Rectangular to Round, Supply Air Systems	0.06	1
			Summation of Section 1 Loss Coefficients	1.93	1
2	2-A	SR5-13	Tee, 45 Degree Entry Branch, Diverging	0.04	2
	2-B	CR3-15	Elbow, Mitered, 90 Degree, Double-Thickness Vanes (2.125 in. Vane Spacing)	0.25	2
			Summation of Section 2 Loss Coefficients	0.29	2
3	3-A	SR5-11	Tee, Rectangular Main to Round Tap, Diverging	1.11	3
	3-B	SD4-2	Transition, Rectangular to Round, Supply Air Systems	0.03	3
			Summation of Section 3 Loss Coefficients	1.14	3
4	4-A	ER5-3	Tee, 45 Degree Entry Branch, Converging	0.91	4
	4-B	CR9-1	Damper, Butterfly	1.18	4
	4-C	ER5-3	Tee, 45 Degree Entry Branch, Converging	0.91	4
			Summation of Section 4 Loss Coefficients	3.00	4
5	5-A	ER5-3	Tee, 45 Degree Entry Branch, Converging	3.00	5
	5-B	ER4-1	Transition, Rectangular , Two Sides Parallel, Symmetrical, Exhaust/Return Systems	0.48	5
			Summation of Section 5 Loss Coefficients	3.48	5

MOTT MACDONALD

JOB	505100403
CALC. BY	CM
CHECKED BY	
DATE	4/20/2021
PROJECT NAME	**Orangeburge Building**

DUCT PRESSURE LOSS CALCULATION

Equipment: WSHP-12

Table 1 - Total pressure loss summary[a]

Duct Section Identification Points[b]	Sub Sequent Item	Duct Element	Type	Height (in., rectangular duct only)	Width (in., rectangular duct only)	Diameter (in., circular duct only)	Duct Size, (in., equivalent round)	Duct Area, (sf)	Airflow, (cfm)	Duct Velocity, (fpm)	Velocity Pressure, (in. of water)	Duct Length, (ft)	Summary of Fitting Loss Coefficients, C	Duct Pressure Loss/100', (in. of water)	Total Pressure Loss, (in. of water)	Total Section Pressure Loss, (in. of water)	Sub Sequent Item
1-1	1	Duct	Circular				10.00	0.55	225	413	-	14.00	-	0.03	0.004	-	1
		Fittings					-	-	225	413	0.01	-	4.49	-	0.048	0.052	
1-2	2	Duct	Rectangular	6	10		8.40	0.42	225	540	-	6.00	-	0.06	0.004	-	2
		Fittings					-	-	225	540	0.02	-	3.28	-	0.060	0.063	
1-3	3	Duct	Rectangular	10	26		17.15	1.81	450	249	-	7.00	-	0.01	0.000	-	3
		Fittings					-	-	450	249	0.00	-	0.32	-	0.001	0.002	
1-4	4	Duct	Rectangular	10	26		17.15	1.81	675	374	-	4.00	-	0.01	0.001	-	4
		Fittings					-	-	675	374	0.01	-	0.21	-	0.002	0.002	
1-5	5	Duct	Rectangular	14	26		20.61	2.53	1,125	445	-	4.00	-	0.01	0.001	-	5
		Fittings					-	-	1,125	445	0.01	-	0.18	-	0.002	0.003	
1-6	6	Duct	Rectangular	14	26		20.61	2.53	1,350	534	-	3.00	-	0.02	0.001	-	6
		Fittings					-	-	1,350	534	0.02	-	0.07	-	0.001	0.002	
1-7	7	Duct	Rectangular	18	26		23.55	3.25	1,575	485	-	4.00	-	0.01	0.001	-	7
		Fittings					-	-	1,575	485	0.01	-	0.07	-	0.001	0.002	
1-8	8	Duct	Rectangular	18	26		23.55	3.25	1,800	554	-	2.00	-	0.02	0.000	-	8
		Fittings					-	-	1,800	554	0.02	-	0.07	-	0.001	0.002	
1-9	9	Duct	Rectangular	18	26		23.55	3.25	2,025	623	-	5.00	-	0.02	0.001	-	9
		Fittings					-	-	2,025	623	0.02	-	0.11	-	0.003	0.004	
1-10	10	Duct	Rectangular	18	36		27.42	4.50	2,025	450	-	4.00	-	0.01	0.000	-	10
		Fittings					-	-	2,025	450	0.01	-	0.41	-	0.005	0.006	
1-11	11	Duct	Rectangular	6	28		13.24	1.17	675	579	-	3.00	-	0.04	0.001	-	11
		Fittings					-	-	675	579	0.02	-	4.21	-	0.088	0.089	
1-12	12	Duct	Rectangular	18	14	6	17.32	1.75	675	386	-	12.00	-	0.01	0.002	-	12
		Fittings					-	-	675	386	0.01	-	0.91	-	0.008	0.010	
1-13	13	Duct	Rectangular	18	14	6	17.32	1.75	1,350	771	-	9.00	-	0.05	0.004	-	13
		Fittings					-	-	1,350	771	0.04		2.23	-	0.083	0.087	
1-14	14	Duct	Rectangular	20	38	6	29.76	5.28	2,025	384	-	5.00	-	0.01	0.000	-	14
		Fittings					-	-	2,025	384	0.01	-	5.99	-	0.055	0.055	
		SUBTOTAL														**0.38**	

NOTE 1: [a] This table and all calculations are based on Chapter 21 in the 2009 ASHRAE Fundamentals.

NOTE 2: [b] See Drawing MSK-10 for location of duct identification points.

SD	0.05
RR	0.05
FLEX	0.05
FLEX	0.05
MERV-13	0.56
TOTAL	**1.14**
10%	**1.3**

MOTT MACDONALD

JOB	505100403
CALC. BY	CM
CHECKED BY	
DATE	4/20/2021
PROJECT NAME	**Orangeburge Building**

Equipment: WSHP-12

Table 2 - Duct fitting loss coefficient summary

Sub Sequent Item (from Table 1)	Fitting Number	ASHRAE Fitting No.[c]	Type of Fitting[c]	Loss Coefficient, C[c]	Sub Sequent Item
1	1-A	Titus Catalog	Register		1
	1-B	CD3-1	Elbow, Die Stamped, 90 Degree, r/D=1.5	0.11	1
	1-C	CR9-1	Damper, Butterfly	4.38	1
	1-D	SD4-2	Transition, Rectangular to Round, Supply Air Systems	0.00	1
			Summation of Section 1 Loss Coefficients	4.49	1
2	2-A	SR5-13	Tee, 45 Degree Entry Branch, Diverging	0.32	2
	2-B	CR3-6	Elbow, Mitered	0.38	2
	2-C	CR3-6	Elbow, Mitered	0.38	2
	2-D	CR9-3	Damper, Parallel and Opposed 3V Blades, Open	2.20	2
			Summation of Section 2 Loss Coefficients	3.28	2
3	3-A	SR5-13	Tee, 45 Degree Entry Branch, Diverging	0.32	3
			Summation of Section 3 Loss Coefficients	0.32	3
4	4-A	SR5-13	Tee, 45 Degree Entry Branch, Diverging	0.15	4
	4-B	SR4-1	Transition, Rectangular, Two Sides Parallel, Symmetrical, Supply Air Systems	0.06	4
			Summation of Section 4 Loss Coefficients	0.21	4
5	5-A	SR5-13	Tee, 45 Degree Entry Branch, Diverging	0.09	5
	5-B	SR5-13	Tee, 45 Degree Entry Branch, Diverging	0.09	5
			Summation of Section 5 Loss Coefficients	0.18	5
6	6-A	SR5-11	Tee, Rectangular Main to Round Tap, Diverging	0.07	6
			Summation of Section 6 Loss Coefficients	0.07	6
7	7-A	SR5-11	Tee, Rectangular Main to Round Tap, Diverging	0.07	7
			Summation of Section 7 Loss Coefficients	0.07	7
8	8-A	SR5-13	Tee, 45 Degree Entry Branch, Diverging	0.07	8
			Summation of Section 8 Loss Coefficients	0.07	8
9	9-A	SR5-13	Tee, 45 Degree Entry Branch, Diverging	0.05	9
	9-B	SR4-1	Transition, Rectangular, Two Sides Parallel, Symmetrical, Supply Air Systems	0.06	9
			Summation of Section 9 Loss Coefficients	0.11	9
10	10-A	CR3-16	Elbow, Mitered, 90 Degree, Double-Thickness Vanes (3.25 in. Vane Spacing)	0.41	10
			Summation of Section 10 Loss Coefficients	0.41	10
11	11-A	ER5-3	Tee, 45 Degree Entry Branch, Converging	0.91	11
	11-B	CR9-1	Damper, Butterfly	3.30	11
			Summation of Section 11 Loss Coefficients	4.21	11
12	12-A	ER5-3	Tee, 45 Degree Entry Branch, Converging	0.91	12
			Summation of Section 12 Loss Coefficients	0.91	12
13	13-A	ER5-3	Tee, 45 Degree Entry Branch, Converging	2.23	13
			Summation of Section 13 Loss Coefficients	2.23	13
14	14-A	ER5-3	Tee, 45 Degree Entry Branch, Converging	2.46	14
	14-B	ER5-3	Tee, 45 Degree Entry Branch, Converging	1.33	14
	14-C	CR9-1	Damper, Butterfly	2.20	14
			Summation of Section 14 Loss Coefficients	5.99	14
15	15-A	ER5-3	Tee, 45 Degree Entry Branch, Converging	6.54	15
			Summation of Section 15 Loss Coefficients	6.54	15

MOTT MACDONALD

JOB	505100403
CALC. BY	CM
CHECKED BY	
DATE	4/20/2021
PROJECT NAME	**Orangeburge Building**

DUCT PRESSURE LOSS CALCULATION

Equipment: WSHP-13

Table 1 - Total pressure loss summary[a]

Duct Section Identification Points[b]	Sub Sequent Item	Duct Element	Type	Height (in., rectangular duct only)	Width (in., rectangular duct only)	Diameter (in., circular duct only)	Duct Size, (in., equivalent round)	Duct Area, (sf)	Airflow, (cfm)	Duct Velocity, (fpm)	Velocity Pressure, (in. of water)	Duct Length, (ft)	Summary of Fitting Loss Coefficients, C	Duct Pressure Loss/100', (in. of water)	Total Pressure Loss, (in. of water)	Total Section Pressure Loss, (in. of water)	Sub Sequent Item
1-1	1	Duct	Circular				10.00	0.55	225	413	-	14.00	-	0.03	0.004	-	1
		Fittings					-	-	225	413	0.01	-	2.67	-	0.028	0.033	
1-2	2	Duct	Rectangular	6	10		8.40	0.42	225	540	-	6.00	-	0.06	0.004	-	2
		Fittings					-	-	225	540	0.02	-	3.12	-	0.057	0.060	
1-3	3	Duct	Rectangular	10	26		17.15	1.81	450	249	-	7.00	-	0.01	0.000	-	3
		Fittings					-	-	450	249	0.00	-	0.45	-	0.002	0.002	
1-4	4	Duct	Rectangular	10	26		17.15	1.81	675	374	-	4.00	-	0.01	0.001	-	4
		Fittings					-	-	675	374	0.01	-	0.62	-	0.005	0.006	
1-5	5	Duct	Rectangular	14	26		20.61	2.53	1,125	445	-	4.00	-	0.01	0.001	-	5
		Fittings					-	-	1,125	445	0.01	-	4.57	-	0.056	0.057	
1-6	6	Duct	Rectangular	14	26		20.61	2.53	1,350	534	-	3.00	-	0.02	0.001	-	6
		Fittings					-	-	1,350	534	0.02	-	2.99	-	0.053	0.054	

SUBTOTAL	**0.21**

NOTE 1: [a] This table and all calculations are based on Chapter 21 in the 2009 ASHRAE Fundamentals.

NOTE 2: [b] See Drawing MSK-11 for location of duct identification points.

SD	0.05
RR	0.05
FLEX	0.05
FLEX	0.05
MERV-13	0.56
TOTAL	**0.97**
10%	**1.1**

MOTT MACDONALD

JOB	505100403
CALC. BY	CM
CHECKED BY	
DATE	4/20/2021
PROJECT NAME	**Orangeburge Building**

Equipment: WSHP-13

Table 2 - Duct fitting loss coefficient summary

Sub Sequent Item (from Table 1)	Fitting Number	ASHRAE Fitting No.[c]	Type of Fitting[c]	Loss Coefficient, C[c]	Sub Sequent Item
1	1-A	Titus Catalog	Register		1
	1-B	SD4-2	Transition, Rectangular to Round, Supply Air Systems	0.00	1
	1-C	CR9-1	Damper, Butterfly	2.20	1
	1-D	CR3-16	Elbow, Mitered, 90 Degree, Double-Thickness Vanes (3.25 in. Vane Spacing)	0.41	1
	1-E	SR4-1	Transition, Rectangular, Two Sides Parallel, Symmetrical, Supply Air Systems	0.06	1
			Summation of Section 1 Loss Coefficients	2.67	1
2	2-A	SR5-13	Tee, 45 Degree Entry Branch, Diverging	0.10	2
	2-B	CR3-6	Elbow, Mitered	0.38	2
	2-C	CR3-6	Elbow, Mitered	0.38	2
	2-D	CR3-16	Elbow, Mitered, 90 Degree, Double-Thickness Vanes (3.25 in. Vane Spacing)	2.20	2
	2-E	SR4-1	Transition, Rectangular, Two Sides Parallel, Symmetrical, Supply Air Systems	0.06	2
			Summation of Section 2 Loss Coefficients	3.12	2
3	3-A	SR5-13	Tee, 45 Degree Entry Branch, Diverging	0.04	3
	3-B	CR3-16	Elbow, Mitered, 90 Degree, Double-Thickness Vanes (3.25 in. Vane Spacing)	0.41	3
			Summation of Section 3 Loss Coefficients	0.45	3
4	4-A	SR5-13	Tee, 45 Degree Entry Branch, Diverging	0.15	4
	4-B	CR3-16	Elbow, Mitered, 90 Degree, Double-Thickness Vanes (3.25 in. Vane Spacing)	0.41	4
	4-C	SR4-1	Transition, Rectangular, Two Sides Parallel, Symmetrical, Supply Air Systems	0.06	4
			Summation of Section 4 Loss Coefficients	0.62	4
5	5-A	ER5-3	Tee, 45 Degree Entry Branch, Converging	0.10	5
	5-B	CR9-1	Damper, Butterfly	3.30	5
	5-C	CR3-16	Elbow, Mitered, 90 Degree, Double-Thickness Vanes (3.25 in. Vane Spacing)	0.41	5
	5-D	CR3-16	Elbow, Mitered, 90 Degree, Double-Thickness Vanes (3.25 in. Vane Spacing)	0.41	5
	5-E	ER4-1	Transition, Rectangular , Two Sides Parallel, Symmetrical, Exhaust/Return Systems	0.35	5
			Summation of Section 5 Loss Coefficients	4.57	5
6	6-A	ER5-3	Tee, 45 Degree Entry Branch, Converging	2.23	6
	6-B	CR3-16	Elbow, Mitered, 90 Degree, Double-Thickness Vanes (3.25 in. Vane Spacing)	0.41	6
	6-C	ER4-1	Transition, Rectangular , Two Sides Parallel, Symmetrical, Exhaust/Return Systems	0.35	6
			Summation of Section 6 Loss Coefficients	2.99	6

MOTT MACDONALD

JOB	505100403
CALC. BY	CM
CHECKED BY	
DATE	4/20/2021
PROJECT NAME	**Orangeburge Building**

DUCT PRESSURE LOSS CALCULATION

Equipment: WSHP-14

Table 1 - Total pressure loss summary[(a)]

Duct Section Identification Points[(b)]	Sub Sequent Item	Duct Element	Type	Height (in., rectangular duct only)	Width (in., rectangular duct only)	Diameter (in., circular duct only)	Duct Size, (in., equivalent round)	Duct Area, (sf)	Airflow, (cfm)	Duct Velocity, (fpm)	Velocity Pressure, (in. of water)	Duct Length, (ft)	Summary of Fitting Loss Coefficients, C	Duct Pressure Loss/100', (in. of water)	Total Pressure Loss, (in. of water)	Total Section Pressure Loss, (in. of water)	Sub Sequent Item
1-1	1	Duct	Rectangular	8	8		8.75	0.44	150	338	-	6.00	-	0.03	0.002	-	1
		Fittings					-	-	150	338	0.01	-	0.31	-	0.002	0.004	
1-2	2	Duct	Rectangular	14	18		17.32	1.75	60	34	-	3.00	-	0.00	0.000	-	2
		Fittings					-	-	60	34	0.00	-	0.91	-	0.000	0.0001	
1-3	3	Duct	Rectangular	14	18		17.32	1.75	150	86	-	1.00	-	0.00	0.000	-	3
		Fittings					-	-	150	86	0.00	-	3.75	-	0.002	0.0017	
			SUBTOTAL													**0.01**	

NOTE 1: [a] This table and all calculations are based on Chapter 21 in the 2009 ASHRAE Fundamentals.

NOTE 2: [b] See Drawing MSK-09 for location of duct identification points.

SD	0.05
RR	0.01
FLEX	0.05
FLEX	0.05
MERV-13	0.56
TOTAL	**0.73**
10%	**0.80**

MOTT MACDONALD

JOB	505100403
CALC. BY	CM
CHECKED BY	
DATE	4/20/2021
PROJECT NAME	**Orangeburge Building**

Equipment: WSHP-14

Table 2 - Duct fitting loss coefficient summary

Sub Sequent Item (from Table 1)	Fitting Number	ASHRAE Fitting No.[c]	Type of Fitting[c]	Loss Coefficient, C[c]	Sub Sequent Item
1	1-A	Titus Catalog	Register		1
	1-B	CR3-15	Elbow, Mitered, 90 Degree, Double-Thickness Vanes (2.125 in. Vane Spacing)	0.25	1
	1-C	SD4-2	Transition, Rectangular to Round, Supply Air Systems	0.06	1
			Summation of Section 1 Loss Coefficients	0.31	1
2	2-A	ER5-3	Tee, 45 Degree Entry Branch, Converging	0.91	2
			Summation of Section 2 Loss Coefficients	0.91	2
3	3-A	ER5-3	Tee, 45 Degree Entry Branch, Converging	3.74	3
	3-B	ER4-1	Transition, Rectangular , Two Sides Parallel, Symmetrical, Exhaust/Return Systems	0.01	3
			Summation of Section 3 Loss Coefficients	3.75	3

MOTT MACDONALD

JOB	505100403
CALC. BY	CM
CHECKED BY	
DATE	4/20/2021
PROJECT NAME	**Orangeburge Building**

DUCT PRESSURE LOSS CALCULATION

Equipment: WSHP-15

Table 1 - Total pressure loss summary[a]

Duct Section Identification Points[b]	Sub Sequent Item	Duct Element	Type	Height (in., rectangular duct only)	Width (in., rectangular duct only)	Diameter (in., circular duct only)	Duct Size, (in., equivalent round)	Duct Area, (sf)	Airflow, (cfm)	Duct Velocity, (fpm)	Velocity Pressure, (in. of water)	Duct Length, (ft)	Summary of Fitting Loss Coefficients, C	Duct Pressure Loss/100', (in. of water)	Total Pressure Loss, (in. of water)	Total Section Pressure Loss, (in. of water)	Sub Sequent Item
1-1	1	Duct	Circular			8	8.00	0.35	85	244	-	6.00	-	0.02	0.001	-	1
		Fittings					-	-	85	244	0.00	-	2.03	-	0.008	0.008	
1-2	2	Duct	Rectangular	10	10		10.93	0.69	85	122	-	2.00	-	0.00	0.000	-	2
		Fittings					-	-	85	122	0.00	-	0.00	-	0.000	0.0001	
1-3	3	Duct	Rectangular	10	10		10.93	0.69	175	252	-	5.00	-	0.01	0.001	-	3
		Fittings					-	-	175	252	0.00	-	1.22	-	0.005	0.005	
1-4	4	Duct	Rectangular	6	24		12.41	1.00	65	65	-	6.00	-	0.00	0.000	-	4
		Fittings					-	-	65	65	0.00	-	2.09	-	0.001	0.0006	
1-5	5	Duct	Rectangular	6	24		12.41	1.00	135	135	-	7.00	-	0.00	0.000	-	5
		Fittings					-	-	135	135	0.00	-	2.64	-	0.003	0.003	
1-6	6	Duct	Rectangular	8	24		14.61	1.33	175	131	-	3.00	-	0.00	0.000	-	6
		Fittings					-	-	175	131	0.00	-	5.49	-	0.006	0.0060	
			SUBTOTAL													**0.02**	

NOTE 1: [a] This table and all calculations are based on Chapter 21 in the 2009 ASHRAE Fundamentals.

NOTE 2: [b] See Drawing MSK-12 for location of duct identification points.

SD	0.05
RR	0.01
FLEX	0.05
FLEX	0.05
MERV-13	0.57
TOTAL	**0.75**
10%	**0.83**

MOTT MACDONALD

JOB	505100403
CALC. BY	CM
CHECKED BY	
DATE	4/20/2021
PROJECT NAME	**Orangeburge Building**

Equipment: WSHP-15

Table 2 - Duct fitting loss coefficient summary

Sub Sequent Item (from Table 1)	Fitting Number	ASHRAE Fitting No.[c]	Type of Fitting[c]	Loss Coefficient, C[c]	Sub Sequent Item
1	1-A	Titus Catalog	Register		1
	1-B	CD9-1	Damper, Butterfly	1.76	1
	1-C	CR3-1	Elbow, Smooth Radius, Without Vanes	0.11	1
	1-D	CR3-1	Elbow, Smooth Radius, Without Vanes	0.11	1
	1-E	SR4-3	Transition, Round to Rectangular, Supply Air Systems	0.05	1
			Summation of Section 1 Loss Coefficients	2.03	1
2			#N/A	0.00	2
			Summation of Section 2 Loss Coefficients	0.00	2
3	3-A	SR5-11	Tee, Rectangular Main to Round Tap, Diverging	0.04	3
	3-B	SR4-2	Transition, Pyramidal, Supply Air Systems	0.00	3
	3-C	CR9-1	Damper, Butterfly	1.18	3
			Summation of Section 3 Loss Coefficients	1.22	3
4	4-A	ER5-3	Tee, 45 Degree Entry Branch, Converging	0.91	4
	4-B	CR9-1	Damper, Butterfly	1.18	4
			Summation of Section 4 Loss Coefficients	2.09	4
5	5-A	ER5-3	Tee, 45 Degree Entry Branch, Converging	2.23	5
	5-B	CR3-16	Elbow, Mitered, 90 Degree, Double-Thickness Vanes (3.25 in. Vane Spacing)	0.41	5
			Summation of Section 5 Loss Coefficients	2.64	5
6	6-A	ER5-3	Tee, 45 Degree Entry Branch, Converging	5.14	6
	6-B	ER4-1	Transition, Rectangular , Two Sides Parallel, Symmetrical, Exhaust/Return Systems	0.35	6
			Summation of Section 6 Loss Coefficients	5.49	6

MOTT MACDONALD

JOB	505100403
CALC. BY	CM
CHECKED BY	
DATE	4/20/2021
PROJECT NAME	**Orangeburge Building**

DUCT PRESSURE LOSS CALCULATION

Equipment: WSHP-16

Table 1 - Total pressure loss summary[a]

Duct Section Identification Points[b]	Sub Sequent Item	Duct Element	Type	Height (in., rectangular duct only)	Width (in., rectangular duct only)	Diameter (in., circular duct only)	Duct Size, (in., equivalent round)	Duct Area, (sf)	Airflow, (cfm)	Duct Velocity, (fpm)	Velocity Pressure, (in. of water)	Duct Length, (ft)	Summary of Fitting Loss Coefficients, C	Duct Pressure Loss/100', (in. of water)	Total Pressure Loss, (in. of water)	Total Section Pressure Loss, (in. of water)	Sub Sequent Item
1-1	1	Duct	Rectangular	6	10		8.40	0.42	190	456	-	19.00	-	0.05	0.009	-	1
		Fittings					-	-	190	456	0.01	-	1.68	-	0.022	0.031	
1-2	2	Duct	Rectangular	16	12		15.11	1.33	380	285	-	2.50	-	0.01	0.000	-	2
		Fittings					-	-	380	285	0.01	-	0.37	-	0.002	0.002	
1-3	3	Duct	Rectangular	12	28		19.61	2.33	380	163	-	3.00	-	0.00	0.000	-	3
		Fittings					-	-	380	163	0.00	-	1.19	-	0.002	0.002	
SUBTOTAL																**0.03**	

NOTE 1: [a] This table and all calculations are based on Chapter 21 in the 2009 ASHRAE Fundamentals.

NOTE 2: [b] See Drawing MSK-07 for location of duct identification points.

SD	0.05
RR	0.01
FLEX	0.05
FLEX	0.05
MERV-13	0.56
TOTAL	**0.75**
10%	**0.83**

MOTT MACDONALD

JOB	505100403
CALC. BY	CM
CHECKED BY	
DATE	4/20/2021
PROJECT NAME	**Orangeburge Building**

Equipment: WSHP-16

Table 2 - Duct fitting loss coefficient summary

Sub Sequent Item (from Table 1)	Fitting Number	ASHRAE Fitting No.[c]	Type of Fitting[c]	Loss Coefficient, C[c]	Sub Sequent Item
1	1-A	Titus Catalog	Register		1
	1-B	CR9-1	Damper, Butterfly	1.18	1
	1-C	CR3-15	Elbow, Mitered, 90 Degree, Double-Thickness Vanes (2.125 in. Vane Spacing)	0.25	1
	1-D	CR3-15	Elbow, Mitered, 90 Degree, Double-Thickness Vanes (2.125 in. Vane Spacing)	0.25	1
			Summation of Section 1 Loss Coefficients	1.68	1
2	2-A	SR5-13	Tee, 45 Degree Entry Branch, Diverging	0.37	2
	2-B	SR5-13	Tee, 45 Degree Entry Branch, Diverging	0.00	2
			Summation of Section 2 Loss Coefficients	0.37	2
3	3-A	ER4-1	Transition, Rectangular , Two Sides Parallel, Symmetrical, Exhaust/Return Systems	0.85	3
	3-B	ER4-1	Transition, Rectangular , Two Sides Parallel, Symmetrical, Exhaust/Return Systems	0.24	3
	3-C	ER5-3	Tee, 45 Degree Entry Branch, Converging	0.10	3
			Summation of Section 3 Loss Coefficients	1.19	3

MOTT MACDONALD

JOB	505100403
CALC. BY	CM
CHECKED BY	
DATE	4/20/2021
PROJECT NAME	**Orangeburge Building**

DUCT PRESSURE LOSS CALCULATION

Equipment: WSHP-17

Table 1 - Total pressure loss summary[(a)]

Duct Section Identification Points[(b)]	Sub Sequent Item	Duct Element	Type	Height (in., rectangular duct only)	Width (in., rectangular duct only)	Diameter (in., circular duct only)	Duct Size, (in., equivalent round)	Duct Area, (sf)	Airflow, (cfm)	Duct Velocity, (fpm)	Velocity Pressure, (in. of water)	Duct Length, (ft)	Summary of Fitting Loss Coefficients, C	Duct Pressure Loss/100', (in. of water)	Total Pressure Loss, (in. of water)	Total Section Pressure Loss, (in. of water)	Sub Sequent Item
1-1	1	Duct	Rectangular	8	8		8.75	0.44	110	248	-	9.00	-	0.015	0.001	-	1
		Fittings					-	-	110	248	0.00	-	1.68	-	0.006	0.008	
1-2	2	Duct	Rectangular	8	8		8.75	0.44	200	450	-	6.00	-	0.043	0.003	-	2
		Fittings					-	-	200	450	0.01	-	0.55	-	0.007	0.010	
1-3	3	Duct	Rectangular	8	8		8.75	0.44	80	180	-	10.00	-	0.008	0.001	-	3
		Fittings					-	-	80	180	0.00	-	2.21	-	0.004	0.005	
1-4	4	Duct	Rectangular	8	12		10.66	0.67	200	300	-	2.50	-	0.016	0.000	-	4
		Fittings					-	-	200	300	0.01	-	0.35	-	0.002	0.002	
		SUBTOTAL														**0.02**	

NOTE 1: [a] This table and all calculations are based on Chapter 21 in the 2009 ASHRAE Fundamentals.

NOTE 2: [b] See Drawing MSK-13 for location of duct identification points.

SD	0.05
RR	0.01
FLEX	0.05
FLEX	0.05
MERV-13	0.56
TOTAL	**0.74**
10%	**0.82**

MOTT MACDONALD

JOB	505100403
CALC. BY	CM
CHECKED BY	
DATE	4/20/2021
PROJECT NAME	**Orangeburge Building**

Equipment: WSHP-17

Table 2 - Duct fitting loss coefficient summary

Sub Sequent Item (from Table 1)	Fitting Number	ASHRAE Fitting No.[c]	Type of Fitting[c]	Loss Coefficient, C[c]	Sub Sequent Item
1	1-A	Titus Catalog	Register		1
	1-B	CR9-1	Damper, Butterfly	1.18	1
	1-C	CR3-15	Elbow, Mitered, 90 Degree, Double-Thickness Vanes (2.125 in. Vane Spacing)	0.25	1
	1-D	CR3-15	Elbow, Mitered, 90 Degree, Double-Thickness Vanes (2.125 in. Vane Spacing)	0.25	1
			Summation of Section 1 Loss Coefficients	1.68	1
2	2-A	SR5-13	Tee, 45 Degree Entry Branch, Diverging	0.49	2
	2-B	SR4-1	Transition, Rectangular, Two Sides Parallel, Symmetrical, Supply Air Systems	0.06	2
			Summation of Section 2 Loss Coefficients	0.55	2
3	3-A	CR3-15	Elbow, Mitered, 90 Degree, Double-Thickness Vanes (2.125 in. Vane Spacing)	0.25	3
	3-B	CR3-15	Elbow, Mitered, 90 Degree, Double-Thickness Vanes (2.125 in. Vane Spacing)	0.25	3
	3-C	ER4-1	Transition, Rectangular , Two Sides Parallel, Symmetrical, Exhaust/Return Systems	0.53	3
	3-D	CR9-1	Damper, Butterfly	1.18	3
			Summation of Section 3 Loss Coefficients	2.21	3
4	4-A	ER4-1	Transition, Rectangular , Two Sides Parallel, Symmetrical, Exhaust/Return Systems	0.35	4
			Summation of Section 4 Loss Coefficients	0.35	4

MOTT MACDONALD

JOB	505100403
CALC. BY	CM
CHECKED BY	
DATE	4/20/2021
PROJECT NAME	**Orangeburge Building**

DUCT PRESSURE LOSS CALCULATION

Equipment: WSHP-18

Table 1 - Total pressure loss summary[(a)]

Duct Section Identification Points[(b)]	Sub Sequent Item	Duct Element	Type	Height (in., rectangular duct only)	Width (in., rectangular duct only)	Diameter (in., circular duct only)	Duct Size, (in., equivalent round)	Duct Area, (sf)	Airflow, (cfm)	Duct Velocity, (fpm)	Velocity Pressure, (in. of water)	Duct Length, (ft)	Summary of Fitting Loss Coefficients, C	Duct Pressure Loss/100', (in. of water)	Total Pressure Loss, (in. of water)	Total Section Pressure Loss, (in. of water)	Sub Sequent Item
1-1	1	Duct	Circular			8	8.00	0.35	160	458	-	3.00	-	0.05	0.001	-	1
		Fittings					-	-	160	458	0.01	-	0.56	-	0.007	0.009	
1-2	2	Duct	Rectangular	8	8		8.75	0.44	130	293	-	12.00	-	0.020	0.002	-	2
		Fittings					-	-	130	293	0.005	-	0.51	-	0.003	0.005	
1-3	3	Duct	Rectangular	24	6		12.41	1.00	130	130	-	3.00	-	0.003	0.000	-	3
		Fittings					-	-	130	130	0.001	-	0.91	-	0.001	0.001	
1-4	4	Duct	Rectangular	12	17		15.55	1.42	130	92	-	4.00	-	0.001	0.000	-	4
		Fittings					-	-	130	92	0.001	-	2.09	-	0.001	0.0011	
1-5	5	Duct	Rectangular	12	17		15.55	1.42	160	113	-	10.00	-	0.00	0.000	-	5
		Fittings					-	-	160	113	0.00	-	1.07	-	0.001	0.00	
		SUBTOTAL														**0.02**	

NOTE 1: [a] This table and all calculations are based on Chapter 21 in the 2009 ASHRAE Fundamentals.

NOTE 2: [b] See Drawing MSK-12 for location of duct identification points.

SD	0.05
RR	0.01
FLEX	0.05
FLEX	0.05
MERV-13	0.56
TOTAL	**0.74**
10%	**0.81**

MOTT MACDONALD

JOB	505100403
CALC. BY	CM
CHECKED BY	
DATE	4/20/2021
PROJECT NAME	**Orangeburge Building**

Equipment: WSHP-18

Table 2 - Duct fitting loss coefficient summary

Sub Sequent Item (from Table 1)	Fitting Number	ASHRAE Fitting No.[c]	Type of Fitting[c]	Loss Coefficient, C[c]	Sub Sequent Item
1	1-A	Titus Catalog	Register		1
	1-B	CD3-1	Elbow, Die Stamped, 90 Degree, r/D=1.5	0.11	1
	1-C	SD4-2	Transition, Rectangular to Round, Supply Air Systems	0.00	1
2	2-A	CR3-15	Elbow, Mitered, 90 Degree, Double-Thickness Vanes (2.125 in. Vane Spacing)	0.25	2
	2-B	CR3-15	Elbow, Mitered, 90 Degree, Double-Thickness Vanes (2.125 in. Vane Spacing)	0.25	2
	2-C	SR4-1	Transition, Rectangular, Two Sides Parallel, Symmetrical, Supply Air Systems	0.01	2
			Summation of Section 2 Loss Coefficients	0.51	2
3	3-A	ER5-3	Tee, 45 Degree Entry Branch, Converging	0.91	3
			Summation of Section 3 Loss Coefficients	0.91	3
4	4-A	ER5-3	Tee, 45 Degree Entry Branch, Converging	0.91	4
	4-B	CR9-1	Damper, Butterfly	1.18	4
			Summation of Section 4 Loss Coefficients	2.09	4
5	5-A	ER5-3	Tee, 45 Degree Entry Branch, Converging	0.59	5
	5-B	ER4-1	Transition, Rectangular , Two Sides Parallel, Symmetrical, Exhaust/Return Systems	0.48	5
			Summation of Section 5 Loss Coefficients	1.07	5

MOTT MACDONALD

JOB	505100403
CALC. BY	CM
CHECKED BY	
DATE	4/20/2021
PROJECT NAME	**Orangeburge Building**

DUCT PRESSURE LOSS CALCULATION

Equipment: WSHP-19

Table 1 - Total pressure loss summary[a]

Duct Section Identification Points[b]	Sub Sequent Item	Duct Element	Type	Height (in., rectangular duct only)	Width (in., rectangular duct only)	Diameter (in., circular duct only)	Duct Size, (in., equivalent round)	Duct Area, (sf)	Airflow, (cfm)	Duct Velocity, (fpm)	Velocity Pressure, (in. of water)	Duct Length, (ft)	Summary of Fitting Loss Coefficients, C	Duct Pressure Loss/100', (in. of water)	Total Pressure Loss, (in. of water)	Total Section Pressure Loss, (in. of water)	Sub Sequent Item
1-1	1	Duct	Rectangular	6	14		9.80	0.58	215	369	-	11.00	-	0.026	0.003	-	1
		Fittings					-	-	215	369	0.01	-	2.16	-	0.018	0.021	
1-2	2	Duct	Rectangular	10	16		13.73	1.11	435	392	-	9.00	-	0.019	0.002	-	2
		Fittings					-	-	435	392	0.01	-	0.04	-	0.000	0.002	
1-3	3	Duct	Rectangular	12	22		17.56	1.83	875	477	-	6.00	-	0.020	0.001	-	3
		Fittings					-	-	875	477	0.01	-	0.14	-	0.002	0.003	
1-4	4	Duct	Rectangular	12	22		17.56	1.83	1,315	717	-	6.00	-	0.043	0.003	-	4
		Fittings					-	-	1,315	717	0.03	-	0.81	-	0.026	0.029	
1-5	5	Duct	Rectangular	8	24		14.61	1.33	465	349	-	6.00	-	0.014	0.001	-	5
		Fittings					-	-	465	349	0.01	-	4.32	-	0.033	0.034	
1-6	6	Duct	Rectangular	10	30		18.27	2.08	1,340	643	-	6.00	-	0.033	0.002	-	6
		Fittings					-	-	1,340	643	0.03	-	1.68	-	0.043	0.045	
SUBTOTAL																**0.13**	

NOTE 1: [a] This table and all calculations are based on Chapter 21 in the 2009 ASHRAE Fundamentals.

NOTE 2: [b] See Drawing MSK-14 for location of duct identification points.

SD	0.05
RR	0.01
FLEX	0.05
FLEX	0.05
MERV-13	0.56
TOTAL	**0.85**
10%	**0.94**

MOTT MACDONALD

JOB	505100403
CALC. BY	CM
CHECKED BY	
DATE	4/20/2021
PROJECT NAME	**Orangeburge Building**

Equipment: WSHP-19

Table 2 - Duct fitting loss coefficient summary

Sub Sequent Item (from Table 1)	Fitting Number	ASHRAE Fitting No.[c]	Type of Fitting[c]	Loss Coefficient, C[c]	Sub Sequent Item
1	1-A	Titus Catalog	Register		1
	1-B	CR9-1	Damper, Butterfly	1.18	1
	1-C	CR3-15	Elbow, Mitered, 90 Degree, Double-Thickness Vanes (2.125 in. Vane Spacing)	0.25	1
	1-D	SR5-13	Tee, 45 Degree Entry Branch, Diverging	0.73	1
			Summation of Section 1 Loss Coefficients	2.16	1
2	2-A	SR5-13	Tee, 45 Degree Entry Branch, Diverging	0.04	2
			Summation of Section 2 Loss Coefficients	0.04	2
3	3-A	SR5-13	Tee, 45 Degree Entry Branch, Diverging	0.04	3
	3-B	SR5-13	Tee, 45 Degree Entry Branch, Diverging	0.04	3
	3-C	SR4-1	Transition, Rectangular, Two Sides Parallel, Symmetrical, Supply Air Systems	0.06	3
			Summation of Section 3 Loss Coefficients	0.14	3
4	4-A	SR5-13	Tee, 45 Degree Entry Branch, Diverging	0.40	4
	4-B	SR5-13	Tee, 45 Degree Entry Branch, Diverging	0.40	4
	4-C	SR4-1	Transition, Rectangular, Two Sides Parallel, Symmetrical, Supply Air Systems	0.01	4
			Summation of Section 4 Loss Coefficients	0.81	4
5	5-A	ER5-3	Tee, 45 Degree Entry Branch, Converging	0.91	5
	5-B	ER5-3	Tee, 45 Degree Entry Branch, Converging	2.23	5
	5-C	CR9-1	Damper, Butterfly	1.18	5
			Summation of Section 5 Loss Coefficients	4.32	5
6	6-A	ER5-3	Tee, 45 Degree Entry Branch, Converging	1.33	6
	6-B	ER4-1	Transition, Rectangular , Two Sides Parallel, Symmetrical, Exhaust/Return Systems	0.35	6
			Summation of Section 6 Loss Coefficients	1.68	6

MOTT MACDONALD

JOB	505100403
CALC. BY	CM
CHECKED BY	
DATE	4/20/2021
PROJECT NAME	**Orangeburge Building**

DUCT PRESSURE LOSS CALCULATION

Equipment: WSHP-20

Table 1 - Total pressure loss summary[a]

Duct Section Identification Points[b]	Sub Sequent Item	Duct Element	Type	Height (in., rectangular duct only)	Width (in., rectangular duct only)	Diameter (in., circular duct only)	Duct Size, (in., equivalent round)	Duct Area, (sf)	Airflow, (cfm)	Duct Velocity, (fpm)	Velocity Pressure, (in. of water)	Duct Length, (ft)	Summary of Fitting Loss Coefficients, C	Duct Pressure Loss/100', (in. of water)	Total Pressure Loss, (in. of water)	Total Section Pressure Loss, (in. of water)	Sub Sequent Item
1-1	1	Duct	Rectangular	8	12		10.66	0.67	275	413	-	9.00	-	0.03	0.003	-	1
		Fittings					-	-	275	413	0.01	-	1.70	-	0.018	0.021	
1-2	2	Duct	Rectangular	8	14		11.46	0.78	375	482	-	6.00	-	0.03	0.002	-	2
		Fittings					-	-	375	482	0.01	-	0.15	-	0.002	0.004	
1-3	3	Duct	Rectangular	10	8		9.76	0.56	275	495	-	6.00	-	0.04	0.003	-	3
		Fittings					-	-	275	495	0.02	-	1.75	-	0.027	0.029	
1-4	4	Duct	Rectangular	12	8		10.66	0.67	375	563	-	11.00	-	0.05	0.006	-	4
		Fittings					-	-	375	563	0.02	-	0.82	-	0.016	0.022	
1-5	5	Duct	Rectangular	16	28		22.92	3.11	375	121	-	7.00	-	0.00	0.000	-	5
		Fittings					-	-	375	121	0.00	-	0.92	-	0.001	0.001	
		SUBTOTAL														**0.08**	

NOTE 1: [a] This table and all calculations are based on Chapter 21 in the 2009 ASHRAE Fundamentals.

NOTE 2: [b] See Drawings MSK-12 for location of duct identification points.

SD	0.05
RR	0.01
FLEX	0.05
FLEX	0.05
MERV-13	0.56
TOTAL	**0.80**
10%	**0.88**

MOTT MACDONALD

JOB	505100403
CALC. BY	CM
CHECKED BY	
DATE	4/20/2021
PROJECT NAME	**Orangeburge Building**

Equipment: WSHP-20

Table 2 - Duct fitting loss coefficient summary

Sub Sequent Item (from Table 1)	Fitting Number	ASHRAE Fitting No.[c]	Type of Fitting[c]	Loss Coefficient, C[c]	Sub Sequent Item
1	1-A	Titus Catalog	Register		1
	1-B	CD9-1	Damper, Butterfly	1.18	1
	1-C	CR3-15	Elbow, Mitered, 90 Degree, Double-Thickness Vanes (2.125 in. Vane Spacing)	0.25	1
	1-D	CR3-15	Elbow, Mitered, 90 Degree, Double-Thickness Vanes (2.125 in. Vane Spacing)	0.25	1
	1-E	SD4-2	Transition, Rectangular to Round, Supply Air Systems	0.01	1
	1-F	SR4-1	Transition, Rectangular, Two Sides Parallel, Symmetrical, Supply Air Systems	0.01	1
			Summation of Section 1 Loss Coefficients	1.70	1
2	2-A	SR5-13	Tee, 45 Degree Entry Branch, Diverging	0.09	2
	2-B	CR3-15	Elbow, Mitered, 90 Degree, Double-Thickness Vanes (2.125 in. Vane Spacing)	0.06	2
			Summation of Section 2 Loss Coefficients	0.15	2
3	3-A	CR3-15	Elbow, Mitered, 90 Degree, Double-Thickness Vanes (2.125 in. Vane Spacing)	0.25	3
	3-B	ER4-1	Transition, Rectangular , Two Sides Parallel, Symmetrical, Exhaust/Return Systems	0.22	3
	3-C	ER4-1	Transition, Rectangular , Two Sides Parallel, Symmetrical, Exhaust/Return Systems	0.10	3
	3-D	CR9-1	Damper, Butterfly	1.18	3
			Summation of Section 3 Loss Coefficients	1.75	3
4	4-A	ER5-3	Tee, 45 Degree Entry Branch, Converging	0.57	4
	4-B	CR3-15	Elbow, Mitered, 90 Degree, Double-Thickness Vanes (2.125 in. Vane Spacing)	0.25	4
			Summation of Section 4 Loss Coefficients	0.82	4
5	5-A	ER5-3	Tee, 45 Degree Entry Branch, Converging	0.91	5
	5-B	ER4-1	Transition, Rectangular , Two Sides Parallel, Symmetrical, Exhaust/Return Systems	0.01	5
			Summation of Section 5 Loss Coefficients	0.92	5

MOTT MACDONALD

JOB	505100403
CALC. BY	CM
CHECKED BY	
DATE	4/20/2021
PROJECT NAME	**Orangeburge Building**

DUCT PRESSURE LOSS CALCULATION

Equipment: WSHP-21

Table 1 - Total pressure loss summary[(a)]

Duct Section Identification Points[(b)]	Sub Sequent Item	Duct Element	Type	Height (in., rectangular duct only)	Width (in., rectangular duct only)	Diameter (in., circular duct only)	Duct Size, (in., equivalent round)	Duct Area, (sf)	Airflow, (cfm)	Duct Velocity, (fpm)	Velocity Pressure, (in. of water)	Duct Length, (ft)	Summary of Fitting Loss Coefficients, C	Duct Pressure Loss/100', (in. of water)	Total Pressure Loss, (in. of water)	Total Section Pressure Loss, (in. of water)	Sub Sequent Item
1-1	1	Duct	Rectangular	8	14	8	11.46	0.78	260	334	-	9.00	-	0.02	0.002	-	1
		Fittings					-	-	260	334	0.01	-	1.18	-	0.008	0.010	
1-2	2	Duct	Rectangular	12	12		13.12	1.00	260	260	-	1.50	-	0.01	0.000	-	2
		Fittings					-	-	260	260	0.00	-	0.31	-	0.001	0.001	
1-3	3	Duct	Rectangular	12	12		13.12	1.00	520	520	-	16.00	-	0.03	0.005	-	3
		Fittings					-	-	520	520	0.02	-	0.73	-	0.012	0.018	
SUBTOTAL																**0.03**	

NOTE 1: [a] This table and all calculations are based on Chapter 21 in the 2009 ASHRAE Fundamentals.

NOTE 2: [b] See Drawing MSK-14 for location of duct identification points.

SD	0.05
FLEX	0.05
FLEX	0.05
MERV-13	0.56
TOTAL	**0.74**
10%	**0.81**

MOTT MACDONALD

JOB	505100403
CALC. BY	CM
CHECKED BY	
DATE	4/20/2021
PROJECT NAME	**Orangeburge Building**

Equipment: WSHP-21

Table 2 - Duct fitting loss coefficient summary

Sub Sequent Item (from Table 1)	Fitting Number	ASHRAE Fitting No.[c]	Type of Fitting[c]	Loss Coefficient, C[c]	Sub Sequent Item
1	1-A	Titus Catalog	Register		1
	1-B	CR9-1	Damper, Butterfly	1.18	1
			Summation of Section 1 Loss Coefficients	1.18	1
2	2-A	CR3-15	Elbow, Mitered, 90 Degree, Double-Thickness Vanes (2.125 in. Vane Spacing)	0.25	2
	2-B	SR4-1	Transition, Rectangular, Two Sides Parallel, Symmetrical, Supply Air Systems	0.06	2
			Summation of Section 2 Loss Coefficients	0.31	2
3	3-A	SR5-13	Tee, 45 Degree Entry Branch, Diverging	0.67	3
	3-B	SR4-1	Transition, Rectangular, Two Sides Parallel, Symmetrical, Supply Air Systems	0.06	3
			Summation of Section 3 Loss Coefficients	0.73	3

MOTT MACDONALD

JOB	505100403
CALC. BY	CM
CHECKED BY	
DATE	4/20/2021
PROJECT NAME	**Orangeburge Building**

DUCT PRESSURE LOSS CALCULATION

Equipment: WSHP-22

Table 1 - Total pressure loss summary[(a)]

Duct Section Identification Points[(b)]	Sub Sequent Item	Duct Element	Type	Height (in., rectangular duct only)	Width (in., rectangular duct only)	Diameter (in., circular duct only)	Duct Size, (in., equivalent round)	Duct Area, (sf)	Airflow, (cfm)	Duct Velocity, (fpm)	Velocity Pressure, (in. of water)	Duct Length, (ft)	Summary of Fitting Loss Coefficients, C	Duct Pressure Loss/100', (in. of water)	Total Pressure Loss, (in. of water)	Total Section Pressure Loss, (in. of water)	Sub Sequent Item
1-1	1	Duct	Rectangular	12	18	8	15.98	1.50	745	497	-	1.00	-	0.02	0.000	-	1
		Fittings					-	-	745	497	0.02	-	0.73	-	0.011	0.01	
1-2	2	Duct	Rectangular	14	14		15.30	1.36	745	547	-	12.00	-	0.03	0.004	-	2
		Fittings					-	-	745	547	0.02	-	3.89	-	0.073	0.08	
1-3	3	Duct	Rectangular	14	14		15.30	1.36	1,490	1,095	-	6.00	-	0.11	0.007	-	3
		Fittings					-	-	1,490	1,095	0.07	-	0.06	-	0.004	0.01	
		SUBTOTAL														**0.10**	

NOTE 1: [a] This table and all calculations are based on Chapter 21 in the 2009 ASHRAE Fundamentals.

NOTE 2: [b] See Drawing MSK-14 for location of duct identification points.

SD	0.05
FLEX	0.05
FLEX	0.05
MERV-13	0.56
TOTAL	**0.81**
10%	**0.89**

JOB	505100403
CALC. BY	CM
CHECKED BY	
DATE	4/20/2021
PROJECT NAME	**Orangeburge Building**

Equipment: WSHP-22

Table 2 - Duct fitting loss coefficient summary

Sub Sequent Item (from Table 1)	Fitting Number	ASHRAE Fitting No.[c]	Type of Fitting[c]	Loss Coefficient, C[c]	Sub Sequent Item
1	1-A	Titus Catalog	Register		1
	1-B	SR5-13	Tee, 45 Degree Entry Branch, Diverging	0.91	1
			Summation of Section 1 Loss Coefficients	0.73	1
2	2-A	CR3-15	Elbow, Mitered, 90 Degree, Double-Thickness Vanes (2.125 in. Vane Spacing)	0.25	2
	2-B	CR9-1	Damper, Butterfly	1.18	
			Summation of Section 0 Loss Coefficients	0.00	0
3	3-A	SR5-13	Tee, 45 Degree Entry Branch, Diverging	0.67	1
	3-B	SR4-1	Transition, Rectangular, Two Sides Parallel, Symmetrical, Supply Air Systems	0.06	3
			Summation of Section 3 Loss Coefficients	0.06	3

MOTT MACDONALD

JOB	505100403
CALC. BY	CM
CHECKED BY	
DATE	4/20/2021
PROJECT NAME	**Orangeburge Building**

DUCT PRESSURE LOSS CALCULATION

Equipment: WSHP-23

Table 1 - Total pressure loss summary[a]

Duct Section Identification Points[b]	Sub Sequent Item	Duct Element	Type	Height (in., rectangular duct only)	Width (in., rectangular duct only)	Diameter (in., circular duct only)	Duct Size, (in., equivalent round)	Duct Area, (sf)	Airflow, (cfm)	Duct Velocity, (fpm)	Velocity Pressure, (in. of water)	Duct Length, (ft)	Summary of Fitting Loss Coefficients, C	Duct Pressure Loss/100', (in. of water)	Total Pressure Loss, (in. of water)	Total Section Pressure Loss, (in. of water)	Sub Sequent Item
1-1	1	Duct	Rectangular	16	18	8	18.54	2.00	725	363	-	2.00	-	0.01	0.000	-	1
		Fittings					-	-	725	363	0.01	-	0.73	-	0.006	0.01	
1-2	2	Duct	Rectangular	18	14		17.32	1.75	1,450	829	-	15.00	-	0.06	0.009	-	2
		Fittings					-	-	1,450	829	0.04	-	3.19	-	0.137	0.15	
1-3	3	Duct	Rectangular	20	18		20.73	2.50	2,900	1,160	-	10.00	-	0.09	0.009	-	3
		Fittings					-	-	2,900	1,160	0.08	-	0.93	-	0.078	0.09	
SUBTOTAL																**0.24**	

NOTE 1: [a] This table and all calculations are based on Chapter 21 in the 2009 ASHRAE Fundamentals.

NOTE 2: [b] See Drawing MSK-15 for location of duct identification points.

SD	0.05
FLEX	0.05
FLEX	0.05
MERV-13	0.56
TOTAL	**0.95**
10%	**1.04**

JOB	505100403
CALC. BY	CM
CHECKED BY	
DATE	4/20/2021
PROJECT NAME	**Orangeburge Building**

Equipment: WSHP-23

Table 2 - Duct fitting loss coefficient summary

Sub Sequent Item (from Table 1)	Fitting Number	ASHRAE Fitting No.[c]	Type of Fitting[c]	Loss Coefficient, C[c]	Sub Sequent Item
1	1-A	Titus Catalog	Register		1
	1-B	CR9-1	Damper, Butterfly	1.18	1
			Summation of Section 1 Loss Coefficients	0.73	1
2	2-A	SR5-13	Tee, 45 Degree Entry Branch, Diverging	0.67	2
	2-B	SR4-1	Transition, Rectangular, Two Sides Parallel, Symmetrical, Supply Air Systems	0.06	2
	2-C	SR5-13	Tee, 45 Degree Entry Branch, Diverging	2.46	2
			Summation of Section 2 Loss Coefficients	3.19	2
3	3-A	SR5-13	Tee, 45 Degree Entry Branch, Diverging	0.04	3
	3-B	SR5-13	Tee, 45 Degree Entry Branch, Diverging	0.04	3
	3-C	SR4-1	Transition, Rectangular, Two Sides Parallel, Symmetrical, Supply Air Systems	0.85	3
			Summation of Section 3 Loss Coefficients	0.93	3

MOTT MACDONALD

JOB	505100403
CALC. BY	CM
CHECKED BY	
DATE	4/20/2021
PROJECT NAME	**Orangeburge Building**

DUCT PRESSURE LOSS CALCULATION

Equipment: WSHP-24

Table 1 - Total pressure loss summary[a]

Duct Section Identification Points[b]	Sub Sequent Item	Duct Element	Type	Height (in., rectangular duct only)	Width (in., rectangular duct only)	Diameter (in., circular duct only)	Duct Size, (in., equivalent round)	Duct Area, (sf)	Airflow, (cfm)	Duct Velocity, (fpm)	Velocity Pressure, (in. of water)	Duct Length, (ft)	Summary of Fitting Loss Coefficients, C	Duct Pressure Loss/100', (in. of water)	Total Pressure Loss, (in. of water)	Total Section Pressure Loss, (in. of water)	Sub Sequent Item
1-1	1	Duct	Rectangular	12	18	8	15.98	1.50	675	450	-	1.00	-	0.02	0.000	-	1
		Fittings					-	-	675	450	0.01	-	0.73	-	0.009	0.01	
1-2	2	Duct	Rectangular	14	14		15.30	1.36	675	496	-	12.00	-	0.03	0.003	-	2
		Fittings					-	-	675	496	0.02	-	3.89	-	0.060	0.06	
1-3	3	Duct	Rectangular	14	14		15.30	1.36	1,350	992	-	6.00	-	0.09	0.006	-	3
		Fittings					-	-	1,350	992	0.06	-	0.06	-	0.004	0.01	
			SUBTOTAL													**0.08**	

NOTE 1: [a] This table and all calculations are based on Chapter 21 in the 2009 ASHRAE Fundamentals.

NOTE 2: [b] See Drawing MSK-14 for location of duct identification points.

SD	0.05
FLEX	0.05
FLEX	0.05
MERV-13	0.56
TOTAL	**0.79**
10%	**0.87**

MOTT MACDONALD

JOB	505100403
CALC. BY	CM
CHECKED BY	
DATE	4/20/2021
PROJECT NAME	**Orangeburge Building**

Equipment: WSHP-24

Table 2 - Duct fitting loss coefficient summary

Sub Sequent Item (from Table 1)	Fitting Number	ASHRAE Fitting No.[c]	Type of Fitting[c]	Loss Coefficient, C[c]	Sub Sequent Item
1	1-A	Titus Catalog	Register		1
	1-B	SR5-13	Tee, 45 Degree Entry Branch, Diverging	0.91	1
			Summation of Section 1 Loss Coefficients	0.73	1
2	2-A	CR3-15	Elbow, Mitered, 90 Degree, Double-Thickness Vanes (2.125 in. Vane Spacing)	0.25	2
	2-B	CR9-1	Damper, Butterfly	1.18	
			Summation of Section 0 Loss Coefficients	0.00	0
3	3-A	SR5-13	Tee, 45 Degree Entry Branch, Diverging	0.67	1
	3-B	SR4-1	Transition, Rectangular, Two Sides Parallel, Symmetrical, Supply Air Systems	0.06	3
			Summation of Section 3 Loss Coefficients	0.06	3

MSK-01
DOAS-1 :

RETURN DUCT

SUPPLY DUCT

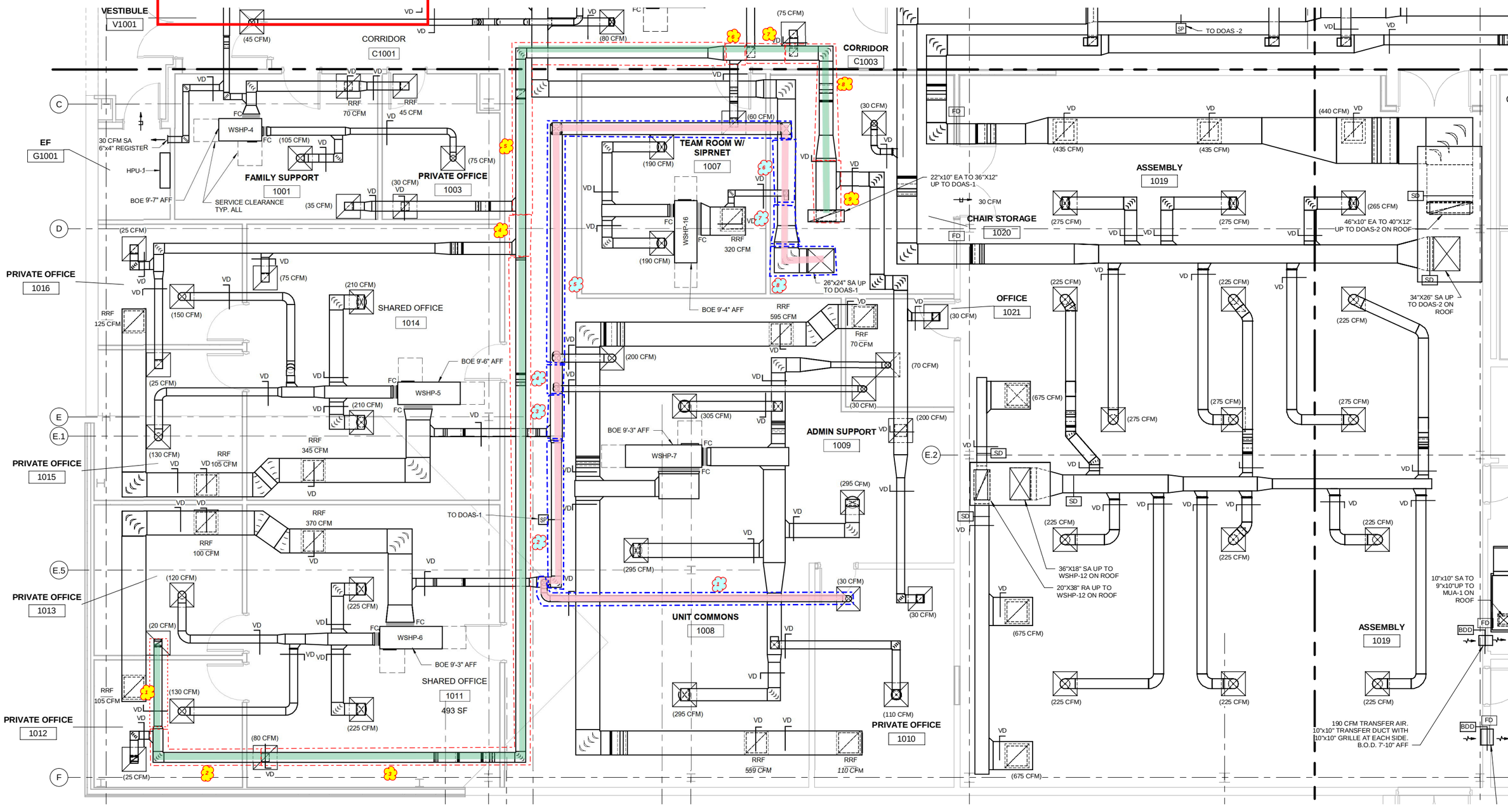

July 29, 2021

MSK-02
DOAS-2 :

RETURN DUCT

SUPPLY DUCT

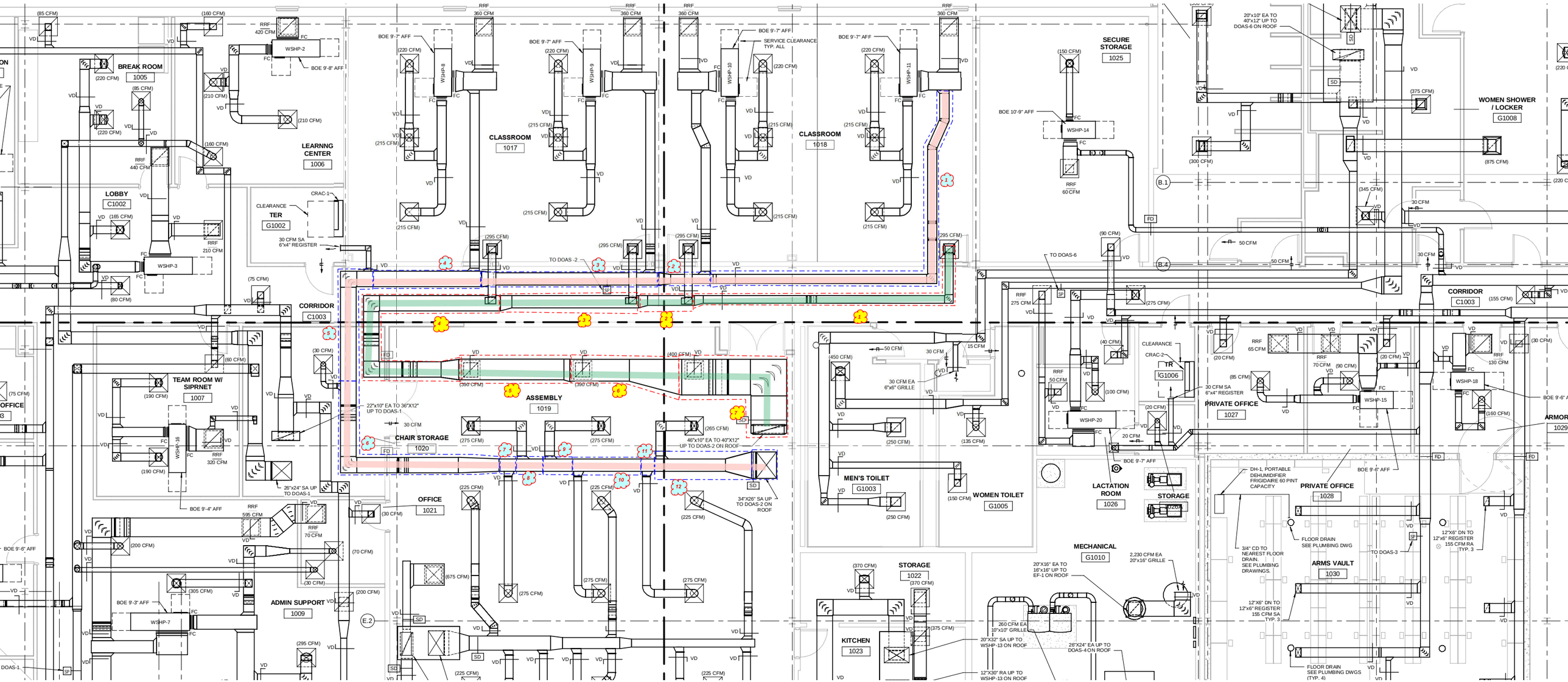

July 29, 2021

MSK-03
DOAS-3 :

RETURN DUCT

SUPPLY DUCT

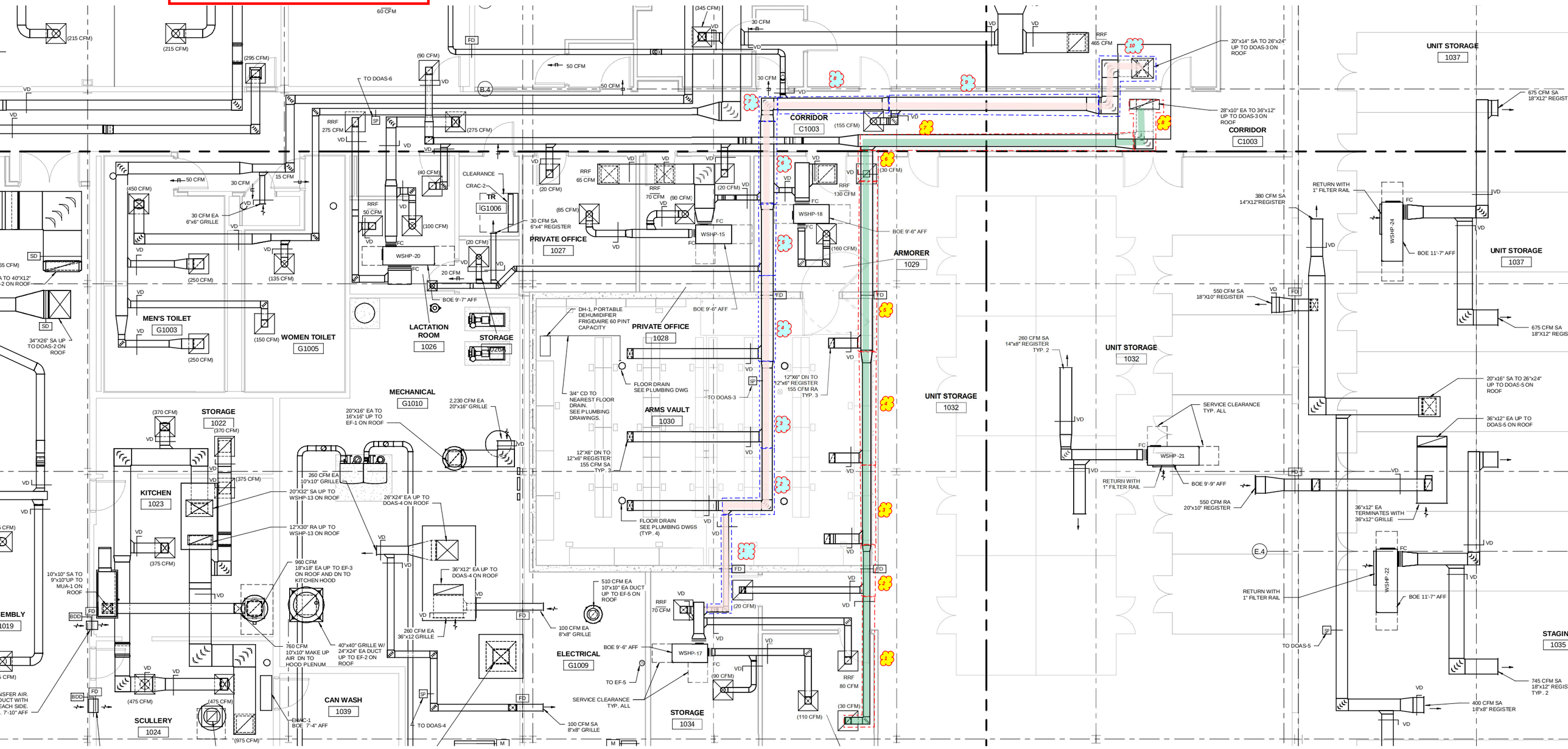

July 29, 2021

MSK-04
DOAS-4 :

RETURN DUCT

SUPPLY DUCT

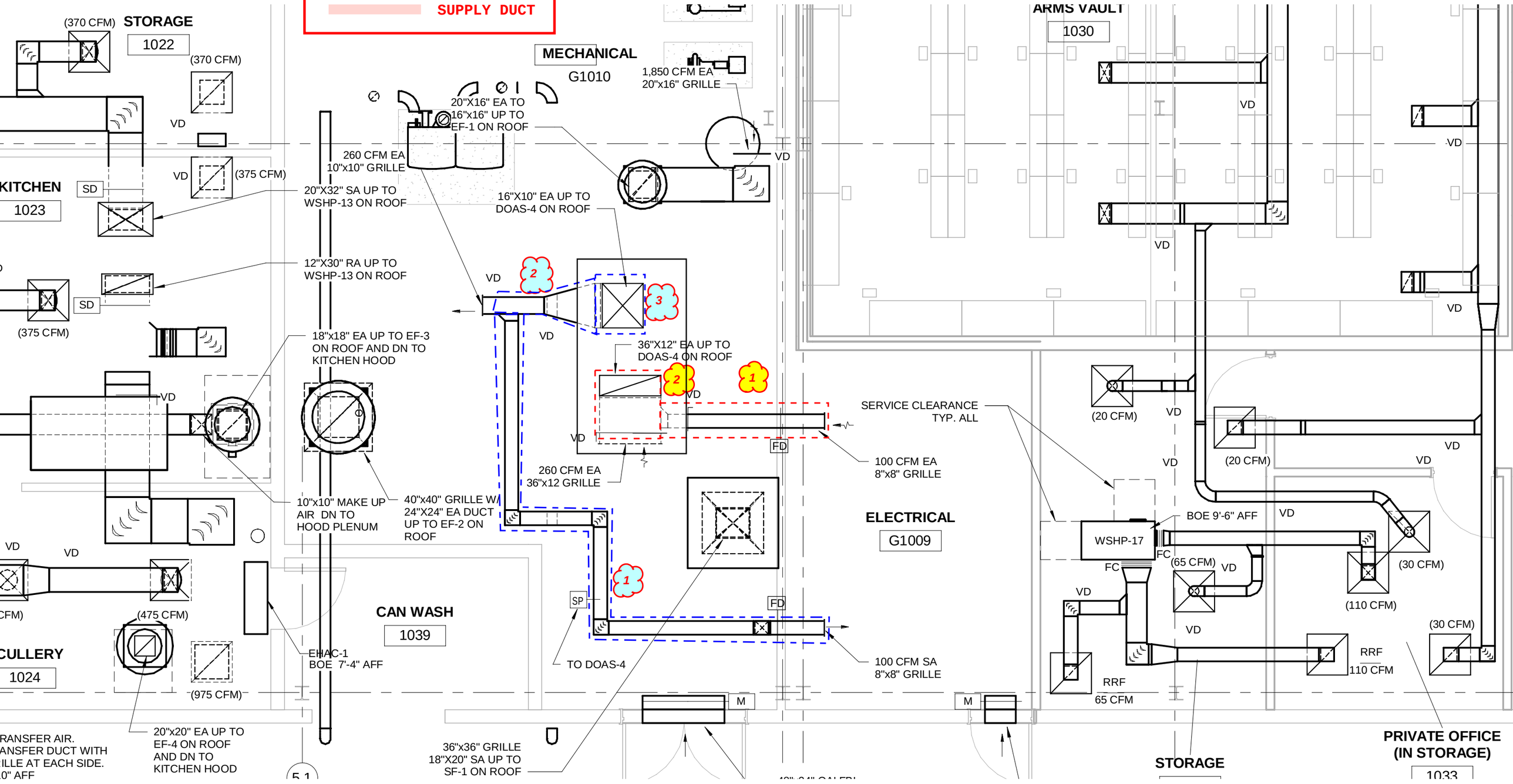

July 29, 2021

MSK-05
DOAS-5 :

RETURN DUCT

SUPPLY DUCT

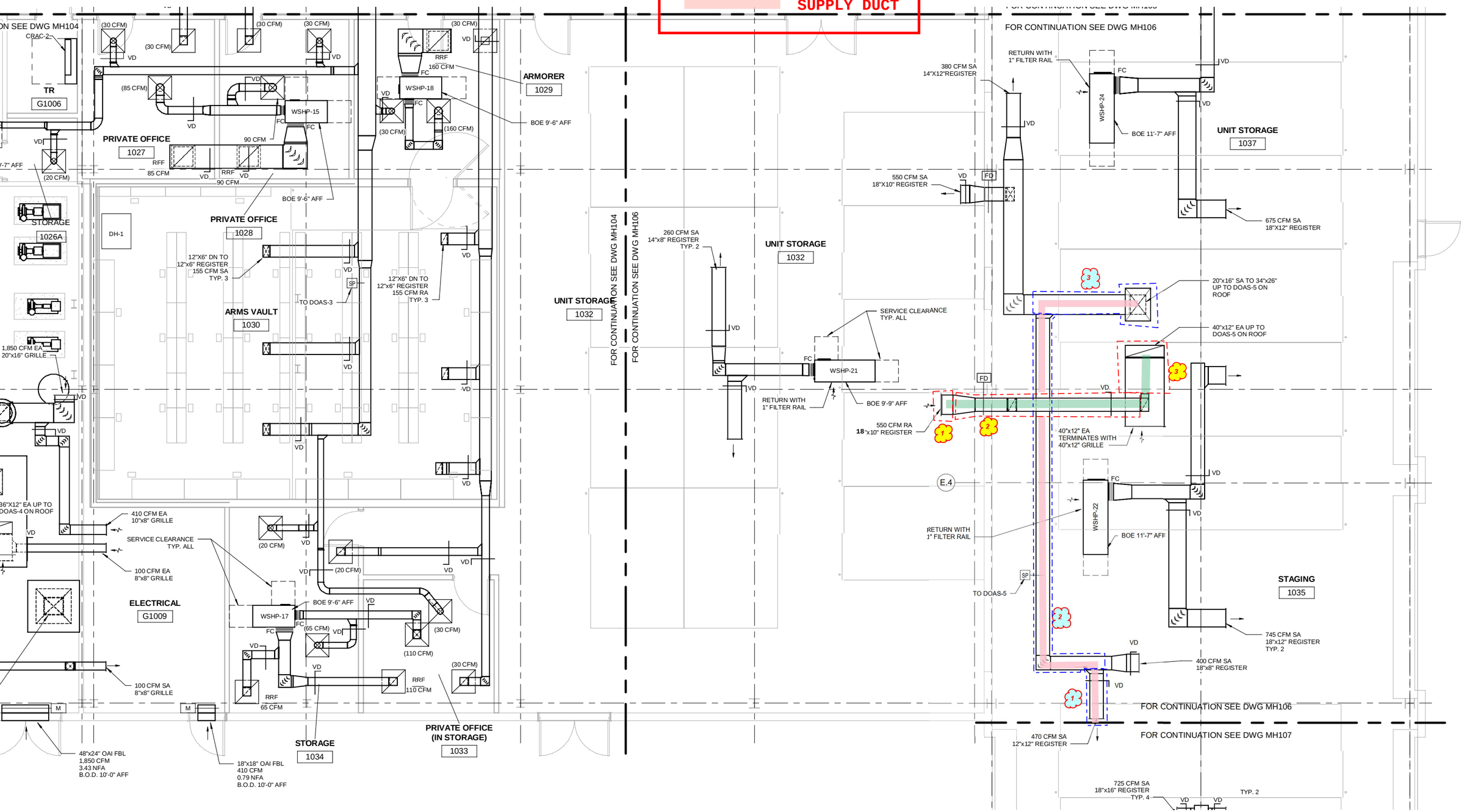

July 29, 2021

MSK-06
DOAS-6 :

RETURN DUCT

SUPPLY DUCT

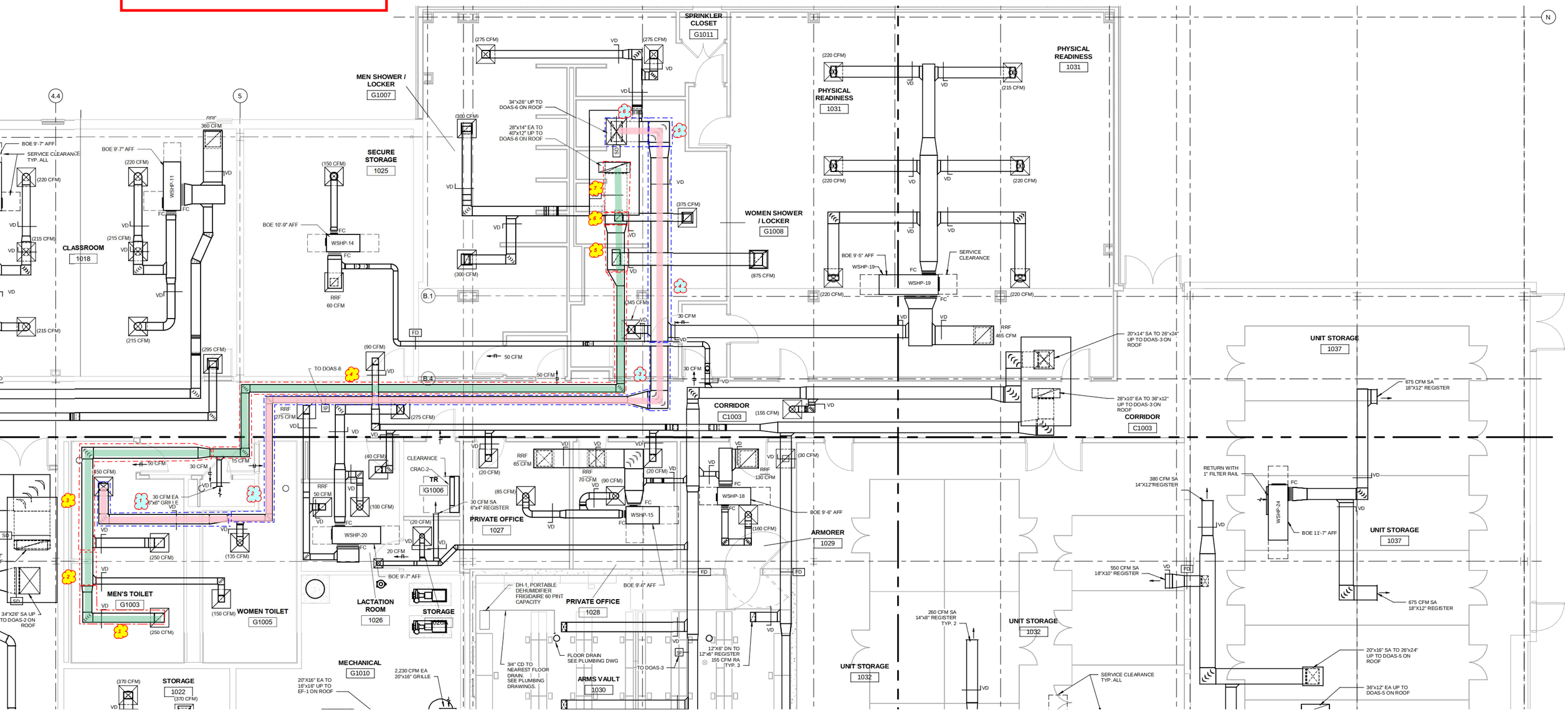

July 29, 2021

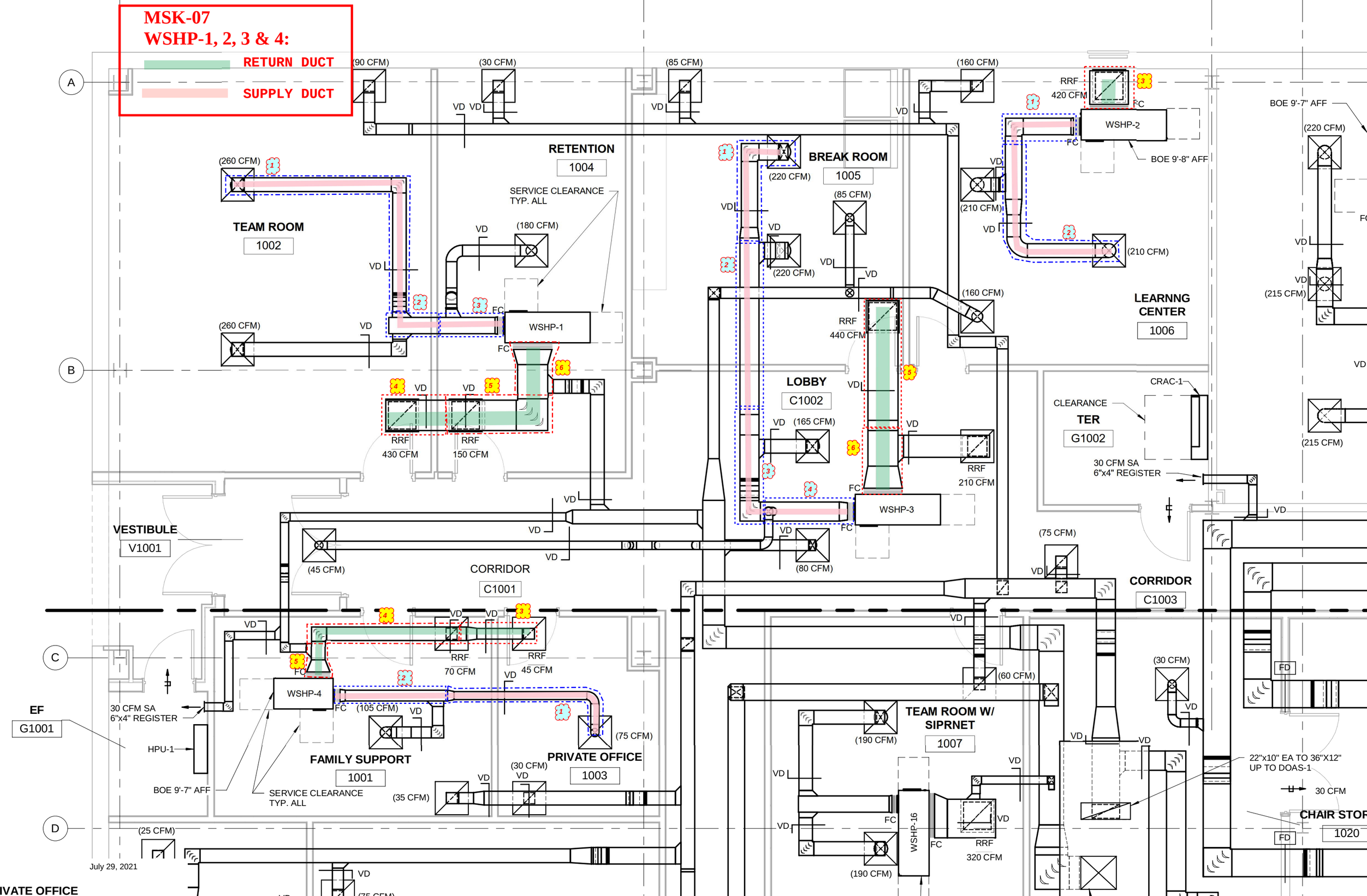
MSK-07
WSHP-1, 2, 3 & 4:
RETURN DUCT
SUPPLY DUCT
A
B
C
D
(90 CFM)
(30 CFM)
(85 CFM)
(160 CFM)
RRF
420 CFM
WSHP-2
BOE 9'-8" AFF
BOE 9'-7" AFF
(220 CFM)
RETENTION
1004
BREAK ROOM
1005
(210 CFM)
(260 CFM)
TEAM ROOM
1002
SERVICE CLEARANCE
TYP. ALL
(180 CFM)
WSHP-1
(215 CFM)
LEARNNG
CENTER
1006
RRF
440 CFM
LOBBY
C1002
(165 CFM)
RRF
430 CFM
RRF
150 CFM
CRAC-1
CLEARANCE
TER
G1002
30 CFM SA
6"x4" REGISTER
RRF
210 CFM
WSHP-3
VESTIBULE
V1001
(45 CFM)
CORRIDOR
C1001
(80 CFM)
(75 CFM)
CORRIDOR
C1003
RRF
70 CFM
RRF
45 CFM
WSHP-4
(105 CFM)
(60 CFM)
(30 CFM)
EF
G1001
30 CFM SA
6"x4" REGISTER
HPU-1
FAMILY SUPPORT
1001
PRIVATE OFFICE
1003
(75 CFM)
(30 CFM)
(35 CFM)
TEAM ROOM W/
SIPRNET
1007
(190 CFM)
22"x10" EA TO 36"X12"
UP TO DOAS-1
30 CFM
CHAIR STOR
1020
WSHP-16
RRF
320 CFM
(25 CFM)
July 29, 2021
PRIVATE OFFICE
VD
FC
FD

MSK-08
WSHP-5, 6, 7 & 16:

RETURN DUCT

SUPPLY DUCT

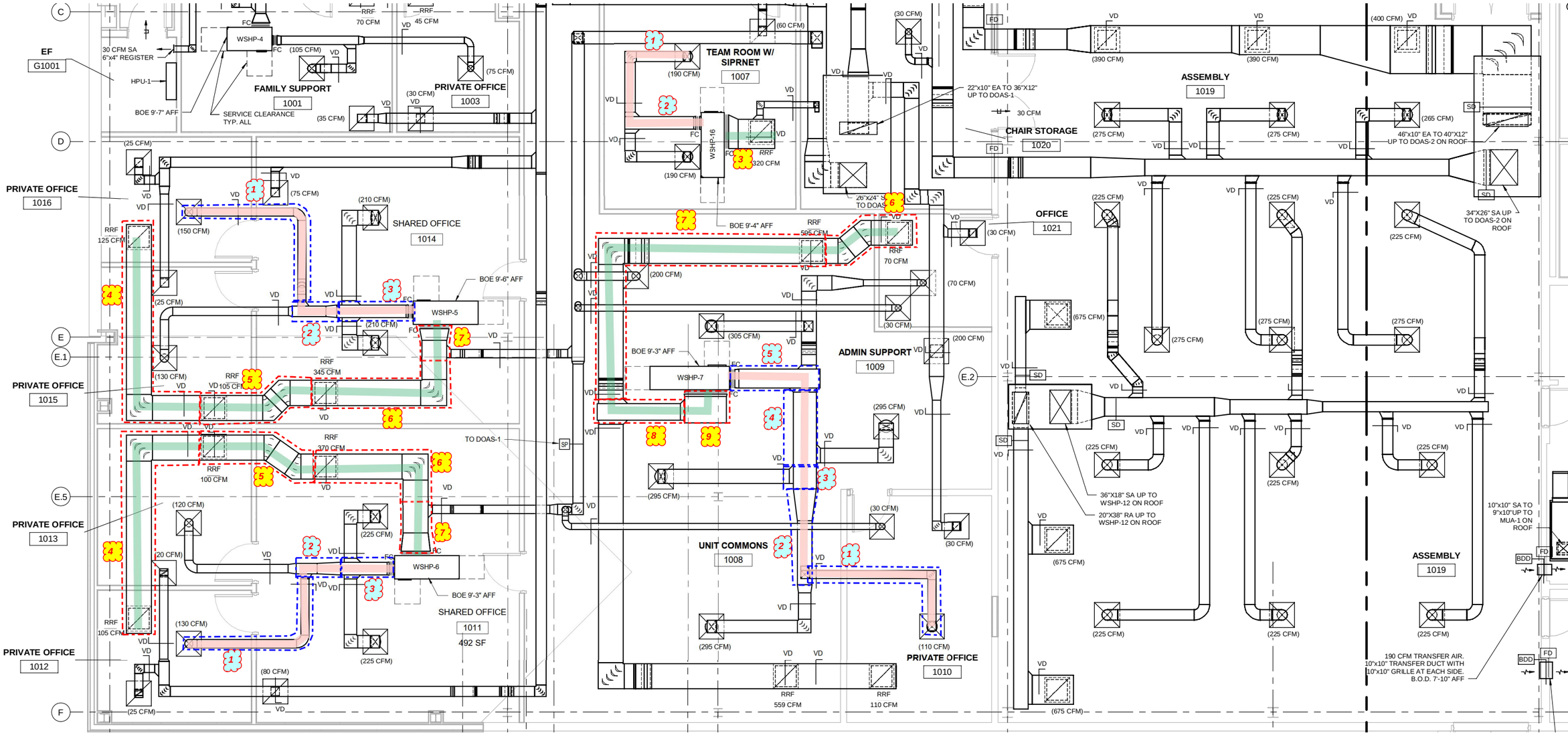

July 29, 2021

MKS-09
WSHP-8, 9, 10, 11 & 14:

RETURN DUCT

SUPPLY DUCT

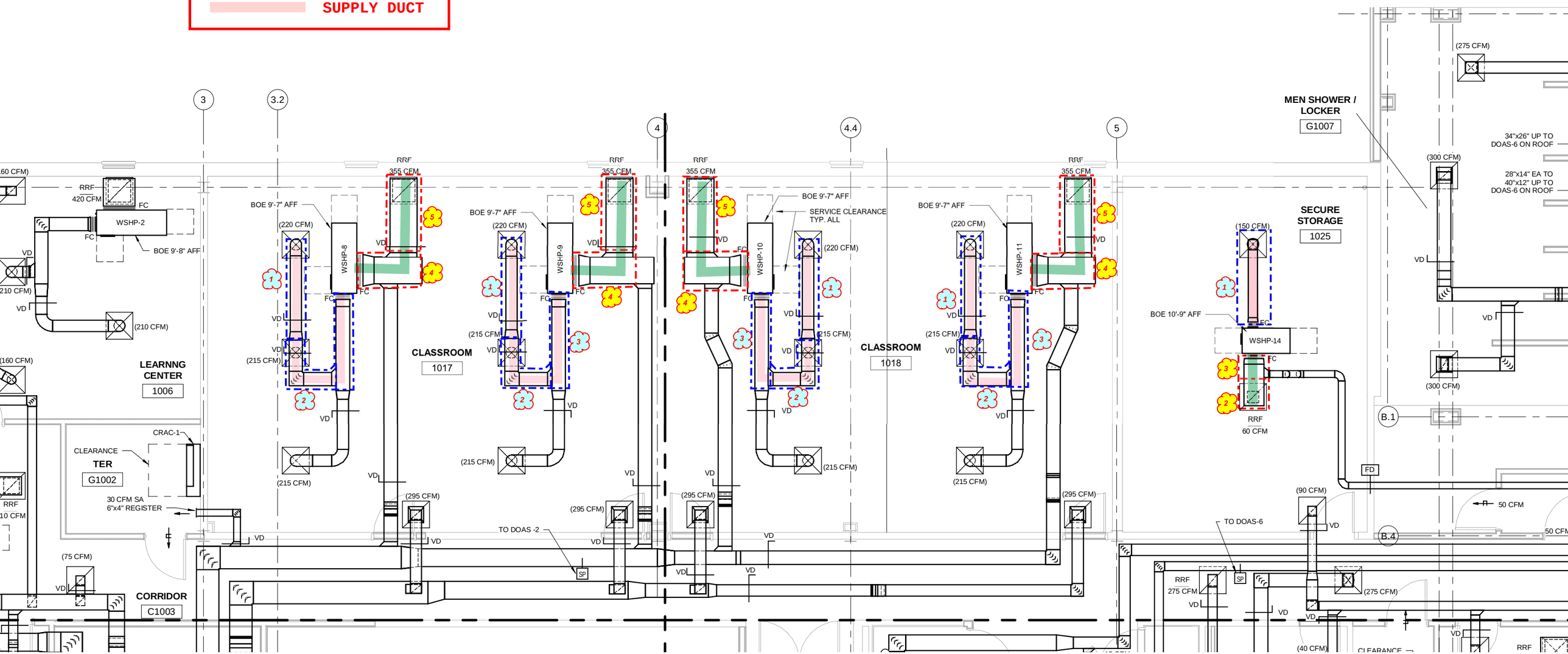

July 29, 2021

MSK-11
WSHP-13:

RETURN DUCT

SUPPLY DUCT

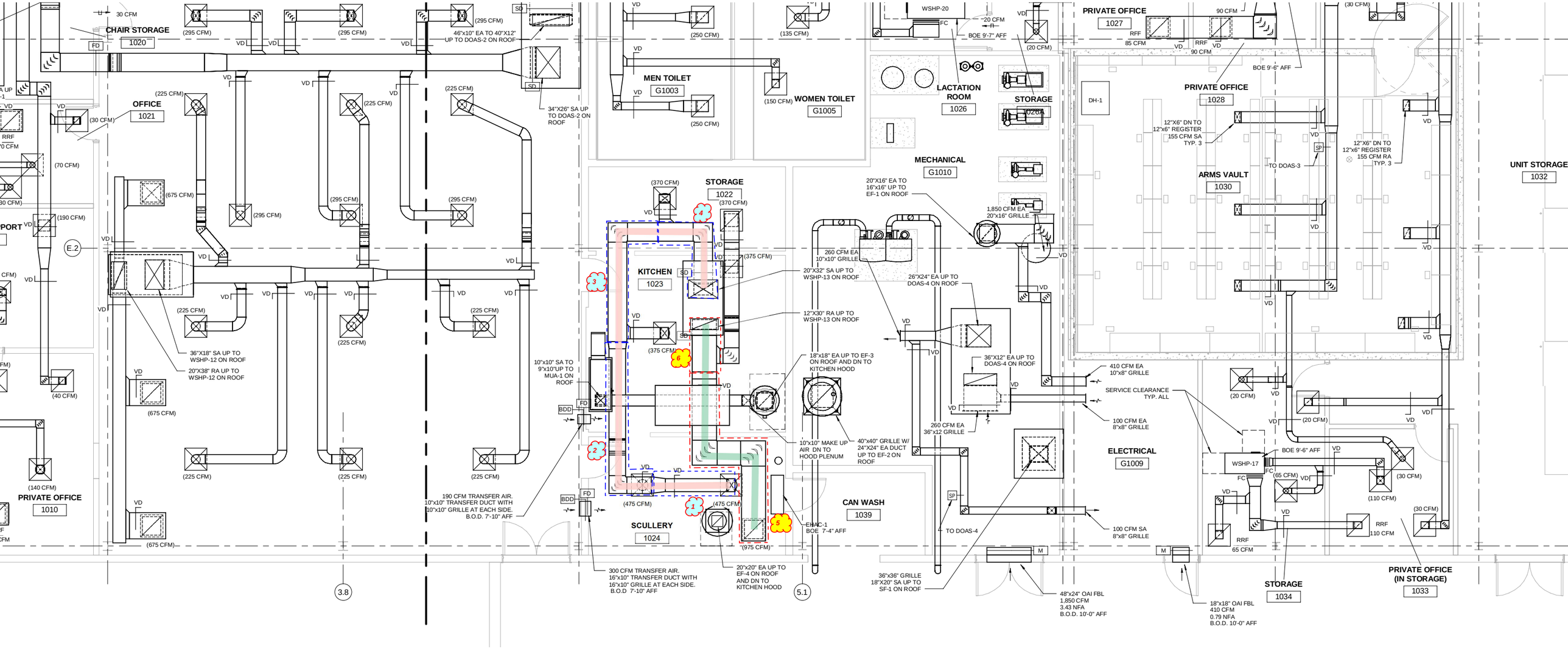

July 29, 2021

MSK-12
WSHP-15, 18 & 20:
RETURN
SUPPLY

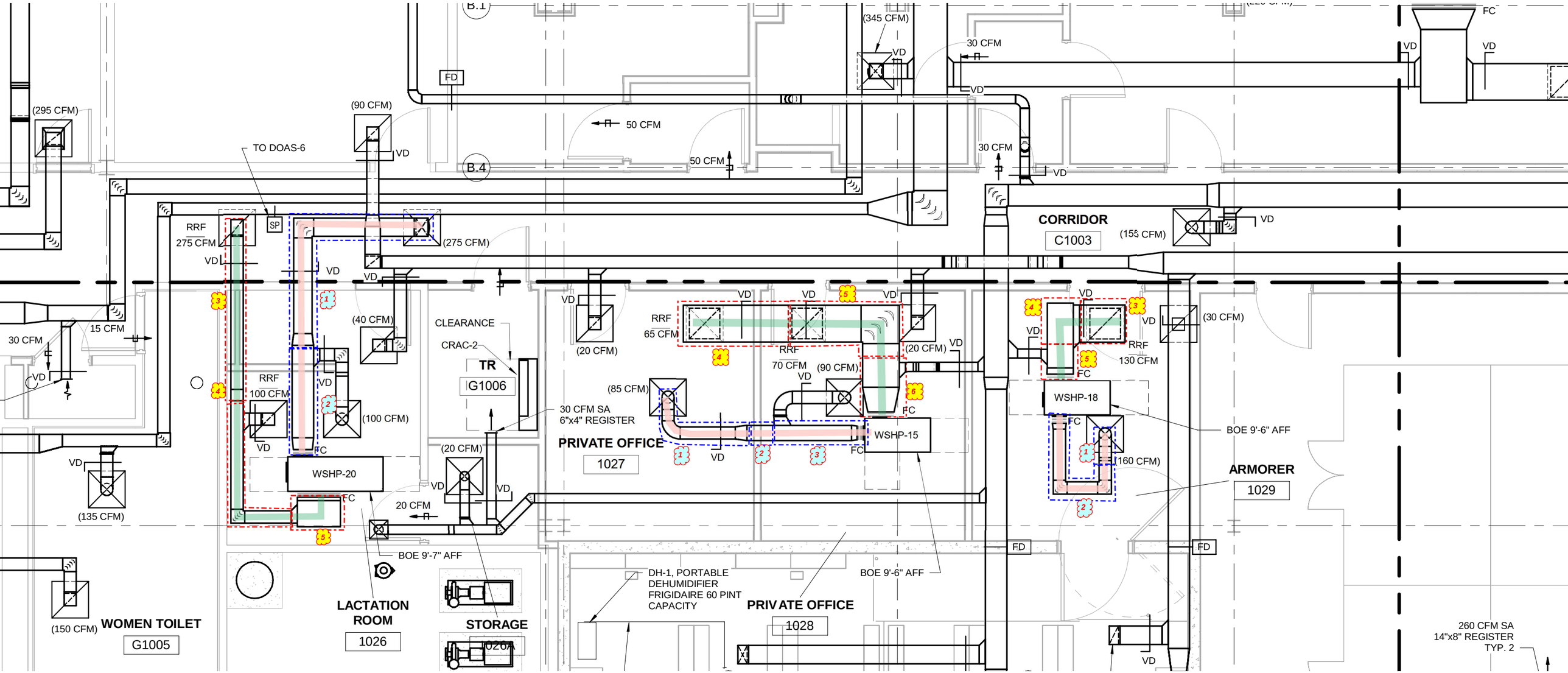

July 29, 2021

MSK-13
WSHP-17:

RETURN DUCT

SUPPLY DUCT

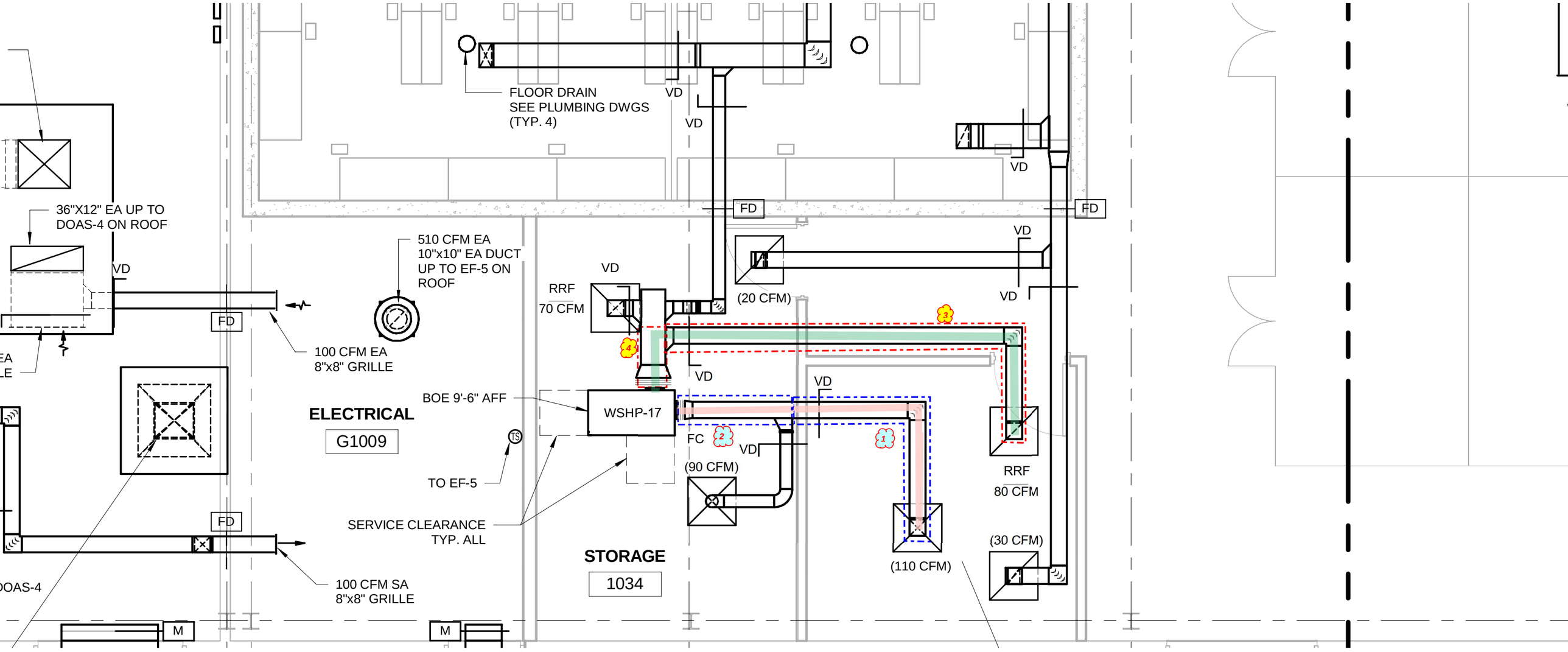

July 29, 2021

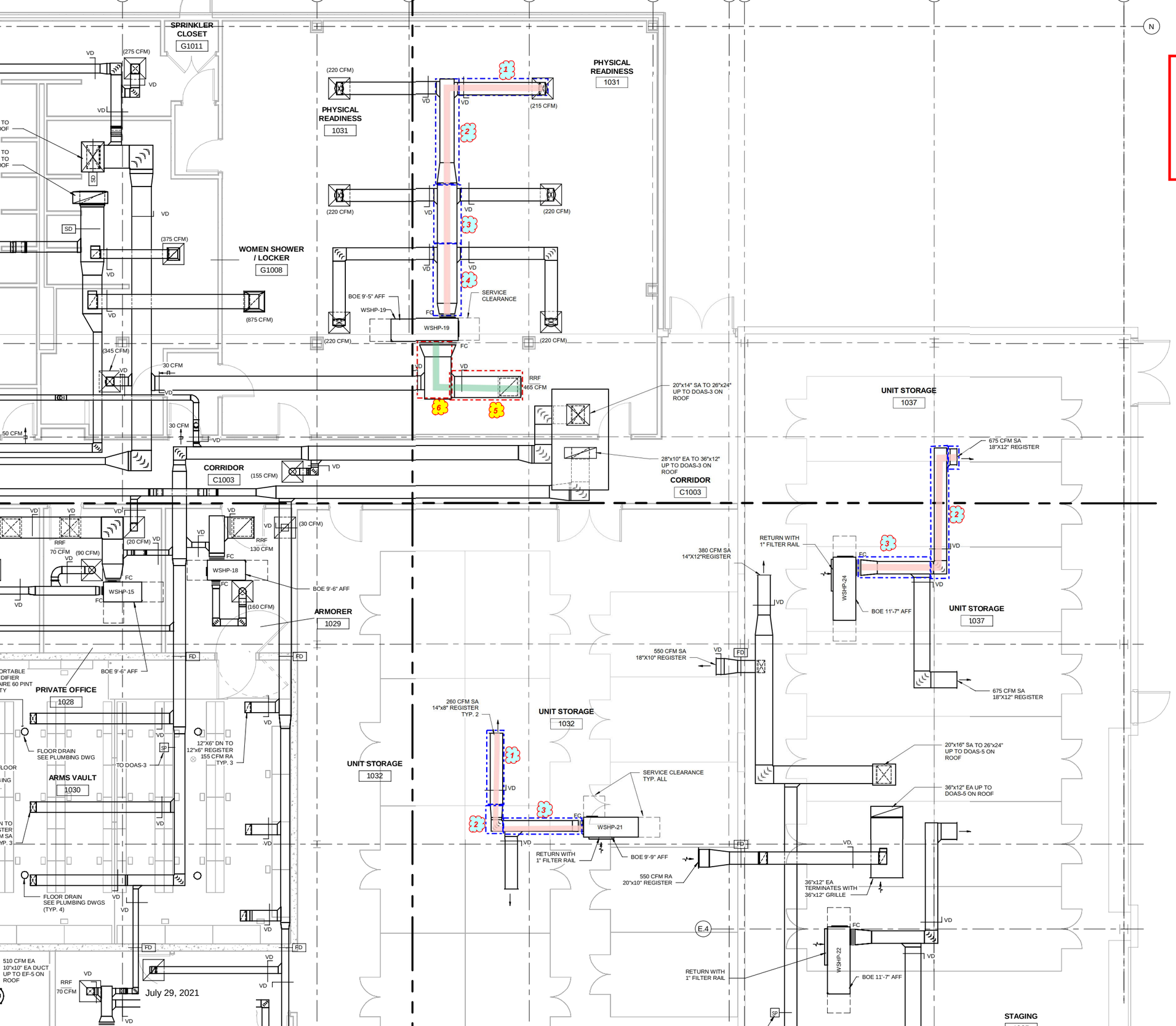
MSK-14
WSHP-19, 21 & 24:
RETURN DUCT
SUPPLY DUCT
SPRINKLER CLOSET
G1011
PHYSICAL READINESS
1031
WOMEN SHOWER / LOCKER
G1008
CORRIDOR
C1003
UNIT STORAGE
1037
ARMORER
1029
PRIVATE OFFICE
1028
ARMS VAULT
1030
UNIT STORAGE
1032
STAGING
WSHP-15
WSHP-18
WSHP-19
WSHP-21
WSHP-22
WSHP-24
BOE 9'-5" AFF
BOE 9'-6" AFF
BOE 9'-9" AFF
BOE 11'-7" AFF
SERVICE CLEARANCE
SERVICE CLEARANCE TYP. ALL
20"x14" SA TO 26"x24" UP TO DOAS-3 ON ROOF
28"x10" EA TO 36"x12" UP TO DOAS-3 ON ROOF
675 CFM SA 18"X12" REGISTER
380 CFM SA 14"X12"REGISTER
550 CFM SA 18"X10" REGISTER
260 CFM SA 14"x8" REGISTER TYP. 2
20"x16" SA TO 26"x24" UP TO DOAS-5 ON ROOF
36"x12" EA UP TO DOAS-5 ON ROOF
36"x12" EA TERMINATES WITH 36"x12" GRILLE
550 CFM RA 20"x10" REGISTER
RETURN WITH 1" FILTER RAIL
12"X6" DN TO 12"x6" REGISTER 155 CFM RA TYP. 3
FLOOR DRAIN SEE PLUMBING DWG
FLOOR DRAIN SEE PLUMBING DWGS (TYP. 4)
510 CFM EA 10"x10" EA DUCT UP TO EF-5 ON ROOF
July 29, 2021

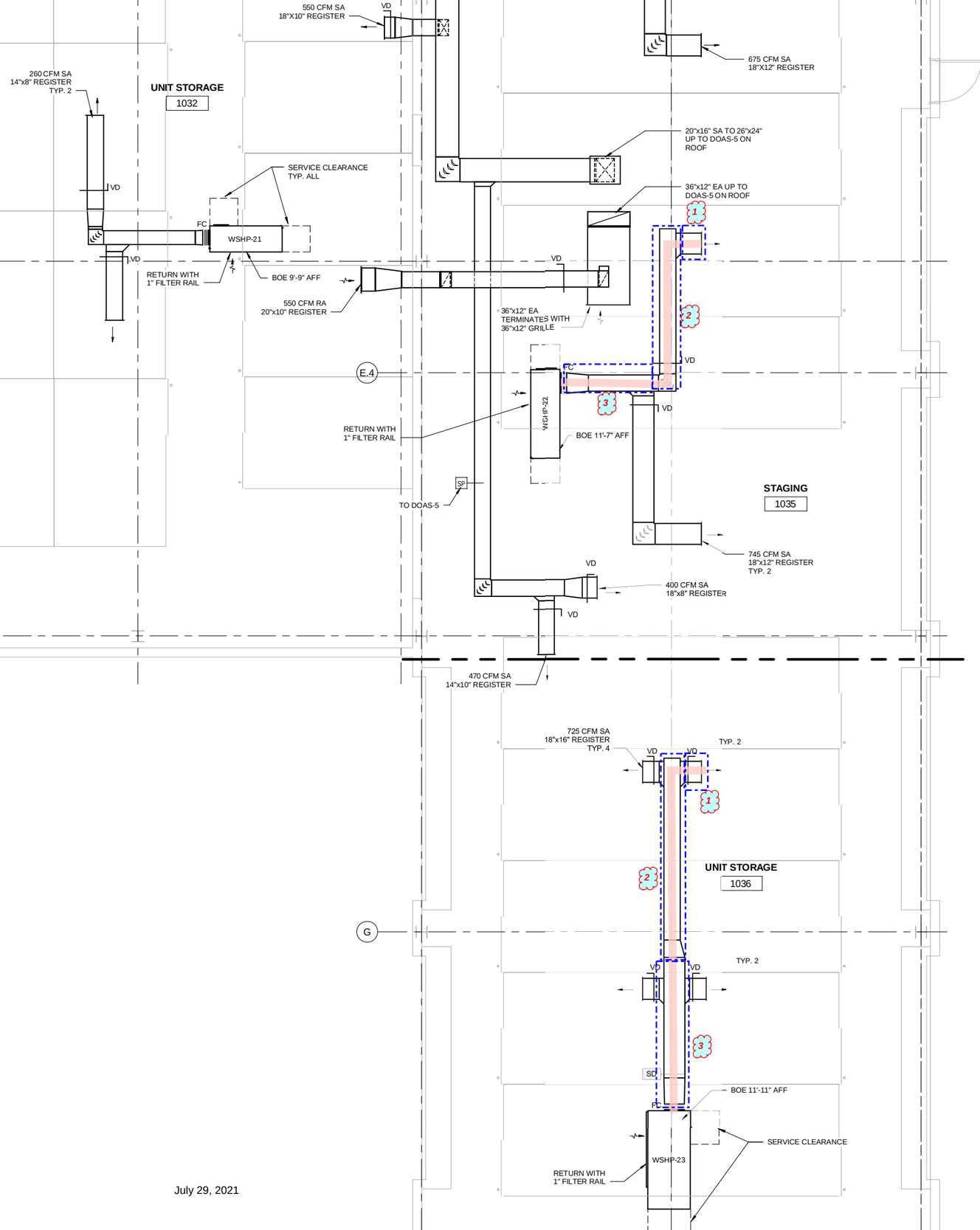

MSK-15
WSHP-22 & 23:

RETURN DUCT

SUPPLY DUCT

July 29, 2021

EQUIPMENT SELECTIONS AND CATALOG CUTS

IN COMPLIANCE WITH THE ARMY RESERVE DESIGN PROCESS AND SUBMITTAL REQUIREDMENTS - PART C, SECTION 7.4.1.2

Table of Contents:

1. DOAS EQUIPMENT CUT SHEET
2. WATER SOURCE HEAT PUMP (WSHP) CUT SHEET
3. COMPUTER ROOM AIR CONDITIONING (CRAC) UNITS CUT SHEET
4. HEAT PUMP (HP) CUT SHEET
5. MAKE UP AIR UNIT (MUA) CUT SHEET
6. FANS CUT SHEET
7. ELECTRIC HEATED AIR CURTAIN (EHAC) CUT SHEET
8. CLOSED CIRCUIT COOLING TOWER CUT SHEET
9. GAS FIRED BOILERS CUT SHEET
10. PUMPS CUT SHEETS
11. AIR SEPARATORS CUT SHEET
12. EXPANSION TANK CUT SHEET
13. GLYCOL MAKE UP PACKAGE CUT SHEET
14. CHEMICAL FEEDER CUT SHEET
15. CONDENSATE NEUTRALIZER CUT SHEET

YORK

Tag: DOAS-1

JROW048B0A2DAC20M3B32DE000000BDCC2DM300KLG10000G00000

Unit Information

Package Unit - DOAS Water Source Heat Pump

Model:	**JROW**	Unit Length:	**148.625**	in	Altitude:	**0**	ft
Size:	**48 B0**	Unit Width:	**64**	in	Unit Weight:	**1902**	lb.
Quantity:	**1**	Unit Height:	**61.25**	in			

Design Conditions

Supply Airflow:	**1100**	CFM
Outside Airflow:	**1100**	CFM

Filter Information

Filters:	**24x24(1)**	
Pleated Filter Media:	**12.8**	sq.ft

Cooling Performance

Gross Total Capacity:	**53.6**	MBh
Gross Sensible Capacity:	**35.7**	MBh
Net Total Capacity:	**52.2**	MBh
Net Sensible Capacity:	**34.3**	MBh
MBH Rejected:	**63.5**	MBh
Entering Air DB / WB (Coil):	**79 / 66**	F
Leaving Air DB / WB (Coil):	**49.5 / 49.3**	F
Leaving Air DB / WB (Subcooling):	**58.0 / 53.0**	F
Leaving Air DB / WB (Max. Reheat):	**77.8 / 60.75**	F
Leaving Air DB / WB (Unit):	**79 / 61.2**	F
Air Velocity:	**157**	fpm
Coil Air PD:	**0.13**	in H2O
EER:	**20.9**	
Watts:	**4054**	

Evaporator Face Area:	**7**	sq ft
Evaporator Rows:	**6**	
Evaporator FPI:	**13**	
Water Connection Sizes:	**1**	in
Entering Fluid Temp:	**85**	F
Leaving Fluid Temp:	**95.0**	F
Fluid Flow:	**13.0**	gpm
Fluid PD:	**9.9**	FT H2O
Fluid Type:	**Propylene**	
Percent Glycol:	**35**	%
MRE:	**7.91**	lb/kWh
MRC:	**32.08**	lb/h

Heating Performance

Capacity:	**54.8**	MBh	Condenser Rows:		
MBH Absorbed:		MBh	Condenser FPI:		
Entering Air DB:	**51.9**	F	Fluid PD:	**11.1**	FT H2O
Leaving Air DB:	**98.0**	F	COP:	**5.8**	
Coil Air PD:	**0.09**	in H2O	Watts:	**2361.0**	
Entering Fluid Temp:	**70.0**	F	Leaving Fluid Temp:	**62.0**	F
Fluid Flow:	**13.0**	gpm	Water Connection Sizes:	**1**	in

Energy Conservation Wheel ECW 324

			Cooling		Heating
Outside Airflow:	**1100** CFM	Outside Air DB / WB:	**92.0 / 74.0** F	Outside Air DB / WB:	**10.0 / 9.0** F
Pre-treated OA:	**1100** CFM	Pre-treated OA DB / WB:	**79.0 / 66.0** F	Pre-treated OA DB / WB:	**51.9 / 46.3** F
Return Airflow:	**0** CFM	Return Air DB / WB:	**75.0 / 63.0** F	Return Air DB / WB:	**70.0 / 58.0** F
Exhaust Airflow:	**1075** CFM	Exhaust Air DB / WB:	**87.6 / 71.2** F	Exhaust Air DB / WB:	**21.8 / 22.4** F
		Supply Air PD:	**0.50** in H2O	Supply Air PD:	**0.60** in H2O
		Exhaust Air PD:	**0.53** in H2O	Exhaust Air PD:	**0.53** in H2O
		Total Capacity:	**32.34** MBh	Total Capacity:	**72.62** MBh
Filters:		Latent Effectiveness:	**79** %	Latent Effectiveness:	**81** %
Pleated Filter Media:	sq.ft	Sensible Effectiveness:	**82** %	Sensible Effectiveness:	**84** %
		Total Effectiveness:	**80** %	Total Effectiveness:	**83** %

Supply Fan ECM 350

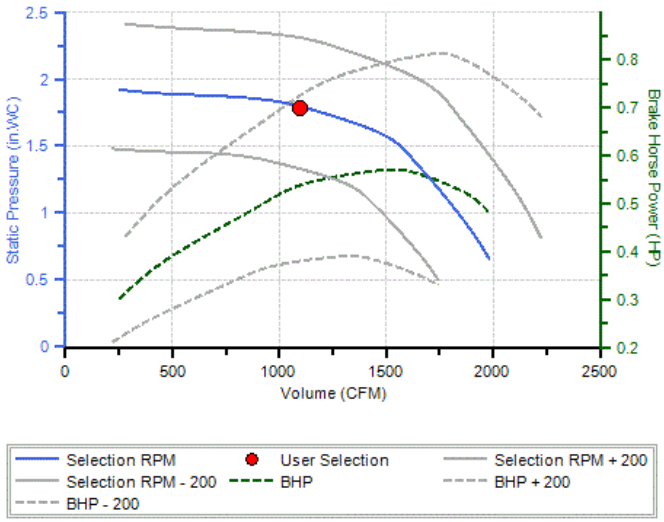

Supply Pressure Drop Summary

External Static Pressure:	**1.00**	in H2O
Internal Pressure Drop:	**0.78**	in H2O
Total Static Pressure:	**1.78**	in H2O

Supply Fan Conditions

Fan Motor BHP:	**0.54**	BHP
Fan RPM:	**1649**	RPM

Internal Pressure Drop Breakdown

Filter:	**0.12**	in H2O
Cooling Coil:	**0.13**	in H2O
Hot Gas Reheat & Subcooling:	**0.02**	in H2O
Energy Conservation Wheel:	**0.5**	in H2O

Exhaust Fan ECM 350

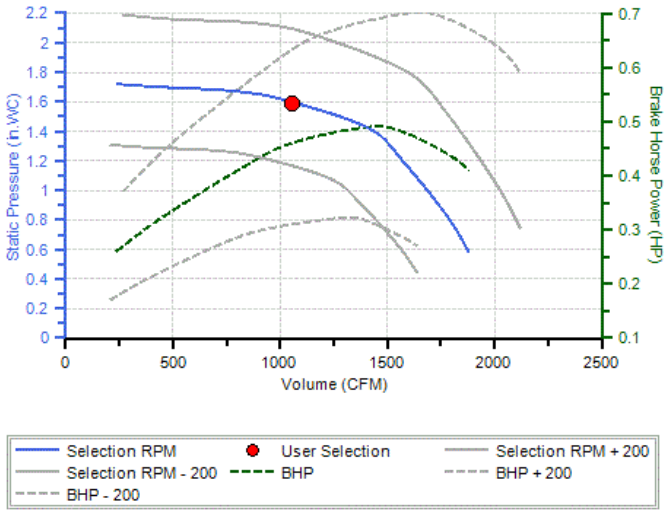

Exhaust Pressure Drop

External Static Pressure:	**1.00**	in H2O
Total Static Pressure:	**1.59**	in H2O

Exhaust Fan Conditions

Fan Motor BHP:	**0.46**	BHP
Fan RPM:	**1563**	RPM

Unit Electrical Data

Unit Voltage-Ph-Hz:	**208-3-60**	
Unit Amps - FLA:	**27.7**	Amps
Min Circuit Ampacity - MCA:	**31.7**	Amps
Maximum Fuse Size - MFS:	**45**	Amps

Motors

Name/Type	Fan Service	Qty	HP (ea.)	FLA (ea.)	RLA (ea.)	LRA (ea.)
ECW		**1**	**0.5**	**2.4**		
ECM-350	**Exhaust**	**1**	**2.41**	**4.6**		
Scroll		**1**			**16.1**	**110.0**
ECM-350	**Supply**	**1**	**2.41**	**4.6**		

Sound Data

	63Hz	125Hz	250Hz	500Hz	1KHz	2KHz	4KHz	8KHz	Total DBA
Supply	**47**	**54**	**70**	**73.0**	**78.0**	**77.0**	**71**	**67**	**82**
Exhaust	**47**	**54**	**70**	**73.0**	**78.0**	**77.0**	**71**	**67**	**82**

YORK

Tag: DOAS-2

JROW120C0A2DAC40M3B42FJ000000CECC2DM300KLK10000G00000

Unit Information

Package Unit - DOAS Water Source Heat Pump

Model:	**JROW**	Unit Length:	**189.625**	in	Altitude:	**0**	ft
Size:	**120 C0**	Unit Width:	**64**	in	Unit Weight:	**2983**	lb.
Quantity:	**1**	Unit Height:	**65.375**	in			

Design Conditions

Supply Airflow:	**2900**	CFM
Outside Airflow:	**2900**	CFM

Filter Information

Filters:		
Pleated Filter Media:		sq.ft

Cooling Performance

Gross Total Capacity:	**142.2**	MBh
Gross Sensible Capacity:	**94.2**	MBh
Net Total Capacity:	**136.1**	MBh
Net Sensible Capacity:	**88.1**	MBh
MBH Rejected:	**167.4**	MBh
Entering Air DB / WB (Coil):	**81.6 / 67.9**	F
Leaving Air DB / WB (Coil):	**52.2 / 51.8**	F
Leaving Air DB / WB (Subcooling):	**59.6 / 54.9**	F
Leaving Air DB / WB (Max. Reheat):	**76.0 / 61.17**	F
Leaving Air DB / WB (Unit):	**78 / 61.9**	F
Air Velocity:	**241**	fpm
Coil Air PD:	**0.24**	in H2O
EER:	**17.9**	
Watts:	**11314**	

Evaporator Face Area:	**12**	sq ft
Evaporator Rows:	**6**	
Evaporator FPI:	**12**	
Water Connection Sizes:	**1.25**	in
Entering Fluid Temp:	**85**	F
Leaving Fluid Temp:	**95.0**	F
Fluid Flow:	**36.0**	gpm
Fluid PD:	**19.2**	FT H2O
Fluid Type:	**Propylene**	
Percent Glycol:	**35**	%
MRE:	**7.69**	lb/kWh
MRC:	**87.03**	lb/h

Heating Performance

Capacity:	**143.8**	MBh	Condenser Rows:		
MBH Absorbed:		MBh	Condenser FPI:		
Entering Air DB:	**43.0**	F	Fluid PD:	**21.5**	FT H2O
Leaving Air DB:	**88.9**	F	COP:	**5.6**	
Coil Air PD:	**0.17**	in H2O	Watts:	**5694.0**	
Entering Fluid Temp:	**70.0**	F	Leaving Fluid Temp:	**62.3**	F
Fluid Flow:	**36.0**	gpm	Water Connection Sizes:	**1.25**	in

Energy Conservation Wheel ECW 364

			Cooling		Heating	
Outside Airflow:	**2900** CFM	Outside Air DB / WB:	**92.0 / 74.0** F	Outside Air DB / WB:	**10.0 / 9.0** F
Pre-treated OA:	**2900** CFM	Pre-treated OA DB / WB:	**81.6 / 67.9** F	Pre-treated OA DB / WB:	**43.0 / 39.4** F
Return Airflow:	**0** CFM	Return Air DB / WB:	**75.0 / 63.0** F	Return Air DB / WB:	**70.0 / 58.0** F
Exhaust Airflow:	**2410** CFM	Exhaust Air DB / WB:	**86.9 / 70.6** F	Exhaust Air DB / WB:	**25.4 / 26.3** F
		Supply Air PD:	**1.10** in H2O	Supply Air PD:	**1.20** in H2O
		Exhaust Air PD:	**0.96** in H2O	Exhaust Air PD:	**0.96** in H2O
		Total Capacity:	**66.43** MBh	Total Capacity:	**148.20** MBh
Filters:		Latent Effectiveness:	**65** %	Latent Effectiveness:	**70** %
Pleated Filter Media:	sq.ft	Sensible Effectiveness:	**72** %	Sensible Effectiveness:	**76** %
		Total Effectiveness:	**68** %	Total Effectiveness:	**74** %

Supply Fan ECM 450 (High)

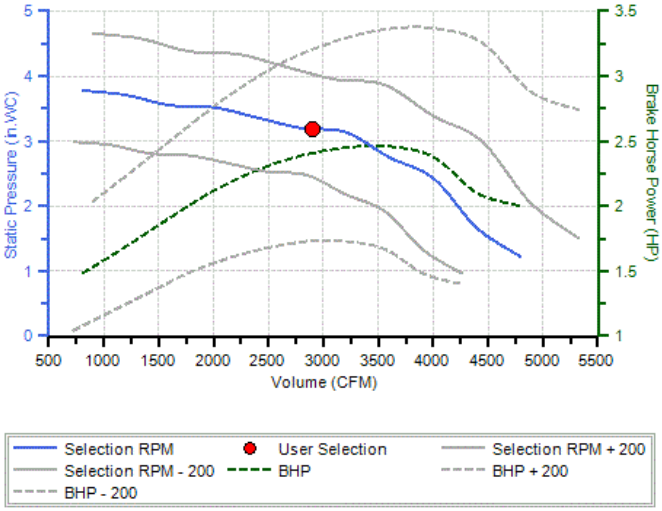

Supply Pressure Drop Summary

External Static Pressure:	**1.50**	in H2O
Internal Pressure Drop:	**1.69**	in H2O
Total Static Pressure:	**3.19**	in H2O

Supply Fan Conditions

Fan Motor BHP:	**2.40**	BHP
Fan RPM:	**1808**	RPM

Internal Pressure Drop Breakdown

Filter:	**0.29**	in H2O
Cooling Coil:	**0.24**	in H2O
Hot Gas Reheat & Subcooling:	**0.04**	in H2O
Energy Conservation Wheel:	**1.1**	in H2O

Exhaust Fan ECM 350

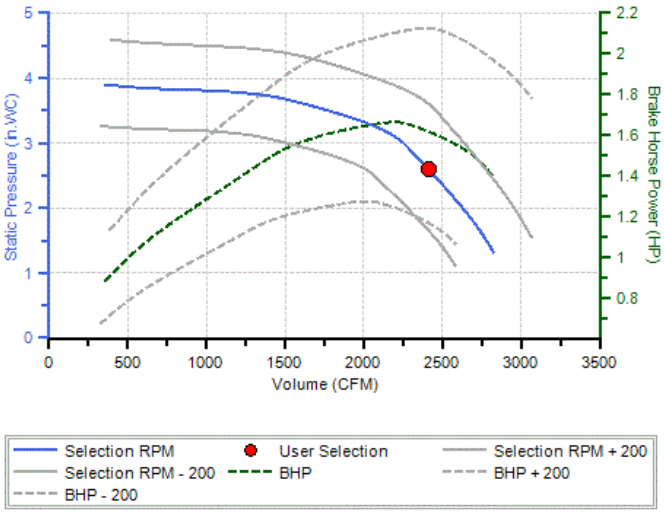

Exhaust Pressure Drop

External Static Pressure:	**1.50**	in H2O
Total Static Pressure:	**2.60**	in H2O

Exhaust Fan Conditions

Fan Motor BHP:	**1.62**	BHP
Fan RPM:	**2350**	RPM

Unit Electrical Data

Unit Voltage-Ph-Hz:	**208-3-60**	
Unit Amps - FLA:	**52**	Amps
Min Circuit Ampacity - MCA:	**56.5**	Amps
Maximum Fuse Size - MFS:	**70**	Amps

Motors

Name/Type	Fan Service	Qty	HP (ea.)	FLA (ea.)	RLA (ea.)	LRA (ea.)
ECW		**1**	**0.5**	**2.4**		
ECM-350	**Exhaust**	**1**	**2.41**	**4.6**		
Scroll		**2**			**17.9**	**110.0**
ECM-450	**Supply**	**1**	**4.83**	**9.2**		

Sound Data

	63Hz	125Hz	250Hz	500Hz	1KHz	2KHz	4KHz	8KHz	Total DBA
Supply	**49**	**62**	**79**	**83.0**	**83.0**	**80.0**	**79**	**77**	**88**
Exhaust	**47**	**54**	**70**	**73.0**	**78.0**	**77.0**	**71**	**67**	**82**

YORK

Tag: DOAS-3

JROW036B0A2DAC20M3B31DE000000BDCC2DM300KLE10000G00000

Unit Information

Package Unit - DOAS Water Source Heat Pump

Model:	**JROW**	Unit Length:	**148.625**	in	Altitude:	**0**	ft
Size:	**36 B0**	Unit Width:	**64**	in	Unit Weight:	**1852**	lb.
Quantity:	**1**	Unit Height:	**61.25**	in			

Design Conditions

Supply Airflow:	**900**	CFM
Outside Airflow:	**900**	CFM

Filter Information

Filters:	**24x24(1)**	
Pleated Filter Media:	**12.8**	sq.ft

Cooling Performance

Gross Total Capacity:	**41.4**	MBh
Gross Sensible Capacity:	**28.4**	MBh
Net Total Capacity:	**40.3**	MBh
Net Sensible Capacity:	**27.3**	MBh
MBH Rejected:	**48.6**	MBh
Entering Air DB / WB (Coil):	**79.6 / 66.4**	F
Leaving Air DB / WB (Coil):	**51.0 / 50.9**	F
Leaving Air DB / WB (Subcooling):	**58.7 / 54.2**	F
Leaving Air DB / WB (Max. Reheat):	**79.0 / 61.93**	F
Leaving Air DB / WB (Unit):	**80.1 / 62.3**	F
Air Velocity:	**128**	fpm
Coil Air PD:	**0.10**	in H2O
EER:	**22**	
Watts:	**2990**	

Evaporator Face Area:	**7**	sq ft
Evaporator Rows:	**6**	
Evaporator FPI:	**13**	
Water Connection Sizes:	**1**	in
Entering Fluid Temp:	**85**	F
Leaving Fluid Temp:	**94.0**	F
Fluid Flow:	**12.0**	gpm
Fluid PD:	**21.9**	FT H2O
Fluid Type:	**Ethylene**	
Percent Glycol:	**35**	%
MRE:	**7.87**	lb/kWh
MRC:	**23.54**	lb/h

Heating Performance

Capacity:	**42.7**	MBh	Condenser Rows:		
MBH Absorbed:		MBh	Condenser FPI:		
Entering Air DB:	**49.0**	F	Fluid PD:	**23.8**	FT H2O
Leaving Air DB:	**92.9**	F	COP:	**6.3**	
Coil Air PD:	**0.07**	in H2O	Watts:	**1659.0**	
Entering Fluid Temp:	**70.0**	F	Leaving Fluid Temp:	**62.9**	F
Fluid Flow:	**12.0**	gpm	Water Connection Sizes:	**1**	in

Energy Conservation Wheel ECW 324

			Cooling		Heating
Outside Airflow:	**900** CFM	Outside Air DB / WB:	**92.0 / 74.0** F	Outside Air DB / WB:	**10.0 / 9.0** F
Pre-treated OA:	**900** CFM	Pre-treated OA DB / WB:	**79.6 / 66.4** F	Pre-treated OA DB / WB:	**49.0 / 44.4** F
Return Airflow:	**0** CFM	Return Air DB / WB:	**75.0 / 63.0** F	Return Air DB / WB:	**70.0 / 58.0** F
Exhaust Airflow:	**715** CFM	Exhaust Air DB / WB:	**88.7 / 72.0** F	Exhaust Air DB / WB:	**18.7 / 18.9** F
		Supply Air PD:	**0.40** in H2O	Supply Air PD:	**0.50** in H2O
		Exhaust Air PD:	**0.37** in H2O	Exhaust Air PD:	**0.37** in H2O
		Total Capacity:	**25.40** MBh	Total Capacity:	**55.57** MBh
Filters:		Latent Effectiveness:	**84** %	Latent Effectiveness:	**89** %
Pleated Filter Media:	sq.ft	Sensible Effectiveness:	**87** %	Sensible Effectiveness:	**92** %
		Total Effectiveness:	**85** %	Total Effectiveness:	**91** %

Supply Fan ECM 350

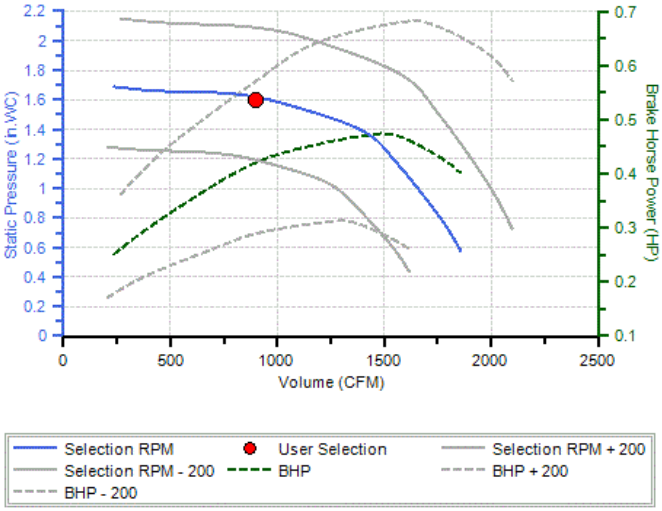

Supply Pressure Drop Summary

External Static Pressure:	**1.00**	in H2O
Internal Pressure Drop:	**0.60**	in H2O
Total Static Pressure:	**1.60**	in H2O

Supply Fan Conditions

Fan Motor BHP:	**0.42**	BHP
Fan RPM:	**1546**	RPM

Internal Pressure Drop Breakdown

Filter:	**0.08**	in H2O
Cooling Coil:	**0.1**	in H2O
Hot Gas Reheat & Subcooling:	**0.01**	in H2O
Energy Conservation Wheel:	**0.4**	in H2O

Exhaust Fan ECM 350

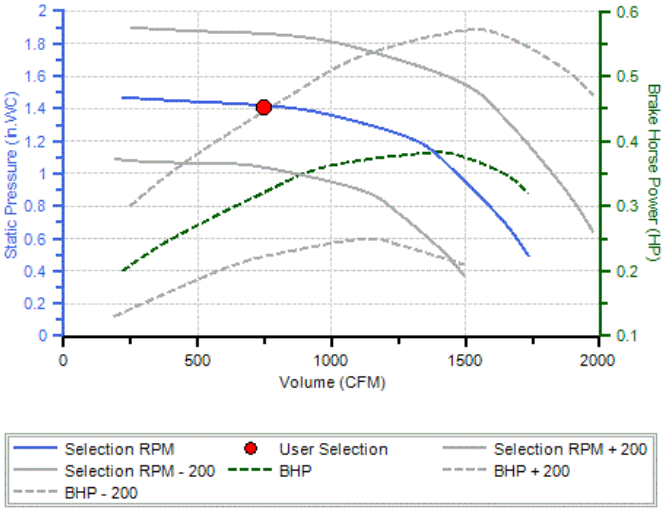

Exhaust Pressure Drop

External Static Pressure:	**1.00**	in H2O
Total Static Pressure:	**1.41**	in H2O

Exhaust Fan Conditions

Fan Motor BHP:	**0.32**	BHP
Fan RPM:	**1442**	RPM

Unit Electrical Data

Unit Voltage-Ph-Hz:	**208-3-60**	
Unit Amps - FLA:	**23.3**	Amps
Min Circuit Ampacity - MCA:	**26.2**	Amps
Maximum Fuse Size - MFS:	**35**	Amps

Motors

Name/Type	Fan Service	Qty	HP (ea.)	FLA (ea.)	RLA (ea.)	LRA (ea.)
ECW		**1**	**0.5**	**2.4**		
ECM-350	**Exhaust**	**1**	**2.41**	**4.6**		
Scroll		**1**			**11.7**	**88.0**
ECM-350	**Supply**	**1**	**2.41**	**4.6**		

Sound Data

	63Hz	125Hz	250Hz	500Hz	1KHz	2KHz	4KHz	8KHz	Total DBA
Supply	**47**	**54**	**70**	**73.0**	**78.0**	**77.0**	**71**	**67**	**82**
Exhaust	**47**	**54**	**70**	**73.0**	**78.0**	**77.0**	**71**	**67**	**82**

YORK

Tag: DOAS-4

JROW060B0A2DAC20M3B32DE000000BDCC2DM300KLH10000G00000

Unit Information

Package Unit - DOAS Water Source Heat Pump

Model:	**JROW**	Unit Length:	**148.625**	in	Altitude:	**0**	ft
Size:	**60 B0**	Unit Width:	**64**	in	Unit Weight:	**1928**	lb.
Quantity:	**1**	Unit Height:	**61.25**	in			

Design Conditions

Supply Airflow:	**1800**	CFM
Outside Airflow:	**1800**	CFM

Filter Information

Filters:	**24x24(1)**	
Pleated Filter Media:	**12.8**	sq.ft

Cooling Performance

Gross Total Capacity:	**71.3**	MBh
Gross Sensible Capacity:	**51.6**	MBh
Net Total Capacity:	**68.9**	MBh
Net Sensible Capacity:	**49.2**	MBh
MBH Rejected:	**84.8**	MBh
Entering Air DB / WB (Coil):	**80 / 66.9**	F
Leaving Air DB / WB (Coil):	**54.0 / 54.0**	F
Leaving Air DB / WB (Subcooling):	**60.7 / 56.7**	F
Leaving Air DB / WB (Max. Reheat):	**80.8 / 64.04**	F
Leaving Air DB / WB (Unit):	**82.1 / 64.5**	F
Air Velocity:	**257**	fpm
Coil Air PD:	**0.26**	in H2O
EER:	**20.7**	
Watts:	**5628**	

Evaporator Face Area:	**7**	sq ft
Evaporator Rows:	**6**	
Evaporator FPI:	**13**	
Water Connection Sizes:	**1**	in
Entering Fluid Temp:	**85**	F
Leaving Fluid Temp:	**104.0**	F
Fluid Flow:	**14.0**	gpm
Fluid PD:	**12.1**	FT H2O
Fluid Type:	**Propylene**	
Percent Glycol:	**35**	%
MRE:	**6.31**	lb/kWh
MRC:	**35.5**	lb/h

Heating Performance

Capacity:	**71.0**	MBh	Condenser Rows:		
MBH Absorbed:		MBh	Condenser FPI:		
Entering Air DB:	**48.7**	F	Fluid PD:	**13.9**	FT H2O
Leaving Air DB:	**85.2**	F	COP:	**6.2**	
Coil Air PD:	**0.20**	in H2O	Watts:	**2643.0**	
Entering Fluid Temp:	**70.0**	F	Leaving Fluid Temp:	**60.3**	F
Fluid Flow:	**14.0**	gpm	Water Connection Sizes:	**1**	in

Energy Conservation Wheel ECW 324

			Cooling		Heating	
Outside Airflow:	**1800**	CFM	Outside Air DB / WB:	**92.0 / 74.0** F	Outside Air DB / WB:	**10.0 / 9.0** F
Pre-treated OA:	**1800**	CFM	Pre-treated OA DB / WB:	**80.0 / 66.9** F	Pre-treated OA DB / WB:	**48.7 / 43.7** F
Return Airflow:	**0**	CFM	Return Air DB / WB:	**75.0 / 63.0** F	Return Air DB / WB:	**70.0 / 58.0** F
Exhaust Airflow:	**1800**	CFM	Exhaust Air DB / WB:	**86.3 / 70.4** F	Exhaust Air DB / WB:	**26.6 / 27.3** F
			Supply Air PD:	**0.90** in H2O	Supply Air PD:	**1.00** in H2O
			Exhaust Air PD:	**0.90** in H2O	Exhaust Air PD:	**0.90** in H2O
			Total Capacity:	**47.85** MBh	Total Capacity:	**108.33** MBh
Filters:			Latent Effectiveness:	**68** %	Latent Effectiveness:	**69** %
Pleated Filter Media:		sq.ft	Sensible Effectiveness:	**74** %	Sensible Effectiveness:	**74** %
			Total Effectiveness:	**71** %	Total Effectiveness:	**72** %

Tag: DOAS-4

JROW036B0A2DAC20M3B31DE00000000CC2DM300KLE10000G00000

Unit Information

Package Unit - DOAS Water Source Heat Pump

Model:	**JROW**	Unit Length:	**148.625**	in	Altitude:	**0**	ft
Size:	**36 B0**	Unit Width:	**64**	in	Unit Weight:	**1687**	lb.
Quantity:	**1**	Unit Height:	**61.25**	in			

Design Conditions

Supply Airflow:	**360**	CFM
Outside Airflow:	**360**	CFM

Filter Information

Filters:	**24x24(1)**	
Pleated Filter Media:	**12.8**	sq.ft

Heating Performance

Capacity:	**40.4**	MBh	Condenser Rows:		
MBH Absorbed:		MBh	Condenser FPI:		
Entering Air DB:	**10.0**	F	Fluid PD:	**12.6**	FT H2O
Leaving Air DB:	**113.9**	F	COP:	**4.3**	
Coil Air PD:	**0.07**	in H2O	Watts:	**2683.0**	
Entering Fluid Temp:	**70.0**	F	Leaving Fluid Temp:	**60.5**	F
Fluid Flow:	**8.0**	gpm	Water Connection Sizes:	**1**	in

Supply Fan ECM 350

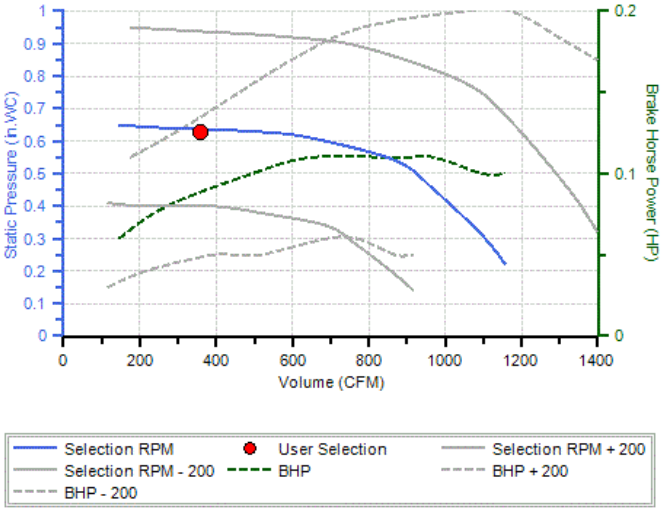

Supply Pressure Drop Summary

External Static Pressure:	**0.50**	in H2O
Internal Pressure Drop:	**0.13**	in H2O
Total Static Pressure:	**0.63**	in H2O

Supply Fan Conditions

Fan Motor BHP:	**0.08**	BHP
Fan RPM:	**962**	RPM

Internal Pressure Drop Breakdown

Filter:	**0.01**	in H2O
Cooling Coil:	**0.12**	in H2O

Exhaust Fan ECM 350

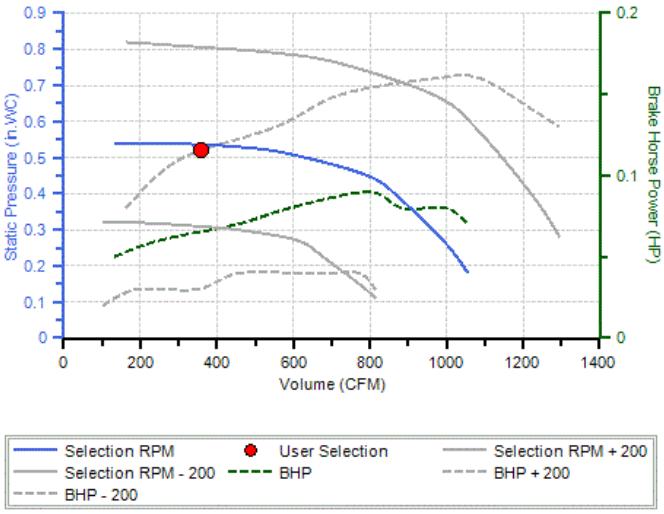

Exhaust Pressure Drop

External Static Pressure:	**0.50**	in H2O
Total Static Pressure:	**0.52**	in H2O

Exhaust Fan Conditions

Fan Motor BHP:	**0.07**	BHP
Fan RPM:	**877**	RPM

Unit Electrical Data

Unit Voltage-Ph-Hz:	**208-3-60**	
Unit Amps - FLA:	**20.9**	Amps
Min Circuit Ampacity - MCA:	**23.8**	Amps
Maximum Fuse Size - MFS:	**35**	Amps

Motors

Name/Type	Fan Service	Qty	HP (ea.)	FLA (ea.)	RLA (ea.)	LRA (ea.)
Scroll		**1**			**11.7**	**88.0**
ECM-350	**Supply**	**1**	**2.41**	**4.6**		
ECM-350	**Exhaust**	**1**	**2.41**	**4.6**		

Sound Data

	63Hz	125Hz	250Hz	500Hz	1KHz	2KHz	4KHz	8KHz	Total DBA
Supply	**47**	**54**	**70**	**73.0**	**78.0**	**77.0**	**71**	**67**	**82**
Exhaust	**47**	**54**	**70**	**73.0**	**78.0**	**77.0**	**71**	**67**	**82**

YORK

Tag: DOAS-5

JROW060B0A2DAC20M3B32DE000000BDCC2DM600KLH10000G0AC00

Unit Information

Package Unit - DOAS Water Source Heat Pump

Model:	**JROW**	Unit Length:	**148.625**	in	Altitude:	**0**	ft
Size:	**60 B0**	Unit Width:	**64**	in	Unit Weight:	**1928**	lb.
Quantity:	**1**	Unit Height:	**61.25**	in			

Design Conditions

Supply Airflow:	**1800**	CFM
Outside Airflow:	**1800**	CFM

Filter Information

Filters:	**24x24(1)**	
Pleated Filter Media:	**12.8**	sq.ft

Cooling Performance

Gross Total Capacity:	**71.3**	MBh
Gross Sensible Capacity:	**51.6**	MBh
Net Total Capacity:	**68.4**	MBh
Net Sensible Capacity:	**48.7**	MBh
MBH Rejected:	**84.8**	MBh
Entering Air DB / WB (Coil):	**80 / 66.9**	F
Leaving Air DB / WB (Coil):	**54.0 / 54.0**	F
Leaving Air DB / WB (Subcooling):	**60.7 / 56.7**	F
Leaving Air DB / WB (Max. Reheat):	**80.8 / 64.04**	F
Leaving Air DB / WB (Unit):	**82.3 / 64.6**	F
Air Velocity:	**257**	fpm
Coil Air PD:	**0.26**	in H2O
EER:	**19.7**	
Watts:	**5912**	

Evaporator Face Area:	**7**	sq ft
Evaporator Rows:	**6**	
Evaporator FPI:	**13**	
Water Connection Sizes:	**1**	in
Entering Fluid Temp:	**85**	F
Leaving Fluid Temp:	**104.0**	F
Fluid Flow:	**14.0**	gpm
Fluid PD:	**12.1**	FT H2O
Fluid Type:	**Propylene**	
Percent Glycol:	**35**	%
MRE:	**6**	lb/kWh
MRC:	**35.5**	lb/h

Heating Performance

Capacity:	**71.0**	MBh	Condenser Rows:		
MBH Absorbed:		MBh	Condenser FPI:		
Entering Air DB:	**48.7**	F	Fluid PD:	**13.9**	FT H2O
Leaving Air DB:	**85.2**	F	COP:	**5.9**	
Coil Air PD:	**0.20**	in H2O	Watts:	**2643.0**	
Entering Fluid Temp:	**70.0**	F	Leaving Fluid Temp:	**60.3**	F
Fluid Flow:	**14.0**	gpm	Water Connection Sizes:	**1**	in

Energy Conservation Wheel ECW 324

			Cooling			Heating		
Outside Airflow:	**1800**	CFM	Outside Air DB / WB:	**92.0 / 74.0**	F	Outside Air DB / WB:	**10.0 / 9.0**	F
Pre-treated OA:	**1800**	CFM	Pre-treated OA DB / WB:	**80.0 / 66.9**	F	Pre-treated OA DB / WB:	**48.7 / 43.7**	F
Return Airflow:	**0**	CFM	Return Air DB / WB:	**75.0 / 63.0**	F	Return Air DB / WB:	**70.0 / 58.0**	F
Exhaust Airflow:	**1800**	CFM	Exhaust Air DB / WB:	**86.3 / 70.4**	F	Exhaust Air DB / WB:	**26.6 / 27.3**	F
			Supply Air PD:	**0.90**	in H2O	Supply Air PD:	**1.00**	in H2O
			Exhaust Air PD:	**0.90**	in H2O	Exhaust Air PD:	**0.90**	in H2O
			Total Capacity:	**47.85**	MBh	Total Capacity:	**108.33**	MBh
Filters:			Latent Effectiveness:	**68**	%	Latent Effectiveness:	**69**	%
Pleated Filter Media:		sq.ft	Sensible Effectiveness:	**74**	%	Sensible Effectiveness:	**74**	%
			Total Effectiveness:	**71**	%	Total Effectiveness:	**72**	%

Supply Fan ECM 350

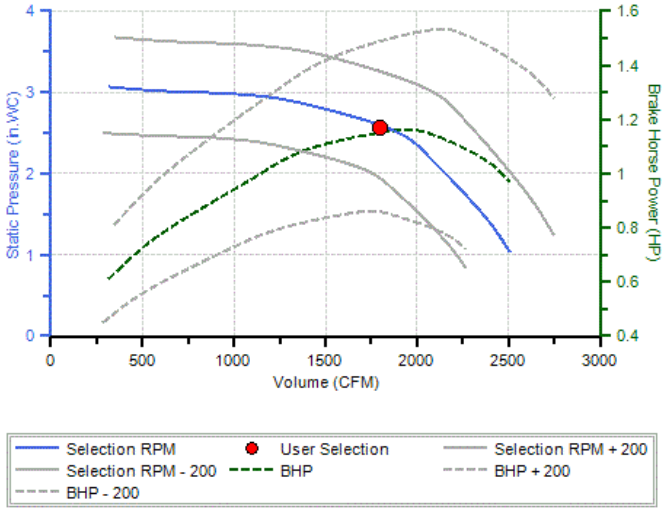

Supply Pressure Drop Summary

External Static Pressure:	**1.00**	in H2O
Internal Pressure Drop:	**1.57**	in H2O
Total Static Pressure:	**2.57**	in H2O

Supply Fan Conditions

Fan Motor BHP:	**1.15**	BHP
Fan RPM:	**2084**	RPM

Internal Pressure Drop Breakdown

Filter:	**0.33**	in H2O
Cooling Coil:	**0.26**	in H2O
Hot Gas Reheat & Subcooling:	**0.05**	in H2O
Energy Conservation Wheel:	**0.9**	in H2O

Exhaust Fan ECM 350

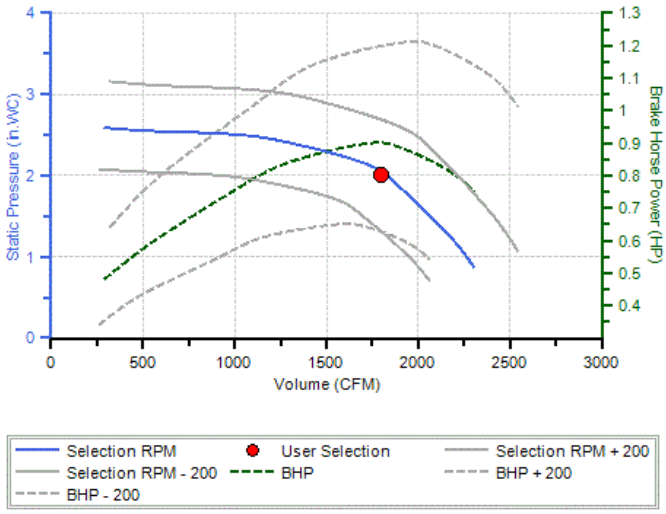

Exhaust Pressure Drop

External Static Pressure:	**1.00**	in H2O
Total Static Pressure:	**2.01**	in H2O

Exhaust Fan Conditions

Fan Motor BHP:	**0.89**	BHP
Fan RPM:	**1915**	RPM

Unit Electrical Data

Unit Voltage-Ph-Hz:	**208-3-60**	
Unit Amps - FLA:	**29.5**	Amps
Min Circuit Ampacity - MCA:	**34**	Amps
Maximum Fuse Size - MFS:	**50**	Amps

Motors

Name/Type	Fan Service	Qty	HP (ea.)	FLA (ea.)	RLA (ea.)	LRA (ea.)
ECW		**1**	**0.5**	**2.4**		
ECM-350	**Exhaust**	**1**	**2.41**	**4.6**		
Scroll		**1**			**17.9**	**110.0**
ECM-350	**Supply**	**1**	**2.41**	**4.6**		

Sound Data

	63Hz	125Hz	250Hz	500Hz	1KHz	2KHz	4KHz	8KHz	Total DBA
Supply	**47**	**54**	**70**	**73.0**	**78.0**	**77.0**	**71**	**67**	**82**
Exhaust	**47**	**54**	**70**	**73.0**	**78.0**	**77.0**	**71**	**67**	**82**

Tag: **DOAS-6**

JROW120C0A2DAC20M3B42FJ000000BDCC2DM300KLJ10000G00000

Unit Information

Package Unit - DOAS Water Source Heat Pump

Model:	**JROW**		Unit Length:	**189.625**	in	Altitude:	**0**	ft
Size:	**120**	**C0**	Unit Width:	**64**	in	Unit Weight:	**2885**	lb.
Quantity:	**1**		Unit Height:	**65.375**	in			

Design Conditions

Supply Airflow:	**2355**	CFM
Outside Airflow:	**2355**	CFM

Filter Information

Filters:	**24x24(2)**	
Pleated Filter Media:	**25.6**	sq.ft

Cooling Performance

Gross Total Capacity:	**134.8**	MBh
Gross Sensible Capacity:	**84.6**	MBh
Net Total Capacity:	**130.9**	MBh
Net Sensible Capacity:	**80.7**	MBh
MBH Rejected:	**160.4**	MBh
Entering Air DB / WB (Coil):	**80.7 / 67.4**	F
Leaving Air DB / WB (Coil):	**48.2 / 47.8**	F
Leaving Air DB / WB (Subcooling):	**57.5 / 52.0**	F
Leaving Air DB / WB (Max. Reheat):	**77.0 / 59.73**	F
Leaving Air DB / WB (Unit):	**78.5 / 60.3**	F
Air Velocity:	**196**	fpm
Coil Air PD:	**0.18**	in H2O
EER:	**17.9**	
Watts:	**10561**	

Evaporator Face Area:	**12**	sq ft
Evaporator Rows:	**6**	
Evaporator FPI:	**12**	
Water Connection Sizes:	**1.25**	in
Entering Fluid Temp:	**85**	F
Leaving Fluid Temp:	**95.0**	F
Fluid Flow:	**33.0**	gpm
Fluid PD:	**16.5**	FT H2O
Fluid Type:	**Propylene**	
Percent Glycol:	**35**	%
MRE:	**8.64**	lb/kWh
MRC:	**91.3**	lb/h

Heating Performance

Capacity:	**137.6**	MBh	Condenser Rows:		
MBH Absorbed:		MBh	Condenser FPI:		
Entering Air DB:	**46.5**	F	Fluid PD:	**18.5**	FT H2O
Leaving Air DB:	**100.6**	F	COP:	**5.3**	
Coil Air PD:	**0.12**	in H2O	Watts:	**6522.0**	
Entering Fluid Temp:	**70.0**	F	Leaving Fluid Temp:	**62.2**	F
Fluid Flow:	**33.0**	gpm	Water Connection Sizes:	**1.25**	in

Tag: **DOAS-6**

JROW120C0A2DAC20M3B42FJ000000BDCC2DM300KLJ10000G00000

Energy Conservation Wheel ECW 324

			Cooling			Heating		
Outside Airflow:	**2355**	CFM	Outside Air DB / WB:	**92.0 / 74.0**	F	Outside Air DB / WB:	**10.0 / 9.0**	F
Pre-treated OA:	**2355**	CFM	Pre-treated OA DB / WB:	**80.7 / 67.4**	F	Pre-treated OA DB / WB:	**46.5 / 41.9**	F
Return Airflow:	**0**	CFM	Return Air DB / WB:	**75.0 / 63.0**	F	Return Air DB / WB:	**70.0 / 58.0**	F
Exhaust Airflow:	**2530**	CFM	Exhaust Air DB / WB:	**85.0 / 69.4**	F	Exhaust Air DB / WB:	**31.6 / 31.8**	F
			Supply Air PD:	**1.10**	in H2O	Supply Air PD:	**1.30**	in H2O
			Exhaust Air PD:	**1.27**	in H2O	Exhaust Air PD:	**1.27**	in H2O
			Total Capacity:	**57.99**	MBh	Total Capacity:	**132.65**	MBh
Filters:			Latent Effectiveness:	**62**	%	Latent Effectiveness:	**58**	%
Pleated Filter Media:		sq.ft	Sensible Effectiveness:	**69**	%	Sensible Effectiveness:	**65**	%
			Total Effectiveness:	**65**	%	Total Effectiveness:	**63**	%

Supply Fan ECM 350

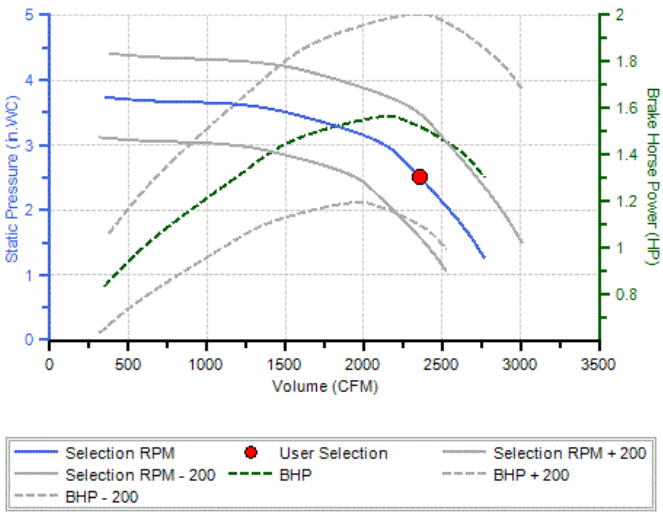

Supply Pressure Drop Summary

External Static Pressure:	**1.00**	in H2O
Internal Pressure Drop:	**1.51**	in H2O
Total Static Pressure:	**2.51**	in H2O

Supply Fan Conditions

Fan Motor BHP:	**1.52**	BHP
Fan RPM:	**2301**	RPM

Internal Pressure Drop Breakdown

Filter:	**0.19**	in H2O
Cooling Coil:	**0.18**	in H2O
Hot Gas Reheat & Subcooling:	**0.03**	in H2O
Energy Conservation Wheel:	**1.1**	in H2O

Exhaust Fan ECM 350

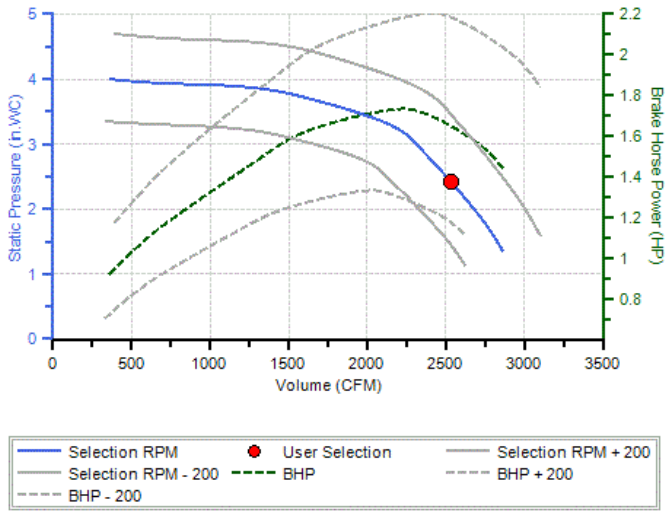

Exhaust Pressure Drop

External Static Pressure:	**1.00**	in H2O
Total Static Pressure:	**2.42**	in H2O

Exhaust Fan Conditions

Fan Motor BHP:	**1.64**	BHP
Fan RPM:	**2380**	RPM

Unit Electrical Data

Unit Voltage-Ph-Hz:	**208-3-60**	
Unit Amps - FLA:	**47.4**	Amps
Min Circuit Ampacity - MCA:	**51.9**	Amps
Maximum Fuse Size - MFS:	**60**	Amps

Motors

Name/Type	Fan Service	Qty	HP (ea.)	FLA (ea.)	RLA (ea.)	LRA (ea.)
ECW		**1**	**0.5**	**2.4**		
ECM-350	**Exhaust**	**1**	**2.41**	**4.6**		
Scroll		**2**			**17.9**	**110.0**
ECM-350	**Supply**	**1**	**2.41**	**4.6**		

Sound Data

	63Hz	125Hz	250Hz	500Hz	1KHz	2KHz	4KHz	8KHz	Total DBA
Supply	**47**	**54**	**70**	**73.0**	**78.0**	**77.0**	**71**	**67**	**82**
Exhaust	**47**	**54**	**70**	**73.0**	**78.0**	**77.0**	**71**	**67**	**82**

0504I-2489 - *R WG B CAB-1

Qty: 5 Tags: DOAS-1, DOAS-3, DOAS-4, DOAS-5

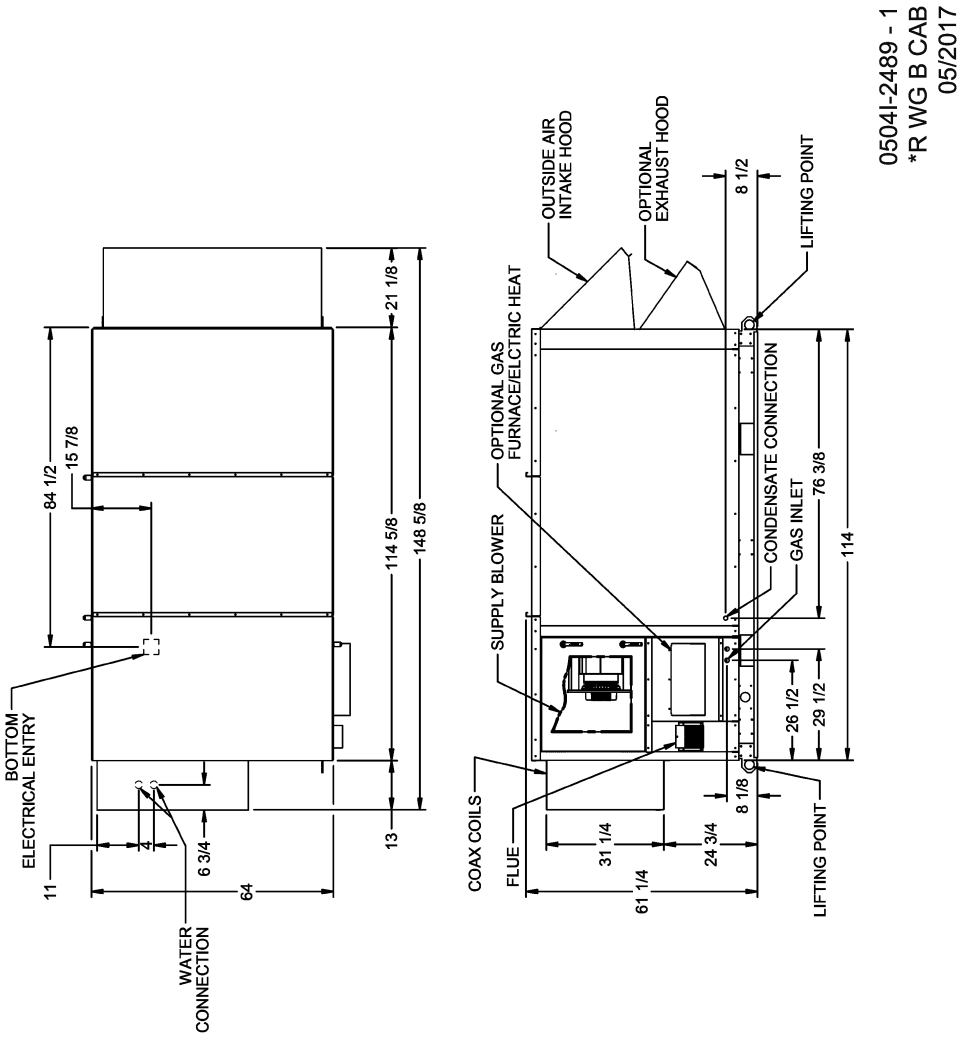

0504I-2489 - *R WG B CAB-2

Qty: 5 Tags: DOAS-1, DOAS-3, DOAS-4, DOAS-5

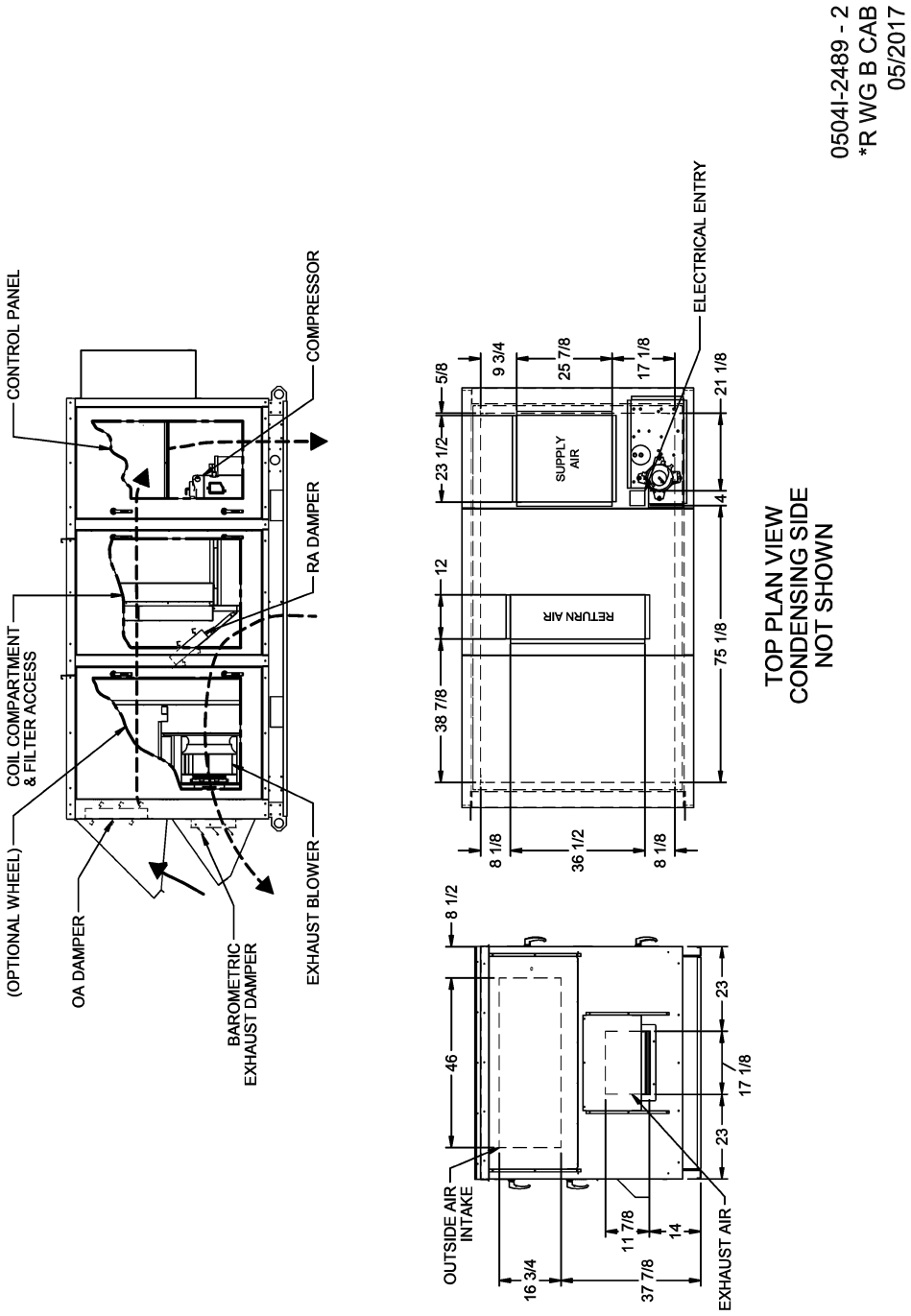

0504I-2529 - *R WG C CAB-1 Qty: 1
Tags: DOAS-2, DOAS-6

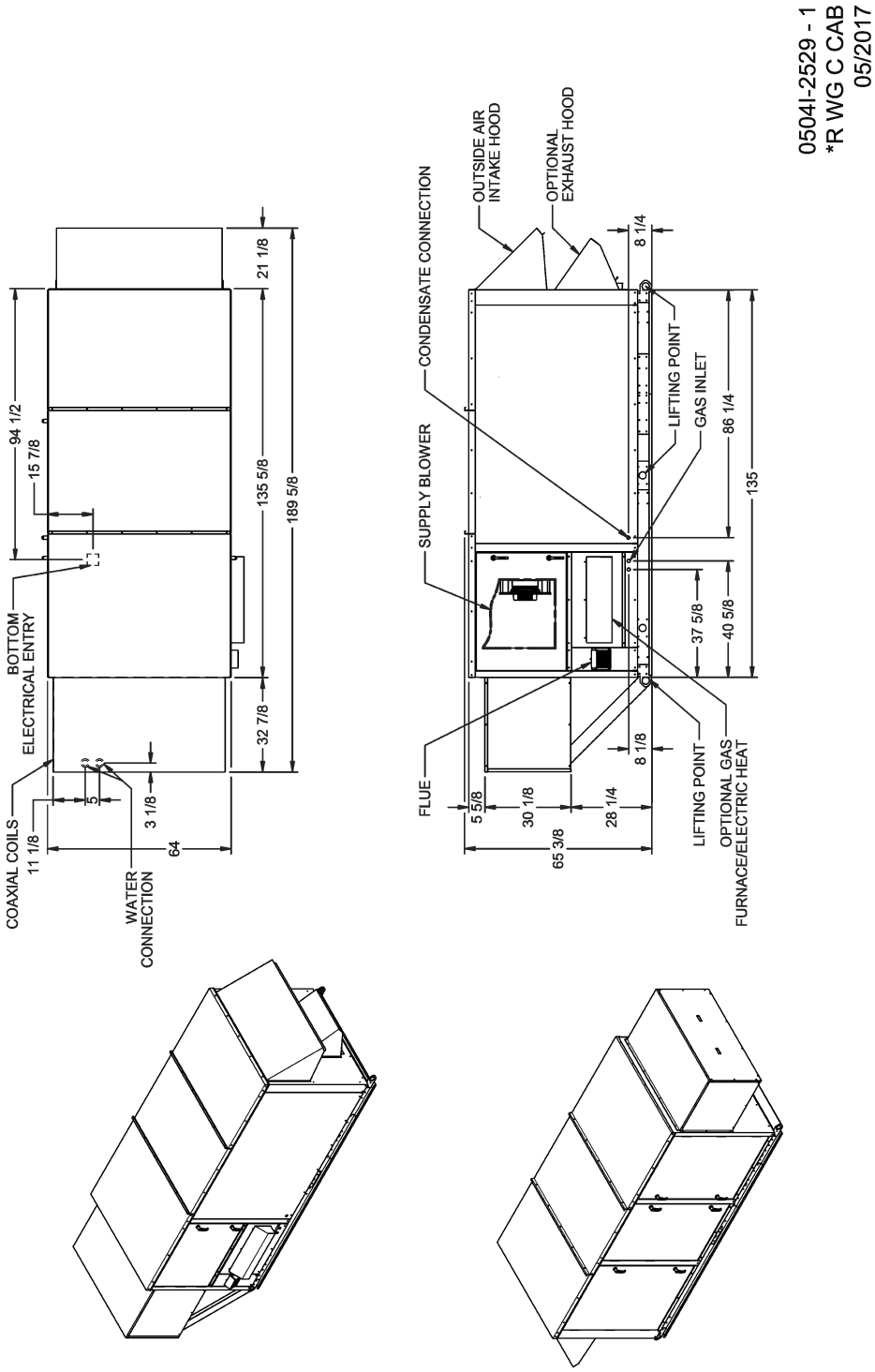

0504I-2529 - *R WG C CAB-2 Qty: 1
Tags: DOAS-2, DOAS-6

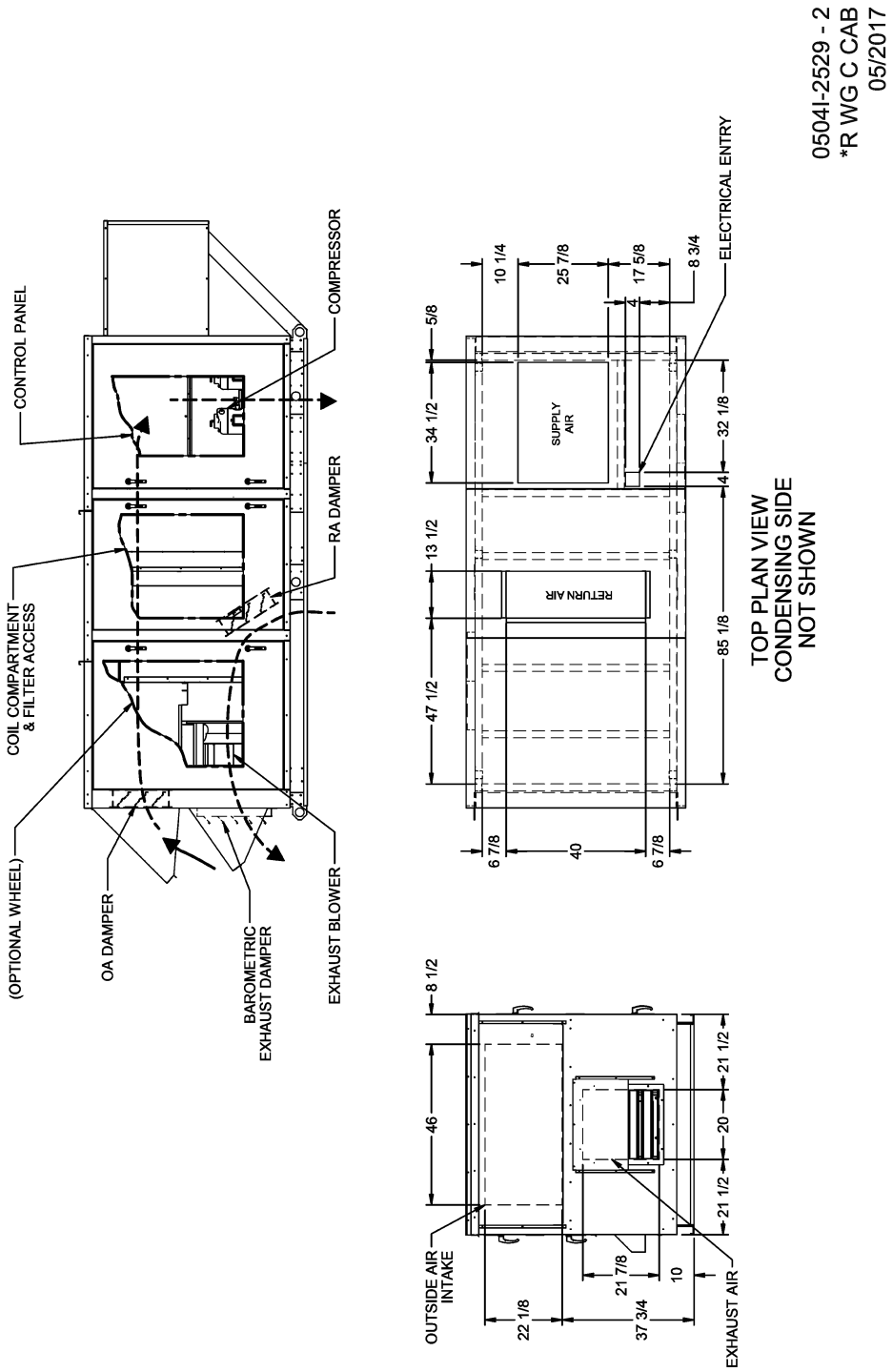

0504I-2614 - RIGGING INSTRUCTIONS

Qty: 6 Tags: DOAS-1, DOAS-2, DOAS-3, DOAS-4, DOAS-5, DOAS-6

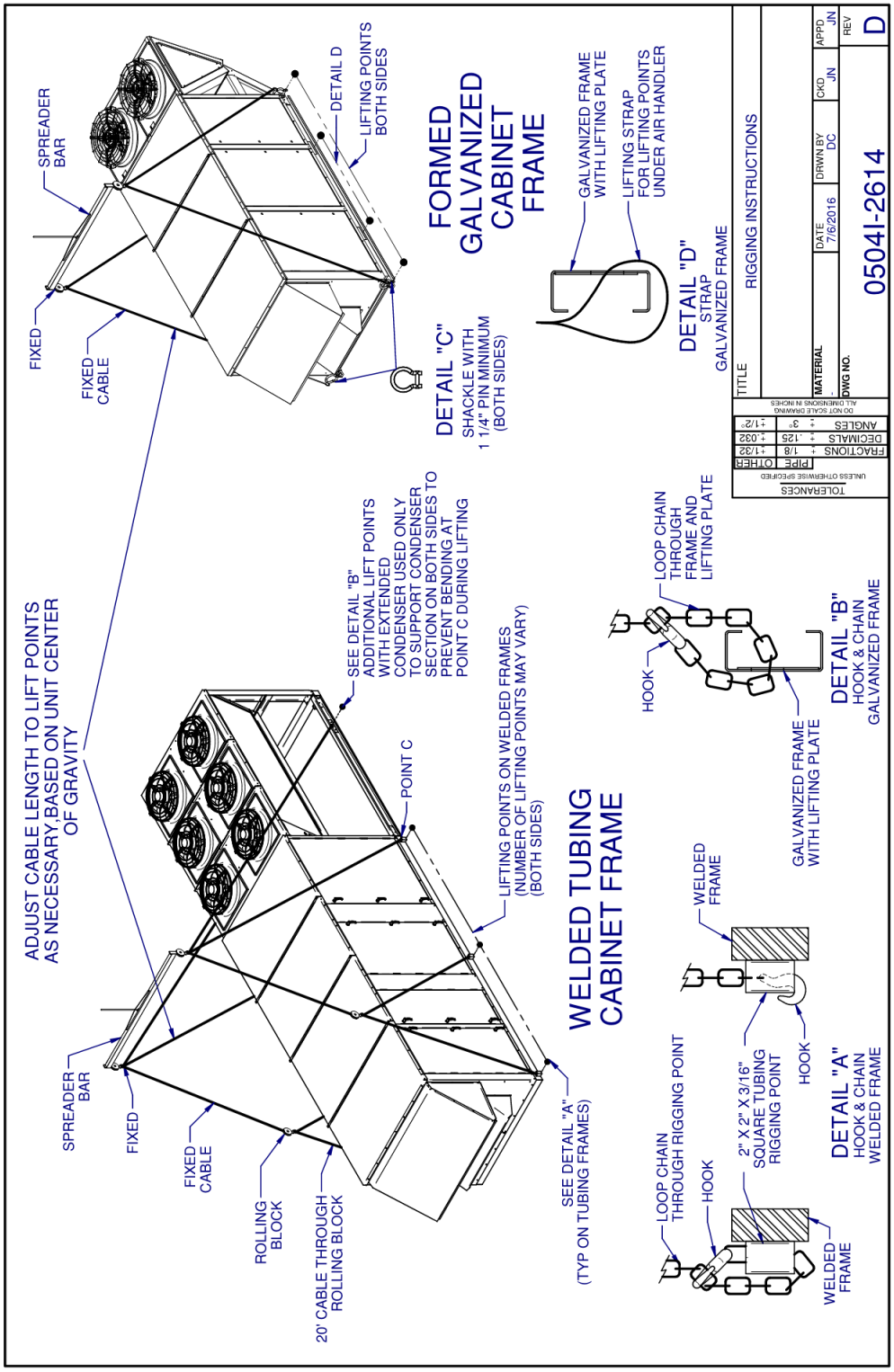

0795I-0037 - *R EXH CLEARANCE

Qty: 6 Tags: DOAS-1, DOAS-2, DOAS-3, DOAS-4, DOAS-5, DOAS-6

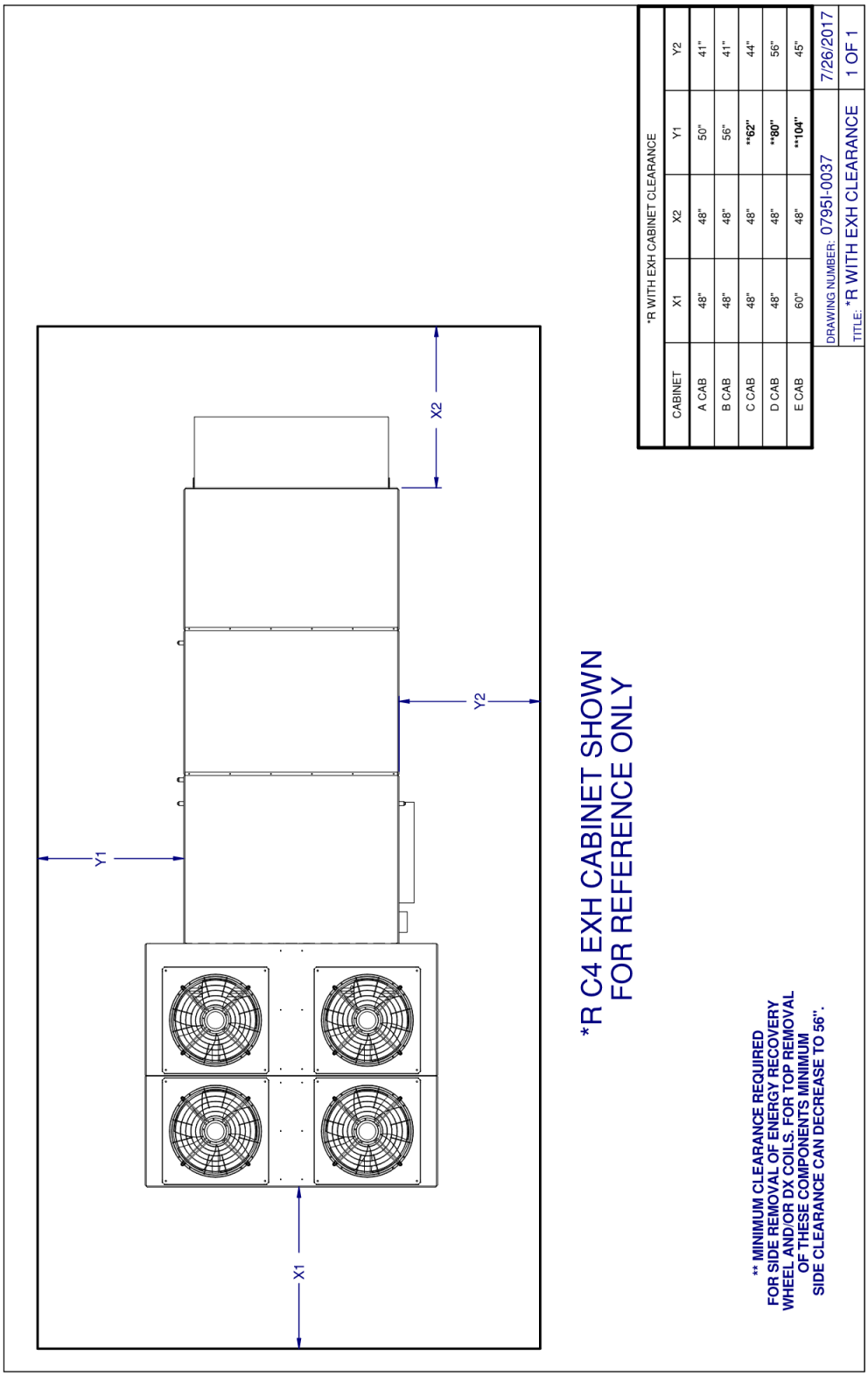

PROP65 for JCI submittal

Qty: 6 Tags: DOAS-1, DOAS-2, DOAS-3, DOAS-4, DOAS-5, DOAS-6

WARNING: Cancer and Reproductive Harm – www.P65Warnings.ca.gov

Mechanical Specifications - Tag(s): DOAS-1, DOAS-2, DOAS-5, DOAS-4, DOAS-3, DOAS-6

Application/Unit Type PROW

PROW Series are designed for dedicated 100% outside air pre-conditioning. Units are DX water-source heat pump with or without optional heat, energy recovery wheel or exhaust.

Unit PROW

The JR Series packaged unit is a fully assembled heating and/or cooling system, ETL listed, with a single refrigerant circuit (sizes 036–096) or dual refrigerant circuits (sizes 120–840). Standard features are hoods for outside air and exhaust (if included), factory wiring with a single point power connection, phase and voltage monitor, refrigerant piping, safeties and refrigerant/oil charge (R-410A). Also included are temperature controls (either factory or terminals for field furnished) and optional features listed below.

Unit Cabinet PROW

Cabinet is double wall design with heavy-duty frame and reinforced base. Double wall panels are constructed of G-90 galvanized steel inside and out with a polyester exterior finish for up to 2,500-hour salt-spray protection. Fixed panels on sides and top have two-inch thick, closed cell foam insulation; access panels have two-inch foam injection insulation provides an R-13 rating to reduce heat transfer losses (this applies to the indoor air tunnel only). Access panels are fitted with one-quarter turn self-tightening latches (one lockable) and stainless steel hinges. Top panels are raised to improve water run-off and include drip edge. Heavy Duty 16-guage base pan has 0.375 inch closed cell insulation on the underside to serve as sound attenuation and as a moisture/thermal barrier and a positive seal to the curb. Bottom openings include a minimum one-half inch turned up flange. Stainless steel and/or MAGNI® 555-coated hardware reduce fastener corrosion. The coaxial water-to-refrigerant heat exchanger coils are mounted in an un-insulated compartment. Coils and water piping are insulated with one-half inch closed cell insulation. A double-sloped, extra-large, stainless steel drain pan equipped with drain fitting positioned on exterior of cabinet to facilitate removal of condensate and eliminate standing water.

Fans PROW

Direct-drive (air foil or backward inclined) supply and exhaust (if included) blowers are provided with high-efficiency, ODP or TEFC motors (optional ECM) and variable frequency drives (VFD). VFD's may be used to field-adjust airflow.

Cabinet Options: Vertical Supply/Vertical Return

Airflow Configuration, vertical (downflow) supply and return; may or may not have exhaust/relief

Cooling Coil: 6 row Copper Tube Aluminum Fin DX Coil

Cooling Coil, 6-row copper tube, aluminum fin DX coil will be enhanced surface aluminum fins, formed on multiple rows of seamless rifled copper tubing, arranged in staggered tube configuration with galvanized steel header plates. These tubes are mechanically expanded, firmly bonding the tube to the shoulder of each fin. Dual circuit units will have intertwined coils for optimal dehumidification at part-load operation.

Compressor Type: Digital Scroll and Single Scroll/Dual Circuit

Compressors are hermetic scroll type with crankcase heaters, overload protection, short cycle protection and minimum on and off timers. Installed in an insulated compartment accessible through hinged access doors compressors are mounted on rubber-in-shear isolators and isolated from the treated air stream. Refrigerant lines include circuit access/service valves and reaction torque loops. Crankcase heaters will only be activated during compressor off mode. The lead refrigeration circuit has a varible capacity, digital compressor. The control system will be capable of unloading the compressor in an unlimited number of steps from 100% capacity down to 10% capacity while staging the lag compressor. Unit sizes 480 and larger have tandem type compressors. The second compressor on each tandem set is staged via a refrigeration pressure control. For applications without ALC a Digital Control Module (DCM) will be included. capacity down to 10% capacity while staging the lag compressor. For applications without ALC a Digital Control Module (DCM) will be included.

Compressor Type: Single Digital Scroll/Single Circuit

Compressor is hermetic, variable capacity, digital scroll type with crankcase heaters, overload protection, short cycle protection and minimum on and off timers. Installed in an insulated compartment accessible through hinged access doors the compressor is mounted on rubber-in-shear isolators and isolated from the treated air stream. Refrigerant lines include circuit access/service valves and reaction torque loops. Crankcase heaters will only be activated during compressor off mode. The control system will be capable of unloading the compressor in an unlimited number of steps from 100% capacity down to 10% capacity. For applications without ALC a Digital Control Module (DCM) will be included.

Refrigeration Controls: Hot Gas Bypass (Lag Circuit)

Refrigeration Controls/Options Hot Gas Bypass, modulating valve without Head Pressure Control (Lag Circuit)

Refrigeration Controls: Hot Gas Reheat, Modulating (Single Circuit)

Refrigeration Controls/Options, Hot Gas Reheat, Modulating with Variable Speed Head Pressure Control (Single Circuit), Includes one-row coil and Electronic valve

Refrigeration Controls: Liquid Sub Cooling, Switchable, All Circuits

Refrigeration Controls/Options, One-row Liquid Sub-cooling/reheat coil on all circuits, face-split for dual circuits with bypass piping, solenoid valves and additional refrigerant charge.

Evaporator Motor Type: ECM evaporator blower motor

Supply Motor Type, the motor(s) will be a totally enclosed air over (IP54) electronically commutated motor (EC-Motor) with external rotor and integrated electronics. The integration of the electronics in the motor allows a simple connection of the power and control lines

Evaporator Motor Horsepower: ECM

Supply Motor Type, ECM based on blower size

Supply Blower Size: ECM 350

350 mm diameter/backward curved impeller.

Supply Blower Size: ECM 450 High

450 mm diameter/backward curved impeller.

Supply Blower Options: None

Controls, None

Energy Recovery & Conservation: ECW 324

The factory-installed enthalpy wheel will be certified to meet the requirements of AHRI Standard 1060 and will be AHRI listed. The rotor will be constructed of alternating layers of flat and corrugated synthetic fibrous media and will be fluted or formed honeycomb geometry so as to eliminate internal wheel bypass. The wheel will include a desiccant that is permanently bound and uniformly dispersed throughout the matrix. The desiccant material will be a 4 angstrom or smaller molecular sieve to minimize cross contamination. The wheel frames will be evenly spaced steel spokes with a galvanized steel outer band and rigid center hub. The wheel seals will be full contact nylon brush type. Wheel cassettes will be constructed of galvanized steel and will have an integral purge section. Bearings will be inboard mounted, permanently sealed roller type or externally flanged type. The wheel cassette will slide out of the cabinet side for service. Wheels up to 60” will be driven by a fractional horsepower AC motor and larger wheels will have a 1.0 or 1.5 horsepower premium efficiency AC motor via a multilink drive belt. Outside and exhaust air streams include 2” MERV 8 filters.

Energy Recovery & Conservation: ECW 364

The factory-installed enthalpy wheel will be certified to meet the requirements of AHRI Standard 1060 and will be AHRI listed. The rotor will be constructed of alternating layers of flat and corrugated synthetic fibrous media and will be fluted or formed honeycomb geometry so as to eliminate internal wheel bypass. The wheel will include a desiccant that is permanently bound and uniformly dispersed throughout the matrix. The desiccant material will be a 4 angstrom or smaller molecular sieve to minimize cross contamination. The wheel frames will be evenly spaced steel spokes with a galvanized steel outer band and rigid center hub. The wheel seals will be full contact nylon brush type. Wheel cassettes will be constructed of galvanized steel and will have an integral purge section. Bearings will be inboard mounted, permanently sealed roller type or externally flanged type. The wheel cassette will slide out of the cabinet side for service. Wheels up to 60” will be driven by a fractional horsepower AC motor and larger wheels will have a 1.0 or 1.5 horsepower premium efficiency AC motor via a multilink drive belt. Outside and exhaust air streams include 2” MERV 8 filters.

Energy Recovery Options: Bypass and VFD Temp Defrost

Energy Recovery Options, VFD defrost, wheel speed is slowed as frost condition occurs plus wheel bypass; includes two position dampers in outside and return air streams.

Exhaust Blower Motor Horsepower: ECM

Exhaust Motor size, ECM, kW based on blower size

Exhaust/Return Blower Motor type: ECM

Exhaust Motor Type
The motor(s) will be a totally enclosed air over (IP54) electronically commutated motor (EC-Motor) with external rotor and integrated electronics. The integration of the electronics in the motor allows a simple connection of the power and control lines

Exhaust Blower Size: ECM 350

350 mm diameter/backward curved impeller.

Exhaust Blower Options: Gravity Relief Damper (ECM only)

Exhaust Blower Options, exhaust air hood with gravity relief damper (ECM only).

Heating Types: None

None

Controls: ALC, Standard Program, DOAS

Controls, ALC I/O OPTICORE LS-1628u digital controller, factory-mounted and wired with standard program for 100% outside air. Includes low voltage control circuit, remote access support over internet/intranet or modem and BACnet and Modbus protocols.

Ventilation & Controls: Motorized 2-Position OA Damper with 2-Position Actuator (ALC, Field DDC, EM)

Ventilation Option, outside air intake hood with birdscreen plus motorized Class 1 damper with 2-position actuator – may be used with ALC or field-installed DDC or electro-mechanical 24 Volt controls

ALC Ship With Options: ZS "Standard" Zone Sensor With Humidity

ZS-H-BNK wall-mounted standard zone temperature and humidity sensor. This is used with PRR and PRM units.

Maintenance Options: 115V Convenience Outlet

Maintenance Options, 115 volt GFCI convenience outlet with cover – factory wired. Includes step down transformer and fused disconnect switch in NEMA 3R enclosures

Maintenance Options: Clogged Filter Indicator

Maintenance Options, clogged filter switch with visual indicator and tubing for the filters ahead of the cooling coil factory-mounted. Includes terminals for connection to a DDC controller. If an ALC is included the switch is pre-wired.

Maintenance Options: Condensate Overflow Switch

Maintenance Options, condensate overflow switch mounted at the coil drain pan. The switch is wired to stop the unit if high water level is sensed.

Filters: 2 in. MERV 8 Pleated and 4 in. MERV 14 Pleated

Pre-filter options, 2 in. plus 4 in. filter racks with 2 in. MERV 8 and 4 in. MERV 14 (pleated) filters pre-loaded in unit

Filters: 4 in. MERV 8 Pleated

Pre-filter options, 4 in. filter rack with MERV 8 (pleated) filters pre-loaded in unit

Roof Curbs: None

ROOF CURB, none

Unit Tag(s): All

⚠ **WARNING:** This product can expose to you chemicals including formaldehyde, which is known to the state of California to cause cancer. For more information go to www.P65Warnings.ca.gov

Unit Details

Line:	1
Qty:	1
Model:	JSH024CHS30ALPB
Fan Speed:	C2-Speed Tap 3
Compr Qty:	1
Compr Speed:	Single Speed
Water Conn (in.):	3/4"

Design Conditions

Airflow (Standard CFM):	700
Altitude:	0
ESP (in w.g.):	1.00
Fluid Flow Rate:	5.5
Fluid Type:	Propylene Glycol
Fluid Percentage:	35

Electrical Data

V/Ph/Hz:	208-230/60/3
Blower FLA (A):	3.9
Compressor RLA (A):	7.1
Compressor LRA (A):	55.4
Total MCA (A):	12.8
Max Fuse (A):	15

Physical Data

Weight (operating) (lbs):	266
Unit Dimensions (HxWxD) (in):	19.3x22.2x62.2
Refrigerant Charge (oz):	41.0
1st 2-inch filter size (Qty-HxW) (in):	N/A
2nd 2-inch filter size (Qty-HxW) (in):	N/A
1st 1-inch filter size (Qty-HxW) (in):	2-18x18
2nd 1-inch filter size (Qty-HxW) (in):	N/A

Cooling Performance

Airside

EAT DB (°F):	79.8
EAT WB (°F):	63.8
LAT DB (°F):	57.3
LAT WB (°F):	52.9
Total Capacity (MBH):	21.9
Sensible Capacity (MBH):	17.0
Heat of Rejection (MBH):	26.9
Input Power (kW):	1.46
EER (Design Conditions):	15.0
EER (AHRI Conditions)*:	17.9

Fluidside

Entering Fluid Temp (°F):	85.0
Leaving Fluid Temp (°F):	94.8
Fluid Pressure Drop (ft.):	3.1

Heating Performance

Airside

EAT DB (°F):	68.0
LAT DB (°F):	105.6
Heating Capacity (MBH):	28.5
Heat of Absorption (MBH):	23.0
Input Power (kW):	1.62
COP (Design Conditions):	5.2
COP (AHRI Conditions)*:	6.1

Fluidside

Entering Fluid Temp (°F):	70.0
Leaving Fluid Temp (°F):	61.6
Fluid Pressure Drop (ft.):	3.6

* AHRI/ISO 13256-1 Water Loop Conditions
Cooling: 86°F EWT, 80.6°F EDB, 66.2°F EWB; Heating: 68°F EWT, 68°F EDB, 59°F EWB
ISO 13256-1 EER and COP values include fan and pump power adjustments, which may increase efficiencies.
Design condition performance is based on non-adjusted tested capacities and efficiencies.

Unit Tag(s): All

⚠ **WARNING:** This product can expose to you chemicals including formaldehyde, which is known to the state of California to cause cancer. For more information go to www.P65Warnings.ca.gov

Unit Details

Line:	2
Qty:	1
Model:	JCH015AGS30CLPB
Fan Speed:	NA
Compr Qty:	1
Compr Speed:	Single Speed
Water Conn (in.):	1/2"

Design Conditions

Airflow (Standard CFM):	420
Altitude:	0
ESP (in w.g.):	0.90
Fluid Flow Rate:	3.2
Fluid Type:	Propylene Glycol
Fluid Percentage:	35

Electrical Data

V/Ph/Hz:	208-230/60/1
Blower FLA (A):	2.6
Compressor RLA (A):	5.6
Compressor LRA (A):	29.0
Total MCA (A):	9.6
Max Fuse (A):	15

Physical Data

Weight (operating) (lbs):	153
Unit Dimensions (HxWxD) (in):	17x20.1x43.1
Refrigerant Charge (oz):	35.0
1st 2-inch filter size (Qty-HxW) (in):	N/A
2nd 2-inch filter size (Qty-HxW) (in):	N/A
1st 1-inch filter size (Qty-HxW) (in):	1-16x25
2nd 1-inch filter size (Qty-HxW) (in):	N/A

Cooling Performance

Airside

EAT DB (°F):	80.2
EAT WB (°F):	64.5
LAT DB (°F):	56.8
LAT WB (°F):	54.5
Total Capacity (MBH):	12.3
Sensible Capacity (MBH):	10.6
Heat of Rejection (MBH):	16.0
Input Power (kW):	1.07
EER (Design Conditions):	11.5
EER (AHRI Conditions)*:	15.5

Fluidside

Entering Fluid Temp (°F):	85.0
Leaving Fluid Temp (°F):	95.0
Fluid Pressure Drop (ft.):	3.7

Heating Performance

Airside

EAT DB (°F):	68.0
LAT DB (°F):	102.8
Heating Capacity (MBH):	15.8
Heat of Absorption (MBH):	11.9
Input Power (kW):	1.13
COP (Design Conditions):	4.1
COP (AHRI Conditions)*:	5.3

Fluidside

Entering Fluid Temp (°F):	70.0
Leaving Fluid Temp (°F):	62.6
Fluid Pressure Drop (ft.):	4.3

* AHRI/ISO 13256-1 Water Loop Conditions
Cooling: 86°F EWT, 80.6°F EDB, 66.2°F EWB; Heating: 68°F EWT, 68°F EDB, 59°F EWB
ISO 13256-1 EER and COP values include fan and pump power adjustments, which may increase efficiencies.
Design condition performance is based on non-adjusted tested capacities and efficiencies.

Unit Tag(s): All

⚠ **WARNING:** This product can expose to you chemicals including formaldehyde, which is known to the state of California to cause cancer. For more information go to www.P65Warnings.ca.gov

Unit Details

Line:	3
Qty:	1
Model:	JSH018BGS30CLPB
Fan Speed:	C2-Speed Tap 2
Compr Qty:	1
Compr Speed:	Single Speed
Water Conn (in.):	3/4"

Design Conditions

Airflow (Standard CFM):	650
Altitude:	0
ESP (in w.g.):	1.00
Fluid Flow Rate:	4.5
Fluid Type:	Propylene Glycol
Fluid Percentage:	35

Electrical Data

V/Ph/Hz:	208-230/60/1
Blower FLA (A):	4.3
Compressor RLA (A):	9.0
Compressor LRA (A):	48.0
Total MCA (A):	15.6
Max Fuse (A):	20

Physical Data

Weight (operating) (lbs):	257
Unit Dimensions (HxWxD) (in):	19.3x22.2x62.2
Refrigerant Charge (oz):	50.0
1st 2-inch filter size (Qty-HxW) (in):	N/A
2nd 2-inch filter size (Qty-HxW) (in):	N/A
1st 1-inch filter size (Qty-HxW) (in):	2-18x18
2nd 1-inch filter size (Qty-HxW) (in):	N/A

Cooling Performance

Airside

EAT DB (°F):	79.7
EAT WB (°F):	64.4
LAT DB (°F):	56.9
LAT WB (°F):	55.4
Total Capacity (MBH):	17.3
Sensible Capacity (MBH):	16.0
Heat of Rejection (MBH):	21.7
Input Power (kW):	1.29
EER (Design Conditions):	13.4
EER (AHRI Conditions)*:	16.5

Fluidside

Entering Fluid Temp (°F):	85.0
Leaving Fluid Temp (°F):	94.6
Fluid Pressure Drop (ft.):	4.5

Heating Performance

Airside

EAT DB (°F):	68.0
LAT DB (°F):	99.6
Heating Capacity (MBH):	22.2
Heat of Absorption (MBH):	17.9
Input Power (kW):	1.26
COP (Design Conditions):	5.2
COP (AHRI Conditions)*:	5.9

Fluidside

Entering Fluid Temp (°F):	70.0
Leaving Fluid Temp (°F):	62.0
Fluid Pressure Drop (ft.):	5.5

* AHRI/ISO 13256-1 Water Loop Conditions
Cooling: 86°F EWT, 80.6°F EDB, 66.2°F EWB; Heating: 68°F EWT, 68°F EDB, 59°F EWB
ISO 13256-1 EER and COP values include fan and pump power adjustments, which may increase efficiencies.
Design condition performance is based on non-adjusted tested capacities and efficiencies.

Unit Tag(s): All

⚠ **WARNING:** This product can expose to you chemicals including formaldehyde, which is known to the state of California to cause cancer. For more information go to www.P65Warnings.ca.gov

Unit Details

Line:	4
Qty:	1
Model:	JCH006AGS30CLPB
Fan Speed:	NA
Compr Qty:	1
Compr Speed:	Single Speed
Water Conn (in.):	1/2"

Design Conditions

Airflow (Standard CFM):	180
Altitude:	0
ESP (in w.g.):	1.00
Fluid Flow Rate:	1.4
Fluid Type:	Propylene Glycol
Fluid Percentage:	35

Electrical Data

V/Ph/Hz:	208-230/60/1
Blower FLA (A):	1.5
Compressor RLA (A):	2.6
Compressor LRA (A):	17.7
Total MCA (A):	4.8
Max Fuse (A):	15

Physical Data

Weight (operating) (lbs):	103
Unit Dimensions (HxWxD) (in):	11.1x19.1x34.1
Refrigerant Charge (oz):	19.0
1st 2-inch filter size (Qty-HxW) (in):	N/A
2nd 2-inch filter size (Qty-HxW) (in):	N/A
1st 1-inch filter size (Qty-HxW) (in):	1-10x18
2nd 1-inch filter size (Qty-HxW) (in):	N/A

Cooling Performance

Airside

EAT DB (°F):	79.9
EAT WB (°F):	64.1
LAT DB (°F):	57.3
LAT WB (°F):	53.8
Total Capacity (MBH):	5.4
Sensible Capacity (MBH):	4.4
Heat of Rejection (MBH):	6.9
Input Power (kW):	0.45
EER (Design Conditions):	12.0
EER (AHRI Conditions)*:	14.0

Fluidside

Entering Fluid Temp (°F):	85.0
Leaving Fluid Temp (°F):	94.9
Fluid Pressure Drop (ft.):	1.7

Heating Performance

Airside

EAT DB (°F):	68.0
LAT DB (°F):	109.1
Heating Capacity (MBH):	8.0
Heat of Absorption (MBH):	6.3
Input Power (kW):	0.51
COP (Design Conditions):	4.6
COP (AHRI Conditions)*:	4.8

Fluidside

Entering Fluid Temp (°F):	70.0
Leaving Fluid Temp (°F):	61.0
Fluid Pressure Drop (ft.):	2.0

* AHRI/ISO 13256-1 Water Loop Conditions
Cooling: 86°F EWT, 80.6°F EDB, 66.2°F EWB; Heating: 68°F EWT, 68°F EDB, 59°F EWB
ISO 13256-1 EER and COP values include fan and pump power adjustments, which may increase efficiencies.
Design condition performance is based on non-adjusted tested capacities and efficiencies.

Unit Tag(s): All

⚠ **WARNING:** This product can expose to you chemicals including formaldehyde, which is known to the state of California to cause cancer. For more information go to www.P65Warnings.ca.gov

Unit Details

Line:	5
Qty:	1
Model:	JSH024CHS30ALPB
Fan Speed:	C2-Speed Tap 3
Compr Qty:	1
Compr Speed:	Single Speed
Water Conn (in.):	3/4"

Design Conditions

Airflow (Standard CFM):	700
Altitude:	0
ESP (in w.g.):	1.00
Fluid Flow Rate:	5.5
Fluid Type:	Propylene Glycol
Fluid Percentage:	35

Electrical Data

V/Ph/Hz:	208-230/60/3
Blower FLA (A):	3.9
Compressor RLA (A):	7.1
Compressor LRA (A):	55.4
Total MCA (A):	12.8
Max Fuse (A):	15

Physical Data

Weight (operating) (lbs):	266
Unit Dimensions (HxWxD) (in):	19.3x22.2x62.2
Refrigerant Charge (oz):	41.0
1st 2-inch filter size (Qty-HxW) (in):	N/A
2nd 2-inch filter size (Qty-HxW) (in):	N/A
1st 1-inch filter size (Qty-HxW) (in):	2-18x18
2nd 1-inch filter size (Qty-HxW) (in):	N/A

Cooling Performance

Airside

EAT DB (°F):	79.9
EAT WB (°F):	63.9
LAT DB (°F):	57.3
LAT WB (°F):	53.0
Total Capacity (MBH):	22.0
Sensible Capacity (MBH):	17.1
Heat of Rejection (MBH):	27.0
Input Power (kW):	1.46
EER (Design Conditions):	15.1
EER (AHRI Conditions)*:	17.9

Fluidside

Entering Fluid Temp (°F):	85.0
Leaving Fluid Temp (°F):	94.8
Fluid Pressure Drop (ft.):	3.1

Heating Performance

Airside

EAT DB (°F):	68.0
LAT DB (°F):	105.6
Heating Capacity (MBH):	28.5
Heat of Absorption (MBH):	23.0
Input Power (kW):	1.62
COP (Design Conditions):	5.2
COP (AHRI Conditions)*:	6.1

Fluidside

Entering Fluid Temp (°F):	70.0
Leaving Fluid Temp (°F):	61.6
Fluid Pressure Drop (ft.):	3.6

* AHRI/ISO 13256-1 Water Loop Conditions
Cooling: 86°F EWT, 80.6°F EDB, 66.2°F EWB; Heating: 68°F EWT, 68°F EDB, 59°F EWB
ISO 13256-1 EER and COP values include fan and pump power adjustments, which may increase efficiencies.
Design condition performance is based on non-adjusted tested capacities and efficiencies.

Unit Tag(s): All

⚠ **WARNING:** This product can expose to you chemicals including formaldehyde, which is known to the state of California to cause cancer. For more information go to www.P65Warnings.ca.gov

Unit Details

Line:	6
Qty:	1
Model:	JSH024CHS30ALPB
Fan Speed:	C2-Speed Tap 3
Compr Qty:	1
Compr Speed:	Single Speed
Water Conn (in.):	3/4"

Design Conditions

Airflow (Standard CFM):	700
Altitude:	0
ESP (in w.g.):	1.00
Fluid Flow Rate:	5.5
Fluid Type:	Propylene Glycol
Fluid Percentage:	35

Electrical Data

V/Ph/Hz:	208-230/60/3
Blower FLA (A):	3.9
Compressor RLA (A):	7.1
Compressor LRA (A):	55.4
Total MCA (A):	12.8
Max Fuse (A):	15

Physical Data

Weight (operating) (lbs):	266
Unit Dimensions (HxWxD) (in):	19.3x22.2x62.2
Refrigerant Charge (oz):	41.0
1st 2-inch filter size (Qty-HxW) (in):	N/A
2nd 2-inch filter size (Qty-HxW) (in):	N/A
1st 1-inch filter size (Qty-HxW) (in):	2-18x18
2nd 1-inch filter size (Qty-HxW) (in):	N/A

Cooling Performance

Airside

EAT DB (°F):	79.7
EAT WB (°F):	63.8
LAT DB (°F):	57.2
LAT WB (°F):	52.9
Total Capacity (MBH):	21.9
Sensible Capacity (MBH):	17.0
Heat of Rejection (MBH):	26.9
Input Power (kW):	1.46
EER (Design Conditions):	15.0
EER (AHRI Conditions)*:	17.9

Fluidside

Entering Fluid Temp (°F):	85.0
Leaving Fluid Temp (°F):	94.8
Fluid Pressure Drop (ft.):	3.1

Heating Performance

Airside

EAT DB (°F):	68.0
LAT DB (°F):	105.6
Heating Capacity (MBH):	28.5
Heat of Absorption (MBH):	23.0
Input Power (kW):	1.62
COP (Design Conditions):	5.2
COP (AHRI Conditions)*:	6.1

Fluidside

Entering Fluid Temp (°F):	70.0
Leaving Fluid Temp (°F):	61.6
Fluid Pressure Drop (ft.):	3.6

* AHRI/ISO 13256-1 Water Loop Conditions
Cooling: 86°F EWT, 80.6°F EDB, 66.2°F EWB; Heating: 68°F EWT, 68°F EDB, 59°F EWB
ISO 13256-1 EER and COP values include fan and pump power adjustments, which may increase efficiencies.
Design condition performance is based on non-adjusted tested capacities and efficiencies.

Unit Tag(s): All

⚠ **WARNING:** This product can expose to you chemicals including formaldehyde, which is known to the state of California to cause cancer. For more information go to www.P65Warnings.ca.gov

Unit Details

Line:	7
Qty:	1
Model:	JSH048CHS30ALPB
Fan Speed:	C2-Speed Tap 3
Compr Qty:	1
Compr Speed:	Single Speed
Water Conn (in.):	1"

Design Conditions

Airflow (Standard CFM):	1370
Altitude:	0
ESP (in w.g.):	1.00
Fluid Flow Rate:	11.2
Fluid Type:	Propylene Glycol
Fluid Percentage:	35

Electrical Data

V/Ph/Hz:	208-230/60/3
Blower FLA (A):	6.9
Compressor RLA (A):	13.7
Compressor LRA (A):	83.1
Total MCA (A):	24.0
Max Fuse (A):	35

Physical Data

Weight (operating) (lbs):	416
Unit Dimensions (HxWxD) (in):	21.3x25.4x76.2
Refrigerant Charge (oz):	68.0
1st 2-inch filter size (Qty-HxW) (in):	N/A
2nd 2-inch filter size (Qty-HxW) (in):	N/A
1st 1-inch filter size (Qty-HxW) (in):	1-18x20
2nd 1-inch filter size (Qty-HxW) (in):	1-20x24

Cooling Performance

Airside

EAT DB (°F):	79.7
EAT WB (°F):	63.8
LAT DB (°F):	56.1
LAT WB (°F):	52.1
Total Capacity (MBH):	45.6
Sensible Capacity (MBH):	34.9
Heat of Rejection (MBH):	55.8
Input Power (kW):	2.99
EER (Design Conditions):	15.3
EER (AHRI Conditions)*:	17.2

Fluidside

Entering Fluid Temp (°F):	85.0
Leaving Fluid Temp (°F):	95.0
Fluid Pressure Drop (ft.):	8.6

Heating Performance

Airside

EAT DB (°F):	68.0
LAT DB (°F):	105.5
Heating Capacity (MBH):	55.6
Heat of Absorption (MBH):	43.8
Input Power (kW):	3.47
COP (Design Conditions):	4.7
COP (AHRI Conditions)*:	5.2

Fluidside

Entering Fluid Temp (°F):	70.0
Leaving Fluid Temp (°F):	62.2
Fluid Pressure Drop (ft.):	9.0

* AHRI/ISO 13256-1 Water Loop Conditions
Cooling: 86°F EWT, 80.6°F EDB, 66.2°F EWB; Heating: 68°F EWT, 68°F EDB, 59°F EWB
ISO 13256-1 EER and COP values include fan and pump power adjustments, which may increase efficiencies.
Design condition performance is based on non-adjusted tested capacities and efficiencies.

Unit Tag(s): All

⚠ **WARNING:** This product can expose to you chemicals including formaldehyde, which is known to the state of California to cause cancer. For more information go to www.P65Warnings.ca.gov

Unit Details

Line:	8
Qty:	1
Model:	JSH018BGS30CLPB
Fan Speed:	C2-Speed Tap 2
Compr Qty:	1
Compr Speed:	Single Speed
Water Conn (in.):	3/4"

Design Conditions

Airflow (Standard CFM):	650
Altitude:	0
ESP (in w.g.):	1.00
Fluid Flow Rate:	4.3
Fluid Type:	Propylene Glycol
Fluid Percentage:	35

Electrical Data

V/Ph/Hz:	208-230/60/1
Blower FLA (A):	4.3
Compressor RLA (A):	9.0
Compressor LRA (A):	48.0
Total MCA (A):	15.6
Max Fuse (A):	20

Physical Data

Weight (operating) (lbs):	257
Unit Dimensions (HxWxD) (in):	19.3x22.2x62.2
Refrigerant Charge (oz):	50.0
1st 2-inch filter size (Qty-HxW) (in):	N/A
2nd 2-inch filter size (Qty-HxW) (in):	N/A
1st 1-inch filter size (Qty-HxW) (in):	2-18x18
2nd 1-inch filter size (Qty-HxW) (in):	N/A

Cooling Performance

Airside

EAT DB (°F):	80.0
EAT WB (°F):	64.2
LAT DB (°F):	57.1
LAT WB (°F):	55.2
Total Capacity (MBH):	17.2
Sensible Capacity (MBH):	16.1
Heat of Rejection (MBH):	21.6
Input Power (kW):	1.29
EER (Design Conditions):	13.3
EER (AHRI Conditions)*:	16.5

Fluidside

Entering Fluid Temp (°F):	85.0
Leaving Fluid Temp (°F):	95.0
Fluid Pressure Drop (ft.):	4.1

Heating Performance

Airside

EAT DB (°F):	68.0
LAT DB (°F):	99.4
Heating Capacity (MBH):	22.1
Heat of Absorption (MBH):	17.8
Input Power (kW):	1.26
COP (Design Conditions):	5.1
COP (AHRI Conditions)*:	5.9

Fluidside

Entering Fluid Temp (°F):	70.0
Leaving Fluid Temp (°F):	61.7
Fluid Pressure Drop (ft.):	5.0

* AHRI/ISO 13256-1 Water Loop Conditions
Cooling: 86°F EWT, 80.6°F EDB, 66.2°F EWB; Heating: 68°F EWT, 68°F EDB, 59°F EWB
ISO 13256-1 EER and COP values include fan and pump power adjustments, which may increase efficiencies.
Design condition performance is based on non-adjusted tested capacities and efficiencies.

Unit Tag(s): All

⚠ **WARNING:** This product can expose to you chemicals including formaldehyde, which is known to the state of California to cause cancer. For more information go to www.P65Warnings.ca.gov

Unit Details

Line:	9
Qty:	1
Model:	JSH018BGS30CLPB
Fan Speed:	C2-Speed Tap 2
Compr Qty:	1
Compr Speed:	Single Speed
Water Conn (in.):	3/4"

Design Conditions

Airflow (Standard CFM):	650
Altitude:	0
ESP (in w.g.):	1.00
Fluid Flow Rate:	4.3
Fluid Type:	Propylene Glycol
Fluid Percentage:	35

Electrical Data

V/Ph/Hz:	208-230/60/1
Blower FLA (A):	4.3
Compressor RLA (A):	9.0
Compressor LRA (A):	48.0
Total MCA (A):	15.6
Max Fuse (A):	20

Physical Data

Weight (operating) (lbs):	257
Unit Dimensions (HxWxD) (in):	19.3x22.2x62.2
Refrigerant Charge (oz):	50.0
1st 2-inch filter size (Qty-HxW) (in):	N/A
2nd 2-inch filter size (Qty-HxW) (in):	N/A
1st 1-inch filter size (Qty-HxW) (in):	2-18x18
2nd 1-inch filter size (Qty-HxW) (in):	N/A

Cooling Performance

Airside

EAT DB (°F):	80.1
EAT WB (°F):	64.2
LAT DB (°F):	57.2
LAT WB (°F):	55.2
Total Capacity (MBH):	17.2
Sensible Capacity (MBH):	16.1
Heat of Rejection (MBH):	21.6
Input Power (kW):	1.29
EER (Design Conditions):	13.3
EER (AHRI Conditions)*:	16.5

Fluidside

Entering Fluid Temp (°F):	85.0
Leaving Fluid Temp (°F):	95.0
Fluid Pressure Drop (ft.):	4.1

Heating Performance

Airside

EAT DB (°F):	68.0
LAT DB (°F):	99.4
Heating Capacity (MBH):	22.1
Heat of Absorption (MBH):	17.8
Input Power (kW):	1.26
COP (Design Conditions):	5.1
COP (AHRI Conditions)*:	5.9

Fluidside

Entering Fluid Temp (°F):	70.0
Leaving Fluid Temp (°F):	61.7
Fluid Pressure Drop (ft.):	5.0

* AHRI/ISO 13256-1 Water Loop Conditions
Cooling: 86°F EWT, 80.6°F EDB, 66.2°F EWB; Heating: 68°F EWT, 68°F EDB, 59°F EWB
ISO 13256-1 EER and COP values include fan and pump power adjustments, which may increase efficiencies.
Design condition performance is based on non-adjusted tested capacities and efficiencies.

Unit Tag(s): All

⚠ **WARNING:** This product can expose to you chemicals including formaldehyde, which is known to the state of California to cause cancer. For more information go to www.P65Warnings.ca.gov

Unit Details

Line:	10
Qty:	1
Model:	JSH018BGS30CLPB
Fan Speed:	C2-Speed Tap 2
Compr Qty:	1
Compr Speed:	Single Speed
Water Conn (in.):	3/4"

Design Conditions

Airflow (Standard CFM):	650
Altitude:	0
ESP (in w.g.):	1.00
Fluid Flow Rate:	4.3
Fluid Type:	Propylene Glycol
Fluid Percentage:	35

Electrical Data

V/Ph/Hz:	208-230/60/1
Blower FLA (A):	4.3
Compressor RLA (A):	9.0
Compressor LRA (A):	48.0
Total MCA (A):	15.6
Max Fuse (A):	20

Physical Data

Weight (operating) (lbs):	257
Unit Dimensions (HxWxD) (in):	19.3x22.2x62.2
Refrigerant Charge (oz):	50.0
1st 2-inch filter size (Qty-HxW) (in):	N/A
2nd 2-inch filter size (Qty-HxW) (in):	N/A
1st 1-inch filter size (Qty-HxW) (in):	2-18x18
2nd 1-inch filter size (Qty-HxW) (in):	N/A

Cooling Performance

Airside

EAT DB (°F):	80.1
EAT WB (°F):	64.3
LAT DB (°F):	57.2
LAT WB (°F):	55.3
Total Capacity (MBH):	17.2
Sensible Capacity (MBH):	16.1
Heat of Rejection (MBH):	21.6
Input Power (kW):	1.29
EER (Design Conditions):	13.3
EER (AHRI Conditions)*:	16.5

Fluidside

Entering Fluid Temp (°F):	85.0
Leaving Fluid Temp (°F):	95.0
Fluid Pressure Drop (ft.):	4.1

Heating Performance

Airside

EAT DB (°F):	68.0
LAT DB (°F):	99.4
Heating Capacity (MBH):	22.1
Heat of Absorption (MBH):	17.8
Input Power (kW):	1.26
COP (Design Conditions):	5.1
COP (AHRI Conditions)*:	5.9

Fluidside

Entering Fluid Temp (°F):	70.0
Leaving Fluid Temp (°F):	61.7
Fluid Pressure Drop (ft.):	5.0

* AHRI/ISO 13256-1 Water Loop Conditions
Cooling: 86°F EWT, 80.6°F EDB, 66.2°F EWB; Heating: 68°F EWT, 68°F EDB, 59°F EWB
ISO 13256-1 EER and COP values include fan and pump power adjustments, which may increase efficiencies.
Design condition performance is based on non-adjusted tested capacities and efficiencies.

Unit Tag(s): All

⚠ **WARNING:** This product can expose to you chemicals including formaldehyde, which is known to the state of California to cause cancer. For more information go to www.P65Warnings.ca.gov

Unit Details

Line:	11
Qty:	1
Model:	JSH018BGS30CLPB
Fan Speed:	C2-Speed Tap 2
Compr Qty:	1
Compr Speed:	Single Speed
Water Conn (in.):	3/4"

Design Conditions

Airflow (Standard CFM):	650
Altitude:	0
ESP (in w.g.):	1.00
Fluid Flow Rate:	4.3
Fluid Type:	Propylene Glycol
Fluid Percentage:	35

Electrical Data

V/Ph/Hz:	208-230/60/1
Blower FLA (A):	4.3
Compressor RLA (A):	9.0
Compressor LRA (A):	48.0
Total MCA (A):	15.6
Max Fuse (A):	20

Physical Data

Weight (operating) (lbs):	257
Unit Dimensions (HxWxD) (in):	19.3x22.2x62.2
Refrigerant Charge (oz):	50.0
1st 2-inch filter size (Qty-HxW) (in):	N/A
2nd 2-inch filter size (Qty-HxW) (in):	N/A
1st 1-inch filter size (Qty-HxW) (in):	2-18x18
2nd 1-inch filter size (Qty-HxW) (in):	N/A

Cooling Performance

Airside

EAT DB (°F):	80.1
EAT WB (°F):	64.3
LAT DB (°F):	57.2
LAT WB (°F):	55.3
Total Capacity (MBH):	17.2
Sensible Capacity (MBH):	16.1
Heat of Rejection (MBH):	21.6
Input Power (kW):	1.29
EER (Design Conditions):	13.3
EER (AHRI Conditions)*:	16.5

Fluidside

Entering Fluid Temp (°F):	85.0
Leaving Fluid Temp (°F):	95.0
Fluid Pressure Drop (ft.):	4.1

Heating Performance

Airside

EAT DB (°F):	68.0
LAT DB (°F):	99.4
Heating Capacity (MBH):	22.1
Heat of Absorption (MBH):	17.8
Input Power (kW):	1.26
COP (Design Conditions):	5.1
COP (AHRI Conditions)*:	5.9

Fluidside

Entering Fluid Temp (°F):	70.0
Leaving Fluid Temp (°F):	61.7
Fluid Pressure Drop (ft.):	5.0

* AHRI/ISO 13256-1 Water Loop Conditions
Cooling: 86°F EWT, 80.6°F EDB, 66.2°F EWB; Heating: 68°F EWT, 68°F EDB, 59°F EWB
ISO 13256-1 EER and COP values include fan and pump power adjustments, which may increase efficiencies.
Design condition performance is based on non-adjusted tested capacities and efficiencies.

Unit Tag(s): All

⚠ **WARNING:** This product can expose to you chemicals including formaldehyde, which is known to the state of California to cause cancer. For more information go to www.P65Warnings.ca.gov

Unit Details

Line:	12
Qty:	1
Model:	JRE072DHP3CCABF
Fan Speed:	NA
Compr Qty:	1
Compr Speed:	Full Load
Water Conn (in.):	1 1/4"

Design Conditions

Airflow (Standard CFM):	2025
Altitude:	0
ESP (in w.g.):	1.50
Fluid Flow Rate:	16.6
Fluid Type:	Propylene Glycol
Fluid Percentage:	35

Electrical Data

V/Ph/Hz:	208-230/60/3
Blower FLA (A):	5.0
Compressor RLA (A):	19.6
Compressor LRA (A):	136.0
Total MCA (A):	29.5
Max Fuse (A):	45

Physical Data

Weight (operating) (lbs):	880
Unit Dimensions (HxWxD) (in):	39.4x43x80
Refrigerant Charge (oz):	132.0
1st 2-inch filter size (Qty-HxW) (in):	4-16x20
2nd 2-inch filter size (Qty-HxW) (in):	N/A
1st 1-inch filter size (Qty-HxW) (in):	N/A
2nd 1-inch filter size (Qty-HxW) (in):	N/A

Cooling Performance

Airside

EAT DB (°F):	79.9
EAT WB (°F):	64.0
LAT DB (°F):	56.0
LAT WB (°F):	52.7
Total Capacity (MBH):	65.6
Sensible Capacity (MBH):	52.2
Heat of Rejection (MBH):	82.9
Input Power (kW):	5.07
EER (Design Conditions):	12.9
EER (AHRI Conditions)*:	15.0

Fluidside

Entering Fluid Temp (°F):	85.0
Leaving Fluid Temp (°F):	95.0
Fluid Pressure Drop (ft.):	7.9

Heating Performance

Airside

EAT DB (°F):	68.0
LAT DB (°F):	106.9
Heating Capacity (MBH):	85.2
Heat of Absorption (MBH):	66.0
Input Power (kW):	5.63
COP (Design Conditions):	4.4
COP (AHRI Conditions)*:	5.0

Fluidside

Entering Fluid Temp (°F):	70.0
Leaving Fluid Temp (°F):	62.0
Fluid Pressure Drop (ft.):	8.7

* AHRI/ISO 13256-1 Water Loop Conditions
Cooling: 86°F EWT, 80.6°F EDB, 66.2°F EWB; Heating: 68°F EWT, 68°F EDB, 59°F EWB
ISO 13256-1 EER and COP values include fan and pump power adjustments, which may increase efficiencies.
Design condition performance is based on non-adjusted tested capacities and efficiencies.

Unit Tag(s): All

⚠ **WARNING:** This product can expose to you chemicals including formaldehyde, which is known to the state of California to cause cancer. For more information go to www.P65Warnings.ca.gov

Unit Details

Line:	13
Qty:	1
Model:	JRE060DHP3CCFCF
Fan Speed:	NA
Compr Qty:	1
Compr Speed:	Full Load
Water Conn (in.):	1"

Design Conditions

Airflow (Standard CFM):	1695
Altitude:	0
ESP (in w.g.):	1.50
Fluid Flow Rate:	14.6
Fluid Type:	Propylene Glycol
Fluid Percentage:	35

Electrical Data

V/Ph/Hz:	208-230/60/3
Blower FLA (A):	4.0
Compressor RLA (A):	15.6
Compressor LRA (A):	110.0
Total MCA (A):	23.5
Max Fuse (A):	35

Physical Data

Weight (operating) (lbs):	785
Unit Dimensions (HxWxD) (in):	39.4x43x80
Refrigerant Charge (oz):	120.0
1st 2-inch filter size (Qty-HxW) (in):	4-16x20
2nd 2-inch filter size (Qty-HxW) (in):	N/A
1st 1-inch filter size (Qty-HxW) (in):	N/A
2nd 1-inch filter size (Qty-HxW) (in):	N/A

Cooling Performance

Airside

EAT DB (°F):	79.6
EAT WB (°F):	63.5
LAT DB (°F):	55.6
LAT WB (°F):	51.3
Total Capacity (MBH):	58.5
Sensible Capacity (MBH):	43.9
Heat of Rejection (MBH):	73.0
Input Power (kW):	4.25
EER (Design Conditions):	13.8
EER (AHRI Conditions)*:	15.7

Fluidside

Entering Fluid Temp (°F):	85.0
Leaving Fluid Temp (°F):	95.0
Fluid Pressure Drop (ft.):	9.4

Heating Performance

Airside

EAT DB (°F):	68.0
LAT DB (°F):	106.8
Heating Capacity (MBH):	71.2
Heat of Absorption (MBH):	55.5
Input Power (kW):	4.61
COP (Design Conditions):	4.5
COP (AHRI Conditions)*:	5.1

Fluidside

Entering Fluid Temp (°F):	70.0
Leaving Fluid Temp (°F):	62.4
Fluid Pressure Drop (ft.):	10.0

* AHRI/ISO 13256-1 Water Loop Conditions
Cooling: 86°F EWT, 80.6°F EDB, 66.2°F EWB; Heating: 68°F EWT, 68°F EDB, 59°F EWB
ISO 13256-1 EER and COP values include fan and pump power adjustments, which may increase efficiencies.
Design condition performance is based on non-adjusted tested capacities and efficiencies.

Unit Tag(s): All

⚠ **WARNING:** This product can expose to you chemicals including formaldehyde, which is known to the state of California to cause cancer. For more information go to www.P65Warnings.ca.gov

Unit Details

Line:	14
Qty:	1
Model:	JCH006AGS30CVPB
Fan Speed:	NA
Compr Qty:	1
Compr Speed:	Single Speed
Water Conn (in.):	1/2"

Design Conditions

Airflow (Standard CFM):	150
Altitude:	0
ESP (in w.g.):	1.00
Fluid Flow Rate:	1.4
Fluid Type:	Propylene Glycol
Fluid Percentage:	35

Electrical Data

V/Ph/Hz:	208-230/60/1
Blower FLA (A):	1.5
Compressor RLA (A):	2.6
Compressor LRA (A):	17.7
Total MCA (A):	4.8
Max Fuse (A):	15

Physical Data

Weight (operating) (lbs):	103
Unit Dimensions (HxWxD) (in):	11.1x19.1x34.1
Refrigerant Charge (oz):	19.0
1st 2-inch filter size (Qty-HxW) (in):	N/A
2nd 2-inch filter size (Qty-HxW) (in):	N/A
1st 1-inch filter size (Qty-HxW) (in):	1-10x18
2nd 1-inch filter size (Qty-HxW) (in):	N/A

Cooling Performance

Airside

EAT DB (°F):	79.9
EAT WB (°F):	65.7
LAT DB (°F):	54.0
LAT WB (°F):	53.3
Total Capacity (MBH):	5.5
Sensible Capacity (MBH):	4.2
Heat of Rejection (MBH):	7.0
Input Power (kW):	0.45
EER (Design Conditions):	12.2
EER (AHRI Conditions)*:	14.0

Fluidside

Entering Fluid Temp (°F):	85.0
Leaving Fluid Temp (°F):	95.0
Fluid Pressure Drop (ft.):	1.7

Heating Performance

Airside

EAT DB (°F):	68.0
LAT DB (°F):	117.3
Heating Capacity (MBH):	8.0
Heat of Absorption (MBH):	6.2
Input Power (kW):	0.52
COP (Design Conditions):	4.5
COP (AHRI Conditions)*:	4.8

Fluidside

Entering Fluid Temp (°F):	70.0
Leaving Fluid Temp (°F):	61.1
Fluid Pressure Drop (ft.):	2.0

* AHRI/ISO 13256-1 Water Loop Conditions
Cooling: 86°F EWT, 80.6°F EDB, 66.2°F EWB; Heating: 68°F EWT, 68°F EDB, 59°F EWB
ISO 13256-1 EER and COP values include fan and pump power adjustments, which may increase efficiencies.
Design condition performance is based on non-adjusted tested capacities and efficiencies.

Unit Tag(s): All

⚠ **WARNING:** This product can expose to you chemicals including formaldehyde, which is known to the state of California to cause cancer. For more information go to www.P65Warnings.ca.gov

Unit Details

Line:	15
Qty:	1
Model:	JCH006AGS30CLPB
Fan Speed:	NA
Compr Qty:	1
Compr Speed:	Single Speed
Water Conn (in.):	1/2"

Design Conditions

Airflow (Standard CFM):	175
Altitude:	0
ESP (in w.g.):	1.00
Fluid Flow Rate:	1.4
Fluid Type:	Propylene Glycol
Fluid Percentage:	35

Electrical Data

V/Ph/Hz:	208-230/60/1
Blower FLA (A):	1.5
Compressor RLA (A):	2.6
Compressor LRA (A):	17.7
Total MCA (A):	4.8
Max Fuse (A):	15

Physical Data

Weight (operating) (lbs):	103
Unit Dimensions (HxWxD) (in):	11.1x19.1x34.1
Refrigerant Charge (oz):	19.0
1st 2-inch filter size (Qty-HxW) (in):	N/A
2nd 2-inch filter size (Qty-HxW) (in):	N/A
1st 1-inch filter size (Qty-HxW) (in):	1-10x18
2nd 1-inch filter size (Qty-HxW) (in):	N/A

Cooling Performance

Airside

EAT DB (°F):	79.8
EAT WB (°F):	63.8
LAT DB (°F):	56.5
LAT WB (°F):	53.1
Total Capacity (MBH):	5.4
Sensible Capacity (MBH):	4.4
Heat of Rejection (MBH):	6.9
Input Power (kW):	0.45
EER (Design Conditions):	12.0
EER (AHRI Conditions)*:	14.0

Fluidside

Entering Fluid Temp (°F):	85.0
Leaving Fluid Temp (°F):	94.9
Fluid Pressure Drop (ft.):	1.7

Heating Performance

Airside

EAT DB (°F):	68.0
LAT DB (°F):	110.3
Heating Capacity (MBH):	8.0
Heat of Absorption (MBH):	6.3
Input Power (kW):	0.51
COP (Design Conditions):	4.6
COP (AHRI Conditions)*:	4.8

Fluidside

Entering Fluid Temp (°F):	70.0
Leaving Fluid Temp (°F):	61.0
Fluid Pressure Drop (ft.):	2.0

* AHRI/ISO 13256-1 Water Loop Conditions
Cooling: 86°F EWT, 80.6°F EDB, 66.2°F EWB; Heating: 68°F EWT, 68°F EDB, 59°F EWB
ISO 13256-1 EER and COP values include fan and pump power adjustments, which may increase efficiencies.
Design condition performance is based on non-adjusted tested capacities and efficiencies.

Unit Tag(s): All

⚠ **WARNING:** This product can expose to you chemicals including formaldehyde, which is known to the state of California to cause cancer. For more information go to www.P65Warnings.ca.gov

Unit Details

Line:	16
Qty:	1
Model:	JCH015AGS30CLPB
Fan Speed:	NA
Compr Qty:	1
Compr Speed:	Single Speed
Water Conn (in.):	1/2"

Design Conditions

Airflow (Standard CFM):	375
Altitude:	0
ESP (in w.g.):	0.90
Fluid Flow Rate:	3.2
Fluid Type:	Propylene Glycol
Fluid Percentage:	35

Electrical Data

V/Ph/Hz:	208-230/60/1
Blower FLA (A):	2.6
Compressor RLA (A):	5.6
Compressor LRA (A):	29.0
Total MCA (A):	9.6
Max Fuse (A):	15

Physical Data

Weight (operating) (lbs):	153
Unit Dimensions (HxWxD) (in):	17x20.1x43.1
Refrigerant Charge (oz):	35.0
1st 2-inch filter size (Qty-HxW) (in):	N/A
2nd 2-inch filter size (Qty-HxW) (in):	N/A
1st 1-inch filter size (Qty-HxW) (in):	1-16x25
2nd 1-inch filter size (Qty-HxW) (in):	N/A

Cooling Performance

Airside

EAT DB (°F):	79.9
EAT WB (°F):	63.9
LAT DB (°F):	54.7
LAT WB (°F):	52.7
Total Capacity (MBH):	12.1
Sensible Capacity (MBH):	10.2
Heat of Rejection (MBH):	15.7
Input Power (kW):	1.06
EER (Design Conditions):	11.4
EER (AHRI Conditions)*:	15.5

Fluidside

Entering Fluid Temp (°F):	85.0
Leaving Fluid Temp (°F):	94.8
Fluid Pressure Drop (ft.):	3.7

Heating Performance

Airside

EAT DB (°F):	68.0
LAT DB (°F):	106.7
Heating Capacity (MBH):	15.7
Heat of Absorption (MBH):	11.7
Input Power (kW):	1.16
COP (Design Conditions):	4.0
COP (AHRI Conditions)*:	5.3

Fluidside

Entering Fluid Temp (°F):	70.0
Leaving Fluid Temp (°F):	62.7
Fluid Pressure Drop (ft.):	4.3

* AHRI/ISO 13256-1 Water Loop Conditions
Cooling: 86°F EWT, 80.6°F EDB, 66.2°F EWB; Heating: 68°F EWT, 68°F EDB, 59°F EWB
ISO 13256-1 EER and COP values include fan and pump power adjustments, which may increase efficiencies.
Design condition performance is based on non-adjusted tested capacities and efficiencies.

Unit Tag(s): All

⚠ **WARNING:** This product can expose to you chemicals including formaldehyde, which is known to the state of California to cause cancer. For more information go to www.P65Warnings.ca.gov

Unit Details

Line:	17
Qty:	1
Model:	JCH006AGS30CLPB
Fan Speed:	NA
Compr Qty:	1
Compr Speed:	Single Speed
Water Conn (in.):	1/2"

Design Conditions

Airflow (Standard CFM):	200
Altitude:	0
ESP (in w.g.):	1.00
Fluid Flow Rate:	1.5
Fluid Type:	Propylene Glycol
Fluid Percentage:	35

Electrical Data

V/Ph/Hz:	208-230/60/1
Blower FLA (A):	1.5
Compressor RLA (A):	2.6
Compressor LRA (A):	17.7
Total MCA (A):	4.8
Max Fuse (A):	15

Physical Data

Weight (operating) (lbs):	103
Unit Dimensions (HxWxD) (in):	11.1x19.1x34.1
Refrigerant Charge (oz):	19.0
1st 2-inch filter size (Qty-HxW) (in):	N/A
2nd 2-inch filter size (Qty-HxW) (in):	N/A
1st 1-inch filter size (Qty-HxW) (in):	1-10x18
2nd 1-inch filter size (Qty-HxW) (in):	N/A

Cooling Performance

Airside

EAT DB (°F):	79.8
EAT WB (°F):	65.4
LAT DB (°F):	58.5
LAT WB (°F):	56.1
Total Capacity (MBH):	5.6
Sensible Capacity (MBH):	4.6
Heat of Rejection (MBH):	7.2
Input Power (kW):	0.46
EER (Design Conditions):	12.2
EER (AHRI Conditions)*:	14.0

Fluidside

Entering Fluid Temp (°F):	85.0
Leaving Fluid Temp (°F):	94.6
Fluid Pressure Drop (ft.):	1.9

Heating Performance

Airside

EAT DB (°F):	68.0
LAT DB (°F):	105.5
Heating Capacity (MBH):	8.1
Heat of Absorption (MBH):	6.5
Input Power (kW):	0.48
COP (Design Conditions):	4.9
COP (AHRI Conditions)*:	4.8

Fluidside

Entering Fluid Temp (°F):	70.0
Leaving Fluid Temp (°F):	61.3
Fluid Pressure Drop (ft.):	2.3

* AHRI/ISO 13256-1 Water Loop Conditions
Cooling: 86°F EWT, 80.6°F EDB, 66.2°F EWB; Heating: 68°F EWT, 68°F EDB, 59°F EWB
ISO 13256-1 EER and COP values include fan and pump power adjustments, which may increase efficiencies.
Design condition performance is based on non-adjusted tested capacities and efficiencies.

Unit Tag(s): All

⚠ **WARNING:** This product can expose to you chemicals including formaldehyde, which is known to the state of California to cause cancer. For more information go to www.P65Warnings.ca.gov

Unit Details

Line:	18
Qty:	1
Model:	JCH006AGS30CLPB
Fan Speed:	NA
Compr Qty:	1
Compr Speed:	Single Speed
Water Conn (in.):	1/2"

Design Conditions

Airflow (Standard CFM):	160
Altitude:	0
ESP (in w.g.):	1.00
Fluid Flow Rate:	1.4
Fluid Type:	Propylene Glycol
Fluid Percentage:	35

Electrical Data

V/Ph/Hz:	208-230/60/1
Blower FLA (A):	1.5
Compressor RLA (A):	2.6
Compressor LRA (A):	17.7
Total MCA (A):	4.8
Max Fuse (A):	15

Physical Data

Weight (operating) (lbs):	103
Unit Dimensions (HxWxD) (in):	11.1x19.1x34.1
Refrigerant Charge (oz):	19.0
1st 2-inch filter size (Qty-HxW) (in):	N/A
2nd 2-inch filter size (Qty-HxW) (in):	N/A
1st 1-inch filter size (Qty-HxW) (in):	1-10x18
2nd 1-inch filter size (Qty-HxW) (in):	N/A

Cooling Performance

Airside

EAT DB (°F):	79.9
EAT WB (°F):	63.9
LAT DB (°F):	55.0
LAT WB (°F):	52.3
Total Capacity (MBH):	5.3
Sensible Capacity (MBH):	4.3
Heat of Rejection (MBH):	6.8
Input Power (kW):	0.45
EER (Design Conditions):	11.8
EER (AHRI Conditions)*:	14.0

Fluidside

Entering Fluid Temp (°F):	85.0
Leaving Fluid Temp (°F):	94.7
Fluid Pressure Drop (ft.):	1.7

Heating Performance

Airside

EAT DB (°F):	68.0
LAT DB (°F):	114.2
Heating Capacity (MBH):	8.0
Heat of Absorption (MBH):	6.2
Input Power (kW):	0.52
COP (Design Conditions):	4.5
COP (AHRI Conditions)*:	4.8

Fluidside

Entering Fluid Temp (°F):	70.0
Leaving Fluid Temp (°F):	61.1
Fluid Pressure Drop (ft.):	2.0

* AHRI/ISO 13256-1 Water Loop Conditions
Cooling: 86°F EWT, 80.6°F EDB, 66.2°F EWB; Heating: 68°F EWT, 68°F EDB, 59°F EWB
ISO 13256-1 EER and COP values include fan and pump power adjustments, which may increase efficiencies.
Design condition performance is based on non-adjusted tested capacities and efficiencies.

Unit Tag(s): All

⚠ **WARNING:** This product can expose to you chemicals including formaldehyde, which is known to the state of California to cause cancer. For more information go to www.P65Warnings.ca.gov

Unit Details

Line:	19
Qty:	1
Model:	JSH048CHS30ALPB
Fan Speed:	C2-Speed Tap 3
Compr Qty:	1
Compr Speed:	Single Speed
Water Conn (in.):	1"

Design Conditions

Airflow (Standard CFM):	1320
Altitude:	0
ESP (in w.g.):	1.00
Fluid Flow Rate:	11.1
Fluid Type:	Propylene Glycol
Fluid Percentage:	35

Electrical Data

V/Ph/Hz:	208-230/60/3
Blower FLA (A):	6.9
Compressor RLA (A):	13.7
Compressor LRA (A):	83.1
Total MCA (A):	24.0
Max Fuse (A):	35

Physical Data

Weight (operating) (lbs):	416
Unit Dimensions (HxWxD) (in):	21.3x25.4x76.2
Refrigerant Charge (oz):	68.0
1st 2-inch filter size (Qty-HxW) (in):	N/A
2nd 2-inch filter size (Qty-HxW) (in):	N/A
1st 1-inch filter size (Qty-HxW) (in):	1-18x20
2nd 1-inch filter size (Qty-HxW) (in):	1-20x24

Cooling Performance

Airside

EAT DB (°F):	79.8
EAT WB (°F):	64.1
LAT DB (°F):	55.7
LAT WB (°F):	52.1
Total Capacity (MBH):	45.4
Sensible Capacity (MBH):	34.3
Heat of Rejection (MBH):	55.6
Input Power (kW):	2.98
EER (Design Conditions):	15.2
EER (AHRI Conditions)*:	17.2

Fluidside

Entering Fluid Temp (°F):	85.0
Leaving Fluid Temp (°F):	95.0
Fluid Pressure Drop (ft.):	8.4

Heating Performance

Airside

EAT DB (°F):	68.0
LAT DB (°F):	106.7
Heating Capacity (MBH):	55.3
Heat of Absorption (MBH):	43.3
Input Power (kW):	3.52
COP (Design Conditions):	4.6
COP (AHRI Conditions)*:	5.2

Fluidside

Entering Fluid Temp (°F):	70.0
Leaving Fluid Temp (°F):	62.2
Fluid Pressure Drop (ft.):	8.8

* AHRI/ISO 13256-1 Water Loop Conditions
Cooling: 86°F EWT, 80.6°F EDB, 66.2°F EWB; Heating: 68°F EWT, 68°F EDB, 59°F EWB
ISO 13256-1 EER and COP values include fan and pump power adjustments, which may increase efficiencies.
Design condition performance is based on non-adjusted tested capacities and efficiencies.

Unit Tag(s): All

⚠ **WARNING:** This product can expose to you chemicals including formaldehyde, which is known to the state of California to cause cancer. For more information go to www.P65Warnings.ca.gov

Unit Details

Line:	20
Qty:	1
Model:	JCH012AGS30CLPB
Fan Speed:	NA
Compr Qty:	3
Compr Speed:	Single Speed
Water Conn (in.):	1/2"

Design Conditions

Airflow (Standard CFM):	300
Altitude:	0
ESP (in w.g.):	0.80
Fluid Flow Rate:	2.8
Fluid Type:	Propylene Glycol
Fluid Percentage:	35

Electrical Data

V/Ph/Hz:	208-230/60/1
Blower FLA (A):	2.6
Compressor RLA (A):	5.6
Compressor LRA (A):	32.5
Total MCA (A):	9.6
Max Fuse (A):	15

Physical Data

Weight (operating) (lbs):	114
Unit Dimensions (HxWxD) (in):	11.1x19.1x34.1
Refrigerant Charge (oz):	23.0
1st 2-inch filter size (Qty-HxW) (in):	N/A
2nd 2-inch filter size (Qty-HxW) (in):	N/A
1st 1-inch filter size (Qty-HxW) (in):	1-10x18
2nd 1-inch filter size (Qty-HxW) (in):	N/A

Cooling Performance

Airside

EAT DB (°F):	79.9
EAT WB (°F):	64.9
LAT DB (°F):	56.1
LAT WB (°F):	52.4
Total Capacity (MBH):	10.9
Sensible Capacity (MBH):	7.7
Heat of Rejection (MBH):	13.9
Input Power (kW):	0.87
EER (Design Conditions):	12.5
EER (AHRI Conditions)*:	13.0

Fluidside

Entering Fluid Temp (°F):	85.0
Leaving Fluid Temp (°F):	94.9
Fluid Pressure Drop (ft.):	10.3

Heating Performance

Airside

EAT DB (°F):	68.0
LAT DB (°F):	113.3
Heating Capacity (MBH):	14.7
Heat of Absorption (MBH):	11.0
Input Power (kW):	1.09
COP (Design Conditions):	4.0
COP (AHRI Conditions)*:	4.4

Fluidside

Entering Fluid Temp (°F):	70.0
Leaving Fluid Temp (°F):	62.1
Fluid Pressure Drop (ft.):	11.8

* AHRI/ISO 13256-1 Water Loop Conditions
Cooling: 86°F EWT, 80.6°F EDB, 66.2°F EWB; Heating: 68°F EWT, 68°F EDB, 59°F EWB
ISO 13256-1 EER and COP values include fan and pump power adjustments, which may increase efficiencies.
Design condition performance is based on non-adjusted tested capacities and efficiencies.

Unit Tag(s): All

⚠ **WARNING:** This product can expose to you chemicals including formaldehyde, which is known to the state of California to cause cancer. For more information go to www.P65Warnings.ca.gov

Unit Details

Line:	21
Qty:	1
Model:	JCH015AGS30CLPB
Fan Speed:	NA
Compr Qty:	1
Compr Speed:	Single Speed
Water Conn (in.):	1/2"

Design Conditions

Airflow (Standard CFM):	550
Altitude:	0
ESP (in w.g.):	0.90
Fluid Flow Rate:	2.5
Fluid Type:	Ethylene Glycol
Fluid Percentage:	50

Electrical Data

V/Ph/Hz:	208-230/60/1
Blower FLA (A):	2.6
Compressor RLA (A):	5.6
Compressor LRA (A):	29.0
Total MCA (A):	9.6
Max Fuse (A):	15

Physical Data

Weight (operating) (lbs):	153
Unit Dimensions (HxWxD) (in):	17x20.1x43.1
Refrigerant Charge (oz):	35.0
1st 2-inch filter size (Qty-HxW) (in):	N/A
2nd 2-inch filter size (Qty-HxW) (in):	N/A
1st 1-inch filter size (Qty-HxW) (in):	1-16x25
2nd 1-inch filter size (Qty-HxW) (in):	N/A

Heating Performance

Airside

EAT DB (°F):	68.0
LAT DB (°F):	94.4
Heating Capacity (MBH):	15.7
Heat of Absorption (MBH):	12.2
Input Power (kW):	1.02
COP (Design Conditions):	4.5
COP (AHRI Conditions)*:	5.3

Fluidside

Entering Fluid Temp (°F):	70.0
Leaving Fluid Temp (°F):	60.2
Fluid Pressure Drop (ft.):	2.5

* AHRI/ISO 13256-1 Water Loop Conditions
Cooling: 86°F EWT, 80.6°F EDB, 66.2°F EWB; Heating: 68°F EWT, 68°F EDB, 59°F EWB
ISO 13256-1 EER and COP values include fan and pump power adjustments, which may increase efficiencies.
Design condition performance is based on non-adjusted tested capacities and efficiencies.

Unit Tag(s): All

⚠ **WARNING:** This product can expose to you chemicals including formaldehyde, which is known to the state of California to cause cancer. For more information go to www.P65Warnings.ca.gov

Unit Details

Line:	22
Qty:	1
Model:	JSH042CHS30ALPB
Fan Speed:	C2-Speed Tap 3
Compr Qty:	1
Compr Speed:	Single Speed
Water Conn (in.):	1"

Design Conditions

Airflow (Standard CFM):	1490
Altitude:	0
ESP (in w.g.):	0.90
Fluid Flow Rate:	8.0
Fluid Type:	Ethylene Glycol
Fluid Percentage:	50

Electrical Data

V/Ph/Hz:	208-230/60/3
Blower FLA (A):	3.9
Compressor RLA (A):	10.4
Compressor LRA (A):	73.0
Total MCA (A):	16.9
Max Fuse (A):	25

Physical Data

Weight (operating) (lbs):	414
Unit Dimensions (HxWxD) (in):	21.3x25.4x76.2
Refrigerant Charge (oz):	68.0
1st 2-inch filter size (Qty-HxW) (in):	N/A
2nd 2-inch filter size (Qty-HxW) (in):	N/A
1st 1-inch filter size (Qty-HxW) (in):	1-18x20
2nd 1-inch filter size (Qty-HxW) (in):	1-20x24

Heating Performance

Airside

EAT DB (°F):	68.0
LAT DB (°F):	96.8
Heating Capacity (MBH):	46.4
Heat of Absorption (MBH):	38.6
Input Power (kW):	2.28
COP (Design Conditions):	6.0
COP (AHRI Conditions)*:	6.0

Fluidside

Entering Fluid Temp (°F):	70.0
Leaving Fluid Temp (°F):	60.4
Fluid Pressure Drop (ft.):	5.3

* AHRI/ISO 13256-1 Water Loop Conditions
Cooling: 86°F EWT, 80.6°F EDB, 66.2°F EWB; Heating: 68°F EWT, 68°F EDB, 59°F EWB
ISO 13256-1 EER and COP values include fan and pump power adjustments, which may increase efficiencies.
Design condition performance is based on non-adjusted tested capacities and efficiencies.

Unit Tag(s): All

⚠ **WARNING:** This product can expose to you chemicals including formaldehyde, which is known to the state of California to cause cancer. For more information go to www.P65Warnings.ca.gov

Unit Details

Line:	23
Qty:	1
Model:	JCH072AHP3ECLBB
Fan Speed:	NA
Compr Qty:	2
Compr Speed:	Full Load
Water Conn (in.):	1 1/4"

Design Conditions

Airflow (Standard CFM):	2895
Altitude:	0
ESP (in w.g.):	1.50
Fluid Flow Rate:	15.0
Fluid Type:	Ethylene Glycol
Fluid Percentage:	50

Electrical Data

V/Ph/Hz:	208-230/60/3
Blower FLA (A):	6.0
Compressor RLA (A):	10.4
Compressor LRA (A):	73.0
Total MCA (A):	29.4
Max Fuse (A):	35

Physical Data

Weight (operating) (lbs):	586
Unit Dimensions (HxWxD) (in):	21.6x36.3x84.9
Refrigerant Charge (oz):	60.0
1st 2-inch filter size (Qty-HxW) (in):	N/A
2nd 2-inch filter size (Qty-HxW) (in):	N/A
1st 1-inch filter size (Qty-HxW) (in):	3-16x20
2nd 1-inch filter size (Qty-HxW) (in):	3-20x20

Heating Performance

Airside

EAT DB (°F):	68.0
LAT DB (°F):	97.3
Heating Capacity (MBH):	91.8
Heat of Absorption (MBH):	73.3
Input Power (kW):	5.43
COP (Design Conditions):	5.0
COP (AHRI Conditions)*:	5.0

Fluidside

Entering Fluid Temp (°F):	70.0
Leaving Fluid Temp (°F):	60.2
Fluid Pressure Drop (ft.):	6.5

* AHRI/ISO 13256-1 Water Loop Conditions
Cooling: 86°F EWT, 80.6°F EDB, 66.2°F EWB; Heating: 68°F EWT, 68°F EDB, 59°F EWB
ISO 13256-1 EER and COP values include fan and pump power adjustments, which may increase efficiencies.
Design condition performance is based on non-adjusted tested capacities and efficiencies.

Unit Tag(s): All

⚠ **WARNING:** This product can expose to you chemicals including formaldehyde, which is known to the state of California to cause cancer. For more information go to www.P65Warnings.ca.gov

Unit Details

Line:	24
Qty:	1
Model:	JSH036CHS30ALPB
Fan Speed:	C2-Speed Tap 3
Compr Qty:	1
Compr Speed:	Single Speed
Water Conn (in.):	3/4"

Design Conditions

Airflow (Standard CFM):	1345
Altitude:	0
ESP (in w.g.):	0.90
Fluid Flow Rate:	7.0
Fluid Type:	Ethylene Glycol
Fluid Percentage:	50

Electrical Data

V/Ph/Hz:	208-230/60/3
Blower FLA (A):	3.9
Compressor RLA (A):	10.0
Compressor LRA (A):	71.0
Total MCA (A):	16.4
Max Fuse (A):	25

Physical Data

Weight (operating) (lbs):	327
Unit Dimensions (HxWxD) (in):	21.3x25.4x71.2
Refrigerant Charge (oz):	48.0
1st 2-inch filter size (Qty-HxW) (in):	N/A
2nd 2-inch filter size (Qty-HxW) (in):	N/A
1st 1-inch filter size (Qty-HxW) (in):	1-12x20
2nd 1-inch filter size (Qty-HxW) (in):	1-20x25

Heating Performance

Airside

EAT DB (°F):	68.0
LAT DB (°F):	95.9
Heating Capacity (MBH):	40.6
Heat of Absorption (MBH):	33.8
Input Power (kW):	1.98
COP (Design Conditions):	6.0
COP (AHRI Conditions)*:	5.9

Fluidside

Entering Fluid Temp (°F):	70.0
Leaving Fluid Temp (°F):	60.3
Fluid Pressure Drop (ft.):	5.7

* AHRI/ISO 13256-1 Water Loop Conditions
Cooling: 86°F EWT, 80.6°F EDB, 66.2°F EWB; Heating: 68°F EWT, 68°F EDB, 59°F EWB
ISO 13256-1 EER and COP values include fan and pump power adjustments, which may increase efficiencies.
Design condition performance is based on non-adjusted tested capacities and efficiencies.

LIEBERT DATAMATE

CABINET DIMENSIONAL DATA
FAN/COIL & CHILLED WATER MODULE

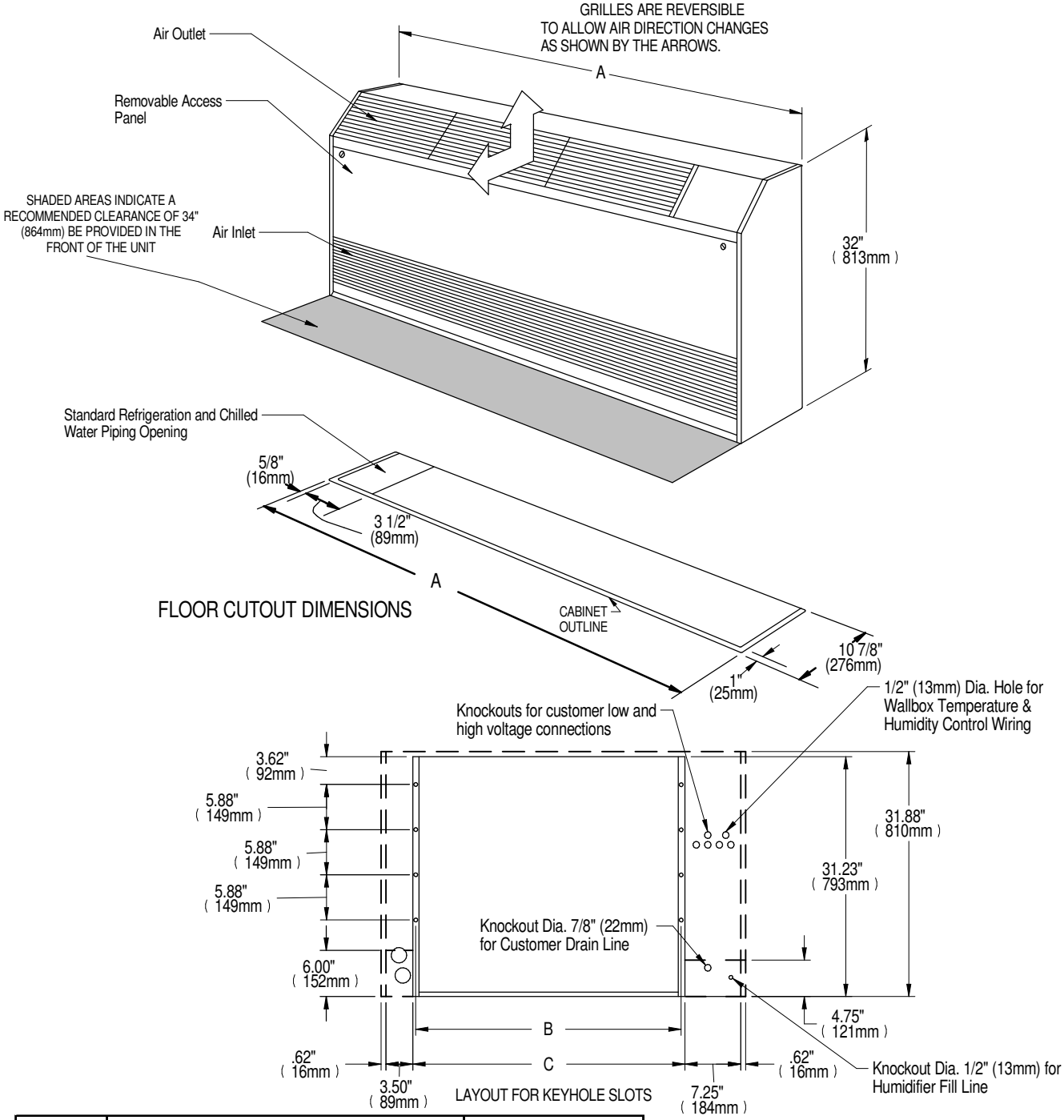

MODEL	DIMENSIONAL DATA in. (mm).			UNIT OPERATING WEIGHT. lbs. (kg)
	A	B	C	
DME020E	46 1/2 (1181)	33 3/4 (857)	34 7/16 (874)	230 (104)
DME027E	64 1/8 (1628)	51 1/2 (1308)	52 3/16 (1325)	330 (150)
DME037E				365 (165)
DME044C				

CABINET DIMENSIONAL DATA

CONDENSING UNIT W/ HORIZONTAL AIR DISCHARGE

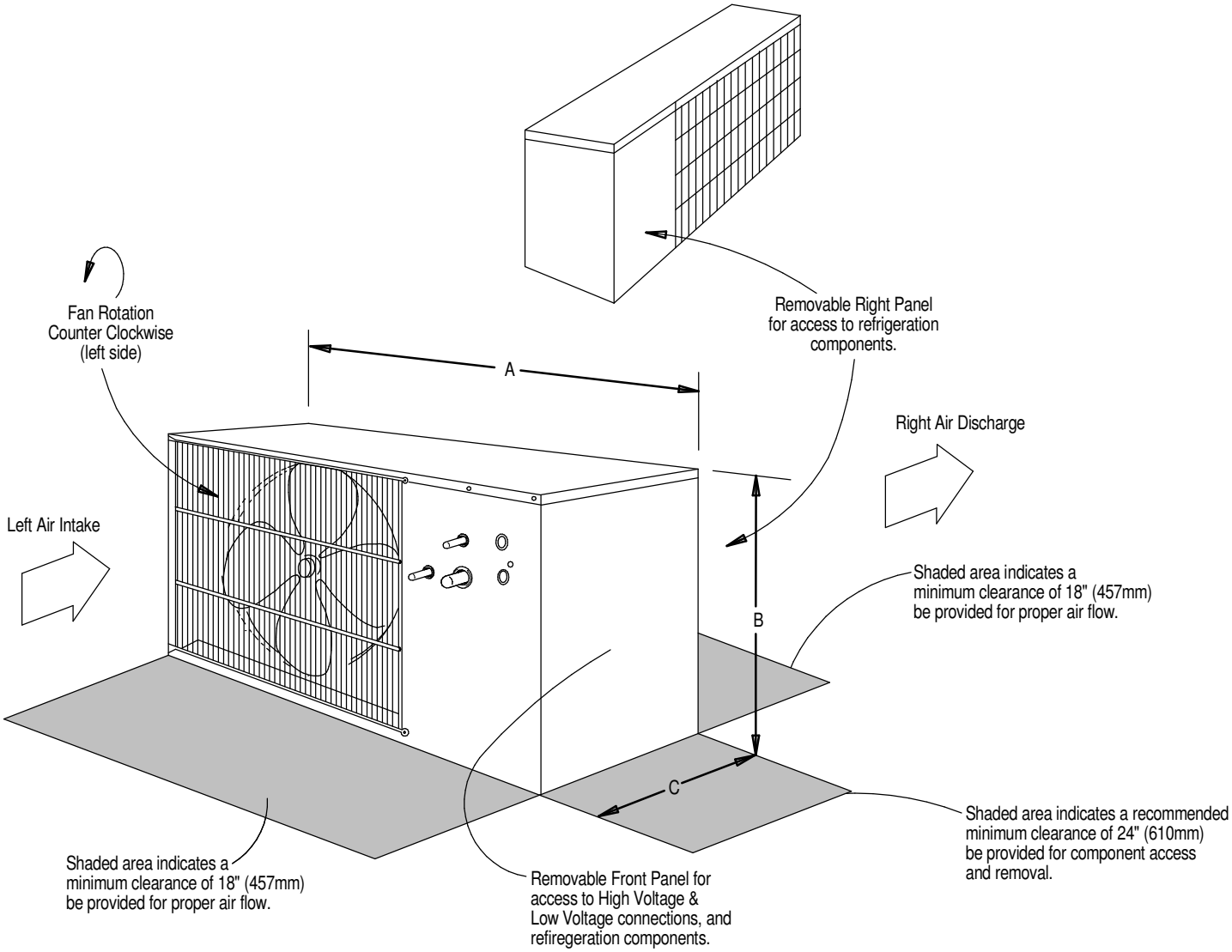

MODEL NUMBERS		DIMENSIONAL DATA IN. (mm)			MODULE WEIGHT
60 HZ	50HZ	A	B	C	lbs. (kg) net.
PFH014A-L	NA	40 (1016)	23 1/2 (597)	18 (457)	200 (91)
PFH020A-L	NA				
PFH027A-L	NA				
PFH027A-H	NA	48 (1219)	31 (787)	18 (457)	241 (109)
PFHZ27A-L	NA				
PFH037A-L	PFH036A-L				
PFH042A-L	PFH041A-L				
PFH037A-H	PFH036A-H	53 (1343)	36 1/4 (918)	18 (457)	351 (159)
PFHZ37A-L	PFHZ36A-L				
PFH042A-H	PFH041A-H				
PFHZ42A-L	PFHZ41A-L				
PFH067A-L	PFH066A-L				

PKA-A12HA7 & PUZ-A12NKA7(-BS)
12,000 BTU/H WALL MOUNT
12,000 BTU/H HEAT PUMP UNIVERSAL OUTDOOR

Job Name:	
System Reference:	Date:

Indoor Unit PKA-A12HA7

Outdoor Unit
- ✔ Standard Model PUZ-A12NKA7
- ☐ Seacoast Model PUZ-A12NKA7-BS

INDOOR UNIT FEATURES
- Sleek, compact design
- Simple installation
- Vane setting for air flow direction control
- Auto fan speed mode
- Ideal for spaces such as server rooms, daycare centers, classrooms, churches, small offices, and more
- Multiple control options available:
  - kumo cloud® smart device app for remote access
  - Third-party interface options
  - Wired or wireless controllers

OUTDOOR UNIT FEATURES
- Variable speed INVERTER-driven compressor
- Power receiver pre-charged with refrigerant volume for piping length up to 70 ft
- Low ambient cooling down to -40°F providing 100% capacity (only for PUY models with wind baffles installed)
- 24-hour continuous operation (cooling mode)
- High pressure protection
- Fast restart due to bypass valve make it ideal for equipment cooling applications, such as data centers
- Superior energy and operational efficiency

© 2021 Mitsubishi Electric Trane HVAC US LLC. All rights reserved.

SPECIFICATIONS: PKA-A12HA7 & PUZ-A12NKA7(-BS)

Cooling at 95°F[1]	Maximum Capacity	BTU/H	12,000
	Rated Capacity	BTU/H	12,000
	Minimum Capacity	BTU/H	5,800
	Maximum Power Input	W	1,000
	Rated Power Input	W	1,000
	Moisture Removal	Pints/h	2.0
	Sensible Heat Factor		0.81
	Power Factor	%	94.5/94.5
Heating at 47°F[2]	Maximum Capacity	BTU/H	18,000
	Rated Capacity	BTU/H	14,000
	Minimum Capacity	BTU/H	5,500
	Maximum Power Input	W	1,600
	Rated Power Input	W	950
	Power Factor	%	20.0/20.0
Heating at 17°F[3]	Maximum Capacity	BTU/H	11,100
	Rated Capacity	BTU/H	9,200
	Maximum Power Input	W	1,050
	Rated Power Input	W	1,020
Heating at 5°F[4]	Maximum Capacity	BTU/H	10,600
	Maximum Power Input	W	1,600
Efficiency	SEER		20.8
	EER[1]		12.0
	HSPF [IV]		10.2
	COP at 47°F[2]		4.31
	COP at 17°F at Maximum Capacity[3]		3.1
	COP at 5°F at Maximum Capacity[4]		1.94
	ENERGY STAR® Certified		No
Electrical	Voltage, Phase, Frequency		208/230, 1, 60
	Guaranteed Voltage Range	V AC	198 - 253
	Voltage: Indoor - Outdoor, S1-S2	V AC	208/230
	Voltage: Indoor - Outdoor, S2-S3	V DC	24
	Short-circuit Current Rating [SCCR]	kA	5
	Recommended Fuse/Breaker Size (Oudoor)	A	15
	Recommended Wire Size [Indoor - Outdoor]	AWG	14
Indoor Unit	MCA	A	1.0
	Fan Motor Full Load Amperage	A	0.33
	Fan Motor Output	W	30
	Airflow Rate at Cooling, Dry	CFM	320–370–425
	Airflow Rate at Cooling, Wet	CFM	290–335–380
	Airflow Rate at Heating, Dry	CFM	320–370–425
	Sound Pressure Level [Cooling]	dB[A]	36–40–43
	Sound Pressure Level [Heating]	dB[A]	36–40–43
	Drain Pipe Size	In. [mm]	5/8 [16]
	Coating on Heat Exchanger		—
	External Finish Color		White Munsell 1.0Y 9.2/0.2
	Unit Dimensions	W x D x H: In. [mm]	35-3/8 x 9-13/16 x 11-5/8 [898 x 249 x 295]
	Package Dimensions	W x D x H: In. [mm]	39-3/8 x 15-3/4 x 13-3/8 [1000 x 400 x 340]
	Unit Weight	Lbs. [kg]	29 [13]
	Package Weight	Lbs. [kg]	33 [15]
Indoor Unit Operating Temperature Range	Cooling Intake Air Temp [Maximum / Minimum]*	°F	95 DB, 71 WB / 67 DB, 57 WB
	Heating Intake Air Temp [Maximum / Minimum]	°F	80 DB / 70 DB

NOTES:

AHRI Rated Conditions (Rated data is determined at a fixed compressor speed)	[1]Cooling (Indoor // Outdoor)	°F	80 DB, 67 WB // 95 DB, 75 WB
	[2]Heating at 47°F (Indoor // Outdoor)	°F	70 DB, 60 WB // 47 DB, 43 WB
	[3]Heating at 17°F (Indoor // Outdoor)	°F	70 DB, 60 WB // 17 DB, 15 WB
Conditions	[4]Heating at 5°F (Indoor // Outdoor)	°F	70 DB, 60 WB // 5 DB, 4 WB
	[5]Heating at -4°F (Indoor // Outdoor)	°F	70 DB, 60 WB // -4 DB, -5 WB
	[6]Heating at -5°F (Indoor // Outdoor)	°F	70 DB, 60 WB // -5 DB, -6 WB
	[7]Heating at -13°F (Indoor // Outdoor)	°F	70 DB, 60 WB // -13 DB, -14 WB

*Outdoor Unit Operating Temperature Range (Cooling Air Temp (Maximum / Minimum)):
- Applications should be restricted to comfort cooling only; equipment cooling applications are not recommended for low ambient temperature conditions.
  - » Wind baffles required to operate below 23°F DB in cooling mode.
  - » Cooling-only system with wind baffle: -40°F - 115°F.
  - » Heat pump system with wind baffle: 0°F - 115°F.
  - » Refer to wind baffle documentation for further information.

**Outdoor Unit Operating Temperature Range (Cooling Thermal Lock-out / Re-start Temperatures; Heating Thermal Lock-out / Re-start Temperatures):
- System cuts out in heating mode to avoid thermistor error and automatically restarts at these temperatures.

SEACOAST PROTECTION (-BS MODELS)
- External Outer Panel: Phosphate coating + Acrylic-Enamel coating
- Fan Motor Support: Epoxy resin coating (at edge face)
- Separator Assembly Valve Bed: Epoxy resin coating (at edge face)
- Blue Fin treatment is an anti-corrosion treatment that is applied to the condenser coil to protect it against airborne contaminants.

© 2021 Mitsubishi Electric Trane HVAC US LLC. All rights reserved.

SPECIFICATIONS: PKA-A12HA7 & PUZ-A12NKA7(-BS)

Outdoor Unit	MCA	A	11.0
	MOCP	A	28
	Fan Motor Full Load Amperage	A	0.5
	Fan Motor Output	W	46
	Airflow Rate	CFM	1590/1590
	Refrigerant Control		LEV
	Defrost Method		Reverse Cycle
	Coating on Heat Exchanger		Blue Fin Coating (BS Model only)
	Sound Pressure Level, Cooling[1]	dB(A)	44
	Sound Pressure Level, Heating[2]	dB(A)	46
	Compressor Type		INVERTER-driven twin rotary
	Compressor Model		SNB092FNCM
	Compressor Rated Load Amps	A	7.0
	Compressor Locked Rotor Amps	A	12.0
	Compressor Oil Type // Charge	oz.	FV50S // 12
	External Finish Color		Ivory Munsell 3Y 7.8/1.1
	Base Pan Heater		N/A
	Unit Dimensions	W x D x H: In. [mm]	31-13/16 (+7/16) x 11-3/16 x 24-13/16 [809 (+62) x 300 x 630]
	Package Dimensions	W x D x H: In. [mm]	37-1/16 x 16-3/16 x 27-7/16 [941 x 411 x 670]
	Unit Weight	Lbs. [kg]	93 [42]
	Package Weight	Lbs. [kg]	104 [47]
Outdoor Unit Operating Temperature Range	Cooling Air Temp [Maximum / Minimum]*	°F	115 DB / 0 DB
	Heating Air Temp [Maximum / Minimum]	°F	70 DB, 59 WB / 12 DB, 10 WB
	Heating Thermal Lock-out / Re-start Temperatures**	°F	8.0 / 12
Refrigerant	Type		R410A
	Charge	Lbs, oz	4, 7.0
	Chargeless Piping Length	Ft. [m]	70.0 [20.0]
	Additional Refrigerant Charge Per Additional Piping Length	oz./Ft. [g/m]	0.2 [15]
Piping	Gas Pipe Size O.D. [Flared]	In.[mm]	1/2 [12.7]
	Liquid Pipe Size O.D. [Flared]	In.[mm]	1/4 [6.35]
	Maximum Piping Length	Ft. [m]	100 [30]
	Maximum Height Difference	Ft. [m]	100 [30]
	Maximum Number of Bends		15

NOTES:

AHRI Rated Conditions (Rated data is determined at a fixed compressor speed)	[1]Cooling (Indoor // Outdoor)	°F	80 DB, 67 WB // 95 DB, 75 WB
	[2]Heating at 47°F (Indoor // Outdoor)	°F	70 DB, 60 WB // 47 DB, 43 WB
	[3]Heating at 17°F (Indoor // Outdoor)	°F	70 DB, 60 WB // 17 DB, 15 WB
Conditions	[4]Heating at 5°F (Indoor // Outdoor)	°F	70 DB, 60 WB // 5 DB, 4 WB
	[5]Heating at -4°F (Indoor // Outdoor)	°F	70 DB, 60 WB // -4 DB, -5 WB
	[6]Heating at -5°F (Indoor // Outdoor)	°F	70 DB, 60 WB // -5 DB, -6 WB
	[7]Heating at -13°F (Indoor // Outdoor)	°F	70 DB, 60 WB // -13 DB, -14 WB

*Outdoor Unit Operating Temperature Range (Cooling Air Temp (Maximum / Minimum)):
- Applications should be restricted to comfort cooling only; equipment cooling applications are not recommended for low ambient temperature conditions.
  - » Wind baffles required to operate below 23°F DB in cooling mode.
  - » Cooling-only system with wind baffle: -40°F - 115°F.
  - » Heat pump system with wind baffle: 0°F - 115°F.
  - » Refer to wind baffle documentation for further information.

**Outdoor Unit Operating Temperature Range (Cooling Thermal Lock-out / Re-start Temperatures; Heating Thermal Lock-out / Re-start Temperatures):
- System cuts out in heating mode to avoid thermistor error and automatically restarts at these temperatures.

SEACOAST PROTECTION (-BS MODELS)
- External Outer Panel: Phosphate coating + Acrylic-Enamel coating
- Fan Motor Support: Epoxy resin coating (at edge face)
- Separator Assembly Valve Bed: Epoxy resin coating (at edge face)
- Blue Fin treatment is an anti-corrosion treatment that is applied to the condenser coil to protect it against airborne contaminants.

© 2021 Mitsubishi Electric Trane HVAC US LLC. All rights reserved.

INDOOR UNIT ACCESSORIES: PKA-A12HA7

Control Interface	3-Pin Connector	☐ PAC-715AD
	BACnet® and Modbus Interface	☐ PAC-UKPRC001-CN-1
	IT Extender	☐ PAC-WHS01IE-E
	kumo station® for kumo cloud®	☐ PAC-WHS01HC-E
	Lockdown bracket for remote controller	☐ RCMKP1CB
	Thermostat Interface	☐ PAC-US444CN-1
	USNAP Adapter	☐ PAC-WHS01UP-E
	Wireless Interface for kumo cloud®	☐ PAC-USWHS002-WF-2
Remote Sensor	Flush Mount Temperature Sensor	☐ PAC-USSEN001-FM-1
	Remote Temperature Sensor	☐ PAC-SE41TS-E
	Wireless temperature and humitity sensor for kumo cloud®	☐ PAC-USWHS003-TH-1
Wired Remote Controller	Deluxe Wired MA Remote Controller†	☐ PAR-40MAAU
	Simple MA Remote Controller†	☐ PAC-YT53CRAU-J
	Touch MA Controller†	☐ PAR-CT01MAU-SB
Wireless Remote Controller	kumo touch™ RedLINK™ Wireless Controller	☐ MHK2
	Wireless MA Receiver	☐ PAR-FA32MA-W
	Wireless MA Remote Controller	☐ PAR-FL32MA-E
Condensate	Blue Diamond (Advanced) Mini Condensate Pump w/ Reservoir & Sensor (208/230V) [recommended]	☐ X87-721
	Blue Diamond (MicroBlue) Mini Condensate Pump (110/208/230V) up to 18,000 BTU/H	☐ X85-003
	Blue Diamond Sensor Extension Cable — 15 Ft.	☐ C13-103
	Drain Pan Level Sensor/Control	☐ SS610E
	Fascia Kit for MicroBlue Pump, mounts the MicroBlue and sensor directly beneath indoor unit	☐ T18-016
	Sauermann Condensate Pump	☐ SI30-230
Disconnect Switch	(30A/600V/UL) [fits 2” X 4” utility box] - Black	☐ TAZ-MS303
	(30A/600V/UL) [fits 2” X 4” utility box] - White	☐ TAZ-MS303W
Lineset	100’ x 1/4” x 100’ / 1/2” Lineset (Twin-Tube Insulation)	☐ MLS141212T-100
	15’ x 1/4” x 15’ / 1/2” Lineset (Twin-Tube Insulation)	☐ MLS141212T-15
	30’ x 1/4” x 30’ / 1/2” Lineset (Twin-Tube Insulation)	☐ MLS141212T-30
	50’ x 1/4” x 50’ / 1/2” Lineset (Twin-Tube Insulation)	☐ MLS141212T-50
	65’ x 1/4” x 65’ / 1/2” Lineset (Twin-Tube Insulation)	☐ MLS141212T-65

© 2021 Mitsubishi Electric Trane HVAC US LLC. All rights reserved.

OUTDOOR UNIT ACCESSORIES: PUZ-A12NKA7(-BS)

Air Outlet Guide	Air Outlet Guide	☐ PAC-SJ07SG-E
Centralized Drain Pan	Centralized Drain Pan	☐ PAC-SG63DP-E
Control/Service Tool	Control/Service Tool	☐ PAC-SK52ST
	M- & P-Series Maintenance Tool Cable Set	☐ M21EC0397
	USB/UART Conversion Cable (Required for all laptop connection)	☐ M21EC1397
Drain Socket	Drain Socket	☐ PAC-SJ08DS-E
Hail Guards	Hail Guard	☐ HG-A5
M-NET Converter	M-NET Converter	☐ PAC-SJ96MA-E
Mini-Split Wire	14 Gauge, 4 wire MiniSplit Cable—250 ft. roll	☐ S144-250
	14 Gauge, 4 wire MiniSplit Cable—50 ft. roll	☐ S144-50
	16 Gauge, 4 wire MiniSplit Cable—250 ft. roll	☐ S164-250
	16 Gauge, 4 wire MiniSplit Cable—50 ft. roll	☐ S164-50
Mounting Pad	Condensing Unit Mounting Pad: 16” x 36” x 3”	☐ ULTRILITE1
Stand	18” Single Fan Stand	☐ QSMS1801M
	24” Single Fan Stand	☐ QSMS2401M
	Condenser Wall Bracket	☐ QSWB2000M-1
	Condenser Wall Bracket -Stainless Steel Finish	☐ QSWBSS
	Outdoor Unit Stand — 12” High	☐ QSMS1201M
Wind Baffle	Front Wind Baffle	☐ WB-PA4
	Rear Wind Baffle	☐ WB-RE4
	Side Advanced Wind Baffle	☐ WB-SD4

© 2021 Mitsubishi Electric Trane HVAC US LLC. All rights reserved.

INDOOR UNIT DIMENSIONS: PKA-A12HA7

Unit: inch (mm)

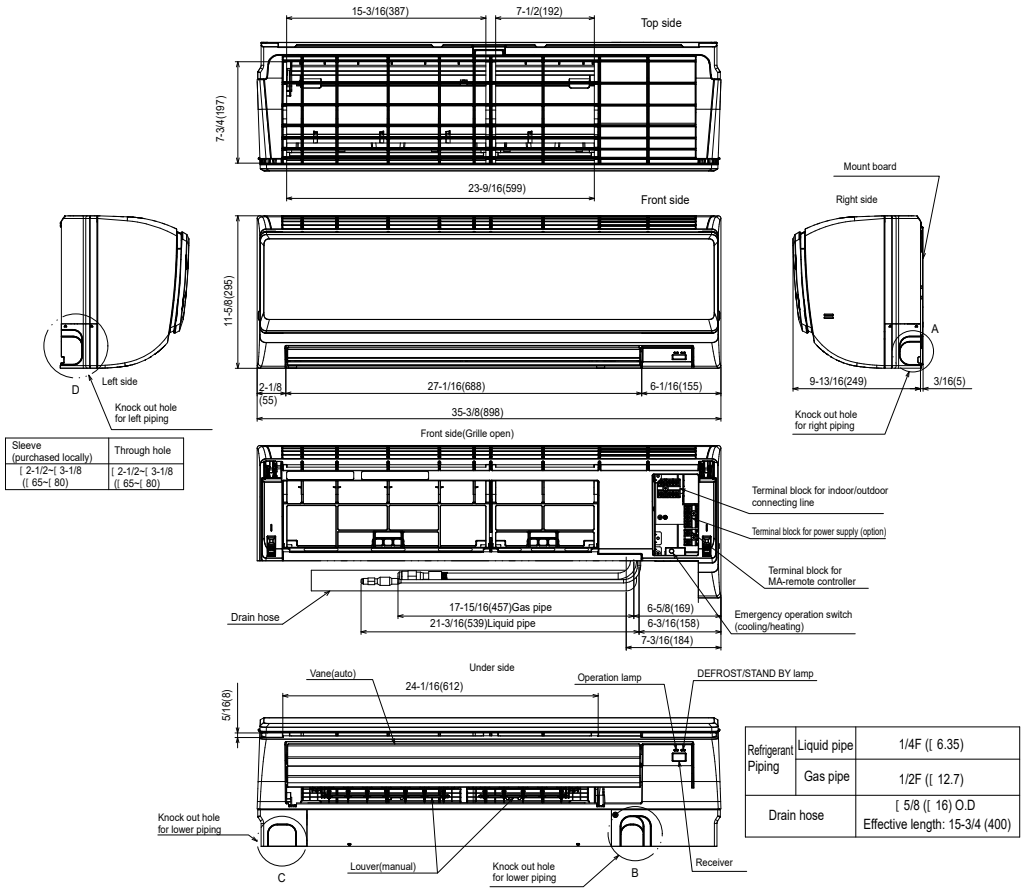

Refrigerant Piping	Liquid pipe	1/4F ([6.35)
	Gas pipe	1/2F ([12.7)
Drain hose		[5/8 ([16) O.D Effective length: 15-3/4 (400)

Sleeve (purchased locally)	Through hole
[2-1/2~[3-1/8 ([65~[80)	[2-1/2~[3-1/8 ([65~[80)

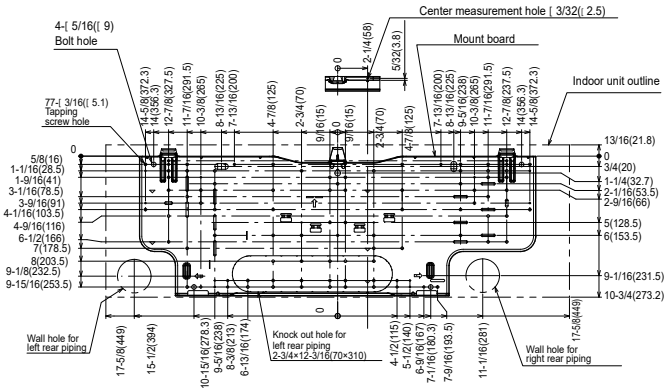

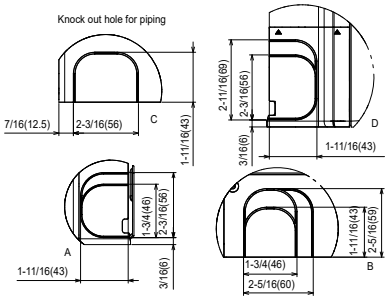

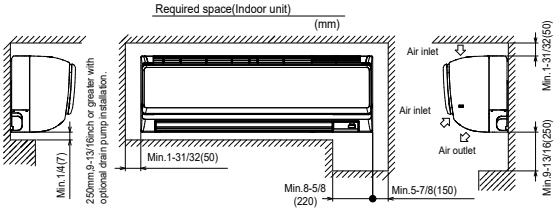

© 2021 Mitsubishi Electric Trane HVAC US LLC. All rights reserved.

OUTDOOR UNIT DIMENSIONS: PUZ-A12NKA7(-BS)

Unit: mm<in>

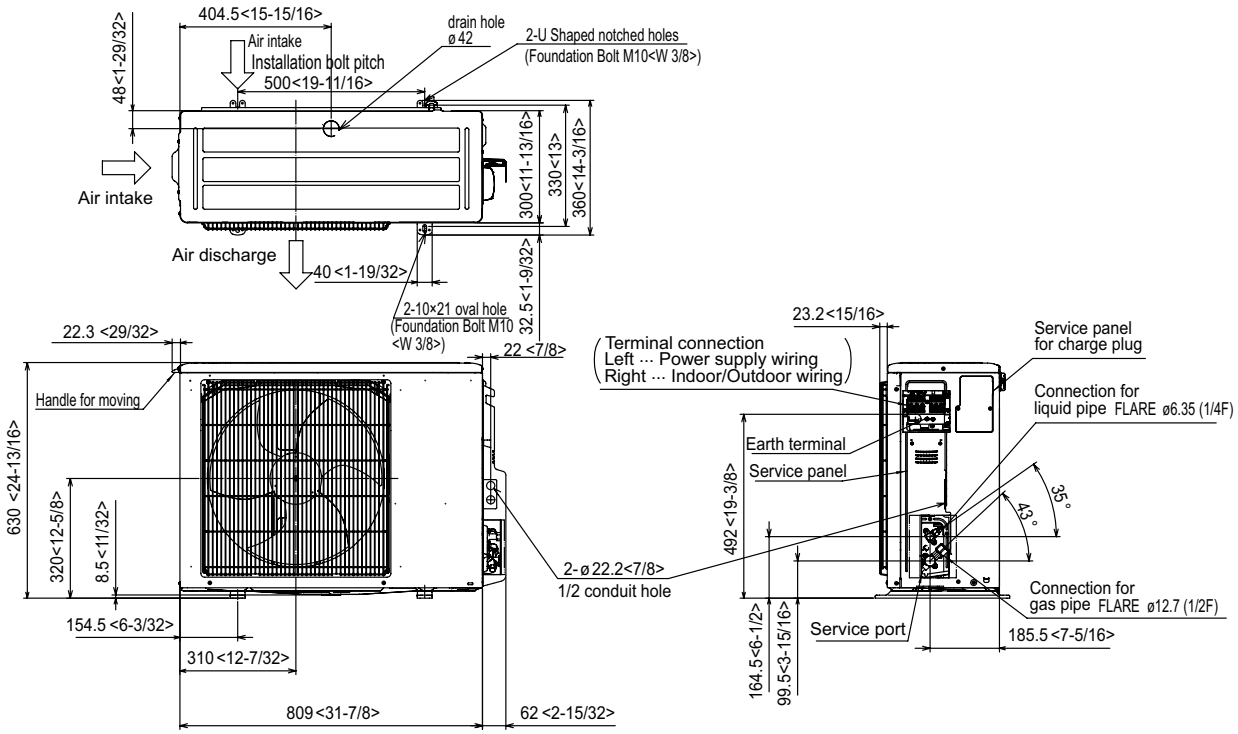

Free space around the outdoor unit (basic example)

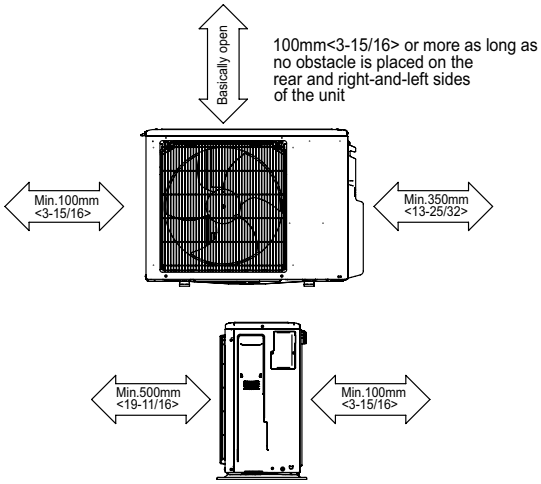

2 sides should be open in
the right, left and rear side.

FOUNDATION BOLTS

Please secure the unit firmly
with 4 foundation (M10<W3/8>) bolts.
(Bolts, washers and nut must
be purchased locally).

<Foundation bolt height>

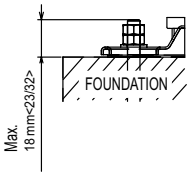

PIPING-WIRING DIRECTION

Piping and wiring connection can
be made from the rear direction only.

1340 Satellite Boulevard Suwanee, GA 30024
Toll Free: 800-433-4822 www.mehvac.com

FORM# PKA-A12HA7 & PUZ-A12NKA7(-BS) - 202103

© 2021 Mitsubishi Electric Trane HVAC US LLC. All rights reserved.

EXHAUST FAN INFORMATION – JOB#4677500

FAN UNIT NO	TAG	QTY	FAN UNIT MODEL #	MANUFACTURER	CFM	ESP	RPM	MOTOR ENCL	HP	BHP	ø	VOLT	FLA	DISCHARGE VELOCITY	WEIGHT (LBS)	SONES
1	EF-1	1	DU50HFA	CAPTIVEAIRE	960	1.000	1498	TEAO-ECM	0.500	0.3470	1	115	6.3	365 FPM	82	15.9
2	EF-2	1	DR12HFA	CAPTIVEAIRE	300	0.500	1271	TEAO-ECM	0.250	0.0910	1	115	2.9		49	6.9

FAN OPTIONS

FAN UNIT NO	TAG	QTY	DESCRIPTION
1	EF-1	1	GREASE BOX.
		1	FAN BASE CERAMIC SEAL - SHIP LOOSE - FOR GREASE DUCTS.
		1	ECM WIRING PACKAGE - EXHAUST - MANUAL OR 0-10VDC REFERENCE SPEED CONTROL -MSC- (TELCO), CCW ROTATION.
2	EF-2	1	I 12-BDD DAMPER.
		1	ECM WIRING PACKAGE - MANUAL OR 0-10VDC REFERENCE SPEED CONTROL (TELCO MOTOR), CCW ROTATION.

CURB ASSEMBLIES

NO	ON FAN	TAG	WEIGHT	ITEM	SIZE
1	# 1	EF-1	27 LBS	CURB	19.500"W X 19.500"L X 20.000"H VENTED HINGED.
2	# 2	EF-2	25 LBS	CURB	17.500"W X 17.500"L X 20.000"H .

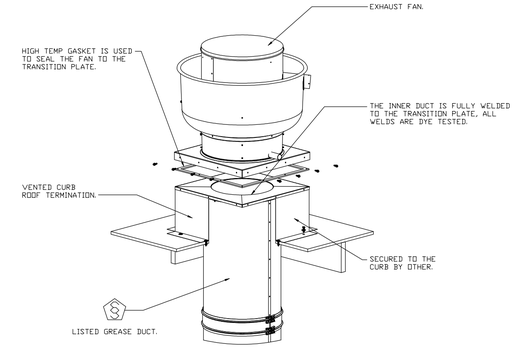

FOR QUESTIONS, CALL THE
North New Jersey Mechanical
Cid Porter
PHONE: (201) 308-6647
EMAIL: reg138@captiveaire.com

FAN #1 DU50HFA - EXHAUST FAN (EF-1)

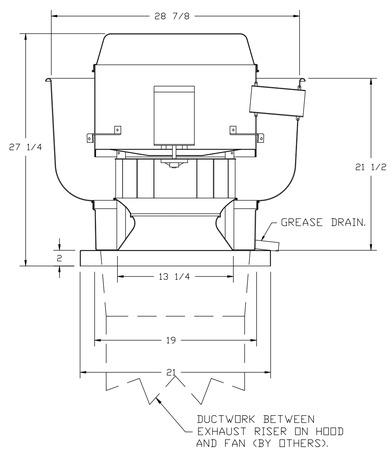

FEATURES:

- DIRECT DRIVE CONSTRUCTION (NO BELTS/PULLEYS).
- ROOF MOUNTED FANS.
- RESTAURANT MODEL.
- UL705 AND UL762 AND ULC-S645
- VARIABLE SPEED CONTROL.
- INTERNAL WIRING.
- THERMAL OVERLOAD PROTECTION (SINGLE PHASE).
- HIGH HEAT OPERATION 300°F (149°C).
- GREASE CLASSIFICATION TESTING.
- NEMA 3R SAFETY DISCONNECT SWITCH.

NORMAL TEMPERATURE TEST
EXHAUST FAN MUST OPERATE CONTINUOUSLY WHILE EXHAUSTING AIR AT 300°F (149°C) UNTIL ALL FAN PARTS HAVE REACHED THERMAL EQUILIBRIUM, AND WITHOUT ANY DETERIORATING EFFECTS TO THE FAN WHICH WOULD CAUSE UNSAFE OPERATION.

ABNORMAL FLARE-UP TEST
EXHAUST FAN MUST OPERATE CONTINUOUSLY WHILE EXHAUSTING BURNING GREASE VAPORS AT 600°F (316°C) FOR A PERIOD OF 15 MINUTES WITHOUT THE FAN BECOMING DAMAGED TO ANY EXTENT THAT COULD CAUSE AN UNSAFE CONDITION.

OPTIONS

GREASE BOX.
FAN BASE CERAMIC SEAL - SHIP LOOSE - FOR GREASE DUCTS.
ECM WIRING PACKAGE - EXHAUST - MANUAL OR 0-10VDC REFERENCE SPEED CONTROL -MSC- (TELCO), CCW ROTATION.

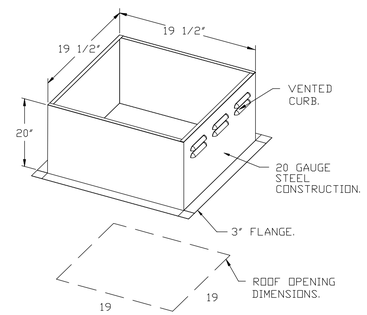

FAN#1 (EF-1) - EXHAUST PERFORMANCE CURVES.
960 CFM, 1 SP @ 1498 RPM AND 0.347 BHP AT 0 FEET AND 120 DEG F.
* PLEASE NOTE THAT THESE CURVES WERE ADJUSTED FOR JOB SPECIFIC TEMPERATURE AND ALTITUDE.

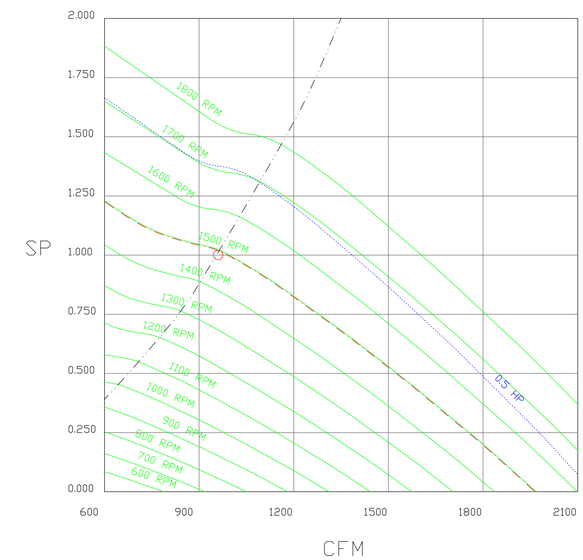

FAN #2 DR12HFA - EXHAUST FAN (EF-2)

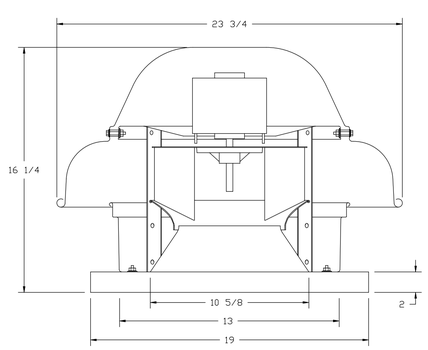

FEATURES:

- DIRECT DRIVE CONSTRUCTION (NO BELTS/PULLEYS).
- ROOF MOUNTED FANS.
- UL705.
- SAFETY DISCONNECT.
- STANDARD BIRD SCREEN.
- SPEED CONTROL.

OPTIONS

I 12-BDD DAMPER.
ECM WIRING PACKAGE - MANUAL OR 0-10VDC REFERENCE SPEED CONTROL (TELCO MOTOR), CCW ROTATION.

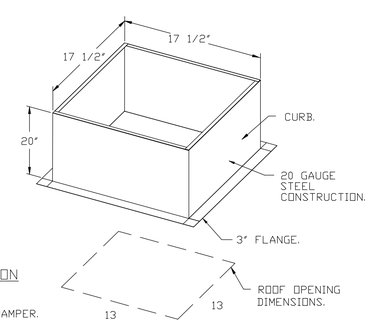

BACKDRAFT DAMPER INSTALLATION

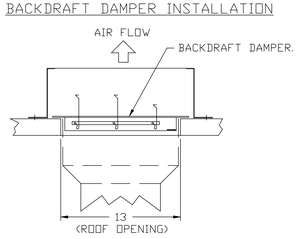

FAN#2 (EF-2) - EXHAUST PERFORMANCE CURVES.
300 CFM, 0.569 SP @ 1271 RPM AND 0.091 BHP AT 0 FEET AND 70 DEG F.
* PLEASE NOTE THAT THESE CURVES WERE ADJUSTED FOR JOB SPECIFIC TEMPERATURE AND ALTITUDE.

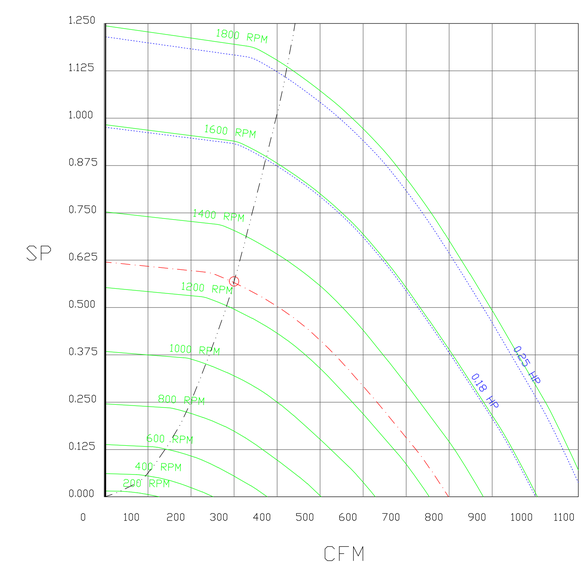

July 29, 2021

REVISIONS

DESCRIPTION	DATE:

CAPTIVEAIRE
www.captiveaire.com
North New Jersey Mechanical
, Summit, NJ, PHONE: (201) 308-6647 FAX: (919) 516-8752 EMAIL: reg138@captiveaire.com

Orangeburg Army Project
ORANGEBURG, NY, 10962

DATE: 1/6/2021

DWG.#: 4677500

DRAWN BY: cid.porter

SCALE: 3/4" = 1'-0"

MASTER DRAWING

SHEET NO.
1

MUA FAN INFORMATION – JOB#4677500

FAN UNIT NO	TAG	QTY	FAN UNIT MODEL #	BLOWER	HOUSING	MIN CFM	DESIGN CFM	ESP	RPM	MOTOR ENCL	HP	BHP	ø	VOLT	FLA	MCA	MOCP	WEIGHT (LBS)	SONES
3	MUA-1	1	D76	G7	D.6	600	760	1.000	1784	ODP	1.000	0.7440	1	115	8.1	12.3A	20A	344	22

GAS FIRED MAKE-UP AIR UNIT(S)

FAN UNIT NO	TAG	INPUT BTUs	OUTPUT BTUs	TEMP RISE	REQUIRED INPUT GAS PRESSURE	GAS TYPE
3	MUA-1	60353	55525	68°F	7 IN. W.C. – 14 IN. W.C.	NATURAL

FAN OPTIONS

FAN UNIT NO	TAG	QTY	DESCRIPTION
3	MUA-1	1	HIGH PROFILE LID.
		1	INLET PRESSURE GAUGE, 0-35".
		1	MANIFOLD PRESSURE GAUGE, -5 TO 15" WC.
		1	MOTORIZED INTAKE DAMPER (D76).

CURB ASSEMBLIES

NO	ON FAN	TAG	WEIGHT	ITEM	SIZE
3	# 3	MUA-1	50 LBS	CURB	19.500"W X 52.000"L X 20.000"H INSULATED.

FAN #3 D76 – HEATER (MUA-1)

1. LOW CFM DIRECT FIRED HEATER. BELT DRIVE.
2. INTAKE HOOD WITH EZ FILTERS.
3. DOWN DISCHARGE – AIR FLOW RIGHT -> LEFT.
4. HIGH PROFILE LID OPTION FOR D76. REQUIRED WITH BELT DRIVE, SINGLE PHASE MOTORS.
5. GAS PRESSURE GAUGE, 0-35", 2.5" DIAMETER, 1/4" THREAD SIZE.
6. GAS PRESSURE GAUGE, -5 TO +15 INCHES WC, 2.5" DIAMETER, 1/4" THREAD SIZE.
7. MOTORIZED BACK DRAFT DAMPER 13" X 17" FOR D76 COMPACT DIRECT FIRED HEATERS W/EXTENDED SHAFT, STANDARD GALVANIZED CONSTRUCTION, 3/4" REAR FLANGE, TF120S ACTUATOR INCLUDED.

SUPPLY SIDE HEATER INFORMATION:

WINTER TEMPERATURE = 0°F. TEMP. RISE = 68°F.
BTUs CALCULATED OFF ACTUAL AIR DENSITY.
OUTPUT BTUs AT ALTITUDE OF 0.0 FT. = 55944.
INPUT BTUs AT ALTITUDE OF 0.0 FT. = 60809.
OUTPUT BTUs AT ALTITUDE OF 208 FT. = 55525.
INPUT BTUs AT ALTITUDE OF 208 FT. = 60353.

July 29, 2021

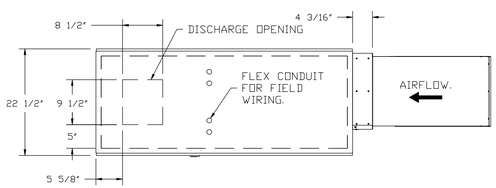

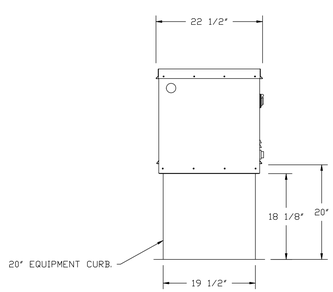

ROOF OPENING 2" SMALLER THAN CURB DIMENSION.

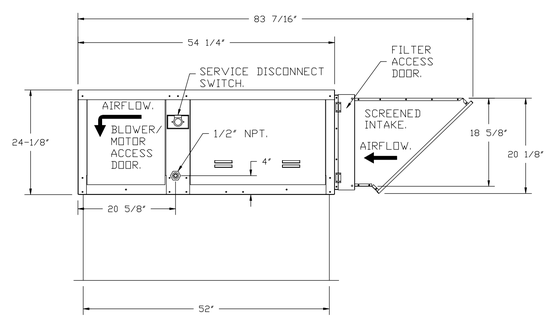

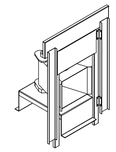

DIRECT FIRED (DF) PROFILE PLATE ASSEMBLY

DIRECT FIRED PROFILE PLATE SPECIFICATIONS:
DESCRIPTION:
DIRECT FIRED BURNERS SHALL HAVE PATENTED (US PATENT NO: US6629523B2), SELF-ADJUSTING PROFILE PLATES DESIGNED TO ENSURE PROPER AIR VELOCITY AND PRESSURE DROP ACROSS THE BURNER. PROFILE PLATES SHALL ALLOW BURNERS TO ACHIEVE CLEAN COMBUSTION BY LIMITING BY-PRODUCT LEVELS TO A MAXIMUM OF 5PPM OF CARBON MONOXIDE (CO), AND 0.5PPM OF NITROGEN DIOXIDE (NO2)(DIRECT FIRED UNITS SHALL BE CONFIGURED WITH THE BLOWER MOUNTED DOWNSTREAM OF THE BURNER. THIS ARRANGEMENT WILL ENSURE A CONSISTENT AIRFLOW, REGARDLESS OF INLET AIR TEMPERATURE.

APPLICATION:
SPRING-LOADED BURNER PROFILE PLATES ARE ENGINEERED TO AUTOMATICALLY REACT TO THE MOMENTUM OF A FRESH AIR STREAM, WITHOUT THE NEED FOR ANY MOTORS OR ACTUATORS TO MECHANICALLY ADJUST THEM. WITH THIS FEATURE, ALL DF UNITS ARE DESIGNED FOR DEMAND CONTROL VENTILATION (DCV) REQUIREMENTS.

CERTIFICATIONS:
ALL PROFILE PLATE ASSEMBLIES SHALL BE INCLUDED IN THE DF UNIT'S ETL LISTING AND COMPLY WITH COMBINED SAFETY STANDARDS ANSI Z83.4 AND CSA 3.7 (NON-RECIRCULATING DF HEATERS) AND ANSI Z83.18 (RECIRCULATING DF HEATERS).

GENERAL CONSTRUCTION:
-PROFILE PLATES SHALL BE FORMED FROM G90 GALVANIZED STEEL.
-PROFILE PLATES SHALL VARY IN SIZE PER UNIT.
-PROFILE PLATES SHALL BE MOUNTED ALONG THE SAME PLANE AS THE DISCHARGE OF THE BURNER.
-DESIGN SHALL INCORPORATE PROPERLY TORQUED, PERMANENTLY MOUNTED SPRING HINGES.
-SPRING HINGES SHALL BE MADE FROM PLATED STEEL.

FAN#3 (MUA-1) – HEATER PERFORMANCE CURVES.

760 CFM, 1.133 SP @ 1784 RPM AND 0.744 BHP AT 208 FEET AND 68 DEG F.

* PLEASE NOTE THAT THESE CURVES WERE ADJUSTED FOR JOB SPECIFIC TEMPERATURE AND ALTITUDE.

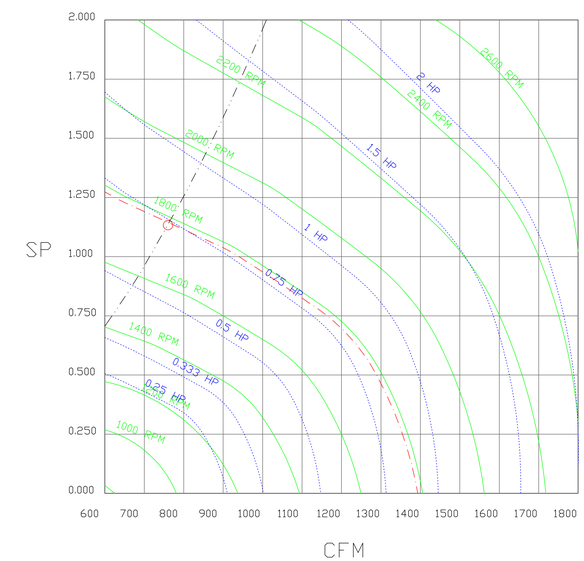

REVISIONS

	DESCRIPTION	DATE:
△		
△		
△		
△		

CAPTIVEAIRE
www.captiveaire.com
North New Jersey Mechanical
, Summit, NJ, PHONE: (201) 308-8647 FAX: (919) 516-8752 EMAIL: reg138@captiveaire.com

Orangeburg Army Project
ORANGEBURG, NY, 10962

DATE: 1/6/2021
DWG.#: 4677500
DRAWN BY: cid.porter
SCALE: 3/4" = 1'-0"
MASTER DRAWING

SHEET NO.
2

Model: G-140-VG

Direct Drive Centrifugal Roof Exhaust Fan

Previously: G-143-VG

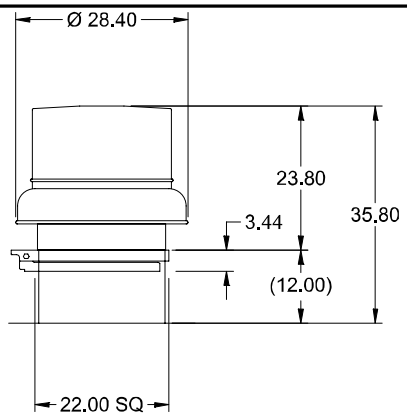

OVERALL HEIGHT MAY BE GREATER DEPENDING ON MOTOR, ADAPTER, AND/OR HINGE BASE.

Dimensional	
Quantity	1
Weight w/o Acc's (lb)	53
Weight w/ Acc's (lb)	97
Weight w/ Acc's and Curb (lb)	128
Standard Curb Cap Size (in.)	22 x 22
Optional Damper (in.)	16 x 16
Roof Opening (in.)	18.5 x 18.5

Performance	
Requested Volume (CFM)	2,230
Actual Volume (CFM)	2,230
Total External SP (in. wg)	0.598
Fan RPM	1425
Operating Power (hp)	0.6
Elevation (ft)	30
Airstream Temp.(F)	70
Air Density (lb/ft3)	0.075
Tip Speed (ft/min)	5,456
Static Eff. (%)	35

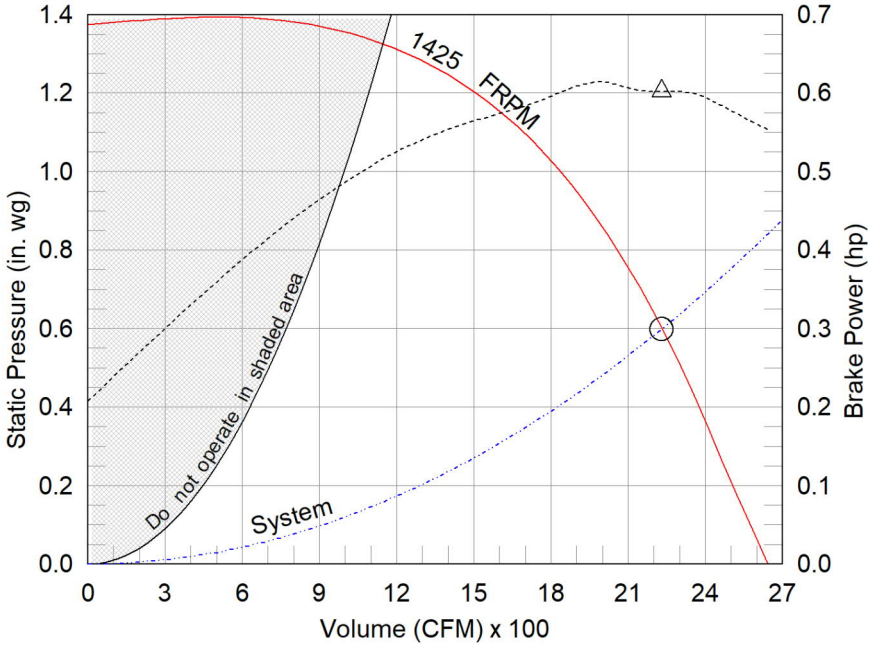

Motor	
Motor Mounted	Yes
Size (hp)	1
Voltage/Cycle/Phase	115/60/1
Enclosure	TENV
Motor RPM	1725
Efficiency Rating	High
Windings	1
FLA (Amps)	11.5

- △ Operating Bhp point
- ○ Operating point at Total External SP
- Fan curve
- System curve
- Brake horsepower curve

Static Pressure Calculations

External SP	0.5	in. wg
Damper	0.098	in. wg
Total External SP	0.598	in. wg

Sound Power by Octave Band

Sound Data	62.5	125	250	500	1000	2000	4000	8000	LwA	dBA	Sones
Inlet	82	77	80	74	67	66	62	57	76	65	14.1

Notes:

All dimensions shown are in units of in.
*NEC FLA - based on tables 430.248 or 430.250 of National Electrical Code 2017. Actual motor FLA may vary, for sizing thermal overload, consult factory.
LwA - A weighted sound power level, based on ANSI S1.4
dBA - A weighted sound pressure level, based on 11.5 dB attenuation per Octave band at 5 ft - dBA levels are not licensed by AMCA International
Sones - calculated using ANSI/AMCA 301 at 5 ft

Model: G-140-VG

Direct Drive Centrifugal Roof Exhaust Fan

Tag: TOILET

Standard Construction Features:

- Aluminum housing - Backward inclined composite (sizes 60-95) or aluminum (sizes 97-300) wheel - Aluminum curb cap with prepunched mounting holes - Birdscreen - Ball bearing motors (sizes 85-300 and all Vari Green), sleeve bearing motors (sizes 60-80) - Motor isolated on shock mounts - Corrosion resistant fasteners

Selected Options & Accessories:

Motor - Vari-Green EC motor
Control - Dial for balancing
Standard Curb Cap Size - 22 in. Square
UL/cUL 705 Listed - "Power Ventilators"
Switch, NEMA-1, Toggle, Shipped with Unit
Junction Box Mounted & Wired
High Wind Rated (+/- 150 PSF Rating)
Florida Product Approval #FL13225.1 & Miami-Dade NOA #19-0717.02
Hinged Bracket Kit (PN 877581) (Shipped Loose)
Foam Curb Seal (Attached)
Damper Shipped Loose, VCD-20-PB-16X16, Coated
Damper Actuator (MS4103F1225), 115 VAC Actuated, End Switch
Coated with Hi-Pro Polyester, Concrete Gray-RAL 7023, Fan And Attached Acc
Birdscreen: Aluminum, nom. 86% Free Area
Unit Warranty: 1 Yr (Standard)

Selected Sub Marks

See individual submittals for full details
GPF-22-G12

AMCA

AMCA Licensed for Sound and Air Performance Without Appurtenances (Accessories). Power rating (BHP/kW) does not include transmission losses.

Greenheck Fan Corporation certifies that the model shown herein is licensed to bear the AMCA Seal. The ratings shown are based on tests and procedures performed in accordance with AMCA Publication 211 and AMCA Publication 311 and comply with the requirements of the AMCA Certified Ratings Program. Performance certified is for installation type A: Free inlet, Free outlet. Power rating (BHP/kW) does not include transmission losses. Performance ratings include the effects of birdscreen. The sound ratings shown are loudness values in fan sones at 5 ft. (1.5 m) in a hemispherical free field calculated per ANSI/AMCA Standard 301. Values shown are for installation type A: free inlet hemispherical sone levels. dBA levels are not licensed by AMCA International. The AMCA Certified Ratings Seal applies to sone ratings only.

The AMCA licensed air and/or sound performance data has been modified for installation, appurtenances or accessories, etc. not included in the certified data. The modified performance is not AMCA licensed but is provided to aid in selection and applications of the product.

Model: GB-220-VGD-20

Belt Drive Centrifugal Roof Exhaust Fan

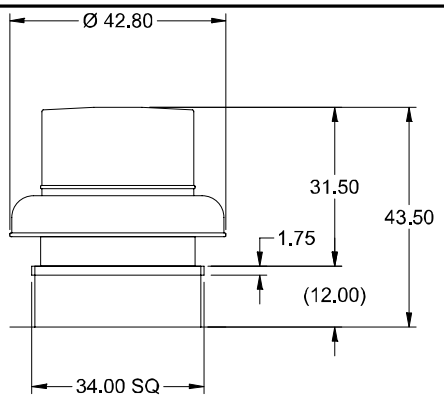

OVERALL HEIGHT MAY BE GREATER DEPENDING ON MOTOR, ADAPTER, AND/OR HINGE BASE.

Dimensional	
Quantity	1
Weight w/o Acc's (lb)	143
Weight w/ Acc's (lb)	202
Weight w/ Acc's and Curb (lb)	254
Max T Motor Frame Size	184
Standard Curb Cap Size (in.)	34 x 34
Optional Damper (in.)	24 x 24
Roof Opening (in.)	26.5 x 26.5

Performance	
Requested Volume (CFM)	6,500
Actual Volume (CFM)	6,500
Total External SP (in. wg)	0.646
Fan RPM	961
Operating Power (hp)	1.89
Elevation (ft)	30
Airstream Temp.(F)	70
Air Density (lb/ft3)	0.075
Drive Loss (%)	4.9
Tip Speed (ft/min)	6,038
Static Eff. (%)	37

Motor	
Motor Mounted	Yes
Size (hp)	2
Voltage/Cycle/Phase	208/60/3
Enclosure	TEFC
Motor RPM	1725
Efficiency Rating	NEMA Premium
Windings	1
NEC FLA* (Amps)	7.5

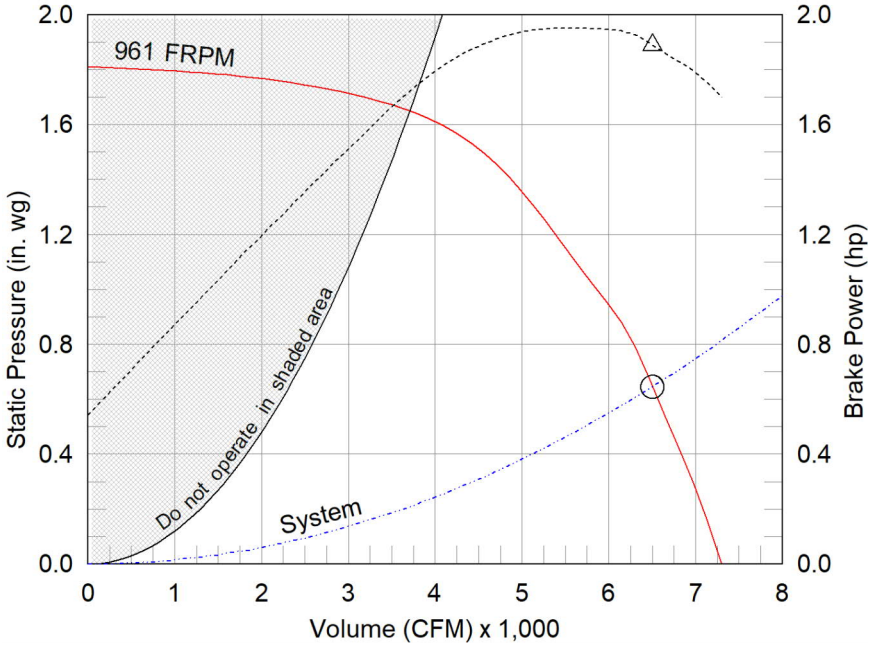

Operating Bhp point
Operating point at Total External SP
Fan curve
System curve
Brake horsepower curve

Static Pressure Calculations

External SP	0.5	in. wg
Damper	0.146	in. wg
Total External SP	0.646	in. wg

Sound Power by Octave Band

Sound Data	62.5	125	250	500	1000	2000	4000	8000	LwA	dBA	Sones
Inlet	82	85	88	79	75	73	68	62	83	72	21

Notes:

All dimensions shown are in units of in.
*NEC FLA - based on tables 430.248 or 430.250 of National Electrical Code 2017. Actual motor FLA may vary, for sizing thermal overload, consult factory.
LwA - A weighted sound power level, based on ANSI S1.4
dBA - A weighted sound pressure level, based on 11.5 dB attenuation per Octave band at 5 ft - dBA levels are not licensed by AMCA International
Sones - calculated using ANSI/AMCA 301 at 5 ft
Sound value does not include carrier frequencies associated with motor controller
The motor provided on this fan is inverter ready and meets NEMA MG1 Part 31.4.4.2

Model: GB-220-VGD-20

Belt Drive Centrifugal Roof Exhaust Fan

Standard Construction Features:

- Aluminum housing - Backward inclined aluminum wheel - Curb cap with prepunched mounting holes - Motor and drives isolated on shock mounts - Birdscreen - Ball bearing motors - Adjustable motor pulley - Adjustable motor plate - Fan shaft mounted in ball bearing pillow blocks - Bearings meet or exceed temperature rating of fan - Static resistant belts - Corrosion resistant fasteners - Sizes 141 and larger have internal Lifting lugs

Selected Options & Accessories:

NEMA Premium Efficient Motor - meets NEMA Table 12-12
Motor VFD Rated without Shaft Grounding Protection
Motor with 40 Degree C Ambient Temperature
Vari-Green Drive 100+ w/On-Board Potentiometer Dial
Standard Curb Cap Size - 34 in. Square
UL/cUL 705 Listed - "Power Ventilators"
Switch, NEMA-1, Toggle, Shipped with Unit
Junction Box Mounted & Wired
High Wind Rated (+/- 150 PSF Rating)
Florida Product Approval #FL13225.1 & Miami-Dade NOA #19-0717.02
Foam Curb Seal (Attached)
Damper Shipped Loose, VCD-20-PB-24X24, Coated
Damper Actuator (MS4103F1225), 115 VAC Actuated, End Switch
Coated with Hi-Pro Polyester, Concrete Gray-RAL 7023, Fan And Attached Acc
Birdscreen: Aluminum, nom. 86% Free Area
Bearings with Grease Fittings, L10 life of 100,000 hrs (L50 avg. life 500,000 hrs)
Unit Warranty: 1 Yr (Standard)

Selected Sub Marks

See individual submittals for full details
GPF-34-G12

AMCA

AMCA Licensed for Sound and Air Performance Without Appurtenances (Accessories). Power rating (BHP/kW) includes transmission losses.

Greenheck Fan Corporation certifies that the model shown herein is licensed to bear the AMCA Seal. The ratings shown are based on tests and procedures performed in accordance with AMCA Publication 211 and AMCA Publication 311 and comply with the requirements of the AMCA Certified Ratings Program. Performance certified is for installation type A: Free inlet, Free outlet. Power rating (BHP/kW) includes transmission losses. Performance ratings include the effects of birdscreen. The sound ratings shown are loudness values in fan sones at 5 ft. (1.5 m) in a hemispherical free field calculated per ANSI/AMCA Standard 301. Values shown are for installation type A: free inlet hemispherical sone levels. dBA levels are not licensed by AMCA International. The AMCA Certified Ratings Seal applies to sone ratings only

The AMCA licensed air and/or sound performance data has been modified for installation, appurtenances or accessories, etc. not included in the certified data. The modified performance is not AMCA licensed but is provided to aid in selection and applications of the product.

Model: RSF-150-50

Filtered Roof Supply Fan

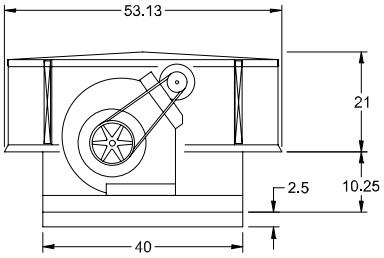

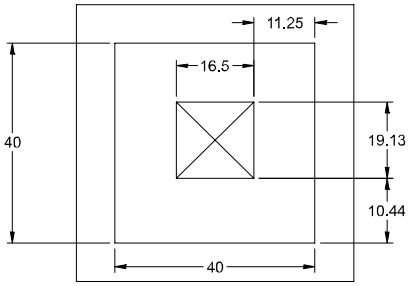

Dimensional	
Quantity	1
Weight w/o Acc's (lb)	439
Weight w/ Acc's (lb)	478
Weight w/ Acc's and Curb (lb)	527
Max T Motor Frame Size	184
Optional Damper (in.)	20 x 20
Roof Opening (in.)	23 x 23

Performance	
Requested Volume (CFM)	6,500
Actual Volume (CFM)	6,500
Total External SP (in. wg)	0.5
Fan RPM	774
Operating Power (hp)	3.11
Elevation (ft)	30
Airstream Temp.(F)	70
Air Density (lb/ft3)	0.075
Drive Loss (%)	4.3
Tip Speed (ft/min)	3,040
Static Eff. (%)	17

Motor	
Motor Mounted	Yes
Size (hp)	5
Voltage/Cycle/Phase	208/60/3
Enclosure	TEFC
Motor RPM	1725
Efficiency Rating	Energy Efficient
Windings	1
NEC FLA* (Amps)	16.7

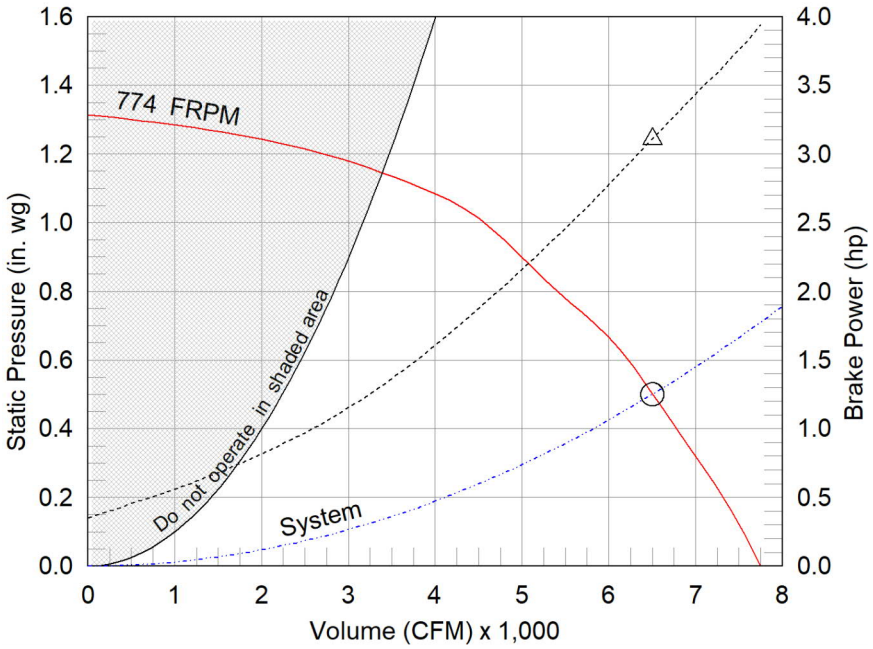

△ Operating Bhp point
○ Operating point at Total External SP
Fan curve
System curve
Brake horsepower curve

Sound Power by Octave Band

Sound Data	62.5	125	250	500	1000	2000	4000	8000	LwA	dBA	Sones
Inlet	85	78	77	82	81	80	78	74	87	75	25

Notes:

All dimensions shown are in units of in.
*NEC FLA - based on tables 430.248 or 430.250 of National Electrical Code 2017. Actual motor FLA may vary, for sizing thermal overload, consult factory.
LwA - A weighted sound power level, based on ANSI S1.4
dBA - A weighted sound pressure level, based on 11.5 dB attenuation per Octave band at 5 ft - dBA levels are not licensed by AMCA International
Sones - calculated using AMCA 301 at 5 ft

Model: RSF-150-50

Filtered Roof Supply Fan

Tag: Generator

Standard Construction Features:

- Removable insulated hood cover - Curb cap with prepunched mounting holes - Blower and motor assembly isolated on shock mounts - Forward curved steel fan wheel - Adjustable motor pulley - Adjustable motor plate - Ball bearing motor - Fan shaft mounted in ball bearing pillow blocks - Static free belts - Corrosion resistant fasteners

Selected Options & Accessories:

Energy Efficient Motor - meets NEMA Table 12-11
Spare Belt(s) - 1 Set (Attached)
Switch, NEMA-4X, Toggle, Shipped with Unit
Junction Box Mounted & Wired
High Wind Rated (+/- 40 PSF Rating)
Damper Shipped Loose, VCD-20-OB-20X20, Not Coated
Damper Actuator (MS4103F1025), 115 VAC Actuated
Galvanized Housing
Standard - 1 in. Washable Aluminum Filters
Unit Warranty: 1 Yr (Standard)

Selected Sub Marks

See individual submittals for full details
GPI-40-G14

AMCA

AMCA Licensed for Air Performance. Power rating (BHP/kW) includes transmission losses.

Greenheck Fan Corporation certifies that the model shown herein is licensed to bear the AMCA Seal. The ratings shown are based on tests and procedures performed in accordance with AMCA Publication 211 and comply with the requirements of the AMCA Certified Ratings Program. The AMCA Certified Ratings Seal applies to air performance ratings only. Performance certified is for installation type B: Free inlet, Ducted outlet. Power rating (BHP/kW) does not include transmission losses. Performance ratings include the effects of 1" aluminum filters.

Model: G-090-VG

Direct Drive Centrifugal Roof Exhaust Fan

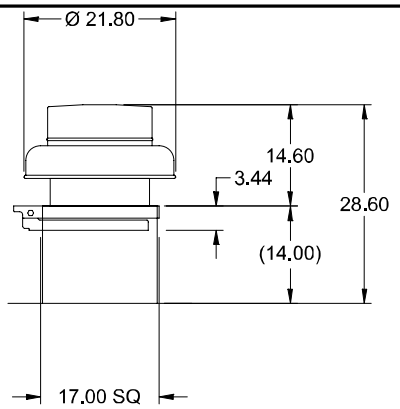

OVERALL HEIGHT MAY BE GREATER DEPENDING ON MOTOR, ADAPTER, AND/OR HINGE BASE.

Dimensional	
Quantity	1
Weight w/o Acc's (lb)	25
Weight w/ Acc's (lb)	59
Weight w/ Acc's and Curb (lb)	83
Standard Curb Cap Size (in.)	17 x 17
Optional Damper (in.)	10 x 10
Roof Opening (in.)	12.5 x 12.5

Performance	
Requested Volume (CFM)	510
Actual Volume (CFM)	500
Total External SP (in. wg)	0.655
Fan RPM	1725
Operating Power (hp)	0.11
Elevation (ft)	30
Airstream Temp.(F)	70
Air Density (lb/ft3)	0.075
Tip Speed (ft/min)	4,911
Static Eff. (%)	49

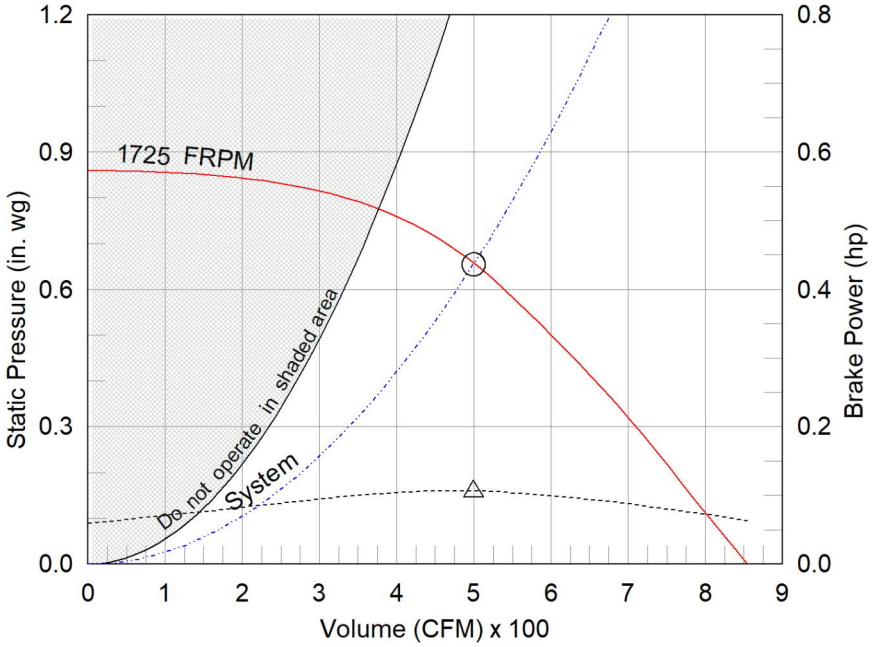

Motor	
Motor Mounted	Yes
Size (hp)	1/6
Voltage/Cycle/Phase	115/60/1
Enclosure	ODP
Motor RPM	1725
Efficiency Rating	High
Windings	1
FLA (Amps)	2.2

△ Operating Bhp point
○ Operating point at Total External SP
Fan curve
System curve
Brake horsepower curve

Static Pressure Calculations

External SP	0.5	in. wg
Direct Drive RPM Adjustment	-0.028	in. wg
Damper	0.183	in. wg
Total External SP	0.655	in. wg

Sound Power by Octave Band

Sound Data	62.5	125	250	500	1000	2000	4000	8000	LwA	dBA	Sones
Inlet	78	76	72	65	61	57	54	47	69	57	8.9

Notes:

All dimensions shown are in units of in.
*NEC FLA - based on tables 430.248 or 430.250 of National Electrical Code 2017. Actual motor FLA may vary, for sizing thermal overload, consult factory.
LwA - A weighted sound power level, based on ANSI S1.4
dBA - A weighted sound pressure level, based on 11.5 dB attenuation per Octave band at 5 ft - dBA levels are not licensed by AMCA International
Sones - calculated using ANSI/AMCA 301 at 5 ft

Model: G-090-VG

Direct Drive Centrifugal Roof Exhaust Fan

Tag: TOILET

Standard Construction Features:

- Aluminum housing - Backward inclined composite (sizes 60-95) or aluminum (sizes 97-300) wheel - Aluminum curb cap with prepunched mounting holes - Birdscreen - Ball bearing motors (sizes 85-300 and all Vari Green), sleeve bearing motors (sizes 60-80) - Motor isolated on shock mounts - Corrosion resistant fasteners

Selected Options & Accessories:

Motor - Vari-Green EC motor
Control - Dial for balancing
Standard Curb Cap Size - 17 in. Square
UL/cUL 705 Listed - "Power Ventilators"
Switch, NEMA-1, Toggle, Shipped with Unit
Junction Box Mounted & Wired
High Wind Rated (+/- 150 PSF Rating)
Florida Product Approval #FL13225.1 & Miami-Dade NOA #19-0717.02
Hinged Bracket Kit (PN 877579) (Shipped Loose)
Foam Curb Seal (Attached)
Damper Shipped Loose, VCD-20-PB-10X10, Coated
Damper Actuator (MS4103F1225), 115 VAC Actuated, End Switch
Coated with Hi-Pro Polyester, Concrete Gray-RAL 7023, Fan And Attached Acc
Birdscreen: Aluminum, nom. 86% Free Area
Composite Wheel Material
Unit Warranty: 1 Yr (Standard)

Selected Sub Marks

See individual submittals for full details
GPF-17-10-G14

AMCA

AMCA Licensed for Sound and Air Performance Without Appurtenances (Accessories). Power rating (BHP/kW) does not include transmission losses.

Greenheck Fan Corporation certifies that the model shown herein is licensed to bear the AMCA Seal. The ratings shown are based on tests and procedures performed in accordance with AMCA Publication 211 and AMCA Publication 311 and comply with the requirements of the AMCA Certified Ratings Program. Performance certified is for installation type A: Free inlet, Free outlet. Power rating (BHP/kW) does not include transmission losses. Performance ratings include the effects of birdscreen. The sound ratings shown are loudness values in fan sones at 5 ft. (1.5 m) in a hemispherical free field calculated per ANSI/AMCA Standard 301. Values shown are for installation type A: free inlet hemispherical sone levels. dBA levels are not licensed by AMCA International. The AMCA Certified Ratings Seal applies to sone ratings only.

The AMCA licensed air and/or sound performance data has been modified for installation, appurtenances or accessories, etc. not included in the certified data. The modified performance is not AMCA licensed but is provided to aid in selection and applications of the product.

COMMERCIAL LOW PROFILE 8

Electric Heated Air Curtain

Data Sheet

BERNER AIR CURTAINS

For Mounting Heights To 8' (environmental separation)

STANDARD CONSTRUCTION

- 8 1/2" high x 13 1/2" deep
- 1/5 hp two speed motor(s)
- Factory installed fan speed/heat switch
- White or black powder coated exterior (Optional: Custom Color or Stainless)
- Wall & Top Mounting
- Open helical element with point suspension
  - Thermal overload protection
  - Galvanized steel frame
- Alternate kW: see sheet EP-102

2 Year Limited Warranty

Made in USA

c UL us

MODEL	Nozzle Width (in)	Max Vel. at Nozzle (fpm)	Avg. Outlet Vel. (fpm)	Air Volume (cfm)	Outlet Vel. Uniformity	Power Rating (kW)	Motor(s) @ hp	Max Electric Capacity (kW)	Heater Output (MBH)	Air Temp. Rise (°F)	Net Wt. (lbs)
CLC08-1030E	27.50	3,071	1,478	670	89%	0.32	1 @ 1/5	7.2	24.6	34°	42
CLC08-1036E	34.62	3,567	1,760	1,005	92%	0.32	1 @ 1/5	10.0	34.1	31°	48
CLC08-1042E	40.62	3,388	1,755	1,176	93%	0.32	1 @ 1/5	10.0	34.1	27°	53
CLC08-1048E	46.62	3,226	1,742	1,340	94%	0.32	1 @ 1/5	14.4	49.1	34°	58
CLC08-1060E	58.13	2,940	1,702	1,632	95%	0.32	1 @ 1/5	14.4	49.1	28°	67
CLC08-1072E	71.37	2,870	1,707	2,010	95%	0.32	1 @ 1/5	20.0	68.3	31°	77
CLC08-2084E	83.50	3,388	1,707	2,351	93%	0.64	2 @ 1/5	20.0	68.3	27°	105
CLC08-2096E	95.50	3,226	1,701	2,679	94%	0.64	2 @ 1/5	28.8	98.3	34°	115
CLC08-2108E	107.00	3,226	1,684	2,971	94%	0.64	2 @ 1/5	28.8	98.3	30°	123
CLC08-2120E	118.50	2,940	1,670	3,263	95%	0.64	2 @ 1/5	28.8	98.3	28°	137

NOTES:
1. Operation at 50 Hz will generate approximately a 17% reduction in performance.
2. Performance data based on unheated units.
3. Consult factory for vertically mounted units.

See sheet EP-102 for amp draws/total load requirements and alternate kW.

MODEL NUMBER CONFIGURATION

CLC08-1 030 E B-072 -R-SS

Series	# of Motors	Opening Width	Heat	Voltage	Standard kW	Opt. Switch	Cabinet Finish / Opt. Cabinet Finish
CLC08	1, 2	030" - 120"	E=Electric Heated	*B=208/1/60 *J=240/1/60 *V=220/1/50 K=120/480 L=120/600 S=208/480 U=240/480 M=208/600 N=240/600 X=208/3/60 Y=240/3/60 Z=480/3/60 Q=600/3/60 O=380/3/50	7.2 - 28.8 (072 - 28.8)	Remote Switch	White *(leave blank)* BK=Black **Opt. Cabinet Finish** SS=Stainless Steel CC=Custom Color

*Max 16kW
See sheet EP-102 for available lengths and voltages

See sheet EP-102 for alternate kW code

for Standard offering, leave options (Opt.) blank make sure to specify Cabinet Finish if other than white

Sound level measured 10' (3m) from the unit in free field:
1 motor: Low/High Speed: 53/54 dBA
2 motors: Low/High Speed: 56/57 dBA

Berner reserves the right to alter specifications without prior notice.

©Copyright, 2020 Berner International

COMMERCIAL LOW PROFILE 8

Electric Heated Air Curtain

Electrical Performance Sheet

			208/1/60 (voltage code B) MOTOR AMP DRAW = 1.7 each		240/1/60 (voltage code J) or 220/1/50 (voltage code V) MOTOR AMP DRAW = 1.7 each		208/3/60 (voltage code X) MOTOR AMP DRAW = 1.7 each		240/3/60 (voltage code Y) MOTOR AMP DRAW = 1.7 each	
MODEL	kW (suffix)	Temp Rise °F	# CKTS	AMPS PER CIRCUIT (including motor)	BREAKER RATING PER CIRCUIT	# CKTS	AMPS PER CIRCUIT (including motor)	BREAKER RATING PER CIRCUIT	# CKTS	AMPS PER CIRCUIT (including motor)	BREAKER RATING PER CIRCUIT	# CKTS	AMPS PER CIRCUIT (including motor)	BREAKER RATING PER CIRCUIT
CLC08-1030E	7.2 (072)	34	1	36.3	50	1	31.7	40	-	N/A	N/A	-	N/A	N/A
	5.4 (054)	25	1	27.7	35	1	24.2	35	-	N/A	N/A	-	N/A	N/A
	4 (040)	19	1	20.9	30	1	18.4	25	-	N/A	N/A	-	N/A	N/A
	3 (030)	14	1	16.1	25	1	12.5	20	-	N/A	N/A	-	N/A	N/A
CLC08-1036E CLC08-1042E	10 (100)	31	1	49.8	60	1	43.4	60	1	29.5	40	1	25.8	35
	7.5 (075)	23	1	37.8	50	1	33.0	45	1	22.5	30	1	19.7	25
	5.6 (056)	18	1	28.6	40	1	25.0	35	1	17.2	25	1	15.2	20
	4 (040)	13	1	20.9	30	-	N/A	N/A	1	12.8	20	-	N/A	N/A
CLC08-1048E CLC08-1060E	14.4 (144)	34	2	36.3/34.6	50/45	2	31.7/30.0	40/40	1	41.7	60	1	36.3	50
	10.8 (108)	25	2	27.7/26.0	35/35	1	46.7	60	1	31.7	40	1	27.7	35
	8.1 (081)	19	1	40.6	60	1	35.5	45	1	24.2	35	1	21.2	30
	5.6 (056)	13	1	28.6	40	-	N/A	N/A	1	17.2	25	-	N/A	N/A
CLC08-1072E	20 (200)	31	-	N/A	N/A	2	43.4/41.7	60/60	2	29.5/27.8	40/35	2	25.8/24.1	35/35
	15 (150)	23	2	37.8/36.1	50/50	2	33.0/31.3	45/40	1	43.3	60	1	37.8	50
	11.2 (112)	18	2	28.6/26.9	40/35	1	48.4	60	1	32.8	45	1	28.6	40
	8 (080)	13	1	40.2	60	-	N/A	N/A	1	23.9	30	-	N/A	N/A
CLC08-2084E	20 (200)	27	-	N/A	N/A	-	N/A	N/A	2	31.2/27.8	40/35	2	27.5/24.1	35/35
	15 (150)	20	2	39.5/36.1	50/50	2	34.7/31.3	45/40	1	45.0	60	1	39.5	50
	11.2 (112)	15	2	30.3/26.9	40/35	1	50.1	60	1	34.5	45	1	30.3	40
	8 (080)	11	1	41.9	60	-	N/A	N/A	1	25.6	35	-	N/A	N/A
CLC08-2096E CLC08-2108E CLC08-2120E	28.8 (288)	34	-	N/A	N/A	-	N/A	N/A	2	43.4/40.0	60/50	2	38.0/34.6	50/45
	21.6 (216)	25	-	N/A	N/A	-	N/A	N/A	2	33.4/30.0	45/40	2	29.4/26.0	40/35
	16.2 (162)	19	2	42.3/38.9	60/50	2	37.2/33.8	50/45	1	48.4	60	1	42.4	60
	11.2 (112)	13	2	30.3/26.9	40/35	-	N/A	N/A	1	34.5	45	-	N/A	N/A

Berner reserves the right to alter specifications without prior notice.

www.berner.com Berner International 800.245.4455
111 Progress Ave. / New Castle / PA / 16101 / USA

EP-102
January, 2017

©Copyright, 2017 Berner International

COMMERCIAL LOW PROFILE 8

Electric Heated Air Curtain
Electrical Performance Sheet

MODEL	kW (suffix)	Temp Rise °F	120/1/60 - 480/3/60 (voltage code K) 120V MOTOR AMP DRAW = 3.4 each					208/1/60 - 480/3/60 (voltage code S) 208V MOTOR AMP DRAW = 1.7 each					240/1/60 - 480/3/60 (voltage code U) 240V MOTOR AMP DRAW = 1.7 each					480/3/60 (voltage code Z) MOTOR AMP DRAW = 0.9 each	
			# CKTS	AMPS PER CIRCUIT		BREAKER RATING PER CIRCUIT		# CKTS	AMPS PER CIRCUIT		BREAKER RATING PER CIRCUIT		# CKTS	AMPS PER CIRCUIT		BREAKER RATING PER CIRCUIT		# CKTS	AMPS PER CIRCUIT (including motor)	BREAKER RATING PER CIRCUIT
				120V/1	480V/3	120V/1	480V/3		208V/1	480V/3	208V/1	480V/3		240V/1	480V/3	240V/1	480V/3			
CLC08-1030E	N/A	N/A	-	N/A	N/A	N/A	N/A	-	N/A	N/A	N/A	N/A	-	N/A	N/A	N/A	N/A	-	N/A	N/A
	N/A	N/A	-	N/A	N/A	N/A	N/A	-	N/A	N/A	N/A	N/A	-	N/A	N/A	N/A	N/A	-	N/A	N/A
	N/A	N/A	-	N/A	N/A	N/A	N/A	-	N/A	N/A	N/A	N/A	-	N/A	N/A	N/A	N/A	-	N/A	N/A
	N/A	N/A	-	N/A	N/A	N/A	N/A	-	N/A	N/A	N/A	N/A	-	N/A	N/A	N/A	N/A	-	N/A	N/A
CLC08-1036E CLC08-1042E	10 (100)	31	2	3.4	12.0	15	15	2	1.7	12.0	15	15	2	1.7	12.0	15	15	1	12.9	20
	7.5 (075)	23	2	3.4	9.0	15	15	2	1.7	9.0	15	15	2	1.7	9.0	15	15	1	9.9	15
	5.6 (056)	18	-	N/A	N/A	N/A	N/A	-	N/A	N/A	N/A	N/A	-	N/A	N/A	N/A	N/A	-	N/A	N/A
	4 (040)	13	-	N/A	N/A	N/A	N/A	-	N/A	N/A	N/A	N/A	-	N/A	N/A	N/A	N/A	-	N/A	N/A
CLC08-1048E CLC08-1060E	14.4 (144)	34	2	3.4	17.3	15	25	2	1.7	17.3	15	25	2	1.7	17.3	15	25	1	18.2	25
	10.8 (108)	25	2	3.4	13.0	15	20	2	1.7	13.0	15	20	2	1.7	13.0	15	20	1	13.9	20
	8.1 (081)	19	-	N/A	N/A	N/A	N/A	-	N/A	N/A	N/A	N/A	-	N/A	N/A	N/A	N/A	-	N/A	N/A
	5.6 (056)	13	-	N/A	N/A	N/A	N/A	-	N/A	N/A	N/A	N/A	-	N/A	N/A	N/A	N/A	-	N/A	N/A
CLC08-1072E	20 (200)	31	2	3.4	24.1	15	35	2	1.7	24.1	15	35	2	1.7	24.1	15	35	1	25.0	35
	15 (150)	23	2	3.4	18.0	15	25	2	1.7	18.0	15	25	2	1.7	18.0	15	25	1	18.9	25
	11.2 (112)	18	-	N/A	N/A	N/A	N/A	-	N/A	N/A	N/A	N/A	-	N/A	N/A	N/A	N/A	-	N/A	N/A
	8 (080)	13	-	N/A	N/A	N/A	N/A	-	N/A	N/A	N/A	N/A	-	N/A	N/A	N/A	N/A	-	N/A	N/A
CLC08-2084E	20 (200)	27	2	6.8	24.1	15	35	2	3.4	24.1	15	35	2	3.4	24.1	15	35	1	25.9	35
	15 (150)	20	2	6.8	18.0	15	25	2	3.4	18.0	15	25	2	3.4	18.0	15	25	1	19.8	25
	11.2 (112)	15	-	N/A	N/A	N/A	N/A	-	N/A	N/A	N/A	N/A	-	N/A	N/A	N/A	N/A	-	N/A	N/A
	8 (080)	11	-	N/A	N/A	N/A	N/A	-	N/A	N/A	N/A	N/A	-	N/A	N/A	N/A	N/A	-	N/A	N/A
CLC08-2096E CLC08-2108E CLC08-2120E	28.8 (288)	34	2	6.8	34.6	15	45	2	3.4	34.6	15	45	2	3.4	34.6	15	45	1	36.4	50
	21.6 (216)	25	2	6.8	26.0	15	35	2	3.4	26.0	15	35	2	3.4	26.0	15	35	1	27.8	35
	16.2 (162)	19	-	N/A	N/A	N/A	N/A	-	N/A	N/A	N/A	N/A	-	N/A	N/A	N/A	N/A	-	N/A	N/A
	11.2 (112)	13	-	N/A	N/A	N/A	N/A	-	N/A	N/A	N/A	N/A	-	N/A	N/A	N/A	N/A	-	N/A	N/A

Berner reserves the right to alter specifications without prior notice.

www.berner.com **Berner International** **800.245.4455**
111 Progress Ave. / New Castle / PA / 16101 / USA

EP-102
January, 2017

©Copyright, 2017 Berner International

MODEL	kW (suffix)	Temp Rise °F	120/1/60 - 600/3/60 (voltage code L) 120V MOTOR AMP DRAW = 3.4 each					208/1/60 - 600/3/60 (voltage code M) 208V MOTOR AMP DRAW = 1.7 each					240/1/60 - 600/3/60 (voltage code N) 240V MOTOR AMP DRAW = 1.7 each					600/3/60 (voltage code Q) MOTOR AMP DRAW = 0.6 each	
			# CKTS	AMPS PER CIRCUIT		BREAKER RATING PER CIRCUIT		# CKTS	AMPS PER CIRCUIT		BREAKER RATING PER CIRCUIT		# CKTS	AMPS PER CIRCUIT		BREAKER RATING PER CIRCUIT		# CKTS	AMPS PER CIRCUIT (including motor)	BREAKER RATING PER CIRCUIT
				120V/1	600V/3	120V/1	600V/3		208V/1	600V/3	208V/1	600V/3		240V/1	600V/3	240V/1	600V/3			
CLC08-1030E	N/A	N/A	-	N/A	N/A	N/A	N/A	-	N/A	N/A	N/A	N/A	-	N/A	N/A	N/A	N/A	-	N/A	N/A
	N/A	N/A	-	N/A	N/A	N/A	N/A	-	N/A	N/A	N/A	N/A	-	N/A	N/A	N/A	N/A	-	N/A	N/A
	N/A	N/A	-	N/A	N/A	N/A	N/A	-	N/A	N/A	N/A	N/A	-	N/A	N/A	N/A	N/A	-	N/A	N/A
	N/A	N/A	-	N/A	N/A	N/A	N/A	-	N/A	N/A	N/A	N/A	-	N/A	N/A	N/A	N/A	-	N/A	N/A
CLC08-1036E CLC08-1042E	10 (100)	31	2	3.4	9.6	15	15	2	1.7	9.6	15	15	2	1.7	9.6	15	15	1	10.6	15
	7.5 (075)	23	-	N/A	N/A	N/A	N/A	-	N/A	N/A	N/A	N/A	-	N/A	N/A	N/A	N/A	-	N/A	N/A
	5.6 (056)	18	-	N/A	N/A	N/A	N/A	-	N/A	N/A	N/A	N/A	-	N/A	N/A	N/A	N/A	-	N/A	N/A
	4 (040)	13	-	N/A	N/A	N/A	N/A	-	N/A	N/A	N/A	N/A	-	N/A	N/A	N/A	N/A	-	N/A	N/A
CLC08-1048E CLC08-1060E	14.4 (144)	34	2	3.4	13.9	15	20	2	1.7	13.9	15	20	2	1.7	13.9	15	20	1	15.1	20
	10.8 (108)	25	-	N/A	N/A	N/A	N/A	-	N/A	N/A	N/A	N/A	-	N/A	N/A	N/A	N/A	-	N/A	N/A
	8.1 (081)	19	-	N/A	N/A	N/A	N/A	-	N/A	N/A	N/A	N/A	-	N/A	N/A	N/A	N/A	-	N/A	N/A
	5.6 (056)	13	-	N/A	N/A	N/A	N/A	-	N/A	N/A	N/A	N/A	-	N/A	N/A	N/A	N/A	-	N/A	N/A
CLC08-1072E	20 (200)	31	2	3.4	19.2	15	25	2	1.7	19.2	15	25	2	1.7	19.2	15	25	1	20.7	30
	15 (150)	23	-	N/A	N/A	N/A	N/A	-	N/A	N/A	N/A	N/A	-	N/A	N/A	N/A	N/A	-	N/A	N/A
	11.2 (112)	18	-	N/A	N/A	N/A	N/A	-	N/A	N/A	N/A	N/A	-	N/A	N/A	N/A	N/A	-	N/A	N/A
	8 (080)	13	-	N/A	N/A	N/A	N/A	-	N/A	N/A	N/A	N/A	-	N/A	N/A	N/A	N/A	-	N/A	N/A
CLC08-2084E	20 (200)	27	2	6.8	19.2	15	25	2	3.4	19.2	15	25	2	3.4	19.2	15	25	1	21.3	30
	15 (150)	20	-	N/A	N/A	N/A	N/A	-	N/A	N/A	N/A	N/A	-	N/A	N/A	N/A	N/A	-	N/A	N/A
	11.2 (112)	15	-	N/A	N/A	N/A	N/A	-	N/A	N/A	N/A	N/A	-	N/A	N/A	N/A	N/A	-	N/A	N/A
	8 (080)	11	-	N/A	N/A	N/A	N/A	-	N/A	N/A	N/A	N/A	-	N/A	N/A	N/A	N/A	-	N/A	N/A
CLC08-2096E CLC08-2108E CLC08-2120E	28.8 (288)	34	2	6.8	27.7	15	35	2	3.4	27.7	15	35	2	3.4	27.7	15	35	1	30.1	40
	21.6 (216)	25	-	N/A	N/A	N/A	N/A	-	N/A	N/A	N/A	N/A	-	N/A	N/A	N/A	N/A	-	N/A	N/A
	16.2 (162)	19	-	N/A	N/A	N/A	N/A	-	N/A	N/A	N/A	N/A	-	N/A	N/A	N/A	N/A	-	N/A	N/A
	11.2 (112)	13	-	N/A	N/A	N/A	N/A	-	N/A	N/A	N/A	N/A	-	N/A	N/A	N/A	N/A	-	N/A	N/A

Berner reserves the right to alter specifications without prior notice.

www.berner.com Berner International 800.245.4455
111 Progress Ave. / New Castle / PA / 16101 / USA

EP-102
January, 2017

©Copyright, 2017 Berner International

				380/3/50 (voltage code O) MOTOR AMP DRAW = 1.7 each	
MODEL	kW (suffix)	Temp Rise °F	# CKTS	AMPS PER CIRCUIT (including motor)	BREAKER RATING PER CIRCUIT
CLC08-1030E	N/A	N/A	-	N/A	N/A
	N/A	N/A	-	N/A	N/A
	N/A	N/A	-	N/A	N/A
	N/A	N/A	-	N/A	N/A
CLC08-1036E CLC08-1042E	10 (100)	31	1	16.9	25
	7.5 (075)	23	1	13.1	20
	5.6 (056)	18	1	10.2	15
	4 (040)	13	-	N/A	N/A
CLC08-1048E CLC08-1060E	14.4 (144)	34	1	23.6	30
	10.8 (108)	25	1	18.1	25
	8.1 (081)	19	1	14.0	20
	5.6 (056)	13	-	N/A	N/A
CLC08-1072E	20 (200)	31	1	32.1	45
	15 (150)	23	1	24.5	35
	11.2 (112)	18	1	18.7	25
	8 (080)	13	-	N/A	N/A
CLC08-2084E	20 (200)	27	1	33.8	45
	15 (150)	20	1	26.2	35
	11.2 (112)	15	1	20.4	30
	8 (080)	11	-	N/A	N/A
CLC08-2096E CLC08-2108E CLC08-2120E	28.8 (288)	34	1	47.2	60
	21.6 (216)	25	1	36.2	45
	16.2 (162)	19	1	28.0	35
	11.2 (112)	13	-	N/A	N/A

Berner reserves the right to alter specifications without prior notice.

www.berner.com Berner International 800.245.4455
111 Progress Ave. / New Castle / PA / 16101 / USA

EP-102
January, 2017

©Copyright, 2017 Berner International

CLC08
ELECTRIC HEATED

TOP VIEW

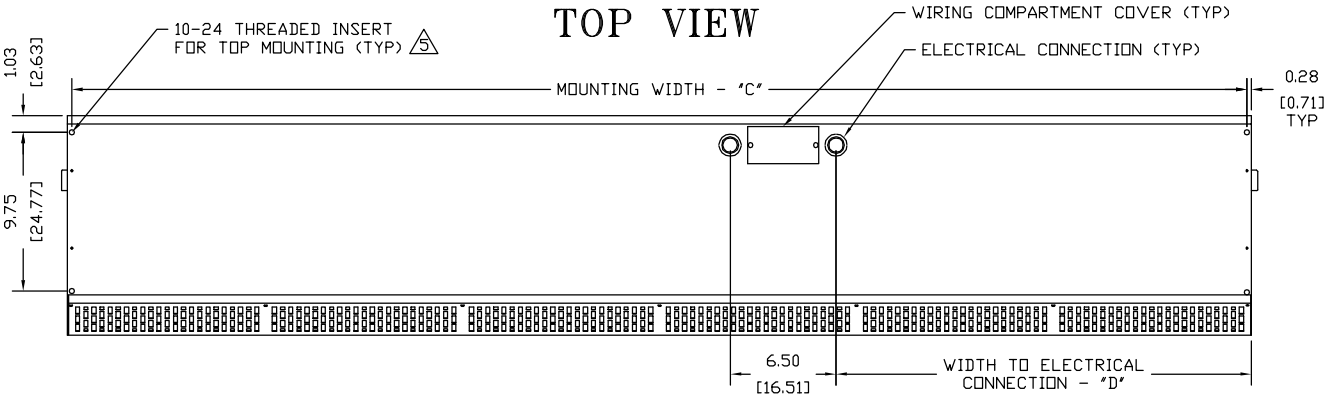

FRONT VIEW

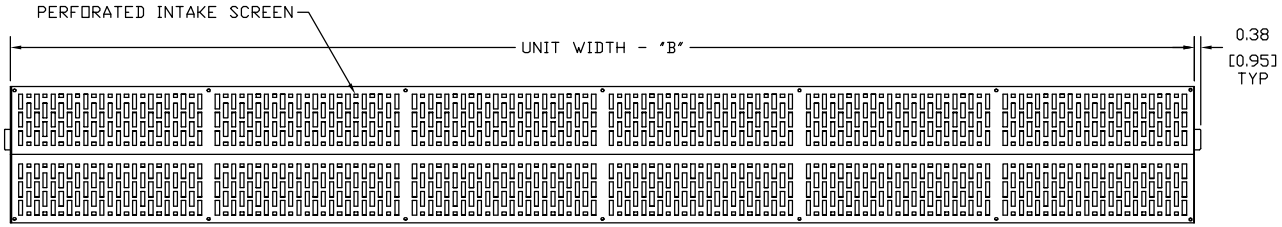

END VIEW

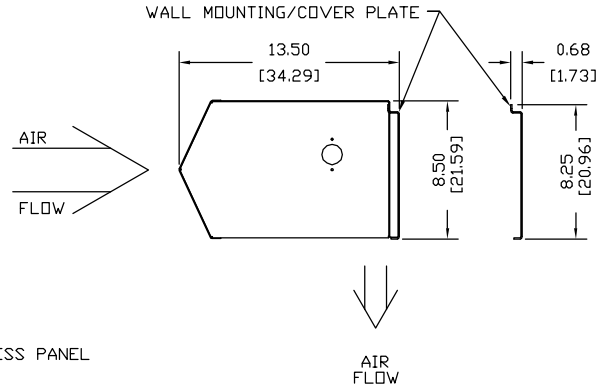

BOTTOM VIEW

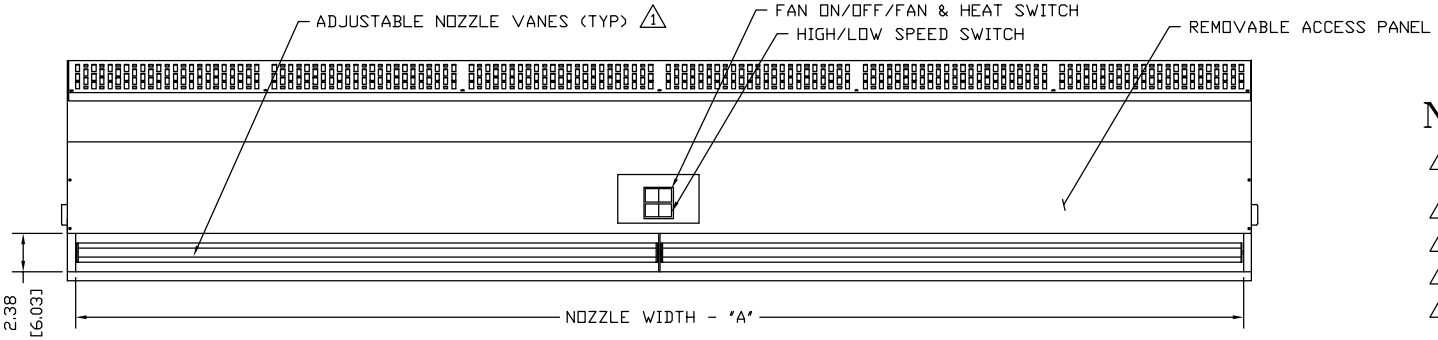

MODEL 6	NOZZLE WIDTH "A"	UNIT WIDTH "B"	MOUNTING WIDTH "C"	ELECTRIC WIDTH "D"
CLC08-1030E	27.44 [69.69]	28.88 [73.35]	28.32 [71.93]	13.13 [33.34]
CLC08-1036E	34.62 [87.95]	36.06 [91.60]	35.50 [90.17]	7.13 [18.10]
CLC08-1042E	40.62 [103.17]	42.06 [106.83]	41.50 [105.41]	13.13 [33.34]
CLC08-1048E	46.62 [118.41]	48.06 [122.07]	47.50 [120.65]	13.13 [33.34]
CLC08-1060E	58.13 [147.65]	59.55 [151.26]	59.00 [149.86]	18.88 [47.94]
CLC08-1072E	71.37 [181.28]	72.81 [184.94]	72.25 [183.52]	25.50 [64.80]
CLC08-2084E	83.50 [212.09]	84.94 [215.74]	84.38 [214.31]	13.13 [33.34]
CLC08-2096E	95.50 [242.57]	96.94 [246.23]	96.38 [244.79]	13.13 [33.34]
CLC08-2108E	107.00 [271.78]	108.44 [275.44]	107.88 [274.00]	18.88 [47.94]
CLC08-2120E	118.50 [300.99]	119.94 [304.65]	119.38 [303.21]	18.88 [47.94]

NOTES:

1. AIR CURTAIN MUST BE INSTALLED SO AIR STREAM IS NOT OBSTRUCTED WHEN DEFLECTED 20° TO EITHER SIDE OF C.
2. ELECTRICAL CONNECTIONS TO BE FLEXIBLE.
3. FIELD VERIFY DIMENSIONS.
4. ANCHORS TO SUPPORTING STRUCTURE BY OTHERS.
5. ADEQUACY OF SUPPORTING STRUCTURE IS TO BE VERIFIED BY A PROFESSIONAL STRUCTURAL ENGINEER.
6. LETTER "E" IN MODEL NUMBER DESIGNATES ELECTRIC HEATED UNIT.
7. DIMENSIONS IN INCHES [CENTIMETERS].

PROJECT		
LOCATION		
ARCHITECT		
ENGINEER		
DWG. NO.	CLC08-ELE	TITLE: BERNER MODEL CLC08 AIR CURTAIN ELECTRIC HEATED SYSTEM
DATE	28MAR2016	
BY	S. Beil	
REPLACES	14OCT14	BERNER INTERNATIONAL CORP. NEW CASTLE,PA.
BY	S. Beil	

Closed Circuit Cooler Technical Data Sheet

Paul Daley
336 Raritan Center Parkway

8488033804
pauld@etshvac.com

(1) ATWB 9-5H8-Z

Project Details

Project Name : USARC rehabilitation Bldg.
Location: TBD UNK

Date: 3/24/2021
Customer:
Contact:
Contact Email:

Product Description

The ATWB is a prime-surface steel **coil only** closed circuit cooler, featuring **CrossCool™ Internal Tube Enhancement**, designed around EVAPCO's induced draft Advanced Technology (AT) tower. The ATWB line offers the most box size configurations in the industry while also providing **nominal dry cooling capacity at reduced loads**. This is not true for most evaporative closed circuit coolers in the industry! The ATWB is a maintenance friendly product, designed for all routine maintenance to be performed from outside the unit.

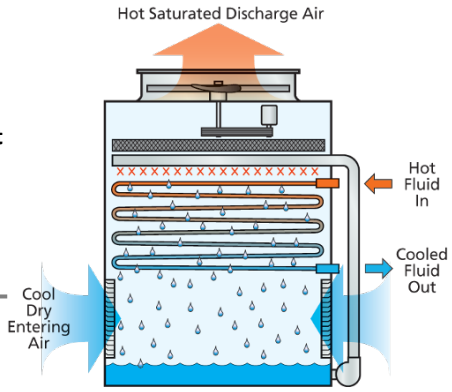

Selection Criteria

	Total	Each Unit
Flow:	250.0 GPM 35%	250.0 GPM 35%
Fluid:	Propylene Glycol	Propylene Glycol
Entering Fluid Temp:	91.6 F	91.6 F
Leaving Fluid Temp:	85.0 F	85.0 F
Entering Wet Bulb:	78.0 F	78.0 F

Required Capacity

774.62 MBH
51.64 Tons

Entering Dry Bulb Switchover: 80 F

Unit Selected

One(1) EVAPCO ATWB 9-5H8-Z at 100% capacity (774.62 MBH)

Product line is CTI/ECC certified for water, propylene glycol or ethylene glycol as process fluid. Selection is rated in accordance with CTI Standard 201 RS.

Physical Data Per Unit

Overall Dimensions (WxLxH):	7'-5 7/8" x 8'-5 1/2" x 13'-2 1/8"
Operating Weight:	13,820 lbs
Shipping Weight:	9,670 lbs
Heaviest Section:	7,520 lbs

*weights and dimensions could vary depending on options selected

IBC Design Capability

IBC Standard Structural Design
1.0 Importance Factor Specified

Seismic(Sds):	up to 1.6 g, z/h = 0
Wind Load(P):	up to 288 psf

Fan Motor Data per Unit

Number of Fans:	1
# of Fan Motors:	1
Nameplate Power (208/3/60):	7.50 HP Per Motor
Typical Nameplate FLA:	21.1 Amps Per Motor

*Nameplate FLA could vary

Pump Motor Data per Unit

No.of Pumps:	1
Nameplate Power (208/3/60):	2 HP per pump motor
Typical Nameplate FLA:	5.94 Amps Per Motor

*Nameplate FLA could vary

Additional Details Per Unit

Air Flow:	31,470 CFM
Coil Volume:	231.3 gal per unit
Coil Design Pressure:	250 psi
Riser Pipe Diameter:	4"

Hydraulic Data

Spray Water Flow:	340 GPM
Pressure Drop Through Coil:	10.9 psi
Evaporated Water Rate:	1.24 GPM

Accessories

(1) ASHRAE 90.1-2019 Energy Compliant
(1) 304 Welded Stainless Steel Cold Water Basin
(1) 5-Probe Electronic Water Level Control Package
(1) Safety Cage
(1) FMF Smart Shield
(1) Fan Motor: Space Heaters
(1) IBC Standard Structural Design
(1) CrossCool Coil
(1) Vibration Switch
(1) El. Heaters (0F / -18C ambient) (1) 6 kW; 208/3/60
(1) Pass Protect
(1) Insulation on Coil Casing, Fan Section, and Hood
(1) 1.0 Importance Factor Specified
(1) Flanged Coil Connections
(1) External Service Platform with Ladder
(1) Straight Sided Discharge Hood with Dampers
(1) Fan Motor: Inverter Capable, Premium Efficient
(1) Series Flow Operation

Water Treatment

(1) Smart Shield Package: FMF-6-4 BCF-10
(1) Smart Shield Startup and Service
Design Conditions: 12 Months @ 4.5 COC
(1) Ethernet

Solid Chemistry: 2 boxes ET; 1 boxes biocide
Initial Loading: IIL=1; IOL=1

Technical Data Sheet

Benchmark 750-6000 with Edge Controller

High Efficiency Boilers

The AERCO Benchmark® (BMK) Water Boiler is designed for condensing application in any closed loop hydronic system. It delivers unmatched burner modulation to match energy input directly to fluctuating system. No other product packs as much capacity into such a small footprint that fits through a standard door and can be transported in a freight elevator.

Energy Efficient

To minimize emissions, the BMK Series is fitted with a low NOx burner whose emissions will meet the most stringent NOx and CO requirements. The fully modulating burner also maintains AERCO standards for energy efficiency, longevity, reliability and construction quality.

The BMK Series comes standard with AERCO's Patent Pending, Oxygen Level (O2) monitoring system. This monitoring system, designed to display the O2 level directly on the unit in real time, can also be remotely monitored via Modbus giving the customer the ability to measure the emissions level and fuel economy of the boiler without traditional combustion calibration devices.

Application and Plant Design

The BMK boilers can be used as an individual unit or in modular arrangements and offers selectable modes of operation. In addition to controlling the boiler according to a constant set point, indoor/outdoor reset schedule or 4-20mA signal, one or more units can be integrated via Modbus communications protocol. For boiler plants ranging from 2-16 boilers, the AERCO Edge® built-in Boiler Sequencing Technology (BST)* can be utilized. The Benchmark can be easily integrated with a facility-wide Energy Management or Building Automation System.

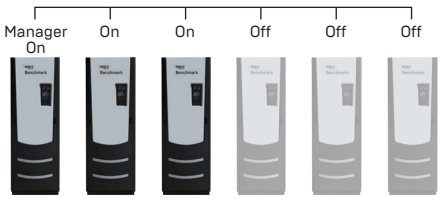

*See BST System technical data sheet for additional system details and capabilities

Features

- Natural gas, propane, or dual fuel
- 20:1 turndown ratio (5%) depending on capacity
- Integrated O2 monitoring and alert for critical conditions
- 439 stainless steel fire tube heat exchanger
- Capable of variable primary flow Installations
- NOx emissions capable of 9PPM or less @ all firing rates *depending on capacity
- Compact footprint, light weight, freight elevator friendly
- Ducted combustion air capable
- Easy open access for service
- Acceptable vent materials AL29-4C, Polypropylene, PVC, cPVC (model dependent)
- Reliable quiet operation
- Optional gas train with VPS (Value Proving System) for BMK Platinum 4000/5000/6000

<u>Edge [i]</u>

- Precise temperature vontrol
- On-board Boiler Sequencing Technology (BST)
- Controls options: constant setpoint, indoor/outdoor reset, remote setpoint, 4-20mA signal or ModBus

Specifications

	BMK									
	750	1000	1500	2000	2500	3000	4000	5000N	5000[4]	6000[4]
Boiler Category	ASME Sect.IV									
Gas Connections (NPT)	1”		2”				3”		2 / 3”	
Max. Gas Pressure	14”								2psi/10”[4]	
Min. Gas Pressure [1]	4”								14 / 4”[4]	
Max. Allowed Working Pressure	160 PSIG								80PSIG/150 PSIG Optional	
Electrical Req. 120V/1PH/60Hz [2]	13 FLA		16 FLA		N/A					
Electrical Req. 208V/3PH/60Hz [2]	N/A				10 FLA		23 FLA		19 FLA	
Electrical Req. 460V/3PH/60Hz [2]	N/A				5 FLA		12 FLA		9 FLA	
Electrical Req. 575V/3PH/60Hz [2]	N/A				N/A		N/A		7 FLA	
Water Connect. (Flanged)	3”		4”				6”		6”	
Min. Water Flow (GPM)	12		25				35		75	
Max. Water Flow (GPM)	175		250	350			500		600	
Water Volume Gallons	16.25	14.25	44	40	58	55	75		110	
Water Pressure Drop	3.0 PSIG @100 GPM		3.0 PSIG @170 GPM		3.0 PSIG @218 GPM	3.0 PSIG @261 GPM	5.0 PSIG @475 GPM		4.0 PSIG @500 GPM	
Turndown Ratio	15:1 (7%)	20:1 (5%)		20:1 (5%)	15:1 (7%)	15:1 (7%)	15:1 (7%)	20:1 (7%)	12:1 (8%)	15:1 (7%)
Vent/Air Intake Connections	6 Inch			8 Inch			12 Inch Vent/10 Inch Air Intake		14 Inch Optional/ 12 Inch Flue Venting	
Vent Materials	AL29-4C Polypro, CPVC, PVC		AL29-4C Polypro							
Type of Gas	Natural Gas, Propane, Dual Fuel									
NOx Emissions <9ppm Capability[4]	✓		✓		<13 ppm		✓		✓	
Temp. Control Range	50°F to 190°F									
Ambient Temp. Range	0°F to 130°F									
Standard Listings & Approvals	UL, CUL, CSD-1, ASME									
Gas Train Operations	FM Compliant or Factory Installed DBB (IRI)						FM Compliant or Factory Installed DBB (IRI), VPS (Value Proving System)		FM Compliant, VPS (Value Proving System)	
Sound Rating dbA	65	65	70	70	72	72	75		79	
Weight (dry) lbs.	669	700	1406	1500	2,000	2,170	2200		3,000	
Shipping Weight lbs.	862	900	1606	1700	2,200	2,300	2350		3,800	

1. Values are for natural gas FM compliant gas trains only. See Benchmark Gas Components & Supply Design Guide GF-2030 for propane, DBB & dual fuel gas train minimum gas pressure requirements.
2. See Benchmark Electrical Power Guide GF-2060 for Service Disconnect Switch amperage requirements.
3. BMK5000/6000 operating at standard gas pressure (>14” W.C.) can achieve 9 ppm NOx.
4. BMK5000/6000 low gas pressure option is available as a different style number. It operates between 4” and 10” of gas pressure.

Ratings

BMK	Min Input MBH	Max Input MBH	Max Output[1] MBH	Efficiency Range	Thermal Efficiency 80° to 180°F
750	50	750	653-720	87%-98%	95.6%
1000	50	1000	870-960	87%-98%	96.8%
1500	75	1500	1305-1440	87%-98%	94.6%
2000	100	2000	1740-1920	87%-98%	94.6%
2500	167	2500	2175-2400	87%-98%	93.5%
3000	200	3000	2610-2880	87%-98%	94.6%
4000	267	4000	3480-3840	87%-98%	94.1%
5000N	250	4990	4341-4790	87%-98%	93.8%
5000	400	5000	4350-4800	87%-98%	94.8%
6000	400	6000	5220-5760	87%-98%	94.5%

[1]Max output dependent upon application – see efficiency curves

Dimensions

750-4000

Dim: Inches

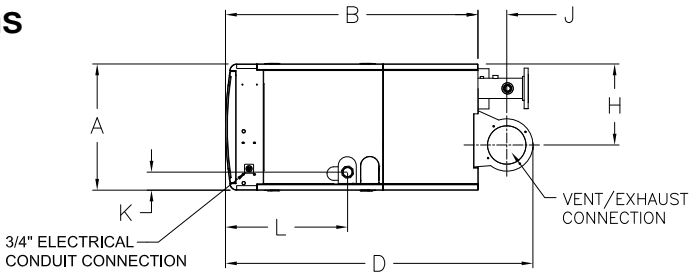

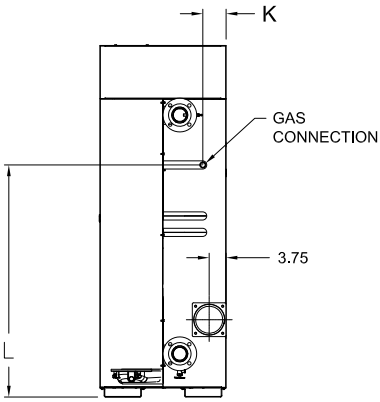

BMK750-1000

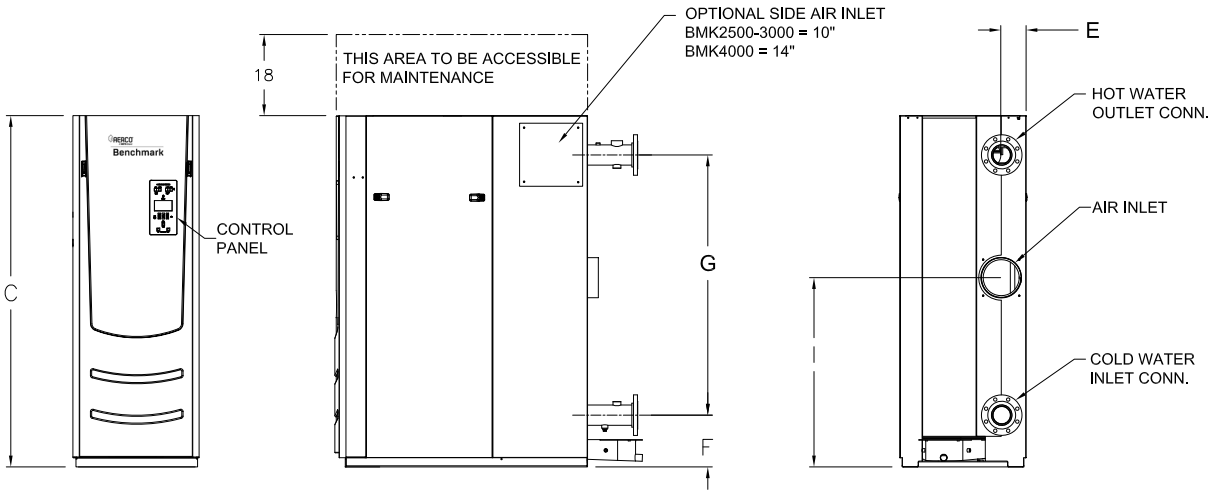

BMK Models	(Width) A	(Depth) B	(Height) C	D	E	F	G	H	I	J	K	L
750	28”	24.5”	78”	34”	10.2”	9.6”	53”	21”	17.1”	4.5’	5.1”	51.5”
1000	28”	25”	78”	34”	10.2”	9.6”	53”	21”	17.1”	4.5”	5.1”	51.5”
1500	28”	43.6”	78”	58.4”	6.6”	11.5”	57.8”	18”	42”	8.9”	4.4”	19.1”
2000	28”	43.6”	78”	58.4”	7”	11.5”	57.8”	18”	42”	8.9”	4.4”	19.1”
2500	28”	56”	78”	68.4”	5.6”	11.5”	57.8”	18”	42”	6.4”	4.4”’	27.1”
3000	28”	56”	78”	68.4”	5.6”	11.5”	57.8”	18”	42”	6.4”	4.4”’	27.1”’
4000	34”	63.5”	78.2”	80.6”	6”	12.4”	56”	21.4”	44.4”	9”	5.5”	28.7”
5000N	34”	63.5”	78.2”	80.6”	6”	12.4”	56”	21.4”	44.4”	9”	5.5”	28.7”

Dimensions

5000/6000

Dim: Inches

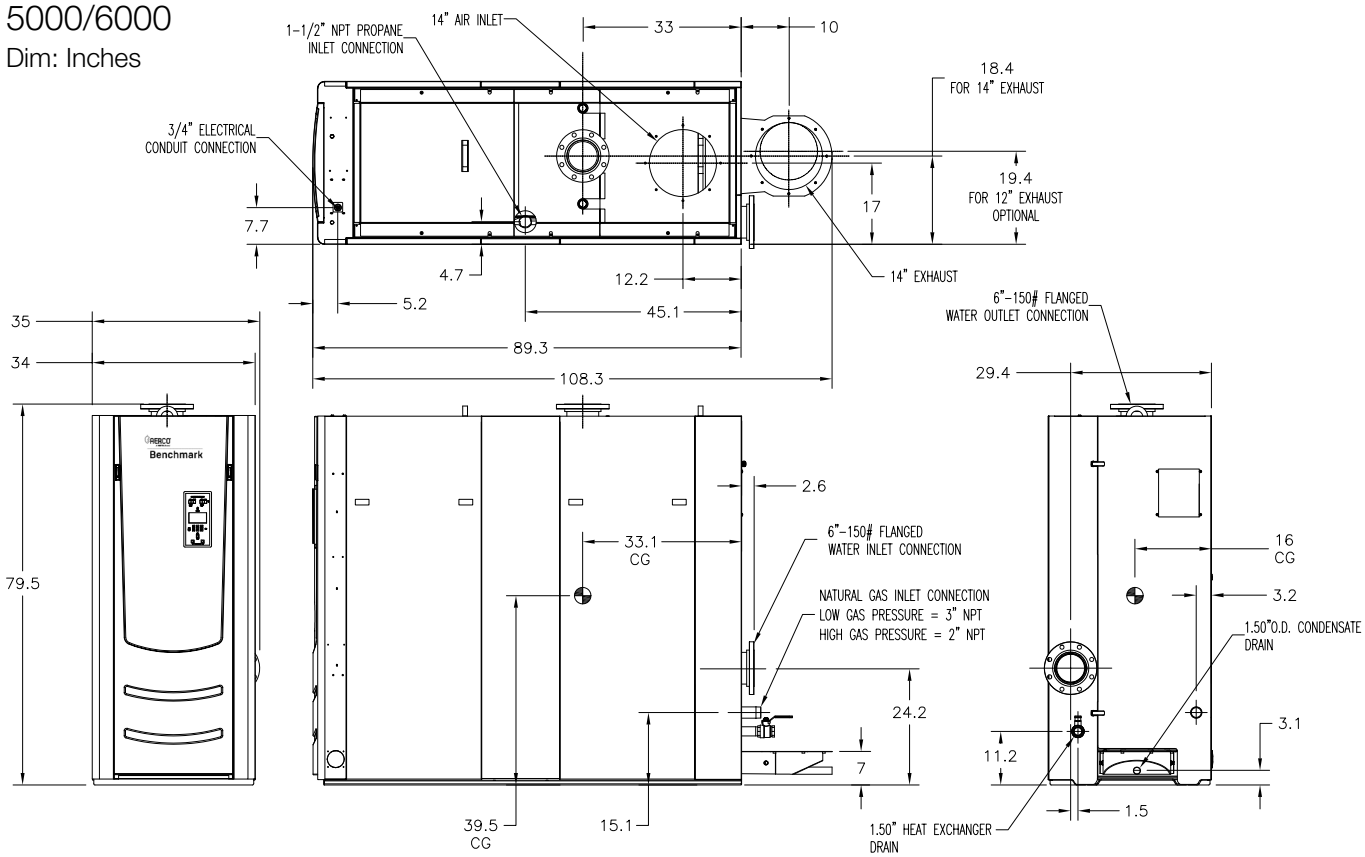

BMK Models	(Width) A	(Depth) B	(Height) C
5000	35”	89.3”	79.8”
6000	35”	89.3”	79.8”

AERCO®
A WATTS Brand

Heating and Hot Water Solutions

AERCO International, Inc. • 100 Oritani Drive • Blauvelt, NY 10913
USA: T: (845) 580-8000 • Toll Free: (800) 526-0288 • AERCO.com

© 2020 AERCO

July 29, 2021

Bell & Gossett
a xylem brand

Submittal

Job/Project:		Representative:	
ESP-Systemwize: WIZE-53D4B4	Created On: 03/25/2021	Phone:	
Location/Tag:		Email:	
Engineer:		Submitted By:	Date:
Contractor:		Approved By:	Date:

Base Mounted End Suction Pump

Series: e-1510

Model: 2EB

Features & Design

- ANSI/OSHA Coupling Guard
- Center Drop Out Spacer Coupling
- Fabricated Heavy Duty Baseplate
- Internally Self-Flushing Mechanical Seal

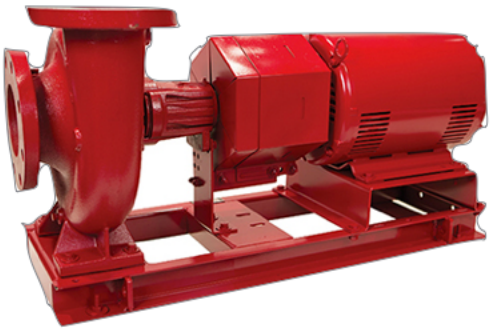

*The Bell & Gossett Series e-1510 is available in 26 sizes and a variety of configuration options that enable customization and flexibility to fit a broad range of operating conditions.

http://bellgossett.com/pumps-circulators/end-suction-pumps/e-1510/

Pump Selection Summary

Duty Point Flow	250 US gpm
Duty Point Head	110 ft
Control Head	33 ft
Duty Point Pump Efficiency	73.9 %
Part Load Efficiency Value (PLEV)	71.0 %
Impeller Diameter	11 in
Motor Power	15 hp
Duty Point Power	9.61 bhp
Motor Speed	1800 rpm
RPM @ Duty Point	1750 rpm
NPSHr	8.79 ft
Minimum Shutoff Head	130 ft
Minimum Flow at RPM	48.9 US gpm
Flow @ BEP	245 US gpm
Fluid Temperature	95 °F
Fluid Type	40% Propylene glycol
Weight *(approx. - consult rep for exact)*	752 lbs
Pump Floor Space Calculation	5.53 ft²

Performance Curve

Energy Efficiency Ratings:
Pump & Motor PEIcl: 0.86 ERcl: 14
Pump, Motor & Drive: PEIvl: 0.43 ERvl: 57

PREMIUM EFFICIENCY PRODUCT

e-1510
2EB
1750 RPM

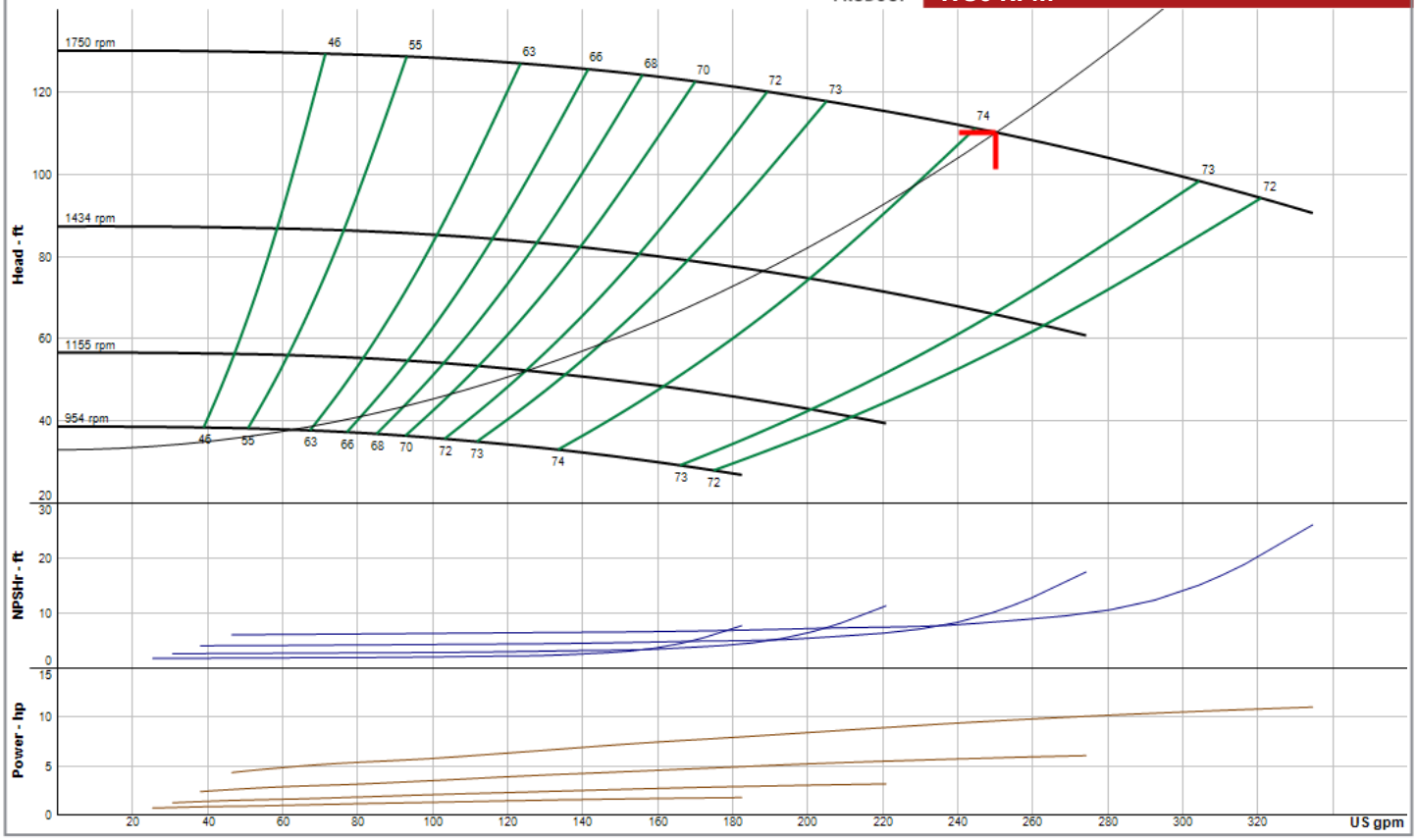

Performance curve meets 14.6 / ISO 9906 acceptance criteria

WIZE-53D4B4

Constant Speed Curve (1750 rpm)

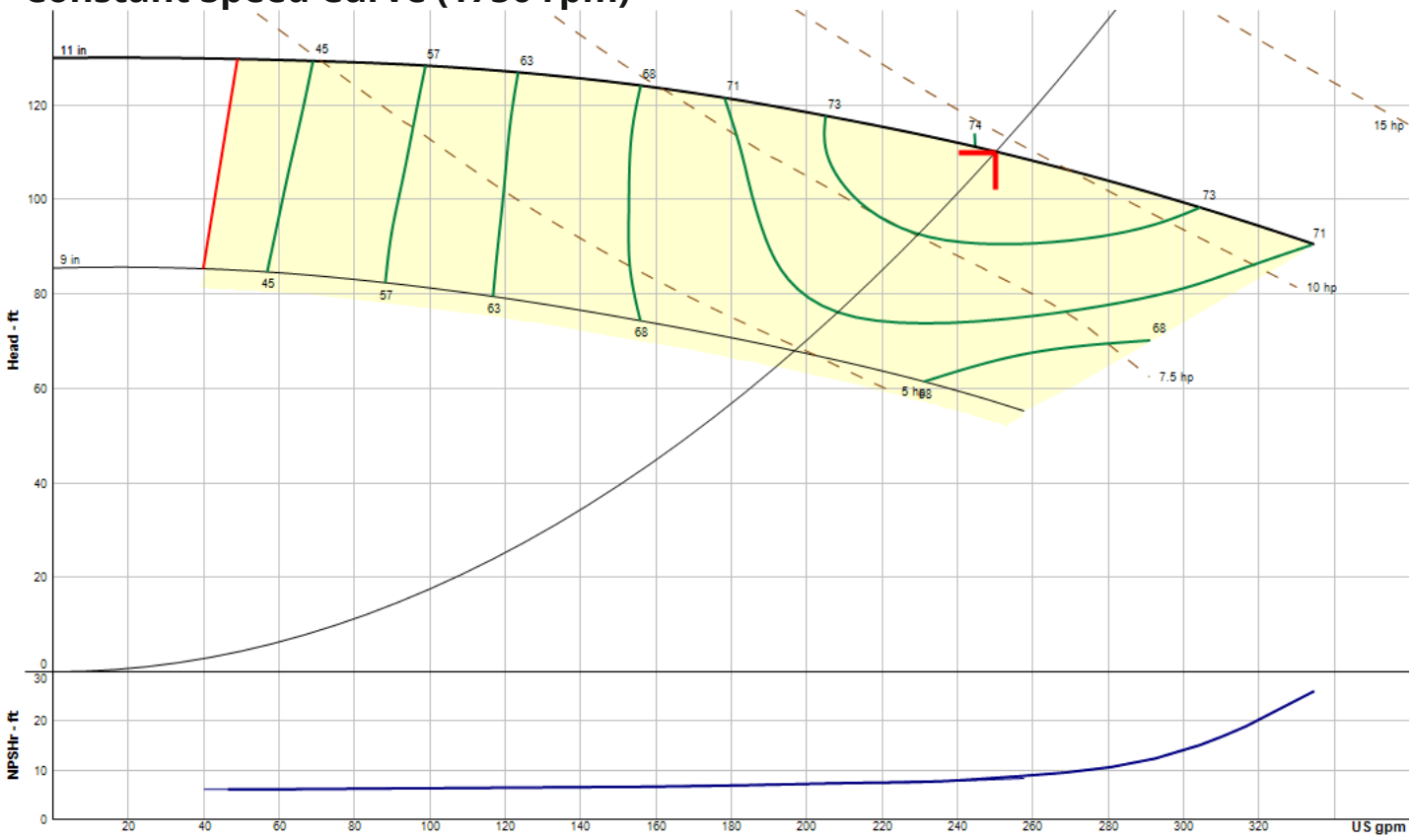

Operating Point

Flow: 250 US gpm **Head:** 110 ft **Speed:** 1750 **Efficiency:** 73.9% **Point BHP:** 9.61 **End Of Curve:** 74.7%

Maximum Duty Point (at rated motor speed)

Flow: 250 US gpm **Head:** 110 ft **Speed:** 1750 **Efficiency:** 73.9% **Point BHP:** 9.61 **NOL Flow:** 335 US gpm **Runout Flow:** 335 US gpm **NOL (BHP):** 11

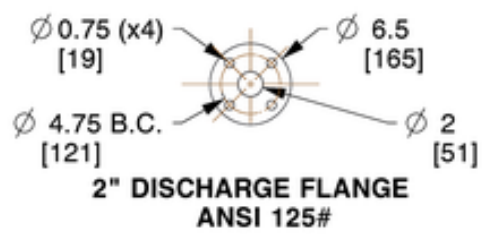

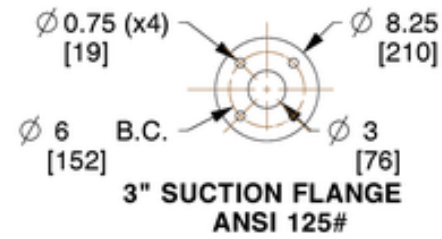

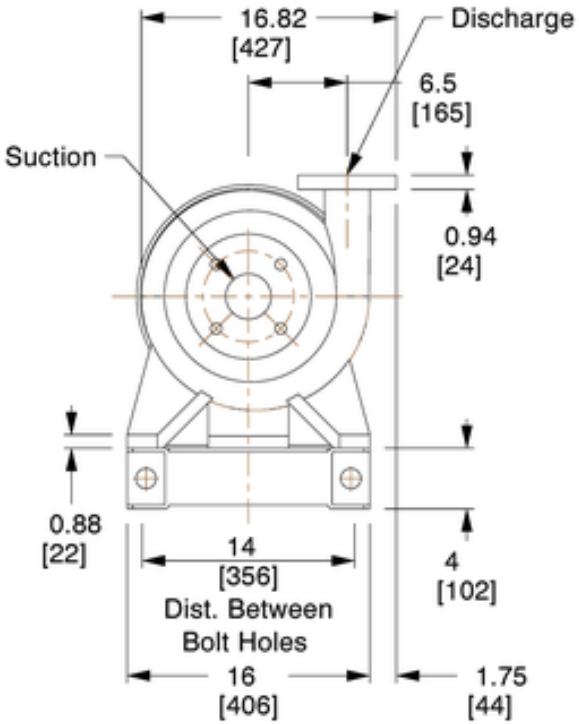

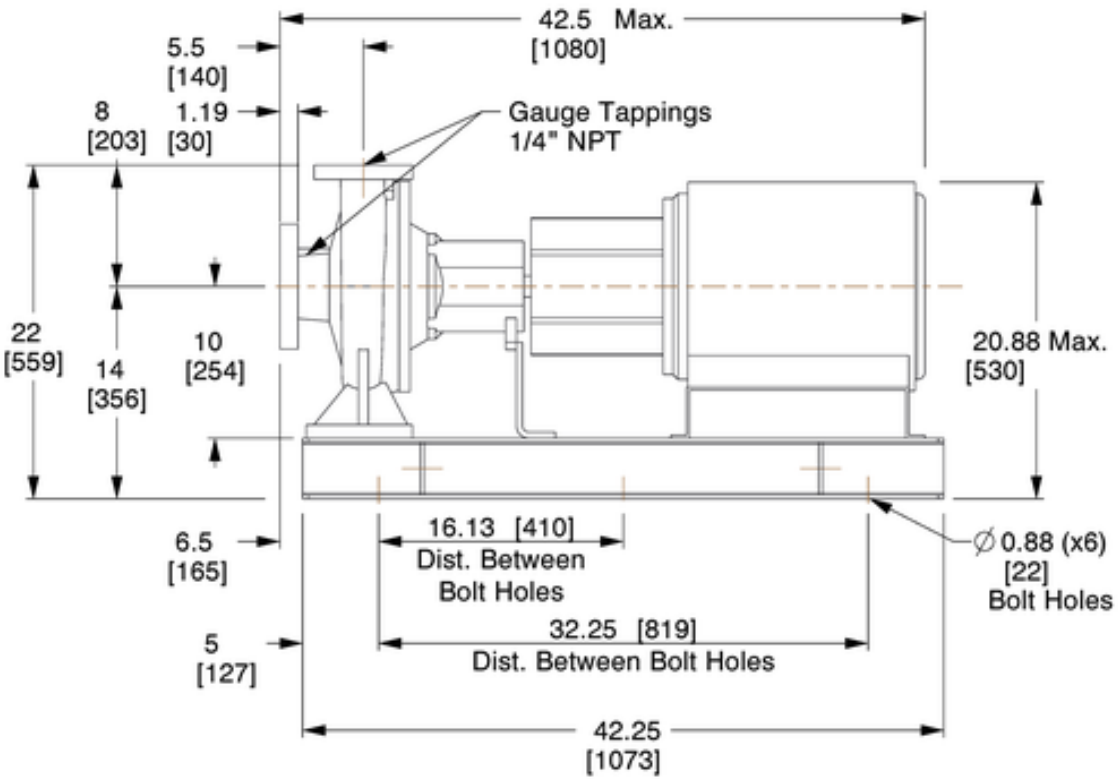

Bell & Gossett
a xylem brand

8200 N. Austin Ave.
Morton Grove, IL 60053, USA

This drawing and the information depicted therein is the property of Xylem. Copies are issued in strict confidence and shall not be reproduced or copied, or used as the basis for the manufacture or sale of products without prior written permission of Xylem.

Dimensions are subject to change

Not to be used for construction unless certified

BG-E1510-2EB-SS-254T-S

Series e-1510 Centrifugal Pumps - Base Mounted

Seal Type: Standard Seal | Motor Frame: 254T | Frame Type: S | Flange: ANSI 125#

Dimensions : IN (mm)	Scale : N.T.S.	Submittal # : B-880.30C

WIZE-53D4B4

Standard Mechanical Configuration

Standard Mechanical Seal	SM, LG, & XL Bearing Frames	ES Bearing Frame
Temperature Range	-20 to 225°F	-20 to 225°F
Maximum Pressure	175 PSI	175 PSI
pH Limitations	7.0 - 9.0	7.0 - 9.0
Elastomer	Buna	Buna
Rotating Face	Carbon	Carbon
Stationary Face	Ceramic	Silicon Carbide
Hardware	Stainless Steel / Brass	Stainless Steel

Mechanical Seal Options	SM, LG, & XL Bearing Frames		
Temperature Range	-20 to 250°F	-10 to 225°F	-20 to 250°F
Maximum Pressure	175 PSI	175 PSI	175 PSI
pH Limitations	7.0 - 11.0	7.0 - 9.0	7.0 - 12.5.0
Elastomer	EPR (Ethylene Propylene Rubber)	FKM (Viton™ or Fluoroelastomer)	EPR (Ethylene Propylene Rubber)
Rotating Face	Carbon	Carbon	Silicon Carbide
Stationary Face	Tungsten Carbide	Ceramic	Silicon Carbide
Hardware	Stainless Steel / Brass	Stainless Steel	Stainless Steel

Mechanical Seal Options	ES Bearing Frame		
Temperature Range	-20 to 250°F	-10 to 225°F	-20 to 250°F
Maximum Pressure	175 PSI	175 PSI	175 PSI
pH Limitations	7.0 - 11.0	7.0 - 9.0	7.0 - 12.5.0
Elastomer	EPR (Ethylene Propylene Rubber)	FKM (Viton™ or Fluoroelastomer)	EPR (Ethylene Propylene Rubber)
Rotating Face	Silicon Carbide	Carbon	Silicon Carbide
Stationary Face	Tungsten Carbide	Silicon Carbide	Silicon Carbide
Hardware	Stainless Steel / Brass	Stainless Steel	Stainless Steel

Stuffing Box Configuration

Mechanical Seal	SM, LG, & XL Bearing Frames
Temperature Range	-20 to 250°F*
Maximum Pressure	175 PSI (Optional 250 PSI)
pH Limitations	7.0 - 11.0
Elastomer	EPR (Ethylene Propylene Rubber)
Rotating Face	Tungsten Carbide
Stationary Face	Carbon
Hardware	Stainless Steel

Packing Option	
Temperature Range	0 to 250°F
Maximum Pressure	175 PSI
pH Limitations	7.0 - 9.0
Material	Braided Graphite Impregnated PTFE

* For operating temperatures above 250°F a cooled flush is required and is recommended for temperatures above 225°F for optimum seal life. On closed systems cooling is accomplished by inserting a small heat exchanger in the flush line to cool the seal flushing fluid.

Flush-line Filters and Sediment Separators are available on special request.

Materials of Construction

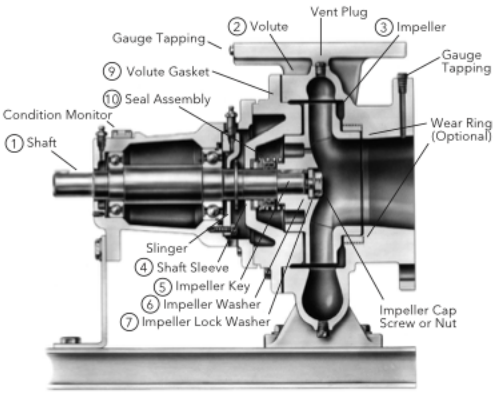

Standard Configuration

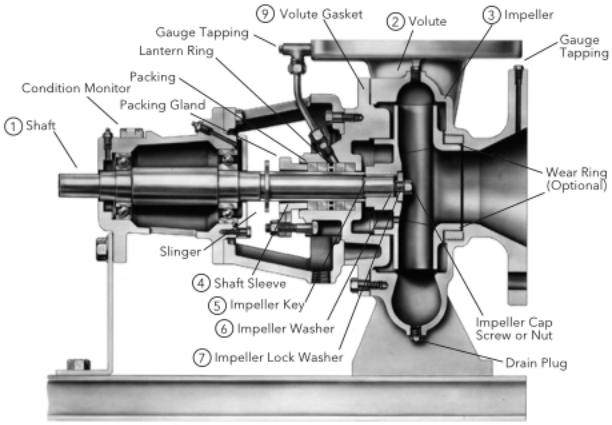

Optional - S Configuration

Description	SM, LG, & XL Bearing Frames	ES Bearing Frame
1 Shaft	ASTM 108 Grade 1144	ASTM 108 Grade 1144
2 Volute	Cast Iron ASTM A48 Class 30B	Cast Iron ASTM A48 Class 30B
3 Impeller	ASTM A743 Grade CF8 - 304 Stainless Steel	ASTM A743 Grade CF8 - 304 Stainless Steel
4 Shaft Sleeve	ASTM 312 Grade TP304 - 304 Stainless Steel	ASTM 312 Grade TP304 - 304 Stainless Steel
5 Impeller Key	#304 Stainless Steel	NA
6 Impeller Washer	Steel	NA
7 Impeller Lock Washer	#304 Stainless Steel (18-8 XL FRM)	NA
8 Impeller Cap Screw	#304 Stainless Steel	NA
8 Impeller Nut	NA	316 Stainless Steel
9 Volute Gasket	Cellulose Fiber	Cellulose Fiber
10 Seal Assembly	Reference Seal Data Tables	Reference Seal Data Tables

Pump Options

- Stainless Steel Volute Wear Ring
- Galvanized Steel Drip Pan
- Stainless Steel Shaft
- Rexnord Omega Spacer Coupling
- Falk T31 Spacer Coupling
- External Flush Line
- Stuffing Box Configuration
- Epoxy Coated Internal Cast Iron Components
- Special Impeller Balancing (ISO 1940 G2.5 or G1.0)
- Certified Performance Tests (Per HI Standard 14.6)
- 250 PSI Working Pressure

xylem
Let's Solve Water

Xylem Inc.
8200 N. Austin Avenue, Morton Grove, IL 60053
Phone: (847)966-3700 Fax: (847)965-8379
www.bellgossett.com

Bell & Gossett is a trademark of Xylem Inc. or one of its subsidiaries.

WIZE-53D4B4

July 29, 2021

Submittal Data Information

401-107

Flanged In-Line Air Separator – 125 psi

SUPERSEDES: October 8, 2014

EFFECTIVE: November 24, 2015

Job:_____ Engineer:_____ Contractor:_____ Rep:_____

ITEM	LOCATION	MODEL	QUANTITY	SIZE

SPECIFICATIONS & OPTIONS

- Designed and constructed per ASME Code Section VIII, Division 1.
- Maximum Design Pressure and Operating Temperature: 125 psi @ 375°F
- Materials of Construction: Carbon Steel with optional 304SS Strainer
- Exterior Finish: Red Oxide Primer
- Larger sizes available. Please consult factory.

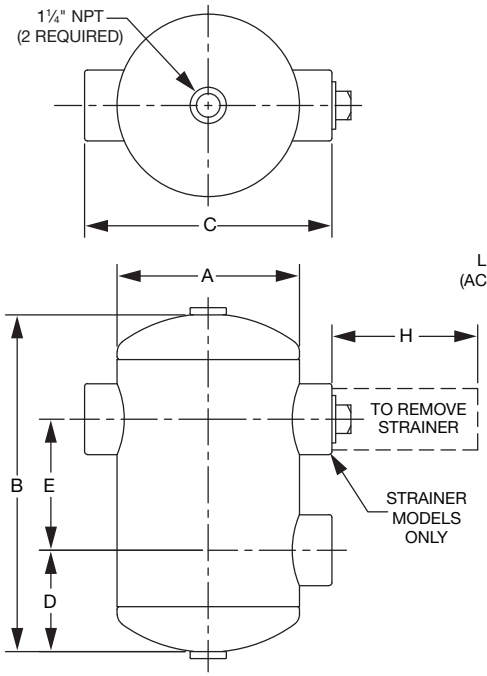

AC02F – AC025F
(THREADED CONNECTIONS)

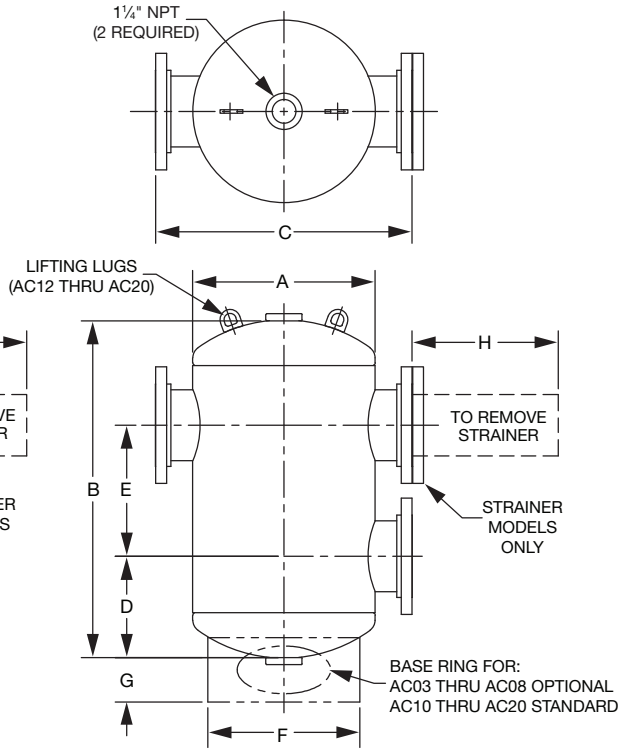

AC03F – AC20F
(FLANGED CONNECTIONS – ANSI CL.150 RFSO)

SIZES & DIMENSIONS

All dimensions shown are subject to change and should not be used for pre-piping. Contact your local Taco representative should certified dimensional drawings be required.

PIPE SIZE	MODEL NUMBER		A DIA. (INCH)	B MAX. (INCH)	C (INCH)	D (INCH)	E (INCH)	F DIA. (INCH)	G (INCH)	H (INCH)	OPTIMUM FLOW (GPM)	STRAINER FREE AREA (INCH²)	C_V FACTOR		APPROXIMATE DRY WEIGHT (LBS.)	
	LESS STRAINER	WITH STRAINER											LESS STRAINER	WITH STRAINER	LESS STRAINER	WITH STRAINER
2	AC02-125	AC02F-125	12	22⅛	14	7 9/16	7	—	—	13	104	31	86	72	40	45
2½	AC025-125	AC025F-125	12	22⅛	14	7 9/16	7	—	—	13	149	38	122	102	40	45
3	AC03-125	AC03F-125	14	27¼	24	8	11¼	12	6¾	22	230	51	190	162	90	110
4	AC04-125	AC04F-125	16	31⅜	26	9 5/16	12¾	12	7	24	416	80	325	272	115	145
5	AC05-125	AC05F-125	16	32½	26	9⅜	13¾	12	7	24	623	112	510	422	130	165
6	AC06-125	AC06F-125	20	36⅞	30	11 1/16	14¾	16	6¾	27	956	180	750	618	170	215
8	AC08-125	AC08F-125	20	45½	30	14 1/16	17⅜	16	6¾	27	1666	246	1260	1060	270	345
10	AC10-125	AC10F-125	24	47¾	36	14 15/16	17⅞	20	6¾	32	2635	392	2000	1670	350	465
12	AC12-125	AC12F-125	30	59¾	42	17⅝	24½	24	7⅞	37	3749	548	2900	2400	600	775
14	AC14-125	AC14F-125	36	68½	48	20¾	27	30	7⅞	44	4298	732	3500	2850	805	1035
16	AC16-125	AC16F-125	36	75½	48	22¼	31	30	7⅞	43	5693	845	4600	3800	875	1150
18	AC18-125	AC18F-125	48	84¼	64	24⅝	35	40	7⅞	56	7496	1290	5900	4900	1550	1900
20	AC20-125	AC20F-125	48	91	64	26	39	40	8⅜	56	9307	1435	7400	6200	1700	2150

COMMENTS: _____

Taco Comfort Solutions™ A Taco Group Company
Taco, Inc., 1160 Cranston Street, Cranston, RI 02920 | Tel: (401) 942-8000 | FAX: (401) 942-2360
Taco (Canada), Ltd., 8450 Lawson Road, Suite #3, Milton, Ontario L9T 0J8 | Tel: (905) 564-9422 | FAX: (905) 564-9436
Visit our web site: www.TacoComfort.com | Printed in USA |

©2015 Taco, Inc.

Submittal Data Information
CA Expansion Tanks

SUPERSEDES: July 30, 2014 EFFECTIVE: December 1, 2014

JOB _____ ENGINEER _____ CONTRACTOR _____ REP. _____

ITEM NO.	LOCATION	MODEL NO.	QUANTITY	PRE-CHARGE *	WORKING PRESSURE
ET-1		**CA-300**	**1**		

* Unless otherwise specified, standard pre-charge of 12 psi (83 kPa).

SPECIFICATIONS

- Designed and constructed per ASME Code Section VIII, Div. 1.
- Construction: Carbon Steel with exterior red oxide primer finish
- Standard Design Pressure and Temperature: 125 psi @ 240°F (862 kPa @ 116°C) Max.
- Registered with the National Board of Pressure Vessel Manufacturers
- U-1A Data Report
- Bladder type for permanent separation of air and water.
- Water expands into bladder, air pre-charge on shell side.
- Bladder – Heavy Duty Butyl, removable for inspection.
- **Suitable for Vertical or Horizontal Installation**
- **Optional Design Pressures and Temperatures**
  - ❏ 125 psi @ 280°F (862 kPa @ 138°C)
  - ❏ 150 psi @ 240°F (1034 kPa @ 116°C) ❏ 150 psi @ 280°F (1034 kPa @ 138°C)
  - ❏ 175 psi @ 240°F (1207 kPa @ 116°C) ❏ 175 psi @ 280°F (1207 kPa @ 138°C)
  - ❏ 250 psi @ 240°F (1724 kPa @ 116°C) ❏ 250 psi @ 280°F (1724 kPa @ 138°C)
  - ❏ 300 psi @ 240°F (2069 kPa @ 116°C) ❏ 300 psi @ 280°F (2069 kPa @ 138°C)
- **Optional System Connection Materials, "For Potable Water Use", Non NSF/ANSI 61-G**
  - ❏ [K] 304 Stainless Steel
- **Additional Options**
  - ❏ [A] Anchor Clips
  - ❏ [B] Bulls Eye Sight Glass

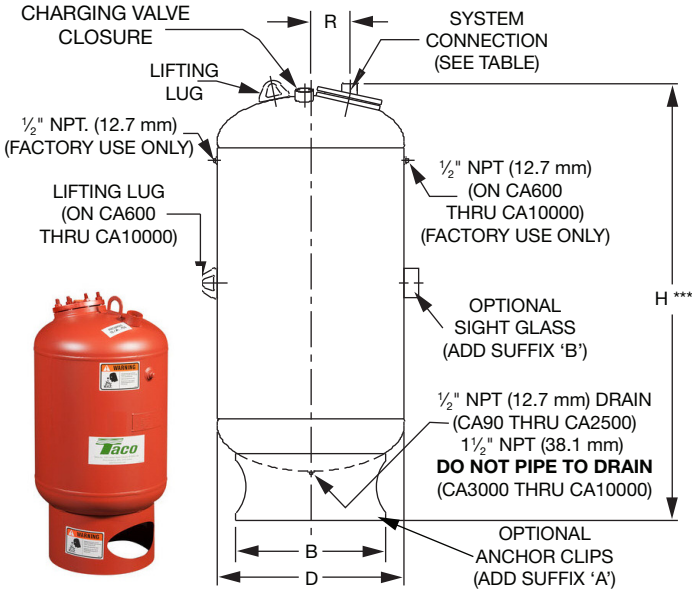

MODEL NUMBER	TANK VOLUME		H HEIGHT ***		B DIAMETER		D DIAMETER		R RADIUS		SHIPPING WEIGHT **		SYSTEM CONNECTION SIZE	
	GAL.	liter	INCH	mm	INCH	mm	INCH	mm	INCH	mm	LBS.	kg	Imperial	metric
CA90-125	23	90	29⅛	740	16	406	20	508	4¼	108	120	155	1" NPT	25.4mm
CA140-125	37	140	40⅛	1019	16	406	20	508	4½	114	195	88	1" NPT	25.4mm
CA215-125	57	215	58⅞	1495	16	406	20	508	4½	114	290	132	1" NPT	25.4mm
CA300-125	79	300	57¾	1467	20	508	24	610	5	127	320	145	1½" NPT	38.1mm
CA450-125	119	450	77⅜	1965	20	508	24	610	5	127	400	181	1½" NPT	38.1mm
CA500-125	132	500	85¾	2178	20	508	24	610	5	127	420	191	1½" NPT	38.1mm
CA600-125	158	600	71⅞	1826	24	610	30	762	6¼	159	460	209	1½" NPT	38.1mm
CA700-125	185	700	80⅝	2048	24	610	30	762	6¼	159	525	238	1½" NPT	38.1mm
CA800-125	211	800	89⅞	2283	24	610	30	762	6¼	159	590	268	1½" NPT	38.1mm
CA900-125	238	900	73⅛	1857	30	762	36	914	7 7/16	189	690	313	1½" NPT	38.1mm
CA1000-125	264	1000	79	2007	30	762	36	914	7 7/16	189	790	358	1½" NPT	38.1mm
CA1100-125	291	1100	85¼	2165	30	762	36	914	7 7/16	189	865	392	1½" NPT	38.1mm
CA1200-125	317	1200	91	2311	30	762	36	914	7 7/16	189	940	426	1½" NPT	38.1mm
CA1300-125	344	1300	97	2464	30	762	36	914	7 7/16	189	980	445	1½" NPT	38.1mm
CA1400-125	370	1400	103	2616	30	762	36	914	7 7/16	189	1020	463	1½" NPT	38.1mm
CA1500-125	396	1500	73⅜	1864	40	1016	48	1219	10 15/16	278	1200	544	1½" NPT	38.1mm
CA1600-125	422	1600	76⅝	1946	40	1016	48	1219	10 15/16	278	1380	626	1½" NPT	38.1mm
CA1800-125	475	1800	83½	2121	40	1016	48	1219	10 15/16	278	1515	687	1½" NPT	38.1mm
CA2000-125	528	2000	90⅜	2296	40	1016	48	1219	10 15/16	278	1650	748	1½" NPT	38.1mm
CA2500-125	660	2500	107⅛	2721	40	1016	48	1219	10 15/16	278	1838	834	1½" NPT	38.1mm
CA3000-125	792	3000	94⅛	2391	44	1118	54	1372	11 7/16	291	2025	919	2" NPT	50.8mm
CA4000-125	1056	4000	120¾	3067	44	1118	54	1372	11 7/16	291	2400	1089	2" NPT	50.8mm
CA5000-125	1320	5000	150¼	3816	44	1118	54	1372	11 7/16	291	3100	1406	2" NPT	50.8mm
CA7500-125	1980	7500	128¾	3270	62	1575	72	1829	11½	292	3850	1746	3" NPT	76.2mm
CA10000-125	2640	10000	158¼	4020	62	1575	72	1829	11½	292	4500	2041	3" NPT	76.2mm

** Weight shown is for 125 psi models only. Consult factory for shipping weight of higher design pressure models.
*** Allow 18" minimum clearance above tank for piping system connection.

COMMENTS: _____

Taco Comfort Solutions™ A Taco Group Company
Taco, Inc., 1160 Cranston Street, Cranston, RI 02920 | Tel: (401) 942-8000 | FAX: (401) 942-2360
Taco (Canada), Ltd., 8450 Lawson Road, Suite #3, Milton, Ontario L9T 0J8 | Tel: (905) 564-9422 | FAX: (905) 564-9436
Visit our web

| ©2015 Taco, Inc.

CA-300

Tag: ET-1

Fluid	Piping Material	System Volume
Propylene Glycol	Steel	2000 gallons

Min of Initial Fill or Operating Temp	Max Design Temperature
38°F	100°F

Min of Initial Fill or Operating Pressure	Max Design Pressure
30 psig	75 psig

Specific Volume of Water at Min Temperature:	Specific Volume of Water at Max Temperature:
0.015393 ft3/lb	0.015393 ft3/lb

Calculated System Expansion Volume	Stainless Steel Connections
29.52 gallons	

Required Tank Volumes:

Plain Steel	Bladder Style
178.90 gallons	58.83 gallons

Advantage Controls

Data Sheet

Digital Glycol Feeder

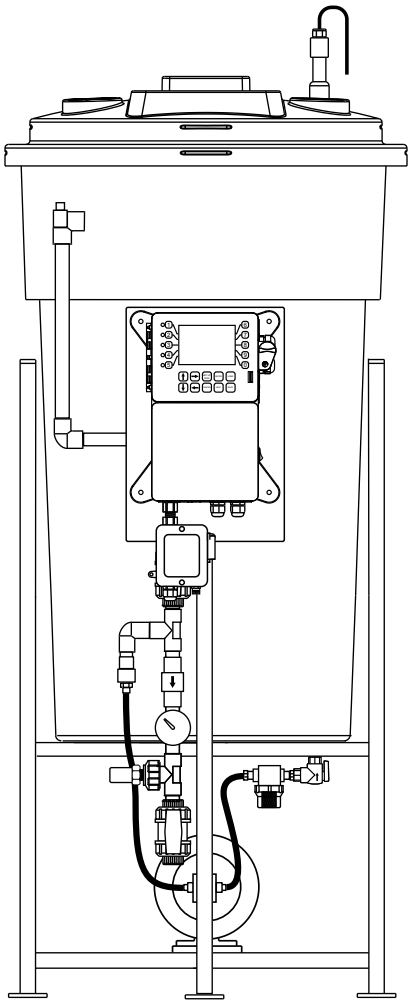

For Closed Loop Systems Now With MegaTron XS Controller Options

Key Features

- Digitally Displayed Pressure
- Simple Set Point Control
- Low Level Pump Cut Off
- Audible Alarm
- High Flow Feed Pump
- Preplumbed and Prewired
- ETL Approved (XS models)
- 3mil Powdercoated Steel Frame
- Multi System
- Optional BMS Interface

Application

Our glycol feeders maintain a consistent pressure in closed loop systems automatically feeding based on a pressure drop.

Digitally displays the actual pressure of the loop and has a user settable control point for pump activation and pressure relief.

The feeder is constructed on a rugged 3mil powdercoated steel frame with a polyethylene tank, high flow feed pump, prewired controller, low level cut-off, audible alarm, motor starter/high amp relay and preplumbed piping assembly with pressure gauge, pressure transducer, back check and relief valve.

Optional: Dry contact output for low tank level and pump on, plus BACnet and ModBus compatibility.

BUILD A MODEL GF - 1 A 1 A 1 G - C1

TANK SELECTION
0 = No tank
1 = 55 gal (208L) poly
2 = 100 gal (378L) poly
3 = 30 gal (113L) poly
5 = 5 gal (18L) no stand, 30 gpd pump only
7 = 150 gallon poly (567L)

STAND SELECTION
A = Painted steel stand
B = Painted steel stand w/ mixer bracket
C = Tank top mount (no tank included)
D = Portable stand with built in rollers
E = No stand (for 5 gal tanks)

PUMP SELECTION
*Dual pump sys. require 2 pump selections (i.e., -11)
0 = No pump
1 = 1.5 gpm at 100 PSI; 1/3 hp
2 = 3.3 gpm at 100 PSI; 1/2 hp
3 = 6.1 gpm at 60 PSI; 1/3 hp
4 = 9.9 gpm at 60 PSI; 1/2 hp
5 = 30 gpd at 100 PSI; solenoid driven

PUMP CONFIGURATION
A = Standard configuration
B = Alternating pumps for single loops (requires 2 pump selections)
C = Pump plumbed for transfer duty into tank

LOOP SELECTION
*Dual loop sys. require 2 loop selections (i.e., -11)
0 = No loop
1 = Sch 80 PVC loop; 100 PSI max; 100°F max
2 = Copper loop; 100 PSI max; 180°F max
3 = Carbon steel loop; 100 PSI max

CONTROL SELECTION
A = Digital controller w/ 0-100 PSI 4-20mA output sensor
C = Analog 5-20 PSI switch for 5 gal tank w/ 30 GPD pump
E = Manual pump control; no pressure switch or level wand
G = Pre-configured ETL listed XS Series controller prewired for a single pump system.
H = Pre-configured ETL listed XS Series controller prewired for a dual pump system.

OPTIONS
1 = 240V
3 = Solenoid valve for pressure relief
5 = Position backcheck to use tank for expansion
C1 = Communications card **Internet** *
C11 = Communications card **Modbus** *
C12 = Communications card **BacNet** *
G = PUMP ON - dry contact relay
H = 1/4" PVC pipe instead of pump suction tubing
M = Mixer controls (order mixer separate)
O4= Four 4-20mA outputs *
* Options C1, C11, C12, O4 require control option G or H.

Specifications

Electrical
- Input 120 VAC, 60 Hz
- Alarm Dry Contact
- Motor: 1/3 HP Pump: 1.5 GPM

Plumbing
- Standard Schedule 80 PVC
- Optional Copper or Black Iron

Enclosure
Heavy Duty NEMA 4X style, high impact thermoplastic with padlockable gasketed Lexan viewing door

Pressure Gauge 0-100 psi (0-6.9 bar)

Dimensions
W 27.5" (69.8 cm)
H 64" (162.5 cm)
D 31.5" (80 cm)

Shipping Weight
330 lbs (149.69 kg) approx.

Most units include poly tank and stand, low level switch with audible alarm (100db), motor starter / high amp relay, dry contact alarm, pressure relief valve and plumbing assembly with pressure gauge and sensor.

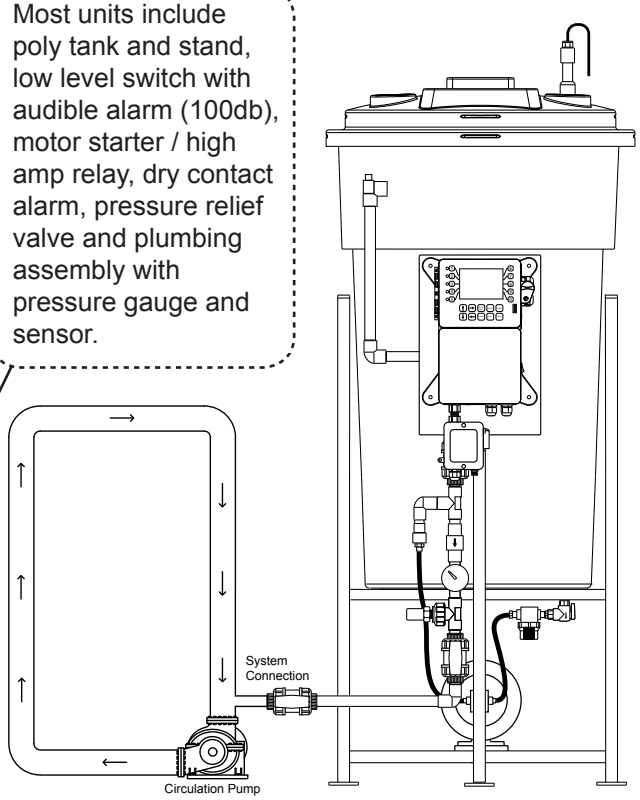

Get the Advantage

Advantage Controls
4700 Harold Abitz Dr
Muskogee, OK 74403
800-743-7431 phone
888-686-6212 fax
www.advantagecontrols.com

12/2014

July 29, 2021

Vector Industries, Inc.
2125 S. West Avenue Waukesha, WI 53189

GENERAL

FA-700 (AL) TC and FA-1000 (AL)TC feeders are designed for maximum operating specifications of: 300psi (20.7 bar), 200°f (93°c)
Select valves and fittings to meet working pressure of the system being treated.

Two and five gallon feeders may be used to slug feed powdered or liquid treatments or for use with briquette treatments.

INSTALLATION

Install feeder in accordance with one of three following alternates:

1. Between suction and discharge sides of a pump.
2. On horizontal or vertical piping, using a valve or orifice to create flow through the feeder.
3. Direct to system piping or pump suction using water from a source at higher pressure.

CAUTION: Be sure there is no possibility of chemical backing up into a domestic water supply line.

TO CHARGE FEEDER

1. When using (2) or (5) gallon feeders with briquette treatments - Close inlet and outlet valves and drain by opening valve and petcock. Remove cover and fill with desired number of briquettes. Replace cover, closed drain valve, open inlet and outlet valves, and close petcock after all air has been forced from feeder.

2. When using any feeder with powdered or liquid treatment - Close inlet and outlet valves; drain. Close drain valve, remove cover and fill with liquid or dissolved powdered treatment Replace cover and open inlet and outlet valves.

OPERATION

1. For controlled solution rate, or for continuous feed when using briquette treatments with the (2) gallon or (5) gallon feeders, adjust Flo-Control Valve to give desired rate of flow through the feeder.

2. To slug feed chemical with any feeder, leave inlet and outlet valves wide open until all chemicals are fed to the system being treated. (Note: When slug feed is to be used, Flo- Control Valve can be eliminated from valve requirements.)

Voice: 262-542-4550
eMail: sales@vector-industries.com
Fax: 262-542-4490
Web: www.vector-industries.com

Vector Industries, Inc.
2125 S. West Avenue Waukesha, WI 53189

Buttress Threaded Closure Style Feeder

(Filter Conversion Kit Optional)

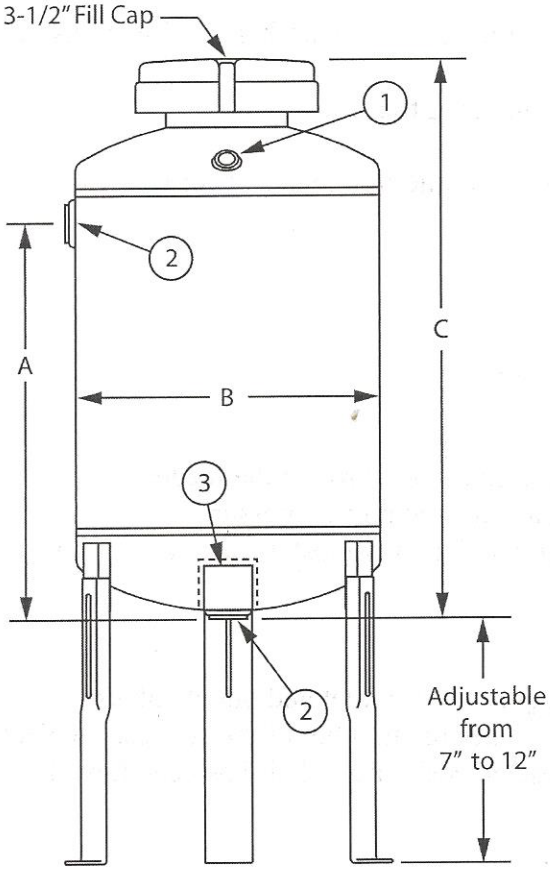

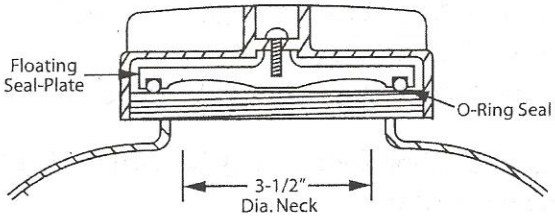

Cross-disection of the 1/4 Buttress Threaded Closure assembly.

Features a self-aligning floating seal-plate that ensures a perfect seat between the closure and neck of the feeder.

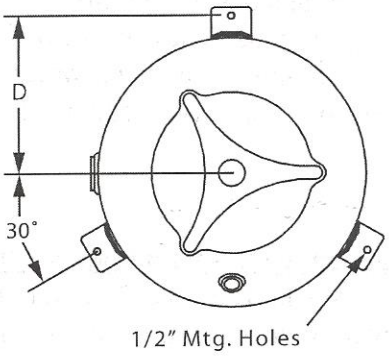

1. 1/4" Female NPT Fitting
2. 3/4" Female NPT Fitting
3. Filter Kit Adapter Included in all tanks

Model	Approx. Capacity	A	B	C	D	Shipping Weight
FA-700-TC	2 Gallons	12"	7"	17-1/2"	N/A	19 lbs
FA-700AL-TC	2 Gallons	12"	7"	17-1/2"	4-1/2"	22 lbs
FA-1000-TC	5 Gallons	13"	10"	19-1/2"	N/A	27 lbs
FA-1000AL-TC	5 Gallons	13"	10"	19-1/2"	6"	32 lbs

Max operating specifications of 300psi (20.7bar), 200°f (93°c)
Models with "AL" suffix include adjustable leg set (AL105)

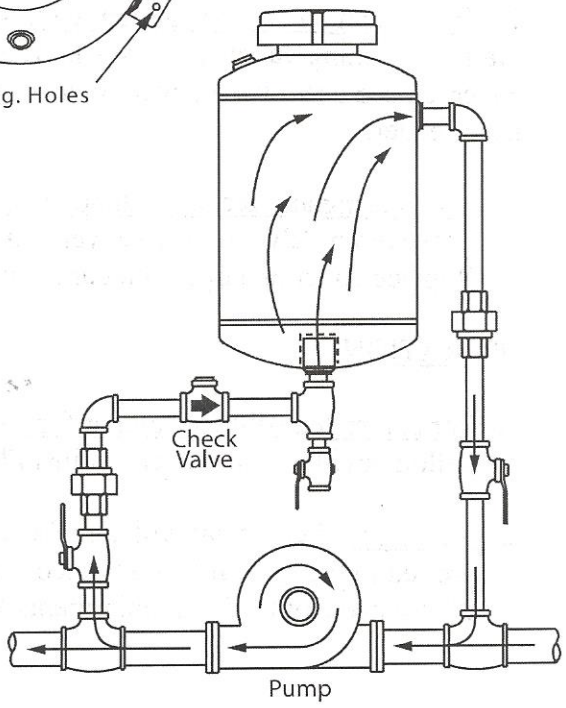

Voice: 262-542-4550 | Fax: 262-542-4490
Email: sales@vector-industries.com
Web: www.vector-industries.com

© 2010 Vector Industries, Inc. | Bulletin BP710TC-0910

Cannon Water Technology Inc.
233 Technology Way Suite 9
Rocklin, CA 95765
Voice: 1 916-315-2691 FAX: 1 916-304-0210
https://cannonwater.com

JJM ALKALINE TECHNOLOGIES

Acidic Condensate Neutralizer
Dimensions and Parts

JJM® CBM-226

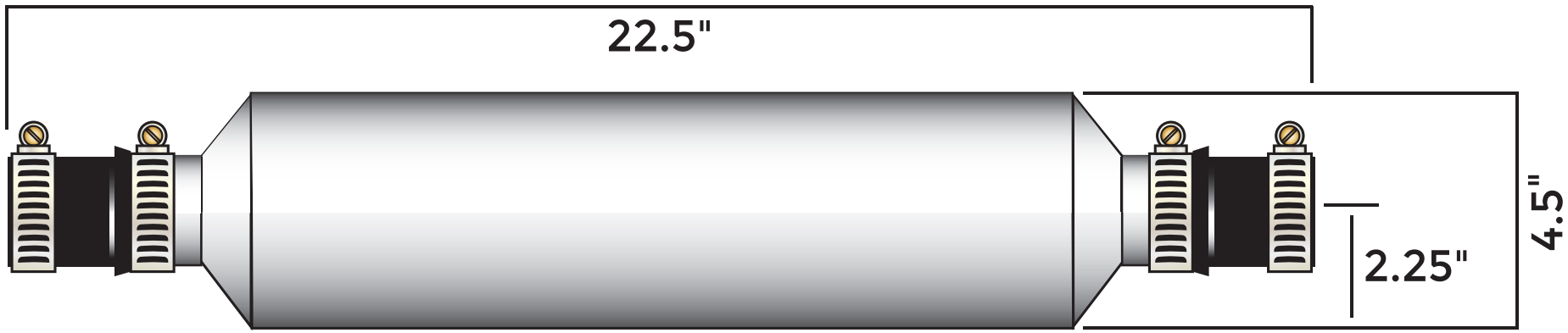

CBM-226 Included Parts
(2) Acid Proof Poly Couplings
(4) Stainless Steel Clamps
(2) 1" Split Ring Pipe Clamps
(2) 3/8" Ceiling Plates

Part No.	MBH	GPH	Material	Pellets	Inlet/Outlet
5003	1,500 max.	11	Clear PVC	7.2 lbs	1" Sch40

F. Plumbing Calculations and Data Sheets- Building

MOTT MACDONALD

Project: Orangeburg Training Center
MM Project No. 505100403

By: C. Keough

Minimum Fixture requirments

Numbert of Employees 175

Reference: UFC 3-420-01 Plumbing Systems

Table 403.1 Water Closet Allowances

Table 403-1. WATER CLOSET ALLOWANCES

Number of Employees	Minimum Number of Water Closets[1]
1 to 15	1
16 to 35	2
36 to 55	3
56 to 80	4
81 to 110	5
111 to 150	6
151 and over	6 for the first 150, plus 1 additional fixture for each additional 40 employees

[1] Where toilet rooms will not be used by women, urinals may be substituted for some water closets, except that the number of water closets in such cases will not be reduced to less than two-thirds of the minimum specified.

Employees		Fixtures
1	150	6
151	175	1
Total Water Closets Required		7

Table 403.2 Lavatory Allowances

Table 403-2. LAVATORY ALLOWANCES

Type of Employment[1]	Number of Employees	Minimum Number of Lavatories
Non-industrial office buildings, public buildings, and similar establishments	1 to 15	1
	16 to 35	2
	36 to 55	3
	56 to 80	4
	81 to 110	5
	111 to 150	6
	151 and over	1 additional fixture for each additional 45 employees

[1] For other types of employment, at least one lavatory for three required water closets will be provided. /9/

Employees		Fixtures
1	150	6
151	175	1
Total Lavatories Required		7

Section 403.1.3 Drinking Fountains

403.1.3 Drinking fountains. One drinking fountain for each 75 employees or fraction and at least one fountain per floor will be provided.

Employees		Fixtures
1	75	1
76	151	1
152	175	1
Total Drinking Fountain Required		3

Water Supply Pipe Sizing

Project	Orangeburg	Stage	
Project No	505100403	Revision	0
Prepared By	RJ	Checked BY	CPK
Date	1/27/2021	Date	1/27/2021
Subject	Cold & Hot Water Supply Pipe Sizing		

MOTT MACDONALD

Ref.	Appliance	Number Of Appliances	Syetem Type	Fixture Units		Pipe Work	
				Per Appliance	Total	Flowrate (GPM)	Size (inch)
Shower/Locker Area	LAV	2	Hot & Ambient	1	2.0	2.00	1/2"
	WC	2	Ambient	8	16.0	12.00	1"
	Shower	10	Hot & Ambient	2	20.0	14.00	1-1/4"
	Water cooler	1	Ambient	0.8	0.8	1.00	1/2"
	Total (Ambient Water)	-	**Ambient**	-	**38.8**	24.00	1-1/2"
Lactation room	LAV	1	Hot & Ambient	1	1.0	1.00	1/2"
	WC		Ambient	8	0.0	#N/A	#N/A
	Shower		Hot & Ambient	2	0.0	#N/A	#N/A
	Water cooler		Ambient	0.8	0.0	#N/A	#N/A
	Total (Ambient Water)	-	**Ambient**	-	**1.0**	1.00	1/2"
TOTAL FOR NEW LOCKER & LACTATION ROOM					**39.8**	25.00	1-1/2"

Notes:

- These calculations are to be read in conjunction with the following drawings:
- The Fixture Units for the Hot and Cold Water Services have been taken from TABLE B.5.2 in NSPC
- All pipesizes are as per NSPC chart 9.8.3 type L copper tube based on a velocity of 3-4.5 fps.

HOT WATER DEMAND & STORAGE CALCULATION

	MOTT MACDONALD	Project Name	Orangeburg		
		Subject	Water Heater Sizing		
		Date	7/29/2021		
	Plumbing Fixture	Capacity/fixture	Units	HOT WATER New+Exis. Toilet & Kitchen	
				Qty	Sub-Total
	LAV	6	GPH	9	54
	Shower	30	GPH	10	300
	Kitchen Sink	20	GPH	3	60
	Pantry Sink	10	GPH	1	10
A	Possible Maximum Demand		GPH		424
	From Ashrae Applications Chapter 50 Table 10 - Gymnasium				
B	Demand Factor				0.40
C	Storage Capacity Factor				1.00
D	Temp Rise	deg f			100
E	Recovery Time		Hours		3
F	Probable Maximum Demand	= A*B	GPH		170
G	Storage Capacity		GAL		130
H	Usable Storage (70%)		GAL		91
I	Available HW	=E/H	GPH		30
J	Min Recovery Required	=F-I	GPH		139
K	Actual Recovery				471

MOTT MACDONALD

Project: Orangeburg Training Center

MM Project No. 505100403
By: C. Keough
Checked: M. LaPilusa

Plumbing Calculations

Plumbing Fixtures - water supply

	Quantity	WSFU	Total
WC	11	10	110
LAV	9	2	18
UR	4	5	20
PS	1	2	2
SS	1	3	3
SH	10	4	40
dishwasher	1	2	2
ice maker	1	1	1
handwash sink	1	2	2
kitchen wash basin	1	2	2
commercial kitchen sink	1	4	4

total for Building	204	wsfu
Convert to GPM	91	GPM
Existing domestic water service	3	inch
Velocity at 91 gpm	5	FPS

Result: The existing 3" water service is acceptable
Ref: IPC Table E103.3(2)

Plumbing Fixtures - drainage for new addition, Locker Room

	Quantity	DFU	Total
WC	2	4	8
LAV	2	1	2
UR	0	2	0
PS	0	2	0
SS	0	2	0
SH	10	2	20

Total for Locker Room 30 DFU

San Sewer for Locker Room 4 inch
Max Permitted DFU for 4" building sewer at 1/8" slope 180 DFU
Result: 4" san is acceptable
Ref: IPC Tables 710.1(1), 709.1

Conquest® Semi-Instantaneous GAS CONDENSING WATER HEATER

AquaPLEX® Storage Tank and Heat Exchanger (duplex stainless steel) • 130 Gallon Tank

MODEL ▼	INPUT BTU	Modulating	RECOVERY GPH (Thermal Efficiency)		** GAS CONNECTION NPT	** VENT DIAMETER (ETL listed for longer vents with larger dia.)	OPERATING Weight (lbs)
			70°F to 140°F ①	40°F to 140°F ②			
40 L 130A-GCML	399,000	Yes	657 (96%)	471 (98%)	3/4	4" @ 125 eq. ft.	
50 L 130A-GCML	500,000	Yes	823 (96%)	588 (98%)	1	4" @ 80 eq. ft.	
60 L 130A-GCML	600,000	Yes	988 (96%)	699 (97%)	1	6" @ 250 eq. ft.	1800
70 L 130A-GCML	700,000	Yes	1152 (96%)	815 (97%)	1	6" @ 250 eq. ft.	
80 L 130A-GCML	800,000	Yes	1317 (96%)	932 (97%)	1	6" @ 250 eq. ft.	

① Recoveries and thermal efficiency based upon DOE 10 CFR 431 testing per ANSI Z21.10.3 @ 70°F to 140°F.
② Recoveries and thermal efficiency based upon 40°F entering water temperature.
Dimensions are in inches unless otherwise indicated.
For standard and optional equipment, refer to form PV 8293.
Empty weight is 720 pounds and shipping weight is 880 pounds (all models)

ENERGY STAR

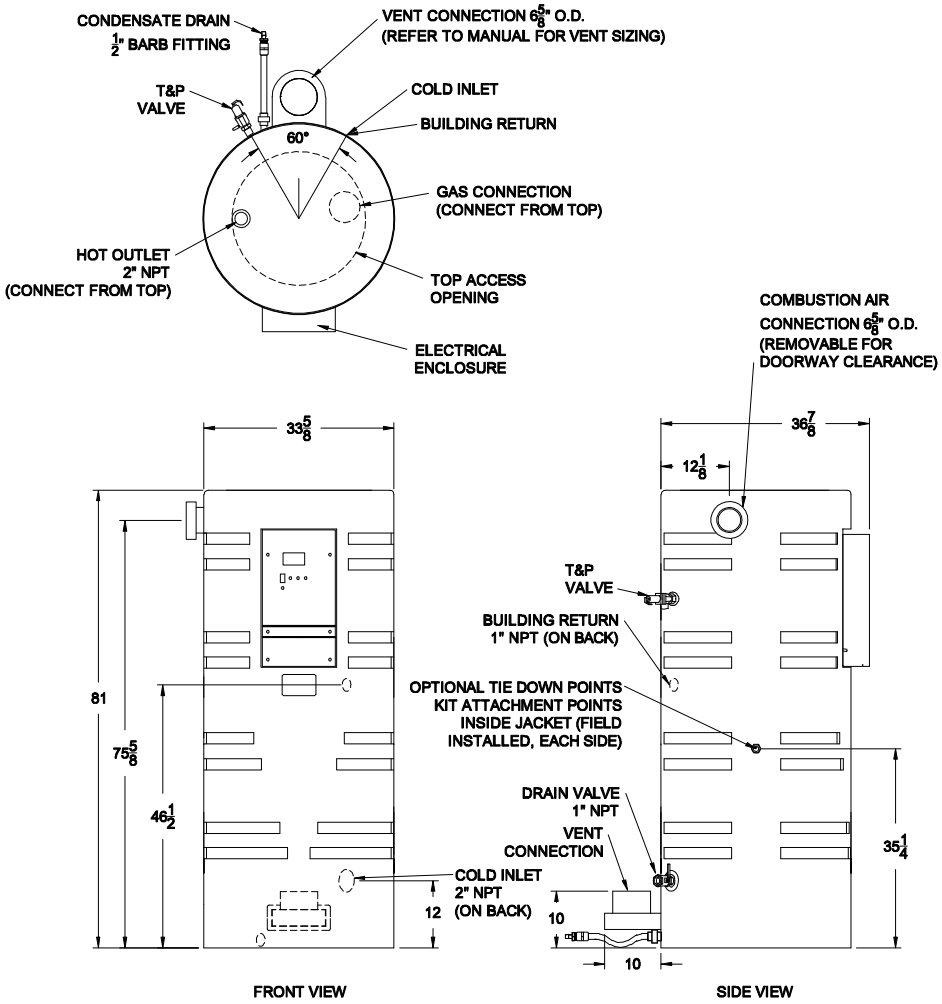

PVI reserves the right to change the design and specification without notice.

Standard Electrical Service

120VAC, 1Ø, 60 Hz.
All models < 11 amps.

Venting

Use a Category IV PVC, CPVC or ETL, UL, ULC or CSA listed stainless steel or Centrotherm InnoFlue SW Polypropylene vent.
Minimum vent length is 5 eq. feet.
Maximum vent length varies by model number and vent diameter.
Do not size vent based only upon connection diameter at the appliance.
Refer to installation manual for sizing requirements.

Inlet Combustion Air Duct

Use PVC or galvanized pipe.
For model 40, up to 125 eq. ft. using 4" diameter pipe.
For model 50, up to 80 eq. ft. using 4" diameter pipe.
For models 60, 70 & 80, up to 250 eq. ft. using 6" pipe.
Longer lengths are ETL listed with larger diameters, refer to installation manual.

Gas Pressure - Natural

Minimum inlet flow pressure 3.5" W.C.
Maximum static pressure 14.0" W.C.
For LP gas, refer to installation manual.

Minimum Clearance from Combustibles

Zero clearance from sides and rear, 24" from front, 15" from top. Can be installed directly on a combustible floor.

Recommended Service Clearances

18" from all sides.
Check local and national codes for additional clearance requirements.

Emissions

All models < 20 ppm NOx.

** Do not size vent and gas line based only upon connection diameter at the appliance. Refer to installation manual for sizing requirements.

Intertek Intertek HLW

PV 8294 11-2018
July 29, 2021

PVI Industries, LLC
Fort Worth, TX ▪ (800) 784-8326 ▪ www.pvi.com

LavAdvantage™

Thermostatic Heater Ideal for Handwashing and Other Fixed or Variable Flow Applications

Specifications
Tankless Electric Water Heater

Applications

- Handwashing
- Kitchen, bar, utility sinks
- Fixed or variable flow
- Ideal for multiple sensor or metering faucets
- Eyewash fountains (EE models - 90°F max)
- Sanitation (S models - 180°F)

Performance Features

- Self-diagnostics with intelligent controls actively protect heater in installed environment
- SafeStart™ technology engages upon start-up to help avoid dry-fire occurrence
- Industry's lowest activation with 0.2 GPM turn on flow
- Digital LED display with accessible user interface communicates system status and heater operation feedback
- Silent operation on all models except for SPEX012240T
- Mounts in any orientation for a flexible installation
- Compact size fits almost anywhere; suitable for ADA compliant facilities
- Only one input line, hot or cold, needed for an easy installation
- Designed to deliver hot water to a single pipe faucet, mixing valves or mixing faucets
- Integral 3/8" compression fittings; no soldering or sweat connections required
- No T&P relief valve needed (check local codes); Ready to go, right out-of-the-box
- Save water and time by installing unit at the point-of-use
- Control system activates heater only on demand
- High temperature limit switch enables safe operation
- Active energy management with power modulation allows for thermostatic accuracy
- 5-year limited warranty on leaks, 1-year on parts

Product Specifications

Dimensions:	10.75" x 5.25" x 3"
Weight:	4 lb
Cover:	ABS-UL rated 94 5VA
Color:	White
Adj. Temperature Range:	70°F-140°F*
Min. Dynamic Operating Pressure:	30 PSI
Max. Dynamic Operating Pressure:	150 PSI
Element:	Replaceable Nichrome cartridge insert
Fittings:	3/8" compression fittings
UL listed file number:	E86887

U.S. Patent #'s: 4,762,980 and 4,960,976

Special Design Service

Inquiries for units for unique applications are welcome.
Call our Technical Service department at **1-800-543-6163**.

Tested and certified by the Water Quality Association against NSF/ANSI 372 for lead free compliance.

Assembled In USA

bimobject Find our products on bimobject.com BIM

Note: For optimum performance, mounting location should be located within 2 feet of fixture.

Suggested Specification

Tankless water heater shall be an Eemax LavAdvantage model number SPEX_____.

Unit shall have ABS-UL 94 5VA rated cover. Unit shall have 0.2 GPM turn on. Unit shall allow mounting in any direction. Element shall be replaceable cartridge insert. Unit shall have replaceable filter in the inlet connector. Element shall be iron free, Nickel Chrome material. Tankless water heater to utilize complex algorithm, actively managing power application to real time system demand. Integrated flow meter, along with inlet and outlet temperature sensors provide data which allows the unit to instantly adapt to variations in input parameters. Heater shall be fitted with 3/8" compression fittings to eliminate need for soldering. Maximum operating pressure of 150 PSI. Accessible diagnostic features to include error/fault display. Hot water storage tanks prohibited. Unit shall be Eemax or approved equal.

Tankless water heater user interface must have the following capabilities:

- Selectable display including Celsius /Fahrenheit, setpoint, flow rate, inlet temperature outlet temperature, power factor
- Capable of displaying flow rate in gallons per minute & liters per minute
- Diagnostic features to include error/fault display
- Control board must maintain error/fault history of 5 events

Specification options to be included with SPEX models:

_____	**EE**	Emergency Eyewash. Meets ANSI tepid water requirements. Factory set to 90°F. Max temp. 90°F.
_____	**ML**	Multiple Lavatory. Factory set to 110°F. Max temp. 110°F
_____	**S**	Sanitation. Factory set to 120°F. Max temp. 180°F.
_____	**N4**	NEMA 4 steel cabinet with powder coat finish
_____	**N4X**	NEMA 4 stainless steel, corrosion-resistant cabinet

*Special settings available, see specification options

Information and product specifications contained in this document are subject to change without notice. REV 2020-01

LavAdvantage

Thermostatic Heater Ideal for Handwashing and Other Fixed or Variable Flow Applications

Specifications

Tankless Electric Water Heater

	MODEL NUMBER	kW	AMPS	RECOM'D WIRE SIZE (75° C/CU)	TURN ON (GPM)	TEMPERATURE RISE °F 0.35 GPM	0.5 GPM	1.0 GPM	2.0 GPM
	VOLTS 120								
C	**SPEX1812T**	1.8	15	14 AWG	0.2	35°	25°	12°	6°
C	**SPEX1812T EE**	1.8	15	14 AWG	0.2	35°	25°	12°	6°
C	**SPEX1812T S**	1.8	15	14 AWG	0.2	35°	25°	12°	6°
C	**SPEX2412T**	2.4	20	14 AWG	0.2	47°	33°	16°	8°
C	**SPEX2412T EE**	2.4	20	14 AWG	0.2	47°	33°	16°	8°
C	**SPEX2412T S**	2.4	20	14 AWG	0.2	47°	33°	16°	8°
C	**SPEX3012T**	3.0	25	12 AWG	0.2	59°	41°	20°	10°
C	**SPEX3012T EE**	3.0	25	12 AWG	0.2	59°	41°	20°	10°
C	**SPEX3012T S**	3.0	25	12 AWG	0.2	59°	41°	20°	10°
C	**SPEX3512T**	3.5	29	10 AWG	0.2	68°	48°	24°	12°
C	**SPEX3512T EE**	3.5	29	10 AWG	0.2	†	48°	24°	12°
C	**SPEX3512T ML**	3.5	29	10 AWG	0.2	68°	48°	24°	12°
C	**SPEX3512T S**	3.5	29	10 AWG	0.2	68°	48°	24°	12°
	VOLTS 240*								
C	**SPEX35T**	3.5	15	14 AWG	0.2	68°	48°	24°	12°
C	**SPEX35T** (derated 208V perf.)	2.7	13	14 AWG	0.2	53°	37°	18°	9°
C	**SPEX35T EE**	3.5	15	14 AWG	0.2	†	48°	24°	12°
C	**SPEX35T ML**	3.5	15	14 AWG	0.2	68°	48°	24°	12°
C	**SPEX35T S**	3.5	15	14 AWG	0.2	68°	48°	24°	12°
C	**SPEX48T**	4.8	20	14 AWG	0.2	94°	66°	33°	16°
C	**SPEX48T** (derated 208V perf.)	3.6	17	14 AWG	0.2	70°	49°	25°	12°
C	**SPEX48T EE**	4.8	20	14 AWG	0.2	†	†	33°	16°
C	**SPEX48T ML**	4.8	20	14 AWG	0.2	94°	66°	33°	16°
C	**SPEX48T S**	4.8	20	14 AWG	0.2	94°	66°	33°	16°
C	**SPEX55T**	5.5	23	12 AWG	0.2	107°	75°	38°	19°
C	**SPEX55T** (derated 208V perf.)	4.1	20	12 AWG	0.2	80°	56°	28°	14°
C	**SPEX55T EE**	5.5	23	12 AWG	0.2	†	†	38°	19°
C	**SPEX55T ML**	5.5	23	12 AWG	0.2	107°	75°	38°	19°
C	**SPEX55T S**	5.5	23	12 AWG	0.2	107°	75°	38°	19°
C	**SPEX65T**	6.5	27	10 AWG	0.2	†	89°	44°	22°
C	**SPEX65T** (derated 208V perf.)	4.9	24	10 AWG	0.2	96°	67°	33°	17°
C	**SPEX65T EE**	6.5	27	10 AWG	0.2	†	†	44°	22°
C	**SPEX65T ML**	6.5	27	10 AWG	0.2	†	89°	44°	22°
C	**SPEX65T S**	6.5	27	10 AWG	0.2	127°	89°	44°	22°
C	**SPEX75T**	7.5	32	10 AWG	0.2	†	102°	51°	26°
C	**SPEX75T** (derated 208V perf.)	5.6	27	10 AWG	0.2	109°	76°	38°	19°
C	**SPEX75T EE**	7.5	32	10 AWG	0.2	†	†	51°	26°
C	**SPEX75T ML**	7.5	32	10 AWG	0.2	†	102°	51°	26°
C	**SPEX75T S**	7.5	32	10 AWG	0.2	146°	102°	51°	26°
C	**SPEX95T**	9.5	40	8 AWG	0.2	†	†	65°	32°
C	**SPEX95T** (derated 208V perf.)	7.0	34	8 AWG	0.2	†	96°	48°	24°
C	**SPEX95T EE**	9.5	40	8 AWG	0.2	†	†	†	32°
C	**SPEX95T ML**	9.5	40	8 AWG	0.2	†	†	65°	32°
C	**SPEX95T S**	9.5	40	8 AWG	0.2	†	130°	65°	32°
C	**SPEX012240T**	11.5	48	8 AWG	0.2	†	†	79°	39°
C	**SPEX012240T** (derated 208V perf.)	8.7	42	8 AWG	0.2	†	†	59°	30°
C	**SPEX012240T EE**	11.5	48	8 AWG	0.2	†	†	†	39°
C	**SPEX012240T ML**	11.5	48	8 AWG	0.2	†	†	79°	39°
C	**SPEX012240T S**	11.5	48	8 AWG	0.2	†	†	79°	39°

* 240V units can be used on 208V single phase with 25% reduced temperature output. Please note per UL standards the rating plate and installation instructions will all be according to a 240V applied voltage. Check with local officials prior to derating the electrical infrastructure.

† Temperature electronically limited to factory preset not to exceed temperature.

"C" indicates evaluation and compliance to either Underwriters Laboratories (UL) or Intertek (ETL) under CAN/CSA-C22.2 No. 64/No. 88.

	MODEL NUMBER	kW	AMPS	RECOM'D WIRE SIZE (75° C/CU)	TURN ON (GPM)	TEMPERATURE RISE °F 0.35 GPM	0.5 GPM	1.0 GPM	2.0 GPM
	VOLTS 208 Single Phase								
C	**SPEX3208T**	3.0	15	14 AWG	0.2	59°	41°	20°	10°
C	**SPEX3208T ML**	3.0	15	14 AWG	0.2	59°	41°	20°	10°
C	**SPEX4208T**	4.1	20	14 AWG	0.2	80°	56°	28°	14°
C	**SPEX4208T EE**	4.1	20	14 AWG	0.2	†	56°	28°	14°
C	**SPEX4208T ML**	4.1	20	14 AWG	0.2	80°	56°	28°	14°
C	**SPEX4208T S**	4.1	20	14 AWG	0.2	80°	56°	28°	14°
C	**SPEX8208T**	8.3	40	8 AWG	0.2	†	†	57°	28°
C	**SPEX8208T EE**	8.3	40	8 AWG	0.2	†	†	57°	28°
C	**SPEX8208T ML**	8.3	40	8 AWG	0.2	†	†	57°	28°
C	**SPEX8208T S**	8.3	40	8 AWG	0.2	†	113°	57°	28°
	VOLTS 277 Single Phase								
	SPEX3277T	3.0	11	14 AWG	0.2	59°	41°	20°	10°
	SPEX3277T EE	3.0	11	14 AWG	0.2	59°	41°	20°	10°
	SPEX3277T ML	3.0	11	14 AWG	0.2	59°	41°	20°	10°
	SPEX3277T S	3.0	11	14 AWG	0.2	59°	41°	20°	10°
	SPEX4277T	4.1	15	14 AWG	0.2	80°	56°	28°	14°
	SPEX4277T EE	4.1	15	14 AWG	0.2	†	56°	28°	14°
	SPEX4277T ML	4.1	15	14 AWG	0.2	80°	56°	28°	14°
	SPEX4277T S	4.1	15	14 AWG	0.2	80°	56°	28°	14°
	SPEX60T	6.0	22	12 AWG	0.2	†	82°	41°	20°
	SPEX60T EE	6.0	22	12 AWG	0.2	†	†	41°	20°
	SPEX60T ML	6.0	22	12 AWG	0.2	†	82°	41°	20°
	SPEX60T S	6.0	22	12 AWG	0.2	117°	82°	41°	20°
	SPEX80T	8.0	29	10 AWG	0.2	†	109°	55°	27°
	SPEX80T EE	8.0	29	10 AWG	0.2	†	†	55°	27°
	SPEX80T ML	8.0	29	10 AWG	0.2	†	109°	55°	27°
	SPEX80T S	8.0	29	10 AWG	0.2	†	109°	55°	27°
	SPEX90T	9.0	33	10 AWG	0.2	†	†	61°	31°
	SPEX90T EE	9.0	33	10 AWG	0.2	†	†	†	31°
	SPEX90T ML	9.0	33	10 AWG	0.2	†	†	61°	31°
	SPEX90T S	9.0	33	10 AWG	0.2	†	123°	61°	31°
	SPEX100T	10.0	36	8 AWG	0.2	†	†	68°	34°
	SPEX100T EE	10.0	36	8 AWG	0.2	†	†	†	34°
	SPEX100T ML	10.0	36	8 AWG	0.2	†	†	68°	34°
	SPEX100T S	10.0	36	8 AWG	0.2	†	137°	68°	34°

Suffix Definitions

EE	Meets ANSI Z358.1 tepid water requirements. Max. temperature 90°F
ML	Multi lavs 0.2 turn on with 110° temp setting
S	Sanitation not to exceed 180°

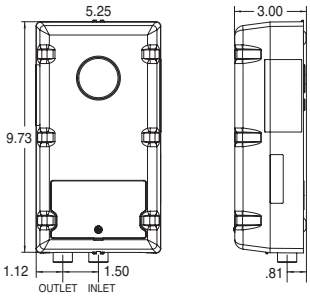

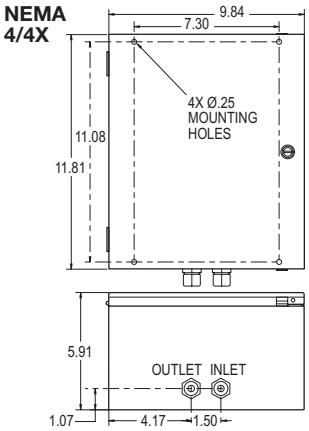

Information and product specifications contained in this document are subject to change without notice. REV 2020-01

Afwall® Millennium™ FloWise® Elongated Flushometer Toilet

VITREOUS CHINA LESS EVERCLEAN®

BARRIER FREE

Afwall® Millenium™ FloWise® Elongated Flushometer Toilet LESS EverClean®

- Wall-mounted flushometer valve toilet
- Vitreous china
- Conventional glaze
- High Efficiency, Low Consumption. Operates in the range of 1.1 gpf to 1.6 gpf (4.2 Lpf to 6.0 Lpf)
- Meets definition of HET (High Efficiency Toilet) when used with a high efficiency flush valve (1.1 gpf - 1.6 gpf or 1.28/1.1 gpf dual flush)
- Maximum Performance (MaP) score of 1,000 grams at 1.1 gpf - 1.6 gpf
- Condensation channel
- Concealed trapway design
- Elongated bowl
- Powerful direct-fed siphon jet action
- 1-1/2" inlet spud
- Fully-glazed 2-1/8" trapway
- 10" x 12" water surface area
- Tested to support static weight load of 1,000 lbs. (454 kg)

❏ **2257.101** Elongated bowl only, top spud
❏ **2633.101** Elongated bowl only, top spud with slotted rim for bedpan holding
❏ **2634.101** Elongated bowl only, back spud

System MaP* Score:
- 1,000 grams of miso @ 1.1 gpf to 1.6 gpf when used with an American Standard flush valve

* Maximum Performance (MaP) testing performed by IAPMO R&T Lab. MaP Report conducted by Veritec Consulting, Inc. and Koeller and Company.

Component Parts:
❏ **047007-0070A** Inlet Spud (furnished with bowl)

Nominal Dimensions:
660 x 356 x 381mm
(26" x 14" x 15")

Recommended working pressure–between 25 psi at valve when flushing and 80 psi static

Fixture only, less seat, bolt caps, and flushometer valve

Compliance Certifications - Meets or Exceeds the Following Specifications:
- ASME A112.19.2/CSA B45.1 for Vitreous China Fixtures

SEE REVERSE FOR ROUGHING-IN DIMENSIONS

To Be Specified:
❏ Color: ❏ White
❏ Seat:
  ❏ American Standard #5901.100 Heavy duty open front less cover
  ❏ American Standard #5905.100 Extra heavy duty open front less cover
❏ Flushometer Valve:
  ❏ 1.6 gpf:
    ❏ Sensor-Operated: American Standard Selectronic® DC Power #6065.161.002 (Top Spud) AC Power #6067.161.002 (Top Spud)
    ❏ Manual: American Standard #6047.161.002 (Top Spud)
  ❏ 1.28 gpf:
    ❏ Sensor-Operated: American Standard Selectronic® DC Power #6065.121.002 (Top Spud) AC Power #6067.121.002 (Top Spud)
    ❏ Manual: American Standard #6047.121.002 (Top Spud)
  ❏ 1.6 / 1.1 gpf Dual Flush:
    ❏ Sensor-Operated: American Standard Selectronic® DC Power #6065.761.002 (Top Spud) AC Power #6067.761.002 (Top Spud)
  ❏ 1.28 / 1.1 gpf Dual Flush:
    ❏ Sensor-Operated: American Standard Selectronic® DC Power #6065.721.002 (Top Spud) AC Power #6067.721.002 (Top Spud)

MEETS THE AMERICANS WITH DISABILITIES ACT GUIDELINES AND ANSI A117.1 REQUIREMENTS FOR ACCESSIBLE AND USABLE BUILDING FACILITIES - CHECK LOCAL CODES.
- When installed so top of seat is 432 to 483mm (17" to 19") from the finished floor.

ENVIROMENTAL PRODUCT DECLARATION

When used with **1.1 or 1.28 gpf** toilet flush valves

ADA COMPLIANT

WATER EFFICIENT

© 2018 AS America Inc.

Afwall® Millennium™ FloWise® Elongated Flushometer Toilet

VITREOUS CHINA LESS EVERCLEAN®

BARRIER FREE

2257.101/2633.101

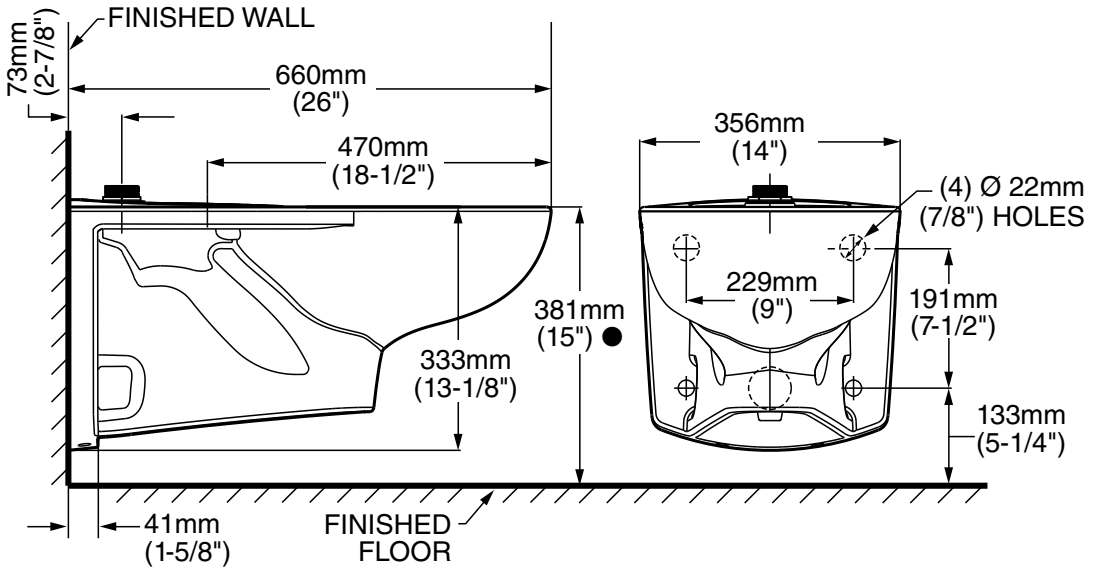

2634.101

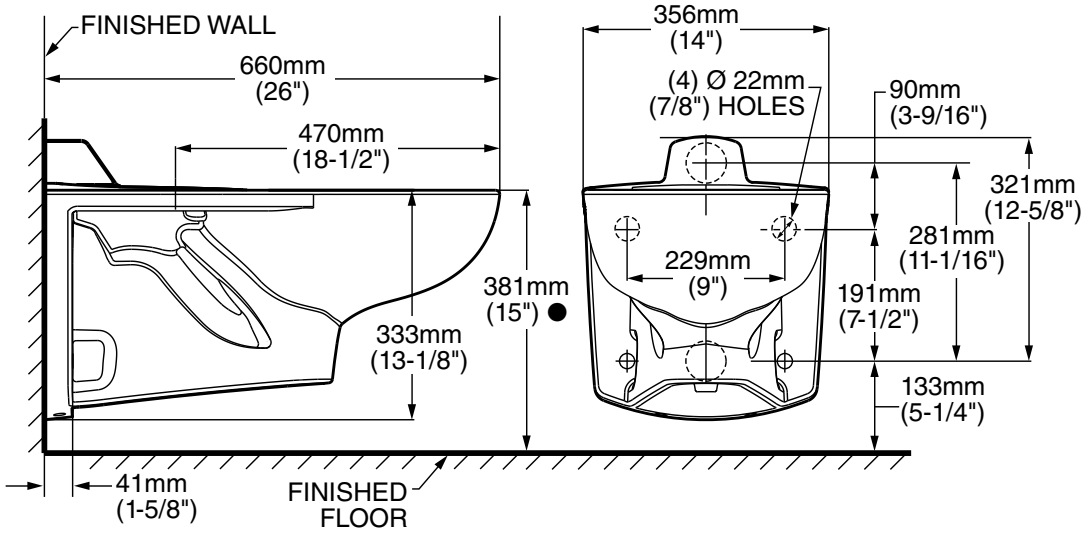

NOTES:

● Toilet designed to meet ADA accessibility standards when top of seat height set at 432 to 483mm (17" to 19") from finished floor.

PRODUCT 2257 SHOWN, 2366 SAME EXCEPT WITH SLOTTED RIM FOR BED PAN HOLDING.
WASTE OUTLET SEAL RING MUST BE NEOPRENE OR GRAPHITE-FELT (WAX RING NOT RECOMMENDED).
SUGGESTED 2mm (1/16) CLEARANCE BETWEEN FACE OF WALL AND BACK OF BOWL.
TO COMPLY WITH AREA CODE GOVERNING THE HEIGHT OF VACUUM BREAKER ON THE FLUSHOMETER VALVE, THE PLUMBER MUST VERIFY DIMENSIONS SHOWN FOR SUPPLY ROUGHING.
FLUSHOMETER VALVE NOT INCLUDED WITH FIXTURE AND MUST BE ORDERED SEPARATELY.
CARRIER FITTING AS REQUIRED TO BE FURNISHED BY OTHERS.
PROVIDE SUITABLE REINFORCEMENT FOR ALL WALL SUPPORT.

IMPORTANT: Dimensions of fixtures are nominal and may vary within the range of tolerances established by ANSI Standard A112.19.2. These measurements are subject to change or cancellation. No responsibility is assumed for use of superseded or voided pages

© 2018 AS America Inc.

PART OF LIXIL

Washbrook® FloWise® Universal Urinal

VITREOUS CHINA

BARRIER FREE

Washbrook® FloWise®
Universal Urinal

- Vitreous china
- Ultra High Efficiency, Low Consumption. Operates in the range of 0.125gpf to 1.0gpf (0.5 Lpf to 3.8 Lpf)
- Flushing rim
- Elongated 14" rim from finished wall
- Washout flush action
- Extended sides for privacy
- 3/4" inlet spud
- Outlet connection threaded 2" inside (NPTF)
- 2 wall hangers
- Fixture only
- Strainer included
- Meets ASME flush requirements at 0.125 to 1.0 gpf

❏ **6590.001** Universal Top spud
❏ **6515.001** Universal Back spud

Nominal Dimensions:
360 x 480 x 664mm
(14-1/8" x 18-7/8" x 26-1/8")

Recommended working pressure – between 20 psi at valve when flushing and 80 psi static

Compliance Certifications -
Meets or Exceeds the Following Specifications:
- ASME A112.19.2-2008/CSA B45.1-08 for Vitreous China Fixtures

SEE REVERSE FOR ROUGHING-IN DIMENSIONS

To Be Specified:
❏ Color: ❏ White
❏ Flush Valve:

1.0 gpf Flush Valve: Sensor-Operated:
❏ American Standard Selectronic® #6063.101.002 DC Power (Top Spud)
❏ American Standard Selectronic® #6062.101.002 AC Power (Back Spud)

1.0 gpf Flush Valve: Manual-Operated:
❏ American Standard # 6045.101.002

0.5 gpf Flush Valve: Sensor-Operated:
❏ American Standard Selectronic® #6063.051.002 DC Power (Top Spud)
❏ American Standard Selectronic® #6062.051.002 AC Power (Back Spud)

0.5 gpf Flush Valve: Manual-Operated:
❏ American Standard #6045.051.002

0.125 gpf Flush Valve: Sensor-Operated:
❏ American Standard Selectronic® #6063.013.002 DC Power (Top Spud)
❏ American Standard Selectronic® #6062.013.002 AC Power (Back Spud)

0.125 gpf Flush Valve: Manual-Operated:
❏ American Standard #6045.013.002

MEETS THE AMERICANS WITH DISABILITIES ACT GUIDELINES AND ANSI A117.1 ACCESSIBLE AND USABLE BUILDINGS AND FACILITIES - CHECK LOCAL CODES.
● When installed so top of rim is 432mm (17") MAXIMUM from finished floor.

CEC — When used with **0.125 gpf** urinal flush vale

WaterSense — When used with **0.125 or 0.5 gpf** urinal flush vale

ADA — ADA COMPLIANT

© 2018 AS America Inc.

Washbrook® FloWise® Universal Urinal

VITREOUS CHINA

BARRIER FREE

6590.001 TOP SPUD

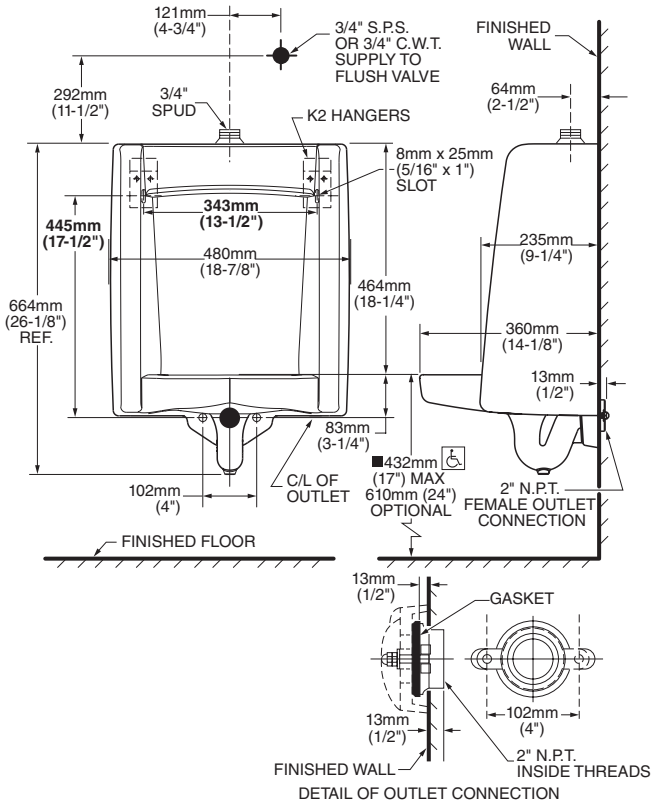

DETAIL OF OUTLET CONNECTION

6515.001 BACK SPUD

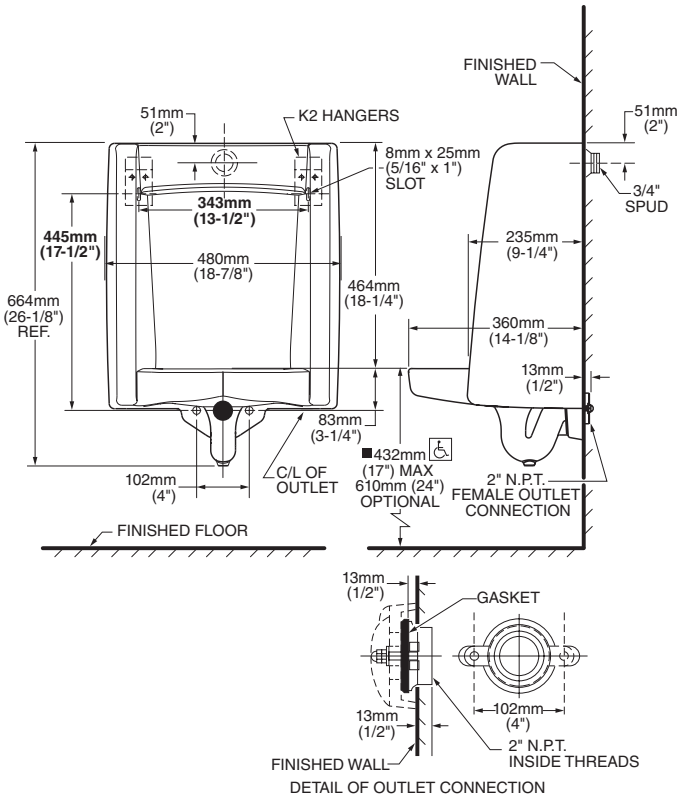

DETAIL OF OUTLET CONNECTION

■ **MEETS THE AMERICANS WITH DISABILITIES ACT GUIDELINES AND ANSI A117.1 ACCESSIBLE AND USABLE BUILDINGS AND FACILITIES - CHECK LOCAL CODES.**

- When installed so top of rim is 432mm (17") MAXIMUM from finished floor.

NOTES:
FLUSH VALVE NOT INCLUDED AND MUST BE ORDERED SEPARATELY.
PROVIDE SUITABLE REINFORCEMENT FOR ALL WALL SUPPORTS.

IMPORTANT: Dimensions of fixtures are nominal and may vary within the range of tolerances established by ANSI Standard A112.19.2. These measurements are subject to change or cancellation. No responsibility is assumed for use of superseded or voided pages.

© 2018 AS America Inc.

PART OF LIXIL

Commercial Shower System Trim Kit

For Flash Rough Shower Valve

1.5 GPM with Hand Shower

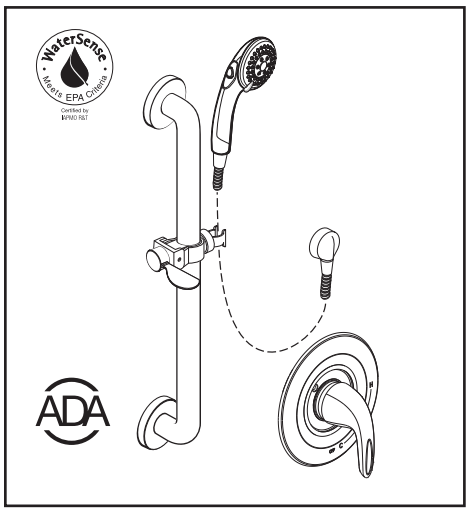

GENERAL DESCRIPTION:

Commercial shower system trim kit includes metal valve trim, wall supply (with 1/2" NPT female inlet and 1/2" NPSM male outlet), a 59" (1500 mm) metal shower hose, vacuum breaker, a 3-function hand shower with non-positive shut-off and a 36" slide-grab bar. One-piece double ceramic pressure balance cartridge maintains a constant output temperature in response to changes in relative hot and cold supply pressure. Integral check valves prevent cross flow. Adjustable hot limit safety stop. Back-to-back capable. Durable valve trim with metal handle and escutcheon. 36" long combination slide bar / grab bar. 1-1/2" diameter stainless steel bar that meets ANSI standard 250 lb pull test. Chrome-plated hand shower holder with ADA compliant lever handle. 1.5 gpm/5.7 L/min.

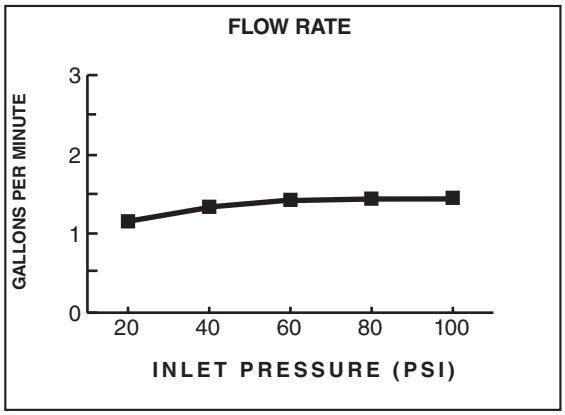

MODEL NUMBER:

❑ TU662SG.211 Commercial Shower System Kit

Includes:

• Reliant3 Valve Only Trim - Includes Pressure Balance Cartridge	TU385500WD **
• 3-Function Hand Shower with non-positive shut-off	1660.766
• In-Line Vacuum Breaker	1660.400
• 59" Metal Hose	8888.035
• Wall Supply	8888.037
• 36" Slide-Grab Bar	1662.236

**** Flash rough-in valve must be purchased separately**

PRESSURE BALANCE CARTRIDGE:

One-Piece Cartridge: Simplifies installation and maintenance.

Double Ceramic Pressure Balance Cartridge: Combination of ceramic disc mixing valve and a ceramic balancing spool in a one-piece cartridge.

Ceramic Disc Mixing Valve: Assures a lifetime of drip-free performance and smooth handle operation.

Ceramic Balancing Spool: Maintains a constant output temperature in response to changes in relative hot and cold supply pressure. Ceramic material is unaffected by mineral deposits and harsh water conditions.

Integrated Check Valves: Engineered to eliminate cross flow.

Adjustable Hot Limit Safety Stop: Limits the amount of hot water allowed to mix with cold. Reduces the risk of accidental scalding.

Comfort Zone: Offers a wider range to fine tune the desired temperature.

Back-to-Back Capability: Hot and cold can be reversed quickly and easily.

Trim Kit: Metal escutcheon with metal lever. Red / blue indicator ring.

PERSONAL SHOWER:

Water Saving: Saves 40% in water usage.

ADA-Compliant: Non-positive shut-off button on handle reduces flow to a trickle.

SLIDE-GRAB BAR:

Stronger Than Standard Slide Bars: 1-1/2" diameter stainless steel bar meets ANSI standard 250 lb. pull test. Chrome-plated hand shower holder with ADA compliant lever handle.

SUGGESTED SPECIFICATION

Commercial shower system trim kit shall feature metal valve trim, wall supply (with 1/2" NPT female inlet and 1/2" NPSM male outlet), 59" metal hose, vacuum breaker, 1.5 gpm/5.7 L/min. 3-function hand shower with non-positive shut-off and a 36" slide-grab bar. Shall also feature one-piece double ceramic pressure balance cartridge. Fitting shall be American Standard Model # TU662SG.211.002.

© 2019 AS America Inc.

Commercial Shower System Trim Kit

For Flash Rough Shower Valve

1.5 GPM with Hand Shower

CODES AND STANDARDS

These products meet or exceed the following codes and standards:

ASSE 1016
ASME A112.18.1016
CSA B125.16
ASME A112.18.1
CSA B125.1

Product Number	Description	Finish Polished Chrome 002
TU662SG.211	Commercial Shower System Trim Kit. Contains double ceramic pressure balance cartridge, valve trim kit, 3-function water saving hand shower with non-positive shut-off, metal hose, vacuum breaker, wall supply and 36" slide-grab bar. 1.5 gpm/5.7 L/min. **** Flash rough-in valve must be purchased separately**	

RELIANT 3 (TU3885500WD)

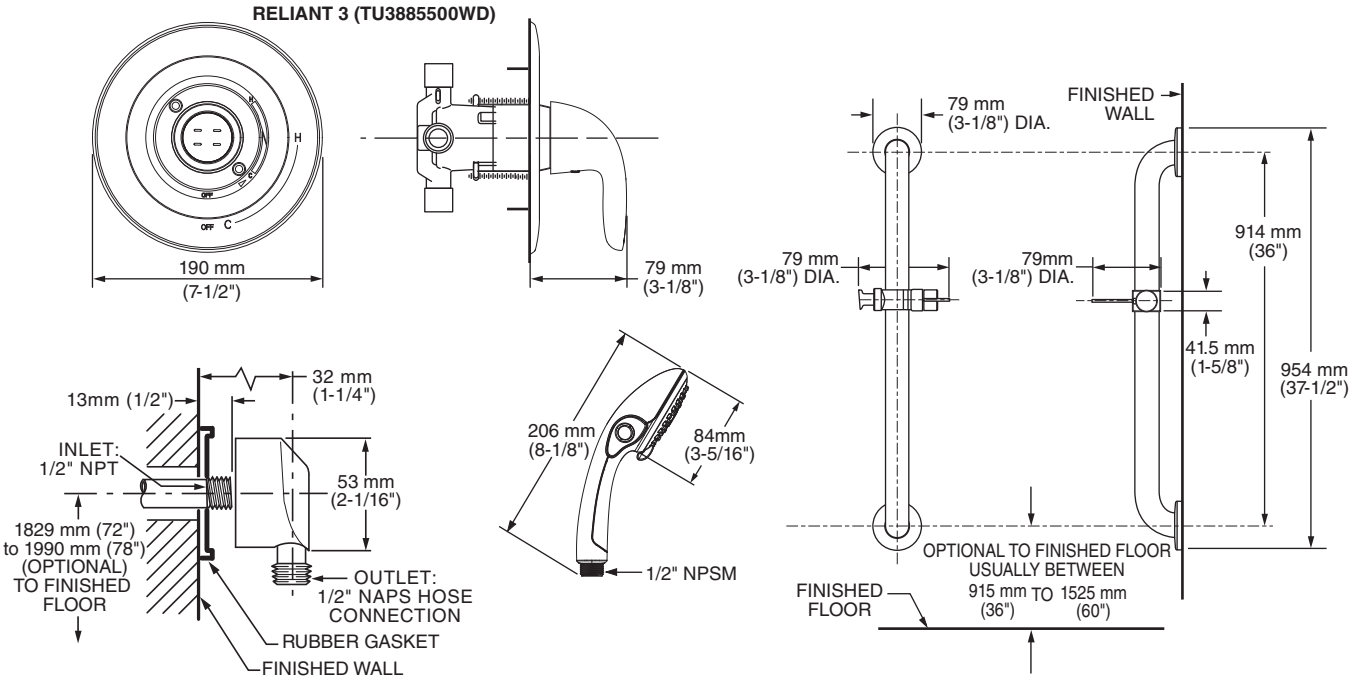

PART OF LIXIL

© 2019 AS America Inc.

ELKAY®
SPECIFICATIONS

Elkay ezH2O Bottle Filling Station & Single ADA Cooler High Efficiency Filtered Refrigerated Stainless
Model LZSG8WSSK

PRODUCT SPECIFICATIONS

Elkay ezH2O® Bottle Filling Station & Single ADA Cooler, High Efficiency Filtered Refrigerated Stainless. Chilling Capacity of 8.0 GPH (gallons per hour) of 50° F drinking water, based on 80° F inlet water and 90° F ambient, per ASHRAE 18 testing. Features shall include Antimicrobial, Filtered, Green Ticker™, Hands Free, High Efficiency, Laminar Flow, Real Drain, Visual Filter Monitor. Furnished with Flexi-Guard ® StreamSaver ™ bubbler. Electronic Bottle Filler Sensor with Electronic Front and Side Bubbler Pushbar activation. Product shall be Wall Mount (On Wall), for Indoor applications, serving 1 station(s). Unit shall be certified to UL 399 and CAN/CSA C22.2 No. 120. Unit shall be lead-free design which is certified to NSF/ANSI 61 & 372 (lead free) and meets Federal and State low-lead requirements.

Special Features:	Antimicrobial, Filtered, Green Ticker™, Hands Free, High Efficiency, Laminar Flow, Real Drain, Visual Filter Monitor
Finish:	Stainless Steel
Power:	115V/60Hz
Bubbler Style:	Flexi-Guard ® StreamSaver ™
Activation by:	Electronic Bottle Filler Sensor with Electronic Front and Side Bubbler Pushbar
Mounting Type:	Wall Mount (On Wall)
Chilling Capacity*:	8.0 GPH
Full Load Amps	6
Rated Watts:	360
Dimensions (L x W x H):	18-3/8" x 19" x 39-1/16"
Approx. Shipping Weight:	85 lbs.
Installation Location:	Indoor
No. of Stations Served:	1
*Based on 80° F inlet water & 90° F ambient air temp for 50° F chilled drinking water.	

Special Note: Installs with stainless steel back panel (1000004833); accessory to enhance design & ease of installation.

- Visual Filter Monitor: LED Filter Status Indicator for when filter change is necessary.
- Filter is certified to NSF 42 and 53 for lead, particulate, chlorine, taste and odor reduction. 3,000 gal. capacity.
- High-performance compressor and insulation greatly reduce energy consumption.
- Green Ticker: Informs user of number of 20 oz. plastic water bottles saved from waste.
- Laminar flow provides clean fill with minimal splash.
- Silver Ion Antimicrobial protection on key plastic components to inhibit the growth of mold and mildew.
- Real Drain System eliminates standing water.

PART:_____QTY: _____

PROJECT:_____

CONTACT:_____

DATE:_____

NOTES:_____

APPROVAL:_____

AMERICAN PRIDE. A LIFETIME TRADITION.
Like your family, the Elkay family has values and traditions that endure. For almost a century, Elkay has been a family-owned and operated company, providing thousands of jobs that support our families and communities.

Included with Product: **Water Cooler (LZSG8WSS), Bottle Filler (LZWSR), Filter**

▼ **Ships in multiple boxes.**

PRODUCT COMPLIANCE

ADA & ICC A117.1

ASME A112.19.3/CSA B45.4

Buy American Act

CAN/CSA C22.2 No. 120

GreenSpec®

NSF/ANSI 42, 53, 61, & 372 (lead free)

UL 399

Complies with ADA & ICC A117.1 accessibility requirements when installed according to the requirements outlined in these standards. Installation may require additional components and/or construction features to be fully compliant. Consult the local Authority Having Jurisdiction if necessary.

Installation Instructions (PDF)

5 Year Limited Warranty on the refrigeration system of the unit. Electrical components and water system are warranted for 12 months from date of installation. **Warranty pertains to drinking water applications only. Non-drinking water applications are not covered under warranty.**

Warranty (PDF)

In keeping with our policy of continuing product improvement, Elkay reserves the right to change product specifications without notice. Please visit elkay.com for the most current version of Elkay product specification sheets. This specification describes an Elkay product with design, quality, and functional benefits to the user. When making a comparison of other producers' offerings, be certain these features are not overlooked.

COOLING SYSTEM

- Compressor: Hermetically-sealed, reciprocating type, single phase. Sealed-in lifetime lubrication.
- Condenser: Fan cooled, copper tube with aluminum fins. Fan motor is permanently lubricated.
- Cooling Unit: Combination tube-tank type. Continuous copper tubing with is fully insulated with EPS foam that meets UL requirements for self-extinguishing material.
- Refrigerant Control: Refrigerant HFC-134a is controlled by accurately calibrated capillary tube for positively trouble-free operation.
- Temperature Control: Easily accessible enclosed adjustable thermostat is factory preset. Requires no adjustment other than for altitude requirements.

OPTIONAL ACCESSORIES

51300C - Elkay WaterSentry Plus Replacement Filter (Bottle Fillers)
LKAPREZL - Elkay Cane Apron for EZ Gray
MLP100 - Accessory - In Wall Carrier (Single) for single EZ, LZ, EMABF, LMABF, VRC, LVRC models
WSF6000R-2PK - WaterSentry Fresh 6000 CTO Replacement Filter (2pack)

In keeping with our policy of continuing product improvement, Elkay reserves the right to change product specifications without notice. Please visit elkay.com for the most current version of Elkay product specification sheets. This specification describes an Elkay product with design, quality, and functional benefits to the user. When making a comparison of other producers' offerings, be certain these features are not overlooked.

IMPORTANT!
INSTALLER PLEASE NOTE :

This water cooler has been designed and built to provide water to the user which has not been altered by materials in the cooler waterways. The grounding of electrical equipment such as telephone, computer, etc. to water lines is a common procedure. The grounding may be in the building but may also occur away from the building. This grounding can cause electrical feedback into a water cooler creating an electrolysis which creates a metallic taste or causes an increase in the metal content of the water. This condition is avoidable by installing the cooler using the proper materials as shown below.

NOTICE

This water cooler must be connected to the water supply using a dielectric coupling. The cooler is furnished with a non-metallic strainer which meets this requirement. The drain trap which is provided by the installer should also be plastic to completely isolate the cooler from the building plumbing system.
Bottle filler unit on bracket attached to wall by 6 holes (as shown). Water and electrical will connect through pre-punched hole in basin.

OPERATION OF QUICK CONNECT FITTINGS

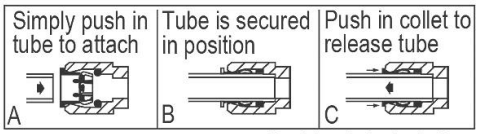

Pushing tube in before pulling it out helps to release tube

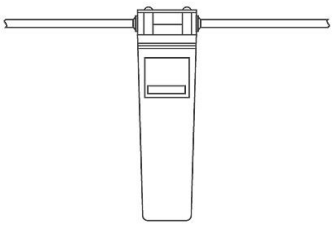

WaterSentry® Plus Filter System

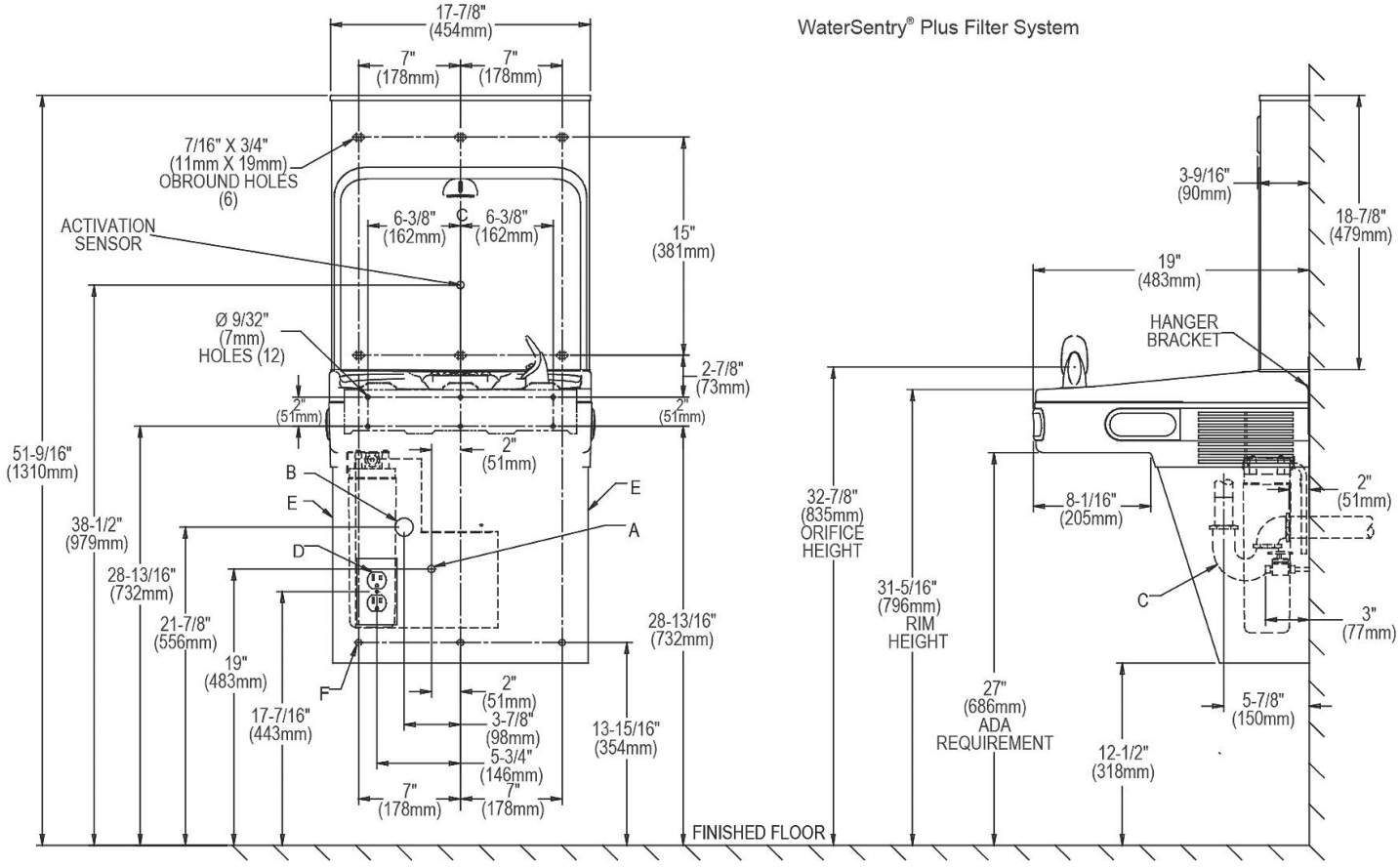

REDUCE HEIGHT BY 3 INCHES FOR INSTALLATION OF CHILDRENS ADA COOLER

LEGEND:
A = Recommended Water Supply location. Shut-off Valve (not furnished) to accept 3/8" O.D. unplated copper tube. Up to 3" (76mm) maximum out from wall.
B = Recommended Waste Outlet location. To accommodate 1-1/4" nominal drain. Drain stub 2" (51mm) out from wall.
C = 1-1/4" Trap (not furnished).
D = Electrical Supply (3) Wire Recessed Box Duplex Outlet.
E = Insure proper ventilation by maintaining 6" (152mm) minimum clearance from cabinet louvers to wall.
F = 7/16" (11mm) Bolt Holes for fastening to wall.
Note : New Installations Must Use Ground Fault Circuit Interrupter (GFCI). It is highly recommended that the circuit be dedicated and the load protection be sized for 20 amps.

In keeping with our policy of continuing product improvement, Elkay reserves the right to change product specifications without notice. Please visit elkay.com for the most current version of Elkay product specification sheets. This specification describes an Elkay product with design, quality, and functional benefits to the user. When making a comparison of other producers' offerings, be certain these features are not overlooked.

Precision Plumbing Products

"Specify with Confidence - Install with Pride"®

MINI-PRIME ELECTRONIC TRAP PRIMING MANIFOLD

MP-500

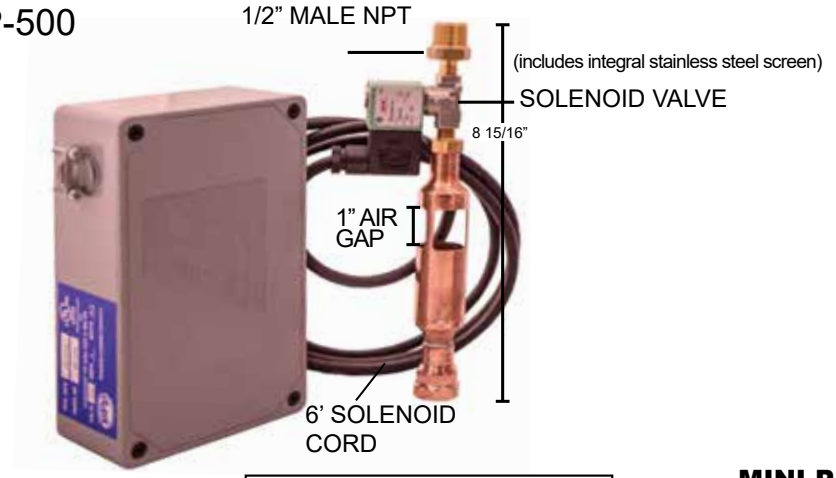

MPB-500

www.pppinc.net

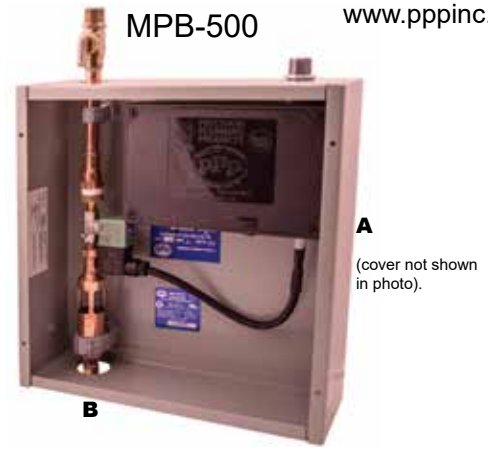

MINI-PRIME
MP-500-115V
MP-500-24V
MP-500-240V

c UL us

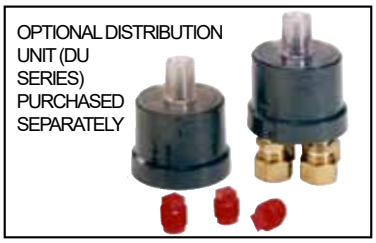

MINI-PRIME W/BOX
MPB-500-115V
MPB-500-24V
MPB-500-220V

ROUGH-IN DIMENSIONS
A. 12 INCHES
B. 12 INCHES
Depth 4 INCHES

c UL us

NEMA Type 1, UL 50, 12" x 12" x 4" - 16 gauge steel w/ screw on cover ANSI 61 gray polyester powder paint.

PLEASE NOTE:
Designed for use with 1 to 4 floor drains.
Must be installed above finished floor. (Consult Local Authority). Must have a minimum 12" from bottom of outlet before 90 degree elbow can be used. The furthest recommended distance of makeup line is approximately 20' to floor drain. Trap primer make up line must have a continuous slope to the floor drain (consult local code requirements).

RECYCLE TIMER BOX:
Pre-set timer opens once for 12 seconds every 24 hrs.
Dimensions - (L) 7 5/8" x (W) 4 5/8" x (D) 2 3/8"

INLET: 1/2" NPT Male. ANSI/ASME B1.20.1.
OUTLET: 1/2" NPT Female. ANSI/ASME B1.20.1

PROJECT SUBMITTAL MODEL # _____

Project: _____

Contractor: _____

Engineer: _____

Date Submitted: _____

Prepared By: _____

24 Volt MP/MPB
24/60 — 6.3 Watts, 8.8 VA Holding, 12.1 VA In Rush

120 Volt MP/MPB
120/60, 110/50 — 6.3 Watts, 8.8 VA Holding, 12.1 VA In Rush

220/240 Volt MP/MPB
240/60, 220/50 — 6.3 Watts, 8.8 VA Holding, 12.1 VA In Rush

DISTRIBUTION UNITS:
(DU Series) Drain Outlet: 5/8" and 1/2" Compression Fittings SAEJ512 -1/2" female NPT ANSI/ASME B1.20.1.

SOLDER JOINTS:
95-5 lead free. Containing lead not in the excess of 0.2%.

ELECTRICAL COMPONENTS:
2 Amp Circuit Breaker, Test Switch, Timer, Solenoid Valve UL Listed.
Electrical assembly listed per UL #73.

TEMPERATURE/PRESSURE:
32°-125° F, 20 PSI-150 PSI.
Minimum 8 oz. water at 60 PSI for up to 4 drains.

ACCESS DOOR FOR MP-500 Model:
D-814PC, D-814SS, F-814PC, F–814SS.

Precision Plumbing Products
Division of JL Industries, Inc.
802 SE 199th Ave
Portland, Oregon 97233
T (503) 256-4010
F (503) 253-8165

US PATENT NUMBER 5,797,419 CANADIAN PATENT NUMBER 2,174,578

Trusted. Tested. Tough.®

Product information presented here reflects conditions at time of publication. Consult factory regarding discrepancies or inconsistencies.

ZOELLER® PUMP COMPANY

SECTION: 2.65.050
FM2801
0620
Supersedes
0814

TECHNICAL DATA SHEET

Drain Pump Series

Models 104*, 105, 106, 110, 115, 120, 131, 132*

Remove water from areas where gravity flow is not available.

BASIN FEATURES

- Polypropylene construction
- 2" NPT vent
- 1-1/2" compression slip fit for top and side intake.
- Basin passes the 10' (3 m) stack test (models 104 and 132 will not)
- PVC "Full Flow" check valve with 1-1/2" or 1-1/4" slip X slip union (excludes model 104).
- Threaded connections

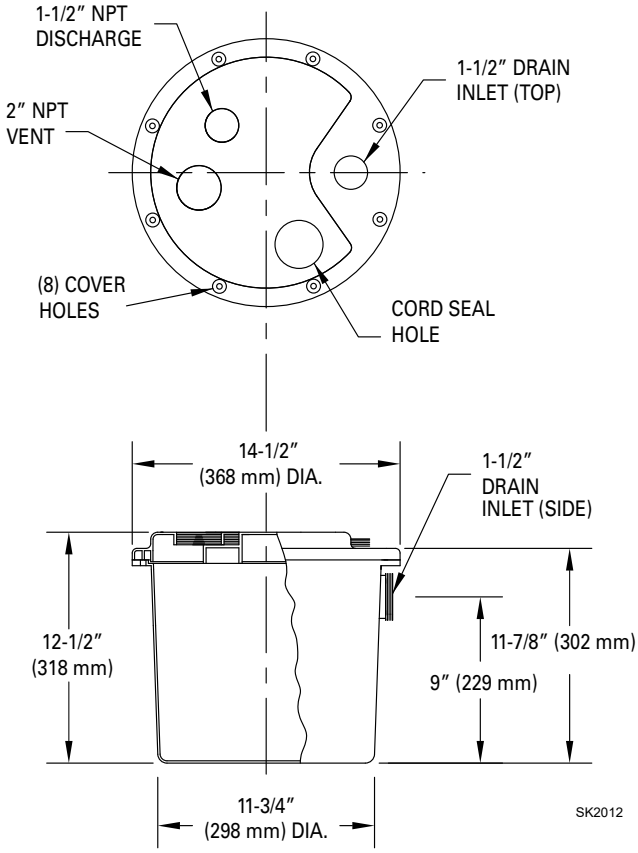

MODELS 104*, 132*

- 3/8" (9 mm) solids-passing capacity
- Temperature rated for 110 °F (43 °C)
- 1-1/2" NPT discharge
- 3400 RPM
- Oil free
- Includes 1-1/2" PVC slip union check valve
- Model 132 is preassembled
- Passes laundry lint
- 9" (2.7 m), UL Listed, 3-wire cord and plug
- Stainless steel screws, switch arm and lower motor housing
- Non-clogging vortex impeller

MODELS 105, 106, 110, 115, 120, 131

- 1/2" (12 mm) solids-passing capacity
- Temperature rated for 130°F (54°C)
- 1-1/2" NPT discharge
- 1550 RPM on 50 series pumps, 1725 RPM on 90 series
- M53, M55 and M98 with glass-filled polypropylene base
- M59 all bronze construction
- M57 and M63 all cast iron construction
- Includes 1-1/4" or 1-1/2" PVC slip x slip union check valve
- Passes laundry lint
- Automatic, float operated mechanical switch
- 9' (2.7 m), UL Listed, 3-wire cord and plug (15' [5 m] cord standard on model 98)
- Stainless steel screws, guard, handle and switch arm
- Non-clogging vortex impeller

* Models 104 & 132 are not UPC approved.

C US MEETS UPC COMPLIES WITH ASME A112.3.4 AND CSA B45.9. PN 01 ISO54

SSPMA

FAMILY OWNED AMERICAN PROUD

July 29, 2021

© Copyright 2020 Zoeller® Co. All rights reserved.

'8-7867 | 3649 Cane Run Road | Louisville, KY 40211-1961 | zoellerpumps.com

TOTAL DYNAMIC HEAD FLOW PER MINUTE

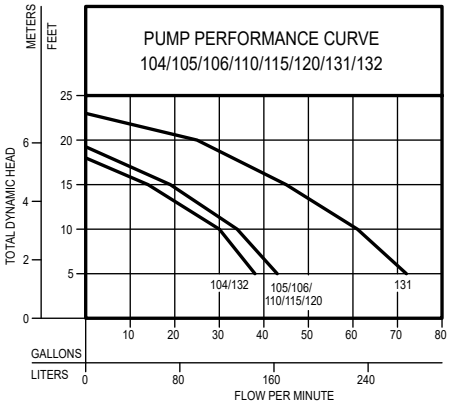

MODELS		104/132		105/106 110/115/120		131	
Feet	Meters	Gal.	Liters	Gal.	Liters	Gal.	Liters
5	1.5	38	144	43	163	72	273
10	3.0	30	114	34	129	61	231
15	4.6	14	53	19	72	45	170
20	6.1	--	--	--	--	25	95
Shut-off Head:		18 ft. (5.5m)		19.25 ft. (5.9m)		23 ft. (7.0m)	

009898

Model	MODEL COMPARISON								
	Seal	Mode	Volts	Ph	Amps	HP	Hz	Lbs	Kg
104 (M72)	Single	Auto	115	1	3.1	1/3	60	16	7
105 (M53)	Single	Auto	115	1	9.7	3/10	60	30	14
106 (M63)	Single	Auto	115	1	9.7	3/10	60	36	16
110 (M55)	Single	Auto	115	1	9.7	3/10	60	32	15
115 (M57)	Single	Auto	115	1	9.7	3/10	60	36	16
120 (M59)	Single	Auto	115	1	9.7	1/3	60	37	17
132 (M72)	Single	Auto	115	1	3.1	1/3	60	19	9
131 (M98)	Single	Auto	115	1	9.4	1/2	60	43	20

⚠ CAUTION All installation of controls, protection devices and wiring should be done by a qualified licensed electrician. All electrical and safety codes should be followed including the most recent National Electrical Code (NEC) and the Occupational Safety and Health Act (OSHA).

INTERNAL TRAP **

STANDARD INSTALL

Lavatory Sink

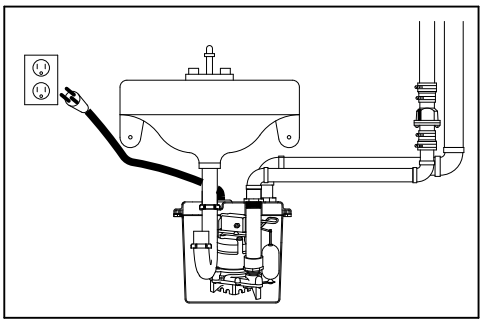

Laundry Tray Pump

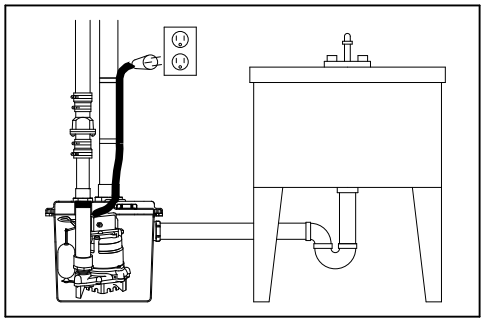

Wet Bar With Sink

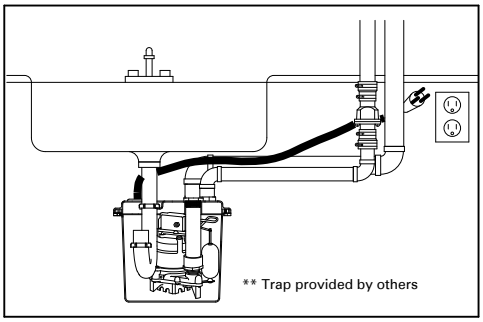

Dehumidifier or Air Conditioner

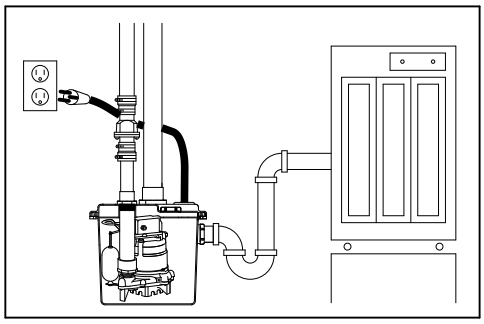

SK2011

Applications include: laundry tray pump, wet bar sink, lavatory, air conditioning condensate or dehumidifier water removal. It can also be used in conjunction with dishwashers and garbage disposal applications.

© Copyright 2020 Zoeller® Co. All rights reserved.
7867 | 3649 Cane Run Road | Louisville, KY 40211-1961 | zoellerpumps.com

SMITH® JAY R. SMITH MFG. CO.®
MEMBER OF MORRIS GROUP INTERNATIONAL
POST OFFICE BOX 3237
MONTGOMERY, ALABAMA 36109-0237 (USA)
TEL: 334-277-8520 FAX: 334-272-7396 www.jrsmith.com

CUSTOMER DRIVEN SINCE 1926

MEMBER OF:

LOCATION

QUARTERHORSE 1/4 TURN NON FREEZE WALL HYDRANT WITH INTEGRAL VACUUM BREAKER

EXPOSED HOSE CONNECTION

FUNCTION: For installation in interior or exterior building walls where an exposed hose connection is acceptable. Provides positive non-freeze protection and features an integral vacuum breaker. Adaptable to all types of wall construction.

1/4 Turn of the Key Allows Full Flow to be Obtained

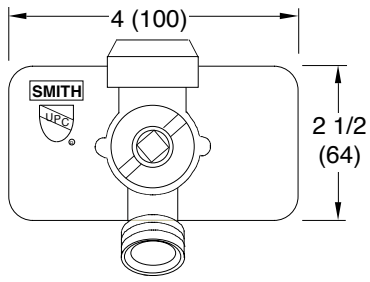

FRONT VIEW

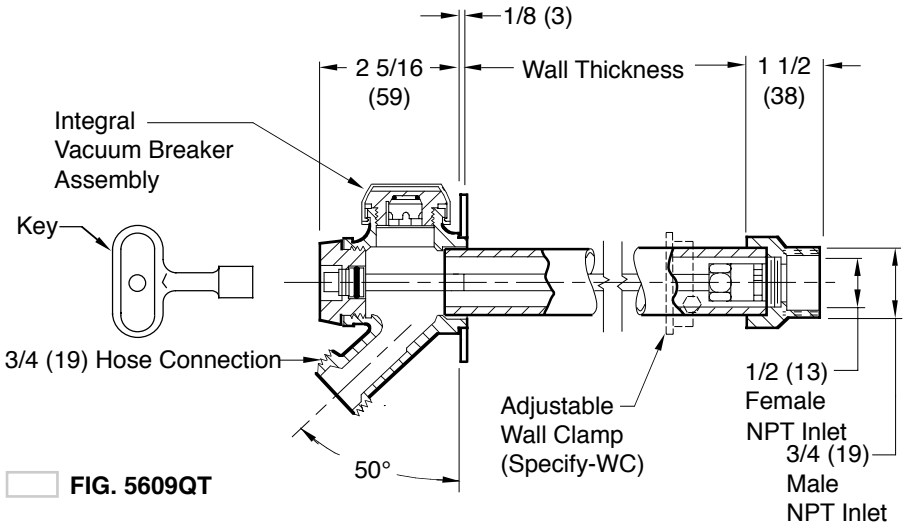

SIDE VIEW

☐ **FIG. 5609QT**

Installer is responsible for providing a 100% watertight positive seal at the hydrant to wall interface. Seal all the flange with an appropriate sealant recommended by a sealant manufacturer. NOTE: Jay R. Smith does not warrant the performance or life expectancy of the sealant material.

Seepage of a small amount of water may occur from the vacuum breaker upon the initial opening of this hydrant. This is normal operation.

REGULARLY FURNISHED:
Bronze Nickel Plated Quarter Turn Non-Freeze Hydrant with 3/4"(19) Hose Connection, Backer Plate, Integral Vacuum Breaker with Vandal Resistant Cap and "T" Handle Key.

VARIATIONS:
- ☐ Adjustable Wall Clamp -WC
- ☐ 1" (25) Hose Connection -HC1
- ● ☐ 1" (25) Male NPT Inlet Connection -IC1
- ☐ Wheel Handle -WH

OPTIONAL MATERIALS:
- ☐ Chrome Plated -CP
- ☐ Chrome Plated Backer Plate -BPCP
- ☐ Polished Bronze -PB
- ☐ Polished Bronze Backer Plate -BPPB

●Add 3/4" (19) to Overall Length when Specified

NOTES:
1. Recommended wall opening 2(51) x 2(51). Hydrant shall be in the vertical position only, the connection must be on the bottom.
2. When ordering, specify wall thickness in 02"(51) increments as follows: 04(100), 06(150), 08(205), 10(255), 12(305), 14(355), 16(405), 18(455), 20(510), 22(560) or 24"(610). When wall clamp -WC is desired, increase wall thickness dimension by 2"(51).
3. All Jay R. Smith hydrants are manufactured with "NO-LEAD" brazing rings, and USDA approved lubricants.
4. The AB1953, California Lead Law, and NSF/ANSI Standard 61-2008 - Drinking Water System Components are not applicable to Jay R. Smith hydrants as they do not convey/dispense water for human consumption through drinking or cooking.
5. Dimensions shown in parentheses are in millimeters.
6. **FOR IRRIGATION PURPOSES ONLY.**
7. For the hydrant to drain properly and provide non-freeze protection when used with a hose, the **Hose must be removed** from the nozzle after each use.

PATENTED

REV.	DATE	DESCRIPTION	BY	CKD. BY
U	3-26-19	Added Note	MW	CR
T	1-25-17	Added Note	TBW	BW
S	2-1-13	Revised Notes	TBW	CL
R	6-13-11	Revised Note	TBW	CL

WEIGHT POUNDS | VOLUME CUBIC FEET | FIGURE NUMBER **5609QT**

U | DRAWING NUMBER S5609QT | SIZE A | SCALE: NONE | DATE: 1-2-90 | APPROVED BY: SJM | CHECKED BY: SB | DRAWN BY: EMB | FIGURE NUMBER 5609QT

WE CAN ASSUME NO RESPONSIBILITY FOR USE OF SUPERSEDED OR VOID DATA
DIMENSIONS ARE SUBJECT TO MANUFACTURERS TOLERANCE AND CHANGE WITHOUT NOTICE

July 29, 2021

SEE REVERSE SIDE

WARNING: Cancer and Reproductive Harm - www.P65Warnings.ca.gov

SMITH® JAY R. SMITH MFG. CO.®
MEMBER OF MORRIS GROUP INTERNATIONAL
POST OFFICE BOX 3237
MONTGOMERY, ALABAMA 36109-0237 (USA)
TEL: 334-277-8520 FAX: 334-272-7396 www.jrsmith.com

CUSTOMER DRIVEN SINCE 1926

MEMBER OF:

LOCATION

HYDRANT PARTS LIST

Installer is responsible for providing a 100% watertight positive seal at the hydrant to wall interface. Seal all the flange with anappropriate sealant recommended by a sealant manufacturer. NOTE: Jay R. Smith does not warrant the performance or life expectancy of the sealant material.

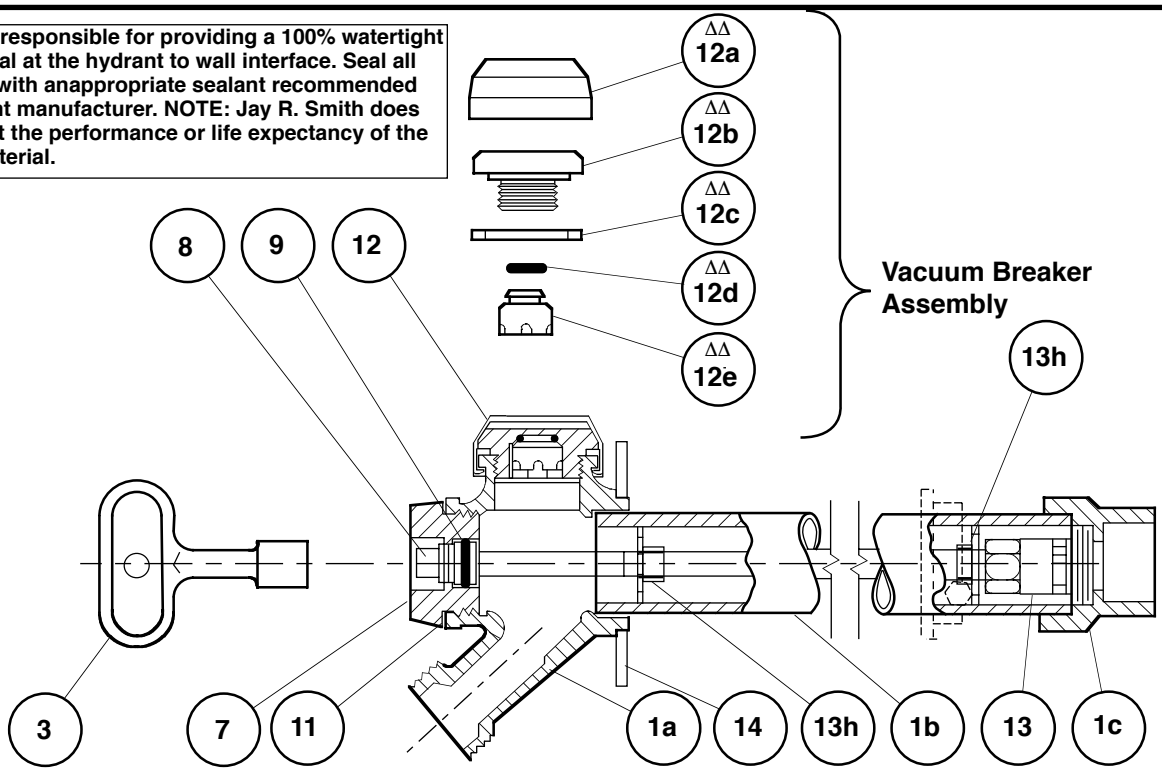

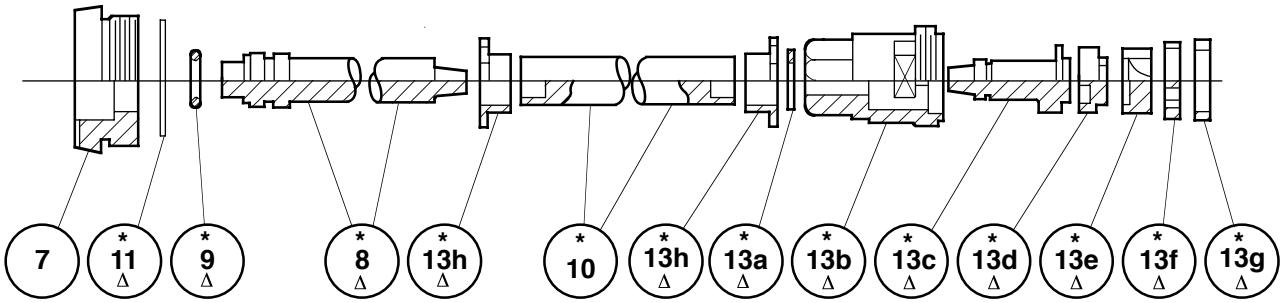

Δ These Replacement Parts Available in HPRK-7

ΔΔ These Replacement Parts Available in HPRK-7VB

*These Parts Accessible from Face of Hydrant by Removing Face Nut.

HYDRANT PARTS LIST

NO.	DESCRIPTION	NO.	DESCRIPTION	NO.	DESCRIPTION
1	Head/Casing Assembly	10	Operator Rod	13a	Retaining Ring
1a	Head	11	Face Nut Washer	13b	Valve Body
1b	Casing	12	Vacuum Breaker Assembly	13c	Valve Actuator
1c	Valve Housing	12a	VB Cap	13d	Nylon Thrust Washer
3	Key	12b	VB Body	13e	Rotating Ceramic Disc
7	Face Nut	12c	VB Washer	13f	Fixed Ceramic Disc
8	Actuator Shaft	12d	VB "O" Ring	13g	Silicon Rubber Seal
9	Actuator "O" Ring	12e	VB Piston	13h	Retainer Guide (2)
		13	Valve Body Assembly	14	Backer Plate w/Screws

REV.	DATE	DESCRIPTION	BY	CKD. BY
J	1-25-17	Added Note	TBW	BW
H	9-22-94	Added HPRK-7VB Note	EMB	CL
G	9-21-93	Chg'd note	EMB	JCS

WEIGHT POUNDS

VOLUME CUBIC FEET

FIGURE NUMBER **5609QT**

J

DRAWING NUMBER S5609QTBS

SIZE A

SCALE: NONE

DATE: 1-3-90

APPROVED BY: TD

CHECKED BY: BS

DRAWN BY: EMB

FIGURE NUMBER 5609QT-BS

WE CAN ASSUME NO RESPONSIBILITY FOR USE OF SUPERSEDED OR VOID DATA

DIMENSIONS ARE SUBJECT TO MANUFACTURERS TOLERANCE AND CHANGE WITHOUT NOTICE

WARNING: Cancer and Reproductive Harm - www.P65Warnings.ca.gov

G. Fire Protection Data Sheets- Building

Reliable®

Model G5 Series Sprinklers

Standard Spray, Flat Concealed Pendent

Available with Gasketed Cover Plate

Features

- Standard Coverage, Concealed Pendent (K2.8, 4.2, 5.6, & 8.0 [40, 60, 80, & 115 metric])
- Flat concealed cover plate available in a variety of finishes.
- Available with Stainless Steel Clad cover plate (see Table I).
- 3/4-inch (19 mm) cover plate adjustment.
- Cover plate available with optional gasket.

Model G5 Cover Plate

Model G5 Cover Plate with QR Gasket

Model G5 Cover Plate with SR Gasket

Note: Gasket material is silicone rubber, available in white only.

Product Description

Model G5 series sprinklers are standard coverage, flat plate concealed sprinklers designed for installation in accordance with NFPA 13 and FM Global Property Loss Prevention Data Sheets. All Model G5 series sprinklers use a fusible-link operating element.

The sprinklers are offered with a standard Model G5 cover plate, a Model G5 cover plate with a quick-response (QR) gasket, or a Model G5 cover plate with a standard-response (SR) gasket. Model G5 sprinklers with a gasketed cover plate are intended for use in dust free environments such as clean rooms.

Model G5 sprinklers must only be used with the Model G5 cover plate listed or approved with the sprinkler. Table A provides a summary of available Model G5 series sprinklers, along with Listing and Approval information for each sprinkler and cover plate combination.

Model G5 Series Sprinkler Summary — **Table A**

Sprinkler Model	K-Factor gpm/psi$^{1/2}$ (L/min/bar$^{1/2}$)	Cover Plate Model	Listings and Approvals	Sensitivity	Max. Working Pressure psi (bar)	Sprinkler Identification Number (SIN)
G5-28	2.8 (40)	G5	cULus	QR	175 (12)	RA3411
			FM	SR		
		G5 QR Gasket	cULus	QR		
		G5 SR Gasket	cULus, FM	SR		
G5-42	4.2 (60)	G5	cULus	QR	175 (12)	RA3413
		G5 QR Gasket				
		G5 SR Gasket	cULus	SR		
G5-56	5.6 (80)	G5	cULus	QR	250 (17)	RA3415
			FM, LPCB, VdS, CE	SR	175 (12)	
		G5 QR Gasket	cULus	QR	250 (17)	
		G5 SR Gasket	cULus	SR	250 (17)	
			FM	SR	175 (12)	
G5-56 300	5.6 (80)	G5	cULus	QR	300 (21)	RA4014
		G5 QR Gasket				
		G5 SR Gasket	cULus	SR		
G5-80	8.0 (115)	G5	cULus	QR	175 (12)	RA3412
		G5 QR Gasket				
		G5 SR Gasket	cULus	SR		
G5-80F	8.0 (115)	G5	FM	SR	175 (12)	RA3417
		G5 SR Gasket				

Model G5-28 Standard Coverage, Concealed Pendent Sprinkler — SIN RA3411

Technical Specifications
- **Style:** Flat Concealed Pendent
- **Threads:** 1/2" NPT or ISO 7-1 R1/2
- **Nominal K-Factor:** 2.8 (40 metric)
- **Max. Working Pressure:** 175 psi (12 bar)

Material Specifications
- **Fusible Link:** Beryllium Nickel
- **Sprinkler Body:** Brass Alloy
- **Levers:** Bronze Alloy
- **Yoke:** Brass Alloy
- **Sealing washer:** Nickel with PTFE
- **Load Screw:** Bronze Alloy
- **Towers:** Copper Alloy
- **Pins:** Stainless Steel
- **Deflector:** Bronze Alloy
- **Cup:** Steel

Sprinkler Temperature Ratings
165°F (74°C)
212°F (100°C)

Sensitivity
(See Table B)

Cover Plates
Model G5
Model G5 QR Gasket (cULus only)
Model G5 SR Gasket

Cover Plate Finishes
(See Table I)

Sprinkler Wrench
Model W3
Model FC

Listings and Approvals
cULus Listed (Light Hazard only)
FM Approved

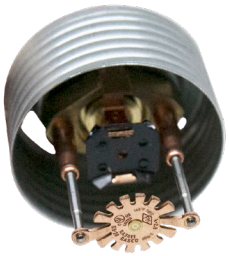

Model G5-28 Sprinkler Components and Dimensions — Figure 1

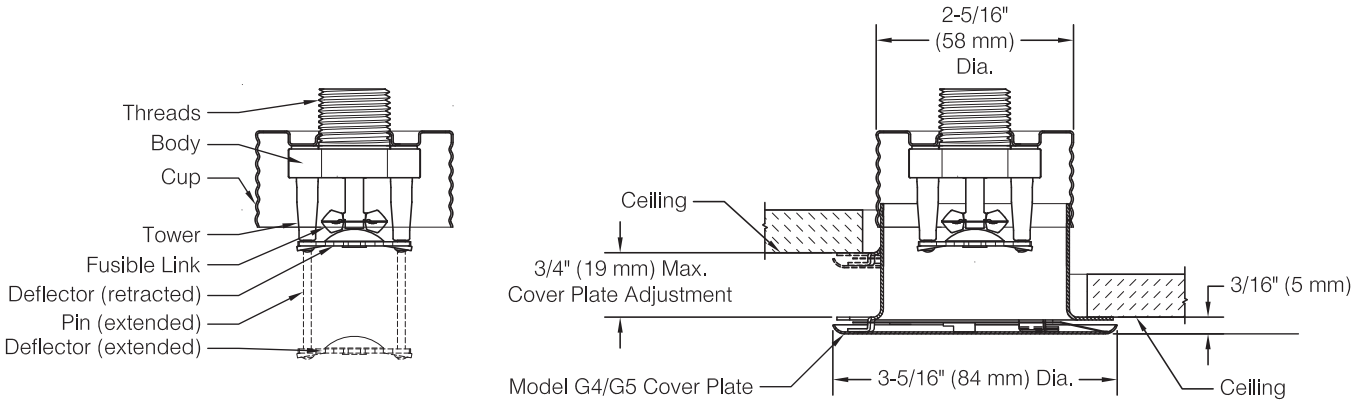

Model G5-28 Sprinkler Sensitivity — Table B

Cover Plate Model	Listing or Approval Agency	
	cULus	FM
G5	QR	SR
G5 QR Gasket	QR	--
G5 SR Gasket	SR	SR

QR: Quick-response
SR: Standard-response

Model G5-42 Standard Coverage, Concealed Pendent Sprinkler — SIN RA3413

Technical Specifications
- **Style:** Flat Concealed Pendent
- **Threads:** 1/2" NPT or ISO 7-1 R1/2
- **Nominal K-Factor:** 4.2 (60 metric)
- **Max. Working Pressure:** 175 psi (12 bar)

Material Specifications
- **Fusible Link:** Beryllium Nickel
- **Sprinkler Body:** Brass Alloy
- **Levers:** Bronze Alloy
- **Yoke:** Brass Alloy
- **Sealing washer:** Nickel with PTFE
- **Load Screw:** Bronze Alloy
- **Towers:** Copper Alloy
- **Pins:** Stainless Steel
- **Deflector:** Bronze Alloy
- **Cup:** Steel

Sprinkler Temperature Ratings
165°F (74°C)
212°F (100°C)

Sensitivity
(See Table C)

Cover Plates
Model G5
Model G5 QR Gasket
Model G5 SR Gasket

Cover Plate Finishes
(See Table I)

Sprinkler Wrench
Model W3
Model FC

Listings and Approvals
cULus Listed (Light Hazard only)

Model G5-42 Sprinkler Components and Dimensions — Figure 2

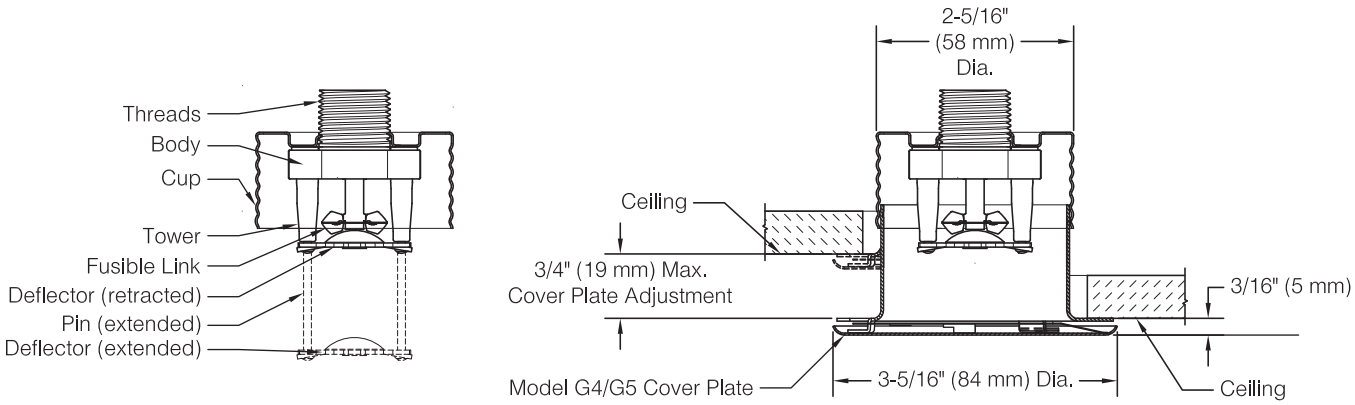

Model G5-42 Sensitivity — Table C

Cover Plate Model	Listing or Approval Agency
	cULus
G5	QR
G5 QR Gasket	QR
G5 SR Gasket	SR

QR: Quick-response
SR: Standard-response

Model G5-56 Standard Coverage, Concealed Pendent Sprinkler — SIN RA3415

Technical Specifications
Style: Flat Concealed Pendent
Threads: 1/2" NPT or ISO 7-1 R1/2
Nominal K-Factor: 5.6 (80 metric)
Max. Working Pressure:
175 psi (12 bar)
250 psi (17 bar) (cULus only)

Material Specifications
Fusible Link: Beryllium Nickel
Sprinkler Body: Brass Alloy
Levers: Bronze Alloy
Yoke: Brass Alloy
Sealing washer: Nickel with PTFE
Load Screw: Bronze Alloy
Towers: Copper Alloy
Pins: Stainless Steel
Deflector: Bronze Alloy
Cup: Steel

Sprinkler Temperature Ratings
165°F (74°C)
212°F (100°C) (cULus, FM, LPCB, CE only)

Sensitivity
(See Table D)

Cover Plates
Model G5
Model G5 QR Gasket (cULus only)
Model G5 SR Gasket (cULus and FM only)

Cover Plate Finishes
(See Table I)

Sprinkler Wrench
Model W3
Model FC

Listings and Approvals
cULus Listed (Light & Ordinary Hazard only)
FM Approved
LPCB Approved
VdS Approved [165°F (74°C) only]
CE Listed (2831-CPR-S2062)

Model G5-56 Sprinkler Components and Dimensions — Figure 3

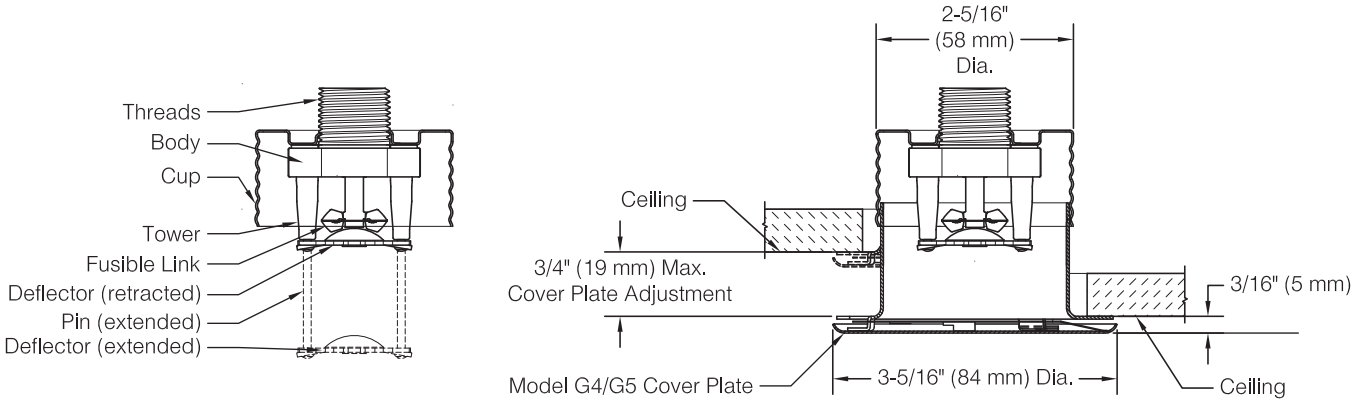

Model G5-56 Sensitivity — Table D

Cover Plate Model	Listing or Approval Agency		
	cULus	FM	LPCB, VdS, CE
G5	QR	SR	SR
G5 QR Gasket	QR	--	--
G5 SR Gasket	SR	SR	--

QR: Quick-response
SR: Standard-response

Model G5-56 300 Standard Coverage, Concealed Pendent Sprinkler — SIN RA4014

Technical Specifications
- **Style:** Flat Concealed Pendent
- **Threads:** 1/2" NPT or ISO 7-1 R1/2
- **Nominal K-Factor:** 5.6 (80 metric)
- **Max. Working Pressure:** 300 psi (21 bar)

Material Specifications
- **Fusible Link:** Beryllium Nickel
- **Sprinkler Body:** Brass Alloy
- **Levers:** Bronze Alloy
- **Yoke:** Brass Alloy
- **Sealing washer:** Nickel with PTFE
- **Load Screw:** Bronze Alloy
- **Towers:** Copper Alloy
- **Pins:** Stainless Steel
- **Deflector:** Bronze Alloy
- **Cup:** Steel

Sprinkler Temperature Ratings
165°F (74°C)
212°F (100°C)

Sensitivity
(See Table E)

Cover Plates
Model G5
Model G5 QR Gasket
Model G5 SR Gasket

Cover Plate Finishes
(See Table I)

Sprinkler Wrench
Model W3
Model FC

Listings and Approvals
cULus Listed (Light & Ordinary Hazard only)

Model G5-56 300 Sprinkler Components and Dimensions — Figure 4

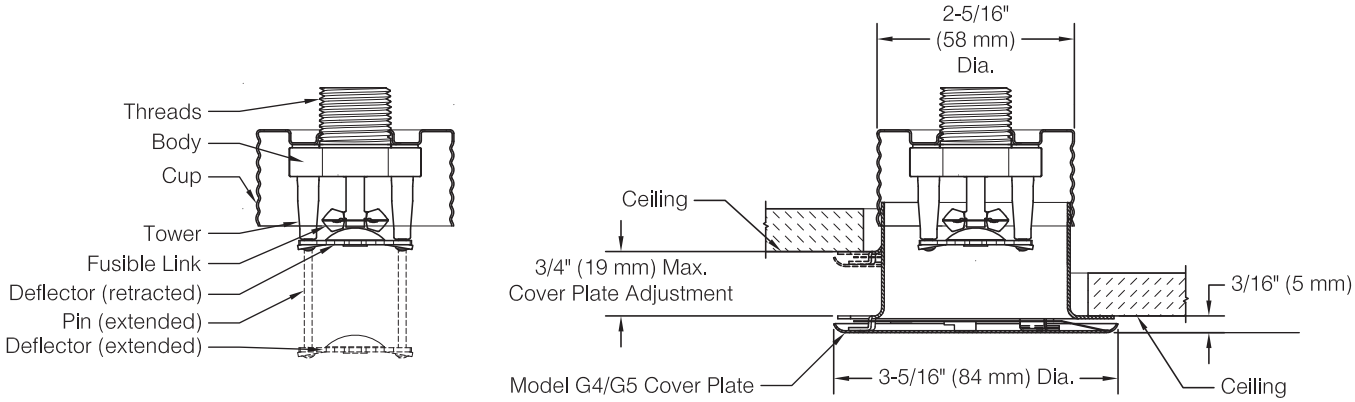

Model G5-56 300 Sensitivity — Table E

Cover Plate Model	Listing or Approval Agency
	cULus
G5	QR
G5 QR Gasket	QR
G5 SR Gasket	SR

QR: Quick-response
SR: Standard-response

Model G5-80 Standard Coverage, Concealed Pendent Sprinkler — SIN RA3412

Technical Specifications
- **Style:** Flat Concealed Pendent
- **Threads:** 3/4" NPT or ISO 7-1 R3/4
- **Nominal K-Factor:** 8.0 (115 metric)
- **Max. Working Pressure:** 175 psi (12 bar)

Material Specifications
- **Fusible Link:** Beryllium Nickel
- **Sprinkler Body:** Brass Alloy
- **Levers:** Bronze Alloy
- **Yoke:** Brass Alloy
- **Sealing washer:** Nickel with PTFE
- **Load Screw:** Bronze Alloy
- **Towers:** Copper Alloy
- **Pins:** Stainless Steel
- **Deflector:** Bronze Alloy
- **Cup:** Steel

Sprinkler Temperature Ratings
165°F (74°C)
212°F (100°C)

Sensitivity
(See Table F)

Cover Plates
Model G5
Model G5 QR Gasket
Model G5 SR Gasket

Cover Plate Finishes
(See Table I)

Sprinkler Wrench
Model W3
Model FC

Listings and Approvals
cULus Listed (Light & Ordinary Hazard only)

Model G5-80 Sprinkler Components and Dimensions — Figure 5

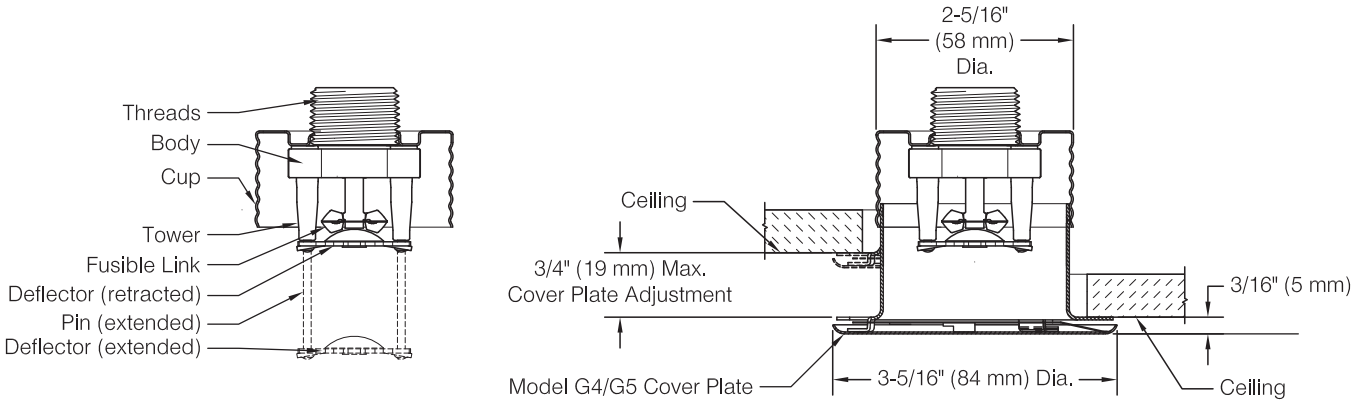

Model G5-80 Sensitivity — Table F

Cover Plate Model	Listing or Approval Agency
	cULus
G5	QR
G5 QR Gasket	QR
G5 SR Gasket	SR

QR: Quick-response
SR: Standard-response

Model G5-80F Standard Coverage, Concealed Pendent Sprinkler — SIN RA3417

Technical Specifications
- **Style:** Flat Concealed Pendent
- **Threads:** 3/4" NPT or ISO 7-1 R3/4
- **Nominal K-Factor:** 8.0 (115 metric)
- **Max. Working Pressure:** 175 psi (12 bar)

Material Specifications
- **Fusible Link:** Beryllium Nickel
- **Sprinkler Body:** Brass Alloy
- **Levers:** Bronze Alloy
- **Yoke:** Brass Alloy
- **Sealing washer:** Nickel with PTFE
- **Load Screw:** Bronze Alloy
- **Towers:** Copper Alloy
- **Pins:** Stainless Steel
- **Deflector:** Stainless Steel
- **Cup:** Steel

Sprinkler Temperature Ratings
165°F (74°C)
212°F (100°C)

Sensitivity
Standard Response

Cover Plates
Model G5
Model G5 SR Gasket

Cover Plate Finishes
(See Table I)

Sprinkler Wrench
Model W3
Model FC

Listings and Approvals
FM Approved

Model G5-80F Sprinkler Components and Dimensions — Figure 6

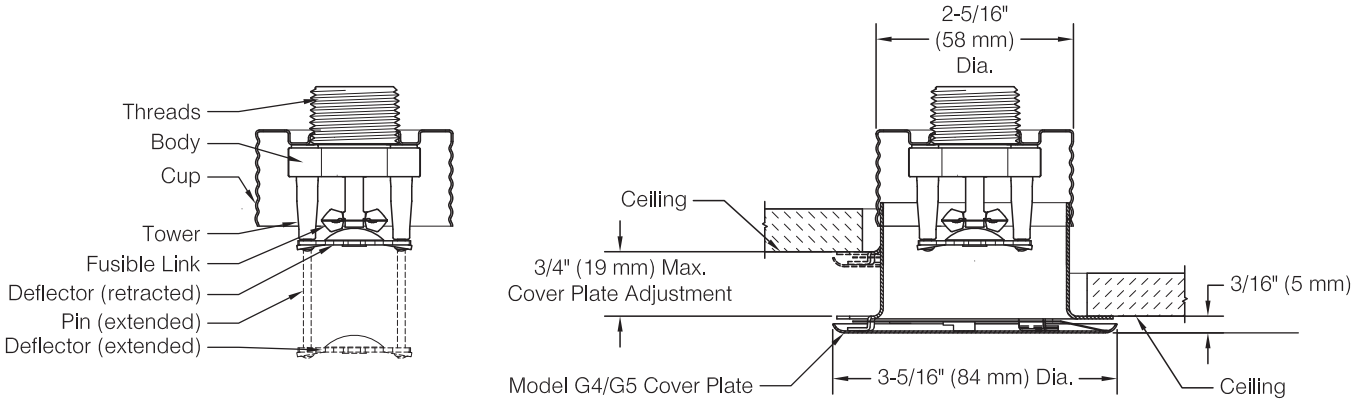

Model G5-80F Sensitivity — Table G

Cover Plate Model	Listing or Approval Agency
	FM
G5	SR
G5SR Gasket	SR

SR: Standard-response

Installation Dimensions and Cover Plate Information — **Table H**

Cover Plate Model	Cover Plate Diameter Inch (mm)	Recommended Hole Diameter in Ceiling Inch (mm)	Cover Plate Adjustment Inch (mm)	Min. to Max. Face of Fitting to Ceiling[1] Inch (mm)	Min. to Max. Dropped Deflector Distance below Ceiling Inch (mm)	Cover Plate Temperature Rating °F (°C)
G5	3-5/16 (84)	2-5/8 (67)	3/4 (19)	1-1/2 to 2-1/4 (38 to 57)	1/4 to 1 (6 to 25)	135°F[3] (57°C) or 165°F[4] (74°C)
G5 QR Gasket[2]	3-11/16 (94)					
G5 SR Gasket[2]	4 (101 mm)					

Notes:

1. Face of fitting to ceiling dimensions are based on nominal thread make up. Verify dimensions based on fitting and thread sealing method prior to installation. A 1/2" x 1/2" brass nipple extension (Reliable P/N 6999991900) is available to assist with replacement of Reliable Model G4A sprinklers.
2. Model G5 QR Gasket and Model G5 SR Gasket cover plates are sold as assembled units including both the cover plate and gasket. Model G5 QR Gasket and Model G5 SR Gasket cover plates and gaskets are not interchangeable.
3. For use with 165°F (74°C) temperature rated sprinklers where the Maximum Ceiling Temperature does not exceed 100°F (38°C).
4. For use with 212°F (100°C) temperature rated sprinklers where the Maximum Ceiling Temperature does not exceed 150°F (66°C).

Cover Plate Finishes[1][2] — **Table I**

Standard Finishes	Special Application Finishes
White Paint Chrome[4]	Off-White Paint Black Paint Custom Color Paint (Specify)[3] Raw Brass (Lacquered) Bright Brass[4] Finished Bronze [4] Black Plated [4] Satin Chrome [4] Stainless Steel Clad[5]

Notes:

1. Paint or any other coating applied over the factory finish will void all approvals and warranties.
2. Cover plates do not carry corrosion resistant listings or approvals.
3. Custom color paint is semi-gloss unless specified otherwise.
4. Not listed for use with QR sealing gasket.
5. Stainless steel clad cover plates are Type 316 Stainless Steel on the finished side and C102 Copper Alloy on the back side.

Application

Model G5 series sprinklers are standard coverage, flat plate concealed pendent sprinklers. The sprinklers are intended for use in accordance with NFPA 13 and FM Global Property Loss Prevention Data Sheets, as well as the requirements of the applicable approval agencies.

Model G5 series sprinklers are available as either Quick-response (QR) or Standard-response (SR) depending on the approval agency and cover plate selected.

Model G5 series sprinklers use Model G5 flat cover plates. Model G5 QR Gasket and G5 SR Gasket cover plates are available to limit air and dust movement through the ceiling.

Listing & Approval Agencies

Individual Model G5 series sprinkler may be listed or approved by the following agencies:

- Underwriters Laboratories, Inc. and UL Canada (cULus)
  Listing Category: Sprinklers, Automatic and Open
  Guide Number: VNIV
- FM Approvals (FM)
- Loss Prevention Certification Board (LPCB)
- VdS Schadenverhütung GmbH (VdS)
- EC-Certificate of Conformity 0832-CPD-2062 (CE)

See Table A and the individual sprinkler data sheets in this Bulletin for listings and approvals applicable to each sprinkler.

Installation

Model G5 series sprinklers are intended to be installed in accordance with NFPA 13, FM Global Property Loss Prevention Data Sheets, and the requirements of applicable authorities having jurisdiction. Model G5 series sprinklers must not be installed in ceilings with positive pressure in the space above. Ensure that the 4 slots in the cup are open and unobstructed following installation.

Model G5 series sprinklers are shipped with a wrench-able protective cap that should remain on the sprinkler until the sprinkler system is placed in service following construction.

Model G5 series sprinklers can be installed without removing the wrench-able protective cap using the Model W3 wrench. Alternatively, Model G5 series sprinklers can be installed using the Model FC wrench by temporarily removing the protective cap during installation of the sprinkler. The use of any other wrench to installed Model G5 series sprinklers is not permitted and may damage the sprinkler.

Wrench

Model FC
For use with Model G5 Series sprinklers without wrench-able cap installed

Model W3
For use with Model G5 Series sprinklers with wrench-able cap installed

Fully insert the Model W3 wrench over the cap until it reaches the bottom of the cup, or the Model FC wrench over the sprinkler until the wrench engages the body. Do not wrench any other part of the sprinkler/cup assembly. The Model W3 and FC wrenches are designed to be turned with a standard 1/2" square drive. Tighten the sprinkler into the fitting after applying a PTFE based thread sealant to the sprinkler's threads. Recommended installation torque is specified in Table J.

Installation Torque — **Table J**

Sprinkler Threads	Recommended Installation Torque (min. – max.)	
	ft.lb	N.m
½" NPT or ISO7-1R1/2	8-18	11-24
¾" NPT or ISO7-1R3/4	14-20	19-27

Do not exceed the maximum recommended torque. Exceeding the maximum recommended torque may cause leakage or impairment of the sprinkler. Use care when inserting or removing the wrench from the sprinkler to avoid damage to the sprinkler.

Install the cover plate by hand, pushing and then turning the cover in the clockwise direction until it is tight against the ceiling. For Model G5 QR Gasket and Model G5 SR Gasket cover plates, the gasket should be attached to the flange of the cover plate skirt only. Do not glue the gasket in place or allow the gasket to overlap both the cover plate and the flange of the skirt.

Maintenance

Reliable Model G5 series sprinkler should be inspected and the sprinkler system maintained in accordance with NFPA 25, as well as the requirements of any Authorities Having Jurisdiction.

Prior to installation, sprinklers should remain in the original cartons and packaging until used. This will minimize the potential for damage to sprinklers that could cause improper operation or non-operation.

Do not clean sprinklers with soap and water, ammonia liquid or any other cleaning fluids. Remove dust by gentle vacuuming without touching the sprinkler.

Replace any sprinkler or cover plate which has been painted (other than factory applied). Properly installed Model G5 cover plates will have an air gap that is required for proper operation, do not seal the gap or paint the cover plates. Model G5 series sprinklers have holes in the cup that must remain unobstructed.

Replace any sprinkler which has been damaged. A stock of spare sprinklers should be maintained to allow quick re-placement of damaged or operated sprinklers. Failure to properly maintain sprinklers may result in inadvertent operation or non-operation during a fire event.

Guarantee

For the Reliable Automatic Sprinkler Co., Inc. guarantee, terms, and conditions, visit www.reliablesprinkler.com.

Patents

Model G5 series sprinklers may be covered by one or more of the following patents:

U.S. Patent 6,554,077, U.S. Patent 7,275,603, U.S. Patent 8,776,903, U.S. Patent 9,248,327

Ordering Information

Specify the following when ordering.

Sprinkler
- Model [G5-28] [G5-42] [G5-56] [G5-56 300] [G5-80] [G5-80F]
- Temperature Rating [165°F (74°C)] [212°F (100°C)]
- Threads [NPT or ISO 7-1]

Cover Plate
- Model [G5, G5 QR Gasket, G5 SR Gasket]
- Finish (See Table I)

Sprinkler Wrench
- Model W3
- Model FC

P/N 9999970421

Bulletin 110 December 2020

Reliable®

Model G Automatic Sprinklers Spray Upright, Spray Pendent, And Conventional

Product Description

The Reliable Model G Automatic Sprinkler utilizes the center strut solder in compression principle of construction. The fusible alloy is captured in the cylinder of the solder capsule by a stainless steel ball. When the fusible alloy melts, the ball moves into the cylinder allowing the cylinder to fall away from the sprinkler. When this happens, the lever is released to spring free from the sprinkler so that all of the operating parts clear from the waterway allowing the deflector to distribute the discharging water.

Except for the parts in the cylinder as mentioned above, the sprinkler components are made from copper based alloys for maximum corrosion protection. Lead plated, wax coated or wax over lead plated sprinklers are available for specially severe environments. Chrome plated sprinklers are available for decorative purposes.

All sprinklers are individually hydrostatically tested. All sprinklers are identified as to their fusing point by markings that appear on several of the operating parts and by an identifying color that appears on the frame.

Upright

Pendent

Small Orifice Upright

Conventional

Sprinkler Types

Standard Upright – This deflector configuration is normally used with exposed piping installations. Water is distributed laterally and downward in a wide pattern approximating a hemisphere which is completely and uniformly filled with water in the form of small drops or spray.

Standard Pendent – This deflector configuration is normally used where the space above the piping is limited or where a concealed piping installation is employed. The discharge characteristics of the standard pendent are virtually identical to the standard upright as described above.

Large and Small Orifice —By varying the orifice size, a large or small orifice sprinkler is created that will distribute as much as 40% more water or 65% less water than the normal ½" (15mm) orifice sprinkler.

Conventional —This deflector configuration is used primarily in those countries where the LPC installation rules have precedence. The sprinkler is designed to distribute a portion of its water discharge upward against the ceiling with the balance downward. It may be installed in either the upright or the pendent position. Sprinklers with conventional deflectors are available with orifice sizes corresponding to light, ordinary and extra–high hazard installations.

Application and Installation

Standard sprinklers are used in fixed fire protection systems: Wet, Dry, Deluge or Preaction. Care must be exercised that the orifice sizes, temperature ratings, deflector styles and sprinkler spacings are in accordance with the latest published standards of the National Fire Protection Association or the approving authority having jurisdiction.

The sprinklers must be installed with the Reliable Model W2 Sprinkler Wrench. Any other type of wrench may damage the sprinkler.

The approvals or listings of Reliable Automatic Sprinklers by major approving organizations are shown in the tabulated list provided on the back of this bulletin.

Reliable Automatic Sprinkler Co., Inc., 103 Fairview Park Drive, Elmsford, New York 10523

July 29, 2021

Technical Data

Sprinkler Type	"K" Factor		Sprinkler Height	Approvals	Sprinkler Identification Number (SIN)	
	US	Metric			SSU	SSP
Standard–Upright (SSU) and Pendent (SSP) Deflectors Marked to Indicate Position						
1/2" (15 mm) Standard Orifice with 1/2" NPT (R1/2) Thread	5.62	81.0	2 7/8" (73 mm)	1, 2, 3, 4, 5, 6	R1025	R1015
7/16" (11 mm) Small Orifice with 1/2" NPT (R1/2) Thread	4.24	61.0	2 7/8" (73 mm)	1	R1023	R1013
3/8" (10 mm) Small Orifice with 1/2" NPT (R1/2) Thread	2.82	40.6	2 7/8" (73 mm)	1, 2,	R1021	R1011
5/16" (8 mm) Small Orifice with 1/2" NPT (R1/2) Thread	1.98	28.5	2 7/8" (73 mm)	1, 5	R1022	R1012
17/32" (20 mm) Large Orifice with 1/2" NPT (R1/2) Thread	7.96	114.7	2 7/8" (73 mm)	1, 2,	R1026	R1016
17/32" (20 mm) Large Orifice with 3/4" NPT (R3/4)Thread	8.20	118.2	2 15/16" (75 mm)	1, 2,	R1027	R1017
20 mm XHH with 20 mm Thread	8.20	118.2	75.4 mm	3, 4, 6	R1027	R1017
10 mm XLH with 10 mm Thread	4.10	59.1	73 mm	3, 4,	R1024	R1014
Conventional—Installed in Upright or Pendent Position						
10mm XLH with 10mm Thread	4.10	59.1	73 mm	4	R1074	
15mm Standard Orifice with (R1/2) Thread	5.62	81.0	73 mm	3, 4, 6	R1075	
20mm XHH with (R3/4) Thread	8.20	118.2	75.4 mm	3, 4, 6	R1077	

Temperature Ratings

Classification	Sprinkler Rating		Maximum Ambient Temperature		Frame [1] Color
	°F	°C	°F	°C	
Ordinary	135	57	100	38	Black
Ordinary	165	74	100	38	Uncolored
Intermediate	212	100	150	66	White
High	286	141	225	107	Blue

[1] Frame color does not apply to painted or plated sprinklers –Use sprinkler rating as identified on operating parts.

Finishes [1]

Standard Finishes	
Bronze	—All Temperature Ratings
Chrome	—All Temperature Ratings
White [2]	—All Temperature Ratings Only Frame and Deflector are Painted
Special Application Finishes	
Bright Brass Plated	—Only frame, deflector and cap are plated. 135°F (57°C), 165°F (74°C), 212°F (100°C) Temp. Rating.
Black Plated	—Only frame, deflector and cap are plated. All Temp. Ratings.
Polyester Coated [2][4]	—Only frame and deflector are coated.
Lead Plated	—165°F (74°C), 212°F (100°C) and 286°F (141°C) Temp. Ratings.
Wax-Coated [3]	—165°F (74°C) Clear Wax, 212°F (100°C) Brown Wax.
Wax-Coated Over Lead Plated [3]	—165°F (74°C) Clear Wax, 212°F (100°C) Brown Wax.

[1] Other colors and finishes are available. Consult factory for details.
[2] UL listed and NYC MEA Approved only.
[3] 212°F (100°C) brown wax may be used on 286°F (141°C) sprinklers when maximum ambient temperatures do not exceed 150°F (66°C). UL Listed, FM Approved, NYC MEA 258-93-E.
[4] FM Approved for R1027 only.

Maintenance

Model G Sprinklers should be inspected and the sprinkler system maintained in accordance with NFPA 25. Do not clean sprinklers with soap and water, ammonia or any other cleaning fluids. Remove any sprinkler that has been painted (other than factory applied) or damaged in any way. A stock of spare sprinklers should be maintained to allow quick replacement of damaged or operated sprinklers. Prior to installation, sprinklers should be maintained in the original cartons and packaging until used to minimize the potential for damage to sprinklers that would cause improper operation or non-operation. Use only the Model W2 Sprinkler Wrench for sprinkler removal and installation. Any other type of wrench may damage the sprinkler.

Approval Organizations

1. Underwriters Laboratories, Inc. and UL Certified for Canada (cULus).
2. Factory Mutual Research Corporation
3. Loss Prevention Council
4. Pleniere Assemblee
5. N.Y.C. BS&A No. 587–75–SA or N.Y.C. MEA 258-93-E
6. CE Certificate:

1438-CPR-0054 (R1015)	1438-CPR-0056 (R1077)
1438-CPR-0053 (R1025)	1438-CPR-0057 (R1027)
1438-CPR-0052 (R1075)	1438-CPR-0058 (R1017)

Ordering Information
Specify:

1. Model G
2. Deflector
   - Upright
   - Pendent
   - Conventional
3. Nominal Orifice
4. Inlet Thread
5. Temperature Rating
6. Finish

The equipment presented in this bulletin is to be installed in accordance with the latest published Standards of the National Fire Protection Association, Factory Mutual Research Corporation, or other similar organizations and also with the provisions of governmental codes or ordinances whenever applicable.
Products manufactured and distributed by Reliable have been protecting life and property for over 90 years.

Manufactured by

Reliable®

July 29, 2021

Reliable Automatic Sprinkler Co., Inc.
(800) 431-1588 Sales Offices
(800) 848-6051 Sales Fax
(914) 829-2042 Corporate Offices
www.reliablesprinkler.com Internet Address

Recycled Paper

Revision lines indicate updated or new data.

EG. Printed in U.S.A. 12/20 P/N 9999970005

Bulletin 417 Rev.O

Model E
4″ (100 mm), 6″ (150 mm) and 8″ (200 mm) Alarm Check Valves with Model E3 Trim

Features

1. Made expressly for all wet-pipe sprinkler systems.
2. Valve's grooved seat design insures positive water flow alarm operation.
3. Precision retard chamber prevents false alarms under variable pressure conditions.
4. External by-pass aids prevention of false alarms under all supply pressure conditions.
5. Installation in either vertical or horizontal positions.
6. Three connection styles available:
   - ANSI flanged inlet and outlet
   - ANSI flanged inlet and grooved outlet
   - Metric flanged inlet and outlet
7. Galvanized trim styles available:
   - Individual part trim
   - Pre-assembled trim
   - Factory trimmed valve
8. Pressure relief trim approved by Factory Mutual Corporation. (FM)

Approvals & Listings:

1. Listed by Underwriters Laboratories and certified by UL for Canada (cULus)
2. Approved by Factory Mutual Research Corp. (FM)
3. LPC (UK)
4. NYC BS & A No. 587-75-SA.
5. Scientific Services Laboratory (SSL, Australia)
6. Conforms to EN 12259-2 metric sizes only (CE).

The Reliable Model E Alarm Check Valve acts as a Water Flow Alarm Device in wet pipe sprinkler systems. The design allows for installation under both variable and constant supply pressure conditions. When water flows in the sprinkler system due to the operation of one or more Automatic Fire Sprinklers the Alarm Valve opens, allowing continuous flow of water into the system and a transmition of an alarm, both electrically and mechanically.

The Reliable Automatic Sprinkler Co., Inc., 103 Fairview Park Drive, Elmsford, New York 10523

July 29, 2021

Operation

Variable Pressure

The Reliable Model E Alarm Check Valve in its closed and open positions is shown in Fig.1 and Fig. 2. The closed position is maintained as long as the water pressure in the sprinkler system piping above the Alarm Valve is greater than, or equal to, the supply pressure. A flow of water in the system piping, resulting from the discharge through one or more fused Automatic Sprinkler(s), causes the Clapper to rise off its Grooved Seat and permits water from the supply to enter the system for distribution on the fire.

Virtually all sprinkler systems piping contain confined air. If a water hammer or pressure surge occurs in the supply line, the increased pressure will compress the confined air and cause the Alarm Valve Clapper to lift intermittently which may result in false alarms. The Model E Alarm Check Valve prevents false alarms under these conditions using two features:

a. The By-Pass connection with Check Valve (Figure 3 & 4) allows pressure surges from the supply to by-pass the Alarm Valve Clapper. An excess system pressure is thus created which steadies the Clapper. Should a heavy surge unseat the Clapper and permit water to flow into the alarm line, the Retard Chamber then comes into action.

b. Drain Orifice Restriction from / to the Retard Chamber allows intermittent flows to be drained before the Chamber fills and activates the Alarms.

Constant Pressure

The operation of the Model E Alarm Check Valve in installations where the water pressure is constant, is the same as described above, with this exception: The Retard Chamber is not required and water passing through the Groove in the Alarm Check Valve Seat flows directly to and activates the Mechanical and Electrical Alarms.

Note: 1 bar=100 kPa

Model E Alarm Valve

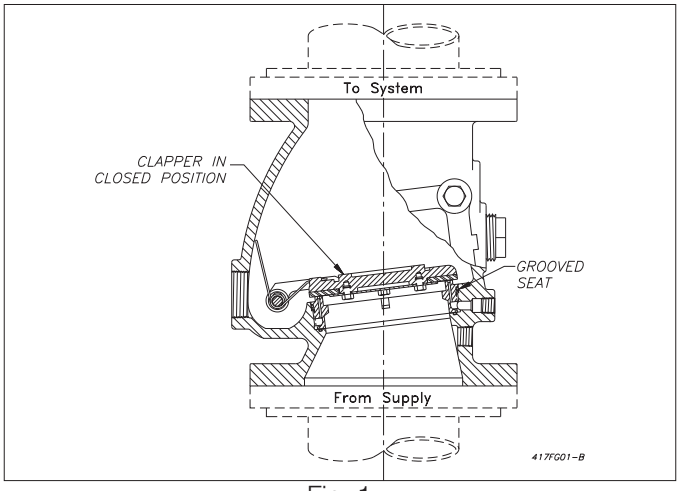

Fig. 1

Valve Description

1. Rated working pressure 175 psi (12,3 bar).
2. Factory hydrostatic test pressure 350 psi (24,6 bar).
3. End and trim connections—Three valve connection styles are available.
   a. US Standard Flanged Inlet and Outlet
      - Flanges mate with ANSI B 16.1 (125 lb.) Flange

U.S. Flange Dimensions In Inches (mm)					
Valve Size	Bolt Circle Dia.	Bolt Hole Dia.	Flange Outside Dia.	Flange Thickness	No. Bolts
4″(100mm)	7½	3/4	9	15/16	8
6″(150mm)	9½	7/8	11	1	8
8″(200mm)	11¾	7/8	13½	1 1/8	8

      - Threaded openings per ANSI B 2.1.
      - Reliable's standard trim sets are compatible with US Flanged Valves.
      - Color—Black

   b. US Standard Flanged Inlet and Grooved Outlet
      - Inlet flange mates with ANSI B 16.1 (125 lb.) Flange.
      - Outlet groove per ANSI/AWWA C606

U.S. Groove Dimensions In Inches (mm)				
Valve Size	Outlet Dia.	Groove Dia.	Groove Width	Outlet Face To Groove
4″(100mm)	4.500 (114)	4.334 (110)	3/8 (9.5)	5/8 (16)
6″(150mm)	6.625 (168)	6.455 (168)	3/8 (9.5)	5/8 (16)
8″(200mm)	8.625 (219)	8.441 (214)	7/16 (11.11)	3/4 (19)

      - Threaded openings per ANSI B 2.1
      - Reliable's standard trim sets are compatible with US Flanged and Grooved Valves.
      - Color— Black

   c. Metric Flanged Inlet and Outlet
      - 100mm & 150mm valve plain face flanges mate with DIN2501, NF-E-29-282, ISO 2084 NP10 and NP16 and BS4504 NP10 and NP16.
      - 200mm valve raised face flanges mate with DIN 2501, ISO 2084 NP16 and BS4504 NP16.

Metric Flange Dimensions in Millimeters							
Valve Size	Bolt Circle Dia.	Bolt Hole Dia.	Raised Dia.	Face Ht.	Flange Outside Dia.	Flange Thickness	No. Bolts
100mm	180	18.3	—	—	229	23.8	8
150mm	241	22.2	—	—	279	25.4	8
200mm	295	22.2	268	3	343	28.6	12

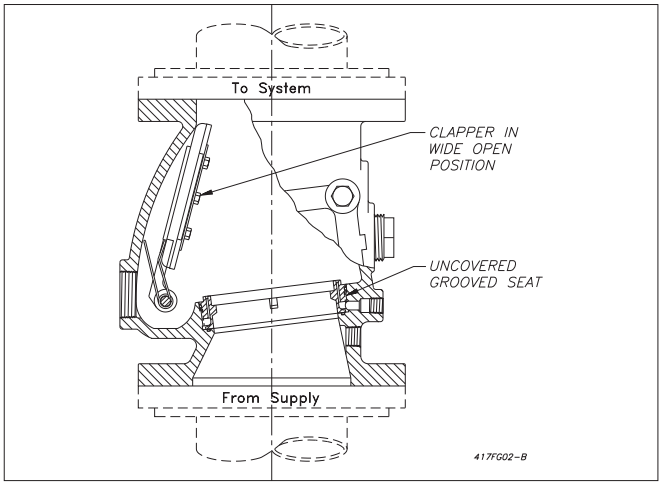

Fig. 2

- Threaded openings per ISO 7/1 R.
- Reliable's standard trim sets may be used with Metric Valves providing trim is assembled carefully and extra thread sealant is applied to connections between valves and trim.
- Color— Red

4. Face to Face Dimension
   - For 4″ (100 mm) Model —11¾″ (299 mm)
   - For 6″ (150 mm) Model —13½″ (343 mm)
   - For 8″ (200 mm) Model —14 ½″ (368 mm)
5. Shipping Weight

	Flanged Inlet and Outlet	Flanged Inlet and Grooved Outlet
4″ (100 mm)	80 lb. (36.3 kg)	70 lb. (31.8 kg)
6″ (150 mm)	116 lb. (52.6 kg)	102 lb. (46.3 kg)
8″ (200 mm)	155 lb. (70.3 kg)	143 lb. (64.9 kg)

6. Friction Loss—Expressed in Equivalent Length of Pipe, Based on Hazen & Williams formula with C = 120.

	Equiv Length
4″ (100 mm)	17′ (5.18 m)
6″ (150 mm)	27′ (8.23 m)
8″ (200 mm)	29′ (8.84 m)

7. Installation position—All sizes may be installed either vertically or horizontally.

Model E3 Trim Description

The E3 trim sets for the Reliable Model E Alarm Valve (Figs. 3 & 4) are arranged for rapid, easy and compact attachment, and serve as connection points to Reliable alarm and other devices. They also act as a means for testing the system to operate. The Model E alarm valves are available in two trims and may be installed in the vertical or horizontal position in the main supply to the wet pipe system:

- **Constant Pressure**, **Closed Drain** - Retard Chamber is not required. The Model E3 trim comes as a constant pressure trim. This trim set is used where water supply pressure does not vary, such as a gravity tank. mechanical sprinkler alarm line automatically drains to the 2″ (50mm) main drain line.
- **Variable Pressure with Closed Retard Chamber Drain—** Retard Chamber is required. This trim is used where water supply pressures vary. An open Drip Cup is provided to drain the Retard Chamber and the Mechanical Sprinkler Alarm line. This drain connection should be piped separately from the 2" main drain.
- **Variable Pressure with Open Retard Chamber Drain —**

  Retard chamber is required.
  Optional Drain Line Kit required (see Figs. 3 & 4).
  This trim set is used where water supply pressures vary. An open drip cup is provided to drain the retard chamber and the mechanical sprinkler alarm line. This drain connection should be piped separately from the 2″ main drain.

Note:

- The trim set permits both vertical (Fig. 3) and horizontal (Fig. 4) installations.
- A TestanDrain® valve segment is optional, to be purchased separately, as a replacement to the Drain valve (see optional Kit in Figs. 3 & 4).
- All trim sets can be fitted with an optional Pressure Relief Trim Kit (see optional kit in Figs. 3 & 4) to relieve pressures above 175 psi in the sprinkler system, as required by NFPA 13, 3-1.2.

- **Pressure Relief Trim Kit—**Required with a wet pipe system when a rise in ambient temperature can cause system pressure to exceed 175 psi (12 bar) or with gridded systems.

Pressure relief trim is not intended for use in relieving water hammer or fire pump surges. It must be installed and maintained in compliance with NFPA 13, local codes and the authority having jurisdiction.

Trim Kits are available, galvanized in three trim styles:

- Individual part trim
- Pre-assembled trim
- Factory trimmed valve

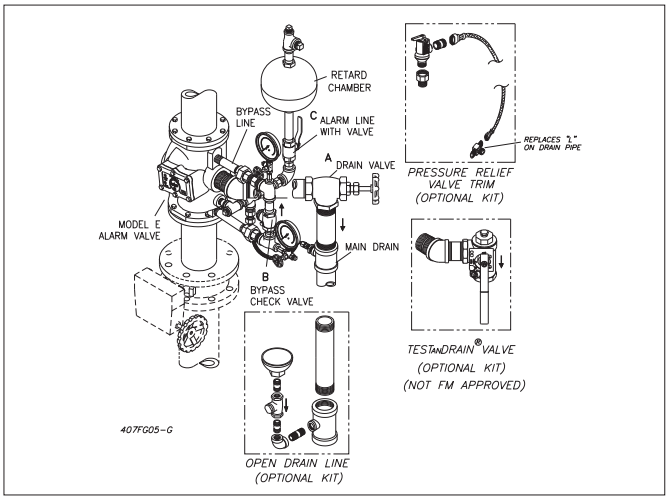

Fig. 3

Alarm valves are listed and approved by Underwriters Laboratories, Inc. and Factory Mutual Research Corp. only when used with the valve manufacturer's trim sets.

Ordering Information— Specify:

- Valve Size — 4″ (100mm), 6″ (150mm) or 8″ (200mm). When size is specified in mm, a metric valve per 3.c will be supplied.
- Inlet and Outlet Connection—Either Flanged/Flanged or Flanged/Grooved.
- Type of Trim—Constant Pressure or Variable Pressure/Open Drain or Variable Pressure/Closed Drain.
- Style of Trim—Individual Part Trim or Pre-Assembled
- Additional Equipment—Retard Chamber, Mechanical Sprinkler Alarm, Pressure Relief Trim Kit, and Pressure Alarm Switch must be separately ordered.

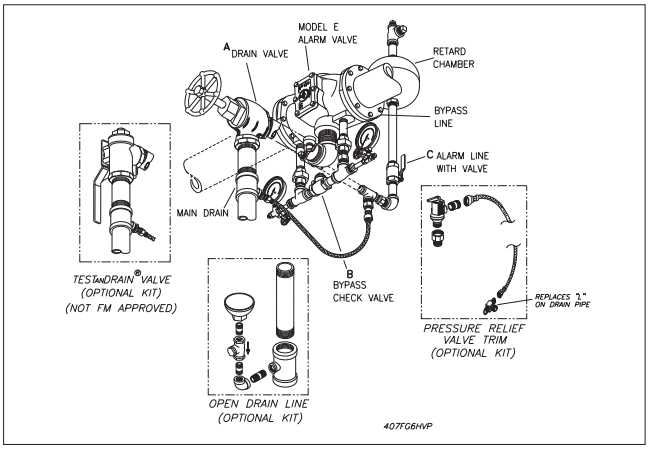

Figure 4

Model E3 Trim Illustrations Vertical & Horizontal

Installation Measurement in Inches (mm)

Valve	A	B	C	D	E	F	G	H	I	J	K	L	M
4 (100)	7 (178)	10½ (267)	16½ (419)	6 (152)	16¾ (426)	15 (381)	3½ (89)	5¾ (146)	12 (305)	4½ (114)	6½ (165)	10 (254)	8¼ (210)
6 (150) (165)	7⅝ (194)	11½ (292)	17½ (445)	7 (178)	15¼ (387)	16½ (419)	4¼ (108)	7 (178)	12 (305)	4½ (114)	6½ (165)	10 (254)	6¾ (172)
8 (200)	7⅝ (194)	11½ (292)	17½ (445)	7 (178)	15¼ (387)	16½ (419)	4¼ (108)	7 (178)	12 (305)	4½ (114)	6½ (165)	10 (254)	6¾ (172)

Vertical Trim, Variable Pressure - Front Elevation

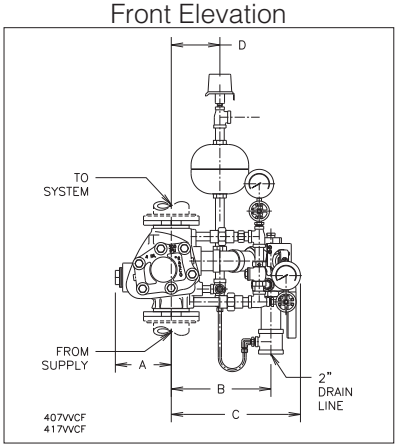

Horizontal Trim, Variable Pressure - Front Elevation

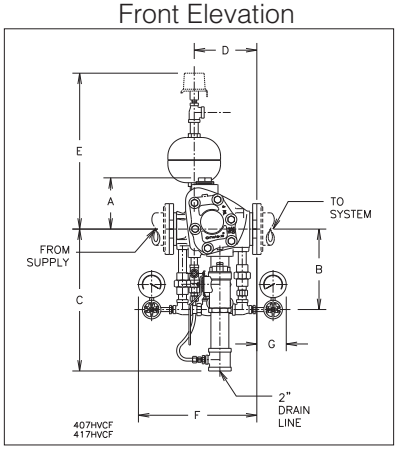

Vertical Trim, Variable Pressure - Top View

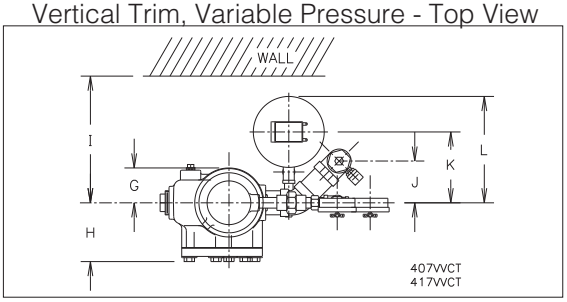

Horizontal Trim, Variable Pressure - Top View

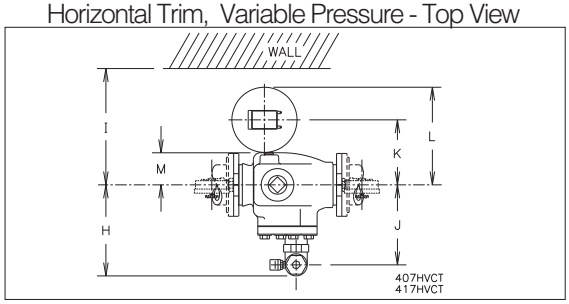

Vertical Trim, Constant Pressure - Front Elevation

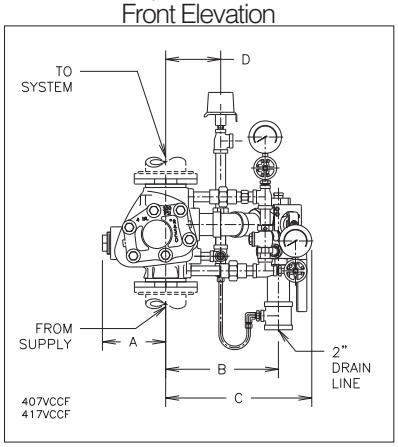

Horizontal Trim, Constant Pressure - Front Elevation

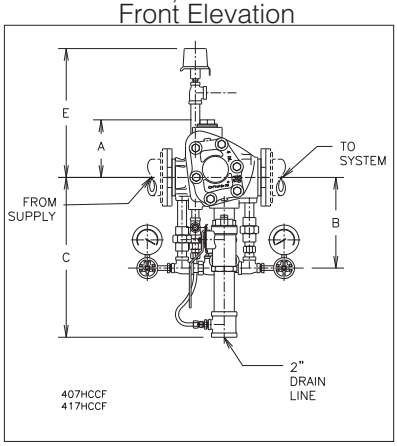

The equipment presented in this bulletin is to be installed in accordance with the latest pertinent Standards of the National Fire Protection Association, Factory Mutual Research Corporation, or other similar organizations and also with the provisions of governmental codes or ordinances, whenever applicable.

Products manufactured and distributed by RELIABLE have been protecting life and property for over 90 years, and are installed and serviced by the most highly qualified and reputable sprinkler contractors located throughout the United States, Canada and foreign countries.

Manufactured by

Reliable®

The Reliable Automatic Sprinkler Co., Inc.

(800) 431-1588 Sales Offices
(800) 848-6051 Sales Fax
(914) 829-2042 Corporate Offices
www.reliablesprinkler.com Internet Address

Recycled Paper

Revision lines indicate updated or new data.
EG. Printed in U.S.A. 01/13 P/N 9999970050

July 29, 2021

Model AAV Automatic Air Vent

cULus Listed,
FM Approved

Features

- Stainless Steel Construction
- 175 psi (12 bar) and 300 psi (20.7 bar) option

Product Description

The Reliable Model AAV Automatic Air Vent is designed to reduce the amount of trapped air in a wet pipe fire sprinkler system. Reducing the amount of air in the system reduces internal corrosion of piping by limiting the supply of oxygen and can also reduce the incidence of false alarms. The Model AAV is designed to automatically vent air from a high point in the system as the piping is filled and will automatically close when water reaches the vent. Air that subsequently migrates to the Model AAV will also be vented. The Model AAV is provided with a ½" NPT inlet for connection to the system, and a ½" NPT outlet connection for routing to drain (if desired).

Installation

The Model AAV shall be installed in accordance with the requirements of NFPA 13 and any applicable local codes or standards. The recommended location is near a high point of the wet pipe system. The Model AAV must be installed in the upright, vertical position on top of the pipe, in a location that does not obstruct the distribution pattern of any fire sprinkler. If desired, a ball valve (not included) may be installed in line with the device to facilitate inspection and servicing. Immediately after filling the wet pipe system, inspect the Model AAV for leaks and proper operation.

Maintenance

The owner is responsible for maintaining all parts of the fire protection system in proper operating condition. Any system maintenance or testing that involves placing a system component out of service may eliminate the fire protection that is provided by the fire protection system.

The Reliable Model AAV Automatic Air Vent shall periodically be given a thorough inspection and test. NFPA 25, "Inspection, Testing, and Maintenance of Water Based Fire Protection Systems," provides minimum maintenance requirements. System components shall be tested, operated, cleaned and inspected at least annually and parts replaced as required.

Listings and Approvals

- UL Listed to Subject 2573, Automatic Air Release Valves and Air/Vacuum Valves for Fire Protection Service
- FM Approved to Approval Standard for Air Release Valves, Class 1344

Model AAV Automatic Air Vent

Dimensions **Figure 1**

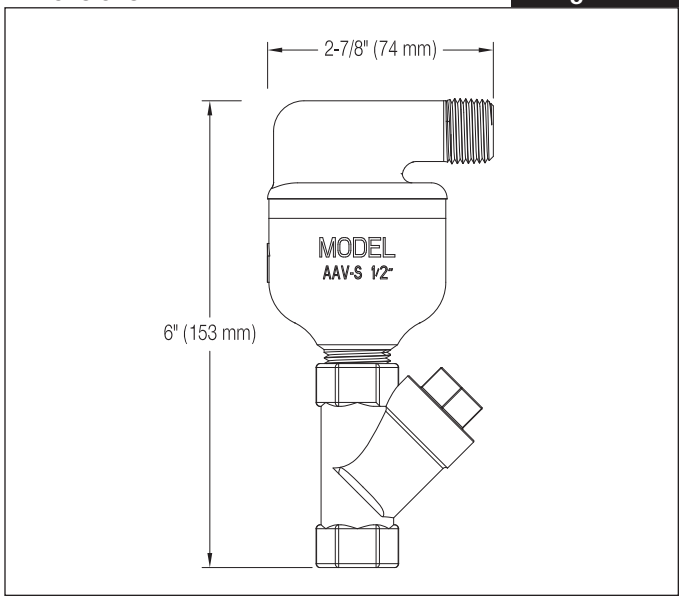

Guarantee

For the Reliable Automatic Sprinkler Co., Inc. guarantee, terms, and conditions, visit www.reliablesprinkler.com.

Ordering Information

Specify the following when ordering:
Model AAV Automatic Air Vent

- 175 psi (12 bar)
- 300 psi (20.7 bar)

P/N 9999970535

WFDN Series Waterflow Detector

The System Sensor WFDN series is compatible with schedule 7 through 40 steel pipe, for sizes 2 in. through 4 in. and compatible with schedule 10 through 40 steel pipe, sizes 5 in. through 8 in., and can be mounted in a vertical or horizontal position.

Features

- New directional cover allows installers and inspectors to easily see the direction of flow
- UL-listed models are NEMA 4 rated
- New cover provides a better seal, is lighter weight, not painted and corrosion resistant
- Sealed retard mechanism immune to dust and other contaminants
- Less exposed metal reduces shock hazard, plastic cover acts as insulator and is resistant to arcing
- Visual switch activation
- Audible switch activation (73 dBA)
- Field-replaceable timer/switch assembly
- Accommodates up to 12 AWG wire
- Switch Synchronization activates both alarm panel and local bell or horn strobe
- Tamper-resistant cover screws
- Improved water sealing
- Reduced product weight
- Wire-ready terminals
- Improved wiring with new terminal block layout
- Snap-in optional cover tamper switch
- Improved timer repeatability and accuracy

Agency Listings

c UL us LISTED S739

7770-1653:0231

FM APPROVED 3051266

The new **WFDN Series** waterflow detectors from **System Sensor** consists of a rugged, NEMA 4-rated enclosure that is more damage resistant than previous metal designs. The waterflow detector is designed for both indoor and outdoor use, with the widest available temperature range, from 32°F to 150°F. They are also approved for installation on the widest range of pipe schedules, sizes 2 in. through 4 in. are approved for installation on pipe schedules 7 through 40.

UL-listed models are equipped with tamper-resistant cover screws to prevent unauthorized entry. Inside, two sets of SPDT (Form C) synchronized switches are enclosed in a durable terminal block with new layout designed to make wiring easy with wire ready terminals, COM terminals are on a different elevation, large barrier between switches and easy to read raised textured lettering all make wiring easy. An optional cover tamper switch is available, securely snaps into place, no tools required.

The WFDN series incorporates a mechanical time delay feature, which minimizes the risk of false alarm due to pressure surges or air trapped in the fire sprinkler system. The larger and easy to turn timer dial makes setting the waterflow detector easy with high contrast pad printed markings. The dial offers three tabs to help with turning, with one larger tab located on the dial position for approximately 60 seconds, a notch is also indicated on the dial to locate approximately 30 seconds making setting the detector in dimmly lit locations easy.

The WFDN series is designed for accuracy and repeatability. The detector also offers improved performance during vibration in riser applications where detectors are exposed to a large in rush of water.

July 29, 2021

Waterflow Detector Specifications

Engineering Specifications

Vane-type waterflow detectors shall be installed on system piping as designated on the drawing and/or as specified herein. Detectors shall mount on any clear pipe span of the appropriate nominal size, either a vertical upflow or horizontal run, at least 6 in. from any fittings that may change water direction, flow rate, or pipe diameter or no closer than 24 in. from a valve or drain. Detectors shall have a sensitivity in the range of 4 to 10 gallons per minute and a static pressure rating of 450 psi for 2 in. – 8 in. pipes. The detector shall respond to waterflow in the specified direction after a preset time delay that is field adjustable. The delay mechanism shall be a sealed mechanical pneumatic unit with visual and audible indication of actuation. The actuation mechanism shall include a ethylene vinyl acetate vane inserted through a hole in the pipe and connected by a mechanical linkage to the delay mechanism. Outputs shall consist of dual SPDT switches (Form C contacts). Two conduit entrances for standard fittings of commonly used electrical conduit shall be provided on the detectors. A grounding provision is provided. Unless noted, enclosures shall be NEMA 4 listed by Underwriters Laboratories Inc. All detectors shall be listed by Underwriters Laboratories Inc. for indoor or outdoor use.

Standard Specifications

Static Pressure Rating	450 PSI	**Operating Temperature Range**	32°F to 150°F (0°C to 66°C)
Maximum Surge	18 Feet Per Second (FPS)	**Enclosure Rating***	NEMA 4 – suitable for indoor/outdoor use
Triggering Threshold Bandwidth (Flow Rate)	4–10 GPM	**Cover Tamper Switch**	Standard with ULC models, optional for UL models, part no. CTS
Conduit Entrances	Two openings for ½ in. conduit. NEMA 4 rated plugs	**Service Use**	Automatic Sprinkler: NFPA-13 One or Two Family Dwelling: NFPA 13D Residential Occupancies up to 4 Stories: NFPA 13R National Fire Alarm Code: NFPA-72
Contact Ratings	Two sets of SPDT (Form C) 10.0 A, ½ HP @ 125/250 VAC 2.5 A @ 6/12/24 VDC	**Warranty**	3 Years
Compatible Pipe	Steel water pipe, schedule 7 through 40*		

WFDN Field Wiring Diagram

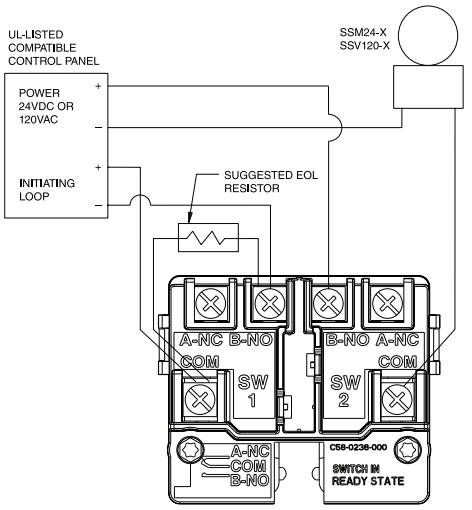

NOTE: COMMON AND B-NO CONNECTIONS WILL CLOSE WHEN VANE IS DEFLECTED. I.E., WHEN WATER IS FLOWING. DUAL SWITCHES PERMIT APPLICATIONS TO BE COMBINED ON A SINGLE DETECTOR.

CONTACT RATINGS	
125/250 VAC	10 AMPS
24 VDC	2.5 AMPS

SCHEMATIC OF INDIVIDUAL SWITCH IN "NO WATERFLOW" CONDITION

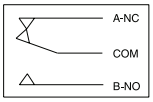

BREAK WIRE AS SHOWN FOR SUPERVISION OF CONNECTION. DO NOT ALLOW STRIPPED WIRE LEADS TO EXTEND BEYOND SWITCH HOUSING. DO NOT LOOP WIRES.

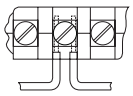

Overall Dimensions, Installed

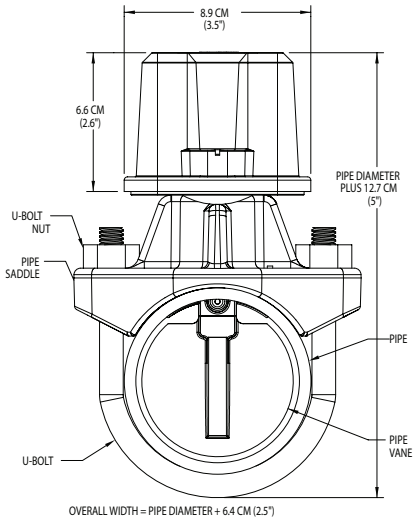

Ordering Information

UL Model	ULC Model	Pipe Size	Hole Size	Shipping Weights
WFD20N	WFD20NA	2 in.	1¼ in.	2.6 lbs.
WFD25N	WFD25NA	2½ in.	1¼ in.	2.6 lbs.
WFD30N	WFD30NA	3 in.	2 in.	3.1 lbs.
WFD40N	WFD40NA	4 in.	2 in.	4.0 lbs.
WFD50N	WFD50NA	5 in.	2 in.	4.9 lbs.
WFD60N	WFD60NA	6 in.	2 in.	5.6 lbs.
WFD80N	WFD80NA	8 in.	2 in.	7.3 lbs.

Accessories

FS-RT	Delay mechanism and switch assembly
CTS	Tamper-proof switch kit
WFDW	Tamper-proof wrench for cover

* 2 in. - 4 in. rated for use with Schedule 7 through 40 pipe, 6 in. - 8 in. rated for use with Schedule 10 through 40 pipe.

SYSTEM SENSOR®

3825 Ohio Avenue • St. Charles, IL 60174
Phone: 800-SENSOR2 • Fax: 630-377-6495
www.systemsensor.com

©2016 System Sensor.
Product specifications subject to change without notice. Visit systemsensor.com for current product information, including the latest version of this data sheet.

WFDS87903 • 11/16

July 29, 2021

OSY2
Supervisory Switch

The System Sensor OSY2 is used to monitor the open position of an Outside Screw and Yoke (OS&Y) type gate valve.

Features

- NEMA 3R-rated enclosure
- User-friendly mounting bracket fits newer valve yokes
- Single side conduit entry does not require right angle fittings
- Adjustable length actuator eliminates the need for cutting the shaft
- Accommodates up to 12 AWG wire
- Three position switch monitors vandal and valve close signals
- Two SPDT contacts are enclosed in a durable terminal block for added strength
- 100 percent synchronization activates both alarm panel and local bell simultaneously

Robust Construction. The OSY2 consists of a rugged housing, intended for indoor and outdoor use. When installed with the actuator in the vertical position, the OSY2 is NEMA 3R rated per UL.

Application Flexibility. The OSY2 features a user-friendly mounting bracket and adjustable shaft to permit mounting to most OS&Y valves, ranging in size from 1″ to 12″. Its right angle design and wide bracket span provides maximum clearance for valve components, to accommodate troublesome valves. Removing the OSY2's gate valve bracket allows the unit to monitor side-bracket-style pressure reducing valves.

Simplified Operation. Installation is made easier with the OSY2's single side conduit entrance. By providing a direct conduit pathway to the electrical source, right angle fittings are not required. Installation is further simplified by the OSY2's adjustable length actuator, which eliminates the need for cutting the shaft.

Reliable Performance. The OSY2 is equipped with tamper-resistant cover screws to prevent unauthorized entry. Inside, two sets of SPDT (Form C) synchronized switches are enclosed in a durable terminal block to assure reliable performance.

Agency Listings

UL LISTED S739 | ULC CS169 | FM APPROVED OW6A8.AY | 7770-1653:0118

July 29, 2021

OSY2 Specifications

Architectural/Engineering Specifications

Model shall be model number OSY2 supervisory switch as manufactured by System Sensor. OSY2 shall be installed on each valve as designated on the drawings and/or as specified herein. Switches shall be mounted so as not to interfere with the normal operation of the valve and shall be adjusted to operate within two revolutions of the valve control or when the stem has moved no more than one-fifth of the distance from its normal position. The mechanism shall be contained in a weatherproof die cast metal housing that provides a side entrance for ½″ conduit and incorporates the necessary facilities for attachment to the valve. A grounding provision is provided. The switch assembly shall include two switches each with a rated capacity of 10 Amp @ 125/250VAC and 2.5 Amp @ 24VDC. The cover shall contain tamper-resistant screws for which a security wrench will be provided with each switch. The OSY2 shall be Underwriters Laboratories listed for indoor or outdoor use. The OSY2 shall be Factory Mutual, CSFM, and MEA approved.

Physical Specifications		Operating Specifications	
Overall Switch Dimensions	5¾″H x 3½″W x 3¼″D (14.6cm x 8.9cm x 8.2cm)	**Contact Ratings**	Two sets of SPDT (Form C) 10.0 A @ 125/250VAC; 2.5 @ 6/12/24VDC
Shipping Weight	2.8 lbs. (1.3 kg)	**Enclosure Rating**	UL indoor/outdoor NEMA 3R when mounted with the actuator vertical
Operating Temperature Range	32°F to 120°F (0°C to 49°C) NOTE: The OSY2 will operate from –40°F to 120°F (–40°C to 49°C); however UL does not test control valve supervisory switches below 32°F (0°C).	**Cover Tamper Switch**	Standard with ULC model Optional for UL model, part no. 546-7000
Maximum Stem Extension	25/8″ (6.7cm)	**Service Use**	Automatic Sprinkler: NFPA 13 One or Two Family Dwelling: NFPA 13D Residential Occupancies up to 4 stories: NFPA 13R; National Fire Alarm code: NFPA 72
Bracket Span	¼″H x 6¾″W x 1″D (5.7cm x 17.1cm x 2.5cm)	**Warranty**	3 years
Conduit Entrances	One single side open for ½″ conduit	**U.S. Patent Nos.**	5,478,038; 5,213,205

Electrical Connections for OSY2

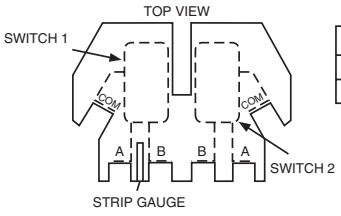

CONTACT RATINGS	
125/250 VAC	10 AMPS
24 VDC	2.5 AMPS

NOTE: COMMON AND B CONNECTIONS WILL CLOSE WHEN VALVE MOVES 1/5 OF ITS TOTAL TRAVEL DISTANCE.

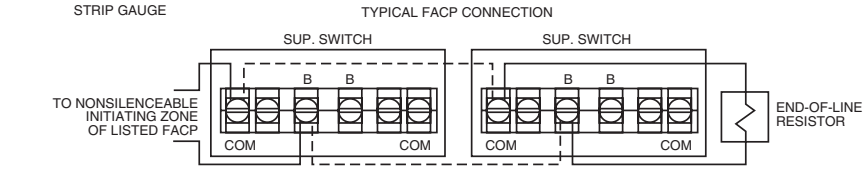

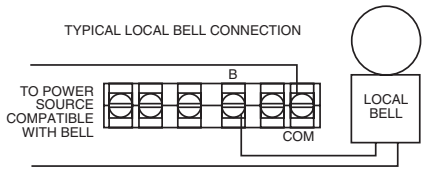

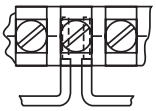

BREAK WIRE AS SHOWN FOR SUPERVISION OF CONNECTION. DO NOT ALLOW STRIPPED WIRE LEADS TO EXTEND BEYOND SWITCH HOUSING. DO NOT LOOP WIRES.

OSY2 Mounting

The following are examples of acceptable mounting positions:

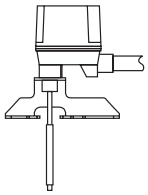

Actuator Vertical (Down)

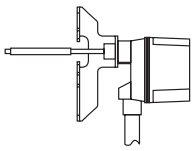

Actuator Horizontal

The following mounting position is not acceptable:

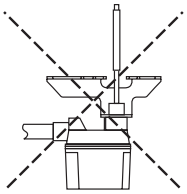

Actuator Vertical (Pointing Up)

Ordering Information

Part No.	Description
OSY2	Outside Screw and Yoke valve supervisory switch
OSY2A	Outside Screw and Yoke valve supervisory switch (ULC model)
Accessories	
OSYRK	Replacement hardware kit (wrenches, screw pack and J–hooks)
546-7000	Cover tamper switch kit
S07-66-XX	Tamper screws for cover
WFDW	Replacement tamper-proof wrench for cover
HEXW	Replacement hex wrench

3825 Ohio Avenue • St. Charles, IL 60174
Phone: 800-SENSOR2 • Fax: 630-377-6495
www.systemsensor.com

©2011 System Sensor.
Product specifications subject to change without notice. Visit systemsensor.com for current product information, including the latest version of this data sheet.

WFDS74601 • 11/11

EPS10-1 and EPS10-2 Alarm Pressure Switches

System Sensor EPS10 Series switches are designed for use in wet, dry, deluge, and pre-action automatic sprinkler systems to indicate a discharge from a sprinkler.

Features

- Sensitivity adjustment wheel, no special tools required
- Reinforced diaphragm resists pressure spikes
- Two conduit entrances
- Both one- and two-switch models available

The EPS10-1 has a single SPDT switch while the EPS10-2 model contains two SPDT switches. The EPS10 Series features field adjustable pressure sensitivity to provide an alarm response between 4 and 20 psi. It is factory set to respond at 4 – 8 psi on rising or falling pressure. The pressure adjustment wheel requires no special tools and does not affect switch synchronization on the EPS10-2. The EPS10 Series switches are NEMA 4 rated.

Agency Listings

UL LISTED S739

FM APPROVED 0X0A7.AY 0D3A3.AY

ULC C5169

LPCB

7770-1209:147

VdS G4020028-27

Specifications, EPS10-1 and EPS10-2

Architectural/Engineering Specifications EPS10-1 (SPDT), EPS10-2 (2/SPDT)

Model shall be an EPS10-1 or EPS10-2 pressure type waterflow switch as manufactured by System Sensor of St. Charles, IL. They shall be installed on the sprinkler system with connection as shown on the drawings and/or as specified herein. Pressure switches shall be of the bellows-activated type. Switches shall have a maximum service pressure rating of 300 psi and shall be factory adjusted to operate at a pressure of 4 – 8 psi. There shall be one (1) or two (2) SPDT contacts rated at 10.0 Amp @ 125/250 VAC and 2.5 Amp @ 6/12/24 VDC. The contractor shall furnish and install, where indicated on the plans, pressure switches according to appropriate NFPA standards. Switches shall be provided with a ½˝NPT male pressure connection to be connected to the alarm check valve of a “wet” sprinkler system, into the intermediate chamber of a “dry” system, or to a pre-action or deluge valve. They shall be activated by any flow of water equal to or in excess of the discharge from one sprinkler head. Switches shall provide 1 knockout type and 1 open hole for ½˝conduit fitting attachment and a ground screw provision for electrical grounding. The switch enclosure shall be weatherproof and carry a UL 4x/NEMA 4 rating when used with proper electrical fittings and conduit. The cover shall incorporate tamper-resistant screws. The unit shall be listed by Underwriters Laboratories, Inc. and approved by Factory Mutual.

July 29, 2021

Specifications, EPS10-1 and EPS10-2 (continued)

Physical/Operating Specifications			
Maximum Operating Pressure	300 psi	**Operating Temperature Range**	Indoor or outdoor use: –40°F to 160°F (–40°C to 71°C)
Maximum Adjustment Pressure Range	4 to 20 psi	**Cover Tamper Switch**	UL Models: Optional P/N 546-8000 ULC Models: Factory Installed
Differential	Approximately 3 psi throughout range	**Enclosure**	Rated UL 4x, NEMA 4 for indoor or outdoor use
Factory Setting	Operates at rising pressure 4 to 8 psi	**Shipping Weight**	1.2 lbs. (.54 Kg)
Switch Contact Ratings	EPS10-1: One set SPDT (Form C) EPS10-2: Two sets SPDT (Form C) 10.0 A, ½ HP @ 125/250 VAC 2.5 A @ 6/12/24 VDC	**Service Use**	Automatic Sprinkler: NFPA 13 One or Two Family Dwelling: NFPA 13D Residential Occupancies up to 4 Stories: NFPA 13R National Fire Alarm Code: NFPA 72
Pressure Connection	½″ NPT male glass reinforced nylon	**Warranty**	3 years
Dimensions	5.12″H × 3.325″W × 4.250″L (13.0 cm × 8.4 cm × 10.8 cm)		

Typical Sprinkler Applications

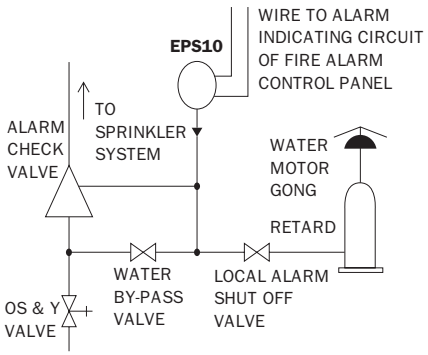

WET SYSTEM

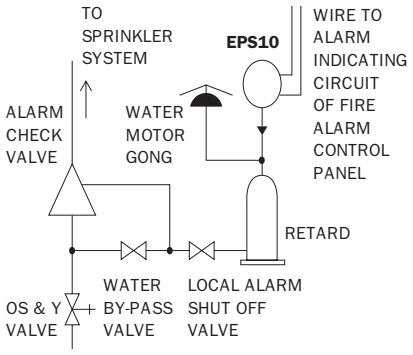

WET SYSTEM

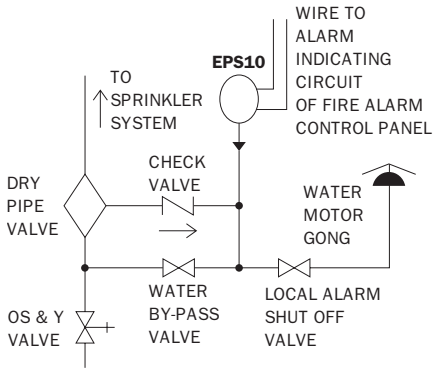

DRY SYSTEM

Pressure Switch Basic Dimensions

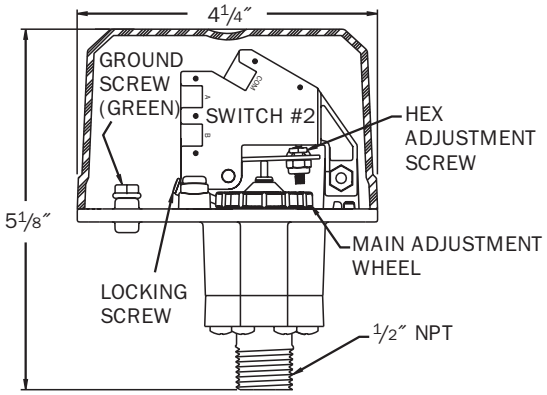

Electrical Connections

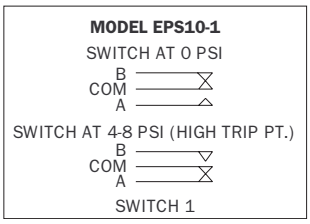

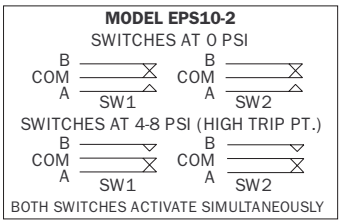

Ordering Information

Part No.	Description
EPS10-1	Alarm Waterflow Pressure Switch, One SPDT, 4–20 PSI
EPS10-2	Alarm Waterflow Pressure Switch, Two SPDT, 4–20 PSI
EPSA10-1	ULC/Canadian Version
EPSA10-2	ULC/Canadian Version
Replacement Parts	
S07-66-02	Replacement Tamper Screws for Cover of EPS
WFDW	Replacement Tamper Proof Wrench for Cover of EPS
546-8000	Cover Tamper Switch for EPS Series

SYSTEM SENSOR®

3825 Ohio Avenue • St. Charles, IL 60174
Phone: 800-SENSOR2 • Fax: 630-377-6495
www.systemsensor.com

©2014 System Sensor.
Product specifications subject to change without notice. Visit systemsensor.com for current product information, including the latest version of this data sheet.

WFDS51702 • 12/14

Kidde WHDR™ Wet Chemical Cylinder Assemblies

Effective: June 2016
K-87-001

FEATURES

- ***For use in WHDR Commercial Cooking Fire Suppression Systems***
- ***Flexible System Configurations***
- ***Five Cylinder Sizes to Suit any Application***
- ***Factory Filled and Pressurized***
- ***No Additional Hardware Required to Pressurize or Regulate Flow***
- ***Rugged, Nickel-Plated Brass Valve***
- ***Durable, Easy-to-Clean, Corrosion-Resistant White Powder Coat Finish***
- ***Easy-to-Read Pressure Gauge for Instant Verification of System Readiness***
- ***DOT/TC Stamped***
- ***UL Listed to Standard UL 300***
- ***ULC Listed to Standard ULC/ORD-C1254.6***
- ***DNV-GL, LR & ABS Approved for Marine Galleys***
- ***System Operating Temperature Range from 0°F to 120°F (-18°C to 49°C)***

DESCRIPTION

The WHDR Series cylinders are used in Kidde pre-engineered wet chemical fire suppression systems for protection of ventilation equipment and appliances associated with commercial cooking operations. The cylinders are factory-filled with Kidde APC wet chemical agent and pressurized with nitrogen to 175 psig at 70ºF (1207 KPa at 21ºC). Kidde APC wet chemical agent provides fast, efficient fire suppression, surface cooling, and prevents re-ignition of fire.

WHDR series cylinders are available in 4 capacities and 5 different sizes to suit a variety of commercial cooking fire protection applications (see Table 1). All cylinders conform to DOT and TC specifications.

Kidde APC agent is discharged through the WHDR cylinder valve, a brass-alloy, nickel-plated forging, trusted worldwide for over 30 years. The valve includes an easy to read pressure gauge to facilitate quick inspection.

WHDR series cylinders are pneumatically actuated via a System Valve Actuator (SVA), using either the XV™ Control System (P/N 87-120099-002) or KRS-50 Control Box (P/N 87-120010-001). Kidde WHDR systems have a listed operating temperature range of 0º F to 120ºF (-18ºC to 49ºC).

All WHDR cylinders are shipped with an anti-recoil plate and valve protection plate for safety.

TECHNICAL DATA

Table 1: Cylinder Assembly Information

Model Number	Part Number	Max. Flows	APC Wet Chemical Agent Fill Qty Gallons (Liters)	Charged Weight lb. (kg)
WHDR-125	87-120001-001	4	1.33 (5.03)	30 (13.6)
WHDR-260	87-120002-001	8	2.66 (10.07)	56 (25.4)
WHDR-400S	87-120003-001	12	4.0 (15.14)	77 (34.9)
WHDR-400M	87-120006-001	12	4.0 (15.14)	77 (34.9)
WHDR-600	87-120005-001	18	6.0 (22.71)	112 (50.8)

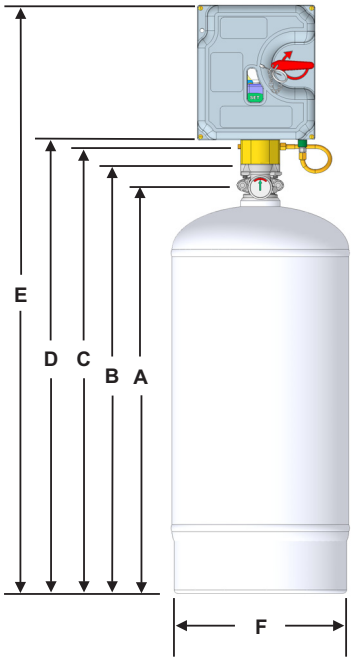

Figure 1. Dimensions of Cylinder Assembly with SVA and XV Control System

Table 2: Dimensions of Cylinder Assembly with SVA and XV Control System

Model	Dimensions					
	A Center of Discharge Port	B Top of Cylinder Valve	C Center of SVA Port	D Top of SVA	E Overall Height	F Nominal Diameter
WHDR-125	13-3/4 in. (349 mm)	15-1/4 in. (387 mm)	16-1/2 in. (419 mm)	17 in. (432 mm)	25-1/8 in. (638 mm)	8 in. (203 mm)
WHDR-260	19-9/16 in. (497 mm)	21 in. (534 mm)	22-5/16 in. (567 mm)	22-3/4 in. (578 mm)	30-15/16 in. (786 mm)	9 in. (230 mm)
WHDR-400S	17-1/2 in. (445 mm)	19 in. (483 mm)	20-1/4 in. (514 mm)	20-3/4 in. (527 mm)	28-7/8 in. (733 mm)	12-1/4 in. (311 mm)
WHDR-400M	22-15/16 in. (583 mm)	24-7/16 in. (621 mm)	25-11/16 in. (652 mm)	26-3/16 in. (665 mm)	34-5/16 in. (872 mm)	10 in. (254 mm)
WHDR-600	33-11/16 in. (856 mm)	35-3/16 in. (894 mm)	36-7/16 in. (929 mm)	36-15/16 in. (938 mm)	45-1/16 in. (1145 mm)	10 in. (254 mm)

SYSTEM VALVE ACTUATOR, P/N 87-120042-001

A System Valve Actuator (SVA) must be mounted to every WHDR cylinder valve assembly (see Figure 2). The SVA contains a pneumatically operated piston, which depresses the cylinder valve stem to open the valve and discharge the wet chemical. The SVA has ports for connection of actuation tubing or braided hose to the Kidde control system. Nitrogen from the control head flows through the actuation tubing, pressurizing the SVA(s), thereby extending the internal SVA piston. The piston is equipped with a spring-loaded plunger, which locks the piston in the actuated position, ensuring a complete cylinder discharge.

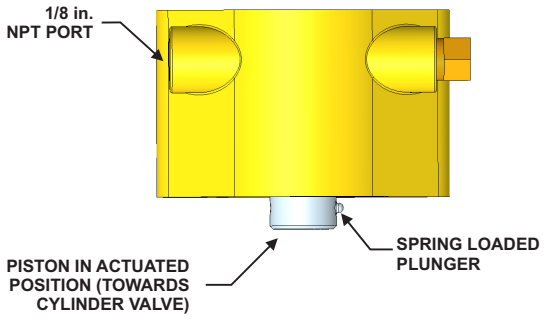

Figure 2. System Valve Actuator

ANTI-RECOIL AND VALVE PROTECTION PLATES

Each Kidde WHDR cylinder is factory equipped with an anti-recoil plate and valve protection plate (see Figure 3). The anti-recoil plate is a safety feature attached to the valve outlet port. In the event of an accidental actuation of a cylinder that is not properly secured and connected to system piping, the anti-recoil plate will provide a controlled, safe discharge.

The valve protection plate is installed on the valve actuation port to prevent tampering or accidental depression of the valve actuation pin.

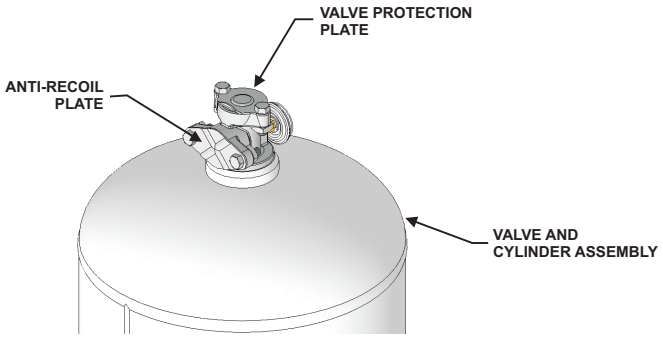

Figure 3. Anti-Recoil and Valve Protection Plates

DISCHARGE ADAPTER KIT, P/N 83-844908-000

The Discharge Adapter (see Figure 4 and Figure 5) provides a means to connect agent distribution pipe to Kidde WHDR cylinder and valve assemblies. The Discharge Adapter Kit (DAK) consists of a valve outlet adapter, o-ring and steel flange plate. The valve outlet adapter has a ¾" NPT male thread and ½" NPT female thread for connection to system piping.

The Discharge Adapter can also be used as a recharge adapter to pressurize WHDR cylinders with nitrogen after re-filling with Kidde APC wet chemical.

A Discharge Adapter Kit is required for every cylinder and must be ordered separately.

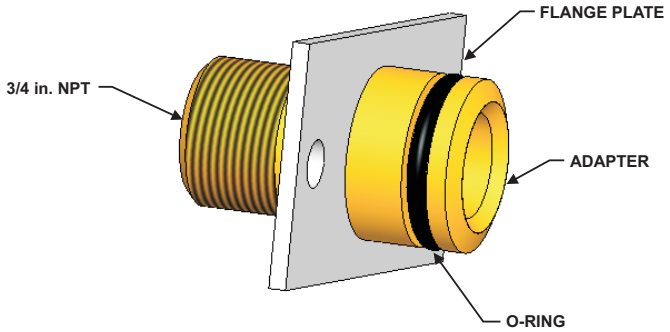

Figure 4. Discharge Adapter Kit

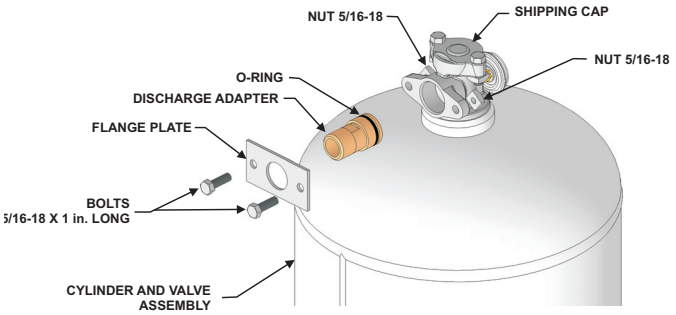

Figure 5. Discharge Adapter Kit Installation

VENT PLUG, P/N 60-9196984-000

The Vent Plug (see Figure 6) is installed in the discharge piping near a WHDR cylinder to prevent pressure build up in the system piping, caused by heat, from rupturing the foil seals on the nozzles. The Vent Plug has a ½-inch NPT male thread, and must be installed in an upright or horizontal position, one per pipe network.

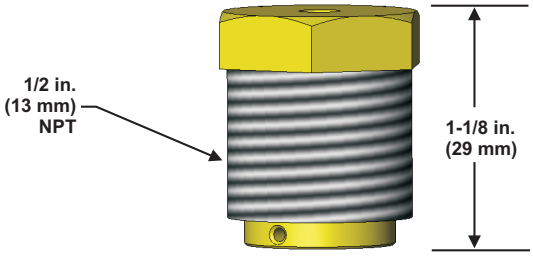

Figure 6. 1/2-inch Vent Plug, P/N 60-9196984-000

ORDERING INFORMATION

Description	Part Number
WHDR-125 Cylinder and Valve Assembly (4 Flow)	87-120001-001
WHDR-260 Cylinder and Valve Assembly (8 Flow)	87-120002-001
WHDR-400S Cylinder and Valve Assembly (12 Flow)	87-120003-001
WHDR-400M Cylinder and Valve Assembly (12 Flow)	87-120006-001
WHDR-600 Cylinder and Valve Assembly (18 Flow)	87-120005-001
Discharge Adapter Kit (one required for each cylinder)	83-844908-000
Vent Plug (one required for each set of piping)	60-9196984-000
Pressure Gauge Shield	83-131024-001
WHDR-125 Wall Mount Bracket	60-9197430-000
WHDR-260 Wall Mount Bracket	60-9197263-000
WHDR-400S Wall Mount Bracket	60-9197415-000
WHDR-400M Wall Mount Bracket	60-9197414-000
WHDR-600 or 400M Shelf Bracket (wall or floor mount)	87-100013-001
Floor Mount Kit, for use with Shelf Bracket (on WHDR-600 and WHDR-400M)	87-100010-001
System Valve Actuator (one required per cylinder, one ships with each control head)	87-120042-001

REFERENCE INFORMATION

WHDR Systems must be designed and installed in accordance with manual P/N 87-122000-001, *Kidde WHDR Wet Chemical Fire Suppression System Design, Installation, Operation, and Maintenance Manual*.

WHDR and XV are trademarks of Kidde-Fenwal, Inc.

This literature is provided for informational purposes only. KIDDE-FENWAL, INC. assumes no responsibility for the product's suitability for a particular application. The product must be properly applied to work correctly.
If you need more information on this product, or if you have a particular question, contact KIDDE-FENWAL, INC., Ashland, MA 01721.

© 2016 Kidde-Fenwal Inc.

Kidde Fire Systems
400 Main Street
Ashland, MA 01721
Ph: 508.881.2000
Fax: 508.881.8920
www.kiddefiresystems.com

Mechanical Gas Valves

P/N: 87-100001-00X

Effective: November 2012
K-87-022

FEATURES

- ***For Use in:***
  - ***WHDR™ Commercial Cooking Fire Suppression Systems***
  - ***IND™ Industrial Fire Suppression Systems***
- ***For Use with XV™ Control System and KRS-50 Control Box***
- ***UL & ULC Listed***
- ***FM Approved for IND™ Systems***

DESCRIPTION

A Mechanical Gas Valve (Figure 1) is required on systems used to protect gas-fueled equipment (e.g., appliances). Upon system actuation, tension on the control stem is released, closing the valve and stopping gas flow to the equipment.

All Mechanical Gas Valves include an optional cable block (see Figure 2) which can be used to prevent over-extending the valve stem in the open position.

Note: Only Mechanical Gas Valves that are specifically UL listed and identified by part number in this data sheet may be used with the Kidde system.

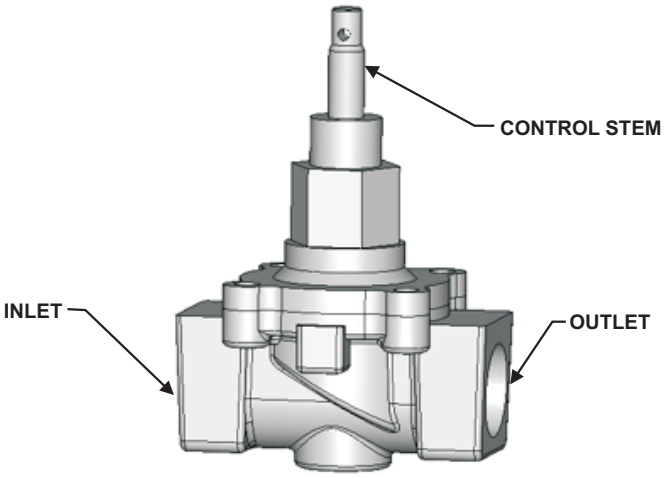

Figure 1. Mechanical Gas Valve, P/N 87-100001-001

ORDERING INFORMATION

Gas Valves:	
Valve Size	**Part Number**
3/4 in. (19 mm)	87-100001-001
1 in. (25.4 mm)	87-100001-002
1-1/4 in. (32 mm)	87-100001-003
1-1/2 in. (38 mm)	87-100001-004
2 in. (51 mm)	87-100001-005
2-1/2 in. (64 mm)	87-100001-006
3 in. (76 mm)	87-100001-007
Pulley:	
Double Tee Pulley	83-843792-000

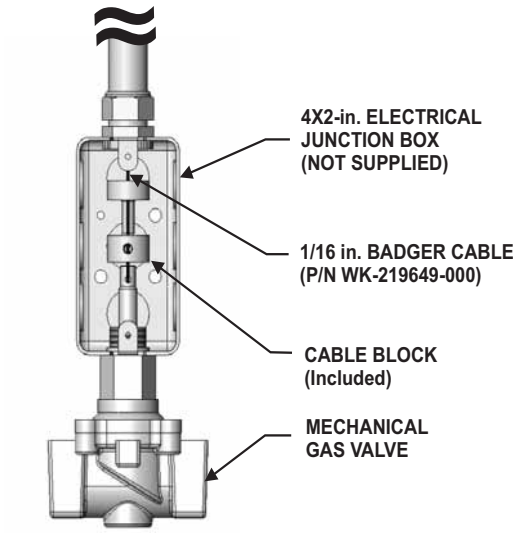

Figure 2. Typical Mechanical Gas Valve Installation

DIMENSIONS

Mechanical Gas Valves can be mounted in any orientation. Refer to Figure 3 and Table 1 below for dimension values.

Table 1: Dimensions for Mechanical Gas Valves

	Dimensions (inches)								
Part Number	**NPT**	**A**	**B**	**C**	**D**	**E**	**F (Max.)**	**G**	**H**
87-100001-001	3/4	3 5/16	1 21/32	3 3/4	4	4 13/16	3/16	1 9/64	2 11/32
87-100001-002	1	5	2 3/8	5 19/32	5 27/32	7 5/32	17/32	2 11/16	5 3/8
87-100001-003	1 1/4								
87-100001-004	1 1/2			5 21/32	5 51/64				
87-100001-005	2	6 3/32	2 13/16	6	6 1/4	7 3/4	39/64	3 5/32	6 5/16
87-100001-006	2 1/2	7 51/64	3 29/32	7 3/8	7 5/8	9 61/64	29/32	4 1/8	7 61/64
87-100001-007	3	7 25/32	3 57/64						

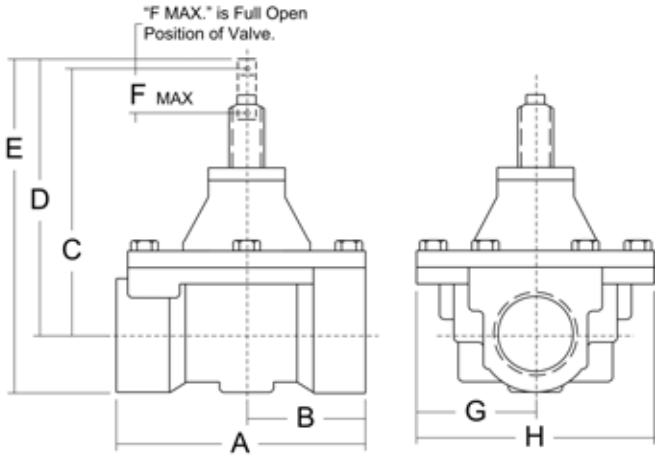

Figure 3. Dimensions of the Mechanical Gas Valve

USE WITH DOUBLE TEE PULLEY

Two mechanical gas valves can be simultaneously operated from a single *XV* Control System connection when used in conjunction with the Double Tee Pulley, P/N 83-843792-000. (See Figure 4.)

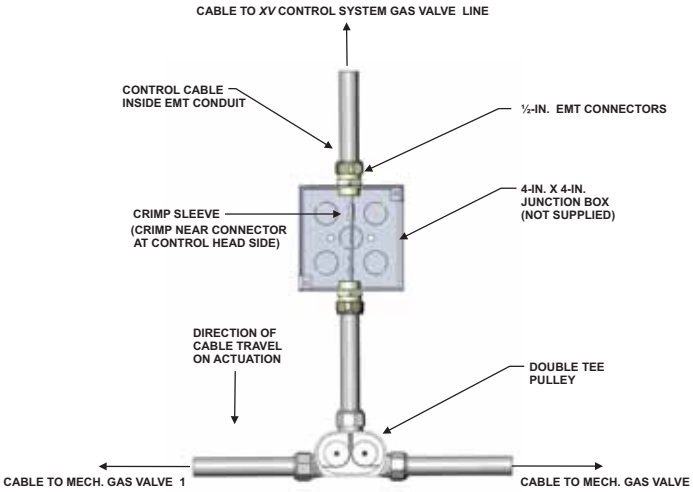

Figure 4. Double Tee Pulley with Two Mechanical Gas Valves (*XV* Control System only)

Kidde is a registered trademark of Kidde-Fenwal, Inc.
WHDR, IND, and *XV* are trademarks of Kidde-Fenwal, Inc.

This literature is provided for informational purposes only. KIDDE-FENWAL, INC. assumes no responsibility for the product's suitability for a particular application. The product must be properly applied to work correctly. If you need more information on this product, or if you have a particular question, contact KIDDE-FENWAL, INC., Ashland, MA 01721.
Telephone: (508) 881-2000.

Kidde Fire Systems
400 Main Street
Ashland, MA 01721
Ph: 508.881.2000
Fax: 508.881.8920
www.kiddefiresystems.com

 © 2012 Kidde-Fenwal Inc.

MOTT MACDONALD
111 South Wood Avenue
Iselin, NJ 08830

HYDRAULIC CALCULATIONS

FOR

Orangburg Training Center

MM Project Number: 505100403
DATE: JUL 29, 2021

Wet pipe system for Unit Storage Rooms

-DESIGN DATA-

OCCUPANCY CLASSIFICATION: Extra Hazard

DENSITY: 1.0 gpm/sq. ft.

AREA OF APPLICATION: 1,200 sq. ft.

COVERAGE PER SPRINKLER: 100 sq. ft.

NUMBER OF SPRINKLERS CALCULATED: 12 sprinklers

TOTAL SPRINKLER WATER FLOW REQUIRED: 1205.9 gpm

TOTAL WATER REQUIRED (including hose): 1455.9 gpm

FLOW AND PRESSURE (@ BOR): 1206 gpm and 61 psi

SPRINKLER ORIFICE SIZE: 3/4 inch

NAME OF CONTRACTOR: TBD

DESIGN/LAYOUT BY: TBD

AUTHORITY HAVING JURISDICTION: TBD

CONTRACTOR CERTIFICATION NUMBER: TBD

CALCULATIONS BY HASS COMPUTER PROGRAM (LICENSE # 64617964)
HRS SYSTEMS, INC.

DATE: 7/29/2021:\USERS\KEO76433\DOCUMENTS\HASSDATA\ORANGEBURG 7.28.21.SDF
JOB TITLE: Orangeburg Training Center

WATER SUPPLY DATA

SOURCE NODE TAG	STATIC PRESS. (PSI)	RESID. PRESS. (PSI)	@ FLOW (GPM)	AVAIL. PRESS. (PSI)	@ TOTAL DEMAND (GPM)	REQ'D PRESS. (PSI)
39	164.0	139.0	1435.0	138.3	1455.9	112.2

AGGREGATE FLOW ANALYSIS:

TOTAL FLOW AT SOURCE 1455.9 GPM
TOTAL HOSE STREAM ALLOWANCE AT SOURCE 250.0 GPM
OTHER HOSE STREAM ALLOWANCES 0.0 GPM
TOTAL DISCHARGE FROM ACTIVE SPRINKLERS 1205.9 GPM

NODE ANALYSIS DATA

NODE TAG	ELEVATION (FT)	NODE TYPE	PRESSURE (PSI)	DISCHARGE (GPM)
1	19.0	K=16.80	35.4	99.9
2	18.0	- - - -	37.3	- - -
3	19.0	K=16.80	35.5	100.1
4	18.0	- - - -	37.4	- - -
5	19.0	K=16.80	36.0	100.8
6	18.0	- - - -	37.9	- - -
7	19.0	K=16.80	37.0	102.2
8	18.0	- - - -	39.0	- - -
9	18.0	- - - -	39.7	- - -
10	19.0	K=16.80	35.0	99.4
11	18.0	- - - -	36.9	- - -
12	19.0	K=16.80	35.1	99.6
13	18.0	- - - -	37.1	- - -
14	19.0	K=16.80	35.6	100.2
15	18.0	- - - -	37.5	- - -
16	19.0	K=16.80	36.6	101.6
17	18.0	- - - -	38.6	- - -
18	18.0	- - - -	39.8	- - -
19	19.0	K=16.80	35.2	99.7
20	18.0	- - - -	37.1	- - -
21	19.0	K=16.80	35.3	99.9
22	18.0	- - - -	37.3	- - -
23	19.0	K=16.80	35.8	100.5
24	18.0	- - - -	37.8	- - -
25	19.0	K=16.80	36.8	101.9
26	18.0	- - - -	38.8	- - -
27	18.0	- - - -	40.0	- - -
28	18.0	- - - -	52.7	- - -
29	4.0	- - - -	61.3	- - -
30	4.0	- - - -	61.5	- - -
31	-3.0	- - - -	66.5	- - -
32	-3.0	- - - -	81.3	- - -
33	-3.0	- - - -	94.1	- - -

DATE: 7/29/2021:\USERS\KEO76433\DOCUMENTS\HASSDATA\ORANGEBURG 7.28.21.SDF
JOB TITLE: Orangeburg Training Center

NODE ANALYSIS DATA

NODE TAG	ELEVATION (FT)	NODE TYPE	PRESSURE (PSI)	DISCHARGE (GPM)
34	4.0	- - - -	91.8	- - -
35	4.0	- - - -	103.8	- - -
36	4.0	- - - -	104.6	- - -
37	-3.0	- - - -	108.6	- - -
38	-3.0	- - - -	110.5	- - -
39	-3.0	SOURCE	112.2	1205.9

DATE: 7/29/2021:\USERS\KEO76433\DOCUMENTS\HASSDATA\ORANGEBURG 7.28.21.SDF
JOB TITLE: Orangeburg Training Center

PIPE DATA

PIPE TAG END NODES	ELEV. (FT)	NOZ. (K)	PT (PSI)	DISC. (GPM)	Q(GPM) VEL(FPS)	DIA(IN) HW(C) FL/FT		LENGTH (FT)		PRESS. SUM. (PSI)
Pipe: 1					-99.9	2.067	PL	1.00	PF	1.5
1	19.0	16.8	35.4	99.9	9.6	120	FTG	ET	PE	0.4
2	18.0	0.0	37.3	0.0		0.094	TL	16.00	PV	
Pipe: 2					-100.1	2.067	PL	1.00	PF	1.5
3	19.0	16.8	35.5	100.1	9.6	120	FTG	ET	PE	0.4
4	18.0	0.0	37.4	0.0		0.094	TL	16.00	PV	
Pipe: 3					-99.9	3.068	PL	10.00	PF	0.1
2	18.0	0.0	37.3	0.0	4.3	120	FTG	----	PE	0.0
4	18.0	0.0	37.4	0.0		0.014	TL	10.00	PV	
Pipe: 4					-100.8	2.067	PL	1.00	PF	1.5
5	19.0	16.8	36.0	100.8	9.6	120	FTG	ET	PE	0.4
6	18.0	0.0	37.9	0.0		0.095	TL	16.00	PV	
Pipe: 5					-200.0	3.068	PL	10.00	PF	0.5
4	18.0	0.0	37.4	0.0	8.7	120	FTG	----	PE	0.0
6	18.0	0.0	37.9	0.0		0.049	TL	10.00	PV	
Pipe: 6					-102.2	2.067	PL	1.00	PF	1.6
7	19.0	16.8	37.0	102.2	9.8	120	FTG	ET	PE	0.4
8	18.0	0.0	39.0	0.0		0.098	TL	16.00	PV	
Pipe: 7					-300.8	3.068	PL	10.00	PF	1.1
6	18.0	0.0	37.9	0.0	13.1	120	FTG	----	PE	0.0
8	18.0	0.0	39.0	0.0		0.105	TL	10.00	PV	
Pipe: 8					-403.0	4.026	PL	5.00	PF	0.7
8	18.0	0.0	39.0	0.0	10.2	120	FTG	E	PE	0.0
9	18.0	0.0	39.7	0.0		0.048	TL	15.00	PV	
Pipe: 9					-99.4	2.067	PL	1.00	PF	1.5
10	19.0	16.8	35.0	99.4	9.5	120	FTG	ET	PE	0.4
11	18.0	0.0	36.9	0.0		0.093	TL	16.00	PV	
Pipe: 10					-99.6	2.067	PL	1.00	PF	1.5
12	19.0	16.8	35.1	99.6	9.5	120	FTG	ET	PE	0.4
13	18.0	0.0	37.1	0.0		0.093	TL	16.00	PV	
Pipe: 11					-99.4	3.068	PL	10.00	PF	0.1
11	18.0	0.0	36.9	0.0	4.3	120	FTG	----	PE	0.0
13	18.0	0.0	37.1	0.0		0.014	TL	10.00	PV	
Pipe: 12					-100.2	2.067	PL	1.00	PF	1.5
14	19.0	16.8	35.6	100.2	9.6	120	FTG	ET	PE	0.4
15	18.0	0.0	37.5	0.0		0.094	TL	16.00	PV	

DATE: 7/29/2021:\USERS\KEO76433\DOCUMENTS\HASSDATA\ORANGEBURG 7.28.21.SDF
JOB TITLE: Orangeburg Training Center

PIPE TAG / END NODES	ELEV. (FT)	NOZ. (K)	PT (PSI)	DISC. (GPM)	Q(GPM) VEL(FPS)	DIA(IN) HW(C) FL/FT		LENGTH (FT)		PRESS. SUM. (PSI)
Pipe: 13					-199.0	3.068	PL	10.00	PF	0.5
13	18.0	0.0	37.1	0.0	8.6	120	FTG	----	PE	0.0
15	18.0	0.0	37.5	0.0		0.049	TL	10.00	PV	
Pipe: 14					-101.6	2.067	PL	1.00	PF	1.5
16	19.0	16.8	36.6	101.6	9.7	120	FTG	ET	PE	0.4
17	18.0	0.0	38.6	0.0		0.097	TL	16.00	PV	
Pipe: 14A					-299.2	3.068	PL	10.00	PF	1.0
15	18.0	0.0	37.5	0.0	13.0	120	FTG	----	PE	0.0
17	18.0	0.0	38.6	0.0		0.104	TL	10.00	PV	
Pipe: 15					-400.9	4.026	PL	5.00	PF	1.2
17	18.0	0.0	38.6	0.0	10.1	120	FTG	T	PE	0.0
18	18.0	0.0	39.8	0.0		0.048	TL	25.00	PV	
Pipe: 16					-403.0	6.065	PL	10.00	PF	0.1
9	18.0	0.0	39.7	0.0	4.5	120	FTG	----	PE	0.0
18	18.0	0.0	39.8	0.0		0.007	TL	10.00	PV	
Pipe: 17					-99.7	2.067	PL	1.00	PF	1.5
19	19.0	16.8	35.2	99.7	9.5	120	FTG	ET	PE	0.4
20	18.0	0.0	37.1	0.0		0.093	TL	16.00	PV	
Pipe: 18					-99.9	2.067	PL	1.00	PF	1.5
21	19.0	16.8	35.3	99.9	9.5	120	FTG	ET	PE	0.4
22	18.0	0.0	37.3	0.0		0.094	TL	16.00	PV	
Pipe: 19					-99.7	3.068	PL	10.00	PF	0.1
20	18.0	0.0	37.1	0.0	4.3	120	FTG	----	PE	0.0
22	18.0	0.0	37.3	0.0		0.014	TL	10.00	PV	
Pipe: 20					-100.5	2.067	PL	1.00	PF	1.5
23	19.0	16.8	35.8	100.5	9.6	120	FTG	ET	PE	0.4
24	18.0	0.0	37.8	0.0		0.095	TL	16.00	PV	
Pipe: 21					-199.6	3.068	PL	10.00	PF	0.5
22	18.0	0.0	37.3	0.0	8.7	120	FTG	----	PE	0.0
24	18.0	0.0	37.8	0.0		0.049	TL	10.00	PV	
Pipe: 22					-101.9	2.067	PL	1.00	PF	1.6
25	19.0	16.8	36.8	101.9	9.7	120	FTG	ET	PE	0.4
26	18.0	0.0	38.8	0.0		0.097	TL	16.00	PV	
Pipe: 23					-300.1	3.068	PL	10.00	PF	1.0
24	18.0	0.0	37.8	0.0	13.0	120	FTG	----	PE	0.0
26	18.0	0.0	38.8	0.0		0.105	TL	10.00	PV	
Pipe: 24					-402.1	4.026	PL	5.00	PF	1.2
26	18.0	0.0	38.8	0.0	10.1	120	FTG	T	PE	0.0
27	18.0	0.0	40.0	0.0		0.048	TL	25.00	PV	

DATE: 7/29/2021:\USERS\KEO76433\DOCUMENTS\HASSDATA\ORANGEBURG 7.28.21.SDF
JOB TITLE: Orangeburg Training Center

PIPE TAG / END NODES	ELEV. (FT)	NOZ. (K)	PT (PSI)	DISC. (GPM)	Q(GPM) VEL(FPS)	DIA(IN) HW(C) FL/FT		LENGTH (FT)		PRESS. SUM. (PSI)
Pipe: 25					-803.8	6.065	PL	10.00	PF	0.2
18	18.0	0.0	39.8	0.0	8.9	120	FTG	----	PE	0.0
27	18.0	0.0	40.0	0.0		0.023	TL	10.00	PV	
Pipe: 26					-1205.9	6.065	PL	200.00	PF	12.7
27	18.0	0.0	40.0	0.0	13.4	120	FTG	4E	PE	0.0
28	18.0	0.0	52.7	0.0		0.050	TL	256.00	PV	
Pipe: 27					-1205.9	6.065	PL	20.00	PF	2.5
28	18.0	0.0	52.7	0.0	13.4	120	FTG	GA	PE	6.1
29	4.0	0.0	61.3	0.0		0.050	TL	51.00	PV	
Pipe: 28					-1205.9	6.065	PL	4.00	PF	0.2
29	4.0	0.0	61.3	0.0	13.4	120	FTG	----	PE	0.0
30	4.0	0.0	61.5	0.0		0.050	TL	4.00	PV	
Pipe: 29					-1205.9	6.065	PL	10.00	PF	1.9
30	4.0	0.0	61.5	0.0	13.4	120	FTG	2E	PE	3.0
31	-3.0	0.0	66.5	0.0		0.050	TL	38.00	PV	
Pipe: 30					-1205.9	6.065	PL	180.00	PF	14.9
31	-3.0	0.0	66.5	0.0	13.4	100	FTG	ETG	PE	0.0
32	-3.0	0.0	81.3	0.0		0.070	TL	213.54	PV	
Pipe: 31					-1205.9	7.981	PL	1400.00	PF	12.8
32	-3.0	0.0	81.3	0.0	7.7	150	FTG	ET	PE	0.0
33	-3.0	0.0	94.1	0.0		0.009	TL	1480.09	PV	
Pipe: 32					-1205.9	7.981	PL	20.00	PF	0.7
33	-3.0	0.0	94.1	0.0	7.7	120	FTG	2E	PE	-3.0
34	4.0	0.0	91.8	0.0		0.013	TL	56.00	PV	
Pipe: 33					FIXED PRESSURE LOSS DEVICE					
34	4.0	0.0	91.8	0.0	12.0 psi, 1205.9 gpm					
35	4.0	0.0	103.8	0.0						
Pipe: 34					-1205.9	7.981	PL	20.00	PF	0.7
35	4.0	0.0	103.8	0.0	7.7	120	FTG	2E	PE	0.0
36	4.0	0.0	104.6	0.0		0.013	TL	56.00	PV	
Pipe: 35					-1205.9	7.981	PL	20.00	PF	1.0
36	4.0	0.0	104.6	0.0	7.7	120	FTG	ET	PE	3.0
37	-3.0	0.0	108.6	0.0		0.013	TL	73.00	PV	
Pipe: 36					-1205.9	7.981	PL	200.00	PF	2.0
37	-3.0	0.0	108.6	0.0	7.7	150	FTG	E	PE	0.0
38	-3.0	0.0	110.5	0.0		0.009	TL	227.20	PV	
Pipe: 37					-1205.9	7.981	PL	200.00	PF	1.7
38	-3.0	0.0	110.5	0.0	7.7	150	FTG	----	PE	0.0
39	-3.0	SRCE	112.2	(N/A)		0.009	TL	200.00	PV	

DATE: 7/29/2021:\USERS\KEO76433\DOCUMENTS\HASSDATA\ORANGEBURG 7.28.21.SDF
JOB TITLE: Orangeburg Training Center

NOTES (HASS):

(1) Calculations were performed by the HASS 2021 D computer program
in accordance with NFPA13 (2016)
under license no. 64617964 granted by
HRS Systems, Inc.
208 Southside Square
Petersburg, TN 37144
(931) 659-9760

(2) The system has been calculated to provide an average
imbalance at each node of 0.003 gpm and a maximum
imbalance at any node of 0.109 gpm.

(3) Total pressure at each node is used in balancing the system.
Maximum water velocity is 13.4 ft/sec at pipe 27.

(4) Items listed in bold print on the cover sheet

are automatically transferred from the calculation report.

(5) Available pressure at source node 39 under full flow conditions is
133.54 psi with a flow of 1596.68 gpm.

(6) PIPE FITTINGS TABLE

HASS Pipe Table Name: standard

PAGE: A MATERIAL: S40 HWC: 120

Diameter (in)	Equivalent Fitting Lengths in Feet								
	E Ell	T Tee	L LngEll	C ChkVlv	B BfyVlv	G GatVlv	A AlmChk	D DPVlv	N NTee
	F F45Ell								
2.067	5.00	10.00	3.00	11.00	6.00	1.00	10.00	10.00	10.00
	2.50								
3.068	7.00	15.00	5.00	16.00	10.00	1.00	13.00	13.00	15.00
	3.50								
4.026	10.00	20.00	6.00	22.00	12.00	2.00	20.00	20.00	20.00
	5.00								
6.065	14.00	30.00	9.00	32.00	10.00	3.00	28.00	28.00	30.00
	7.00								
7.981	18.00	35.00	13.00	45.00	12.00	4.00	31.00	31.00	35.00
	9.00								

DATE: 7/29/2021:\USERS\KEO76433\DOCUMENTS\HASSDATA\ORANGEBURG 7.28.21.SDF
JOB TITLE: Orangeburg Training Center

WATER SUPPLY ANALYSIS

Static: 164.00 psi Resid: 139.00 psi Flow: 1435.0 gpm

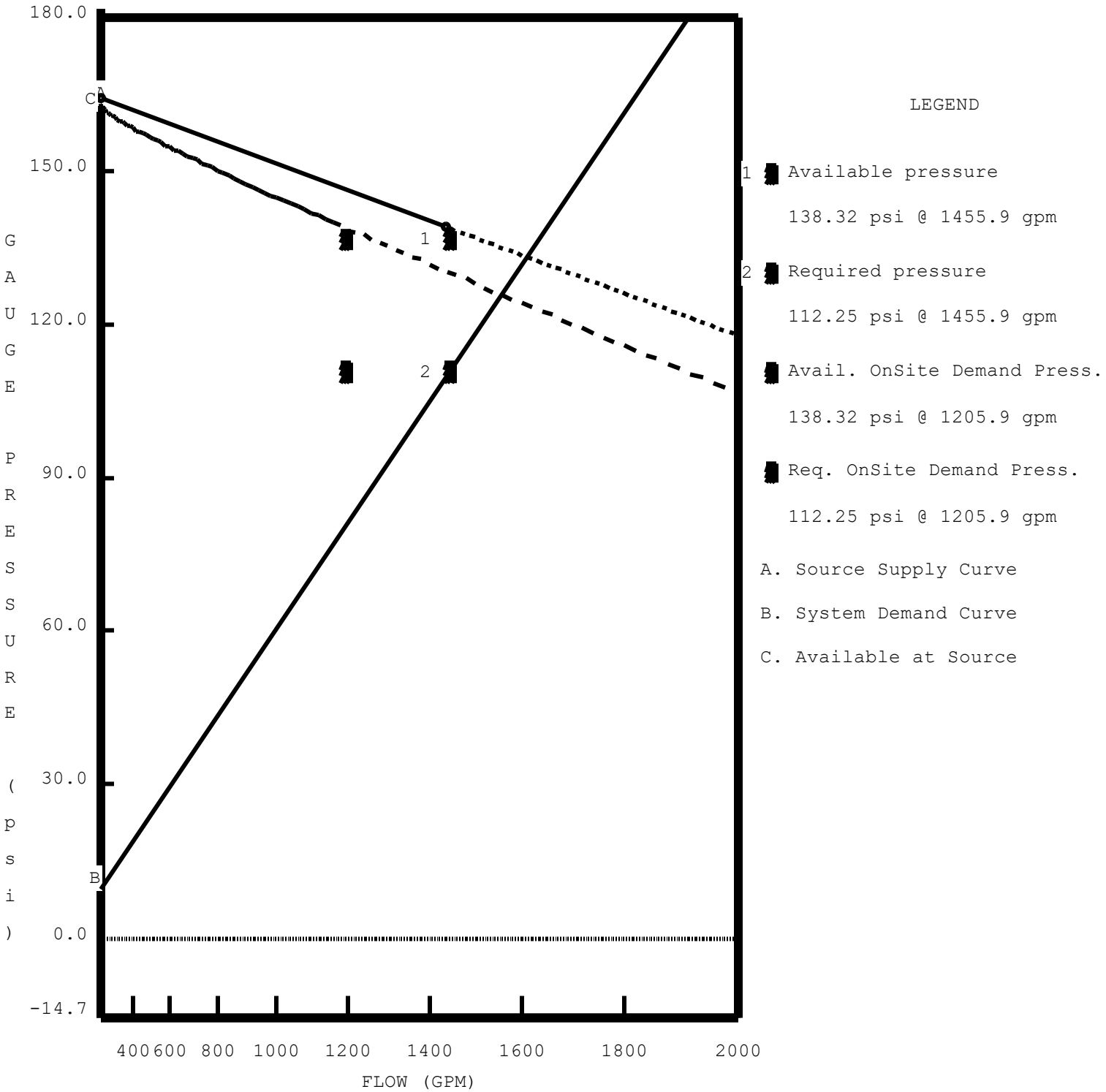

Note: (1) Dashed Lines indicate extrapolated values from Test Results

(2) On Site pressures are based on hose stream deduction at the source

DATE: 7/29/2021:\USERS\KEO76433\DOCUMENTS\HASSDATA\ORANGEBURG 7.28.21.SDF
JOB TITLE: Orangeburg Training Center

WATER SUPPLY CURVE

```
  168+
     *\\\\
     |    \\\\\
     |         \\\\\
  154+              \\\\\
     |                   \\\\\
     |                        \\\\\
     |                             \\\\\
  140+                                 *0<-139.0 psi @ 1435 gpm
     |                                      Flow Test Point
     |
     |
  126+
     |
     |
     |
 P112+                                  X
 R   |
 E   |
 S   |
 S 98+
 U   |
 R   |
 E   |
   84+
 (   |
 P   |
 S   |
 I 70+
 )   |
     |
     |
   56+
     |
     |
     |
   42+
     |
     |
     |==============================
   28+            LEGEND            "
     |                              "
     | X = Required Water Supply    "
     |    112.25 psi @ 1455.9 gpm   "
   14+                              "
     | 0 = Available Water Supply   "
     |    138.32 psi @ 1455.9 gpm   "
     |                              "
    0++-+---+----+-----+------+--------+--------+---------+-----------+
       400 600  800  1000   1200     1400     1600      1800        2000
                                    FLOW (GPM)
```

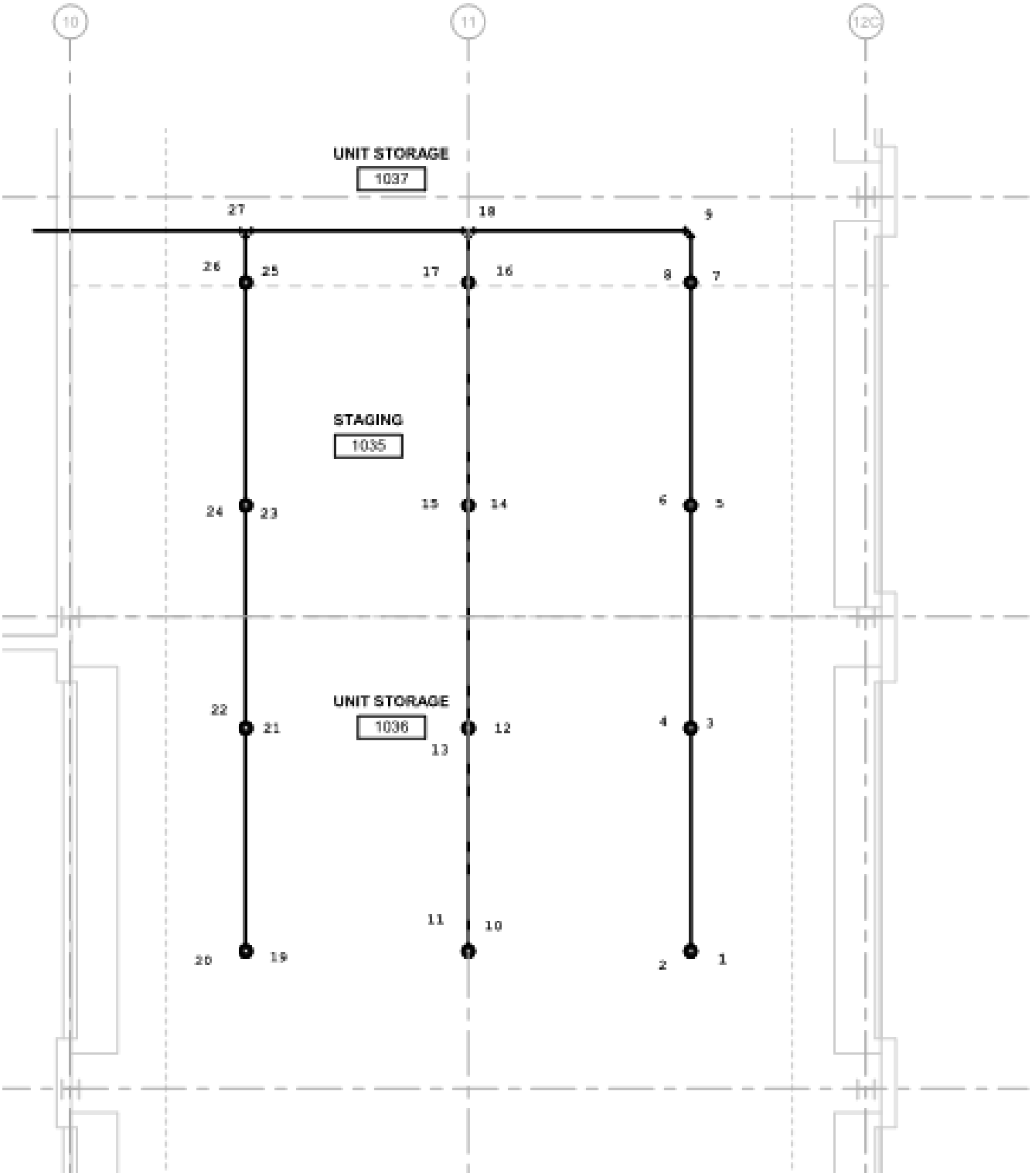

NODE DIAGRAM -1

July 29, 2021

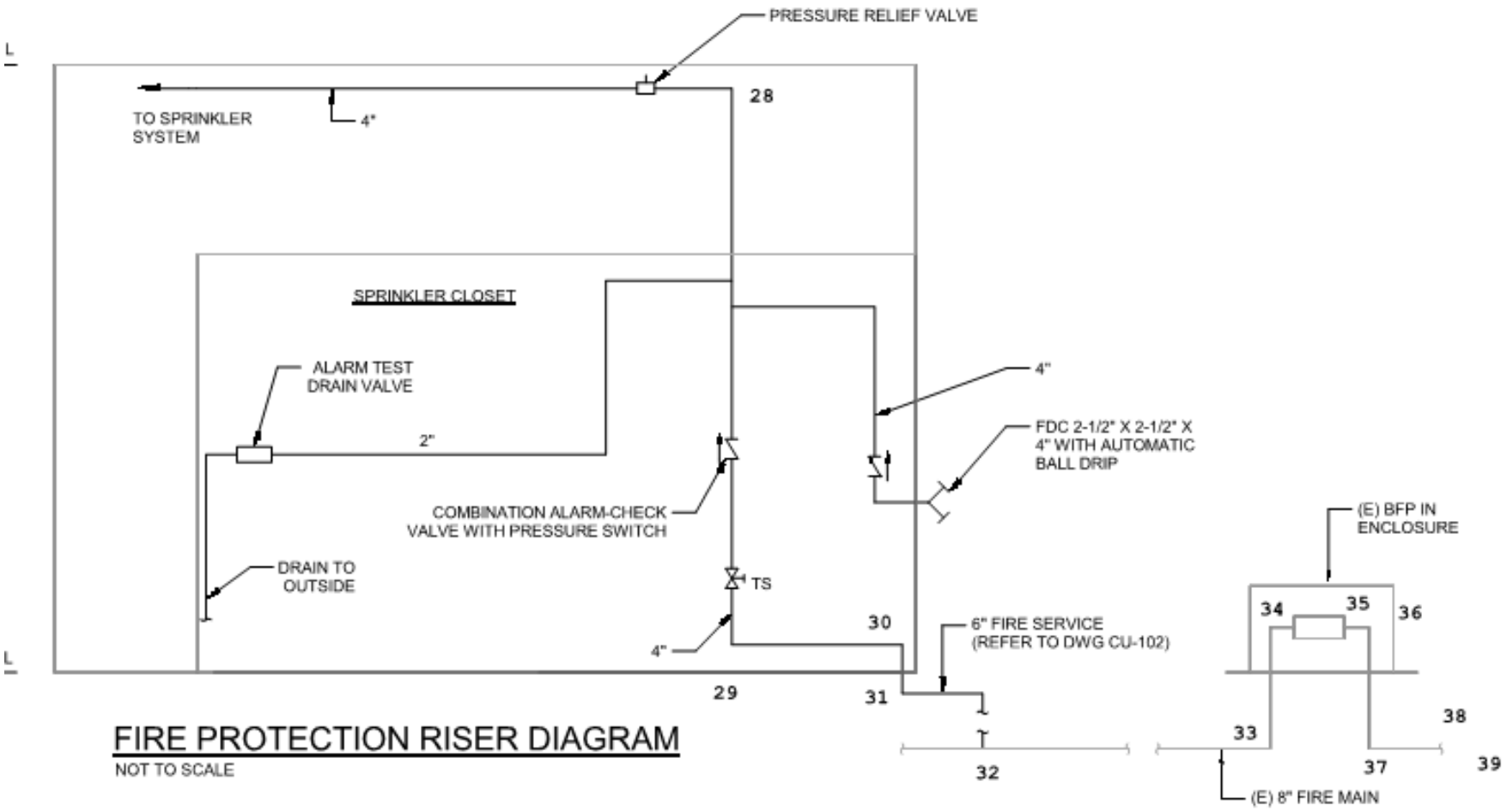

FIRE PROTECTION RISER DIAGRAM

NOT TO SCALE

NODE DIAGRAM -2

SUEZ New York

Hydrant Flow Test

MOTT MCDONALD / COLUM KEOUGH
111 WOOD AVENUE SOUTH
ISELIN NEW JERSEY

ATTN ; COLUM

Re: HYDRANT 8-82
123 ROUTE 303
ORANGEBURG NY

Following are the results of the flow test:

Date Tested	12.10.2020
Flow Hydrant:	.8-82
Control Hydrant	.7-80
Gauge Pressure (PSI)	90
Static Pressure (PSI)	164
Residual Pressure (PSI)	139
Hydrant Discharge Observed * (GPM)	1435
Work Order #	1772725

If there are any questions, please contact the SWNY Planning Specialist (845) 623-1500.

**** Flow test results represent pressure and flow conditions in the water main at the specified location at the time of the flow test. Please note that these conditions do not necessarily represent the lowest pressure and flow conditions that may occur in the main due to normal changes in daily and seasonal water demand. Please note that Suez Water New York makes no guarantees about the accuracy of the flow test information and shall not be held liable for operational problems with fire sprinkler systems designed using this information.***

July 29, 2021

H. Structural Calculations - Building

MARTOS
reinforcing design
ENGINEERING

Structural Engineering Calculations:
Main Building Additions

Proposed Main Building Additions
& Arms Vault
123 Route 303
Orangeburg, NY 10962

Prepared for:
Mott MacDonald

Referencing:
Architectural Drawings
A-001 through A-512
Prepared by Mott MacDonald
Dated: 01/22/2021

April 23, 2021
MARTOS Project Number: 20086

Design Wind Loads

Governing Codes: IBC 2018
ASCE 7-16

- Basic Wind Speed: $V = 115\,mph$
- Building Category: II
- Importance Category: 1.0
- Directionality Factor: $K_d = 0.85$ (ASCE Table 26.6-1)
- Velocity Pressure Exposure Coefficient: $K_z = 0.85$ (ASCE Table 26.10-1)
- Topographic Factor: $K_{zt} = 1.0$ (ASCE Section 26.8.2)
- Exposure Category: C
- Mean Roof Height: $\approx 14.25\,ft$
- Ground Elevation Factor: $K_e = 1.0$ (ASCE Section 26.9)

Velocity Pressure, q_z:

$$q_z = 0.00256\, K_z\, K_{zt}\, K_d\, K_e\, V^2 \quad \text{(ASCE Eq. 26.10-1)}$$

$$= (0.00256)(0.85)(1.0)(0.85)(1.0)(115\,mph)^2$$

$$= \boxed{24.5\,psf}$$

Components & Cladding Walls

Design Wind Pressure by effective wind area:

$P = q_h[(GC_p) - (GC_{pi})]$

where, $q_h = q = 24.5$ psf (Sheet 1)

$(GC_{pi}) = \pm 0.18$ (ASCE Table 26.13-1)

10ft²

• Toward the surface: Figure 30.3-1

• Zone 4 & 5: $P = q_h[(GC_p) \pm (GC_{pi})] =$

$= 24.5\text{psf}[1.0 - 0.18] = 20.09\text{psf} \Rightarrow 21\text{psf}$

$= 24.5\text{psf}[1.0 + 0.18] = 28.91\text{psf} \Rightarrow \boxed{29\text{psf}}$

• Away from the surface: Figure 30.3-1

• Zone 4: $P = q_h[(GC_p) \pm (GC_{pi})] =$

$= (24.5\text{psf})[-1.1 - 0.18] = -31.36\text{psf} \Rightarrow \boxed{-32\text{psf}}$

$= (24.5\text{psf})[-1.1 + 0.18] = -22.54\text{psf} \Rightarrow -23\text{psf}$

• Zone 5: $P = q_h[(GC_p) \pm (GC_{pi})] =$

$= (24.5\text{psf})[-1.4 - 0.18] = -38.71\text{psf} \Rightarrow \boxed{-39\text{psf}}$

$= (24.5\text{psf})[-1.4 + 0.18] = -29.89\text{psf} \Rightarrow -30\text{psf}$

Components & Cladding (Walls)

20ft²

- Toward the surface: Figure 30.3-1
  - Zone 4 & 5: $P = q_h[(GC_p) \pm (GC_{pi})]$

    $= (24.5psf)[(0.95) - (0.18)] = 18.87psf \Rightarrow 19psf$

    $= (24.5psf)[(0.95) + (0.18)] = 27.69psf \Rightarrow \boxed{28psf}$

- Away from the surface: Figure 30.3-1
  - Zone 4: $P = q_h[(GC_p) \pm (GC_{pi})]$

    $= (24.5psf)[-1.05 - 0.18] = -30.14psf \Rightarrow \boxed{-31psf}$

    $= (24.5psf)[-1.05 + 0.18] = -21.32psf \Rightarrow -22psf$

  - Zone 5: $P = q_h[(GC_p) \pm (GC_{pi})]$

    $= (24.5psf)[-1.3 - 0.18] = -36.26psf \Rightarrow \boxed{-37psf}$

    $= (24.5psf)[-1.3 + 0.18] = -27.44psf \Rightarrow -28psf$

Components & Cladding (Walls)

50 ft²

- Toward the surface: Figure 30.3-1
  - Zone 4 & 5: $P = q_h[(GC_p) \pm (GC_{pi})]$

    $= (24.5\,psf)[0.90 - 0.18] = 17.64\,psf \Rightarrow 18\,psf$

    $= (24.5\,psf)[0.90 + 0.18] = 26.46\,psf \Rightarrow \boxed{27\,psf}$

- Away from the surface: Figure 30.3-1
  - Zone 4: $P = q_h[(GC_p) \pm (GC_{pi})]$

    $= (24.5\,psf)[-1.0 - 0.18] = -28.91\,psf \Rightarrow \boxed{-29\,psf}$

    $= (24.5\,psf)[-1.0 + 0.18] = -20.09\,psf \Rightarrow -21\,psf$

  - Zone 5: $P = q_h[(GC_p) \pm (GC_{pi})]$

    $= (24.5\,psf)[-1.15 - 0.18] = -32.59\,psf \Rightarrow \boxed{-33\,psf}$

    $= (24.5\,psf)[-1.15 + 0.18] = -23.77\,psf \Rightarrow -24\,psf$

Components & Cladding (Walls)

100ft²

- Toward the surface: Figure 30.3-1
  - Zone 4 & 5: $P = q_h[(GC_p) \pm (GC_{pi})] =$

    $= (24.5psf)[0.8 - 0.18] = 15.19psf \Rightarrow 16psf$

    $= 24.5psf\,[0.8 + 0.18] = 24.01psf \Rightarrow \boxed{25psf}$

- Away from the surface: Figure 30.3-1
  - Zone 4: $P = q_h\,[(GC_p) \pm (GC_{pi})]$

    $= (24.5psf)[-0.9 - 0.18] = -26.46psf \Rightarrow \boxed{-27psf}$

    $= (24.5psf)[-0.9 + 0.18] = -17.64psf \Rightarrow -18psf$

  - Zone 5: $P = q_h\,[(GC_p) \pm (GC_{pi})]$

    $= (24.5psf)[-1.05 - 0.18] = -30.14psf \Rightarrow \boxed{-31psf}$

    $= (24.5psf)[-1.05 + 0.18] = -21.32psf \Rightarrow -22psf$

Components & Cladding (Walls)

200 ft²

- Toward the surface: Figure 30.3-1
  - Zone 4 & 5: $P = q_h[(GC_p) \pm (GC_{pi})]$

    $= (24.5psf)[0.78 - 0.18] = 14.7psf \Rightarrow 15psf$

    $= (24.5psf)[0.78 + 0.18] = 23.52psf \Rightarrow \boxed{24psf}$

- Away from the surface: Figure 30.3-1
  - Zone 4: $P = q_h[(GC_p) \pm (GC_{pi})]$

    $= (24.5psf)[-0.85 - 0.18] = -25.24psf \Rightarrow \boxed{-26psf}$

    $= (24.5psf)[-0.85 + 0.18] = -16.42psf \Rightarrow -17psf$

  - Zone 5: $P = q_h[(GC_p) \pm (GC_{pi})]$

    $= (24.5psf)[-0.95 - 0.18] = -27.69psf \Rightarrow \boxed{-28psf}$

    $= (24.5psf)[-0.95 + 0.18] = -18.87psf \Rightarrow -19psf$

COMPONENTS & CLADDING (ROOF)

DESIGN WIND PRESSURE BY EFFECTIVE WIND AREA:

$P = q_h [(GC_p) - (GC_{pi})]$

WHERE $q_h = q_z = 24.5$ psf (SHEET 1)

$(GC_{pi}) = \pm 0.18$ (ASCE TABLE 26.13-1)

$\underline{10 \text{ ft}^2}$

- TOWARD THE SURFACE:
  - ZONE 1', 1, 2, & 3: $P = q_h [(GC_p) \pm (GC_{pi})] =$ (FIGURE 30.3-2A)

    $= 24.5 [0.3 - 0.18] = 3$ psf

    $= 24.5 [0.3 + 0.18] = \boxed{12 \text{ psf}}$
- AWAY FROM THE SURFACE: $P = q_h [(GC_p) \pm (GC_{pi})]$ (FIGURE 30.3-2A)
  - ZONE 1': $P = 24.5 [-0.9 \pm 0.18] = -18$ psf $\boxed{-27 \text{ psf}}$
  - ZONE 1: $P = 24.5 [-1.7 \pm 0.18] = -37$ psf $\boxed{-46 \text{ psf}}$
  - ZONE 2: $P = 24.5 [-2.3 \pm 0.18] = -52$ psf $\boxed{-61 \text{ psf}}$
  - ZONE 3: $P = 24.5 [-3.2 \pm 0.18] = -74$ psf $\boxed{-83 \text{ psf}}$

COMPONENTS & CLADDING (ROOF)

20 ft²

- TOWARD THE SURFACE: FIGURE 30.3-2A
  - ALL ZONES: $P = q_h [(GC_p) \pm (GC_{pi})]$

    $= 24.5 [0.25 + 0.18] = \boxed{11 \text{ PSF}}$

    $= 24.5 [0.25 - 0.18] = 2 \text{ PSF}$

- AWAY FROM THE SURFACE:
  - ZONE 1': (SAME AS 10 ft²)
  - ZONE 1: $P = q_h [(GC_p) \pm (GC_{pi})]$

    $= 24.5 [-1.6 + 0.18] = -35 \text{ psf}$

    $= 24.5 [-1.6 - 0.18] = \boxed{-44 \text{ psf}}$
  - ZONE 2: $P = q_h [(GC_p) \pm (GC_{pi})]$

    $= 24.5 [-2.15 + 0.18] = -48 \text{ psf}$

    $= 24.5 [-2.15 - 0.18] = \boxed{-57 \text{ psf}}$
  - ZONE 3: $P = q_h [(GC_p) \pm (GC_{pi})]$

    $= 24.5 [-2.9 + 0.18] = -67 \text{ psf}$

    $= 24.5 [-2.9 - 0.18] = \boxed{-76 \text{ psf}}$

COMPONENTS & CLADDING (ROOF)

FIGURE 30.3-2A

50 ft² $P = q_h [(GC_p) \pm (GC_{pi})]$

- TOWARD THE SURFACE:
  - ALL ZONES: $P = 24.5 [0.23 + 0.18] = \boxed{10 \text{ psf}}$

    $= 24.5 [0.23 - 0.18] = 1 \text{ psf}$

- AWAY FROM THE SURFACE:
  - ZONE 1': (SAME AS 10 ft²)
  - ZONE 1: $P = 24.5 [-1.4 + 0.18] = -30 \text{ psf}$

    $24.5 [-1.4 - 0.18] = \boxed{-39 \text{ psf}}$
  - ZONE 2: $P = 24.5 [-1.9 + 0.18] = -42 \text{ psf}$

    $24.5 [-1.9 - 0.18] = \boxed{-51 \text{ psf}}$
  - ZONE 3: $P = 24.5 [-2.5 + 0.18] = -57 \text{ psf}$

    $= 24.5 [-2.5 - 0.18] = \boxed{-66 \text{ psf}}$

COMPONENTS & CLADDING (ROOF)

100 ft² $P = q_h [(GC_p) \pm (GC_{pi})]$

• TOWARD THE SURFACE:

• ALL ZONES: $P = 24.5 [0.2 + 0.18] = \boxed{10 \text{ psf}}$

$= 24.5 [0.2 - 0.18] = \boxed{0.5 \text{ psf}}$

• AWAY FROM THE SURFACE:

• ZONE 1': (SAME AS 10 ft²)

• ZONE 1: $P = 24.5 [-1.3 + 0.18] = -28 \text{ psf}$

$= 24.5 [-1.3 - 0.18] = \boxed{-37 \text{ psf}}$

• ZONE 2: $P = 24.5 [-1.8 + 0.18] = -40 \text{ psf}$

$= 24.5 [-1.8 - 0.18] = \boxed{-49 \text{ psf}}$

• ZONE 3: $P = 24.5 [-2.15 + 0.18] = -49 \text{ psf}$

$24.5 [-2.15 - 0.18] = \boxed{-57 \text{ psf}}$

COMPONENTS & CLADDING (ROOF)

200 ft² $P = q_h [(GC_p) \pm (GC_{pi})]$

- TOWARD THE SURFACE:
  - ALL ZONES: (SAME AS 100 ft²)
- AWAY FROM THE SURFACE:
  - ZONE 1': $P = 24.5[-0.75 + 0.18] = -14$ psf

    $= 24.5[-0.75 - 0.18] = \boxed{-23 \text{ psf}}$
  - ZONE 1: $P = 24.5[-1.2 + 0.18] = -25$ psf

    $= 24.5[-1.2 - 0.18] = \boxed{-34 \text{ psf}}$
  - ZONE 2: $P = 24.5[-1.6 + 0.18] = -35$ psf

    $= 24.5[-1.6 - 0.18] = \boxed{-44 \text{ psf}}$
  - ZONE 3: $P = 24.5[-1.8 + 0.18] = -40$ psf

    $= 24.5[-1.8 - 0.18] = \boxed{-49 \text{ psf}}$

MWFRS Calculations

$P = q\,GC_p - q_i(GC_{pi})$ (ASCE Eq. 27.3-1)

where, $q = q_i = 24.5\,psf$

G = gust effect factor = 0.85 (ASCE Section 26.11.1)

(GC_{pi}) = Internal pressure coefficient = ±0.18 (ASCE Table 26.13-1)

• NORTH/SOUTH:

WINDWARD C_p: 0.8 (WALL) (ASCE FIGURE 27.3-1)

LEEWARD C_p: -0.5 (WALL) (ASCE FIGURE 27.3-1)

ROOF C_p: 0 (FLAT ROOF)

$$P = \left[q\,GC_p - q_i(GC_{pi})\right]_{WINDWARD} - \left[q\,GC_p - q_i(GC_{pi})\right]_{LEEWARD}$$

$$= \left[(24.5)(0.85)(0.8) - (24.5)(0.18)\right] - \left[(24.5)(0.85)(-0.5) - (24.5)(0.18)\right]$$

$$\boxed{= 27.1\ PSF}$$

MWFRS CALCULATIONS

$P = qGC_p - q_i(GC_{pi})$

- EAST/WEST:

WINDWARD C_p: 0.8 (WALL) (ASCE FIGURE 27.3-1)

LEEWARD C_p: -0.4 (WALL) (ASCE FIGURE 27.3-1)

ROOF C_p: 0 (FLAT ROOF)

$P = P_{WINDWARD} - P_{LEEWARD}$

$= [(24.5)(0.85)(0.8) - (24.5)(0.18)] - [(24.5)(0.85)(-0.4) - (24.5)(0.18)]$

$\boxed{= 25 \text{ PSF}}$

Total Load Per Linear Foot on Bar Joist:

- LR = (35psf)*(5ft) = **175 plf**

- Super Imposed DL = (15psf)*(5ft) = **75 plf**

- Self Weight DL from Manufacturer, see sheet xxx = **16 plf**

Total Load on bar joist per linear foot =
= 175 plf + 75 plf + 16 plf = **266 plf**

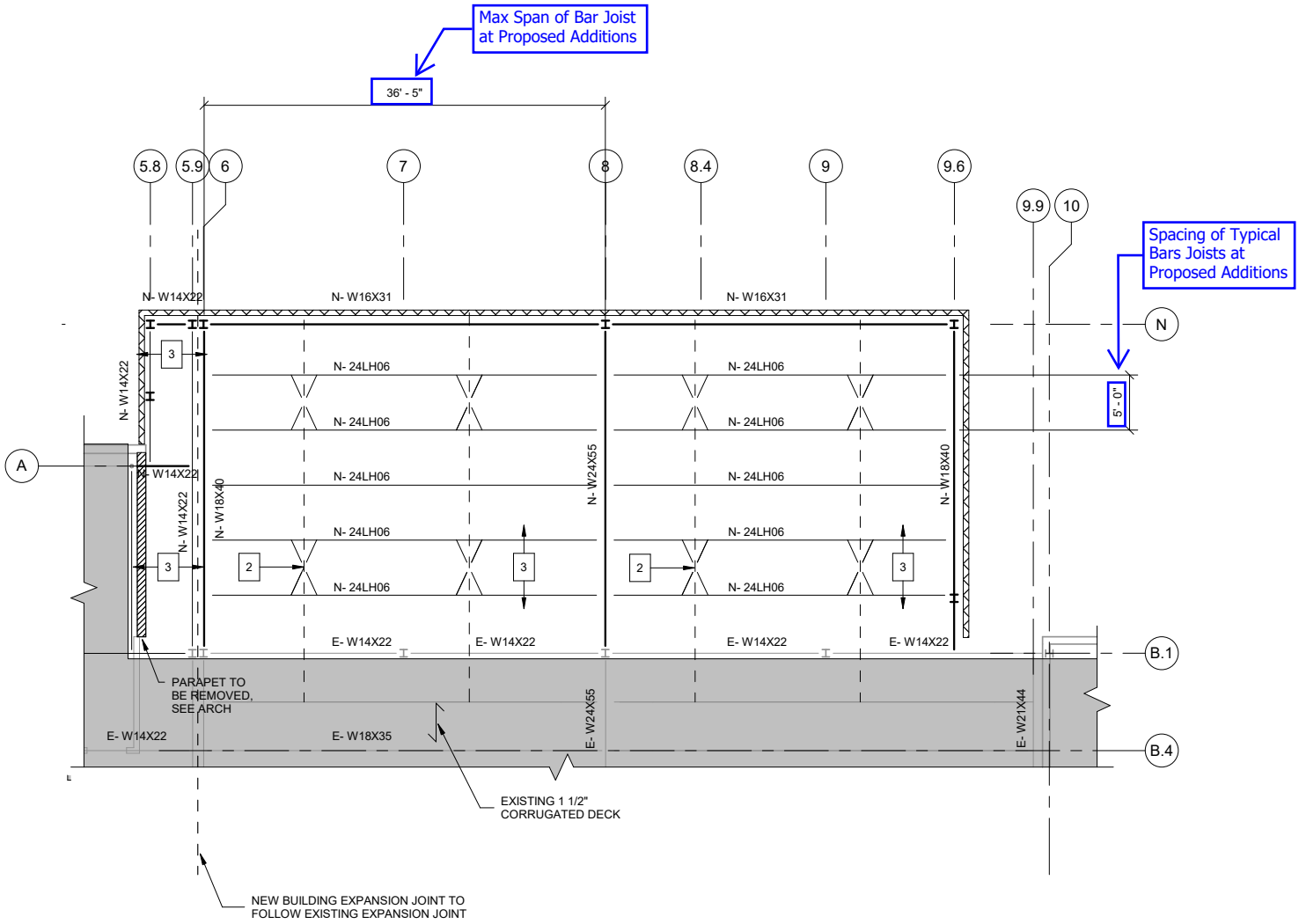

2 ROOF FRAMING PLAN AT PROPOSED ADDITION B

1/8" = 1'-0"

0 4' 8' 16'

PLAN NORTH

American National Standard SJI 100 - 2015

STANDARD ASD LOAD TABLE

LONGSPAN STEEL JOISTS, LH-SERIES

Based on a 50 ksi (345 MPa) Maximum Yield Strength
Adopted by the Steel Joist Institute May 1, 2000
Revised to May 18, 2010 – Effective December 31, 2010

The **BLACK** figures in the Load Table give the TOTAL safe uniformly distributed load-carrying capacities, in pounds per linear foot, of **ASD** LH-Series Steel Joists.

The approximate joist weights, in pounds per linear foot (kiloNewtons per meter), given in the Load Table may be added to the other building weights to determine the DEAD load. In all cases the DEAD load, including the joist self-weight, must be deducted from the TOTAL load to determine the LIVE load. The approximate joist weights do not include accessories.

The **RED** figures in the Load Table represent the uniform load, in pounds per linear foot (kiloNewtons per meter), which will produce an approximate joist deflection of 1/360 of the span. This load can be linearly prorated to obtain the uniform load for supplementary deflection criteria (i.e. a uniform load that will produce a joist deflection of 1/240 of the span may be obtained by multiplying the **RED** figures by 360/240). In no case shall the prorated load exceed the TOTAL load-carrying capacity of the joist.

The Load Table applies to joists with either parallel chords or pitched top chords. Joists can have a top chord pitch up to 1/2 inch per foot (42 mm per meter). If the pitch exceeds this limit, the Load Table does not apply. When top chords are pitched, the load-carrying capacities are determined by the nominal depth of the joists at the center of the span. Sloped parallel-chord joists shall use span as defined by the length along the slope.

Where the joist span is in the **RED SHADED** area of the Load Table, the row of bridging nearest the mid span shall be diagonal bridging with bolted connections at chords and intersections. Hoisting cables shall not be released until this row of bolted diagonal bridging is completely installed. The **RED SHADED** area extends up through 60'–0" (18288 mm).

Where the joist span is in the **BLUE SHADED** area of the Load Table, all rows of bridging shall be diagonal bridging with bolted connections at chords and intersections. Hoisting cables shall not be released until the two rows of bridging nearest the third points are completely installed. The **BLUE SHADED** area starts after 60'–0" (18288 mm) and extends up through 100'–0" (30175 mm).

The approximate gross moment of inertia (not adjusted for shear deformation) of a standard joist listed in the Load Table may be determined as follows:

$I_j = 26.767(W)(L^3)(10^{-6})$ in^4 or $2.6953(W)(L^3)(10^{-5})$ mm^4, where W= **RED** figure in the Load Table, and
L = (span – 0.33) in feet or (span – 102) in millimeters

Loads for span increments not explicitly given in the Load Table may be determined using linear interpolation between the load values given in adjacent span columns.

*The safe uniform load for the spans shown in the SAFE LOAD Column is equal to (SAFE LOAD) / (span). The TOTAL safe uniformly distributed load-carrying capacity, for spans less than those shown in the SAFE LOAD Column are given in the MAX LOAD Column.

To solve for a RED figure for spans shown in the SAFE LOAD Column (or lesser spans), multiply the RED figure of the shortest span shown in the Load Table by (the shortest span shown in the Load Table – 0.33 feet [101 mm])^2 and divide by (the actual span – 0.33 feet [101 mm])^2. In no case shall the calculated load exceed the TOTAL load-carrying capacity of the joist.

Total Load on proposed bar joist = 266 plf

266 plf < 530 plf
266 plf < 331 plf

Therefore proposed bar joist is adequate for strength and will produce a deflection less than L/360

ASD

STANDARD LOAD TABLE FOR LONGSPAN STEEL JOISTS, LH-SERIES
Based on a 50 ksi Maximum Yield Strength - Loads Shown In Pounds Per Linear Foot (plf)

Joist Designation	Approx. Wt in Lbs. Per Linear Ft. (Joists only)	Depth in inches	Max Load (plf)	SAFELOAD* in Lbs. Between	SPAN IN FEET														
			< 29	29-33	34	35	36	37	38	39	40	41	42	43	44	45	46	47	48
24LH03	11	24	401	11620	342	339	336	323	307	293	279	267	255	244	234	224	215	207	199
					235	226	218	204	188	175	162	152	141	132	124	116	109	102	96
24LH04	12	24	491	14240	419	398	379	360	343	327	312	298	285	273	262	251	241	231	222
					288	265	246	227	210	195	182	169	158	148	138	130	122	114	107
24LH05	13	24	526	15260	449	446	440	419	399	380	363	347	331	317	304	291	280	269	258
					308	297	285	264	244	226	210	196	182	171	160	150	141	132	124
24LH06	16	24	708	20520	604	579	555	530	504	480	457	437	417	399	381	364	348	334	320
					411	382	356	331	306	284	263	245	228	211	197	184	172	161	152
24LH07	17	24	777	22540	665	638	613	588	565	541	516	491	468	446	426	407	389	373	357
					452	421	393	367	343	320	297	276	257	239	223	208	195	182	171
24LH08	18	24	829	24040	707	677	649	622	597	572	545	520	497	475	455	435	417	400	384
					480	447	416	388	362	338	314	292	272	254	238	222	208	196	184
24LH09	21	24	976	28300	832	808	785	764	731	696	663	632	602	574	548	524	501	480	460
					562	530	501	460	424	393	363	337	313	292	272	254	238	223	209
24LH10	23	24	1031	29900	882	856	832	809	788	768	737	702	668	637	608	582	556	533	511
					596	559	528	500	474	439	406	378	351	326	304	285	266	249	234
24LH11	25	24	1087	31520	927	900	875	851	829	807	787	768	734	701	671	642	616	590	567
					624	588	555	525	498	472	449	418	388	361	337	315	294	276	259
			< 34	34-41	42	43	44	45	46	47	48	49	50	51	52	53	54	55	56
28LH05	13	28	415	14120	337	323	310	297	286	275	265	255	245	237	228	220	213	206	199
					219	205	192	180	169	159	150	142	133	126	119	113	107	102	97
28LH06	16	28	552	18760	448	429	412	395	379	364	350	337	324	313	301	291	281	271	262
					289	270	253	238	223	209	197	186	175	166	156	148	140	133	126
28LH07	17	28	623	21180	505	484	464	445	427	410	394	379	365	352	339	327	316	305	295
					326	305	285	267	251	236	222	209	197	186	176	166	158	150	142
28LH08	18	28	667	22680	540	517	496	475	456	438	420	403	387	371	357	344	331	319	308
					348	325	305	285	268	252	236	222	209	196	185	175	165	156	148
28LH09	21	28	821	27920	667	639	612	586	563	540	519	499	481	463	446	430	415	401	387
					428	400	375	351	329	309	291	274	258	243	228	216	204	193	183
28LH10	23	28	898	30540	729	704	679	651	625	600	576	554	533	513	495	477	460	444	429
					466	439	414	388	364	342	322	303	285	269	255	241	228	215	204
28LH11	25	28	964	32760	780	762	736	711	682	655	629	605	582	561	540	521	502	485	468
					498	475	448	423	397	373	351	331	312	294	278	263	249	236	223
28LH12	27	28	1058	35980	857	837	818	800	782	766	737	709	682	656	632	609	587	566	546
					545	520	496	476	454	435	408	383	361	340	321	303	285	270	256
28LH13	30	28	1103	37500	895	874	854	835	816	799	782	766	751	722	694	668	643	620	598
					569	543	518	495	472	452	433	415	396	373	352	332	314	297	281
			< 39	39-46 47-49	50	51	52	53	54	55	56	57	58	59	60	61	62	63	64
32LH06	14	32	431	16820 16820	338	326	315	304	294	284	275	266	257	249	242	234	227	220	214
					211	199	189	179	169	161	153	145	138	131	125	119	114	108	104
32LH07	16	32	485	18920 18920	379	366	353	341	329	318	308	298	288	279	271	262	254	247	240
					235	223	211	200	189	179	170	162	154	146	140	133	127	121	116
32LH08	17	32	527	20540 20540	411	397	383	369	357	345	333	322	312	302	293	284	275	267	259
					255	242	229	216	205	194	184	175	167	159	151	144	137	131	125
32LH09	21	32	661	25780 25780	516	498	480	463	447	432	418	404	391	379	367	356	345	335	325
					319	302	285	270	256	243	230	219	208	198	189	180	172	164	157
32LH10	21	32	731	28500 28500	571	550	531	512	495	478	462	445	430	416	402	389	376	364	353
					352	332	315	297	282	267	254	240	228	217	206	196	186	178	169
32LH11	24	32	801	31220 31220	625	602	580	560	541	522	505	488	473	458	443	429	416	403	390
					385	363	343	325	308	292	277	263	251	239	227	216	206	196	187
32LH12	27	32	939	36640 36640	734	712	688	664	641	619	598	578	559	541	524	508	492	477	463
					450	428	406	384	364	345	327	311	295	281	267	255	243	232	221
32LH13	30	32	1048	40880 40880	817	801	785	771	742	715	690	666	643	621	600	581	562	544	527
					500	480	461	444	420	397	376	354	336	319	304	288	275	262	249
32LH14	33	32	1079	42080 42080	843	826	810	795	780	766	738	713	688	665	643	622	602	583	564
					515	495	476	458	440	417	395	374	355	337	321	304	290	276	264
32LH15	35	32	1115	43500 43500	870	853	837	821	805	791	776	763	750	725	701	678	656	635	616
					532	511	492	473	454	438	422	407	393	374	355	338	322	306	292
			< 43	43-46 47-56 57	58	59	60	61	62	63	64	65	66	67	68	69	70	71	72
36LH07	16	36	393	16900 16900	292	283	274	266	258	251	244	237	230	224	218	212	207	201	196
					177	168	160	153	146	140	134	128	122	117	112	107	103	99	95
36LH08	18	36	433	18600 18600	321	311	302	293	284	276	268	260	253	246	239	233	227	221	215
					194	185	176	168	160	153	146	140	134	128	123	118	113	109	104
36LH09	21	36	554	23840 23840	411	398	386	374	363	352	342	333	323	314	306	297	289	282	275
					247	235	224	214	204	195	186	179	171	163	157	150	144	138	133
36LH10	21	36	611	26260 26260	454	440	426	413	401	389	378	367	357	347	338	328	320	311	303
					273	260	248	236	225	215	206	197	188	180	173	165	159	152	146
36LH11	23	36	667	28660 28660	495	480	465	451	438	425	412	401	389	378	368	358	348	339	330
					297	283	269	257	246	234	224	214	205	196	188	180	173	166	159
36LH12	25	36	798	34300 34300	593	575	557	540	523	508	493	478	464	450	437	424	412	400	389
					354	338	322	307	292	279	267	255	243	232	222	213	204	195	187
36LH13	30	36	938	40340 40340	697	675	654	634	615	596	579	562	546	531	516	502	488	475	463
					415	395	376	359	342	327	312	298	285	273	262	251	240	231	222
36LH14	36	36	1034	44460 44460	768	755	729	706	683	661	641	621	602	584	567	551	535	520	505
					456	434	412	392	373	356	339	323	309	295	283	270	259	247	237
36LH15	36	36	1090	46880 46880	809	795	781	769	744	721	698	677	656	637	618	600	583	567	551
					480	464	448	434	413	394	375	358	342	327	312	299	286	274	263

Girder Loads:

Roof Loads:
- SIDL = **15psf**
- LR = **35psf**
- SL = **21 psf**

Self weight of bar joists in psf:
= (self weight in plf)/(joist spacing)
= (16 plf)/(5ft)
= **3.2psf**

Tributary Width =
= [(36.417ft)*(31.667ft)]/2
= **34.042ft**

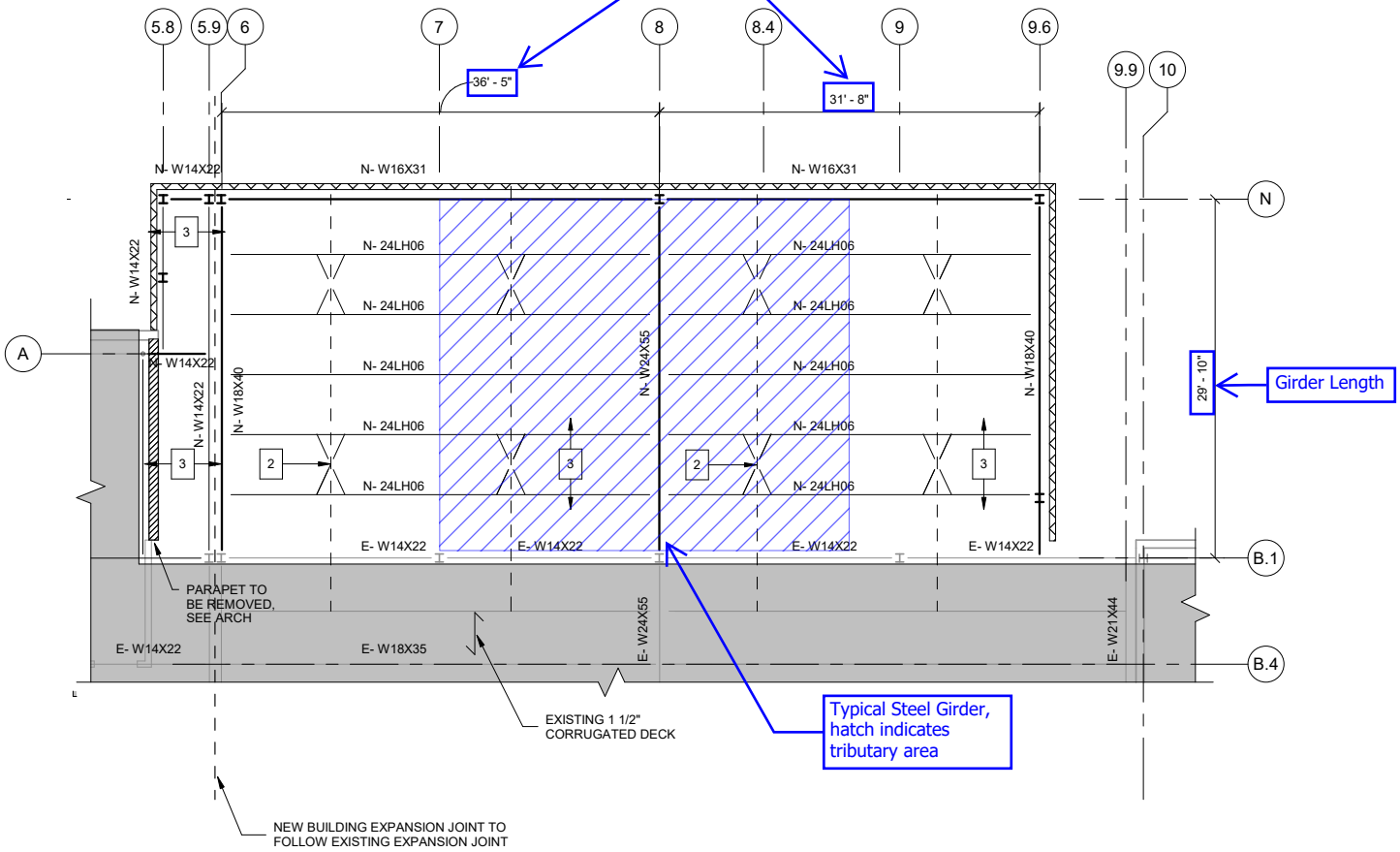

2 ROOF FRAMING PLAN AT PROPOSED ADDITION B

1/8" = 1'-0"

0 4' 8' 16'

PLAN NORTH

Printed: 5 FEB 2021, 1:47AM

Steel Beam

ec\MARTOS~1\MARTOS~1\Projects\20086-~1\Analysis\Enercalc\20086 - MMD 123 Route 303, Orangeburg.ec6 .
Software copyright ENERCALC, INC. 1983-2019, Build:12.19.11.12 .

Lic. # : KW-06011600 Christian L. Martos Engineering pllc

DESCRIPTION: TYPICAL STEEL GIRDER CALC

CODE REFERENCES

Calculations per AISC 360-10, IBC 2012, CBC 2013, ASCE 7-10
Load Combination Set : IBC 2018

Material Properties

Analysis Method :	Allowable Strength Design	Fy : Steel Yield :	50.0 ksi
Beam Bracing :	Beam is Fully Braced against lateral-torsional buckling	E: Modulus :	29,000.0 ksi
Bending Axis :	Major Axis Bending		

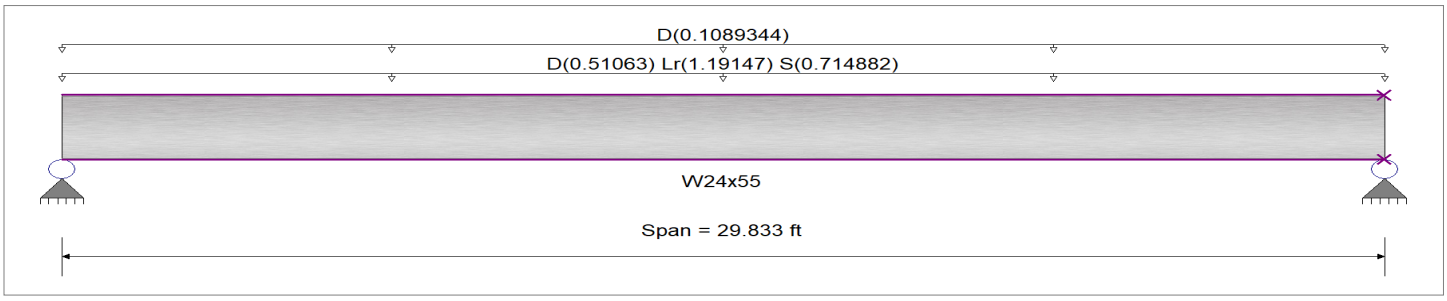

Applied Loads

Service loads entered. Load Factors will be applied for calculations.

Beam self weight calculated and added to loading

Uniform Load : D = 0.0150, Lr = 0.0350, S = 0.0210 ksf, Tributary Width = 34.042 ft, (ROOF LOADS)

Uniform Load : D = 0.00320 ksf, Tributary Width = 34.042 ft, (SELF WEIGHT OF BAR JOISTS)

Loads and tributary width from sheet xxx

DESIGN SUMMARY

Design OK

Maximum Bending Stress Ratio =	0.621 : 1	Maximum Shear Stress Ratio =	0.166 : 1
Section used for this span	W24x55	Section used for this span	W24x55
Ma : Applied	207.598 k-ft	Va : Applied	27.835 k
Mn / Omega : Allowable	334.331 k-ft	Vn/Omega : Allowable	167.461 k
Load Combination	+D+Lr	Load Combination	+D+Lr
Location of maximum on span	14.917 ft	Location of maximum on span	0.000 ft
Span # where maximum occurs	Span # 1	Span # where maximum occurs	Span # 1

Maximum Deflection

Max Downward Transient Deflection	0.544 in	Ratio =	657 >=360
Max Upward Transient Deflection	0.000 in	Ratio =	0 <360
Max Downward Total Deflection	0.853 in	Ratio =	420 >=180
Max Upward Total Deflection	0.000 in	Ratio =	0 <180

Maximum Forces & Stresses for Load Combinations

Load Combination		Max Stress Ratios		Summary of Moment Values							Summary of Shear Values		
Segment Length	Span #	M	V	Mmax +	Mmax -	Ma Max	Mnx	Mnx/Omega	Cb	Rm	Va Max	Vnx	Vnx/Omega
D Only													
Dsgn. L = 29.83 ft	1	0.224	0.060	75.05		75.05	558.33	334.33	1.00	1.00	10.06	279.66	167.46
+D+Lr													
Dsgn. L = 29.83 ft	1	0.621	0.166	207.60		207.60	558.33	334.33	1.00	1.00	27.83	279.66	167.46
+D+S													
Dsgn. L = 29.83 ft	1	0.462	0.124	154.58		154.58	558.33	334.33	1.00	1.00	20.73	279.66	167.46
+D+0.750Lr													
Dsgn. L = 29.83 ft	1	0.522	0.140	174.46		174.46	558.33	334.33	1.00	1.00	23.39	279.66	167.46
+D+0.750S													
Dsgn. L = 29.83 ft	1	0.403	0.108	134.69		134.69	558.33	334.33	1.00	1.00	18.06	279.66	167.46
+0.60D													
Dsgn. L = 29.83 ft	1	0.135	0.036	45.03		45.03	558.33	334.33	1.00	1.00	6.04	279.66	167.46

Overall Maximum Deflections

Load Combination	Span	Max. "-" Defl	Location in Span	Load Combination	Max. "+" Defl	Location in Span
+D+Lr	1	0.8534	15.002		0.0000	0.000

Vertical Reactions

Support notation : Far left is #1 Values in KIPS

Load Combination	Support 1	Support 2
Overall MAXimum		27.835
Overall MINimum		6.037

Printed: 5 FEB 2021, 1:47AM

Steel Beam

ec\MARTOS~1\MARTOS~1\Projects\20086-~1\Analysis\Enercalc\20086 - MMD 123 Route 303, Orangeburg.ec6 .
Software copyright ENERCALC, INC. 1983-2019, Build:12.19.11.12 .

Lic. # : KW-06011600 Christian L. Martos Engineering pllc

DESCRIPTION: TYPICAL STEEL GIRDER CALC

Vertical Reactions

Support notation : Far left is #1 Values in KIPS

Load Combination	Support 1	Support 2
D Only	10.062	10.062
+D+Lr	27.835	27.835
+D+S	20.726	20.726
+D+0.750Lr	23.392	23.392
+D+0.750S	18.060	18.060
+0.60D	6.037	6.037
Lr Only	17.773	17.773
S Only	10.664	10.664

Max vertical reactions transfer to supporting columns at ends of beam, see sheet xxx

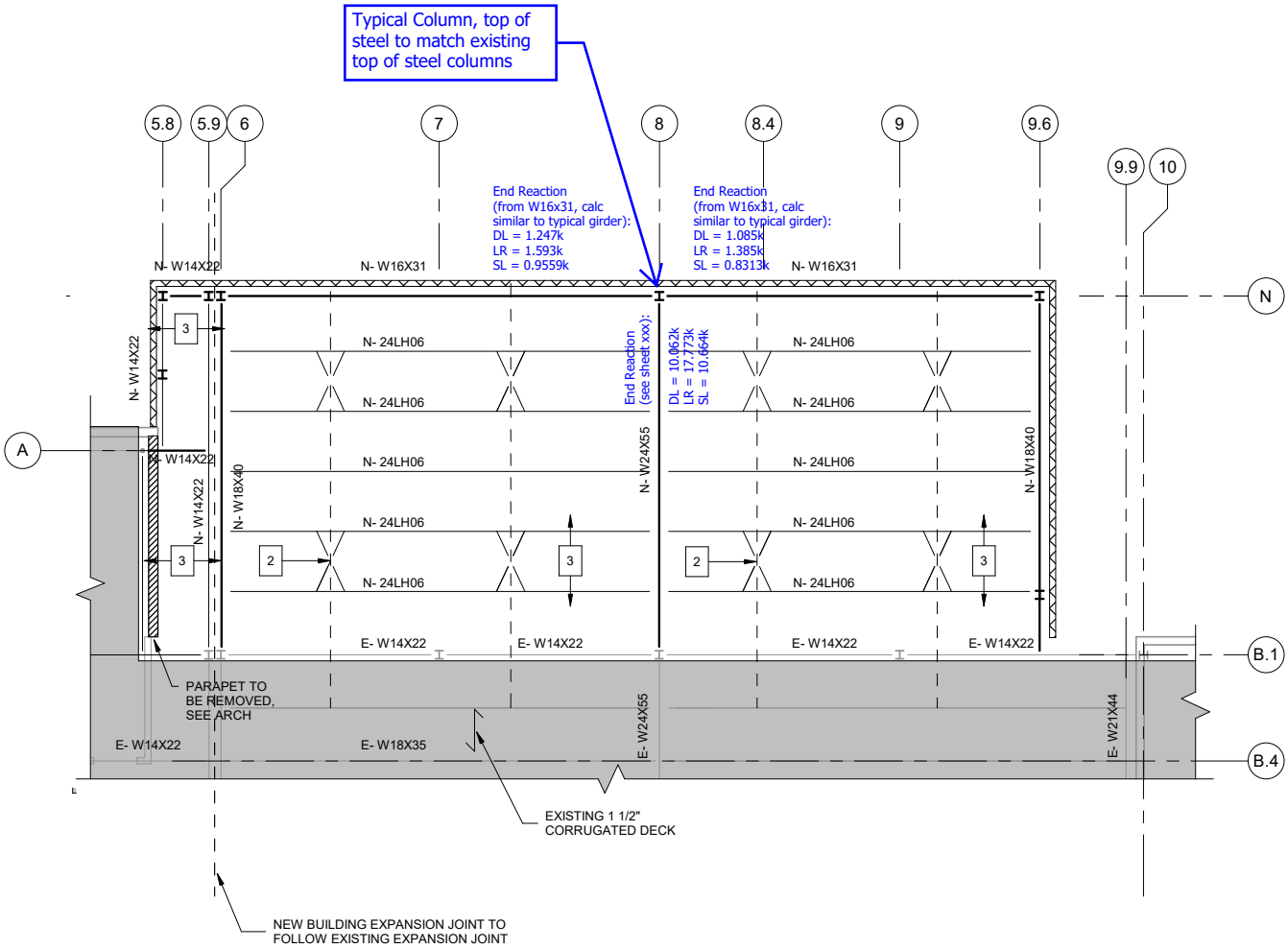

2 ROOF FRAMING PLAN AT PROPOSED ADDITION B

1/8" = 1'-0"

0 4' 8' 16'

PLAN NORTH

Printed: 5 FEB 2021, 2:40AM

Steel Column

ec\MARTOS~1\MARTOS~1\Projects\20086-~1\Analysis\Enercalc\20086 - MMD 123 Route 303, Orangeburg.ec6 .
Software copyright ENERCALC, INC. 1983-2019, Build:12.19.11.12 .

Lic. # : KW-06011600 — Christian L. Martos Engineering pllc

DESCRIPTION: TYPICAL STEEL COLUMN CALC

Code References

Calculations per AISC 360-10, IBC 2012, CBC 2013, ASCE 7-10
Load Combinations Used : IBC 2018

General Information

Steel Section Name :	**W8x31**	Overall Column Height	13.0 ft
Analysis Method :	Allowable Strength	Top & Bottom Fixity	Top & Bottom Pinned
Steel Stress Grade	A-992, High Strength, Low Alloy, Fy =	Brace condition for deflection (buckling) along columns :	
Fy : Steel Yield	50.0 ksi	X-X (width) axis :	
E : Elastic Bending Modulus	29,000.0 ksi	Unbraced Length for buckling ABOUT Y-Y Axis = 13.0 ft, K = 1.0	
		Y-Y (depth) axis :	
		Unbraced Length for buckling ABOUT X-X Axis = 13.0 ft, K = 1.0	

Applied Loads

Service loads entered. Load Factors will be applied for calculations.

Column self weight included : 403.0 lbs * Dead Load Factor ← Column self weight included

AXIAL LOADS . . .

W24x55 END REACTION: Axial Load at 13.0 ft, D = 10.062, LR = 17.773, S = 10.664 k
W16x31 END REACTION: Axial Load at 13.0 ft, D = 1.247, LR = 1.593, S = 0.9559 k
W16x31 END REACTION: Axial Load at 13.0 ft, D = 1.085, LR = 1.385, S = 0.8313 k

← Loads from end reactions of beams framing into column

DESIGN SUMMARY

Bending & Shear Check Results

PASS Max. Axial+Bending Stress Ratio = **0.1898** : 1

Load Combination	+D+Lr	
Location of max.above base	0.0	ft
At maximum location values are . . .		
Pa : Axial	33.548	k
Pn / Omega : Allowable	176.741	k
Ma-x : Applied	0.0	k-ft
Mn-x / Omega : Allowable	66.596	k-ft
Ma-y : Applied	0.0	k-ft
Mn-y / Omega : Allowable	35.124	k-ft

Maximum Load Reactions . .

Top along X-X	0.0 k
Bottom along X-X	0.0 k
Top along Y-Y	0.0 k
Bottom along Y-Y	0.0 k

Maximum Load Deflections . . .

Along Y-Y 0.0 in at 0.0 ft above base
for load combination :

Along X-X 0.0 in at 0.0 ft above base
for load combination :

PASS Maximum Shear Stress Ratio = **0.0** : 1

Load Combination	0.0	
Location of max.above base	0.0	ft
At maximum location values are . . .		
Va : Applied	0.0	k
Vn / Omega : Allowable	0.0	k

Load Combination Results

Load Combination	Maximum Axial + Bending Stress Ratios: Stress Ratio	Status	Location	Cbx	Cby	KxLx/Rx	KyLy/Ry	Maximum Shear Ratios: Stress Ratio	Status	Location
D Only	0.072	PASS	0.00 ft	1.00	1.00	44.96	77.23	0.000	PASS	0.00 ft
+D+Lr	0.190	PASS	0.00 ft	1.00	1.00	44.96	77.23	0.000	PASS	0.00 ft
+D+S	0.143	PASS	0.00 ft	1.00	1.00	44.96	77.23	0.000	PASS	0.00 ft
+D+0.750Lr	0.160	PASS	0.00 ft	1.00	1.00	44.96	77.23	0.000	PASS	0.00 ft
+D+0.750S	0.125	PASS	0.00 ft	1.00	1.00	44.96	77.23	0.000	PASS	0.00 ft
+0.60D	0.043	PASS	0.00 ft	1.00	1.00	44.96	77.23	0.000	PASS	0.00 ft

Maximum Reactions

Note: Only non-zero reactions are listed.

Load Combination	Axial Reaction @ Base	X-X Axis Reaction @ Base	X-X Axis Reaction @ Top	Y-Y Axis Reaction @ Base	Y-Y Axis Reaction @ Top	Mx - End Moments @ Base	Mx - End Moments @ Top	My - End Moments @ Base	My - End Moments @ Top
D Only	12.797								
+D+Lr	33.548								
+D+S	25.248								
+D+0.750Lr	28.360								
+D+0.750S	22.135								
+0.60D	7.678								
Lr Only	20.751								

Max dead and live roof vertical reactions at base of column, loads are transferred to footing, see sheet xxx

Printed: 5 FEB 2021, 2:40AM

Steel Column

ec\MARTOS~1\MARTOS~1\Projects\20086-~1\Analysis\Enercalc\20086 - MMD 123 Route 303, Orangeburg.ec6 .
Software copyright ENERCALC, INC. 1983-2019, Build:12.19.11.12 .

Lic. # : KW-06011600 — Christian L. Martos Engineering pllc

DESCRIPTION: TYPICAL STEEL COLUMN CALC

Max vertical reaction from snow load at base of column, load is transferred to footing, see sheet xxx

Maximum Reactions

Note: Only non-zero reactions are listed.

Load Combination	Axial Reaction @ Base	X-X Axis Reaction @ Base	@ Top	k	Y-Y Axis Reaction @ Base	@ Top	Mx - End Moments @ Base	@ Top	k-ft	My - End Moments @ Base	@ Top
S Only	12.451										

Extreme Reactions

Item	Extreme Value	Axial Reaction @ Base	X-X Axis Reaction @ Base	@ Top	k	Y-Y Axis Reaction @ Base	@ Top	Mx - End Moments @ Base	@ Top	k-ft	My - End Moments @ Base	@ Top
Axial @ Base	Maximum	33.548										
"	Minimum	7.678										
Reaction, X-X Axis Base	Maximum	12.797										
"	Minimum	12.797										
Reaction, Y-Y Axis Base	Maximum	12.797										
"	Minimum	12.797										
Reaction, X-X Axis Top	Maximum	12.797										
"	Minimum	12.797										
Reaction, Y-Y Axis Top	Maximum	12.797										
"	Minimum	12.797										
Moment, X-X Axis Base	Maximum	12.797										
"	Minimum	12.797										
Moment, Y-Y Axis Base	Maximum	12.797										
"	Minimum	12.797										
Moment, X-X Axis Top	Maximum	12.797										
"	Minimum	12.797										
Moment, Y-Y Axis Top	Maximum	12.797										
"	Minimum	12.797										

Maximum Deflections for Load Combinations

Load Combination	Max. X-X Deflection		Distance		Max. Y-Y Deflection		Distance	
D Only	0.0000	in	0.000	ft	0.000	in	0.000	ft
+D+Lr	0.0000	in	0.000	ft	0.000	in	0.000	ft
+D+S	0.0000	in	0.000	ft	0.000	in	0.000	ft
+D+0.750Lr	0.0000	in	0.000	ft	0.000	in	0.000	ft
+D+0.750S	0.0000	in	0.000	ft	0.000	in	0.000	ft
+0.60D	0.0000	in	0.000	ft	0.000	in	0.000	ft
Lr Only	0.0000	in	0.000	ft	0.000	in	0.000	ft
S Only	0.0000	in	0.000	ft	0.000	in	0.000	ft

Steel Section Properties : W8x31

Depth	=	8.000	in	I xx	=	110.00	in^4	J	=	0.536	in^4
Web Thick	=	0.285	in	S xx	=	27.50	in^3	Cw	=	530.00	in^6
Flange Width	=	8.000	in	R xx	=	3.470	in				
Flange Thick	=	0.435	in	Zx	=	30.400	in^3				
Area	=	9.130	in^2	I yy	=	37.100	in^4				
Weight	=	31.000	plf	S yy	=	9.270	in^3	Wno	=	15.100	in^2
Kdesign	=	0.829	in	R yy	=	2.020	in	Sw	=	13.200	in^4
K1	=	0.750	in	Zy	=	14.100	in^3	Qf	=	6.350	in^3
rts	=	2.260	in					Qw	=	15.000	in^3
Ycg	=	0.000	in								

Printed: 5 FEB 2021, 2:40AM

Steel Column

ec\MARTOS~1\MARTOS~1\Projects\20086-~1\Analysis\Enercalc\20086 - MMD 123 Route 303, Orangeburg.ec6 .
Software copyright ENERCALC, INC. 1983-2019, Build:12.19.11.12 .

Lic. # : KW-06011600 Christian L. Martos Engineering pllc

DESCRIPTION: TYPICAL STEEL COLUMN CALC

Sketches

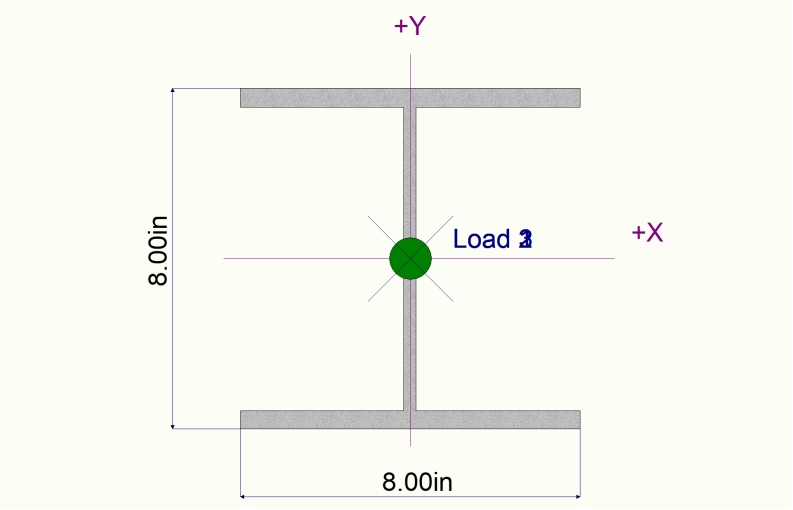

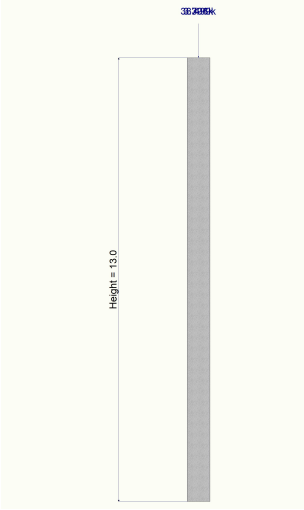

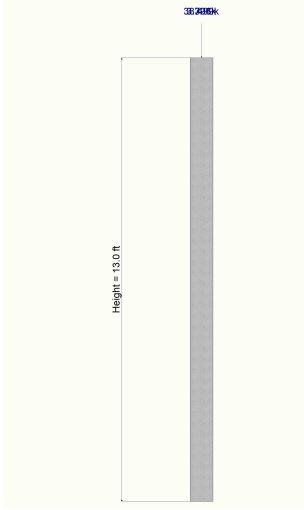

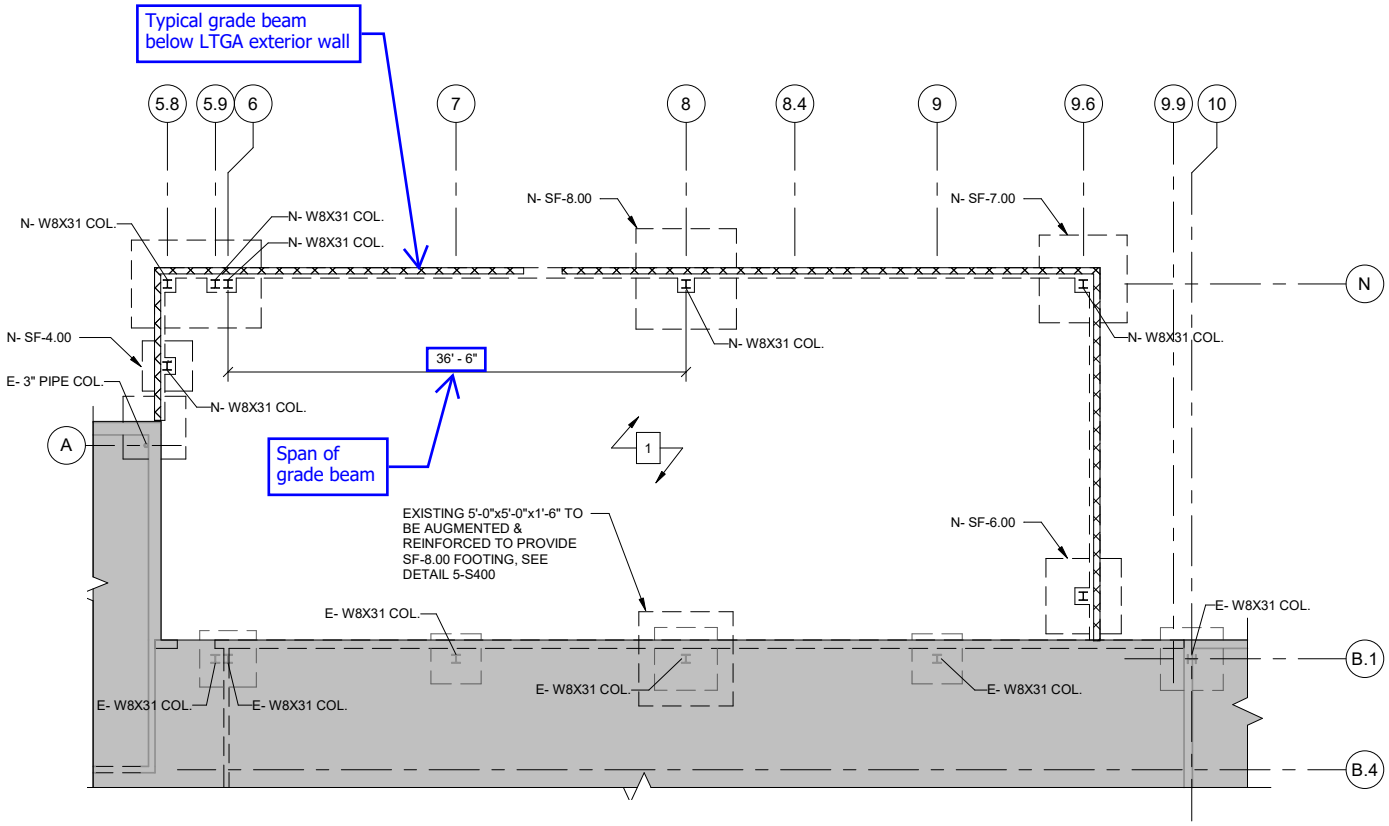

1 FOUNDATION PLAN AT PROPOSED ADDITION B

1/8" = 1'-0"

0 4' 8' 16'

PLAN NORTH

Concrete Beam

ec\MARTOS~1\MARTOS~1\Projects\20086-~1\Analysis\Enercalc\20086 - MMD 123 Route 303, Orangeburg.ec6 .
Software copyright ENERCALC, INC. 1983-2019, Build:12.19.11.12 .
Lic. # : KW-06011600
Christian L. Martos Engineering pllc

DESCRIPTION: TYPICAL GRADE BEAM

CODE REFERENCES

Calculations per ACI 318-11, IBC 2012, CBC 2013, ASCE 7-10
Load Combination Set : IBC 2018

Material Properties

f'c	=	4.0 ksi	ϕ Phi Values	Flexure :	0.90
fr = f'c$^{1/2}$ * 7.50	=	474.342 psi		Shear :	0.750
ψ Density	=	150.0 pcf	β_1	=	0.850
λ LtWt Factor	=	1.0			
Elastic Modulus	=	3,605.0 ksi	Fy - Stirrups		40.0 ksi
fy - Main Rebar	=	60.0 ksi	E - Stirrups	=	29,000.0 ksi
E - Main Rebar	=	29,000.0 ksi	Stirrup Bar Size #		3
			Number of Resisting Legs Per Stirrup =		2

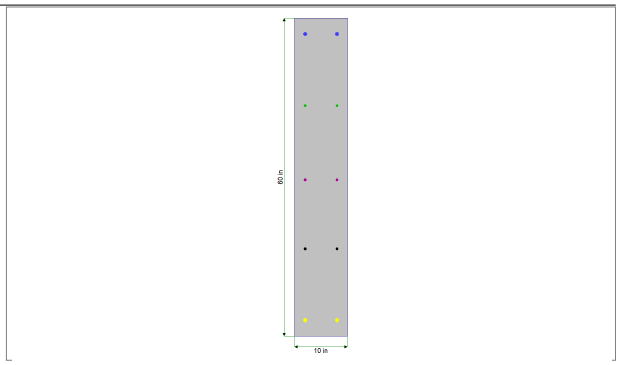

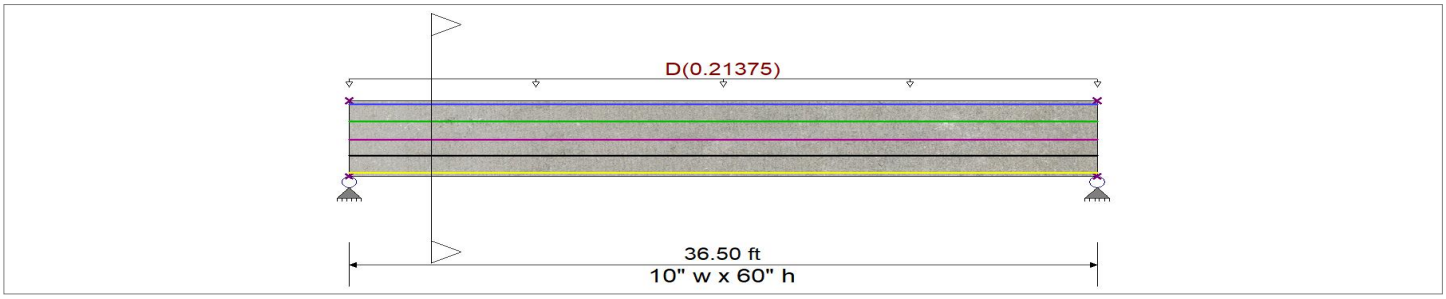

Cross Section & Reinforcing Details

Rectangular Section, Width = 10.0 in, Height = 60.0 in
Span #1 Reinforcing....
2-#6 at 3.0 in from Top, from 0.0 to 36.50 ft in this span
2-#4 at 29.50 in from Bottom, from 0.0 to 36.50 ft in this span
2-#6 at 3.0 in from Bottom, from 0.0 to 36.50 ft in this span
2-#4 at 16.50 in from Top, from 0.0 to 36.50 ft in this span
2-#4 at 16.50 in from Bottom, from 0.0 to 36.50 ft in this span

Beam self weight calculated and added to loads

Concrete self weight automatically calculated using a density of 150 pcf and added as dead load

Load for Span Number 1
Uniform Load : D = 0.0150 ksf, Tributary Width = 14.250 ft, (EXTERIOR LTGA WALL LOAD)

Dead load from LTGA wall weight above

DESIGN SUMMARY

Design OK

Maximum Bending Stress Ratio =	**0.526** : 1		Maximum Deflection		
Section used for this span	**Typical Section**		Max Downward Transient Deflection	0.000 in	Ratio = 0 <360.0
Mu : Applied	195.549	k-ft	Max Upward Transient Deflection	0.000 in	Ratio = 0 <360.0
Mn * Phi : Allowable	371.950	k-ft	Max Downward Total Deflection	0.052 in	Ratio = 8488 >=180.
Location of maximum on span	18.217	ft	Max Upward Total Deflection	0.000 in	Ratio = 0 <180.0
Span # where maximum occurs	Span # 1				

Vertical Reactions

Support notation : Far left is #1

Load Combination	Support 1	Support 2
Overall MAXimum	15.307	15.307
Overall MINimum	9.184	9.184
+D+H	15.307	15.307
+D+L+H	15.307	15.307
+D+Lr+H	15.307	15.307
+D+S+H	15.307	15.307
+D+0.750Lr+0.750L+H	15.307	15.307
+D+0.750L+0.750S+H	15.307	15.307
+D+0.60W+H	15.307	15.307
+D+0.70E+H	15.307	15.307
+D+0.750Lr+0.750L+(	15.307	15.307

Grade beam adequate for strength & deflection, therefore:

(2)#6 at top & bottom
(3)#4 each face at balance, (6 bars total)

Concrete Beam

ec\MARTOS~1\MARTOS~1\Projects\20086-~1\Analysis\Enercalc\20086 - MMD 123 Route 303, Orangeburg.ec6 .
Software copyright ENERCALC, INC. 1983-2019, Build:12.19.11.12 .

Lic. # : KW-06011600 Christian L. Martos Engineering pllc

DESCRIPTION: TYPICAL GRADE BEAM

Vertical Reactions

Support notation : Far left is #1

Load Combination	Support 1	Support 2
+D+0.750L+0.750S+0.450W+H	15.307	15.307
+D+0.750L+0.750S+0.5250E+H	15.307	15.307
+0.60D+0.60W+0.60H	9.184	9.184
+0.60D+0.70E+0.60H	9.184	9.184
D Only	15.307	15.307
Lr Only		
L Only		
S Only		
W Only		
E Only		
H Only		

Max Vertical reaction that is transferred to corresponding footing, see sheet xxx

No shear reinforcement required

Detailed Shear Information

Load Combination	Span Number	Distance (ft)	'd' (in)	Vu (k) Actual	Vu (k) Design	Mu (k-ft)	d*Vu/Mu	Phi*Vc (k)	Comment	Phi*Vs (k)	Phi*Vn (k)	Spacing (in) Req'd	Spacing (in) Suggest
+1.40D+1.60H	1	0.00	57.00	21.43	21.43	0.00	1.00	54.52	Vu < PhiVc/2	lot Reqd 11.4	54.5	0.0	0.0
+1.40D+1.60H	1	0.40	57.00	20.96	20.96	8.46	1.00	54.52	Vu < PhiVc/2	lot Reqd 11.4	54.5	0.0	0.0
+1.40D+1.60H	1	0.80	57.00	20.49	20.49	16.72	1.00	54.52	Vu < PhiVc/2	lot Reqd 11.4	54.5	0.0	0.0
+1.40D+1.60H	1	1.20	57.00	20.02	20.02	24.80	1.00	54.52	Vu < PhiVc/2	lot Reqd 11.4	54.5	0.0	0.0
+1.40D+1.60H	1	1.60	57.00	19.56	19.56	32.70	1.00	54.52	Vu < PhiVc/2	lot Reqd 11.4	54.5	0.0	0.0
+1.40D+1.60H	1	1.99	57.00	19.09	19.09	40.41	1.00	54.52	Vu < PhiVc/2	lot Reqd 11.4	54.5	0.0	0.0
+1.40D+1.60H	1	2.39	57.00	18.62	18.62	47.93	1.00	54.52	Vu < PhiVc/2	lot Reqd 11.4	54.5	0.0	0.0
+1.40D+1.60H	1	2.79	57.00	18.15	18.15	55.26	1.00	54.52	Vu < PhiVc/2	lot Reqd 11.4	54.5	0.0	0.0
+1.40D+1.60H	1	3.19	57.00	17.68	17.68	62.41	1.00	54.52	Vu < PhiVc/2	lot Reqd 11.4	54.5	0.0	0.0
+1.40D+1.60H	1	3.59	57.00	17.21	17.21	69.37	1.00	54.52	Vu < PhiVc/2	lot Reqd 11.4	54.5	0.0	0.0
+1.40D+1.60H	1	3.99	57.00	16.75	16.75	76.14	1.00	54.52	Vu < PhiVc/2	lot Reqd 11.4	54.5	0.0	0.0
+1.40D+1.60H	1	4.39	57.00	16.28	16.28	82.73	0.93	54.32	Vu < PhiVc/2	lot Reqd 11.4	54.3	0.0	0.0
+1.40D+1.60H	1	4.79	57.00	15.81	15.81	89.13	0.84	54.03	Vu < PhiVc/2	lot Reqd 11.4	54.0	0.0	0.0
+1.40D+1.60H	1	5.19	57.00	15.34	15.34	95.34	0.76	53.78	Vu < PhiVc/2	lot Reqd 11.4	53.8	0.0	0.0
+1.40D+1.60H	1	5.58	57.00	14.87	14.87	101.37	0.70	53.57	Vu < PhiVc/2	lot Reqd 11.4	53.6	0.0	0.0
+1.40D+1.60H	1	5.98	57.00	14.40	14.40	107.21	0.64	53.38	Vu < PhiVc/2	lot Reqd 11.4	53.4	0.0	0.0
+1.40D+1.60H	1	6.38	57.00	13.94	13.94	112.86	0.59	53.22	Vu < PhiVc/2	lot Reqd 11.4	53.2	0.0	0.0
+1.40D+1.60H	1	6.78	57.00	13.47	13.47	118.33	0.54	53.07	Vu < PhiVc/2	lot Reqd 11.4	53.1	0.0	0.0
+1.40D+1.60H	1	7.18	57.00	13.00	13.00	123.60	0.50	52.94	Vu < PhiVc/2	lot Reqd 11.4	52.9	0.0	0.0
+1.40D+1.60H	1	7.58	57.00	12.53	12.53	128.70	0.46	52.83	Vu < PhiVc/2	lot Reqd 11.4	52.8	0.0	0.0
+1.40D+1.60H	1	7.98	57.00	12.06	12.06	133.60	0.43	52.72	Vu < PhiVc/2	lot Reqd 11.4	52.7	0.0	0.0
+1.40D+1.60H	1	8.38	57.00	11.59	11.59	138.32	0.40	52.63	Vu < PhiVc/2	lot Reqd 11.4	52.6	0.0	0.0
+1.40D+1.60H	1	8.78	57.00	11.12	11.12	142.85	0.37	52.54	Vu < PhiVc/2	lot Reqd 11.4	52.5	0.0	0.0
+1.40D+1.60H	1	9.17	57.00	10.66	10.66	147.19	0.34	52.45	Vu < PhiVc/2	lot Reqd 11.4	52.5	0.0	0.0
+1.40D+1.60H	1	9.57	57.00	10.19	10.19	151.35	0.32	52.38	Vu < PhiVc/2	lot Reqd 11.4	52.4	0.0	0.0
+1.40D+1.60H	1	9.97	57.00	9.72	9.72	155.32	0.30	52.31	Vu < PhiVc/2	lot Reqd 11.4	52.3	0.0	0.0
+1.40D+1.60H	1	10.37	57.00	9.25	9.25	159.11	0.28	52.24	Vu < PhiVc/2	lot Reqd 11.4	52.2	0.0	0.0
+1.40D+1.60H	1	10.77	57.00	8.78	8.78	162.70	0.26	52.18	Vu < PhiVc/2	lot Reqd 11.4	52.2	0.0	0.0
+1.40D+1.60H	1	11.17	57.00	8.31	8.31	166.11	0.24	52.12	Vu < PhiVc/2	lot Reqd 11.4	52.1	0.0	0.0
+1.40D+1.60H	1	11.57	57.00	7.85	7.85	169.34	0.22	52.06	Vu < PhiVc/2	lot Reqd 11.4	52.1	0.0	0.0
+1.40D+1.60H	1	11.97	57.00	7.38	7.38	172.37	0.20	52.01	Vu < PhiVc/2	lot Reqd 11.4	52.0	0.0	0.0
+1.40D+1.60H	1	12.37	57.00	6.91	6.91	175.22	0.19	51.96	Vu < PhiVc/2	lot Reqd 11.4	52.0	0.0	0.0
+1.40D+1.60H	1	12.77	57.00	6.44	6.44	177.89	0.17	51.91	Vu < PhiVc/2	lot Reqd 11.4	51.9	0.0	0.0
+1.40D+1.60H	1	13.16	57.00	5.97	5.97	180.36	0.16	51.87	Vu < PhiVc/2	lot Reqd 11.4	51.9	0.0	0.0
+1.40D+1.60H	1	13.56	57.00	5.50	5.50	182.65	0.14	51.82	Vu < PhiVc/2	lot Reqd 11.4	51.8	0.0	0.0
+1.40D+1.60H	1	13.96	57.00	5.04	5.04	184.75	0.13	51.78	Vu < PhiVc/2	lot Reqd 11.4	51.8	0.0	0.0
+1.40D+1.60H	1	14.36	57.00	4.57	4.57	186.67	0.12	51.74	Vu < PhiVc/2	lot Reqd 11.4	51.7	0.0	0.0
+1.40D+1.60H	1	14.76	57.00	4.10	4.10	188.40	0.10	51.70	Vu < PhiVc/2	lot Reqd 11.4	51.7	0.0	0.0
+1.40D+1.60H	1	15.16	57.00	3.63	3.63	189.94	0.09	51.66	Vu < PhiVc/2	lot Reqd 11.4	51.7	0.0	0.0
+1.40D+1.60H	1	15.56	57.00	3.16	3.16	191.29	0.08	51.62	Vu < PhiVc/2	lot Reqd 11.4	51.6	0.0	0.0
+1.40D+1.60H	1	16	57.00	2.69	2.69	192.46	0.07	51.58	Vu < PhiVc/2	lot Reqd 11.4	51.6	0.0	0.0

Concrete Beam

ec\MARTOS~1\MARTOS~1\Projects\20086-~1\Analysis\Enercalc\20086 - MMD 123 Route 303, Orangeburg.ec6 .
Software copyright ENERCALC, INC. 1983-2019, Build:12.19.11.12 .

Lic. # : KW-06011600 Christian L. Martos Engineering pllc

DESCRIPTION: TYPICAL GRADE BEAM

Detailed Shear Information

Load Combination	Span Number	Distance (ft)	'd' (in)	Vu (k) Actual	Vu (k) Design	Mu (k-ft)	d*Vu/Mu	Phi*Vc (k)	Comment	Phi*Vs (k)	Phi*Vn (k)	Spacing (in) Req'd	Spacing (in) Suggest
+1.40D+1.60H	1	16.36	57.00	2.22	2.22	193.44	0.05	51.54	Vu < PhiVc/2	lot Reqd 11.4	51.5	0.0	0.0
+1.40D+1.60H	1	16.75	57.00	1.76	1.76	194.24	0.04	51.51	Vu < PhiVc/2	lot Reqd 11.4	51.5	0.0	0.0
+1.40D+1.60H	1	17.15	57.00	1.29	1.29	194.84	0.03	51.47	Vu < PhiVc/2	lot Reqd 11.4	51.5	0.0	0.0
+1.40D+1.60H	1	17.55	57.00	0.82	0.82	195.26	0.02	51.43	Vu < PhiVc/2	lot Reqd 11.4	51.4	0.0	0.0
+1.40D+1.60H	1	17.95	57.00	0.35	0.35	195.50	0.01	51.40	Vu < PhiVc/2	lot Reqd 11.4	51.4	0.0	0.0
+1.40D+1.60H	1	18.35	57.00	-0.12	0.12	195.54	0.00	51.38	Vu < PhiVc/2	lot Reqd 11.4	51.4	0.0	0.0
+1.40D+1.60H	1	18.75	57.00	-0.59	0.59	195.40	0.01	51.42	Vu < PhiVc/2	lot Reqd 11.4	51.4	0.0	0.0
+1.40D+1.60H	1	19.15	57.00	-1.05	1.05	195.08	0.03	51.45	Vu < PhiVc/2	lot Reqd 11.4	51.5	0.0	0.0
+1.40D+1.60H	1	19.55	57.00	-1.52	1.52	194.56	0.04	51.49	Vu < PhiVc/2	lot Reqd 11.4	51.5	0.0	0.0
+1.40D+1.60H	1	19.95	57.00	-1.99	1.99	193.86	0.05	51.52	Vu < PhiVc/2	lot Reqd 11.4	51.5	0.0	0.0
+1.40D+1.60H	1	20.34	57.00	-2.46	2.46	192.97	0.06	51.56	Vu < PhiVc/2	lot Reqd 11.4	51.6	0.0	0.0
+1.40D+1.60H	1	20.74	57.00	-2.93	2.93	191.90	0.07	51.60	Vu < PhiVc/2	lot Reqd 11.4	51.6	0.0	0.0
+1.40D+1.60H	1	21.14	57.00	-3.40	3.40	190.64	0.08	51.64	Vu < PhiVc/2	lot Reqd 11.4	51.6	0.0	0.0
+1.40D+1.60H	1	21.54	57.00	-3.86	3.86	189.19	0.10	51.68	Vu < PhiVc/2	lot Reqd 11.4	51.7	0.0	0.0
+1.40D+1.60H	1	21.94	57.00	-4.33	4.33	187.56	0.11	51.72	Vu < PhiVc/2	lot Reqd 11.4	51.7	0.0	0.0
+1.40D+1.60H	1	22.34	57.00	-4.80	4.80	185.73	0.12	51.76	Vu < PhiVc/2	lot Reqd 11.4	51.8	0.0	0.0
+1.40D+1.60H	1	22.74	57.00	-5.27	5.27	183.72	0.14	51.80	Vu < PhiVc/2	lot Reqd 11.4	51.8	0.0	0.0
+1.40D+1.60H	1	23.14	57.00	-5.74	5.74	181.53	0.15	51.84	Vu < PhiVc/2	lot Reqd 11.4	51.8	0.0	0.0
+1.40D+1.60H	1	23.54	57.00	-6.21	6.21	179.15	0.16	51.89	Vu < PhiVc/2	lot Reqd 11.4	51.9	0.0	0.0
+1.40D+1.60H	1	23.93	57.00	-6.67	6.67	176.58	0.18	51.94	Vu < PhiVc/2	lot Reqd 11.4	51.9	0.0	0.0
+1.40D+1.60H	1	24.33	57.00	-7.14	7.14	173.82	0.20	51.99	Vu < PhiVc/2	lot Reqd 11.4	52.0	0.0	0.0
+1.40D+1.60H	1	24.73	57.00	-7.61	7.61	170.88	0.21	52.04	Vu < PhiVc/2	lot Reqd 11.4	52.0	0.0	0.0
+1.40D+1.60H	1	25.13	57.00	-8.08	8.08	167.75	0.23	52.09	Vu < PhiVc/2	lot Reqd 11.4	52.1	0.0	0.0
+1.40D+1.60H	1	25.53	57.00	-8.55	8.55	164.43	0.25	52.15	Vu < PhiVc/2	lot Reqd 11.4	52.1	0.0	0.0
+1.40D+1.60H	1	25.93	57.00	-9.02	9.02	160.93	0.27	52.21	Vu < PhiVc/2	lot Reqd 11.4	52.2	0.0	0.0
+1.40D+1.60H	1	26.33	57.00	-9.49	9.49	157.24	0.29	52.27	Vu < PhiVc/2	lot Reqd 11.4	52.3	0.0	0.0
+1.40D+1.60H	1	26.73	57.00	-9.95	9.95	153.36	0.31	52.34	Vu < PhiVc/2	lot Reqd 11.4	52.3	0.0	0.0
+1.40D+1.60H	1	27.13	57.00	-10.42	10.42	149.30	0.33	52.42	Vu < PhiVc/2	lot Reqd 11.4	52.4	0.0	0.0
+1.40D+1.60H	1	27.52	57.00	-10.89	10.89	145.05	0.36	52.49	Vu < PhiVc/2	lot Reqd 11.4	52.5	0.0	0.0
+1.40D+1.60H	1	27.92	57.00	-11.36	11.36	140.61	0.38	52.58	Vu < PhiVc/2	lot Reqd 11.4	52.6	0.0	0.0
+1.40D+1.60H	1	28.32	57.00	-11.83	11.83	135.98	0.41	52.67	Vu < PhiVc/2	lot Reqd 11.4	52.7	0.0	0.0
+1.40D+1.60H	1	28.72	57.00	-12.30	12.30	131.17	0.45	52.77	Vu < PhiVc/2	lot Reqd 11.4	52.8	0.0	0.0
+1.40D+1.60H	1	29.12	57.00	-12.76	12.76	126.17	0.48	52.88	Vu < PhiVc/2	lot Reqd 11.4	52.9	0.0	0.0
+1.40D+1.60H	1	29.52	57.00	-13.23	13.23	120.99	0.52	53.01	Vu < PhiVc/2	lot Reqd 11.4	53.0	0.0	0.0
+1.40D+1.60H	1	29.92	57.00	-13.70	13.70	115.62	0.56	53.14	Vu < PhiVc/2	lot Reqd 11.4	53.1	0.0	0.0
+1.40D+1.60H	1	30.32	57.00	-14.17	14.17	110.06	0.61	53.30	Vu < PhiVc/2	lot Reqd 11.4	53.3	0.0	0.0
+1.40D+1.60H	1	30.72	57.00	-14.64	14.64	104.31	0.67	53.47	Vu < PhiVc/2	lot Reqd 11.4	53.5	0.0	0.0
+1.40D+1.60H	1	31.11	57.00	-15.11	15.11	98.38	0.73	53.67	Vu < PhiVc/2	lot Reqd 11.4	53.7	0.0	0.0
+1.40D+1.60H	1	31.51	57.00	-15.57	15.57	92.26	0.80	53.90	Vu < PhiVc/2	lot Reqd 11.4	53.9	0.0	0.0
+1.40D+1.60H	1	31.91	57.00	-16.04	16.04	85.95	0.89	54.16	Vu < PhiVc/2	lot Reqd 11.4	54.2	0.0	0.0
+1.40D+1.60H	1	32.31	57.00	-16.51	16.51	79.46	0.99	54.48	Vu < PhiVc/2	lot Reqd 11.4	54.5	0.0	0.0
+1.40D+1.60H	1	32.71	57.00	-16.98	16.98	72.78	1.00	54.52	Vu < PhiVc/2	lot Reqd 11.4	54.5	0.0	0.0
+1.40D+1.60H	1	33.11	57.00	-17.45	17.45	65.91	1.00	54.52	Vu < PhiVc/2	lot Reqd 11.4	54.5	0.0	0.0
+1.40D+1.60H	1	33.51	57.00	-17.92	17.92	58.86	1.00	54.52	Vu < PhiVc/2	lot Reqd 11.4	54.5	0.0	0.0
+1.40D+1.60H	1	33.91	57.00	-18.39	18.39	51.62	1.00	54.52	Vu < PhiVc/2	lot Reqd 11.4	54.5	0.0	0.0
+1.40D+1.60H	1	34.31	57.00	-18.85	18.85	44.19	1.00	54.52	Vu < PhiVc/2	lot Reqd 11.4	54.5	0.0	0.0
+1.40D+1.60H	1	34.70	57.00	-19.32	19.32	36.58	1.00	54.52	Vu < PhiVc/2	lot Reqd 11.4	54.5	0.0	0.0
+1.40D+1.60H	1	35.10	57.00	-19.79	19.79	28.78	1.00	54.52	Vu < PhiVc/2	lot Reqd 11.4	54.5	0.0	0.0
+1.40D+1.60H	1	35.50	57.00	-20.26	20.26	20.79	1.00	54.52	Vu < PhiVc/2	lot Reqd 11.4	54.5	0.0	0.0
+1.40D+1.60H	1	35.90	57.00	-20.73	20.73	12.61	1.00	54.52	Vu < PhiVc/2	lot Reqd 11.4	54.5	0.0	0.0
+1.40D+1.60H	1	36.30	57.00	-21.20	21.20	4.25	1.00	54.52	Vu < PhiVc/2	lot Reqd 11.4	54.5	0.0	0.0

Maximum Forces & Stresses for Load Combinations

Load Combination Segment	July 29, 2021	Span #	Location (ft) along Beam	Bending Stress Results (k-ft) Mu : Max	Phi*Mnx	Stress Ratio

Printed: 9 FEB 2021, 10:04AM

Concrete Beam

ec\MARTOS~1\MARTOS~1\Projects\20086-~1\Analysis\Enercalc\20086 - MMD 123 Route 303, Orangeburg.ec6 .
Software copyright ENERCALC, INC. 1983-2019, Build:12.19.11.12 .

Lic. # : KW-06011600 Christian L. Martos Engineering pllc

DESCRIPTION: TYPICAL GRADE BEAM

MAXimum BENDING Envelope					
Span # 1	1	36.500	195.55	371.95	0.53
+1.40D+1.60H					
Span # 1	1	36.500	195.55	371.95	0.53
+1.20D+0.50Lr+1.60L+1.60H					
Span # 1	1	36.500	167.61	371.95	0.45
+1.20D+1.60L+0.50S+1.60H					
Span # 1	1	36.500	167.61	371.95	0.45
+1.20D+1.60Lr+0.50L+1.60H					
Span # 1	1	36.500	167.61	371.95	0.45
+1.20D+1.60Lr+0.50W+1.60H					
Span # 1	1	36.500	167.61	371.95	0.45
+1.20D+0.50L+1.60S+1.60H					
Span # 1	1	36.500	167.61	371.95	0.45
+1.20D+1.60S+0.50W+1.60H					
Span # 1	1	36.500	167.61	371.95	0.45
+1.20D+0.50Lr+0.50L+W+1.60H					
Span # 1	1	36.500	167.61	371.95	0.45
+1.20D+0.50L+0.50S+W+1.60H					
Span # 1	1	36.500	167.61	371.95	0.45
+1.20D+0.50L+0.70S+E+1.60H					
Span # 1	1	36.500	167.61	371.95	0.45
+0.90D+W+0.90H					
Span # 1	1	36.500	125.71	371.95	0.34
+0.90D+E+0.90H					
Span # 1	1	36.500	125.71	371.95	0.34

Overall Maximum Deflections

Load Combination	Span	Max. "-" Defl (in)	Location in Span (ft)	Load Combination	Max. "+" Defl (in)	Location in Span (ft)
D Only	1	0.0516	18.250		0.0000	0.000

Footing Loads:

Roof Loads:
- SIDL = **15psf**
- LR = **35psf**
- SL = **21 psf**

Total DL = 12.1917k + 15.307k + 13.28k = **41.384k**

Total Lr = **20.751k**

Total SL = **12.451k**

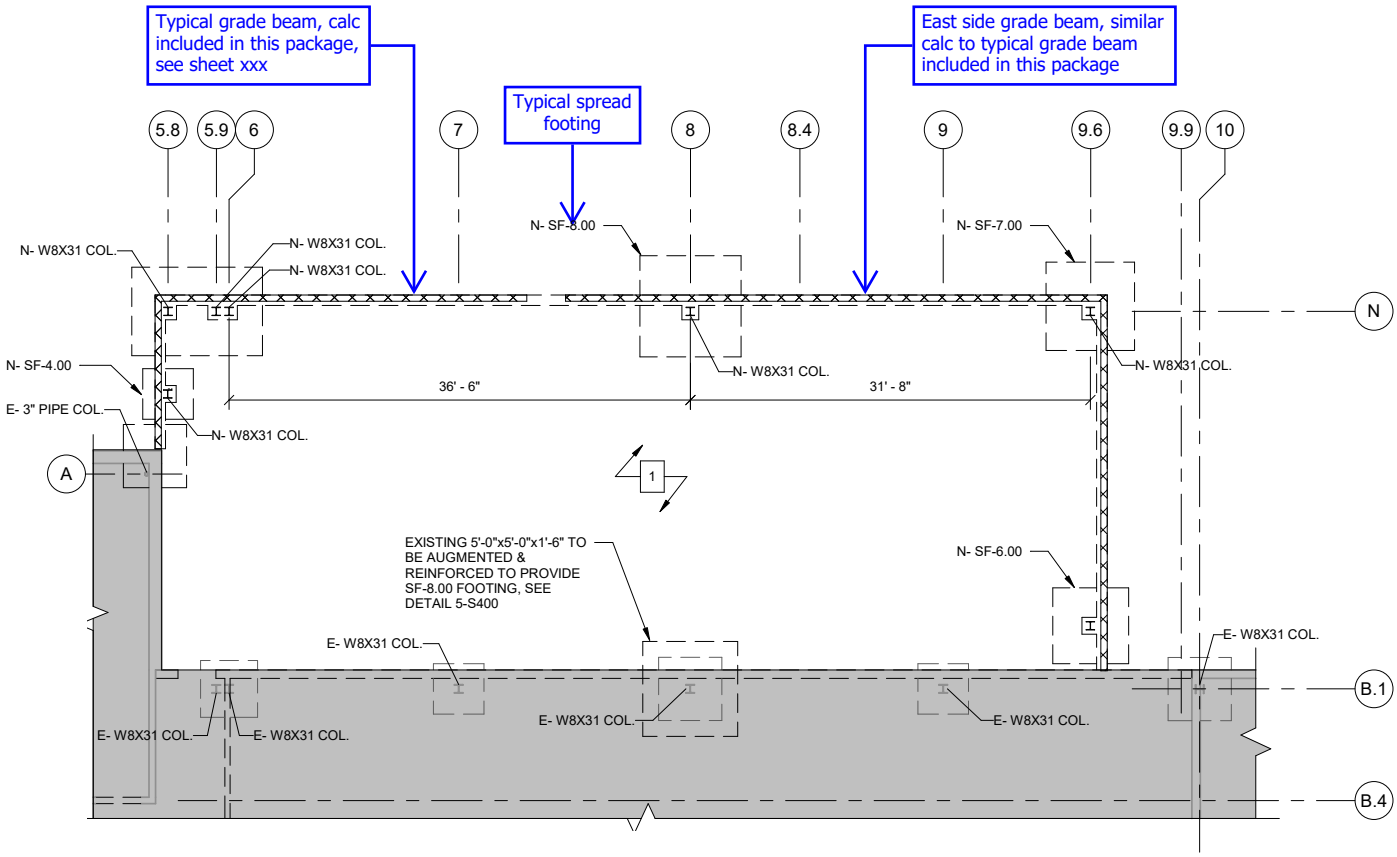

1 FOUNDATION PLAN AT PROPOSED ADDITION B

1/8" = 1'-0"

0 4' 8' 16'

PLAN NORTH

General Footing

ec\MARTOS~1\MARTOS~1\Projects\20086-~1\Analysis\Enercalc\20086 - MMD 123 Route 303, Orangeburg.ec6 .
Software copyright ENERCALC, INC. 1983-2019, Build:12.19.11.12 .
Lic. # : KW-06011600
Christian L. Martos Engineering pllc

DESCRIPTION: TYPICAL SPREAD FOOTING

Code References

Calculations per ACI 318-11, IBC 2012, CBC 2013, ASCE 7-10
Load Combinations Used : IBC 2018

General Information

Material Properties

f'c : Concrete 28 day strength	=	4.0	ksi
fy : Rebar Yield	=	60.0	ksi
Ec : Concrete Elastic Modulus	=	3,605.0	ksi
Concrete Density	=	150.0	pcf
φ Values Flexure	=	0.90	
Shear	=	0.750	

Analysis Settings

Min Steel % Bending Reinf.	=	
Min Allow % Temp Reinf.	=	0.00180
Min. Overturning Safety Factor	=	1.0 : 1
Min. Sliding Safety Factor	=	1.0 : 1
Add Ftg Wt for Soil Pressure	:	Yes
Use ftg wt for stability, moments & shears	:	Yes
Add Pedestal Wt for Soil Pressure	:	Yes
Use Pedestal wt for stability, mom & shear	:	Yes

Concrete Footing & Pier self weight calculated and used as dead load

Soil Design Values

Recommended soil bearing pressure per geotechnical report

Allowable Soil Bearing	=	2.0	ksf
Increase Bearing By Footing Weight	=	No	
Soil Passive Resistance (for Sliding)	=	250.0	pcf
Soil/Concrete Friction Coeff.	=	0.30	

Increases based on footing Depth

Footing base depth below soil surface	=	7.0	ft
Allow press. increase per foot of depth	=		ksf
when footing base is below	=		ft

Increases based on footing plan dimension

Allowable pressure increase per foot of depth	=		ksf
when max. length or width is greater than	=		ft

Dimensions

Width parallel to X-X Axis	=	8.0	ft
Length parallel to Z-Z Axis	=	8.0	ft
Footing Thickness	=	18.0	in

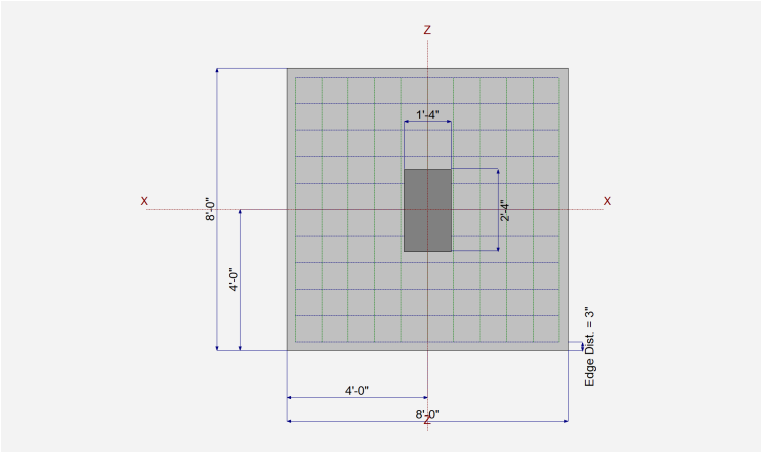

Pedestal dimensions...

px : parallel to X-X Axis	=	16.0	in
pz : parallel to Z-Z Axis	=	28.0	in
Height	=	60.0	in

Rebar Centerline to Edge of Concrete...

at Bottom of footing	=	3.0	in

Reinforcing

Bars parallel to X-X Axis			
Number of Bars	=	11.0	
Reinforcing Bar Size	=	#	5
Bars parallel to Z-Z Axis			
Number of Bars	=	11.0	
Reinforcing Bar Size	=	#	5

Bandwidth Distribution Check (ACI 15.4.4.2)

Direction Requiring Closer Separation

	n/a
# Bars required within zone	n/a
# Bars required on each side of zone	n/a

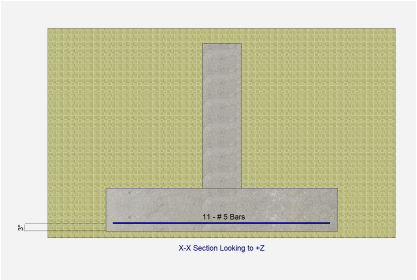

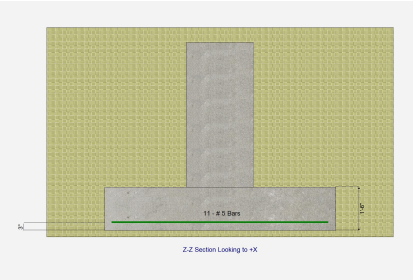

Applied Loads

		D	Lr	L	S	W	E	H	
P : Column Load	=	41.384	20.751		12.451				k
OB : Overburden	=								ksf
M-xx	=								k-ft
M-zz	=								k-ft
V-x	=								k
V-z	=								k

DL breakdown:

- DL from bottom reaction of typical column calc, see sheet xxx
  = **12.797k**

- DL from end reaction of typical grade beam calc, see sheet xxx
  = **15.307k**

- DL from similar grade beam calc
  = **13.28k**

Total DL = 12.797k + 15.307k + 13.28k = **41.384k**

Applied Loads

		D	Lr	L	S	W	E	H	
P : Column Load	=	41.384	20.751		12.451				k
OB : Overburden	=								ksf
M-xx	=								k-ft
M-zz	=								k-ft
V-x	=								k
V-z	=								k

Live Roof Load from bottom reaction of typical column calc, see sheet xxx

Snow Load from bottom reaction of typical column calc, see sheet xxx

General Footing

ec\MARTOS~1\MARTOS~1\Projects\20086-~1\Analysis\Enercalc\20086 - MMD 123 Route 303, Orangeburg.ec6 .
Software copyright ENERCALC, INC. 1983-2019, Build:12.19.11.12 .
Lic. # : KW-06011600
Christian L. Martos Engineering pllc

DESCRIPTION: TYPICAL SPREAD FOOTING

DESIGN SUMMARY

Design OK

	Min. Ratio	Item	Applied	Capacity	Governing Load Combination
PASS	0.9040	Soil Bearing	1.808 ksf	2.0 ksf	+D+Lr about Z-Z axis
PASS	n/a	Overturning - X-X	0.0 k-ft	0.0 k-ft	No Overturning
PASS	n/a	Overturning - Z-Z	0.0 k-ft	0.0 k-ft	No Overturning
PASS	n/a	Sliding - X-X	0.0 k	0.0 k	No Sliding
PASS	n/a	Sliding - Z-Z	0.0 k	0.0 k	No Sliding
PASS	n/a	Uplift	0.0 k	0.0 k	No Uplift
PASS	0.2570	Z Flexure (+X)	7.239 k-ft/ft	28.171 k-ft/ft	+1.20D+1.60Lr
PASS	0.2570	Z Flexure (-X)	7.239 k-ft/ft	28.171 k-ft/ft	+1.20D+1.60Lr
PASS	0.1857	X Flexure (+Z)	5.230 k-ft/ft	28.171 k-ft/ft	+1.20D+1.60Lr
PASS	0.1857	X Flexure (-Z)	5.230 k-ft/ft	28.171 k-ft/ft	+1.20D+1.60Lr
PASS	0.1587	1-way Shear (+X)	15.059 psi	94.868 psi	+1.20D+1.60Lr
PASS	0.1587	1-way Shear (-X)	15.059 psi	94.868 psi	+1.20D+1.60Lr
PASS	0.1221	1-way Shear (+Z)	11.584 psi	94.868 psi	+1.20D+1.60Lr
PASS	0.1221	1-way Shear (-Z)	11.584 psi	94.868 psi	+1.20D+1.60Lr
PASS	0.1701	2-way Punching	32.280 psi	189.737 psi	+1.20D+1.60Lr

Detailed Results

Soil Bearing

Rotation Axis & Load Combination...	Gross Allowable	Xecc (in)	Zecc (in)	Actual Soil Bearing Stress @ Location Bottom, -Z	Top, +Z	Left, -X	Right, +X	Actual / Allow Ratio
X-X, D Only	2.0	n/a	0.0	1.484	1.484	n/a	n/a	0.742
X-X, +D+Lr	2.0	n/a	0.0	1.808	1.808	n/a	n/a	0.904
X-X, +D+S	2.0	n/a	0.0	1.678	1.678	n/a	n/a	0.839
X-X, +D+0.750Lr	2.0	n/a	0.0	1.727	1.727	n/a	n/a	0.864
X-X, +D+0.750S	2.0	n/a	0.0	1.630	1.630	n/a	n/a	0.815
X-X, +0.60D	2.0	n/a	0.0	0.8902	0.8902	n/a	n/a	0.445
Z-Z, D Only	2.0	0.0	n/a	n/a	n/a	1.484	1.484	0.742
Z-Z, +D+Lr	2.0	0.0	n/a	n/a	n/a	1.808	1.808	0.904
Z-Z, +D+S	2.0	0.0	n/a	n/a	n/a	1.678	1.678	0.839
Z-Z, +D+0.750Lr	2.0	0.0	n/a	n/a	n/a	1.727	1.727	0.864
Z-Z, +D+0.750S	2.0	0.0	n/a	n/a	n/a	1.630	1.630	0.815
Z-Z, +0.60D	2.0	0.0	n/a	n/a	n/a	0.8902	0.8902	0.445

Overturning Stability

Rotation Axis & Load Combination...	Overturning Moment	Resisting Moment	Stability Ratio	Status
Footing Has NO Overturning				

All units k

Sliding Stability

Force Application Axis Load Combination...	Sliding Force	Resisting Force	Stability Ratio	Status
Footing Has NO Sliding				

Footing Flexure

Flexure Axis & Load Combination	Mu k-ft	Side	Tension Surface	As Req'd in^2	Gvrn. As in^2	Actual As in^2	Phi*Mn k-ft	Status
X-X, +1.40D	3.673	+Z	Bottom	0.3888	Min Temp %	0.4263	28.171	OK
X-X, +1.40D	3.673	-Z	Bottom	0.3888	Min Temp %	0.4263	28.171	OK
X-X, +1.20D+0.50Lr	3.799	+Z	Bottom	0.3888	Min Temp %	0.4263	28.171	OK
X-X, +1.20D+0.50Lr	3.799	-Z	Bottom	0.3888	Min Temp %	0.4263	28.171	OK
X-X, +1.20D+0.50S	3.538	+Z	Bottom	0.3888	Min Temp %	0.4263	28.171	OK
X-X, +1.20D+0.50S	3.538	-Z	Bottom	0.3888	Min Temp %	0.4263	28.171	OK
X-X, +1.20D+1.60Lr	5.230	+Z	Bottom	0.3888	Min Temp %	0.4263	28.171	OK
X-X, +1.20D+1.60Lr	5.230	-Z	Bottom	0.3888	Min Temp %	0.4263	28.171	OK
X-X, +1.20D+1.60S	4.397	+Z	Bottom	0.3888	Min Temp %	0.4263	28.171	OK
X-X, +1.20D+1.60S	4.397	-Z	Bottom	0.3888	Min Temp %	0.4263	28.171	OK
X-X, +1.20D+0.70S	3.695	+Z	Bottom	0.3888	Min Temp %	0.4263	28.171	OK
X-X, +1.20D+0.70S	3.695	-Z	Bottom	0.3888	Min Temp %	0.4263	28.171	OK

General Footing

DESCRIPTION: TYPICAL SPREAD FOOTING

Footing Flexure

Flexure Axis & Load Combination	Mu k-ft	Side	Tension Surface	As Req'd in^2	Gvrn. As in^2	Actual As in^2	Phi*Mn k-ft	Status
X-X, +0.90D	2.361	+Z	Bottom	0.3888	Min Temp %	0.4263	28.171	OK
X-X, +0.90D	2.361	-Z	Bottom	0.3888	Min Temp %	0.4263	28.171	OK
Z-Z, +1.40D	5.084	-X	Bottom	0.3888	Min Temp %	0.4263	28.171	OK
Z-Z, +1.40D	5.084	+X	Bottom	0.3888	Min Temp %	0.4263	28.171	OK
Z-Z, +1.20D+0.50Lr	5.258	-X	Bottom	0.3888	Min Temp %	0.4263	28.171	OK
Z-Z, +1.20D+0.50Lr	5.258	+X	Bottom	0.3888	Min Temp %	0.4263	28.171	OK
Z-Z, +1.20D+0.50S	4.898	-X	Bottom	0.3888	Min Temp %	0.4263	28.171	OK
Z-Z, +1.20D+0.50S	4.898	+X	Bottom	0.3888	Min Temp %	0.4263	28.171	OK
Z-Z, +1.20D+1.60Lr	7.239	-X	Bottom	0.3888	Min Temp %	0.4263	28.171	OK
Z-Z, +1.20D+1.60Lr	7.239	+X	Bottom	0.3888	Min Temp %	0.4263	28.171	OK
Z-Z, +1.20D+1.60S	6.087	-X	Bottom	0.3888	Min Temp %	0.4263	28.171	OK
Z-Z, +1.20D+1.60S	6.087	+X	Bottom	0.3888	Min Temp %	0.4263	28.171	OK
Z-Z, +1.20D+0.70S	5.114	-X	Bottom	0.3888	Min Temp %	0.4263	28.171	OK
Z-Z, +1.20D+0.70S	5.114	+X	Bottom	0.3888	Min Temp %	0.4263	28.171	OK
Z-Z, +0.90D	3.268	-X	Bottom	0.3888	Min Temp %	0.4263	28.171	OK
Z-Z, +0.90D	3.268	+X	Bottom	0.3888	Min Temp %	0.4263	28.171	OK

One Way Shear

Load Combination...	Vu @ -X	Vu @ +X	Vu @ -Z	Vu @ +Z	Vu:Max	Phi Vn	Vu / Phi*Vn	Status
+1.40D	10.58 psi	10.58 psi	8.14 psi	8.14 psi	10.58 psi	94.87 psi	0.11	OK
+1.20D+0.50Lr	10.94 psi	10.94 psi	8.41 psi	8.41 psi	10.94 psi	94.87 psi	0.12	OK
+1.20D+0.50S	10.19 psi	10.19 psi	7.84 psi	7.84 psi	10.19 psi	94.87 psi	0.11	OK
+1.20D+1.60Lr	15.06 psi	15.06 psi	11.58 psi	11.58 psi	15.06 psi	94.87 psi	0.16	OK
+1.20D+1.60S	12.66 psi	12.66 psi	9.74 psi	9.74 psi	12.66 psi	94.87 psi	0.13	OK
+1.20D+0.70S	10.64 psi	10.64 psi	8.18 psi	8.18 psi	10.64 psi	94.87 psi	0.11	OK
+0.90D	6.80 psi	6.80 psi	5.23 psi	5.23 psi	6.80 psi	94.87 psi	0.07	OK

All units k

Two-Way "Punching" Shear

Load Combination...	Vu	Phi*Vn	Vu / Phi*Vn	Status
+1.40D	22.67 psi	189.74 psi	0.1195	OK
+1.20D+0.50Lr	23.45 psi	189.74 psi	0.1236	OK
+1.20D+0.50S	21.84 psi	189.74 psi	0.1151	OK
+1.20D+1.60Lr	32.28 psi	189.74 psi	0.1701	OK
+1.20D+1.60S	27.14 psi	189.74 psi	0.143	OK
+1.20D+0.70S	22.80 psi	189.74 psi	0.1202	OK
+0.90D	14.57 psi	189.74 psi	0.0768	OK

I. Hazmat Report

ENVIRONMENTAL CONNECTION INC
A Vertical Technologies Corporation

REPORT

Asbestos Containing Material Inspection

United States Army Reserve Center
Orangeburg, New York
Full Facility Revitalization

Prepared For:

Mott MacDonald
111 South Wood Avenue
Iselin, New Jersey 08830

Prepared By:

Environmental Connection, Inc.
120 North Warren Street
Trenton, New Jersey 08608

December 1, 2020

EC Project #: 20205-01

TABLE OF CONTENTS

SECTION 1.0 EXECUTIVE SUMMARY 2

SECTION 2.0 ASSESSMENT FOR ASBESTOS CONTAINING MATERIALS 2

SECTION 3.0 PROJECT LIMITATIONS/DISCLAIMERS 4

APPENDIX I ASBESTOS SAMPLE LOCATION PLAN, ANALYTICAL REPORTS AND CHAIN OF CUSTODY RECORDS

APPENDIX II HAZARDOUS MATERIAL INSPECTION REPORT ISSUED BY MICHAEL BAKER INTERNATIONAL ON JANUARY 20, 2020

APPENDIX III CERTIFICATIONS/ACCREDITATIONS

SECTION 1.0 EXECUTIVE SUMMARY

Environmental Connection, Inc., (EC) was contracted by Mott MacDonald to conduct an assessment for Asbestos Containing Materials (ACMs) at the United States Army Reserve Center located at 123 State Route 303 in Orangeburg, New York, in preparation for the Full Facility Revitalization. Dominick Dercole, a New York State, Department of Labor certified Asbestos Inspector, performed the ACM inspection on November 10, 2020. Michael Moore, a United States Environmental Protection Agency (USEPA) accredited Asbestos Building Inspector, provided assistance.

The building is a one (1) story steel and masonry construction structure. Interior finishes included suspended acoustical ceiling tile, drywall walls, carpet, vinyl and epoxy flooring. No spray-on fireproofing was observed on metal ceiling decks or structural members.

As a result of the inspection, sampling and laboratory analysis, one (1) asbestos containing material, Mirror Mastic, was identified.

The following sections review each task and the results of the survey.

SECTION 2.0 ASSESSMENT FOR ASBESTOS CONTAINING MATERIALS

Section 2.1 Summary

EC identified potential ACMs, catalogued their locations, and collected bulk samples in adequate quantities to perform analysis via Polarized Light Microscopy (PLM) or Transmission Electron Microscopy (TEM) to determine the presence or absence of asbestos (greater than 1% by weight). As per the State of New York, Industrial Code Rule (ICR) 56, non-friable organically bound (NOB) asbestos containing materials are to be analyzed by the Polarized Light Microscopy (PLM) method specifically for NOBs (PLM-NOB); if such materials are determined by analysis to be less than, or equal to, 1% asbestos by weight or “Inconclusive” for asbestos fibers, then Transmission Electron Microscopy (TEM) is performed, referenced as TEM-NOB. The tables below list those materials identified and tested.

Section 2.2 Results

Asbestos is a naturally occurring mineral, which exists in two (2) groups, Serpentine and Amphibole, and was utilized in more than 3,600 products for its fire resistant, tensile strength, inertness, and chemical binding properties. The Serpentine group is comprised of Chrysotile asbestos, while the Amphibole group consists of Amosite, Crocidolite, Tremolite, Anthophyllite, and other forms of asbestos. According to the USEPA, materials that are greater than 1% asbestos by weight are classified as asbestos containing materials. The following is a summary of the analytical results.

Table 1 - Results of Asbestos Analysis Orangeburg Army Reserve Center Orangeburg, NY				
ID #	**Material**	**Analytical Results PLM**	**Analytical Results PLM-NOB**	**Analytical Results TEM-NOB**
01	2' x 2' Acoustical Ceiling Tile	N/A	None Detected*	None Detected*
02	Glue to 4" Ceramic Wall Tile	N/A	None Detected	None Detected
03	Grout to Ceramic Floor Tile – Bathrooms	None Detected	N/A	N/A
04	Sink Caulk	N/A	None Detected	None Detected
05	**Mirror Mastic**	**N/A**	**11% Chrysotile**	**N/A**
06	Grout to Ceramic Floor Tile - Kitchen	None Detected	N/A	N/A
07	Tan Epoxy Floor	N/A	None Detected	None Detected
08	Cinderblock	None Detected	N/A	N/A
09	Cinderblock Mortar	None Detected	N/A	N/A
10	Exterior Stucco	None Detected*	N/A	N/A
11	2' x 4' Acoustical Ceiling Tile	N/A	None Detected*	None Detected*
12	Drywall	None Detected	N/A	N/A
12A	Joint Compound to Drywall	None Detected	N/A	N/A
13	Window Caulk	N/A	None Detected*	None Detected*
14	Brown Vinyl Cove Base	N/A	None Detected	None Detected
14A	Glue to Brown Vinyl Cove Base	N/A	None Detected	None Detected
15	Black Vinyl Cove Base	N/A	None Detected	None Detected
15A	Glue to Black Vinyl Cove Base	N/A	None Detected	None Detected
16	Paste on Fiberglass Pipe Insulation	N/A	None Detected	None Detected
17	Red Fire Stop Caulk	N/A	None Detected	None Detected
18	12" x 12" White Vinyl Floor Tile	N/A	None Detected	None Detected
18A	Mastic to 12" x 12" White Vinyl Floor Tile	N/A	None Detected	None Detected
19	White Vinyl Cove Base	N/A	None Detected	None Detected
20	12" x 12" Grey Vinyl Floor Tile	N/A	None Detected*	None Detected*
21	Roof Field Membrane	N/A	None Detected	None Detected
22	Roof Mastic	N/A	None Detected	None Detected
23	Mastic on A/C Unit	N/A	None Detected	None Detected
24	Window Panel Insulation	None Detected	N/A	N/A
N/A = Not Applicable *Analyzed Previously, See Appendix II				

Table 2 - Summary of Inspection Results Orangeburg Army Reserve Center Orangeburg, NY		
Location	**Material**	**Approximate Quantity**
1027 – Female Restroom	Mirror Mastic	15 SF
1029 – Male Restroom	Mirror Mastic	15 SF

The Certificates of Analyses and Chains of Custody for asbestos testing are located in Appendix I of this report.

SECTION 3.0 PROJECT LIMITATIONS/DISCLAIMERS

The Client should be aware that this survey did not incorporate destructive demolition to access hidden or obscured ACM. Concealed asbestos-containing materials, such as vinyl asbestos floor tile which has been overlaid with plywood, insulated piping lines in wall cavities, asbestos nailcrete below tongue and groove flooring, internal boiler ACM, ACM on pipes buried in concrete slabs and other potential ACM which is inaccessible for sample extraction due to the physical coverage of the material were not sampled. EC does assure, however, that due diligence was observed in performing sampling by generally recognized industry sampling practices.

The Client should be advised that quantities referenced herein are estimates/approximations. Assumed asbestos containing materials are to be treated as asbestos containing materials until otherwise determined by appropriate sampling and analysis, in accordance with 40 CFR, Part 763, and NYS ICR 56, inclusive of utilizing NYS certified Asbestos Inspectors to collect the appropriate number of samples and an ELAP accredited laboratory that is a NVLAP participant.

APPENDIX I

ASBESTOS SAMPLE LOCATION PLAN, ASBESTOS ANALYTICAL REPORTS AND CHAIN-OF-CUSTODY RECORDS

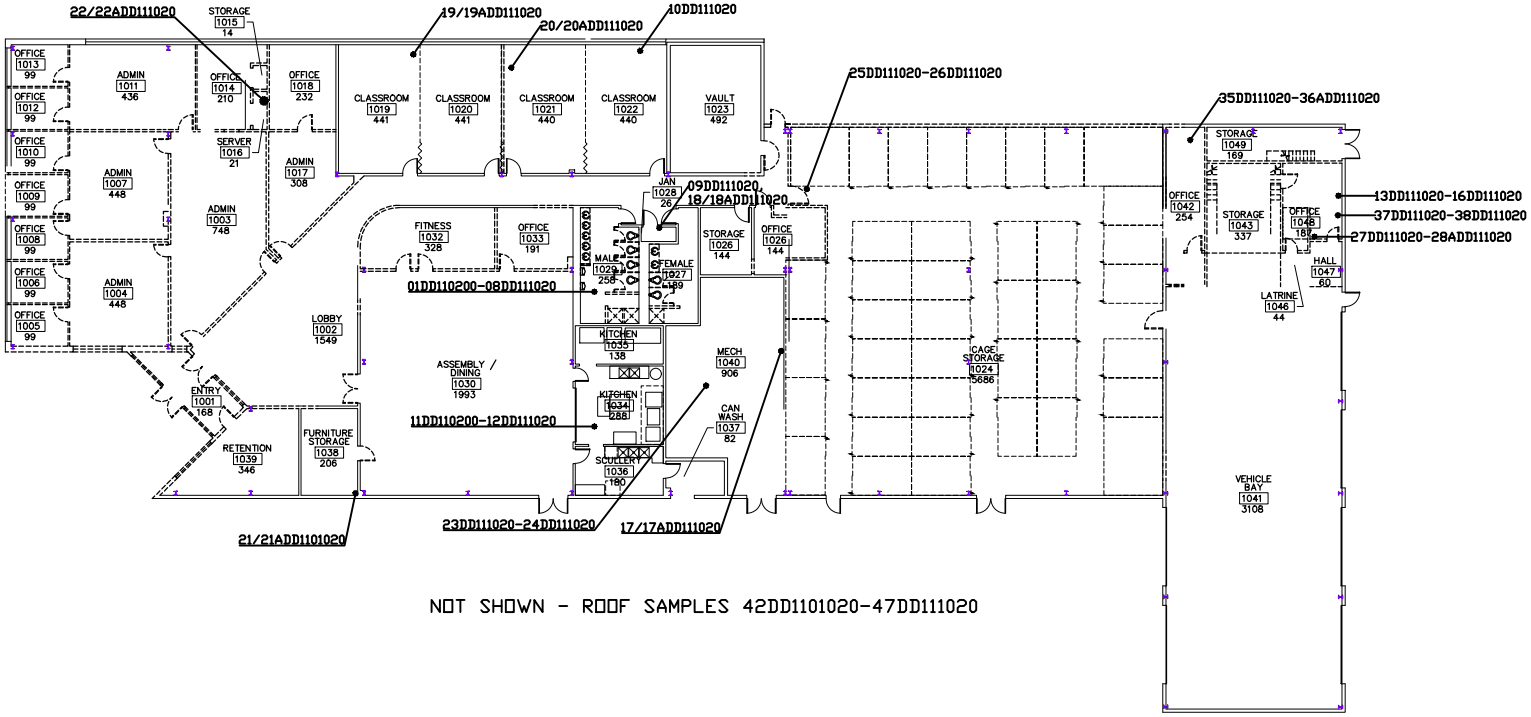

NOT SHOWN - ROOF SAMPLES 42DD1101020-47DD111020

INSPECTION DATE: 11/10/2020

SL-01

ORANGEBURG ARMY RESERVE CENTER
123 STATE ROUTE 303, ORANGEBURG, NY

ENVIRONMENTAL CONNECTION, INC.
120 NORTH WARREN STREET, TRENTON, NEW JERSEY 08608
TEL: 609-392-4200 FAX: 609-392-1216 WEB: WWW.VTIHQ.COM

MOTT MACDONALD
111 SOUTH WOOD AVENUE
ISELIN, NEW JERSEY 08830

SCALE: NONE
LOCATION: FIRST FLOOR
DRAWN BY: RJ
PROJECT #: 20205-01

EMSL Analytical, Inc.
200 Route 130 North Cinnaminson, NJ 08077
Tel/Fax: (800) 220-3675 / (856) 786-5974
http://www.EMSL.com / cinnasblab@EMSL.com

EMSL Order: 042027849
Customer ID: ENVI65
Customer PO:
Project ID:

Attention: Rollie Jones
Environmental Connection, Inc.
120 North Warren Street
Trenton, NJ 08608

Phone: (609) 392-4200
Fax:
Received Date: 11/13/2020 11:20 AM
Analysis Date: 11/17/2020
Collected Date: 11/10/2020

Project: Mott MacDonald / ACM Inspection US Army Reserve Center, Orangeburg, NY / 20205-01

Test Report:Asbestos Analysis of Bulk Material

Test	Analyzed Date	Color	Non-Asbestos Fibrous	Non-Fibrous	Asbestos
Sample ID 01DD111020		**Description**	1029 - 4" Ceramic Tile Adhesive		
042027849-0001		**Homogeneity**	Homogeneous		
PLM NYS 198.1 Friable					**Not Analyzed**
PLM NYS 198.6 VCM					**Not Analyzed**
PLM NYS 198.6 NOB	11/17/2020	White		100.00% Other	**Inconclusive: None Detected**
TEM NYS 198.4 NOB	11/17/2020	White		100.00% Other	**None Detected**
Sample ID 02DD111020		**Description**	1029 - 4" Ceramic Tile Adhesive		
042027849-0002		**Homogeneity**	Homogeneous		
PLM NYS 198.1 Friable					**Not Analyzed**
PLM NYS 198.6 VCM					**Not Analyzed**
PLM NYS 198.6 NOB	11/17/2020	White		100.00% Other	**Inconclusive: None Detected**
TEM NYS 198.4 NOB	11/17/2020	White		100.00% Other	**None Detected**
Sample ID 03DD111020		**Description**	1029 - Grout		
042027849-0003		**Homogeneity**	Homogeneous		
PLM NYS 198.1 Friable	11/17/2020	Gray		100.00% Non-fibrous (other)	**None Detected**
PLM NYS 198.6 VCM					**Not Analyzed**
PLM NYS 198.6 NOB					**Not Analyzed**
TEM NYS 198.4 NOB					**Not Analyzed**
Sample ID 04DD111020		**Description**	1029 - Grout		
042027849-0004		**Homogeneity**	Homogeneous		
PLM NYS 198.1 Friable	11/17/2020	Gray/ White		100.00% Non-fibrous (other)	**None Detected**
PLM NYS 198.6 VCM					**Not Analyzed**
PLM NYS 198.6 NOB					**Not Analyzed**
TEM NYS 198.4 NOB					**Not Analyzed**
Sample ID 05DD111020		**Description**	1029 - Sink Counter Caulk		
042027849-0005		**Homogeneity**	Homogeneous		
PLM NYS 198.1 Friable					**Not Analyzed**
PLM NYS 198.6 VCM					**Not Analyzed**
PLM NYS 198.6 NOB	11/17/2020	White		100.00% Other	**Inconclusive: None Detected**
TEM NYS 198.4 NOB	11/17/2020	White		100.00% Other	**None Detected**

Initial report from: 11/17/2020 23:48:59

EMSL Analytical, Inc.
200 Route 130 North Cinnaminson, NJ 08077
Tel/Fax: (800) 220-3675 / (856) 786-5974
http://www.EMSL.com / cinnasblab@EMSL.com

EMSL Order: 042027849
Customer ID: ENVI65
Customer PO:
Project ID:

Test Report:Asbestos Analysis of Bulk Material

Test	Analyzed Date	Color	Non-Asbestos Fibrous	Non-Fibrous	Asbestos
Sample ID 06DD111020		**Description**	1029 - Sink Counter Caulk		
042027849-0006		**Homogeneity**	Homogeneous		
PLM NYS 198.1 Friable					**Not Analyzed**
PLM NYS 198.6 VCM					**Not Analyzed**
PLM NYS 198.6 NOB	11/17/2020	White		100.00% Other	**Inconclusive: None Detected**
TEM NYS 198.4 NOB	11/17/2020	White		100.00% Other	**None Detected**
Sample ID 07DD111020		**Description**	1029 - Mirror Mastic		
042027849-0007		**Homogeneity**	Homogeneous		
PLM NYS 198.1 Friable					**Not Analyzed**
PLM NYS 198.6 VCM					**Not Analyzed**
PLM NYS 198.6 NOB	11/17/2020	Black	None	89.00% Other	**11.00% Chrysotile**
TEM NYS 198.4 NOB					**Not Analyzed**
Sample ID 08DD111020		**Description**	1029 - Mirror Mastic		
042027849-0008		**Homogeneity**			
PLM NYS 198.1 Friable					**Not Analyzed**
PLM NYS 198.6 VCM					**Not Analyzed**
PLM NYS 198.6 NOB	11/17/2020				**Positive Stop (Not Analyzed)**
TEM NYS 198.4 NOB					**Not Analyzed**
Sample ID 09DD111020		**Description**	1028 - Tan Epoxy Floor		
042027849-0009		**Homogeneity**	Homogeneous		
PLM NYS 198.1 Friable					**Not Analyzed**
PLM NYS 198.6 VCM					**Not Analyzed**
PLM NYS 198.6 NOB	11/17/2020	Tan		100.00% Other	**Inconclusive: None Detected**
TEM NYS 198.4 NOB	11/17/2020	Tan		100.00% Other	**None Detected**
Sample ID 10DD111020		**Description**	1022 - Tan Epoxy Floor		
042027849-0010		**Homogeneity**	Homogeneous		
PLM NYS 198.1 Friable					**Not Analyzed**
PLM NYS 198.6 VCM					**Not Analyzed**
PLM NYS 198.6 NOB	11/17/2020	Tan		100.00% Other	**Inconclusive: None Detected**
TEM NYS 198.4 NOB	11/17/2020	Tan		100.00% Other	**None Detected**
Sample ID 11DD111020		**Description**	1034 - Grout		
042027849-0011		**Homogeneity**	Homogeneous		
PLM NYS 198.1 Friable	11/17/2020	Gray		100.00% Non-fibrous (other)	**None Detected**
PLM NYS 198.6 VCM					**Not Analyzed**
PLM NYS 198.6 NOB					**Not Analyzed**
TEM NYS 198.4 NOB					**Not Analyzed**

Initial report from: 11/17/2020 23:48:59

EMSL Analytical, Inc.
200 Route 130 North Cinnaminson, NJ 08077
Tel/Fax: (800) 220-3675 / (856) 786-5974
http://www.EMSL.com / cinnasblab@EMSL.com

EMSL Order: 042027849
Customer ID: ENVI65
Customer PO:
Project ID:

Test Report:Asbestos Analysis of Bulk Material

Test	Analyzed Date	Color	Fibrous	Non-Asbestos Non-Fibrous	Asbestos
Sample ID 12DD111020 *042027849-0012*		**Description** 1034 - Grout **Homogeneity** Homogeneous			
PLM NYS 198.1 Friable	11/17/2020	Gray		100.00% Non-fibrous (other)	**None Detected**
PLM NYS 198.6 VCM					**Not Analyzed**
PLM NYS 198.6 NOB					**Not Analyzed**
TEM NYS 198.4 NOB					**Not Analyzed**
Sample ID 13DD111020 *042027849-0013*		**Description** 1048 - Cinder Block **Homogeneity** Homogeneous			
PLM NYS 198.1 Friable	11/17/2020	Gray		100.00% Non-fibrous (other)	**None Detected**
PLM NYS 198.6 VCM					**Not Analyzed**
PLM NYS 198.6 NOB					**Not Analyzed**
TEM NYS 198.4 NOB					**Not Analyzed**
Sample ID 14DD111020 *042027849-0014*		**Description** 1048 - Cinder Block **Homogeneity** Homogeneous			
PLM NYS 198.1 Friable	11/17/2020	Gray/ Tan		100.00% Non-fibrous (other)	**None Detected**
PLM NYS 198.6 VCM					**Not Analyzed**
PLM NYS 198.6 NOB					**Not Analyzed**
TEM NYS 198.4 NOB					**Not Analyzed**
Sample ID 15DD111020 *042027849-0015*		**Description** 1048 - Mortar **Homogeneity** Homogeneous			
PLM NYS 198.1 Friable	11/17/2020	White		100.00% Non-fibrous (other)	**None Detected**
PLM NYS 198.6 VCM					**Not Analyzed**
PLM NYS 198.6 NOB					**Not Analyzed**
TEM NYS 198.4 NOB					**Not Analyzed**
Sample ID 16DD111020 *042027849-0016*		**Description** 1048 - Mortar **Homogeneity** Homogeneous			
PLM NYS 198.1 Friable	11/17/2020	Gray/ Tan		100.00% Non-fibrous (other)	**None Detected**
PLM NYS 198.6 VCM					**Not Analyzed**
PLM NYS 198.6 NOB					**Not Analyzed**
TEM NYS 198.4 NOB					**Not Analyzed**
Sample ID 17DD111020-Drywall *042027849-0017*		**Description** 1040 - Drywall **Homogeneity** Homogeneous			
PLM NYS 198.1 Friable	11/17/2020	Brown/ White	15.00% Cellulose 5.00% Glass	80.00% Non-fibrous (other)	**None Detected**
PLM NYS 198.6 VCM					**Not Analyzed**
PLM NYS 198.6 NOB					**Not Analyzed**
TEM NYS 198.4 NOB					**Not Analyzed**

Initial report from: 11/17/2020 23:48:59

EMSL Analytical, Inc.
200 Route 130 North Cinnaminson, NJ 08077
Tel/Fax: (800) 220-3675 / (856) 786-5974
http://www.EMSL.com / cinnasblab@EMSL.com

EMSL Order: 042027849
Customer ID: ENVI65
Customer PO:
Project ID:

Test Report:Asbestos Analysis of Bulk Material

Test	Analyzed Date	Color	Non-Asbestos Fibrous	Non-Asbestos Non-Fibrous	Asbestos
Sample ID 17ADD111020-Joint Compounc *042027849-0017A*		**Description** 1040 - Joint Compound **Homogeneity** Homogeneous			
PLM NYS 198.1 Friable	11/17/2020	White		100.00% Non-fibrous (other)	**None Detected**
PLM NYS 198.6 VCM					**Not Analyzed**
PLM NYS 198.6 NOB					**Not Analyzed**
TEM NYS 198.4 NOB					**Not Analyzed**
Sample ID 18DD111020-Drywall *042027849-0018*		**Description** 1028 - Drywall **Homogeneity** Homogeneous			
PLM NYS 198.1 Friable	11/17/2020	Brown/ White	20.00% Cellulose 5.00% Glass	75.00% Non-fibrous (other)	**None Detected**
PLM NYS 198.6 VCM					**Not Analyzed**
PLM NYS 198.6 NOB					**Not Analyzed**
TEM NYS 198.4 NOB					**Not Analyzed**
Sample ID 18ADD111020-Joint Compounc *042027849-0018A*		**Description** 1028 - Joint Compound **Homogeneity** Homogeneous			
PLM NYS 198.1 Friable	11/17/2020	White		100.00% Non-fibrous (other)	**None Detected**
PLM NYS 198.6 VCM					**Not Analyzed**
PLM NYS 198.6 NOB					**Not Analyzed**
TEM NYS 198.4 NOB					**Not Analyzed**
Sample ID 19DD111020-Cove Base *042027849-0019*		**Description** 1019 - Brown Cove Base **Homogeneity** Homogeneous			
PLM NYS 198.1 Friable					**Not Analyzed**
PLM NYS 198.6 VCM					**Not Analyzed**
PLM NYS 198.6 NOB	11/17/2020	Brown		100.00% Other	**Inconclusive: None Detected**
TEM NYS 198.4 NOB	11/17/2020	Brown		100.00% Other	**None Detected**
Sample ID 19ADD111020-Glue *042027849-0019A*		**Description** 1019 - Glue **Homogeneity** Homogeneous			
PLM NYS 198.1 Friable					**Not Analyzed**
PLM NYS 198.6 VCM					**Not Analyzed**
PLM NYS 198.6 NOB	11/17/2020	Yellow		100.00% Other	**Inconclusive: None Detected**
TEM NYS 198.4 NOB	11/17/2020	Yellow		100.00% Other	**None Detected**
Sample ID 20DD111020-Cove Base *042027849-0020*		**Description** 1021 - Brown Cove Base **Homogeneity** Homogeneous			
PLM NYS 198.1 Friable					**Not Analyzed**
PLM NYS 198.6 VCM					**Not Analyzed**
PLM NYS 198.6 NOB	11/17/2020	Brown		100.00% Other	**Inconclusive: None Detected**
TEM NYS 198.4 NOB	11/17/2020	Brown		100.00% Other	**None Detected**

Initial report from: 11/17/2020 23:48:59

EMSL Analytical, Inc.
200 Route 130 North Cinnaminson, NJ 08077
Tel/Fax: (800) 220-3675 / (856) 786-5974
http://www.EMSL.com / cinnasblab@EMSL.com

EMSL Order: 042027849
Customer ID: ENVI65
Customer PO:
Project ID:

Test Report:Asbestos Analysis of Bulk Material

Test	Analyzed Date	Color	Non-Asbestos Fibrous	Non-Fibrous	Asbestos
Sample ID 20ADD111020-Glue *042027849-0020A*		**Description** 1021 - Glue **Homogeneity** Homogeneous			
PLM NYS 198.1 Friable					**Not Analyzed**
PLM NYS 198.6 VCM					**Not Analyzed**
PLM NYS 198.6 NOB	11/17/2020	Yellow		100.00% Other	**Inconclusive: None Detected**
TEM NYS 198.4 NOB	11/17/2020	Yellow		100.00% Other	**None Detected**
Sample ID 21DD111020-Cove Base *042027849-0021*		**Description** 1038 - Black Cove Base **Homogeneity** Homogeneous			
PLM NYS 198.1 Friable					**Not Analyzed**
PLM NYS 198.6 VCM					**Not Analyzed**
PLM NYS 198.6 NOB	11/17/2020	Black		100.00% Other	**Inconclusive: None Detected**
TEM NYS 198.4 NOB	11/17/2020	Black		100.00% Other	**None Detected**
Sample ID 21ADD111020-Glue *042027849-0021A*		**Description** 1038 - Glue **Homogeneity** Homogeneous			
PLM NYS 198.1 Friable					**Not Analyzed**
PLM NYS 198.6 VCM					**Not Analyzed**
PLM NYS 198.6 NOB	11/17/2020	Yellow		100.00% Other	**Inconclusive: None Detected**
TEM NYS 198.4 NOB	11/17/2020	Yellow		100.00% Other	**None Detected**
Sample ID 22DD111020-Cove Base *042027849-0022*		**Description** 1016 - Black Cove Base **Homogeneity** Homogeneous			
PLM NYS 198.1 Friable					**Not Analyzed**
PLM NYS 198.6 VCM					**Not Analyzed**
PLM NYS 198.6 NOB	11/17/2020	Black		100.00% Other	**Inconclusive: None Detected**
TEM NYS 198.4 NOB	11/17/2020	Black		100.00% Other	**None Detected**
Sample ID 22ADD111020-Glue *042027849-0022A*		**Description** 1016 - Glue **Homogeneity** Homogeneous			
PLM NYS 198.1 Friable					**Not Analyzed**
PLM NYS 198.6 VCM					**Not Analyzed**
PLM NYS 198.6 NOB	11/17/2020	Yellow		100.00% Other	**Inconclusive: None Detected**
TEM NYS 198.4 NOB	11/17/2020	Yellow		100.00% Other	**None Detected**
Sample ID 23DD111020 *042027849-0023*		**Description** 1040 - Paste **Homogeneity** Heterogeneous			
PLM NYS 198.1 Friable					**Not Analyzed**
PLM NYS 198.6 VCM					**Not Analyzed**
PLM NYS 198.6 NOB	11/17/2020	White/ Yellow	11.00% Glass	89.00% Other	**Inconclusive: None Detected**
TEM NYS 198.4 NOB	11/17/2020	White/ Yellow		100.00% Other	**None Detected**

Initial report from: 11/17/2020 23:48:59

EMSL Analytical, Inc.
200 Route 130 North Cinnaminson, NJ 08077
Tel/Fax: (800) 220-3675 / (856) 786-5974
http://www.EMSL.com / cinnasblab@EMSL.com

EMSL Order: 042027849
Customer ID: ENVI65
Customer PO:
Project ID:

Test Report:Asbestos Analysis of Bulk Material

Test	Analyzed Date	Color	Non-Asbestos Fibrous	Non-Fibrous	Asbestos
Sample ID 24DD111020 *042027849-0024*		**Description** 1040 - Paste **Homogeneity** Heterogeneous			
PLM NYS 198.1 Friable					**Not Analyzed**
PLM NYS 198.6 VCM					**Not Analyzed**
PLM NYS 198.6 NOB	11/17/2020	White/ Yellow	33.00% Glass	67.00% Other	**Inconclusive: None Detected**
TEM NYS 198.4 NOB	11/17/2020	White/ Yellow		100.00% Other	**None Detected**
Sample ID 25DD111020 *042027849-0025*		**Description** 1024 - Fire Stop Caulk **Homogeneity** Homogeneous			
PLM NYS 198.1 Friable					**Not Analyzed**
PLM NYS 198.6 VCM					**Not Analyzed**
PLM NYS 198.6 NOB	11/17/2020	Red	11.00% Glass	89.00% Other	**Inconclusive: None Detected**
TEM NYS 198.4 NOB	11/17/2020	Red		100.00% Other	**None Detected**
Sample ID 26DD111020 *042027849-0026*		**Description** 1024 - Fire Stop Caulk **Homogeneity** Homogeneous			
PLM NYS 198.1 Friable					**Not Analyzed**
PLM NYS 198.6 VCM					**Not Analyzed**
PLM NYS 198.6 NOB	11/17/2020	Red	17.00% Glass	83.00% Other	**Inconclusive: None Detected**
TEM NYS 198.4 NOB	11/17/2020	Red		100.00% Other	**None Detected**
Sample ID 27DD111020-Cove Base *042027849-0027*		**Description** 1045 - White Cove Base **Homogeneity** Homogeneous			
PLM NYS 198.1 Friable					**Not Analyzed**
PLM NYS 198.6 VCM					**Not Analyzed**
PLM NYS 198.6 NOB	11/17/2020	White		100.00% Other	**Inconclusive: None Detected**
TEM NYS 198.4 NOB	11/17/2020	White		100.00% Other	**None Detected**
Sample ID 27ADD111020-Glue *042027849-0027A*		**Description** 1045 - Glue **Homogeneity** Homogeneous			
PLM NYS 198.1 Friable					**Not Analyzed**
PLM NYS 198.6 VCM					**Not Analyzed**
PLM NYS 198.6 NOB	11/17/2020	Yellow		100.00% Other	**Inconclusive: None Detected**
TEM NYS 198.4 NOB Contains inseparable debris	11/17/2020	Yellow		100.00% Other	**None Detected**
Sample ID 28DD111020-Cove Base *042027849-0028*		**Description** 1045 - White Cove Base **Homogeneity** Homogeneous			
PLM NYS 198.1 Friable					**Not Analyzed**
PLM NYS 198.6 VCM					**Not Analyzed**
PLM NYS 198.6 NOB	11/17/2020	White		100.00% Other	**Inconclusive: None Detected**
TEM NYS 198.4 NOB	11/17/2020	White		100.00% Other	**None Detected**

Initial report from: 11/17/2020 23:48:59

EMSL Analytical, Inc.
200 Route 130 North Cinnaminson, NJ 08077
Tel/Fax: (800) 220-3675 / (856) 786-5974
http://www.EMSL.com / cinnasblab@EMSL.com

EMSL Order: 042027849
Customer ID: ENVI65
Customer PO:
Project ID:

Test Report:Asbestos Analysis of Bulk Material

Test	Analyzed Date	Color	Non-Asbestos Fibrous	Non-Asbestos Non-Fibrous	Asbestos
Sample ID 28ADD111020-Glue *042027849-0028A*		**Description** 1045 - Glue **Homogeneity** Homogeneous			
PLM NYS 198.1 Friable					**Not Analyzed**
PLM NYS 198.6 VCM					**Not Analyzed**
PLM NYS 198.6 NOB	11/17/2020	Yellow		100.00% Other	**Inconclusive: None Detected**
TEM NYS 198.4 NOB Contains inseparable debris	11/17/2020	Yellow		100.00% Other	**None Detected**
Sample ID 29DD111020-Membrane *042027849-0029*		**Description** Roof - Roof Field **Homogeneity** Homogeneous			
PLM NYS 198.1 Friable					**Not Analyzed**
PLM NYS 198.6 VCM					**Not Analyzed**
PLM NYS 198.6 NOB	11/17/2020	Black		100.00% Other	**Inconclusive: None Detected**
TEM NYS 198.4 NOB	11/17/2020	Black		100.00% Other	**None Detected**
Sample ID 29DD111020-Foam Insulation *042027849-0029A*		**Description** Roof - Roof Field **Homogeneity** Homogeneous			
PLM NYS 198.1 Friable	11/17/2020	Black/ Yellow	60.00% Cellulose 20.00% Glass	20.00% Non-fibrous (other)	**None Detected**
PLM NYS 198.6 VCM					**Not Analyzed**
PLM NYS 198.6 NOB					**Not Analyzed**
TEM NYS 198.4 NOB					**Not Analyzed**
Sample ID 30DD111020-Membrane *042027849-0030*		**Description** Roof - Roof Field **Homogeneity** Homogeneous			
PLM NYS 198.1 Friable					**Not Analyzed**
PLM NYS 198.6 VCM					**Not Analyzed**
PLM NYS 198.6 NOB	11/17/2020	Black	<1.00% Glass	100.00% Other	**Inconclusive: None Detected**
TEM NYS 198.4 NOB	11/17/2020	Black		100.00% Other	**None Detected**
Sample ID 30DD111020-Foam Insulation *042027849-0030A*		**Description** Roof - Roof Field **Homogeneity** Heterogeneous			
PLM NYS 198.1 Friable	11/17/2020	Black/ Yellow	20.00% Cellulose 5.00% Glass	75.00% Non-fibrous (other)	**None Detected**
PLM NYS 198.6 VCM					**Not Analyzed**
PLM NYS 198.6 NOB					**Not Analyzed**
TEM NYS 198.4 NOB					**Not Analyzed**
Sample ID 31DD111020 *042027849-0031*		**Description** Roof - Roof Mastic **Homogeneity** Homogeneous			
PLM NYS 198.1 Friable					**Not Analyzed**
PLM NYS 198.6 VCM					**Not Analyzed**
PLM NYS 198.6 NOB	11/17/2020	Black		100.00% Other	**Inconclusive: None Detected**
TEM NYS 198.4 NOB	11/17/2020	Black		100.00% Other	**None Detected**

Initial report from: 11/17/2020 23:48:59

EMSL Analytical, Inc.
200 Route 130 North Cinnaminson, NJ 08077
Tel/Fax: (800) 220-3675 / (856) 786-5974
http://www.EMSL.com / cinnasblab@EMSL.com

EMSL Order: 042027849
Customer ID: ENVI65
Customer PO:
Project ID:

Test Report:Asbestos Analysis of Bulk Material

Test	Analyzed Date	Color	Non-Asbestos Fibrous	Non-Asbestos Non-Fibrous	Asbestos
Sample ID 32DD111020 *042027849-0032*		**Description**	Roof - Roof Mastic		
		Homogeneity	Homogeneous		
PLM NYS 198.1 Friable					**Not Analyzed**
PLM NYS 198.6 VCM					**Not Analyzed**
PLM NYS 198.6 NOB	11/17/2020	Black		100.00% Other	**Inconclusive: None Detected**
TEM NYS 198.4 NOB	11/17/2020	Black		100.00% Other	**None Detected**
Sample ID 33DD111020 *042027849-0033*		**Description**	Roof - Roof Patch Mastic		
		Homogeneity	Homogeneous		
PLM NYS 198.1 Friable					**Not Analyzed**
PLM NYS 198.6 VCM					**Not Analyzed**
PLM NYS 198.6 NOB	11/17/2020	Black		100.00% Other	**Inconclusive: None Detected**
TEM NYS 198.4 NOB	11/17/2020	Black		100.00% Other	**None Detected**
Sample ID 34DD111020 *042027849-0034*		**Description**	Roof - Roof Patch Mastic		
		Homogeneity	Homogeneous		
PLM NYS 198.1 Friable					**Not Analyzed**
PLM NYS 198.6 VCM					**Not Analyzed**
PLM NYS 198.6 NOB	11/17/2020	Black		100.00% Other	**Inconclusive: None Detected**
TEM NYS 198.4 NOB	11/17/2020	Black		100.00% Other	**None Detected**
Sample ID 35DD111020-Floor Tile *042027849-0035*		**Description**	1042 - White Vinyl Floor Tile		
		Homogeneity	Homogeneous		
PLM NYS 198.1 Friable					**Not Analyzed**
PLM NYS 198.6 VCM					**Not Analyzed**
PLM NYS 198.6 NOB	11/17/2020	White		100.00% Other	**Inconclusive: None Detected**
TEM NYS 198.4 NOB	11/17/2020	White		100.00% Other	**None Detected**
Sample ID 35ADD111020-Mastic *042027849-0035A*		**Description**	1042 - Mastic		
		Homogeneity	Homogeneous		
PLM NYS 198.1 Friable					**Not Analyzed**
PLM NYS 198.6 VCM					**Not Analyzed**
PLM NYS 198.6 NOB	11/17/2020	Black		100.00% Other	**Inconclusive: None Detected**
TEM NYS 198.4 NOB Contains inseparable debris	11/17/2020	Black		100.00% Other	**None Detected**
Sample ID 36DD111020-Floor Tile *042027849-0036*		**Description**	1042 - White Vinyl Floor Tile		
		Homogeneity	Homogeneous		
PLM NYS 198.1 Friable					**Not Analyzed**
PLM NYS 198.6 VCM					**Not Analyzed**
PLM NYS 198.6 NOB	11/17/2020	White		100.00% Other	**Inconclusive: None Detected**
TEM NYS 198.4 NOB	11/17/2020	White		100.00% Other	**None Detected**

Initial report from: 11/17/2020 23:48:59

EMSL Analytical, Inc.
200 Route 130 North Cinnaminson, NJ 08077
Tel/Fax: (800) 220-3675 / (856) 786-5974
http://www.EMSL.com / cinnasblab@EMSL.com

EMSL Order: 042027849
Customer ID: ENVI65
Customer PO:
Project ID:

Test Report:Asbestos Analysis of Bulk Material

Test	Analyzed Date	Color	Non-Asbestos Fibrous	Non-Fibrous	Asbestos
Sample ID 36ADD111020-Mastic *042027849-0036A*		**Description** 1042 - Mastic **Homogeneity** Homogeneous			
PLM NYS 198.1 Friable					**Not Analyzed**
PLM NYS 198.6 VCM					**Not Analyzed**
PLM NYS 198.6 NOB	11/17/2020	Black		100.00% Other	**Inconclusive: None Detected**
TEM NYS 198.4 NOB Contains inseparable debris	11/17/2020	Black		100.00% Other	**None Detected**
Sample ID 37DD111020 *042027849-0037*		**Description** 1048 - Window Panel Insulation **Homogeneity** Homogeneous			
PLM NYS 198.1 Friable	11/17/2020	Brown	90.00% Cellulose	10.00% Non-fibrous (other)	**None Detected**
PLM NYS 198.6 VCM					**Not Analyzed**
PLM NYS 198.6 NOB					**Not Analyzed**
TEM NYS 198.4 NOB					**Not Analyzed**
Sample ID 38DD111020 *042027849-0038*		**Description** 1048 - Window Panel Insulation **Homogeneity** Homogeneous			
PLM NYS 198.1 Friable	11/17/2020	Brown	90.00% Cellulose	10.00% Non-fibrous (other)	**None Detected**
PLM NYS 198.6 VCM					**Not Analyzed**
PLM NYS 198.6 NOB					**Not Analyzed**
TEM NYS 198.4 NOB					**Not Analyzed**

Initial report from: 11/17/2020 23:48:59

EMSL Analytical, Inc.
200 Route 130 North Cinnaminson, NJ 08077
Tel/Fax: (800) 220-3675 / (856) 786-5974
http://www.EMSL.com / cinnasblab@EMSL.com

EMSL Order: 042027849
Customer ID: ENVI65
Customer PO:
Project ID:

Test Report:Asbestos Analysis of Bulk Material

Analyst(s):

Dave Poitras PLM NYS 198.1 Friable (8)

Dave Poitras PLM NYS 198.6 NOB (16)

Debbie Little TEM NYS 198.4 NOB (10)

Keishla Vazquez Caraballo PLM NYS 198.1 Friable (8)

Keishla Vazquez Caraballo PLM NYS 198.6 NOB (17)

Wayne Froehlich TEM NYS 198.4 NOB (22)

Samples reviewed and approved by:

Samantha Rundstrom, Laboratory Manager
or Other Approved Signatory

NOB = Non Friable Organically Bound N/A = Not Applicable VCM = Vermiculite Containing Material

-In New York State, TEM is currently the only method that can be used to determine if NOB materials can be considered or treated as non-asbestos containing.
All samples examined for the presence of vermiculite when analyzed via NYS 198.1.
-NYS Guidelines for Vermiculite containing samples are available at http ://www.wadsworth.org/labcert/elapcert/forms/ VermiculiteInterimGuidance_Rev070913.pdf EMSL maintains liability limited to cost of analysis. This report relates only to the samples reported above and may not be reproduced, except in full, without written approval by EMSL. EMSL bears no responsibility for sample collection activities or analytical method limitations . Interpretation and use of test results are the responsibility of the client. Samples were received in good condition unless otherwise noted.
This report must not be used by the client to claim product certification, approval, or endorsement by NVLAP, NIST, or any agency of the federal government. This report may contain data that is not covered by the NVLAP accreditation .

Samples analyzed by EMSL Analytical, Inc. Cinnaminson, NJ NYS ELAP 10872, PA ID# 68-00367, NVLAP Lab Code 101048-0

Initial report from: 11/17/2020 23:48:59

OrderID: 042027849

042027849

ENVIRONMENTAL CONNECTION INC

A Vertical Technologies Corporation

CINNAMINSON, NJ

20 NOV 13 AM 11:34

Survey Form 04

CLIENT : Mott MacDonald
PROJECT : ACM Inspection
BUILDING : US Army Reserve Center, Orangeburg, NY

DATE : 11/10/20
TECHNICIAN: D. Dercole / M. Moore / R. Jones
PROJECT # : 20205-01

ASBESTOS ANALYSIS OF BULK MATERIALS via NYS ELAP

MATERIAL DESCRIPTION	SAMPLE	HOMO. AREA ID	ROOM NUMBER	PLM or TEM NOB
4" Ceramic Tile Adhesive	01DD111020	02	1029	PLM NOB → TEM NOB
4" Ceramic Tile Adhesive	02DD111020	02	1029	PLM NOB → TEM NOB
Grout	03DD111020	03	1029	PLM
Grout	04DD111020	03	1029	PLM
Sink Counter Caulk	05DD111020	04	1029	PLM NOB → TEM NOB
Sink Counter Caulk	06DD111020	04	1029	PLM NOB → TEM NOB
Mirror Mastic	07DD111020	05	1029	PLM NOB → TEM NOB
Mirror Mastic	08DD111020	05	1029	PLM NOB → TEM NOB
Tan ~~Epo~~ Epoxy Floor	09DD111020	07	1028	PLM NOB → TEM NOB
Tan Epoxy Floor	10DD111020	07	1022	PLM NOB → TEM NOB
Grout	11DD111020	06	1034	PLM
Grout	12DD111020	06	1034	PLM
Cinder block	13DD111020	08	1048	PLM
Cinderblock	14DD111020	08	1048	PLM
Mortar	15DD111020	09	1048	PLM
Mortar	16DD111020	09	1048	PLM
Drywall	17DD111020	12	1040	PLM

CHECK EACH BOX THAT APPLIES

- [x] Point Count Sample if <10% Asbestos by Weight
- [x] NOB's - TEM if Sample(s) are None Detected or <1%
- [x] Stop at First Positive Homo. Area ID Code
- [ ] 6 hr. TAT
- [x] 48 hr. TAT
- [ ] 5 Day TAT
- [ ] Other_____

CHAIN OF CUSTODY RECORD (CCR)

RELINQUISHED BY	DATE	TIME	RECEIVED BY	DATE	TIME	REASON FOR CCR
RJ	11/13/20		Fred A Kp	11-13-20	9:27	

RLB BY: Fred A Kp 11-13-20 11:14

COMMENTS:

courier 11/13/2020 1120 am

120 North Warren Street • Trenton, New Jersey 08608 • tel: 609-392-4200 • fax: 609-392-1216

38RH

July 29, 2021

OrderID: 042027849

042027849

ENVIRONMENTAL CONNECTION INC

A Vertical Technologiee Corporation

RECEIVED
EMSL
CINNAMINSON, NJ
20 NOV 13 AM 11:34

Survey Form 04

CLIENT : Mott MacDonald
PROJECT : ACM Inspection
BUILDING : US Army Reserve Center, Orangeburg, NY

DATE : 11/10/20
TECHNICIAN: D. Dercole/M. Moore/R. Jones
PROJECT # : 20205-01

ASBESTOS ANALYSIS OF BULK MATERIALS via NYS ELAP

MATERIAL DESCRIPTION	SAMPLE	HOMO. AREA ID	ROOM NUMBER	PLM or TEM NOB
Joint Cpd ~~17ADD111020~~	17ADD111020	12A	1040	PLM
Drywall	18DD111020	12	1028	PLM
Joint Compound	18ADD111020	12A	1028	PLM
Brown Cove Base	19DD111020	14	1019	PLM NOB → TEM NOB
Glue	19ADD111020	14A	1019	PLM NOB → TEM NOB
Brown Cove Base	20DD111020	14	1021	PLM NOB → TEM NOB
Glue	20ADD111020	14A	1021	PLM NOB → TEM NOB
Black Cove Base	21DD111020	15	1038	PLM NOB → TEM NOB
Glue	21ADD111020	15A	1038	PLM NOB → TEM NOB
Black Cove Base	22DD111020	15	1016	PLM NOB → TEM NOB
Glue	22ADD111020	15A	1016	PLM NOB → TEM NOB
Paste	23DD111020	16	1040	PLM NOB → TEM NOB
Paste	24DD111020	16	1040	PLM NOB → TEM NOB
Fire Stop Caulk	25DD111020	17	1024	PLM NOB → TEM NOB
Fire Stop Caulk	26DD111020	17	1024	PLM NOB → TEM NOB
White Cove Base	27DD111020	19	1045	PLM NOB → TEM NOB
Glue	27ADD111020	19A	1045	PLM NOB → TEM NOB

CHECK EACH BOX THAT APPLIES

- [x] Point Count Sample if <10% Asbestos by Weight
- [x] NOB's - TEM if Sample(s) are None Detected or <1%
- [x] Stop at First Positive Homo. Area ID Code
- [ ] 6 hr. TAT
- [x] 48 hr. TAT
- [ ] 5 Day TAT
- [ ] Other_____

CHAIN OF CUSTODY RECORD (CCR)

RELINQUISHED BY	DATE	TIME	RECEIVED BY	DATE	TIME	REASON FOR CCR
RJ	11/13/20		Fred A Ko	11-13-20	9:27	
			RLQ BY: Fred A Ko	11-13-20	11:14	

COMMENTS:

120 North Warren Street • Trenton, New Jersey 08608 • tel: 609-392-4200 • fax: 609-392-1216

OrderID: 042027849

042027849

ENVIRONMENTAL CONNECTION INC

A Vertical Technologiee Corporation

RECEIVED ETSL CINNAMINSON, NJ 20 NOV 13 AM 11:34

Survey Form 04

CLIENT : Mott MacDonald
PROJECT : ACM Inspection
BUILDING : US Army Reserve Center, Orangeburg, NY

DATE : 11/10/20
TECHNICIAN: D. Deroole / M. Moore / R. Jones
PROJECT # : 20205-01

ASBESTOS ANALYSIS OF BULK MATERIALS via NYS ELAP

MATERIAL DESCRIPTION	SAMPLE	HOMO. AREA ID	ROOM NUMBER	PLM or TEM NOB
White Cove Base	28DD111020	19	1045	PLM NOB → TEM NOB
Glue	28ADD111020	19A	1045	PLM NOB → TEM NOB
Roof Field	29DD111020	21	Roof	PLM NOB → TEM NOB
Roof Field	30DD111020	21	Roof	PLM NOB → TEM NOB
Roof Mastic	31DD111020	22	Roof	PLM NOB → TEM NOB
Roof Mastic	32DD111020	22	Roof	PLM NOB → TEM NOB
Roof Patch Mastic	33DD111020	23	Roof	PLM NOB → TEM NOB
Roof Patch Mastic	34DD111020	23	Roof	PLM NOB → TEM NOB
White Vinyl Floor Tile	35DD111020	18	1042	PLM NOB → TEM NOB
Mastic	35ADD111020	18A	1042	PLM NOB → TEM NOB
White Vinyl Floor Tile	36DD111020	18	1042	PLM NOB → TEM NOB
Mastic	36ADD111020	18A	1042	PLM NOB → TEM NOB
Window Panel Insulation	37DD111020	24	1048	PLM
Window Panel Insulation	38DD111020	24	1048	PLM

CHECK EACH BOX THAT APPLIES

- [x] Point Count Sample if <10% Asbestos by Weight
- [x] NOB's - TEM if Sample(s) are None Detected or <1%
- [x] Stop at First Positive Homo. Area ID Code
- [ ] 6 hr. TAT
- [x] 48 hr. TAT
- [ ] 5 Day TAT
- [ ] Other_____

CHAIN OF CUSTODY RECORD (CCR)

RELINQUISHED BY	DATE	TIME	RECEIVED BY	DATE	TIME	REASON FOR CCR
[signature]	11/13/20		[signature]	11-13-20	9:27	

COMMENTS: RLQ BY: Fred A 11-13-20 11:14

120 North Warren Street • Trenton, New Jersey 08608 • tel: 609-392-4200 • fax: 609-392-1216

APPENDIX II

HAZARDOUS MATERIAL INSPECTION REPORT ISSUED BY MICHAEL BAKER INTERNATIONAL ON JANUARY 20, 2020

Attachment H
Hazardous Materials Investigation Report

Michael Baker
INTERNATIONAL

We Make a Difference

January 20, 2020

Mr. Ram Vuddagiri, Ph.D., P.E.
US Army Corps of Engineers
CELRL-ED-M-R
Project Engineer/Architect 600 Dr. Martin Luther King Jr. Place, Suite 972
Louisville, Kentucky 40201-0059

Re: Hazardous Material Inspection of Orangeburg Training Center

Dear Mr. Vuddagiri:

I am pleased to provide you with this letter report which details the environmental sampling services that Michael Baker International, Inc. (Michael Baker) has recently provided for your project.

SCOPE OF WORK

Michael Baker was requested to conduct a limited hazardous material inspection for the presence of asbestos-containing materials (ACM) and lead-containing paint (LCP) within the Training Center located at Orangeburg in New York. The purpose of the inspection was to meet the requirements of the United States Environmental Protection Agency (USEPA), State of New York, and the National Emission Standards for Hazardous Air Pollutants (NESHAP) standards. The NESHAP standard (40 CFR, Part 61) requires that an asbestos inspection be conducted prior to any renovation and/or demolition activities of any structure or dwelling. The building plans are shown in the Figures.

FIELD VISIT INVESTIGATION

The inspection survey was conducted during November 18-20, 2019 at the Training Center. Michael Baker utilized an accredited and New York-licensed Asbestos Building Inspector (Gary R. Case - Certification No. 108885424). The field inspector identified suspected building materials from the building. The bulk material samples were collected and analyzed for the presence of asbestos. Samples were submitted using chain-of-custody documentation to EMSL Analytical, Inc. in Cinnaminson, New Jersey. EMSL is accredited by the American Industrial Hygiene Association (AIHA) and the U.S. National Institute of Standards and Technology, under the National Voluntary Laboratory Accreditation Program (NIST/NVLAP) for bulk material analysis for asbestos. The bulk asbestos samples were analyzed by Polarized Light Microscopy (PLM), United States Environmental Protection Agency (USEPA) Method for Determination of Asbestos in Bulk Building Materials, EPA/600/R-93/116 (7/93 Edition). Table 1 presents the specific information for all of the building components that were sampled as suspected ACM in the building.

100 Airside Drive | Moon Township, PA 15108
Office: 412.269.6300 | Fax: 412.375.3996

The field personnel also reviewed and identified the suspected painted building components with the building. While no bulk paint samples were collected, general observations of the condition and locations of the paint were documented to assist with the potential renovation/repair project. Table 2 presents the specific information for the lead paint.

FINDINGS AND RECOMMENDATIONS

Asbestos

As for the building materials recorded in Table 1, the laboratory analyses of the material samples indicated that none of the sampled materials contained asbestos greater than the USEPA criteria level of 1% asbestos by weight and/or in accordance with NESHAP regulations. The final laboratory analytical reports for these samples are submitted to confirm this determination and is contained in Attachment A. These results are also supported by a previous asbestos survey from December 2004 which indicated no asbestos-containing materials either. The previous report is contained in Attachment B. Attachment C contains photographs of the building.

Lead Paint

Based upon the age of the buildings and previous information, all of the painted materials should be identified as lead-containing paint (LCP). While there is no abatement of paint planned, the Contractor should be aware of the lead-containing paint during the renovation activities, so that proper safety worker procedures can be performed. The requirements of the Occupational Safety and Health Administration (OSHA) Construction Standards need to be invoked if any metal content is present in the paint that may be affected by renovation activities. OSHA does not provide a minimum concentration criteria level for these metals; however, it requires precautions and protection for workers and the working environment be taken at any work place where an exposure to airborne metals may occur. The Contractor shall be responsible to perform work according to all applicable federal, state, and local laws.

Should you have any questions regarding this report, please do not hesitate to contact me at (412) 269-6381 or by email at gcase@mbakerintl.com.

Sincerely,

MICHAEL BAKER INTERNATIONAL, INC.

Gary R. Case
Senior Environmental Scientist

ATTACHMENTS

Michael Baker INTERNATIONAL

FIGURES

W912QR20R0038-0003

July 29, 2021

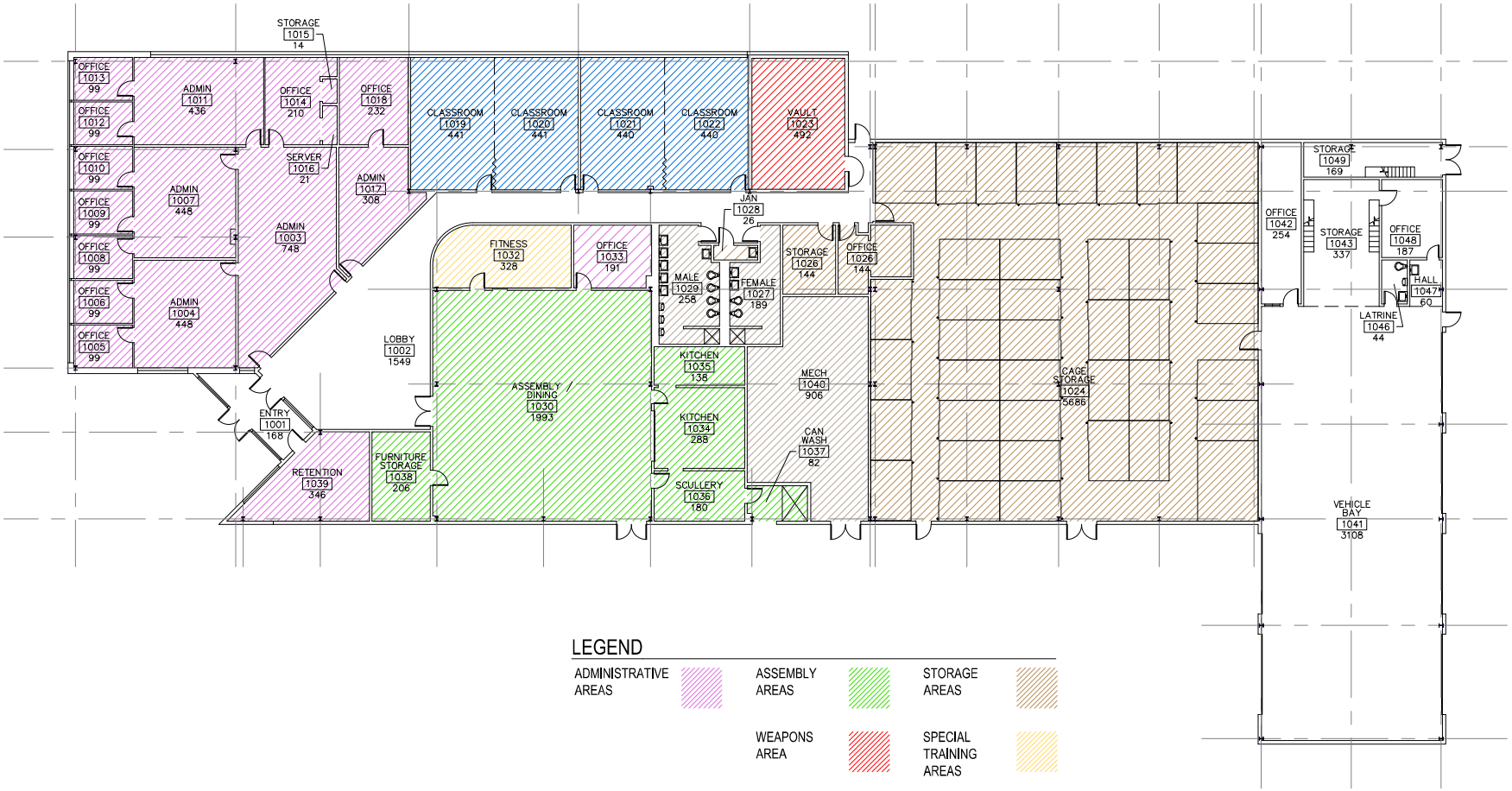

LEGEND

ADMINISTRATIVE AREAS		ASSEMBLY AREAS		STORAGE AREAS	
		WEAPONS AREA		SPECIAL TRAINING AREAS	
		EDUCATIONAL AREAS		SUPPORT AREAS	

US Army Corps of Engineers®
Louisville District

Michael Baker INTERNATIONAL
MICHAEL BAKER JR INC
Airside Business Park
100 Airside Drive
Moon Township PA 15108
(412) 269-6300

ARC EXISTING CONDITIONS PLAN

16' 8' 0 16'
SCALE: 3/32"=1'-0"
IF PLOTTED TO 22" x 34"

N
TRUE

ITR SET
22 JAN 2020

UNITED STATES ARMY RESERVE CENTER
ORANGEBURG NEW YORK
DESIGN BUILD RFP SOLICITATION
FINAL SUBMISSION
P2# 447938

A-100

Date: 31 JAN 2020

Michael Baker INTERNATIONAL

TABLES

TABLE 1
ASBESTOS SURVEY MATERIAL SUMMARY

ORANGEBURG, NEW YORK
ARMY RESERVE CENTER

ogeneous laterial lumber	Material Type	Material Description	Material Locations	Friable	Sample Numbers	Sample Results	Sample Locations	Asbestos-Containing Material	Approximate Quantity of Asbestos	Condition of Material
01	Vinyl Floor Tile and Floor Adhesive	12" x 12" White Mottle Floor Tile with Black Floor Adhesive	Room 1042	No	1119-ORG-01A (FT)	None Detected	Room 1042	No	Not Applicable	Not Applicable
					1119-ORG-01A (FA)	None Detected	Room 1042			
					1119-ORG-01B (FT)	None Detected	Room 1042			
					1119-ORG-01B (FA)	None Detected	Room 1042			
02	Wall and Ceiling Board	White, with White Joint Compound	Throughout Building	No	1119-ORG-02A	None Detected	Room 1005	No	Not Applicable	Not Applicable
					1119-ORG-02B	None Detected	Room 1014			
					1119-ORG-02C	None Detected	Room 1028			
03	Vinyl Floor Tile and Floor Adhesive	12" x 12" Gray Floor Tile with Black Floor Adhesive	Rooms 1015, 1016, and 1038	No	1119-ORG-03A (FT)	None Detected	Room 1015	No	Not Applicable	Not Applicable
					1119-ORG-03A (FA)	None Detected	Room 1015			
					1119-ORG-03B (FT)	None Detected	Room 1038			
					1119-ORG-03B (FA)	None Detected	Room 1038			
04	Vinyl Floor Tile and Floor Adhesive	12" x 12" White Floor Tile with Black Floor Adhesive	Throughout Building	No	Previously Sampled	None Detected	See Previous Survey	No	Not Applicable	Not Applicable
05	Asphaltic Roofing Material	Black	Main Roof and Maintenance Roof	No	1119-ORG-05A	None Detected	Exterior Roof	No	Not Applicable	Not Applicable
					1119-ORG-05B	None Detected	Exterior Roof			

According to EPA, asbestos-containing material (ACM) is defined as any material containing greater than 1% asbestos using laboratory analysis or, by NESHAP, contains less than 10% asbestos is considered positive, unless re-analyzed by PLM point count.

TABLE 1
ASBESTOS SURVEY MATERIAL SUMMARY

ORANGEBURG, NEW YORK
ARMY RESERVE CENTER

ogeneous laterial lumber	Material Type	Material Description	Material Locations	Friable	Sample Numbers	Sample Results	Sample Locations	Asbestos-Containing Material	Approximate Quantity of Asbestos	Condition of Material
06	Ceiling Tile	2' x 2' Pinhole	Throughout Building	Yes	1119-ORG-06A 1119-ORG-06B	None Detected None Detected	Room 1006 Room 1026	No	Not Applicable	Not Applicable
07	Ceiling Tile	2' x 4' Fissured/Pinhole	Throughout Building	Yes	1119-ORG-07A 1119-ORG-07B	None Detected None Detected	Room 1038 Room 1038	No	Not Applicable	Not Applicable
08	Cove Base Adhesive	Yellow, under 6" Vinyl Cove Base	Throughout Building	No	1119-ORG-08A 1119-ORG-08B	None Detected None Detected	Room 1030 Room 1039	No	Not Applicable	Not Applicable
09	Cove Base Adhesive	Tan, under 4" Vinyl Cove Base	Throughout Building	No	1119-ORG-09A 1119-ORG-09B	None Detected None Detected	Room 1041 Room 1042	No	Not Applicable	Not Applicable
10	Exterior Stucco	White Top Coat and Gray Bottom Coat	On Exterior of Building	No	1119-ORG-10A 1119-ORG-10B	None Detected None Detected	Exterior Exterior	No	Not Applicable	Not Applicable
11	Window Caulking	Gray	On Exterior of Building	No	1119-ORG-11A 1119-ORG-11B	None Detected None Detected	Exterior Exterior	No	Not Applicable	Not Applicable

According to EPA, asbestos-containing material (ACM) is defined as any material containing greater than 1% asbestos using laboratory analysis or, by NESHAP, contains less than 10% asbestos is considered positive, unless re-analyzed by PLM point count.

TABLE 2
PAINT SURVEY SUMMARY

ORANGEBURG, NEW YORK
ARMY RESERVE CENTER

Buildings	Component	Locations	Color	Substrate	Condition	Findings	Recommendations
Training Center	All painted components	Interior and Exterior	All Paint Colors	All Substrates	All Conditions	All paint contains at least a trace of lead and must be addressed according to OSHA requirements.	If impacted by renovation activities, proper handling and/or removal of the lead containing paint is needed.

* The requirements of the Occupational Safety and Health Administration (OSHA) Construction Standards need to be invoked if any metal content is present in the paint that may be affected by renovation activities. OSHA does not provide a minimum concentration criteria level for lead; however, it requires precautions and protection for workers and the working environment be taken at any work place where an exposure to airborne metals may occur.

Michael Baker
INTERNATIONAL

ATTACHMENT A

EMSL Analytical, Inc.
200 Route 130 North Cinnaminson, NJ 08077
Tel/Fax: (800) 220-3675 / (856) 786-5974
http://www.EMSL.com / cinnasblab@EMSL.com

EMSL Order: 041933601
Customer ID: BAKE51
Customer PO:
Project ID:

Attention: Gary Case
Michael Baker, Jr. Inc.
100 Airside Drive
Moon Township, PA 15108

Project: USARC Orangeburg

Phone: (412) 375-3996
Fax: (412) 375-3996
Received Date: 11/20/2019 9:40 AM
Analysis Date: 12/04/2019 - 12/05/2019
Collected Date:

Test Report:Asbestos Analysis of Bulk Material

Test	Analyzed Date	Color	Fibrous	Non-Asbestos Non-Fibrous	Asbestos
Sample ID 1119-ORG-01A- Floor Tile		**Description**			
041933601-0001		**Homogeneity**	Homogeneous		
PLM NYS 198.1 Friable					**Not Analyzed**
PLM NYS 198.6 VCM					**Not Analyzed**
PLM NYS 198.6 NOB	12/04/2019	Tan/ White		100.00% Other	**Inconclusive: None Detected**
TEM NYS 198.4 NOB	12/04/2019	Tan/ White		100.00% Other	**None Detected**
Sample ID 1119-ORG-01A- Mastic		**Description**			
041933601-0001A		**Homogeneity**	Homogeneous		
PLM NYS 198.1 Friable					**Not Analyzed**
PLM NYS 198.6 VCM					**Not Analyzed**
PLM NYS 198.6 NOB	12/04/2019	Black		100.00% Other	**Inconclusive: None Detected**
TEM NYS 198.4 NOB	12/04/2019	Black		100.00% Other	**None Detected**
Sample ID 1119-ORG-01B- Floor Tile		**Description**			
041933601-0002		**Homogeneity**	Homogeneous		
PLM NYS 198.1 Friable					**Not Analyzed**
PLM NYS 198.6 VCM					**Not Analyzed**
PLM NYS 198.6 NOB	12/04/2019	Tan/ White		100.00% Other	**Inconclusive: None Detected**
TEM NYS 198.4 NOB	12/04/2019	Tan/ White		100.00% Other	**None Detected**
Sample ID 1119-ORG-01B- Mastic		**Description**			
041933601-0002A		**Homogeneity**	Homogeneous		
PLM NYS 198.1 Friable					**Not Analyzed**
PLM NYS 198.6 VCM					**Not Analyzed**
PLM NYS 198.6 NOB	12/04/2019	Black		100.00% Other	**Inconclusive: None Detected**
TEM NYS 198.4 NOB	12/05/2019	Black		100.00% Other	**None Detected**
Sample ID 1119-ORG-02A		**Description**			
041933601-0003		**Homogeneity**	Homogeneous		
PLM NYS 198.1 Friable	12/04/2019	White	10.00% Cellulose	90.00% Non-fibrous (other)	**None Detected**
PLM NYS 198.6 VCM					**Not Analyzed**
PLM NYS 198.6 NOB					**Not Analyzed**
TEM NYS 198.4 NOB					**Not Analyzed**

Initial report from: 12/05/2019 12:38:53

EMSL Analytical, Inc.
200 Route 130 North Cinnaminson, NJ 08077
Tel/Fax: (800) 220-3675 / (856) 786-5974
http://www.EMSL.com / cinnasblab@EMSL.com

EMSL Order: 041933601
Customer ID: W912QR20R0038-0003 BAKE51
Customer PO:
Project ID:

Test Report:Asbestos Analysis of Bulk Material

Test	Analyzed Date	Color	Non-Asbestos Fibrous	Non-Asbestos Non-Fibrous	Asbestos
Sample ID 1119-ORG-02B		**Description**			
041933601-0004		**Homogeneity**	Homogeneous		
PLM NYS 198.1 Friable	12/04/2019	White	10.00% Cellulose	90.00% Non-fibrous (other)	**None Detected**
PLM NYS 198.6 VCM					**Not Analyzed**
PLM NYS 198.6 NOB					**Not Analyzed**
TEM NYS 198.4 NOB					**Not Analyzed**
Sample ID 1119-ORG-02C		**Description**			
041933601-0005		**Homogeneity**	Homogeneous		
PLM NYS 198.1 Friable	12/04/2019	Brown/ White	15.00% Cellulose	85.00% Non-fibrous (other)	**None Detected**
PLM NYS 198.6 VCM					**Not Analyzed**
PLM NYS 198.6 NOB					**Not Analyzed**
TEM NYS 198.4 NOB					**Not Analyzed**
Sample ID 1119-ORG-03A- Floor Tile		**Description**			
041933601-0006		**Homogeneity**	Homogeneous		
PLM NYS 198.1 Friable					**Not Analyzed**
PLM NYS 198.6 VCM					**Not Analyzed**
PLM NYS 198.6 NOB	12/04/2019	Gray/ White/ Black		100.00% Other	**Inconclusive: None Detected**
TEM NYS 198.4 NOB	12/05/2019	Gray/ White/ Black		100.00% Other	**None Detected**
Sample ID 1119-ORG-03A- Mastic		**Description**			
041933601-0006A		**Homogeneity**	Homogeneous		
PLM NYS 198.1 Friable					**Not Analyzed**
PLM NYS 198.6 VCM					**Not Analyzed**
PLM NYS 198.6 NOB	12/04/2019	Black		100.00% Other	**Inconclusive: None Detected**
TEM NYS 198.4 NOB	12/05/2019	Black		100.00% Other	**None Detected**
Sample ID 1119-ORG-03B- Floor Tile		**Description**			
041933601-0007		**Homogeneity**	Homogeneous		
PLM NYS 198.1 Friable					**Not Analyzed**
PLM NYS 198.6 VCM					**Not Analyzed**
PLM NYS 198.6 NOB	12/04/2019	Gray/ White		100.00% Other	**Inconclusive: None Detected**
TEM NYS 198.4 NOB	12/05/2019	Gray/ White		100.00% Other	**None Detected**
Sample ID 1119-ORG-03B- Mastic		**Description**			
041933601-0007A		**Homogeneity**	Homogeneous		
PLM NYS 198.1 Friable					**Not Analyzed**
PLM NYS 198.6 VCM					**Not Analyzed**
PLM NYS 198.6 NOB	12/04/2019	Black		100.00% Other	**Inconclusive: None Detected**
TEM NYS 198.4 NOB	12/05/2019	Black		100.00% Other	**None Detected**

Initial report from: 12/05/2019 12:38:53

EMSL Analytical, Inc.
200 Route 130 North Cinnaminson, NJ 08077
Tel/Fax: (800) 220-3675 / (856) 786-5974
http://www.EMSL.com / cinnasblab@EMSL.com

EMSL Order: 041933601
Customer ID: W912QR20R0038-0003 BAKE51
Customer PO:
Project ID:

Test Report:Asbestos Analysis of Bulk Material

Test	Analyzed Date	Color	Non-Asbestos Fibrous	Non-Fibrous	Asbestos
Sample ID 1119-ORG-05A		**Description**			
041933601-0008		**Homogeneity**	Homogeneous		
PLM NYS 198.1 Friable					**Not Analyzed**
PLM NYS 198.6 VCM					**Not Analyzed**
PLM NYS 198.6 NOB	12/04/2019	Black		100.00% Other	**Inconclusive: None Detected**
TEM NYS 198.4 NOB	12/05/2019	Black		100.00% Other	**None Detected**
Sample ID 1119-ORG-05B		**Description**			
041933601-0009		**Homogeneity**	Homogeneous		
PLM NYS 198.1 Friable					**Not Analyzed**
PLM NYS 198.6 VCM					**Not Analyzed**
PLM NYS 198.6 NOB	12/04/2019	Black		100.00% Other	**Inconclusive: None Detected**
TEM NYS 198.4 NOB	12/05/2019	Black		100.00% Other	**None Detected**
Sample ID 1119-ORG-06A		**Description**			
041933601-0010		**Homogeneity**	Homogeneous		
PLM NYS 198.1 Friable	12/04/2019	Gray/ White	50.00% Cellulose 30.00% Min. Wool	20.00% Non-fibrous (other)	**None Detected**
PLM NYS 198.6 VCM					**Not Analyzed**
PLM NYS 198.6 NOB					**Not Analyzed**
TEM NYS 198.4 NOB					**Not Analyzed**
Sample ID 1119-ORG-06B		**Description**			
041933601-0011		**Homogeneity**	Homogeneous		
PLM NYS 198.1 Friable	12/04/2019	Gray/ White	60.00% Cellulose 30.00% Min. Wool	10.00% Non-fibrous (other)	**None Detected**
PLM NYS 198.6 VCM					**Not Analyzed**
PLM NYS 198.6 NOB					**Not Analyzed**
TEM NYS 198.4 NOB					**Not Analyzed**
Sample ID 1119-ORG-07A		**Description**			
041933601-0012		**Homogeneity**	Homogeneous		
PLM NYS 198.1 Friable	12/04/2019	Gray/ White	50.00% Cellulose 35.00% Min. Wool	15.00% Non-fibrous (other)	**None Detected**
PLM NYS 198.6 VCM					**Not Analyzed**
PLM NYS 198.6 NOB					**Not Analyzed**
TEM NYS 198.4 NOB					**Not Analyzed**
Sample ID 1119-ORG-07B		**Description**			
041933601-0013		**Homogeneity**	Homogeneous		
PLM NYS 198.1 Friable	12/04/2019	Gray/ White	60.00% Cellulose 30.00% Min. Wool	10.00% Non-fibrous (other)	**None Detected**
PLM NYS 198.6 VCM					**Not Analyzed**
PLM NYS 198.6 NOB					**Not Analyzed**
TEM NYS 198.4 NOB					**Not Analyzed**

Initial report from: 12/05/2019 12:38:53

EMSL Analytical, Inc.
200 Route 130 North Cinnaminson, NJ 08077
Tel/Fax: (800) 220-3675 / (856) 786-5974
http://www.EMSL.com / cinnasblab@EMSL.com

EMSL Order: 041933601
Customer ID: W912QR20R0038-0003 BAKE51
Customer PO:
Project ID:

Test Report:Asbestos Analysis of Bulk Material

Test	Analyzed Date	Color	Non-Asbestos Fibrous	Non-Fibrous	Asbestos
Sample ID 1119-ORG-08A		**Description**			
041933601-0014		**Homogeneity**	Homogeneous		
PLM NYS 198.1 Friable					**Not Analyzed**
PLM NYS 198.6 VCM					**Not Analyzed**
PLM NYS 198.6 NOB	12/04/2019	Yellow		100.00% Other	**Inconclusive: None Detected**
TEM NYS 198.4 NOB	12/05/2019	Yellow		100.00% Other	**None Detected**
Sample ID 1119-ORG-08B		**Description**			
041933601-0015		**Homogeneity**	Homogeneous		
PLM NYS 198.1 Friable					**Not Analyzed**
PLM NYS 198.6 VCM					**Not Analyzed**
PLM NYS 198.6 NOB	12/04/2019	Yellow		100.00% Other	**Inconclusive: None Detected**
TEM NYS 198.4 NOB	12/05/2019	Yellow		100.00% Other	**None Detected**
Sample ID 1119-ORG-09A		**Description**			
041933601-0016		**Homogeneity**	Homogeneous		
PLM NYS 198.1 Friable					**Not Analyzed**
PLM NYS 198.6 VCM					**Not Analyzed**
PLM NYS 198.6 NOB	12/04/2019	Yellow		100.00% Other	**Inconclusive: None Detected**
TEM NYS 198.4 NOB	12/05/2019	Yellow		100.00% Other	**None Detected**
Sample ID 1119-ORG-09B		**Description**			
041933601-0017		**Homogeneity**	Homogeneous		
PLM NYS 198.1 Friable					**Not Analyzed**
PLM NYS 198.6 VCM					**Not Analyzed**
PLM NYS 198.6 NOB	12/04/2019	Yellow		100.00% Other	**Inconclusive: None Detected**
TEM NYS 198.4 NOB	12/05/2019	Yellow		100.00% Other	**None Detected**
Sample ID 1119-ORG-10A		**Description**			
041933601-0018		**Homogeneity**	Homogeneous		
PLM NYS 198.1 Friable	12/04/2019	Gray/ Tan		100.00% Non-fibrous (other)	**None Detected**
PLM NYS 198.6 VCM					**Not Analyzed**
PLM NYS 198.6 NOB					**Not Analyzed**
TEM NYS 198.4 NOB					**Not Analyzed**
Sample ID 1119-ORG-10B		**Description**			
041933601-0019		**Homogeneity**	Homogeneous		
PLM NYS 198.1 Friable	12/04/2019	Gray/ Tan		100.00% Non-fibrous (other)	**None Detected**
PLM NYS 198.6 VCM					**Not Analyzed**
PLM NYS 198.6 NOB					**Not Analyzed**
TEM NYS 198.4 NOB					**Not Analyzed**

Initial report from: 12/05/2019 12:38:53

EMSL Analytical, Inc.
200 Route 130 North Cinnaminson, NJ 08077
Tel/Fax: (800) 220-3675 / (856) 786-5974
http://www.EMSL.com / cinnasblab@EMSL.com

EMSL Order: 041933601
Customer ID: W912QR20R0038-0003 BAKE51
Customer PO:
Project ID:

Test Report:Asbestos Analysis of Bulk Material

Test	Analyzed Date	Color	Non-Asbestos Fibrous	Non-Fibrous	Asbestos
Sample ID 1119-ORG-11A		**Description**			
041933601-0020		**Homogeneity**	Homogeneous		
PLM NYS 198.1 Friable					**Not Analyzed**
PLM NYS 198.6 VCM					**Not Analyzed**
PLM NYS 198.6 NOB	12/04/2019	Gray/ Black		100.00% Other	**Inconclusive: None Detected**
TEM NYS 198.4 NOB	12/05/2019	Gray/ Black		100.00% Other	**None Detected**
Sample ID 1119-ORG-11B		**Description**			
041933601-0021		**Homogeneity**	Homogeneous		
PLM NYS 198.1 Friable					**Not Analyzed**
PLM NYS 198.6 VCM					**Not Analyzed**
PLM NYS 198.6 NOB	12/04/2019	Gray/ Black		100.00% Other	**Inconclusive: None Detected**
TEM NYS 198.4 NOB	12/05/2019	Gray/ Black		100.00% Other	**None Detected**

Initial report from: 12/05/2019 12:38:53

EMSL Analytical, Inc.
200 Route 130 North Cinnaminson, NJ 08077
Tel/Fax: (800) 220-3675 / (856) 786-5974
http://www.EMSL.com / cinnasblab@EMSL.com

EMSL Order: 041933601
Customer ID: W912QR20R0038-0003 BAKE51
Customer PO:
Project ID:

Test Report:Asbestos Analysis of Bulk Material

Analyst(s):

Andrew Borsos PLM NYS 198.1 Friable (5)

Andrew Borsos PLM NYS 198.6 NOB (8)

Chelsey Donnelly TEM NYS 198.4 NOB (9)

Seri Smith PLM NYS 198.1 Friable (4)

Seri Smith PLM NYS 198.6 NOB (8)

Diane Turcios TEM NYS 198.4 NOB (7)

Samples reviewed and approved by:

Samantha Rundstrom, Laboratory Manager
or Other Approved Signatory

NOB = Non Friable Organically Bound N/A = Not Applicable VCM = Vermiculite Containing Material

-In New York State, TEM is currently the only method that can be used to determine if NOB materials can be considered or treated as non-asbestos containing.
All samples examined for the presence of vermiculite when analyzed via NYS 198.1.
-NYS Guidelines for Vermiculite containing samples are available at http://www.wadsworth.org/labcert/elapcert/forms/VermiculiteInterimGuidance_Rev070913.pdf EMSL maintains liability limited to cost of analysis. This report relates only to the samples reported above and may not be reproduced, except in full, without written approval by EMSL. EMSL bears no responsibility for sample collection activities or analytical method limitations. Interpretation and use of test results are the responsibility of the client. Samples were received in good condition unless otherwise noted.
This report must not be used by the client to claim product certification, approval, or endorsement by NVLAP, NIST, or any agency of the federal government. This report may contain data that is not covered by the NVLAP accreditation.

Samples analyzed by EMSL Analytical, Inc. Cinnaminson, NJ NYS ELAP 10872, PA ID# 68-00367

Initial report from: 12/05/2019 12:38:53

APPENDIX III

CERTIFICATIONS/ACCREDITATIONS

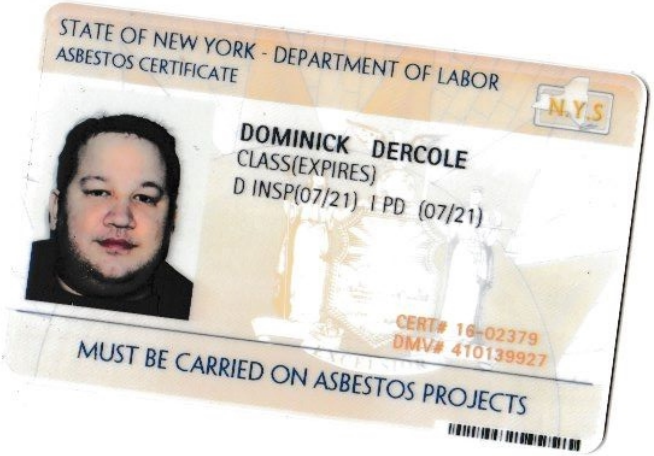
STATE OF NEW YORK - DEPARTMENT OF LABOR
ASBESTOS CERTIFICATE
N.Y.S
DOMINICK DERCOLE
CLASS(EXPIRES)
D INSP(07/21) I PD (07/21)
CERT# 16-02379
DMV# 410139927
MUST BE CARRIED ON ASBESTOS PROJECTS

57085

NAETI Inc.

CERTIFICATE OF COMPLETION

AHERA/EPA Accredited Per 40 CFR Part 763
Asbestos Accreditation under TSCA Title II

This is to certify that

Mike Moore

Successfully completed the course entitled

1/2-Day New York State/EPA/AHERA Asbestos Building Inspector Annual Refresher on June 1, 2020

Examination Passed on June 1, 2020 *Expiration Date on June 1, 2021*

Lee Wasserman
President, NAETI Inc.

Per 10 NYCRR Part 73.2 (L) (1), DOH 2832 Certificate of Completion of Asbestos Safety Training is the only official record of training for N.Y.S. students.

Language: English ABIH 1/2 CM POINT

3321 Doris Avenue, Building B, Ocean, NJ 07712 **Phone (732) 531-5571** **Fax (732) 531-5956** **www.naeti.com**

NEW YORK STATE DEPARTMENT OF HEALTH
WADSWORTH CENTER

Expires 12:01 AM April 01, 2021
Issued April 01, 2020

CERTIFICATE OF APPROVAL FOR LABORATORY SERVICE

Issued in accordance with and pursuant to section 502 Public Health Law of New York State

MR. PHILLIP M. WORBY
EMSL ANALYTICAL INC
200 ROUTE 130 NORTH
CINNAMINSON, NJ 08077

NY Lab Id No: 10872

is hereby APPROVED as an Environmental Laboratory for the category
ENVIRONMENTAL ANALYSES SOLID AND HAZARDOUS WASTE
All approved subcategories and/or analytes are listed below:

Miscellaneous

Asbestos in Friable Material	Item 198.1 of Manual
	EPA 600/M4/82/020
Asbestos in Non-Friable Material-PLM	Item 198.6 of Manual (NOB by PLM)
Asbestos in Non-Friable Material-TEM	Item 198.4 of Manual
Asbestos-Vermiculite-Containing Material	Item 198.8 of Manual
Lead in Dust Wipes	EPA 7000B
Lead in Paint	EPA 6010C
	EPA 7000B

Sample Preparation Methods

	EPA 3050B
	EPA 3051A

NEW YORK STATE | Department of Health

Serial No.: 61218

Property of the New York State Department of Health. Certificates are valid only at the address shown, must be conspicuously posted, and are printed on secure paper. Continued accreditation depends on successful ongoing participation in the Program. Consumers are urged to call (518) 485-5570 to verify the laboratory's accreditation status.

July 29, 2021

J. LEED Implementation Plan

MOTT MACDONALD

BENAKA INC.
7 LAWRENCE STREET
NEW BRUNSWICK, NJ 08901
Ph: 732-246 7060 FAX: 732 246 7073
www.benakainc.com

Training Center Full Facility Revitalization Orangeburg, NY

LEED Implementation Plan

July 29, 2021

MOTT MACDONALD

Training Center Full Facility Revitalization Orangeburg, NY

LEED Implementation Plan

July 29, 2021

BENAKA INC.
7 LAWRENCE STREET
NEW BRUNSWICK, NJ 08901
Ph: 732-246 7060 FAX: 732 246 7073
www.benakainc.com

Mott MacDonald
111 Wood Avenue South
Iselin
NJ 08830-4112
United States of America

T +1 (800) 832 3272
mottmac.com

U. S. ARMY ENGINEER
DISTRICT, LOUISVILLE
600 DR. MARTIN LUTHER
KING, JR. PLACE
ROOM 821
LOUISVILLE KY 40202-2239U.

Training Center Full Facility Revitalization Orangeburg, NY

LEED Implementation Plan

July 29, 2021

Issue and revision record

Revision	Date	Originator	Checker	Approver	Description
0	05-21-2021	JJD	KDA	RKF	LEED Implementation Plan
1	07-29-2021	JJD	KDA	RKF	LEED Implementation Plan

Document reference: 505100403 | 0 |

Information class: **Standard**

This document is issued for the party which commissioned it and for specific purposes connected with the above-captioned project only. It should not be relied upon by any other party or used for any other purpose.

We accept no responsibility for the consequences of this document being relied upon by any other party, or being used for any other purpose, or containing any error or omission which is due to an error or omission in data supplied to us by other parties.

This document contains confidential information and proprietary intellectual property. It should not be shown to other parties without consent from us and from the party which commissioned it.

Contents

1 Sustainability Action Plan and LEED Implementation 2

Applicable codes and standards 2
Applicability. 2
Minimum Project Requirements 3
Project Documentation. 4
Attempted LEED Credits 4

Location and Transportation
(D) CREDIT Sensitive Land Protection 7
(D) CREDIT Surrounding Density and Diverse Uses 8

Sustainable Sites
(C) PREREQ. Construction Activity Pollution Prevention 9
(D) CREDIT Site Assessment 10
(D) CREDIT Open Space 11
(D) CREDIT Light Pollution Reduction 12

Water Efficiency
(D) PREREQ.Outdoor Water Use Reduction 13
(D) PREREQ. Indoor Water Use Reduction 14
(D) PREREQ. Building-Level Water Metering 15
(D) CREDIT Outdoor Water Use Reduction 16
(D) CREDIT Indoor Water Use Reduction 17
(D) CREDIT Cooling Tower Water Use 18

Energy and Atmosphere
(C) PREREQ.Fundamental Commissioning and Verification 19
(D) PREREQ. Minimum Energy Performance 22
(D) PREREQ.Building-Level Energy Metering 24
(D) PREREQ. Fundamental Refrigerant Management 26
(C) CREDIT Enhanced Commissioning 27
(D) CREDIT Optimize Energy Performance 28
(D) CREDIT Renewable Energy Production 28
(D) CREDIT Enhanced Refrigerant Management 30

Materials and Resources
(D) PREREQ. Storage and Collection of Recyclables 33
PREREQ. Construction and Demolition Waste Management Planning 34
(C) CREDIT Building Life-Cycle Impact Reduction 35
(C) CREDIT Building Product Disclosure & Optimization – Environmental Product Declarations 36
(C) CREDIT Building Product Disclosure & Optimization – Environmental Product Declarations 38
CREDIT Construction and Demolition Waste Management 42

Indoor Environmental Quality
(D) PREREQ. Minimum Indoor Air Quality Performance 44

(C) PREREQ. Environmental Tobacco Smoke Control 46
(D) CREDIT Enhanced Indoor Air Quality Strategies 48
(C) CREDIT Low-Emitting Materials 52
(C) CREDIT Construction Indoor Air Quality Management Plan 53
(C) CREDIT Indoor Air Quality Assessment 54

Innovation

(D) CREDIT Innovation 55
(C) CREDIT LEED Accredited Professional 56

Regional Priority

(D) CREDIT Regional Priority: Renewable Energy Production 57
(D) CREDIT Regional Priority: Building Life-Cycle Impact Reduction 57

Sustainability Action Plan and LEED Implementation 57

A. Appendix 58

A.1 LEED Credit Scorecard 58
A.2 LEED Credit Guidance Spreadsheet 59

1 Sustainability Action Plan and LEED Implementation

1.1 Applicable codes and standards

UFC 1-200-02 01 DECEMBER 2020
ASHRAE 90.1 Energy Standard for Buildings Except Low-Rise Residential Buildings
International Green Construction Code (IgCC)

AMERICAN SOCIETY OF HEATING, REFRIGERATING AND AIR-CONDITIONING ENGINEERS (ASHRAE)
http://www.ashrae.org/
NOTE: Include all references Errata, except Errata for Addenda. Include Interpretations, except Interpretations for Addenda. Do not include Addenda.
ANSI/ASHRAE/IESNA Standard 90.1-2013 (ASHRAE 90.1), Energy Standards for Buildings Except Low Rise Residential Buildings, 2013
ENVIRONMENTAL PROTECTION AGENCY
Comprehensive Procurement Guideline (CPG) Program, https://www.epa.gov/smm/comprehensive-procurement-guideline-cpg-program
Energy Independence and Security Act (EISA), 19 December 2007, https://www.epa.gov/laws-regulations/summary-energy-independence-and-securityact
Energy Policy Act of 2005 (EPAct 2005), https://www.epa.gov/lawsregulations/summary-energy-policy-act
ENERGY STAR®, http://www.energystar.gov/Resource Conservation and Recovery Act (RCRA), 21 October 1976, https://www.epa.gov/laws-regulations/summaryresource-conservation-and-recovery-act
WaterSense Program, https://www.epa.gov/watersense
GENERAL SERVICES ADMINISTRATION
Guiding Principles for Sustainable Federal Buildings and Associated Instructions (February 2016), https://sftool.gov/Content/attachments/guiding_principles_for_sustainable_federal_buildings_and_associated_instructions_february_2016.pdf
INTERNATIONAL CODE COUNCIL
https://codes.iccsafe.org/search/
International Energy Conservation Code, 2015
International Green Construction Code, 2018

1.2 Applicability.

Per United States Army Corps of Engineer (USACE) Army Leadership Energy and Environmental Design (LEED)® v4 Implementation Guide:
This implementation guidance applies to USACE-executed new construction, add/alter and renovation and projects located on Army property. Paragraphs 5 through 16 address USACE processes for implementing LEED v4 and are applicable to all USACE projects pursuing LEED v4 certification, including Civil Works projects.

LEED PROJECT BOUNDARY. For purposes of applying the LEED credit calculations a LEED Project boundary is established by the design team and all LEED documentation consistently observes this boundary. The LEED Project Boundary may match the limits of construction, but may also deviate from that perimeter. The LEED Project Boundary should exclude work that is unrelated to the building seeking LEED certification. An example of work that is logically located outside the LEED Project Boundary for a building is road improvements or utilities that extend well beyond the building site. Work that is outside the LEED Project Boundary is excluded from all LEED documentation.

The Project was registered on 17 Dec 2020 as an Individual Project under the LEED v4 BD=C: NC, using a Split Design & Construction Review path.

1.3 Minimum Project Requirements

Per (USACE Army LEED® v4 Implementation Guide -September 2014)
9.3.3. MINIMUM PROGRAM REQUIREMENTS. LEED v4 requires compliance with LEED Minimum program Requirements (MPRs) to register any building.

- MPR- Must be in a permanent location on existing land

Requirements: All LEED projects must be constructed and operated on a permanent location on existing land. No project that is designed to move at any point in its lifetime may pursue LEED certification. This requirement applies to all land within the LEED project.

- MPR- Must use reasonable LEED boundaries

Requirements: The LEED project boundary must include all contiguous land that is associated with the project and supports its typical operations. This includes land altered as a result of construction and features used primarily by the project's occupants, such as hardscape (parking and sidewalks), septic or stormwater treatment equipment, and landscaping. The LEED boundary may not unreasonably exclude portions of the building, space, or site to give the project an advantage in complying with credit requirements. The LEED project must accurately communicate the scope of the certifying project in all promotional and descriptive materials and distinguish it from any non-certifying space

- Must comply with project size requirements

Requirements: LEED projects must meet the size requirements for LEED BD+C and EB:O&M Rating Systems. The LEED project must include a minimum of 1,000 square feet (93 square meters) of gross floor area.

A LEED Project Boundary site is defined as shown below and was uploaded to the USGBC website for review.

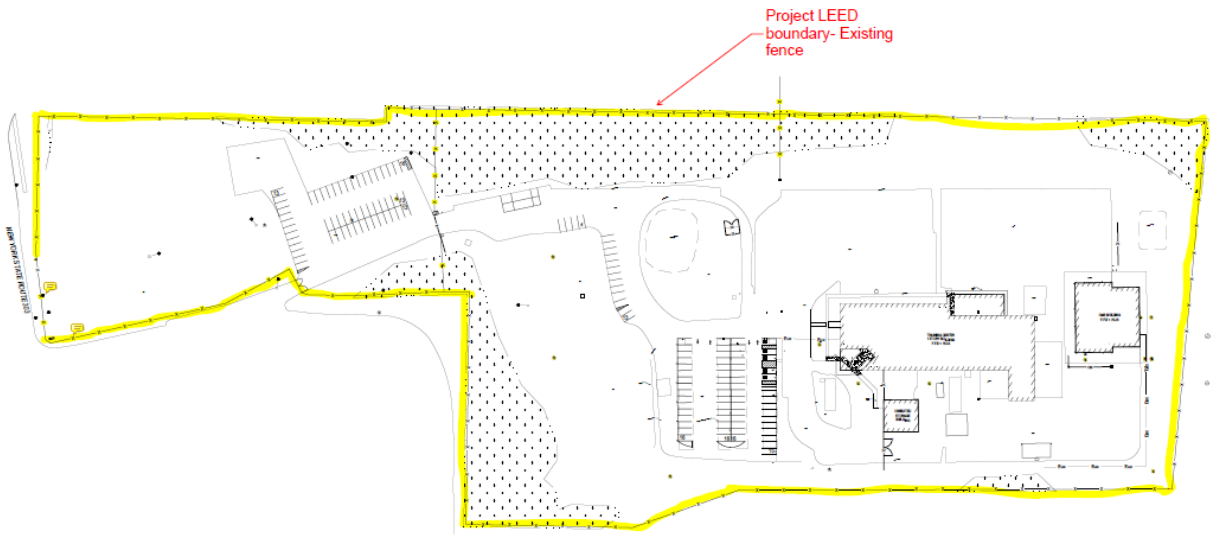

Figure 1- LEED Project Boundary

1.4 Project Documentation.

The project will incorporate the applicable LEED prerequisites and credits in the construction drawings and specifications and will provide LEED supporting documentation in the design analysis and the construction phase submittals in accordance with the applicable LEED Reference Guide both in electronic archive copy and on LEED Online.
LEED supporting documentation will be separable from other project documentation and included in the project files.
Project LEED Design and construction credit documentation will be prepared so that it can be compiled into a single document. LEED Design credit documentation will be prepared and reviewed during design and furnished to construction contractor (usually through LEED Online) to add construction credit documentation.

1.5 Attempted LEED Credits

The projects will attempt to pursue the Design and Construction Credits and Pre-Requisites as targeted on the RFP Vol 1- Appendix M- Preliminary LEED Scorecard. The following credits and requirements are based on the Preliminary LEED Scorecard from the RFP with preliminary selections deemed applicable to the project.

A Preliminary Design Submission was submitted with GBCI on June 22nd 2021. The Preliminary review was conducted by GBCI on a basket of Prerequisite and Design credits. The status of the Preliminary Design credits submitted to and reviewed by GBCI will be reflected in the list of attempted credits below. Refer to the keynote designations for current Preliminary Design Credit status.

NOTE:	The total number of credits marked as "required" or "preferred" does not equal the required number of credit required for certification of the project. Additional points shall be gained from the remainder of available credits.
KEY:	**R** Required. This credit is required for LEED certification to be achieved.
	A Anticipated. This credit is anticipated to be awarded by GBCI
	P Pursued. This credit is being pursued as part of LEED certification.
	PS Pursued under Special Circumstances. This credit is being pursued but we are citing special circumstances in order to meet the credit requirements. Special circumstances must be approved by GBCI.

Project Information

Design Credit (A)	Project Information

Location and Transportation

Design Credit (A)	Sensitive Land Protection
Design Credit (PS)	Surrounding Density and Diverse Uses

Sustainable Sites

Construction Prereq. 1 (R)	Construction Activity Pollution Prevention
Design Credit (A)	Site Assessment
Design Credit (P)	Open Space
Design Credit (P)	Light Pollution Reduction

Water Efficiency

Design Prereq. 1 (A)	Outdoor Water Use Reduction
Design Prereq. 2 (R)	Indoor Water Use Reduction
Design Prereq. 3 (A)	Building-Level Water Metering
Design Credit (A)	Outdoor Water Use Reduction
Design Credit (P)	Indoor Water Use Reduction
Design Credit (P)	Cooling Tower Water Use

Energy and Atmosphere

Construction Prereq. 1 (R)	Fundamental Commissioning of the Building Energy Systems
Design Prereq. 2 (R)	Minimum Energy Performance
Design Prereq. 3 (A)	Building-Level Energy Metering
Design Prereq. 4 (A)	Fundamental Refrigerant Management
Construction Credit (P)	Enhanced Commissioning
Design Credit (P)	Optimize Energy Performance
Design Credit (P)	Renewable Energy Production
Design Credit (P)	Enhanced Refrigerant Management

Materials and Resources

Design Prereq. 1 (R)	Storage and Collection of Recyclables
Construction Prereq. 2 (R)	Construction and Demolition Waste Management Planning
Construction Credit (P)	Building Life-Cycle Impact Reduction
Construction Credit (P)	Building Product Disclosure and Optimization - Environmental Product Declarations
Construction Credit (P)	Building Product Disclosure and Optimization - Sourcing of Raw Materials

Construction Credit (P)	Building Product Disclosure and Optimization - Material Ingredients
Construction Credit (P)	Construction and Demolition Waste Management - Material Ingredients

Indoor Environmental Quality

Design Prereq 1 (R)	Minimum Indoor Air Quality Performance
Design Prereq 2 (A)	Environmental Tobacco Smoke Control
Design Credit (P)	Enhanced Indoor Air Quality Strategies
Construction Credit (P)	Low-Emitting Materials
Construction Credit (P)	Construction Indoor Air Quality Management Plan
Construction Credit (P)	Indoor Air Quality Assessment

Innovation

Design Credit (P)	Innovation: Purchasing Lamps
Design Credit (P)	Innovation: PBT Source Reduction
Design Credit (P)	Pilot: Integrative Analysis of Building Materials
Design Credit (P)	Exemplary Performance: Enhanced Indoor Air Quality Strategies
Design Credit (P)	Exemplary Performance: Renewable Energy Production
Construction Credit (P)	LEED Accredited Professional

Regional Priority

Design Credit (P)	Regional Priority: Renewable Energy Production
Design Credit (P)	Regional Priority: Building Life-Cycle Impact Reduction

Location and Transportation: **(D) CREDIT Sensitive Land Protection**
Requirements: **Option 1:** Project is located on a previously developed site (1 point)
Documentation during Design: Narrative briefly describing the previous development on the site, immediately prior to this project (e.g., type of use, extent, etc.).
Documentation during Construction: None
Credit was submitted for approval as part of the LEED Preliminary Design Submission: Credit Status - Anticipated

Location and Transportation: **(D) CREDIT Surrounding Density and Diverse Uses**
Requirements: **Option 2: Diverse Uses** (1-2 points) Construct or renovate a building or a space within a building such that the building's main entrance is within a ½-mile (800-meter) walking distance of the main entrance of four to seven (1 point) or eight or more (2 points) existing and publicly available diverse uses
Documentation during Design: **Upload: Area Plan** Provide a site area plan indicating that the building's main entrance is within a ½-mile (800-meter) walking distance of the main entrance of four to seven (1 point) or eight or more (2 points) existing and publicly available diverse uses
Documentation during Construction: None
Credit was submitted for approval as part of the LEED Preliminary Design Submission: Credit Status – Pending. Revisions needed based on comments from GBCI

Sustainable Sites

(C) PREREQ. Construction Activity Pollution Prevention

Requirements:

EPA Construction General Permit: The project team created and implemented an erosion and sedimentation control (ESC) plan that conforms to the requirements of the 2012 EPA Construction General Permit (CGP). The requirements of the CGP are more stringent than local standards and codes.

OR

Local standards and codes: The project team created and implemented an erosion and sedimentation control (ESC) plan that conforms to local standards and codes, which are as or more stringent than the 2012 EPA Construction General Permit (CGP).

Documentation during Design:

None

Documentation during Construction:

Provide a narrative describing how the local erosion and sedimentation control standards and codes are equal to or more stringent than the requirements of the 2012 EPA CGP.

Provide a narrative describing how the project complies with the requirements of local erosion and sedimentation control standards and codes.

Upload: ESC Plan

Provide the ESC plan or construction drawings describing the erosion and sedimentation control measures implemented on the site.

Select one of the following:

Upload: Contractor declaration

Provide a written declaration from the general contractor or builder who implemented the plan, confirming that the ESC plan was carried out appropriately

Upload: Photographs

Provide date-stamped photos showing the measures taken, including any corrective action, to effectively implement the ESC plan. Photos should be taken at regular intervals and show all areas of the site covered in the plan

Upload: ESC implementation narrative

Provide a description of how the ESC plan was implemented, including the timing of the implementation of the plan, specific control measures applied on site, and the maintenance protocol used to ensure the proper function of control measures.

Sustainable Sites

(D) CREDIT Site Assessment

Requirements:

Upload: Site survey

Provide the site survey or assessment detailing the following characteristics of the site:

- Topography
- Hydrology
- Climate
- Vegetation
- Soils
- Human use
- Human health effects

Upload: Site Assessment Worksheet

Provide the completed Site Assessment Worksheet (found under the credit's "Resources" tab in the Credit Library) or an equivalent narrative description.

Documentation during Design:

Upload: Site survey

Upload: Site Assessment Worksheet

Documentation during Construction:

None

Credit was submitted for approval as part of the LEED Preliminary Design Submission:

Credit Status - Anticipated

Sustainable Sites

(D) CREDIT Open Space

Requirements:

Provide outdoor space greater than or equal to 30% of the total site area (including building footprint). A minimum of 25% of that outdoor space must be vegetated (turf grass does not count as vegetation) or have overhead vegetated canopy. The outdoor space must be physically accessible and be one or more of the following:

- a pedestrian-oriented paving or turf area with physical site elements that accommodate outdoor social activities;
- a recreation-oriented paving or turf area with physical site elements that encourage physical activity;
- a garden space with a diversity of vegetation types and species that provide opportunities for year-round visual interest;
- a garden space dedicated to community gardens or urban food production;
- preserved or created habitat that meets the criteria of SS Credit Site Development—Protect or Restore Habitat and also includes elements of human interaction.

Documentation during Design:

Provide site calculations demonstrating that the project site has outdoor space greater than or equal to 30% of the total site area and a minimum of 25% of that outdoor space is vegetated.

Describe how the open space is physically accessible and meets the criteria of one or more of the following types of areas:

· Pedestrian-oriented paving or turf area with physical site elements that accommodate outdoor social activities

· Recreation-oriented paving or turf area with physical site elements that encourage physical activity

· Garden space with a diversity of vegetation types and species that provide opportunities for year-round visual interest

· Garden space dedicated to community gardens or urban food production

· Preserved or created habitat that meets the criteria of SS Credit Site Development - Protect or Restore Habitat and

Documentation during Construction:

None

Credit was submitted for approval as part of the LEED Preliminary Design Submission:

Credit Status – Pending. Revisions needed based on comments from GBCI

Sustainable Sites

(D) CREDIT Light Pollution Reduction

Requirements:

Classify the project under one of the following lighting zones:

- LZ0: No ambient lighting
- LZ1: Low ambient lighting
- LZ2: Moderate ambient lighting
- LZ3: Moderately high ambient lighting
- LZ4: High ambient lighting

Upload: Site lighting plan

Provide a site lighting plan depicting the project boundary, the property line (if different from the project boundary), the lighting boundary, any additional properties included in the lighting boundary (if applicable), the location and label of all exterior luminaires within the project boundary (both exempt and nonexempt), and any relevant project site conditions.

Uplight

Meet uplight and light trespass requirements, using either the backlight-uplight-glare (BUG) method (Option 1) or the calculation method (Option 2). Projects may use different options for uplight and light trespass. Meet these requirements for all exterior luminaires located inside the project boundary (except those listed under “Exemptions”), based on the following: Topography

- The photometric characteristics of each luminaire when mounted in the same orientation and tilt as specified in the project design; and
- The lighting zone of the project property (at the time construction begins). Classify the project under one lighting zone using the lighting zones definitions provided in the Illuminating Engineering Society and International Dark Sky Association (IES/IDA) Model Lighting Ordinance (MLO) User Guide.

Sustainable Sites

(D) CREDIT Light Pollution Reduction

Documentation during Design:

Documentation	All Projects	Option 1, Uplight	Option 1, Light Trespass	Option 2, Uplight	Option 2, Light Trespass
Site lighting plan with boundaries, elements, location of fixtures, and applicable measurements	X				
Projects with internally illuminated exterior signage only: provide maximum luminance data	X				
Luminaire schedule showing uplight ratings		X			
Luminaire schedule showing backlight and glare ratings and mounting heights			X		
Calculations for lumens per luminaire and lumens emitted above horizontal				X	
Greatest vertical illuminance value for each vertical calculation plane at lighting boundary; calculation grid for one vertical plane with greatest vertical illuminance (worst-case scenario), highlighting point of greatest illuminance					X

Documentation during Construction:

None

Water Efficiency

(D) PREREQ. Outdoor Water Use Reduction

Requirements:

Option 1. No Irrigation required

List the plant species and water needs for the landscape area. If applicable, include irrigation establishment plan information.

Water Efficiency (D) PREREQ. Outdoor Water Use Reduction
Documentation during Design: Narrative describing the plant species and water needs for the landscape area.
Documentation during Construction: None
Credit was submitted for approval as part of the LEED Preliminary Design Submission: Credit Status - Anticipated

1.5.1 Water Efficiency (D) PREREQ. Indoor Water Use Reduction
Requirements: All eligible newly installed fixtures and fittings are WaterSense labeled (or local equivalent for projects outside the U.S.) **Upload:** Fixture and fitting cutsheets Provide cutsheets for all fixtures and fittings installed in the project. Use either a Prescriptive Achievement or Usage Based Calculation method to achieve and prove at least a 35% building water use reduction percentage
Documentation during Design: Cutsheets for all fixtures and fittings installed in the project. Indoor Water Use Reduction Calculator showing a 35% building water use reduction percentage when compared to the base model
Documentation during Construction: None
Credit was submitted for approval as part of the LEED Preliminary Design Submission: Credit Status – Pending. Revisions needed based on comments from GBCI

Water Efficiency

(D) PREREQ. Building-Level Water Metering

Requirements:

Install permanent water meters that measure the total potable water use for the building and associated grounds.

Upload: Letter of commitment

Provide a letter from the project owner committing to share water usage data, compiled into monthly and annual summaries, with USGBC for a five-year period beginning on the date of LEED certification or when the project reaches typical occupancy, whichever comes first.

We are citing a DoD exemption on this credit.

Documentation during Design:

Documentation	All projects
Meter declaration	X
Sharing commitment	X

Documentation during Construction:

None

Credit was submitted for approval as part of the LEED Preliminary Design Submission:

Credit Status - Anticipated

Water Efficiency

(D) CREDIT Outdoor Water Use Reduction

Requirements:

Reduce outdoor water use through one of the following options. Non-vegetated surfaces, such as permeable or impermeable pavement, should be excluded from landscape area calculations. Athletic fields and playgrounds (if vegetated) and food gardens may be included or excluded at the project team's discretion:

- Option 1. (2 points) No Irrigation required - Show that the landscape does not require a permanent irrigation system beyond a maximum two-year establishment period
- Option 2. (1-2 points) Reduce the project's landscape water requirement (LWR) by at least 50% from the calculated baseline for the site's peak watering month. Reductions must first be achieved through plant species selection and irrigation system efficiency as calculated in the Environmental Protection Agency (EPA) WaterSense Water Budget Tool. Additional reductions beyond 30% may be achieved using any combination of efficiency, alternative water sources, and smart scheduling technologies.

Percentage reduction from baseline	Points (except Healthcare)	Points (Healthcare)
50%	1	1
100%	2	—

Documentation during Design:

Documentation	Option 1	Option 2
Alternative water source and controls calculations		X

Documentation during Construction:

None

Credit was submitted for approval as part of the LEED Preliminary Design Submission:

Credit Status - Anticipated

Water Efficiency

(D) CREDIT Indoor Water Use Reduction

Requirements:

All eligible newly installed fixtures and fittings are WaterSense labeled (or local equivalent for projects outside the U.S.)

Upload: Fixture and fitting cutsheets

Provide cutsheets for all fixtures and fittings installed in the project.

Use either a Prescriptive Achievement or Usage Based Calculation method to achieve and prove at least a 35% building water use reduction percentage

Documentation during Design:

Cutsheets for all fixtures and fittings installed in the project.

Indoor Water Use Reduction Calculator showing a 35% building water use reduction percentage when compared to the base model

Documentation during Construction:

None

Credit was submitted for approval as part of the LEED Preliminary Design Submission:

Credit Status – Pending. Revisions needed based on comments from GBCI

Water Efficiency

(D) CREDIT Cooling Tower Water Use

Requirements:

For cooling towers and evaporative condensers, conduct a one-time potable water analysis, in order to optimize cooling tower cycles. Measure at least the five control parameters listed in Table 1.

Table 1. Maximum concentrations for parameters in condenser water

Parameter	Maximum level
Ca (as $CaCO_3$)	1,000 ppm
Total alkalinity	1,000 ppm
SiO_2	100 ppm
Cl^-	250 ppm
Conductivity	2000 µS/cm

ppm = parts per million µS/cm = micro siemens per centimeter

Calculate the number of cooling tower cycles by dividing the maximum allowed concentration level of each parameter by the actual concentration level of each parameter found in the potable makeup water. Limit cooling tower cycles to avoid exceeding maximum values for any of these parameters.

Table 2. Points for cooling tower cycles

Cooling tower cycles

Maximum number of cycles achieved without exceeding any filtration levels or affecting operation of condenser water system (up to maximum of 10 cycles)

1 point: Achieve a minimum 10 cycles by increasing the level of treatment in condenser or make-up water

OR

2 points: Achieve the number of cycles for 1 point and use a minimum 20% recycled non-potable water 2

Documentation during Design:

Documentation	1 point	2 points
Potable water analysis results	x	x
Potable water analysis narrative	x	x
Cycles of concentration calculations	x	x

Nonpotable water calculations		x
Water treatment calculations		x
Nonpotable water analysis (if using 100% nonpotable water)		x

Documentation during Construction:

None

1.5.2 Energy and Atmosphere

(C) PREREQ. Fundamental Commissioning and Verification

Requirements:

Upload: Commissioning authority experience

Provide documentation demonstrating the commissioning authority's appropriate project experience for at least two similar projects of comparable size. Include the individual's name, certifications, company, and any other relevant information.

Develop the OPR (Owner's Project Requirements) to include the following:

- Owner and user requirements
- Environmental and sustainability goals
- Energy efficiency goals
- Indoor environmental quality requirements
- Equipment and system expectations
- Building occupant operations and maintenance personnel requirements
- Building envelope requirements

Develop a BOD (Basis of Design) to include the following:

- Specific codes, standards, and guidelines considered during design
- Information regarding ambient conditions
- Usage assumptions
- Operations and maintenance assumptions
- Performance criteria from OPR
- Design and operations narratives
- Equipment make and model used as basis of drawings and specifications
- Envelope design criteria

CxA (Commissioning Authority)

By the end of the design development phase, engage a commissioning authority with the following qualifications.

- The CxA must have documented commissioning process experience on at least two building projects with a similar scope of work. The experience must extend from early design phase through at least 10 months of occupancy;
- The CxA may be a qualified employee of the owner, an independent consultant, or an employee of the design or construction firm who is not part of the project's design or construction team, or a disinterested subcontractor of the design or construction team.

The following tasks must be completed by the CxA for all mechanical, electrical, plumbing, and renewable energy systems:

- Review the OPR, BOD, and project design.
- Develop and implement a Cx plan.
- Confirm incorporation of Cx requirements into the construction documents.
- Develop construction checklists.
- Develop a system test procedure.
- Verify system test execution.
- Maintain an issues and benefits log throughout the Cx process
- Prepare a final Cx process report.
- Document all findings and recommendations and report directly to the owner throughout the process.

Upload: Commissioning plan table of contents

Provide the table of contents for the commissioning plan. The plan should include a commissioning program overview and information on the commissioning team and process activities.

Upload: Functional performance test

Provide at least one complete functional performance test for each of the applicable systems indicated in Table: Commissioning systems scope (mechanical, electrical, plumbing, and renewable energy).

Upload: CFR and O&M plan tables of contents

Provide the tables of contents for the current facilities requirements and operations and maintenance (O&M) plan. Confirm that all sections listed in the credit requirements have been included.

Upload: Commissioning report summary

Provide an executive summary of the commissioning report that includes a list of systems commissioned (and by whom), a summary of issues corrected, and a list of major outstanding/unresolved issues.

Documentation during Design:

None

Documentation during Construction:

Documentation	**All projects**
CxA previous experience	x
Confirmation of OPR and BOD contents	x
List of systems to be commissioned	x
Verification of CxA activities and reviews	x
Cx plan	x
Documentation of testing and verification	x
CFR, O&M plan	x
Cx report	x

1.5.3 Energy and Atmosphere

(D) PREREQ. Minimum Energy Performance

Requirements:

1. Option 1. Whole-building energy simulation

   Demonstrate an improvement of 5% for new construction, 3% for major renovations, or 2% for core and shell projects in the proposed building performance rating compared with the baseline building performance rating. Calculate the baseline building performance according to ANSI/ASHRAE/IESNA Standard 90.1–2010, Appendix G, with errata (or a USGBC-approved equivalent standard for projects outside the U.S.), using a simulation model.

   The proposed design must meet the following criteria:

   - compliance with the mandatory provisions of ANSI/ASHRAE/IESNA Standard 90.1–2010, with errata (or a USGBC-approved equivalent standard for projects outside the U.S.);
   - inclusion of all energy consumption and costs within and associated with the building project; and
   - comparison against a baseline building that complies with Standard 90.1–2010, Appendix G, with errata (or a USGBC-approved equivalent standard for projects outside the U.S.).

   Document the energy modeling input assumptions for unregulated loads. Unregulated loads should be modeled accurately to reflect the actual expected energy consumption of the building.

   If unregulated loads are not identical for both the baseline and the proposed building performance rating, and the simulation program cannot accurately model the savings, follow the exceptional calculation method (ANSI/ASHRAE/IESNA Standard 90.1–2010, G2.5). Alternatively, use the COMNET Modeling Guidelines and Procedures to document measures that reduce unregulated loads.

2. Option 2. Prescriptive compliance: ASHRAE 50% Advanced Energy Design Guide

   Comply with the mandatory and prescriptive provisions of ANSI/ASHRAE/IESNA Standard 90.1–2010, with errata.

Comply with the HVAC and service water heating requirements, including equipment efficiency, economizers, ventilation, and ducts and dampers, in Chapter 4, Design Strategies and Recommendations by Climate Zone, for the appropriate ASHRAE 50% Advanced Energy Design Guide and climate zone:

- ASHRAE 50% Advanced Energy Design Guide for Small to Medium Office Buildings, for office buildings smaller than 100,000 square feet (9 290 square meters);
- ASHRAE 50% Advanced Energy Design Guide for Medium to Large Box Retail Buildings, for retail buildings with 20,000 to 100,000 square feet (1 860 to 9 290 square meters);
- ASHRAE 50% Advanced Energy Design Guide for K–12 School Buildings; or
- ASHRAE 50% Advanced Energy Design Guide for Large Hospitals. Over 100,000 square feet (9 290 square meters)

Documentation during Design:

Documentation	Option 1	Option 2	Option 3
Appendix G energy modeling inputs	x		
Input-output reports from modeling software	x		
Exceptional calculations (if applicable)	x		
Energy consumption and demand for each building end use and fuel type	x		
Fuels rates	x		
AEDG compliance tables		x	
Target Finder results, summary			x
Confirmation that all aspects of CPG Sections 1 and 2 were met			x
Building configuration analysis			x
Building loads and mechanical system design capacity			x
Insulation installation details			x
Building envelope details			x
Domestic hot water efficiency			x
Narrative or calculations for CPG enhanced performance strategies			x

1.5.3 Energy and Atmosphere

(D) PREREQ. Minimum Energy Performance

Data center calculator (if applicable)	x		
Retail process energy calculator (if applicable)	x		

Documentation during Construction:

None

Credit was submitted for approval as part of the LEED Preliminary Design Submission:

Credit Status – Pending. Revisions needed based on comments from GBCI

1.5.4 Energy and Atmosphere

(D) PREREQ. Building-Level Energy Metering

Requirements:

The project must have permanently installed, building-level energy meters that account for all sources of energy delivered to the building by an external provider, as listed in EA Prerequisite Minimum Energy Performance.

We are Citing a DoD exemption for this credit

Upload: Letter of commitment

Provide a letter from the project owner committing to share energy usage data, compiled into monthly and annual summaries, with USGBC for a five-year period beginning on the date of LEED certification or when the project reaches typical occupancy, whichever comes first.

USGBC-approved data template. The project owner commits to providing energy consumption data to USGBC and acknowledges that USGBC will only accept the data using ENERGY STAR's Portfolio Manager import facility data templates.

OR

Third-party data source. The project owner commits to providing energy consumption data to USGBC and acknowledges that USGBC will only accept the data in an approved third-party source or format.

Documentation during Design:

Documentation	**All projects**
Location of all meters	X
Meter ownership	X
Letter of Owner Commitment	X
Systems metered	X

Documentation during Construction:

None

Credit was submitted for approval as part of the LEED Preliminary Design Submission:

Credit Status - Anticipated

1.5.5 Energy and Atmosphere

(D) PREREQ. Fundamental Refrigerant Management

Requirements:

Do not use chlorofluorocarbon (CFC)-based refrigerants in new heating, ventilating, air-conditioning, and refrigeration (HVAC&R) systems. When reusing existing HVAC&R equipment, complete a comprehensive CFC phase-out conversion before project completion. Phase-out plans extending beyond the project completion date will be considered on their merits. Existing small HVAC&R units (defined as containing less than 0.5 pound (225 grams) of refrigerant) and other equipment, such as standard refrigerators, small water coolers, and any other equipment that contains less than 0.5 pound (225 grams) of refrigerant, are exempt.

Upload: CFC phase-out plan

Provide the CFC phase-out conversion plan(s) (or summary) for all existing mechanical cooling equipment. Highlight language indicating specific equipment using CFC-based refrigerants and expected phase-out dates. Include leakage rates and refrigerant quantities. Phase-out must be complete prior to project completion.

Documentation during Design:

Documentation	All equipment	Phaseout required
Equipment type	x	X
Confirmation that no new or existing equipment contains CFCs	x	X
Refrigerant type	x	X
CFC conversion or replacement plan		X
Refrigerant leakage rate, quantity		X
Phase-out completion date		X

Documentation during Construction:

None

Credit was submitted for approval as part of the LEED Preliminary Design Submission:

Credit Status - Anticipated

1.5.6 Energy and Atmosphere

(C) CREDIT Enhanced Commissioning

Requirements:

Implement, or have in place a contract to implement, the following commissioning process activities in addition to those required under EA Prerequisite Fundamental Commissioning and Verification.
Commissioning authority

- The CxA must have documented commissioning process experience on at least two building projects with a similar scope of work. The experience must extend from early design phase through at least 10 months of occupancy;
- The CxA may be a qualified employee of the owner, an independent consultant, or a disinterested subcontractor of the design team.

Documentation during Design:

None

Documentation during Construction:

Documentation	Option 1, Path 1	Option 1, Path 2	Option 2
List of all tasks completed as part of Cx activities	X	X	x
Training outline and participation list	X	X	x
Confirmation of systems manual delivery	X	X	x
Ongoing Cx plan	X	X	x
Inclusion of monitoring and tracking in Cx plan		X	
Inclusion of envelope in Cx plan			x
Verification of additional reviews per Data Center requirements (data centers only)			

1.5.7 Energy and Atmosphere

(D) CREDIT Optimize Energy Performance

Requirements:

Credits are awarded based on the results of the EA PREREQ requirement Minimum Energy Performance. Option 1 must be used to achieve at least 10 credits.

Documentation during Design:

Submission requirements based on Minimum Energy Performance Pre-requisite credit

Documentation during Construction:

None

1.5.8 Energy and Atmosphere

(D) CREDIT Renewable Energy Production

Requirements:

Table: Renewable energy production
Complete the LEED Online table for all renewable energy systems serving the project. Renewable energy systems must be installed and commissioned prior to project
occupancy.

Provide a narrative describing the renewable system(s) and explain the calculation method used to estimate the annual energy generated. Indicate any factors influencing performance (e.g., DC-to-AC derate factor, tilt, orientation, and adjacent shading structures for photovoltaic arrays)

Use renewable energy systems to offset building energy costs. Percent renewable energy must be at least 1% for 1 point, 5% for 2 points, 10% for 3 points, and 15% for exemplary performance. Calculate the percentage of renewable energy with the following equation:

$$\% \text{ renewable energy} = \frac{\text{Equivalent cost of usable energy produced by the renewable energy system}}{\text{Total building annual energy cost}}$$

Documentation during Design:

Documentation	On-site system	On-site third-party system ownership	Community system
Renewable system rated capacity	x	x	x
Calculations to determine energy generated	x	x	x
Equivalent cost of renewable energy produced	x	x	x
Documentation of annual energy costs	x	x	x
Contract indicating duration		x	x
Documentation indicating percentage ownership of community system			x
If selling RECs for on-site system, Contract and Green-e certification for REC or carbon offset purchase	x		

Documentation during Construction:

None

Credit was submitted for approval as part of the LEED Preliminary Design Submission:

Credit Status – Pending. Revisions needed based on comments from GBCI

1.5.9 Energy and Atmosphere

(D) CREDIT Enhanced Refrigerant Management

Requirements:

1. Option 1. No refrigerants or low-impact refrigerants (1 point)

Do not use refrigerants, or use only refrigerants (naturally occurring or synthetic) that have an ozone depletion potential (ODP) of zero and a global warming potential (GWP) of less than 50.

2. Option 2. Calculation of refrigerant impact (1 point)

Select refrigerants that are used in heating, ventilating, air-conditioning, and refrigeration (HVAC&R) equipment to minimize or eliminate the emission of compounds that contribute to ozone depletion and climate change. The combination of all new and existing base building and tenant HVAC&R equipment that serve the project must comply with the following formula:

IP units

LCGWP	+	LCODP	x	10^5	≤	100

SI units

LCGWP	+	LCODP	x	10^5	≤	13

Calculation definitions for LCGWP + LCODP x 10^5 ≤ 100 (IP units)	Calculation definitions for LCGWP + LCODP x 10^5 ≤ 13 (SI units)
LCODP = [ODPr x (Lr x Life +Mr) x Rc]/Life	LCODP = [ODPr x (Lr x Life +Mr) x Rc]/Life
LCGWP = [GWPr x (Lr x Life +Mr) x Rc]/Life	LCGWP = [GWPr x (Lr x Life +Mr) x Rc]/Life
LCODP: Lifecycle Ozone Depletion Potential (lb CFC 11/Ton-Year)	LCODP: Lifecycle Ozone Depletion Potential (kg CFC 11/(kW/year))
LCGWP: Lifecycle Direct Global Warming Potential (lb CO2/Ton-Year)	LCGWP: Lifecycle Direct Global Warming Potential (kg CO2/kW-year)
GWPr: Global Warming Potential of Refrigerant (0 to 12,000 lb CO2/lbr)	GWPr: Global Warming Potential of Refrigerant (0 to 12,000 kg CO2/kg r)
ODPr: Ozone Depletion Potential of Refrigerant (0 to 0.2 lb CFC 11/lbr)	ODPr: Ozone Depletion Potential of Refrigerant (0 to 0.2 kg CFC 11/kg r)

Lr: Refrigerant Leakage Rate (2.0%)	Lr: Refrigerant Leakage Rate (2.0%)
Mr: End-of-life Refrigerant Loss (10%)	Mr: End-of-life Refrigerant Loss (10%)
Rc: Refrigerant Charge (0.5 to 5.0 lbs of refrigerant per ton of gross AHRI rated cooling capacity)	Rc: Refrigerant Charge (0.065 to 0.65 kg of refrigerant per kW of AHRI rated or Eurovent Certified cooling capacity)
Life: Equipment Life (10 years; default based on equipment type, unless otherwise demonstrated)	Life: Equipment Life (10 years; default based on equipment type, unless otherwise demonstrated)

For multiple types of equipment, calculate a weighted average of all base building HVAC&R equipment, using the following formula:

IP units		SI units
$\frac{\sum (LCGWP + LCODP \times 10^5) \times Qunit}{Qtotal}$	≤ 100	$\frac{\sum (LCGWP + LCODP \times 10^5) \times Qunit}{Qtotal}$ ≤ 13

Calculation definitions for $[\sum (LCGWP + LCODP \times 10^5) \times Qunit] / Qtotal \leq 100$	Calculation definitions for $[\sum (LCGWP + LCODP \times 10^5) \times Qunit] / Qtotal \leq 13$
(IP units)	**(SI units)**
Qunit = Gross AHRI rated cooling capacity of an individual HVAC or refrigeration unit (Tons)	Qunit = Eurovent Certified cooling capacity of an individual HVAC or refrigeration unit (kW)
Qtotal = Total gross AHRI rated cooling capacity of all HVAC or refrigeration	Qtotal = Total Eurovent Certified cooling capacity of all HVAC or refrigeration (kW)

Documentation during Design:

Documentation	Option 1	Option 2
Confirmation that only no or low-impact refrigerants are used	x	
Equipment type		x
Equipment cooling capacity		x
Equipment quantity		x
Refrigerant type		x
Refrigerant charge (plus supporting documentation, if applicable)		x
Refrigerant charge calculations (for VRF systems only)		x
Equipment life (plus supporting documentation, if applicable)		x
Provide Refrigerant equipment schedule or GreenChill certification (commercial refrigeration systems)		x
Leak test results (commercial refrigeration systems only)		x

Documentation during Construction:

None

Credit was submitted for approval as part of the LEED Preliminary Design Submission:

Credit Status – Pending. Revisions needed based on comments from GBCI

1.5.10 Materials and Resources

(D) PREREQ. Storage and Collection of Recyclables

Requirements:

Provide dedicated areas accessible to waste haulers and building occupants for the collection and storage of recyclable materials for the entire building. Collection and storage areas may be separate locations. Recyclable materials must include mixed paper, corrugated cardboard, glass, plastics, and metals. Take appropriate measures for the safe collection, storage, and disposal of two of the following: batteries, mercury-containing lamps, and electronic waste.

Provide a narrative describing the dedicated recycling storage areas for the project. Include the size of the areas, accessibility, and expected volume for the project. Demonstrate that the recycling storage areas are appropriately sized and located. Demonstrate that safe storage and collection has been provided for batteries, mercury-containing lamps, and/or e-waste.

Upload: Floor plan(s)
Provide a floor plan(s) highlighting the recycling storage areas for the project.

Documentation during Design:

Documentation	All projects	Retail only
Verification of recycled material types	x	
Narrative describing recycling storage and collection strategies	x	
Floor plans indicating recycling storage and collection areas	x	
Methodology and results of waste stream study		x

Documentation during Construction:

None

Credit was submitted for approval as part of the LEED Preliminary Design Submission:

Credit Status – Pending. Revisions needed based on comments from GBCI

1.5.11 Materials and Resources

PREREQ. Construction and Demolition Waste Management Planning

Requirements:

Develop and implement a construction and demolition waste management plan:

- Establish waste diversion goals for the project by identifying at least five materials (both structural and nonstructural) targeted for diversion. approximate a percentage of the overall project waste that these materials represent.
- Specify whether materials will be separated or commingled and describe the diversion strategies planned for the project. Describe where the materials will be taken and how the recycling facility will process the material.

Provide a final report detailing all major waste streams generated, including disposal and diversion rates. Alternative daily cover (ADC) does not qualify as material diverted from disposal. Include materials destined for ADC in the calculations as waste. Land-clearing debris is not considered construction, demolition, or renovation waste that can contribute to waste diversion.

Upload: Construction and demolition waste management plan

Provide the construction and demolition waste management plan. The plan must outline at least five materials targeted for diversion, provide the anticipated percentage of total waste that these materials represent, and include on-site diversion strategies. If on-site diversion strategies are not available, explain why.

Documentation during Design:

None

Documentation during Construction:

Documentation	**All projects**
Construction waste management plan	x
Total construction waste	x

1.5.12 Materials and Resources

(C) CREDIT Building Life-Cycle Impact Reduction

Requirements:

Option 3:

Table: Reused building surface area

Complete the LEED Online table for all surface areas in the building(s). List the surface area of structural elements, enclosure materials, and interior finishes such as walls, doors, floor coverings, and ceiling finishes. All structural element square footages must be accounted for. Exclude nonstructural roofing material and window assemblies from credit calculations. If portions of structural elements have been excluded from either existing or reused areas due to structural unsoundness, presence of hazardous materials and/or contamination risk to occupants, remove the excluded elements from the existing area input.

Percent building reuse must be at least 25% for 2 points, 50% for 3 points, 75% for 4 points, and 95% for exemplary performance

Documentation during Design:

None

Documentation during Construction:

Documentation	All projects
Construction waste management plan	x
Total construction waste	x

1.5.13 Materials and Resources

(C) CREDIT Building Product Disclosure & Optimization – Environmental Product Declarations

Requirements:

Upload: BPDO Calculator

Provide the completed BPDO Calculator (found under the credit's "Resources" tab in the Credit Library) or equivalent documentation. Include all of the products contributing toward credit compliance.

Option 1. Environmental Product Declaration

Provide the following value from the Summary tab of the BPDO Calculator:

Weighted number of products with EPD Weighted number of products must be at least 20 for 1 point and 40 for exemplary performance.

Products provided in the BPDO Calculator must represent at least five different manufacturers.

Upload: EPD documentation

For each product, provide a summary of the product EPD, the full EPD document, or a reference to the website where the publicly-available EPD can be found. Highlight relevant sections as applicable.

OR

Option 2. Multi-Attribute Optimization

Provide the following value from the Summary tab of the BPDO Calculator:

Sustainable criteria value as a percentage of total materials cost (%)

Sustainable criteria value must be at least 50% for 1 point and 75% for exemplary performance.

Upload: Multi-attribute optimization documentation

Provide documentation demonstrating that all products meet the credit criteria or a USGBC-approved program. If pursuing local or domestic criteria, provide documentation of product source location (extraction, manufacture, and purchase)

Documentation during Design:

None

1.5.13 Materials and Resources

(C) CREDIT Building Product Disclosure & Optimization – Environmental Product Declarations

Documentation during Construction:

Documentation	Option 1	Option 2
MR building product disclosure and optimization calculator or equivalent tracking tool	x	x
EPD and LCA reports or compliant summary documents for 100% of products contributing toward credit	x	
Documentation of compliance with USGBC-approved program		

1.5.14 Materials and Resources

(C) CREDIT Building Product Disclosure & Optimization – Environmental Product Declarations

Requirements:

Upload: BPDO Calculator
Provide the completed BPDO Calculator (found under the credit's "Resources" tab in the Credit Library) or equivalent documentation. Include all of the products contributing toward credit compliance.

Option 1. Raw Material Source and Extraction Reporting

Provide the following value from the Summary tab of the BPDO Calculator:
Weighted number of products with raw material source and extraction reports

Weighted number of products must be at least 20 for 1 point and 40 for exemplary performance.

Products listed in the BPDO Calculator must represent at least five different manufacturers.

Upload: Sourcing documentation
Provide a summary of each manufacturer report, the full manufacturer reports, or references to the websites where the publicly-available reports can be found. Reports must outline the raw material suppliers' sourcing practices. Highlight relevant sections as applicable.

Summaries must include, at a minimum, the criteria listed in the credit requirements. This may be in the form of a Corporate Sustainability Report or manufacturer declaration.

OR

Option 2. Leadership Extraction Practices

Provide the following values from Summary tab of the BPDO Calculator:
Sustainable criteria value as a percentage of total materials cost (%)

Sustainable criteria value must be at least 25% for 1 point and 50% for exemplary performance.

Upload: Leadership sourcing documentation
Provide documentation demonstrating that products meet at least one of the sustainable extraction criteria listed in the credit requirements. If pursuing local or domestic criteria, provide documentation showing product source location (extraction, manufacture, and purchase).

Provide documentation for projects that include bio-based products:

Documentation must be provided for all products meeting the Sustainable Agriculture Network's Sustainable Agriculture standard (e.g., Rainforest Alliance certification).

Provide documentation for projects that include wood products:

Vendor Chain of Custody certificate numbers must be provided for all wood products with FSC certification.

Provide documentation for projects that include products from a USGBC-approved program:

Documentation must be provided for all products complying under a USGBC-approved program.

Documentation during Design:

None

Documentation during Construction:

Documentation	Option 1	Option 2
MR building product disclosure and optimization calculator or equivalent tracking tool	x	x
Corporate sustainability reports for 100% of products contributing toward credit	x	
Documentation of product claims for credit requirements or other USGBC-approved program		

1.5.15 Materials and Resources

(C) CREDIT Building Product Disclosure and Optimization – Material Ingredients

Requirements:

Upload: BPDO Calculator

Provide the completed BPDO Calculator (found under the credit's "Resources" tab in the Credit Library) or equivalent documentation. Include all of the products contributing toward credit compliance.

Select one or more of the following:

Option 1. Material ingredient reporting (1 point)

1.5.15 Materials and Resources

(C) CREDIT Building Product Disclosure and Optimization – Material Ingredients

Option 2. Material ingredient optimization (1 point)
Option 3. Product manufacturer supply chain optimization (1 point)

Option 1. Material Ingredient Reporting

Provide the following value from the Summary tab of the BPDO Calculator:
Number of products meeting material ingredient reporting requirements

Number of products must be at least 20 for 1 point and 40 for exemplary performance.

Products listed in the BPDO Calculator must represent at least five different manufacturers

Upload: Material ingredient reports
Provide documentation of chemical inventory for all products contributing toward credit compliance. The inventory can be provided by the manufacturer, Health Product Declaration, Cradle to Cradle certification, or a USGBC-approved program.

AND/OR

Option 2. Material Ingredient Optimization

Provide the following value from the Summary tab of the BPDO Calculator:
Sustainable criteria value as a percentage of total materials cost (%)

Sustainable criteria value must be at least 25% for 1 point and 50% for exemplary performance.

For projects that include products using GreenScreen
Verification of criteria compliance from the manufacturer or a third party has been provided for all products using GreenScreen v1.2

For projects that include Cradle to Cradle-certified products
The Cradle to Cradle v2 or v3 scorecard and website listing have been provided for all products with Cradle to Cradle
certification.

For projects that include products with no ingredients on REACH list
Verification of criteria compliance from manufacturer or third party has been provided for all products meeting REACH criteria.

1.5.15 Materials and Resources

(C) CREDIT Building Product Disclosure and Optimization – Material Ingredients

For projects that include products from a USGBC-approved program

Documentation has been provided for all products complying under a USGBC-approved program.

Upload: Manufacturer documentation

Provide documentation demonstrating that products have optimized material ingredients under Green Screen v1.2, Cradle to Cradle v2, REACH, or other USGBC-approved program criteria.

AND/OR

Option 3. Product Manufacturer Supply Chain Optimization

Check USGBC's website for updates on how to complete this option.

1.5.15 Materials and Resources

(C) CREDIT Building Product Disclosure and Optimization – Material Ingredients

Documentation during Design:

None

Documentation during Construction:

Documentation	Option 1	Option 2	Option 3
MR building product disclosure and optimization calculator or equivalent tracking tool	x	x	
Documentation of chemical inventory through Health Product Declaration, Cradle to Cradle certification labels, manufacturers' lists of ingredients with GreenScreen assessment reports for confidential ingredients, or USGBC-approved programs (if applicable)	x		
Verification of ingredient optimization through Cradle to Cradle certification labels, manufacturers'lists of ingredients with GreenScreen Benchmark or LT scores listed for all ingredients, or manufacturers' declaration (for REACH), or USGBC-approved programs (if applicable)		x	
Documentation of supply chain optimization			x

1.5.16 Materials and Resources

CREDIT Construction and Demolition Waste Management

Requirements:

Recycle and/or salvage nonhazardous construction and demolition materials. Calculations can be by weight or volume but must be consistent throughout. Exclude excavated soil, land-clearing debris from calculations. Include materials destined for alternative daily cover (ADC) in the calculations as waste (not diversion). Include wood waste converted to fuel (bio-fuel) in the calculations; other types of waste-to-energy are not

considered diversion for this credit. However, for projects that cannot meet credit requirements using reuse and recycling methods, waste-to-energy systems may be considered waste diversion if the European Commission Waste Framework Directive 2008/98/EC and Waste Incineration Directive 2000/76/EC are followed and Waste to Energy facilities meet applicable European Committee for Standardization (CEN) EN 303 standards.

Option 1. Diversion (1-2 points)

- Path 1. Divert 50% and Three Material Streams (1 point)

Divert at least 50% of the total construction and demolition material; diverted materials must include at least three material streams.

- Path 2. Divert 75% and Four Material Streams (2 points)

Divert at least 75% of the total construction and demolition material; diverted materials must include at least four material streams.

OR

Option 2. Reduction of Total Waste Material (2 points)

Do not generate more than 2.5 pounds of construction waste per square foot (12.2 kilograms of waste per square meter) of the building's floor area.

Documentation during Design:

None

Documentation during Construction:

Documentation	Option 1	Option 2
MR construction and demolition waste management calculator or equivalent tool, tracking total and diverted waste amounts and material streams	x	
Documentation of recycling rates for commingled facilities (if applicable)	x	
Justification narrative for use of waste-to-energy strategy (if applicable)	x	

Documentation of waste-to-energy facilities adhering to relevant EN standards (if applicable)		
Total waste per area		x

1.5.17 Indoor Environmental Quality

(D) PREREQ. Minimum Indoor Air Quality Performance

Requirements:

Meet the requirements for both ventilation and monitoring.

- Ventilation
- Mechanically ventilated spaces

Option 1. ASHRAE Standard 62.1–2010

For mechanically ventilated spaces (and for mixed-mode systems when the mechanical ventilation is activated), determine the minimum outdoor air intake flow for mechanical ventilation systems using the ventilation rate procedure from ASHRAE 62.1–2010 or a local equivalent, whichever is more stringent. Meet the minimum requirements of ASHRAE Standard 62.1–2010, Sections 4–7, Ventilation for Acceptable Indoor Air Quality (with errata), or a local equivalent, whichever is more stringent.

Documentation during Design:

Documentation	Option 1	Naturally ventilated	Mixed Mode
Confirmation that project meets minimum requirements of ASHRAE 62.1–2010, Sections 4–7, or CEN Standard 13779–2007	x		x
Confirmation that project has MERV 11 or higher filters (if project is in nonattainment area for PM2.5)	x		x

Ventilation rate procedure or CEN calculations and documentation of assumptions for calculation variables	x		x
Confirmation that project meets minimum requirements of ASHRAE Standard 62.1–2010, Section 7, and exhaust ventilation requirements of Section 6.5		x	x
Documentation of CIBSE flow diagram process for project		x	x
Natural ventilation procedure calculations and ventilation opening information		x	x
Any natural ventilation exception from mechanical ventilation system (ASHRAE 62.1–2010, Section 6.4)		x	x
Any exception from authority having jurisdiction		x	x

Controls drawing showing monitoring devices (outdoor airflow measuring device, current transducer, airflow switch, or similar monitor, automatic indication device, CO2 sensor)	x	x	x

Documentation during Construction:

None

1.5.18 Indoor Environmental Quality

(C) PREREQ. Environmental Tobacco Smoke Control

Requirements:

Prohibit smoking inside the building. Prohibit smoking outside the building except in designated smoking areas located at least 25 feet (7.5 meters) from all entries, outdoor air intakes, and operable windows. Also prohibit smoking outside the property line in spaces used for business purposes. If the requirement to prohibit smoking within 25 feet (7.5 meters) cannot be implemented because of code, provide documentation of these regulations. Signage must be posted within 10 feet (3 meters) of all building entrances indicating the no-smoking policy.

Upload: No-smoking policy

Provide one of the following documents:

- A copy of the no-smoking policy
- A letter signed by the project owner describing the project's no-smoking policy and enforcement
- A copy of legally binding covenants/restrictions to verify the status of the residential units as no-smoking, if applicable

Upload: Signage details

Provide evidence of signage communicating the smoking policy. Drawing(s) with signage details or photos are acceptable

Upload: Site plan

Provide a scaled site plan or map showing the location of designated outdoor smoking and non-smoking areas, the property line, and the site boundary. Label the distance to any designated smoking areas to show that they are at least 25 ft (7.5 m) from building openings.

Documentation during Design:

Documentation	All projects where smoking is prohibited
Description of project's no-smoking policy, including information on how policy is communicated to building occupants and enforced	x
Copy of no-smoking policy, signed letter from owner describing project's no-smoking policy and enforcement, or copy of any legally binding covenants or restrictions to verify status of residential units as nonsmoking	x
Door schedule demonstrating weather-stripping at exterior unit doors and doors leading from units to common hallways	
Differential air pressure test report for units in project building	
Scaled site plan or map showing the location of designated outdoor smoking and no-smoking areas, location of property line, and site boundary and indicating 25-foot (7.5-meter) distance from building openings	x
Drawings, photos, or other evidence of signage communicating no-smoking policy	x
Any code restrictions that prevent establishment of no-smoking requirements	x

Documentation during Construction:

None

Credit was submitted for approval as part of the LEED Preliminary Design Submission:

Credit Status - Anticipated

1.5.19 Indoor Environmental Quality

(D) CREDIT Enhanced Indoor Air Quality Strategies

Requirements:

One or more of the following (each option in worth 1 point)

Option 1. Enhanced IAQ strategies (1 point)
Comply with the following requirements, as applicable.
Mechanically ventilated spaces:
A. entryway systems;
B. interior cross-contamination prevention; and
C. filtration.

Naturally ventilated spaces:
A. entryway systems; and
D. natural ventilation design calculations.

Mixed-mode systems:
A. entryway systems;
B. interior cross-contamination prevention;
C. filtration;
D. natural ventilation design calculations; and
E. mixed-mode design calculations.

A. Entryway systems
Install permanent entryway systems at least 10 feet (3 meters) long in the primary direction of travel to capture dirt and particulates entering the building at regularly used exterior entrances. Acceptable entryway systems include permanently installed grates, grilles, slotted systems that allow for cleaning underneath, rollout mats, and any other materials manufactured as entryway systems with equivalent or better performance. Maintain all on a weekly basis.

B. Interior cross-contamination prevention
Sufficiently exhaust each space where hazardous gases or chemicals may be present or used (e.g., garages, housekeeping and laundry areas, copying and printing rooms), using the exhaust rates determined in EQ Prerequisite Minimum Indoor Air Quality Performance or a minimum of 0.50 cfm per square foot (2.54 l/s per square meter), to create negative pressure with respect to adjacent spaces when the doors to the room are closed. For each of these spaces, provide self-closing doors and deck-to-deck partitions or a hard-lid ceiling.

C. Filtration

Each ventilation system that supplies outdoor air to occupied spaces must have particle filters or air-cleaning devices that meet one of the following filtration media requirements:

minimum efficiency reporting value (MERV) of 13 or higher, in accordance with ASHRAE Standard 52.2–2007; or

Class F7 or higher as defined by CEN Standard EN 779–2002, Particulate Air Filters for General Ventilation, Determination of the Filtration Performance.

[East Asia ACP: Filtration Media]

Replace all air filtration media after completion of construction and before occupancy.

D. Natural ventilation design calculations

Demonstrate that the system design for occupied spaces employs the appropriate strategies in Chartered Institution of Building Services Engineers (CIBSE) Applications Manual AM10, March 2005, Natural Ventilation in Non-Domestic Buildings, Section 2.4. [Latin America ACP: Engineered Natural Ventilation Systems]

E. Mixed-mode design calculations

Demonstrate that the system design for occupied spaces complies with CIBSE Applications Manual 13–2000, Mixed Mode Ventilation.

Option 2. Additional enhanced IAQ strategies (1 point)

Comply with the following requirements, as applicable.

Mechanically ventilated spaces (select one):

A. exterior contamination prevention;

B. increased ventilation;

C. carbon dioxide monitoring; or

D. additional source control and monitoring.

Naturally ventilated spaces (select one):

A. exterior contamination prevention;

D. additional source control and monitoring; or

E. natural ventilation room by room calculations.

Mixed-mode systems (select one):

A. exterior contamination prevention;

B. increased ventilation;

D. additional source control and monitoring; or

E. natural ventilation room-by-room calculations.

Option 2: Select one or more of the following (Projects earn 1 point for pursuing one strategy and exemplary performance for pursuing two strategies and meeting the requirements of Option 1).):

A. Exterior contamination prevention

Design the project to minimize and control the entry of pollutants into the building. Ensure through the results of computational fluid dynamics modeling, Gaussian dispersion analyses, wind tunnel modeling, or tracer gas modeling that outdoor air contaminant concentrations at outdoor air intakes are below the thresholds listed in Table 1 (or local equivalent for projects outside the U.S., whichever is more stringent).

Pollutants	Maximum concentration	Standard
Those regulated by National Ambient Air Quality Standards (NAAQS)	Allowable annual average OR 8-hour or 24-hour average where an annual standard does not exist OR Rolling 3-month average	National Ambient Air Quality Standards (NAAQS)

B. Increased ventilation

Increase breathing zone outdoor air ventilation rates to all occupied spaces by at least 30% above the minimum rates as determined in EQ Prerequisite Minimum Indoor Air Quality Performance.

C. Carbon dioxide monitoring

Monitor CO2 concentrations within all densely occupied spaces. CO2 monitors must be between 3 and 6 feet (900 and 1 800 millimeters) above the floor. CO2 monitors must have an audible or visual indicator or alert the building automation system if the sensed CO2 concentration exceeds the setpoint by more than 10%. Calculate appropriate CO2 setpoints using methods in ASHRAE 62.1–2010, Appendix C.

D. Additional source control and monitoring

For spaces where air contaminants are likely, evaluate potential sources of additional air contaminants besides CO2. Develop and implement a materials-handling plan to reduce the likelihood of contaminant release. Install monitoring systems with sensors designed to detect the specific contaminants. An alarm must indicate any unusual or unsafe conditions.

E. Natural ventilation room-by-room calculations

Follow CIBSE AM10, Section 4, Design Calculations, to predict that room-by-room airflows will provide effective natural ventilation. [Latin America ACP: Engineered Natural Ventilation Systems]

Documentation during Design:

Documentation	Option 1	Option 2
Entryway systems: scaled floor plans showing locations and measurements	x	

Interior cross-contamination prevention: list of rooms, areas, exhaust rate, separation method	x	
Filtration: mechanical schedules highlighting MERV or class ratings for all units that supply outdoor air	x	
Natural ventilation design: calculations and narrative demonstrating appropriate strategies per referenced standard	x	
Mixed mode design: calculations and narrative demonstrating appropriate strategies per referenced standard	x	
Exterior contamination prevention: narrative describing type of modeling; model output reports highlighting contaminant levels and required thresholds		x
Increased ventilation: confirmation (calculations are documented under EQ Prerequisite Minimum Indoor Air Quality Performance)		x
Carbon dioxide monitoring: list of densely occupied spaces, space type, design CO2 concentrations, floor plan showing sensor locations, narrative describing CO2 setpoints		x
Additional source control and monitoring: description of likely air contaminants and how they were identified, description of materials handling plan, plans showing installed monitoring system		x
Natural ventilation: room-by-room calculations, narrative, and diagrams demonstrating effective natural ventilation per referenced standard		x

Documentation during Construction:

None

1.5.20 Indoor Environmental Quality

(C) CREDIT Low-Emitting Materials

Requirements:

This credit includes requirements for product manufacturing as well as project teams. It covers volatile organic compound (VOC) emissions in the indoor air and the VOC content of materials, as well as the testing methods by which indoor VOC emissions are determined. Different materials must meet different requirements to be considered compliant for this credit. The building interior and exterior are organized in seven categories, each with different thresholds of compliance. The building interior is defined as everything within the waterproofing membrane. The building exterior is defined as everything outside and inclusive of the primary and secondary weatherproofing system, such as waterproofing membranes and air- and water-resistive barrier materials.

Upload: Low-Emitting Materials Calculator

Provide the completed Low-Emitting Materials Calculator (found under the credit's "Resources" tab in the Credit Library) or equivalent documentation. Include all of the products contributing toward credit compliance. Include inherently non-emitting sources.

Upload: Low-emitting product documentation

For all products included in the Low-Emitting Materials Calculator, provide manufacturer or testing documentation demonstrating that the sustainable criteria are met. Documentation may include URLs to product information, cutsheets, MSDS, etc

AND 1 of the following options:

Option 1. Product category calculations (1-3 points)

Option 2. Budget calculation method (1-3 points)

Documentation during Design:

None

Documentation during Construction:

Documentation	Option 1	Option 2
USGBC low-emitting materials calculator	x	x
Product information (e.g., MSDS, third-party certifications, testing reports)	x	x

1.5.21 Indoor Environmental Quality

(C) Credit Construction Indoor Air Quality Management Plan

Requirements:

Develop and implement an indoor air quality (IAQ) management plan for the construction and preoccupancy phases of the building. The plan must address all of the following. During construction, meet or exceed all applicable recommended control measures of the Sheet Metal and Air Conditioning National Contractors Association (SMACNA) IAQ Guidelines for Occupied Buildings under Construction, 2nd edition, 2007, ANSI/SMACNA 008–2008, Chapter 3. Protect absorptive materials stored on-site and installed from moisture damage. Do not operate permanently installed air-handling equipment during construction unless filtration media with a minimum efficiency reporting value (MERV) of 8, as determined by ASHRAE 52.2–2007, with errata (or equivalent filtration media class of F5 or higher, as defined by CEN Standard EN 779–2002, Particulate Air Filters for General Ventilation, Determination of the Filtration Performance, [East Asia ACP: Construction IAQ Equivalent]), are installed at each return air grille and return or transfer duct inlet opening such that there is no bypass around the filtration media. Immediately before occupancy, replace all filtration media with the final design filtration media, installed in accordance with the manufacturer's recommendations. Prohibit the use of tobacco products inside the building and within 25 feet (8 meters) of the building entrance during construction.

Documentation during Design:

None

Documentation during Construction:

Documentation	All projects except Healthcare
IAQ management plan or detailed checklist, highlighting nonsmoking policy	x
EQMP or detailed checklist, highlighting nonsmoking policy	
Narrative describing protection measures for absorbent materials	x
Annotated photographs of indoor air and environmental quality measures	x
Record of filtration media	x

1.5.22 Indoor Environmental Quality

(C) CREDIT Indoor Air Quality Assessment

Requirements:

Select one of the following two options, to be implemented after construction ends and the building has been completely cleaned. All interior finishes, such as millwork, doors, paint, carpet, acoustic tiles, and movable furnishings (e.g., workstations, partitions), must be installed, and major VOC punch list items must be finished. The options cannot be combined.

1. Option 1. Flush-out (1 point)

- Path 1. Before occupancy

Install new filtration media and perform a building flush-out by supplying a total air volume of 14,000 cubic feet of outdoor air per square foot (4 267 140 liters of outdoor air per square meter) of gross floor area while maintaining an internal temperature of at least 60°F (15°C) and no higher than 80°F (27°C) and relative humidity no higher than 60%.

- Path 2. During occupancy

If occupancy is desired before the flush-out is completed, the space may be occupied only after delivery of a minimum of 3,500 cubic feet of outdoor air per square foot (1 066 260 liters of outdoor air per square meter) of gross floor area while maintaining an internal temperature of at least 60°F (15°C) and no higher than 80°F (27°C) and relative humidity no higher than 60%. Once the space is occupied, it must be ventilated at a minimum rate of 0.30 cubic foot per minute (cfm) per square foot of outdoor air (1.5 liters per second per square meter of outdoor air) or the design minimum outdoor air rate determined in EQ Prerequisite Minimum Indoor Air Quality Performance, whichever is greater. During each day of the flush-out period, ventilation must begin at least three hours before occupancy and continue during occupancy. These conditions must be maintained until a total of 14,000 cubic feet per square foot of outdoor air (4 267 140 liters of outdoor air per square meter) has been delivered to the space.

Documentation during Design:

None

Documentation during Construction:

Documentation	Option 1, Path 1	Option 1, Path 2
Flush-out report	x	x

1.5.23 Innovation

(D) CREDIT Innovation

Requirements:

Points pursued for each approach that the project team is attempting:

Innovation (2 points)

Pilot (1 point)

Exemplary performance (2 points)

Project teams may pursue up to 5 points total. To earn all 5 points, project teams must achieve at least 1 innovation point and 1 pilot point.

Innovation

Innovation: Purchasing Lamps
Innovation: PBT Source Reduction

Upload: Innovation documentation
Provide documentation including the following information:

- The intent of the proposed innovation credit(s)
- Proposed requirements for compliance
- Proposed submittals to demonstrate compliance
- The design approach or strategies used to meet the requirements

Pilot

Pilot: Integrative Analysis of Building Materials

Upload: Pilot documentation
Provide all documentation listed in the pilot credit(s).

Exemplary Performance

Exemplary Performance: Enhanced Indoor Air Quality Strategies
Exemplary Performance: Renewable Energy Production

Documentation during Design**:** **Upload**: Innovation documentation **Upload**: Pilot documentation
Documentation during Construction: None

1.5.24 IN Credit	LEED Accredited Professional
Requirements: **Provide** the name and credential of the LEED Accredited Professional with specialty who is a principal participant on the project team The specialty of the LEED AP must match the rating system family of the project. **Provide** a narrative describing the extent and depth of participation of the LEED Accredited Professional on the project.	
Documentation during Design: None	
Documentation during Construction: Provide the above listed information	

1.5.25 RP Credit	Regional Priority: Renewable Energy Production
Requirements: Points will be awarded for achieving renewable energy producing above what is required in the regular LEED credit	
Documentation during Design: See Energy and Atmosphere credit – Renewable Energy Production	
Documentation during Construction: None	

1.5.26 RP Credit	Regional Priority: Building Life-Cycle Impact Reduction
Requirements: Points will be awarded for achieving renewable energy producing above what is required in the regular LEED credit	
Documentation during Design: See Materials and Resources credit – Building Life-Cycle Impact Reduction	
Documentation during Construction: None	

A. Appendix

A.1 LEED Credit Scorecard

LEED v4 for BD+C: New Construction and Major Renovation
Project Checklist

Project Name:
Date:

Y	?	N			
1			Credit	Integrative Process	1

2	2	8	**Location and Transportation**		**16**
-	-	-	Credit	LEED for Neighborhood Development Location	16
1			Credit	Sensitive Land Protection	1
		2	Credit	High Priority Site	2
1			Credit	Surrounding Density and Diverse Uses	5
		5	Credit	Access to Quality Transit	5
	1		Credit	Bicycle Facilities	1
		1	Credit	Reduced Parking Footprint	1
	1		Credit	Green Vehicles	1

3	0	7	**Sustainable Sites**		**10**
Y			Prereq	Construction Activity Pollution Prevention	Required
1			Credit	Site Assessment	1
		2	Credit	Site Development - Protect or Restore Habitat	2
1			Credit	Open Space	1
		3	Credit	Rainwater Management	3
		2	Credit	Heat Island Reduction	2
1			Credit	Light Pollution Reduction	1

8	2	1	**Water Efficiency**		**11**
Y			Prereq	Outdoor Water Use Reduction	Required
Y			Prereq	Indoor Water Use Reduction	Required
E			Prereq	Building-Level Water Metering	Required
2			Credit	Outdoor Water Use Reduction	2
5		1	Credit	Indoor Water Use Reduction	6
1	1		Credit	Cooling Tower Water Use	2
	1		Credit	Water Metering	1

25	1	7	**Energy and Atmosphere**		**33**
Y			Prereq	Fundamental Commissioning and Verification	Required
Y			Prereq	Minimum Energy Performance	Required
E			Prereq	Building-Level Energy Metering	Required
Y			Prereq	Fundamental Refrigerant Management	Required
3		3	Credit	Enhanced Commissioning	6
18			Credit	Optimize Energy Performance	18
	1		Credit	Advanced Energy Metering	1
		2	Credit	Demand Response	2
3			Credit	Renewable Energy Production	3
1			Credit	Enhanced Refrigerant Management	1
		2	Credit	Green Power and Carbon Offsets	2

8	3	2	**Materials and Resources**		**13**
Y			Prereq	Storage and Collection of Recyclables	Required
Y			Prereq	Construction and Demolition Waste Management Planning	Required
3		2	Credit	Building Life-Cycle Impact Reduction	5
1	1		Credit	Building Product Disclosure and Optimization - Environmental Product Declarations	2
1	1		Credit	Building Product Disclosure and Optimization - Sourcing of Raw Materials	2
1	1		Credit	Building Product Disclosure and Optimization - Material Ingredients	2
2			Credit	Construction and Demolition Waste Management	2

8	1	7	**Indoor Environmental Quality**		**16**
Y			Prereq	Minimum Indoor Air Quality Performance	Required
Y			Prereq	Environmental Tobacco Smoke Control	Required
2			Credit	Enhanced Indoor Air Quality Strategies	2
3			Credit	Low-Emitting Materials	3
1			Credit	Construction Indoor Air Quality Management Plan	1
2			Credit	Indoor Air Quality Assessment	2
	1		Credit	Thermal Comfort	1
		2	Credit	Interior Lighting	2
		3	Credit	Daylight	3
		1	Credit	Quality Views	1
		1	Credit	Acoustic Performance	1

6	0	0	**Innovation**		**6**
5			Credit	Innovation	5
1			Credit	LEED Accredited Professional	1

2	0	0	**Regional Priority**		**2**
1			Credit	Regional Priority: Building Life Cycle Impact Reduction	1
1			Credit	Regional Priority: Renewable Energy Production	1

63	9	32	**TOTALS**	Possible Points:	**108**

Certified: 40 to 49 points, **Silver:** 50 to 59 points, **Gold:** 60 to 79 points, **Platinum:** 80 to 110

A.2 LEED Credit Guidance Spreadsheet

LEED Credit Guidance

LEED v4 for BD+C: New Construction and Major Renovation
Project Name:
ARMY-FFR TRAINING CENTER, ORANGEBURG, NY
1000138978 - LEED v4 BD+C: NC - D/B RFP

NOTE:	The total number of credits marked as "required" or "preferred" does not equal the required number of credit required for certification of the project. Additional points shall be gained from the remainder of available credits.
KEY:	**R** Required. This credit is required for LEED certification to be achieved.
	A Anticipated. This credit is anticipated to be awarded by GBCI
	P Pursued. This credit is being pursued as part of LEED certification.
	PS Pursued under Special Circumstances. This credit is being pursued but we are citing special circumstances in order to meet the credit requirements. Special circumstances must be approved by GBCI.
	PP Potential to be Pursued. This credit may be acheivable. Requires scope changes to be achieved.
	NP Not pursued. This credit is not being pursued for the reason(s) listed.

		Possible Points	Credit Preferences/ Requirements	Remarks
Credit (D)	Integrative Process	1	P	This credit is being pursued
Location and Transportation		**2**		
Credit (D)	LEED for Neighborhood Development Location	0	NP	*Project site does not meet the credit requirements.*
Credit (D)	Sensitive Land Protection	1	A	Awarded
Credit (D)	High Priority Site	0	NP	*Project site does not meet the credit requirements.*
Credit (D)	Surrounding Density and Diverse Uses	1	PS	1 Pt is being pursued - Attempted under Special Circumstances
Credit (D)	Access to Quality Transit	0	NP	*Project site does not meet the credit requirements.*
Credit (D)	Bicycle Facilities	0-1	PP	Credit can be pursued but requires the installation of bicycle storge racks on the exterior of the building and requires dedicated storage space on the interior of the building for long term bicycle storage
Credit (D)	Reduced Parking Footprint	0	NP	*Project site does not meet the credit requirements.*
Credit (D)	Green Vehicles	0-1	PP	Credit can be pursued but requires the following changes to scope: •Designate 5% of all parking spaces used by the project as preferred parking for green vehicles •Install electrical vehicle supply equipment (EVSE) in 2% of all parking spaces used by the project. Clearly identify and reserve these spaces for the sole use by plug-in electric vehicles (this 2% is in addition to the 5% designation above not concurrent) EVSE must meet the following requirements: •Provide a Level 2 charging capacity (208 – 240 volts) or greater. •Comply with the relevant regional or local standard for electrical connectors, such as SAE Surface Vehicle Recommended Practice J1772, SAE Electric Vehicle Conductive Charge Coupler or IEC 62196 of the International Electrotechnical Commission for projects outside the U.S. •Be networked or internet addressable and be capable of participating in a demand-response program or time-of-use
Sustainable Sites		**3**		
Prereq (C)	Construction Activity Pollution Prevention	Required	R	Option 2: Erosion and sedimentation control (ESC) to be developed according to local standards and codes.
Credit (D)	Site Assessment	1	A	This credit is being pursued. Worksheet will be completed according to the changes made to the site.
Credit (D)	Site Development - Protect or Restore Habitat	0	NP	*Project site does not meet the credit requirements.*
Credit (D)	Open Space	1	P	This credit is being pursued
Credit (D)	Rainwater Management	0	NP	*As Per 4/21/21 meeting with Civil this credit does not seem acheivable based on site conditions.*
Credit (D)	Heat Island Reduction	0	NP	Attempted under Special Circumstances. We are requesting GBCI to allow us to use existing greenfield areas as an implemented strategy to counter the heat island effect. As of the Preliminary Design Submission response from GBCI we are not elligible for this credit.
Credit (D)	Light Pollution Reduction	1	P	This credit is being pursued
Water Efficiency		**8**		
Prereq (D)	Outdoor Water Use Reduction	Required	A	Awarded
Prereq (D)	Indoor Water Use Reduction	Required	R	This prerequisite is being pursued
Prereq (D)	Building-Level Water Metering	Required	A	Awarded

LEED Credit Guidance

LEED v4 for BD+C: New Construction and Major Renovation
Project Name:
ARMY-FFR TRAINING CENTER, ORANGEBURG, NY
1000138978 - LEED v4 BD+C: NC - D/B RFP

NOTE:	The total number of credits marked as "required" or "preferred" does not equal the required number of credit required for certification of the project. Additional points shall be gained from the remainder of available credits.
KEY:	**R** Required. This credit is required for LEED certification to be achieved.
	A Anticipated. This credit is anticipated to be awarded by GBCI
	P Pursued. This credit is being pursued as part of LEED certification.
	PS Pursued under Special Circumstances. This credit is being pursued but we are citing special circumstances in order to meet the credit requirements. Special circumstances must be approved by GBCI.
	PP Potential to be Pursued. This credit may be acheivable. Requires scope changes to be achieved.
	NP Not pursued. This credit is not being pursued for the reason(s) listed.

		Possible Points	Credit Preferences/ Requirements	Remarks
Credit (D)	Outdoor Water Use Reduction	2	A	Awarded
Credit (D)	Indoor Water Use Reduction	5	P	This credit is being pursued. A 30% minimum reduction in water use over the base is needed to achieve at least 2 points.
Credit (D)	Cooling Tower Water Use	1	P/PS	This credit is being pursued, 1 credit is acheivable under the current project scope. 2 credits may be acheivable in this category, but may require scope changes. 2nd credit eligibility is pending a water analysis. Water sample has been taken for analysis by EVAPCO
Credit (D)	Water Metering	0-1	PP	This credit may be acheivable but changes in scope may be necessary to achieve compliance (additional water meters)
Energy and Atmosphere		**25**		
Prereq (C)	Fundamental Commissioning and Verification	Required	R	This prerequisite is being pursued
Prereq (D)	Minimum Energy Performance	Required	R	This prerequisite is being pursued
Prereq (D)	Building-Level Energy Metering	Required	A	Awarded
Prereq (D)	Fundamental Refrigerant Management	Required	R	This prerequisite is being pursued
Credit (C)	Enhanced Commissioning	3	P	Option 1, Path 1 (3 points) required
Credit (D)	Optimize Energy Performance	18	P	Option 1, New Construction 12% minimum (4 points minimum) required. Option 1, Renovation 10% minimum (3 points minimum) required. 8 points seem possible based on current energy simulations
Credit (D)	Advanced Energy Metering	0-1	PP	This credit may be acheivable but changes in scope may be necessary to achieve compliance (additional energy meters)
Credit (C)	Demand Response	0	NP	*This credit requires post construction communication and cooperation with the electrical utility providor.*
Credit (D)	Renewable Energy Production	3	P	This credit is being pursued
Credit (D)	Enhanced Refrigerant Management	1	P	This credit is being pursued
Credit (C)	Green Power and Carbon Offsets	0	NP	*This credit requires post construction communication and cooperation with the electrical utility providor.*
Materials and Resources		**8**		
Prereq (D)	Storage and Collection of Recyclables	Required	R	This prerequisite is being pursued
Prereq (C)	Construction and Demolition Waste Management Planning	Required	R	This prerequisite is being pursued
Credit (D)	Building Life-Cycle Impact Reduction	3	P	This credit is being pursued
Credit (C)	Building Product Disclosure and Optimization - Environmental Product Declarations	1	P	This credit is being pursued. 1 credit required, 2+ may be acheivable
Credit (C)	Building Product Disclosure and Optimization - Sourcing of Raw Materials	1	P	This credit is being pursued. 1 credit required, 2+ may be acheivable
Credit (C)	Building Product Disclosure and Optimization - Material Ingredients	1	P	This credit is being pursued. 1 credit required, 2+ may be acheivable
Credit (C)	Construction and Demolition Waste Management	2	R	Divert 50% (1 point) required. 2 points can be achieved if 75%+ is diverted
Indoor Environmental Quality		**8**		
Prereq (D)	Minimum Indoor Air Quality Performance	Required	R	This prerequisite is being pursued
Prereq (D)	Environmental Tobacco Smoke Control	Required	A	Awarded
Credit (D)	Enhanced Indoor Air Quality Strategies	2	P	This credit is being pursued
Credit (C)	Low-Emitting Materials	3	P	This credit is being pursued
Credit (C)	Construction Indoor Air Quality Management Plan	1	P	This credit is being pursued
Credit (C)	Indoor Air Quality Assessment	2	P	This credit is being pursued
Credit (D)	Thermal Comfort	0-1	P	This credit is being pursued

LEED Credit Guidance

LEED v4 for BD+C: New Construction and Major Renovation
Project Name:
ARMY-FFR TRAINING CENTER, ORANGEBURG, NY
1000138978 - LEED v4 BD+C: NC - D/B RFP

NOTE:	The total number of credits marked as "required" or "preferred" does not equal the required number of credit required for certification of the project. Additional points shall be gained from the remainder of available credits.
KEY:	**R** Required. This credit is required for LEED certification to be achieved.
	A Anticipated. This credit is anticipated to be awarded by GBCI
	P Pursued. This credit is being pursued as part of LEED certification.
	PS Pursued under Special Circumstances. This credit is being pursued but we are citing special circumstances in order to meet the credit requirements. Special circumstances must be approved by GBCI.
	PP Potential to be Pursued. This credit may be acheivable. Requires scope changes to be achieved.
	NP Not pursued. This credit is not being pursued for the reason(s) listed.

		Possible Points	Credit Preferences/ Requirements	Remarks
Credit (D)	Interior Lighting	0	NP	*Current lighting scheme does not meet the credit requirements.*
Credit (D)	Daylight	0	NP	*Current building scheme does not meet the credit requirements.*
Credit (D)	Quality Views	0	NP	*Current building scheme does not meet the credit requirements.*
Credit (D)	Acoustic Performance	0	NP	*Current interior design scheme does not meet the credit requirements.*
Innovation		**6**		
Credit (D)	Innovation : Purchasing Lamps	1	P	This credit is being pursued
Credit (D)	Innovation : PBT Source Reduction	1	P	This credit is being pursued
Credit (D)	Pilot: Integrative Analysis of Building Materials	1	P	This credit is being pursued
Credit (D)	Pilot: Passive Survivability and Functionality During Emergencies	0-1	PP	This credit can be pursued but requires the installation of a battery system tied into the PV Array.
Credit (D)	Exemplary Performance: Enhanced Indoor Air Quality Strategies	1	P	This credit is being pursued
Credit (D)	Exemplary Performance:Renewable Energy Production	1	P	This credit is being pursued
Credit (C)	LEED Accredited Professional	1	P	This credit is being pursued
Regional Priority		**2**		Possible Regional Priority credits to be based on the project location in Zip Code 10962 - per USGBC website.
Credit (D)	Building Life Cycle Impact Reduction	1	P	This credit is being pursued
Credit (D)	Renewable Energy Production	1	P	This credit is being pursued
	Possible Points:	**63**		

Certified: 40 to 49 points, **Silver:** 50 to 59 points, **Gold:** 60 to 79 points, **Platinum:** 80 to 110

K. Unit Plan

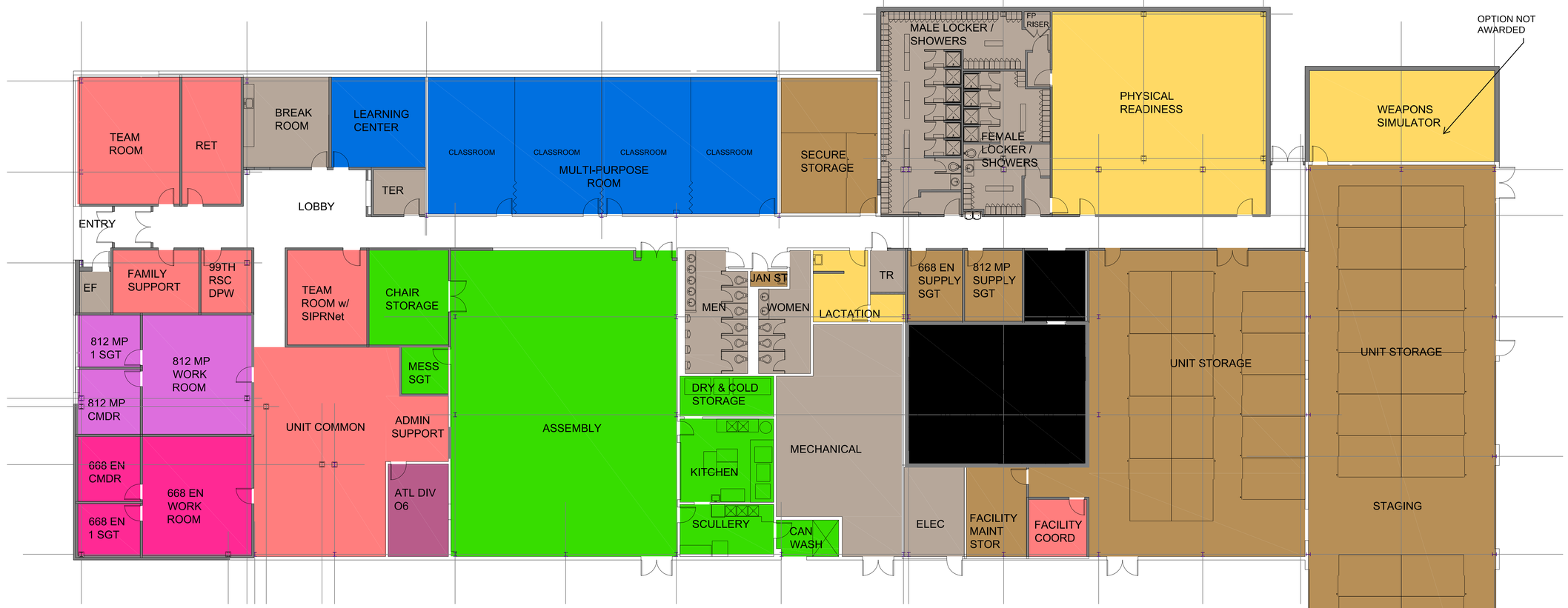

July 29, 2021

LEGEND

WRC1AA 668 EN CO		ASSEMBLY AREAS		STORAGE AREAS	
WTE2AA 812 MP CO		WEAPONS AREA		SPECIAL TRAINING AREAS	
W85Q07 DET 1, 2 BDE ATL DIV		EDUCATIONAL AREAS		SUPPORT AREAS	
COMMON ADMIN AREAS					

For reference only as provided by USACE

TRAINING CENTER UNIT PLAN

16' 8' 0 16'

SCALE: 3/32"=1'-0"
IF PLOTTED TO 22" x 34"

US Army Corps of Engineers ®

MARK	DESCRIPTION	DATE

DESIGNED BY: D. PECHARKA
DRAWN BY: D. PECHARKA
CHECKED BY: R. SCHWARTZ
SUBMITTED BY:
SIZE: ANSI D
ISSUE DATE: 07 MAY 2020
SOLICITATION NO.:
CONTRACT NO.:

US ARMY CORPS OF ENGINEERS
LOUISVILLE DISTRICT

MICHAEL BAKER INTERNATIONAL
100 AIRSIDE DRIVE
MOON TOWNSHIP, PA 15108

UNITED STATES ARMY RESERVE CENTER
ORANGEBURG, NEW YORK
DESIGN BUILD RFP SOLICITATION
175000

TRAINING CENTER UNIT PLAN

SHEET ID
SK101

mottmac.com

July 29, 2021