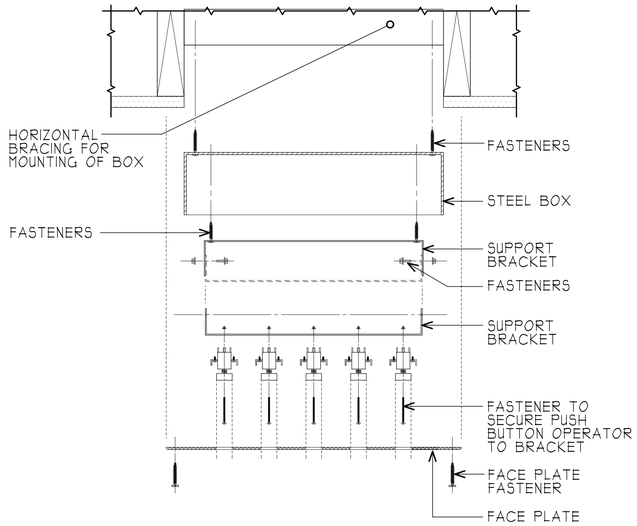

ASSEMBLY DIAGRAM N.T.S.

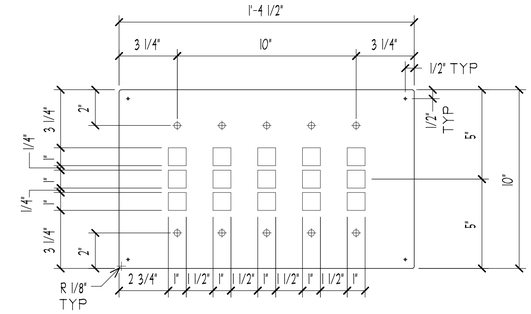

STAINLESS STEEL FACE PLATE

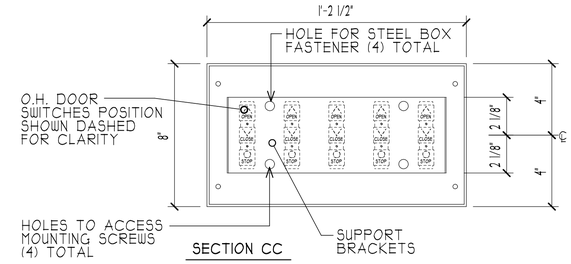

SECTION CC

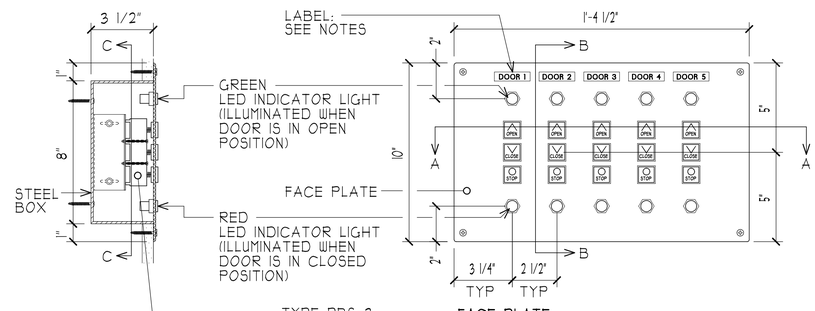

SECTION BB

FACE PLATE

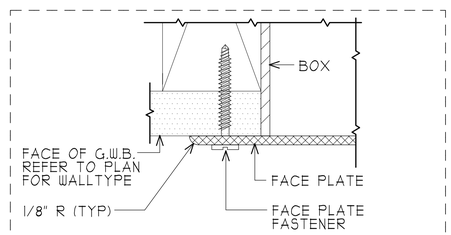

ENLARGED DETAIL N.T.S.

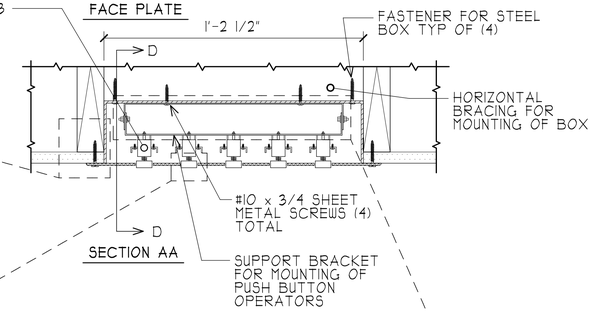

SECTION AA

FABRICATOR TO ENSURE ALL PARTS WILL FUNCTION PROPERLY AFTER ASSEMBLY. FABRICATOR IS RESPONSIBLE FOR DIMENSIONS, TOLERANCES AND MOVEMENT FOR PROPER FUCTION OF DESIGN INTENT. ARCHITECT IS PROVIDING DESIGN INTENT WITH APPROXIMATE DIMENSIONS.

BOX:
HOFFMAN SCREW COVER PULL BOX (TYPE 1) 14 1/2x8x4

STEEL BOX FASTENERS: SELF TAPPING

FACE PLATE:
1/8" THICK BRUSHED STAINLESS STEEL WITH A FINISHED EDGE BEVEL. DIMENSIONS AS SHOWN ON DETAILS

FACE PLATE FASTENERS:
PANCAKE HEAD SCREWS. (FINISH MUST MATCH FACE PLATE) MAX HEAD DIA OF .423

PUSH BUTTON OPERATOR:
RAYNOR PBS-3 OR APPROVED EQUAL

LED INDICATOR LIGHTS:
DOOR OPEN AND DOOR CLOSED LIGHTS ARE 24 VOLT LIGHTS WITH LED BULBS. SIZE: 16MM FLAT INDICATOR LIGHT. THE INDICATOR LIGHTS WILL BE RED & GREEN. SEE DETAILS FOR PLACEMENT. REQUIRES (2) CONDUCTOR LOCKING CONNECTOR FOR EACH INDICATOR LIGHT.

LABELS:
ANNODIZED ALUMINUM 1/2"h x 2"w x 1/32" thick MATT-NON REFLECTIVE W/ FLAT FINISH. SILVER GRAPHICS WITH BLACK BACKGROUND COORDINATE INSCRIPTION AND PLACEMENT ON PANELS WITH OWNER.

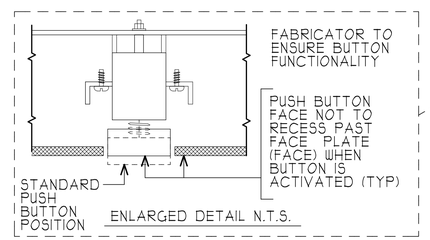

ENLARGED DETAIL N.T.S.

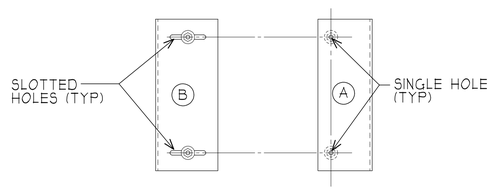

SECTION DD
NOT TO SCALE

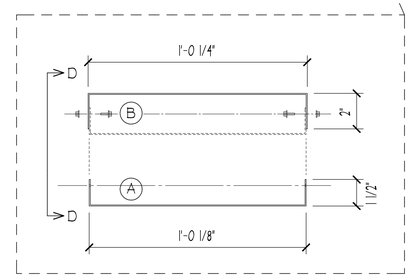

SUPPORT BRACKETS
1/16" THICK STEEL MIN.

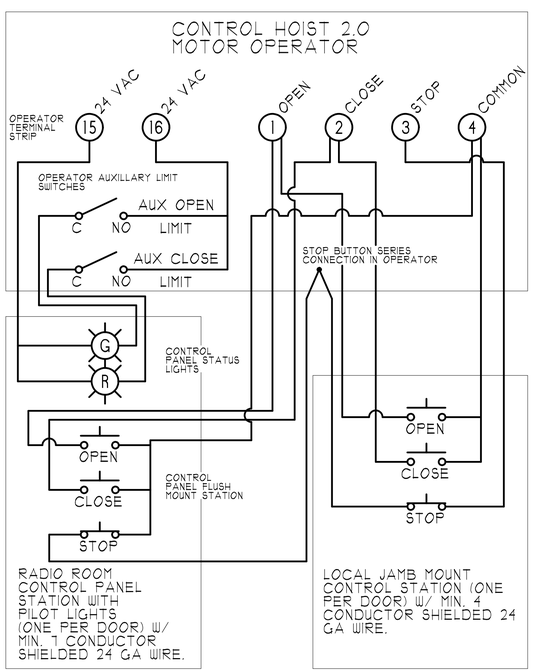

2 / A432 WIRING DETAIL
SCALE: N.T.S.

1 / A432 O.H. DOOR CONTROL PANEL
SCALE: 3" = 1'-0"

MITCHELL ASSOCIATES ARCHITECTS PLLC
29 THACHER PARK ROAD
VOORHEESVILLE, NY 12186
(518) 765-4571 FAX (518) 765-2950
WWW.MITCHELL-ARCHITECTS.COM

EMERGENCY SERVICE FACILITIES

CONSULTANTS:

INSITE ENGINEERING SURVEYING & LANDSCAPE ARCHITECTURE, P.C.
3 GARRETT PLACE
CARMEL, NY 10512
(845) 225-7490 FAX: (845) 225-9717

CRAIG A. MALONEY, P.E.
STRUCTURAL ENGINEERING CONSULTANT
3 BENEDICT COURT
BALLSTON SPA, NY 12020
(518) 584-9944 FAX: (518) 584-9955

GERARD ASSOCIATES
CONSULTING ENGINEERS, P.C.
MECHANICAL, PLUMBING, AND ELECTRICAL
223 MAIN STREET
GOSHEN, NY 10924
(845) 291-1212 FAX: (845) 291-1939

COPYRIGHT 2012
MITCHELL ASSOCIATES ARCHITECTS
UNAUTHORIZED ALTERATION OR ADDITION TO THIS DOCUMENT IS A VIOLATION OF LAW

NEW STATION FOR PUTNAM VALLEY FIRE STATION #1

OSCAWANA LAKE ROAD
PUTNAM VALLEY, NEW YORK

REVISION HISTORY

	DATE	DESCRIPTION
1		
2		
3		
4		
5		
6		
7		
8		

O.H. DOOR CONTROL PANEL

SCALE: AS NOTED
DWG. BY: JDA
DWG DATE: 8/14/2020
STATUS: BID DRAWINGS

A432

DWG ID#: S:\J Drive\Putnam Valley\PV_A432

PLOT TIME: 3:01PM