CONTRACT 1
SUFFERN WWTP UPGRADES

VILLAGE OF SUFFERN ROCKLAND COUNTY, NEW YORK

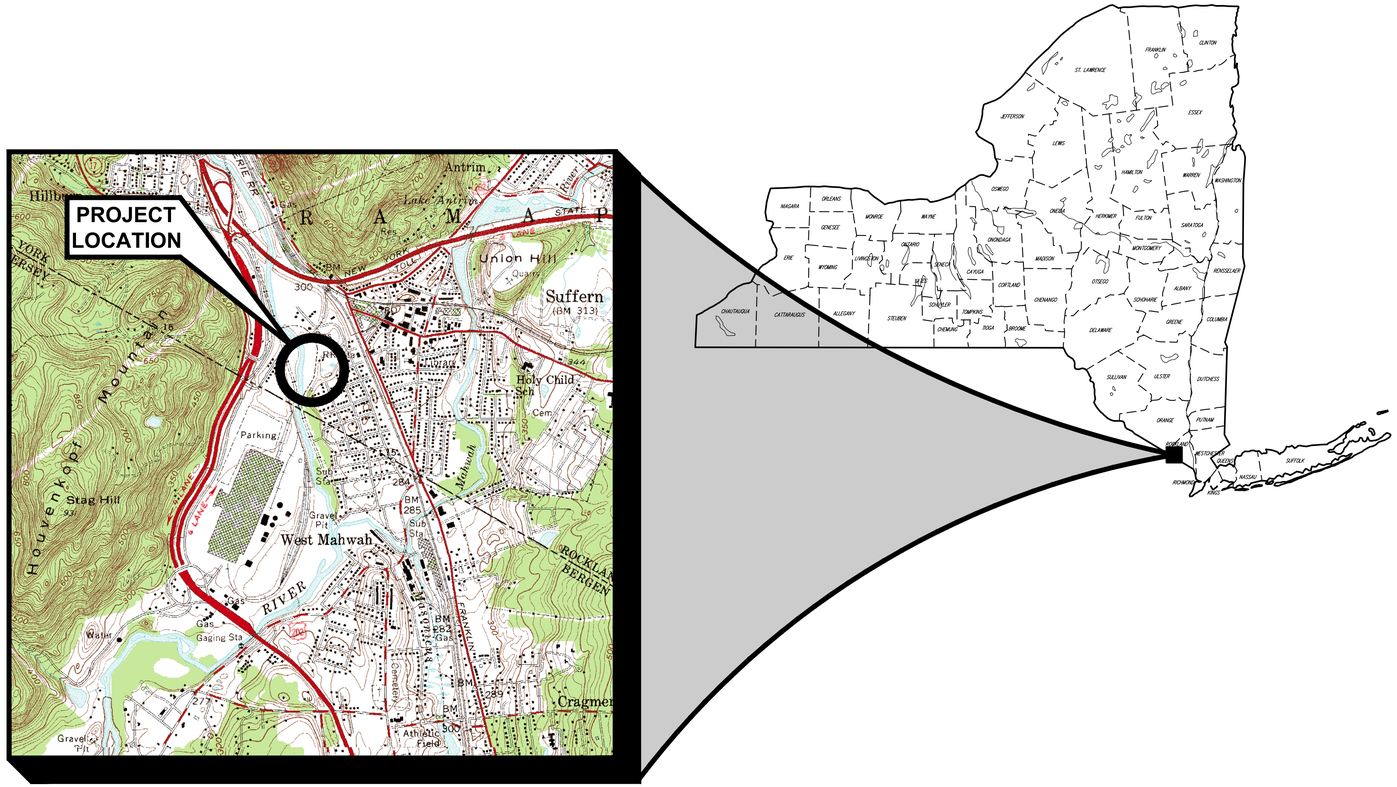

1 ED FAGAN DRIVE, SUFFERN, NEW YORK 10901

LOCATION MAP
SCALE: 1"=1500'

CONTRACT - 1G

CONTRACT - 1H

CONTRACT - 1E

DECEMBER 2020

PREPARED BY:

DELAWARE ENGINEERING, D.P.C.
CIVIL AND ENVIRONMENTAL ENGINEERING
28 MADISON AVENUE EXTENSION, ALBANY, NY 12203 - 518.452.1290
55 SOUTH MAIN ST, ONEONTA, NY 13820 - 607.432.8073
31 NORTH MAIN STREET, LIBERTY, NY 12754 - 845.747.9952
6 TOWNSEND STREET, WALTON, NY 13856 - 607.865.9235
16 EAST MARKET ST., RED HOOK, NY 12571 - 518.452.1290
548 BROADWAY, MONTICELLO, NY 12701 - 845.791.7777

BID PLANS

WARNING – IT IS A VIOLATION OF NEW YORK EDUCATION LAW SECTION 7209.2, FOR ANY PERSON, UNLESS HE IS ACTING UNDER THE DIRECTION OF A LICENSED PROFESSIONAL ENGINEER OR LAND SURVEYOR, TO ALTER THIS DOCUMENT IN ANY WAY. IF ALTERED THE ALTERING PERSON SHALL COMPLY WITH THE REQUIREMENTS OF NEW YORK EDUCATION LAW, SECTION 7209.2.

DATE: 12/2020
DRAWN BY: GJM
SCALE: AS SHOWN
REVIEWED BY: RF
PROJECT NO.: 19-1612
FILE:

DELAWARE ENGINEERING, D.P.C.
CIVIL AND ENVIRONMENTAL ENGINEERING
28 MADISON AVENUE EXTENSION, ALBANY, NY 12203 - 518.452.1290
55 SOUTH MAIN ST, ONEONTA, NY 13820 - 607.432.8073
31 NORTH MAIN STREET, LIBERTY, NY 12754 - 845.747.9952
6 TOWNSEND STREET, WALTON, NY 13856 - 607.865.9235
16 EAST MARKET ST., RED HOOK, NY 12571 - 518.452.1290
548 BROADWAY, MONTICELLO, NY 12701 - 845.791.7777

STATE OF NEW YORK
REGISTERED PROFESSIONAL ENGINEER
RICHARD FLORIO
LICENSED PROFESSIONAL ENGINEER

REVISIONS

NO.	DATE	DESCRIPTION

CONTRACT 1
SUFFERN WWTP UPGRADES
VILLAGE OF SUFFERN
ROCKLAND COUNTY, NEW YORK

COVER SHEET

SHEET:
C-001

File: H:\DRAWINGS\SUFFERN WWTP\ACAD\SFRN_C-001_COVER.DWG Saved: 12/8/2020 8:37:56 AM Plotted: 12/8/2020 8:38:31 AM User: Gary Markham LastSaveBy: markhamg

GENERAL CONSTRUCTION NOTES:

1. THE CONTRACTOR SHALL EXAMINE AND VERIFY, IN THE FIELD, ALL CONDITIONS AND DIMENSIONS. DIMENSIONS OF THE EXISTING STRUCTURES SHOWN ON THESE PLANS ARE FOR GENERAL REFERENCE ONLY. THEY HAVE BEEN TAKEN FROM THE ORIGINAL CONSTRUCTION OR SUBSEQUENT REHABILITATION DRAWINGS AND ARE NOT GUARANTEED. THE CONTRACTOR SHALL TAKE ALL SUCH FIELD MEASUREMENTS TO ASSURE PROPER FIT OF THE FINISHED WORK, AND THE CONTRACTOR SHALL ASSUME FULL RESPONSIBILITY FOR THEIR ACCURACY. IF FIELD CONDITIONS AND DIMENSIONS DIFFER FROM THOSE SHOWN ON THE PLANS, THE CONTRACTOR SHALL USE THE FIELD CONDITIONS AND DIMENSIONS AND MAKE THE APPROPRIATE CHANGES TO THOSE SHOWN ON THE PLANS, AS APPROVED BY THE ENGINEER. WHEN SHOP DRAWINGS BASED ON FIELD MEASUREMENTS ARE SUBMITTED FOR APPROVAL, THE FIELD MEASUREMENTS MADE SHALL BE INDICATED ON THE SHOP DRAWINGS SUBMITTED FOR REFERENCE OF THE REVIEWER.
2. THERE SHALL BE NO CLAIM AGAINST THE OWNER MADE BY THE CONTRACTOR FOR WORK PERTAINING TO MODIFICATIONS, AS MAY BE REQUIRED, DUE TO ANY DIFFERENCE BETWEEN ACTUAL FIELD CONDITIONS AND THOSE SHOWN BY THE DETAILS AND DIMENSIONS ON THE CONTRACT PLANS. THE CONTRACTOR WILL BE PAID AT A LUMP SUM OR THE UNIT BID PRICE FOR THE ACTUAL QUANTITIES OF MATERIALS USED OR FOR THE WORK PERFORMED, AS INDICATED BY THE VARIOUS ITEMS IN THE CONTRACT. THE CONTRACTOR SHOULD NOTE THAT ADDITIONAL WORK MAY BE REQUIRED AS THE CONTRACT PROGRESSES, WHICH IS NOT SHOWN OR NOTED ON THE PLANS. THIS WORK SHALL BE PERFORMED BY THE CONTRACTOR, AS ORDERED BY THE ENGINEER, AND PAYMENT SHALL BE MADE AT THE BID PRICE FOR THE APPROPRIATE ITEMS. THE CONTRACTOR'S ATTENTION IS DIRECTED TO THE FACT THAT, DUE TO THE NATURE OF REPLACEMENT PROJECTS, THE EXACT EXTENT OF REPLACEMENT WORK CANNOT ALWAYS BE ACCURATELY DETERMINED PRIOR TO THE COMMENCEMENT OF WORK. THESE CONTRACT DOCUMENTS HAVE BEEN PREPARED BASED ON FIELD INSPECTION AND OTHER INFORMATION AVAILABLE AT THE TIME. ACTUAL FIELD CONDITIONS MAY REQUIRE MODIFICATIONS TO CONSTRUCTION DETAILS AND WORK QUANTITIES. THE CONTRACTOR SHALL PERFORM THE WORK IN ACCORDANCE WITH FIELD CONDITIONS.
3. THE CONTRACTOR WILL BE HELD RESPONSIBLE FOR ALL DAMAGE TO THE EXISTING STRUCTURES CAUSED BY HIS OPERATIONS WHICH IS NOT INCLUDED AS PART OF THIS WORK. ALL DAMAGE TO THE EXISTING STRUCTURES WHICH IS NOT PART OF THE INTENDED WORK SHALL BE REPAIRED BY THE CONTRACTOR WITHOUT COST TO THE OWNER, AND TO THE SATISFACTION OF THE ENGINEER. THE CONTRACTOR SHALL CONDUCT HIS REMOVAL OPERATIONS TO THE SATISFACTION OF THE ENGINEER SO AS NOT TO UNDULY DISTURB UNDERLYING MATERIALS WHICH ARE TO REMAIN IN PLACE. THE CONTRACTOR SHALL PERFORM ALL WORK WITH CARE SO THAT ANY MATERIALS WHICH ARE TO REMAIN IN PLACE, OR WHICH ARE TO REMAIN THE PROPERTY OF THE OWNER, WILL NOT BE DAMAGED. IF THE CONTRACTOR DAMAGES ANY MATERIALS WHICH ARE TO REMAIN IN PLACE, OR WHICH ARE TO REMAIN THE PROPERTY OF THE OWNER, THE DAMAGED MATERIAL SHALL BE REPAIRED OR REPLACED IN A MANNER SATISFACTORY TO THE ENGINEER AT THE EXPENSE OF THE CONTRACTOR.
4. WHENEVER ITEMS IN THE CONTRACT REQUIRE MATERIALS TO BE REMOVED AND DISPOSED, THE COST OF SUPPLYING A LEGAL DISPOSAL AREA AND TRANSPORTATION TO THE AREA SHALL BE INCLUDED IN THE PRICE BID.
5. THE CONTRACTOR IS STRONGLY SUGGESTED TO VISIT THE SITE BEFORE BIDDING, TO BECOME FAMILIAR WITH THE FIELD CONDITIONS AND TO JUDGE THE EXTENT AND NATURE OF THE WORK TO BE DONE UNDER THIS CONTRACT. NO EXTRA COMPENSATION WILL BE ALLOWED TO THE CONTRACTOR BECAUSE OF THE CONTRACTOR'S FAILURE TO INCLUDE IN THEIR BID ALL ITEMS AND MATERIALS WHICH THEY ARE REQUIRED TO FURNISH IN ACCORDANCE WITH THE CONTRACT DOCUMENTS.
6. ALL WORK AREAS AT THE SITE SHALL BE COMPLETELY SECURED, CONFORMING WITH OSHA REGULATIONS, TO PROTECT THE PUBLIC AND PREVENT UNAUTHORIZED ENTRY. THE COST OF THIS WORK IS TO BE INCLUDED IN THE VARIOUS ITEMS OF THE CONTRACT.
7. IT WILL BE THE CONTRACTOR'S OBLIGATION AND RESPONSIBILITY TO USE METHODS AND EQUIPMENT WHICH WILL INSURE THE SATISFACTORY COMPLETION OF THE REQUIRED WORK WITHIN THE TIME FRAME STIPULATED IN THE CONTRACT.
8. THE CONTRACTOR SHALL PROVIDE SURVEY AND STAKE OUT FOR THIS PROJECT. THE COST FOR THE SURVEY AND STAKE OUT SHALL BE INCLUDED IN THE BID FOR VARIOUS ITEMS OF THE CONTRACT REQUIRING SURVEY AND STAKEOUT.
9. LOCATION OF UTILITIES, PUBLIC AND/OR PRIVATE, INDICATED AS EXISTING AND/OR TO BE CONSTRUCTED AS SHOWN ON THE PLANS ARE APPROXIMATE ONLY. THEIR EXACT LOCATION SHALL BE DETERMINED IN THE FIELD. ADDITIONAL UTILITY LINES, WHETHER ABANDONED OR IN SERVICE, MAY EXIST AND IT SHALL BE THE CONTRACTOR'S RESPONSIBILITY TO CONDUCT HIS OPERATIONS AND TAKE THE NECESSARY PRECAUTIONS TO PREVENT INTERFERENCE WITH, OR DAMAGE TO, THESE OR OTHER FACILITIES DURING THE COURSE OF CONSTRUCTION. CONTRACTOR SHALL HIRE LOCATING COMPANY TO PROVIDE LOCATE AND MARKOUT ON PRIVATE PROPERTY AT NO ADDITIONAL COST TO OWNER.
10. IN THE EVENT THE CONTRACTOR DAMAGES AN EXISTING UTILITY SERVICE CAUSING AN INTERRUPTION IN SAID SERVICE, THEY SHALL IMMEDIATELY COMMENCE WORK TO RESTORE SERVICE AND MAY NOT CEASE THE WORK OPERATION UNTIL SERVICE IS RESTORED.
11. THE CONTRACTOR SHALL CALL DIG SAFELY NEW YORK (DSNY) (1-800-962-7962) A MINIMUM OF THREE WORKING DAYS PRIOR TO ANY EXCAVATION TO HAVE EXISTING UNDERGROUND UTILITIES LOCATED IN THE FIELD. CONTRACTOR WILL BE RESPONSIBLE TO MAINTAIN ALL UTILITY LOCATIONS THROUGHOUT PROJECT.
12. AREAS DISTURBED BY THE CONTRACTOR AS PART OF THE WORK TO BE PERFORMED UNDER THIS CONTRACT, SHALL BE RESTORED TO PRECONSTRUCTION STANDARDS AND TO THE SATISFACTION OF THE ENGINEER. ALL THE DISTURBED GRASS AREAS SHALL BE GRADED AND SEEDED IN A MANNER APPROVED BY THE ENGINEER.
13. AS-BUILT DRAWINGS: DURING THE DAILY PROGRESS OF WORK, THE CONTRACTOR'S JOB SUPERINTENDENT SHALL RECORD ON THE FIELD SET OF DRAWINGS ALL WORK INSTALLED. ALL PIPING, VALVES, FITTINGS, FIRE HYDRANTS, ETC. SHALL BE LOCATED IN TWO DIRECTIONS. ONE LOCATION SHALL BE REFERENCED PERPENDICULAR TO THE RIGHT OF WAY LINES AND/OR PROPERTY LINES (PREFERABLY BOTH). SIZE, TYPE, AND CLASS OF PIPING, VALVES, FITTINGS, FIRE HYDRANTS, ETC. SHALL BE SHOWN (I.E. 8" CL 52 D.I.P., 6" GATE VALVE). ALL LOCATIONS WHERE THE TOP OF THE PIPING IS LESS THAN 60" DEEP OR MORE THAN 96" DEEP SHALL BE NOTED ON THE AS-BUILTS.
14. CLEAN-UP: ALL SURPLUS MATERIALS OF CONSTRUCTION SHALL BE REMOVED FROM THE SITE AND LEGALLY DISPOSED OF BY THE CONTRACTOR AS PART OF THE CONTRACT WITH THE OWNER. THERE SHALL BE NO ADDITIONAL PAYMENT FOR THIS WORK.
15. DEWATERING: THE CONTRACTOR SHALL AT ALL TIMES DURING CONSTRUCTION PROVIDE AMPLE MEANS AND EQUIPMENT WITH WHICH TO PROMPTLY REMOVE AND DISPOSE OF ALL WATER ENTERING THE TRENCH AND STRUCTURE EXCAVATIONS AND SHALL KEEP SAID EXCAVATIONS ACCEPTABLY DRY, UNTIL THE PIPING AND/OR STRUCTURES TO BE BUILT THEREIN ARE COMPLETED. ALL WATER PUMPED OR DRAINED FROM THE WORK AREA SHALL BE DISPOSED OF IN A MANNER AS TO NOT DAMAGE SEWER, WATER, ELECTRICAL OR ANY OTHER PIPING STRUCTURES OR PROPERTY. NO PIPE SHALL BE LAID IN WATER AND NO WATER SHALL BE ALLOWED TO RISE ABOVE THE BOTTOM OF ANY PIPE WHILE IT IS BEING JOINTED. DEWATERING WITH UP TO A 4" PUMP SHALL BE INCLUDED IN THE CONTRACT PRICE. ADDITIONAL COMPENSATION FOR DEWATERING THAT REQUIRES LARGER PUMPS, WELLPOINTS, OR OTHER METHODS SHALL BE APPROVED BY THE ENGINEER AND THE OWNER PRIOR TO INSTALLATION.
16. JOBSITE SAFETY: WHILE ON THE JOBSITE, THE CONTRACTOR SHALL AT ALL TIMES OBSERVE ALL FEDERAL, STATE, AND LOCAL SAFETY RULES, REGULATIONS AND LAWS. JOBSITE SAFETY IS THE SOLE RESPONSIBILITY OF THE CONTRACTOR.
17. MAINTENANCE OF SEWER FLOWS: CONTRACTOR SHALL MAINTAIN ALL SEWER FLOWS. BYPASS PUMPING MAY BE REQUIRED.
18. PROJECT BASE MAPPING OBTAINED FROM DRAWINGS: "VILLAGE OF SUFFERN, NEW YORK WASTEWATER TREATMENT FACILITIES USEPA / NYSDEC PROJECT C-36-1002", BY: RIDDICK ASSOCIATES, P.C., DATED: 9/15/80.
19. EXISTING CONTOUR LINE DATA WITH ELEVATIONS SHOWN ON PROJECT PLANS WERE OBTAINED FROM NYS GIS CLEARINGHOUSE WEBSITE.
20. ADDITIONAL SURVEY INFORMATION PERTAINING TO EXISTING SITE STRUCTURE ELEVATIONS PROVIDED BY: MFS CONSULTING ENGINEERS & SURVEYOR, DPC., DATED: 6/30/2020.

CONTRACT 1 INDEX:

CONTRACT - 1G

C-001 COVER SHEET
C-002 GENERAL NOTES AND INDEX
C-003 PROCESS FLOW DIAGRAM
C-004 HYDRAULIC PROFILE
C-005 PROPOSED WWTP SEQUENCING PLAN
C-101 EXISTING CONDITIONS PLAN
C-102 EXISTING YARD PIPING PLAN
C-103 EXISTING SITE DEMO PLAN
C-104 PROPOSED SITE PLAN
C-110 EXISTING CONDITIONS HEADWORKS PLAN
C-111 EXISTING CONDITIONS HEADWORKS PLAN
C-112 EXISTING CONDITIONS HEADWORKS SECTION
C-113 EXISTING CONDITIONS HEADWORKS SECTIONS
C-114 EXISTING HEADWORKS DEMO PLAN
C-115 EXISTING HEADWORKS DEMO PLAN
C-116 EXISTING HEADWORKS DEMO SECTION
C-117 EXISTING HEADWORKS DEMO SECTIONS
C-120 EXISTING CONDITIONS TRICKLING FILTERS BELOW EL.=287.92 PLAN
C-121 EXISTING CONDITIONS TRICKLING FILTERS ABOVE EL.=287.92 PLAN
C-122 EXISTING CONDITIONS TRICKLING FILTERS NO. 1 AND NO. 2 (TYPICAL) SECTION
C-123 EXISTING TRICKLING FILTERS BELOW EL.=287.92 DEMO PLAN
C-124 EXISTING TRICKLING FILTERS ABOVE EL.=287.92 DEMO PLAN
C-125 EXISTING TRICKLING FILTERS NO. 1 AND NO. 2 (TYPICAL) DEMO SECTION
C-130 EXISTING CONDITIONS TRICKLING FILTER PUMP STATION PLANS
C-131 EXISTING CONDITIONS TRICKLING FILTER PUMP STATION SECTIONS
C-132 EXISTING TRICKLING FILTER PUMP STATION DEMO PLANS
C-133 EXISTING TRICKLING FILTER PUMP STATION DEMO SECTIONS
C-140 EXISTING CONDITIONS BLOWER BUILDING PLAN AND SECTION
C-141 EXISTING BLOWER BUILDING DEMO PLAN AND SECTION
M-101 PROPOSED HEADWORKS PLAN ABOVE TOP SLAB
M-102 PROPOSED HEADWORKS PLAN BELOW TOP SLAB
M-103 PROPOSED HEADWORKS SECTION
M-104 PROPOSED HEADWORKS SECTION
M-105 PROPOSED HEADWORKS SECTIONS
M-106 PROPOSED HEADWORKS SECTIONS
M-110 PROPOSED TRICKLING FILTERS BELOW EL.=287.92 UPGRADE PLAN
M-111 PROPOSED TRICKLING FILTERS ABOVE EL.=287.92 UPGRADE PLAN
M-112 PROPOSED TRICKLING FILTERS NO. 1 AND NO. 2 (TYPICAL) UPGRADE SECTION
M-120 PROPOSED TRICKLING FILTER PUMP STATION UPGRADE PLANS
M-121 PROPOSED TRICKLING FILTER PUMP STATION UPGRADE SECTIONS
D-101 MISCELLANEOUS DETAILS
D-102 MISCELLANEOUS DETAILS
D-103 EROSION CONTROL NOTES AND DETAILS
A101 ARCHITECTURAL FLOOR PLAN
A102 ARCHITECTURAL ELEVATIONS
SN01 STRUCTURAL NOTES
SN02 STRUCTURAL NOTES AND TYPICAL DETAILS
SN03 STRUCTURAL NOTES AND TYPICAL DETAILS
SN04 SPECIAL INSPECTIONS AND TESTING
S100 FOUNDATION PLAN (BELOW ELEVATION 278.16')
S101 TOP SLAB/GRATING PLAN
S102 ROOF FRAMING PLAN
S103 SECTION
S104 SECTION
S105 SECTION
S106 SECTION
S107 SECTION
S108 SECTION
S109 SECTION
S110 SECTION
S201 TYPICAL PERIMETER FOUNDATION AND STEM WALL DETAILS
S202 TYPICAL ROOF EAVE, RAKE AND RIDGE DETAILS

CONTRACT - 1H

M-200 HVAC COVER SHEET & SCHEDULES
M-201 HVAC NEW WORK PLAN
M-202 HVAC SPECIFICATIONS & SEQUENCES

CONTRACT - 1E

E1 ELECTRICAL NOTES
E2 ELECTRICAL ONE-LINE DIAGRAM
E3 MCC-3 DEMO PLAN
E4 CONDUIT SCHEDULE
E-101 HEADWORKS BUILDING ELECTRICAL LAYOUT
E-102 HEADWORKS LIGHTING PLAN
E-103 SLUDGE BUILDING ELECTRICAL PLAN
E-201 PROPOSED HEADWORKS ELECTRICAL BUILDING PLAN AND SECTION
E-202 HEADWORKS ELECTRICAL BUILDING LIGHTING PLAN

BID PLANS

DATE: 12/2020
DRAWN BY: GJM
SCALE: AS SHOWN
REVIEWED BY: RF
PROJECT NO.: 19-1612
FILE:

DELAWARE ENGINEERING, D.P.C.
CIVIL AND ENVIRONMENTAL ENGINEERING
28 MADISON AVENUE EXTENSION, ALBANY, NY 12203 - 518.452.1290
55 SOUTH MAIN ST, ONEONTA, NY 13820 - 607.432.8073
31 NORTH MAIN STREET, LIBERTY, NY 12754 - 845.747.9952
6 TOWNSEND STREET, WALTON, NY 13856 - 607.865.9235
16 EAST MARKET ST., RED HOOK, NY 12571 - 518.452.1290
548 BROADWAY, MONTICELLO, NY 12701 - 845.791.7777

REVISIONS

NO.	DATE	DESCRIPTION

CONTRACT 1
SUFFERN WWTP UPGRADES
VILLAGE OF SUFFERN
ROCKLAND COUNTY, NEW YORK

GENERAL NOTES AND INDEX

SHEET: C-002

WARNING - IT IS A VIOLATION OF NEW YORK EDUCATION LAW SECTION 7209.2, FOR ANY PERSON, UNLESS HE IS ACTING UNDER THE DIRECTION OF A LICENSED PROFESSIONAL ENGINEER OR LAND SURVEYOR, TO ALTER THIS DOCUMENT IN ANY WAY. IF ALTERED THE ALTERING PERSON SHALL COMPLY WITH THE REQUIREMENTS OF NEW YORK EDUCATION LAW, SECTION 7209.2.

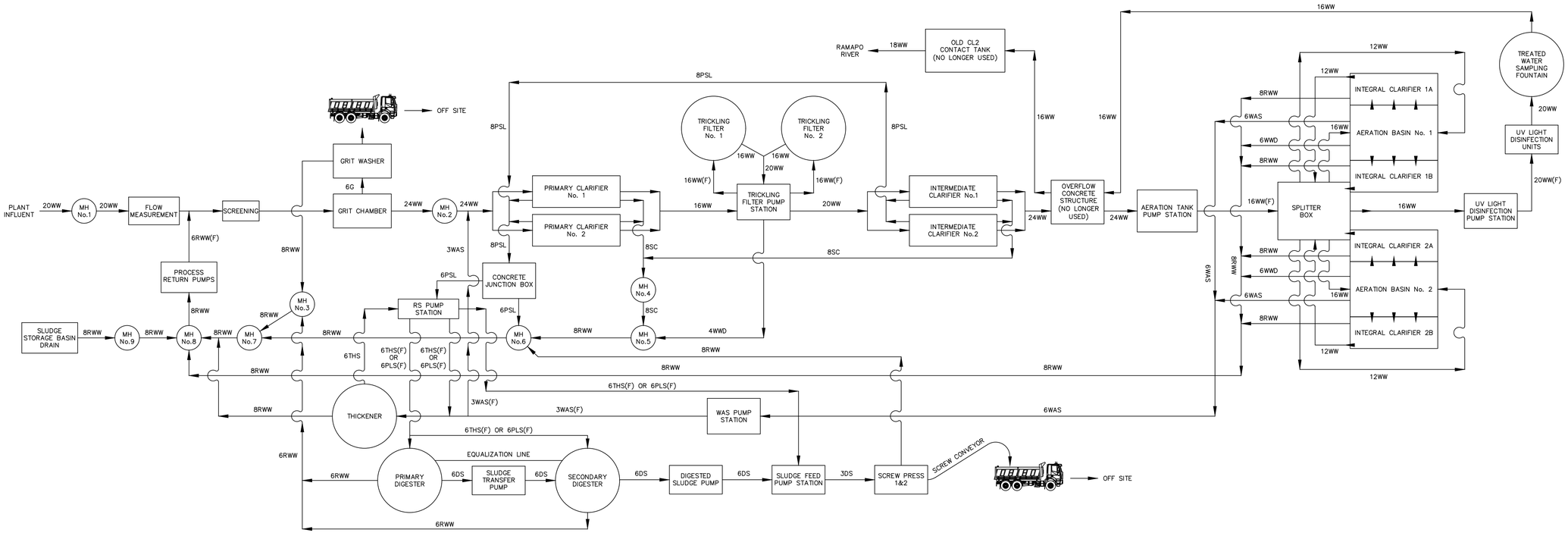

EXISTING PROCESS FLOW DIAGRAM

SCALE: NTS

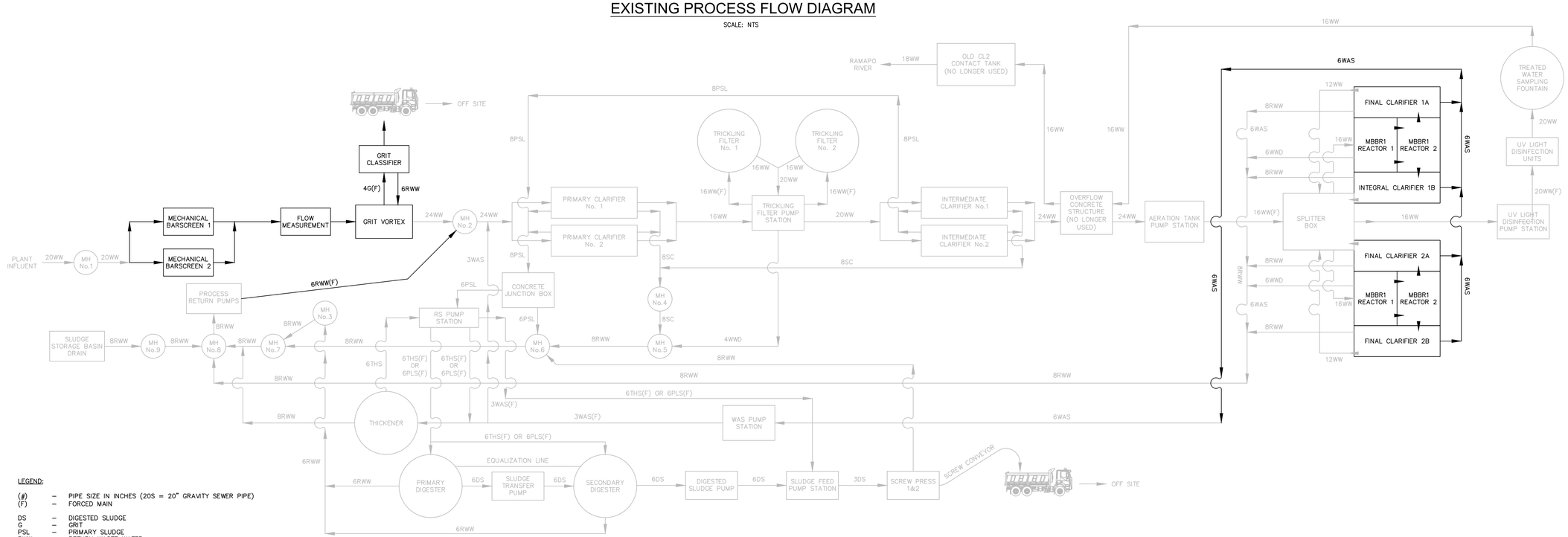

LEGEND:

(#)	–	PIPE SIZE IN INCHES (20S = 20" GRAVITY SEWER PIPE)
(F)	–	FORCED MAIN
DS	–	DIGESTED SLUDGE
G	–	GRIT
PSL	–	PRIMARY SLUDGE
RWW	–	RETURN WASTE WATER
SC	–	SCUM
SLC	–	SLUDGE CAKE
THS	–	THICKENED SLUDGE
WAS	–	WASTE ACTIVATED SLUDGE
WW	–	WASTE WATER
WWD	–	WASTE WATER DRAIN

PROPOSED PROCESS FLOW DIAGRAM

SCALE: NTS

BID PLANS

WARNING – IT IS A VIOLATION OF NEW YORK EDUCATION LAW SECTION 7209.2, FOR ANY PERSON, UNLESS HE IS ACTING UNDER THE DIRECTION OF A LICENSED PROFESSIONAL ENGINEER OR LAND SURVEYOR, TO ALTER THIS DOCUMENT IN ANY WAY. IF ALTERED THE ALTERING PERSON SHALL COMPLY WITH THE REQUIREMENTS OF NEW YORK EDUCATION LAW, SECTION 7209.2.

DATE:	12/2020
DRAWN BY:	GJM
SCALE:	AS SHOWN
REVIEWED BY:	RF
PROJECT NO.:	19-1612
FILE:	

DELAWARE ENGINEERING, D.P.C.
CIVIL AND ENVIRONMENTAL ENGINEERING
28 MADISON AVENUE EXTENSION, ALBANY, NY 12203 - 518.452.1290
55 SOUTH MAIN ST, ONEONTA, NY 13820 - 607.432.8073
31 NORTH MAIN STREET, LIBERTY, NY 12754 - 845.747.9952
6 TOWNSEND STREET, WALTON, NY 13856 - 607.865.9235
16 EAST MARKET ST., RED HOOK, NY 12571 - 518.452.1290
548 BROADWAY, MONTICELLO, NY 12701 - 845.791.7777

STATE OF NEW YORK · REGISTERED PROFESSIONAL ENGINEER · LICENSED PROFESSIONAL ENGINEER · No. 081396

REVISIONS

NO.	DATE	DESCRIPTION

CONTRACT 1
SUFFERN WWTP UPGRADES
VILLAGE OF SUFFERN
ROCKLAND COUNTY, NEW YORK

PROCESS FLOW DIAGRAM

SHEET:
C-003

File: H:\DRAWINGS\SUFFERN\WWTP\CAD\SFRN_C-003_PROCESS_FLOW_DIAGRAM.DWG Saved: 12/8/2020 8:46:13 AM Plotted: 12/8/2020 8:50:29 AM User: Gary Markham LastSavedBy: markhamg

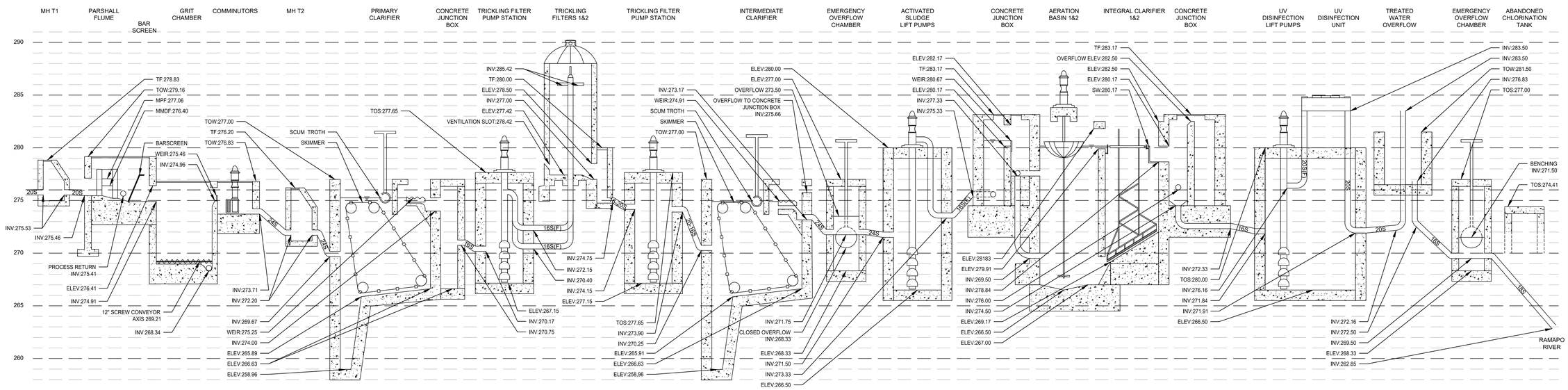

EXISTING HYDRAULIC PROFILE

NOT TO SCALE

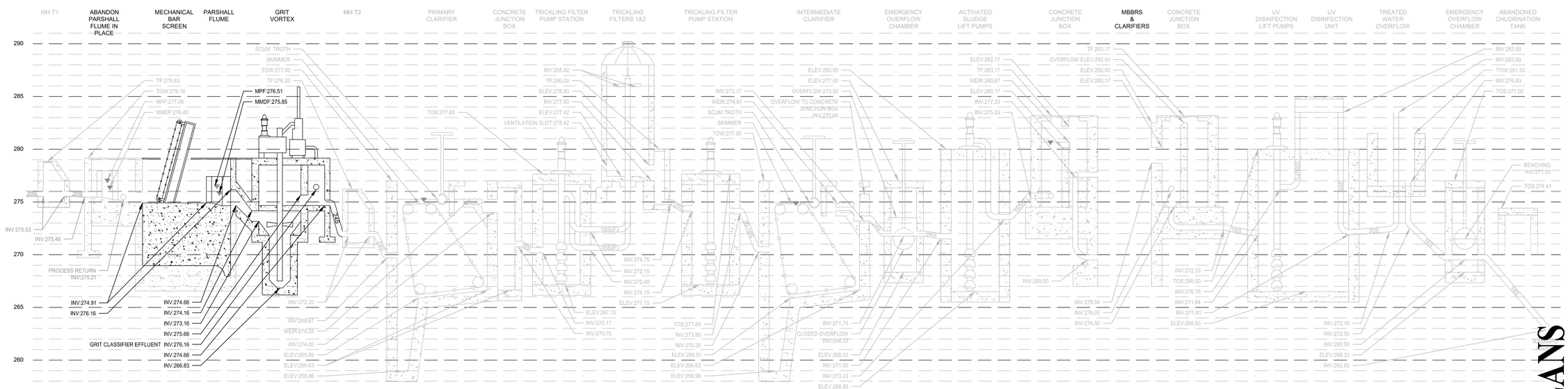

PROPOSED HYDRAULIC PROFILE

NOT TO SCALE

NOTES:

MAX MONTHLY DAILY FLOW	1.8	MGD
MAX PEAK FLOW	4.0	MGD
100 YEAR FLOOD ELEVATION	276	FT

TF	-	TOP OF FRAME
TOW	-	TOP OF WALL
TOS	-	TOP OF SLAB
MMDF	-	MAX MONTHLY DAILY FLOW
MPF	-	MAX PEAK FLOW

BID PLANS

WARNING – IT IS A VIOLATION OF NEW YORK EDUCATION LAW SECTION 7209.2, FOR ANY PERSON, UNLESS HE IS ACTING UNDER THE DIRECTION OF A LICENSED PROFESSIONAL ENGINEER OR LAND SURVEYOR, TO ALTER THIS DOCUMENT IN ANY WAY. IF ALTERED THE ALTERING PERSON SHALL COMPLY WITH THE REQUIREMENTS OF NEW YORK EDUCATION LAW, SECTION 7209.2.

DATE: 12/2020
DRAWN BY: GJM
SCALE: AS SHOWN
REVIEWED BY: RF
PROJECT NO.: 19-1612
FILE:

DELAWARE ENGINEERING, D.P.C.
CIVIL AND ENVIRONMENTAL ENGINEERING
28 MADISON AVENUE EXTENSION, ALBANY, NY 12203 - 518.452.1290
55 SOUTH MAIN ST., ONEONTA, NY 13820 - 607.432.8073
31 NORTH MAIN STREET, LIBERTY, NY 12754 - 845.747.9952
6 TOWNSEND STREET, WALTON, NY 13856 - 607.865.9235
16 EAST MARKET ST., RED HOOK, NY 12571 - 518.452.1290
548 BROADWAY, MONTICELLO, NY 12701 - 845.791.7777

REGISTERED PROFESSIONAL ENGINEER STATE OF NEW YORK 081-196 LICENSED

REVISIONS

NO.	DATE	DESCRIPTION

CONTRACT 1
SUFFERN WWTP UPGRADES
VILLAGE OF SUFFERN
ROCKLAND COUNTY, NEW YORK

HYDRAULIC PROFILE

SHEET:
C-004

File: H:\DRAWINGS\SUFFERN\WWTP\ACAD\SFRN_C-004_HYDRAULIC_PROFILE.DWG Saved: 12/8/2020 8:51:09 AM Plotted: 12/8/2020 8:52:08 AM User: Gary Markham LastSavedBy: markhamg

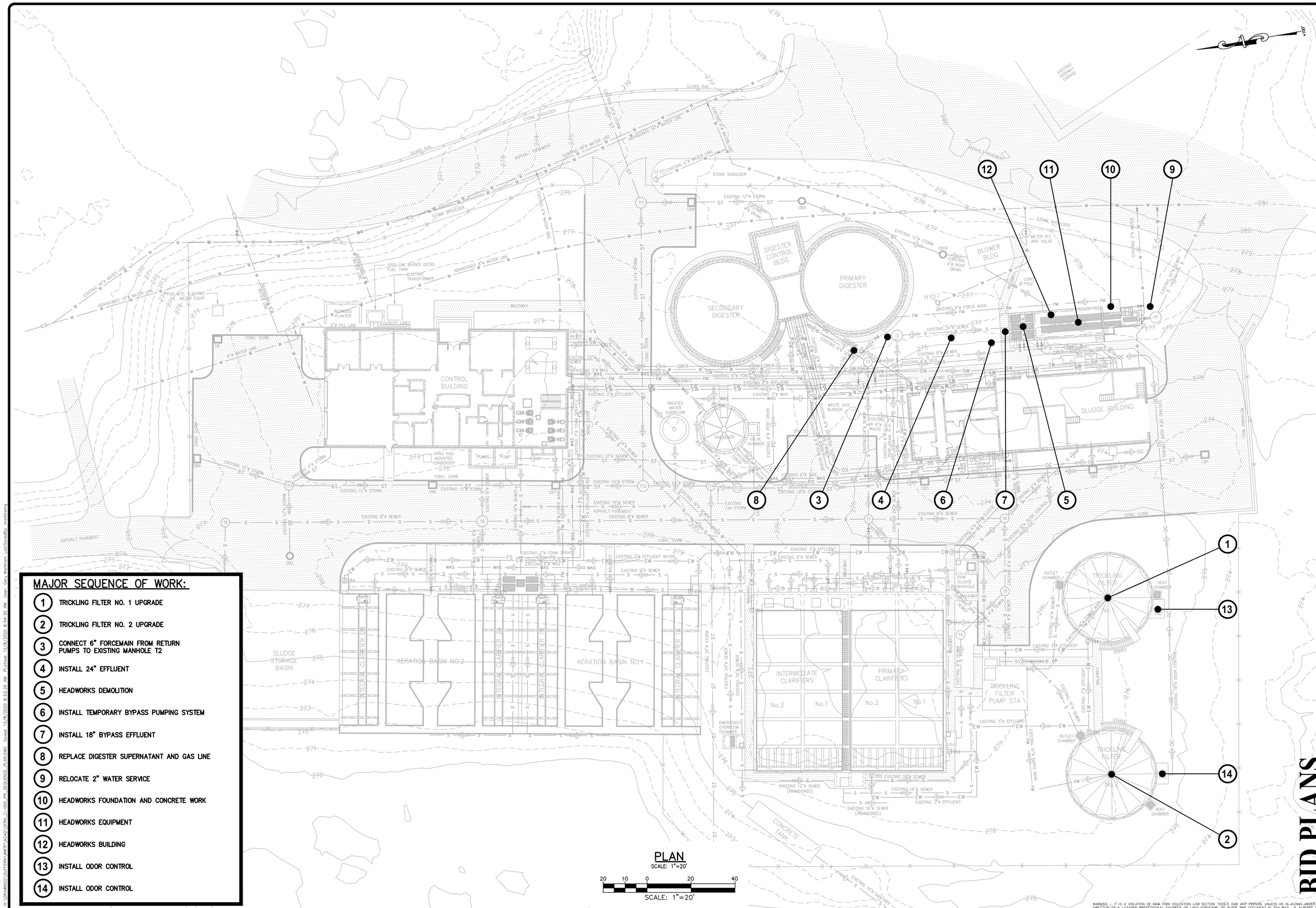

MAJOR SEQUENCE OF WORK:

1. TRICKLING FILTER NO. 1 UPGRADE
2. TRICKLING FILTER NO. 2 UPGRADE
3. CONNECT 6" FORCEMAIN FROM RETURN PUMPS TO EXISTING MANHOLE T2
4. INSTALL 24" EFFLUENT
5. HEADWORKS DEMOLITION
6. INSTALL TEMPORARY BYPASS PUMPING SYSTEM
7. INSTALL 18" BYPASS EFFLUENT
8. REPLACE DIGESTER SUPERNATANT AND GAS LINE
9. RELOCATE 2" WATER SERVICE
10. HEADWORKS FOUNDATION AND CONCRETE WORK
11. HEADWORKS EQUIPMENT
12. HEADWORKS BUILDING
13. INSTALL ODOR CONTROL
14. INSTALL ODOR CONTROL

PLAN

SCALE: 1"=20'

20 10 0 20 40

SCALE: 1"=20'

WARNING – IT IS A VIOLATION OF NEW YORK EDUCATION LAW SECTION 7209.2, FOR ANY PERSON, UNLESS HE IS ACTING UNDER THE DIRECTION OF A LICENSED PROFESSIONAL ENGINEER OR LAND SURVEYOR, TO ALTER THIS DOCUMENT IN ANY WAY. IF ALTERED THE ALTERING PERSON SHALL COMPLY WITH THE REQUIREMENTS OF NEW YORK EDUCATION LAW SECTION 7209.2.

BID PLANS

DATE:	12/2020
DRAWN BY:	GJM
SCALE:	AS SHOWN
REVIEWED BY:	RF
PROJECT NO.:	19-1612
FILE:	

DELAWARE ENGINEERING, D.P.C.
CIVIL AND ENVIRONMENTAL ENGINEERING
28 MADISON AVENUE EXTENSION, ALBANY, NY 12203 - 518.452.1290
55 SOUTH MAIN ST, ONEONTA, NY 13820 - 607.432.8073
31 NORTH MAIN STREET, LIBERTY, NY 12754 - 845.747.9952
6 TOWNSEND STREET, WALTON, NY 13856 - 607.865.9235
16 EAST MARKET ST., RED HOOK, NY 12571 - 518.452.1290
548 BROADWAY, MONTICELLO, NY 12701 - 845.791.7777

STATE OF NEW YORK · REGISTERED PROFESSIONAL ENGINEER · GARY J. MARKHAM · LICENSED PROFESSIONAL ENGINEER

REVISIONS

NO.	DATE	DESCRIPTION

CONTRACT 1
SUFFERN WWTP UPGRADES
VILLAGE OF SUFFERN
ROCKLAND COUNTY, NEW YORK

PROPOSED
WWTP SEQUENCING
PLAN

SHEET:
C-005

File: H:\DRAWINGS\SUFFERN\WWTP\ACAD\SFRN_C-005_PR_SEQUENCE_PLAN.DWG Sheet: 12/8/2020 8:53:26 AM Plotted: 12/8/2020 8:54:30 AM User: Gary Markham LastSavedBy: markhamg

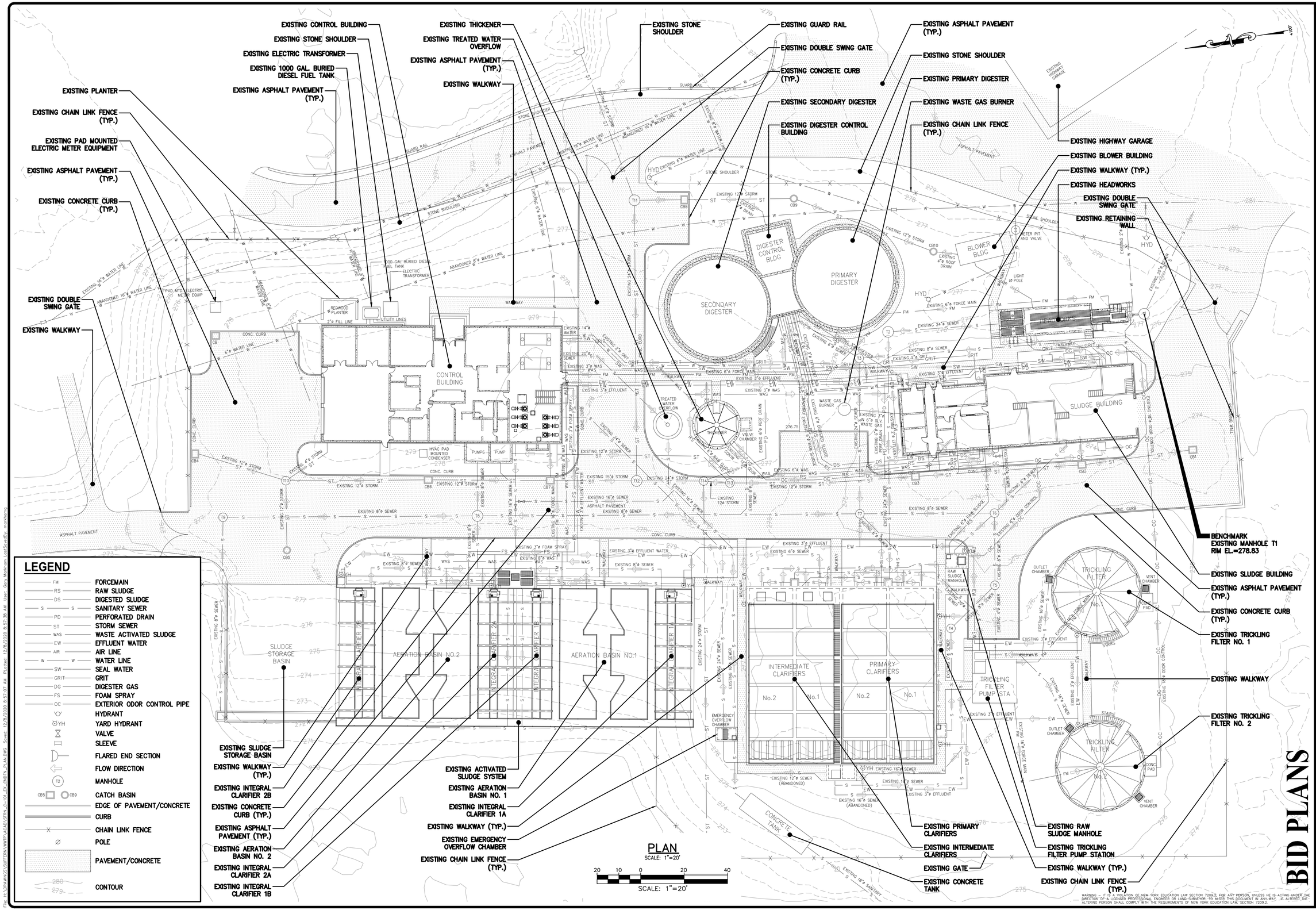

DATE: 12/2020
DRAWN BY: GJM
SCALE: AS SHOWN
REVIEWED BY: RF
PROJECT NO.: 19-1612
FILE:

DELAWARE ENGINEERING, D.P.C.
CIVIL AND ENVIRONMENTAL ENGINEERING
28 MADISON AVENUE EXTENSION, ALBANY, NY 12203 - 518.452.1290
55 SOUTH MAIN ST, ONEONTA, NY 13820 - 607.432.8073
31 NORTH MAIN STREET, LIBERTY, NY 12754 - 845.747.9952
6 TOWNSEND STREET, WALTON, NY 13856 - 607.865.9235
16 EAST MARKET ST., RED HOOK, NY 12571 - 518.452.1290
548 BROADWAY, MONTICELLO, NY 12701 - 845.791.7777

REVISIONS

NO.	DATE	DESCRIPTION

CONTRACT 1
SUFFERN WWTP UPGRADES
VILLAGE OF SUFFERN
ROCKLAND COUNTY, NEW YORK

EXISTING CONDITIONS PLAN

SHEET: C-101

WARNING – IT IS A VIOLATION OF NEW YORK EDUCATION LAW SECTION 7209.2, FOR ANY PERSON, UNLESS HE IS ACTING UNDER THE DIRECTION OF A LICENSED PROFESSIONAL ENGINEER OR LAND SURVEYOR, TO ALTER THIS DOCUMENT IN ANY WAY. IF ALTERED, THE ALTERING PERSON SHALL COMPLY WITH THE REQUIREMENTS OF NEW YORK EDUCATION LAW SECTION 7209.2.

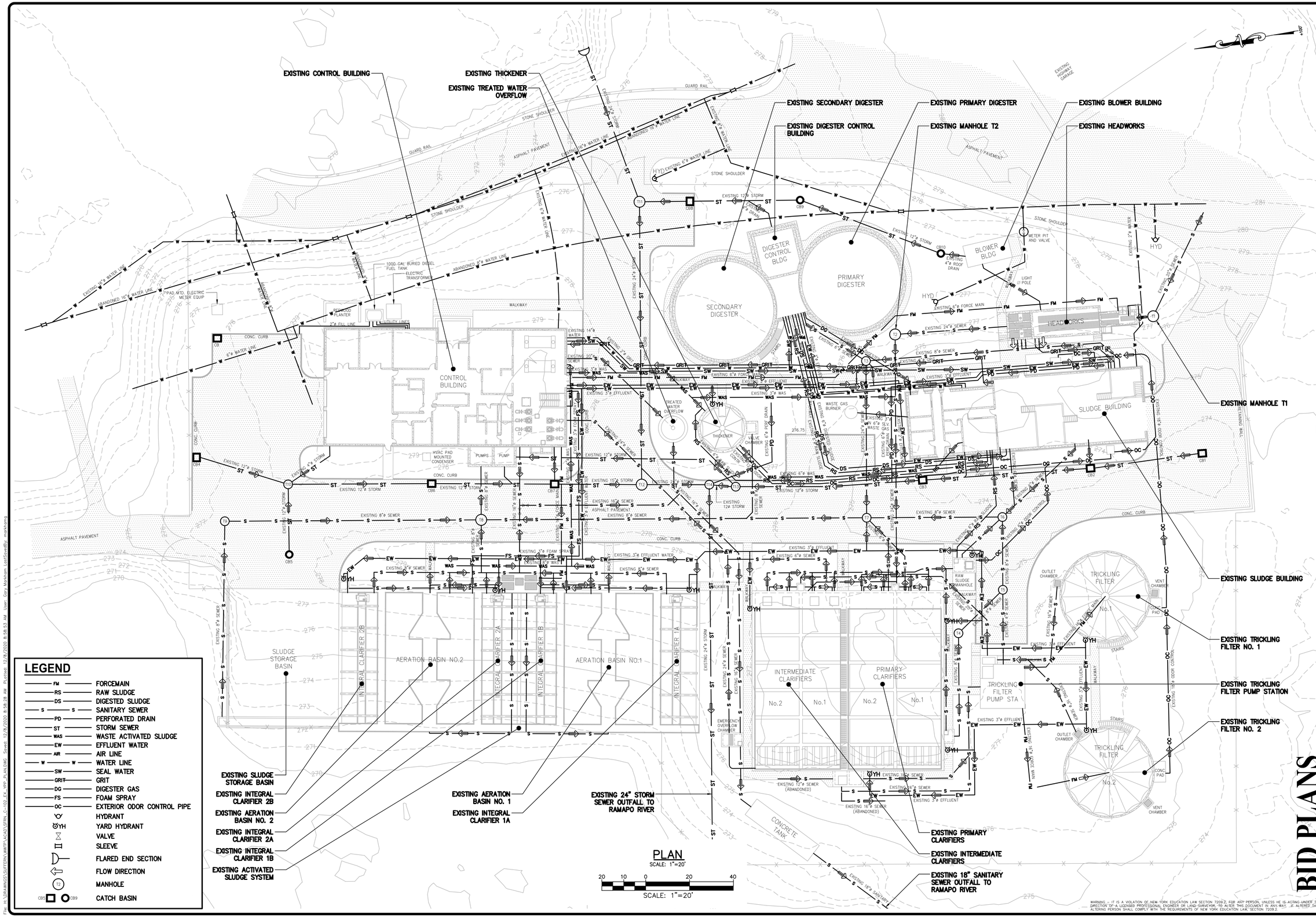

WARNING – IT IS A VIOLATION OF NEW YORK EDUCATION LAW SECTION 7209.2, FOR ANY PERSON, UNLESS HE IS ACTING UNDER THE DIRECTION OF A LICENSED PROFESSIONAL ENGINEER OR LAND SURVEYOR, TO ALTER THIS DOCUMENT IN ANY WAY. IF ALTERED, THE ALTERING PERSON SHALL COMPLY WITH THE REQUIREMENTS OF NEW YORK EDUCATION LAW, SECTION 7209.2.

DATE:	12/2020
DRAWN BY:	GJM
SCALE:	AS SHOWN
REVIEWED BY:	RF
PROJECT NO.:	19-1612
FILE:	

DELAWARE ENGINEERING, D.P.C.
CIVIL AND ENVIRONMENTAL ENGINEERING
28 MADISON AVENUE EXTENSION, ALBANY, NY 12203 - 518.452.1290
55 SOUTH MAIN ST, ONEONTA, NY 13820 - 607.432.8073
31 NORTH MAIN STREET, LIBERTY, NY 12754 - 845.747.9952
6 TOWNSEND STREET, WALTON, NY 13856 - 607.865.9235
16 EAST MARKET ST., RED HOOK, NY 12571 - 518.452.1290
548 BROADWAY, MONTICELLO, NY 12701 - 845.791.7777

STATE OF NEW YORK
REGISTERED PROFESSIONAL ENGINEER
RICHARD FOLLOTT
LICENSED PROFESSIONAL ENGINEER

REVISIONS

NO.	DATE	DESCRIPTION

CONTRACT 1
SUFFERN WWTP UPGRADES
VILLAGE OF SUFFERN
ROCKLAND COUNTY, NEW YORK

EXISTING
YARD PIPING PLAN

SHEET:
C-102

NOTE:
1. CONTRACTOR SHALL REMOVE AND DISPOSE OF ANY EQUIPMENT NOT SHOWN THAT IS DIRECTLY ASSOCIATED WITH THE DETAILED REMOVALS DEPICTED.

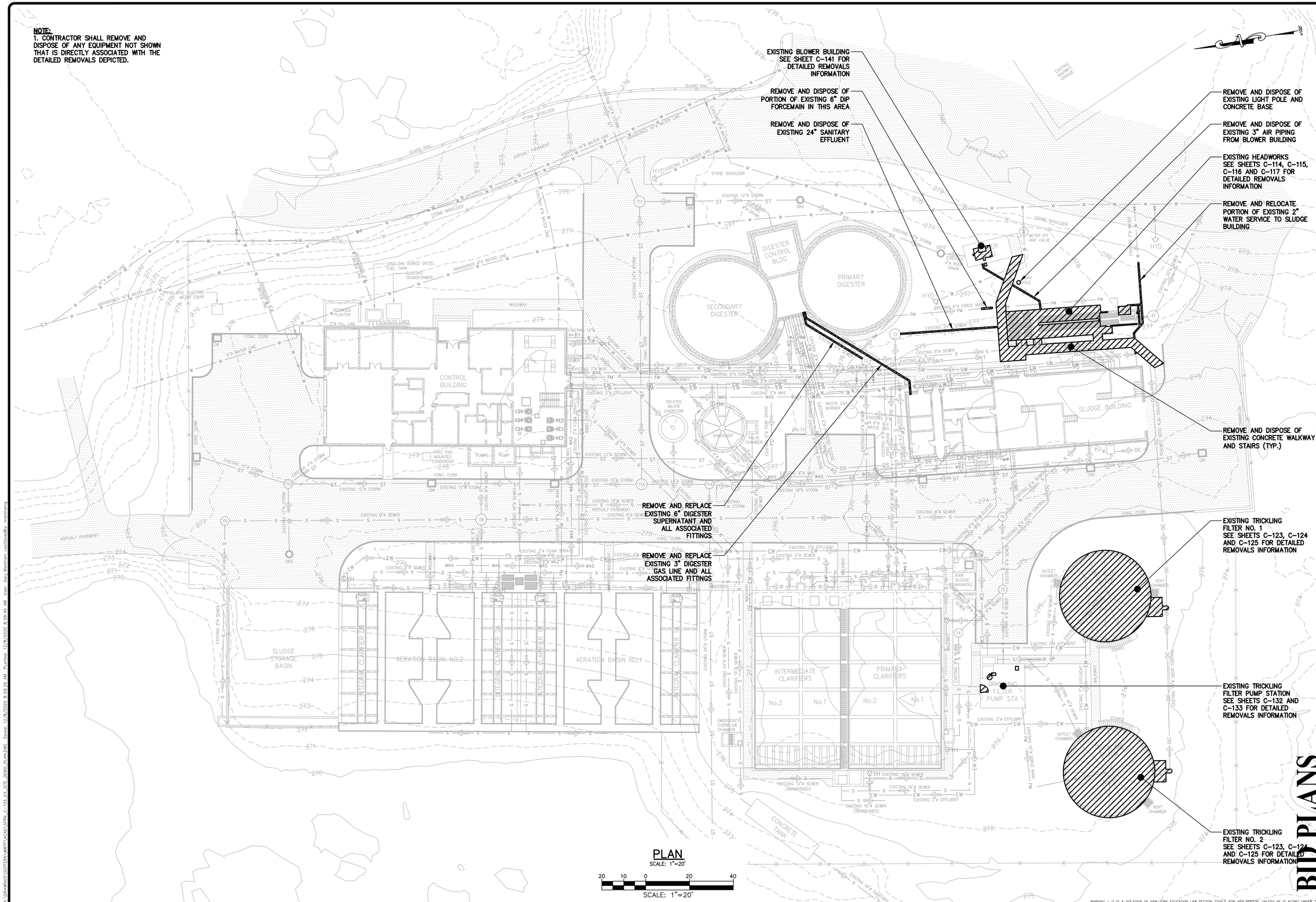

PLAN
SCALE: 1"=20'

20 10 0 20 40
SCALE: 1"=20'

WARNING – IT IS A VIOLATION OF NEW YORK EDUCATION LAW SECTION 7209.2, FOR ANY PERSON, UNLESS HE IS ACTING UNDER THE DIRECTION OF A LICENSED PROFESSIONAL ENGINEER OR LAND SURVEYOR, TO ALTER THIS DOCUMENT IN ANY WAY. IF ALTERED, THE ALTERING PERSON SHALL COMPLY WITH THE REQUIREMENTS OF NEW YORK EDUCATION LAW SECTION 7209.2.

BID PLANS

DATE:	12/2020
DRAWN BY:	GJM
SCALE:	AS SHOWN
REVIEWED BY:	RF
PROJECT NO.:	19-1612
FILE:	

DELAWARE ENGINEERING, D.P.C.
CIVIL AND ENVIRONMENTAL ENGINEERING
28 MADISON AVENUE EXTENSION, ALBANY, NY 12203 - 518.452.1290
55 SOUTH MAIN ST, ONEONTA, NY 13820 - 607.432.8073
31 NORTH MAIN STREET, LIBERTY, NY 12754 - 845.747.9952
6 TOWNSEND STREET, WALTON, NY 13856 - 607.865.9235
16 EAST MARKET ST., RED HOOK, NY 12571 - 518.452.1290
548 BROADWAY, MONTICELLO, NY 12701 - 845.791.7777

STATE OF NEW YORK · REGISTERED PROFESSIONAL ENGINEER · GARY M. JIMAS · LICENSED PROFESSIONAL ENGINEER

REVISIONS		
NO.	DATE	DESCRIPTION

CONTRACT 1
SUFFERN WWTP UPGRADES
VILLAGE OF SUFFERN
ROCKLAND COUNTY, NEW YORK

EXISTING
SITE DEMO PLAN

SHEET:
C-103

File: I:\DRAWINGS\SUFFERN\WWTP\ACAD\SFRN_C-103_EX_SITE_DEMO_PLAN.DWG Sheet: 12/8/2020 8:59:25 AM Plotted: 12/8/2020 8:59:45 AM User: Gary Markham LastSaved By: markhamg

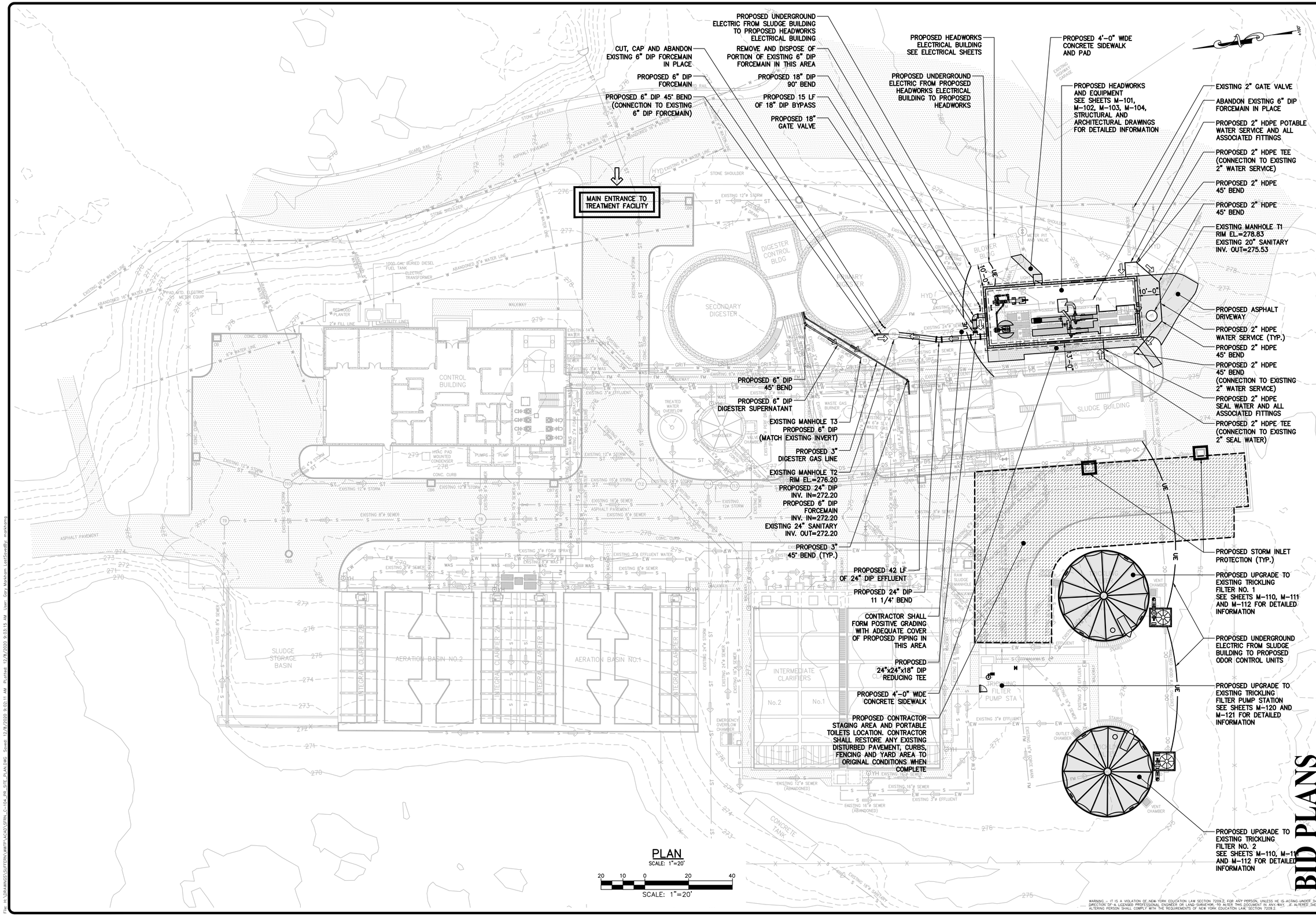

BID PLANS

WARNING -- IT IS A VIOLATION OF NEW YORK EDUCATION LAW SECTION 7209.2, FOR ANY PERSON, UNLESS HE IS ACTING UNDER THE DIRECTION OF A LICENSED PROFESSIONAL ENGINEER OR LAND SURVEYOR, TO ALTER THIS DOCUMENT IN ANY WAY. IF ALTERED THE ALTERING PERSON SHALL COMPLY WITH THE REQUIREMENTS OF NEW YORK EDUCATION LAW SECTION 7209.2.

DATE:	12/2020
DRAWN BY:	GJM
SCALE:	AS SHOWN
REVIEWED BY:	RF
PROJECT NO.:	19-1612
FILE:	

DELAWARE ENGINEERING, D.P.C.
CIVIL AND ENVIRONMENTAL ENGINEERING
28 MADISON AVENUE EXTENSION, ALBANY, NY 12203 - 518.452.1290
55 SOUTH MAIN ST, ONEONTA, NY 13820 - 607.432.8073
31 NORTH MAIN STREET, LIBERTY, NY 12754 - 845.747.9952
6 TOWNSEND STREET, WALTON, NY 13856 - 607.865.9235
16 EAST MARKET ST., RED HOOK, NY 12571 - 518.452.1290
548 BROADWAY, MONTICELLO, NY 12701 - 845.791.7777

STATE OF NEW YORK
REGISTERED PROFESSIONAL ENGINEER
LICENSED PROFESSIONAL ENGINEER

REVISIONS

NO.	DATE	DESCRIPTION

CONTRACT 1
SUFFERN WWTP UPGRADES
VILLAGE OF SUFFERN
ROCKLAND COUNTY, NEW YORK

PROPOSED SITE PLAN

SHEET:
C-104

File: H:\DRAWINGS\SUFFERN\WWTP\ACAD\SFRN_C-104_PR_SITE_PLAN.DWG Saved: 12/8/2020 9:22:11 AM Plotted: 12/8/2020 9:03:15 AM User: Gary Markham LastSavedBy: markhamg

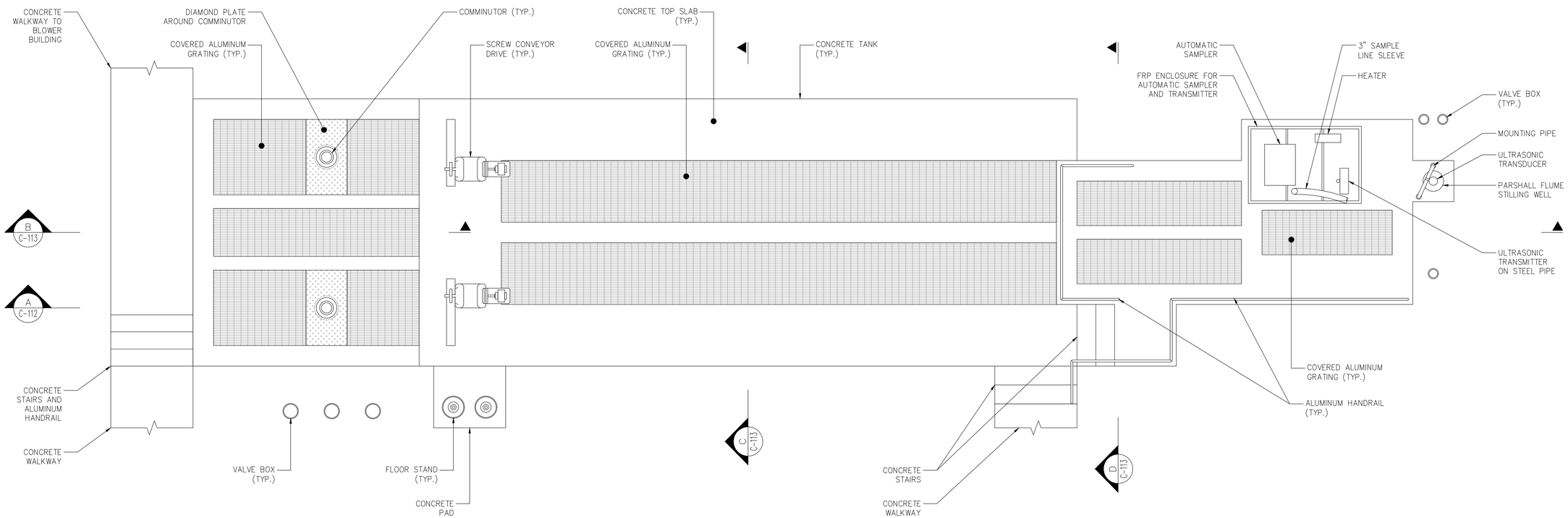

PLAN – ABOVE TOP SLAB

SCALE: 3/8"=1'-0"

BID PLANS

DATE: 12/2020
DRAWN BY: GJM
SCALE: AS SHOWN
REVIEWED BY: RF
PROJECT NO.: 19-1612
FILE:

DELAWARE ENGINEERING, D.P.C.
CIVIL AND ENVIRONMENTAL ENGINEERING
28 MADISON AVENUE EXTENSION, ALBANY, NY 12203 - 518.452.1290
55 SOUTH MAIN ST, ONEONTA, NY 13820 - 607.432.8073
31 NORTH MAIN STREET, LIBERTY, NY 12754 - 845.747.9952
6 TOWNSEND STREET, WALTON, NY 13856 - 607.865.9235
16 EAST MARKET ST., RED HOOK, NY 12571 - 518.452.1290
548 BROADWAY, MONTICELLO, NY 12701 - 845.791.7777

STATE OF NEW YORK · REGISTERED PROFESSIONAL ENGINEER · GARY J. MARKHAM · 081301 · FLORIDA

REVISIONS

NO.	DATE	DESCRIPTION

CONTRACT 1
SUFFERN WWTP UPGRADES
VILLAGE OF SUFFERN
ROCKLAND COUNTY, NEW YORK

EXISTING CONDITIONS
HEADWORKS
PLAN

SHEET:
C-110

WARNING – IT IS A VIOLATION OF NEW YORK EDUCATION LAW SECTION 7209.2, FOR ANY PERSON, UNLESS HE IS ACTING UNDER THE DIRECTION OF A LICENSED PROFESSIONAL ENGINEER OR LAND SURVEYOR, TO ALTER THIS DOCUMENT IN ANY WAY. IF ALTERED THE ALTERING PERSON SHALL COMPLY WITH THE REQUIREMENTS OF NEW YORK EDUCATION LAW, SECTION 7209.2.

File: H:\DRAWINGS\SUFFERN\WWTP\ACAD\SFRN_C-110_HDWKS_EX_CNDTN_PLAN.DWG Saved: 12/8/2020 9:04:17 AM Plotted: 12/8/2020 9:04:39 AM User: Gary Markham LastSavedBy: markhamg

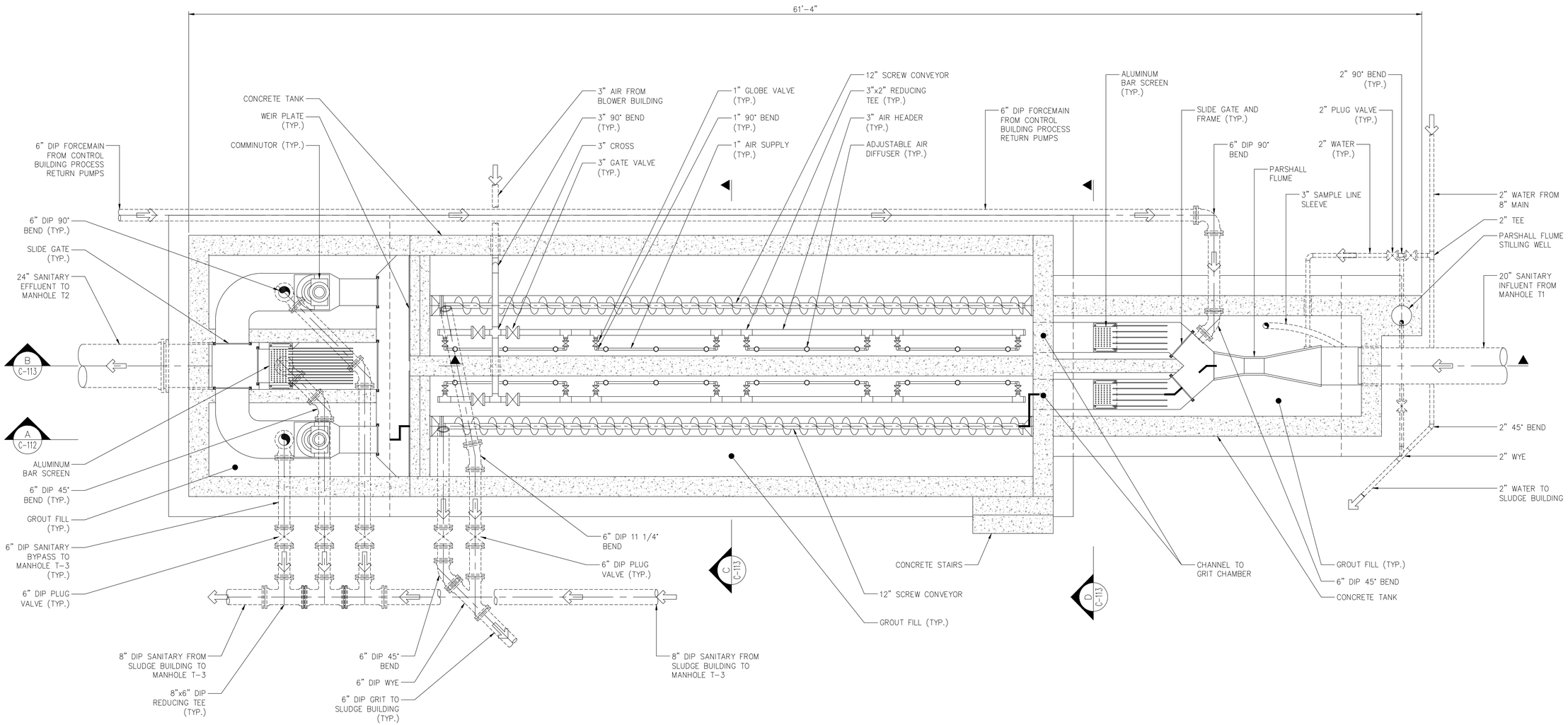

PLAN – BELOW TOP SLAB

SCALE: 3/8"=1'-0"

BID PLANS

WARNING – IT IS A VIOLATION OF NEW YORK EDUCATION LAW SECTION 7209.2, FOR ANY PERSON, UNLESS HE IS ACTING UNDER THE DIRECTION OF A LICENSED PROFESSIONAL ENGINEER OR LAND SURVEYOR, TO ALTER THIS DOCUMENT IN ANY WAY. IF ALTERED THE ALTERING PERSON SHALL COMPLY WITH THE REQUIREMENTS OF NEW YORK EDUCATION LAW, SECTION 7209.2

DATE: 12/2020
DRAWN BY: GJM
SCALE: AS SHOWN
REVIEWED BY: RF
PROJECT NO.: 19-1612
FILE:

DELAWARE ENGINEERING, D.P.C.
CIVIL AND ENVIRONMENTAL ENGINEERING
28 MADISON AVENUE EXTENSION, ALBANY, NY 12203 - 518.452.1290
55 SOUTH MAIN ST, ONEONTA, NY 13820 - 607.432.8073
31 NORTH MAIN STREET, LIBERTY, NY 12754 - 845.747.9952
6 TOWNSEND STREET, WALTON, NY 13856 - 607.865.9235
16 EAST MARKET ST., RED HOOK, NY 12571 - 518.452.1290
548 BROADWAY, MONTICELLO, NY 12701 - 845.791.7777

STATE OF NEW YORK · REGISTERED PROFESSIONAL ENGINEER · GARY J. MARCHAM · 081 080 · LICENSED PROFESSIONAL ENGINEER

REVISIONS

NO.	DATE	DESCRIPTION

CONTRACT 1
SUFFERN WWTP UPGRADES
VILLAGE OF SUFFERN
ROCKLAND COUNTY, NEW YORK

EXISTING CONDITIONS
HEADWORKS
PLAN

SHEET:
C-111

File: H:\DRAWINGS\SUFFERN\WWTP\ACAD\GFRN_C-111_HDWKS_EX_CNDTN_PLAN.DWG Saved: 12/8/2020 9:05:00 AM Plotted: 12/8/2020 9:06:30 AM User: Gary Marcham LastSavedBy: marcham

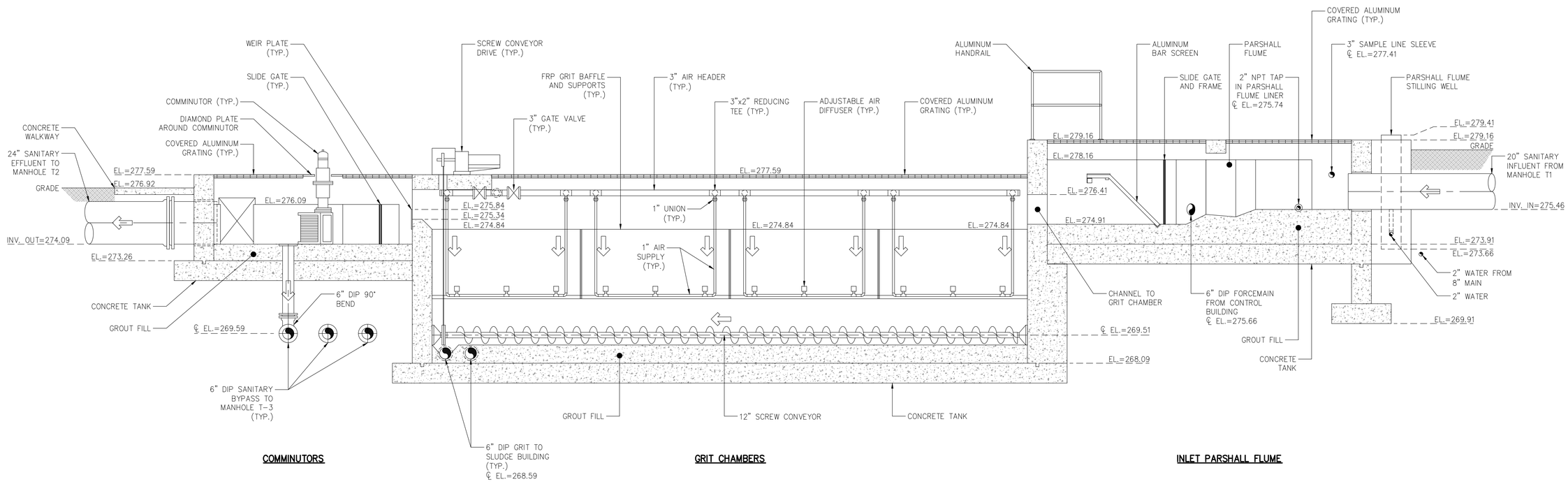

A SECTION
SCALE: 3/8"=1'-0"

DATE: 12/2020
DRAWN BY: GJM
SCALE: AS SHOWN
REVIEWED BY: RF
PROJECT NO.: 19-1612
FILE:

DELAWARE ENGINEERING, D.P.C.
CIVIL AND ENVIRONMENTAL ENGINEERING
28 MADISON AVENUE EXTENSION, ALBANY, NY 12203 - 518.452.1290
55 SOUTH MAIN ST, ONEONTA, NY 13820 - 607.432.8073
31 NORTH MAIN STREET, LIBERTY, NY 12754 - 845.747.9952
6 TOWNSEND STREET, WALTON, NY 13856 - 607.865.9235
16 EAST MARKET ST., RED HOOK, NY 12571 - 518.452.1290
548 BROADWAY, MONTICELLO, NY 12701 - 845.791.7777

STATE OF NEW YORK · LICENSED PROFESSIONAL ENGINEER · REGISTERED TO PRACTICE

REVISIONS

NO.	DATE	DESCRIPTION

CONTRACT 1
SUFFERN WWTP UPGRADES
VILLAGE OF SUFFERN
ROCKLAND COUNTY, NEW YORK

EXISTING CONDITIONS
HEADWORKS
SECTION

BID PLANS

SHEET:
C-112

WARNING – IT IS A VIOLATION OF NEW YORK EDUCATION LAW SECTION 7209.2, FOR ANY PERSON, UNLESS HE IS ACTING UNDER THE DIRECTION OF A LICENSED PROFESSIONAL ENGINEER OR LAND SURVEYOR, TO ALTER THIS DOCUMENT IN ANY WAY. IF ALTERED THE ALTERING PERSON SHALL COMPLY WITH THE REQUIREMENTS OF NEW YORK EDUCATION LAW, SECTION 7209.2.

File: H:\DRAWINGS\SUFFERN\WWTP\ACAD\SFRN_C-112_HDWKS_EX_CNDTN_SECT.DWG Saved: 12/8/2020 9:07:24 AM Plotted: 12/8/2020 9:07:41 AM User: Gary Markham LastSavedBy: markhamg

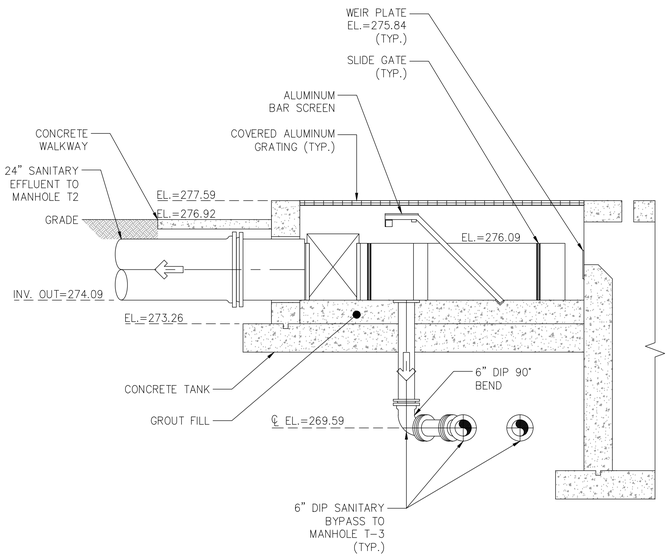

BAR SCREEN

B SECTION
SCALE: 3/8"=1'-0"

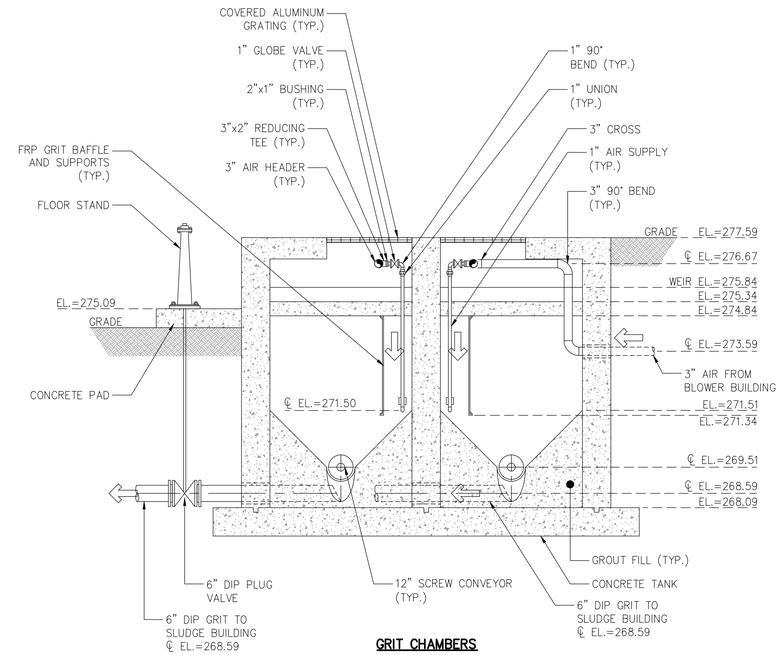

GRIT CHAMBERS

C SECTION
SCALE: 3/8"=1'-0"

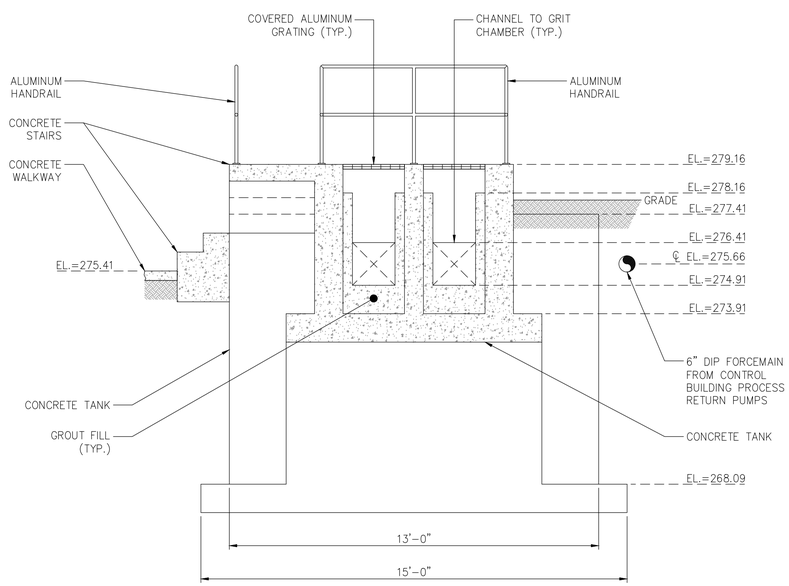

INLET PARSHALL FLUME

D SECTION
SCALE: 3/8"=1'-0"

DATE: 12/2020
DRAWN BY: GJM
SCALE: AS SHOWN
REVIEWED BY: RF
PROJECT NO.: 19-1612
FILE:

DELAWARE ENGINEERING, D.P.C.
CIVIL AND ENVIRONMENTAL ENGINEERING
28 MADISON AVENUE EXTENSION, ALBANY, NY 12203 - 518.452.1290
55 SOUTH MAIN ST, ONEONTA, NY 13820 - 607.432.8073
31 NORTH MAIN STREET, LIBERTY, NY 12754 - 845.747.9952
6 TOWNSEND STREET, WALTON, NY 13856 - 607.865.9235
16 EAST MARKET ST., RED HOOK, NY 12571 - 518.452.1290
548 BROADWAY, MONTICELLO, NY 12701 - 845.791.7777

STATE OF NEW YORK · REGISTERED PROFESSIONAL ENGINEER · GARY J. MARKHAM · 065201 · LICENSED PROFESSIONAL ENGINEER

REVISIONS

NO.	DATE	DESCRIPTION

CONTRACT 1
SUFFERN WWTP UPGRADES
VILLAGE OF SUFFERN
ROCKLAND COUNTY, NEW YORK

EXISTING CONDITIONS
HEADWORKS
SECTIONS

BID PLANS

SHEET:
C-113

WARNING – IT IS A VIOLATION OF NEW YORK EDUCATION LAW SECTION 7209.2, FOR ANY PERSON, UNLESS HE IS ACTING UNDER THE DIRECTION OF A LICENSED PROFESSIONAL ENGINEER OR LAND SURVEYOR, TO ALTER THIS DOCUMENT IN ANY WAY. IF ALTERED THE ALTERING PERSON SHALL COMPLY WITH THE REQUIREMENTS OF NEW YORK EDUCATION LAW, SECTION 7209.2.

File: n:\DRAWINGS\SUFFERN\WWTP\ACAD\SFRN_C-113_HDWKS_EX_CNDTN_SECT.DWG Saved: 12/8/2020 9:08:31 AM Plotted: 12/8/2020 9:09:06 AM User: Gary Markham LastSavedBy: markhamg

NOTE:
1. CONTRACTOR SHALL REMOVE AND DISPOSE OF ANY EQUIPMENT NOT SHOWN THAT IS DIRECTLY ASSOCIATED WITH THE DETAILED REMOVALS DEPICTED.

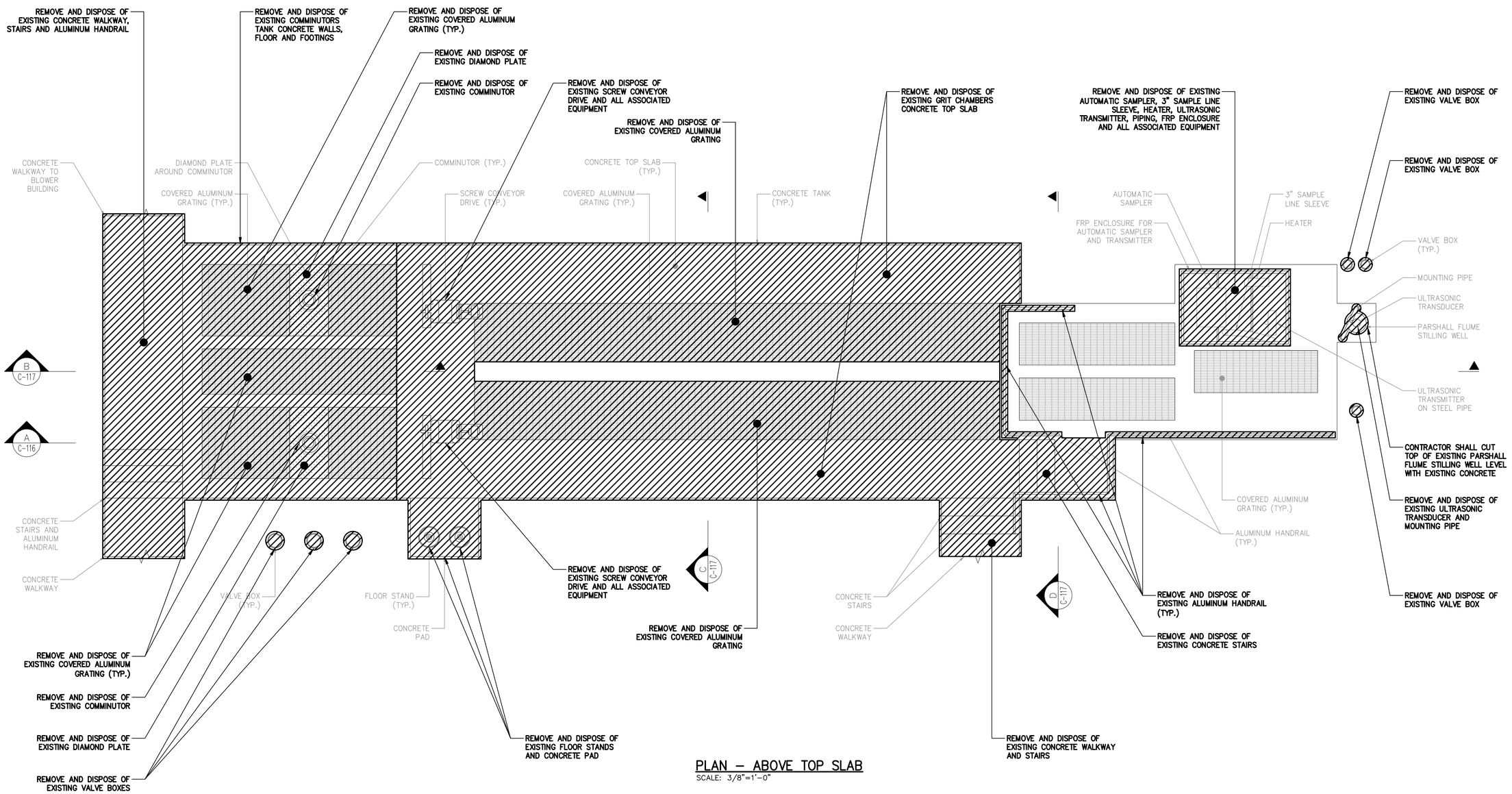

PLAN – ABOVE TOP SLAB

SCALE: 3/8"=1'-0"

BID PLANS

WARNING – IT IS A VIOLATION OF NEW YORK EDUCATION LAW SECTION 7209.2, FOR ANY PERSON, UNLESS HE IS ACTING UNDER THE DIRECTION OF A LICENSED PROFESSIONAL ENGINEER OR LAND SURVEYOR, TO ALTER THIS DOCUMENT IN ANY WAY. IF ALTERED THE ALTERING PERSON SHALL COMPLY WITH THE REQUIREMENTS OF NEW YORK EDUCATION LAW, SECTION 7209.2.

DATE:	12/2020
DRAWN BY:	GJM
SCALE:	AS SHOWN
REVIEWED BY:	RF
PROJECT NO.:	19-1612
FILE:	

DELAWARE ENGINEERING, D.P.C.
CIVIL AND ENVIRONMENTAL ENGINEERING
28 MADISON AVENUE EXTENSION, ALBANY, NY 12203 - 518.452.1290
55 SOUTH MAIN ST, ONEONTA, NY 13820 - 607.432.8073
31 NORTH MAIN STREET, LIBERTY, NY 12754 - 845.747.9952
6 TOWNSEND STREET, WALTON, NY 13856 - 607.865.9235
16 EAST MARKET ST., RED HOOK, NY 12571 - 518.452.1290
548 BROADWAY, MONTICELLO, NY 12701 - 845.791.7777

REVISIONS

NO.	DATE	DESCRIPTION

CONTRACT 1
SUFFERN WWTP UPGRADES
VILLAGE OF SUFFERN
ROCKLAND COUNTY, NEW YORK

EXISTING HEADWORKS DEMO PLAN

SHEET:
C-114

File: H:\DRAWINGS\SUFFERN\WWTP\ACAD\SFRN_C-114_HDWKS_DEMO_PLAN.DWG Saved: 12/8/2020 9:09:54 AM Plotted: 12/8/2020 9:10:18 AM User: Gary Markham LastSaveBy: markhamg

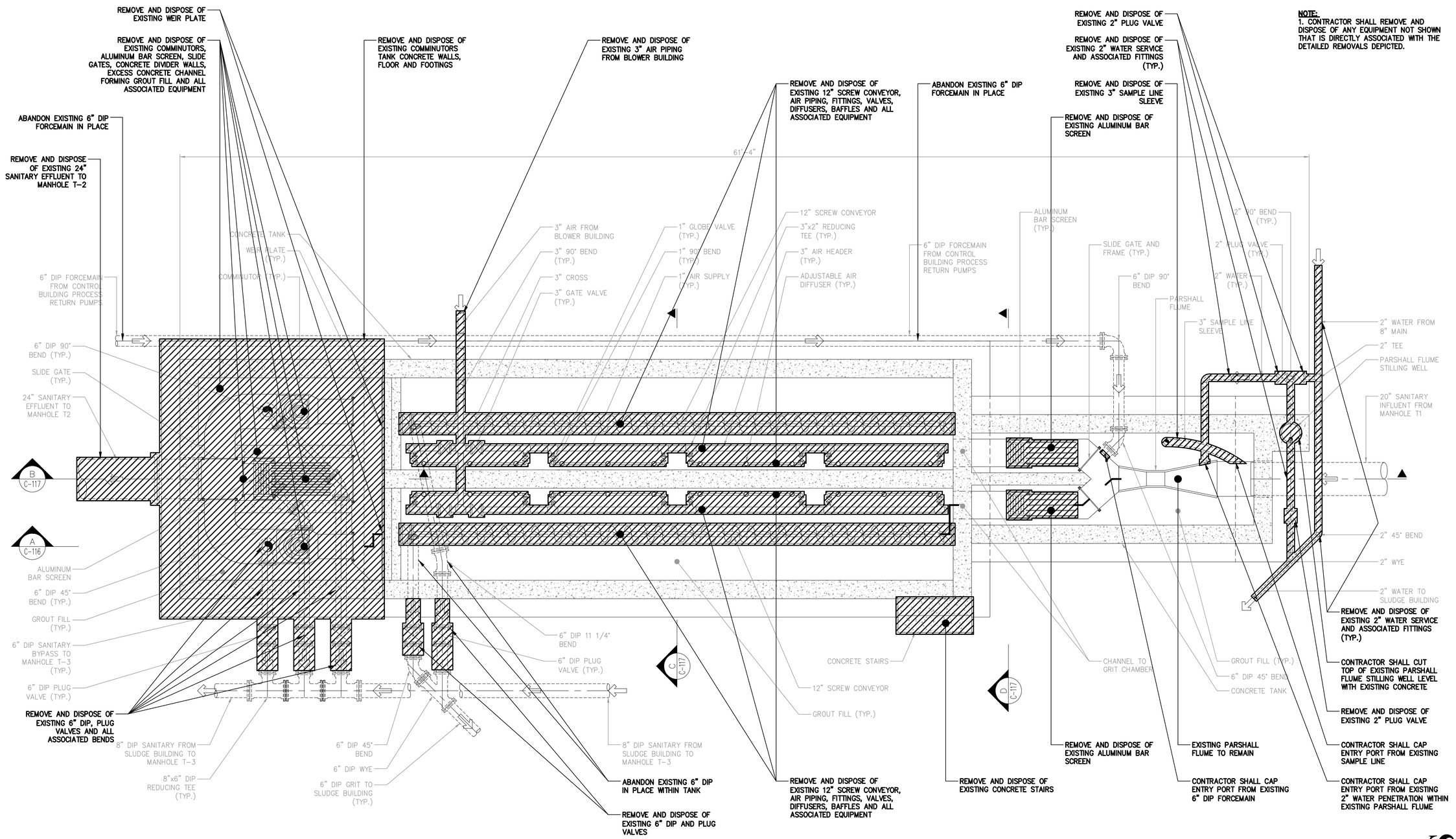

PLAN – BELOW TOP SLAB

SCALE: 3/8"=1'-0"

NOTE:
1. CONTRACTOR SHALL REMOVE AND DISPOSE OF ANY EQUIPMENT NOT SHOWN THAT IS DIRECTLY ASSOCIATED WITH THE DETAILED REMOVALS DEPICTED.

BID PLANS

WARNING – IT IS A VIOLATION OF NEW YORK EDUCATION LAW SECTION 7209.2, FOR ANY PERSON, UNLESS HE IS ACTING UNDER THE DIRECTION OF A LICENSED PROFESSIONAL ENGINEER OR LAND SURVEYOR, TO ALTER THIS DOCUMENT IN ANY WAY. IF ALTERED THE ALTERING PERSON SHALL COMPLY WITH THE REQUIREMENTS OF NEW YORK EDUCATION LAW, SECTION 7209.2.

DATE:	12/2020
DRAWN BY:	GJM
SCALE:	AS SHOWN
REVIEWED BY:	RF
PROJECT NO.:	19-1612
FILE:	

DELAWARE ENGINEERING, D.P.C.
CIVIL AND ENVIRONMENTAL ENGINEERING
28 MADISON AVENUE EXTENSION, ALBANY, NY 12203 - 518.452.1290
55 SOUTH MAIN ST, ONEONTA, NY 13820 - 607.432.8073
31 NORTH MAIN STREET, LIBERTY, NY 12754 - 845.747.9952
6 TOWNSEND STREET, WALTON, NY 13856 - 607.865.9235
16 EAST MARKET ST., RED HOOK, NY 12571 - 518.452.1290
548 BROADWAY, MONTICELLO, NY 12701 - 845.791.7777

STATE OF NEW YORK · REGISTERED PROFESSIONAL ENGINEER · RICHARD FLORIO · 065 080 · LICENSED PROFESSIONAL ENGINEER

REVISIONS

NO.	DATE	DESCRIPTION

CONTRACT 1
SUFFERN WWTP UPGRADES
VILLAGE OF SUFFERN
ROCKLAND COUNTY, NEW YORK

EXISTING HEADWORKS DEMO PLAN

SHEET:
C-115

File: h:\DRAWINGS\SUFFERN\WWTP\ACAD\SFRN_C-115_HDWKS_DEMO_PLAN.DWG Saved: 12/8/2020 9:10:59 AM Plotted: 12/8/2020 9:11:28 AM User: Gary Markham (usrGaryM@gr. markham)

NOTE:
1. CONTRACTOR SHALL REMOVE AND DISPOSE OF ANY EQUIPMENT NOT SHOWN THAT IS DIRECTLY ASSOCIATED WITH THE DETAILED REMOVALS DEPICTED.

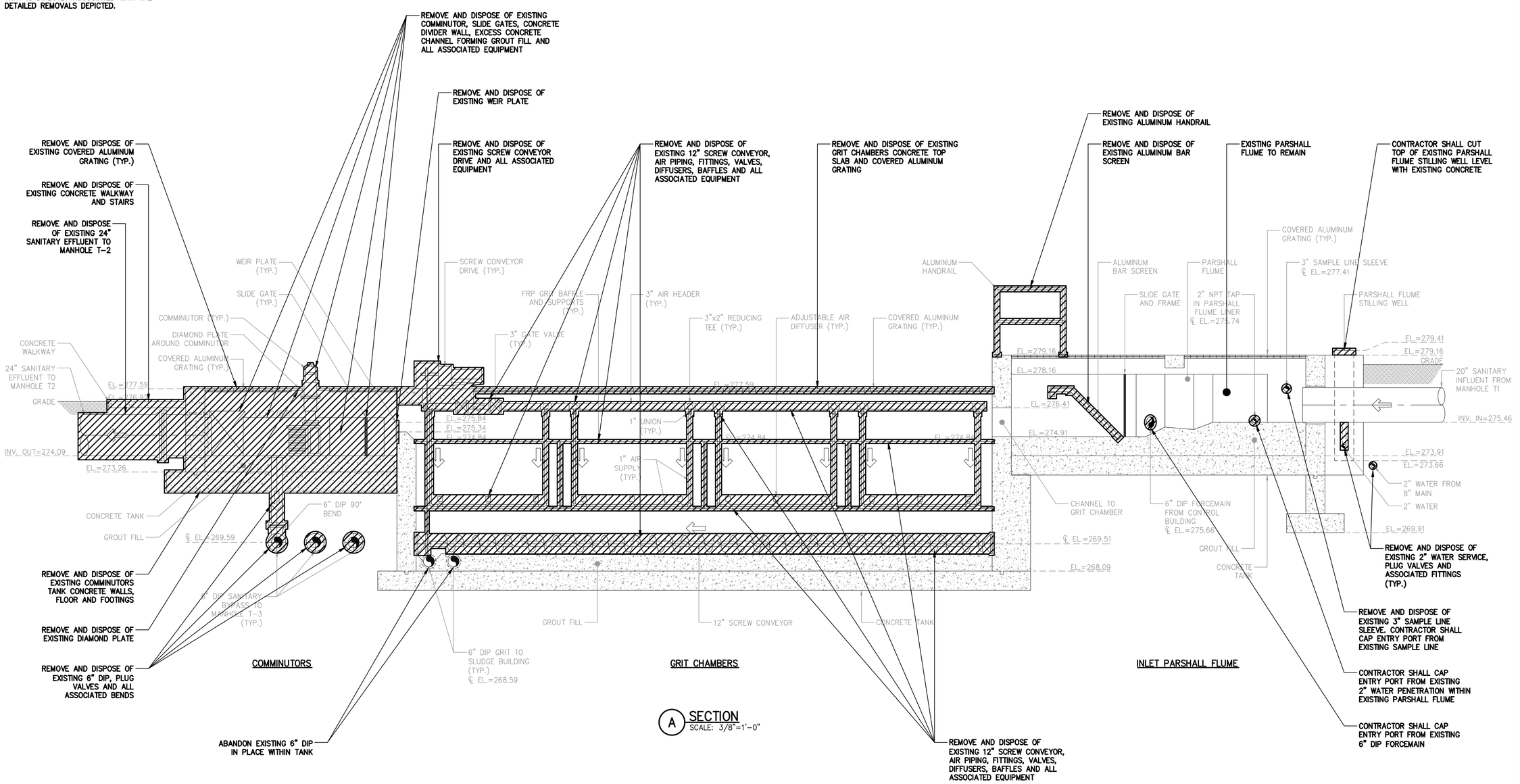

A SECTION
SCALE: 3/8"=1'-0"

BID PLANS

DATE: 12/2020
DRAWN BY: GJM
SCALE: AS SHOWN
REVIEWED BY: RF
PROJECT NO.: 19-1612
FILE:

DELAWARE ENGINEERING, D.P.C.
CIVIL AND ENVIRONMENTAL ENGINEERING
28 MADISON AVENUE EXTENSION, ALBANY, NY 12203 - 518.452.1290
55 SOUTH MAIN ST, ONEONTA, NY 13820 - 607.432.8073
31 NORTH MAIN STREET, LIBERTY, NY 12754 - 845.747.9952
6 TOWNSEND STREET, WALTON, NY 13856 - 607.865.9235
16 EAST MARKET ST., RED HOOK, NY 12571 - 518.452.1290
548 BROADWAY, MONTICELLO, NY 12701 - 845.791.7777

REVISIONS

NO.	DATE	DESCRIPTION

CONTRACT 1
SUFFERN WWTP UPGRADES
VILLAGE OF SUFFERN
ROCKLAND COUNTY, NEW YORK

EXISTING HEADWORKS DEMO SECTION

SHEET: C-116

WARNING -- IT IS A VIOLATION OF NEW YORK EDUCATION LAW SECTION 7209.2, FOR ANY PERSON, UNLESS HE IS ACTING UNDER THE DIRECTION OF A LICENSED PROFESSIONAL ENGINEER OR LAND SURVEYOR, TO ALTER THIS DOCUMENT IN ANY WAY. IF ALTERED THE ALTERING PERSON SHALL COMPLY WITH THE REQUIREMENTS OF NEW YORK EDUCATION LAW, SECTION 7209.2.

File: H:\DRAWINGS\SUFFERN\WWTP\ACAD\SFRN_C-116_HDWKS_DEMO_SECT.DWG Saved: 12/8/2020 9:12:20 AM Plotted: 12/8/2020 9:12:38 AM User: Gary Markham (autoSaveBy: mpakang)

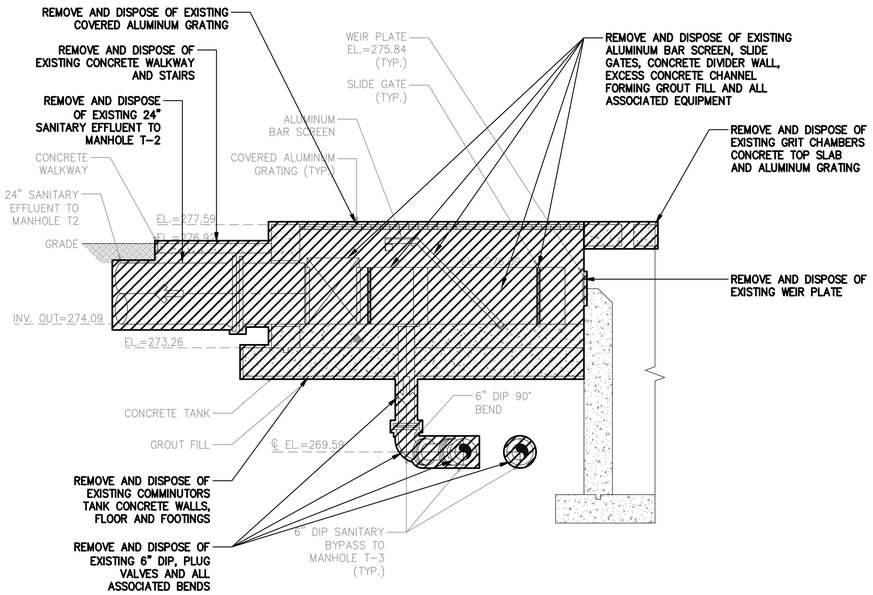

BAR SCREEN

B SECTION
SCALE: 3/8"=1'-0"

NOTE:
1. CONTRACTOR SHALL REMOVE AND DISPOSE OF ANY EQUIPMENT NOT SHOWN THAT IS DIRECTLY ASSOCIATED WITH THE DETAILED REMOVALS DEPICTED.

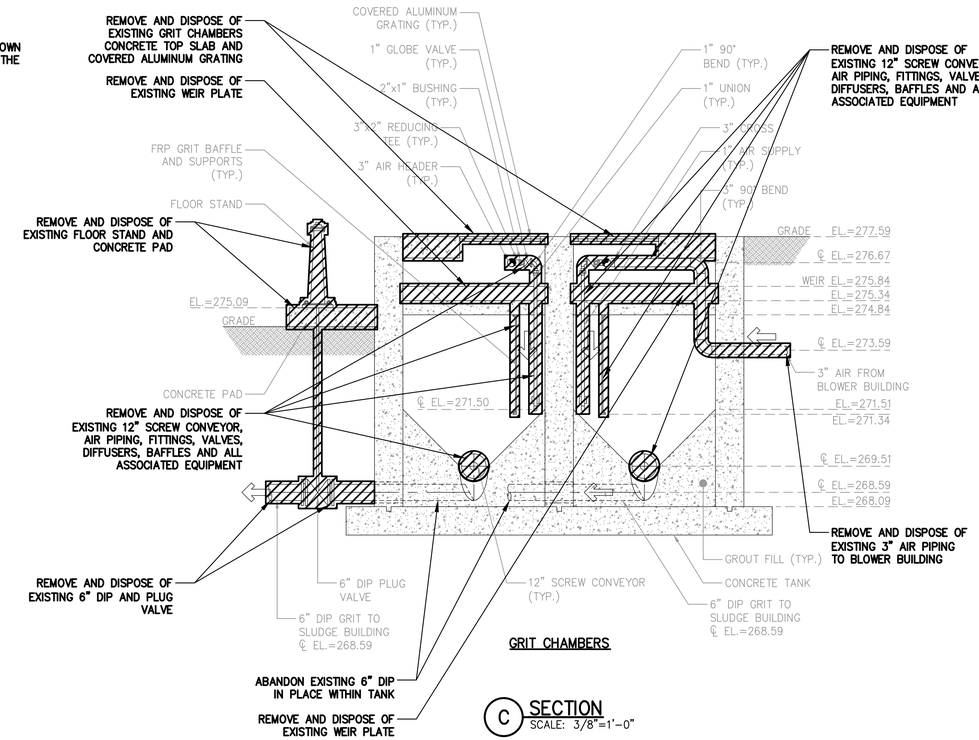

GRIT CHAMBERS

C SECTION
SCALE: 3/8"=1'-0"

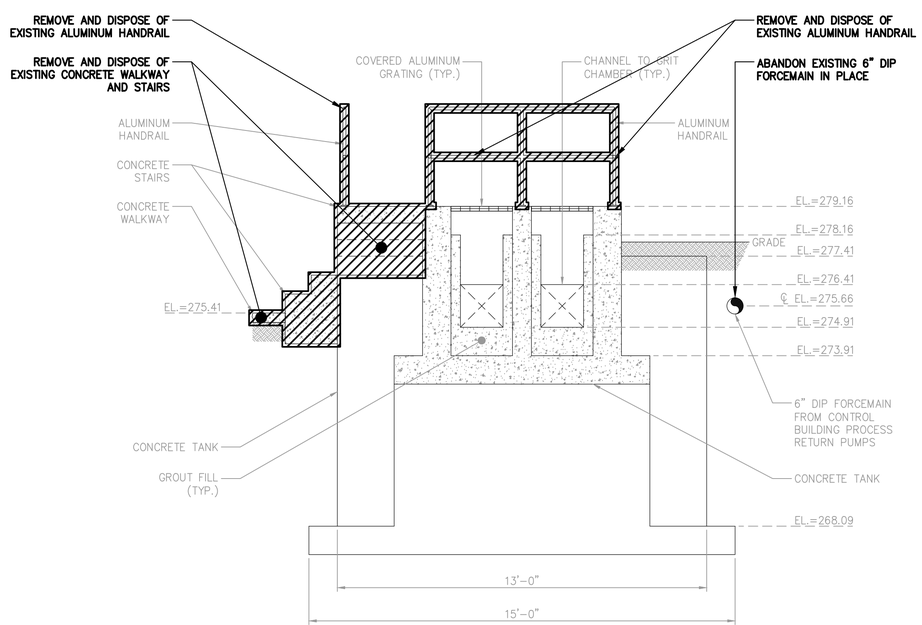

INLET PARSHALL FLUME

D SECTION
SCALE: 3/8"=1'-0"

BID PLANS

WARNING – IT IS A VIOLATION OF NEW YORK EDUCATION LAW SECTION 7209.2, FOR ANY PERSON, UNLESS HE IS ACTING UNDER THE DIRECTION OF A LICENSED PROFESSIONAL ENGINEER OR LAND SURVEYOR, TO ALTER THIS DOCUMENT IN ANY WAY. IF ALTERED THE ALTERING PERSON SHALL COMPLY WITH THE REQUIREMENTS OF NEW YORK EDUCATION LAW, SECTION 7209.2.

DATE:	12/2020
DRAWN BY:	GJM
SCALE:	AS SHOWN
REVIEWED BY:	RF
PROJECT NO.:	19-1612
FILE:	

DELAWARE ENGINEERING, D.P.C.
CIVIL AND ENVIRONMENTAL ENGINEERING
28 MADISON AVENUE EXTENSION, ALBANY, NY 12203 - 518.452.1290
55 SOUTH MAIN ST, ONEONTA, NY 13820 - 607.432.8073
31 NORTH MAIN STREET, LIBERTY, NY 12754 - 845.747.9952
6 TOWNSEND STREET, WALTON, NY 13856 - 607.865.9235
16 EAST MARKET ST., RED HOOK, NY 12571 - 518.452.1290
548 BROADWAY, MONTICELLO, NY 12701 - 845.791.7777

REVISIONS

NO.	DATE	DESCRIPTION

CONTRACT 1
SUFFERN WWTP UPGRADES
VILLAGE OF SUFFERN
ROCKLAND COUNTY, NEW YORK

EXISTING
HEADWORKS
DEMO SECTIONS

SHEET:
C-117

File: H:\DRAWINGS\SUFFERN\WWTP\ACAD\SFRN_C-117_HDWKS_DEMO_SECT.DWG Saved: 12/8/2020 9:13:16 AM Plotted: 12/8/2020 9:13:54 AM User: Gary Markham LastSavedBy: markhamg

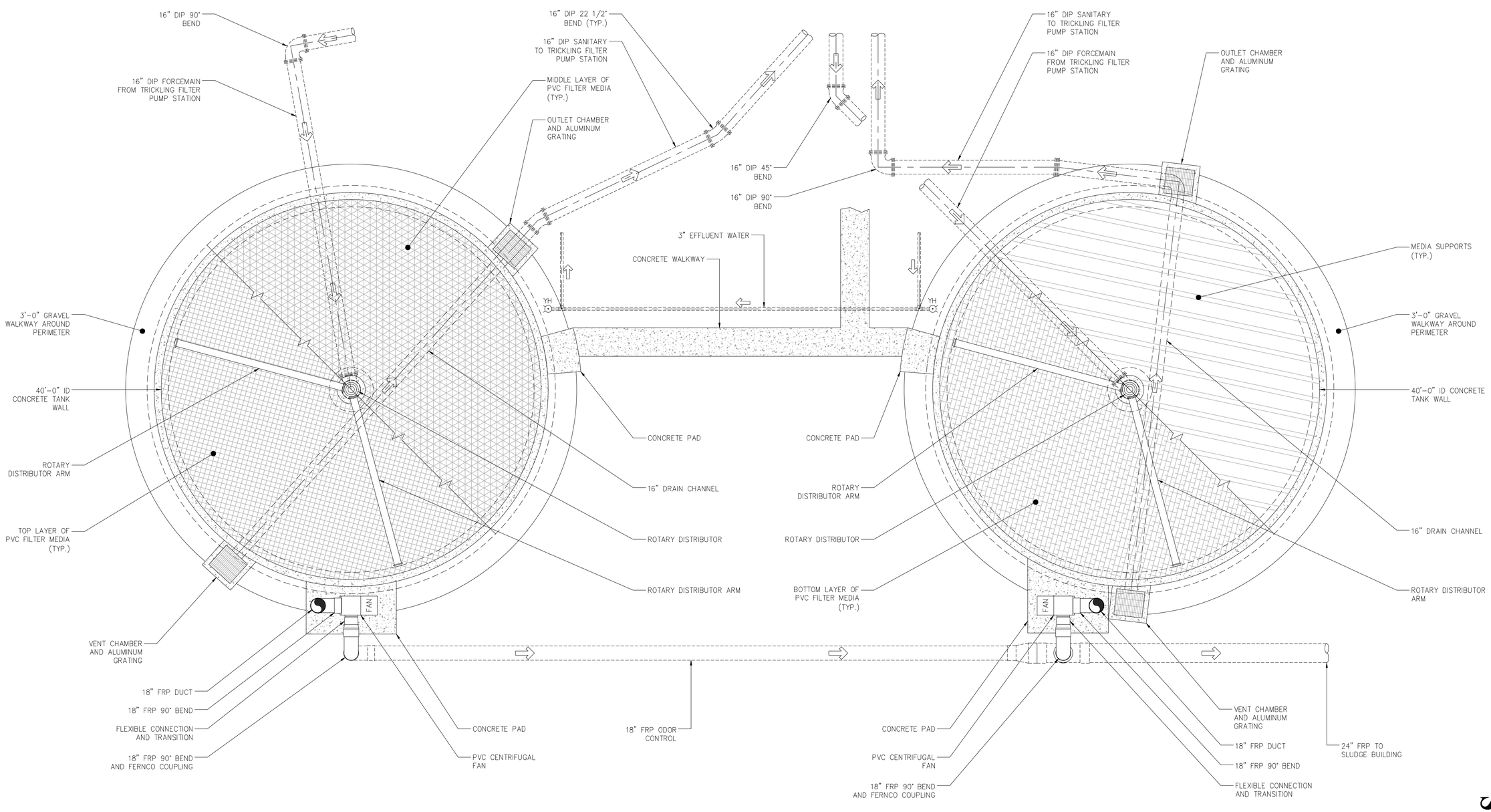

TRICKLING FILTER NO. 2

TRICKLING FILTER NO. 1

PLAN – TRICKLING FILTERS BELOW EL.=287.92

SCALE: 3/16"=1'-0"

BID PLANS

WARNING – IT IS A VIOLATION OF NEW YORK EDUCATION LAW SECTION 7209.2, FOR ANY PERSON, UNLESS HE IS ACTING UNDER THE DIRECTION OF A LICENSED PROFESSIONAL ENGINEER OR LAND SURVEYOR, TO ALTER THIS DOCUMENT IN ANY WAY. IF ALTERED THE ALTERING PERSON SHALL COMPLY WITH THE REQUIREMENTS OF NEW YORK EDUCATION LAW, SECTION 7209.2.

DATE:	12/2020
DRAWN BY:	GJM
SCALE:	AS SHOWN
REVIEWED BY:	RF
PROJECT NO.:	19-1612
FILE:	

DELAWARE ENGINEERING, D.P.C.
CIVIL AND ENVIRONMENTAL ENGINEERING
28 MADISON AVENUE EXTENSION, ALBANY, NY 12203 - 518.452.1290
55 SOUTH MAIN ST, ONEONTA, NY 13820 - 607.432.8073
31 NORTH MAIN STREET, LIBERTY, NY 12754 - 845.747.9952
6 TOWNSEND STREET, WALTON, NY 13856 - 607.865.9235
16 EAST MARKET ST., RED HOOK, NY 12571 - 518.452.1290
548 BROADWAY, MONTICELLO, NY 12701 - 845.791.7777

STATE OF NEW YORK
REGISTERED PROFESSIONAL ENGINEER
LICENSED PROFESSIONAL ENGINEER

REVISIONS

NO.	DATE	DESCRIPTION

CONTRACT 1
SUFFERN WWTP UPGRADES
VILLAGE OF SUFFERN
ROCKLAND COUNTY, NEW YORK

EXISTING CONDITIONS
TRICKLING FILTERS
BELOW EL.=287.92
PLAN

SHEET:
C-120

File: H:\DRAWINGS\SUFFERN\WWTP\ACAD\SPRN_C-120_TRICKLING_EX_CNDTN_PLAN.DWG Saved: 12/8/2020 9:17:04 AM Plotted: 12/8/2020 9:17:31 AM User: Gary Markham LastSavedBy: markhamg

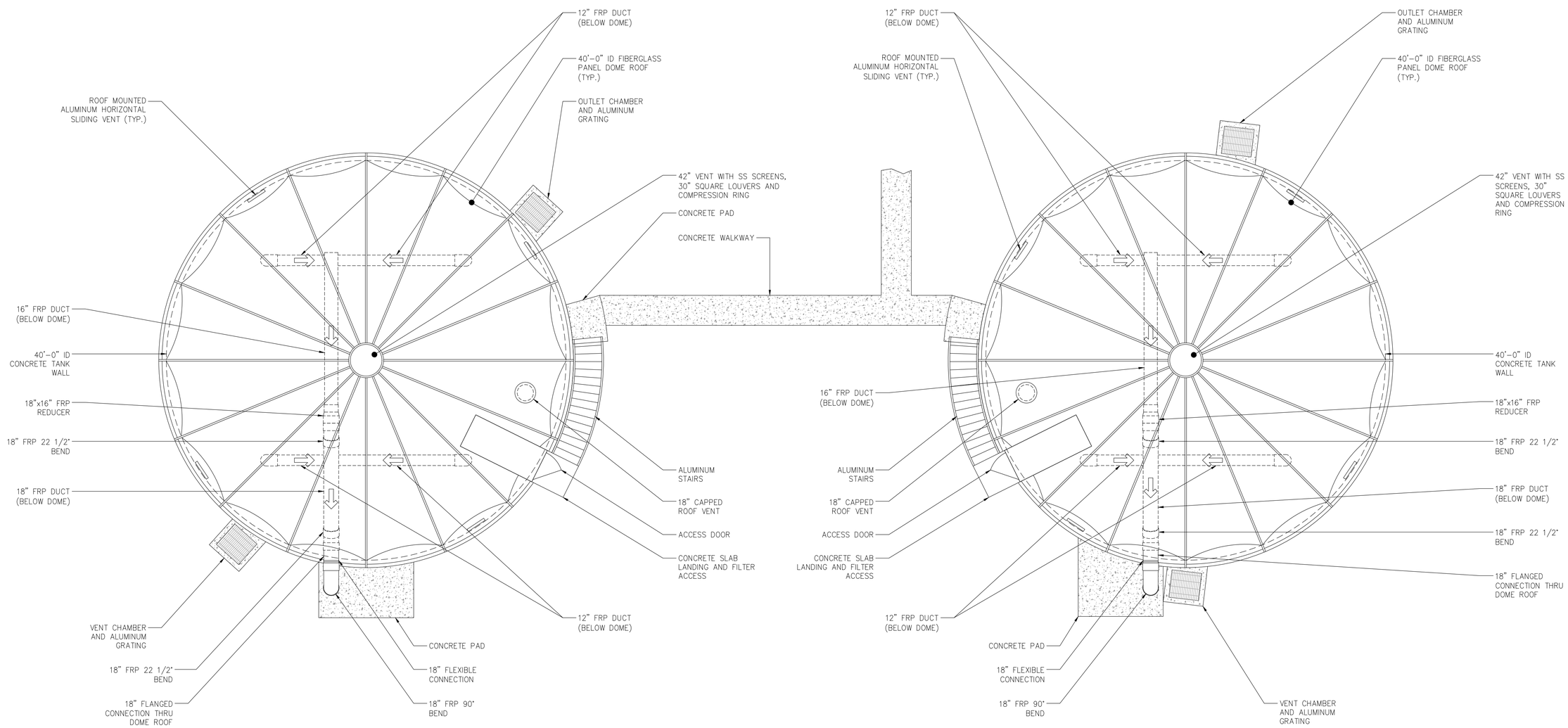

TRICKLING FILTER NO. 2

TRICKLING FILTER NO. 1

PLAN – TRICKLING FILTERS ABOVE EL.=287.92

SCALE: 3/16"=1'-0"

BID PLANS

WARNING – IT IS A VIOLATION OF NEW YORK EDUCATION LAW SECTION 7209.2, FOR ANY PERSON, UNLESS HE IS ACTING UNDER THE DIRECTION OF A LICENSED PROFESSIONAL ENGINEER OR LAND SURVEYOR, TO ALTER THIS DOCUMENT IN ANY WAY. IF ALTERED THE ALTERING PERSON SHALL COMPLY WITH THE REQUIREMENTS OF NEW YORK EDUCATION LAW, SECTION 7209.2.

DATE: 12/2020
DRAWN BY: GJM
SCALE: AS SHOWN
REVIEWED BY: RF
PROJECT NO.: 19-1612
FILE:

DELAWARE ENGINEERING, D.P.C.
CIVIL AND ENVIRONMENTAL ENGINEERING
28 MADISON AVENUE EXTENSION, ALBANY, NY 12203 - 518.452.1290
55 SOUTH MAIN ST, ONEONTA, NY 13820 - 607.432.8073
31 NORTH MAIN STREET, LIBERTY, NY 12754 - 845.747.9952
6 TOWNSEND STREET, WALTON, NY 13856 - 607.865.9235
16 EAST MARKET ST., RED HOOK, NY 12571 - 518.452.1290
548 BROADWAY, MONTICELLO, NY 12701 - 845.791.7777

STATE OF NEW YORK · REGISTERED PROFESSIONAL ENGINEER · RICHARD FLORIO · LICENSE NO. 085180

REVISIONS

NO.	DATE	DESCRIPTION

CONTRACT 1
SUFFERN WWTP UPGRADES
VILLAGE OF SUFFERN
ROCKLAND COUNTY, NEW YORK

EXISTING CONDITIONS
TRICKLING FILTERS
ABOVE EL.=287.92
PLAN

SHEET:
C-121

File: H:\DRAWINGS\SUFFERN\WWTP\ACAD\SFRN_C-121_TRICKLING_EX_CNDTN_PLAN.DWG Saved: 12/8/2020 9:18:15 AM Plotted: 12/8/2020 9:18:37 AM User: Gary Markham LastSavedBy: markhamg

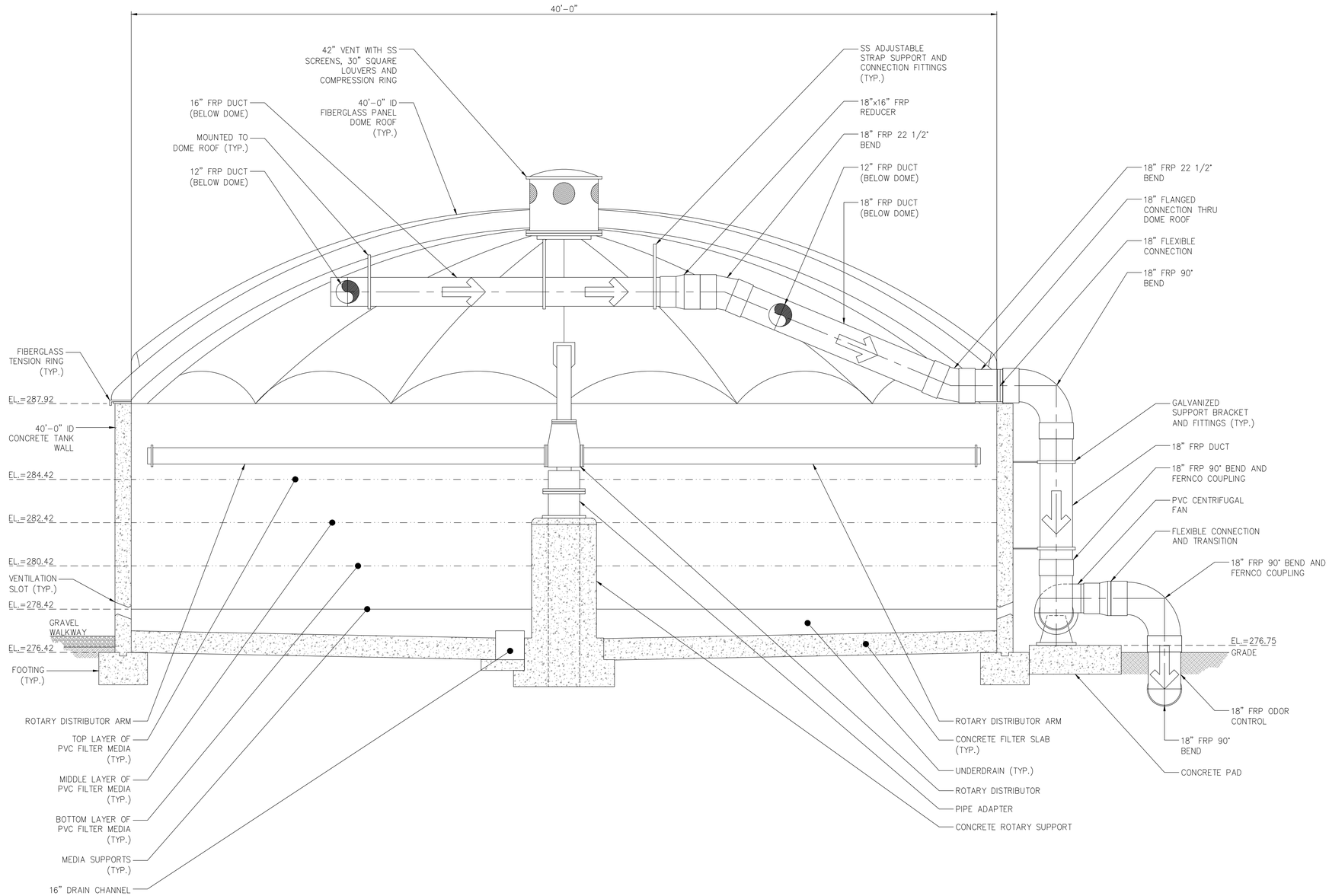

A (TYPICAL) SECTION – TRICKLING FILTERS NO. 1 AND NO. 2
SCALE: 3/8"=1'-0"

BID PLANS

WARNING – IT IS A VIOLATION OF NEW YORK EDUCATION LAW SECTION 7209.2, FOR ANY PERSON, UNLESS HE IS ACTING UNDER THE DIRECTION OF A LICENSED PROFESSIONAL ENGINEER OR LAND SURVEYOR, TO ALTER THIS DOCUMENT IN ANY WAY. IF ALTERED THE ALTERING PERSON SHALL COMPLY WITH THE REQUIREMENTS OF NEW YORK EDUCATION LAW, SECTION 7209.2.

DATE: 12/2020
DRAWN BY: GJM
SCALE: AS SHOWN
REVIEWED BY: RF
PROJECT NO.: 19-1612
FILE:

DELAWARE ENGINEERING, D.P.C.
CIVIL AND ENVIRONMENTAL ENGINEERING
28 MADISON AVENUE EXTENSION, ALBANY, NY 12203 - 518.452.1290
55 SOUTH MAIN ST, ONEONTA, NY 13820 - 607.432.8073
31 NORTH MAIN STREET, LIBERTY, NY 12754 - 845.747.9952
6 TOWNSEND STREET, WALTON, NY 13856 - 607.865.9235
16 EAST MARKET ST., RED HOOK, NY 12571 - 518.452.1290
548 BROADWAY, MONTICELLO, NY 12701 - 845.791.7777

REVISIONS

NO.	DATE	DESCRIPTION

CONTRACT 1
SUFFERN WWTP UPGRADES
VILLAGE OF SUFFERN
ROCKLAND COUNTY, NEW YORK

EXISTING CONDITIONS
TRICKLING FILTERS
NO. 1 AND NO. 2
(TYPICAL) SECTION

SHEET:
C-122

NOTE:
1. CONTRACTOR SHALL REMOVE AND DISPOSE OF ANY EQUIPMENT NOT SHOWN THAT IS DIRECTLY ASSOCIATED WITH THE DETAILED REMOVALS DEPICTED.

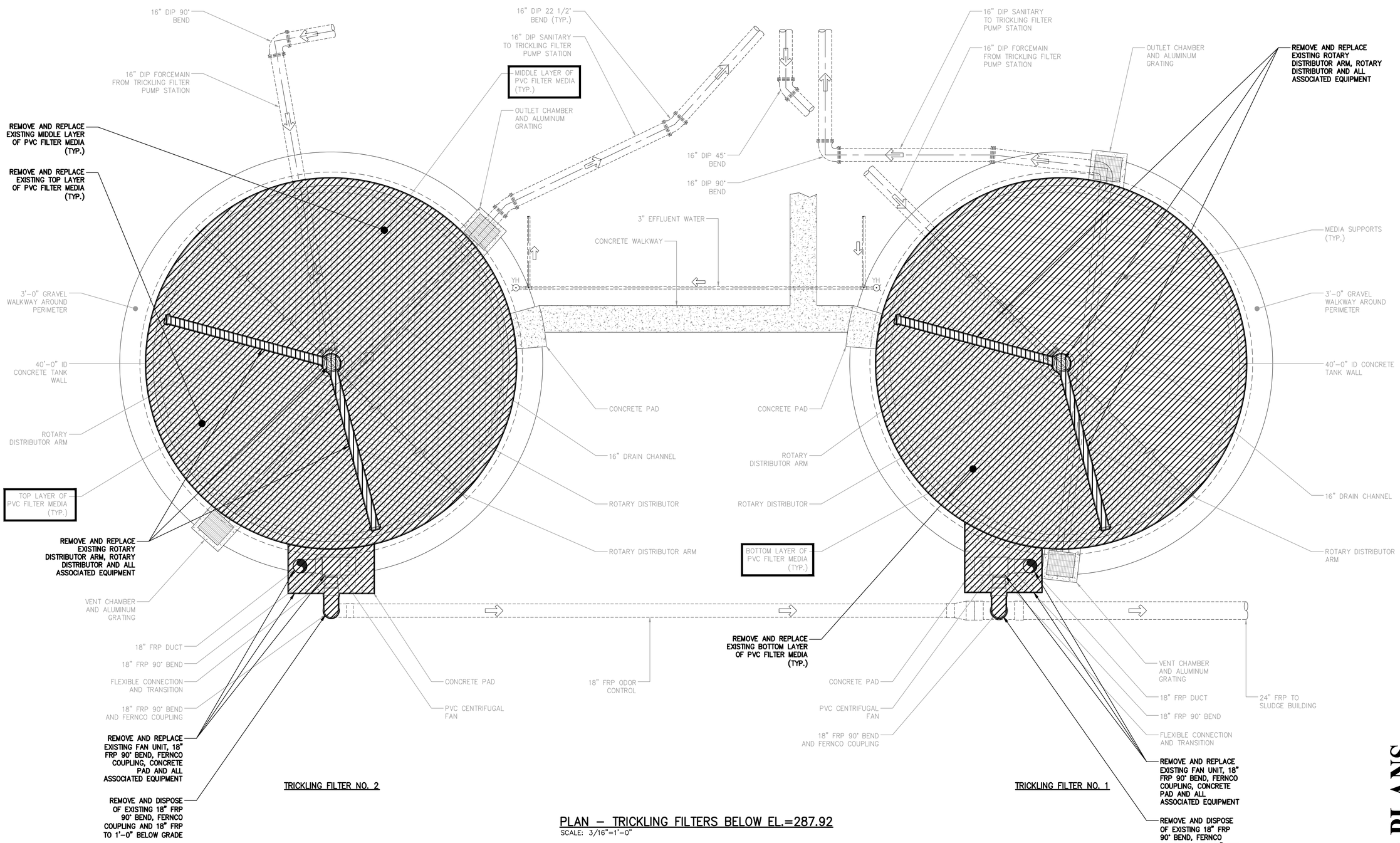

PLAN – TRICKLING FILTERS BELOW EL.=287.92
SCALE: 3/16"=1'-0"

BID PLANS

WARNING – IT IS A VIOLATION OF NEW YORK EDUCATION LAW SECTION 7209.2, FOR ANY PERSON, UNLESS HE IS ACTING UNDER THE DIRECTION OF A LICENSED PROFESSIONAL ENGINEER OR LAND SURVEYOR, TO ALTER THIS DOCUMENT IN ANY WAY. IF ALTERED THE ALTERING PERSON SHALL COMPLY WITH THE REQUIREMENTS OF NEW YORK EDUCATION LAW, SECTION 7209.2.

DATE: 12/2020
DRAWN BY: GJM
SCALE: AS SHOWN
REVIEWED BY: RF
PROJECT NO.: 19-1612
FILE:

DELAWARE ENGINEERING, D.P.C.
CIVIL AND ENVIRONMENTAL ENGINEERING
28 MADISON AVENUE EXTENSION, ALBANY, NY 12203 - 518.452.1290
55 SOUTH MAIN ST, ONEONTA, NY 13820 - 607.432.8073
31 NORTH MAIN STREET, LIBERTY, NY 12754 - 845.747.9952
6 TOWNSEND STREET, WALTON, NY 13856 - 607.865.9235
16 EAST MARKET ST., RED HOOK, NY 12571 - 518.452.1290
548 BROADWAY, MONTICELLO, NY 12701 - 845.791.7777

STATE OF NEW YORK · REGISTERED PROFESSIONAL ENGINEER · LICENSED PROFESSIONAL ENGINEER

REVISIONS

NO.	DATE	DESCRIPTION

CONTRACT 1
SUFFERN WWTP UPGRADES
VILLAGE OF SUFFERN
ROCKLAND COUNTY, NEW YORK

EXISTING
TRICKLING FILTERS
BELOW EL.=287.92
DEMO PLAN

SHEET:
C-123

File: H:\DRAWINGS\SUFFERN\WWTP\ACAD\SPRN_C-123_TRICKLING_DEMO_PLAN.DWG Saved: 12/8/2020 9:21:04 AM Plotted: 12/8/2020 9:21:45 AM User: Gary Markham LastSavedBy: markhamg

NOTE:
1. CONTRACTOR SHALL REMOVE AND DISPOSE OF ANY EQUIPMENT NOT SHOWN THAT IS DIRECTLY ASSOCIATED WITH THE DETAILED REMOVALS DEPICTED.

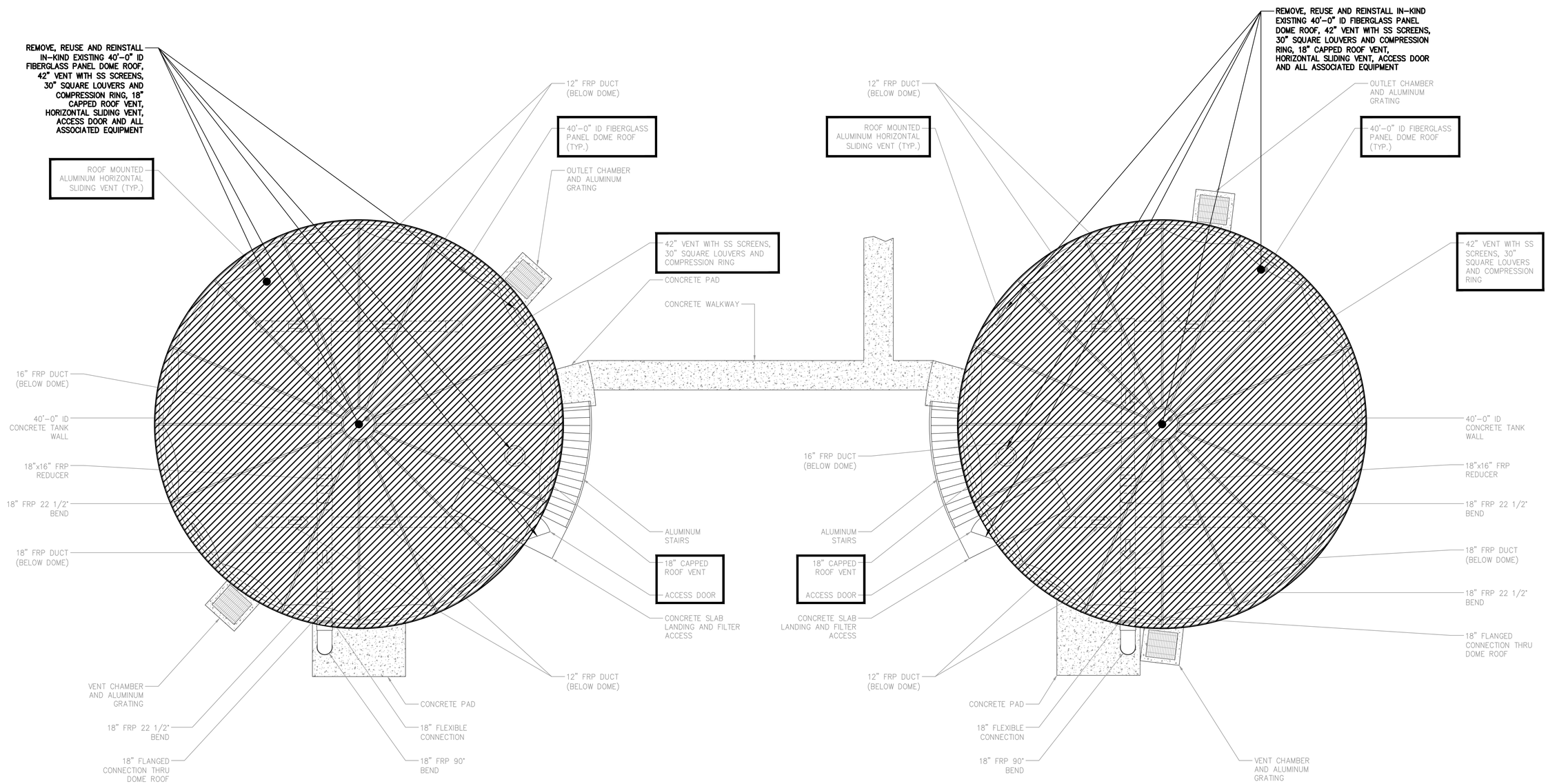

TRICKLING FILTER NO. 2

TRICKLING FILTER NO. 1

PLAN – TRICKLING FILTERS ABOVE EL.=287.92

SCALE: 3/16"=1'-0"

BID PLANS

WARNING – IT IS A VIOLATION OF NEW YORK EDUCATION LAW SECTION 7209.2, FOR ANY PERSON, UNLESS HE IS ACTING UNDER THE DIRECTION OF A LICENSED PROFESSIONAL ENGINEER OR LAND SURVEYOR, TO ALTER THIS DOCUMENT IN ANY WAY. IF ALTERED THE ALTERING PERSON SHALL COMPLY WITH THE REQUIREMENTS OF NEW YORK EDUCATION LAW, SECTION 7209.2.

DATE:	12/2020
DRAWN BY:	GJM
SCALE:	AS SHOWN
REVIEWED BY:	RF
PROJECT NO.:	19-1612
FILE:	

DELAWARE ENGINEERING, D.P.C.
CIVIL AND ENVIRONMENTAL ENGINEERING
28 MADISON AVENUE EXTENSION, ALBANY, NY 12203 - 518.452.1290
55 SOUTH MAIN ST, ONEONTA, NY 13820 - 607.432.8073
31 NORTH MAIN STREET, LIBERTY, NY 12754 - 845.747.9952
6 TOWNSEND STREET, WALTON, NY 13856 - 607.865.9235
16 EAST MARKET ST., RED HOOK, NY 12571 - 518.452.1290
548 BROADWAY, MONTICELLO, NY 12701 - 845.791.7777

REGISTERED PROFESSIONAL ENGINEER STATE OF NEW YORK

REVISIONS

NO.	DATE	DESCRIPTION

CONTRACT 1
SUFFERN WWTP UPGRADES
VILLAGE OF SUFFERN
ROCKLAND COUNTY, NEW YORK

EXISTING
TRICKLING FILTERS
ABOVE EL.=287.92
DEMO PLAN

SHEET:
C-124

File: n:\DRAWINGS\SUFFERN\WWTP\CAD\SFRN_C-124_TRICKLING_DEMO_PLAN.DWG Saved: 12/8/2020 9:22:18 AM Plotted: 12/8/2020 9:22:57 AM User: Gary Markham LastSavedBy: markhamg

NOTE:
1. CONTRACTOR SHALL REMOVE AND DISPOSE OF ANY EQUIPMENT NOT SHOWN THAT IS DIRECTLY ASSOCIATED WITH THE DETAILED REMOVALS DEPICTED.

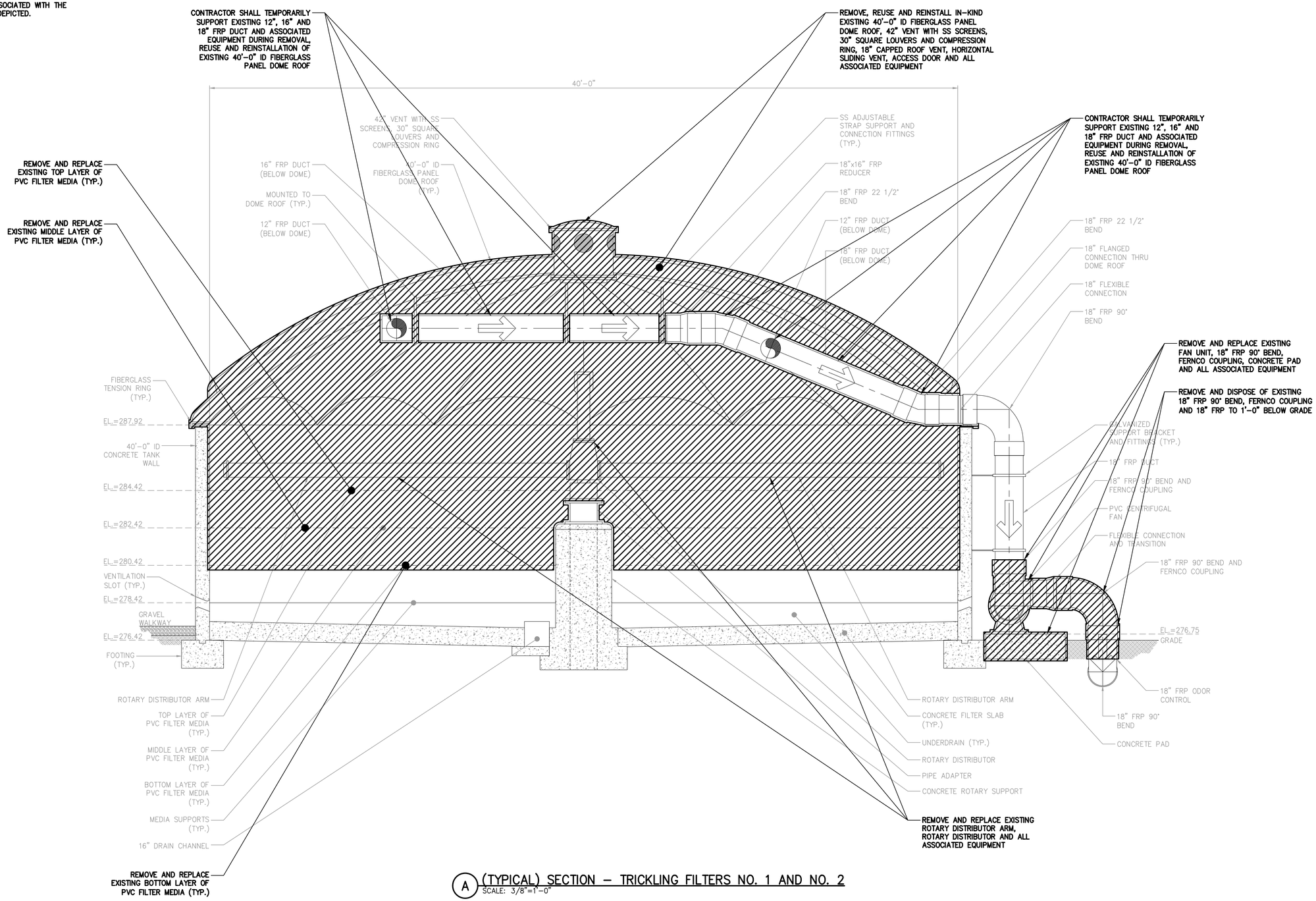

A (TYPICAL) SECTION – TRICKLING FILTERS NO. 1 AND NO. 2
SCALE: 3/8"=1'-0"

BID PLANS

WARNING – IT IS A VIOLATION OF NEW YORK EDUCATION LAW SECTION 7209.2, FOR ANY PERSON, UNLESS HE IS ACTING UNDER THE DIRECTION OF A LICENSED PROFESSIONAL ENGINEER OR LAND SURVEYOR, TO ALTER THIS DOCUMENT IN ANY WAY. IF ALTERED THE ALTERING PERSON SHALL COMPLY WITH THE REQUIREMENTS OF NEW YORK EDUCATION LAW, SECTION 7209.2.

DATE: 12/2020
DRAWN BY: GJM
SCALE: AS SHOWN
REVIEWED BY: RF
PROJECT NO.: 19-1612
FILE:

DELAWARE ENGINEERING, D.P.C.
CIVIL AND ENVIRONMENTAL ENGINEERING
28 MADISON AVENUE EXTENSION, ALBANY, NY 12203 - 518.452.1290
55 SOUTH MAIN ST, ONEONTA, NY 13820 - 607.432.8073
31 NORTH MAIN STREET, LIBERTY, NY 12754 - 845.747.9952
6 TOWNSEND STREET, WALTON, NY 13856 - 607.865.9235
16 EAST MARKET ST., RED HOOK, NY 12571 - 518.452.1290
548 BROADWAY, MONTICELLO, NY 12701 - 845.791.7777

REVISIONS

NO.	DATE	DESCRIPTION

CONTRACT 1
SUFFERN WWTP UPGRADES
VILLAGE OF SUFFERN
ROCKLAND COUNTY, NEW YORK

EXISTING
TRICKLING FILTERS
NO. 1 AND NO. 2
(TYPICAL) DEMO SECTION

SHEET:
C-125

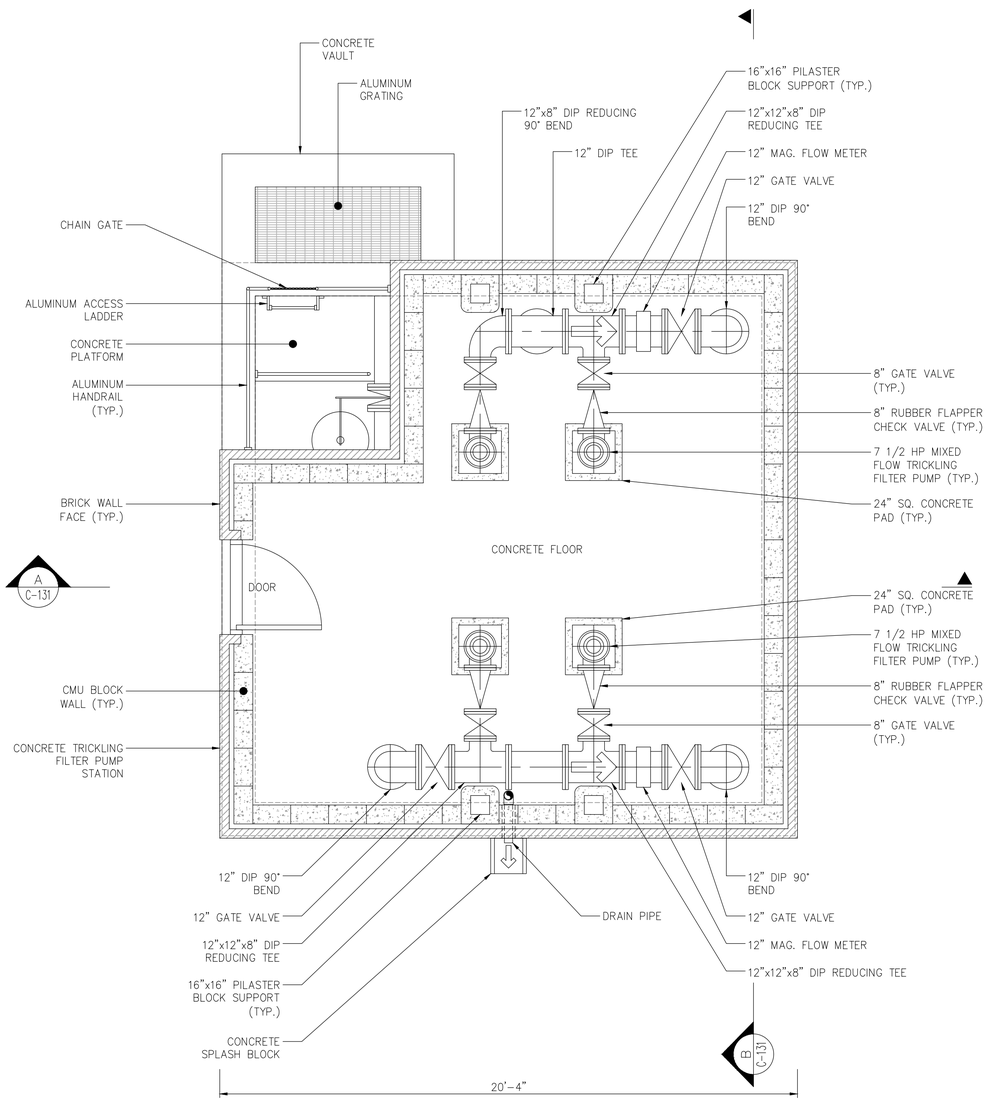

PLAN – MAIN FLOOR

SCALE: 3/8"=1'-0"

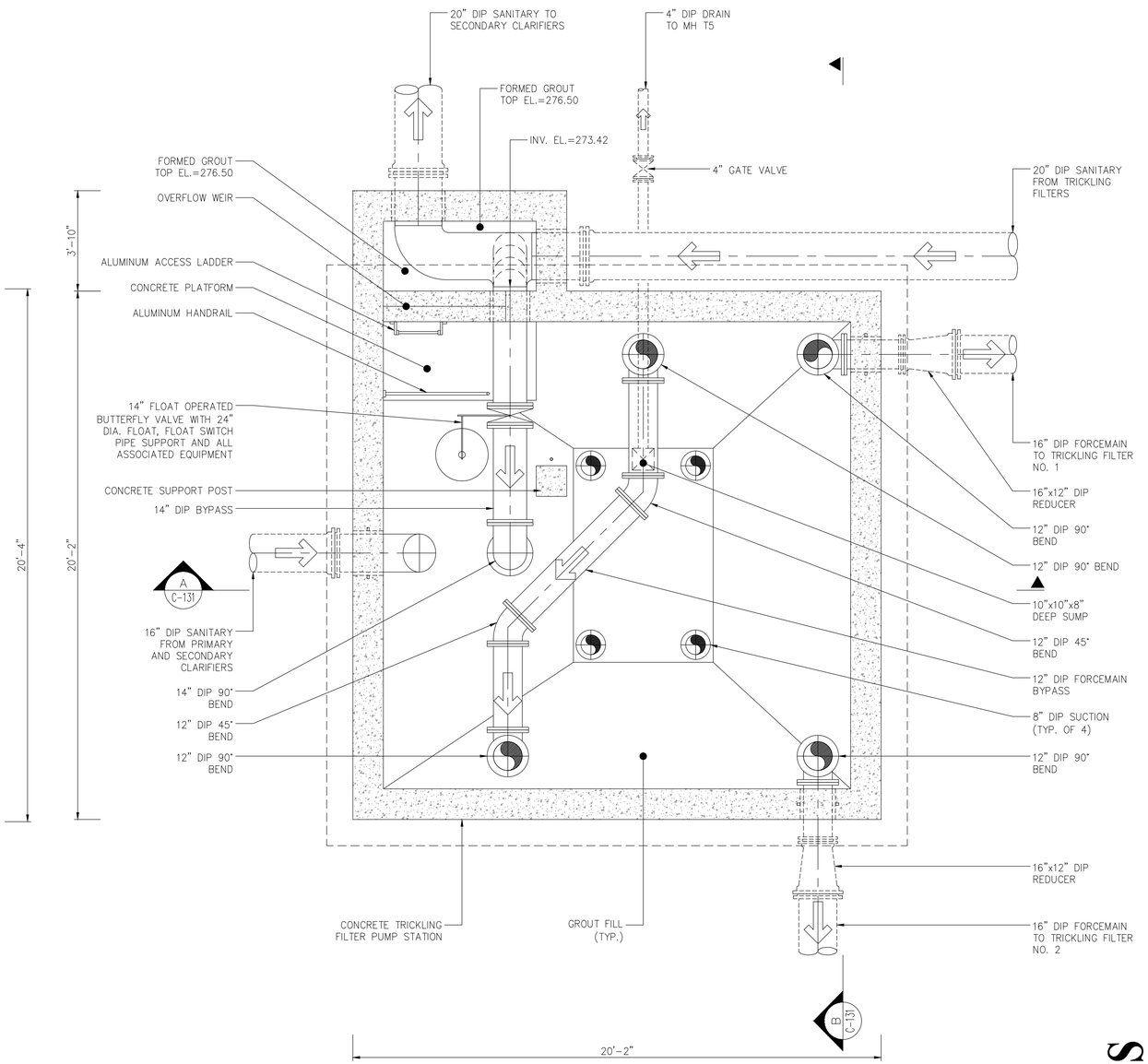

PLAN – WET WELL

SCALE: 3/8"=1'-0"

BID PLANS

WARNING – IT IS A VIOLATION OF NEW YORK EDUCATION LAW SECTION 7209.2, FOR ANY PERSON, UNLESS HE IS ACTING UNDER THE DIRECTION OF A LICENSED PROFESSIONAL ENGINEER OR LAND SURVEYOR, TO ALTER THIS DOCUMENT IN ANY WAY. IF ALTERED THE ALTERING PERSON SHALL COMPLY WITH THE REQUIREMENTS OF NEW YORK EDUCATION LAW, SECTION 7209.2.

DATE: 12/2020
DRAWN BY: GJM
SCALE: AS SHOWN
REVIEWED BY: RF
PROJECT NO.: 19-1612
FILE:

DELAWARE ENGINEERING, D.P.C.
CIVIL AND ENVIRONMENTAL ENGINEERING
28 MADISON AVENUE EXTENSION, ALBANY, NY 12203 - 518.452.1290
55 SOUTH MAIN ST, ONEONTA, NY 13820 - 607.432.8073
31 NORTH MAIN STREET, LIBERTY, NY 12754 - 845.747.9952
6 TOWNSEND STREET, WALTON, NY 13856 - 607.865.9235
16 EAST MARKET ST., RED HOOK, NY 12571 - 518.452.1290
548 BROADWAY, MONTICELLO, NY 12701 - 845.791.7777

STATE OF NEW YORK · REGISTERED PROFESSIONAL ENGINEER · LICENSED PROFESSIONAL ENGINEER · STATE OF FLORIDA

REVISIONS

NO.	DATE	DESCRIPTION

CONTRACT 1
SUFFERN WWTP UPGRADES
VILLAGE OF SUFFERN
ROCKLAND COUNTY, NEW YORK

EXISTING CONDITIONS
TRICKLING FILTER
PUMP STATION
PLANS

SHEET:
C-130

File: I:\DRAWINGS\SUFFERN\WWTP\ACAD\SFRN_C-130_TRICKLING_PUMPSTA_EX_CNDTN_PLAN.DWG Saved: 12/8/2020 9:43:05 AM Plotted: 12/8/2020 9:43:28 AM User: Gary Mankoon (LastSaveBy: mankoong

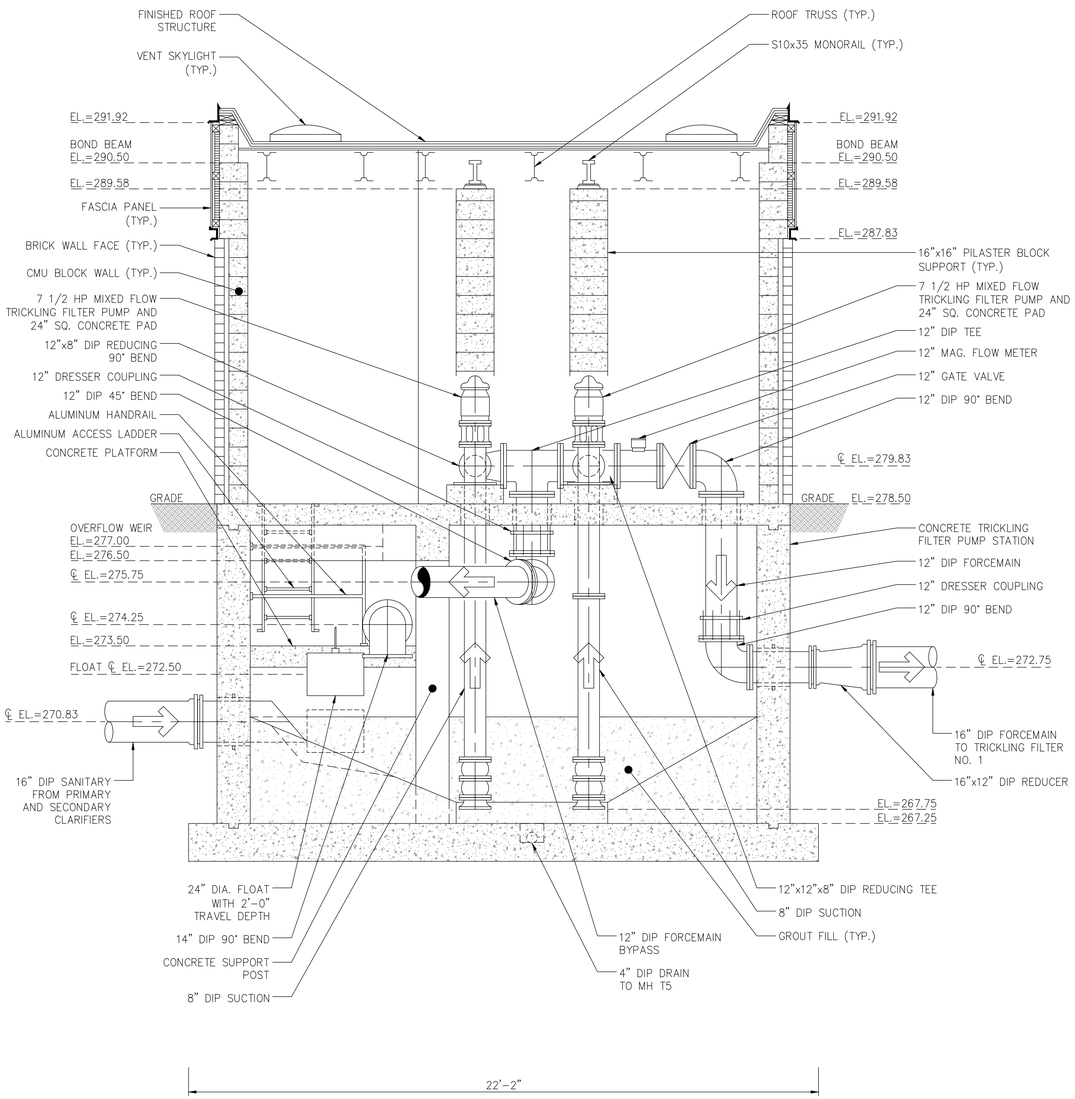

A SECTION
SCALE: 3/8"=1'-0"

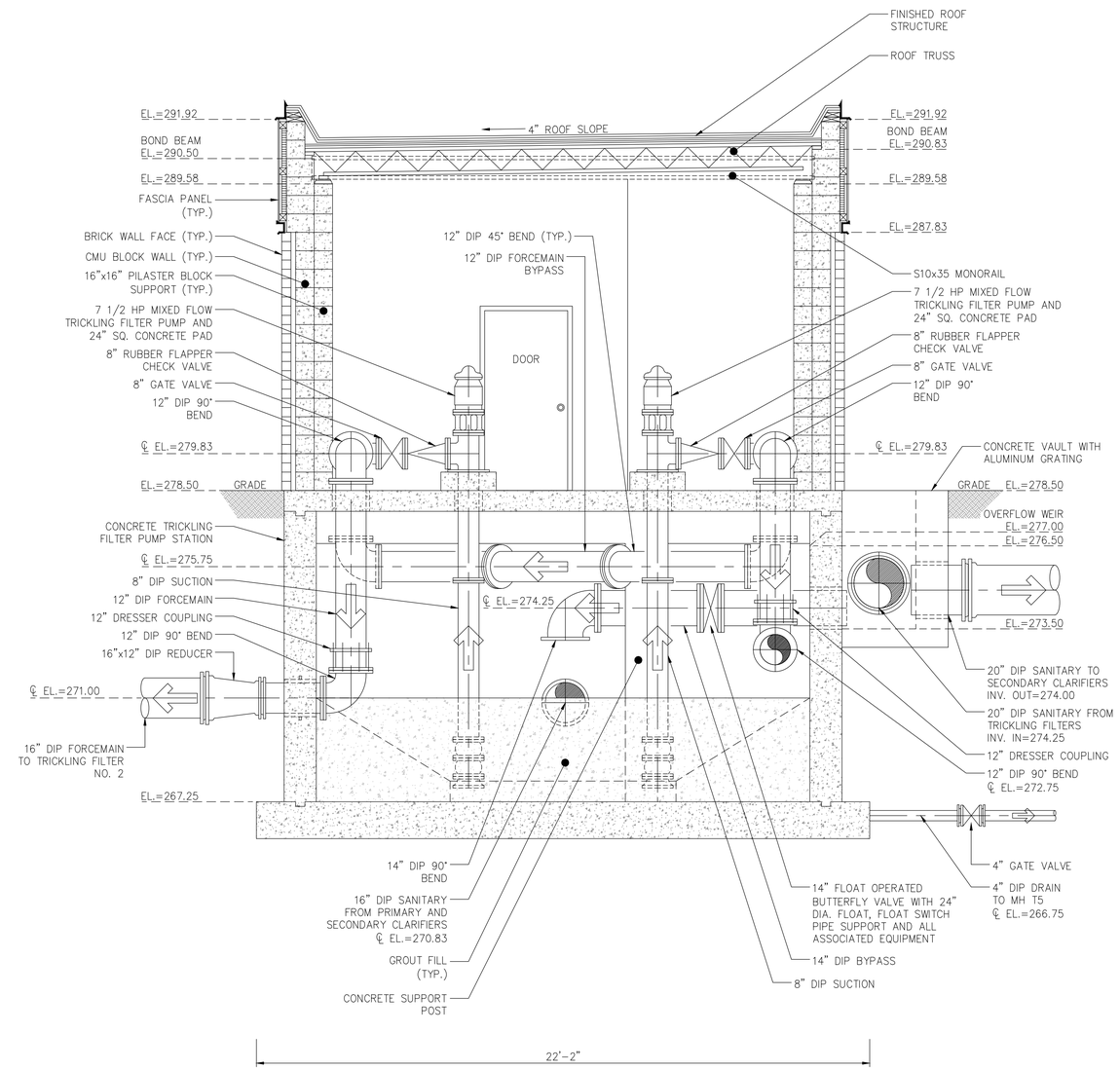

B SECTION
SCALE: 3/8"=1'-0"

BID PLANS

DATE: 12/2020
DRAWN BY: GJM
SCALE: AS SHOWN
REVIEWED BY: RF
PROJECT NO.: 19-1612
FILE:

DELAWARE ENGINEERING, D.P.C.
CIVIL AND ENVIRONMENTAL ENGINEERING
28 MADISON AVENUE EXTENSION, ALBANY, NY 12203 - 518.452.1290
55 SOUTH MAIN ST, ONEONTA, NY 13820 - 607.432.8073
31 NORTH MAIN STREET, LIBERTY, NY 12754 - 845.747.9952
6 TOWNSEND STREET, WALTON, NY 13856 - 607.865.9235
16 EAST MARKET ST., RED HOOK, NY 12571 - 518.452.1290
548 BROADWAY, MONTICELLO, NY 12701 - 845.791.7777

STATE OF NEW YORK · REGISTERED PROFESSIONAL ENGINEER · LICENSED PROFESSIONAL ENGINEER

REVISIONS

NO.	DATE	DESCRIPTION

CONTRACT 1
SUFFERN WWTP UPGRADES
VILLAGE OF SUFFERN
ROCKLAND COUNTY, NEW YORK

EXISTING CONDITIONS
TRICKLING FILTER
PUMP STATION
SECTIONS

SHEET:
C-131

WARNING – IT IS A VIOLATION OF NEW YORK EDUCATION LAW SECTION 7209.2, FOR ANY PERSON, UNLESS HE IS ACTING UNDER THE DIRECTION OF A LICENSED PROFESSIONAL ENGINEER OR LAND SURVEYOR, TO ALTER THIS DOCUMENT IN ANY WAY. IF ALTERED THE ALTERING PERSON SHALL COMPLY WITH THE REQUIREMENTS OF NEW YORK EDUCATION LAW, SECTION 7209.2.

File: H:\DRAWINGS\SUFFERN\WWTP\ACAD\SFRN_C-131_TRICKLING_PUMPSTA_EX_CNDTN_SECT.DWG Sheet: 12/8/2020 9:44:19 AM Plotted: 12/8/2020 9:44:45 AM User: Gary Markham LastSavedBy: markhamg

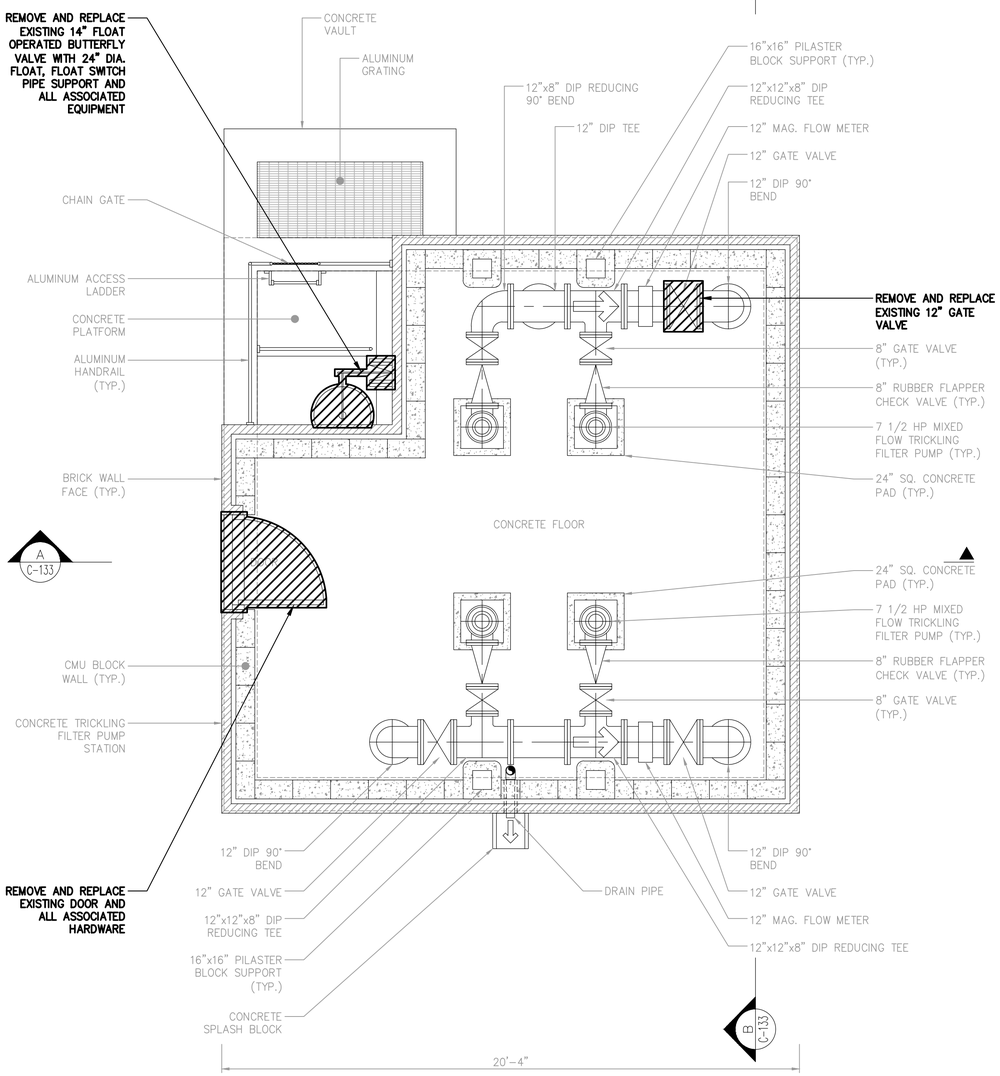

PLAN – MAIN FLOOR

SCALE: 3/8"=1'-0"

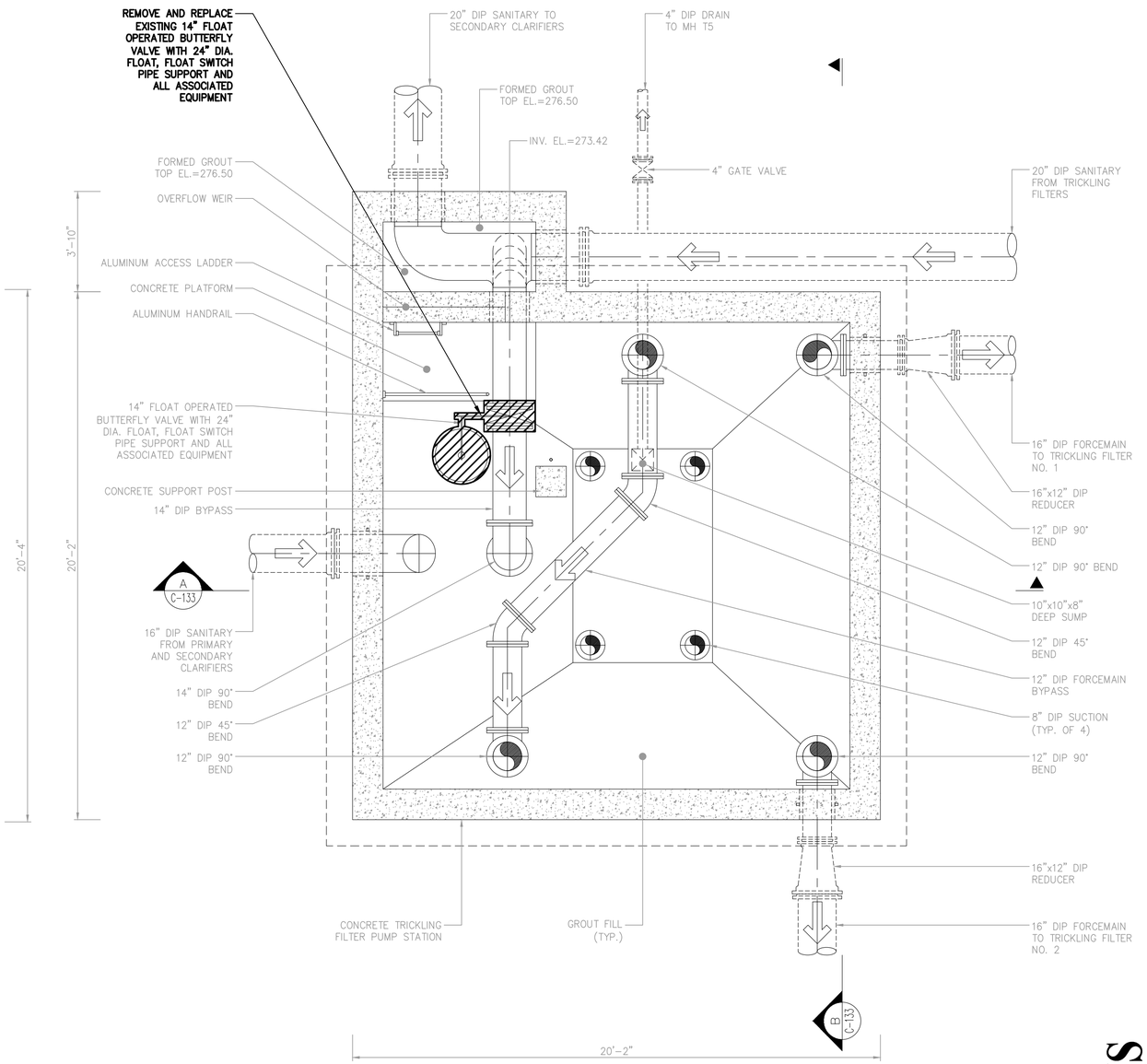

PLAN – WET WELL

SCALE: 3/8"=1'-0"

BID PLANS

WARNING – IT IS A VIOLATION OF NEW YORK EDUCATION LAW SECTION 7209.2, FOR ANY PERSON, UNLESS HE IS ACTING UNDER THE DIRECTION OF A LICENSED PROFESSIONAL ENGINEER OR LAND SURVEYOR, TO ALTER THIS DOCUMENT IN ANY WAY. IF ALTERED THE ALTERING PERSON SHALL COMPLY WITH THE REQUIREMENTS OF NEW YORK EDUCATION LAW, SECTION 7209.2.

DATE: 12/2020
DRAWN BY: GJM
SCALE: AS SHOWN
REVIEWED BY: RF
PROJECT NO.: 19-1612
FILE:

DELAWARE ENGINEERING, D.P.C.
CIVIL AND ENVIRONMENTAL ENGINEERING
28 MADISON AVENUE EXTENSION, ALBANY, NY 12203 - 518.452.1290
55 SOUTH MAIN ST, ONEONTA, NY 13820 - 607.432.8073
31 NORTH MAIN STREET, LIBERTY, NY 12754 - 845.747.9952
6 TOWNSEND STREET, WALTON, NY 13856 - 607.865.9235
16 EAST MARKET ST., RED HOOK, NY 12571 - 518.452.1290
548 BROADWAY, MONTICELLO, NY 12701 - 845.791.7777

REVISIONS

NO.	DATE	DESCRIPTION

CONTRACT 1
SUFFERN WWTP UPGRADES
VILLAGE OF SUFFERN
ROCKLAND COUNTY, NEW YORK

EXISTING
TRICKLING FILTER
PUMP STATION
DEMO PLANS

SHEET:
C-132

File: n:\DRAWINGS\SUFFERN\WWTP\ACAD\SFRN_C-132_TRICKLING_PUMPSTA_DEMO_PLAN.DWG Saved: 12/8/2020 9:45:55 AM Plotted: 12/8/2020 9:46:24 AM User: Gary Markham LastSavedBy: markahing

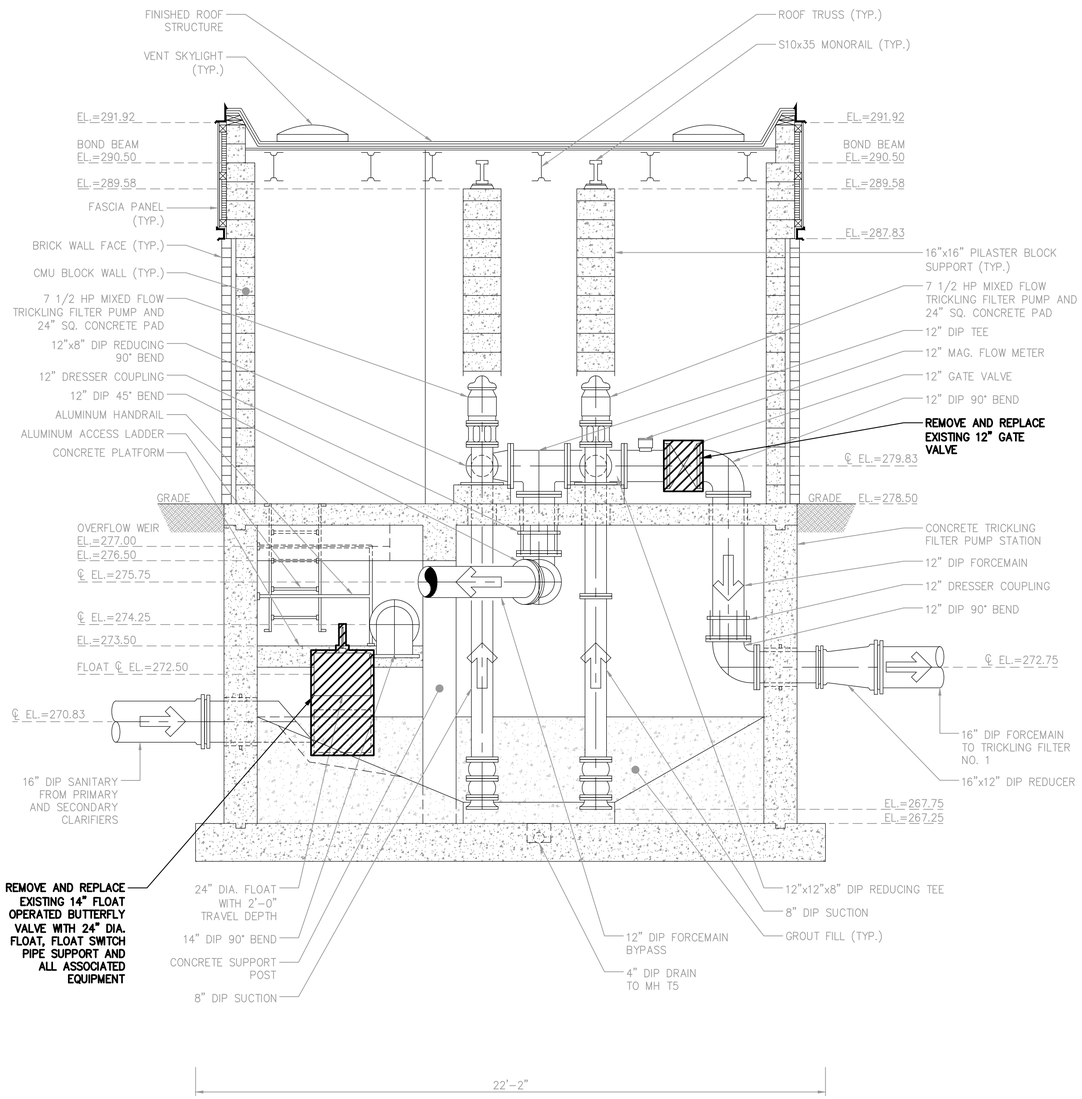

A SECTION
SCALE: 3/8"=1'-0"

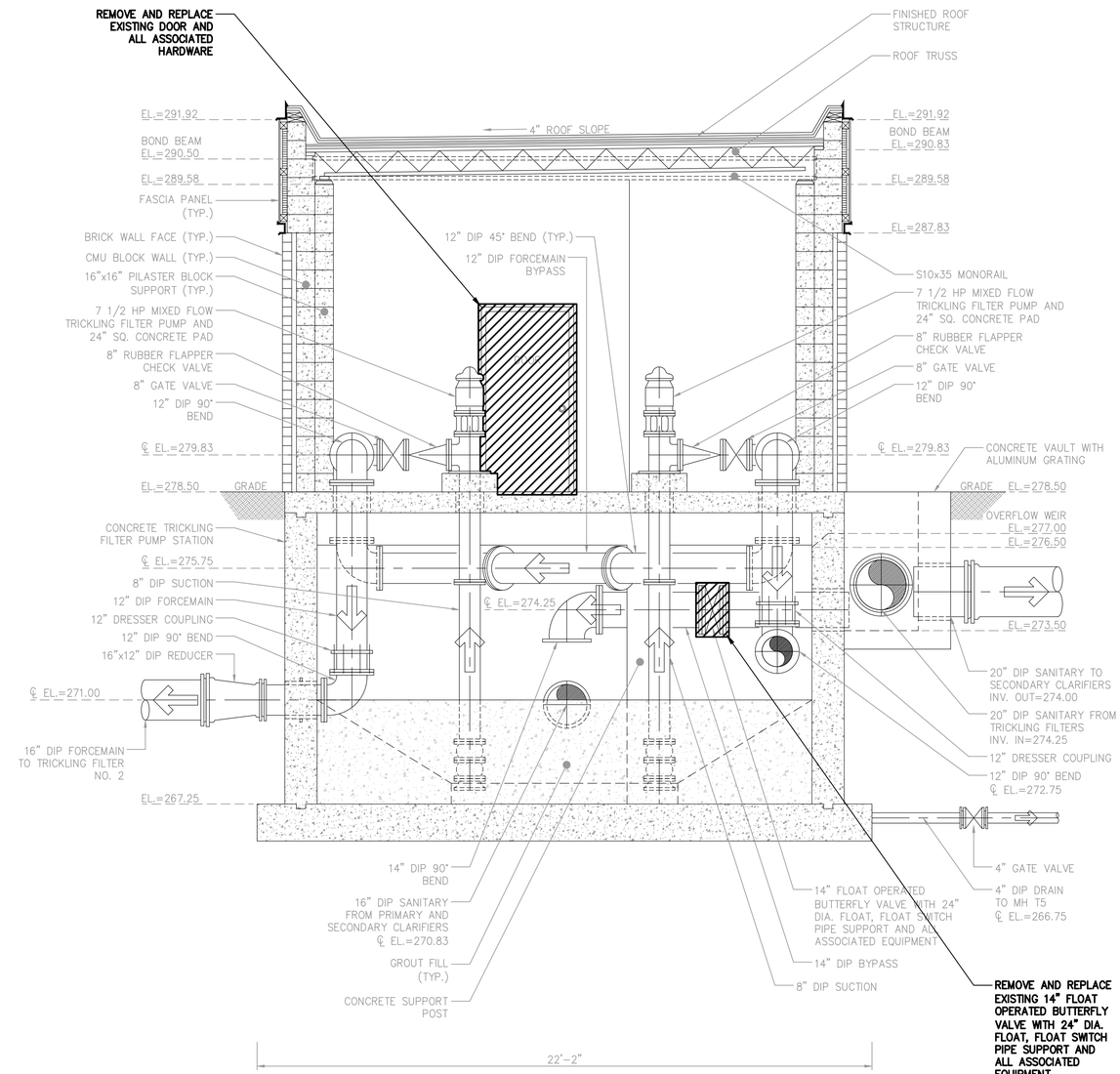

B SECTION
SCALE: 3/8"=1'-0"

BID PLANS

WARNING – IT IS A VIOLATION OF NEW YORK EDUCATION LAW SECTION 7209.2, FOR ANY PERSON, UNLESS HE IS ACTING UNDER THE DIRECTION OF A LICENSED PROFESSIONAL ENGINEER OR LAND SURVEYOR, TO ALTER THIS DOCUMENT IN ANY WAY. IF ALTERED THE ALTERING PERSON SHALL COMPLY WITH THE REQUIREMENTS OF NEW YORK EDUCATION LAW, SECTION 7209.2.

DATE: 12/2020
DRAWN BY: GJM
SCALE: AS SHOWN
REVIEWED BY: RF
PROJECT NO.: 19-1612
FILE:

DELAWARE ENGINEERING, D.P.C.
CIVIL AND ENVIRONMENTAL ENGINEERING
28 MADISON AVENUE EXTENSION, ALBANY, NY 12203 - 518.452.1290
55 SOUTH MAIN ST, ONEONTA, NY 13820 - 607.432.8073
31 NORTH MAIN STREET, LIBERTY, NY 12754 - 845.747.9952
6 TOWNSEND STREET, WALTON, NY 13856 - 607.865.9235
16 EAST MARKET ST., RED HOOK, NY 12571 - 518.452.1290
548 BROADWAY, MONTICELLO, NY 12701 - 845.791.7777

STATE OF NEW YORK · REGISTERED PROFESSIONAL ENGINEER · LICENSED LAND SURVEYOR

REVISIONS

NO.	DATE	DESCRIPTION

CONTRACT 1
SUFFERN WWTP UPGRADES
VILLAGE OF SUFFERN
ROCKLAND COUNTY, NEW YORK

EXISTING
TRICKLING FILTER
PUMP STATION
DEMO SECTIONS

SHEET:
C-133

File: H:\DRAWINGS\SUFFERN\WWTP\ACAD\SFRN_C-133_TRICKLING_PUMPSTA_DEMO_SECT.DWG Saved: 12/8/2020 9:47:12 AM Plotted: 12/8/2020 9:47:52 AM User: Gary Markham LastSavedBy: markhamg

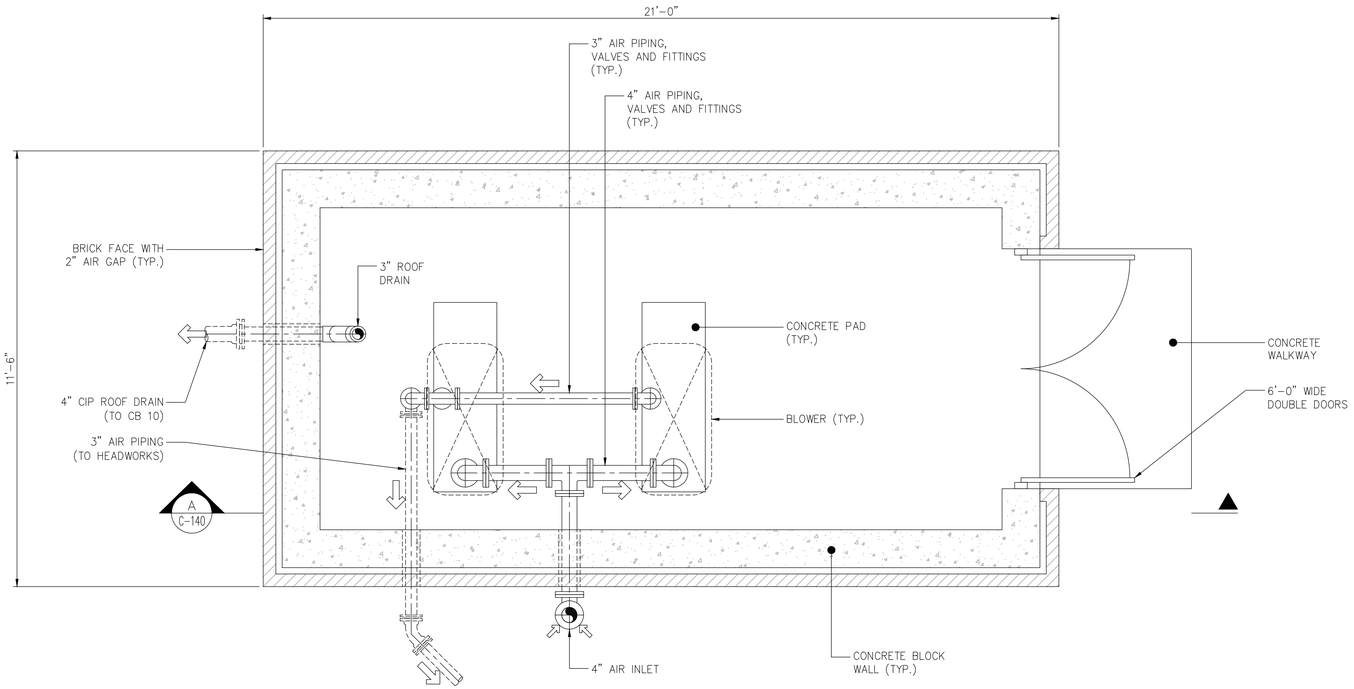

PLAN – BELOW ELEV.=286.00

SCALE: 1/2"=1'-0"

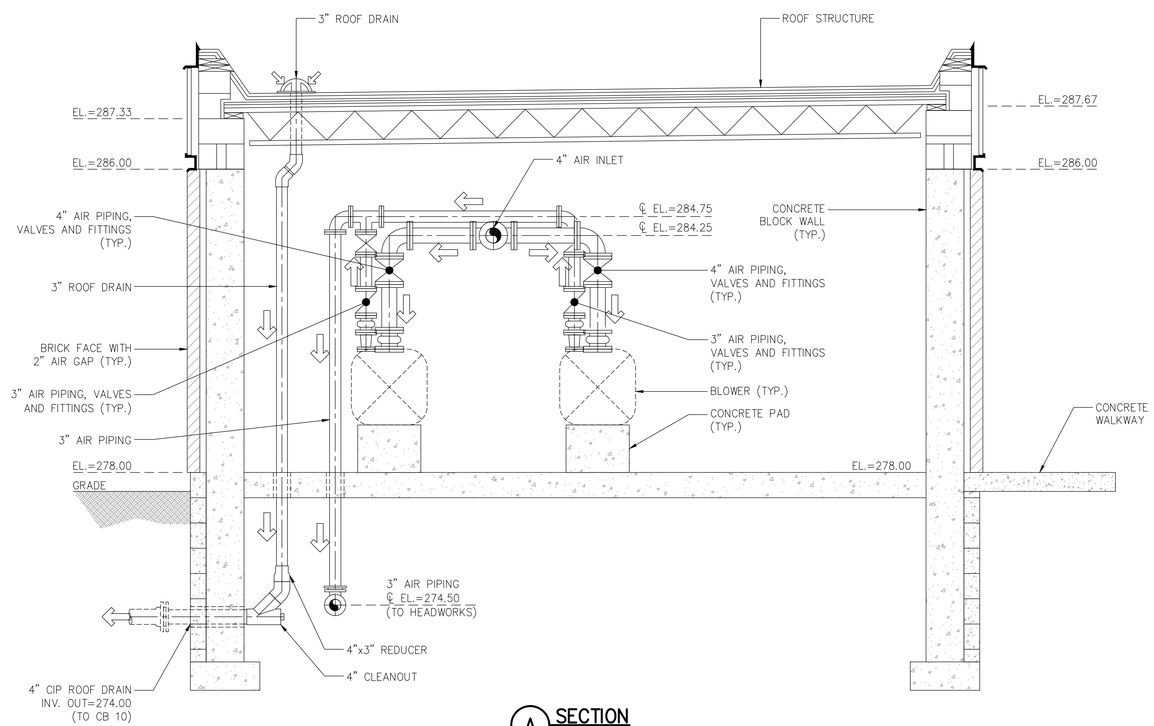

A SECTION

SCALE: 1/2"=1'-0"

WARNING – IT IS A VIOLATION OF NEW YORK EDUCATION LAW SECTION 7209.2, FOR ANY PERSON, UNLESS HE IS ACTING UNDER THE DIRECTION OF A LICENSED PROFESSIONAL ENGINEER OR LAND SURVEYOR, TO ALTER THIS DOCUMENT IN ANY WAY. IF ALTERED THE ALTERING PERSON SHALL COMPLY WITH THE REQUIREMENTS OF NEW YORK EDUCATION LAW, SECTION 7209.2.

BID PLANS

DATE: 12/2020
DRAWN BY: GJM
SCALE: AS SHOWN
REVIEWED BY: RF
PROJECT NO.: 19-1612
FILE:

DELAWARE ENGINEERING, D.P.C.
CIVIL AND ENVIRONMENTAL ENGINEERING
28 MADISON AVENUE EXTENSION, ALBANY, NY 12203 - 518.452.1290
55 SOUTH MAIN ST, ONEONTA, NY 13820 - 607.432.8073
31 NORTH MAIN STREET, LIBERTY, NY 12754 - 845.747.9952
6 TOWNSEND STREET, WALTON, NY 13856 - 607.865.9235
16 EAST MARKET ST., RED HOOK, NY 12571 - 518.452.1290
548 BROADWAY, MONTICELLO, NY 12701 - 845.791.7777

STATE OF NEW YORK · REGISTERED PROFESSIONAL ENGINEER · GARY J. MARKHAM · 081531 · LICENSED PROFESSIONAL ENGINEER

REVISIONS

NO.	DATE	DESCRIPTION

CONTRACT 1
SUFFERN WWTP UPGRADES
VILLAGE OF SUFFERN
ROCKLAND COUNTY, NEW YORK

EXISTING CONDITIONS
BLOWER BUILDING
PLAN AND SECTION

SHEET:
C-140

File: H:\DRAWINGS\SUFFERN\WWTP\ACAD\SFRN_C-140_EX_BLOWER_BLD_EX_CNDTN_PLAN_SECT.DWG Saved: 12/8/2020 9:48:54 AM Plotted: 12/8/2020 9:48:58 AM User: Gary Markham LastSavedBy: markhamg

NOTE:
1. CONTRACTOR SHALL REMOVE AND DISPOSE OF ANY EQUIPMENT NOT SHOWN THAT IS DIRECTLY ASSOCIATED WITH THE DETAILED REMOVALS DEPICTED.

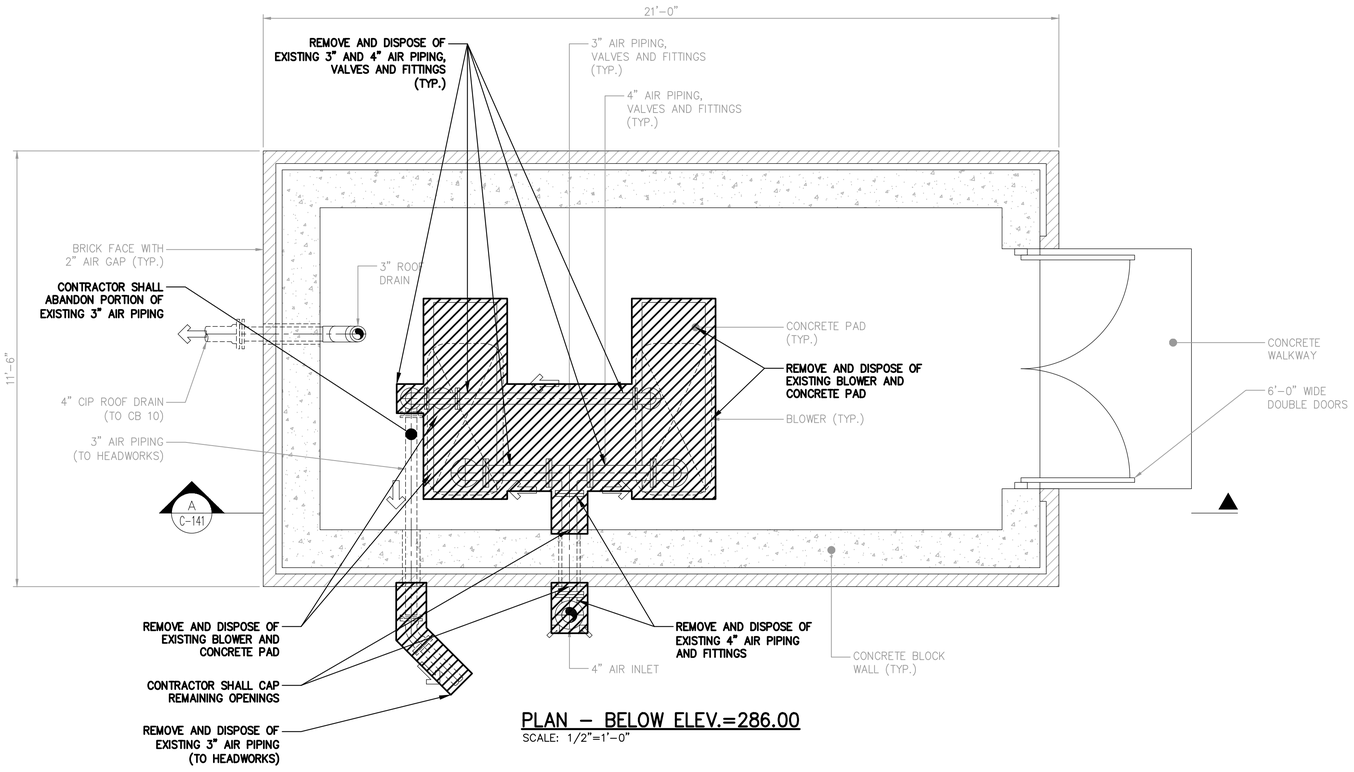

PLAN – BELOW ELEV.=286.00

SCALE: 1/2"=1'-0"

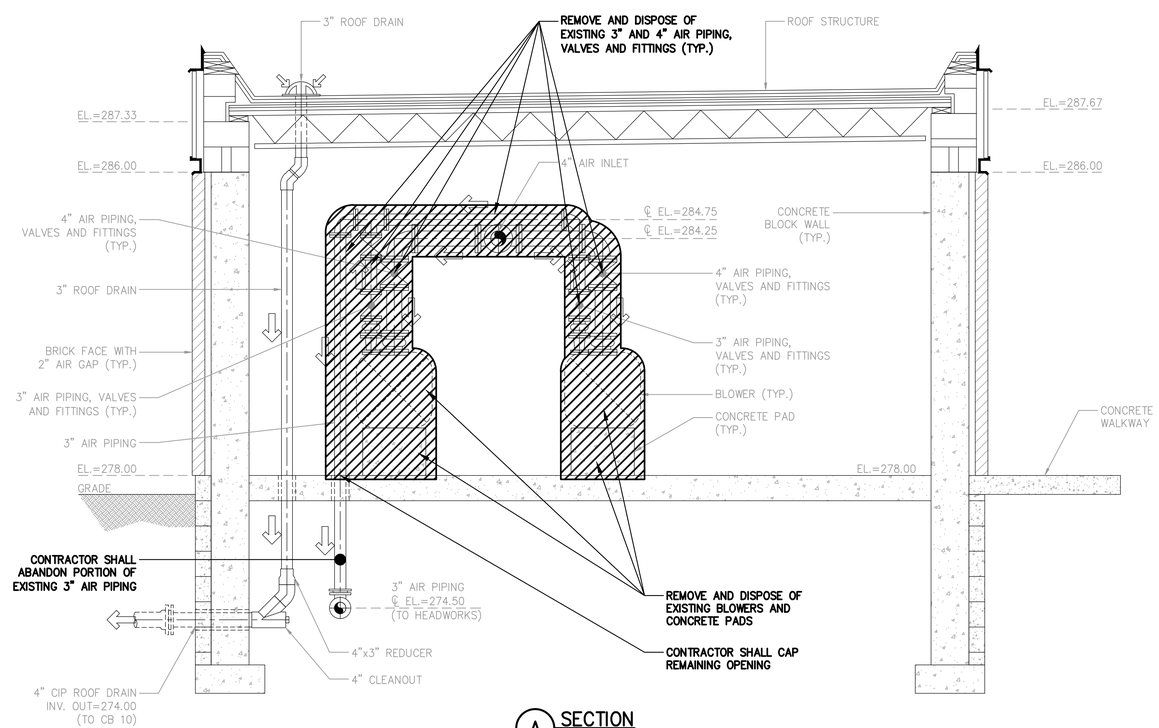

A SECTION

SCALE: 1/2"=1'-0"

BID PLANS

WARNING – IT IS A VIOLATION OF NEW YORK EDUCATION LAW SECTION 7209.2, FOR ANY PERSON, UNLESS HE IS ACTING UNDER THE DIRECTION OF A LICENSED PROFESSIONAL ENGINEER OR LAND SURVEYOR, TO ALTER THIS DOCUMENT IN ANY WAY. IF ALTERED THE ALTERING PERSON SHALL COMPLY WITH THE REQUIREMENTS OF NEW YORK EDUCATION LAW, SECTION 7209.2.

DATE: 12/2020
DRAWN BY: GJM
SCALE: AS SHOWN
REVIEWED BY: RF
PROJECT NO.: 19-1612
FILE:

DELAWARE ENGINEERING, D.P.C.
CIVIL AND ENVIRONMENTAL ENGINEERING
28 MADISON AVENUE EXTENSION, ALBANY, NY 12203 - 518.452.1290
55 SOUTH MAIN ST, ONEONTA, NY 13820 - 607.432.8073
31 NORTH MAIN STREET, LIBERTY, NY 12754 - 845.747.9952
6 TOWNSEND STREET, WALTON, NY 13856 - 607.865.9235
16 EAST MARKET ST., RED HOOK, NY 12571 - 518.452.1290
548 BROADWAY, MONTICELLO, NY 12701 - 845.791.7777

STATE OF NEW YORK · REGISTERED PROFESSIONAL ENGINEER · LICENSED PROFESSIONAL ENGINEER

REVISIONS

NO.	DATE	DESCRIPTION

CONTRACT 1
SUFFERN WWTP UPGRADES
VILLAGE OF SUFFERN
ROCKLAND COUNTY, NEW YORK

EXISTING
BLOWER BUILDING
DEMO PLAN AND
SECTION

SHEET:
C-141

File: I:\DRAWINGS\SUFFERN\WWTP\ACAD\SFRN_C-141_EX_BLOWER_BLD_DEMO_PLAN_SECT.DWG Saved: 12/8/2020 9:49:39 AM Plotted: 12/8/2020 9:49:58 AM User: Gary Mackison LastSavedBy: mcakkang

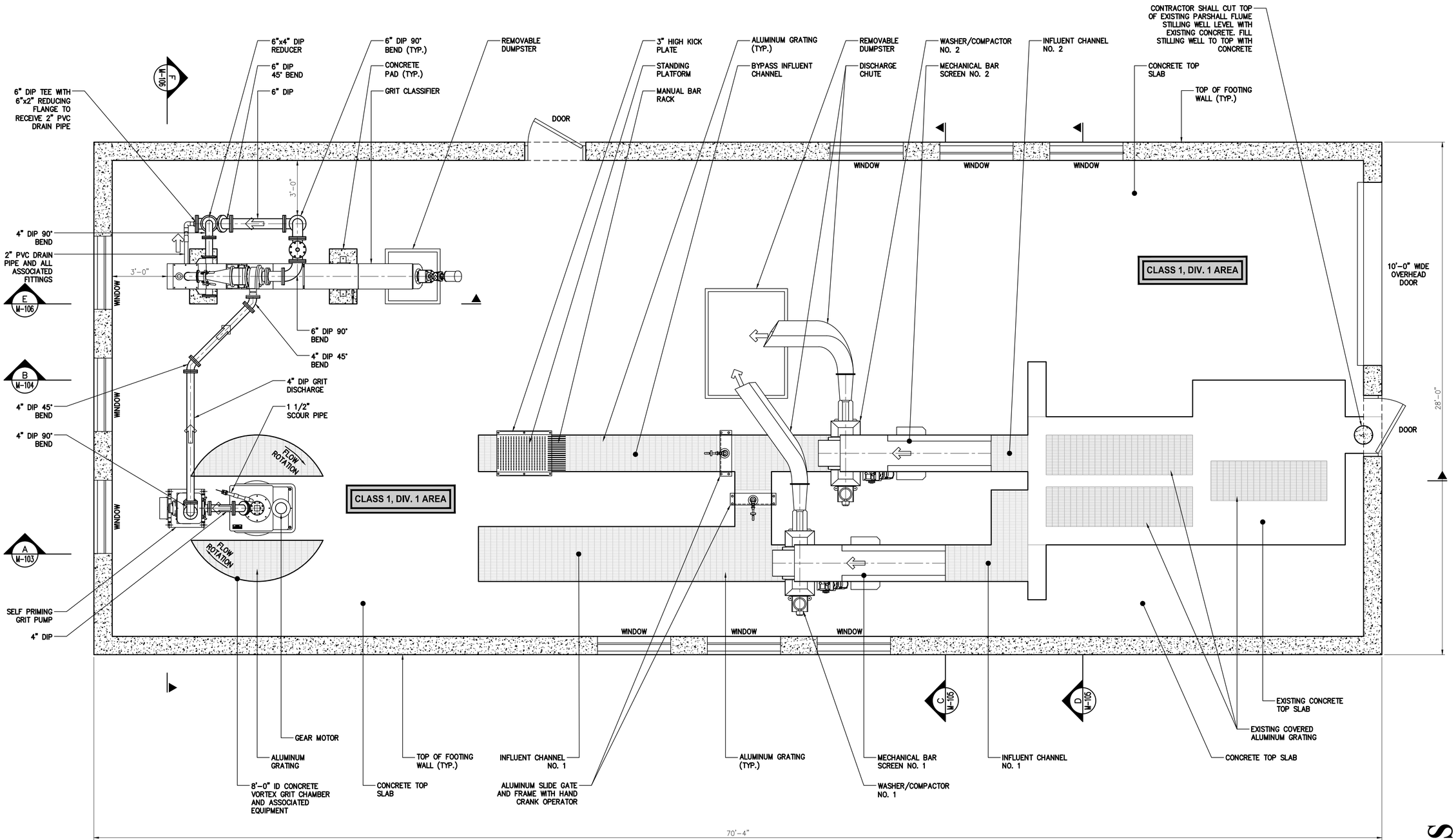

PROPOSED HEADWORKS UPGRADE

HEADWORKS BUILDING ENCLOSURE NOT SHOWN FOR CLARITY

PLAN – ABOVE TOP SLAB

SCALE: 3/8"=1'-0"

NOTE:

1. REFER TO STRUCTURAL DRAWINGS FOR DETAILED CONCRETE AND BUILDING STRUCTURE INFORMATION.

BID PLANS

WARNING – IT IS A VIOLATION OF NEW YORK EDUCATION LAW SECTION 7209.2, FOR ANY PERSON, UNLESS HE IS ACTING UNDER THE DIRECTION OF A LICENSED PROFESSIONAL ENGINEER OR LAND SURVEYOR, TO ALTER THIS DOCUMENT IN ANY WAY. IF ALTERED THE ALTERING PERSON SHALL COMPLY WITH THE REQUIREMENTS OF NEW YORK EDUCATION LAW, SECTION 7209.2.

DATE:	12/2020
DRAWN BY:	GJM
SCALE:	AS SHOWN
REVIEWED BY:	RF
PROJECT NO.:	19-1612
FILE:	

DELAWARE ENGINEERING, D.P.C.
CIVIL AND ENVIRONMENTAL ENGINEERING
28 MADISON AVENUE EXTENSION, ALBANY, NY 12203 - 518.452.1290
55 SOUTH MAIN ST, ONEONTA, NY 13820 - 607.432.8073
31 NORTH MAIN STREET, LIBERTY, NY 12754 - 845.747.9952
6 TOWNSEND STREET, WALTON, NY 13856 - 607.865.9235
16 EAST MARKET ST., RED HOOK, NY 12571 - 518.452.1290
548 BROADWAY, MONTICELLO, NY 12701 - 845.791.7777

REVISIONS

NO.	DATE	DESCRIPTION

CONTRACT 1
SUFFERN WWTP UPGRADES
VILLAGE OF SUFFERN
ROCKLAND COUNTY, NEW YORK

PROPOSED HEADWORKS PLAN ABOVE TOP SLAB

SHEET: M-101

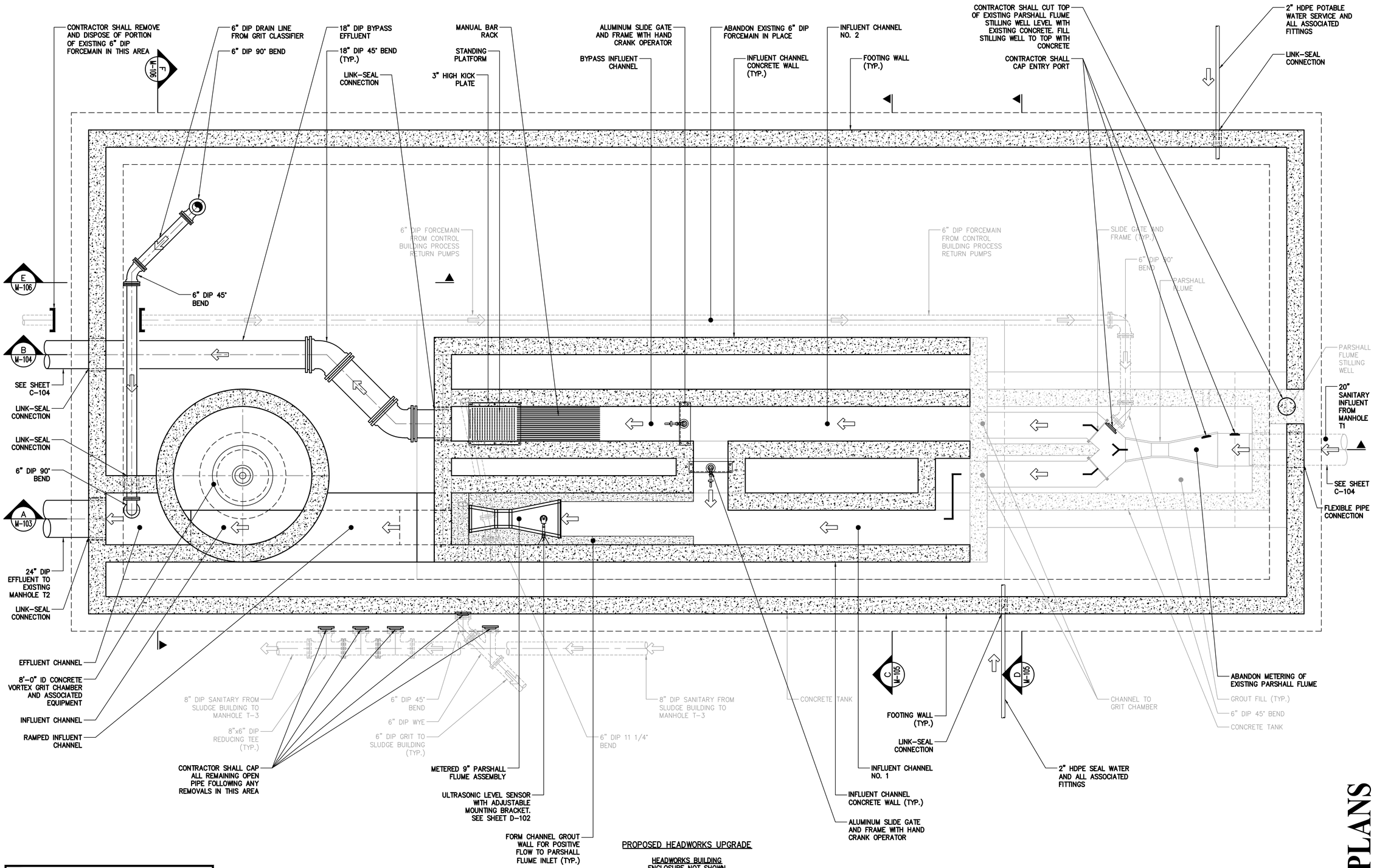

PROPOSED HEADWORKS UPGRADE

HEADWORKS BUILDING ENCLOSURE NOT SHOWN FOR CLARITY

PLAN – BELOW TOP SLAB

SCALE: 3/8"=1'-0"

NOTE:

1. REFER TO STRUCTURAL DRAWINGS FOR DETAILED CONCRETE AND BUILDING STRUCTURE INFORMATION.

BID PLANS

WARNING – IT IS A VIOLATION OF NEW YORK EDUCATION LAW SECTION 7209.2, FOR ANY PERSON, UNLESS HE IS ACTING UNDER THE DIRECTION OF A LICENSED PROFESSIONAL ENGINEER OR LAND SURVEYOR, TO ALTER THIS DOCUMENT IN ANY WAY. IF ALTERED THE ALTERING PERSON SHALL COMPLY WITH THE REQUIREMENTS OF NEW YORK EDUCATION LAW, SECTION 7209.2.

DATE:	12/2020
DRAWN BY:	GJM
SCALE:	AS SHOWN
REVIEWED BY:	RF
PROJECT NO.:	19-1612
FILE:	

DELAWARE ENGINEERING, D.P.C.
CIVIL AND ENVIRONMENTAL ENGINEERING
28 MADISON AVENUE EXTENSION, ALBANY, NY 12203 - 518.452.1290
55 SOUTH MAIN ST, ONEONTA, NY 13820 - 607.432.8073
31 NORTH MAIN STREET, LIBERTY, NY 12754 - 845.747.9952
6 TOWNSEND STREET, WALTON, NY 13856 - 607.865.9235
16 EAST MARKET ST., RED HOOK, NY 12571 - 518.452.1290
548 BROADWAY, MONTICELLO, NY 12701 - 845.791.7777

REGISTERED PROFESSIONAL ENGINEER STATE OF NEW YORK

REVISIONS

NO.	DATE	DESCRIPTION

CONTRACT 1
SUFFERN WWTP UPGRADES
VILLAGE OF SUFFERN
ROCKLAND COUNTY, NEW YORK

PROPOSED HEADWORKS PLAN BELOW TOP SLAB

SHEET: M-102

File: H:\DRAWINGS\SUFFERN\WWTP\CAD\SFRN_M-102_HDWKS_PR_PLAN.DWG Saved: 12/8/2020 9:52:11 AM Plotted: 12/8/2020 9:52:39 AM User: Gary Markham LastSavedBy: markhamg

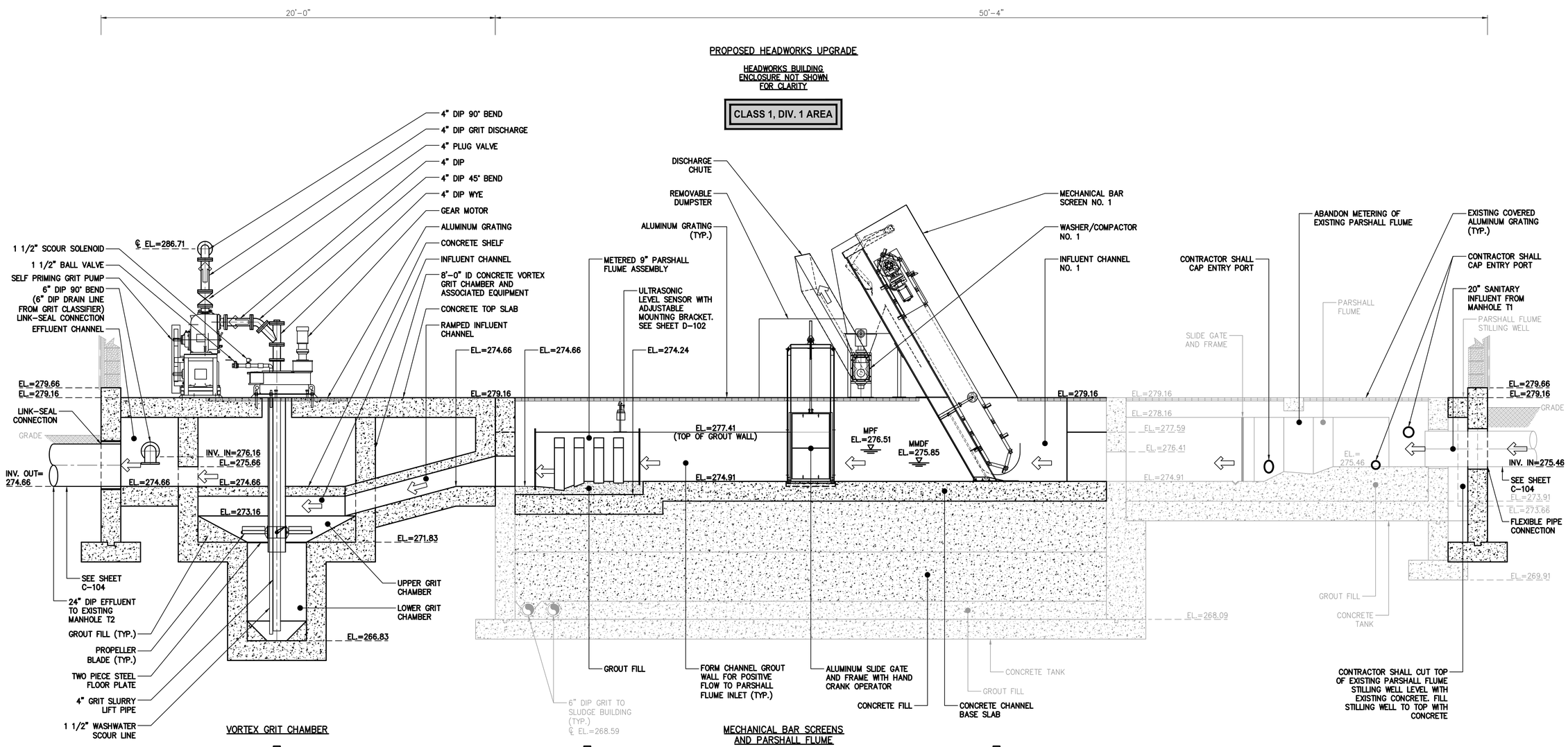

A SECTION
SCALE: 3/8"=1'-0"

GRIT REMOVAL VORTEX		
DESCRIPTION	UNITS	DIMENSION/CAPACITY
APPLICATION		DOMESTIC SEWAGE GRIT REMOVAL
INLET/EFFLUENT ORIENTATION	DG	360.00
UPPER CHAMBER FLOOR		SLOPPED
PEAK FLOW RATE	MGD	4.00
GRIT CAPTURE RATING, MAX FLOW	%GRIT > 50 MESH	95.00
GRIT CAPTURE RATING, MAX FLOW	%GRIT > 70 MESH, < 50 MESH	85.00
GRIT CAPTURE RATING, MAX FLOW	%GRIT > 100 MESH, < 70 MESH	65.00
GRIT SPECIFIC GRAVITY		2.65
CHAMBER DIAMETER	FT	8.00
INLET WIDTH	IN	24.00
EFFLUENT WIDTH	IN	24.00
AIR RATE	CF/M/F	3MIN, 8 MAX
PEAK FLOW DETENTION TIME	MIN	3MIN, 5 MAX
GRIT PUMP	1HP, 480V, 3PHASE, 60HZ	

9" PARSHALL FLUME			
HEAD	MGD	CFS	GPM
1.59	4.03	6.24	2,801.10

MECHANICAL FINE SCREENS		
INPUT: CHANNEL PHYSICS		
PEAK FLOW DESIGN WITH TWO SCREENS	MGD	4.00
CHANNEL WIDTH	FT	2.00
CHANNEL DEPTH	FT	4.50
DEGREE OF BLINDING	%	0.25
SCREEN:		
CLEAR OPENING	MM	3.00
BAR THICKNESS	IN	FINE
304 L STAINLESS STEEL		
POWER:		
SCREEN: 480V, E3 PHASE, 60HZ, 3/4 HP		
SOLENOID VALVES: 120V, 60HZ NORMALLY CLOSED		
COMPACTOR: 480V, 3 PHASE, 60 HZ, 1 HP		
WASHER:		
FLOW	GPM	3-5
CONNECTION	INCH	0.75

NOTE:

1. REFER TO STRUCTURAL DRAWINGS FOR DETAILED CONCRETE AND BUILDING STRUCTURE INFORMATION.

BID PLANS

WARNING -- IT IS A VIOLATION OF NEW YORK EDUCATION LAW SECTION 7209.2, FOR ANY PERSON, UNLESS HE IS ACTING UNDER THE DIRECTION OF A LICENSED PROFESSIONAL ENGINEER OR LAND SURVEYOR, TO ALTER THIS DOCUMENT IN ANY WAY. IF ALTERED THE ALTERING PERSON SHALL COMPLY WITH THE REQUIREMENTS OF NEW YORK EDUCATION LAW, SECTION 7209.2.

DATE: 12/2020
DRAWN BY: GJM
SCALE: AS SHOWN
REVIEWED BY: RF
PROJECT NO.: 19-1612
FILE:

DELAWARE ENGINEERING, D.P.C.
CIVIL AND ENVIRONMENTAL ENGINEERING
28 MADISON AVENUE EXTENSION, ALBANY, NY 12203 - 518.452.1290
55 SOUTH MAIN ST, ONEONTA, NY 13820 - 607.432.8073
31 NORTH MAIN STREET, LIBERTY, NY 12754 - 845.747.9952
6 TOWNSEND STREET, WALTON, NY 13856 - 607.865.9235
16 EAST MARKET ST., RED HOOK, NY 12571 - 518.452.1290
548 BROADWAY, MONTICELLO, NY 12701 - 845.791.7777

REVISIONS

NO.	DATE	DESCRIPTION

CONTRACT 1
SUFFERN WWTP UPGRADES
VILLAGE OF SUFFERN
ROCKLAND COUNTY, NEW YORK

PROPOSED HEADWORKS SECTION

SHEET:
M-103

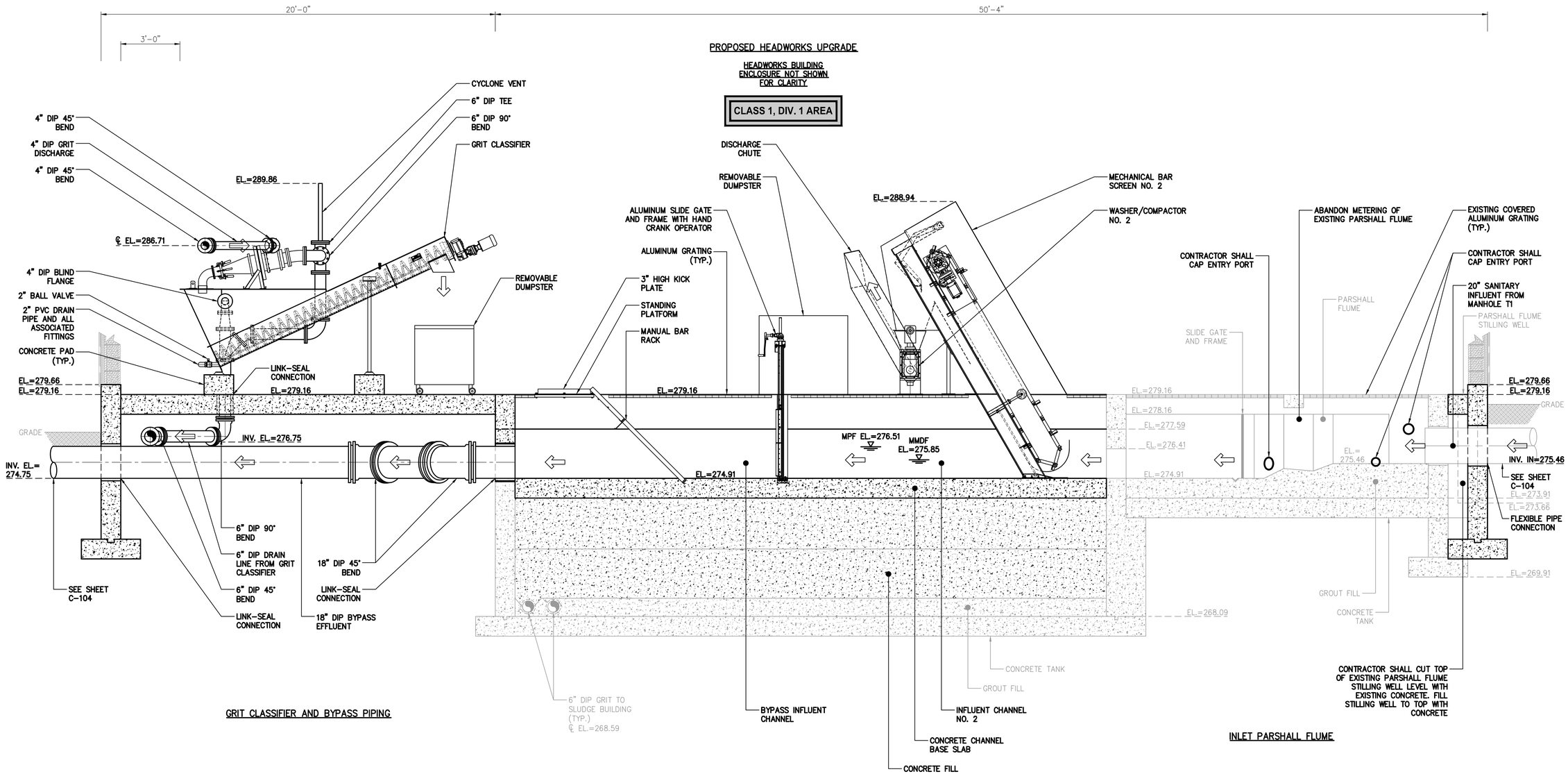

B SECTION
SCALE: 3/8"=1'-0"

NOTE:

1. REFER TO STRUCTURAL DRAWINGS FOR DETAILED CONCRETE AND BUILDING STRUCTURE INFORMATION.

BID PLANS

WARNING – IT IS A VIOLATION OF NEW YORK EDUCATION LAW SECTION 7209.2, FOR ANY PERSON, UNLESS HE IS ACTING UNDER THE DIRECTION OF A LICENSED PROFESSIONAL ENGINEER OR LAND SURVEYOR, TO ALTER THIS DOCUMENT IN ANY WAY. IF ALTERED THE ALTERING PERSON SHALL COMPLY WITH THE REQUIREMENTS OF NEW YORK EDUCATION LAW, SECTION 7209.2.

File: H:\DRAWINGS\SUFFERN\WWTP\ACAD\SFRN_M-104_HDWKS_PR-SECT.DWG Saved: 12/8/2020 10:00:29 AM Plotted: 12/8/2020 10:00:54 AM User: Gary Markham LastSaveBy: markhamg

DATE: 12/2020
DRAWN BY: GJM
SCALE: AS SHOWN
REVIEWED BY: RF
PROJECT NO.: 19-1612
FILE:

DELAWARE ENGINEERING, D.P.C.
CIVIL AND ENVIRONMENTAL ENGINEERING
28 MADISON AVENUE EXTENSION, ALBANY, NY 12203 - 518.452.1290
55 SOUTH MAIN ST, ONEONTA, NY 13820 - 607.432.8073
31 NORTH MAIN STREET, LIBERTY, NY 12754 - 845.747.9952
6 TOWNSEND STREET, WALTON, NY 13856 - 607.865.9235
16 EAST MARKET ST., RED HOOK, NY 12571 - 518.452.1290
548 BROADWAY, MONTICELLO, NY 12701 - 845.791.7777

REVISIONS

NO.	DATE	DESCRIPTION

CONTRACT 1
SUFFERN WWTP UPGRADES
VILLAGE OF SUFFERN
ROCKLAND COUNTY, NEW YORK

PROPOSED HEADWORKS SECTION

SHEET:
M-104

PROPOSED HEADWORKS UPGRADE

HEADWORKS BUILDING ENCLOSURE NOT SHOWN FOR CLARITY

CLASS 1, DIV. 1 AREA

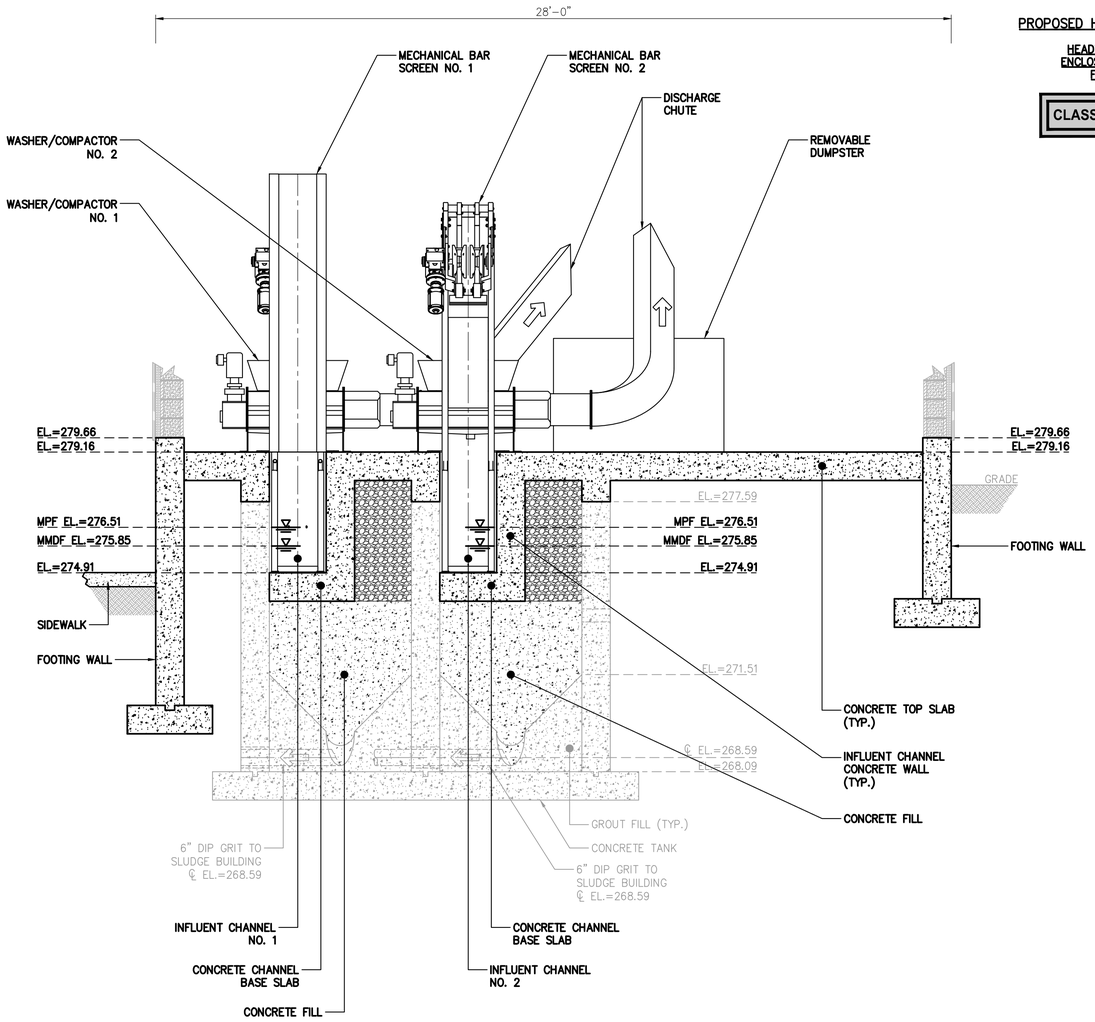

MECHANICAL BAR SCREENS

C SECTION
SCALE: 3/8"=1'-0"

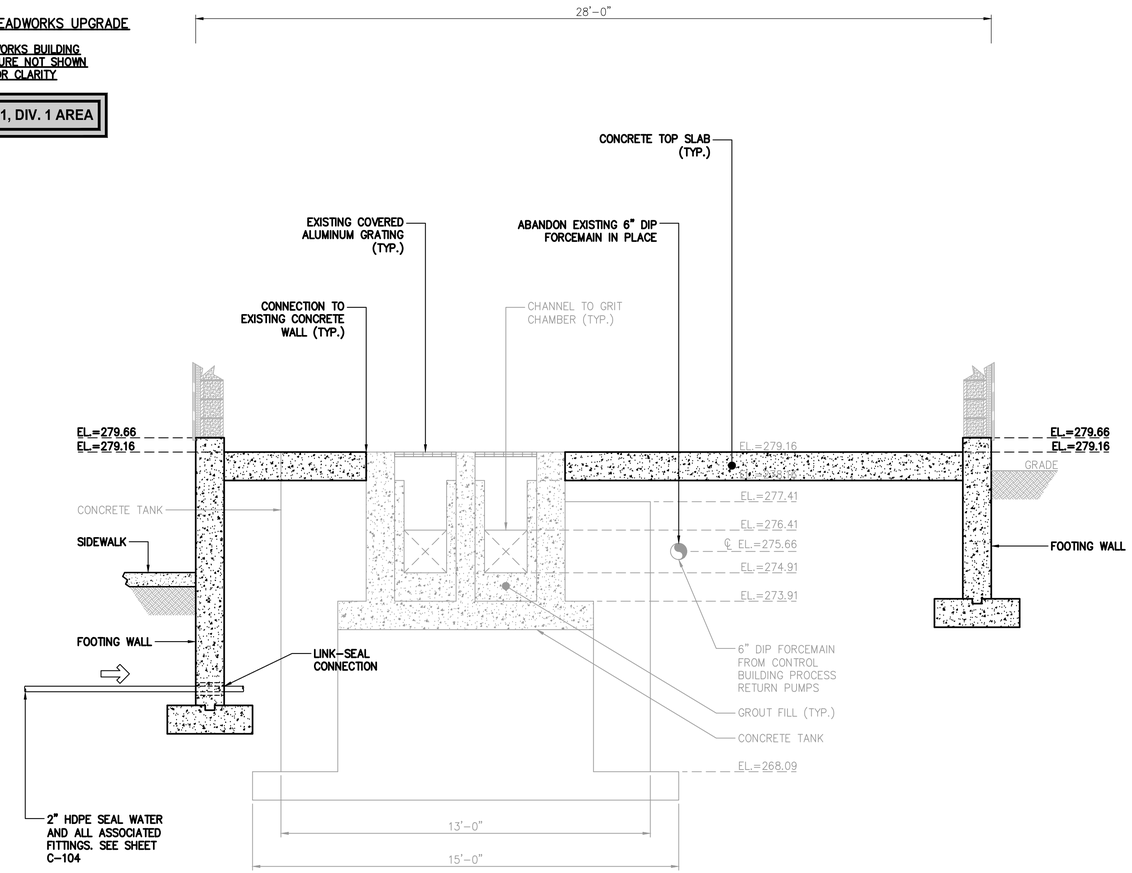

INLET PARSHALL FLUME

D SECTION
SCALE: 3/8"=1'-0"

NOTE:

1. REFER TO STRUCTURAL DRAWINGS FOR DETAILED CONCRETE AND BUILDING STRUCTURE INFORMATION.

BID PLANS

WARNING – IT IS A VIOLATION OF NEW YORK EDUCATION LAW SECTION 7209.2, FOR ANY PERSON, UNLESS HE IS ACTING UNDER THE DIRECTION OF A LICENSED PROFESSIONAL ENGINEER OR LAND SURVEYOR, TO ALTER THIS DOCUMENT IN ANY WAY. IF ALTERED THE ALTERING PERSON SHALL COMPLY WITH THE REQUIREMENTS OF NEW YORK EDUCATION LAW, SECTION 7209.2.

DATE: 12/2020
DRAWN BY: GJM
SCALE: AS SHOWN
REVIEWED BY: RF
PROJECT NO.: 19-1612
FILE:

DELAWARE ENGINEERING, D.P.C.
CIVIL AND ENVIRONMENTAL ENGINEERING
28 MADISON AVENUE EXTENSION, ALBANY, NY 12203 - 518.452.1290
55 SOUTH MAIN ST, ONEONTA, NY 13820 - 607.432.8073
31 NORTH MAIN STREET, LIBERTY, NY 12754 - 845.747.9952
6 TOWNSEND STREET, WALTON, NY 13856 - 607.865.9235
16 EAST MARKET ST., RED HOOK, NY 12571 - 518.452.1290
548 BROADWAY, MONTICELLO, NY 12701 - 845.791.7777

REGISTERED PROFESSIONAL ENGINEER — STATE OF NEW YORK — LICENSED PROFESSIONAL ENGINEER

REVISIONS

NO.	DATE	DESCRIPTION

CONTRACT 1
SUFFERN WWTP UPGRADES
VILLAGE OF SUFFERN
ROCKLAND COUNTY, NEW YORK

PROPOSED HEADWORKS SECTIONS

SHEET: M-105

File: H:\DRAWINGS\SUFFERN\WWTP\ACAD\SFRN_M-105_HDWKS_PR_SECT.DWG Saved: 12/8/2020 10:01:37 AM Plotted: 12/8/2020 10:02:02 AM User: Gary Markham LastSavedBy: markhamg

PROPOSED HEADWORKS UPGRADE

HEADWORKS BUILDING ENCLOSURE NOT SHOWN FOR CLARITY

CLASS 1, DIV. 1 AREA

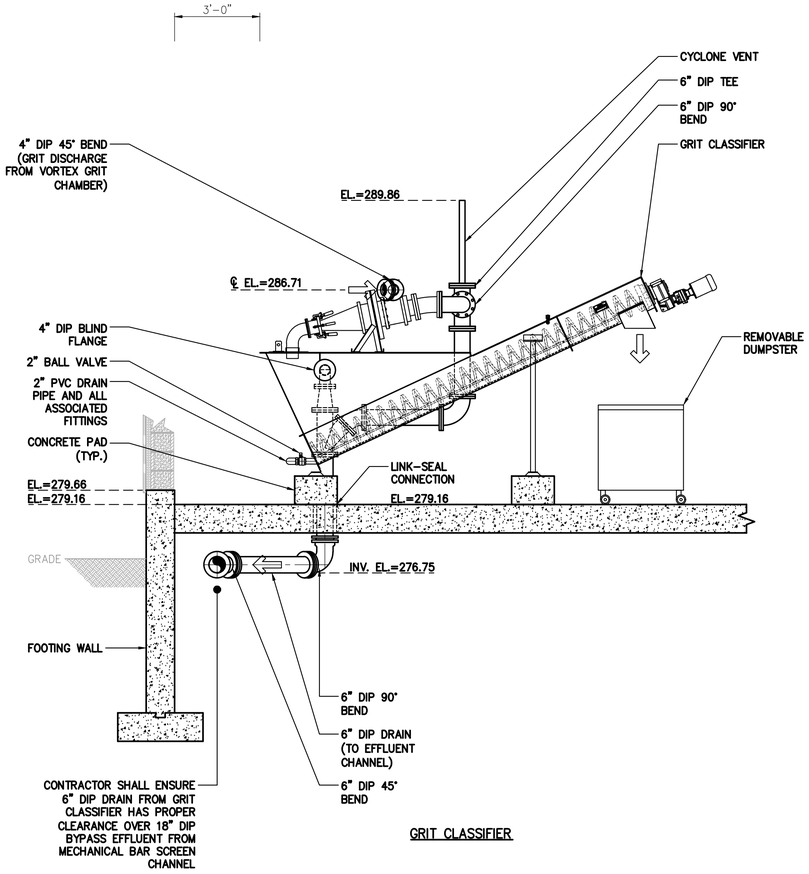

GRIT CLASSIFIER

E SECTION
SCALE: 3/8"=1'-0"

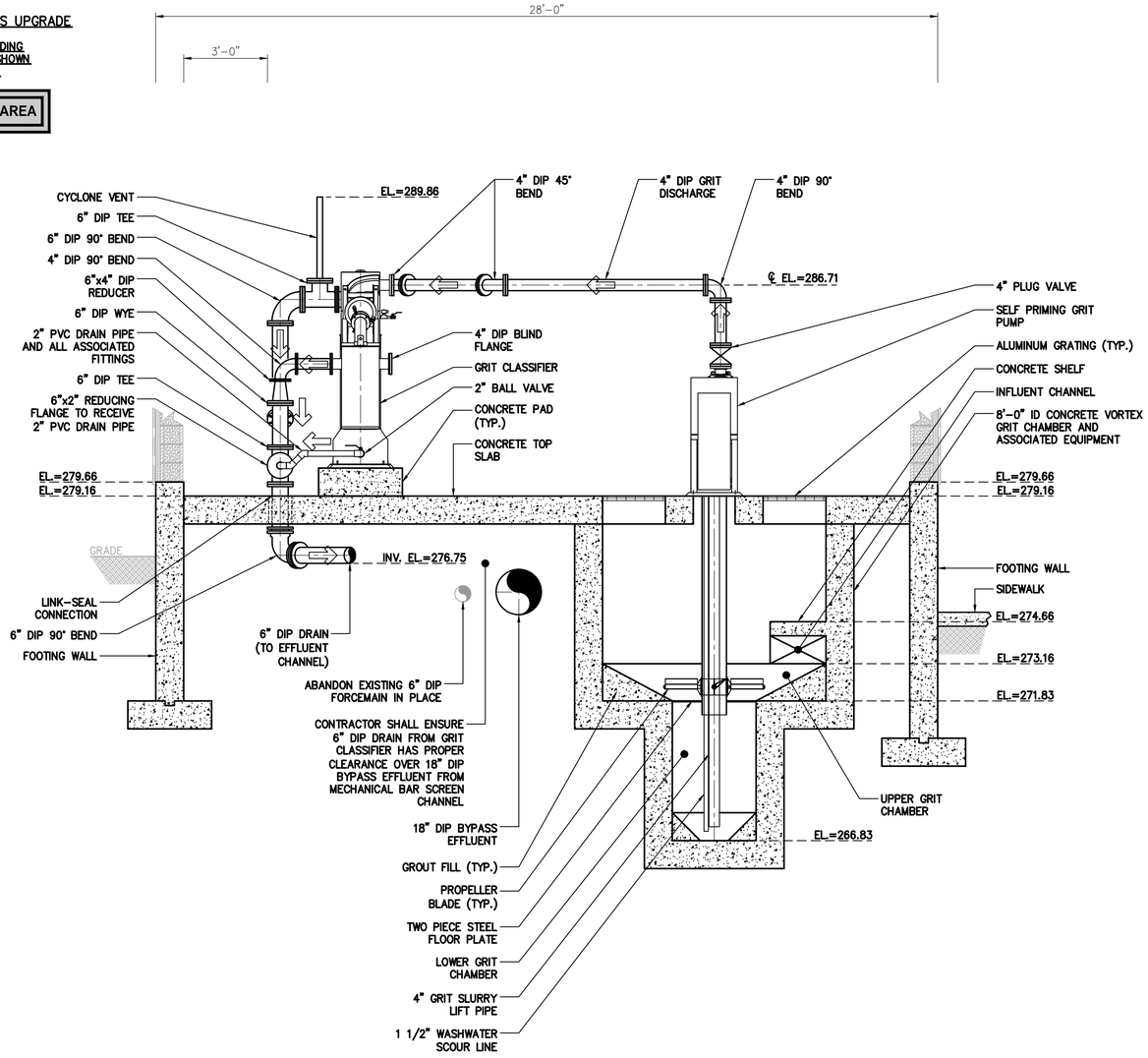

GRIT CLASSIFIER VORTEX GRIT CHAMBER

F SECTION
SCALE: 3/8"=1'-0"

NOTE:

1. REFER TO STRUCTURAL DRAWINGS FOR DETAILED CONCRETE AND BUILDING STRUCTURE INFORMATION.

BID PLANS

WARNING – IT IS A VIOLATION OF NEW YORK EDUCATION LAW SECTION 7209.2, FOR ANY PERSON, UNLESS HE IS ACTING UNDER THE DIRECTION OF A LICENSED PROFESSIONAL ENGINEER OR LAND SURVEYOR, TO ALTER THIS DOCUMENT IN ANY WAY. IF ALTERED THE ALTERING PERSON SHALL COMPLY WITH THE REQUIREMENTS OF NEW YORK EDUCATION LAW, SECTION 7209.2.

DATE: 12/2020
DRAWN BY: GJM
SCALE: AS SHOWN
REVIEWED BY: RF
PROJECT NO.: 19-1612
FILE:

DELAWARE ENGINEERING, D.P.C.
CIVIL AND ENVIRONMENTAL ENGINEERING
28 MADISON AVENUE EXTENSION, ALBANY, NY 12203 - 518.452.1290
55 SOUTH MAIN ST, ONEONTA, NY 13820 - 607.432.8073
31 NORTH MAIN STREET, LIBERTY, NY 12754 - 845.747.9952
6 TOWNSEND STREET, WALTON, NY 13856 - 607.865.9235
16 EAST MARKET ST., RED HOOK, NY 12571 - 518.452.1290
548 BROADWAY, MONTICELLO, NY 12701 - 845.791.7777

REGISTERED PROFESSIONAL ENGINEER STATE OF NEW YORK

REVISIONS

NO.	DATE	DESCRIPTION

CONTRACT 1
SUFFERN WWTP UPGRADES
VILLAGE OF SUFFERN
ROCKLAND COUNTY, NEW YORK

PROPOSED HEADWORKS SECTIONS

SHEET: M-106

File: I:\DRAWINGS\SUFFERN\WWTP\ACAD\SFRN_M-106_HDWKS_PR_SECT.DWG Saved: 12/8/2020 10:02:43 AM Plotted: 12/8/2020 10:03:12 AM User: Gary Markham LastSavedBy: markhamg

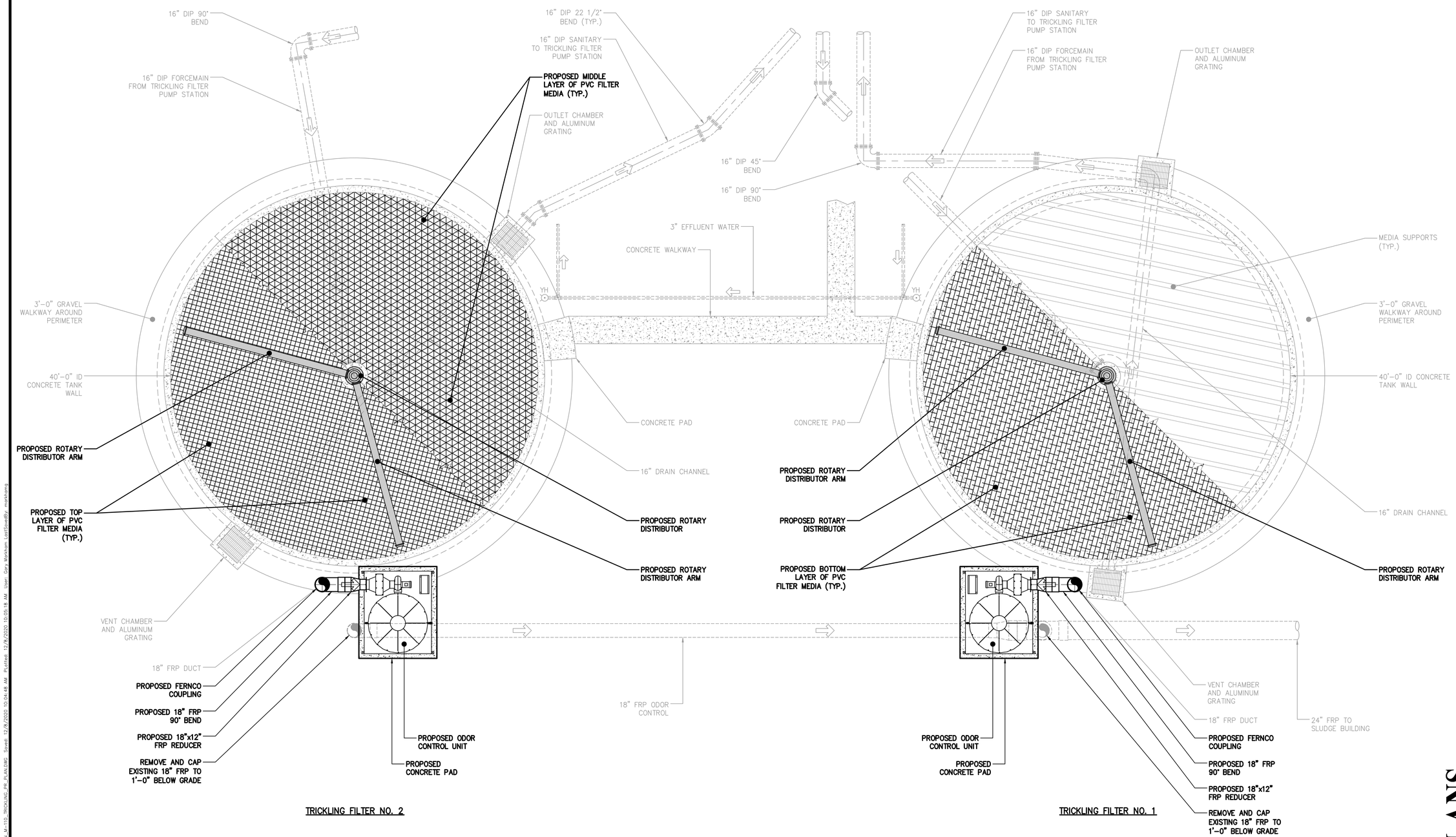

PLAN – TRICKLING FILTERS BELOW EL.=287.92

SCALE: 3/16"=1'-0"

BID PLANS

WARNING – IT IS A VIOLATION OF NEW YORK EDUCATION LAW SECTION 7209.2, FOR ANY PERSON, UNLESS HE IS ACTING UNDER THE DIRECTION OF A LICENSED PROFESSIONAL ENGINEER OR LAND SURVEYOR, TO ALTER THIS DOCUMENT IN ANY WAY. IF ALTERED THE ALTERING PERSON SHALL COMPLY WITH THE REQUIREMENTS OF NEW YORK EDUCATION LAW, SECTION 7209.2.

DATE:	12/2020
DRAWN BY:	GJM
SCALE:	AS SHOWN
REVIEWED BY:	RF
PROJECT NO.:	19-1612
FILE:	

DELAWARE ENGINEERING, D.P.C.
CIVIL AND ENVIRONMENTAL ENGINEERING
28 MADISON AVENUE EXTENSION, ALBANY, NY 12203 - 518.452.1290
55 SOUTH MAIN ST, ONEONTA, NY 13820 - 607.432.8073
31 NORTH MAIN STREET, LIBERTY, NY 12754 - 845.747.9952
6 TOWNSEND STREET, WALTON, NY 13856 - 607.865.9235
16 EAST MARKET ST., RED HOOK, NY 12571 - 518.452.1290
548 BROADWAY, MONTICELLO, NY 12701 - 845.791.7777

STATE OF NEW YORK · REGISTERED PROFESSIONAL ENGINEER · LICENSED PROFESSIONAL ENGINEER

REVISIONS

NO.	DATE	DESCRIPTION

CONTRACT 1
SUFFERN WWTP UPGRADES
VILLAGE OF SUFFERN
ROCKLAND COUNTY, NEW YORK

PROPOSED
TRICKLING FILTERS
BELOW EL.=287.92
UPGRADE PLAN

SHEET:
M-110

File: I:\DRAWINGS\SUFFERN\WWTP\ACAD\SFRN_M-110_TRICKLING_FR_PLAN.DWG Saved: 12/8/2020 10:04:48 AM Plotted: 12/8/2020 10:05:18 AM User: Gary Markham LastSavedBy: markhamg

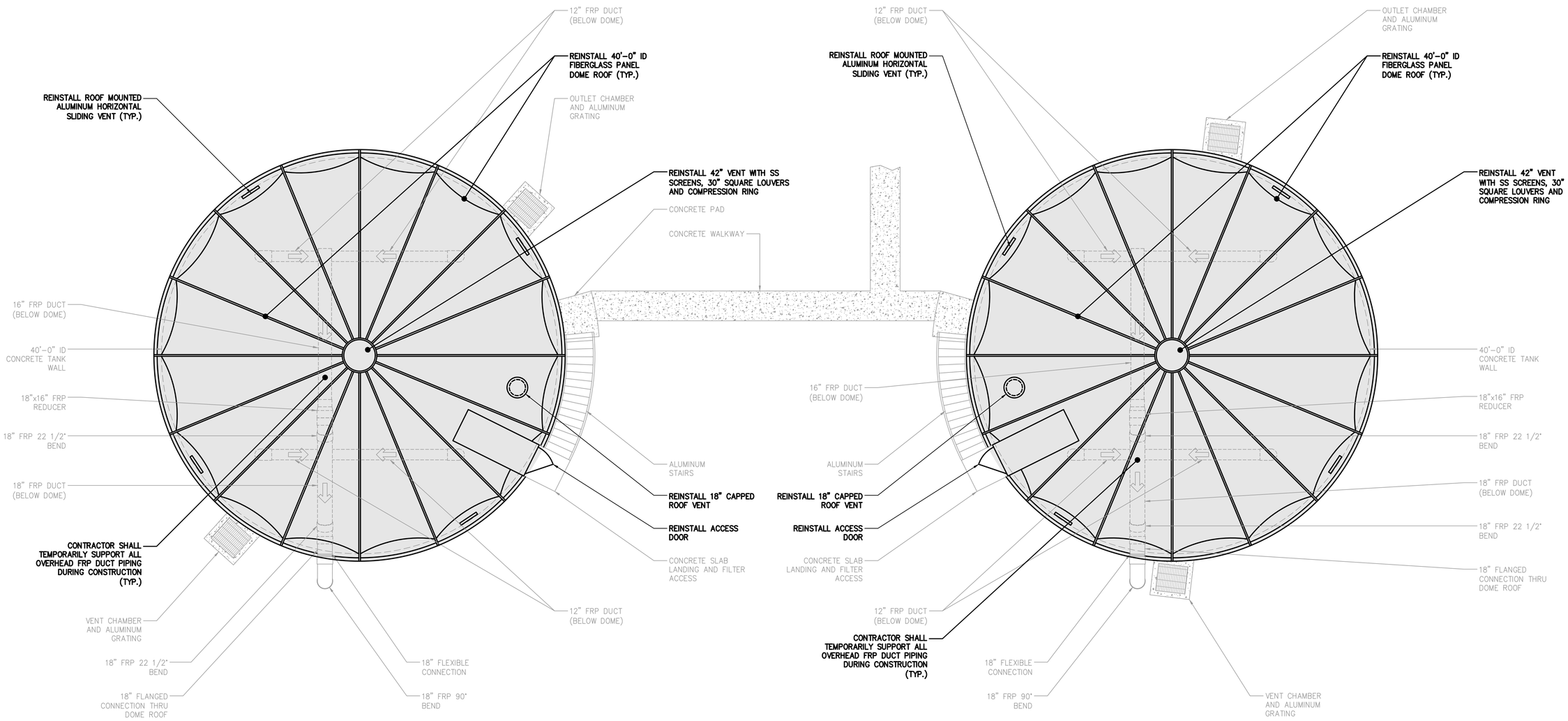

PLAN – TRICKLING FILTERS ABOVE EL.=287.92

SCALE: 3/16"=1'-0"

BID PLANS

WARNING – IT IS A VIOLATION OF NEW YORK EDUCATION LAW SECTION 7209.2, FOR ANY PERSON, UNLESS HE IS ACTING UNDER THE DIRECTION OF A LICENSED PROFESSIONAL ENGINEER OR LAND SURVEYOR, TO ALTER THIS DOCUMENT IN ANY WAY. IF ALTERED THE ALTERING PERSON SHALL COMPLY WITH THE REQUIREMENTS OF NEW YORK EDUCATION LAW, SECTION 7209.2.

DATE: 12/2020
DRAWN BY: GJM
SCALE: AS SHOWN
REVIEWED BY: RF
PROJECT NO.: 19-1612
FILE:

DELAWARE ENGINEERING, D.P.C.
CIVIL AND ENVIRONMENTAL ENGINEERING
28 MADISON AVENUE EXTENSION, ALBANY, NY 12203 - 518.452.1290
55 SOUTH MAIN ST, ONEONTA, NY 13820 - 607.432.8073
31 NORTH MAIN STREET, LIBERTY, NY 12754 - 845.747.9952
6 TOWNSEND STREET, WALTON, NY 13856 - 607.865.9235
16 EAST MARKET ST., RED HOOK, NY 12571 - 518.452.1290
548 BROADWAY, MONTICELLO, NY 12701 - 845.791.7777

STATE OF NEW YORK · REGISTERED PROFESSIONAL ENGINEER · GARY J. MARKHAM · 075-080-1

REVISIONS

NO.	DATE	DESCRIPTION

CONTRACT 1
SUFFERN WWTP UPGRADES
VILLAGE OF SUFFERN
ROCKLAND COUNTY, NEW YORK

PROPOSED
TRICKLING FILTERS
ABOVE EL.=287.92
UPGRADE PLAN

SHEET:
M-111

File: H:\DRAWINGS\SUFFERN\WWTP\ACAD\SFRN_M-111_TRICKLING_PR_PLAN.DWG Saved: 12/8/2020 10:05:59 AM Plotted: 12/8/2020 10:06:41 AM User: Gary Markham (asSaved)By: markhamg

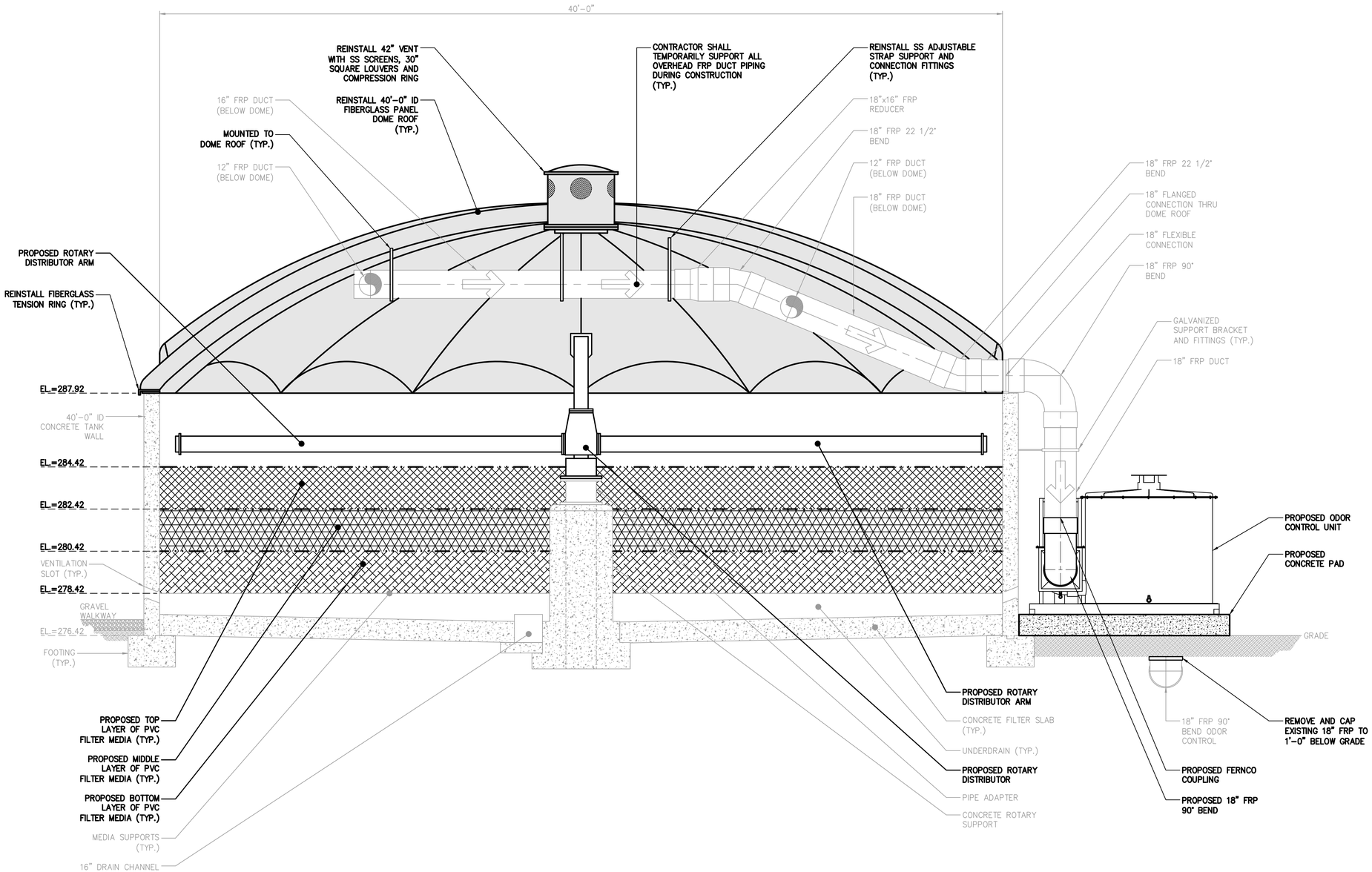

A (TYPICAL) SECTION – TRICKLING FILTERS NO. 1 AND NO. 2
SCALE: 3/8"=1'-0"

DATE: 12/2020
DRAWN BY: GJM
SCALE: AS SHOWN
REVIEWED BY: RF
PROJECT NO.: 19-1612
FILE:

DELAWARE ENGINEERING, D.P.C.
CIVIL AND ENVIRONMENTAL ENGINEERING
28 MADISON AVENUE EXTENSION, ALBANY, NY 12203 - 518.452.1290
55 SOUTH MAIN ST, ONEONTA, NY 13820 - 607.432.8073
31 NORTH MAIN STREET, LIBERTY, NY 12754 - 845.747.9952
6 TOWNSEND STREET, WALTON, NY 13856 - 607.865.9235
16 EAST MARKET ST., RED HOOK, NY 12571 - 518.452.1290
548 BROADWAY, MONTICELLO, NY 12701 - 845.791.7777

STATE OF NEW YORK · REGISTERED PROFESSIONAL ENGINEER · LICENSED PROFESSIONAL ENGINEER

REVISIONS

NO.	DATE	DESCRIPTION

CONTRACT 1
SUFFERN WWTP UPGRADES
VILLAGE OF SUFFERN
ROCKLAND COUNTY, NEW YORK

PROPOSED TRICKLING FILTERS NO. 1 AND NO. 2 (TYPICAL) UPGRADE SECTION

BID PLANS

SHEET:
M-112

WARNING – IT IS A VIOLATION OF NEW YORK EDUCATION LAW SECTION 7209.2, FOR ANY PERSON, UNLESS HE IS ACTING UNDER THE DIRECTION OF A LICENSED PROFESSIONAL ENGINEER OR LAND SURVEYOR, TO ALTER THIS DOCUMENT IN ANY WAY. IF ALTERED THE ALTERING PERSON SHALL COMPLY WITH THE REQUIREMENTS OF NEW YORK EDUCATION LAW, SECTION 7209.2.

File: H:\DRAWINGS\SUFFERN\WWTP\ACAD\SFRN_M-112-TRICKLING_PR_SECT.DWG Saved: 12/8/2020 10:07:09 AM Plotted: 12/8/2020 10:07:31 AM User: Gary Markham LastSaved By: markham

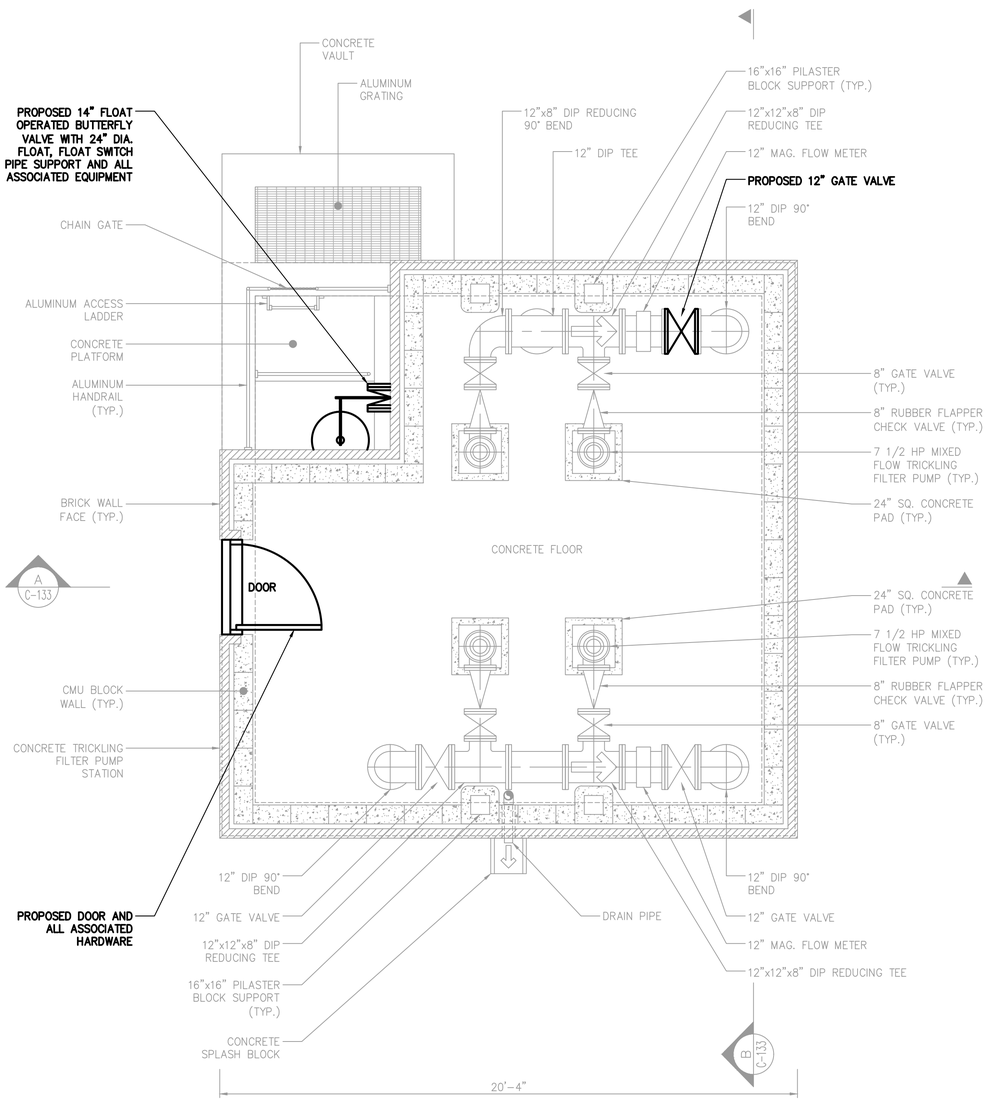

PLAN – MAIN FLOOR

SCALE: 3/8"=1'-0"

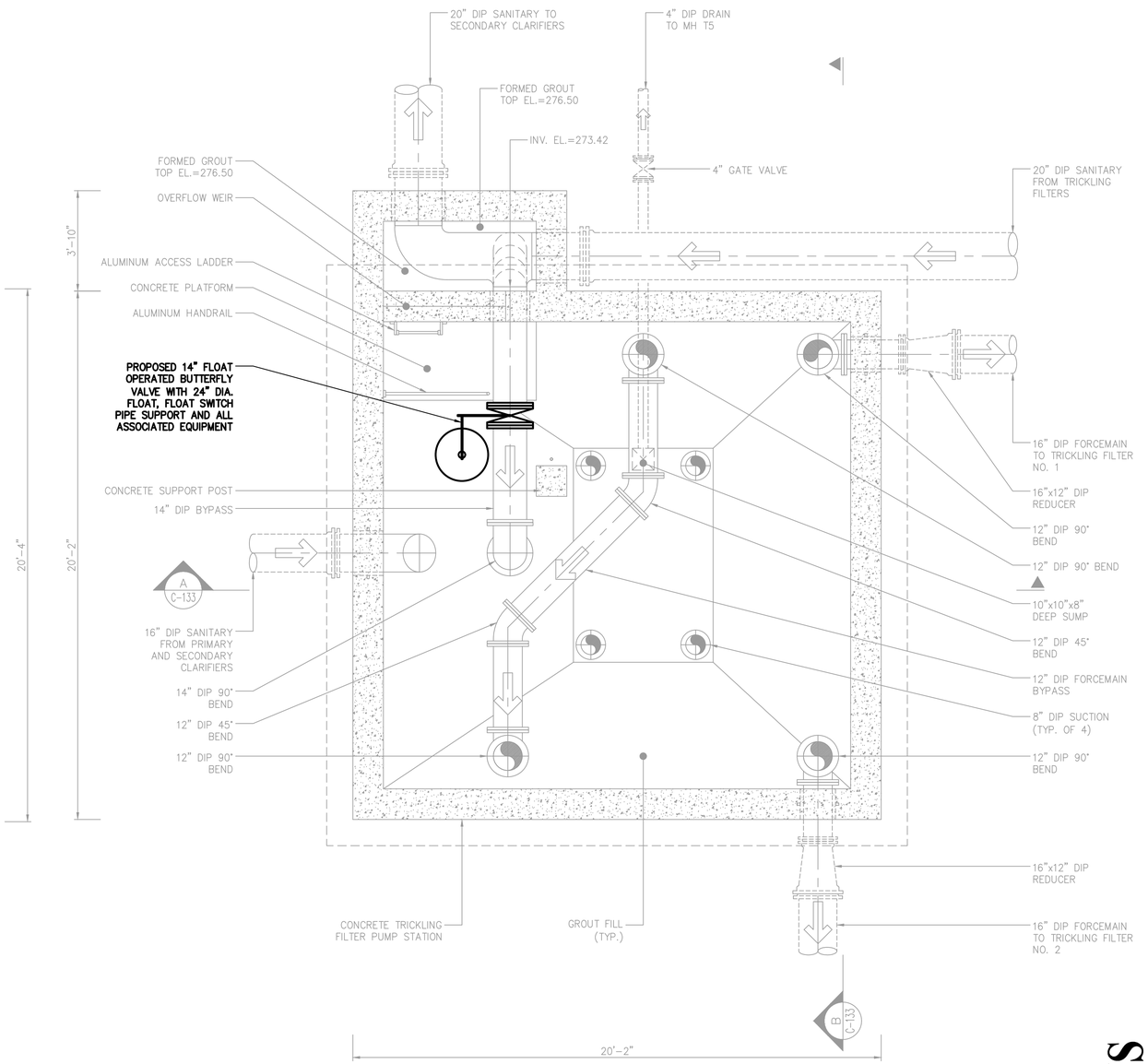

PLAN – WET WELL

SCALE: 3/8"=1'-0"

BID PLANS

WARNING – IT IS A VIOLATION OF NEW YORK EDUCATION LAW SECTION 7209.2, FOR ANY PERSON, UNLESS HE IS ACTING UNDER THE DIRECTION OF A LICENSED PROFESSIONAL ENGINEER OR LAND SURVEYOR, TO ALTER THIS DOCUMENT IN ANY WAY. IF ALTERED THE ALTERING PERSON SHALL COMPLY WITH THE REQUIREMENTS OF NEW YORK EDUCATION LAW, SECTION 7209.2.

DATE: 12/2020
DRAWN BY: GJM
SCALE: AS SHOWN
REVIEWED BY: RF
PROJECT NO.: 19-1612
FILE:

DELAWARE ENGINEERING, D.P.C.
CIVIL AND ENVIRONMENTAL ENGINEERING
28 MADISON AVENUE EXTENSION, ALBANY, NY 12203 - 518.452.1290
55 SOUTH MAIN ST, ONEONTA, NY 13820 - 607.432.8073
31 NORTH MAIN STREET, LIBERTY, NY 12754 - 845.747.9952
6 TOWNSEND STREET, WALTON, NY 13856 - 607.865.9235
16 EAST MARKET ST., RED HOOK, NY 12571 - 518.452.1290
548 BROADWAY, MONTICELLO, NY 12701 - 845.791.7777

REVISIONS

NO.	DATE	DESCRIPTION

CONTRACT 1
SUFFERN WWTP UPGRADES
VILLAGE OF SUFFERN
ROCKLAND COUNTY, NEW YORK

PROPOSED
TRICKLING FILTER
PUMP STATION
UPGRADE PLANS

SHEET:
M-120

File: m:\DRAWINGS\SUFFERN\WWTP\ACAD\SFRN_M-120_TRICKLING_PUMPSTA_PR_PLAN.DWG Saved: 12/8/2020 10:07:59 AM Plotted: 12/8/2020 10:08:18 AM User: Gary Markham LastSavedBy: markhamg

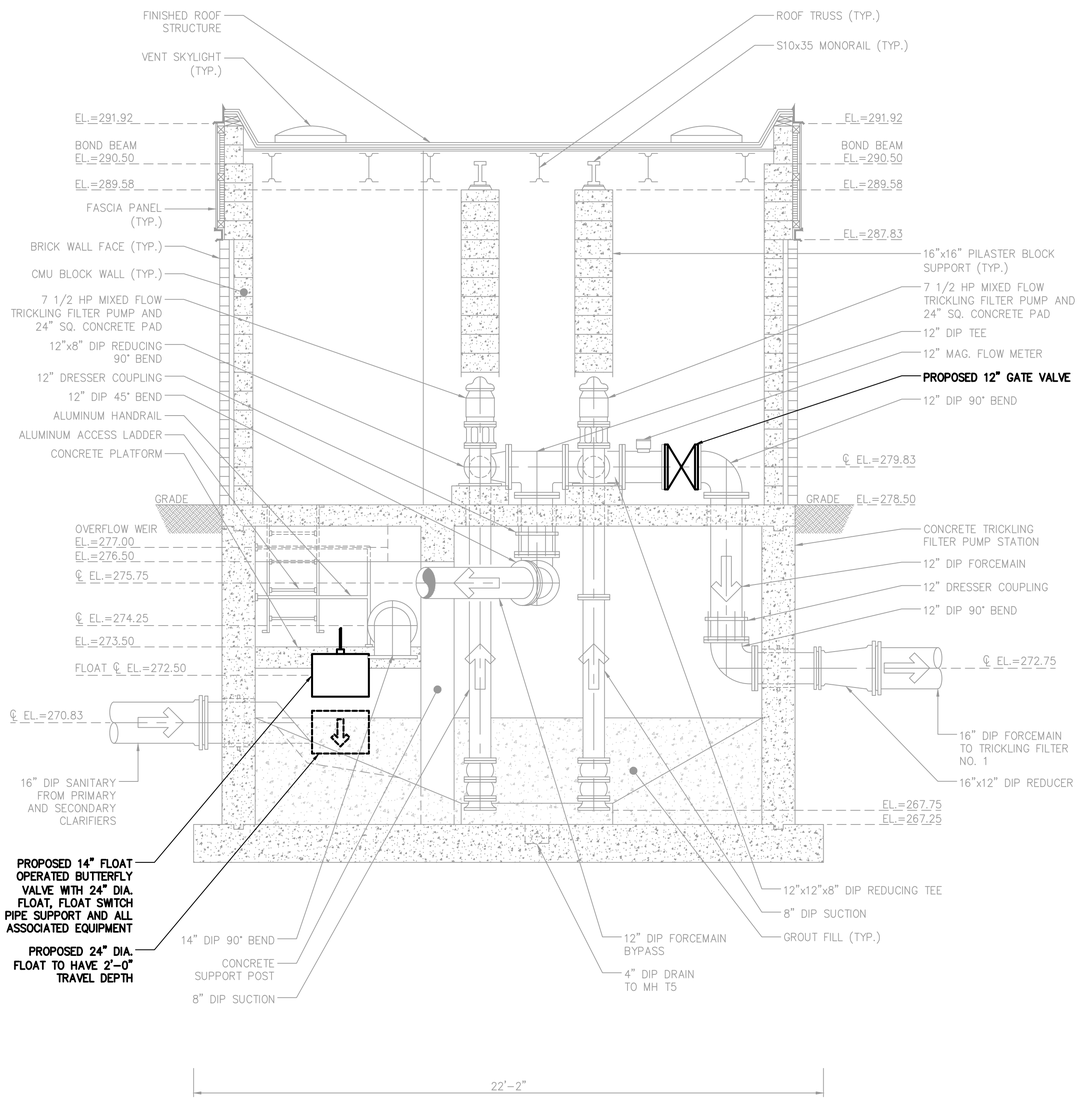

A SECTION
SCALE: 3/8"=1'-0"

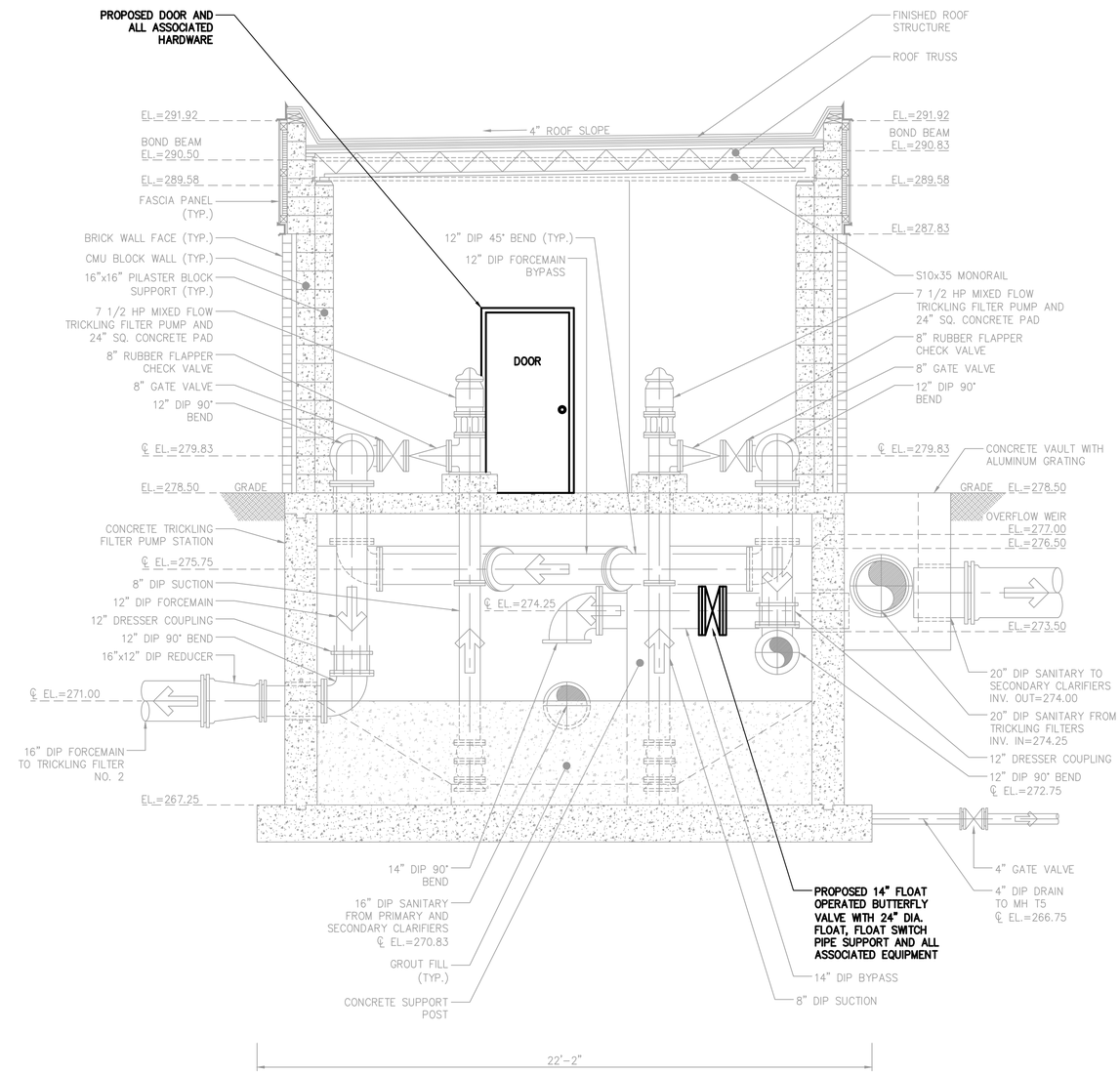

B SECTION
SCALE: 3/8"=1'-0"

BID PLANS

WARNING – IT IS A VIOLATION OF NEW YORK EDUCATION LAW SECTION 7209.2, FOR ANY PERSON, UNLESS HE IS ACTING UNDER THE DIRECTION OF A LICENSED PROFESSIONAL ENGINEER OR LAND SURVEYOR, TO ALTER THIS DOCUMENT IN ANY WAY. IF ALTERED THE ALTERING PERSON SHALL COMPLY WITH THE REQUIREMENTS OF NEW YORK EDUCATION LAW, SECTION 7209.2.

DATE: 12/2020
DRAWN BY: GJM
SCALE: AS SHOWN
REVIEWED BY: RF
PROJECT NO.: 19-1612
FILE:

DELAWARE ENGINEERING, D.P.C.
CIVIL AND ENVIRONMENTAL ENGINEERING
28 MADISON AVENUE EXTENSION, ALBANY, NY 12203 - 518.452.1290
55 SOUTH MAIN ST, ONEONTA, NY 13820 - 607.432.8073
31 NORTH MAIN STREET, LIBERTY, NY 12754 - 845.747.9952
6 TOWNSEND STREET, WALTON, NY 13856 - 607.865.9235
16 EAST MARKET ST., RED HOOK, NY 12571 - 518.452.1290
548 BROADWAY, MONTICELLO, NY 12701 - 845.791.7777

REVISIONS

NO.	DATE	DESCRIPTION

CONTRACT 1
SUFFERN WWTP UPGRADES
VILLAGE OF SUFFERN
ROCKLAND COUNTY, NEW YORK

PROPOSED
TRICKLING FILTER
PUMP STATION
UPGRADE SECTIONS

SHEET:
M-121

File: I:\DRAWINGS\SUFFERN\WWTP\ACAD\SFRN_M-121_TRICKLING_PUMPSTA_PR_SECT.DWG Saved: 12/8/2020 10:08:54 AM Plotted: 12/8/2020 10:09:21 AM User: Gary Markham LastSavedBy: markhamg

GENERAL HVAC NOTES

1. CONTRACTOR(S) SHALL PROVIDE ALL ITEMS, ARTICLES, EQUIPMENT, TOOLS, APPLIANCES, MATERIALS AND METHODS REQUIRED FOR COMPLETED SYSTEMS.
2. PROVIDE ALL LABOR, SCAFFOLDING, SUPPORTS, SUPERVISION AND INCIDENTALS REQUIRED TO MODIFY AND/OR INSTALL THE SYSTEMS COMPLETE.
3. CONTRACTOR(S) SHALL LOCATE AND PROTECT THE OWNER'S EQUIPMENT, PIPING AND UTILITIES SCHEDULED TO REMAIN FROM DAMAGE DURING CONSTRUCTION.
4. ALL WORK SHALL BE EXECUTED IN A THOROUGHLY SUBSTANTIAL AND CRAFTSMAN LIKE MANNER BY SKILLED MECHANICS IN THE VARIOUS TRADES INVOLVED. FOLLOW MANUFACTURERS' INSTRUCTIONS FOR INSTALLING, CONNECTING AND ADJUSTING ALL EQUIPMENT.
5. CONTRACTOR(S) SHALL FIELD VERIFY ALL DIMENSIONS OF EXISTING ELEMENTS, EQUIPMENT, AND OTHER CONDITIONS HAVING A BEARING ON THE WORK. CONTRACTOR(S) SHALL COORDINATE WITH OTHER TRADES TO ELIMINATE ANY INTERFERENCES WITH LIGHTING FIXTURES, DUCTWORK, PIPING, ETC.
6. CONTRACTOR(S) SHALL PERFORM ALL VERIFICATIONS, OBSERVATIONS, TESTS, AND EXAMINATIONS OF THE WORK PRIOR TO THE ORDERING OF ANY EQUIPMENT AND THE ACTUAL CONSTRUCTION.
7. CONTRACTOR(S) SHALL BE SOLELY RESPONSIBLE FOR CONSTRUCTION MEANS, METHODS, TECHNIQUES, SEQUENCES AND PROCEDURES AND FOR COORDINATING ALL PORTIONS OF THE WORK UNDER CONTRACT.
8. CONTRACTOR(S) SHALL FURNISH AND INSTALL ALL MATERIALS AS REQUIRED FOR COMPLETE SYSTEMS, INCLUDING ALL PARTS OBVIOUSLY OR REASONABLY INCIDENTAL TO A COMPLETE INSTALLATION, WHETHER SPECIFICALLY INDICATED OR NOT.
9. DRAWINGS ARE NOT TO BE SCALED. DRAWINGS ARE INTENDED TO BE A DIAGRAMMATIC OUTLINE ONLY.
10. DIMENSIONS SHOWN ARE TO FINISH SURFACES UNLESS OTHERWISE NOTED. SPACING BETWEEN EQUIPMENT IS REQUIRED CLEARANCE. THEREFORE, IT IS CRITICAL TO FIELD VERIFY DIMENSIONS. SHOULD THERE BE ANY QUESTIONS REGARDING THE CONTRACT DOCUMENTS, EXISTING CONDITIONS AND/OR DESIGN INTENT, THE CONTRACTOR SHALL BE RESPONSIBLE FOR OBTAINING A CLARIFICATION FROM THE OWNER PRIOR TO PROCEEDING WITH THE WORK.
11. DETAILS ARE INTENDED TO SHOW END RESULT OF DESIGN. MINOR MODIFICATIONS MAY BE REQUIRED TO SUIT JOB DIMENSIONS OR CONDITIONS, AND SUCH MODIFICATIONS SHALL BE INCLUDED AS PART OF THE WORK.
12. DRAWINGS ARE DIAGRAMMATIC ONLY, FINAL ROUTING OF DUCTWORK AND EQUIPMENT LOCATIONS SHALL BE DETERMINED IN THE FIELD. ADDITIONAL OFFSETS, ELBOWS, ETC., SHALL BE PROVIDED AND INSTALLED WITHOUT ADDITIONAL COST TO THE OWNER.
13. THE MC SHALL FURNISH TO THE GC ALL INFORMATION REQUIRED FOR SETTING OF WALL OPENINGS FOR MECHANICAL WORK. THIS INFORMATION SHALL BE FURNISHED IN A TIMELY MANNER SUCH THAT CONSTRUCTION SCHEDULE IS NOT JEOPARDIZED.
14. THE TEMPERATURE CONTROL CONTRACTOR SHALL COORDINATE THERMOSTAT/TEMPERATURE SENSOR LOCATIONS WITH ARCHITECTURAL PLANS AND/OR THE OWNER. THERMOSTATS SHALL BE INSTALLED 48-INCHES' ABOVE FINISHED FLOORS UNLESS OTHERWISE NOTED.

HVAC LEGEND

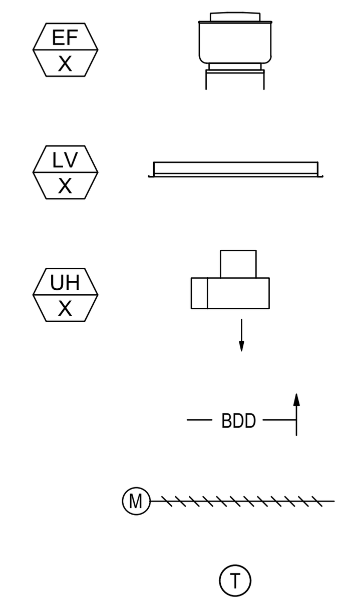

EXHAUST FAN
LOUVER
UNIT HEATER
BACKDRAFT DAMPER
MOTORIZED DAMPER
THERMOSTAT

TYPICAL ABBREVIATIONS

AFF	ABOVE FINISH FLOOR
BOD	BASIS OF DESIGN
EF	EXHAUST FAN
LV	LOUVER
MAX	MAXIMUM
MIN	MINIMUM
UH	UNIT HEATER

HVAC DRAWING LIST

M-200	HVAC COVER SHEET AND SCHEDULES
M-201	HVAC NEW WORK PLAN
M-202	HVAC SPECIFICATIONS & SEQUENCES

ELECTRIC UNIT HEATER SCHEDULE

TAG	CAPACITY [kW]	DESIGN AIRFLOW [CFM]	BOTTOM ELEVATION	ELECTRICAL CHARACTERISTICS		BASIS OF DESIGN	DIMENSIONS [L" x W" x H"]	WEIGHT [LBS]	NOTES
				V / φ	FLA				
UH-1	30.0	3,850	±12' - 0"	460 / 3	37	INDEECO 233-FC-0306U	31 x 23 x 27.5	190	1,2,3,4,5
UH-2	30.0	3,850	±12' - 0"	460 / 3	37	INDEECO 233-FC-0306U	31 x 23 x 27.5	190	1,2,3,4,5
UH-3	30.0	3,850	±9' - 0"	460 / 3	37	INDEECO 233-FC-0306U	31 x 23 x 27.5	190	1,2,3,4,5
UH-4	30.0	3,850	±9' - 0"	460 / 3	37	INDEECO 233-FC-0306U	31 x 23 x 27.5	190	1,2,3,4,5

NOTES:

1. SEE SEQUENCES OF OPERATIONS FOR UNIT HEATER OPERATION SEQUENCE.
2. UNIT HEATER AND ALL ACCESSORIES SHALL BE SUITABLE FOR CLASS I, DIVISION 1, GROUP D LOCATIONS.
3. PROVIDE UNIT WITH THE FOLLOWING OPTIONS:
   A. 316 STAINLESS STEEL CORROSION-RESISTANT CONSTRUCTION
   B. FACTORY INSTALLED DISCONNECT SWITCH
   C. "WARNING" PILOT LIGHT
   D. "HEATER ON" PILOT LIGHT
   E. AUTO / FAN SELECTOR SWITCH
   F. FACTORY INSTALLED ADJUSTABLE THERMOSTAT FOR WET LOCATIONS
4. INTENT IS FOR EQUIPMENT TO BE CEILING MOUNTED TYPE. COORDINATE WITH FIELD CONDITIONS PRIOR TO ORDER. PROVIDE WITH MANUFACTURER CORROSION RESISTANT MOUNTING KIT.
5. COORDINATE MOUNTING HEIGHT WITH FIELD CONDITIONS AND INTENDED EQUIPMENT INSTALLATION LOCATIONS IN FACILITY. MAINTAIN MINIMUM 6' DISTANCE FROM UNIT OUTLET TO WALL/ INSTALLED EQUIPMENT.

FAN SCHEDULE

TAG	DESCRIPTION	DESIGN AIRFLOW [CFM]	E.S.P. [in. w.g.]	ELECTRICAL CHARACTERISTICS		ACCESSORIES	BASIS OF DESIGN	WEIGHT [LBS]	NOTES
				V / φ	HP				
EF-1	BD, BI, SW, SPRK	5,670	0.50	460 / 3	1-1/2	MS (NEMA 3R), VI	GREENHECK CUBE-240	250	1,2,3
EF-2	BD, BI, SW, SPRK	5,670	0.50	460 / 3	1-1/2	MS (NEMA 3R), VI	GREENHECK CUBE-240	250	1,2,3
EF-3	BD, BI, SW, SPRK	5,670	0.50	460 / 3	1-1/2	MS (NEMA 3R), VI	GREENHECK CUBE-240	250	1,2,3

NOTES:

1. SEE SEQUENCES OF OPERATIONS FOR FAN OPERATION SEQUENCE.
2. FAN SHALL HAVE SPARK RESISTANCE CONSTRUCTION OF EITHER TYPE A OR B.
3. PROVIDE UNIT WITH NEMA 3R MOTOR STARTER WITH INTEGRAL DISCONNECT. MOTOR STARTER SHALL BE LOCKOUT READY, HAVE HAND/ OFF/ AUTO SELECTOR SWITCH, LED PILOT LIGHT, MINIMUM (2) CONTROL INPUTS, MOTOR STATUS AND FAULT ALARM OUTPUTS, AND A DAMPER CONTROL OUTPUT LIMIT SWITCH CLOSED LOOP SIGNAL. BASIS OF DESIGN: GREENHECK MSAC.
4. PROVIDE WITH THE FOLLOWING OPTIONS:
   A. SIDEWALL MOUNT
   B. ALUMINUM BIRDSCREEN
   C. AUTOMATIC BELT TENSIONER
   D. HI-PRO POLYESTER COATING ON ALL PARTS. COORDINATE COLOR WITH FACILITY REPRESENTATIVE.

E. PROVIDE BACKDRAFT DAMPER TO BE MOUNTED IN DUCTWORK UPSTREAM OF FAN. DAMPER SHALL HAVE SPARK B OR SPARK A RESISTANCE CONSTRUCTION. ALL METALLIC COMPONENTS SHALL BE EITHER ANODIZED ALUMINUM OR STAINLESS STEEL. DAMPER SHALL HAVE HI PRO POLYESTER COATING. BLADE SEAL SHALL BE VINYL. BASIS OF DESIGN: GREENHECK HB-110.

ABBREVIATIONS			
BD	BELT DRIVE	SPRK	SPARK RESISTANCE CONSTRUCTION
BI	BACKWARD INCLINED	SW	SIDEWALL
MS	MOTOR STARTER	VI	VIBRATION ISOLATORS

LOUVER SCHEDULE

TAG	SERVICE	DESIGN AIRFLOW [CFM]	DESIGN VELOCITY [FPM]	DIMENSIONS [W X H]	DEPTH	NET FREE AREA		DESCRIPTION	BASIS OF DESIGN	NOTES
						%	FT²			
LV-1	EF-1 INTAKE	5,670	708	48" x 56"	4"	43	18.67	WIND-DRIVEN RAIN, SIGHTPROOF	RUSKIN EME420DD	1,2,3,4,5,6,7
LV-2	EF-2 INTAKE	5,670	708	48" x 56"	4"	43	18.67	WIND-DRIVEN RAIN, SIGHTPROOF	RUSKIN EME420DD	1,2,3,4,5,6,7
LV-3	EF-3 INTAKE	5,670	708	48" x 56"	4"	43	18.67	WIND-DRIVEN RAIN, SIGHTPROOF	RUSKIN EME420DD	1,2,3,4,5,6,7

NOTES:

1. PROVIDE ALUMINUM LOUVER.
2. MAXIMUM PRESSURE DROP ACROSS LOUVER SHALL BE 0.15" W.G.
3. PROVIDE WITH 1/2" STAINLESS STEEL OR ANODIZED ALUMINUM BIRDSCREEN.
4. PROVIDE WITH 70% PVDF FINISH. COORDINATE COLOR WITH FACILITY REPRESENTATIVE.
5. PROVIDE MOTORIZED DAMPER WITH SPARK B OR SPARK A RESISTANCE CONSTRUCTION, OPPOSED BLADE WITH SEALS CONFIGURATION. ALL METALLIC COMPONENTS SHALL BE EITHER ANODIZED ALUMINUM OR STAINLESS STEEL. DAMPER SHALL HAVE HI PRO POLYESTER COATING. BLADE SEAL SHALL BE EPDM. BASIS OF DESIGN: GREENHECK HCD-140.
6. PROVIDE MOTORIZED DAMPER ACTUATOR WITH MINIMUM TWO (2) END SWITCHES SUITABLE FOR CLASS I, DIVISION 1, GROUP D LOCATIONS WITH ON/OFF CONTROL, SPRING RETURN, MANUAL OVERIDE, AND MAXIMUM 30 SECOND 90° RUNTIME. ACTUATOR HOUSING SHALL BE STAINLESS STEEL. BASIS OF DESIGN: SCHISECK ROTORK MODEL EXMAX-135-SF-A, 120V POWER INPUT.
7. COORDINATE COMPATIBILITY OF SUBMITTED MOTORIZED DAMPER AND ACTUATOR PRIOR TO EQUIPMENT SUBMISSION FOR ENGINEER REVIEW. PROVIDE ALL ACCESSORIES NECESSARY FOR COMPATIBILITY. ALL EQUIPMENT AND ACCESSORIES SHALL BE SUITABLE FOR CLASS I, DIVISION I, GROUP D LOCATIONS.

BID PLANS

WARNING – IT IS A VIOLATION OF NEW YORK EDUCATION LAW SECTION 7209.2, FOR ANY PERSON, UNLESS HE IS ACTING UNDER THE DIRECTION OF A LICENSED PROFESSIONAL ENGINEER OR LAND SURVEYOR, TO ALTER THIS DOCUMENT IN ANY WAY. IF ALTERED THE ALTERING PERSON SHALL COMPLY WITH THE REQUIREMENTS OF NEW YORK EDUCATION LAW, SECTION 7209.2.

DATE: 12/08/2020
DRAWN BY: TNS
SCALE: NONE
REVIEWED BY: TJH
PROJECT NO.: 19-1612
FILE:

DELAWARE ENGINEERING, D.P.C.
CIVIL AND ENVIRONMENTAL ENGINEERING
28 MADISON AVENUE EXTENSION, ALBANY, NY 12203 - 518.452.1290
55 SOUTH MAIN ST, ONEONTA, NY 13820 - 607.432.8073
31 NORTH MAIN STREET, LIBERTY, NY 12754 - 845.747.9952
6 TOWNSEND STREET, WALTON, NY 13856 - 607.865.9235
16 EAST MARKET ST., RED HOOK, NY 12571 - 518.452.1290
548 BROADWAY, MONTICELLO, NY 12701 - 845.791.7777

HESNOR ENGINEERING ASSOCIATES
22 COMPUTER DRIVE WEST
ALBANY, NY 12205
TEL: 518.689.2030

STATE OF NEW YORK ★ THOMAS JEFFREY HESNOR ★ LICENSED PROFESSIONAL ENGINEER 081007

REVISIONS		
NO.	DATE	DESCRIPTION

CONTRACT 1
SUFFERN WWTP UPGRADES
VILLAGE OF SUFFERN
ROCKLAND COUNTY, NEW YORK

HVAC
COVER SHEET & SCHEDULES

SHEET:
M-200

File: F:\DE\DE10 SUFFERN\DRAWINGS\MECHANICAL PLANS.DWG Saved: 12/4/2020 4:58:54 PM PLotted: 12/7/2020 2:09:36 PM User: Tyler Scarborough LastSavedBy: tscarborough

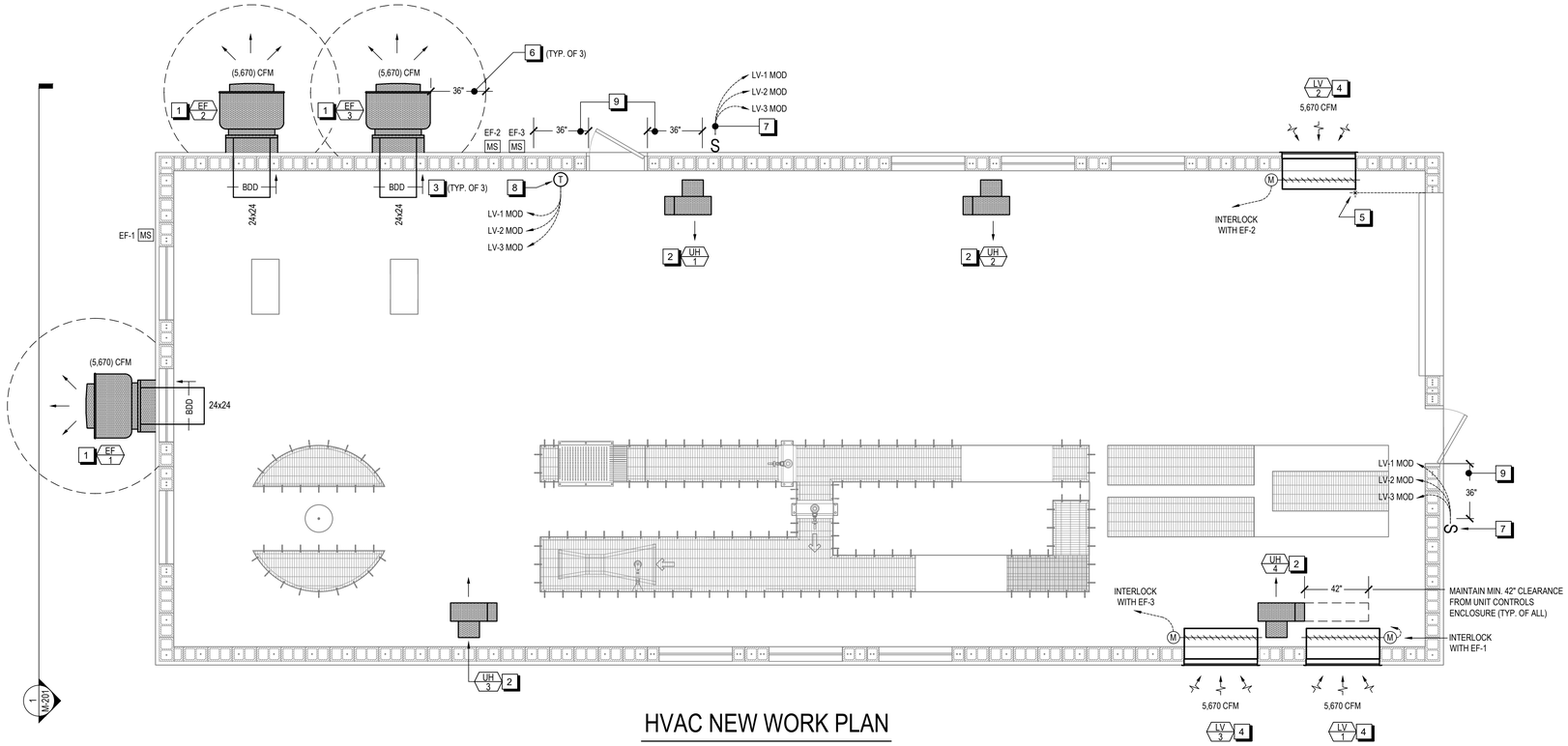

HVAC NEW WORK PLAN

SCALE: 1/4" = 1'-0"

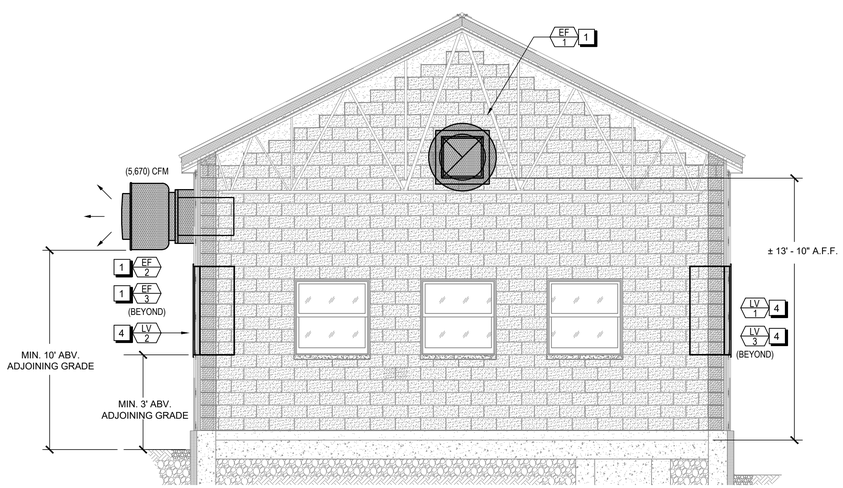

1 M-201

SECTION VIEW

SCALE: 1/4" = 1'-0"

GENERAL NOTES:

1. ALL MECHANICAL EQUIPMENT AND DEVICES INSTALLED WITHIN THE BUILDING SHALL BE RATED FOR USE IN A CLASS I, DIVISION 1, GROUP D LOCATION.
2. ALL DUCTWORK SHALL BE CONSTRUCTED Of STAINLESS STEEL. ALL DUCT HANGERS, FASTENERS, ETC. SHALL BE OF SIMILAR CONSTRUCTION.

KEYED NOTES:

1. PROVIDE SIDE-WALL EXHAUST FAN. SEE MECHANICAL SCHEDULE SHEET FOR MORE INFORMATION. SEE SECTION VIEW ON THIS SHEET FOR MOUNTING HEIGHT INFORMATION. FAN DISCHARGE SHALL NOT BE WITHIN 10' OF ADJOINING GRADE. OPERABLE OPENING INTO BUILDING, OR 30' FROM AN OPERABLE OPENING INTO A BUILDING IN THE DIRECTION OF THE FAN DISCHARGE. COORDINATE WITH SITE CONDITIONS.
2. PROVIDE ELECTRIC UNIT HEATER HUNG FROM STRUCTURE ABOVE. SEE MECHANICAL SCHEDULE SHEET FOR MORE INFORMATION. COORDINATE EXACT INSTALLATION LOCATION WITH FIELD CONDITIONS.
3. EXTEND DUCT INTO SPACE AS NECESSARY TO ALLOW FOR INSTALLATION OF BACKDRAFT DAMPER (TYPICAL OF 3). PROVIDE STAINLESS STEEL WIRE MESH SCREEN AT OPENING.
4. PROVIDE LOUVER IN EXTERIOR WALL. SEE MECHANICAL SCHEDULE SHEET FOR MORE INFORMATION. EXTEND DUCT FROM LOUVER TO ALLOW INSTALLATION OF MOTORIZED DAMPER. LOUVER SHALL BE INSTALLED WITH BOTTOM ELEVATION MINIMUM 36" ABOVE ADJOINING GRADE. SEE STRUCTURAL DRAWINGS FOR SUPPORT, LINTELS, ETC.
5. DUCT FROM LOUVER LV-1 SHALL NOT EXTEND INTO CLEAR PATH EXTENDED FROM GARAGE DOOR OPENING.
6. DO NOT INSTALL ELECTRICAL DEVICES WITHIN 3' OF EXHAUST DISCHARGE. PROVIDE REMOTE MOTOR STARTER DISCONNECTS FOR EXHAUST FAN. SEE EXHAUST FAN SCHEDULE FOR MORE INFORMATION.
7. FACILITY LIGHTING SHALL BE INTERLOCKED WITH EXHAUST FAN OPERATION. SEE SEQUENCE OF OPERATIONS FOR MORE INFORMATION.
8. PROVIDE REMOTE THERMOSTAT SUITABLE FOR CLASS I, DIVISION 1, GROUP D LOCATIONS. SEE SEQUENCE OF OPERATIONS FOR MORE INFORMATION. THERMOSTAT SHALL HAVE DUAL SET POINTS (HEATING AND COOLING) WITH A MINIMUM ADJUSTMENT RANGE OF 36°F TO 82°F. THE THERMOSTAT SHALL HAVE 120V POWER SUPPLY.
9. DO NOT INSTALL ELECTRICAL DEVICES WITHIN 3' OF OPERABLE OPENINGS TO THE BUILDING UNLESS THEY ARE SUITABLE FOR USE IN A CLASS I, DIVISION 2 ENVIRONMENT.

VENTILATION COMPLIANCE:

THE VENTILATION FOR THIS BUILDING IS DESIGNED TO BE IN COMPLIANCE WITH THE REQUIREMENTS OF THE TEN STATES STANDARD. INTERMITTENT VENTILATION OF GREATER THAN 30 COMPLETE AIR CHANGES PER HOUR SHALL BE PROVIDED WHEN PERSONNEL ENTER THE AREA. BELOW IS A SUMMARY OF THE CALCULATIONS FOR COMPLIANCE:

BUILDING VOLUME:	32,812 FT³
MIN. AIRFLOW FOR COMPLIANCE (30ACH):	16,406 CFM
PROVIDED AIRFLOW:	17,010 CFM
PROVIDED ACH:	31.1

IN ADDITION, ALL VENTILATION EQUIPMENT WILL BE INTERCONNECTED WITH THE FACILITY LIGHTING AND ALL SWITCHES FOR OPERATION OF THE VENTILATION SYSTEM WILL BE MARKED AND CONVENIENTLY LOCATED.

BID PLANS

WARNING -- IT IS A VIOLATION OF NEW YORK EDUCATION LAW SECTION 7209.2, FOR ANY PERSON, UNLESS HE IS ACTING UNDER THE DIRECTION OF A LICENSED PROFESSIONAL ENGINEER OR LAND SURVEYOR, TO ALTER THIS DOCUMENT IN ANY WAY. IF ALTERED THE ALTERING PERSON SHALL COMPLY WITH THE REQUIREMENTS OF NEW YORK EDUCATION LAW, SECTION 7209.2.

DATE:	12/08/2020
DRAWN BY:	TNS
SCALE:	1/4" = 1'-0"
REVIEWED BY:	TJH
PROJECT NO.:	19-1612
FILE:	

DELAWARE ENGINEERING, D.P.C.
CIVIL AND ENVIRONMENTAL ENGINEERING
28 MADISON AVENUE EXTENSION, ALBANY, NY 12203 - 518.452.1290
55 SOUTH MAIN ST, ONEONTA, NY 13820 - 607.432.8073
31 NORTH MAIN STREET, LIBERTY, NY 12754 - 845.747.9952
8 TOWNSEND STREET, HALCOTT, NY 13860 - 607.865.9235
9 TECHNOLOGY PLACE, BUFFALO, NY 14203 - 716.852.7720
548 BROADWAY, MONTICELLO, NY 12701 - 845.791.7777

HESNOR ENGINEERING
22 COMPUTER DRIVE WEST
ALBANY, NY 12205
TEL: 518.689.2030

STATE OF NEW YORK ★ MARK S. HESNOR ★ 081070 ★ LICENSED PROFESSIONAL ENGINEER

REVISIONS

NO.	DATE	DESCRIPTION

CONTRACT 1
SUFFERN WWTP UPGRADES
VILLAGE OF SUFFERN
ROCKLAND COUNTY, NEW YORK

HVAC
NEW WORK PLAN

SHEET:
M-201

File: G:\DE\DE10 SUFFERN\DRAWINGS\MECHANICAL PLANS.DWG Saved: 12/4/2020 4:58:54 PM Plotted: 12/7/2020 2:07:08 PM User: Tyler Sasebarough LastSavedBy: tasebarough

HVAC SPECIFICATIONS

METAL DUCTS 15-1

PART 1 GENERAL -
- 1.1. SUMMARY
  - 1.1.1. FURNISH ALL LABOR, MATERIALS, EQUIPMENT AND SERVICES NECESSARY FOR, AND INCIDENTAL TO, THE INSTALLATION OF METAL DUCTS AS SHOWN ON THE DRAWINGS AND/OR AS SPECIFIED HEREIN.
  - 1.1.2. DUCT DIMENSIONS SHOWN ON DRAWINGS ARE CLEAR INSIDE DIMENSIONS.
- 1.2. SUBMITTALS
  - 1.2.1. SUBMIT THE FOLLOWING:
    - 1.2.1.1. SHOP DRAWINGS FROM DUCT FABRICATION SHOP, DRAWN TO A SCALE NOT SMALLER THAN 3/8 INCH EQUALS 1 FOOT, ON DRAWING SHEETS SAME SIZE AS THE CONTRACT DRAWINGS, DETAILING:
      - 1.2.1.1.1. FABRICATION, ASSEMBLY, AND INSTALLATION DETAILS, INCLUDING PLANS, ELEVATIONS, SECTIONS, DETAILS OF COMPONENTS, AND ATTACHMENTS TO OTHER WORK.
- 1.3. QUALITY ASSURANCE
  - 1.3.1. QUALIFY WELDING PROCESSES AND WELDING OPERATORS IN ACCORDANCE WITH AWS DI.1 "STRUCTURAL WELDING CODE - STEEL" FOR HANGERS AND SUPPORTS AND AWS D9.1 "SHEET METAL WELDING CODE."
  - 1.3.2. QUALIFY EACH WELDER IN ACCORDANCE WITH AWS QUALIFICATION TESTS FOR WELDING PROCESSES INVOLVED. CERTIFY THAT THEIR QUALIFICATION IS CURRENT.
  - 1.3.3. COMPLY WITH SECTION 603 “DUCT CONSTRUCTION AND INSTALLATION” OF THE MECHANICAL CODE OF NEW YORK STATE.

PART 2 PRODUCTS -
- 2.1. SHEET METAL MATERIALS
  - 2.1.1. PROVIDE SHEET METAL IN THICKNESSES INDICATED, PACKAGED AND MARKED AS SPECIFIED IN ASTM A 700.
  - 2.1.2. STAINLESS STEEL SHEETS: TYPE 304 OR 316; COLD ROLLED, ANNEALED, SHEET, NO. 4 FINISH.
- 2.2. RECTANGULAR DUCT FABRICATION
  - 2.2.1. EXCEPT AS OTHERWISE INDICATED, FABRICATE RECTANGULAR DUCTS WITH TYPE 304 OR 316 STAINLESS SHEET STEEL, IN ACCORDANCE WITH SMACNA "HVAC DUCT CONSTRUCTION STANDARDS". DUCT SHALL BE WELDED AND THE MINIMUM THICKNESS SHALL BE 18 GAGE. DUCT PRESSURE CLASS SHELL BE POSITIVE OR NEGATIVE 2-INCH W.G.
    - 2.2.1.1. FABRICATE RECTANGULAR DUCTS IN LENGTHS APPROPRIATE TO REINFORCEMENT AND RIGIDITY CLASS REQUIRED FOR PRESSURE CLASSIFICATION.
    - 2.2.1.2. PROVIDE MATERIALS THAT ARE FREE FROM VISUAL IMPERFECTIONS SUCH AS PITTING, SEAM MARKS, ROLLER MARKS, STAINS, AND DISCOLORATIONS.

PART 3 EXECUTION-
- 3.1. DUCT INSTALLATION, GENERAL
  - 3.1.1. DUCT SYSTEM PRESSURE CLASS: CONSTRUCT AND INSTALL EACH DUCT SYSTEM FOR THE SPECIFIC DUCT PRESSURE CLASSIFICATION INDICATED.
  - 3.1.2. LOCATE DUCTS, EXCEPT AS OTHERWISE INDICATED, VERTICALLY AND HORIZONTALLY, PARALLEL AND PERPENDICULAR TO BUILDING LINES; AVOID DIAGONAL RUNS. INSTALL DUCT SYSTEMS IN SHORTEST ROUTE THAT DOES NOT OBSTRUCT USEABLE SPACE OR BLOCK ACCESS FOR SERVICING BUILDING AND ITS EQUIPMENT.
  - 3.1.3. INSTALL DUCTS CLOSE TO WALLS, OVERHEAD CONSTRUCTION, COLUMNS, AND OTHER STRUCTURAL AND PERMANENT ENCLOSURE ELEMENTS OF BUILDING.
  - 3.1.4. COORDINATE LAYOUT WITH LIGHTING LAYOUTS AND SIMILAR FINISHED WORK.
- 3.2. CONNECTIONS
  - 3.2.1. EQUIPMENT CONNECTIONS: CONNECT EQUIPMENT WITH FLEXIBLE CONNECTORS IN ACCORDANCE WITH THE SECTION "AIR DUCT ACCESSORIES".

AIR DUCT ACCESSORIES 15-7

PART 1 GENERAL-
- 1.1. INTRODUCTION
  - 1.1.1. FURNISH ALL LABOR, MATERIALS, EQUIPMENT, AND SERVICES NECESSARY FOR, AND INCIDENTAL FOR THE INSTALLATION OF AIR DUCT ACCESSORIES AS SPECIFIED HEREIN.
- 1.2. SUBMITTALS
  - 1.2.1. SUBMIT THE FOLLOWING:
  - 1.2.2. PRODUCT DATA INCLUDING DETAILS FOR MATERIALS, DIMENSIONS OF INDIVIDUAL COMPONENTS, PROFILES, AND FINISHES.
- 1.3. QUALITY ASSURANCE
  - 1.3.1. COMPLY WITH THE REQUIREMENTS OF MECHANICAL AND BUILDING CODES OF NEW YORK STATE.

PART 2 PRODUCTS-.
- 2.1. FLEXIBLE CONNECTIONS
  - 2.1.1. GENERAL: FLAME-RETARDED OR NONCOMBUSTIBLE FABRICS, COATINGS, AND ADHESIVES COMPLYING WITH UL STANDARD 181, CLASS 1.
  - 2.1.2. EXTRA-WIDE METAL-EDGED CONNECTORS:
    - 2.1.2.1. FACTORY-FABRICATED WITH A STRIP OF FABRIC 5-3/4 INCHES WIDE ATTACHED TO 2 STRIPS OF 2-3/4-INCH-WIDE, 24-GAGE, GALVANIZED SHEET STEEL OR 0.032-GAGE ALUMINUM SHEETS.
      - 2.1.2.1.1. SELECT- METAL COMPATIBLE WITH CONNECTED DUCT SYSTEM.
      - 2.1.2.1.2. FOLD AND CRIMP METAL EDGE STRIPS ONTO FABRIC AS ILLUSTRATED IN SMACNA HVAC DUCT STANDARD, LST EDITION, FIGURE 2-19.

PART 3 EXECUTION-
- 3.1. INSTALLATION
  - 3.1.1. INSTALL DUCT ACCESSORIES ACCORDING TO MANUFACTURER'S INSTALLATION INSTRUCTIONS AND APPLICABLE PORTIONS OF DETAILS OF CONSTRUCTION AS SHOWN IN SMACNA STANDARDS.
- 3.2. ADJUSTING
  - 3.2.1. ADJUST DUCT ACCESSORIES FOR PROPER SETTINGS.

TESTING, ADJUSTING AND BALANCING FOR HVAC 15-3

PART 1 GENERAL -
- 1.1. DESCRIPTION
  - 1.1.1. FURNISH ALL LABOR, MATERIALS, EQUIPMENT, AND SERVICES NECESSARY FOR, AND INCIDENTAL FOR, THE TESTING, ADJUSTING AND BALANCING OF ALL SYSTEMS IDENTIFIED AS SHOWN ON THE DRAWINGS AND/OR AS SPECIFIED HEREIN.
  - 1.1.2. TEST, ADJUST, AND BALANCE THE FOLLOWING MECHANICAL SYSTEMS:
    - 1.1.2.1. EXHAUST AIR
- 1.2. SUBMITTALS
  - 1.2.1. AGENCY DATA:
    - 1.2.1.1. SUBMIT PROOF THAT THE PROPOSED TESTING, ADJUSTING, AND BALANCING AGENCY MEETS THE QUALIFICATIONS SPECIFIED BELOW.
  - 1.2.2. ENGINEER AND TECHNICIANS DATA:
    - 1.2.2.1. SUBMIT PROOF THAT THE TEST AND BALANCE ENGINEER ASSIGNED TO SUPERVISE THE PROCEDURES, AND THE TECHNICIANS PROPOSED TO PERFORM THE PROCEDURES MEET THE QUALIFICATIONS SPECIFIED BELOW.
  - 1.2.3. MAINTENANCE DATA: SUBMIT MAINTENANCE AND OPERATING DATA THAT INCLUDE HOW TO TEST, ADJUST, AND BALANCE THE BUILDING SYSTEMS.
  - 1.2.4. CERTIFIED REPORTS: SUBMIT TESTING, ADJUSTING, AND BALANCING REPORTS BEARING THE SEAL AND SIGNATURE OF THE TEST AND BALANCE ENGINEER. THE REPORTS SHALL BE CERTIFIED PROOF THAT THE SYSTEMS HAVE BEEN TESTED, ADJUSTED, AND BALANCED IN ACCORDANCE WITH THE REFERENCED STANDARDS; ARE AN ACCURATE REPRESENTATION OF HOW THE SYSTEMS HAVE BEEN INSTALLED; ARE A TRUE REPRESENTATION OF HOW THE SYSTEMS ARE OPERATING AT THE COMPLETION OF THE TESTING, ADJUSTING, AND BALANCING PROCEDURES; AND ARE AN ACCURATE RECORD OF ALL FINAL QUANTITIES MEASURED, TO ESTABLISH NORMAL OPERATING VALUES OF THE SYSTEMS. FOLLOW THE PROCEDURES AND FORMAT SPECIFIED BELOW.
  - 1.2.5. CALIBRATION REPORTS: SUBMIT PROOF THAT ALL REQUIRED INSTRUMENTATION HAS BEEN CALIBRATED TO TOLERANCES SPECIFIED IN THE REFERENCED STANDARDS, WITHIN A PERIOD OF SIX MONTHS PRIOR TO STARTING THE PROJECT.
- 1.3 QUALITY ASSURANCE
  - 1.3.1. TEST AND BALANCE ENGINEERS QUALIFICATIONS:
    - 1.3.1.1. A PROFESSIONAL ENGINEER (EITHER ON THE INSTALLERS STAFF OR AND INDEPENDENT CONSULTANT), REGISTERED IN THE STATE IN WHICH THE SERVICES ARE TO BE PERFORMED, AND HAVING AT LEAST 3-YEARS OF SUCCESSFUL TESTING, ADJUSTING, AND BALANCING EXPERIENCE ON PROJECTS WITH TESTING AND BALANCING REQUIREMENTS SIMILAR TO THOSE REQUIRED FOR THIS PROJECT. AGENCY SHALL BE NEBB OR AABC CERTIFIED.
  - 1.3.2. CODES AND STANDARDS:
    - 1.3.2.1. NEBB: "PROCEDURAL STANDARDS FOR TESTING, ADJUSTING, AND BALANCING OF ENVIRONMENTAL SYSTEMS."
    - 1.3.2.2. AABC: "NATIONAL STANDARDS FOR TOTAL SYSTEM BALANCE".
    - 1.3.2.3. ASHRAE: ASHRAE HANDBOOK, 1984 SYSTEMS VOLUME, CHAPTER 37, TESTING, ADJUSTING, AND BALANCING.

PART 2 EXECUTION -
- 2.1 PRELIMINARY PROCEDURES FOR AIR SYSTEM BALANCING
  - 2.1.1 BEFORE OPERATING THE SYSTEM, PERFORM THESE STEPS:
    - 2.1.1.1 OBTAIN DESIGN DRAWINGS AND SPECIFICATIONS AND BECOME THOROUGHLY ACQUAINTED WITH THE DESIGN INTENT.
    - 2.1.1.2 OBTAIN COPIES OF APPROVED SHOP DRAWINGS OF ALL AIR HANDLING EQUIPMENT AND TEMPERATURE CONTROL DIAGRAMS.
    - 2.1.1.3 COMPARE DESIGN TO INSTALLED EQUIPMENT AND FIELD INSTALLATIONS.
    - 2.1.1.4 CHECK DAMPERS FOR CORRECT AND LOCKED POSITION, AND TEMPERATURE CONTROL FOR COMPLETENESS OF INSTALLATION BEFORE STARTING FANS.
    - 2.1.1.5 DETERMINE BEST LOCATIONS IN MAIN AND BRANCH DUCTWORK FOR MOST ACCURATE DUCT TRAVERSES..
    - 2.1.1.6 PREPARE SCHEMATIC DIAGRAMS OF SYSTEM "AS-BUILT, DUCTWORK AND PIPING LAYOUTS TO FACILITATE REPORTING.
- 2.2 MEASUREMENTS
  - 2.2.1 PROVIDE ALL REQUIRED INSTRUMENTATION TO OBTAIN PROPER MEASUREMENTS, CALIBRATED TO THE TOLERANCES SPECIFIED IN THE REFERENCED STANDARDS. INSTRUMENTS SHALL BE PROPERLY MAINTAINED AND PROTECTED AGAINST DAMAGE.
  - 2.2.2 PROVIDE INSTRUMENTS MEETING THE SPECIFICATIONS OF THE REFERENCED STANDARDS.
  - 2.2.3 USE ONLY THOSE INSTRUMENTS WHICH HAVE THE MAXIMUM FIELD MEASURING ACCURACY AND ARE BEST SUITED TO THE FUNCTION BEING MEASURED.
  - 2.2.4 APPLY INSTRUMENT AS RECOMMENDED BY THE MANUFACTURER.
  - 2.2.5 USE INSTRUMENTS WITH MINIMUM SCALE AND MAXIMUM SUBDIVISIONS AND WITH SCALE RANGES PROPER FOR THE VALUE BEING MEASURED.
  - 2.2.6 WHEN AVERAGING VALUES, TAKE A SUFFICIENT QUANTITY OF READINGS WHICH WILL RESULT IN A REPEATABILITY ERROR OF LESS THAN 5 PERCENT. WHEN MEASURING A SINGLE POINT, REPEAT READINGS UNTIL 2 CONSECUTIVE IDENTICAL VALUES ARE OBTAINED.
  - 2.2.7 TAKE ALL READING WITH THE EYE AT THE LEVEL OF THE INDICATED VALUE TO PREVENT PARALLAX.
  - 2.2.8 USE PULSATION DAMPENERS WHERE NECESSARY TO ELIMINATE ERROR INVOLVED IN ESTIMATING AVERAGE OF RAPIDLY FLUCTUATION READINGS.
    - 2.2.8.1 TAKE MEASUREMENTS IN THE SYSTEM WHERE BEST SUITED TO THE TASK.
- 2.3 PERFORMING TESTING, ADJUSTING AND BALANCING
  - 2.3.1 PERFORM TESTING AND BALANCING PROCEDURES ON EACH SYSTEM IDENTIFIED, IN ACCORDANCE WITH THE DETAILED PROCEDURES OUTLINED IN THE REFERENCED STANDARDS.
  - 2.3.2 MARK EQUIPMENT SETTINGS, INCLUDING DAMPER CONTROL POSITIONS, FAN SPEED CONTROL LEVERS, AND SIMILAR CONTROLS AND DEVICES, TO SHOW FINAL SETTINGS. MARK WITH PAINT OR OTHER SUITABLE, PERMANENT IDENTIFICATION MATERIALS.
- 2.4 RECORD AND REPORT DATA
  - 2.4.1 RECORD ALL DATA OBTAINED DURING TESTING, ADJUSTING, AND BALANCING IN ACCORDANCE WITH, AND ON THE FORMS RECOMMENDED BY THE REFERENCED STANDARDS, AND AS APPROVED ON THE SAMPLE REPORT FORMS.
  - 2.4.2 PREPARE REPORT OF RECOMMENDATIONS FOR CORRECTING UNSATISFACTORY MECHANICAL PERFORMANCES WHEN SYSTEM CANNOT BE SUCCESSFULLY BALANCED.
- 2.5 DEMONSTRATION
  - 2.5.1 TRAINING:
    - 2.5.1.1 TRAIN THE OWNER'S MAINTENANCE PERSONNEL ON TROUBLE SHOOTING PROCEDURES AND TESTING, ADJUSTING, AND BALANCING PROCEDURES. REVIEW WITH THE OWNER'S PERSONNEL, THE INFORMATION CONTAINED IN THE MAINTENANCE MANUAL.
    - 2.5.1.2 SCHEDULE TRAINING WITH OWNER THROUGH THE OWNER'S REPRESENTATIVE WITH AT LEAST 7 DAYS PRIOR NOTICE.

MECHANICAL IDENTIFICATION 15-4

PART 1 GENERAL -
- 1.1. DESCRIPTION
  - 1.1.1. FURNISH ALL LABOR, MATERIALS, EQUIPMENT, AND SERVICES NECESSARY FOR, AND INCIDENTAL TO, THE INSTALLATION OF MECHANICAL IDENTIFICATION AS SPECIFIED HEREIN.

PART 2 PRODUCTS -
- 2.1. EQUIPMENT LABELS
  - 2.1.1. METAL LABELS FOR EQUIPMENT:
  - 2.1.2. MATERIAL AND THICKNESS: ALUMINUM, 0.032-INCH MINIMUM THICKNESS, AND HAVING PREDRILLED OR STAMPED HOLES FOR ATTACHMENT HARDWARE.
    - 2.1.2.1. MINIMUM LABEL SIZE: LENGTH AND WIDTH VARY FOR REQUIRED LABEL CONTENT, BUT NOT LESS THAN 2-1/2 BY 3/4 INCH.
    - 2.1.2.2. MINIMUM LETTER SIZE: 1/4 INCH FOR NAME OF UNITS IF VIEWING DISTANCE IS LESS THAN 24 INCHES, 1/2 INCH FOR VIEWING DISTANCES UP TO 72 INCHES, AND PROPORTIONATELY LARGER LETTERING FOR GREATER VIEWING DISTANCES. INCLUDE SECONDARY LETTERING TWO-THIRDS TO THREE-FOURTHS THE SIZE OF PRINCIPAL LETTERING.
    - 2.1.2.3. FASTENERS: STAINLESS-STEEL RIVETS OR SELF-TAPPING SCREWS.

PART 3 EXECUTION -
- 3.1. PREPARATION
  - 3.1.1. CLEAN PIPING AND EQUIPMENT SURFACES OF SUBSTANCES THAT COULD IMPAIR BOND OF IDENTIFICATION DEVICES, INCLUDING DIRT, OIL, GREASE, RELEASE AGENTS, AND INCOMPATIBLE PRIMERS, PAINTS, AND ENCAPSULANTS.
- 3.2. EQUIPMENT LABEL INSTALLATION
  - 3.2.1. INSTALL OR PERMANENTLY FASTEN LABELS ON EACH MAJOR ITEM OF MECHANICAL EQUIPMENT.
  - 3.2.2. LOCATE EQUIPMENT LABELS WHERE ACCESSIBLE AND VISIBLE.
  - 3.2.3. FOR EACH PIECE OF EQUIPMENT, LABELS SHALL BE APPLIED ON THE EQUIPMENT, ON THE DISCONNECT SWITCH AND AT THE SOURCE OF ELECTRICAL POWER.

SEQUENCE OF OPERATIONS

PART 1 - GENERAL

1.01 DESCRIPTION OF WORK
- A. THE WORK REQUIRED UNDER THIS SCOPE INCLUDES ALL LABOR, MATERIALS AND RELATED ITEMS NECESSARY TO IMPLEMENT THE SPECIFIED EQUIPMENT OPERATING SEQUENCES AS SHOWN ON THE DRAWINGS OR INFERABLE THERE FROM AND AS SPECIFIED HEREIN.
- B. THE CONTRACTOR WHO COMPLETES THE WORK MUST INCLUDE A DEMONSTRATION TO THE OWNER OF EACH SPECIFIED SEQUENCE.

1.02 COMMISSIONING OF THE WORK
- A. PRIOR TO CONCEALMENT OF THE CONTROLLED DEVICES, THE CONTRACTOR MUST DEMONSTRATE THE AUTOMATIC CONTROL SYSTEM SPECIFIED HEREIN.

PART 2 - SEQUENCES OF OPERATIONS

3.01 OPERATING SEQUENCES - GENERAL
- A. GENERAL
  1. PROVIDE END SWITCHES ON ALL DAMPERS THAT ARE INTERLOCKED WITH A FAN SYSTEM. DAMPERS SHALL FULLY OPEN PRIOR TO ENERGIZING THE FANS.
  2. ALL AUTOMATIC START SEQUENCES SHALL ALSO HAVE MANUAL OVERRIDE CAPABILITY.
- B. THE CONTROLS CONTRACTOR SHALL BE RESPONSIBLE FOR STABLE OPERATION OF ALL CONTROL LOOPS.
- C. REFERENCES TO EQUIPMENT MONITORED AND CONTROLLED WITHIN THE OPERATING SEQUENCES MAY INDICATE SINGULAR QUANTITIES OF EQUIPMENT, SUCH AS FANS AND DAMPERS, WHICH ARE MULTIPLE IN THE PROJECT.
- D. ANY INFORMATION REQUIRED BY THE CONTROLS CONTRACTOR FOR THE IMPLEMENTATION OF THE SEQUENCES SHALL BE REQUESTED IN WRITING TO THE OWNER AT LEAST FOUR (4) WEEKS PRIOR TO THE TIME IT IS REQUIRED. SUBMIT THE REQUEST FOR INFORMATION IN THE FORM OF TABLES OR FORMS FOR THE OWNER'S PERSONNEL TO COMPLETE AND RETURN.
- E. ALL SET-POINTS SHALL BE ADJUSTABLE BY THE END USER.

3.02 BUILDING VENTILATION SYSTEM
- A. LIGHT SWITCHING CONTROL - NORMAL OPERATION
  1. THE FACILITY LIGHTING SHALL BE INTERCONNECTED WITH THE FACILITY VENTILATION SYSTEM.
  2. UPON FACILITY PERSONNEL SWITCHING THE LIGHTING TO THE 'ON' POSITION:
     - a. A SIGNAL SHALL BE SENT TO THE MOTORIZED DAMPERS OF LOUVERS LV-1, LV-2, AND LV-3 TO MODULATE TO FULL-OPEN POSITION.
     - b. WHEN THE MOTORIZED DAMPER IS AT THE FULL-OPEN POSITION, AS SENSED BY THE ACTUATOR END SWITCH, THE RESPECTIVE EXHAUST FAN (EF-1, EF-2, OR EF-3) SHALL BE ENABLED AND ENERGIZED.
     - c. THE EXHAUST FAN MOTOR STARTER AND CONTROLLER SHALL MONITOR MOTOR STATUS AND FAULT ALARMS AT ALL TIMES.
  3. UPON FACILITY PERSONNEL SWITCH THE LIGHTING TO THE 'OFF' POSITION:
     - a. A SIGNAL SHALL BE SENT TO THE MOTORIZED DAMPERS OF LOUVERS LV-1, LV-2, AND LV-3 TO MODULATE TO FULL-CLOSED POSITION.
     - b. WHEN THE MOTORIZED DAMPER IS NO LONGER AT THE FULL-OPEN POSITION, AS SENSED BY THE ACTUATOR END SWITCH, THE RESPECTIVE EXHAUST FAN (EF-1,EF-2, OR EF-3) SHALL BE DISABLED AND DE-ENERGIZED.
  4. ALARMS - ALARMS SHALL BE GENERATED IF ANY OF THE FOLLOWING INSTANCES OCCUR.
     - a. MOTORIZED DAMPERS ARE COMMANDED TO FULL-OPEN POSITIONS AND DO NOT DE-ACTIVE "CLOSED" END SWITCH AND ACTIVATE "OPEN" END SWITCH WITHIN 120 SECONDS (ADJ.).
     - b. MOTORIZED DAMPERS ARE COMMANDED TO FULL-CLOSED POSITION AND DON NOT DE-ACTIVE "OPEN" END SWITCH AND ACTIVATE "CLOSED" END SWITCH WITHIN 120 SECONDS (ADJ.).
     - c. A FAULT IS DETECTED BY THE EXHAUST FAN MOTOR CONTROLLER.
- B. GAS MONITORING SYSTEM CONTROL
  1. THE VENTILATION SYSTEM SHALL BE INTERCONNECTED WITH THE FACILITY GAS MONITORING SYSTEM. THE GAS MONITORING CONTROL SEQUENCE SHALL TAKE PRECEDENT OVER THE LIGHT SWITCHING CONTROL SEQUENCE AT ALL TIMES. SEE ELECTRICAL DRAWINGS FOR GAS DETECTOR INFORMATION AND SET POINTS.
  2. UPON THE GAS DETECTION SYSTEM SENSING A GAS CONCENTRATION ABOVE THE SET POINT:
     - a. THE VENTILATION SYSTEM SHALL REACT IN AND IDENTICAL MANNER TO THE STEPS OUTLINED IN 3.02, A, 2,(a,b,c).
     - b. THE VENTILATION SYSTEM SHALL REMAIN IN THIS OPERATIONAL STATE UNTIL THE GAS DETECTION SYSTEM IS NO LONGER IN ALARM.
  3. UPON THE GAS DETECTION SYSTEM SENSING A GAS CONCENTRATION BELOW THE SET POINT:
     - a. THE VENTILATION SYSTEM SHALL RETURN TO NORMAL OPERATION (LIGHT SWITCH CONTROL).

3.03 BUILDING TEMPERATURE CONTROL SYSTEM
- A. FAN COOLING
  1. UPON THE REMOTE THERMOSTAT SENSING A SPACE TEMPERATURE ABOVE THE SPACE COOLING SET POINT (INITIALLY SET AT 85°F (ADJ.)), THE VENTILATION SYSTEM SHALL OPERATE AS DESCRIBED IN 3.02, A, 2,(a,b,c).
  2. UPON THE REMOTE THERMOSTAT SENSING A SPACE TEMPERATURE COOLING SET POINT, THE VENTILATION SYSTEM SHALL RETURN TO NORMAL OPERATION (LIGHT SWITCH CONTROL).
- B. SPACE HEATING
  1. UPON A UNIT HEATER SENSING A SPACE TEMPERATURE BELOW THE SPACE HEATING SET POINT (INITIALLY SET AT 50°F (ADJ.)), THE UNIT HEATER SHALL ENERGIZE AND USE INTERNAL LOGIC TO MAINTAIN THE SPACE TEMPERATURE SET POINT.
  2. UPON A UNIT HEATER SENSING A SPACE TEMPERATURE ABOVE THE SPACE HEATING SET POINT, THE UNIT HEATER SHALL BE OFF.
- C. SAFETIES
  1. UPON THE REMOTE THERMOSTAT SENSING A SPACE TEMPERATURE BELOW THE HEATING ALARM SET POINT (INITIALLY SET AT 36°F (ADJ.)), ALL HEATERS SHALL ENERGIZE TO FULL HEATING AND AN ALARM SHALL BE GENERATED WITHIN THE BUILDING. THE EXHAUST FANS SHALL DE-ENERGIZE AND THE LOUVER MOTORIZED DAMPERS SHALL CLOSE. THE SYSTEM SHALL STAY IN THIS MODE UNTIL THE SPACE TEMPERATURE IS ABOVE THE HEATING ALARM SET POINT. IF AT ANYTIME DURING THIS SAFETY SEQUENCE, A GAS DETECTOR GOES INTO ALARM MODE, THE GAS MONITORING SYSTEM CONTROL SHALL IMMEDIATELY BE IMPLEMENTED (GAS MONITORING CONTROL SHALL ALWAYS TAKE PRECEDENT).

WARNING — IT IS A VIOLATION OF NEW YORK EDUCATION LAW SECTION 7209.2, FOR ANY PERSON, UNLESS HE IS ACTING UNDER THE DIRECTION OF A LICENSED PROFESSIONAL ENGINEER OR LAND SURVEYOR, TO ALTER THIS DOCUMENT IN ANY WAY. IF ALTERED THE ALTERING PERSON SHALL COMPLY WITH THE REQUIREMENTS OF NEW YORK EDUCATION LAW, SECTION 7209.2.

File: F:\DE\DE10 SUFFERN\DRAWINGS\MECHANICAL PLANS.DWG Saved: 12/4/2020 4:58:54 PM Plotted: 12/7/2020 2:08:40 PM User: Tyler Scarborough LastSavedBy: tscarborough

BID PLANS

DATE:	12/08/2020
DRAWN BY:	TNS
SCALE:	NONE
REVIEWED BY:	TJH
PROJECT NO.:	19-1612
FILE:	

DELAWARE ENGINEERING, D.P.C.
CIVIL AND ENVIRONMENTAL ENGINEERING
28 MADISON AVENUE EXTENSION, ALBANY, NY 12203 - 518.452.1290
55 SOUTH MAIN ST, ONEONTA, NY 13820 - 607.432.8073
31 NORTH MAIN STREET, LIBERTY, NY 12754 - 845.747.9952
6 TOWNSEND STREET, WALTON, NY 13856 - 607.865.9235
16 EAST MARKET ST., RED HOOK, NY 12571 - 518.452.1290
548 BROADWAY, MONTICELLO, NY 12701 - 845.791.7777

HESNOR ENGINEERING ASSOCIATES
22 COMPUTER DRIVE WEST
ALBANY, NY 12205
TEL: 518.689.2030

STATE OF NEW YORK ★ THOMAS JEFFREY HESNOR ★ LICENSED PROFESSIONAL ENGINEER 081097

REVISIONS

NO.	DATE	DESCRIPTION

CONTRACT 1
SUFFERN WWTP UPGRADES
VILLAGE OF SUFFERN
ROCKLAND COUNTY, NEW YORK

HVAC SPECIFICATIONS & SEQUENCES

SHEET: M-202

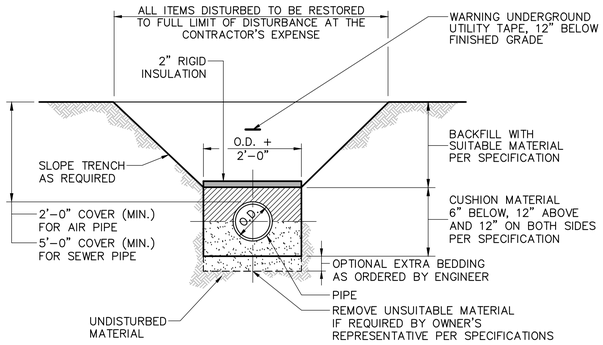

1 TYPICAL TRENCH DETAIL
SCALE: N.T.S.

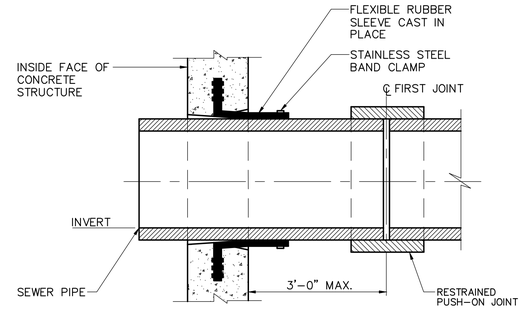

2 TYPICAL FLEXIBLE PIPE JOINT DETAIL
SCALE: N.T.S.

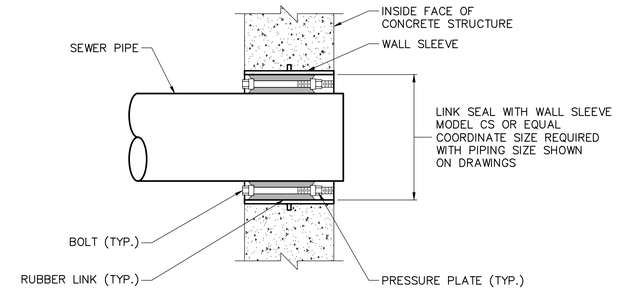

3 TYPICAL LINK-SEAL DETAIL
SCALE: N.T.S.

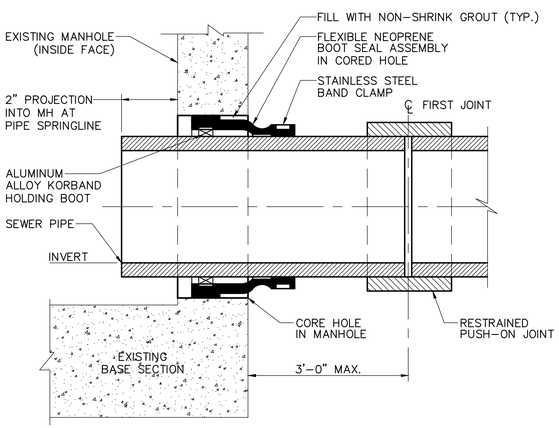

4 TYPICAL FLEXIBLE PIPE JOINT DETAIL FOR CONNECTION TO EXISTING MANHOLE
SCALE: N.T.S.

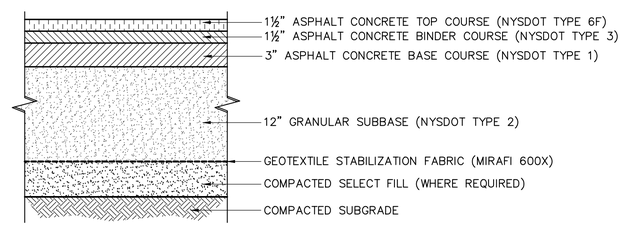

5 TYPICAL ASPHALT PAVEMENT DRIVEWAY DETAIL
SCALE: N.T.S.

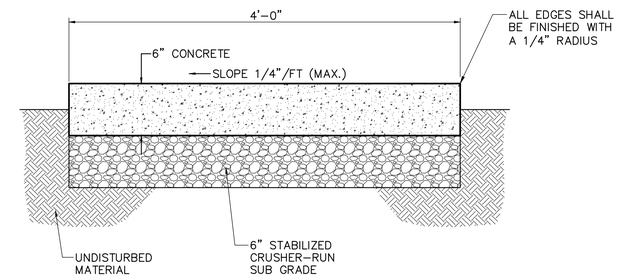

NOTES:

1. THE CONCRETE USED SHALL BE PORTLAND CEMENT, AIR-ENTRAINED, CLASS "A" CONCRETE WITH AN AIR CONTENT OF 5%, MIN, TO 7% MAX, AND A SLUMP OF TWO INCHES, MIN TO THREE INCHES, MAX.
2. ALL NEW CONCRETE SIDEWALKS SHALL BE TRANSVERSELY SCORED TO ONE (1) INCH DEPTHS 5' INTERVALS. FULL-DEPTH CONSTRUCTION JOINTS SHALL BE PROVIDED AT ALL DRIVEWAY CROSSINGS OR AT 20' INTERVALS, MAX.

6 TYPICAL CONCRETE SIDEWALK DETAIL
SCALE: N.T.S.

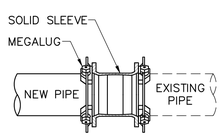

7 TYPICAL SOLID SLEEVE DETAIL
SCALE: N.T.S.

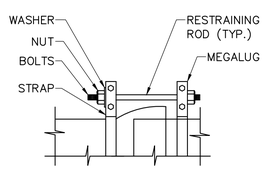

8 TYPICAL STRAPPING DETAIL
SCALE: N.T.S.

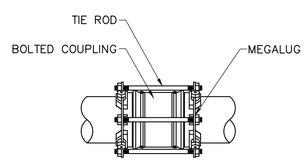

9 TYPICAL BOLTED COUPLING DETAIL
SCALE: N.T.S.

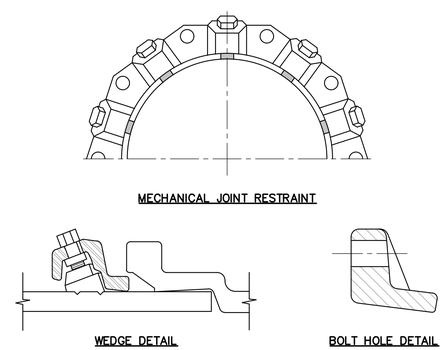

10 TYPICAL MECHANICAL JOINT DETAIL
SCALE: N.T.S.

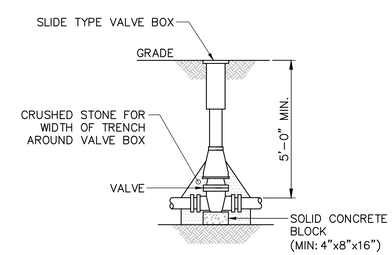

NOTES:

1. VALVE BOX SHALL BE CENTERED ON VALVE AND SET ON COMPACTED BACKFILL.
2. USE VALVE BOX ALIGNER.

11 TYPICAL VALVE DETAIL
SCALE: N.T.S.

BID PLANS

WARNING – IT IS A VIOLATION OF NEW YORK EDUCATION LAW SECTION 7209.2, FOR ANY PERSON, UNLESS HE IS ACTING UNDER THE DIRECTION OF A LICENSED PROFESSIONAL ENGINEER OR LAND SURVEYOR, TO ALTER THIS DOCUMENT IN ANY WAY. IF ALTERED THE ALTERING PERSON SHALL COMPLY WITH THE REQUIREMENTS OF NEW YORK EDUCATION LAW, SECTION 7209.2.

DATE: 12/2020
DRAWN BY: GJM
SCALE: AS SHOWN
REVIEWED BY: RF
PROJECT NO.: 19-1612
FILE:

DELAWARE ENGINEERING, D.P.C.
CIVIL AND ENVIRONMENTAL ENGINEERING
28 MADISON AVENUE EXTENSION, ALBANY, NY 12203 - 518.452.1290
55 SOUTH MAIN ST, ONEONTA, NY 13820 - 607.432.8073
31 NORTH MAIN STREET, LIBERTY, NY 12754 - 845.747.9952
6 TOWNSEND STREET, WALTON, NY 13856 - 607.865.9235
16 EAST MARKET ST., RED HOOK, NY 12571 - 518.452.1290
548 BROADWAY, MONTICELLO, NY 12701 - 845.791.7777

REVISIONS

NO.	DATE	DESCRIPTION

CONTRACT 1
SUFFERN WWTP UPGRADES
VILLAGE OF SUFFERN
ROCKLAND COUNTY, NEW YORK

MISCELLANEOUS DETAILS

SHEET: D-101

File: I:\DRAWINGS\SUFFERN\WWTP\ACAD\SFRN_D-101_MISC_DETS.DWG Saved: 12/8/2020 10:10:08 AM Plotted: 12/8/2020 10:10:37 AM User: Gary Markham LastSavedBy: markhamg

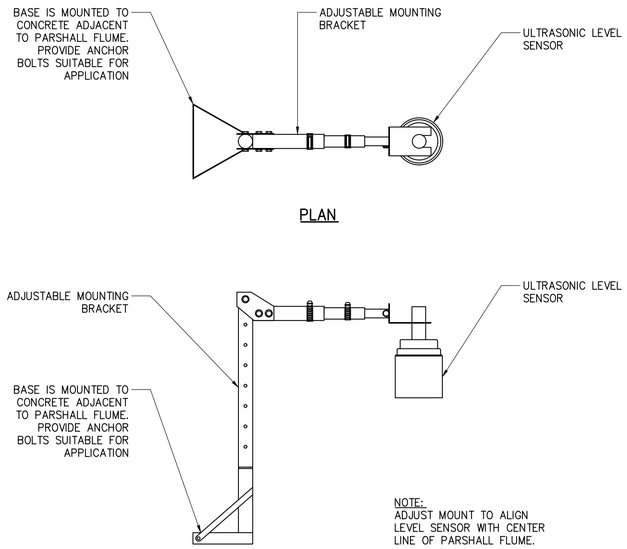

1 TYPICAL ULTRASONIC LEVEL SENSOR WITH ADJUSTABLE MOUNTING BRACKET DETAIL
SCALE: N.T.S.

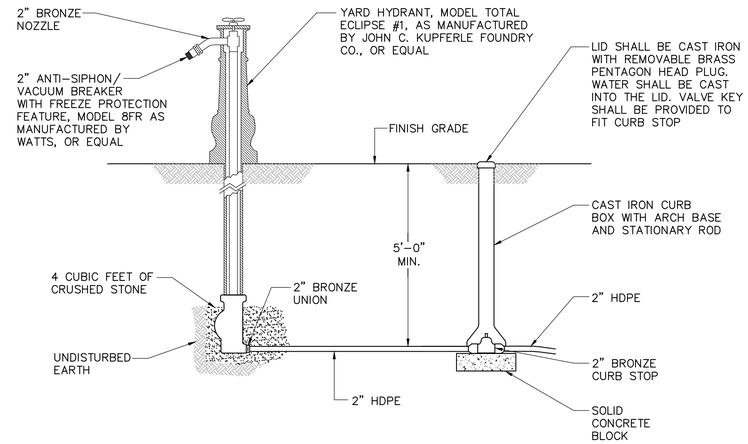

2 TYPICAL YARD HYDRANT DETAIL
SCALE: N.T.S.

PAD THICKNESS	REINFORCING
GREATER THAN/EQUAL TO 8"	#5@12"OC EW
LESS THAN 8"	#4@12"OC EW

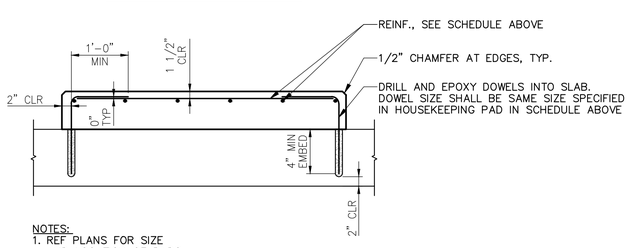

NOTES:
1. REF PLANS FOR SIZE AND LOCATION OF PADS.

3 TYPICAL HOUSEKEEPING PAD DETAIL
SCALE: N.T.S.

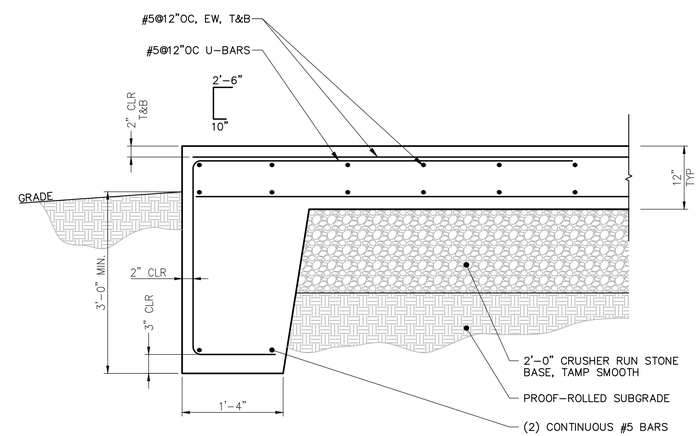

NOTES:
1. PROVIDE 1" WASH IN ALL DIRECTIONS, SLOPING TO THE EDGES OF THE SLAB

4 TYPICAL SITE EQUIPMENT PAD DETAIL
SCALE: N.T.S.

WARNING – IT IS A VIOLATION OF NEW YORK EDUCATION LAW SECTION 7209.2, FOR ANY PERSON, UNLESS HE IS ACTING UNDER THE DIRECTION OF A LICENSED PROFESSIONAL ENGINEER OR LAND SURVEYOR, TO ALTER THIS DOCUMENT IN ANY WAY. IF ALTERED THE ALTERING PERSON SHALL COMPLY WITH THE REQUIREMENTS OF NEW YORK EDUCATION LAW, SECTION 7209.2.

BID PLANS

DATE: 12/2020
DRAWN BY: GJM
SCALE: AS SHOWN
REVIEWED BY: RF
PROJECT NO.: 19-1612
FILE:

DELAWARE ENGINEERING, D.P.C.
CIVIL AND ENVIRONMENTAL ENGINEERING
28 MADISON AVENUE EXTENSION, ALBANY, NY 12203 - 518.452.1290
55 SOUTH MAIN ST, ONEONTA, NY 13820 - 607.432.8073
31 NORTH MAIN STREET, LIBERTY, NY 12754 - 845.747.9952
6 TOWNSEND STREET, WALTON, NY 13856 - 607.865.9235
16 EAST MARKET ST., RED HOOK, NY 12571 - 518.452.1290
548 BROADWAY, MONTICELLO, NY 12701 - 845.791.7777

STATE OF NEW YORK · REGISTERED PROFESSIONAL ENGINEER · GARY J. MARKHAM · 081501

REVISIONS

NO.	DATE	DESCRIPTION

CONTRACT 1
SUFFERN WWTP UPGRADES
VILLAGE OF SUFFERN
ROCKLAND COUNTY, NEW YORK

MISCELLANEOUS DETAILS

SHEET: D-102

File: I:\DRAWINGS\SUFFERN\WWTP\ACAD\SFRN_D-102_MISC_DET.DWG Saved: 12/8/2020 10:11:08 AM Plotted: 12/8/2020 10:11:25 AM User: Gary Markham LastSavedBy: markhamg

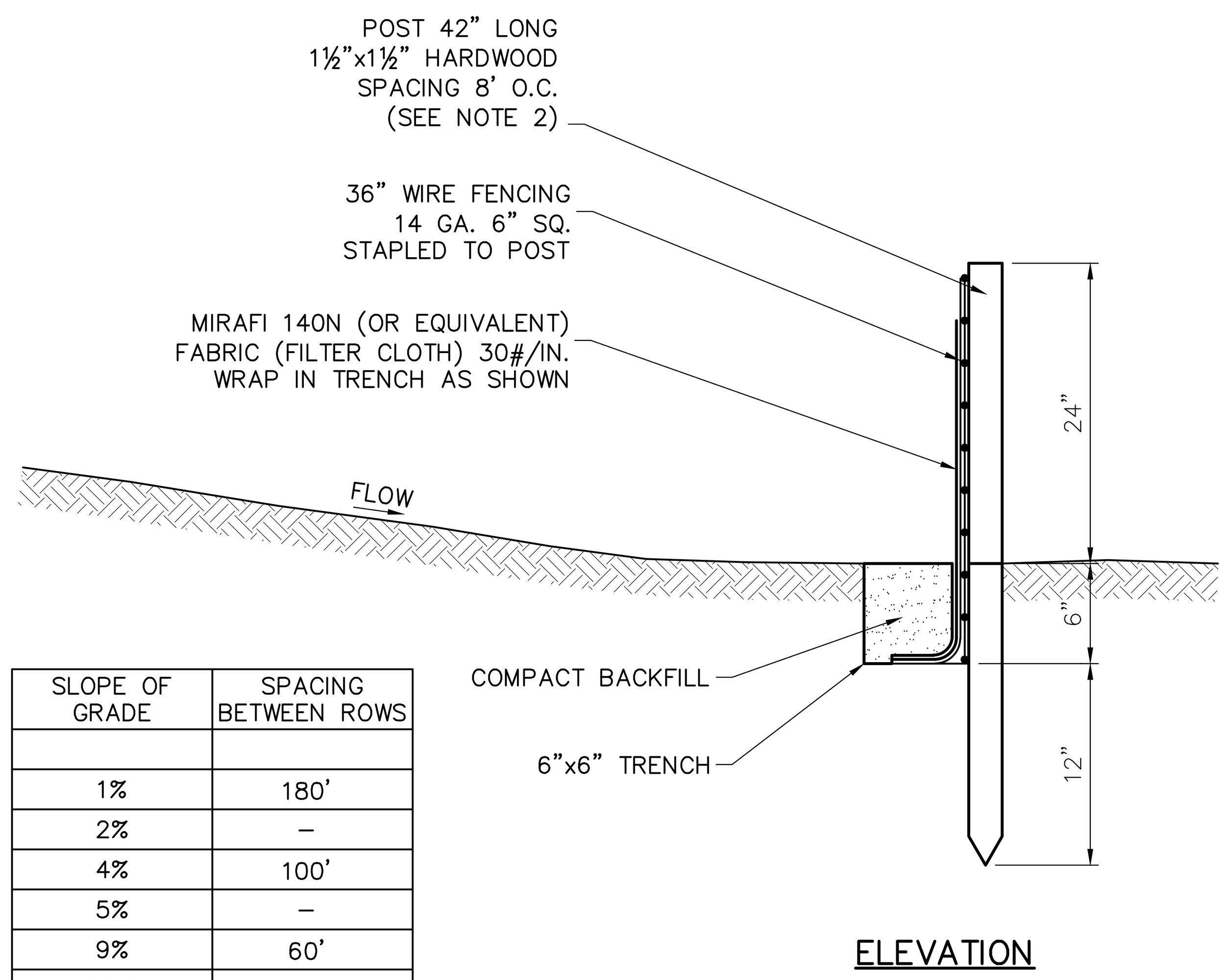

SLOPE OF GRADE	SPACING BETWEEN ROWS
1%	180'
2%	–
4%	100'
5%	–
9%	60'
10%	–
14%	40'
18%	30'
20%	–
30%	20'

NOTES:

1. TIE FABRIC TO WIRE FENCE IN ACCORDANCE WITH MANUFACTURERS RECOMMENDATIONS.
2. IF EXTRA STRENGTH FABRIC (GREATER THAN 50#/INCH) IS USED, WIRE CAN BE DELETED IF POST SPACING IS REDUCED TO 6' O.C..
3. AT THE ENDS OF THE FENCING THE FIRST 20' SHALL BE TURNED UP THE SLOPE 2'.
4. POSTS SHOULD BE INCLINED TOWARD THE DIRECTION FLOW CAME FROM.
5. OVERLAP FABRIC A MINIMUM OF 6" AND FOLDED AT JOINTS.
6. THE MAXIMUM AREA OF RUNOFF PER 100LF. OF FENCE SHALL NOT EXCEED 0.25 ACRES.
7. MAINTENANCE SHALL BE PERFORMED AS NECESSARY. THE FENCING SHALL BE CHECKED AFTER EVERY STORM TO ENSURE THEIR PROPER FUNCTIONING.
8. WHEN FENCE IS NO LONGER NEEDED, THE ACCUMULATED SILT, THE POSTS AND FABRIC SHALL BE REMOVED AND TRENCH BACK FILLED WITH TOPSOIL AND SEEDED.
9. FENCING SHOULD BE PLACED AS SHOWN ON THE DRAWING OR IF NOT SHOWN, 10' BEYOND THE TOE OF THE OF THE SLOPE AND AT A SPACING IN ACCORDANCE WITH THE TABLE.

1 TYPICAL SILT FENCE DETAIL
SCALE: N.T.S.

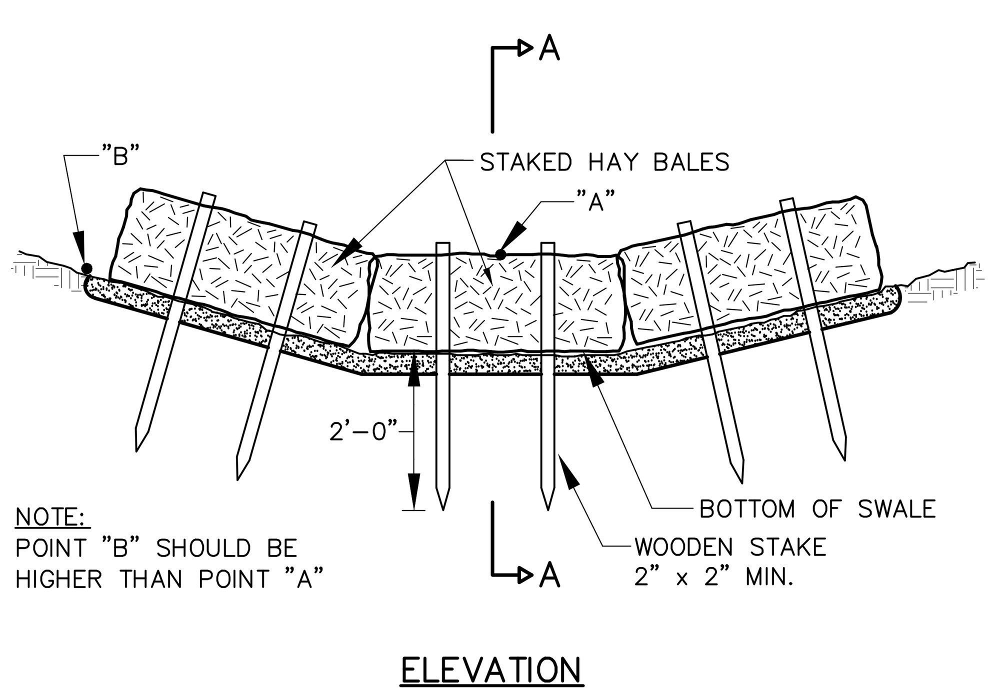

NOTE:
POINT "B" SHOULD BE HIGHER THAN POINT "A"

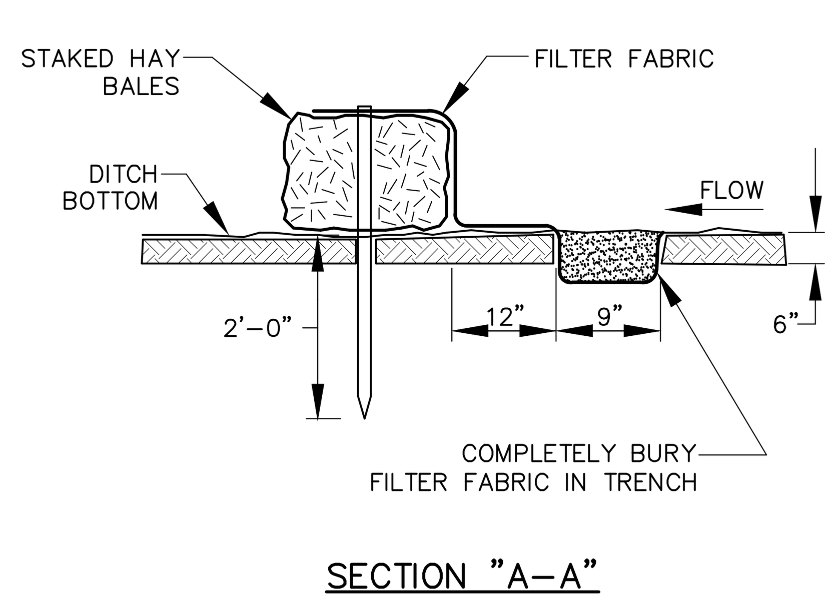

2 TYPICAL HAY BALE SILTATION CONTROL DETAIL
SCALE: N.T.S.

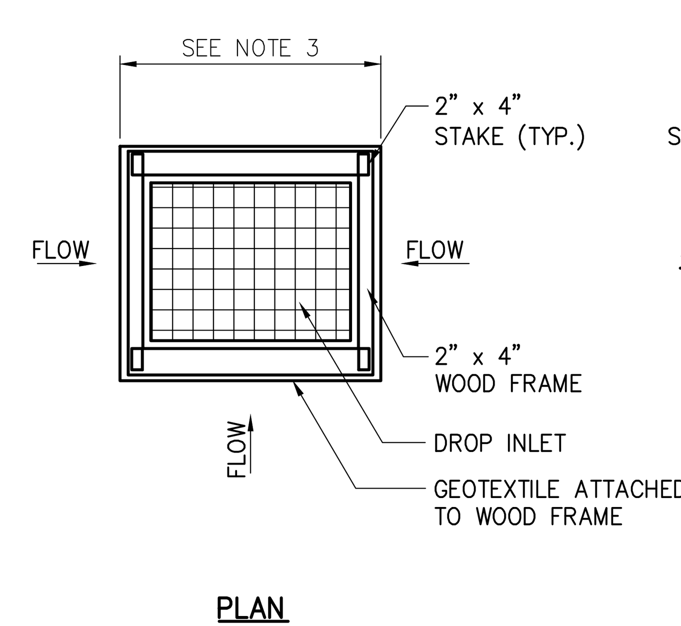

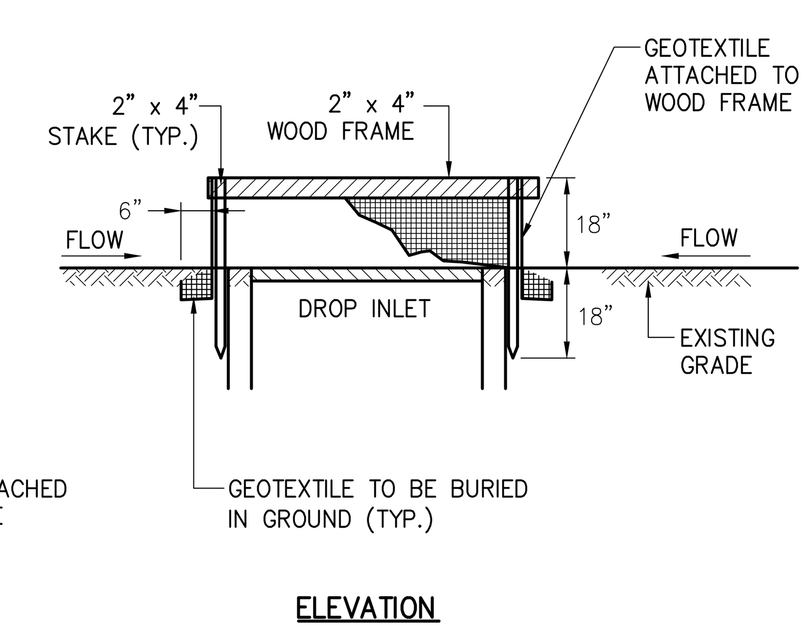

NOTES:

1. GEOTEXTILE SHALL BE CUT FROM A CONTINUOUS ROLL TO ELIMINATE JOINTS. IF JOINTS ARE NECESSARY THEY WILL BE OVERLAPPED TO THE NEXT STAKE.
2. STAKE MATERIAL WILL BE STANDARD 2"x4" WOOD OR EQUIVALENT METAL WITH A MINIMUM LENGTH OF 3 FEET.
3. SPACE STAKES EVENLY AROUND INLET WITH A MAXIMUM SPACING OF 3 FEET DRIVE STAKES 18" MINIMUM INTO GROUND. WIRE MESH MAY BE REQUIRED BEHIND GEOTEXTILE TO PROVIDE SUPPORT.
4. GEOTEXTILE SHALL BE EMBEDDED 12" BELOW GROUND AND BACKFILLED. IT SHALL BE SECURELY FASTENED TO STAKES AND FRAME.
5. GEOTEXTILE FABRIC SHALL HAVE EOS OF 40-85.
6. A 2"x 4" WOOD FRAME SHALL BE FORMED AROUND THE CREST OF FABRIC FOR OVERFLOW STABILITY.
7. INLET PROTECTION TO REMAIN IN-PLACE UNTIL AREA IS STABILIZED.

3 TYPICAL FILTER FABRIC DROP INLET PROTECTION DETAIL
SCALE: N.T.S.

NOTES FOR TEMPORARY EROSION AND SEDIMENT CONTROL

1. THE CONTRACTOR'S ATTENTION IS DIRECTED TO THE FACT THAT THROUGHOUT THE DURATION OF THE CONTRACT IT WILL BE THE CONTRACTOR'S RESPONSIBILITY TO PROTECT ALL WATER COURSES FROM WATER BORNE SEDIMENT OR POLLUTANTS ORIGINATING FROM ANY WORK DONE ON, OR IN SUPPORT OF THIS PROJECT.
2. THE SEDIMENT CONTROL NOTES AND DETAILS SHOWN ON THIS DRAWING ARE NOT INTENDED TO BE ALL INCLUSIVE BUT TO SERVE AS A GUIDELINE FOR THE DEVELOPMENT OF THE CONTRACTOR'S EROSION AND SEDIMENT CONTROL SCHEDULE REQUIRED.
3. THE CONTRACTOR SHALL IDENTIFY STAGING, STOCKPILE, AND SPOIL DISPOSAL AREAS FOR THE ENGINEERS REVIEW AND APPROVAL PRIOR TO THE START OF CONSTRUCTION.
4. THE CONTRACTOR SHALL OBSERVE ALL RULES AND REGULATIONS OF THE STATE OF NEW YORK AND AGENCIES OF THE FEDERAL GOVERNMENT THAT APPLY TO THIS PROJECT.
5. ALL EROSION AND SEDIMENT CONTROL MEASURES SHALL BE IN PLACE BEFORE COMMENCING WORK WITHIN AN AREA.
6. DISTURBED AREAS THAT ARE NOT UNDER ACTIVE EXCAVATION WILL BE MULCHED AND SEEDED WITHIN ONE DAY FOLLOWING CESSATION OF ACTIVITY IN THE AREA. ALL UTILITY LINE TRENCHES WILL BE BACKFILLED AT THE END OF EACH WORKDAY AND WILL BE MULCHED AND SEEDED. SILT FENCE WILL BE PLACED AROUND SOIL AND STONE STOCKPILES THAT WILL REMAIN IN PLACE FOR MORE THAN 7 DAYS. SOIL STOCKPILES THAT WILL REMAIN IN PLACE FOR MORE THAN 14 DAYS WILL BE MULCHED AND SEEDED.
7. IN NON-PAVED AREAS OUTSIDE OF ROADWAYS WITH A SLOPE GREATER THAN 15% OR AS NOTED BY THE ENGINEER, EROSION CONTROL BLANKETS WILL BE INSTALLED TO CONTROL EROSION. THE AREA WILL BE GRADED, SEEDED, AND THE EROSION CONTROL BLANKET APPLIED TO THE PREPARED SEEDBED. IF CONDITIONS PRECLUDE SEEDING, THE EROSION CONTROL BLANKET WILL BE APPLIED TO THE ROUGH GRADED AREA.
8. CHECK DAMS WILL BE USED WITHIN DRAINAGE DITCHES TO CONTROL SEDIMENTATION IN AREAS WHERE THERE IS A POTENTIAL FOR SOIL TO BE TRANSPORTED TO THE DITCH. CHECK DAMS WILL BE USED TO CONTAIN SEDIMENT AT LOCATIONS AOBE, WHERE EXISTING DRAINAGE PATTERNS DIRECT ROAD RUNOFF TO A WATERBODY.
9. ANY TURBID DISCHARGES FROM DEWATERING AREAS WILL BE DIRECTED TO EITHER A SETTLING TANK OR A STABLE, LEVEL, GRASSED AREA, AT LEAST 100 FEET FROM WATERCOURSES AND WETLANDS. IF THE DISCHARGE IS DIRECTED TO A STABLE, LEVEL VEGETATED AREA, THE DISCHARGE AND ANY RELATED DEWATERING FILTER AREA WILL BE SURROUNDED BY A SILT CURTAIN SEDIMENT BARRIER. SETTLING TANKS AND DEWATERING FILTER DEVICES SHALL BE OF SUFFICIENT CAPACITY TO HANDLE THE DISCHARGE OF THE PUMPS SUCH THAT THE WATER RETURNED TO A STREAM IS CLEAR. NO DISCHARGES SHALL CAUSE A SUBSTANTIAL VISIBLE CONTRAST TO NATURAL CONDITIONS. PRIOR TO THE START OF CONSTRUCTION, THE CONTRACTOR WILL IDENTIFY DISCHARGE LOCATIONS AND METHODS FOR TRENCH DEWATERING OPERATIONS TO ENSURE TURBIDITY FREE DISCHARGE TO ANY RECEIVING WATER BODY.
10. IN PAVEMENT AREAS ALL UTILITY LINE TRENCHES WILL BE BACKFILLED AT THE END OF EACH WORKDAY. ALSO, THE TRENCH AREA WILL BE TEMPORARILY COVERED WITH THE REQUIRED AMOUNT OF ROAD SUBBASE PLUS THE ADDITIONAL AMOUNT NEEDED TO MEET THE EXISTING ROAD GRADE TO MINIMIZE EROSION. THE CONTRACTOR WILL BE REQUIRED TO INSTALL A MINIMUM OF 2" COLD PATCH OVER THE REQUIRED SUBBASE IN ALL DISTURBED AREAS ON A DAILY BASIS ONCE THE ASPHALT PLANTS HAVE SHUT DOWN FOR THE WINTER. THE CONTRACTOR WILL BE REQUIRED TO MAINTAIN THE SURFACE IN GOOD CONDITION TO THE SATISFACTION OF THE OWNER AND THE ENGINEER. THE COLD PATCH SHALL BE REMOVED AND REPLACED WITH THE SPECIFIED AMOUNT OF TYPE 3 BINDER ASPHALT AS SOON AS THE ASPHALT PLANTS REOPEN IN THE SPRING.
11. THE SEDIMENT AND EROSION CONTROLS WILL BE MAINTAINED DURING ALL CONSTRUCTION ACTIVITIES AND UNTIL AREAS WITH THE POTENTIAL FOR EROSION HAVE BEEN STABILIZED. DISTURBED AREAS ARE CONSIDERED PERMANENTLY STABILIZED WHEN 80 PERCENT OF THE AREA HAS ATTAINED PERENNIAL VEGETATIVE COVER.
12. INSPECTION OF TEMPORARY SOIL EROSION AND POLLUTION CONTROL DEVICES SHALL BE DONE BY A QUALIFIED PROFESSIONAL AND OCCUR ON A WEEKLY BASIS AND WITHIN 24 HRS. AFTER EVERY STORM GREATER THAN ½". A.O.B.E. REPAIRS SHALL BE MADE AS NEEDED. SEDIMENT SHALL BE REMOVED WHEN THE STORAGE VOLUME OF AN EROSION CONTROL MEASURE IS APPROACHING ONE HALF OF ITS INTENDED CAPACITY OR A.O.B.E. THE CONTRACTOR OR ENGINEER WILL COMPLETE A SITE LOGBOOK DOCUMENTING ALL INSPECTIONS AND MAINTENANCE ACTIVITIES. AN INSPECTION SHALL BE SCHEDULED PRIOR TO COMMENCEMENT OF CONSTRUCTION AND A CERTIFICATION SHALL BE PROVIDED STATING THAT THE SITE IS READY FOR CONSTRUCTION TO START.
13. IMMEDIATELY UPON COMPLETION OF EXCAVATION OR EMBANKMENT, THE CONTRACTOR SHALL INSTALL THE APPROPRIATE FINAL DITCH LINING AS SHOWN IN THE CONTRACT DOCUMENTS AND/OR PLACE TEMPORARY DITCH CHECK DAMS IN ALL ROADWAY AND OUTLET DITCHES AS ORDERED BY THE ENGINEER.
14. WHERE THE CONTRACTOR PROVIDED TEMPORARY CHANNELS TO KEEP WORK SITES FREE FROM WATER DURING CONSTRUCTION, A TEMPORARY LINING MATERIAL MAY BE REQUIRED, A.O.B.E. NO DIRECT PAYMENT WILL BE MADE FOR THIS WORK; THE COST IS TO BE INCLUDED IN THE OTHER ITEMS OF THIS CONTRACT.
15. THE CONTRACTOR SHALL INSTALL OR CONSTRUCT AS SHOWN IN THE CONTRACT DOCUMENTS OR AS ORDERED BY THE ENGINEER, ALL EROSION AND SEDIMENT CONTROL DEVICES, INCLUDING BUT NOT LIMITED TO SILT FENCE, CULVERT INLET TRAPS, SEDIMENT BASINS OR POOLS, CHECK DAMS AND EROSION CONTROL BLANKETS. THESE APPURTENANCES SHALL BE PROVIDED AS AN INTEGRAL PART OF CONSTRUCTING A CULVERT AND SHALL BE MAINTAINED AND REPLACED AS REQUIRED.
16. THE CONTRACTOR SHALL GRADE AND TRIM ALL SLOPES AS THE EXCAVATION PROGRESSES AND SEED ALL SLOPES, A.O.B.E.
17. THE CONTRACTOR SHALL HAVE A HYDROSEEDER AND/OR A MULCHING MACHINE AVAILABLE ON THE PROJECT UNTIL THE PERMANENT SEEDING IS COMPLETED.
18. CONSTRUCTION OPERATIONS SHALL BE CONDUCTED IN SUCH A MANNER AS TO PREVENT ANY DAMAGE TO THE STREAM FROM POLLUTION BY DEBRIS, SEDIMENT, OR OTHER FOREIGN MATERIAL, OR FROM MANIPULATION OF EQUIPMENT AND/OR MATERIALS IN OR NEAR THE STREAM. THE CONTRACTOR SHALL NOT RETURN DIRECTLY TO THE STREAM ANY WATER WHICH HAS BEEN USED FOR WASH PURPOSES OR OTHER SIMILAR OPERATIONS WHICH CAUSE THIS WATER TO BECOME POLLUTED WITH SAND, SILT, CEMENT, OIL OR OTHER IMPURITIES. IF THE CONTRACTOR USES WATER FROM THE STREAM, THE CONTRACTOR SHALL CONSTRUCT AN INTAKE OR TEMPORARY DAM REQUIRED TO PROTECT AND MAINTAIN WATER QUALITY. REFER TO NYS DEC STREAM DISTURBANCE PERMIT REQUIREMENTS.
19. DURING CONSTRUCTION, NO WET OR FRESH CONCRETE OR LEACHATE SHALL BE ALLOWED TO ESCAPE INTO THE WATERS OF THE UNITED STATES, NOR SHALL ANY WASHING FROM REDIMIX TRUCKS, MIXERS OR OTHER DEVICES BE ALLOWED TO ENTER ANY WETLANDS OR WATERS
20. THE SCHEME PROPOSED BY THE CONTRACTOR TO ACCOMPLISH THE WORK FOR EROSION AND SEDIMENT CONTROL SHALL BE SUBJECT TO APPROVAL OF THE E.I.C.
21. ONLY GRAVEL FILL WILL BE ACCEPTABLE IN GRAVEL BAGS. GRAVEL FILL SHALL BE FREE OF SILT AND GRAVEL BAGS SHALL BE REMOVED IN THEIR ENTIRETY AT THE COMPLETION OF THE PROJECT.
22. COFFERDAMS IF REQUIRED MAY BE CONSTRUCTED FROM MATERIALS OTHER THAN STEEL OR TIMBER SHEET PILING AS APPROVED BY THE ENGINEER IN CHARGE. MATERIALS SHALL NOT BE USED THAT ARE ERODIBLE, WOULD BE HARMFUL TO PLANTS OR ANIMALS OR WOULD ADVERSELY AFFECT WATER QUALITY.
23. INSTALLING, CLEANING, AND REMOVING SOIL EROSION AND WATER SEDIMENT CONTROL DEVICES SHALL BE PAID UNDER EROSION AND SEDIMENTATION CONTROL BID ITEMS.
24. STRAW BALES AND/OR HAY BALES CAN ONLY BE USED AS SUPPORT FOR SILT FENCING OR OTHER EROSION CONTROL MEASURE.
25. THE WORK AREA WITHIN THE COFFERDAM WILL BE DEWATERED USING PUMPS CONSTRUCTED IN A LOW AREA WITHIN THE COFFERDAM AREA. THE PUMP INTAKE WILL BE PROTECTED WITH STONE TO MINIMIZE TURBIDITY. AS AN ALTERNATIVE TO PUMPS, TEMPORARY WELL POINTS MAY BE USED TO DEWATER THE WORK AREA. THE DISCHARGE FROM THE PUMPS OR WELL POINTS WILL BE DIRECTED TO EITHER A SETTLING TANK OR A STABLE, LEVEL VEGETATED AREA. THE DISCHARGE FROM THE SETTLING TANK WOULD BE DIRECTED BACK INTO THE STREAM PROVIDED THERE IS NO TURBIDITY. IF THE DISCHARGE IS DIRECTED TO A STABLE, LEVEL VEGETATED AREA, THE DISCHARGE AND ANY RELATED DEWATERING FILTER AREA WILL BE SURROUNDED BY A SILT CURTAIN SEDIMENT BARRIER. SETTLING TANKS AND DEWATERING FILTER DEVICES SHALL BE OF SUFFICIENT CAPACITY TO HANDLE THE DISCHARGE OF THE PUMPS SUCH THAT THE WATER RETURNED TO A STREAM IS CLEAR.
26. AT LOCATIONS WHERE THERE IS SIGNIFICANT FLOW IN ROADSIDE DRAINAGE DITCHES/SWALES, IT MAY BE NECESSARY FOR THE CONTRACTOR TO CONTAIN WATER AS NEAR AS POSSIBLE TO THE SOURCE, AND PUMP WATER AWAY FROM EXCAVATION AREAS TO PREVENT SOILS FROM BECOMING ENTRAINED IN THE WATER.

WARNING – IT IS A VIOLATION OF NEW YORK EDUCATION LAW SECTION 7209.2, FOR ANY PERSON, UNLESS HE IS ACTING UNDER THE DIRECTION OF A LICENSED PROFESSIONAL ENGINEER OR LAND SURVEYOR, TO ALTER THIS DOCUMENT IN ANY WAY. IF ALTERED THE ALTERING PERSON SHALL COMPLY WITH THE REQUIREMENTS OF NEW YORK EDUCATION LAW, SECTION 7209.2.

BID PLANS

DATE:	12/2020
DRAWN BY:	GJM
SCALE:	AS SHOWN
REVIEWED BY:	RF
PROJECT NO.:	19-1612
FILE:	

DELAWARE ENGINEERING, D.P.C.
CIVIL AND ENVIRONMENTAL ENGINEERING
28 MADISON AVENUE EXTENSION, ALBANY, NY 12203 - 518.452.1290
55 SOUTH MAIN ST, ONEONTA, NY 13820 - 607.432.8073
31 NORTH MAIN STREET, LIBERTY, NY 12754 - 845.747.9952
6 TOWNSEND STREET, WALTON, NY 13856 - 607.865.9235
16 EAST MARKET ST., RED HOOK, NY 12571 - 518.452.1290
548 BROADWAY, MONTICELLO, NY 12701 - 845.791.7777

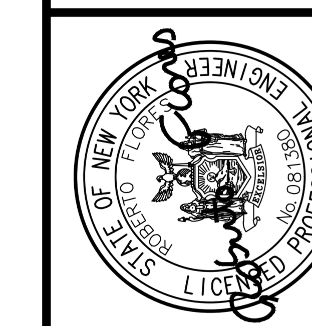

REVISIONS

NO.	DATE	DESCRIPTION

CONTRACT 1
SUFFERN WWTP UPGRADES
VILLAGE OF SUFFERN
ROCKLAND COUNTY, NEW YORK

EROSION CONTROL
NOTES AND DETAILS

SHEET:
D-103

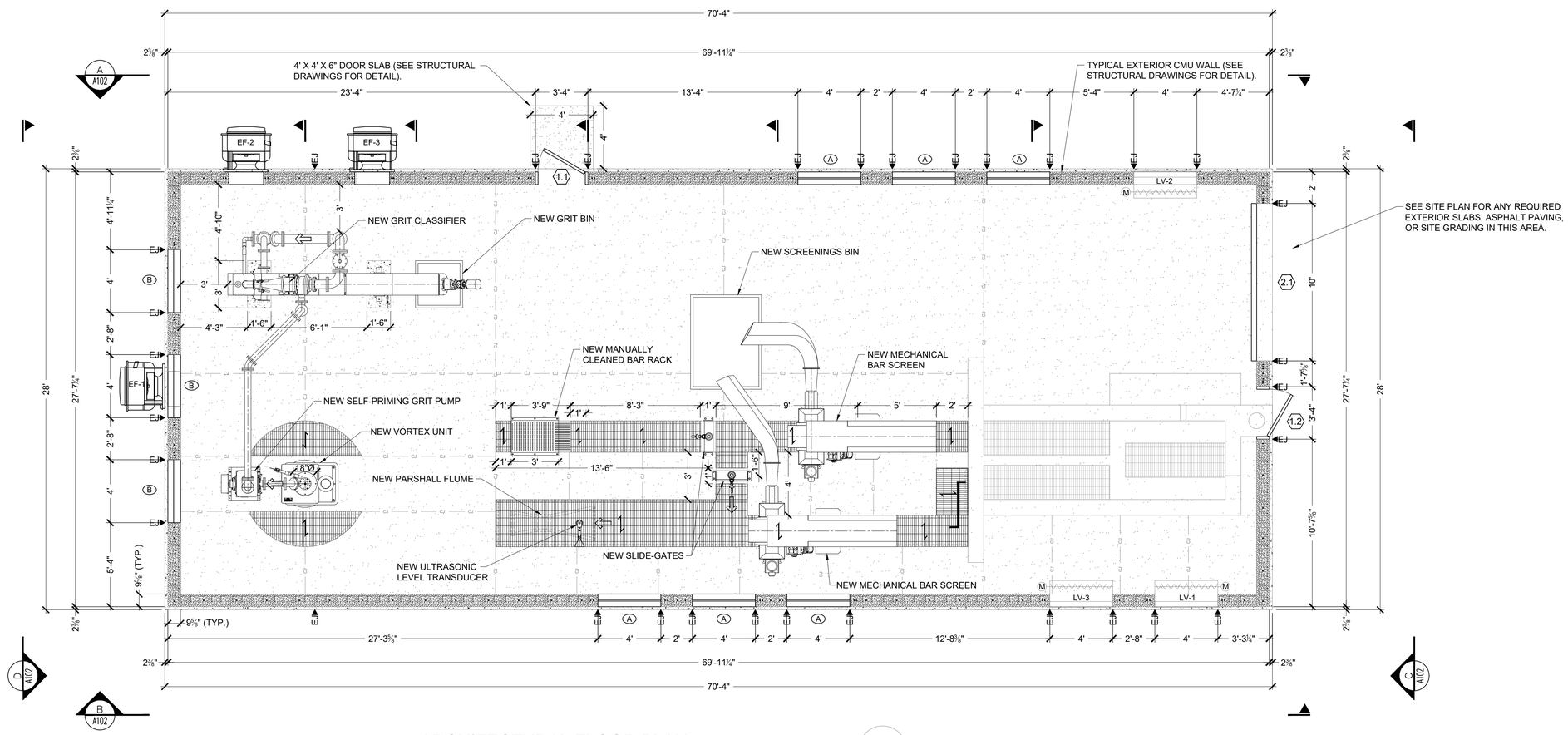

ARCHITECTURAL FLOOR PLAN

SCALE: ¼" = 1'-0"

A101

NOTE: FOR EXISTING AND FINISHED GRADE ELEVATIONS SEE SITE PLAN DRAWINGS.

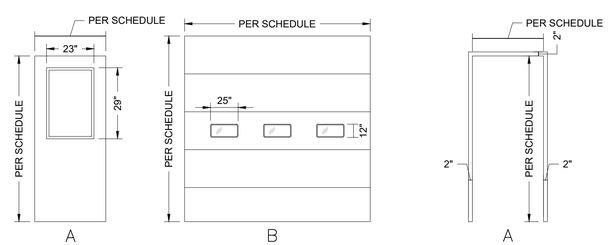

DOOR TYPE DETAILS

SCALE: NOT TO SCALE

DOOR HARDWARE SCHEDULE:

LIST OF MANUFACTURERS:

MAN DOORS	-CECO MEDALLION OR EQUAL
OVERHEAD DOORS	-THERMACORE 592 OR EQUAL
HINGES	-HAGER
CLOSERS	-LCN
LOCKS & LATCHES	-SARGENT
DOOR STOPS	-HAGER
EXIT DEVICES	-VON-DUPRIN
KICK PLATES	-ROCKWOOD
WEATHER STRIPPING	-PEMKO
THREASHOLDS	-PEMKO

HARDWARE GROUP 1:

(1½)	PAIR BUTTS	BB191 4½"x4½" US32D NRP
(1)	EXIT DEVICE	99L 06 36" US32D
(1)	CYLINDER	34 US32D
(1)	CLOSER	4040XP Rw/PA TBWMS 689
(1)	THRESHOLD	2009APK36"
(1)	WEATHER STRIPPING	335AR 36"x84"
(1)	WEATHER STRIPPING	336AR 36"x84"
(1)	DOOR BOTTOM	314CN 36"
(3)	SILENCERS	307D GREY
(1)	KICK PLATE	K1050F US32D

DOOR SCHEDULE:

DOOR NUMBER:	DOORS: TO: ROOM NO.:	TO: NAME:	FROM: ROOM NO.:	FROM: NAME:	SIZE: (W X H)	THICKNESS	TYPE	MATERIAL	INSULATION	FRAME: TYPE:	MATERIAL:	JAMB DETAIL:	HEAD DETAIL:	FIRE RATING (HRS):	HARDWARE:	QUANTITY:	REMARKS: MAN DOORS – CECO MEDALLION GARAGE DOORS – THERMACORE 592
1	N/A	HEADWORKS	N/A	EXTERIOR	3'-0" X 7'-0"	1-3/4"	A	STEEL	U=0.41	A	STEEL			3/4	1	1	THRESHOLD, EGRESS DOOR
2	N/A	HEADWORKS	N/A	EXTERIOR	3'-0" X 7'-0"	1-3/4"	A	STEEL	U=0.41	A	STEEL			3/4	1	1	THRESHOLD, EGRESS DOOR
3	N/A	HEADWORKS	N/A	EXTERIOR	10'-0" X 12'-0"	2"	B	STEEL	U=0.057	N/A	STEEL			N/A	N/A	1	INSULATED OVERHEAD STEEL DOOR

WINDOW SCHEDULE:

WINDOW TAG:	BUILDING:	QTY.:	FRAME: MAT.:	FRAME: FIN.:	GLAZING: MAT.:	ROUGH OPENING:	REMARKS: ALL WINDOWS SHALL BE MARVIN DOUBLE HUNG, OR EQUAL, OF A COLOR TO BE SELECTED BY THE OWNER (BO). INSTALLATION SHALL BE THROUGH THE JAMB. WINDOWS SHALL BE CUSTOM SIZE – 48" X 48" MASONRY OPENING (MO).
A	HEADWORKS	6	ALUM.	BO	5/8" INSUL	4'-0" x 4'-0"	MARVIN UDHG2 48"X48" (CUSTOM) MO CN20
B	HEADWORKS	3	ALUM.	BO	5/8" INSUL	4'-0" x 4'-0"	MARVIN UDHG2 PICTURE 48"X48" (CUSTOM) MO CN20

WARNING – IT IS A VIOLATION OF NEW YORK EDUCATION LAW SECTION 7209.2, FOR ANY PERSON, UNLESS HE IS ACTING UNDER THE DIRECTION OF A LICENSED PROFESSIONAL ENGINEER OR LAND SURVEYOR, TO ALTER THIS DOCUMENT IN ANY WAY. IF ALTERED THE ALTERING PERSON SHALL COMPLY WITH THE REQUIREMENTS OF NEW YORK EDUCATION LAW, SECTION 7209.2.

BID PLANS

DATE: 12/2020
DRAWN BY: YB
SCALE: AS SHOWN
REVIEWED BY: RF
PROJECT NO.: 19-1612
FILE:

DELAWARE ENGINEERING, D.P.C.
CIVIL AND ENVIRONMENTAL ENGINEERING
28 MADISON AVENUE EXTENSION, ALBANY, NY 12203 - 518.452.1290
55 SOUTH MAIN ST, ONEONTA, NY 13820 - 607.432.8073
31 NORTH MAIN STREET, LIBERTY, NY 12754 - 845.747.9952
6 TOWNSEND STREET, WALTON, NY 13856 - 607.865.9235
16 EAST MARKET ST., RED HOOK, NY 12571 - 518.452.1290
548 BROADWAY, MONTICELLO, NY 12701 - 845.791.7777

STATE OF NEW YORK · REGISTERED PROFESSIONAL ENGINEER · LICENSE NO. 081395 · LICENSED PROFESSIONAL ENGINEER

REVISIONS

NO.	DATE	DESCRIPTION

CONTRACT 1
SUFFERN WWTP UPGRADES
VILLAGE OF SUFFERN
ROCKLAND COUNTY, NEW YORK

ARCHITECTURAL FLOOR PLAN

SHEET: A101

File: H:\DRAWINGS\SUFFERN WWTP-STRUCTURAL\VILLAGE OF SUFFERN WWTP-STRUCTURAL-HEADWORKS-ELEVATIONS.DWG Saved: 12/8/2020 7:59:44 AM Plotted: 12/8/2020 8:00:35 AM User: Gary Markham LastSavedBy: markhamg

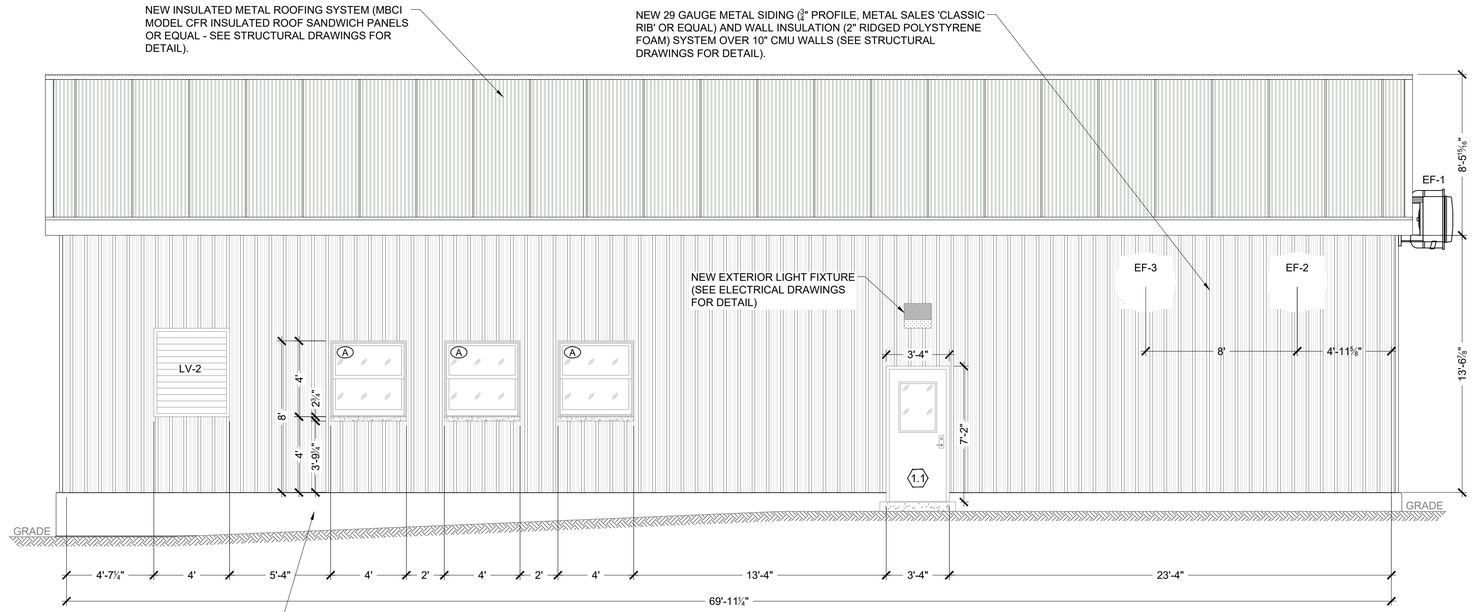

EASTERN ELEVATION

SCALE: 3/4" = 1'-0"

A / A102

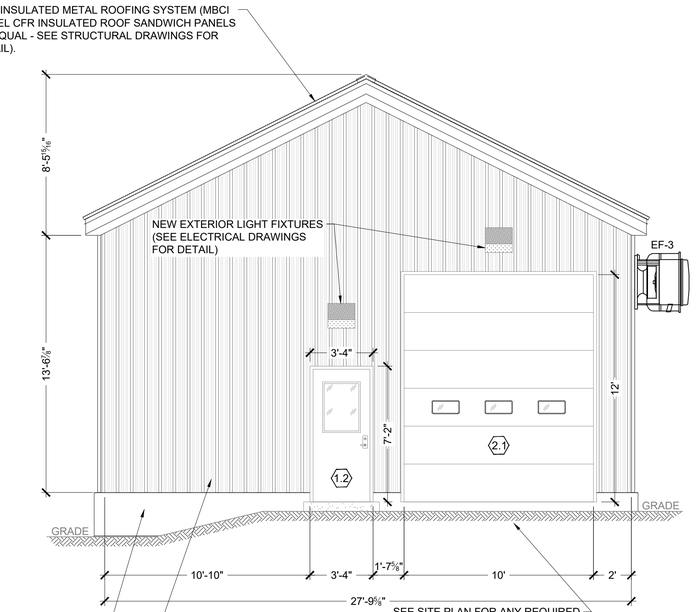

SOUTHERN ELEVATION

SCALE: 3/4" = 1'-0"

C / A102

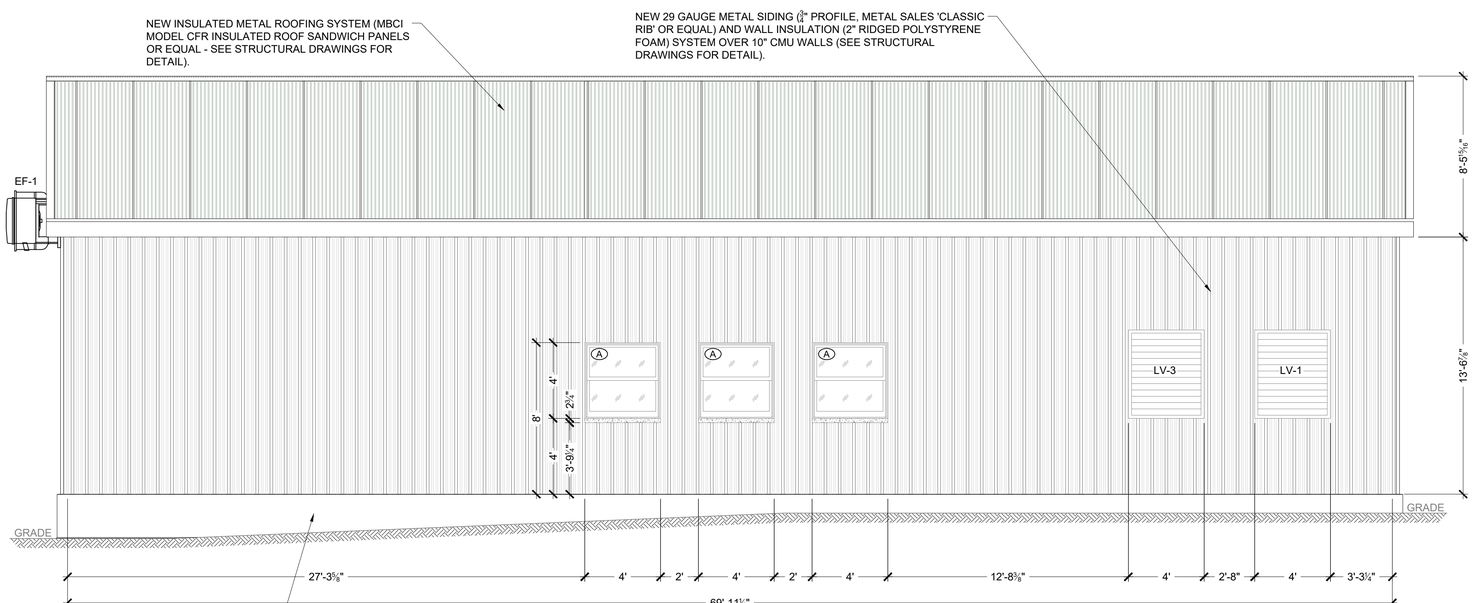

NOTE: FOR EXISTING AND FINISHED GRADE ELEVATIONS SEE SITE PLAN DRAWINGS.

WESTERN ELEVATION

SCALE: 3/4" = 1'-0"

B / A102

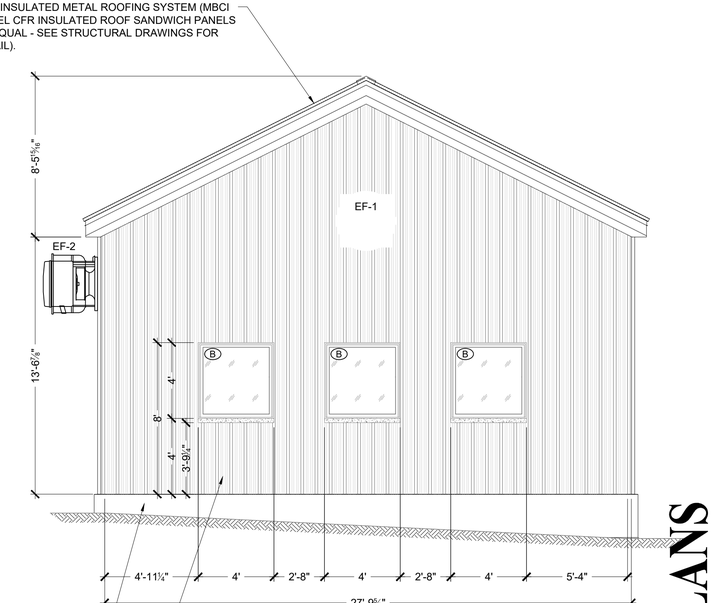

NORTHERN ELEVATION

SCALE: 3/4" = 1'-0"

D / A102

BID PLANS

WARNING – IT IS A VIOLATION OF NEW YORK EDUCATION LAW SECTION 7209-2, FOR ANY PERSON, UNLESS HE IS ACTING UNDER THE DIRECTION OF A LICENSED PROFESSIONAL ENGINEER OR LAND SURVEYOR, TO ALTER THIS DOCUMENT IN ANY WAY. IF ALTERED THE ALTERING PERSON SHALL COMPLY WITH THE REQUIREMENTS OF NEW YORK EDUCATION LAW, SECTION 7209-2.

DATE:	12/2020
DRAWN BY:	YB
SCALE:	AS SHOWN
REVIEWED BY:	RF
PROJECT NO.:	19-1612
FILE:	

DELAWARE ENGINEERING, D.P.C.
CIVIL AND ENVIRONMENTAL ENGINEERING
28 MADISON AVENUE EXTENSION, ALBANY, NY 12203 - 518.452.1290
55 SOUTH MAIN ST, ONEONTA, NY 13820 - 607.432.8073
31 NORTH MAIN STREET, LIBERTY, NY 12754 - 845.747.9952
6 TOWNSEND STREET, WALTON, NY 13856 - 607.865.9235
16 EAST MARKET ST., RED HOOK, NY 12571 - 518.452.1290
548 BROADWAY, MONTICELLO, NY 12701 - 845.791.7777

STATE OF NEW YORK · REGISTERED PROFESSIONAL ENGINEER · LICENSED PROFESSIONAL ENGINEER

REVISIONS

NO.	DATE	DESCRIPTION

CONTRACT 1
SUFFERN WWTP UPGRADES
VILLAGE OF SUFFERN
ROCKLAND COUNTY, NEW YORK

ARCHITECTURAL ELEVATIONS

SHEET: A102

PROJECT DESCRIPTION:
1. NEW HEADWORKS BUILDING CONSTRUCTION SHALL BE METAL DECK AND INSULATED METAL SANDWICH PANEL ROOFING OVER VULCRAFT STEEL DOUBLE PITCHED TRUSSES (NO EQUAL). TRUSSES TO BEAR ON NEW PERIMETER CMU WALLS. CONTRACTOR SHALL DEMOLISH PORTIONS OF EXISTING HEADWORKS STRUCTURE AND CONSTRUCT CAST IN PLACE CONCRETE FOUNDATION WALLS, MAT SLAB FOUNDATIONS AND SLABS ON GRADE WITH GRATED AREAS TO BE ADDED TO EXISTING HEADWORKS STRUCTURE. REFER TO STRUCTURAL DRAWINGS INCLUDING DEMOLITION, ARCHITECTURAL, MECHANICAL, PLUMBING AND ELECTRICAL DRAWINGS. ROOF STRUCTURE TO RECEIVE SOLAR PANELS AND ASSOCIATED APPURTENANCES AS PER ELECTRICAL DRAWINGS

GENERAL:
1. THE STRUCTURAL DRAWINGS ARE A PORTION OF THE CONTRACT DOCUMENTS AND ARE INTENDED TO BE USED IN CONJUNCTION WITH THE ARCHITECTURAL, CIVIL, MECHANICAL, PLUMBING AND ELECTRICAL DRAWINGS. THE CONTRACTOR IS RESPONSIBLE FOR COORDINATING THE REQUIREMENTS FROM THE ENTIRE SET OF CONTRACT DOCUMENTS (INCLUDING THE PROJECT SPECIFICATIONS) INTO THEIR WORK.
2. THESE GENERAL NOTES SUPPLEMENT THE PROJECT SPECIFICATIONS. REFER TO THE PROJECT SPECIFICATIONS FOR ADDITIONAL REQUIREMENTS.
3. NOTES AND DETAILS ON THE STRUCTURAL DRAWINGS SHALL TAKE PRECEDENCE OVER THE GENERAL STRUCTURAL NOTES AND TYPICAL DETAILS.
4. VERIFY ALL DIMENSIONS WITH THE ARCHITECTURAL DRAWINGS.
5. DETAILS ON THESE PLANS ARE INTENDED TO DEPICT THE GENERAL CONSTRUCTION METHODS FOR THIS STRUCTURE. CONNECTIONS, DETAILS AND CONDITIONS NOT SPECIFICALLY SHOWN THAT ARE SIMILAR TO THOSE THAT ARE SPECIFIED SHALL BE ASSUMED ONE AND THE SAME. IF QUESTIONS REGARDING THE APPLICATION OF DETAILS ARE ENCOUNTERED, NOTIFY THE ARCHITECT/ENGINEER FOR CLARIFICATION IN A TIMELY MANNER PRIOR TO BID OPENING.

CODE REQUIREMENTS:
1. CONFORM TO 2018 INTERNATIONAL BUILDING CODE (IBC) AND NYS 2020 BUILDING CODE.
2. ALL REFERENCE TO OTHER CODES AND STANDARDS (ACI, ASCE, ASTM, ETC.) SHALL BE FOR THE EDITIONS LISTED IN THE IBC AND NYS BUILDING CODE.

TEMPORARY CONDITIONS:
1. THE STRUCTURE HAS BEEN DESIGNED TO FUNCTION AS A UNIT UPON COMPLETION. THE CONTRACTOR IS RESPONSIBLE FOR FURNISHING ALL TEMPORARY BRACING AND/OR SUPPORT REQUIRED AS A RESULT OF THE CONTRACTOR ' S CONSTRUCTION METHODS AND/OR SEQUENCES.
2. CONTRACTOR ' S CONSTRUCTION METHODS AND/OR SEQUENCES SHALL RECOGNIZE AND CONSIDER THE EFFECTS OF THERMAL MOVEMENTS OF STRUCTURAL ELEMENTS DURING THE CONSTRUCTION PERIOD. CONTRACTOR IS SOLELY RESPONSINLE FOR THE SAFETY OF THE BUILDING DURING CONSTRUCTION.

EXISTING CONDITIONS:
1. ALL EXISTING CONDITIONS, DIMENSIONS, AND ELEVATIONS SHALL BE FIELD VERIFIED. THE CONTRACTOR SHALL NOTIFY THE ENGINEER OF ANY SIGNIFICANT DISCREPANCIES FROM CONDITIONS SHOWN ON THE DRAWINGS.

DESIGN CRITERIA:
1. DESIGN WAS BASED ON THE STRENGTH AND DEFLECTION CRITERIA OF THE IBC. IN ADDITION TO THE DEAD LOADS, THE FOLLOWING LOADS AND ALLOWANCES WERE USED FOR DESIGN, WITH LIVE LOADS (L.L.) REDUCED IN ACCORDANCE WITH THE IBC:

DESIGN CRITERIA		
GEOTECHNICAL DESIGN CRITERIA		
ALLOWABLE SOIL BEARING PRESSURE	HEADWORKS BUILDING: 2,000 PSF + 50% INCREASE FOR WIND OR SEISMIC LOADS (PER NYS BUILDING CODE TABLE 1806.2)	
SNOW DESIGN CRITERIA		
DESIGN ROOF SNOW LOAD	50 PSF MINIMUM	
SNOW DRIFT	ACCOUNTED FOR IN DESIGN ROOF SNOW LOAD	
GROUND SNOW LOAD	P_g = 50 PSF	
FLAT ROOF SNOW LOAD	P_f = 38.5 PSF	
EXPOSURE FACTOR	C_e = 1.0 (PARTIAL EXPOSED)	
IMPORTANCE FACTOR	I_s = 1.10	
THERMAL FACTOR	C_t = 1.0	
WIND DESIGN CRITERIA		
MAIN WIND FORCE RESISTING SYSTEM	122 MPH BASIC WIND SPEED (3-SECOND GUST)	
COMPONENTS AND CLADDING	122 MPH BASIC WIND SPEED (3-SECOND GUST)	
EXPOSURE CATEGORY	C	
GUST/INTERNAL PRESSURE	GC_{pi} = +/- 0.55	
SEISMIC DESIGN CRITERIA		
RISK CATEGORY	III	
SITE CLASS	D (STIFF SOIL PROFILE PER GEO-TECHNICAL REPORT)	
IMPORTANCE FACTOR	I_E = 1.25	
SEISMIC DESIGN CATEGORY	B	
MCE SPECTRAL ACCELERATIONS	S_s = 0.286g	S_1 = 0.061g
SITE COEFFICIENTS	F_a = 1.6	F_v = 2.4
DESIGN SPECTRAL ACCELERATIONS	S_{DS} = 0.299	S_{D1} = 0.097
ANALYSIS PROCEDURE	EQUIVALENT LATERAL FORCE PER ASCE 7-16 SECTION 12.8	
	NORTH-SOUTH DIRECTION	EAST-WEST DIRECTION
SEISMIC LOAD RESISTING SYSTEM	HEADWORKS: ORDINARY REINFORCED MASONRY SHEAR WALLS	HEADWORKS: ORDINARY REINFORCED MASONRY SHEAR WALLS
RESPONSE MODIFICATION FACTOR	HEADWORKS: R=2.0,Ω=2.5	HEADWORKS: R=2.0,Ω=2.5
SEISMIC RESPONSE COEFFICIENT	HEADWORKS: C_s = 0.187	HEADWORKS: C_s = 0.187
REDUNDANCY FACTOR	ρ = 1.0	ρ = 1.0
DESIGN INELASTIC STORY DRIFT	Δ = 0.5 INCHES	Δ = 0.5 INCHES

ADDITIONAL DESIGN CRITERIA:
1. REFER TO SPECIFICATIONS FOR ALL SOILS REPORTS ASSOCIATED WITH THIS PROJECT. CONTRACTOR TO PREPARE ALL SOILS AND SUB-GRADE IN CONFORMANCE WITHE THESE REPORTS AND UNDER DIRECT SUPERVISION OF THE GEO-TECHNICAL ENGINEER.

STRUCTURAL OBSERVATION:
1. THE STRUCTURAL ENGINEER OF RECORD (SER) WILL PERFORM STRUCTURAL OBSERVATIONS BASED ON THE REQUIREMENTS OF THE NYS BUILDING CODE AT THE STAGES OF CONSTRUCTION LISTED BELOW. THE CONTRACTOR SHALL PROVIDE SUFFICIENT NOTICE AND ACCESS FOR THE SER TO PERFORM THESE OBSERVATIONS:

STRUCTURAL OBSERVATIONS		
CONSTRUCTION PHASE	OBSERVATION BY SER	COMMENTS
PRIOR TO ALL CONCRETE POURS	X	REF FOOTNOTE A, B, C
AT COMPLETION OF TRUSS INSTALLATION	X	REF FOOTNOTE A, B
AT COMPLETION OF HORIZONTAL ROOF DIAPHRAGM	X	REF FOOTNOTE A, B
PRIOR TO COVERING STRUCTURAL ELEMENTS	X	REF FOOTNOTE A, B
AS REQUIRED TO ADDRESS STRUCTURAL ISSUES	X	REF FOOTNOTE A, B

A. STRUCTURAL OBSERVATIONS ARE INTENDED TO VERIFY GENERAL CONFORMANCE WITH THE STRUCTURAL DRAWINGS. SPECIAL INSPECTIONS AND TESTING ARE STILL REQUIRED.
B. A FIELD REPORT WILL BE SUBMITTED TO THE BUILDING DEPARTMENT FOLLOWING EACH VISIT.
C. STRUCTURAL OBSERVATION TO OCCUR AFTER THE REINFORCING STEEL HAS BEEN INSTALLED.

FOUNDATIONS:
1. FOUNDATION SIZES ARE BASED UPON A MAXIMUM TOTAL LOAD BEARING SOIL PRESSURE AS NOTED IN DESIGN CRITERIA FOR BEARING ON NATIVE SOILS/COMPACTED FILL.
2. ALL FOOTINGS SHALL BE A MINIMUM OF 4'-0" BELOW FINAL GRADES.
3. ALL DISTURBED SOIL SHALL BE REMOVED BY HAND OPERATION FROM FOOTING EXCAVATIONS TO NEAT LINES AND REPLACED WITH ENGINEERED FILL.
4. BOTTOM OF FOOTINGS SHALL BE STEPPED FROM ELEVATION TO ELEVATION AT 2'-0" HORIZONTAL TO 1'-0" VERTICAL STEPS WHERE STEPS ARE REQUIRED.
5. PLACEMENT OF ALL FILL SHALL BE OBSERVED AND TESTED FOR RELATIVE COMPACTION BY A QUALIFIED TECHNICIAN.
6. THE CONTRACTOR SHALL NOTIFY THE GEO-TECHNICAL ENGINEER PRIOR TO COMMENCEMENT OF FILLING OPERATIONS.
7. ALL GENERAL EXCAVATIONS AND FOOTINGS SHALL BE INSPECTED AND APPROVED PRIOR TO THE PLACEMENT OF ANY SOIL BACKFILL AND/OR CONCRETE.
8. ALL FILL, BACKFILL AND COMPACTION ACTIVITIES, PARTICULARLY DURING WET WEATHER CONDITIONS, SHALL FOLLOW RECOMMENDATIONS OF THE GEO-TECHNICAL ENGINEER.

SPECIAL INSPECTION AND TESTING:
1. SPECIAL INSPECTION WILL BE PROVIDED BY THE OWNER BASED ON THE REQUIREMENTS OF THE NYS BUILDING CODE AS SUMMARIZED IN THE SPECIAL INSPECTION AND TESTING PROGRAM ON SHEET SN04. THE CONTRACTOR SHALL PROVIDE SUFFICIENT NOTICE (48 HOURS MINIMUM) AND ACCESS FOR THE SPECIAL INSPECTOR TO PERFORM THESE INSPECTIONS.

SUBMITTALS:
1. SHOP DRAWINGS SHALL BE SUBMITTED TO THE ENGINEER PRIOR TO THE FABRICATION AND CONSTRUCTION OF ALL STRUCTURAL ITEMS INCLUDING BUT NOT LIMITED TO THE FOLLOWING (IF APPLICABLE):

SUBMITTALS			
ITEM	SUBMITTAL (A, D)	DEFERRED SUBMITTAL (B, D)	COMMENTS
CONCRETE MIX DESIGNS	X		
CONCRETE REINFORCEMENT	X		
REINFORCING STEEL MILL CERTS	X		
CONCRETE ANCHORAGES	X		
HOLDOWN ANCHOR BOLT LAYOUT	X		
EMBEDDED STEEL ITEMS	X		
SLAB-ON-GRADE CONTROL JOINT LAYOUT	X		
PREMANUFACTURED STEEL TRUSSES	X	X	
MEP ANCHORAGE AND BRACING	X	X	FOOTNOTE "C"

A. IF THE SHOP DRAWINGS DIFFER FROM OR ADD TO THE DESIGN OF THE STRUCTURAL DRAWINGS, THEY SHALL BEAR THE SEAL AND SIGNATURE OF A STRUCTURAL ENGINEER REGISTERED IN THE STATE WHERE THE PROJECT IS LOCATED. ANY MODIFICATIONS TO THE STRUCTURAL DRAWINGS SHALL BE SUBMITTED TO THE ENGINEER AND ARE SUBJECT TO REVIEW AND ACCEPTANCE BY THE STRUCTURAL ENGINEER OF RECORD.
B. DESIGN DRAWINGS, SHOP DRAWINGS, AND CALCULATIONS FOR THE DESIGN AND FABRICATION OF ITEMS THAT ARE DESIGNED BY OTHERS SHALL BEAR THE SEAL AND SIGNATURE OF A STRUCTURAL ENGINEER REGISTERED IN THE STATE WHERE THE PROJECT IS LOCATED. CALCULATIONS SHALL BE INCLUDED FOR ALL CONNECTIONS TO THE STRUCTURE CONSIDERING LOCALIZED EFFECTS ON STRUCTURAL ELEMENTS INDUCED BY THE CONNECTION LOADS. DESIGN SHALL BE BASED UPON THE REQUIREMENTS OF THE NYS BUILDING CODE AND AS NOTED UNDER " DESIGN CRITERIA".
C. THE CONTRACTOR SHALL COORDINATE THE SEISMIC RESTRAINTS OF MECHANICAL, ELECTRICAL, AND PLUMBING EQUIPMENT, MACHINERY, AND ASSOCIATED PIPING WITH THE STRUCTURE. CONNECTIONS TO THE STRUCTURE SHALL CONFORM TO ASCE 7-16 CHAPTER 13 AND BE DESIGNED BY AN ENGINEER REGISTERED IN THE STATE WHERE THE PROJECT IS LOCATED.
D. FIELD ENGINEERED DETAILS DEVELOPED BY THE CONTRACTOR THAT DIFFER FROM, OR ADD TO, THE STRUCTURAL DRAWINGS SHALL BEAR THE SEAL AND SIGNATURE OF A STRUCTURAL ENGINEER REGISTERED IN THE STATE WHERE THE PROJECT IS LOCATED AND SHALL BE SUBMITTED TO THE ENGINEER PRIOR TO CONSTRUCTION. ANY SUCH DETAILS ARE SUBJECT TO REVIEW AND ACCEPTANCE BY THE STRUCTURAL ENGINEER OF RECORD.

CONCRETE:
1. ALL CONCRETE WORK SHALL CONFORM TO " ACI 318– BUILDING CODE AND ACI 350- REQUIREMENTS FOR STRUCTURAL CONCRETE" AND CONCRETE CHAPTER OF THE NYS BUILDING CODE.
2. CONCRETE STRENGTHS SHALL BE VERIFIED BY STANDARD 28-DAY CYLINDER TESTS PER ASTM C39, UNLESS NOTED OTHERWISE, AND SHALL BE AS FOLLOWS:

CONCRETE STRENGTHS				
DESCRIPTION	f'_c (PSI)	WATER -CEMENT RATIO BY WEIGHT	ENTRAINED AIR	OTHER
MATS, FOOTINGS AND WALLS	4,500	0.42	6% +/- 1.5%	
EXTERIOR SLAB-ON-GRADE	3,000	0.50	6% +/- 1.5%	
COLUMNS, BEAMS	4,500	0.42	0%	
INTERIOR SLAB-ON-GRADE	4,000	0.44	0%	

NOTES:
A. VERIFY WATER/CEMENT RATIO WITH FLOOR COVERING MANUFACTURER FOR CONCRETE FLOORS WITH MOISTURE SENSITIVE FLOOR COVERINGS.
B. CONCRETE MIXES SHALL BE NORMAL WEIGHT AND CONTAIN PORTLAND CEMENT CONFORMING TO ASTM C150 FOR TYPE I, OR TYPE II.
C. AIR ENTRAINING AGENT SHALL CONFORM TO ASTM C260.
D. COLUMNS THAT ARE AN INTEGRAL PART OF A WALL SHALL HAVE CONCRETE STRENGTH AS REQUIRED FOR COLUMNS.
3. MINIMUM CEMENT CONTENT PER CUBIC YARD SHALL BE AS FOLLOWS:

MINIMUM CEMENT CONTENT	
f'_c (PSI)	MINIMUM CEMENT CONTENT PER CUBIC YARD
3,000	440 LBS.
4,000	520 LBS.
4,500	590 LBS.

NOTES:
A. FLYASH CONFORMING TO ASTM C618 " TYPE F, " OR " TYPE C " MAY BE USED TO REPLACE UP TO 20% OF THE CEMENT CONTENT, PROVIDED THAT THE MIX STRENGTH IS SUBSTANTIATED BY TEST DATA.
B. ALL CONCRETE MIX DESIGNS FOR THIS PROJECT SHALL CONTIN AGGREGATE NO GREATER THAN $\frac{3}{4}$" IN SIZE.
4. THE CONTRACTOR SHALL SUBMIT CONCRETE MIX DESIGNS, ALONG WITH TEST DATA COMPLIANT WITH ACI-318 CHAPTER 5, A MINIMUM OF TWO WEEKS PRIOR TO PLACING CONCRETE.
5. NO WATER MAY BE ADDED TO CONCRETE IN THE FIELD UNLESS IT CONFORMS TO THE APPROVED MIX DESIGN AND IS SPECIFICALLY APPROVED IN WRITING BY THE CONCRETE SUPPLIER.
6. A WATER REDUCING ADMIXTURE CONFORMING TO ASTM C494 USED IN STRICT CONFORMANCE WITH THE MANUFACTURER'S RECOMMENDATIONS SHALL BE INCORPORATED INTO CONCRETE MIX DESIGNS AND SHALL BE ADDED AT THE SITE AFTER SLUMP TESTS ARE PERFORMED UNLESS APPROVED IN WRITING BY THE ENGINEER. A HIGH RANGE WATER REDUCING ADMIXTURE CONFORMING TO ASTM C494 "TYPE F, OR TYPE "G" MAY BE USED IN CONCRETE MIXES PROVIDED THAT THE SLUMP DOES NOT EXCEED 10-INCHES. ALL HEADWORKS LIQUID CONTAINING STRUCTURES SUCH AS WALLS, MAT FOUNDATIONS AND BASE SLABS SHALL INCLUDE CORROSION INHIBITING ADMIXTURE (EUCON CIA OR EQUAL) AND CRYSTALLINE WATER PROOFING ADMIXTURE (EUCON VANDEX AM-10 OR EQUAL) ADDED PER MANUFACTURER RECOMMENDATIONS.
7. CONCRETE SHALL BE PLACED IN ONE CONTINUOUS OPERATION WHEREVER PRACTICAL. CONSTRUCTION JOINTS IN BEAMS, JOISTS, AND SLABS SHALL BE LOCATED AT MID-SPAN WITH REINFORCING CONTINUING THROUGH AS IF THE JOINT DID NOT OCCUR. VERTICAL CONSTRUCTION JOINTS IN WALLS SHALL BE LOCATED MIDWAY BETWEEN COLUMNS OR PILASTERS IF APPLICABLE.
8. SLEEVES, OPENING, CONDUITS, AND OTHER EMBEDDED ITEMS NOT SHOWN ON THE STRUCTURAL DRAWINGS SHALL BE APPROVED BY THE STRUCTURAL ENGINEER PRIOR TO PLACING CONCRETE. CONDUITS EMBEDDED IN SLABS SHALL NOT BE LARGER IN OUTSIDE DIMENSION THAN ONE-THIRD THE THICKNESS OF THE SLAB AND SHALL NOT BE SPACED CLOSER THAN THREE DIAMETERS ON-CENTER.
9. UNLESS SHOWN OTHERWISE, THE CONTRACTOR SHALL PROVIDE SHOP DRAWINGS FOR THE LAYOUT OF CONSTRUCTION AND CONTROL JOINTS FOR CONCRETE SLABS-ON-GRADE. THE JOINTS SHALL BE LOCATED AT MAXIMUM 12'-0" ON-CENTER EACH WAY FORMING RECTANGLES WITH A LENGTH TO WIDTH RATIO NOT EXCEEDING 1.5 IN ANY DIRECTION. CONTROL JOINTS SHALL INTERSECT AT COLUMN BLOCKOUTS, AT ENDS OF BEARING WALLS, AND AT ALL RE-ENTRANT CORNERS IN THE SLAB.
10. ALL BOLTS AND/OR ANCHOR RODS EMBEDDED INTO CONCRETE SHALL CONFORM TO ASTM SPECIFICATION F1554 GRADE 36 UNLESS NOTED OTHERWISE ON THE STRUCTURAL DRAWINGS.
11. ANCHOR RODS ARE TO BE LOCATED BY MEANS OF TEMPLATE. ANCHOR RODS SHALL NOT BE HAND SET, OR WET SET.
12. ANCHOR RODS AND EMBEDDED ITEMS SHALL BE SET IN ACCORDANCE WITH THE AISC CODE OF STANDARD PRACTICE SECTION 7.5.
13. WHERE NEW CONCRETE IS PLACED AGAINST EXISTING CONCRETE, THE EXISTING CONCRETE SURFACE SHALL BE CLEANED AND ROUGHENED TO A MINIMUM 1/4" AMPLITUDE.
14. PROVIDE 3/4" CHAMFERS ON ALL EXPOSED CONCRETE EDGES, UNLESS NOTED OTHERWISE.
15. PREPARATION, CONSTRUCTION AND PROTECTION OF CONCRETE DURING COLD WEATHER OR HOT WEATHER SHALL CONFORM TO ACI 318 5.12, 5.13 AND ACI 306R AND 305R.
16. SEE SPECIFICATIONS FOR REQUIRED WATER/DAMP PROOFING OF ALL BELOW GRADE WALLS AS WELL AS REQUIRED PAINTS AND/OR SEALANTS TO BE APPLIED TO ALL EXPOSED CONCRETE WALL AND SLAB SURFACES, TYP.

SHORING AND RE-SHORING:
1. SHORING AND RE-SHORING IS THE CONTRACTOR ' S RESPONSIBILITY AND SHALL CONFORM TO ACI 347-04 AND ACI 347.2R-05.
2. SHORING AND SUPPORTING FORMWORK SHALL NOT BE REMOVED FROM HORIZONTAL MEMBERS BEFORE THE CONCRETE STRENGTH HAS REACHED AT LEAST 70 PERCENT OF THE SPECIFIED DESIGN STRENGTH AS DETERMINED FROM FIELD CURED CYLINDERS. IN ADDITION, SHORING SHALL NOT BE REMOVED SOONER THAN THE FOLLOWING:

SHORING AND RE-SHORING		
ELEMENT	MINIMUM REMOVAL TIME	COMMENTS
WALLS, COLUMNS, ELEVATED SLABS AND BEAM SIDES	12 HR. CUMULATIVE WITH 50 DEGREES FARENHEIT SURROUNDING TEMPERATURE.	WHERE FORMS ALSO SUPPORT FORMWORK FOR SLABS OR SOFFITS, THE REMOVAL TIME OF THE LATTER GOVERNS

EPOXY REPAIR ADHESIVE:
1. EPOXY REPAIR ADHESIVE SHALL CONFORM TO ASTM C881 AND SHALL BE A TWO-COMPONENT, LIQUID EPOXY WITH NON-SAG CONSISTENCY AND LONG POT LIFE. THE EPOXY ADHESIVE SHALL BE SUITABLE FOR USE ON DRY OR DAMP SURFACES.
2. ADHESIVE SHALL HAVE A MINIMUM SLANT SHEAR STRENGTH OF 5,000 PSI AND A MINIMUM TENSILE STRENGTH OF 4,000 PSI.
3. HOLE SIZES AND INSTALLATION SHALL BE IN STRICT ACCORDANCE WITH THE MANUFACTURER'S RECOMMENDATIONS AND THE REQUIREMENTS SET FORTH IN THE APPROVED ICC EVALUATION REPORT.
4. REINFORCEMENT SHALL NOT BE CUT OR DAMAGED IN EITHER NEW OR EXISTING CONCRETE DURING INSTALLATION.

REINFORCING STEEL:
1. REINFORCING STEEL SHALL BE DETAILED, FABRICATED, AND PLACED IN ACCORDANCE TO "ACI 318 — BUILDING CODE REQUIREMENTS FOR STRUCTURAL CONCRETE" AND "ACI 315 — MANUAL OF STANDARD PRACTICE FOR DETAILING REINFORCED CONCRETE STRUCTURES".
2. ALL REINFORCING STEEL SHALL CONFORM TO THE FOLLOWING SPECIFICATIONS AND GRADES UNLESS NOTED OTHERWISE ON THE STRUCTURAL DRAWINGS:
A. SMOOTH WELDED WIRE FABRIC — ASTM A185
B. CONCRETE COLUMN VERTICAL REINFORCEMENT — ASTM A706, GRADE 60
C. ALL OTHER REINFORCEMENT — ASTM A615, GRADE 60
3. REINFORCING STEEL TO BE WELDED SHALL CONFORM TO ASTM A706. WELDING OF REINFORCING STEEL SHALL CONFORM TO AWS D1.
4. ALL WELDING SHALL BE DONE BY AWS CERTIFIED WELDERS USING LOW HYDROGEN E70XX ELECTRODES.
5. REINFORCING STEEL SHALL BE SECURELY TIED IN-PLACE WITH #16 ANNEALED IRON WIRE. BARS IN BEAMS, SLABS, AND FOUNDATIONS SHALL BE SUPPORTED ON WELL-CURED CONCRETE BLOCKS, OR APPROVED METAL CHAIRS, AS SPECIFIED BY THE " CRSI MANUAL OF STANDARD PRACTICE", MSP-1.
6. ALL REINFORCEMENT SHALL BE FREE OF LOOSE MILL AND RUST SCALE, OIL, DIRT, OR COATINGS OF ANY KIND THAT REDUCE THE BOND STRENGTH TO THE CONCRETE.
6. REINFORCEMENT STEEL SHALL NOT BE DISPLACED OR ALTERED FOR THE CONVENIENCE OF OTHER TRADES UNLESS APPROVED BY THE STRUCTURAL ENGINEER OF RECORD.
7. " WET SETTING " OF REINFORCING STEEL, ANCHOR RODS, EMBEDDED PLATES AND INSERTS IS NOT PERMITTED.
8. ALL REINFORCEMENT SHALL BE CONTINUOUS WITH ADEQUATE LAP LENGTHS AT SPLICE LOCATIONS.
9. THE FOLLOWING MINIMUM LAP SPLICE LENGTHS SHALL BE PROVIDED FOR ALL REINFORCING STEEL. LAP LENGTHS SHOWN ON THE DRAWINGS TAKE PRECEDENCE OVER THE FOLLOWING LISTED TABLE VALUES:

TYPICAL NON-CONTACT LAP SPLICE SCHEDULE (IN)						
BAR SIZE	3,000 PSI		4,000 PSI		4,500 PSI	
	TOP BARS	OTHER BARS	TOP BARS	OTHER BARS	TOP BARS	OTHER BARS
#3	28	22	24	19	23	18
#4	37	29	32	25	31	24
#5	47	36	40	31	38	29
#6	56	43	48	37	46	35
#7	81	63	70	54	66	51
#8	93	72	80	62	76	58
#9	105	81	91	70	85	66
#10	116	89	100	77	95	73
#11	128	98	111	85	104	80

NOTES:
A. FOR CENTER-TO-CENTER SPACING LESS THAN THREE TIMES THE BAR DIAMETER (CONTACT SPLICE), MULTIPLY THE ABOVE VALUES BY A FACTOR OF 1.5.
B. TABLE VALUES APPLY FOR CLEAR COVER GREATER THAN OR EQUAL TO 1-1/2". CONTACT ENGINEER OF RECORD IF CONDITIONS VARY.
C. TOP BARS ARE HORIZONTAL BARS WITH MORE THAN 12" OF CONCRETE CAST BELOW THE BAR.
D. VALUES ARE FOR UNCOATED BARS.
10. THE FOLLOWING MINIMUM CONCRETE COVER SHALL BE PROVIDED FOR ALL REINFORCING STEEL:

MINIMUM CONCRETE COVER (CAST-IN-PLACE)	
USE	COVER
CONCRETE EXPOSED TO EARTH	#6-18: 2" / #5 & SMALLER: 1$\frac{1}{2}$"
CONCRETE NOT EXPOSED TO EARTH	#14-18: 1$\frac{1}{2}$" / #11 & SMALLER: $\frac{3}{4}$"
SLAB-ON-GRADE BARS	3" COVER FROM TOP OF SLAB
CONCRETE CAST AGAINST EARTH	3"

11. CONTINUE HORIZONTAL WALL BARS THROUGH PILASTERS, COLUMNS AND INTERSECTING WALLS.
12. PROVIDE HOOKED FOOTING DOWELS OF THE SAME SIZE AND SPACING AS THE VERTICAL WALL REINFORCEMENT. LAP SPLICE DOWELS TO THE VERTICAL WALL REINFORCEMENT AND TERMINATE WITH STANDARD 90 DEGREE HOOK INTO THE FOOTING WITH A MINIMUM 6 " EMBEDMENT BELOW THE TOP OF FOOTING.
13. AT SLAB AND WALL OPENINGS, PROVIDE A MINIMUM OF TWO #5 BARS OVER, UNDER, AND AT THE SIDES OF THE OPENING. EXTEND THESE BARS A LAP DISTANCE (OR A MINIMUM OF 2'-0") PAST THE OPENING ON ALL SIDES.
14. PROVIDE ONE #5 FOR SINGLE LAYER, AND TWO #5 FOR DOUBLE LAYER REINFORCING, 4'-0 " LONG, DIAGONALLY AT EACH CORNER OF ALL WALL AND SLAB OPENINGS.
15. REFERENCE TYPICAL DETAILS FOR THE POSITION OF REINFORCEMENT AT WALL CORNERS, WALL INTERSECTIONS, AND FOR BARS IN SMALL WALL SECTIONS.
16. PROVIDE #5 CARRIER BAR AT 3'-0 " MAX SPACING FOR ALL SLAB, JOIST, AND WALL REINFORCING NOT SUPPORTED BY OTHER TRANSVERSE REINFORCEMENT.
17. PROVIDE CORNER BARS AT CORNERS AND INTERSECTIONS FOR WALLS AND FOUNDATIONS EQUAL IN SIZE, NUMBER AND SPACING TO HORIZONTAL REINFORCING. SIZE CORNER BARS TO PROVIDE A FULL LAP WITH HORIZONTAL REINFORCEMENT ON EACH LEG. SEE ALSO TYPICAL HYDRAULIC STRUCTURES CORNER REINFORCEMENT DETAIL FOR ADDITIONAL DIAGONAL BARS AT WALL CORNERS AND TEES.

CONCRETE ACCESSORIES:
1. APPROVED POST-INSTALLED ANCHORS ARE AS FOLLOWS:

APPROVED POST-INSTALLED CONCRETE ANCHORS		
TYPE	ANCHOR	ICC REPORT
CONCRETE SCREW	SIMPSON TITEN HD	ICC ESR-2713
	HILTI KWIK HUS-EZ	ICC ESR-3027
EPOXY ADHESIVE	SIMPSON AT-XP	ICC ESR-2508
	HILTI HIT-RE 500SD	ICC ESR-2322
EXPANSION	SIMPSON STRONG-BOLT II	ICC ESR-3037
	HILTI KWIK BOLT TZ	ICC ESR-1917

NOTES:
A. ALL ANCHORS SHALL BE INSTALLED IN STRICT CONFORMANCE TO THE APPLICABLE ICC REPORT.
B. REINFORCEMENT SHALL NOT BE CUT IN NEW, OR EXISTING CONCRETE DURING INSTALLATION OF POST-INSTALLED ANCHORS.
C. ANCHORS THAT ARE LEFT EXPOSED TO WEATHER SHALL BE STAINLESS STEEL, OR HOT-DIPPED GALVANIZED.

WARNING – IT IS A VIOLATION OF NEW YORK EDUCATION LAW SECTION 7209.2, FOR ANY PERSON, UNLESS HE IS ACTING UNDER THE DIRECTION OF A LICENSED PROFESSIONAL ENGINEER OR LAND SURVEYOR, TO ALTER THIS DOCUMENT IN ANY WAY. IF ALTERED THE ALTERING PERSON SHALL COMPLY WITH THE REQUIREMENTS OF NEW YORK EDUCATION LAW, SECTION 7209.2.

BID PLANS

DELAWARE ENGINEERING, D.P.C.
CIVIL AND ENVIRONMENTAL ENGINEERING
28 MADISON AVENUE EXTENSION, ALBANY, NY 12203 - 518.452.1290
55 SOUTH MAIN ST, ONEONTA, NY 13820 - 607.432.8073
31 NORTH MAIN STREET, LIBERTY, NY 12754 - 845.747.9952
61 TOWNSEND STREET, WALTON, NY 13856 - 607.865.9235
16 EAST MARKET ST, RED HOOK, NY 12571 - 518.452.1290
548 BROADWAY, MONTICELLO, NY 12701 - 845.791.7777

DATE: 12/2020
DRAWN BY: YB
SCALE: AS SHOWN
REVIEWED BY: RF
PROJECT NO.: 19-1612
FILE:

REVISIONS

NO.	DATE	DESCRIPTION

CONTRACT 1
SUFFERN WWTP UPGRADES
VILLAGE OF SUFFERN
ROCKLAND COUNTY, NEW YORK

STRUCTURAL NOTES

SHEET:
SN01

MISCELLANEOUS NOTES:
1. ALL ELEVATIONS IN FT.
2. PROVIDE WALL CASTINGS AND/OR PIPE SLEEVES CAST IN CONCRETE FOR ALL PIPING.
3. COORDINATE SIZE AND LOCATIONS OF PIPE SLEEVES AND CONCRETE OPENINGS WITH ALL TRADES PRIOR TO DETAILING REINFORCING STEEL. FINAL SIZE AND LOCATIONS SHALL BE SUBJECT TO ENGINEER'S REVIEW.
4. ALL ALUMINUM IN CONTACT WITH, OR EMBEDDED IN CONCRETE SHALL BE THOROUGHLY ISOLATED FROM THE CONCRETE WITH BITUMASTIC.
5. ALL EXPOSED CONCRETE CORNERS SHALL HAVE A $\frac{3}{4}$" CHAMFER.
6. CONTRACTOR IS RESPONSIBLE FOR DESIGN AND PLACEMENT OF ERECTION SHORING AND BRACING.
7. WHEN BACKFILLING, ALL STONE TO SOIL BOUNDARIES MUST RECEIVE A LAYER OF GEO-TEXTILE FABRIC. GEO-TEXTILE FABRIC SHALL BE MIRAFI 600X OR APPROVED EQUAL.
8. CONSTRUCTION CRANE OR OTHER HEAVY EQUIPMENT SHALL NOT BE PERMITTED ON SLABS OR ADJACENT TO FOUNDATION WALLS.
9. UNLESS OTHERWISE NOTED, MINIMUM CONCRETE COVER SHALL CONFORM TO ACI 318-14 SECTION 20.6.1.1. MAXIMUM CONCRETE COVER SHALL NOT EXCEED MINIMUM COVER BY MORE THAN $\frac{1}{4}$".
10. WHEN STIRRUPS OR TIES ARE REQUIRED, PLACE FIRST STIRRUP.TIE ONE-HALF OF STIRRUP SPACING FROM EDGE OF SUPPORT.
11. REINFORCING BARS SHALL BE SHIFTED TO CLEAR ANCHOR BOLTS AND EMBEDDED ITEMS, SUBJECT TO REVIEW BY ENGINEER. CUTTING OF REINFORCING BARS WILL NOT BE PERMITTED.
12. SAW-CUT JOINTS IN 12" THICK SLABS ON GRADE SHALL BE 3" DEEP AND CUT WITHIN 12 HOURS OF CONCRETE POUR. FILL JOINTS WITH A SEMI-RIGID EPOXY JOINT FILLER. DO NOT CUT THROUGH REBAR REINFORCEMENT. CUTTING THROUGH WELDED WIRE FABRIC IS PERMITTED.
13. EXISTING CONCRETE SURFACES ARE TO BE CLEANED OF ALL OIL, DIRT AND GREASE BEFORE NEW CONCRETE IS PLACED.
14. CUT OR GRIND BACK ANY EXISTING REBAR 1" FROM FACE OF ANY NEW OPENING THROUGH EXISTING CONCRETE. REPLACE ANY REMOVED CONCRETE WITH NON-SHRINK GROUT AND SEAL IN AND AROUND OPENING (12"MIN) WITH VANDEX SUPER CRYSTALLINE WATERPROOF COATING.
15. CONTRACTOR SHALL SUBMIT FOR REVIEW CONSTRUCTION SEQUENCING PLAN INDICATING LOCATION OF VERTICAL CONSTRUCTION JOINTS IN WALLS AND WALL FOOTINGS PRIOR TO DETAILING REINFORCING STEEL. FOOTING CONSTRUCTION JOINTS SHALL BE SPACED A MAXIMUM OF 60'-0" O.C. AND OFFSET A MINIMUM OF 2'-0" FROM WALL JOINTS.
16. WATERSTOP SHALL BE LOCATED ON WET SIDE OF CONSTRUCTION JOINT. CARE SHALL BE TAKEN TO PREVENT DISPLACEMENT OR FOLDING OVER OF WATERSTOP DURING PLACEMENT OF CONCRETE.
17. IMMEDIATELY AFTER THE REMOVAL OF FORMS, CONCRETE THAT IS EXPOSED SHALL HAVE ALL PROJECTIONS AND IRREGULARITIES CAREFULLY REMOVED AND ALL CAVITIES FILLED WITH MORTAR OF THE PROPORTION USED IN CONCRETE.
18. ALLOW FOUNDATIONS TO CURE A MINIMUM OF 7 DAYS PRIOR TO ERECTING WALLS ABOVE FOOTINGS, TYP.

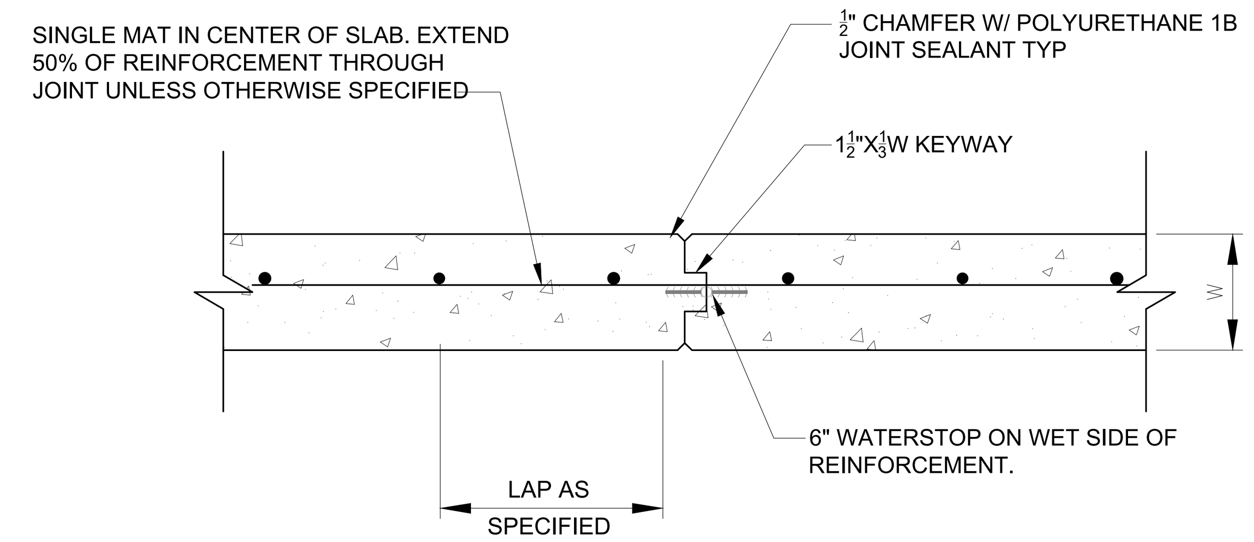

CONSTRUCTION JOINT DETAIL SINGLE MAT
SCALE: NTS

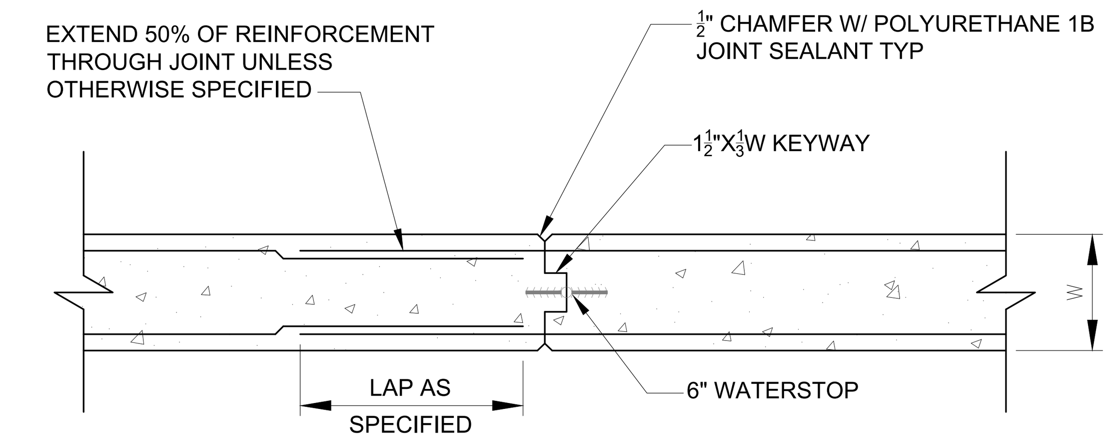

CONSTRUCTION JOINT DETAIL DOUBLE MAT
SCALE: NTS

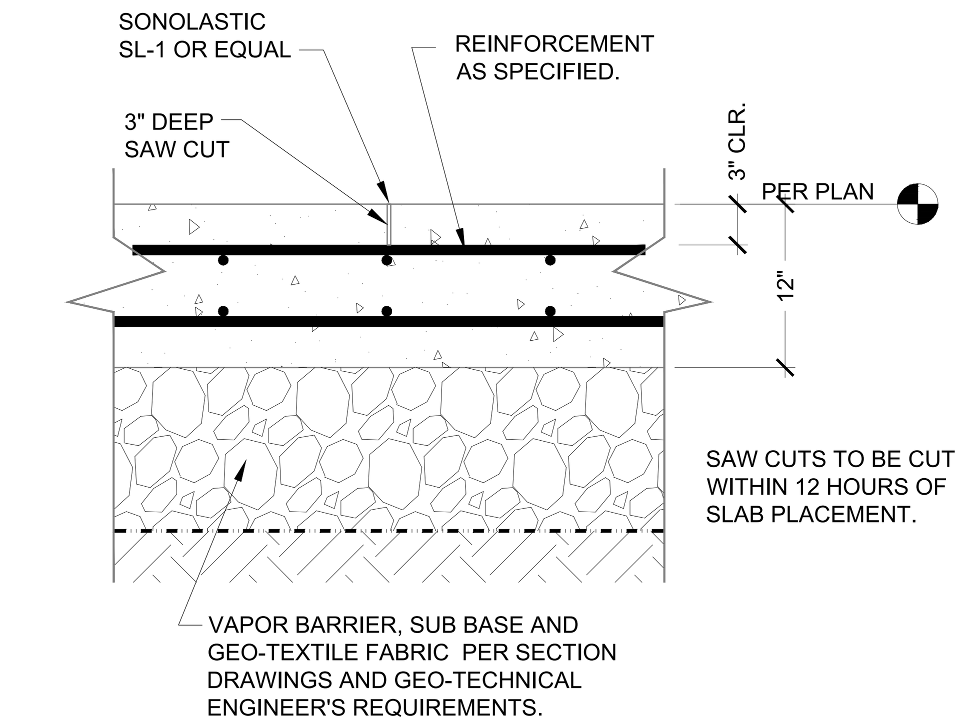

TYPICAL SLAB CONTROL JOINT DETAIL (CJ)
SCALE: NTS

NOTE: SIZE AND SPACING OF DIAGONAL AND CORNER BARS TO MATCH HORIZONTAL REINFORCING. EXTENSION ARM OF DIAGONAL BARS TO BE IN SAME PLANE AS WALL HORIZONTAL REINFORCEMENT. ALL HORIZONTAL BARS TO BE EQUALLY SPACED VERTICALLY.

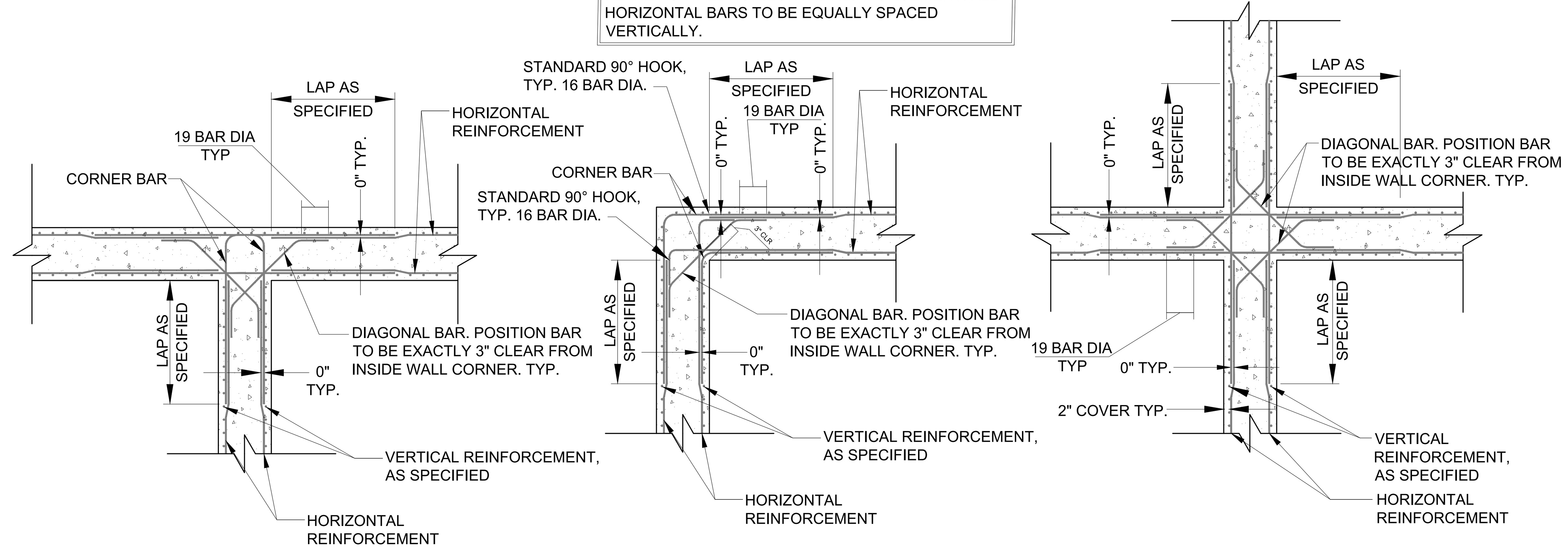

TYPICAL HYDRAULIC STRUCTURES CORNER REINFORCING DETAILS
SCALE: NTS

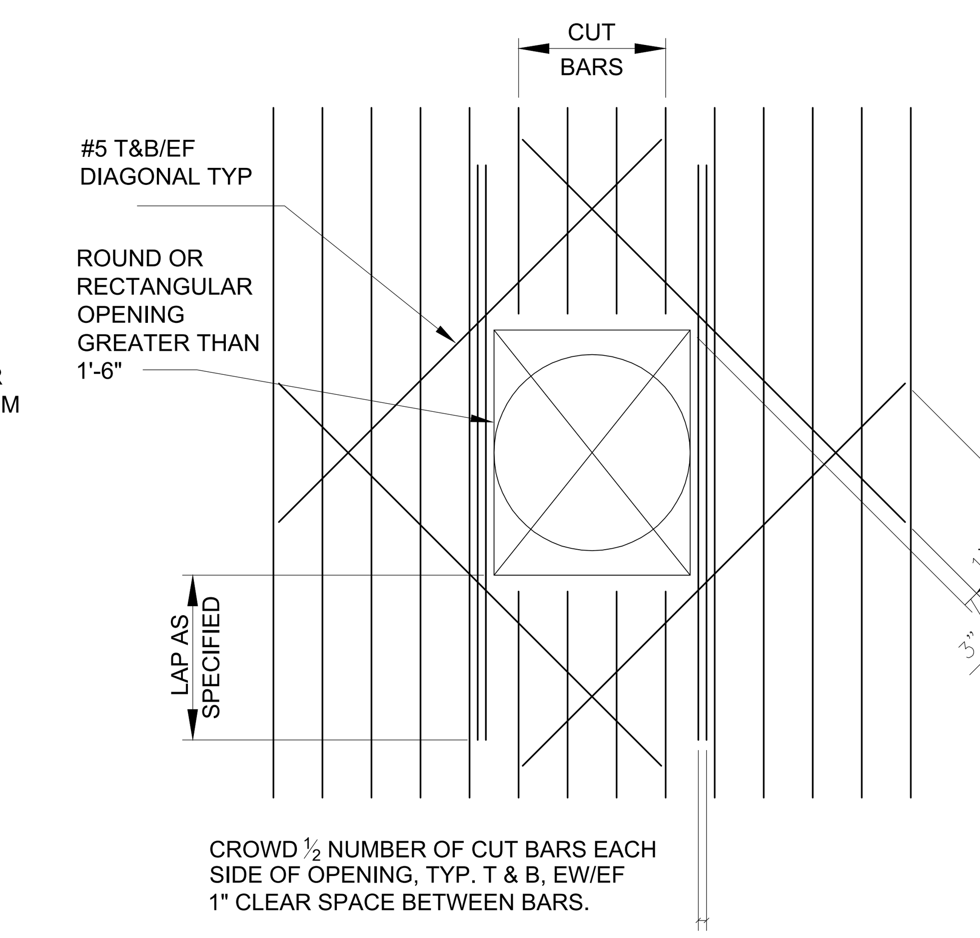

NOTE: BARS SHOWN IN ONE DIRECTION FOR CLARITY. TREAT BARS IN OTHER DIRECTION IN SAME MANNER.

TYP. WALL/SLAB OPENING DETAIL
SCALE: NTS

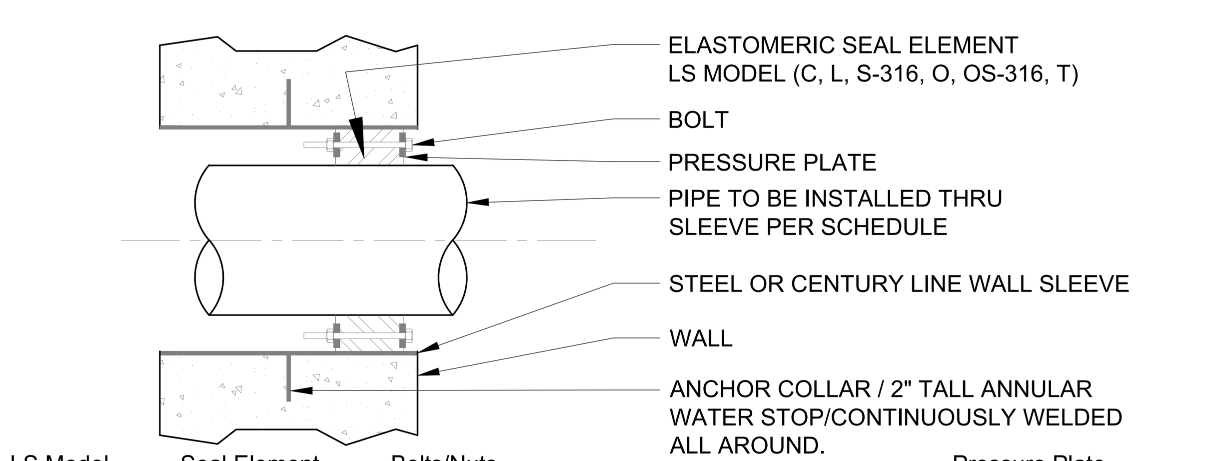

LS Model	Seal Element	Bolts/Nuts	Pressure Plate
C	EPDM (Black)	Zinc Dichromate/Organic Coated Carbon Steel Bolt	Reinforced Nylon Polymer
L	EPDM (Blue)	Zinc Dichromate/Organic Coated Carbon Steel Bolt	Reinforced Nylon Polymer
O	Nitrile	Zinc Dichromate/Organic Coated Carbon Steel Bolt	Reinforced Nylon Polymer
T	Silicone	Zinc Dichromate/Organic Coated Carbon Steel Bolt	Steel Zinc Dichromate
(C,L,O)+S-316	(see model options)	316 Stainless Steel	Reinforced Nylon Polymer

Sleeve Model	Description	Material
CS	Century-Line Sleeve	HDPE
WS	Steel Wall Sleeve	Steel

LINK-SEAL
MODULAR SEALS WITH MODEL WS STEEL WALL SLEEVES
MANUFACTURED BY PIPELINE SEAL & INSULATOR, INC.
HOUSTON, TEXAS, U.S.A. TEL: 800-423-2410
E-MAIL: INFO@PSIPSI.COM

PIPE SLEEVE AND MECHANICAL SEAL SCHEDULE FOR HORIZONTAL WALL PENETRATIONS

SYMBOL	PIPE SIZE	PIPE MATERIAL	PIPE ACTUAL O.D.	WALL SLEEVE MODEL NO.	LINK SEAL MODEL NO.	PURPOSE	PIPE INVERT ELEVATION	PIPE CENTERLINE ELEVATION
A	24"	DUCTILE IRON	25.8"	CS-30-12	LS-400-S-316-23	VORTEX UNIT EFFLUENT TO MANHOLE T2. ALTERNATIVELY, INSTALL W/ LINK SEAL CELL HOLE FORMING CAST DISKS	274.66	275.70
B	18"	DUCTILE IRON	19.5"	CS-24-12	LS-410-S-316-21	BAR SCREEN EXIT CHANNEL PIPE AT EXTERIOR PERIMETER WALL PENETRATION	274.75	275.53
C	18"	DUCTILE IRON	19.5"	24" DIA. CORE DRILL	LS-525-S-316-17	BAR SCREEN EXIT CHANNEL PIPE AT EXISTING CHANNEL WALL CORE DRILLED OPENING	274.91	275.69
D	6"	DUCTILE IRON	6.9"	WS-10-36-S-12"	LS-475-S-316-10	GRIT CLASSIFIER DRAIN PIPE	276.16	276.42
E	2"	HDPE	2.375"	CS-4-12	LS-300-S-316-6	2" HDPE POTABLE WATER LINE	TBD	TBD
F	2"	HDPE	2.375"	CS-4-12	LS-300-S-316-6	2" HDPE SEAL WATER LINE	TBD	TBD

WALL PENETRATION SCHEDULE
SCALE: NTS

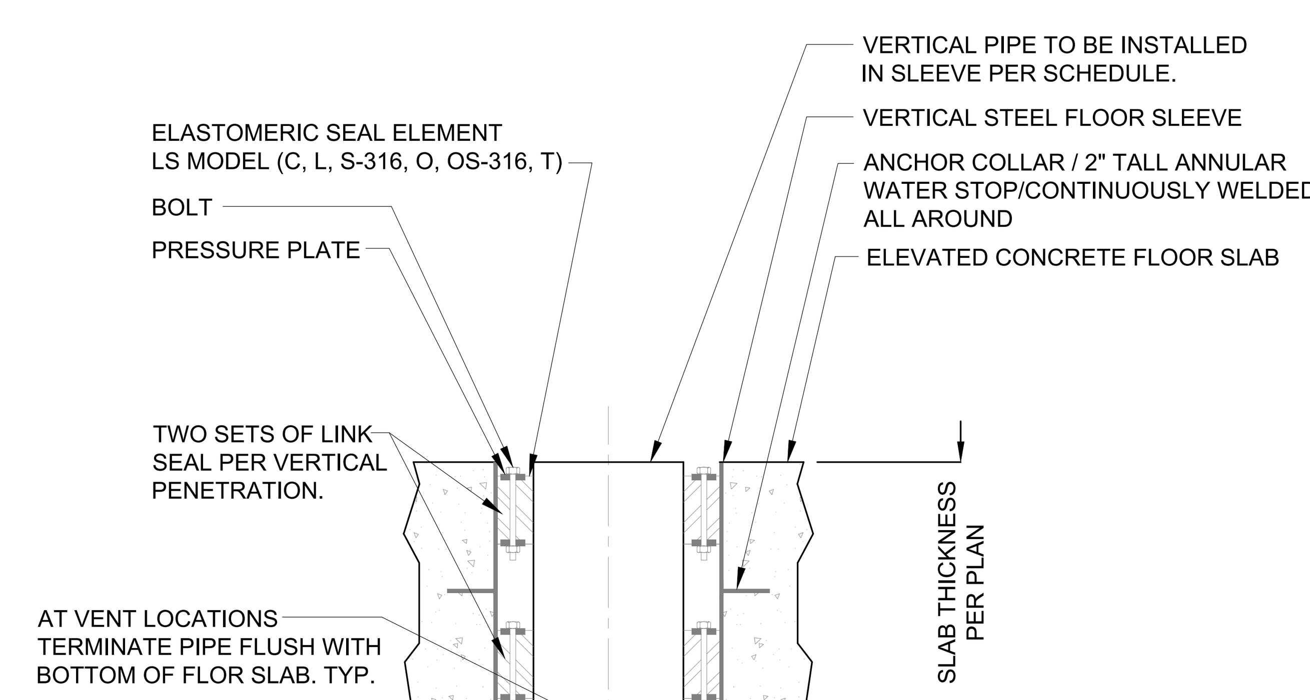

PIPE SLEEVE AND MECHANICAL SEAL SCHEDULE FOR VERTICAL SLAB PENETRATIONS

SYMBOL	SIZE	MATERIAL	ACTUAL O.D.	SLEEVE MODEL NO.	LINK SEAL MODEL NO.	PURPOSE	COMMENTS
A	6"	DUCTILE IRON	6.9"	CS-10-12	LS-475-S-316-10	GRIT CLASSIFIER DRAIN PIPE	

VERTICAL FLOOR PENETRATION SCHEDULE
SCALE: NTS

ABBREVIATIONS

&	AND	HP	HIGH POINT
@	AT	IF	INSIDE FACE
#X@Y	BAR SIZE AND SPACING IN INCHES	LP	LOW POINT
±	FIELD VERIFY	MFG R	MANUFACTURER
†	VERIFY W/EQUIPMENT	NF	NEAR FACE
→	SLOPE (DOWN DIRECTION) $\frac{1}{4}$"/ FT UNO	NTS	NOT TO SCALE
ALUM	ALUMINUM	O.C.	ON CENTER
B OR BOT	BOTTOM	REQ'D	REQUIRED
B/	BOTTOM OF	SQ	SQUARE
CL	CLEAR	SS	STAINLESS STEEL
CLR	CLEAR	STL	STEEL
CMU	CONCRETE MASONRY UNIT	T	TOP
CTR	CENTER	T/	TOP OF
DIA	DIAMETER	T.O.C	TOP OF CONCRETE
DWL	DOWEL	T.O.S	TOP OF SLAB
EF	EACH FACE	T.O.W	TOP OF WALL
EW	EACH WAY	TYP	TYPICAL
F.O	FACE OF	VERT	VERTICAL
EL	ELEVATION	W/	WITH
FRP	FIBER REINFORCED PLASTIC	WS	WATERSTOP
FTG	FOOTING	WS	WALL SLEEVE
GTR	GRATING	WWR	WELDED WIRE REINFORCEMENT
HORZ	HORIZONTAL		

BID PLANS

WARNING – IT IS A VIOLATION OF NEW YORK EDUCATION LAW SECTION 7209.2, FOR ANY PERSON, UNLESS HE IS ACTING UNDER THE DIRECTION OF A LICENSED PROFESSIONAL ENGINEER OR LAND SURVEYOR, TO ALTER THIS DOCUMENT IN ANY WAY. IF ALTERED THE ALTERING PERSON SHALL COMPLY WITH THE REQUIREMENTS OF NEW YORK EDUCATION LAW, SECTION 7209.2.

DATE:	12/2020
DRAWN BY:	YB
SCALE:	AS SHOWN
REVIEWED BY:	RF
PROJECT NO.:	19-1612
FILE:	

DELAWARE ENGINEERING, D.P.C.
CIVIL AND ENVIRONMENTAL ENGINEERING
28 MADISON AVENUE EXTENSION, ALBANY, NY 12203 - 518.452.1290
55 SOUTH MAIN ST, ONEONTA, NY 13820 - 607.432.8073
31 NORTH MAIN STREET, LIBERTY, NY 12754 - 845.747.9952
6 TOWNSEND STREET, WALTON, NY 13856 - 607.865.9235
16 EAST MARKET ST., RED HOOK, NY 12571 - 518.452.1290
548 BROADWAY, MONTICELLO, NY 12701 - 845.791.7777

STATE OF NEW YORK · LICENSED PROFESSIONAL ENGINEER

REVISIONS

NO.	DATE	DESCRIPTION

CONTRACT 1
SUFFERN WWTP UPGRADES
VILLAGE OF SUFFERN
ROCKLAND COUNTY, NEW YORK

STRUCTURAL NOTES AND TYPICAL DETAILS

SHEET:
SN02

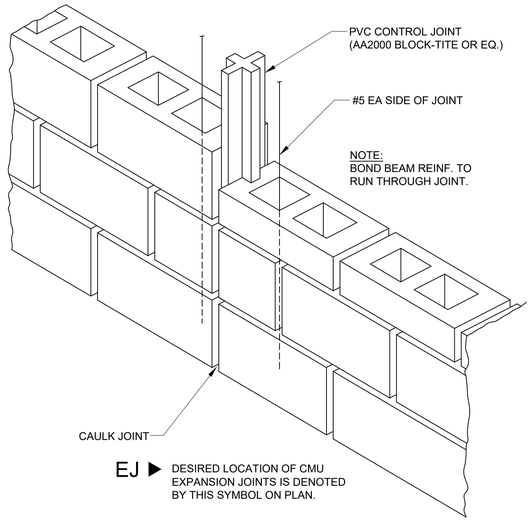

CMU EXPANSION JOINT DETAIL

SCALE: NTS

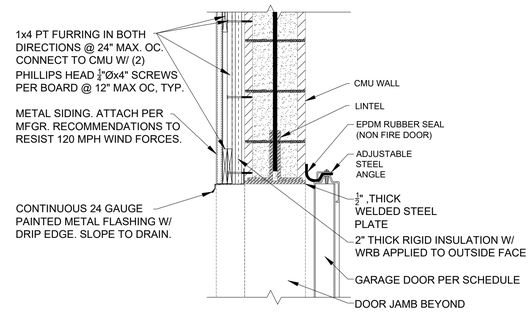

TYPICAL GARAGE DOOR HEAD

SCALE: NTS

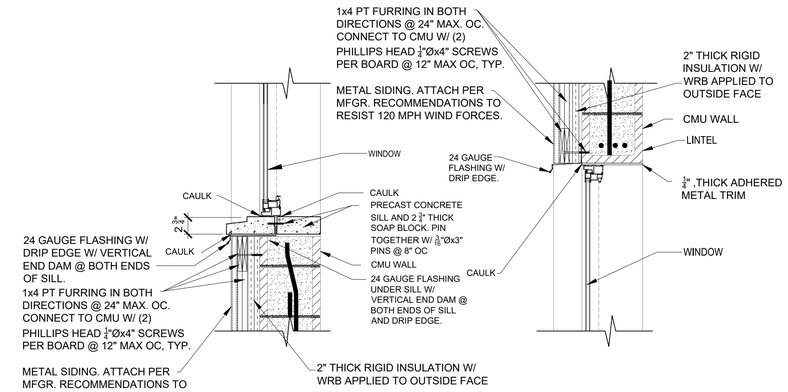

TYPICAL SILL

SCALE: NTS

TYPICAL HEAD

SCALE: NTS

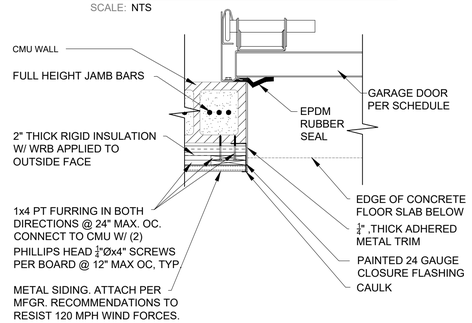

TYPICAL GARAGE DOOR JAMB

SCALE: NTS

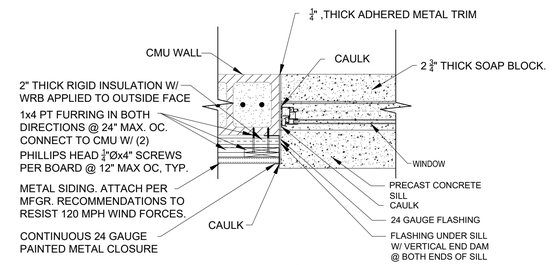

TYPICAL JAMB

SCALE: NTS

TYP. OVERHEAD DOOR, HEAD AND JAMB DETAIL

SCALE: NTS

TYPICAL EXT. WINDOW/DOOR OPENING DETAILS

SCALE: NTS

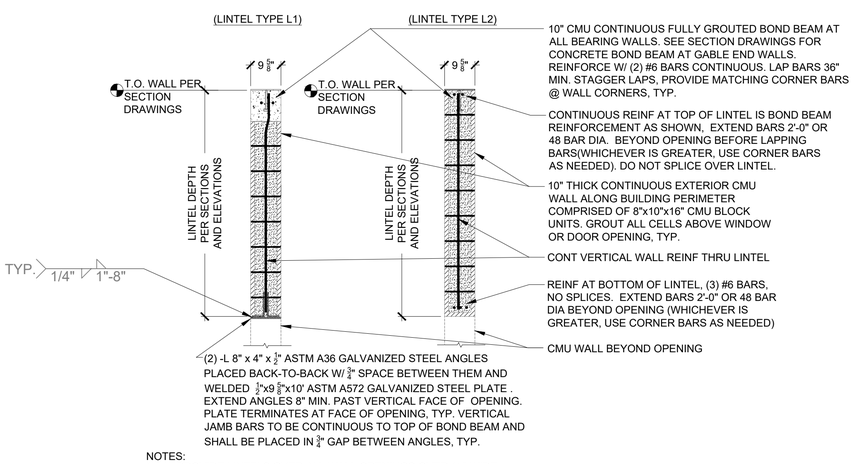

NOTES:
1. PROVIDE LINTELS OVER ALL WALL OPENINGS OVER 15" WIDE
2. LINTEL TO OVERLAP ADJOINING BLOCK 8" MINIMUM ON EACH SIDE OF OPENING

TYPICAL EXT. CMU WALL LINTEL DETAIL

SCALE: NTS

NOTE: IN STRUCTURAL CONCRETE, LOCATE REBAR PRIOR TO DRILLING HOLES. RELOCATE AS REQUIRED TO AVOID CUTTING REINFORCING.

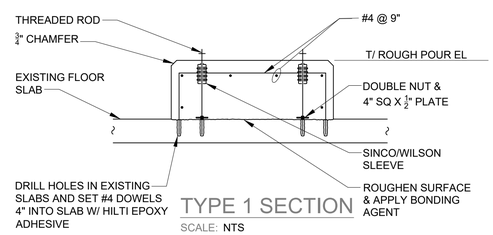

TYPE 1 SECTION

SCALE: NTS

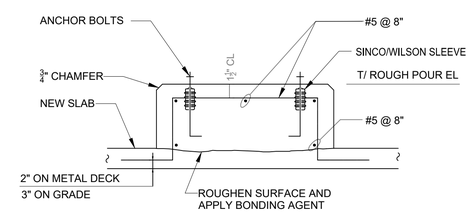

TYPE 2 SECTION

SCALE: NTS

TYPICAL EQUIPMENT DETAILS

SCALE: NTS

NOTE:
1. SIZE OF PAD, ANCHOR BOLTS AND ARRANGEMENT TO SUIT EQUIPMENT.
2. USE OF TYPE 1 PAD IS LIMITED TO EXISTING CONCRETE. USE OF TYPE 1 & 2 PAD IS LIMITED TO EQUIPMENT LESS THEN 1200 LBS AND 50 HP UNLESS APPROVED BY ENGINEER.

BID PLANS

WARNING – IT IS A VIOLATION OF NEW YORK EDUCATION LAW SECTION 7209.2, FOR ANY PERSON, UNLESS HE IS ACTING UNDER THE DIRECTION OF A LICENSED PROFESSIONAL ENGINEER OR LAND SURVEYOR, TO ALTER THIS DOCUMENT IN ANY WAY. IF ALTERED THE ALTERING PERSON SHALL COMPLY WITH THE REQUIREMENTS OF NEW YORK EDUCATION LAW, SECTION 7209.2.

DATE:	12/2020
DRAWN BY:	YB
SCALE:	AS SHOWN
REVIEWED BY:	RF
PROJECT NO.:	19-1612
FILE:	

DELAWARE ENGINEERING, D.P.C.
CIVIL AND ENVIRONMENTAL ENGINEERING
28 MADISON AVENUE EXTENSION, ALBANY, NY 12203 - 518.452.1290
55 SOUTH MAIN ST, ONEONTA, NY 13820 - 607.432.8073
31 NORTH MAIN STREET, LIBERTY, NY 12754 - 845.747.9952
6 TOWNSEND STREET, WALTON, NY 13856 - 607.865.9235
16 EAST MARKET ST., RED HOOK, NY 12571 - 518.452.1290
548 BROADWAY, MONTICELLO, NY 12701 - 845.791.7777

REGISTERED PROFESSIONAL ENGINEER
STATE OF NEW YORK
STATE OF FLORIDA
LICENSE NO. 081-95-90

REVISIONS

NO.	DATE	DESCRIPTION

CONTRACT 1
SUFFERN WWTP UPGRADES
VILLAGE OF SUFFERN
ROCKLAND COUNTY, NEW YORK

STRUCTURAL NOTES
AND
TYPICAL DETAILS

SHEET:
SN03

SPECIAL INSPECTIONS AND TESTING:

1. SPECIAL INSPECTION WILL BE PROVIDED BY THE OWNER BASED ON THE REQUIREMENTS OF THE IBC AS SUMMARIZED IN THE SPECIAL INSPECTION AND TESTING PROGRAM ON THIS SHEET. THE CONTRACTOR SHALL PROVIDE SUFFICIENT NOTICE AND ACCESS FOR THE SPECIAL INSPECTOR TO PERFORM THESE INSPECTIONS.

TABLE 1

REQUIRED GEOTECHNICAL SPECIAL INSPECTIONS

SYSTEM or MATERIAL	INSPECTION				REMARKS
	IBC CODE REFERENCE	CODE or STANDARD REFERENCE	FREQUENCY		
			CONTINUOUS	PERIODIC	
SOILS					
GEOTECHNICAL INVESTIGATIONS	TABLE 1705.6 1803				GEOTECHNICAL INVESTIGATION SHALL INCLUDE ITEMS OF SPECIAL INSPECTION AND TESTING AS NOTED IN TABLE 5 OF THE GUIDELINES
VERIFY MATERIALS BELOW SHALLOW FOUNDATIONS ARE ADEQUATE TO ACHIEVE THE DESIGN BEARING CAPACITY	TABLE 1705.6			X	BY THE GEOTECHNICAL ENGINEER
VERIFY EXCAVATIONS ARE EXTENDED TO PROPER DEPTH AND HAVE REACHED PROPER MATERIAL	TABLE 1705.6			X	BY THE GEOTECHNICAL ENGINEER
PERFORM CLASSIFICATION AND TESTING OF COMPACTED FILL MATERIALS	TABLE 1705.6 1803.5.1			X	TESTING OF COMPACTED FILL MATERIALS (SEE TABLE 5)
VERIFY USE OF PROPER MATERIALS, DENSITIES AND LIFT THICKNESSES DURING PLACEMENT AND COMPACTION OF COMPACTED FILL	TABLE 1705.6		X		BY THE GEOTECHNICAL ENGINEER
PRIOR TO PLACEMENT OF COMPACTED FILL, OBSERVE SUBGRADE AND VERIFY THAT SITE HAS BEEN PREPARED PROPERLY.	TABLE 1705.6			X	BY THE GEOTECHNICAL ENGINEER

TABLE 2

REQUIRED STRUCTURAL SPECIAL INSPECTIONS

SYSTEM or MATERIAL	INSPECTION				REMARKS
	IBC CODE REFERENCE	CODE or STANDARD REFERENCE	FREQUENCY		
			CONTINUOUS	PERIODIC	
FABRICATORS					
FABRICATORS	1704.2.5			X	SPECIAL INSPECTION IS REQUIRED FOR STRUCTURAL LOAD-BEARING MEMBERS AND ASSEMBLIES FABRICATED ON THE PREMISES OF A FABRICATOR'S SHOP.
	1704.2.5.1				THE SPECIAL INSPECTOR SHALL VERIFY THAT THE FABRICATOR MAINTAINS DETAILED FABRICATION AND QUALITY CONTROL PROCEDURES AND SHALL REVIEW FOR COMPLETENESS AND ADEQUACY RELATIVE TO THE CODE REQUIREMENT.
	1704.2.5.2				SPECIAL INSPECTIONS REQUIRED BY SECTION 1705 ARE NOT REQUIRED WHERE THE WORK IS DONE ON THE PREMISES OF A FABRICATOR REGISTERED AND APPROVED TO PERFORM SUCH WORK WITHOUT SPECIAL INSPECTION. APPROVAL SHALL BE BASED UPON REVIEW OF THE FABRICATOR'S WRITTEN PROCEDURAL AND QUALITY CONTROL MANUALS AND PERIODIC AUDITING OF FABRICATION PRACTICES BY A NATIONALLY RECOGNIZED ACCREDITING AUTHORITY. AT COMPLETION OF FABRICATION, THE APPROVED FABRICATOR SHALL SUBMIT A CERTIFICATE OF COMPLIANCE TO THE BUILDING OFFICIAL STATING THAT THE WORK WAS PERFORMED IN ACCORDANCE WITH THE APPROVED CONSTRUCTION DOCUMENTS.
CONCRETE (TABLE 3)					
INSPECTION OF ANCHORS INSTALLED IN HARDENED CONCRETE	1909.1 TABLE 1705.3	ACI 318: 3.8.6, 8.1.3, 21.1.8		X	SPECIAL INSPECTIONS APPLY TO ANCHOR PRODUCT NAME, TYPE, AND DIMENSIONS, HOLE DIMENSIONS, COMPLIANCE WITH DRILL BIT REQUIREMENTS, CLEANLINESS OF THE HOLE AND ANCHOR, ADHESIVE EXPIRATION DATE, ANCHOR/ADHESIVE INSTALLATION, ANCHOR EMBEDMENT, AND TIGHTENING TORQUE
REINFORCING STEEL PLACEMENT	1705.3 1910.4 1901.3.2	ACI 318: 3.5 ACI 318: 7.1-7.7		X	TOLERANCES AND REINFORCING PLACEMENT PER ACI 7.5; SPACING LIMITS FOR REINFORCING ACI 7.6 PROTECTION OF REINFORCEMENT PER ACI 7.7
VERIFYING USE OF REQUIRED MIX DESIGN(S)	TABLE 1705.3 1904 1904.2 1910.2 1910.3	ACI 318: CHAPTER 4 ACI 318: 5.2-5.4		X	
CONCRETE PLACEMENT	TABLE 1705.3	ACI 318: 1.3.2.D ACI 318: 5.9 - 5.10	X		
CONCRETE CURING	TABLE 1705.3 1910.9.1-3	ACI 318: 5.11-5.13		X	
VERIFICATION OF FORMWORK	TABLE 1705.3	ACI 318: 6.1.1		X	SPECIAL INSPECTIONS APPLY TO SHAPE, LOCATION AND DIMENSIONS OF THE CONCRETE MEMBER BEING FORMED
WOOD (TABLE 4)					
FABRICATION OF PREFABRICATED STRUCTURAL ELEMENTS	1705.5			X	REFER TO INSPECTION OF FABRICATOR REQUIREMENTS
PREFABRICATED WOOD SHEAR PANELS	1705.5 1704.2.5	ICC EVALUATION REPORT		X	SPECIAL INSPECTIONS APPLY TO HOLDOWN ANCHOR SIZE AND PLACEMENT, INCLUDING EMBEDMENT LENGTH, SPACING, AND EDGE DISTANCE

TABLE 5

REQUIRED TESTING FOR SPECIAL INSPECTIONS

SYSTEM or MATERIAL	TESTING				REMARKS
	IBC CODE REFERENCE	CODE or STANDARD REFERENCE	FREQUENCY		
			CONTINUOUS	PERIODIC	
CONCRETE					
AT THE TIME FRESH CONCRETE IS SAMPLED TO FABRICATE SPECIMENS FOR STRENGTH TESTS, PERFORM SLUMP AND AIR CONTENT TESTS, AND DETERMINE THE TEMPERATURE OF THE CONCRETE	TABLE 1705.3	ASTM C 172 ASTM C 31 ACI 318: 5.6, 5.8	X		FABRICATE SPECIMENS AT TIME FRESH CONCRETE IS PLACED ONCE EACH DAY FOR A GIVEN CLASS OF CONCRETE, OR LESS THAN ONCE FOR EACH 150 YDS OF CONCRETE, OR LESS THAN ONCE FOR EACH 5,000 FT2 OF SURFACE AREA FOR SLABS/WALLS. ONCE EACH SHIFT FROM IN-PLACE WORK OR FROM TEST PANEL AND MINIMUM ONE SPECIMEN FOR EACH 50 CUBIC YARDS. "PRECONSTRUCTION TESTS AS REQUIRED PER THE BUILDING OFFICIAL."
CONCRETE STRENGTH	TABLE 1705.3	ASTM C39	X		
CONCRETE SLUMP	TABLE 1705.3	ASTM C143	X		
CONCRETE AIR CONTENT		ASTM C231	X		
CONCRETE TEMPERATURE		ASTM C1064	X		

TABLE 6

REQUIRED SPECIAL INSPECTIONS FOR SEISMIC RESISTANCE (SEISMIC CATEGORIES C, D, E, F)

SYSTEM or MATERIAL	INSPECTION				REMARKS
	IBC CODE REFERENCE	CODE or STANDARD REFERENCE	FREQUENCY		
			CONTINUOUS	PERIODIC	
STRUCTURAL WOOD					
CONNECTIONS FOR DIAPHRAGM CHORDS, COLLECTORS, BRACING, AND SHEAR WALL ANCHORAGE AND HOLDOWNS				X	ALL CONNECTIONS VISUALLY INSPECTED
FASTENING OF DIAPHRAGM AND SHEAR WALL SHEATHING WITH EDGE NAILING ≤ 4"				X	SPECIAL INSPECTION IS NOT REQUIRED WHEN FASTENER SPACING IS GREATER THAN 4" ON CENTER FOR WOOD SHEAR WALLS, DIAPHRAGMS, NAILING, BUILDING AND OTHER COMPONENTS IN THE SEISMIC FORCE-RESISTING SYSTEM.
ARCHITECTURAL COMPONENTS					
INSTALLATION AND ANCHORAGE OF SUSPENDED CEILING SYSTEMS	1705.11	ASCE 7-10 Section 13.5.6		X	
INSTALLATION OF OTHER SEISMIC SUPPORTS FOR DESIGNATED ARCHITECTURAL SYSTEMS AND THEIR COMPONENTS	1705.11.5			X	
ELECTRICAL COMPONENTS					
INSTALLATION OF ANCHORAGE OF ELECTRICAL EQUIPMENT FOR EMERGENCY OR STANDBY POWER SYSTEMS	1705.11.6			X	
INSTALLATION OF OTHER SEISMIC SUPPORTS FOR DESIGNATED ELECTRICAL SYSTEMS AND THEIR COMPONENTS	1705.11.6			X	
PROCESS MECHANICAL COMPONENTS					
INSTALLATION OF OTHER SEISMIC SUPPORTS FOR DESIGNATED MECHANICAL SYSTEMS AND THEIR COMPONENTS	1705.11.6			X	

SUBMITTALS:

1. SHOP DRAWINGS SHALL BE SUBMITTED TO THE ENGINEER PRIOR TO THE FABRICATION AND CONSTRUCTION OF ALL STRUCTURAL ITEMS INCLUDING THE FOLLOWING ITEMS IN ADDITION TO INDIVIDUAL SPECIFICATION SECTIONS.

SUBMITTALS

ITEM	SUBMITTAL (A, D)	DEFERRED SUBMITTAL (B, D)	COMMENTS
CONCRETE MIX DESIGNS	X		
CONCRETE REINFORCEMENT	X		
REINFORCING STEEL MILL CERTS	X		
CONCRETE ANCHORAGES	X		
HOLDOWN ANCHOR BOLT LAYOUT	X		DOES NOT APPLY
EMBEDDED STEEL ITEMS	X		
SLAB-ON-GRADE CONTROL JOINT LAYOUT	X		
STRUCTURAL STEEL MILL CERTS	X		
STRUCTURAL STEEL	X		
STEEL WELDING PROCEDURES	X		
STEEL DECKING	X		
STEEL FASTENERS	X		
GLUED LAMINATED MEMBERS	X		DOES NOT APPLY
PREMANUFACTURED STEEL TRUSSES	X	X	
MEP ANCHORAGE AND BRACING	X	X	FOOTNOTE "C"
PRE-ENGINEERED METAL STAIRS	X	X	DOES NOT APPLY

A. IF THE SHOP DRAWINGS DIFFER FROM OR ADD TO THE DESIGN OF THE STRUCTURAL DRAWINGS, THEY SHALL BEAR THE SEAL AND SIGNATURE OF A STRUCTURAL ENGINEER REGISTERED IN NEW YORK STATE. ANY MODIFICATIONS TO THE STRUCTURAL DRAWINGS SHALL BE SUBMITTED TO THE ENGINEER AND ARE SUBJECT TO REVIEW AND ACCEPTANCE BY THE STRUCTURAL ENGINEER OF RECORD.

B. DESIGN DRAWINGS, SHOP DRAWINGS, AND CALCULATIONS FOR THE DESIGN AND FABRICATION OF ITEMS THAT ARE DESIGNED BY OTHERS SHALL BEAR THE SEAL AND SIGNATURE OF A STRUCTURAL ENGINEER REGISTERED IN NEW YORK STATE. CALCULATIONS SHALL BE INCLUDED FOR ALL CONNECTIONS TO THE STRUCTURE CONSIDERING LOCALIZED EFFECTS ON STRUCTURAL ELEMENTS INDUCED BY THE CONNECTION LOADS. DESIGN SHALL BE BASED UPON THE REQUIREMENTS OF THE IBC AND AS NOTED UNDER "DESIGN CRITERIA."

C. THE CONTRACTOR SHALL COORDINATE THE SEISMIC RESTRAINTS OF MECHANICAL, ELECTRICAL, AND PLUMBING EQUIPMENT, MACHINERY, AND ASSOCIATED PIPING WITH THE STRUCTURE. CONNECTIONS TO THE STRUCTURE SHALL CONFORM TO ASCE 7-16 CHAPTER 13 AND BE DESIGNED BY AN ENGINEER REGISTERED IN NEW YORK STATE.

D. FIELD ENGINEERED DETAILS DEVELOPED BY THE CONTRACTOR THAT DIFFER FROM, OR ADD TO, THE STRUCTURAL DRAWINGS SHALL BEAR THE SEAL AND SIGNATURE OF A STRUCTURAL ENGINEER REGISTERED IN NEW YORK STATE AND SHALL BE SUBMITTED TO THE ARCHITECT PRIOR TO CONSTRUCTION. ANY SUCH DETAILS ARE SUBJECT TO REVIEW AND ACCEPTANCE BY THE STRUCTURAL ENGINEER OF RECORD.

BID PLANS

WARNING – IT IS A VIOLATION OF NEW YORK EDUCATION LAW SECTION 7209.2, FOR ANY PERSON, UNLESS HE IS ACTING UNDER THE DIRECTION OF A LICENSED PROFESSIONAL ENGINEER OR LAND SURVEYOR, TO ALTER THIS DOCUMENT IN ANY WAY. IF ALTERED THE ALTERING PERSON SHALL COMPLY WITH THE REQUIREMENTS OF NEW YORK EDUCATION LAW, SECTION 7209.2.

DATE: 12/2020
DRAWN BY: YB
SCALE: AS SHOWN
REVIEWED BY: RF
PROJECT NO.: 19-1612
FILE:

DELAWARE ENGINEERING, D.P.C.
CIVIL AND ENVIRONMENTAL ENGINEERING
28 MADISON AVENUE EXTENSION, ALBANY, NY 12203 - 518.452.1290
55 SOUTH MAIN ST, ONEONTA, NY 13820 - 607.432.8073
31 NORTH MAIN STREET, LIBERTY, NY 12754 - 845.747.9952
6 TOWNSEND STREET, WALTON, NY 13856 - 607.865.9235
16 EAST MARKET ST., RED HOOK, NY 12571 - 518.452.1290
548 BROADWAY, MONTICELLO, NY 12701 - 845.791.7777

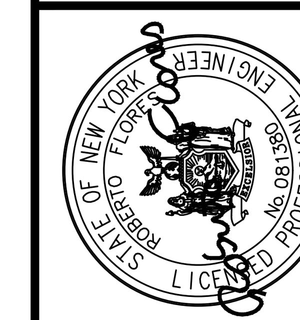

REVISIONS

NO.	DATE	DESCRIPTION

CONTRACT 1
SUFFERN WWTP UPGRADES
VILLAGE OF SUFFERN
ROCKLAND COUNTY, NEW YORK

SPECIAL INSPECTIONS AND TESTING

SHEET:
SN04

File: H:\DRAWINGS\SUFFERN\WWTP\STRUCTURAL\VILLAGE OF SUFFERN WWTP-STRUCTURAL-HEADWORKS-YB.DWG Saved: 12/8/2020 8:03:49 AM PLotted: 12/8/2020 8:08:08 AM User: Gary Markham LastSavedBy: markhamg

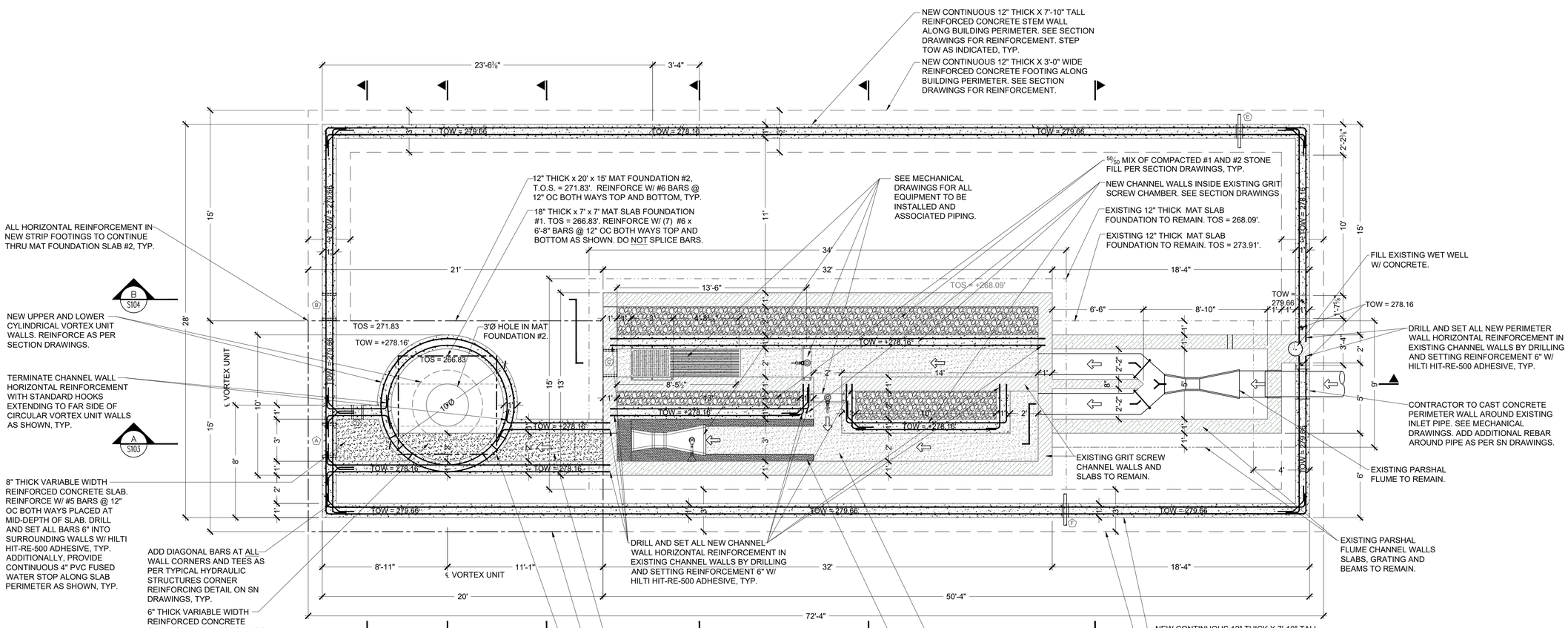

FOUNDATION PLAN (below elevation 278.16') — S100

SCALE: ¾" = 1'-0"

LEGEND:

- NEW REINFORCED CONCRETE WALL OR NEW CONCRETE IN SECTION.
- EXISTING REINFORCED CONCRETE WALL OR EXISTING CONCRETE IN SECTION.
- NEW CONCRETE SLAB OR CONCRETE IN ELEVATION
- EDGES OF MAT FOUNDATION NO. 1
- EDGES OF MAT FOUNDATION NO. 2
- EDGES OF EXISTING MAT FOUNDATION

BID PLANS

WARNING – IT IS A VIOLATION OF NEW YORK EDUCATION LAW SECTION 7209.2, FOR ANY PERSON, UNLESS HE IS ACTING UNDER THE DIRECTION OF A LICENSED PROFESSIONAL ENGINEER OR LAND SURVEYOR, TO ALTER THIS DOCUMENT IN ANY WAY. IF ALTERED THE ALTERING PERSON SHALL COMPLY WITH THE REQUIREMENTS OF NEW YORK EDUCATION LAW, SECTION 7209.2.

DATE: 12/2020
DRAWN BY: YB
SCALE: AS SHOWN
REVIEWED BY: RF
PROJECT NO.: 19-1612
FILE:

DELAWARE ENGINEERING, D.P.C.
CIVIL AND ENVIRONMENTAL ENGINEERING
28 MADISON AVENUE EXTENSION, ALBANY, NY 12203 - 518.452.1290
55 SOUTH MAIN ST, ONEONTA, NY 13820 - 607.432.8073
31 NORTH MAIN STREET, LIBERTY, NY 12754 - 845.747.9952
6 TOWNSEND STREET, WALTON, NY 13856 - 607.865.9235
16 EAST MARKET ST., RED HOOK, NY 12571 - 518.452.1290
548 BROADWAY, MONTICELLO, NY 12701 - 845.791.7777

STATE OF NEW YORK · REGISTERED PROFESSIONAL ENGINEER · LICENSED PROFESSIONAL ENGINEER · No. 081-95

REVISIONS

NO.	DATE	DESCRIPTION

CONTRACT 1
SUFFERN WWTP UPGRADES
VILLAGE OF SUFFERN
ROCKLAND COUNTY, NEW YORK

FOUNDATION PLAN
(below elevation 278.16')

SHEET: S100

File: In \DRAWINGS\SUFFERN\WWTP\STRUCTURAL\VILLAGE OF SUFFERN WWTP-STRUCTURAL-HEADWORKS-19.DWG Saved: 12/8/2020 8:03:49 AM Plotted: 12/8/2020 8:08:50 AM User: Gary Markham LastSavedBy: markham

LEGEND:

DENOTES MCNICHOLS CO. OR EQUAL. $1\frac{1}{2}$"x$\frac{3}{16}$" SERIES GAL-150 ALUMINUM GRATING. ARROW INDICATES SPAN DIRECTION OF GRATING. SEE GRATING NOTES.

DENOTES ASTM A6061-T6 ALUMINUM CHANNEL OR ANGLE (LLV) OF SIZE NOTED. DASH LINES INDICATES LOCATION OF WEB OF CHANNEL OR VERTICAL LEG OF ANGLE.

EJ▶ DENOTES APPROXIMATE DESIRED LOCATION OF VERTICAL CMU WALL EXPANSION JOINT CONSTRUCTED AS PER TYPICAL CMU EXPANSION JOINT DETAIL ON SN DRAWINGS.

TYPICAL EXTERIOR CMU WALL:
10" THICK CONTINUOUS EXTERIOR CMU WALL ALONG BUILDING PERIMETER COMPRISED OF 10x8x16 NORMAL CMU BLOCK UNITS. REINFORCE W/ #6 VERTICAL BARS AT CENTERLINE OF CMU GROUT CELLS @ 24" MAX. O.C. AND 9 GAUGE HORIZONTAL DUROWALL LADDER REINFORCEMENT @ 16" O.C. ADD ADDITIONAL VERTICAL WALL DOWELS AND VERTICAL BARS AT ALL DOOR AND WINDOW JAMBS AND WALL CORNERS AS SHOWN HERE. ADD TRIPLE VERTICAL JAMB BARS AT EACH SIDE OF GARAGE DOOR OPENING AND DOUBLE JAMB BARS AT EACH SIDE OF ALL OPENINGS GREATER THAN 2' WIDE. GROUT ALL CMU WALL CELLS, TYP. SECURE VERTICAL BARS AT CENTERLINE OF GROUT CELLS PRIOR TO GROUTING OPERATIONS. IF CMU VERTICAL REINFORCEMENT IS LAPPED, LAP 36" MIN., TYP.

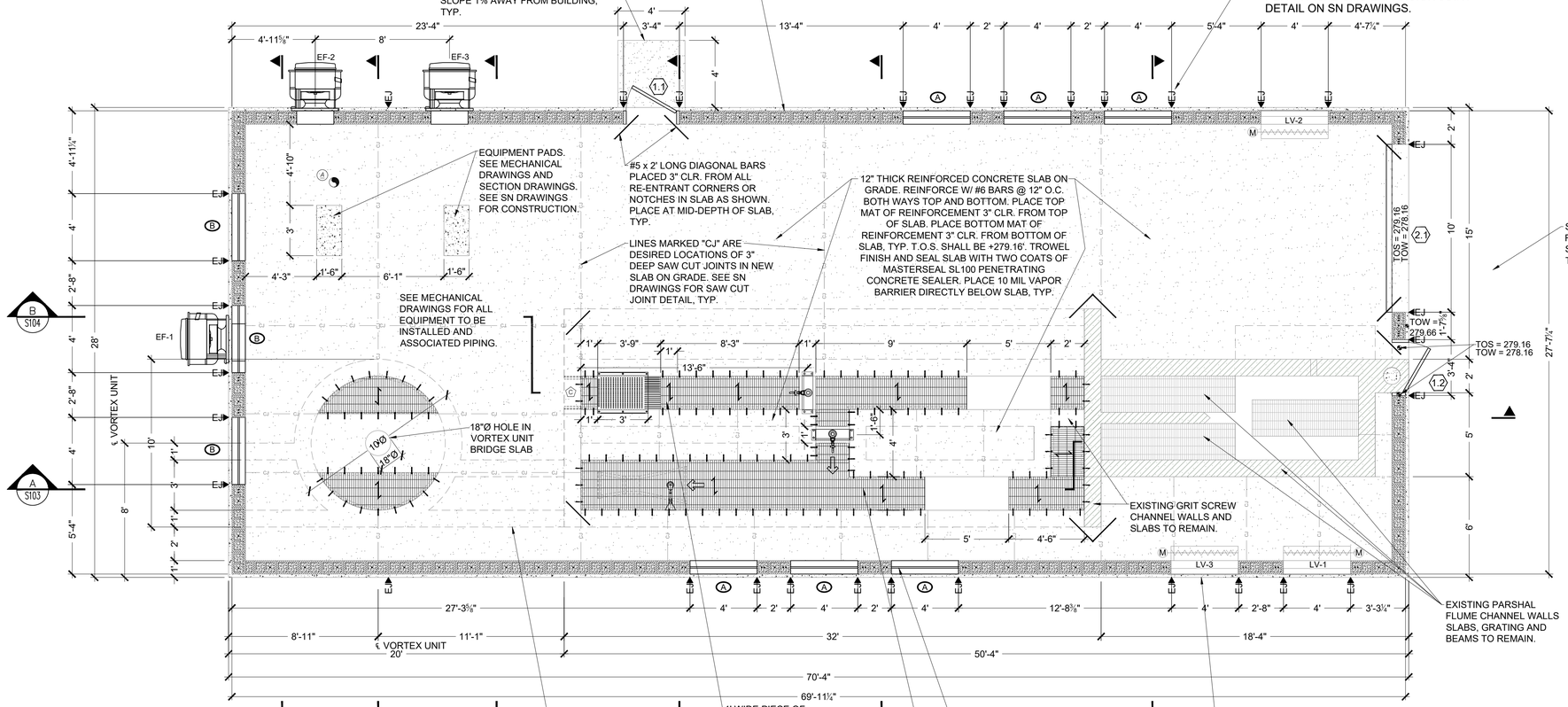

NOTE:
VERIFY LOUVER AND EXHAUST FAN ROUGH OPENING DIMENSIONS W/ MECH'L DWGS.

FLOOR GRATING NOTES

1. ALL FLOOR GRATES DENOTED AS ALUMINUM FLOOR GRATE ON LEGEND SHALL BE ALUMINUM ALLOY ASTM 6061-T6 AND SHALL BE BE OF RECTANGULAR I BAR CONFIGURATION, McNICHOLS MODEL NO. GAL-150 OR APPROVED EQUAL. DEPTH OF BEARING BARS SHALL BE $1\frac{1}{2}$" DEEP . FINISH SHALL BE MILL FINISH AS PER "OHIO GRATINGS" 19-SG-4 OR EQUAL. SURFACE TO BE STRIATED. ALL GRATING TO BE FASTENED TO SUPPORTING MEMBERS BY THE USE OF ALUMINUM OR EPOXY COATED STEEL DEVICES SUCH AS SADDLE CLIPS, GRATING CLAMPS, COUNTERSUNK LANDS, Z CLIPS OR ANCHOR BLOCKS, AS NECESSARY TO SECURE GRATING TO SUPPORTING MEMBERS OR PREPARED OPENINGS. ALL GRATING TO BE SUPPLIED IN SECTIONS NOT EXCEEDING 50 POUNDS IN WEIGHT FOR EASE OF REMOVAL. FINAL GRATING DESIGN AND LAYOUT SHALL BE SUBMITTED TO ENGINEER FOR REVIEW AND APPROVAL PRIOR TO CONSTRUCTION.
2. ALL LEDGER ANGLES SUPPORTING GRATING SHALL BE ASTM 6061-T6 ALUMINUM L3"x2"x$\frac{1}{4}$" (LLV) UNLESS NOTES OTHERWISE.
3. ALL EXPANSION ANCHORS SHALL BE STAINLESS STEEL ASTM A304 HILTI KWIK BOLT 3 OR EQUAL OF SIZE AND LENGTH SHOWN ON DRAWINGS. ALL EXPANSION ANCHORS TO BE INSTALLED W/ APPROPRIATE STAINLESS STEEL NUT, WASHER AND LOCK WASHER OF THE SAME TYPE AND GRADE OF STEEL.
4. ALL STRUCTURAL WELDS CONNECTING MEMBERS COMPRISED OF ALUMINUM ALLOY SHALL BE WELDED WITH ARC OR RESISTANCE WELDING PROCESS. NO WELDING PROCESS THAT REQUIRES THE USE OF A WELDING FLUX SHALL BE USED. THE FILLER METAL SHALL BE ALUMINUM ALLOY 4043 (ASTM DESIGNATION S5B),5154 (ASTM DESIGNATION GR40A) OR OTHER APPROVED ALLOY CAPABLE OF MEETING QUALIFICATION TEST REQUIREMENTS. ALL WELDING OF ALUMINUM SHALL BE PERFORMED BY A QUALIFIED CERTIFIED WELDER.

TOP SLAB/GRATING PLAN

SCALE: $\frac{1}{4}$" = 1'-0"

S101

BID PLANS

WARNING – IT IS A VIOLATION OF NEW YORK EDUCATION LAW SECTION 7209.2, FOR ANY PERSON, UNLESS HE IS ACTING UNDER THE DIRECTION OF A LICENSED PROFESSIONAL ENGINEER OR LAND SURVEYOR, TO ALTER THIS DOCUMENT IN ANY WAY. IF ALTERED THE ALTERING PERSON SHALL COMPLY WITH THE REQUIREMENTS OF NEW YORK EDUCATION LAW, SECTION 7209.2.

DATE:	12/2020
DRAWN BY:	YB
SCALE:	AS SHOWN
REVIEWED BY:	RF
PROJECT NO.:	19-1612
FILE:	

DELAWARE ENGINEERING, D.P.C.
CIVIL AND ENVIRONMENTAL ENGINEERING
28 MADISON AVENUE EXTENSION, ALBANY, NY 12203 - 518.452.1290
55 SOUTH MAIN ST, ONEONTA, NY 13820 - 607.432.8073
31 NORTH MAIN STREET, LIBERTY, NY 12754 - 845.747.9952
6 TOWNSEND STREET, WALTON, NY 13856 - 607.865.9235
16 EAST MARKET ST., RED HOOK, NY 12571 - 518.452.1290
548 BROADWAY, MONTICELLO, NY 12701 - 845.791.7777

STATE OF NEW YORK · REGISTERED PROFESSIONAL ENGINEER · 081956 · 12/31/21

REVISIONS

NO.	DATE	DESCRIPTION

CONTRACT 1
SUFFERN WWTP UPGRADES
VILLAGE OF SUFFERN
ROCKLAND COUNTY, NEW YORK

TOP SLAB/GRATING PLAN

SHEET: S101

File: I:\DRAWINGS\SUFFERN\WWTP\STRUCTURAL\VILLAGE OF SUFFERN WWTP-STRUCTURAL-HEADWORKS-R0.dwg Saved: 12/8/2020 8:03:49 AM Plotted: 12/8/2020 8:09:53 AM User: Gary Markham LastSavedBy: markham

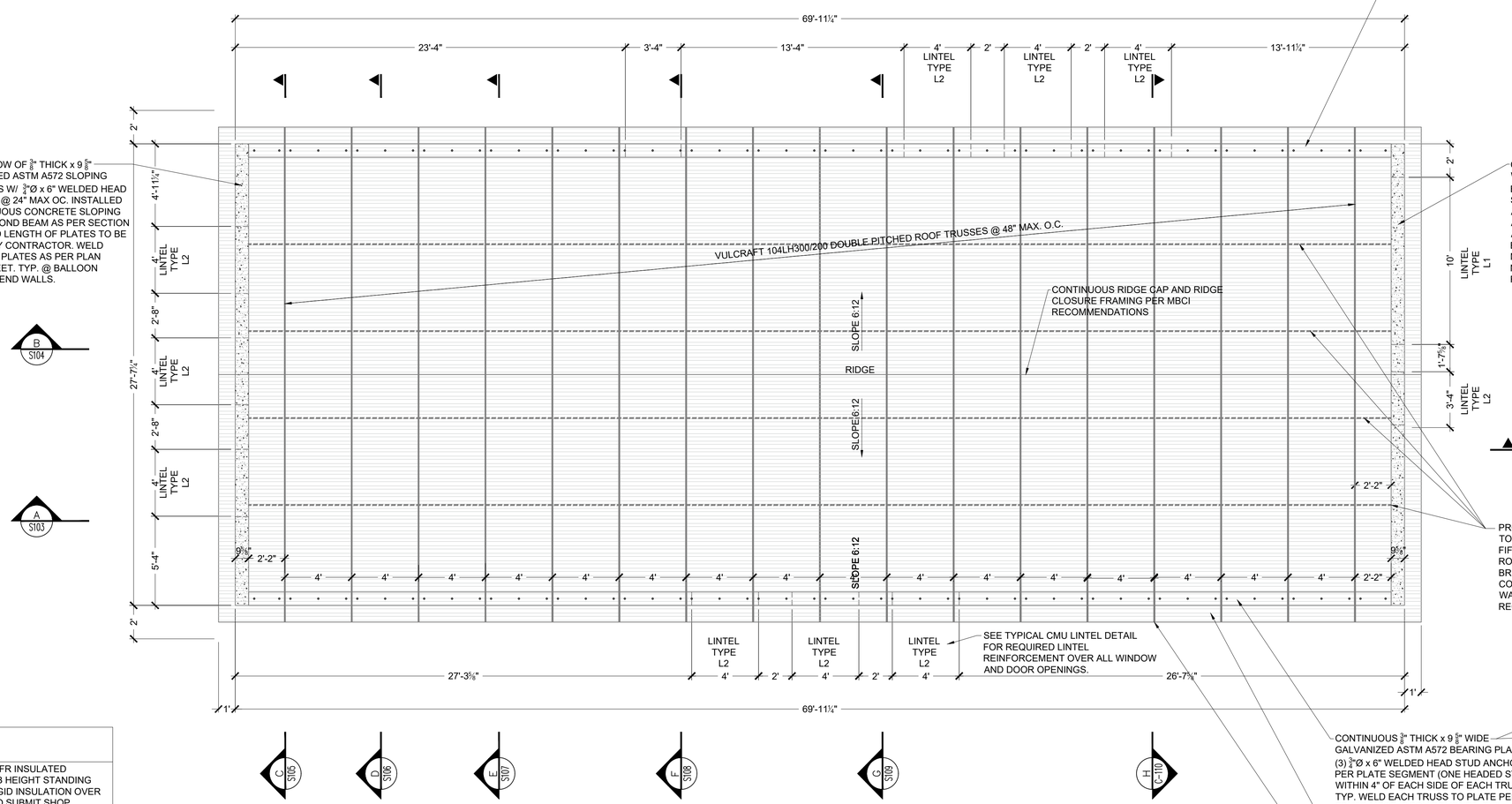

ROOF FRAMING PLAN

SCALE: ¼" = 1'-0"

S102

PLAN NOTES:

1. ROOFING SHALL BE MBCI OR EQUAL CFR INSULATED SANDWICH PANELS MADE UP OF 2" RIB HEIGHT STANDING SEAM METAL ROOFING OVER 5" OF RIGID INSULATION OVER METAL LINER PANEL. CONTRACTOR TO SUBMIT SHOP DRAWINGS FOR ROOFING INCLUDING ACTUAL RIDGE, EAVE AND RAKE DETAILS TO ENGINEER FOR APPROVAL PRIOR TO CONSTRUCTION. INSTALL ROOFING OVER GALVANIZED VERCO OR EQUAL 20 GAUGE 1½" B-CD FORMLOK DECK OVER PAINTED VULCRAFT DOUBLE PITCHED ROOF TRUSSES AS SHOWN. DO NOT PAINT TOP SURFACE OF TRUSS TOP CHORDS TO ALLOW ROOF DECKING TO BE WELDED TO TRUSSES.
2. CONTRACTOR SHALL INSTALL AND TERMINATE ALL HORIZONTAL TRUSS BRIDGING AS REQUIRED BY TRUSS MANUFACTURER. CONTRACTOR TO SUBMIT SHOP DRAWINGS FOR ALL ROOF TRUSSES, BRIDGING, AND ROOF DECK TO ENGINEER FOR APPROVAL PRIOR TO CONSTRUCTION.
3. GALVANIZED VERCO 1½", 20 GAUGE B-CD FORMLOK DECKING SHALL BE INSTALLED WITH DECK FLUTES PERPENDICULAR TO TRUSSES AS SHOWN. WELD DECK TO ALL SUPPORTING MEMBERS WITH 5/8"Ø PUDDLE WELDS EVERY OTHER LOW FLUTE (36/4) AND @ 12" O.C ALONG ALL TOP OF WALL GABLE END PLATES. SIDE SEAM LAPS SHALL BE SCREWED W/ #10 TEK SCREWS @ 6" OC.
4. REFER TO ELECTRICAL DRAWINGS FOR REQUIRED SOLAR PANELS TO BE INSTALLED ON ROOF. CONTRACTOR TO SUBMIT SHOP DRAWINGS FOR COMPLETE SOLAR PANEL INSTALLATION. IN ADDITION TO SOLAR PANELS, CONTRACTOR SHALL INSTALL A SNOW RAIL SYSTEM CONSISTING OF ONE OR MORE SNOW RAILS TO BE INSTALLED ON ROOF AS REQUIRED BY SNOW RAIL SYSTEM MANUFACTURER. CONTRACTOR TO SUBMIT SHOP DRAWINGS FOR SNOW RAIL SYSTEM INCLUDING CALCULATIONS TO ENGINEER FOR REVIEW AND APPROVAL PRIOR TO CONSTRUCTION.

BID PLANS

WARNING – IT IS A VIOLATION OF NEW YORK EDUCATION LAW SECTION 7209.2, FOR ANY PERSON, UNLESS HE IS ACTING UNDER THE DIRECTION OF A LICENSED PROFESSIONAL ENGINEER OR LAND SURVEYOR, TO ALTER THIS DOCUMENT IN ANY WAY. IF ALTERED THE ALTERING PERSON SHALL COMPLY WITH THE REQUIREMENTS OF NEW YORK EDUCATION LAW, SECTION 7209.2.

DATE:	12/2020
DRAWN BY:	YB
SCALE:	AS SHOWN
REVIEWED BY:	RF
PROJECT NO.:	19-1612
FILE:	

DELAWARE ENGINEERING, D.P.C.
CIVIL AND ENVIRONMENTAL ENGINEERING
28 MADISON AVENUE EXTENSION, ALBANY, NY 12203 - 518.452.1290
55 SOUTH MAIN ST, ONEONTA, NY 13820 - 607.432.8073
31 NORTH MAIN STREET, LIBERTY, NY 12754 - 845.747.9952
6 TOWNSEND STREET, WALTON, NY 13856 - 607.865.9235
16 EAST MARKET ST., RED HOOK, NY 12571 - 518.452.1290
548 BROADWAY, MONTICELLO, NY 12701 - 845.791.7777

REVISIONS

NO.	DATE	DESCRIPTION

CONTRACT 1
SUFFERN WWTP UPGRADES
VILLAGE OF SUFFERN
ROCKLAND COUNTY, NEW YORK

ROOF FRAMING PLAN

SHEET:
S102

File: I:\DRAWINGS\SUFFERN\WWTP\STRUCTURAL\VILLAGE OF SUFFERN WWTP-STRUCTURAL-HEADWORKS-RB.DWG Saved: 12/8/2020 8:03:49 AM Plotted: 12/8/2020 8:10:38 AM User: Gary Markham LastSavedBy: markhamg

NOTE:
REFER TO ELECTRICAL DRAWINGS FOR INFORMATION ON SOLAR PANELS TO BE INSTALLED ON ROOF (NOT SHOWN HERE). IN ADDITION, THE CONTRACTOR SHALL INSTALL SNOW A GUARD SYSTEM TO THE ROOF. THE SNOW GUARD SYSTEM SHALL BE DESIGNED BY SNOW GUARD MFGR. PER SPECIFICATIONS, TYP. AS A MINIMUM, SNOW GUARD RAILS SHALL BE INSTALLED BELOW THE BOTTOM MOST SOLAR PANELS. PROVIDE A MINIMUM OF ONE ROW OF SNOW GUARDS PER EAVE.

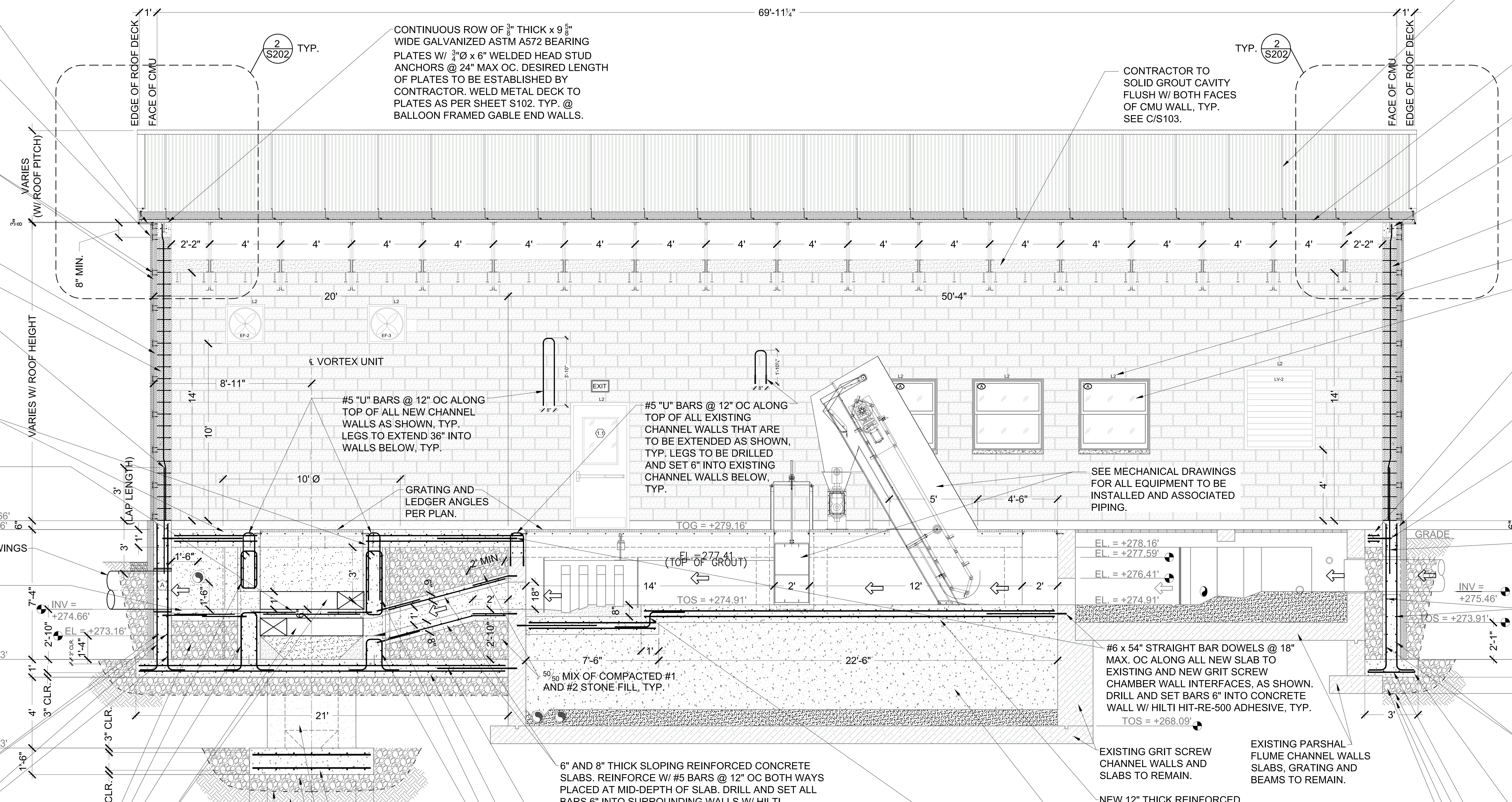

CONTINUOUS ALUMINUM SOFFIT. INSTALL W/ 24 GAUGE F CHANNELS AT BOTH ENDS. WELD OR SCREW CHANNELS TO BOTTOM OF TRUSS TOP CHORD AS REQUIRED, TYP.

29 GAUGE METAL SIDING, METAL SALES "CLASSIC RIB" OR EQUAL ¾" PROFILE. INSTALL W/ CONTINUOUS 24 GAUGE J CHANNEL (TOP) AND ALL REQUIRED FLASHING TO ENSURE WEATHER TIGHT SEAL AS PER MANUFACTURER RECOMMENDATIONS, TYP.

CONTRACTOR SHALL PROVIDE CONTINUOUS HORIZONTAL AND VERTICAL 1x4 FURRING STRIPS @ 24" MAX. O.C. BETWEEN CONTINUOUS INSULATION AND METAL PANEL SIDING TO FACILITATE INSTALLATION OF THE METAL PANEL SIDING, TYP.

2" THICK RIGID EXTRUDED POLYSTYRENE FOAM INSULATION ALONG OUTSIDE FACE OF ALL PERIMETER CMU WALLS, TYP.

TYPICAL 10" THICK EXTERIOR CMU PERIMETER WALL. REINFORCE ALL PERIMETER CMU WALLS PER NOTES ON PLAN SHEET S101, TYP.

#6 x 72" STRAIGHT BAR DOWELS @ 24" MAX OC TO LAP 36" MIN. W/ VERTICAL CMU WALL REINFORCEMENT. EMBED 36" INTO CONCRETE WALL BELOW AS SHOWN. PROVIDE ONE DOWEL PER EVERY VERTICAL BAR IN CMU WALL AS ILLUSTRATED ON PLAN VIEW S101, TYP.

12" THICK SLAB ON GRADE. REINFORCE W/ #6 BARS @ 12" OC BOTH WAYS TOP AND BOTTOM. LAP BARS 56" MIN. STAGGER LAPS, TYP.

6" THICK VARIABLE WIDTH REINFORCED CONCRETE SHELF SLAB. REINFORCE W/ #5 BARS @ 12" OC BOTH WAYS PLACED AT MID-DEPTH OF SHELF. DRILL AND SET ALL BARS 6" INTO SURROUNDING CYLINDRICAL WALLS W/ HILTI HIT-RE-500 ADHESIVE, TYP.

SEE MECH'L DRAWINGS FOR ALL PIPING.

8" THICK VARIABLE WIDTH REINFORCED CONCRETE SLAB. REINFORCE W/ #5 BARS @ 12" OC BOTH WAYS PLACED AT MID-DEPTH OF SLAB. DRILL AND SET ALL BARS 6" INTO SURROUNDING WALLS W/ HILTI HIT-RE-500 ADHESIVE, TYP. ADDITIONALLY, PROVIDE CONTINUOUS 4" PVC FUSED WATER STOP ALONG SLAB PERIMETER AS SHOWN, TYP.

#6 CONTINUOUS HORIZONTAL LONGITUDINAL BARS @ 12" MAX. O.C. BOTH FACES OF WALL AND FULL HEIGHT OF WALL. LAP 56" MIN. STAGGER LAPS. PROVIDE MATCHING CORNER BARS AT BUILDING CORNERS, TYP.

#6 VERTICAL BENT BAR DOWELS @ 12" OC BOTH FACES OF ALL PERIMETER WALLS, TYP. DOWELS TO REST ON, AND BE TIED TO THE BOTTOM MAT OF MAT FOUNDATION #2 REINFORCEMENT, TYP. ADDITIONALLY, INSTALL CONTINUOUS 6" FUSED WATER STOP AT THE BASE OF ALL 12" THICK CHANNEL WALLS AS SHOWN, TYP.

8'-4"
1'

CONTINUOUS ROW OF ⅜" THICK x 9⅝" WIDE GALVANIZED ASTM A572 BEARING PLATES W/ ¾"Ø x 6" WELDED HEAD STUD ANCHORS @ 24" MAX OC. DESIRED LENGTH OF PLATES TO BE ESTABLISHED BY CONTRACTOR. WELD METAL DECK TO PLATES AS PER SHEET S102. TYP. @ BALLOON FRAMED GABLE END WALLS.

#5 "U" BARS @ 12" OC ALONG TOP OF ALL NEW CHANNEL WALLS AS SHOWN, TYP. LEGS TO EXTEND 36" INTO WALLS BELOW, TYP.

#5 "U" BARS @ 12" OC ALONG TOP OF ALL EXISTING CHANNEL WALLS THAT ARE TO BE EXTENDED AS SHOWN, TYP. LEGS TO BE DRILLED AND SET 6" INTO EXISTING CHANNEL WALLS BELOW, TYP.

GRATING AND LEDGER ANGLES PER PLAN.

CONTRACTOR TO SOLID GROUT CAVITY FLUSH W/ BOTH FACES OF CMU WALL, TYP. SEE C/S103.

SEE MECHANICAL DRAWINGS FOR ALL EQUIPMENT TO BE INSTALLED AND ASSOCIATED PIPING.

50/50 MIX OF COMPACTED #1 AND #2 STONE FILL, TYP.

BAFFLE PLATES BY VORTEX UNIT MFGR. CONTRACTOR TO INSTALL. SEE D/S106.

50/50 MIX OF COMPACTED #1 AND #2 STONE FILL, TYP.

AT LOCATIONS WHERE CYLINDRICAL VORTEX UNIT WALLS ARE INTERRUPTED BY OUTLET OPENING, #6 VERTICAL DOWELS BELOW OPENING TURN INTO "U BARS" AND #6 VERTICAL BARS ABOVE OPENING TURN INTO CLOSED TIES AS SHOWN @ 12" OC, TYP.

WOVEN GEOTEXTILE FABRIC, MIRAFI 600X OR APPROVED EQUAL PLACED DIRECTLY UNDER STRUCTURAL FILL AS SHOWN. TYP.

COMPACTED NATIVE SOILS UNDER GEO-TECHNICAL ENGINEERS SUPERVISION, TYP.

18" THICK x 7' x 7' MAT SLAB FOUNDATION #1. TOS = 266.83'. REINFORCE W/ (7) #6 x 6'-8" BARS @ 12" OC BOTH WAYS TOP AND BOTTOM AS SHOWN. DO NOT SPLICE BARS.

LOWER VORTEX UNIT CYLINDRICAL WALLS BEYOND. SEE SECTION D/S106 FOR REINFORCEMENT.

12" THICK LAYER OF COMPACTED SELECT STRUCTURAL FILL OR SUITABLE FILL MATERIAL AS APPROVED BY THE GEOTECHNICAL ENGINEER. CONTRACTOR TO REFER TO GEOTECHNICAL REPORT FOR ACCEPTABLE PREPARATION OF SUB-BASE MATERIALS PRIOR TO PLACING CONCRETE.

6" AND 8" THICK SLOPING REINFORCED CONCRETE SLABS. REINFORCE W/ #5 BARS @ 12" OC BOTH WAYS PLACED AT MID-DEPTH OF SLAB. DRILL AND SET ALL BARS 6" INTO SURROUNDING WALLS W/ HILTI HIT-RE-500 ADHESIVE, TYP. ADDITIONALLY, PROVIDE CONTINUOUS 4" PVC FUSED WATER STOP ALONG SLAB PERIMETER AS SHOWN, TYP.

#6 x 54" STRAIGHT BAR DOWELS @ 18" MAX. OC ALONG ALL NEW SLAB TO EXISTING GRIT SCREW CHAMBER WALL INTERFACES, AS SHOWN. DRILL AND SET BARS 6" INTO CONCRETE WALL W/ HILTI HIT-RE-500 ADHESIVE, TYP.

12" THICK x 21' x 15' MAT FOUNDATION #2, T.O.S. = 271.83'. REINFORCE W/ #6 BARS @ 12" OC BOTH WAYS TOP AND BOTTOM. LAP BARS 56" MIN. STAGGER LAPS, TYP.

AT LOCATIONS WHERE CYLINDRICAL VORTEX UNIT WALLS ARE INTERRUPTED BY INLET OPENING, #6 VERTICAL DOWELS BELOW OPENING TURN INTO "U BARS" AND #6 VERTICAL BARS ABOVE OPENING TURN INTO CLOSED TIES AS SHOWN @ 12" OC, TYP.

#6 x 54" STRAIGHT BAR DOWELS @ 18" MAX. OC ALONG ALL NEW SLAB TO EXISTING AND NEW GRIT SCREW CHAMBER WALL INTERFACES, AS SHOWN. DRILL AND SET BARS 6" INTO CONCRETE WALL W/ HILTI HIT-RE-500 ADHESIVE, TYP.

EXISTING GRIT SCREW CHANNEL WALLS AND SLABS TO REMAIN.

EXISTING PARSHAL FLUME CHANNEL WALLS SLABS, GRATING AND BEAMS TO REMAIN.

NEW 12" THICK REINFORCED CONCRETE SLAB. REINFORCE W/ #6 BARS @ 12" MAX OC BOTH WAYS TOP AND BOTTOM. LAP BARS 56" MIN. STAGGER LAPS, TYP.

FILL EXISTING CAVITIES TO UNDERSIDE OF NEW 12" THICK SLABS WITH CONCRETE SLURRY FILL, TYP.

#6 BENT BAR DOWELS @ 12" MAX. OC TO CONNECT NEW UPPER AND LOWER SLABS AS SHOWN.

ROOFING SYSTEM SHALL BE MBCI MODEL CFR INSULATED ROOF SANDWICH PANELS OR EQUAL COMBINING 2" STANDING SEAM METAL ROOF OVER 5" OF RIGID INSULATION OVER INTERIOR METAL LINER PANEL INSTALLED OVER VERCO 1½" DECK. CONNECTIONS AND ENTIRE ROOF ASSEMBLY MUST BE DESIGNED TO ACCOMMODATE FORCES FROM BASIC WIND LOAD SPEED OF 115 MPH.

VERCO OR EQUAL 1½", 20 GAUGE STEEL B-CD FORMLOK ROOF DECK. WELD TO SUPPORTING ROOF TRUSSES PER ROOF FRAMING PLAN S102, TYP.

VULCRAFT 104LH300/200 DOUBLE PITCHED ROOF TRUSSES @ 48" MAX. O.C. PER ROOF FRAMING PLAN S102, TYP.

CONTINUOUS 9⅝" WIDE x 8" DEEP MIN. CAST IN PLACE SLOPING AND STEPPED CONCRETE BOND BEAM W/ (2) #6 CONTINUOUS BARS, ONE EACH SIDE OF HEADED STUD, TYP. LAP BARS 36" MIN. STAGGER LAPS. PROVIDE MATCHING CORNER BARS AT CMU WALL CORNERS, TYP.

CMU WALL AT GABLE ENDS TO CONTINUE TO UNDERSIDE OF STEPPED CAST IN PLACE CONCRETE BOND BEAM, AS SHOWN, TYP.

SEE TYPICAL CMU LINTEL DETAIL FOR REQUIRED LINTEL REINFORCEMENT, TYP.

SEE WINDOW SCHEDULE FOR INFORMATION ON WINDOWS. COORDINATE REQUIRED ROUGH OPENING DIMENSIONS WITH WINDOW MANUFACTURER. REFER TO WINDOW HEAD, SILL AND JAMB DETAILS ON SN DRAWINGS, TYP.

12" THICK SLAB ON GRADE. REINFORCE W/ #6 BARS @ 12" MAX OC BOTH WAYS TOP AND BOTTOM. LAP BARS 56" MIN. STAGGER LAPS, TYP.

NEW CONTINUOUS 12" THICK x 7'-10" TALL REINFORCED CONCRETE STEM WALL ALONG BUILDING PERIMETER.

#6 STRAIGHT BAR DOWELS @ 18" MAX. OC ALONG SLAB TO WALL INTERFACES AS SHOWN, DRILL AND SET BARS 6" INTO CONCRETE WALL W/ HILTI HIT-RE-500 ADHESIVE, TYP.

#6 x 72" STRAIGHT BAR DOWELS @ 24" MAX OC TO LAP 36" MIN. W/ VERTICAL CMU REINFORCEMENT. EMBED 36" INTO CONCRETE WALL AS SHOWN. PROVIDE ONE DOWEL PER EVERY VERTICAL BAR IN CMU WALL AS ILLUSTRATED ON PLAN VIEW S101, TYP.

#6 CONTINUOUS HORIZONTAL LONGITUDINAL BARS @ 12" MAX. O.C. BOTH FACES OF WALL AND FULL HEIGHT OF WALL. LAP 56" MIN. STAGGER LAPS. PROVIDE MATCHING CORNER BARS AT BUILDING CORNERS, TYP.

#6 VERTICAL BENT BAR DOWELS @ 12" MAX OC AROUND BOTH FACES OF WALL, TYP. ALONG ALL PERIMETER CONCRETE WALLS. MAINTAIN 2" CLR. BETWEEN FACE OF WALL AND REINFORCEMENT, TYP.

8'-4"
1'

12" THICK X 3'-0" WIDE CONTINUOUS REINFORCED CONCRETE FOOTING. REINFORCE W/ (4) #6 LONGITUDINAL BARS (EQUALLY SPACED) AS SHOWN. LAP BARS 56" MIN. STAGGER LAPS. TYP. PROVIDE MATCHING CORNER BARS AT ALL FOOTING CORNERS AND TEES, TYP.

#5 x 2'-8" TRANSVERSE BARS @ 12" MAX OC, TYP ALL CONTINUOUS SPREAD FOOTINGS.

WOVEN GEOTEXTILE FABRIC, MIRAFI 600X OR APPROVED EQUAL PLACED DIRECTLY UNDER STRUCTURAL FILL AS SHOWN. TYP.

NATIVE SOILS TO BE COMPACTED UNDER THE SUPERVISION OF THE GEO-TECHNICAL ENGINEER, TYP.

12" THICK LAYER OF COMPACTED SELECT STRUCTURAL FILL OR SUITABLE FILL MATERIAL AS APPROVED BY THE GEOTECHNICAL ENGINEER. CONTRACTOR TO REFER TO GEOTECHNICAL REPORT FOR ACCEPTABLE PREPARATION OF SUB-BASE MATERIALS PRIOR TO PLACING CONCRETE.

NOTE:
SEE TRANSVERSE SECTIONS C/S103 TO H/S110 FOR BALANCE OF NOTES.

NOTE:
VERIFY LOUVER AND EXHAUST FAN ROUGH OPENING DIMENSIONS W/ MECH'L DWGS.

SECTION
SCALE: ⅛" = 1'-0"

A
S103

BID PLANS

WARNING – IT IS A VIOLATION OF NEW YORK EDUCATION LAW SECTION 7209.2, FOR ANY PERSON, UNLESS HE IS ACTING UNDER THE DIRECTION OF A LICENSED PROFESSIONAL ENGINEER OR LAND SURVEYOR, TO ALTER THIS DOCUMENT IN ANY WAY. IF ALTERED THE ALTERING PERSON SHALL COMPLY WITH THE REQUIREMENTS OF NEW YORK EDUCATION LAW, SECTION 7209.2.

DATE:	12/2020
DRAWN BY:	YB
SCALE:	AS SHOWN
REVIEWED BY:	RF
PROJECT NO.:	19-1612
FILE:	

DELAWARE ENGINEERING, D.P.C.
CIVIL AND ENVIRONMENTAL ENGINEERING
28 MADISON AVENUE EXTENSION, ALBANY, NY 12203 - 518.452.1290
55 SOUTH MAIN ST, ONEONTA, NY 13820 - 607.432.8073
31 NORTH MAIN STREET, LIBERTY, NY 12754 - 845.747.9952
3 TOWNSEND STREET, WALTON, NY 13856 - 607.865.9235
16 EAST MARKET ST, RED HOOK, NY 12571 - 518.452.1290
548 BROADWAY, MONTICELLO, NY 12701 - 845.791.7777

REVISIONS

NO.	DATE	DESCRIPTION

CONTRACT 1
SUFFERN WWTP UPGRADES
VILLAGE OF SUFFERN
ROCKLAND COUNTY, NEW YORK

SECTION

SHEET:
S103

29 GAUGE METAL SIDING, METAL SALES "CLASSIC RIB" OR EQUAL $\frac{3}{4}$" PROFILE. INSTALL W/ CONTINUOUS 24 GAUGE J CHANNEL (TOP) AND ALL REQUIRED FLASHING TO ENSURE WEATHER TIGHT SEAL AS PER MANUFACTURER RECOMMENDATIONS, TYP.

CONTRACTOR SHALL PROVIDE CONTINUOUS HORIZONTAL AND VERTICAL 1x4 FURRING STRIPS @ 24" MAX. O.C. BETWEEN CONTINUOUS INSULATION AND METAL PANEL SIDING TO FACILITATE INSTALLATION OF THE METAL PANEL SIDING, TYP.

2" THICK RIGID EXTRUDED POLYSTYRENE FOAM INSULATION ALONG OUTSIDE FACE OF ALL PERIMETER CMU WALLS, TYP.

TYPICAL 10" THICK EXTERIOR CMU PERIMETER WALL. REINFORCE ALL PERIMETER CMU WALLS PER NOTES ON PLAN SHEET S101, TYP.

SEE WINDOW SCHEDULE FOR INFORMATION ON WINDOWS. COORDINATE REQUIRED ROUGH OPENING DIMENSIONS WITH WINDOW MANUFACTURER. REFER TO WINDOW HEAD, SILL AND JAMB DETAILS ON SN DRAWINGS, TYP.

#6 x 72" STRAIGHT BAR DOWELS @ 24" MAX OC TO LAP 36" MIN. W/ VERTICAL CMU WALL REINFORCEMENT. EMBED 36" INTO CONCRETE WALL BELOW AS SHOWN. PROVIDE ONE DOWEL PER EVERY VERTICAL BAR IN CMU WALL AS ILLUSTRATED ON PLAN VIEW S101, TYP.

#6 x 54" STRAIGHT BAR DOWELS @ 18" MAX. OC ALONG ALL SLAB TO WALL INTERFACES, AS SHOWN. DRILL AND SET BARS 6" INTO CONCRETE WALL W/ HILTI HIT-RE-500 ADHESIVE, TYP.

FINISH GRADE ELEVATION PER SITE PLAN SLOPE GRADE TO DRAIN AWAY FROM BLDG. $\frac{1}{4}$"/FT. MIN., TYP.

4" THICK EXTRUDED RIGID POLYSTYRENE FOAM INSULATION, TYP. ALONG BUILDING PERIMETER. INSULATION SHALL BE ATTACHED TO CONCRETE STEM WALL PER MFGR. RECOMMENDATIONS. COVER WITH CONTINUOUS PAINTED 24 GAUGE METAL FLASHING W/ DRIP EDGE AS SHOWN, TYP. FLASHING TO BE ADHERED TO INSULATION.

BACK FILL AROUND ALL WALLS W/ 50/50 MIX OF COMPACTED #1 AND #2 STONE FOR 2' MIN.THICKNESS ADJACENT TO WALL, TYP. SEPARATE STONE FILL FROM SURROUNDING SOILS W/ GEOTEXTILE FABRIC AS SHOWN, TYP.

#6 CONTINUOUS HORIZONTAL LONGITUDINAL BARS @ 12" MAX. O.C. BOTH FACES OF WALL AND FULL HEIGHT OF WALL. LAP 56" MIN. STAGGER LAPS. PROVIDE MATCHING CORNER BARS AT BUILDING CORNERS. TYP.

#6 VERTICAL BENT BAR DOWELS @ 12" OC BOTH FACES OF ALL PERIMETER WALLS, TYP. DOWELS TO REST ON, AND BE TIED TO THE BOTTOM MAT OF MAT FOUNDATION #2 REINFORCEMENT, TYP. ADDITIONALLY, INSTALL CONTINUOUS 6" FUSED WATER STOP AT THE BASE OF ALL 12" THICK CHANNEL WALLS AS SHOWN, TYP.

12" THICK X 3'-0" WIDE CONTINUOUS REINFORCED CONCRETE FOOTING. REINFORCE W/ (4) #6 LONGITUDINAL BARS (EQUALLY SPACED) AS SHOWN. LAP BARS 56" MIN. STAGGER LAPS. TYP. PROVIDE MATCHING CORNER BARS AT ALL FOOTING CORNERS AND TEES, TYP.

#5 x 2'-8" TRANSVERSE BARS @ 12" MAX OC, TYP ALL CONTINUOUS SPREAD FOOTINGS.

WOVEN GEOTEXTILE FABRIC, MIRAFI 600X OR APPROVED EQUAL PLACED DIRECTLY UNDER STRUCTURAL FILL AS SHOWN. TYP.

NATIVE SOILS TO BE COMPACTED UNDER THE SUPERVISION OF THE GEO-TECHNICAL ENGINEER, TYP.

12" THICK LAYER OF COMPACTED SELECT STRUCTURAL FILL OR SUITABLE FILL MATERIAL AS APPROVED BY THE GEOTECHNICAL ENGINEER. CONTRACTOR TO REFER TO GEOTECHNICAL REPORT FOR ACCEPTABLE PREPARATION OF SUB-BASE MATERIALS PRIOR TO PLACING CONCRETE.

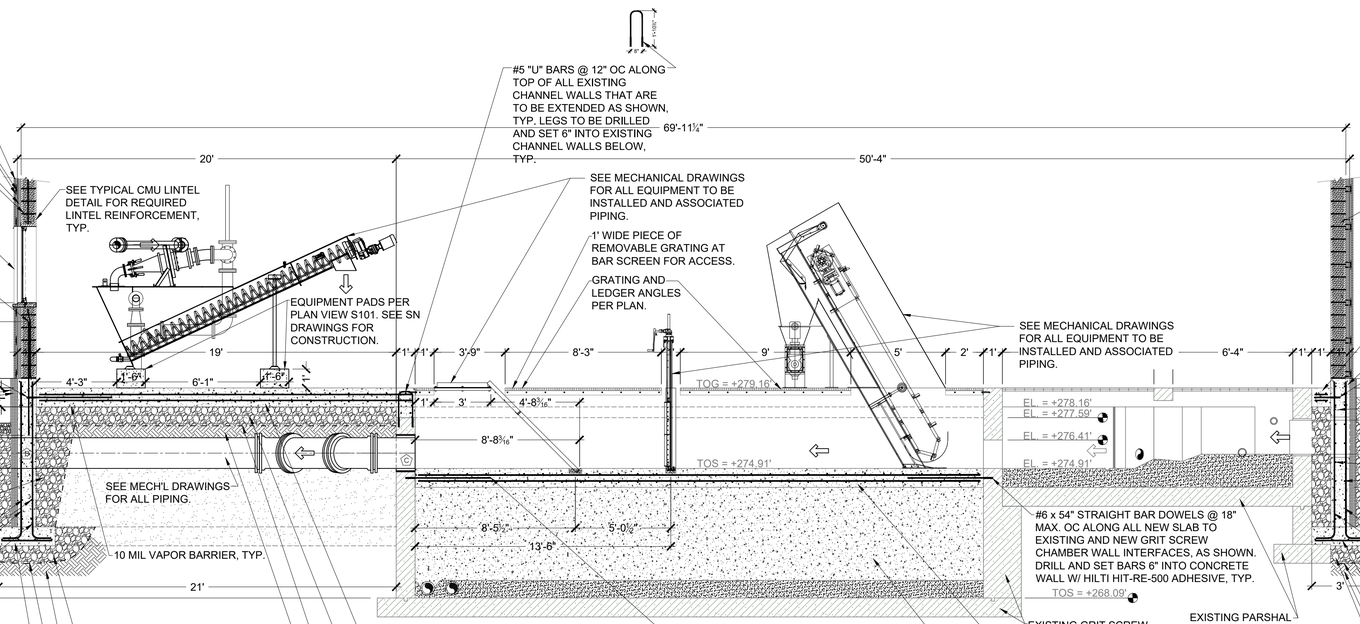

SECTION B / S104

SCALE: $\frac{1}{4}$" = 1'-0"

BID PLANS

WARNING — IT IS A VIOLATION OF NEW YORK EDUCATION LAW SECTION 7209.2, FOR ANY PERSON, UNLESS HE IS ACTING UNDER THE DIRECTION OF A LICENSED PROFESSIONAL ENGINEER OR LAND SURVEYOR, TO ALTER THIS DOCUMENT IN ANY WAY. IF ALTERED THE ALTERING PERSON SHALL COMPLY WITH THE REQUIREMENTS OF NEW YORK EDUCATION LAW, SECTION 7209.2.

DATE: 12/2020
DRAWN BY: YB
SCALE: AS SHOWN
REVIEWED BY: RF
PROJECT NO.: 19-1612
FILE:

DELAWARE ENGINEERING, D.P.C.
CIVIL AND ENVIRONMENTAL ENGINEERING
28 MADISON AVENUE EXTENSION, ALBANY, NY 12203 - 518.452.1290
55 SOUTH MAIN ST, ONEONTA, NY 13820 - 607.432.8073
31 NORTH MAIN STREET, LIBERTY, NY 12754 - 845.747.9952
6 TOWNSEND STREET, WALTON, NY 13856 - 607.865.9235
16 EAST MARKET ST., RED HOOK, NY 12571 - 518.452.1290
548 BROADWAY, MONTICELLO, NY 12701 - 845.791.7777

REGISTERED PROFESSIONAL ENGINEER — STATE OF NEW YORK — LICENSE No. 081950

REVISIONS

NO.	DATE	DESCRIPTION

CONTRACT 1
SUFFERN WWTP UPGRADES
VILLAGE OF SUFFERN
ROCKLAND COUNTY, NEW YORK

SECTION

SHEET: S104

File: I:\DRAWINGS\SUFFERN\WWTP\STRUCTURAL\VILLAGE OF SUFFERN WWTP-STRUCTURAL-HEADWORKS-19.dwg Saved: 12/8/2020 8:03:49 AM Plotted: 12/8/2020 8:12:12 AM User: Gary Markham LastSavedBy: markhamg

NOTE:
REFER TO ELECTRICAL DRAWINGS FOR INFORMATION ON SOLAR PANELS TO BE INSTALLED ON ROOF (NOT SHOWN HERE). IN ADDITION, THE CONTRACTOR SHALL INSTALL SNOW A GUARD SYSTEM TO THE ROOF. THE SNOW GUARD SYSTEM SHALL BE DESIGNED BY SNOW GUARD MFGR. PER SPECIFICATIONS, TYP. AS A MINIMUM, SNOW GUARD RAILS SHALL BE INSTALLED BELO THE BOTTOM MOST SOLAR PANELS. PROVIDE A MINIMUM OF ONE ROW OF SNOW GUARDS PER EAVE.

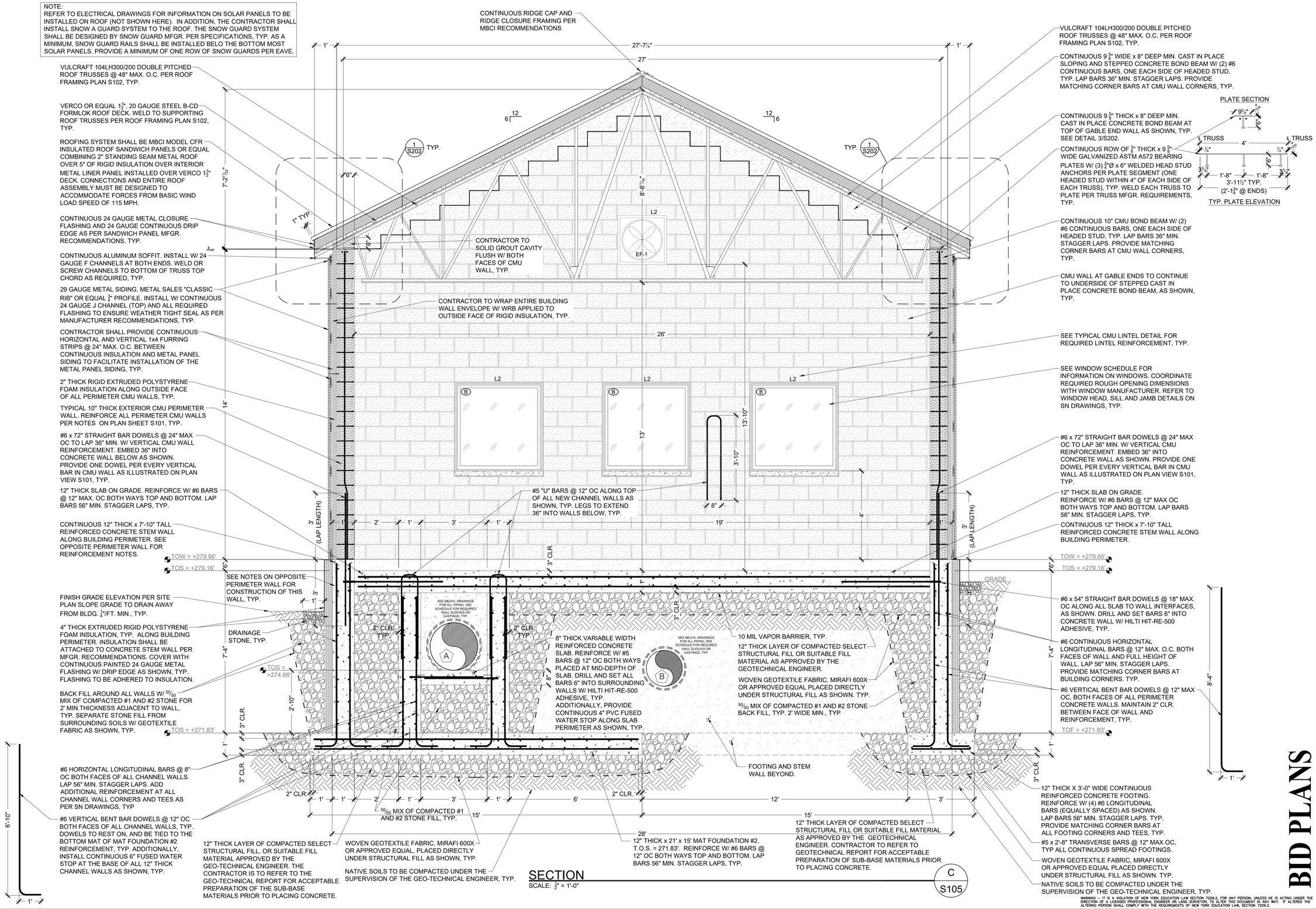

SECTION
SCALE: 3/8" = 1'-0"

WARNING – IT IS A VIOLATION OF NEW YORK EDUCATION LAW SECTION 7209-2, FOR ANY PERSON, UNLESS HE IS ACTING UNDER THE DIRECTION OF A LICENSED PROFESSIONAL ENGINEER OR LAND SURVEYOR, TO ALTER THIS DOCUMENT IN ANY WAY. IF ALTERED THE ALTERING PERSON SHALL COMPLY WITH THE REQUIREMENTS OF NEW YORK EDUCATION LAW, SECTION 7209-2.

BID PLANS

DATE: 12/2020
DRAWN BY: YB
SCALE: AS SHOWN
REVIEWED BY: RF
PROJECT NO.: 19-1612
FILE:

DELAWARE ENGINEERING, D.P.C.
CIVIL AND ENVIRONMENTAL ENGINEERING
28 MADISON AVENUE EXTENSION, ALBANY, NY 12203 - 518.452.1290
55 SOUTH MAIN ST, ONEONTA, NY 13820 - 607.432.8073
31 NORTH MAIN STREET, LIBERTY, NY 12754 - 845.747.9952
6 TOWNSEND STREET, WALTON, NY 13856 - 607.865.9235
16 EAST MARKET ST., RED HOOK, NY 12571 - 518.452.1290
548 BROADWAY, MONTICELLO, NY 12701 - 845.791.7777

STATE OF NEW YORK · FRED E. DELAWARE · LICENSED PROFESSIONAL ENGINEER · No. 081950

REVISIONS

NO.	DATE	DESCRIPTION

CONTRACT 1
SUFFERN WWTP UPGRADES
VILLAGE OF SUFFERN
ROCKLAND COUNTY, NEW YORK

SECTION

SHEET: S105

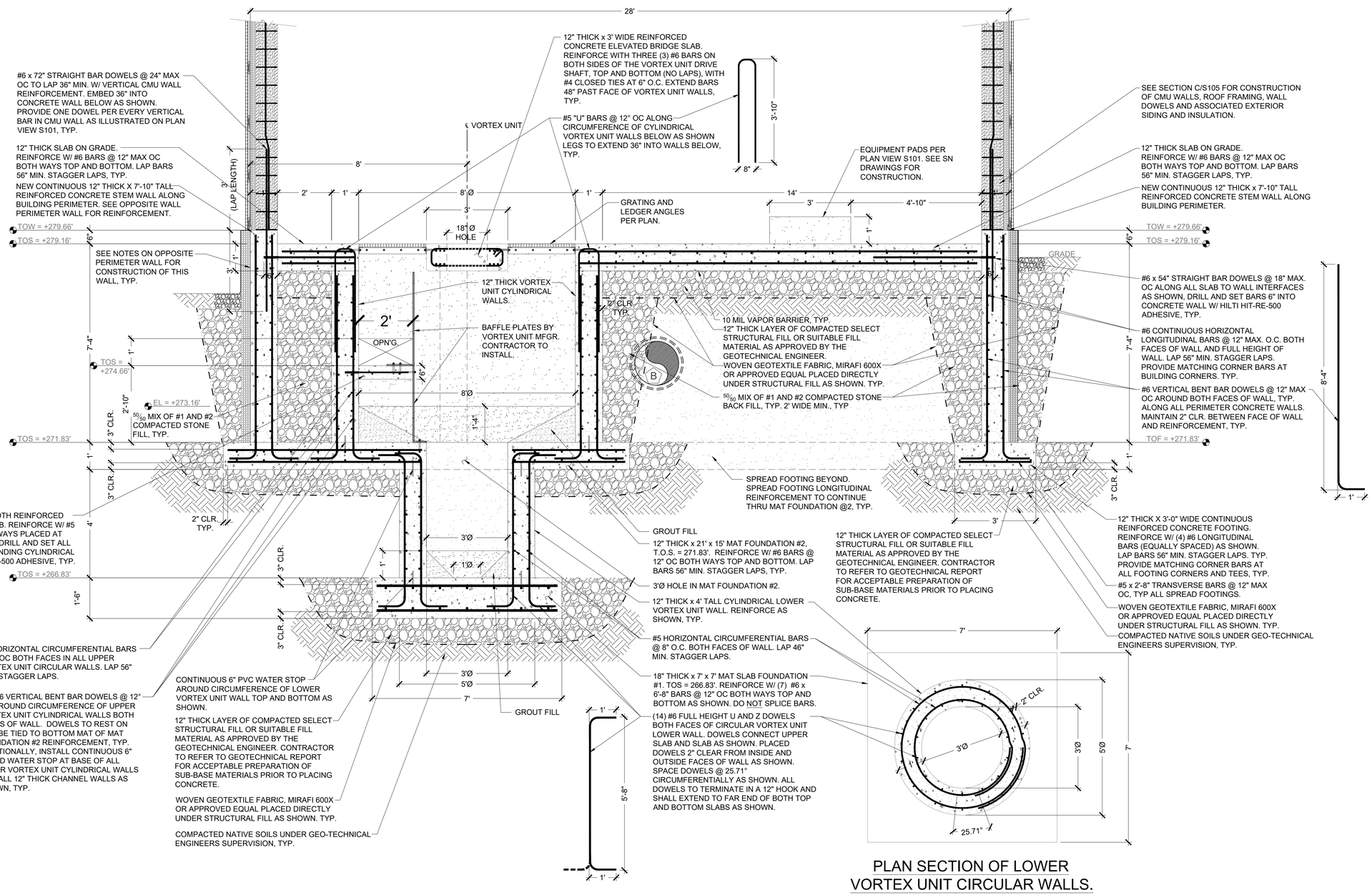

PLAN SECTION OF LOWER VORTEX UNIT CIRCULAR WALLS.

SECTION D / S106

SCALE: 3/4" = 1'-0"

BID PLANS

WARNING – IT IS A VIOLATION OF NEW YORK EDUCATION LAW SECTION 7209-2, FOR ANY PERSON, UNLESS HE IS ACTING UNDER THE DIRECTION OF A LICENSED PROFESSIONAL ENGINEER OR LAND SURVEYOR, TO ALTER THIS DOCUMENT IN ANY WAY. IF ALTERED THE ALTERING PERSON SHALL COMPLY WITH THE REQUIREMENTS OF NEW YORK EDUCATION LAW, SECTION 7209-2.

DATE:	12/2020
DRAWN BY:	YB
SCALE:	AS SHOWN
REVIEWED BY:	RF
PROJECT NO.:	19-1612
FILE:	

DELAWARE ENGINEERING, D.P.C.
CIVIL AND ENVIRONMENTAL ENGINEERING
28 MADISON AVENUE EXTENSION, ALBANY, NY 12203 - 518.452.1290
55 SOUTH MAIN ST, ONEONTA, NY 13820 - 607.432.8073
31 NORTH MAIN STREET, LIBERTY, NY 12754 - 845.747.9952
6 TOWNSEND STREET, WALTON, NY 13856 - 607.865.9235
16 EAST MARKET ST., RED HOOK, NY 12571 - 518.452.1290
548 BROADWAY, MONTICELLO, NY 12701 - 845.791.7777

REGISTERED PROFESSIONAL ENGINEER — STATE OF NEW YORK — 081,956 — STATE OF FLORIDA

REVISIONS

NO.	DATE	DESCRIPTION

CONTRACT 1
SUFFERN WWTP UPGRADES
VILLAGE OF SUFFERN
ROCKLAND COUNTY, NEW YORK

SECTION

SHEET: S106

NOTE:
REFER TO ELECTRICAL DRAWINGS FOR INFORMATION ON SOLAR PANELS TO BE INSTALLED ON ROOF (NOT SHOWN HERE). IN ADDITION, THE CONTRACTOR SHALL INSTALL SNOW A GUARD SYSTEM TO THE ROOF. THE SNOW GUARD SYSTEM SHALL BE DESIGNED BY SNOW GUARD MFGR. PER SPECIFICATIONS, TYP. AS A MINIMUM, SNOW GUARD RAILS SHALL BE INSTALLED BELO THE BOTTOM MOST SOLAR PANELS. PROVIDE A MINIMUM OF ONE ROW OF SNOW GUARDS PER EAVE.

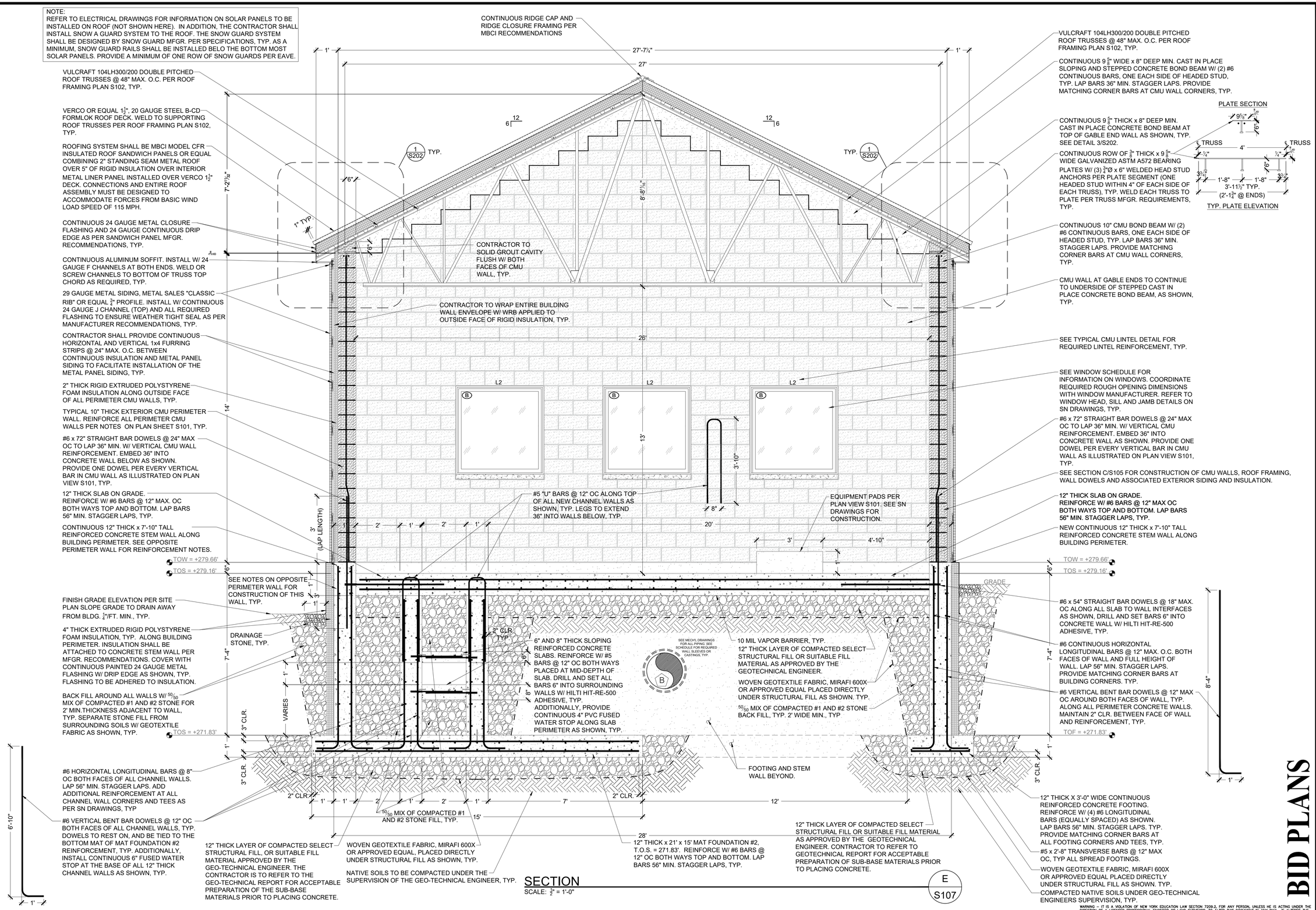

SECTION

SCALE: ¾" = 1'-0"

E
S107

BID PLANS

DATE: 12/2020
DRAWN BY: YB
SCALE: AS SHOWN
REVIEWED BY: RF
PROJECT NO.: 19-1612
FILE:

DELAWARE ENGINEERING, D.P.C.
CIVIL AND ENVIRONMENTAL ENGINEERING
28 MADISON AVENUE EXTENSION, ALBANY, NY 12203 - 518.452.1290
55 SOUTH MAIN ST, ONEONTA, NY 13820 - 607.432.8073
31 NORTH MAIN STREET, LIBERTY, NY 12754 - 845.747.9952
6 TOWNSEND STREET, WALTON, NY 13856 - 607.865.9235
16 EAST MARKET ST., RED HOOK, NY 12571 - 518.452.1290
548 BROADWAY, MONTICELLO, NY 12701 - 845.791.7777

STATE OF NEW YORK · REGISTERED PROFESSIONAL ENGINEER · RICHARD FLORIO · 081-58

REVISIONS

NO.	DATE	DESCRIPTION

CONTRACT 1
SUFFERN WWTP UPGRADES
VILLAGE OF SUFFERN
ROCKLAND COUNTY, NEW YORK

SECTION

SHEET:
S107

WARNING – IT IS A VIOLATION OF NEW YORK EDUCATION LAW SECTION 7209.2, FOR ANY PERSON, UNLESS HE IS ACTING UNDER THE DIRECTION OF A LICENSED PROFESSIONAL ENGINEER OR LAND SURVEYOR, TO ALTER THIS DOCUMENT IN ANY WAY. IF ALTERED THE ALTERING PERSON SHALL COMPLY WITH THE REQUIREMENTS OF NEW YORK EDUCATION LAW, SECTION 7209.2.

NOTE:
REFER TO ELECTRICAL DRAWINGS FOR INFORMATION ON SOLAR PANELS TO BE INSTALLED ON ROOF (NOT SHOWN HERE). IN ADDITION, THE CONTRACTOR SHALL INSTALL SNOW A GUARD SYSTEM TO THE ROOF. THE SNOW GUARD SYSTEM SHALL BE DESIGNED BY SNOW GUARD MFGR. PER SPECIFICATIONS, TYP. AS A MINIMUM, SNOW GUARD RAILS SHALL BE INSTALLED BELO THE BOTTOM MOST SOLAR PANELS. PROVIDE A MINIMUM OF ONE ROW OF SNOW GUARDS PER EAVE.

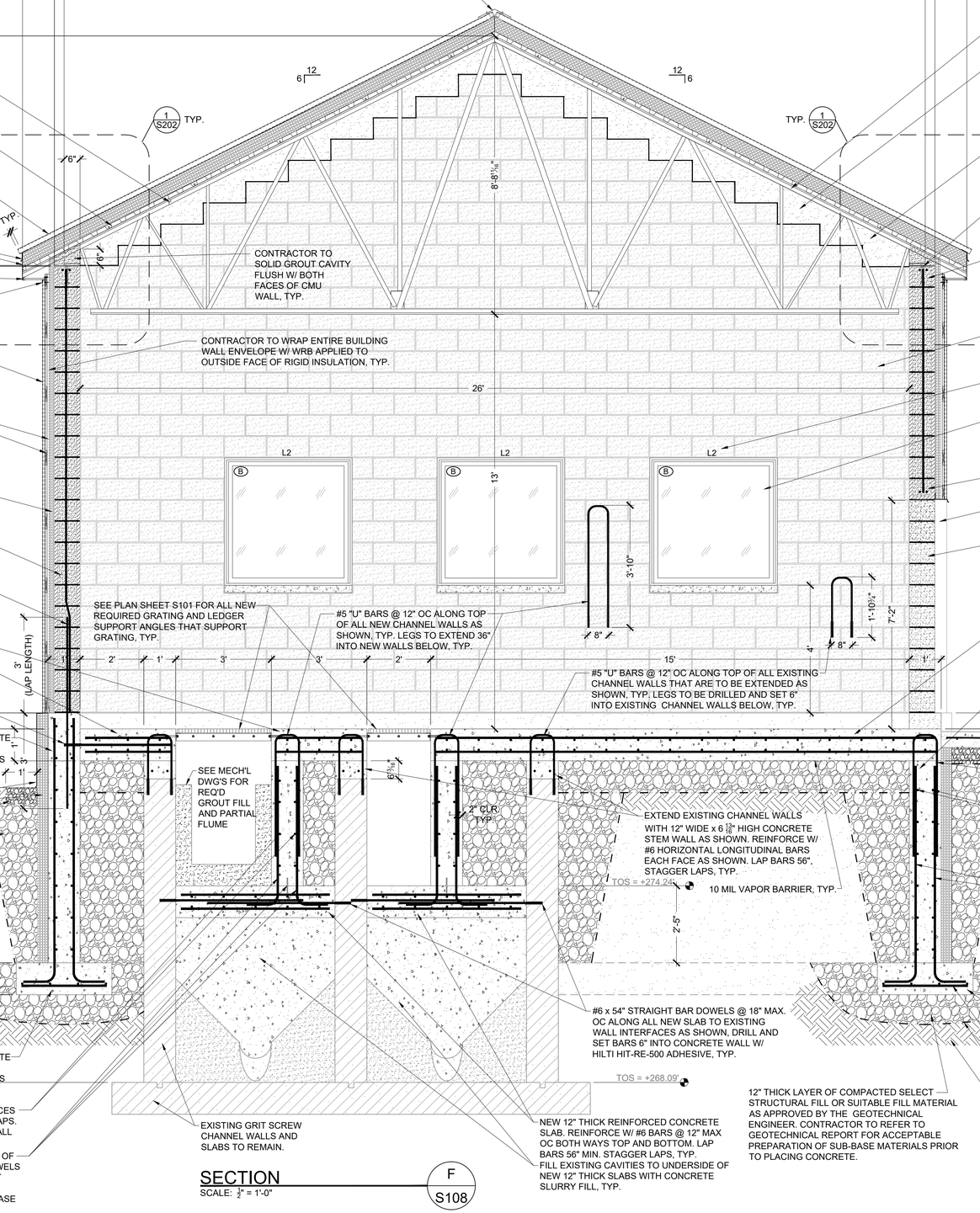

SECTION
SCALE: ¼" = 1'-0"
F
S108

WARNING – IT IS A VIOLATION OF NEW YORK EDUCATION LAW SECTION 7209.2, FOR ANY PERSON, UNLESS HE IS ACTING UNDER THE DIRECTION OF A LICENSED PROFESSIONAL ENGINEER OR LAND SURVEYOR, TO ALTER THIS DOCUMENT IN ANY WAY. IF ALTERED THE ALTERING PERSON SHALL COMPLY WITH THE REQUIREMENTS OF NEW YORK EDUCATION LAW, SECTION 7209.2.

BID PLANS

DATE: 12/2020
DRAWN BY: YB
SCALE: AS SHOWN
REVIEWED BY: RF
PROJECT NO.: 19-1612
FILE:

DELAWARE ENGINEERING, D.P.C.
CIVIL AND ENVIRONMENTAL ENGINEERING
28 MADISON AVENUE EXTENSION, ALBANY, NY 12203 - 518.452.1290
55 SOUTH MAIN ST, ONEONTA, NY 13820 - 607.432.8073
31 NORTH MAIN STREET, LIBERTY, NY 12754 - 845.747.9952
6 TOWNSEND STREET, WALTON, NY 13856 - 607.865.9235
16 EAST MARKET ST., RED HOOK, NY 12571 - 518.452.1290
548 BROADWAY, MONTICELLO, NY 12701 - 845.791.7777

STATE OF NEW YORK · REGISTERED PROFESSIONAL ENGINEER · LICENSED PROFESSIONAL · No. 081,956

REVISIONS

NO.	DATE	DESCRIPTION

CONTRACT 1
SUFFERN WWTP UPGRADES
VILLAGE OF SUFFERN
ROCKLAND COUNTY, NEW YORK

SECTION

SHEET:
S108

NOTE:
REFER TO ELECTRICAL DRAWINGS FOR INFORMATION ON SOLAR PANELS TO BE INSTALLED ON ROOF (NOT SHOWN HERE). IN ADDITION, THE CONTRACTOR SHALL INSTALL SNOW A GUARD SYSTEM TO THE ROOF. THE SNOW GUARD SYSTEM SHALL BE DESIGNED BY SNOW GUARD MFGR. PER SPECIFICATIONS, TYP. AS A MINIMUM, SNOW GUARD RAILS SHALL BE INSTALLED BELO THE BOTTOM MOST SOLAR PANELS. PROVIDE A MINIMUM OF ONE ROW OF SNOW GUARDS PER EAVE.

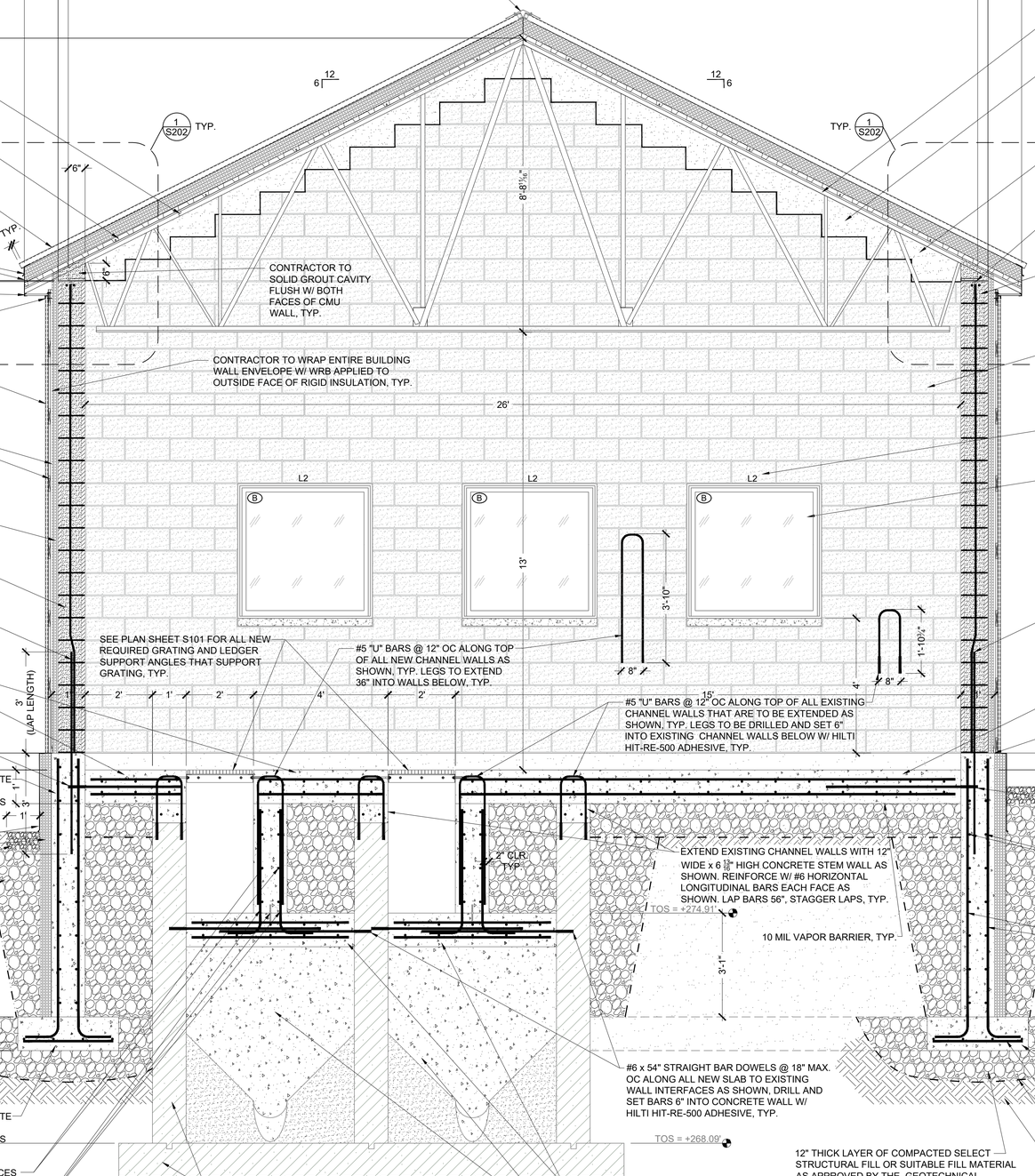

SECTION
SCALE: ½" = 1'-0"

G
S109

VULCRAFT 104LH300/200 DOUBLE PITCHED ROOF TRUSSES @ 48" MAX. O.C. PER ROOF FRAMING PLAN S102, TYP.

VERCO OR EQUAL 1½", 20 GAUGE STEEL B-CD FORMLOK ROOF DECK. WELD TO SUPPORTING ROOF TRUSSES PER ROOF FRAMING PLAN S102, TYP.

ROOFING SYSTEM SHALL BE MBCI MODEL CFR INSULATED ROOF SANDWICH PANELS OR EQUAL COMBINING 2" STANDING SEAM METAL ROOF OVER 5" OF RIGID INSULATION OVER INTERIOR METAL LINER PANEL INSTALLED OVER VERCO 1½" DECK. CONNECTIONS AND ENTIRE ROOF ASSEMBLY MUST BE DESIGNED TO ACCOMMODATE FORCES FROM BASIC WIND LOAD SPEED OF 115 MPH.

CONTINUOUS 24 GAUGE METAL CLOSURE FLASHING AND 24 GAUGE CONTINUOUS DRIP EDGE AS PER SANDWICH PANEL MFGR. RECOMMENDATIONS, TYP.

CONTINUOUS ALUMINUM SOFFIT. INSTALL W/ 24 GAUGE F CHANNELS AT BOTH ENDS. WELD OR SCREW CHANNELS TO BOTTOM OF TRUSS TOP CHORD AS REQUIRED, TYP.

29 GAUGE METAL SIDING, METAL SALES "CLASSIC RIB" OR EQUAL ¾" PROFILE. INSTALL W/ CONTINUOUS 24 GAUGE J CHANNEL (TOP) AND ALL REQUIRED FLASHING TO ENSURE WEATHER TIGHT SEAL AS PER MANUFACTURER RECOMMENDATIONS, TYP.

CONTRACTOR SHALL PROVIDE CONTINUOUS HORIZONTAL AND VERTICAL 1x4 FURRING STRIPS @ 24" MAX. O.C. BETWEEN CONTINUOUS INSULATION AND METAL PANEL SIDING TO FACILITATE INSTALLATION OF THE METAL PANEL SIDING, TYP.

2" THICK RIGID EXTRUDED POLYSTYRENE FOAM INSULATION ALONG OUTSIDE FACE OF ALL PERIMETER CMU WALLS, TYP.

TYPICAL 10" THICK EXTERIOR CMU PERIMETER WALL. REINFORCE ALL PERIMETER CMU WALLS PER NOTES ON PLAN SHEET S101, TYP.

#6 x 72" STRAIGHT BAR DOWELS @ 24" MAX OC TO LAP 36" MIN. W/ VERTICAL CMU WALL REINFORCEMENT. EMBED 36" INTO CONCRETE WALL BELOW AS SHOWN. PROVIDE ONE DOWEL PER EVERY VERTICAL BAR IN CMU WALL AS ILLUSTRATED ON PLAN VIEW S101, TYP.

12" THICK SLAB ON GRADE. REINFORCE W/ #6 BARS @ 12" MAX. OC BOTH WAYS TOP AND BOTTOM. LAP BARS 56" MIN. STAGGER LAPS, TYP.

#6 x 40" STRAIGHT BAR DOWELS @ 18" MAX. OC ALONG ALL SLAB TO WALL INTERFACES AS SHOWN, DRILL AND SET BARS 6" INTO CONCRETE WALL W/ HILTI HIT-RE-500 ADHESIVE, TYP.

FINISH GRADE ELEVATION PER SITE PLAN SLOPE GRADE TO DRAIN AWAY FROM BLDG. ¼"/FT. MIN., TYP.

4" THICK EXTRUDED RIGID POLYSTYRENE FOAM INSULATION, TYP. ALONG BUILDING PERIMETER. INSULATION SHALL BE ATTACHED TO CONCRETE STEM WALL PER MFGR. RECOMMENDATIONS. COVER WITH CONTINUOUS PAINTED 24 GAUGE METAL FLASHING W/ DRIP EDGE AS SHOWN, TYP. FLASHING TO BE ADHERED TO INSULATION.

DRAINAGE STONE, TYP.

BACK FILL AROUND ALL WALLS W/ 50/50 MIX OF COMPACTED #1 AND #2 STONE FOR 2' MIN.THICKNESS ADJACENT TO WALL, TYP. SEPARATE STONE FILL FROM SURROUNDING SOILS W/ GEOTEXTILE FABRIC AS SHOWN, TYP.

VULCRAFT 104LH300/200 DOUBLE PITCHED ROOF TRUSSES @ 48" MAX. O.C. PER ROOF FRAMING PLAN S102, TYP.

CONTINUOUS 9 3/8" WIDE x 8" DEEP MIN. CAST IN PLACE SLOPING AND STEPPED CONCRETE BOND BEAM W/ (2) #6 CONTINUOUS BARS, ONE EACH SIDE OF HEADED STUD, TYP. LAP BARS 36" MIN. STAGGER LAPS. PROVIDE MATCHING CORNER BARS AT CMU WALL CORNERS, TYP.

CONTINUOUS 9 3/8" THICK x 8" DEEP MIN. CAST IN PLACE CONCRETE BOND BEAM AT TOP OF GABLE END WALL AS SHOWN, TYP. SEE DETAIL 3/S202.

CONTINUOUS ROW OF 3/8" THICK x 9 3/8" WIDE GALVANIZED ASTM A572 BEARING PLATES W/ (3) 3/4"Ø x 6" WELDED HEAD STUD ANCHORS PER PLATE SEGMENT (ONE HEADED STUD WITHIN 4" OF EACH SIDE OF EACH TRUSS), TYP. WELD EACH TRUSS TO PLATE PER TRUSS MFGR. REQUIREMENTS, TYP.

PLATE SECTION

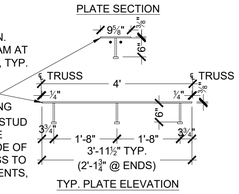

TYP. PLATE ELEVATION

CONTINUOUS 10" CMU BOND BEAM W/ (2) #6 CONTINUOUS BARS, ONE EACH SIDE OF HEADED STUD, TYP. LAP BARS 36" MIN. STAGGER LAPS. PROVIDE MATCHING CORNER BARS AT CMU WALL CORNERS, TYP.

CMU WALL AT GABLE ENDS TO CONTINUE TO UNDERSIDE OF STEPPED CAST IN PLACE CONCRETE BOND BEAM, AS SHOWN, TYP.

SEE TYPICAL CMU LINTEL DETAIL FOR REQUIRED LINTEL REINFORCEMENT, TYP.

SEE WINDOW SCHEDULE FOR INFORMATION ON WINDOWS. COORDINATE REQUIRED ROUGH OPENING DIMENSIONS WITH WINDOW MANUFACTURER. REFER TO WINDOW HEAD, SILL AND JAMB DETAILS ON SN DRAWINGS, TYP.

#6 x 72" STRAIGHT BAR DOWELS @ 24" MAX OC TO LAP 36" MIN. W/ VERTICAL CMU REINFORCEMENT. EMBED 36" INTO CONCRETE WALL AS SHOWN. PROVIDE ONE DOWEL PER EVERY VERTICAL BAR IN CMU WALL AS ILLUSTRATED ON PLAN VIEW S101, TYP.

12" THICK SLAB ON GRADE. REINFORCE W/ #6 BARS @ 12" MAX OC BOTH WAYS TOP AND BOTTOM. LAP BARS 56" MIN. STAGGER LAPS, TYP.

NEW CONTINUOUS 12" THICK x 7'-10" TALL REINFORCED CONCRETE STEM WALL ALONG BUILDING PERIMETER.

#6 x 54" STRAIGHT BAR DOWELS @ 18" MAX. OC ALONG ALL SLAB TO WALL INTERFACES AS SHOWN, DRILL AND SET BARS 6" INTO CONCRETE WALL W/ HILTI HIT-RE-500 ADHESIVE, TYP.

#6 CONTINUOUS HORIZONTAL LONGITUDINAL BARS @ 12" MAX. O.C. BOTH FACES OF WALL AND FULL HEIGHT OF WALL. LAP 56" MIN. STAGGER LAPS. PROVIDE MATCHING CORNER BARS AT BUILDING CORNERS. TYP.

#6 VERTICAL BENT BAR DOWELS @ 12" MAX OC AROUND BOTH FACES OF WALL, TYP. ALONG ALL PERIMETER CONCRETE WALLS. MAINTAIN 2" CLR. BETWEEN FACE OF WALL AND REINFORCEMENT, TYP.

WARNING – IT IS A VIOLATION OF NEW YORK EDUCATION LAW SECTION 7209.2, FOR ANY PERSON, UNLESS HE IS ACTING UNDER THE DIRECTION OF A LICENSED PROFESSIONAL ENGINEER OR LAND SURVEYOR, TO ALTER THIS DOCUMENT IN ANY WAY. IF ALTERED THE ALTERING PERSON SHALL COMPLY WITH THE REQUIREMENTS OF NEW YORK EDUCATION LAW, SECTION 7209.2.

BID PLANS

DATE: 12/2020
DRAWN BY: YB
SCALE: AS SHOWN
REVIEWED BY: RF
PROJECT NO.: 19-1612
FILE:

DELAWARE ENGINEERING, D.P.C.
CIVIL AND ENVIRONMENTAL ENGINEERING
28 MADISON AVENUE EXTENSION, ALBANY, NY 12203 - 518.452.1290
55 SOUTH MAIN ST, ONEONTA, NY 13820 - 607.432.8073
31 NORTH MAIN STREET, LIBERTY, NY 12754 - 845.747.9952
6 TOWNSEND STREET, WALTON, NY 13856 - 607.865.9235
16 EAST MARKET ST., RED HOOK, NY 12571 - 518.452.1290
548 BROADWAY, MONTICELLO, NY 12701 - 845.791.7777

REGISTERED PROFESSIONAL ENGINEER STATE OF NEW YORK 081,956 LICENSED PROFESSIONAL ENGINEER STATE OF FLORIDA

REVISIONS

NO.	DATE	DESCRIPTION

CONTRACT 1
SUFFERN WWTP UPGRADES
VILLAGE OF SUFFERN
ROCKLAND COUNTY, NEW YORK

SECTION

SHEET:
S109

NOTE:
REFER TO ELECTRICAL DRAWINGS FOR INFORMATION ON SOLAR PANELS TO BE INSTALLED ON ROOF (NOT SHOWN HERE). IN ADDITION, THE CONTRACTOR SHALL INSTALL SNOW A GUARD SYSTEM TO THE ROOF. THE SNOW GUARD SYSTEM SHALL BE DESIGNED BY SNOW GUARD MFGR. PER SPECIFICATIONS, TYP. AS A MINIMUM, SNOW GUARD RAILS SHALL BE INSTALLED BELO THE BOTTOM MOST SOLAR PANELS. PROVIDE A MINIMUM OF ONE ROW OF SNOW GUARDS PER EAVE.

PLATE SECTION

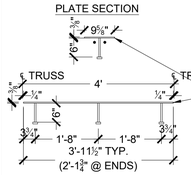

TYP. PLATE ELEVATION

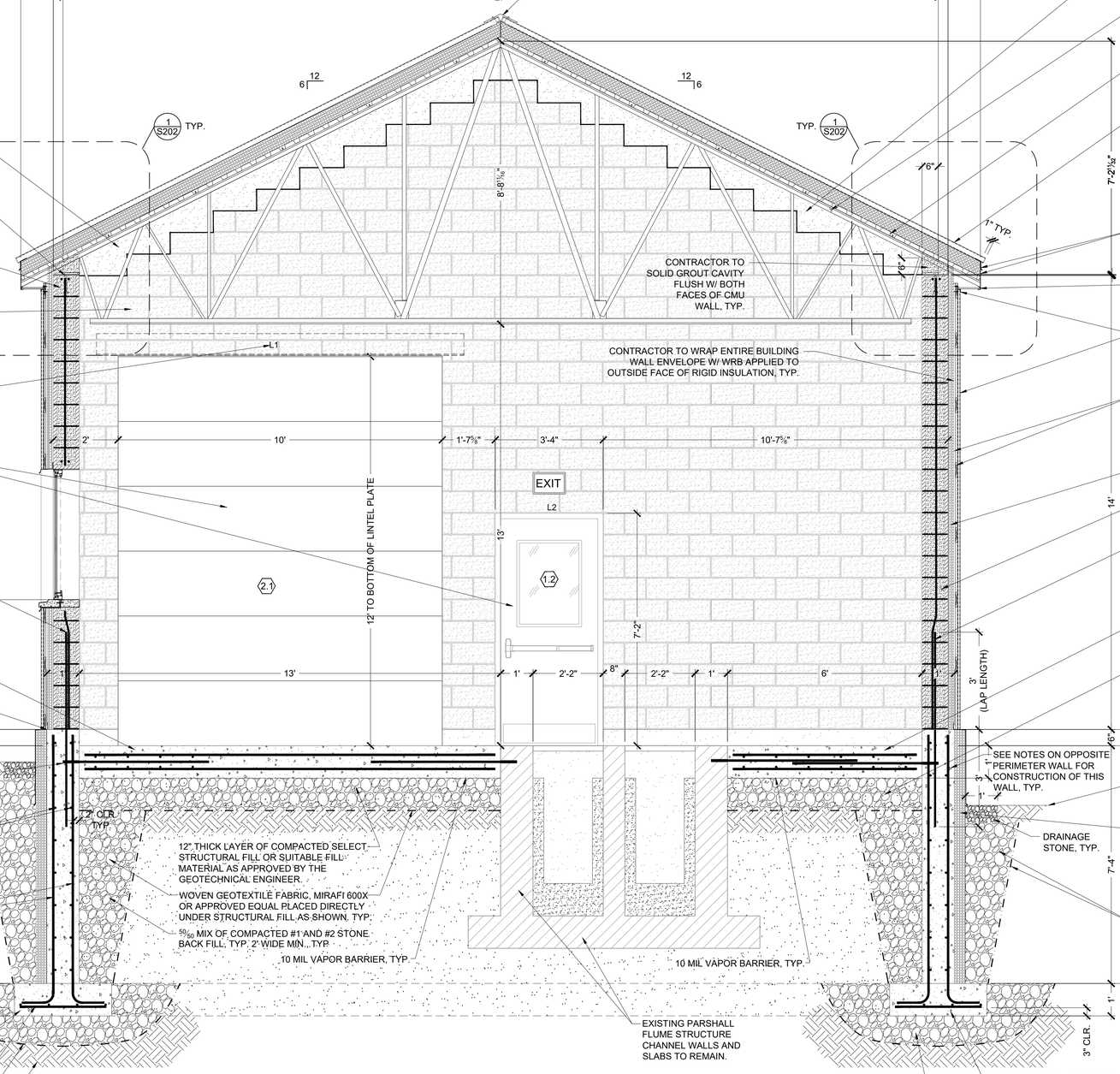

SECTION

SCALE: 1/4" = 1'-0"

H
S110

BID PLANS

WARNING – IT IS A VIOLATION OF NEW YORK EDUCATION LAW SECTION 7209.2, FOR ANY PERSON, UNLESS HE IS ACTING UNDER THE DIRECTION OF A LICENSED PROFESSIONAL ENGINEER OR LAND SURVEYOR, TO ALTER THIS DOCUMENT IN ANY WAY. IF ALTERED THE ALTERING PERSON SHALL COMPLY WITH THE REQUIREMENTS OF NEW YORK EDUCATION LAW, SECTION 7209.2.

DATE: 12/2020
DRAWN BY: YB
SCALE: AS SHOWN
REVIEWED BY: RF
PROJECT NO.: 19-1612
FILE:

DELAWARE ENGINEERING, D.P.C.
CIVIL AND ENVIRONMENTAL ENGINEERING
28 MADISON AVENUE EXTENSION, ALBANY, NY 12203 - 518.452.1290
55 SOUTH MAIN ST, ONEONTA, NY 13820 - 607.432.8073
31 NORTH MAIN STREET, LIBERTY, NY 12754 - 845.747.9952
6 TOWNSEND STREET, WALTON, NY 13856 - 607.865.9235
16 EAST MARKET ST., RED HOOK, NY 12571 - 518.452.1290
548 BROADWAY, MONTICELLO, NY 12701 - 845.791.7777

REGISTERED PROFESSIONAL ENGINEER STATE OF NEW YORK 081,956 LICENSED

REVISIONS

NO.	DATE	DESCRIPTION

CONTRACT 1
SUFFERN WWTP UPGRADES
VILLAGE OF SUFFERN
ROCKLAND COUNTY, NEW YORK

SECTION

SHEET:
S110

File: I:\DRAWINGS\SUFFERN\WWTP\STRUCTURAL\VILLAGE OF SUFFERN WWTP-STRUCTURAL-HEADWORKS-19.DWG Saved: 12/8/2020 8:03:49 AM Plotted: 12/8/2020 8:20:04 AM User: Gary Markham LastSavedBy: markhamg

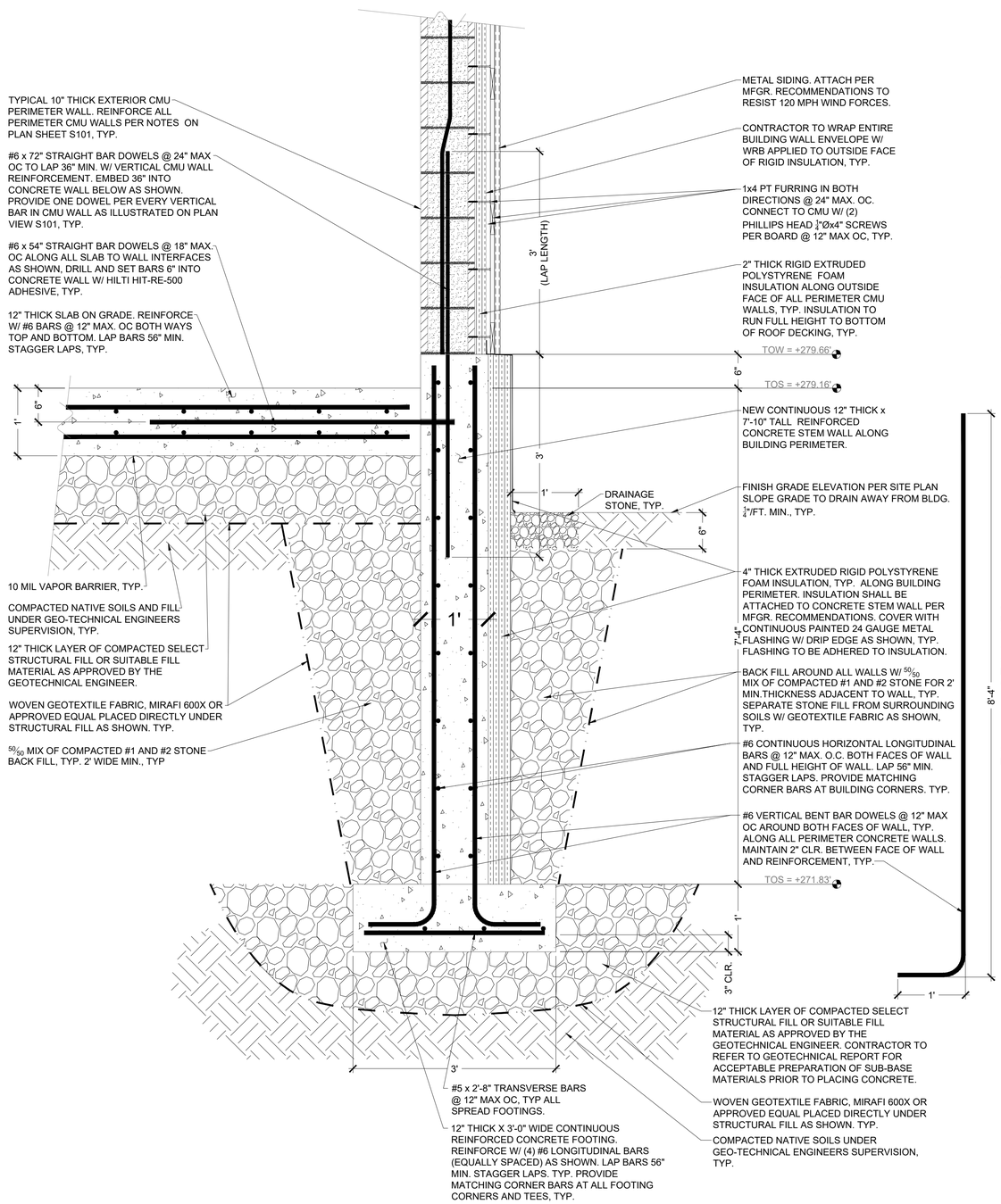

TYPICAL PERIMETER FOOTING AND STEM WALL DETAIL
SCALE: 1" = 1'-0"

1
S201

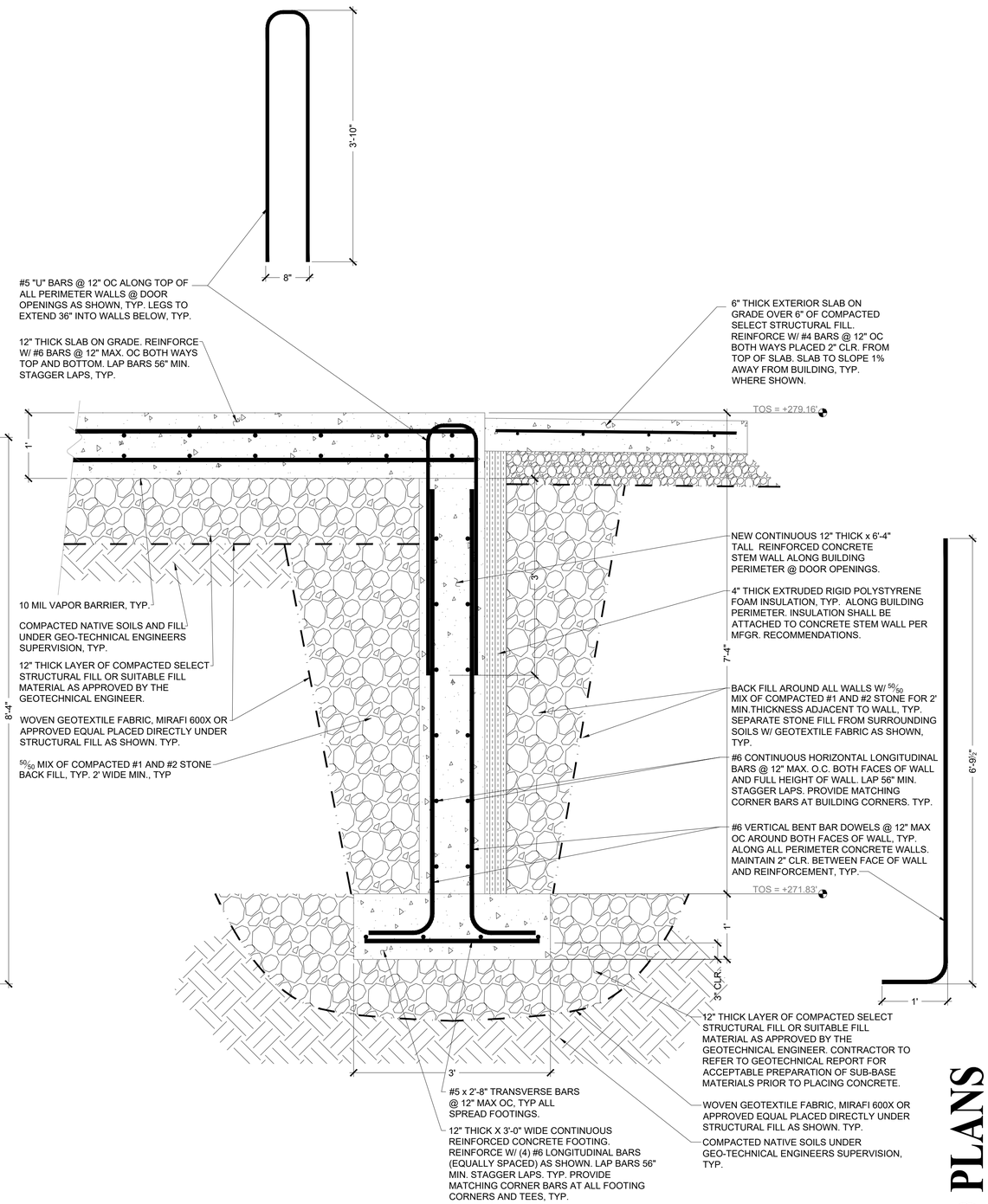

TYPICAL PERIMETER FOOTING AND STEM WALL @ DOOR OPENING DETAIL
SCALE: 1" = 1'-0"

2
S201

BID PLANS

WARNING – IT IS A VIOLATION OF NEW YORK EDUCATION LAW SECTION 7209.2, FOR ANY PERSON, UNLESS HE IS ACTING UNDER THE DIRECTION OF A LICENSED PROFESSIONAL ENGINEER OR LAND SURVEYOR, TO ALTER THIS DOCUMENT IN ANY WAY. IF ALTERED THE ALTERING PERSON SHALL COMPLY WITH THE REQUIREMENTS OF NEW YORK EDUCATION LAW, SECTION 7209.2.

DATE: 12/2020
DRAWN BY: YB
SCALE: AS SHOWN
REVIEWED BY: RF
PROJECT NO.: 19-1612
FILE:

DELAWARE ENGINEERING, D.P.C.
CIVIL AND ENVIRONMENTAL ENGINEERING
28 MADISON AVENUE EXTENSION, ALBANY, NY 12203 - 518.452.1290
55 SOUTH MAIN ST, ONEONTA, NY 13820 - 607.432.8073
31 NORTH MAIN STREET, LIBERTY, NY 12754 - 845.747.9952
6 TOWNSEND STREET, WALTON, NY 13856 - 607.865.9235
16 EAST MARKET ST., RED HOOK, NY 12571 - 518.452.1290
548 BROADWAY, MONTICELLO, NY 12701 - 845.791.7777

REGISTERED PROFESSIONAL ENGINEER
STATE OF NEW YORK
STATE OF FLORIDA
No. 081395
LICENSED

REVISIONS

NO.	DATE	DESCRIPTION

CONTRACT 1
SUFFERN WWTP UPGRADES
VILLAGE OF SUFFERN
ROCKLAND COUNTY, NEW YORK

TYPICAL PERIMETER FOUNDATION AND STEM WALL DETAILS

SHEET:
S201

NOTE:
CONTRACTOR SHALL CONSULT MBCI FOR THEIR RECOMMENDED MEANS FOR CLOSING THE CFR ROOF PANELS AT LOW EAVES SIMILAR TO THAT SHOWN HERE. CONTRACTOR SHALL SUBMIT RECOMMENDED CFR ROOF EAVE DETAIL TO ENGINEER FOR REVIEW AND APPROVAL PRIOR TO CONSTRUCTION. CONTRACTOR TO MAKE ALLOWANCES IN HIS BID PRICE FOR ANY ADDITIONAL CLOSURE FRAMING, FLASHING. TAPING, INSULATION AND SCREWS, ETC. AS REQUIRED TO ENSURE A WEATHER TIGHT EAVE CLOSURE AT NO ADDITIONAL COST TO OWNER, TYP.

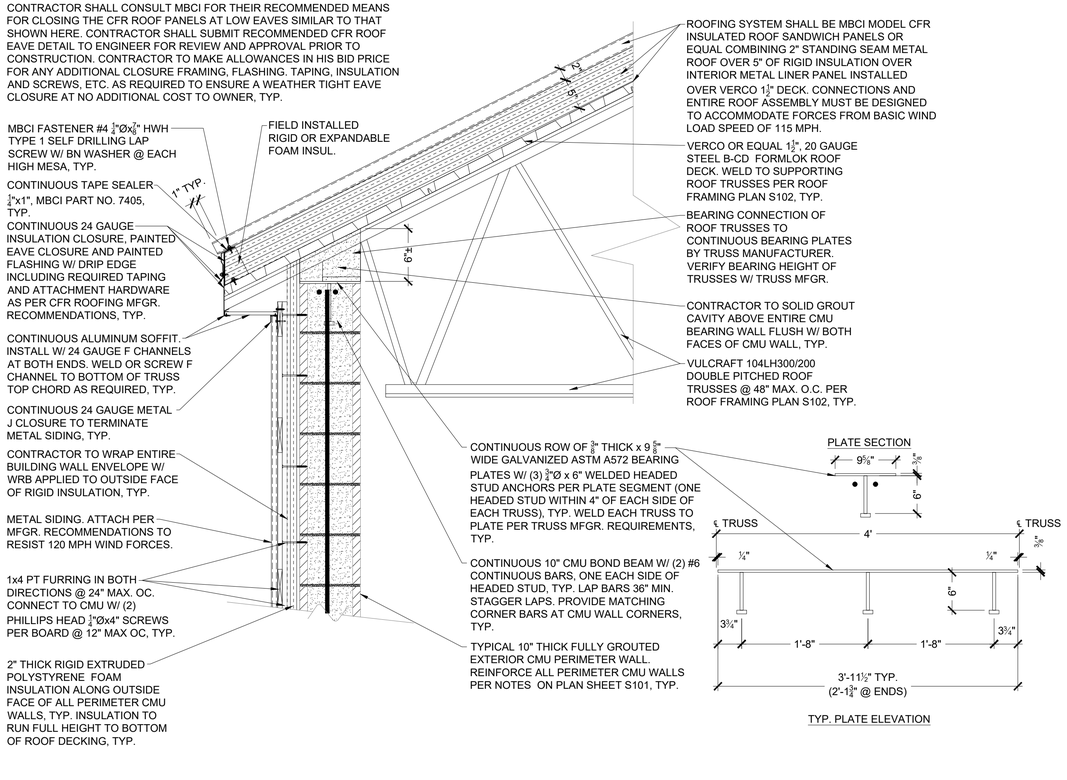

TYPICAL ROOF EAVE DETAIL
SCALE: 1" = 1'-0"

1
S202

NOTE:
CONTRACTOR SHALL CONSULT MBCI FOR THEIR RECOMMENDED MEANS FOR CLOSING THE CFR ROOF PANELS AT GABLE END RAKES SIMILAR TO THAT SHOWN HERE. CONTRACTOR SHALL SUBMIT RECOMMENDED CFR ROOF RAKE DETAIL TO ENGINEER FOR REVIEW AND APPROVAL PRIOR TO CONSTRUCTION. CONTRACTOR TO MAKE ALLOWANCES IN HIS BID PRICE FOR ANY ADDITIONAL CLOSURE FRAMING, FLASHING. TAPING, INSULATION AND SCREWS, ETC. AS REQUIRED TO ENSURE A WEATHER TIGHT EAVE CLOSURE AT NO ADDITIONAL COST TO OWNER, TYP.

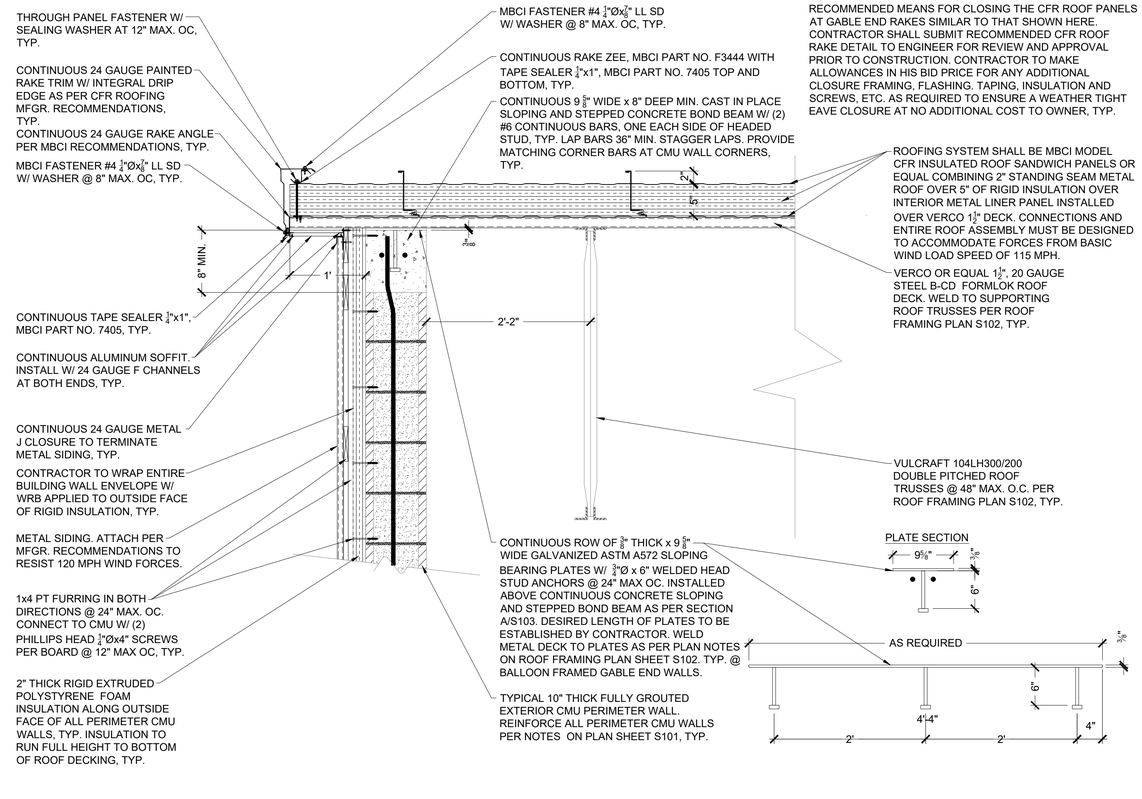

TYPICAL ROOF RAKE DETAIL
SCALE: 1" = 1'-0"

2
S202

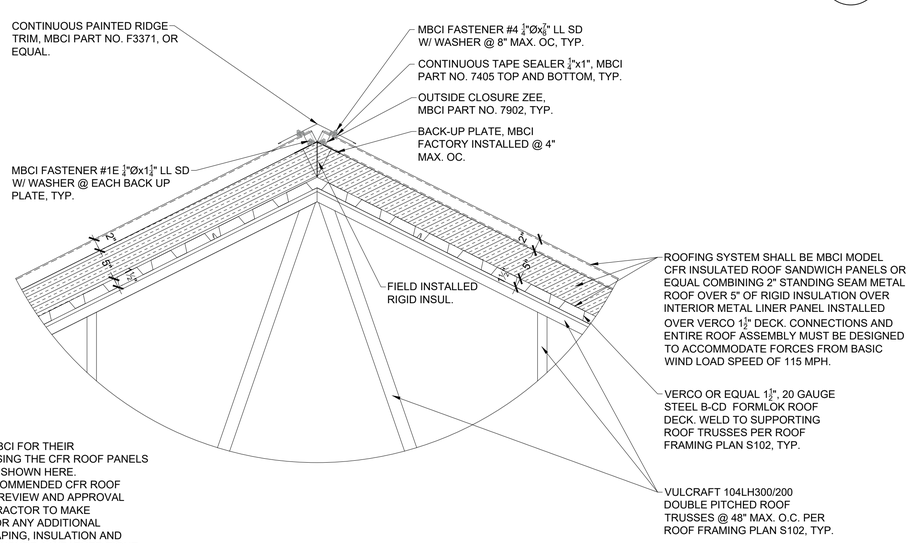

NOTE:
CONTRACTOR SHALL CONSULT MBCI FOR THEIR RECOMMENDED MEANS FOR CLOSING THE CFR ROOF PANELS AT ROOF RIDGE SIMILAR TO THAT SHOWN HERE. CONTRACTOR SHALL SUBMIT RECOMMENDED CFR ROOF RIDGE DETAIL TO ENGINEER FOR REVIEW AND APPROVAL PRIOR TO CONSTRUCTION. CONTRACTOR TO MAKE ALLOWANCES IN HIS BID PRICE FOR ANY ADDITIONAL CLOSURE FRAMING, FLASHING. TAPING, INSULATION AND SCREWS, ETC. AS REQUIRED TO ENSURE A WEATHER TIGHT RIDGE CLOSURE AT NO ADDITIONAL COST TO OWNER, TYP.

TYPICAL ROOF RIDGE DETAIL
SCALE: 1" = 1'-0"

3
S202

BID PLANS

WARNING – IT IS A VIOLATION OF NEW YORK EDUCATION LAW SECTION 7209.2, FOR ANY PERSON, UNLESS HE IS ACTING UNDER THE DIRECTION OF A LICENSED PROFESSIONAL ENGINEER OR LAND SURVEYOR, TO ALTER THIS DOCUMENT IN ANY WAY. IF ALTERED THE ALTERING PERSON SHALL COMPLY WITH THE REQUIREMENTS OF NEW YORK EDUCATION LAW, SECTION 7209.2.

DATE: 12/2020
DRAWN BY: YB
SCALE: AS SHOWN
REVIEWED BY: RF
PROJECT NO.: 19-1612
FILE:

DELAWARE ENGINEERING, D.P.C.
CIVIL AND ENVIRONMENTAL ENGINEERING
28 MADISON AVENUE EXTENSION, ALBANY, NY 12203 - 518.452.1290
55 SOUTH MAIN ST, ONEONTA, NY 13820 - 607.432.8073
31 NORTH MAIN STREET, LIBERTY, NY 12754 - 845.747.9952
6 TOWNSEND STREET, WALTON, NY 13856 - 607.865.9235
16 EAST MARKET ST., RED HOOK, NY 12571 - 518.452.1290
548 BROADWAY, MONTICELLO, NY 12701 - 845.791.7777

STATE OF NEW YORK · STATE OF FLORIDA · REGISTERED PROFESSIONAL ENGINEER · DELAWARE ENGINEERING, D.P.C. · 081-0596

REVISIONS

NO.	DATE	DESCRIPTION

CONTRACT 1
SUFFERN WWTP UPGRADES
VILLAGE OF SUFFERN
ROCKLAND COUNTY, NEW YORK

TYPICAL ROOF EAVE, RAKE AND RIDGE DETAILS

SHEET:
S202

File: N:\DRAWINGS\SUFFERN\WWTP\STRUCTURAL\VILLAGE OF SUFFERN WWTP-STRUCTURAL-HEADWORKS-19.DWG Saved: 12/8/2020 8:03:49 AM Plotted: 12/8/2020 8:21:43 AM User: Gary Abraham, LastSavedBy: mgrabowng

GENERAL ELECTRICAL NOTES:

1. THE ELECTRICAL CONTRACTOR SHALL BE RESPONSIBLE FOR SUPPLYING, INSTALLING AND CONNECTING ALL LINE AND LOW VOLTAGE CONDUIT, CONDUCTORS, SWITCHES, DISCONNECTS, JUNCTION BOXES, AND FIXTURES FOR POWER, TELECOMMUNICATIONS, AND LIGHTING SYSTEMS.
2. LABEL ALL PANELS, DISCONNECTS, MOTOR STARTERS, AND CONTROLLERS. ALL LABELS ARE TO BE SELF ADHERING PLASTIC LAMINATED WITH 3/8" WHITE LETTERS ON A BLACK BACKGROUND. ALL DEVICES WILL BE IDENTIFIED BY THEIR NUMBER, VOLTAGE AND SOURCE OF POWER.
3. PROVIDE A TYPEWRITTEN CIRCUIT DIRECTORY IN ALL NEW PANEL BOXES.
4. THE ELECTRICAL CONTRACTOR SHALL BE RESPONSIBLE FOR ARRANGING AND SCHEDULING ALL ELECTRICAL INSPECTIONS, PAY ALL FEES, AND SUBMIT A FINAL INSPECTION REPORT TO THE ENGINEER.
5. THE ELECTRICAL CONTRACTOR SHALL INSTALL ALL GROUNDING IN ACCORDANCE WITH NEC ARTICLE 250 AND ACCORDING TO THE REQUIREMENTS INDICATED ON THE DRAWINGS. EQUIPMENT GROUNDING CONDUCTORS SHALL BE USED. GROUNDING THROUGH RACEWAY AND CONDUITS IS NOT PERMITTED.
6. THE ELECTRICAL CONTRACTOR SHALL FURNISH AND INSTALL GROUND CONDUCTORS TO BOND THE WWTP GROUNDING SYSTEM TOGETHER.
7. THE LOCATIONS AND ROUTES OF CONDUITS AND RACEWAYS SHOWN ON THESE DRAWINGS ARE SCHEMATIC. ALL CONDUITS ABOVE THE SLAB SHALL BE INSTALLED PARALLEL OR PERPENDICULAR TO THE BUILDING. CONDUITS ABOVE THE CEILING SHALL BE MOUNTED AS HIGH AS POSSIBLE. ALL BELOW GROUND CONDUITS SHALL BE INSTALLED USING THE MOST DIRECT ROUTE WITH CONSIDERATION OF PROPER COORDINATION WITH OTHER UTILITIES – UNDERGROUND OR ABOVE GROUND.
8. ELECTRICAL CONTRACTOR SHALL PROVIDE ALL CONDUIT AND CONDUCTORS FOR TELEPHONE AND LAN SYSTEMS. ALL CONDUCTORS SHALL BE COPPER WITH TYPE THHN/THWN OR XHHW INSULATION UNLESS OTHERWISE NOTED. ALL CONDUCTORS SHALL BE SIZED PER NEC.
9. THE ELECTRICAL CONTRACTOR SHALL PROVIDE LAMPS FOR ALL LIGHTING FIXTURES.
10. ALL DUPLEX RECEPTACLES SHALL BE MOUNTED VERTICALLY AND 18" NOMINALLY AFF TO BOTTOM OF BOX UNLESS OTHERWISE INDICATED.
11. FASTENING OF HANGERS TO THE ROOF WILL NOT BE PERMITTED. ANY CONTRACTOR RESPONSIBLE FOR PUNCTURING THE ROOF STRUCTURE WILL REPAIR THE ROOF AT THEIR EXPENSE.
12. ALL DISCONNECT SWITCHES AND SAFETY SWITCHES ARE TO BE HEAVY DUTY TYPE.
13. MC CABLE WILL NOT BE ACCEPTED.
14. "GREENFIELD" AND LIQUID TIGHT FLEX CONDUIT MAY BE USED IN LENGTHS NOT TO EXCEED 72".
15. THE ELECTRICAL CONTRACTOR SHALL CAULK ALL PENETRATIONS,RELATED TO ELECTRICAL WORK, IN 1 & 2 RATED HR FIRE WALL WITH 3M FIRE CAULK. SEAL LARGER OPENINGS WITH WIREMOLD "FLAMESTOPPER" KIT.
16. ALL EXTERIOR EXPOSED CONDUIT SHALL BE PVC COATED GRC.
17. ALL CONDUIT IN CLASS 1 DIV1 LOCATIONS, SCREEN ROOM AND INFLUENT WETWELL, SHALL BE PVC COATED GRC.
18. ALL CONDUIT IN THE HEADWORKS ELECTRICAL ROOM SHALL BE GRC.
19. THE ELECTRICAL CONTRACTOR SHALL FURNISH AND INSTALL ALL EQUIPMENT CONDUIT AND CONDUCTORS FOR THE HVAC EQUIPMENT. THIS SHALL INCLUDE LINE AND LOW VOLTAGE EQUIPMENT.
20. THE ELECTRICAL CONTRACTOR SHALL FURNISH AND INSTALL ALL CONTROL CONDUIT AND CONDUCTORS. THE ELECTRICAL CONTRACTOR THROUGH THE WASTE WATER CONTROL SYSTEM WWCS VENDOR SHALL MAKE ALL TERMINATIONS AT CONTROLS INSTRUMENTS AND AT THE WWCS CONTROL PANELS. ALL OTHER TERMINATIONS ARE BY THE ELECTRICAL CONTRACTOR.
21. THE ELECTRICAL CONTRACTOR SHALL FURNISH AND INSTALL ALL FIBER OPTIC CABLE AND CONDUIT FOR THE FIBER RUNS. THE ELECTRICAL CONTRACTOR SHALL FURNISH ALL OF THE FIBER TERMINATIONS AND TEST.

SYMBOLS

- NEW #⅝ AWG GROUND GRID EXOTHERMIC CONNECTION TO BUILDING FOUNDATION REINFORCING BAR
- NEW #4/0 AWG MAIN GROUND GRID CONDUCTOR BELOW GRADE (BURY 30" BELOW GRADE THROUGHOUT)
- 3/4"x 10' COPPER CLAD GROUND ROD WITH EXOTHERMIC CONNECTION TO MAIN GROUND GRID CONDUCTOR
- GROUND GRID RISER CONDUCTOR THROUGH SLAB FOR CONNECTION TO COLUMN, EQUIPMENT, ETC.
- EXOTHERMIC CONNECTION BETWEEN GROUND GRID CONDUCTOR
- NEW PANEL
- GP–2 — HOMERUN GP = GENERAL PURPOSE PANEL 'GP' 2 = CIRCUIT No.
- CONDUIT DOWN
- CONDUIT UP
- FLEXIBLE CONDUIT CONNECTION
- SPECIAL USE RECEPTACLE REFER TO INFORMATION ON INDIVIDUAL DRAWINGS
- GF LPA1–2 — NEW RECEPTACLE GF = GROUND FAULT WP = WEATHERPROOF LPA1–2 = FEED FROM PANEL LPA1 CIRCUIT 2
- 42"AFF — EXISTING SINGLE RECEPTACLE 42" AFF = 42 INCHES ABOVE FINISHED FLOOR
- $A/4 — SWITCH – A = SWITCHING SCHEME 3 = 3 WAY 4 = 4 WAY M = MOTOR STARTER TYPE
- NEW TELEPHONE JACK
- NEW ETHERNET JACK
- L.A. — LIGHTNING ARRESTOR
- 1600A/1200A, LT, SST, ST, I — DRAW–OUT TYPE SOLID STATE CIRCUIT BREAKER 1600A = FRAME SIZE 1200A = TRIP SENSOR LT = LONG TIME TRIP FUNCTION ST = SHORT TIME TRIP FUNCTION I = INSTANTANEOUS TRIP FUNCTION SST = SOLID STATE TRIP UNIT
- 400A/300A — CIRCUIT BREAKER. 400A = FRAME SIZE 300A = TRIP RATING
- DRAW OUT TYPE CIRCUIT BREAKER
- 52 — DRAW–OUT TYPE POWER CIRCUIT BREAKER
- DELTA–WYE TRANSFORMER. SIZE AS INDICATED ON DRAWINGS.
- POTENTIAL TRANSFORMER
- CURRENT TRANSFORMER
- SSS — SOLID STATE SOFT STARTER
- LOCAL START/LOCK STOP CONTROLLER
- TVSS — TRANSIENT VOLTAGE SURGE SUPPRESION
- FACP — FIRE ALARM CONTROL PANEL
- RADIO — RADIO TRANSCEIVER
- OMNI DIRECTIONAL ANTENNA/WITH MODULE
- SOUNDER STROBE
- TM — 60 MIN TIMER
- NORMALLY OPEN CONTACT
- NORMALLY CLOSED CONTACT
- DISCONNECT SWITCH
- DISCONNECT SWITCH
- X — MOTOR. SIZE AS INDICATED ON DRAWINGS. X = HORSEPOWER
- K — KEY INTERLOCK
- J — JUNCTION BOX. SIZE AS SHOWN ON DRAWINGS.
- 80E — FUSE 80E = RATING
- GENERATOR SIZE AS INDICATED ON DRAWINGS
- $A/LPM–9, J — LIGHTING FIXTURE CONTROLLED BY SWITCHING SCHEME A AND FED FROM LIGHTING PANEL LPM CIRCUIT 9
- VFD — VARIABLE FREQUENCY DRIVE
- E — EMERGENCY STOP
- A — COMBINATION DISCONNECT SWITCH MOTOR STARTER A = STARTER SIZE
- M — METHANE SENSOR
- O — OXYGEN SENSOR
- P — STROBE LIGHT
- F — PULL STATION WITH KEY RESET
- S — SMOKE DETECTOR PHOTO ELECTRIC
- H X — HEAT DETECTOR X=135 FOR 135DEG RATE OF RISE AND X=190 FOR 190DEG RATE OF RISE
- ANSUL — SUPPRESSION SYSTEM SUPERVISION
- DR — DOOR HOLDER WALL MOUNT
- NMM — ADDRESSABLE MINI MODULE
- XS — EXPLOSION PROOF SMOKE DETECTOR
- XF — EXPLOSION PROOF PULL STATION WITH KEY RESET
- XP — EXTERIOR STROBE LIGHT WITH HORN
- ANN — ANNUNCIATOR

BID PLANS

WARNING – IT IS A VIOLATION OF NEW YORK EDUCATION LAW SECTION 7209.2, FOR ANY PERSON, UNLESS HE IS ACTING UNDER THE DIRECTION OF A LICENSED PROFESSIONAL ENGINEER OR LAND SURVEYOR, TO ALTER THIS DOCUMENT IN ANY WAY. IF ALTERED THE ALTERING PERSON SHALL COMPLY WITH THE REQUIREMENTS OF NEW YORK EDUCATION LAW, SECTION 7209.2.

DATE: 12/2020
DRAWN BY: ED
SCALE: SCALE
REVIEWED BY:
PROJECT NO.: 19-1612
FILE: FILE NAME

DELAWARE ENGINEERING, D.P.C.
CIVIL AND ENVIRONMENTAL ENGINEERING
28 MADISON AVENUE EXTENSION, ALBANY, NY 12203 - 518.452.1290
55 SOUTH MAIN ST, ONEONTA, NY 13820 - 607.432.8073
31 NORTH MAIN STREET, LIBERTY, NY 12754 - 845.747.9862
6 TOWNSEND STREET, WALTON, NY 13856 - 607.865.9235
16 EAST MARKET ST., RED HOOK, NY 12571 - 518.452.1290
548 BROADWAY, MONTICELLO, NY 12701 - 845.791.7777

STATE OF NEW YORK · LICENSED PROFESSIONAL ENGINEER

REVISIONS

NO.	DATE	DESCRIPTION
1	12/7/20	BID SET

CONTRACT 1
SUFFERN WWTP UPGRADES
VILLAGE OF SUFFERN
ROCKLAND COUNTY, NEW YORK

ELECTRICAL NOTES

SHEET: E1

File: H:\DRAWINGS\SUFFERN WWTP\ACAD\REF\ELECTRICAL\PRELIMINARY ONE-LINE.DWG Saved: 12/7/2020 5:03:01 PM Plotted: 12/7/2020 5:07:47 PM User: Aiden Arnold LastSavedBy: arnoldc

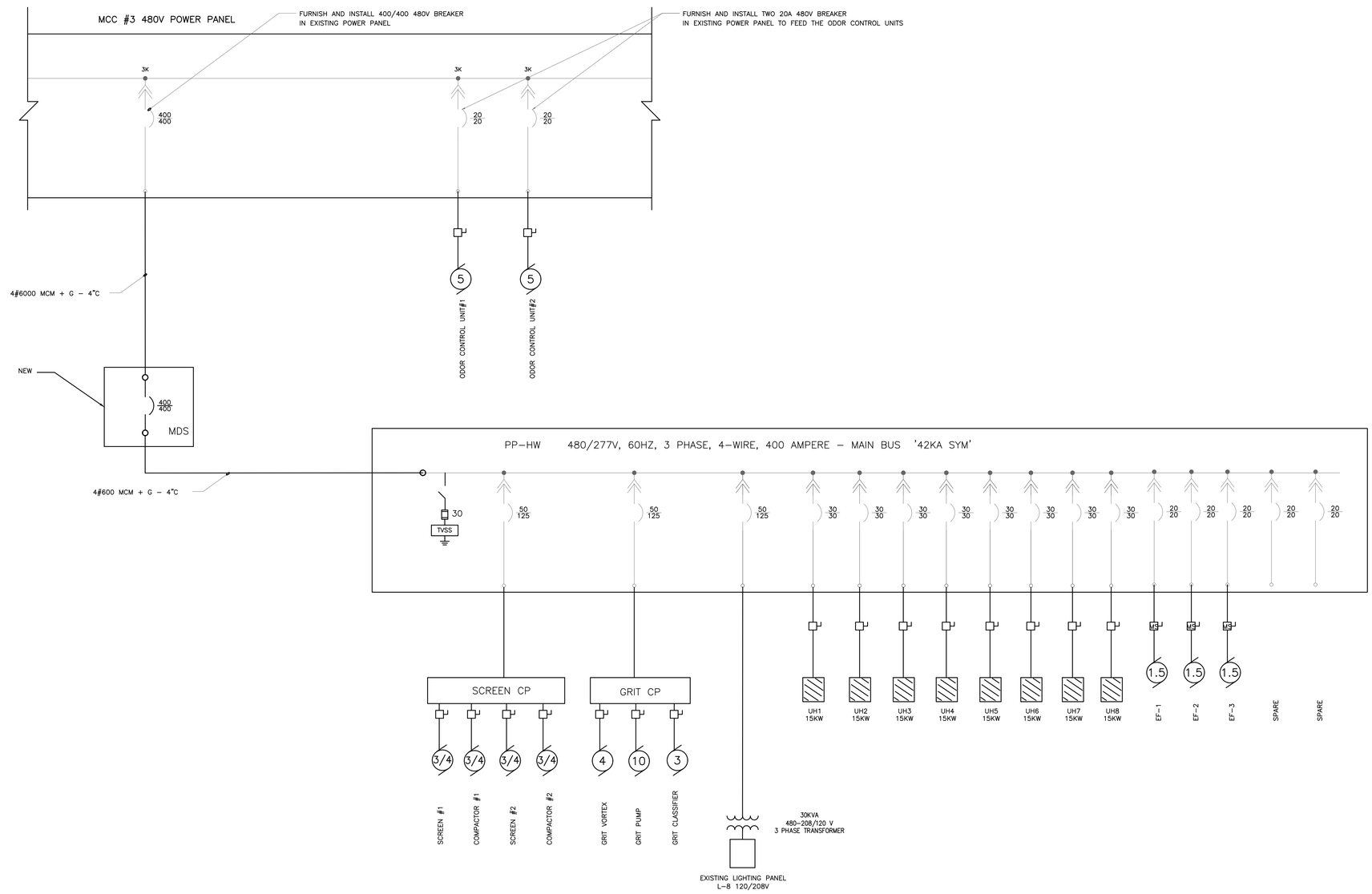

BID PLANS

WARNING – IT IS A VIOLATION OF NEW YORK EDUCATION LAW SECTION 7209.2, FOR ANY PERSON, UNLESS HE IS ACTING UNDER THE DIRECTION OF A LICENSED PROFESSIONAL ENGINEER OR LAND SURVEYOR, TO ALTER THIS DOCUMENT IN ANY WAY. IF ALTERED THE ALTERING PERSON SHALL COMPLY WITH THE REQUIREMENTS OF NEW YORK EDUCATION LAW, SECTION 7209.2.

DATE: 12/2020
DRAWN BY: AMS
SCALE: SCALE
REVIEWED BY:
PROJECT NO.: 19-1612
FILE: FILE NAME

DELAWARE ENGINEERING, D.P.C.
CIVIL AND ENVIRONMENTAL ENGINEERING
28 MADISON AVENUE EXTENSION, ALBANY, NY 12203 - 518.452.1290
55 SOUTH MAIN ST, ONEONTA, NY 13820 - 607.432.8073
31 NORTH MAIN STREET, LIBERTY, NY 12754 - 845.747.9862
6 TOWNSEND STREET, WALTON, NY 13856 - 607.865.6235
16 EAST MARKET ST., RED HOOK, NY 12571 - 518.452.1290
543 BROADWAY, MONTICELLO, NY 12701 - 845.791.7777

STATE OF NEW YORK · LICENSED PROFESSIONAL ENGINEER

REVISIONS

NO.	DATE	DESCRIPTION
1	12/7/20	BID SET

CONTRACT 1
SUFFERN WWTP UPGRADES
VILLAGE OF SUFFERN
ROCKLAND COUNTY, NEW YORK

ELECTRICAL ONE-LINE DIAGRAM

SHEET: E2

File: H:\DRAWINGS\SUFFERN\WWTP\ACAD\PREP\ELECTRICAL\PRELIMINARY ONE-LINE.DWG Saved: 12/7/2020 5:03:01 PM Plotted: 12/7/2020 5:08:26 PM User: Adam Arnold LastSavedBy: amrods

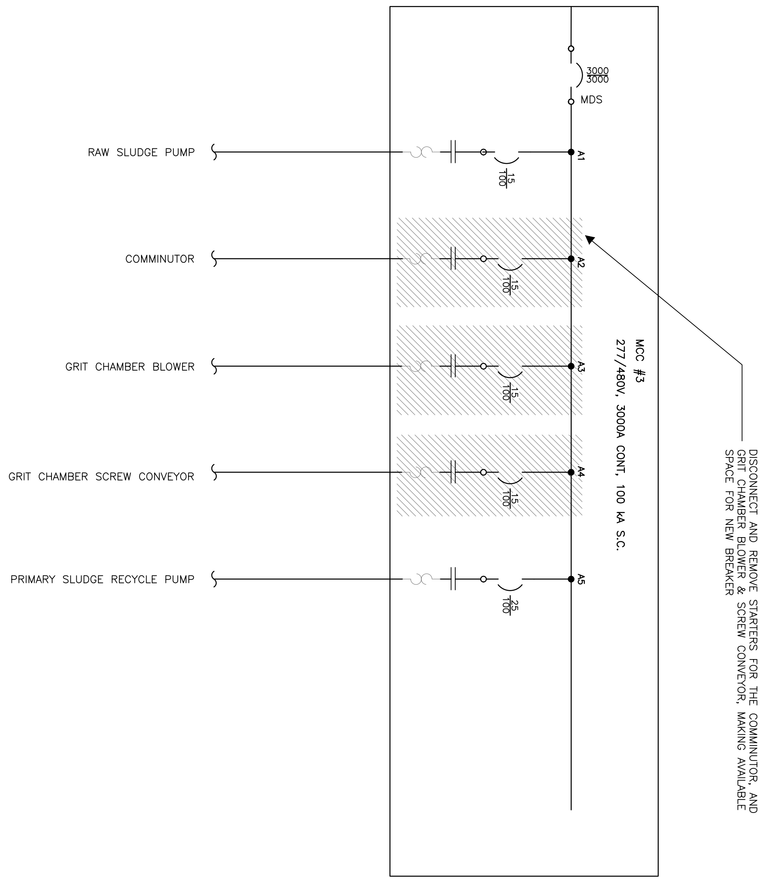

WARNING - IT IS A VIOLATION OF NEW YORK EDUCATION LAW SECTION 7209.2, FOR ANY PERSON, UNLESS HE IS ACTING UNDER THE DIRECTION OF A LICENSED PROFESSIONAL ENGINEER, TO ALTER IN ANY WAY AN ITEM BEARING THE SEAL OF A LICENSED PROFESSIONAL ENGINEER. ALTERING ITEMS SHALL COMPLY WITH THE REQUIREMENTS OF NEW YORK EDUCATION LAW SECTION 7209.2

BID PLANS

SHEET: E3

MCC-3 DEMO PLAN

CONTRACT 1
SUFFERN WWTP UPGRADES
VILLAGE OF SUFFERN
ROCKLAND COUNTY, NEW YORK

REVISIONS

NO.	DATE	DESCRIPTION
1	12/7/20	BID SET

STATE OF NEW YORK · LICENSED PROFESSIONAL ENGINEER

DELAWARE ENGINEERING, D.P.C.
CIVIL AND ENVIRONMENTAL ENGINEERING
28 MADISON AVENUE EXTENSION, ALBANY, NY 12203 - 518.452.1290
55 SOUTH MAIN ST, ONEONTA, NY 13820 - 607.432.8073
31 NORTH MAIN STREET, LIBERTY, NY 12754 - 845.747.9952
6 TOWNSEND STREET, WALTON, NY 13856 - 607.865.9235
16 EAST MARKET ST., RED HOOK, NY 12571 - 518.452.1290
548 BROADWAY, MONTICELLO, NY 12701 - 845.791.7777

DATE: 12/2020
DRAWN BY: AMS
SCALE: SCALE
REVIEWED BY:
PROJECT NO.: 19-1612
FILE: FILE NAME

CONDUIT AND CABLE SCHEDULE

CONDUIT NO.	CONDUIT SIZE	CABLE QTY.	CABLE SIZE	PURPOSE	FROM	VIA	TO	REMARKS
A1.1	4"	4	600kCM	POWER	SLUDGE BLDG MCC #3		MDS	
A1.2	4"	4	600kCM	POWER	MDS		PP-HW	
A2.1	1 1/4"	4	#4	POWER	PP-HW		XFMR - HW	
A2.2	2"	4	2/0	POWER	XFMR - HW		L8	
A3.1	2"	1	FIBER CABLE	CONTROL	SLUDGE BLDG CP		RIO	
A4.1	3/4"	3	#12	POWER	L3		SLUDGE BLDG. CP	
A5.1	4"	-	NA	SPARE	SLUDGE BLDG MCC#3		HEADWORKS ELEC. BLDG	
A5.2	4"	-	NA	SPARE	HEADWORKS ELEC. BLDG.		HEADWORKS BLDG.	
S1.1	3/4"	4	#8	POWER	PP-HW		SCREEN CP	
S1.2	3/4"	1	CAT6	CONTROL	SCREEN CP		ETHERNET SWITCH	
S1.3	3/4"	4	#12	POWER	SCREEN CP		SCREEN #1	
S1.4	3/4"	6	#14	CONTROL	SCREEN CP		SCREEN #1 FWD/REV	
S1.5	3/4"	2	#14	CONTROL	SCREEN CP		SCREEN #1 ESTOP	
S1.6	3/4"	4	#14	CONTROL	SCREEN CP		COMPACTOR #1 WASH SOLENOID	
S1.7	3/4"	4	#12	POWER	SCREEN CP		COMPACTOR #1	POWER TO COMPACTOR #1
S1.8	3/4"	6	#14	CONTROL	SCREEN CP		COMPACTOR #1 START/STOP	
S1.9	3/4"	4	#12	CONTROL	SCREEN CP		SCREEN #1 WASH SOLENOID	
S2.1	3/4"	4	#12	POWER	SCREEN CP		SCREEN #2	
S2.2	3/4"	6	#14	CONTROL	SCREEN CP		SCREEN #2 FWD/REV	
S2.3	3/4"	2	#14	CONTROL	SCREEN CP		SCREEN #2 ESTOP	
S2.4	3/4"	4	#14	CONTROL	SCREEN CP		COMPACTOR #2 WASH SOLENOID	
S2.5	3/4"	4	#12	POWER	SCREEN CP		COMPACTOR #2	POWER TO COMPACTOR #2
S2.6	3/4"	6	#14	CONTROL	SCREEN CP		COMPACTOR #2 START/STOP	
S2.7	3/4"	4	#12	CONTROL	SCREEN CP		SCREEN #2 WASH SOLENOID	
S3.1	3/4"	8	#14	CONTROL	SCREEN CP		CHANNEL FLOATS	
G1.1	3/4"	4	#8	POWER	PP-HW		GRIT CP	
G1.2	3/4"	1	CAT6	CONTROL	GRIT CP		ETHERNET SWITCH	POWER THROUGH DISCONNECT SWITCH
G1.3	3/4"	4	#12	POWER	GRIT CP		GRIT CLASSIFIER	
G1.4	3/4"	6	#14	CONTROL	GRIT CP		GRIT CLASS. START STOP	POWER THROUGH DISCONNECT SWITCH
G2.1	3/4"	4	#12	POWER	GRIT CP		GRIT PUMP	
G2.2	3/4"	6	#14	CONTROL	GRIT CP		GRIT PUMP START/STOP	POWER THROUGH DISCONNECT SWITCH
G3.1	3/4"	4	#12	POWER	GRIT CP		GRIT VORTEX UNIT	
G3.2	3/4"	6	#14	CONTROL	GRIT CP		GRIT VORTEX START/STOP	
G3.3	3/4"	4	#14	CONTROL	GRIT CP		GRIT WASH VALVES	
H1.3	3/4"	3	16TS	CONTROL	GAS DETECTION		HWCP	O2, H2S, METHANE
H1.4	3/4"	3	16TS	CONTROL	GAS DETECTION		HWCP	O2, H2S, METHANE
O1.1	1"	4	#12	POWER	MCC#3		ODOR CONTROL UNIT#1	
O1.2	1"	6	#14	CONTROL	WWTP CONTROL PANEL		ODOR CONTROL UNIT#1	
O2.1	1"	4	#12	POWER	MCC#3		ODOR CONTROL UNIT#2	
O2.2	1"	6	#14	CONTROL	WWTP CONTROL PANEL		ODOR CONTROL UNIT#2	
F1.1	3/4"	3	#12	POWER	L8		FM TRANSMITTER	
F1.2	3/4"	1	16TS	CONTROL	FM TRANSMITTER		RIO	
F1.3	3/4"	1	VENDOR CABLE	CONTROL	FM TRANSMITTER		FLOW METER	
H1.1	3/4"	4	#10	POWER	PPHW		UH1	
H2.1	3/4"	4	#10	POWER	PPHW		UH2	
H3.1	3/4"	4	#10	POWER	PPHW		UH3	
H4.1	3/4"	4	#10	POWER	PPHW		UH4	
H5.1	3/4"	4	#10	POWER	PPHW		UH5	
H6.1	3/4"	4	#10	POWER	PPHW		UH6	
H7.1	3/4"	4	#10	POWER	PPHW		UH7	
H8.1	3/4"	4	#10	POWER	PPHW		UH8	
E1.1	3/4"	4	#12	POWER	PPHW	MS	EF1	
E2.1	3/4"	4	#12	POWER	PPHW	MS	EF2	
E3.1	3/4"	4	#12	POWER	PPHW	MS	EF3	

BID PLANS

WARNING - IT IS A VIOLATION OF NEW YORK EDUCATION LAW SECTION 7209.2, FOR ANY PERSON, UNLESS HE IS ACTING UNDER THE DIRECTION OF A LICENSED PROFESSIONAL ENGINEER OR LAND SURVEYOR, TO ALTER THIS DOCUMENT IN ANY WAY. IF ALTERED THE ALTERING PERSON SHALL COMPLY WITH THE REQUIREMENTS OF NEW YORK EDUCATION LAW, SECTION 7209.2.

DATE: 12/2020
DRAWN BY: AMS
SCALE: SCALE
REVIEWED BY:
PROJECT NO.: 19-1612
FILE: FILE NAME

DELAWARE ENGINEERING, D.P.C.
CIVIL AND ENVIRONMENTAL ENGINEERING
28 MADISON AVENUE EXTENSION, ALBANY, NY 12203 - 518.452.1290
55 SOUTH MAIN ST, ONEONTA, NY 13820 - 607.432.8073
31 NORTH MAIN STREET, LIBERTY, NY 12754 - 845.747.9862
6 TOWNSEND STREET, WALTON, NY 13856 - 607.865.6235
16 EAST MARKET ST., RED HOOK, NY 12571 - 518.452.1290
543 BROADWAY, MONTICELLO, NY 12701 - 845.791.7777

STATE OF NEW YORK · LICENSED PROFESSIONAL ENGINEER

REVISIONS

NO.	DATE	DESCRIPTION
1	12/7/20	BID SET

CONTRACT 1
SUFFERN WWTP UPGRADES
VILLAGE OF SUFFERN
ROCKLAND COUNTY, NEW YORK

CONDUIT SCHEDULE

SHEET: E4

File: H:\DRAWINGS\SUFFERN WWTP\ACAD\REF\ELECTRICAL\PRELIMINARY ONE-LINE.DWG Saved: 12/7/2020 5:03:01 PM Plotted: 12/7/2020 5:09:31 PM User: Allen Arnold LastSavedBy: amrcds

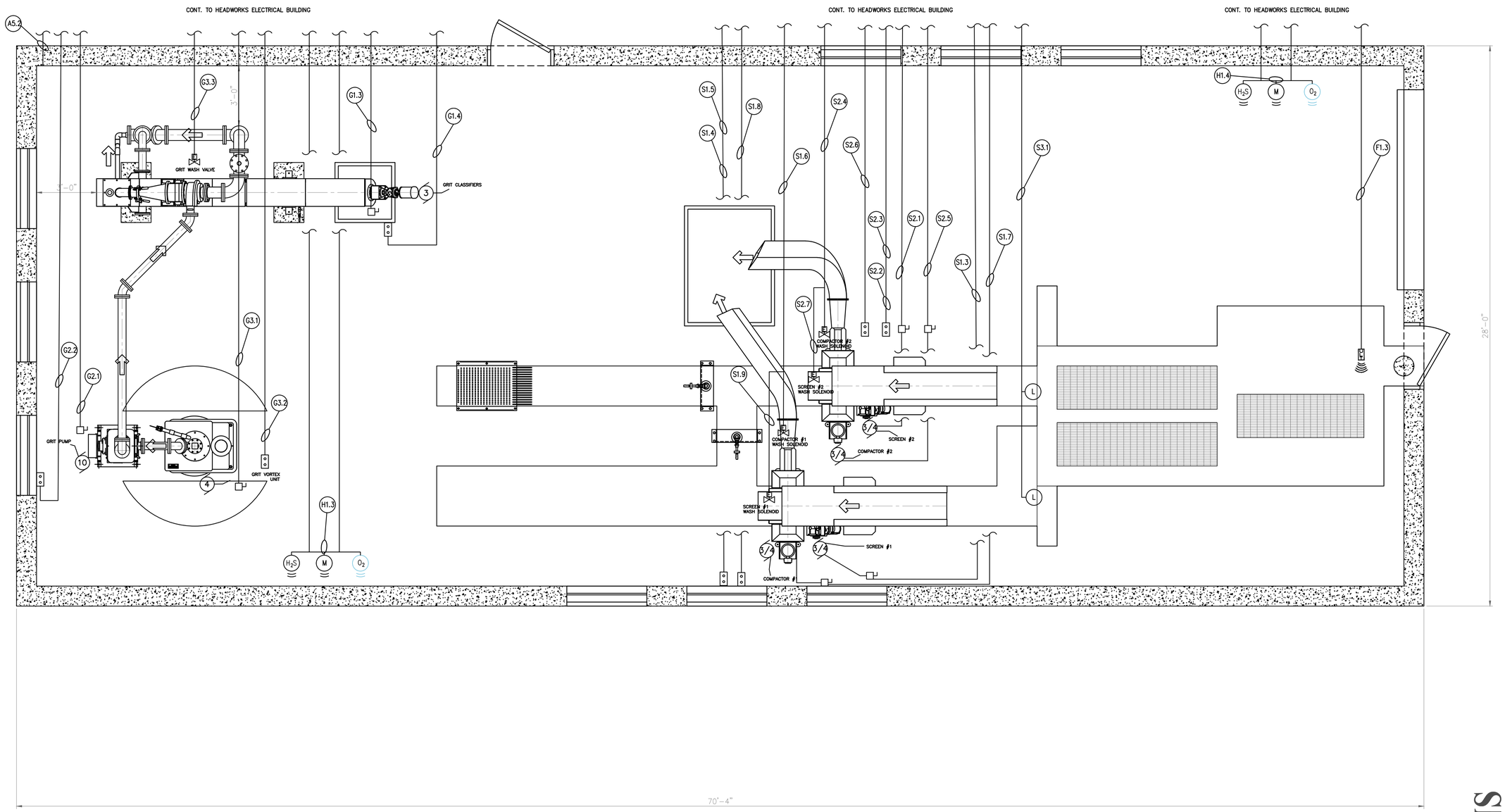

HEADWORKS POWER PLAN

SCALE: 3/8"=1'

NOTE:

1. REFER TO STRUCTURAL DRAWINGS FOR DETAILED CONCRETE AND BUILDING STRUCTURE INFORMATION.

BID PLANS

WARNING – IT IS A VIOLATION OF NEW YORK EDUCATION LAW SECTION 7209.2, FOR ANY PERSON, UNLESS HE IS ACTING UNDER THE DIRECTION OF A LICENSED PROFESSIONAL ENGINEER OR LAND SURVEYOR, TO ALTER THIS DOCUMENT IN ANY WAY. IF ALTERED THE ALTERING PERSON SHALL COMPLY WITH THE REQUIREMENTS OF NEW YORK EDUCATION LAW, SECTION 7209.2.

DATE: 12/2020
DRAWN BY: ED
SCALE: AS SHOWN
REVIEWED BY: RF
PROJECT NO.: 19-1612
FILE:

DELAWARE ENGINEERING, D.P.C.
CIVIL AND ENVIRONMENTAL ENGINEERING
28 MADISON AVENUE EXTENSION, ALBANY, NY 12203 - 518.452.1290
55 SOUTH MAIN ST, ONEONTA, NY 13820 - 607.432.8073
31 NORTH MAIN STREET, LIBERTY, NY 12754 - 845.747.9952
6 TOWNSEND STREET, WALTON, NY 13856 - 607.865.9235
16 EAST MARKET ST., RED HOOK, NY 12571 - 518.452.1290
543 BROADWAY, MONTICELLO, NY 12701 - 845.791.7777

STATE OF NEW YORK · LICENSED PROFESSIONAL ENGINEER

REVISIONS

NO.	DATE	DESCRIPTION
1	12/7/20	BID SET

CONTRACT 1
SUFFERN WWTP UPGRADES
VILLAGE OF SUFFERN
ROCKLAND COUNTY, NEW YORK

HEADWORKS BUILDING
ELECTRICAL LAYOUT

SHEET:
E-101

File: H:\DRAWINGS\SUFFERN\WWTP\ACAD\VREF\ELECTRICAL\SPRN_E-101_HDWKS_ELEC_PLAN_ED0.DWG Saved: 12/7/2020 5:07:51 PM Plotted: 12/7/2020 5:11:26 PM User: Alex Arnold LastSavedBy: arnolds

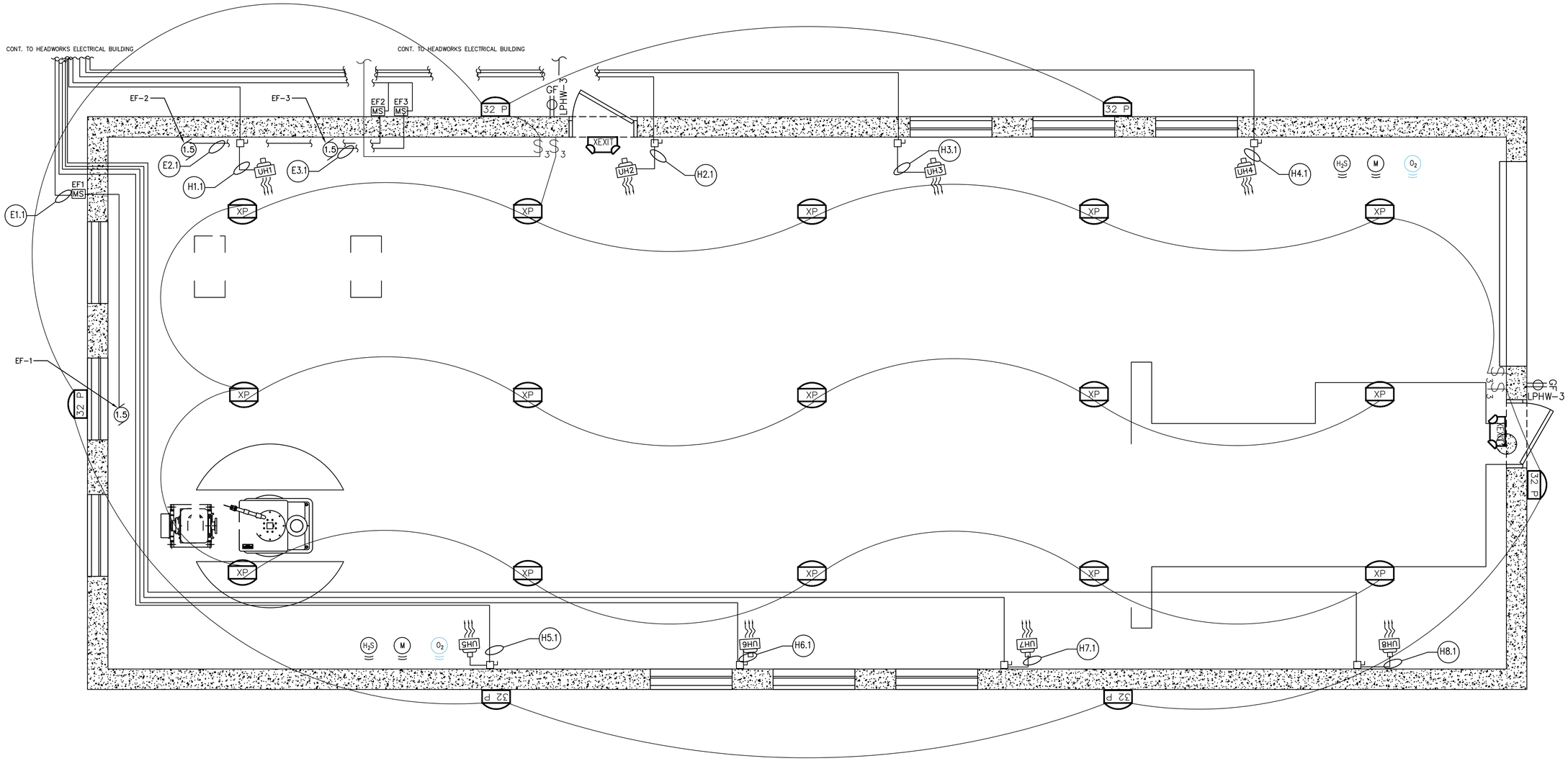

XEXIT — 120 VOLT POLYCARBONATE EMERGENCY/EXIT CLASS 1, DIV1 FIXTURE WITH LED LIGHT AND BATTERY BACKUP. RIG-A-LITE XPEX SERIES MODEL # XPEX-2-R-DT-WP-EM OR APPROVED EQUAL WHITE CASE WITH RED LETTERS

XP — 120 VOLT 57 W LED PENDANT MOUNTED FIXTURE MOUNTED 10' ABOVE FINISHED FLOOR HUBBELL KEMLUX III HAZARDOUS FIXTURE MODEL#KHL-24L-U-5K-5M-X OR APPROVED EQUAL.

32 P — 120 VOLT 32 W LED WALL PACK FIXTURE P = DUSK TO DAWN PHOTO CELL CONTROL HUBBELL MODEL#PGM3-180L3K-035-1-DB-PC

HEADWORKS LIGHTING PLAN

SCALE: 3/8"=1'

NOTE:

1. REFER TO STRUCTURAL DRAWINGS FOR DETAILED CONCRETE AND BUILDING STRUCTURE INFORMATION.

NOTES

1) ALL LIGHTING SWITCHES AND RECEPTACLES IN THE HEADWORKS BUILDING SCREEN ROOM SHALL BE RATED CLASS 1 DIV1.

2) ALL LIGHTING IN THE HEADWORKS BUILDING SCREEN ROOM SHALL BE EXPLOSION PROOF, CLASS 1 DIV 1.

3) ALL LIGHTING SHALL BE INSTALLED PER MANUFACTURERS RECOMMENDATIONS.

4) ELECTRICAL CONTRACTOR SHALL INSTALL THE GAS MONITORS. ELECTRICAL CONTRACTOR THROUGH THE WWCS VENDOR SHALL FURNISH THE GAS MONITORING EQUIPMENT. THE ELECTRICAL CONTRACTOR THROUGH THE WWCS VENDOR SHALL STARTUP THE GAS SENSORS. THE ELECTRICAL CONTRACTOR SHALL FURNISH AND INSTALL CONDUIT AND CONDUCTORS TO THE GAS MONITORS.

5) THE OXYGEN SENSORS SHALL BE INSTALLED 4 TO 6 FEET ABOVE THE FLOOR IN THE BREATHING ZONE.

6) THE METHANE SENSORS SHALL BE INSTALLED WITHIN 12 INCHES OF THE CEILING.

7) ALL LIGHTING CIRCUITS SHALL BE 3#12 IN 3/4" CONDUIT.

8) THE ELECTRICAL CONTRACTOR SHALL FURNISH ALL OF THE CONDUITS AND CONDUCTORS FOR THE HVAC EQUIPMENT. SEE THE H DRAWINGS FOR LOCATIONS OF TEMPERATURE CONTROL DEVICES AND EQUIPMENT.

WARNING – IT IS A VIOLATION OF NEW YORK EDUCATION LAW SECTION 7209.2, FOR ANY PERSON, UNLESS HE IS ACTING UNDER THE DIRECTION OF A LICENSED PROFESSIONAL ENGINEER OR LAND SURVEYOR, TO ALTER THIS DOCUMENT IN ANY WAY. IF ALTERED THE ALTERING PERSON SHALL COMPLY WITH THE REQUIREMENTS OF NEW YORK EDUCATION LAW, SECTION 7209.2.

BID PLANS

DATE: 12/2020
DRAWN BY: ED
SCALE: AS SHOWN
REVIEWED BY: RF
PROJECT NO.: 19-1612
FILE:

DELAWARE ENGINEERING, D.P.C.
CIVIL AND ENVIRONMENTAL ENGINEERING
28 MADISON AVENUE EXTENSION, ALBANY, NY 12203 - 518.452.1290
55 SOUTH MAIN ST, ONEONTA, NY 13820 - 607.432.8073
31 NORTH MAIN STREET, LIBERTY, NY 12754 - 845.747.9862
6 TOWNSEND STREET, WALTON, NY 13856 - 607.865.9235
16 EAST MARKET ST., RED HOOK, NY 12571 - 518.452.1290
548 BROADWAY, MONTICELLO, NY 12701 - 845.791.7777

STATE OF NEW YORK · LICENSED PROFESSIONAL ENGINEER

REVISIONS

NO.	DATE	DESCRIPTION
1	12/7/20	BID SET

CONTRACT 1
SUFFERN WWTP UPGRADES
VILLAGE OF SUFFERN
ROCKLAND COUNTY, NEW YORK

HEADWORKS LIGHTING PLAN

SHEET: E-102

File: H:\DRAWINGS\SUFFERN\WWTP\ACAD\VREX\ELECTRICAL\SFRN_E-101_HDWKS_ELEC_PLAN_ED3.DWG Saved: 12/3/2020 5:07:51 PM Plotted: 12/7/2020 5:12:13 PM User: Allen Ahmad LastSavedBy: amrods

NOTES

1) CONTRACTOR SHALL FURNISH AND INSTALL A BREAKER IN MCC#3 TO FEED THE HEADWORKS ELECTRICAL BUILDING.

2) CONTRACTOR SHALL FURNISH AND INSTALL CONDUIT AND CONDUCTORS FROM MCC#3 TO THE NEW HEADWORKS ELECTRICAL BUILDING.

3) CONTRACTOR SHALL FURNISH AND INSTALL THE NEW SLUDGE BUILDING CONTROL PANEL.

4) CONTRACTOR SHALL FURNISH AND INSTALL A BREAKER IN THE EXISTING PANEL LP3 TO FEED THE SLUDGE BUILDING CONTROL PANEL.

5) CONTRACTOR SHALL FURNISH AND INSTALL CONDUIT AND CONDUCTORS FROM LP3 TO THE SLUDGE BUILDING CONTROL PANEL.

6) CONTRACTOR SHALL FURNISH AND INSTALL FIBER OPTIC CABLE AND CONDUIT FROM THE SLUDGE BUILDING CONTROL PANEL TO THE HEADWORKS ELECTRICAL BUILDING REMOTE IO PANEL.

7) THE CONTRACTOR SHALL FURNISH AND INSTALL TWO BREAKERS FOR THE ODOR CONTROL UNITS IN MCC#3.

8) THE CONTRACTOR SHALL FURNISH AND INSTALL THE CONDUIT AND CONDUCTORS FROM MCC#3 TO THE ODOR CONTROL UNITS.

9) THE ELECTRICAL CONTRACTOR SHALL FURNISH AND INSTALL CONDUIT AND CONDUCTORS FROM THE ODOR CONTROL UNITS TO THE SLUDGE BUILDING CONTROL PANEL.

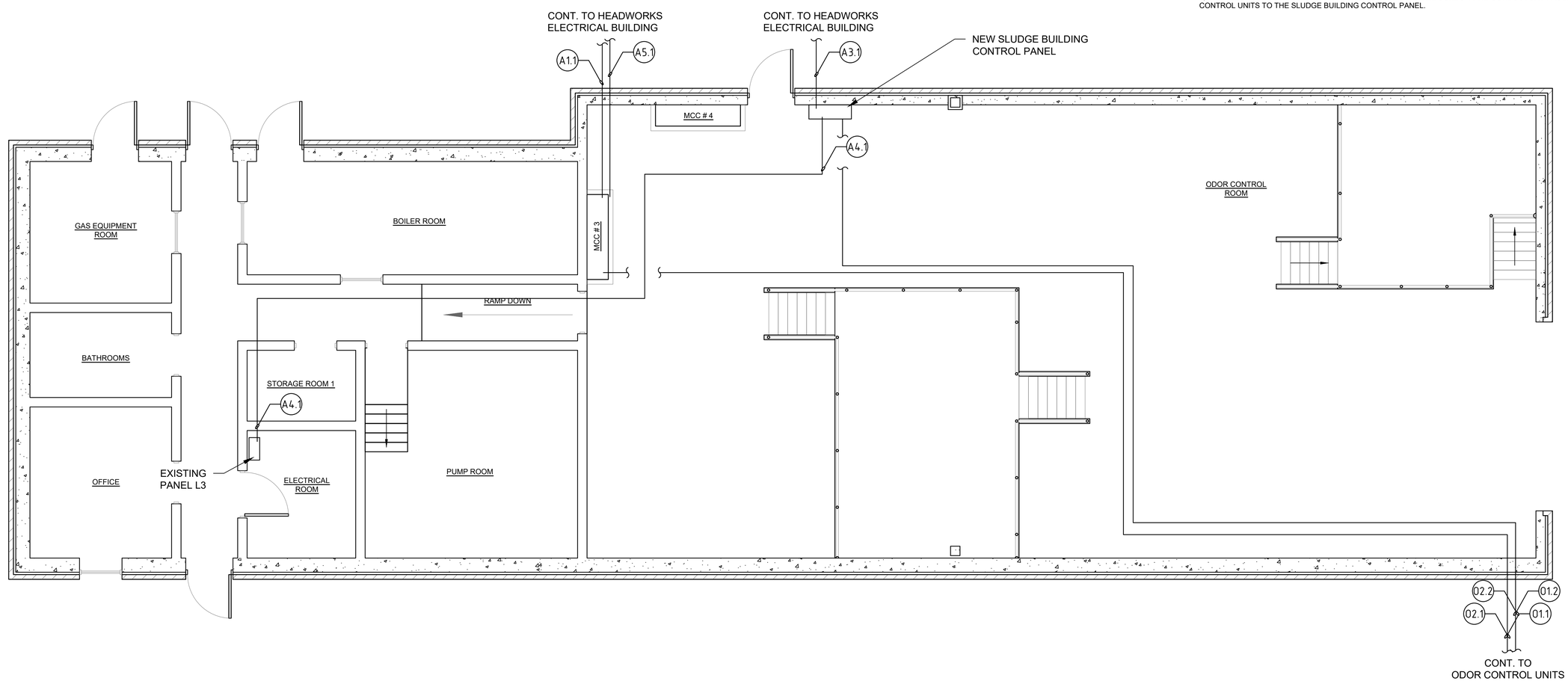

BID PLANS

WARNING -- IT IS A VIOLATION OF NEW YORK EDUCATION LAW SECTION 7209.2, FOR ANY PERSON, UNLESS HE IS ACTING UNDER THE DIRECTION OF A LICENSED PROFESSIONAL ENGINEER OR LAND SURVEYOR, TO ALTER THIS DOCUMENT IN ANY WAY. IF ALTERED THE ALTERING PERSON SHALL COMPLY WITH THE REQUIREMENTS OF NEW YORK EDUCATION LAW, SECTION 7209.2.

DATE: 12/2020
DRAWN BY: XXX
SCALE: AS SHOWN
REVIEWED BY: RF
PROJECT NO.: 19-1612
FILE:

DELAWARE ENGINEERING, D.P.C.
CIVIL AND ENVIRONMENTAL ENGINEERING
28 MADISON AVENUE EXTENSION, ALBANY, NY 12203 - 518.452.1290
55 SOUTH MAIN ST, ONEONTA, NY 13820 - 607.432.8073
21 NORTH MAIN STREET, LIBERTY, NY 12754 - 845.292.0062
6 TOWNSEND STREET, WALTON, NY 13856 - 607.865.6235
16 EAST MARKET ST., RED HOOK, NY 12571 - 518.452.1290
548 BROADWAY, MONTICELLO, NY 12701 - 845.791.7777

STATE OF NEW YORK · LICENSED PROFESSIONAL ENGINEER

REVISIONS

NO.	DATE	DESCRIPTION
1	12/7/20	BID SET

CONTRACT 1
SUFFERN WWTP UPGRADES
VILLAGE OF SUFFERN
ROCKLAND COUNTY, NEW YORK

SLUDGE BUILDING
ELECTRICAL PLAN

SHEET:
E-103

File: H:\DRAWINGS\SUFFERN\WWTP\ACAD\RBSF\ELECTRICAL\SLUDGE BUILDING GROUND PLAN.DWG Saved: 12/7/2020 5:15:48 PM PLotted: 12/7/2020 5:17:34 PM User: Abien Armrod LastSavedBy: armrodo

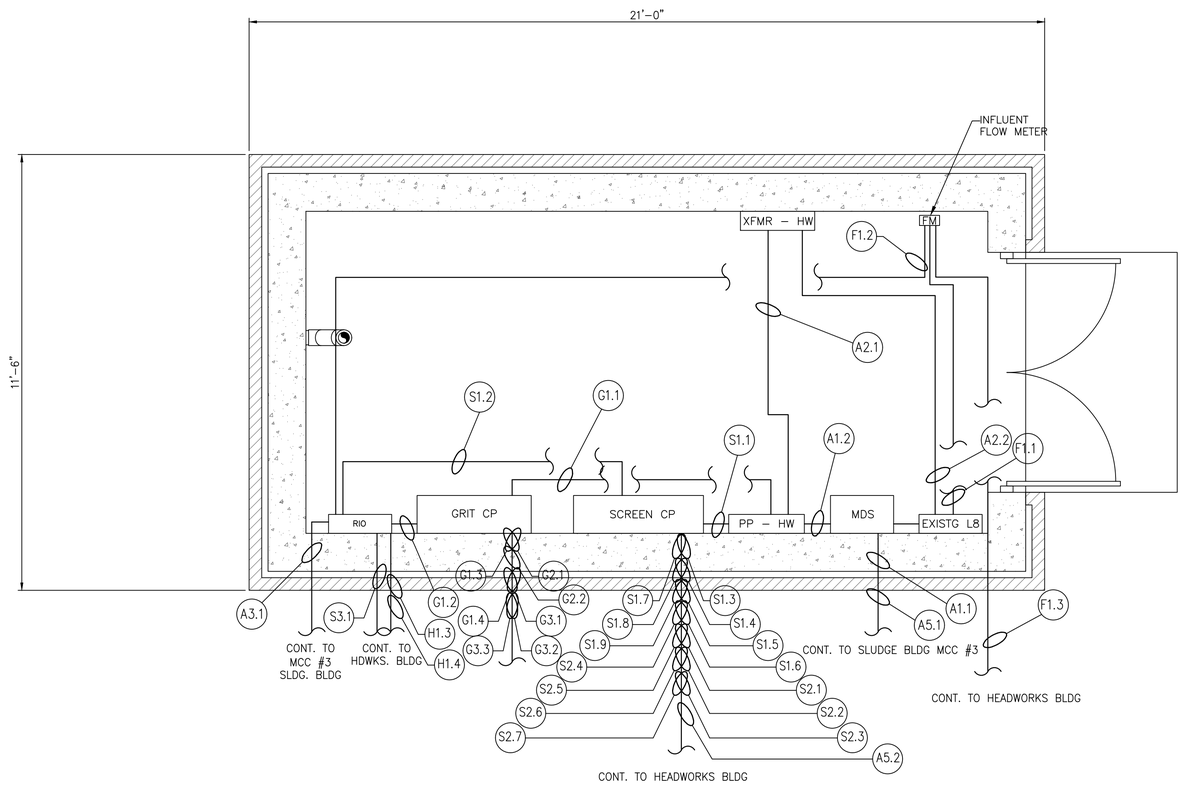

HEADWORKS ELECTRICALBLDG POWER PLAN ELEV. 286.00

SCALE: 1/2"=1'

DATE: 12/2020
DRAWN BY: XXX
SCALE: AS SHOWN
REVIEWED BY: RF
PROJECT NO.: 19-1612
FILE:

DELAWARE ENGINEERING, D.P.C.
CIVIL AND ENVIRONMENTAL ENGINEERING
28 MADISON AVENUE EXTENSION, ALBANY, NY 12203 - 518.452.1290
55 SOUTH MAIN ST, ONEONTA, NY 13820 - 607.432.8073
31 NORTH MAIN STREET, LIBERTY, NY 12754 - 845.747.9862
6 TOWNSEND STREET, WALTON, NY 13856 - 607.865.9235
16 EAST MARKET ST., RED HOOK, NY 12571 - 518.452.1290
543 BROADWAY, MONTICELLO, NY 12701 - 845.791.7777

STATE OF NEW YORK · LICENSED PROFESSIONAL ENGINEER

REVISIONS

NO.	DATE	DESCRIPTION
1	12/7/20	BID SET

CONTRACT 1
SUFFERN WWTP UPGRADES
VILLAGE OF SUFFERN
ROCKLAND COUNTY, NEW YORK

PROPOSED
HEADWORKS
ELECTRICAL BUILDING
PLAN AND SECTION

BID PLANS

SHEET:
E-201

WARNING – IT IS A VIOLATION OF NEW YORK EDUCATION LAW SECTION 7209.2, FOR ANY PERSON, UNLESS HE IS ACTING UNDER THE DIRECTION OF A LICENSED PROFESSIONAL ENGINEER OR LAND SURVEYOR, TO ALTER THIS DOCUMENT IN ANY WAY. IF ALTERED THE ALTERING PERSON SHALL COMPLY WITH THE REQUIREMENTS OF NEW YORK EDUCATION LAW, SECTION 7209.2.

File: H:\DRAWINGS\SUFFERN\WWTP\CAD\XREF\ELECTRICAL\SFRN_E-201_PR_HEADWORKS_ELECT_BLDG_PLAN_SECT_ED.DWG Saved: 12/3/2020 5:07:23 PM Plotted: 12/7/2020 5:14:39 PM User: Allen Amrod LastSavedBy: amrodo

LEGEND

4' LED ENCLOSED GASKETED
VAPORTITE CEILING MOUNTED FIXTURE
METALUX MODEL#4VT2-LD5-4-W-DR-UNV-L835-CD1-WL-U OR APPROVED EQUAL.

XEXIT — 120 VOLT POLYCARBONATE EMERGENCY/EXIT CLASS 1, DIV1
FIXTURE WITH LED LIGHT AND BATTERY BACKUP.
RIG-A-LITE XPEX SERIES MODEL # XPEX-2-R-DT-WP-EM
OR APPROVED EQUAL WHITE CASE WITH RED LETTERS

EXIT — 120 VOLT POLYCARBONATE EMERGENCY/EXIT
FIXTURE WITH LED LIGHT AND BATTERY BACKUP.
OR APPROVED EQUAL WHITE CASE WITH RED LETTERS

32 P — 120 VOLT 32 W LED WALL PACK FIXTURE
P = DUSK TO DAWN PHOTO CELL CONTROL
HUBBELL MODEL#PGM3-180L3K-035-1-DB-PC

XP — 120 VOLT 57 W LED PENDANT MOUNTED FIXTURE
MOUNTED 10' ABOVE FINISHED FLOOR
HUBBELL KEMLUX III HAZARDOUS FIXTURE
MODEL#KHL-24-U-57-5M OR APPROVED EQUAL.

XP X Y — 120 VOLT CLASS 1 DIV 1 LED FIXTURE WITH GLOBE
RIG-A-LITE SXPJ MODEL# SXPJ X-L2-U-G-Y
X=06 FOR 50 WATT FIXTURE
X=09 FOR 70 WATT FIXTURE
X=11 FOR 96 WATT FIXTURE
Y=C FOR CEILING MOUNT FIXTURE
Y=W1 FOR WALL MOUNT FIXTURE

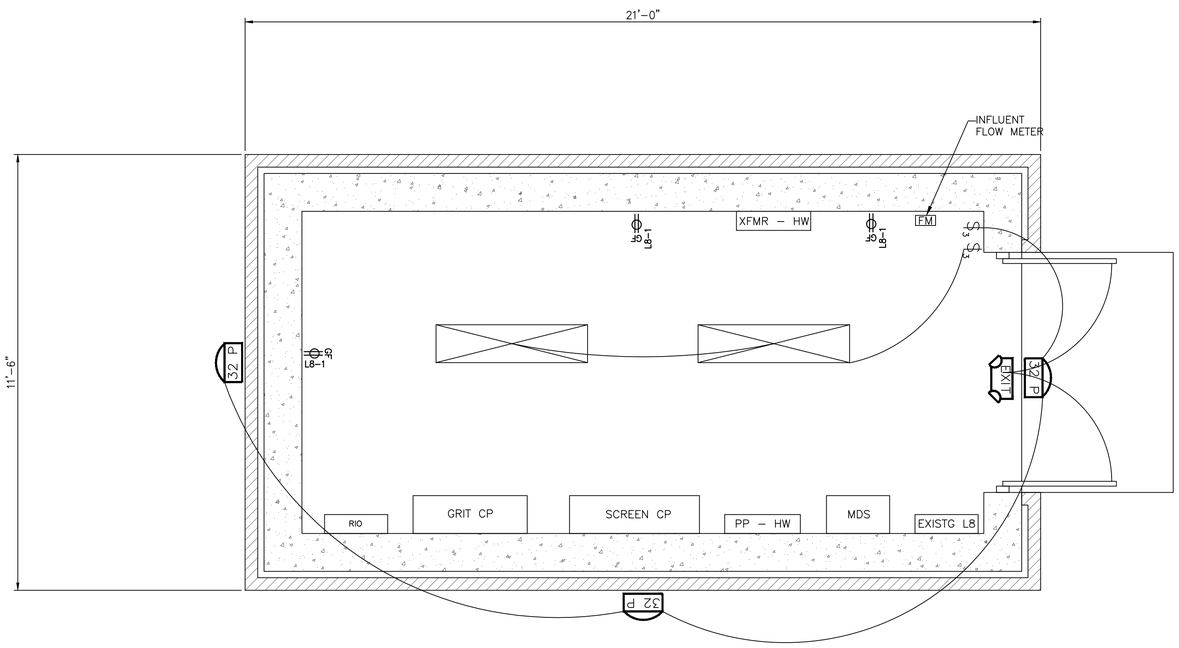

HEADWORKS ELECTRICALBLDG LIGHTING PLAN ELEV. 286.00
SCALE: 1/2"=1'

NOTES
1) ALL LIGHTING SHALL BE INSTALLED PER MANUFACTURERS RECOMMENDATIONS.
2) ALL LIGHTING CIRCUITS SHALL BE 3#12 IN 3/4" CONDUIT.

BID PLANS

WARNING – IT IS A VIOLATION OF NEW YORK EDUCATION LAW SECTION 7209.2, FOR ANY PERSON, UNLESS HE IS ACTING UNDER THE DIRECTION OF A LICENSED PROFESSIONAL ENGINEER OR LAND SURVEYOR, TO ALTER THIS DOCUMENT IN ANY WAY. IF ALTERED THE ALTERING PERSON SHALL COMPLY WITH THE REQUIREMENTS OF NEW YORK EDUCATION LAW, SECTION 7209.2.

DATE: 12/2020
DRAWN BY: XXX
SCALE: AS SHOWN
REVIEWED BY: RF
PROJECT NO.: 19-1612
FILE:

DELAWARE ENGINEERING, D.P.C.
CIVIL AND ENVIRONMENTAL ENGINEERING
28 MADISON AVENUE EXTENSION, ALBANY, NY 12203 - 518.452.1290
55 SOUTH MAIN ST, ONEONTA, NY 13820 - 607.432.8073
31 NORTH MAIN STREET, LIBERTY, NY 12754 - 845.747.9862
6 TOWNSEND STREET, WALTON, NY 13856 - 607.865.6235
16 EAST MARKET ST., RED HOOK, NY 12571 - 518.452.1290
543 BROADWAY, MONTICELLO, NY 12701 - 845.791.7777

STATE OF NEW YORK — LICENSED PROFESSIONAL ENGINEER

REVISIONS

NO.	DATE	DESCRIPTION
1	12/7/20	BID SET

CONTRACT 1
SUFFERN WWTP UPGRADES
VILLAGE OF SUFFERN
ROCKLAND COUNTY, NEW YORK

HEADWORKS
ELECTRICAL BUILDING
LIGHTING PLAN

SHEET:
E-202

File: H:\DRAWINGS\SUFFERN WWTP\ACAD\REF\ELECTRICAL\SFRN_E-201_PR_HEADWORKS_ELECT_BLDG_PLAN_SECT_EDB.DWG Saved: 12/7/2020 5:07:23 PM Plotted: 12/7/2020 5:15:21 PM User: Allen Arnold LastSavedBy: arnold