GENERAL DRAWING SYMBOLS LEGEND

1 / H101	SECTION "1" - SECTION NUMBER "H-1" - DRAWING LOCATION
	BREAK
	PIPE BREAK
	POINT OF DISCONNECTION
	POINT OF CONNECTION TO EXISTING
X	KEYED NOTE

HVAC PIPE FITTINGS LEGEND

	ELBOW TURNED UP
	ELBOW TURNED DOWN
	TEE TURNED UP
	TEE TURNED DOWN
	TEE
	RISE OR DROP IN PIPE
	UNION
	FLANGE
	PIPE CAP
CO	CLEANOUT
	CONCENTRIC REDUCER
	ECCENTRIC REDUCER
UP	PIPE PITCH UP
DN	PIPE PITCH DOWN

HVAC PIPE LEGEND

TAG	PIPE TO BE REMOVED (TAG IDENTIFIES TYPE OF PIPE)
ETAG	EXISTING PIPE NOTED WITH PREFIX LETTER E
BF	BOILER FEEDWATER
CR	CONDENSER WATER RETURN
CS	CONDENSER WATER SUPPLY
	DOMESTIC COLD WATER
CWR	CHILLED WATER RETURN
CWS	CHILLED WATER SUPPLY
D	CONDENSATE DRAIN
FOG	FUEL OIL GAUGE
FOR	FUEL OIL RETURN
FOS	FUEL OIL SUPPLY
FOV	FUEL OIL VENT
G	GAS
HCR	HOT/CHILLED WATER RETURN
HCS	HOT/CHILLED WATER SUPPLY
HPC	HIGH PRESSURE CONDENSATE
HPS	HIGH PRESSURE STEAM
HTPR	HEAT PUMP WATER RETURN
HTPS	HEAT PUMP WATER SUPPLY
HWR	HOT WATER RETURN
HWS	HOT WATER SUPPLY
LPC	LOW PRESSURE CONDENSATE
LPS	LOW PRESSURE STEAM
MPC	MEDIUM PRESSURE CONDENSATE
MPS	MEDIUM PRESSURE STEAM
PC	PUMPED CONDENSATE
RG	REFRIGERANT GAS
RL	REFRIGERANT LIQUID
RS	REFRIGERANT SUCTION
	ATMOSPHERIC VENT

CONTROLS SYMBOLS LEGEND

T	REMOVE TEMPERATURE SENSOR
T	TEMPERATURE SENSOR
T S	TEMPERATURE SENSOR WITH CAST ALUMINUM SECURITY COVER
TH	THERMOSTAT
H	HUMIDISTAT
E	EXISTING DEVICE NOTED WITH LETTER E

HVAC EQUIPMENT SYMBOLS LEGEND

TAG	REMOVE EXISTING EQUIPMENT (TAG IDENTIFIES TYPE OF EQUIPMENT)
FTR-1 10'-0"	FINNED TUBE RADIATION FTR-1 = TAG 10'-0" = ACTIVE LENGTH
FP | CS | OS	VERTICAL TYPE UNIT VENTILATOR CABINETRY FP = FILLER PIECE CS = CLOSED SHELVING UNIT OS = OPEN SHELVING UNIT
EF-X	ROOF EXHAUST FAN WITH DAMPER/ACTUATOR
GRV-X	GRAVITY ROOF VENTILATOR WITH DAMPER/ACTUATOR
	COMBINATION MOTOR STARTER (FURNISHED BY MECHANICAL CONTRACT INSTALLED BY ELECTRIC CONTRACT)
VFD	VARIABLE FREQUENCY DRIVE (FURNISHED BY MECHANICAL CONTRACT INSTALLED BY ELECTRIC CONTRACT)
ETAG	EXISTING EQUIPMENT NOTED WITH PREFIX LETTER E (TAG IDENTIFIES TYPE OF EQUIPMENT)

HVAC VALVE AND SPECIALTIES LEGEND

	GATE VALVE
	GLOBE VALVE
	CHECK VALVE
	BUTTERFLY VALVE
	BALL VALVE
	BALANCE VALVE
	RELIEF VALVE
	PRESSURE REDUCING VALVE
	STRAINER
	STRAINER WITH BLOWDOWN BALL VALVE
	SOLENOID VALVE
	2-WAY CONTROL VALVE
	3-WAY CONTROL VALVE
	FUSIBLE FIRE VALVE
	PUMP DISCHARGE VALVE
	BACKFLOW PREVENTER
	DRAIN VALVE WITH HOSE END CONNECTION
	UNION
	MANUAL AIR VENT
AV	AUTOMATIC AIR VENT
	PRESSURE GAUGE WITH SHUT OFF
	THERMOMETER
	PRESSURE AND TEMPERATURE READOUT PORT
	EXPANSION JOINT
	PREFABRICATED EXPANSION LOOP
	FLEXIBLE PIPE CONNECTOR
G	PIPE ALIGNMENT GUIDE
	PIPE ANCHOR
	INLINE PUMP
AS	TANGENTIAL AIR SEPARATOR
AS	INLINE AIR SEPARATOR
ESD	END SUCTION DIFFUSER
ET	EXPANSION TANK

DUCTWORK & ACCESSORIES SYMBOLS LEGEND

SINGLE LINE DUCT	DOUBLE LINE DUCT	
20/8	20/8	RIGID DUCT TO BE REMOVED 20 = WIDTH (IN), 8 =HEIGHT (IN)
E20/8	E20/8	EXISTING DUCT 20 = WIDTH (IN), 8 =HEIGHT (IN)
20/8	20/8	RIGID DUCT 20 = WIDTH (IN), 8 =HEIGHT (IN)
20/8	20/8	OVAL DUCT 20 = WIDTH (IN), 8 =HEIGHT (IN)
20ø	20ø	ROUND DUCT 20ø = 20 INCH DIAMETER
		ACOUSTICAL LINING (SIZE INDICATES INSIDE DIMENSION)
		SUPPLY DUCT SECTION
		RETURN OR EXHAUST DUCT SECTION
		SUPPLY DUCT ELBOW DOWN
		RETURN OR EXHAUST DUCT ELBOW DOWN
		SQUARE ELBOW WITH TURNING VANES
R W	R W	SMOOTH RADIUS ELBOW $R = \frac{3(W)}{2}$
		DUCT TRANSITION ON CENTER
		DUCT TRANSITION WITH FLAT SIDE
		DUCT TRANSITION SQUARE TO ROUND
		BRANCH DUCT WITH 45° TAKE OFF FOR RECTANGULAR AND ROUND TAKEOFFS
R	R	CHANGE OF ELEVATION R = RISE, D = DROP ARROW IN DIRECTION OF AIRFLOW
AD	AD	HORIZONTAL ACCESS DOOR 12/12 MINIMUM UNLESS OTHERWISE NOTED (FULL WIDTH OF DUCT < 12 WIDTH)
S1-6 / 100	S1-6 / 100	DIFFUSER/GRILLE NOMENCLATURE S = SUPPLY DIFFUSER/GRILLE TAG R = RETURN GRILLE TAG E = EXHAUST GRILLE TAG
S1-14/8 / 100	S1-14/8 / 100	6 = ROUND NECK SIZE (IN) 14/8 = RECTANGULAR NECK SIZE (IN) 100 = AIRFLOW (CFM)
C	C	CABLE DAMPER

SINGLE LINE DUCT	DOUBLE LINE DUCT	
AD	AD	VERTICAL ACCESS DOOR 12/12 MINIMUM UNLESS OTHERWISE NOTED (FULL HEIGHT OF DUCT < 12 HEIGHT)
		24"x24" CEILING SUPPLY DIFFUSER WITH FLEX DUCT ROUND NECK, 4-WAY SUPPLY, EQUAL SIZED BRANCH DUCT
		24"x24" CEILING RETURN OR EXHAUST GRILLE WITH FLEX DUCT ROUND NECK, PERFORATED FACE, EQUAL SIZED BRANCH DUCT
		24"x24" DUCTED CEILING RETURN OR EXHAUST GRILLE SQUARE NECK, PERFORATED FACE
		ROUND CEILING SUPPLY DIFFUSER WITH FLEX DUCT
		RECTANGULAR SUPPLY GRILLE/REGISTER
		RECTANGULAR RETURN OR EXHAUST GRILLE/REGISTER
		LINEAR CEILING SUPPLY DIFFUSER WITH FLEX DUCT ROUND NECK, ADJUSTABLE SUPPLY, EQUAL SIZED BRANCH DUCT
		LINEAR CEILING RETURN OR EXHAUST WITH FLEX DUCT ROUND NECK, EQUAL SIZED BRANCH DUCT
		HEAVY DUTY LINEAR BAR SUPPLY GRILLE
		HEAVY DUTY LINEAR BAR RETURN OR EXHAUST GRILLE
		WALL MOUNTED SUPPLY, RETURN OR EXHAUST GRILLE
DS	DS	DUCT SILENCER
		PARALLEL BLADE DAMPER WITH ACTUATOR
		OPPOSED BLADE DAMPER WITH ACTUATOR
		VOLUME DAMPER
		AIR FLOW DIRECTION
S	S	DUCT SMOKE DETECTOR FURNISHED AND WIRED BY ELECTRICAL CONTRACTOR INSTALLED BY HVAC CONTRACTOR
		VERTICAL SMOKE DAMPER
		HORIZONTAL SMOKE DAMPER
		VERTICAL FIRE/SMOKE DAMPER
		HORIZONTAL FIRE/SMOKE DAMPER
		VERTICAL FIRE DAMPER
		HORIZONTAL FIRE DAMPER

STATE OF NEW YORK · RICHARD REIS SANGUINETO · 087 BESTAR · LICENSED PROFESSIONAL ENGINEER

2021-10.25

ABBREVIATIONS

ABBREVIATION	DESCRIPTION
ACC	AIR-COOLED CONDENSER
ACCU	AIR-COOLED CONDENSING UNIT
AD	ACCESS DOOR
AF	AIR FILTER
AFF	ABOVE FINISHED FLOOR
AFM	AIRFLOW MEASURING DEVICE
AHU	AIR HANDLING UNIT
APD	AIR PRESSURE DROP
AS	AIR SEPARATOR
AT	AIR TERMINAL UNIT
AV	AIR VENT
B	BOILER
BTUH	BRITISH THERMAL UNITS PER HOUR
C	CONVECTOR
CC	COOLING COIL
CHLR	CHILLER
CFM	CUBIC FEET PER MINUTE
CH	CABINET HEATER
CO	CLEAN OUT
CONT.	CONTINUED
CS	CLOSED SHELVING UNIT
CT	COOLING TOWER
DB	DECIBELS
DBT	DRY BULB TEMPERATURE
DIA	DIAMETER
DPT	DEW POINT TEMPERATURE
DS	DUCT SILENCER
DX	DIRECT EXPANSION
E'TAG'	EXISTING EQUIPMENT
EA	EXHAUST AIR
EAT	ENTERING AIR TEMPERATURE

ABBREVIATION	DESCRIPTION
EF	EXHAUST FAN
EG	EXHAUST GRILLE OR REGISTER
EH	ELECTRIC HEATER
EHC	ELECTRIC HEATING COIL
ERC	ENERGY RECOVERY COIL
ET	EXPANSION TANK
EWT	ENTERING WATER TEMPERATURE
FC	FAN COIL UNIT
FD	FIRE DAMPER
FD/SD	COMBINATION FIRE/SMOKE DAMPER
FF	FINAL FILTER
FM	FLOW MEASURING STATION
FP	FILLER PIECE
FPM	FEET PER MINUTE
FT	FEET
FTR	FINNED TUBE RADIATION
GAL	GALLONS
GC	GENERAL CONTRACTOR
GPM	GALLONS PER MINUTE
GRV	GRAVITY ROOF VENTILATOR
H	HUMIDIFIER
HC	HEATING COIL
HE	HEAT EXCHANGER
HGT	HEIGHT
HP	HORSEPOWER
HTP	HEAT PUMP
HRU	HEAT RECOVERY UNIT
IN	INCH
KW	KILOWATT

ABBREVIATION	DESCRIPTION
L	LOUVER
LAT	LEAVING AIR TEMPERATURE
LBS/HR	POUNDS PER HOUR
LF	LINEAR FOOT
LPC	LOW PRESSURE CONDENSATE RETURN
LPS	LOW PRESSURE STEAM (15 PSIG AND BELOW)
LWT	LEAVING WATER TEMPERATURE
MAX	MAXIMUM
MBH	ONE THOUSAND BRITISH THERMAL UNITS PER HOUR
MCA	MINIMUM CURRENT AMPACITY
MIN	MINIMUM
M	DAMPER ACTUATOR
MOCP	MAXIMUM OVERCURRENT PROTECTION
MPC	MEDIUM PRESSURE CONDENSATE RETURN
MPS	MEDIUM PRESSURE STEAM (16-59 PSIG)
MV	MANUAL VENT
NIC	NOT IN CONTRACT
NOM	NOMINAL
OA	OUTSIDE AIR
OS	OPEN SHELVING UNIT
P	PUMP
PC	PUMPED CONDENSATE
PD	PRESSURE DROP
PF	PREFILTER
PRV	PRESSURE REDUCING VALVE
PSIG	POUNDS PER SQUARE INCH WATER GAUGE
RA	RETURN AIR
RF	RETURN AIR FAN
RG	RETURN GRILLE OR REGISTER
RM	ROOM

ABBREVIATION	DESCRIPTION
RP	RETURN PANEL
RPM	REVOLUTIONS PER MINUTE
RTU	ROOFTOP UNIT
S	DUCT SMOKE DETECTOR
SA	SUPPLY AIR
SD	SUPPLY DIFFUSER
SKD	SMOKE DAMPER
SF	SUPPLY AIR FAN
SG	SUPPLY GRILLE OR REGISTER
SP	STATIC PRESSURE
SPS	STATIC PRESSURE SENSOR
SPG	SPECIFIC GRAVITY
TAG	EQUIPMENT IDENTIFICATION
TG	TOP GRILLE OR REGISTER (WALL TYPE)
TO	TRANSFER OPENING
TWU	THRU-THE-WALL UNIT
TYP	TYPICAL
UH	UNIT HEATER
UNO	UNLESS NOTED OTHERWISE
UV	UNIT VENTILATOR
VD	VOLUME DAMPER (MANUAL OPPOSED BLADE)
VFD	VARIABLE FREQUENCY DRIVE
VP	VACUUM PUMP
VR	VACUUM STEAM CONDENSATE RETURN
WBT	WET BULB TEMPERATURE (°F)
WEF	WALL TYPE EXHAUST FAN
WG	WATER GAUGE
WPD	WATER PRESSURE DROP
ZD	ZONE DAMPER

ARCHITECT

ksqdesign

NEW YORK OKLAHOMA NORTH CAROLINA
TEXAS COLORADO

KSQ Design
215 West 40th Street | 15th Floor
New York, NY 10018
914.682.3700 office
www.ksq.design

Owner

Yorktown Central School District
2725 Crompond Road
Yorktown Heights, NY 10598
914 243 8000 office

Construction Manager

Arris Contracting Co.
189 Smith Street
Poughkeepsie, NY 12601
845 473 6300 office
845 473 1453 fax

MEP Engineer

DELTA Engineers, Architects, & Land Surveyors, DPC
220 Harborside Dr, Suite #202
Schenectady, NY 12305
518.690.0046 office

Structural Engineer

Clapper Structural Engineering, PLLC
160 Partition Street
Saugeties, New York 12477
845.943.9601 office
www.clapperstructural.com

Civil Engineer

The Chazen Companies
547 River Street
Troy, New York 12180
518.266.7323 office
www.chazencompanies.com

SED CONTROL NUMBERS

YHS - #66-24-02-06-0-005-028
MS - #66-24-02-06-0-007-027
CES - #66-24-02-06-0-003-022
MES - #66-24-02-06-0-004-025
BES - #66-24-02-06-0-002-020

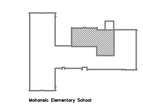

Yorktown CENTRAL SCHOOL DISTRICT

DISTRICT WIDE
IMPROVEMENTS 2020
PHASE II

MOHANSIC ELEMENTARY
SCHOOL
704 LOCKSLEY RD.
YORKTOWN HEIGHTS, NY 10598

REVISIONS

No.	Description	Date

ISSUED: BID ISSUE

DATE: 10/25/2021

SCALE: AS NOTED

SHEET NAME:
HVAC LEGENDS, SYMBOLS & ABBREVIATIONS

SHEET NUMBER:
MES-H001

COPYRIGHT © 2018 KSQ ARCHITECTS, PC

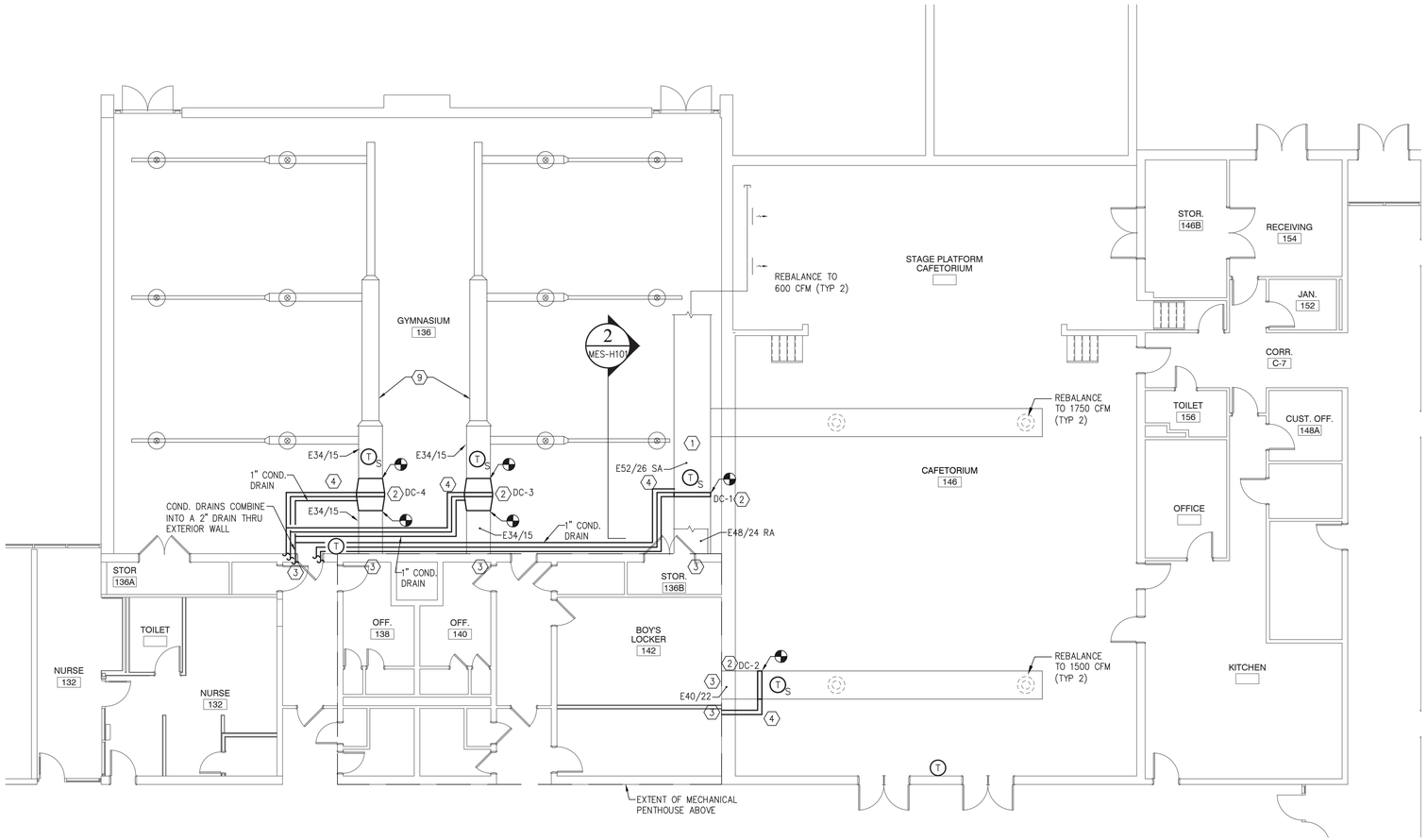

1 GYMNASIUM & CAFETERIA RENOVATION PLAN
MES-H101 SCALE: 1/8" = 1'-0"

GENERAL NOTES	
1	FIELD VERIFY ALL EXISTING DUCT DIMENSIONS AND CLEARANCES. REPORT DISCREPANCIES TO THE ENGINEER.
2	THE CONTRACTOR SHALL PROTECT EXISTING SERVICES AND EQUIPMENT DURING THE WORK.

#	RENOVATION KEY NOTES
1	RETURN DUCT (NOT SHOWN) RUNS ABOVE THE SUPPLY DUCTWORK.
2	PROVIDE DRAIN PAN AND LITTLE GIANT OR EQUAL CONDENSATE SUMP PUMP AND ROUTE TO FAN ROOM FLOOR DRAIN. REFER TO DETAIL 2/MES-H101.
3	SEE DRAWING 3/MES-H101 FOR CONTINUATION.
4	VRF REFRIGERANT PIPING SIZE PER MANUFACTURER'S RECOMMENDATIONS.
5	REMOVE EXISTING STARTER & PROVIDE VFD.
6	SEE DRAWING 1/MES-H101 FOR CONTINUATION.
7	SIZE REFRIGERANT LINES PER MANUFACTURERS RECOMMENDATION.
8	INSTALL VRF CONDENSING UNITS ON STEEL SUPPORT FRAME AS PER DETAIL 2/MES-H501.
9	MC TO PAINT ALL GYMNASIUM EXISTING AND NEW DUCTWORK TO MATCH SCHOOL COLORS. COORDINATE WITH ARCHITECT ON COLORS

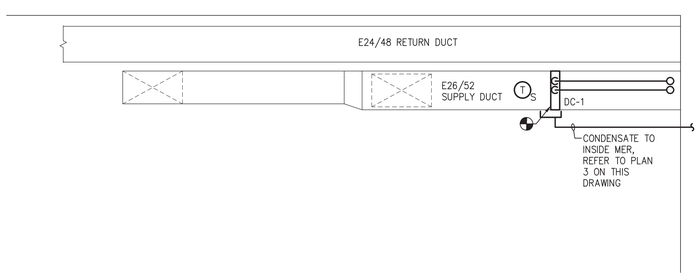

2 SECTION A-A
MES-H101 SCALE: 1/4" = 1'-0"

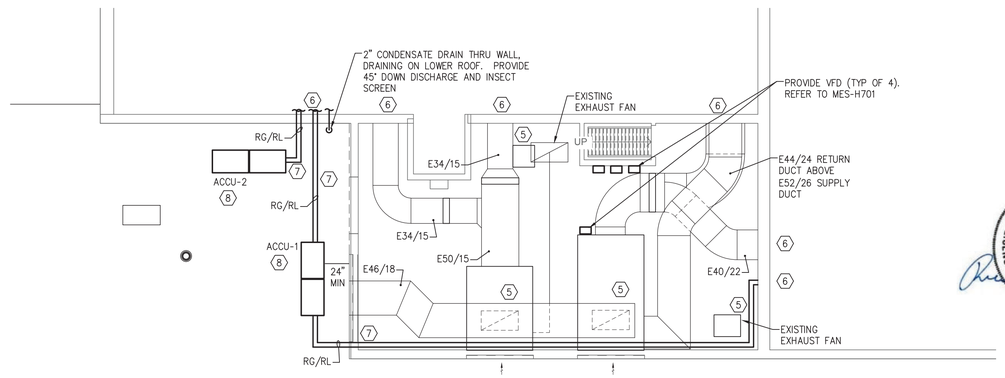

3 ROOF AND PENTHOUSE RENOVATION PLAN
MES-H101 SCALE: 1/8" = 1'-0"

0 2' 4' 8'
SCALE: 1/4" = 1'-0"

0 4' 8' 16'
SCALE: 1/8" = 1'-0"

STATE OF NEW YORK
RICHARD REIS SANGUINETI
LICENSED PROFESSIONAL ENGINEER
2024.10.25

ARCHITECT

ksqdesign

NEW YORK OKLAHOMA NORTH CAROLINA
TEXAS COLORADO

KSQ Design
215 West 40th Street | 15th Floor
New York, NY 10018
914.682.3700 office
www.ksq.design

Owner

Yorktown Central School District
2725 Crompond Road
Yorktown Heights, NY 10598
914 243 8000 office

Construction Manager

Arris Contracting Co.
189 Smith Street
Poughkeepsie, NY 12601
845 473 6300 office
845 473 1453 fax

MEP Engineer

DELTA Engineers, Architects, & Land Surveyors, DPC
220 Harborside Dr, Suite #202
Schenectady, NY 12305
518.690.0046 office

Structural Engineer

Clapper Structural Engineering, PLLC
160 Partition Street
Saugerties, New York 12477
845.943.9601 office
www.clapperstructural.com

Civil Engineer

The Chazen Companies
547 River Street
Troy, New York 12180
518.266.7323 office
www.chazencompanies.com

SED CONTROL NUMBERS

YHS - #66-24-02-06-0-005-028
MS - #66-24-02-06-0-007-027
CES - #66-24-02-06-0-003-022
MES - #66-24-02-06-0-004-025
BES - #66-24-02-06-0-002-020

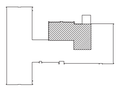

Yorktown CENTRAL SCHOOL DISTRICT

DISTRICT WIDE
IMPROVEMENTS 2020
PHASE II

MOHANSIC ELEMENTARY
SCHOOL
704 LOCKSLEY RD.
YORKTOWN HEIGHTS, NY 10598

REVISIONS

No.	Description	Date

ISSUED: BID ISSUE
DATE: 10/25/2021
SCALE: AS NOTED
SHEET NAME:
GYMNASIUM, CAFETERIA, & ROOF RENOVATION PLANS
SHEET NUMBER:
MES-H101

RELEASED: 10/25/2021 PROJECT NUMBER: 1710402 COPYRIGHT © 2018 KSQ ARCHITECTS, PC

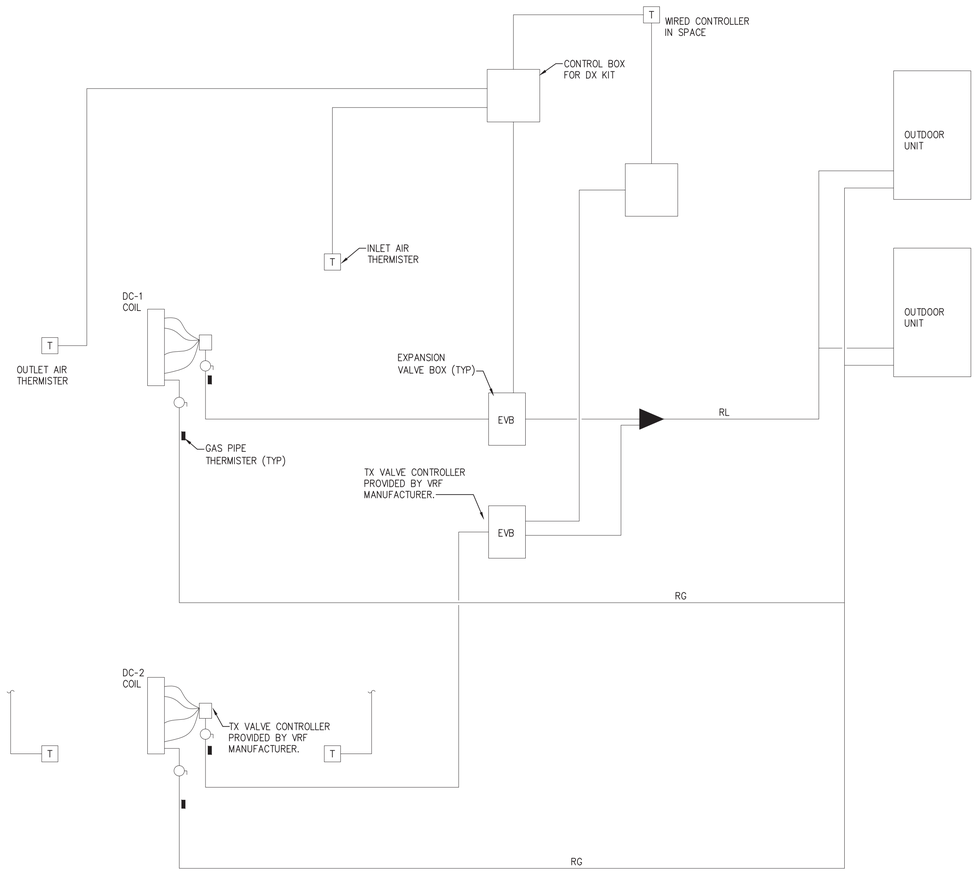

1 CONDENSING UNIT PIPING DETAIL
MES-H501 SCALE: NOT TO SCALE

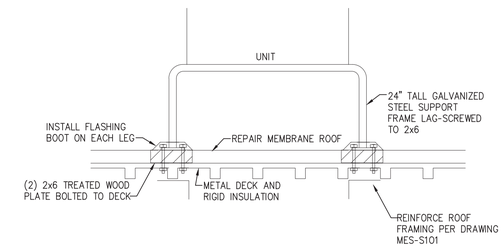

2 ROOF SUPPORT DETAIL
MES-H501 SCALE: NOT TO SCALE

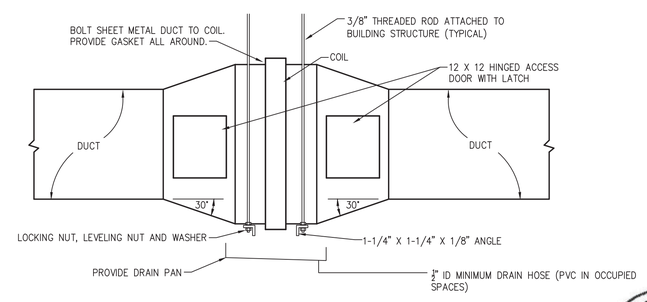

3 VRF DUCT COIL
MES-H501 SCALE: NOT TO SCALE

STATE OF NEW YORK · RICHARD REIS SAUGUINETTI · LICENSED PROFESSIONAL ENGINEER · No. 081318
2021-10.25

VRF DUCT COIL SCHEDULE

MARK	SYSTEM	TYPE	REFRIGERANT	CFM	TOTAL MBH	SENSIBLE MBH	FV (FPM)	APD	EAT DB/WB (°F)	LAT DB/WB (°F)	REFRIGERANT SUCTION °F	LIQUID TEMP (°F)	ROWS	FIN SPACING (FPI)	TUBE SIZE (IN)	NO. OF PASSES	COIL TUBE WALL (IN)	Max COIL VOLUME (IN ^{3})	ACCU	DIMENSIONS (IN) FINN WIDTH X FINN HIEGHT	REMARKS (BASIS OF DESIGN)
DC-1	MOHANSIC CAFETERIA	DX COOLING	R410A	3850	145.4	88.9	504	0.66	80.4/69.2	60/59.5	45	100	3	15	3/8	8	0.016	397	ACCU-1	50 X 22	CAPITAL COIL MODEL X3-4520-13D-HCA-R
DC-2	MOHANSIC CAFETERIA	DX COOLING	R410A	3850	145.4	88.9	504	0.66	80.4/69.2	60/59.5	45	100	3	15	3/8	8	0.016	397	ACCU-1	50 X 22	CAPITAL COIL MODEL X3-4520-13D-HCA-R
DC-3	MOHANSIC GYM	DX COOLING	R410A	3100	130	86	451	0.66	81/68	55.4/54.6	45	100	3	16	3/8	8	0.016	362	ACCU-2	45 X 22	CAPITAL COIL MODEL X3-4522-16C-8CA-R
DC-4	MOHANSIC GYM	DX COOLING	R410A	3100	130	86	451	0.66	81/68	55.4/54.6	45	100	3	16	3/8	8	0.016	362	ACCU-2	45 X 22	CAPITAL COIL MODEL X3-4522-16C-8CA-R

NOTE: SUPPLY AIR TEMPERATURE SHALL BE HELD AT 60° F MINIMUM FOR DC-1 AND DC-2

VENTILATION REQUIREMENTS

Space Designation	Area Area SF	Ocuupants /1000 SF	Ocuupants Total	Ventilation Required Per Occup.	Ventilation Required Per SF	Uncorrected Ventilation	Efficiency Factor	Corrected CFM
Mohansic Café	3,500	-	200	7.50	0.18	2,130	80%	2,660
Mohansic Gym	3,750	7	26	20.00	0.18	1,200	80%	1,500
Total	7,250		226			3,330	80%	4,160

AIR COOLED CONDENSING UNIT SCHEDULE

MARK	SERVICE	NOMINAL TONS	REFRIG. TYPE	ELECTRICAL: COMPRESSOR QTY	COMPRESSOR HP	COND. FAN QTY	COND. FAN HP	VOLTS/PH/HZ	MCA	MAXIMUM FUSE SIZE	DISCONNECT TYPE	DISCONNECT FURNISHED BY	DISCONNECT INSTALLED BY	BASIS OF DESIGN	REMARKS
ACCU-1	DC-1 & 2	20	R-410A	2x2	-	2x2	-	208/3/60	46x2	60x2	NEMA 3R	EC	EC	HITACHI	(Y,H)VAHP120B32S
ACCU-2	DC-3 & 4	20	R-410A	2x2		2x2		208/3/60	46x2	60x2	NEMA 3R	EC	EC	HITACHI	(Y,H)VAHP120B32S

ARCHITECT

ksqdesign

NEW YORK OKLAHOMA NORTH CAROLINA TEXAS COLORADO

KSQ Design
215 West 40th Street | 15th Floor
New York, NY 10018
914.682.3700 office
www.ksq.design

Owner
Yorktown Central School District
2725 Crompond Road
Yorktown Heights, NY 10598
914 243 8000 office

Construction Manager
Arris Contracting Co.
189 Smith Street
Poughkeepsie, NY 12601
845 473 6300 office
845 473 1453 fax

MEP Engineer
DELTA Engineers, Architects, & Land Surveyors, DPC
220 Harborside Dr, Suite #202
Schenectady, NY 12305
518.690.0046 office

Structural Engineer
Clapper Structural Engineering, PLLC
160 Partition Street
Saugeties, New York 12477
845.943.9601 office
www.clapperstructural.com

Civil Engineer
The Chazen Companies
547 River Street
Troy, New York 12180
518.266.7323 office
www.chazencompanies.com

SED CONTROL NUMBERS
YHS - #66-24-02-06-0-005-028
MS - #66-24-02-06-0-007-027
CES - #66-24-02-06-0-003-022
MES - #66-24-02-06-0-004-025
BES - #66-24-02-06-0-002-020

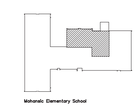

Yorktown CENTRAL SCHOOL DISTRICT

DISTRICT WIDE IMPROVEMENTS 2020 PHASE II

MOHANSIC ELEMENTARY SCHOOL
704 LOCKSLEY RD.
YORKTOWN HEIGHTS, NY 10598

REVISIONS

No.	Description	Date

ISSUED: BID ISSUE
DATE: 10/25/2021
SCALE: AS NOTED
SHEET NAME: DETAILS & SCHEDULES
SHEET NUMBER: MES-H501

COPYRIGHT © 2018 KSQ ARCHITECTS, PC

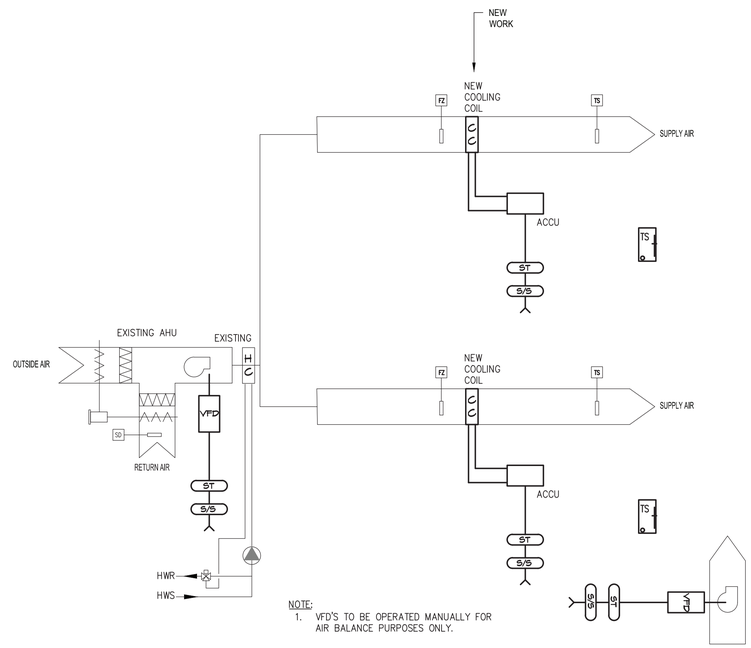

NOTE:
1. VFD'S TO BE OPERATED MANUALLY FOR AIR BALANCE PURPOSES ONLY.

1 VRF DUCT COIL SEQUENCE OF OPERATIONS
BES-H701 SCALE: NTS

SEQUENCE OF OPERATIONS

THE EXISTING AHU'S NORMAL SEQUENCE OF OPERATIONS SHALL BE MAINTAINED INCLUDING:
a. OCCUPIED/UNOCCUPIED SCHEDULE OF OPERATION.
b. HEATING SETPOINTS AND CONTROL.
c. OUTSIDE AIR VENTILATION (REBALANCED TO NEW CFM).
d. THE VFD SHALL MAINTAIN THE ORIGINAL UNIT TOTAL AIR FLOW IN THE HEATING MODE.

NEW DUCT COOLING COIL SEQUENCE OF OPERATION
1. THE COOLING COIL VRF SYSTEM SHALL ONLY BE ENABLED WHEN THE ASSOCIATED AHU IS OPERATING.

2. PRE-OCCUPIED START-UP
2.a. IF ONE HOUR PRIOR TO THE NORMAL START SCHEDULE THE SPACE CALLS FOR COOLING A PRE-COOLING CYCLE SHALL COMMENCE.
2.a.1. THE AHU RETURN AIR DAMPER SHALL OPEN.
2.a.2. THE OUTSIDE AIR DAMPER SHALL REMAIN CLOSED.
2.a.3. THE AHU SUPPLY FAN SHALL START.
2.b. THE SYSTEM SHALL BRING THE SPACE TO NORMAL OCCUPIED TEMPERATURES.
2.b.1. THE DISCHARGE TEMPERATURE IN THE SUPPLY DUCT SHALL NOT BE LOWER THAN 65°F TO PREVENT CONDENSATION ON THE OUTSIDE OF UNINSULATED DUCTS.
2.c. THE SA TEMPERATURE SETPOINT SHALL BE LOWERED BY 2 DEGREES F EVERY 15 MINUTES UNTIL EITHER THE ROOM TEMPERATURE IS SATISFIED OR THE MINIMUM SA TEMPERATURE IS REACHED.
2.d. SETPOINT TEMPERATURES ARE THE NORMAL OCCUPIED VALUES.
2.e. THE DX COMPRESSOR SHALL START IF FREE COOLING IS NOT AVAILABLE.

3. SETPOINT TEMPERATURES: COOLING: 72 DEGREES (ADJUSTABLE).

4. OCCUPIED SCHEDULE OPERATION:
4.a. THE SUPPLY FAN SHALL RUN AT THE COOLING CFM TO MAINTAIN A MAXIMUM OF 500 FPM ACROSS THE COOLING COIL.
4.b. THE OUTSIDE AIR DAMPER SHALL OPEN TO THE MINIMUM POSITION. THE EXHAUST FAN SHALL START.
4.c. THE CONTROLLER SHALL CONTINUE TO MONITOR THE SPACE TEMPERATURE AND MODULATE VRF COMPRESSOR.
4.c.1. THE CAFETERIA SUPPLY AIR TEMPERATURE SHALL BE LIMITED TO A MINIMUM OF 60 DEGREES TO PREVENT CONDENSATION ON THE OUTSIDE OF UNINSULATED DUCTS.
4.c.2. THE GYM SUPPLY AIR TEMPERATURE SHALL BE MAINTAINED AT OR ABOVE 55 DEGREES.

5. SPECIAL EVENT OVERRIDE:
5.1. THE SYSTEM SHALL HAVE AN OVERRIDE FUNCTION THAT MAY BE INITIATED BY THE HEAD END COMPUTER. THE OVERRIDE SHALL BE ABLE TO SPECIFY THE DATE, START AND FINISH TIMES OF THE EVENT.
5.2. THE OVERRIDE COMMAND WILL HAVE A BUILT IN ONE-HOUR PRE-OCCUPIED CYCLE.

STATUS ALARMS AND SETPOINTS

1. THE VRF CONTROLLER SHALL INTERFACE EITHER DIRECTLY OR VIA A BACNET CONNECTION WITH BUILDING AUTOMATION SYSTEM'S HEAD END.

2. THE HEAD SHALL AT A MINIMUM BE ABLE TO READ THE STATUS OF THE FOLLOWING:
2.a. SPACE TEMPERATURE AND SETPOINT.
2.b. VRF COOLING STATUS.
2.b.1. SUPPLY AIR TEMPERATURE.

3. ADJUSTABLE SETPOINTS SHALL INCLUDE:
3.1. SPACE TEMPERATURE.
3.2. SPECIAL EVENT OVERRIDE.
3.a. MINIMUM SUPPLY AIR TEMPERATURE.

4. THE FOLLOWING ALARMS SHALL BE REPORTED:
4.1. SPACE TEMPERATURE 3 DEGREES ABOVE OR BELOW THE SETPOINT (ADJUSTABLE).
4.2. VRF COMPRESSOR FAILURE.

STATE OF NEW YORK
RICHARD REIS SANDQUINTO
LICENSED PROFESSIONAL ENGINEER
No. 075176
2021.10.25

ARCHITECT

ksqdesign

NEW YORK OKLAHOMA NORTH CAROLINA TEXAS COLORADO

KSQ Design
215 West 40th Street | 15th Floor
New York, NY 10018
914.682.3700 office
www.ksq.design

Owner
Yorktown Central School District
2725 Crompond Road
Yorktown Heights, NY 10598
914 243 8000 office

Construction Manager
Arris Contracting Co.
189 Smith Street
Poughkeepsie, NY 12601
845 473 6300 office
845 473 1453 fax

MEP Engineer
DELTA Engineers, Architects, & Land Surveyors, DPC
220 Harborside Dr, Suite #202
Schenectady, NY 12305
518.690.0046 office

Structural Engineer
Clapper Structural Engineering, PLLC
160 Partition Street
Saugeties, New York 12477
845.943.9601 office
www.clapperstructural.com

Civil Engineer
The Chazen Companies
547 River Street
Troy, New York 12180
518.266.7323 office
www.chazencompanies.com

SED CONTROL NUMBERS
YHS - #66-24-02-06-0-005-028
MS - #66-24-02-06-0-007-027
CES - #66-24-02-06-0-003-022
MES - #66-24-02-06-0-004-025
BES - #66-24-02-06-0-002-020

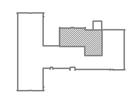

Yorktown CENTRAL SCHOOL DISTRICT

DISTRICT WIDE IMPROVEMENTS 2020 PHASE II

MOHANSIC ELEMENTARY SCHOOL
704 LOCKSLEY RD.
YORKTOWN HEIGHTS, NY 10598

REVISIONS

No.	Description	Date

ISSUED: BID ISSUE
DATE: 10/25/2021
SCALE: AS NOTED
SHEET NAME: CONTROL DIAGRAMS
SHEET NUMBER: MES-H701

COPYRIGHT © 2018 KSQ ARCHITECTS, PC