CAMP KAUFMANN, GIRL SCOUTS OF GREATER NEW YORK

81 CAMP ROAD
HOLMES, NY 12531

ARCHITECT/ LANDSCAPE ARCHITECT
Peter Gisolfi Associates, LLP
566 Warburton Avenue
Hastings-on-Hudson, New York 10706
PH: (914) 478 3677 FAX: (914) 478 1600

MECH./ ELEC./ PLBG. ENGINEER
Tietjen Venegas Consulting Engineers
68 Purchase Street
Rye, NY 10580
PH: (914) 967-9505

STRUCTURAL ENGINEER
D.R. Pilla Consulting Engineers
143 Main Street
Nyack, NY 10960
PH: (845) 727-7793

ROOFING CONSULTANT
Watsky Associates
20 Madison Ave
Valhalla, NY 10595
PH: (914) 948-3450

FOOD SERVICE CONSULTANT
Clevenger Frable Lavallee
39 Westmoreland Ave.
White Plains, NY 10606
PH: (914) 997-9660

CIVIL ENGINEER
Insite Engineering, Surveying
& Landscape Architecture, P.C.
3 Garrett Place
Carmel, NY 10512
PH: (845) 225-9690

SYMBOLS

FOUR INTERIOR ELEVATIONS
WALL TYPE
ELEVATION
OVERALL SECTION
DETAIL SECTION
CENTER LINE
REVISION
EXISTING PARTITION/WALL TO BE DEMOLISHED (DEMO. PLAN)
EXISTING PARTITION TO REMAIN (DEMO. PLAN)
NEW PARTITION (CONST. PLAN)
NEW PARTITION MASONRY WALL
DOOR NUMBER andTYPE (CONST. PLAN)
SMOKE DETECTOR
FIRE EXIT LIGHT
HGT ABOVE FIN. FLOOR.
WINDOW NUMBER & TYPE (CONST. PLAN)
FINISH SYMBOL

ABBREVIATIONS

@ at
& and
ADD addendum
AFF above finished floor
AP access panel
AC acoustical
ACT acoustical tile
A/C air conditioning
ACD access door
AD area drain
ALUM aluminum
ALT alternate
ARCH architect (ural)
ASB asbestos
ASC above suspended ceiling
ASPH asphalt

BLDG building
BLT-IN built-in
BM beam
BRK brick
BUR built-up roofing
B.M.O. brick masonry opg.

CAB cabinet
CC construction contractor
CPT carpet
CLL contract limit line
CJT control joint
CLG ceiling
CM crown moulding
CMU concrete masonry unit
COL column
CONC concrete
CONST construction
CONT continuous
CONTR contractor
CRG cross grain
CU.IN. cubic inch(es)
CU.FT. cubic foot

DPR damper
DET detail
DEMO demolish, demolition
DIAM diameter
DIFF diffuser
DIM dimension
DIM dimension
DR door
D drain
DW drywall
DWG drawing

E east
EA each
EJ expansion joint
ELC electrical contractor
ELEC electric (al)
EP electric panelboard
EL elevation
ELEV elevator
ENT entrance
EQ equal
EQP equipment
EX(IST) existing

FA fire alarm (fresh air)
FD dimension to finish
FE fire extinguisher
FHC fire hose cabinet
FIN finish (ed)
FF finished floor
FFE finished floor elevation (level)
FLG flashing
FFL finished floor line
FLR floor
FC flooring contractor
FLD floor drain
FLUOR fluorescent
FT feet
FUR furred

GC general contractor
GYP gypsum
GB gypsum board
GWB gypsum wall board
GPDW gypsum dry wall

HDW hardware
HM hollow metal
HC hollow core
HR hand rail
HR hour
HT height
HVAC heating/ventilating/ air conditioning
HWD hardwood
HB hose bibb
HMF hollow metal frame

INCAN incandescent
INFO information
INSUL insulate (d) (ion)
INT interior
INST installation
INT interior

JC janitor's closet

KIT kitchen

LAM laminate

MAS masonary
MTL material
MAX maximum
MO masonry opening
MECH mechanic (al)
MC mechanical contractor
MET metal
MIN minimum
MISC miscellaneous
MRB marble
MUL mullion

N/C not in contract
NO number
NTS not to scale

OC on center (s)
OPN'G opening
OUT outlet

PLYWD plywood
PLBG plumbing
PLC plumbing contractor
PV power ventilator with cant
PT point
LB pound
PTN partition
PTD painted

QT quarry tile

RLG railing
REINF reinforce (d), (ing)
RC reinforced concrete
REF reference
REG register (ed)
REM remove
REQ require (s)
RET return
RA return air
REV revision (s)
RL roof ladder
RO rough opening
RV roof vent
RH roof hatch
RD roof drain
RM room
RB rubber base
RBT rubber tile

SC solid core
SCHED schedule
SEC section
SK skylight
SC solid core
SIM similar
SPEC specification (s)
SQ square
SP starting point
SS stainless steel
STD standard
STL steel
SD storm drain
SUSP CLG suspended ceiling
SYM symmetry(ical)
TEL telephone
T&G tongue & groove
TC top of curb
TSL top of slab
TST top of steel
TF top of footing
TW top of wall
TT terrazzo tile
TYP typical
TG tempered glass

VB vinyl base
VIF verify in field
VS vent stack or pipe
VT vinyl tile

UON unless otherwise noted

WG wire glass
WD wood

GENERAL NOTES

1. All materials, assemblies, forms, and methods of construction shall comply with these documents and any of the codes and standards referenced within any or all of these documents.
2. Contractor(s) must comply at all times with OSHA rules and requirements.
3. Contractor(s) shall be solely responsible for construction means, methods, techniques, sequences, or procedures or for safety precautions and programs in conjunction with the work.
4. Contractor(s) must be familiar with all of the drawings and specifications (Contract Documents) pertaining to all of the trades connected with the project.
5. The Contractor(s) shall study and compare all drawings and verify all measurement figures before laying out or constructing the work. Deviation from the drawings and the dimensions given therein shall be made only after written approval or confirmation is requested by the Contractor(s) and issued by the Architect.
6. Whenever any additional materials and/or workmanship not shown are required to complete the work of the Contract Documents in accordance with the obvious intent thereof, the Contractor shall provide these materials and workmanship at no additional cost to the Owner.
7. In the event of conflicts, omissions, ambiguities, discrepancies and /or unclear circumstances between any of the requirements of the Contract Documents, the requirement that is most inclusive and of highest quality, and/or cost shall govern. Contractor(s) shall (a) provide the better quality or greater quantity of work or (b) comply with the more stringent requirement, either or both, in accordance with the Architect's interpretation. No extra compensation shall be awarded to the Contractor(s) based upon a claim of ambiguity or unclear circumstances in the Contract Documents.
8. The Contractor(s) shall verify the accuracy of all elevations, dimensions, and locations and report any discrepancy between existing conditions and the information shown on the drawings prior to the start of work. Any errors due to the Contractor(s) failure to verify such elevations, dimensions, and locations shall be rectified by the Contractor(s) without change to the project schedule and at no cost to the Owner.
9. If a change in the work is found necessary due to a discrepancy between actual field conditions and the drawings, the Contractor(s) shall submit detailed drawings of such departure for the approval of the Architect before making any changes.
10. Contractor(s) shall coordinate neighborhood street access, delivery routing, vehicle parking locations, acceptable hours for construction and material delivery with the Owner and the Owner's Representative.
11. Contractor(s) shall not cause interruption in services such as power, water, or heat without the approval of the Owner and Owner's Representative.
12. Contractor(s) shall protect all areas adjacent to the construction area from damage by construction vehicles, equipment, or construction personnel. Any damage to adjacent areas shall be repaired by the Contractor(s) with no change to the project schedule and at no cost to the Owner.
13. Provisions shall be made to prevent the passage of dust and contaminants into adjacent parts of the building which are not part of the Construction Contract. Periodic inspection and repairs of the containment barriers must be made to prevent exposure to dust or contaminants.
14. Under no circumstances shall the Contractor(s) submit the Architect's own construction drawings or details as their shop drawings or as-built drawings. Shop drawings and as-built drawings must be original documents provided by the Contractor(s).
15. Unless otherwise noted, all gypsum board shall be fire-rated (Type X).
16. All rough wood framing, plywood, and blocking shall be fire retardant treated.
17. All horizontal penetrations through fire rated walls and all vertical penetrations through floor structures shall be properly firestopped and/or equipped with smoke/fire dampers to maintain the integrity of the fire ratings indicated. Where firestopping is not required, spaces between the tops of walls or around penetrations shall be filled with noncombustible material approved by the Architect.
18. Control and expansion joints will be required in all CMU and brick (interior and exterior), per industry standards (National Concrete Masonry Institute and Brick Institute of America); sketches showing precise joint locations will be subsequently issued by the Architect.

DEMOLITION NOTES

1. See Specification Section 024119 "Selective Demolition."
2. The Contractor is solely responsible for all activities, actions, supervision, and control related to the demolition of any and all portions of the existing building.
3. The Contractor is solely responsible for verifying the integrity of the existing structure before demolishing any walls, floors, ceilings, and/or roofing.
4. The Contractor is solely responsible for identifying any load-bearing walls prior to demolition, and for providing reinforcement or support before demolition, saw-cutting or other operations begin.
5. The installation, use, and removal of shoring, reinforcement, and/or temporary supports are the sole responsibility of the Contractor.
6. It is understood that the Architect has no responsibility whatsoever for the Contractor's demolition operations including, but not limited to sequence of operations, means, methods, supervision, or control.
7. Any injuries resulting from the Contractor's demolition operations are the sole responsibility of the Contractor.

LIST OF DRAWINGS

T-001 TITLE PAGE

CIVIL
C-100 EXISTING CONDITIONS PLAN
C-200 OVERALL PLAN
C-300 GRADING AND UTILITIES PLAN
C-301 GRADING AND UTILITIES PLAN
C-302 GRADING AND UTILITIES PLAN
C-303 GRADING, UTILITIES & EROSION PLAN AND SEDIMENT CONTROL PLAN
C-400 SSTS ABSORPTION TRENCH & DISTRIBUTION PLAN
C-500 EROSION AND SEDIMENT CONTROL PLAN
C-501 EROSION AND SEDIMENT CONTROL PLAN
C-502 EROSION AND SEDIMENT CONTROL PLAN
C-600 SEWER PROFILES
C-601 SEWER PROFILES
C-602 SEWER FORCEMAIN PROFILES
C-700 SSTS TRENCH DISTRIBUTION SCHEMATICS
C-800 SSTS ABSORPTION TRENCH PROFILES
C-900 DETAILS
C-901 DETAILS
C-902 DETAILS
C-903 DETAILS
C-904 DETAILS

LANDSCAPE
L-100 REMOVALS PLAN
L-200 MATERIALS PLAN
L-300 GRADING PLAN
L-400 PLANTING PLAN
L-500 SITE DETAILS
L-501 SITE DETAILS

ARCHITECTURAL
A-001 CODE ANALYSIS PLAN
A-002 ICC/ANSI REQUIREMENTS
A-003 ICC/ANSI REQUIREMENTS
A-004 SIGNAGE DETAILS

EN-100 ENERGY ANALYSIS
EN-101 ENERGY ANALYSIS
EN-102 ENERGY ANALYSIS
EN-200 ENVELOPE COMCHECK
EN-201 MEP COMCHECK

A-100 FOUNDATION PLAN
A-101 FIRST FLOOR CONSTRUCTION PLAN
A-102 MEZZANINE FLOOR CONSTRUCTION PLAN
A-103 CLERESTORY PLAN
A-104 ROOF CONSTRUCTION PLAN
A-151 FIRST FLOOR REFLECTED CEILING PLAN
A-152 MEZZANINE FLOOR REFLECTED CEILING PLAN
A-200 BUILDING ELEVATIONS
A-201 BUILDING ELEVATIONS
A-300 BUILDING SECTIONS
A-301 BUILDING SECTIONS
A-302 BUILDING SECTIONS

A-350 WALL SECTIONS
A-351 WALL SECTIONS
A-352 WALL SECTIONS
A-353 WALL SECTIONS
A-354 WALL SECTIONS
A-355 WALL SECTIONS

A-360 ENLARGED DETAILS
A-370 ROOFTOP EQUIPMENT SCREEN DETAILS
A-371 FIREPLACE DETAILS
A-372 FAUX CHIMNEY DETAILS

A-400 INTERIOR ELEVATIONS
A-401 ENLARGED TOILET ROOM PLANS & INTERIOR ELEVATIONS

A-600 MILLWORK DETAILS

A-701 FIRST FLOOR FINISH PLAN
A-702 MEZZANINE FLOOR FINISH PLAN

A-800 PARTITION TYPES

A-860 ROOFING DETAILS
A-861 ROOFING DETAILS
A-862 ROOFING DETAILS
A-863 ROOFING DETAILS
A-864 ROOFING DETAILS
A-865 ROOFING DETAILS

A-900 ALUMINUM STOREFRONT SYSTEM AND DOOR SCHEDULE
A-901 ALUMINUM STOREFRONT WINDOW AND LOUVER SCHEDULE

A-950 FINISH SCHEDULE

FOOD SERVICE
KA-1 KITCHEN EQUIPMENT PLAN WITH SCHEDULE
KA-2 PLUMBING PLAN
KA-3 ELECTRICAL PLAN
KA-4 SPECIAL CONDITIONS PLAN
KA-5 FOOD SERVICE DETAILS
KA-6 EXHAUST HOOD DETAILS

STRUCTURAL
S-001 TITLE SHEET
S-002 GENERAL NOTES (1)
S-003 GENERAL NOTES (2)
S-100 FOUNDATION AND FIRST FLOOR FRAMING PLAN
S-101 MEZZANINE AND LOW ROOF FRAMING PLAN
S-102 ROOF FRAMING PLAN
S-200 CONCRETE DETAILS
S-201 ELEVATION (1)
A-202 ELEVATION (2)
A-203 ELEVATION (3)
A-204 ELEVATION (4)
S-300 SECTIONS AND DETAILS (1)
S-301 SECTIONS AND DETAILS (2)

SITE UTILITY
SU-1 KEY PLAN AND SITE PLAN
SU-2 DETAILS AND NOTES

PLUMBING
P-1 FIRST FLOOR PLAN, DETAIL & SCHEDULE
P-2 KITCHEN PLAN
P-3 FOOD SERVICE PLUMBING SCHEDULE
P-4 SANITARY, WATER & GAS RISER

FIRE PROTECTION
FP-1 FIRST FLOOR PLAN
FP-2 MEZZANINE FLOOR PLAN
FP-3 FIRE PROTECTION DETAILS

HVAC
H-1 FIRST FLOOR PLAN & DETAILS
H-2 MEZZANINE FLOOR PART PLAN
H-3 ENLARGED KITCHEN PLAN AND DETAILS
H-4 HVAC DETAILS

ELECTRICAL
E-1 FIRST FLOOR PLAN & LIGHTING CONTROL CHART
E-2 MEZZANINE FLOOR PLAN, FIRE ALARM RISER, NOTES & DETAILS
E-3 POWER- FIRST FLOOR PLAN
E-4 POWER- MEZZANINE FLOOR PLAN
E-5 POWER- RISER, NOTES & SCHEDULE
E-6 POWER- LEGEND, ABBREVIATION & SCHEDULES
E-7 KITCHEN PLAN
E-8 ELECTRICAL EQUIPMENT SCHEDULE

KEY PLAN

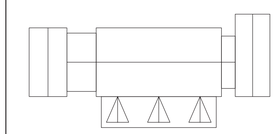

N.T.S.

BUILDING LOCATION PLAN

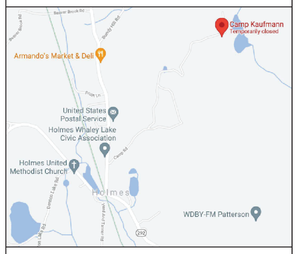

No.	Date	Revision
1	07/01/2022	ADDENDUM #1
1.	06/24/2022	ISSUED FOR BID

STRUCTURAL ENGINEER
D.R. Pilla Consulting Engineers
143 Main Street
Nyack, NY 10960
PH (845) 727-7793

CIVIL ENGINEER
Insite Engineering, Surveying & Landscape Architecture, P.C.
3 Garrett Place
Carmel, NY 10512
PH (845) 225-9690

M.E.P. ENGINEER
Tietjen Venegas Consulting Engineers
68 Purchase Street,
Rye, NY 10580
PH (914) 967-9505

Architect
PETER GISOLFI ASSOCIATES
Architects · Landscape Architects, LLP
566 Warburton Avenue, Hastings-on-Hudson, NY 10706
Phone: (914) 478-3677 · Fax: (914) 478-1600

Project Title

CAMP KAUFMANN
GIRL SCOUTS OF
GREATER NEW YORK
81 CAMP ROAD
HOLMES, NY 12531

Drawing Title

TITLE SHEET

Seal & Signature

Date:	06/21/2021
PROJECT No:	2005
DRAWN BY:	CS, RW, MK
CHK BY:	NL
DWG No:	T-001
CADD FILE No:	–

W:\2005 Girl Scouts of Greater NY

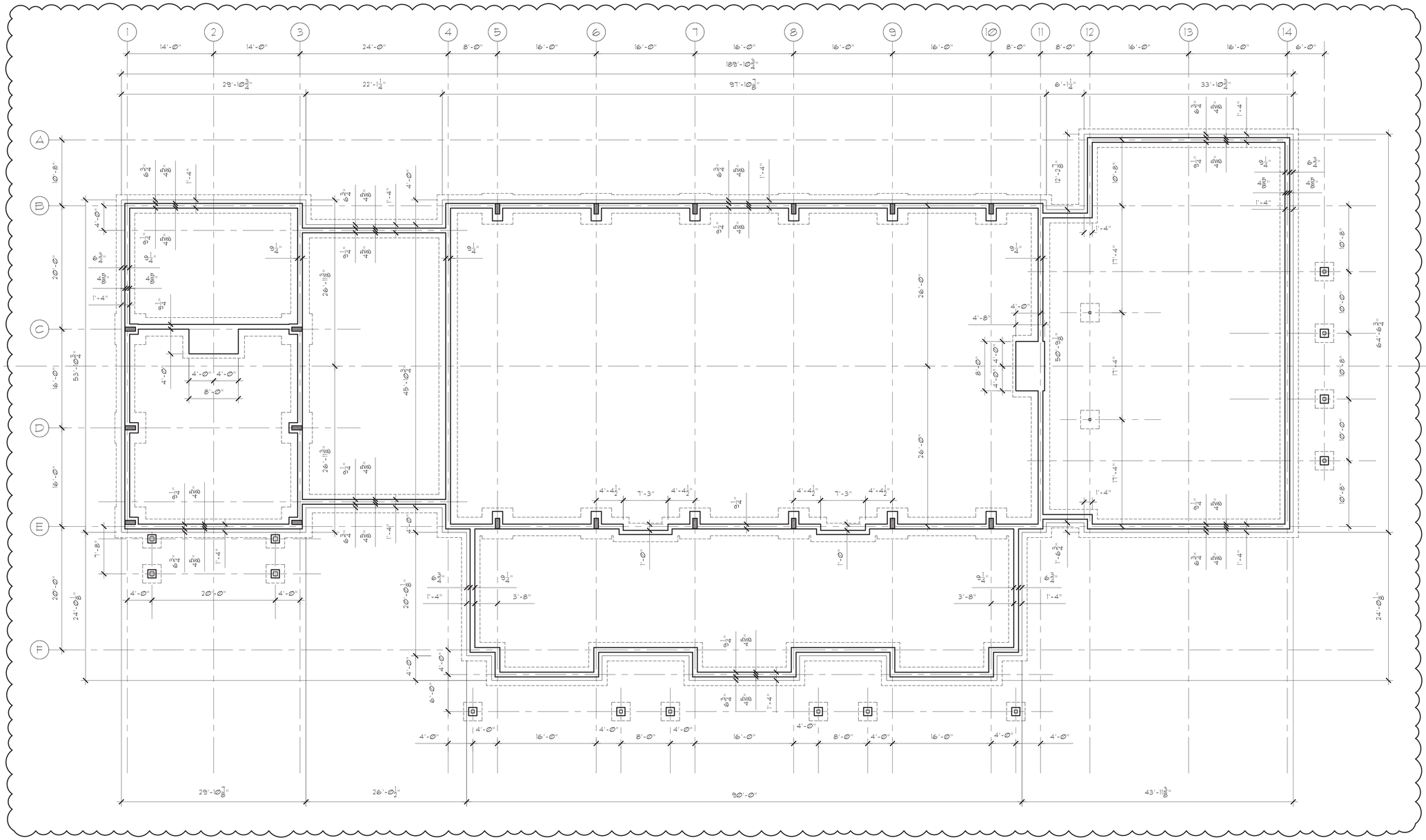

1 FOUNDATION PLAN
SCALE: 1/8"=1'-0"

KEY PLAN

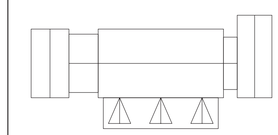

N.T.S.

No.	Date	Revision
1	07/01/2022	ADDENDUM #1
1.	06/24/2022	ISSUED FOR BID

STRUCTURAL ENGINEER
D.R. Pilla Consulting Engineers
143 Main Street
Nyack, NY 10960
PH (845) 727-7793

M.E.P. ENGINEER
Turjen Venegas Consulting Engineers
68 Purchase Street,
Rye, NY 10580
PH (914) 967-9505

FOR REFERENCE ONLY
CIVIL ENGINEER
Insite Engineering, Surveying & Landscape Architecture, P.C.
3 Garrett Place
Carmel, NY 10512
PH (845) 225-6600

Architect
PETER GISOLFI ASSOCIATES
Architects · Landscape Architects, LLP
566 Warburton Avenue, Hastings-on-Hudson, NY 10706
Phone: (914) 478-3677 · Fax: (914) 478-1600

Project Title

CAMP KAUFMANN GIRL SCOUTS OF GREATER NEW YORK

81 CAMP ROAD
HOLMES, NY 12531

Drawing Title

FOUNDATION PLAN

Seal & Signature

Date:	06/21/2021
PROJECT No:	2005
DRAWN BY:	CS, RW, MK
CHK BY:	NL
DWG No:	A-100
CADD FILE No:	

W:\2005 Girl Scouts of Greater NY

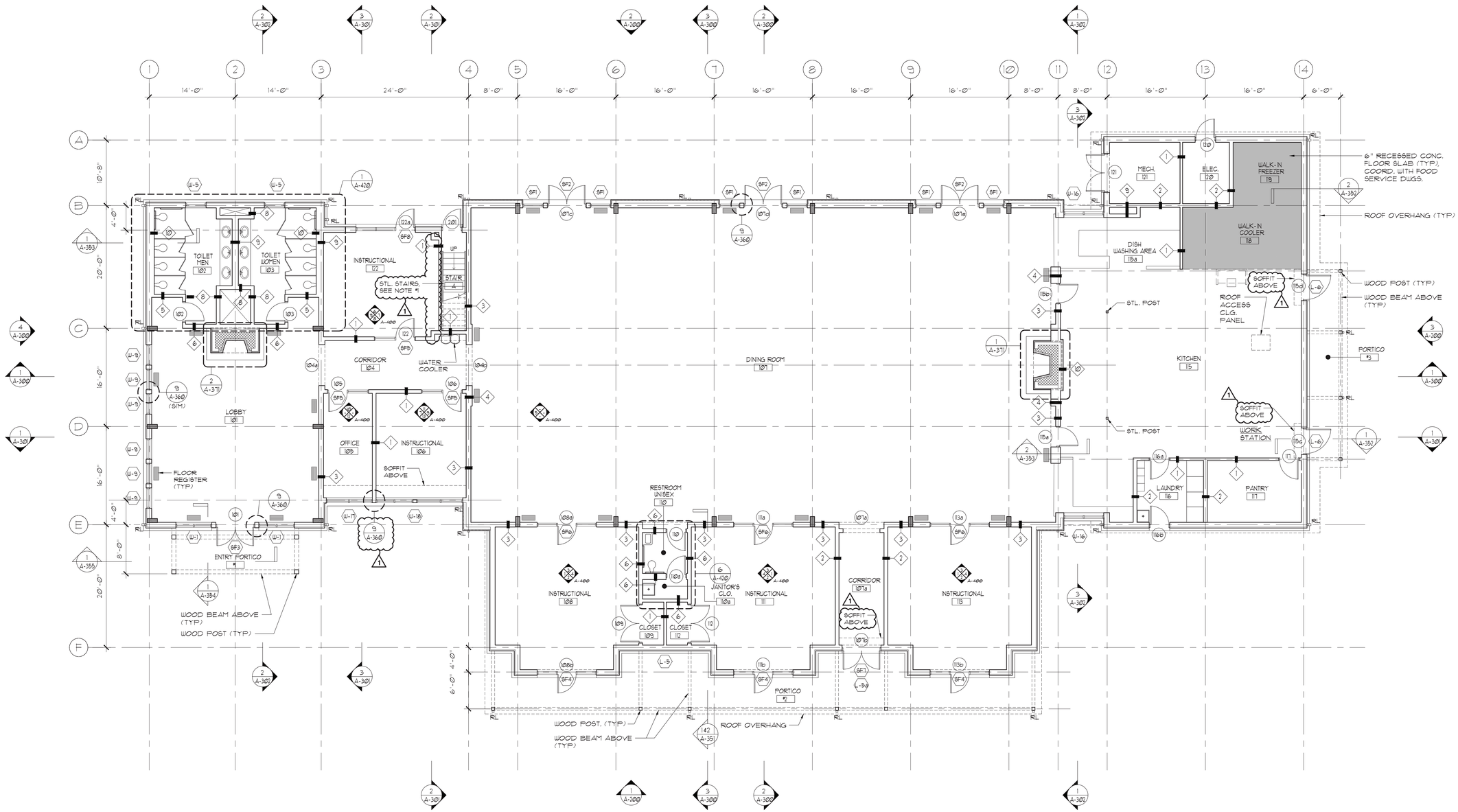

1 FIRST FLOOR CONSTRUCTION PLAN

SCALE: 1/8"=1'-0"

KEY PLAN

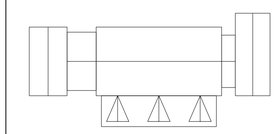

N.T.S.

NOTE

1. STEEL STAIRS SHALL BE ENGINEERED AND CONSTRUCTED FROM THE FOLLOWING:
   a. TREADS: 11"x 42" DIAMOND STEEL PLATE TREADS (WELDED TO STEEL STRINGER) WITH SCREWED DOWN NON-SLIP NOSING.
   b. RISERS: CLOSED RISERS SHALL BE 7" MAX. AND CONSTRUCTED FROM DIAMOND PLATE WELDED TO STEEL STRINGER.
   c. STRINGER: STRINGER SHALL BE "C" CHANNEL.
   d. HANDRAIL: HANDRAIL SHALL BE 1½" DIA. STEEL TUBE HANDRAIL (BOTH SIDES OF STAIR) BOLTED TO WALL.
   e. FINISH: PRIMED WITH RUST INHIBITOR AND PAINTED.
   f. FLOOR TO FLOOR HEIGHT IS 10'-0".

CONTRACTOR SHALL FIELD VERIFY ALL DIM. PRIOR TO FABRICATION.

2. ALL EXPOSED WOOD AT EXTERIOR INCLUDING POSTS, BEAMS, TRIMS, RAFTERS AND ROOF DECK AT PORTICO #1 & 2, SHALL BE RED CEDAR (STAINED), UNLESS STATED OTHERWISE.

No.	Date	Revision
1	07/01/2022	ADDENDUM #1
1.	06/24/2022	ISSUED FOR BID

STRUCTURAL ENGINEER
D.R. Pilla Consulting Engineers
143 Main Street
Nyack, NY 10960
PH (845) 727-7793

M.E.P. ENGINEER
Tietjen Venegas Consulting Engineers
68 Purchase Street,
Rye, NY 10580
PH (914) 967-9505

FOR REFERENCE ONLY
CIVIL ENGINEER
Insite Engineering, Surveying & Landscape Architecture, P.C.
3 Garrett Place
Carmel, NY 10512
PH (845) 225-9690

Architect
PETER GISOLFI ASSOCIATES
Architects · Landscape Architects, LLP
566 Warburton Avenue, Hastings-on-Hudson, NY 10706
Phone: (914) 478-3677 · Fax: (914) 478-1600

Project Title

CAMP KAUFMANN GIRL SCOUTS OF GREATER NEW YORK

81 CAMP ROAD
HOLMES, NY 12531

Drawing Title

FIRST FLOOR CONSTRUCTION PLAN

Seal & Signature

Date:	06/21/2021
PROJECT No:	2005
DRAWN BY:	CS, RW, MK
CHK BY:	NL
DWG No:	A-101
CADD FILE No:	

W:\2005 Girl Scouts of Greater NY

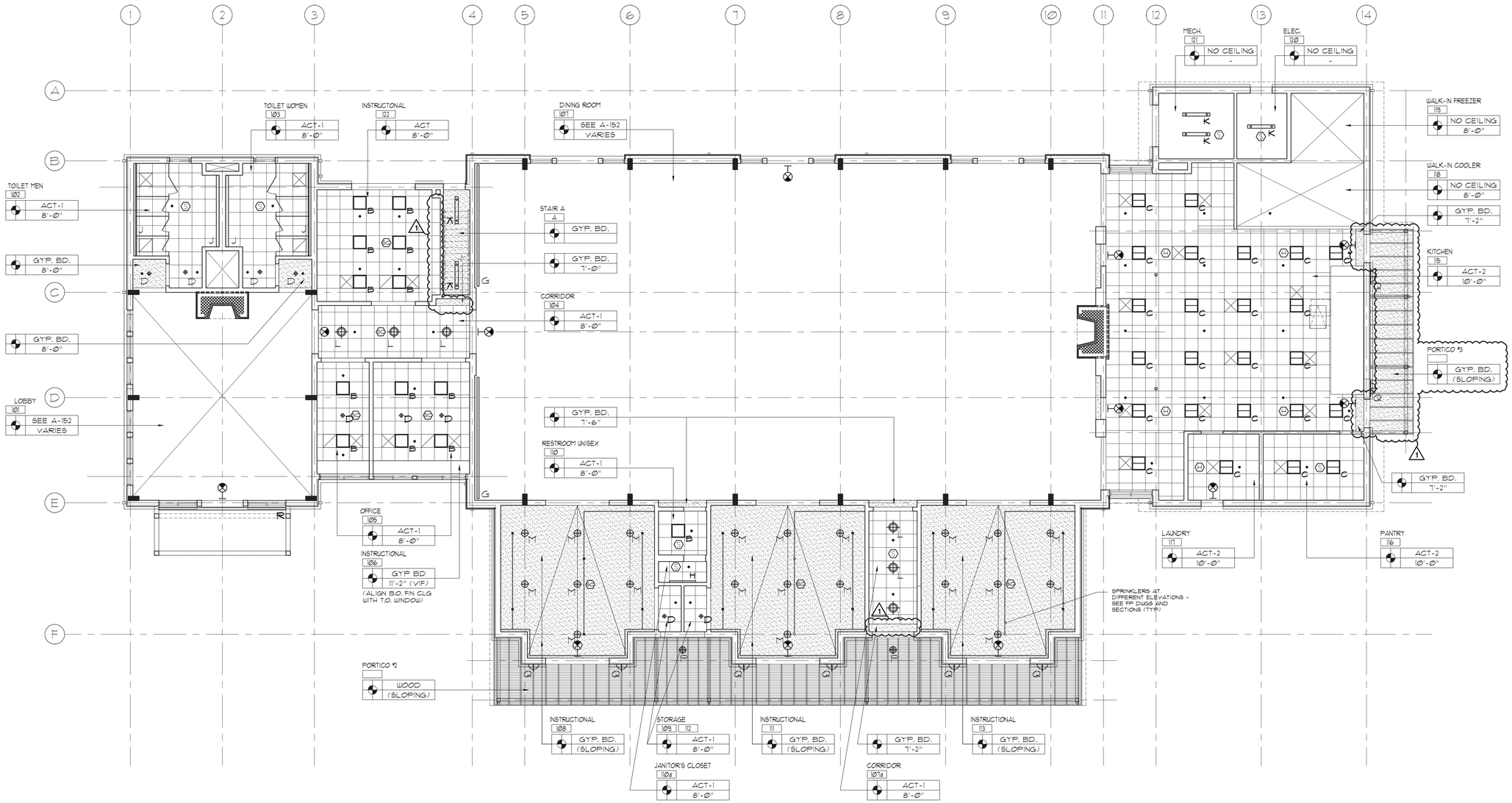

1 FIRST FLOOR REFLECTED CEILING PLAN

SCALE: 1/8"=1'-0"

LEGEND

- B — 2'x2' LED RECESSED LIGHT FIXTURE
- C — 2'x2' LED RECESSED LIGHT FIXTURE - WET LOCATION (KITCHEN)
- D — LED RECESSED DOWN LIGHT FIXTURE
- LED SURFACE MOUNTED LIGHT FIXTURE
- G — LED STRIP LIGHT IN CUSTOM COVE
- K, J — LED COVE VANITY LIGHT FIXTURE WITH DIFFUSER
- L — LED SURFACE MOUNTED DECORATIVE LIGHT FIXTURE
- M — LED PENDANT DECORATIVE LIGHT FIXTURE
- N — LED PENDANT DECORATIVE LIGHT FIXTURE
- S — LED PENDANT DECORATIVE LIGHT FIXTURE
- T — LED PENDANT DECORATIVE LIGHT FIXTURE - EXTERIOR
- P — EXTERIOR RATED DOWNLIGHT
- Q — EXT. GRADE LED WALL SCONCE
- R — EXIT SIGN
- R — EXIT SIGN WITH DIRECTIONAL ARROW
- H — SMOKE DETECTOR
- SMOKE/CO DETECTOR
- S — SMOKE DETECTOR
- SPRINKLER HEAD
- LINEAR DIFFUSER
- SUPPLY AIR DIFFUSER
- SUPPLY AIR DIFFUSER
- RETURN AIR GRILLE
- RETURN/EXHAUST AIR GRILLE
- 2'-0"x 2'-0" ACOUSTIC CEILING TILE
- FINISHED GYP. BD. CEILING
- WOOD CEILING
- EXPOSED CEILING STRUCTURE

KEY PLAN

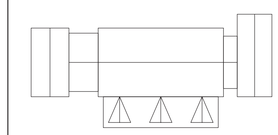

N.T.S.

No.	Date	Revision
1	07/01/2022	ADDENDUM #1
1.	06/24/2022	ISSUED FOR BID

STRUCTURAL ENGINEER
D.R. Pilla Consulting Engineers
143 Main Street
Nyack, NY 10960
PH (845) 727-7793

M.E.P. ENGINEER
Tietjen Venegas Consulting Engineers
68 Purchase Street,
Rye, NY 10580
PH (914) 967-9505

FOR REFERENCE ONLY
CIVIL ENGINEER
Insite Engineering, Surveying & Landscape Architecture, P.C.
3 Garrett Place
Carmel, NY 10512
PH (845) 225-9690

Architect
PETER GISOLFI ASSOCIATES
Architects · Landscape Architects, LLP
566 Warburton Avenue, Hastings-on-Hudson, NY 10706
Phone: (914) 478-3677 · Fax: (914) 478-1600

Project Title

CAMP KAUFMANN GIRL SCOUTS OF GREATER NEW YORK

81 CAMP ROAD
HOLMES, NY 12531

Drawing Title

FIRST FLOOR REFLECTED CEILING PLAN

Seal & Signature

Date:	06/21/2021
PROJECT No:	2005
DRAWN BY:	CS, RW, MK
CHK BY:	NL
DWG No:	A-151
CADD FILE No:	

W:\2005 Girl Scouts of Greater NY

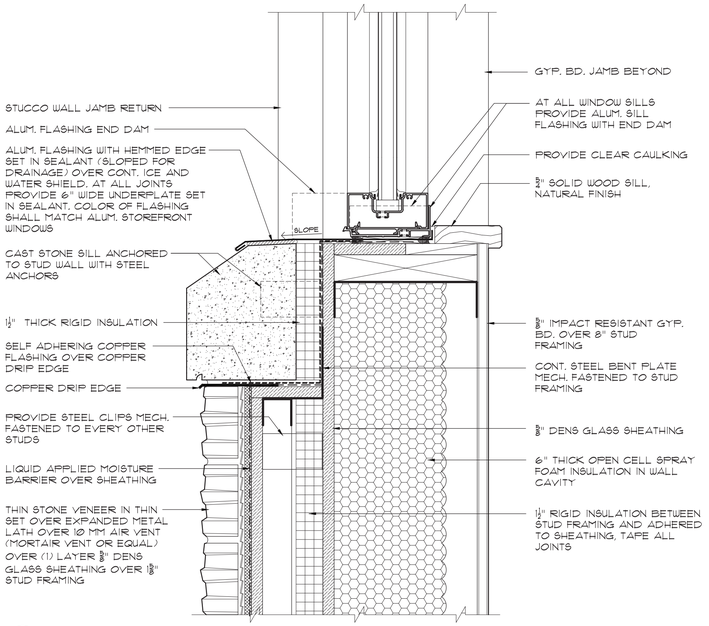

1 TYPICAL SILL DETAIL

SCALE: 3"=1'-0"

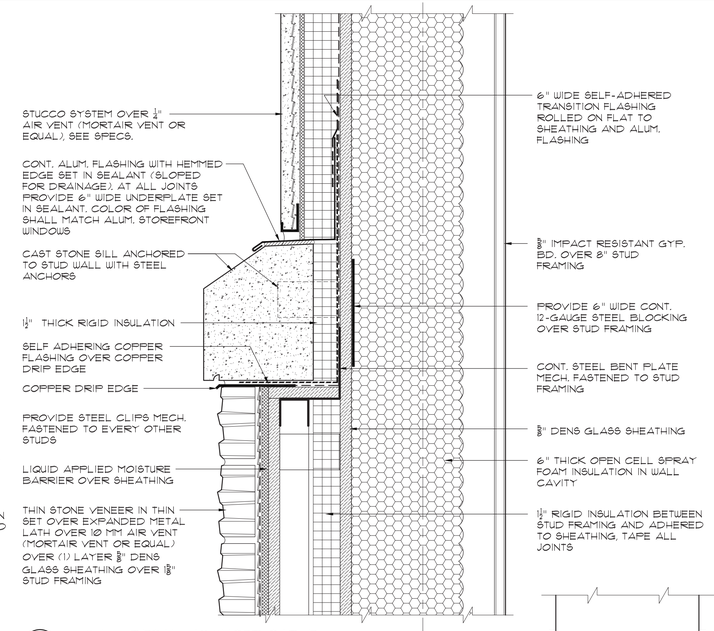

2 WALL DETAIL AT WATER-TABLE

SCALE: 3"=1'-0"

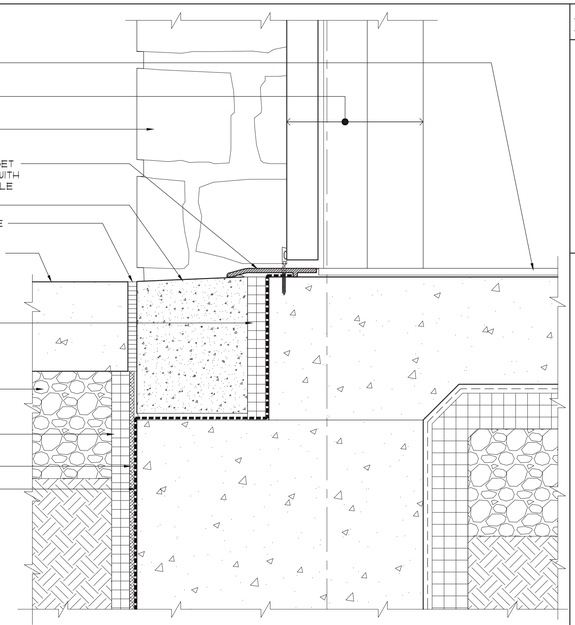

3 TYPICAL EXTERIOR DOOR SILL DETAIL

SCALE: 3"=1'-0"

KEY PLAN

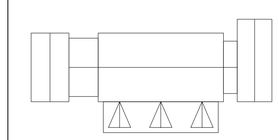

N.T.S.

GENERAL CONSTRUCTION NOTES

1. IF DISCREPANCIES ARE FOUND BETWEEN ARCHITECTURAL DRAWINGS, AND STRUCTURAL DRAWINGS, CONTRACTOR SHALL CONTACT ARCHITECT FOR CLARIFICATION OR RESOLUTION BEFORE PROCEEDING WITH THE WORK.
2. IF DISCREPANCIES ARE FOUND BETWEEN ARCHITECTURAL DRAWINGS, AND ROOFING DRAWINGS, CONTRACTOR SHALL CONTACT ARCHITECT FOR CLARIFICATION OR RESOLUTION BEFORE PROCEEDING WITH THE WORK.
3. PLACE WEEP HOLES AT 24" O.C. ABOVE EACH FLASHING TERMINATION POINT. CONTRACTOR SHALL NOT COVER ANY WEEP HOLES NEAR GRADE WITH SOIL OR LANDSCAPE MATERIAL.
4. PROVIDE FIRE RESISTANT COATING ON ALL EXPOSED SURFACES OF SPRAY-FOAM INSULATION.
5. AT STUD WALLS WHERE CAST STONE SILLS, ROOF AND OTHER FLASHING ASSEMBLIES ARE TO BE INSTALLED PROVIDE 12 GAUGE STEEL PLATE BLOCKING BEHIND SHEATHING (OVER STUD FRAMING) TO RECEIVE FASTENERS.

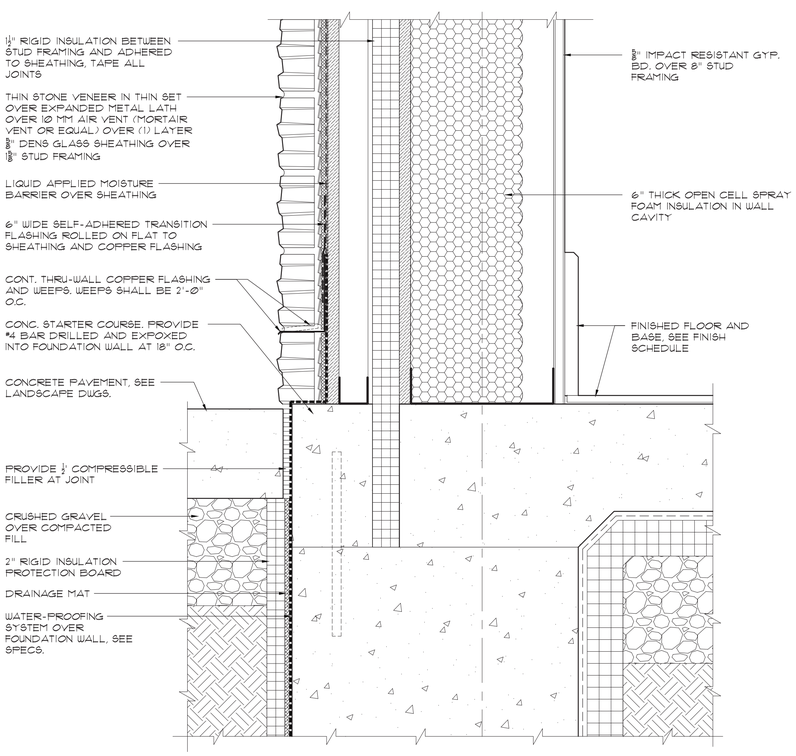

4 ENLARGED WALL DETAIL

SCALE: 3"=1'-0"

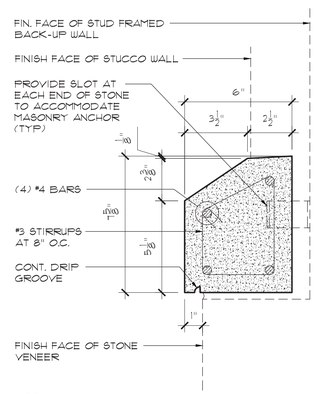

5 CAST STONE WINDOW SILL/ WATER-TABLE DETAIL

SCALE: 3"=1'-0"

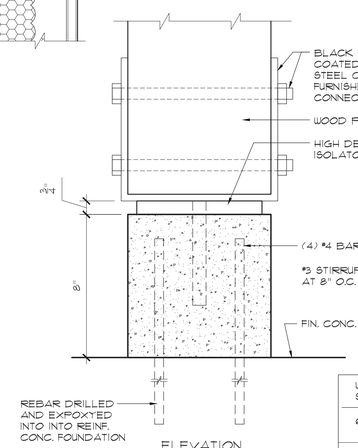

WOOD POST SIZE	PRECAST CONC. POST BASE
6"x 6"	A= 8" B= 8"
8"x 8"	A= 10" B= 10"

6 PRE-CAST CONC. POST BASE

SCALE: 3"=1'-0"

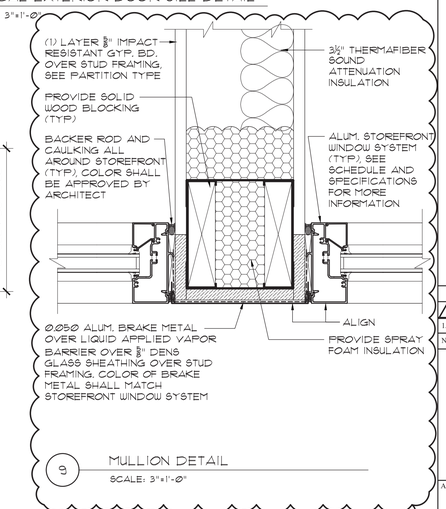

9 MULLION DETAIL

SCALE: 3"=1'-0"

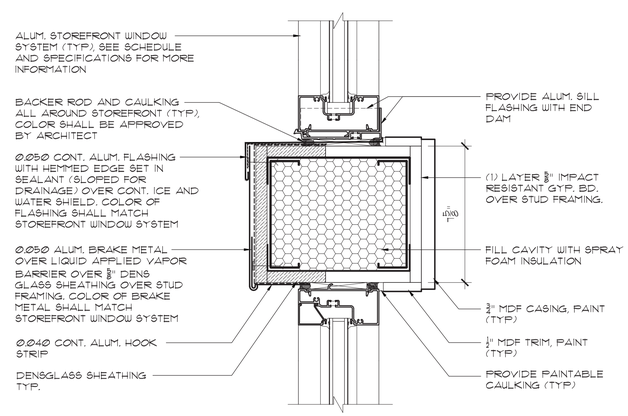

7 TYPICAL HORIZ. MULLION DETAIL

SCALE: 3"=1'-0"

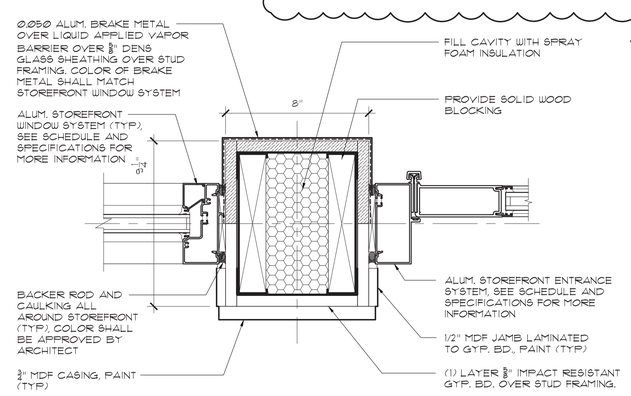

8 TYPICAL VERT. MULLION DETAIL

SCALE: 3"=1'-0"

No.	Date	Revision
1	07/01/2022	ADDENDUM #1
1.	06/24/2022	ISSUED FOR BID

STRUCTURAL ENGINEER
D.R. Pilla Consulting Engineers
143 Main Street
Nyack, NY 10960
PH (845) 727-7793

M.E.P. ENGINEER
Turlyn Venegas Consulting Engineers
68 Purchase Street,
Rye, NY 10580
PH (914) 967-9505

FOR REFERENCE ONLY
CIVIL ENGINEER
Insite Engineering, Surveying & Landscape Architecture, P.C.
3 Garrett Place
Carmel, NY 10512
PH (845) 225-6600

Architect
PETER GISOLFI ASSOCIATES
Architects · Landscape Architects, LLP
566 Warburton Avenue, Hastings-on-Hudson, NY 10706
Phone: (914) 478-3677 · Fax: (914) 478-1600

Project Title

CAMP KAUFMANN GIRL SCOUTS OF GREATER NEW YORK

81 CAMP ROAD
HOLMES, NY 12531

Drawing Title

ENLARGED DETAILS

Seal & Signature

Date:	06/21/2021
PROJECT No:	2005
DRAWN BY:	CS, RW, MK
CHK BY:	NL
DWG No:	A-360
CADD FILE No:	

W:\2005 Girl Scouts of Greater NY

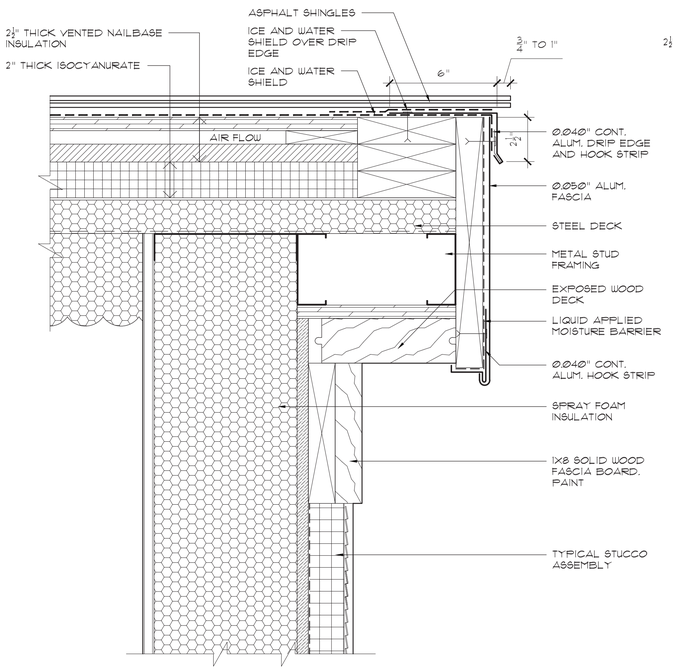

1 TYP. RAKE AT SLOPED ROOF
SCALE: 3"=1'-0"

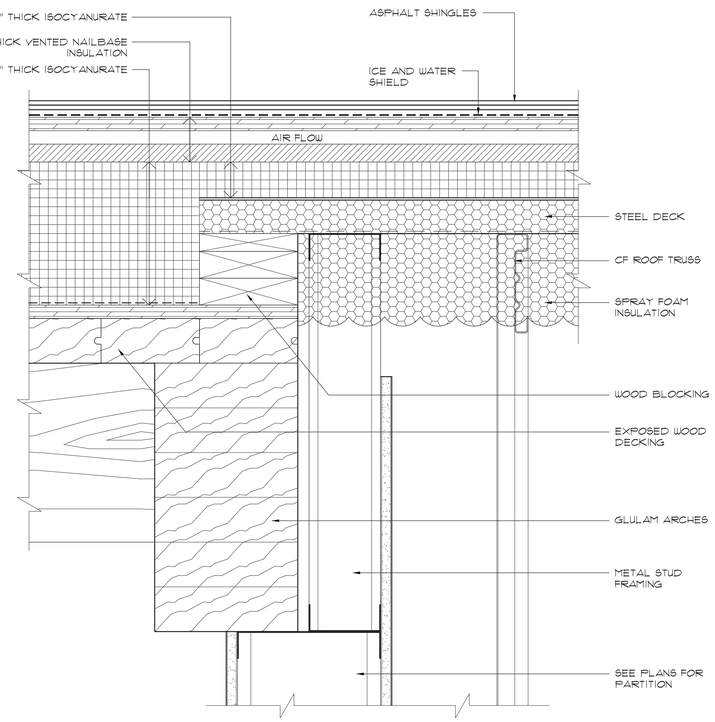

2 TYP. ROOF TRANSITION
SCALE: 3"=1'-0"

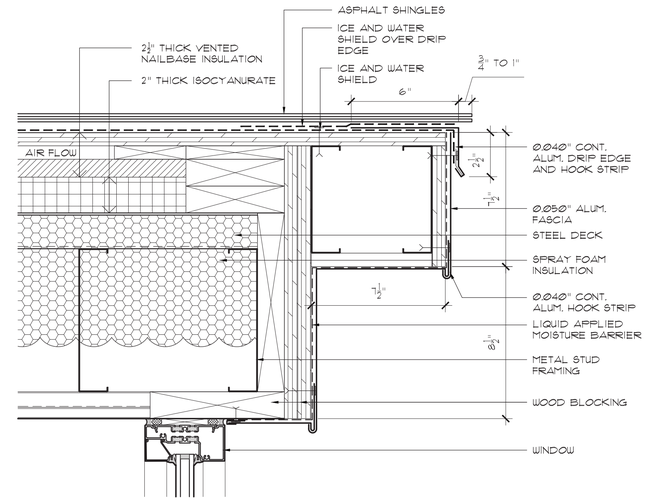

3 TYP. RAKE AT DORMER
SCALE: 3"=1'-0"

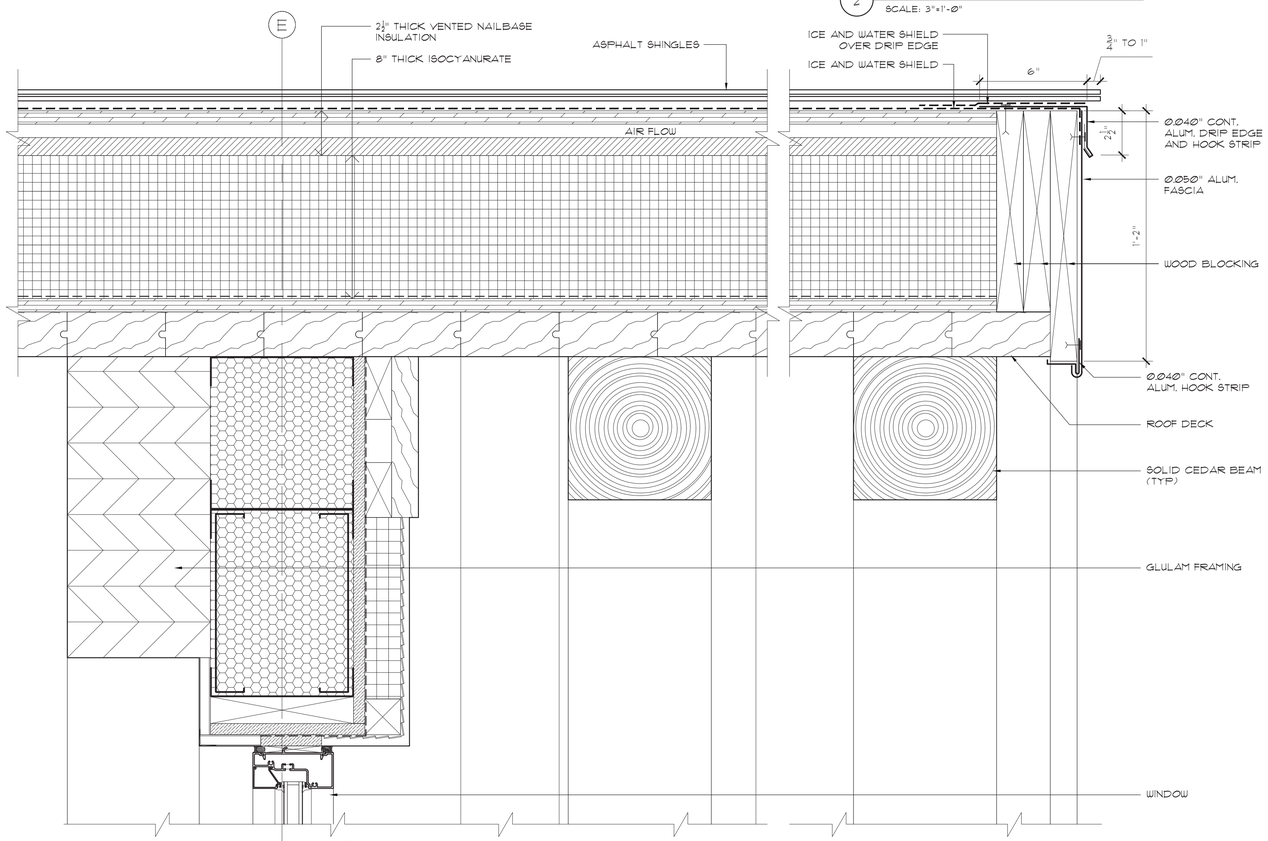

4 TYP. RAKE AT CEDAR FRAMING
SCALE: 3"=1'-0"

KEY PLAN

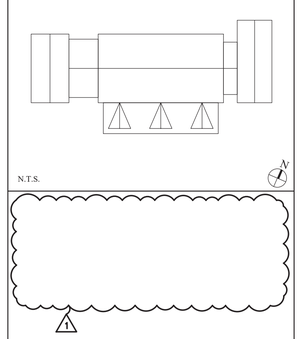

No.	Date	Revision
1	07/01/2022	ADDENDUM #1
1.	06/24/2022	ISSUED FOR BID

STRUCTURAL ENGINEER
D.R. Pilla Consulting Engineers
143 Main Street
Nyack, NY 10960
PH (845) 727-7793

M.E.P. ENGINEER
Tietjen Venegas Consulting Engineers
68 Purchase Street,
Rye, NY 10580
PH (914) 967-9505

FOR REFERENCE ONLY
CIVIL ENGINEER
Insite Engineering, Surveying & Landscape Architecture, P.C.
3 Garrett Place
Carmel, NY 10512
PH (845) 225-9690

Architect
PETER GISOLFI ASSOCIATES
Architects · Landscape Architects, LLP
566 Warburton Avenue, Hastings-on-Hudson, NY 10706
Phone: (914) 478-3677 · Fax: (914) 478-1600

Project Title

CAMP KAUFMANN GIRL SCOUTS OF GREATER NEW YORK

81 CAMP ROAD
HOLMES, NY 12531

Drawing Title

ROOF DETAILS

Seal & Signature

Date:	06/21/2021
PROJECT No:	2005
DRAWN BY:	CS, RW, MK
CHK BY:	NL
DWG No:	A-864
CADD FILE No:	

W:\2005 Girl Scouts of Greater NY