DRAWING LIST- VOLUME 1

DRAWING No.	SHEET #	SHEET NAME	DPW File #
1	T-01	COVER SHEET	1-118-T-751-0
2	T-02	DRAWING LIST	1-118-G-752-1
3	T-02A	DRAWING LIST	1-118-G-752A-1
4	T-03	ACCESSIBILITY DETAILS, GENERAL SYMBOLS AND ABBREVIATIONS	1-118-G-753-0
5	T-04	SITE PLAN & SCOPE OF WORK	1-118-G-754-1
6	T-05	FEMA MAPS	1-118-G-755-0
7	T-06	CONTRACTOR INFORMATION- CAPITAL CONTRACTS, SITE ACTIVITIES,	1-118-G-756-1
8	T-07	(NOT USED)	1-118-G-757-1
9	T-08	FIRESTOPPING DETAILS 1 OF 2	1-118-G-758-0
10	T-09	FIRESTOPPING DETAILS 2 OF 2	1-118-G-759-0
GENERAL (ELECTRICAL)			
11	GE-E-01	ELECTRICAL SYMBOLS, ABBREVIATIONS AND NOTES	1-118-G-760-0
12	GE-E-02	SITE PLAN	1-118-G-761-0
13	GE-E-03	LIGHTING FIXTURE SCHEDULE	1-118-G-762-1

BURGER BARN

DRAWING No.	SHEET #	SHEET NAME	DPW File #
GENERAL			
14	BB-G-01	BUILDING INTRO	1-118-G-763-0
15	BB-G-02	EGRESS PLANS AND CODE ANALYSIS	1-118-G-764-1
16	BB-G-03	SITE RESTORATION PLAN	1-118-G-765-1
ENVIRONMENTAL			
17	BB-H-10	GENERAL ASBESTOS ABATEMENT NOTES	1-118-G-766-0
18	BB-H-11	ROOF- ASBESTOS ABATEMENT PLAN	1-118-G-767-0
19	BB-H-20	GENERAL LEAD REMEDIATION NOTES	1-118-G-768-0
20	BB-H-21	NW, SW & SE ELEVATIONS- LEAD REMEDIATION PLAN	1-118-G-769-0
21	BB-H-22	NE & SE ELEVATIONS- LEAD REMEDIATION PLAN	1-118-G-770-0
ARCHITECTURAL			
22	BB-A-01	GROUND FLOOR DEMOLITION PLAN	1-118-A-771-0
23	BB-A-02	GROUND FLOOR DEMOLITION- REFLECTED CEILING PLANS	1-118-A-772-0
24	BB-A-03	ROOF DEMOLITION PLAN	1-118-A-773-0
25	BB-A-04	EXTERIOR DEMOLITION ELEVATIONS 1	1-118-A-774-0
26	BB-A-05	EXTERIOR DEMOLITION ELEVATIONS 2	1-118-A-775-0
27	BB-A-11	CONSTRUCTION PLANS	1-118-A-776-1
28	BB-A-12	REFLECTED CEILING PLAN	1-118-A-777-1
29	BB-A-13	ROOF CONSTRUCTION PLAN	1-118-A-778-0
30	BB-A-14	FINISH PLAN	1-118-A-779-0
31	BB-A-21	EXTERIOR ELEVATION 1	1-118-A-780-0
32	BB-A-22	EXTERIOR ELEVATION 2	1-118-A-781-1
33	BB-A-31	BUILDING SECTIONS 1	1-118-A-782-0
34	BB-A-51	INTERIOR ELEVATIONS	1-118-A-783-0
35	BB-A-52	KITCHEN INTERIOR ELEVATIONS	1-118-A-784-1
36	BB-A-81	BUILDING TOWER DETAILS	1-118-A-785-1
37	BB-A-82	CEILING DETAILS	1-118-A-786-0
38	BB-A-83	ROOF DETAILS	1-118-A-787-0
39	BB-A-84	BIFOLD DOOR DETAILS	1-118-A-788-1
40	BB-A-85	COLUMN DETAILS	1-118-A-789-0
41	BB-A-86	ENLARGED BATHROOM PLANS	1-118-A-790-1
42	BB-A-87	FLOORING DETAILS	1-118-A-791-1
43	BB-A-88	SIGNAGE DETAILS	1-118-A-792-0
44	BB-A-89	FENCE DETAILS	1-118-A-793-1
45	BB-A-91	DOOR & HARDWARE SCHEDULE	1-118-A-794-1
46	BB-A-92	WINDOW SCHEDULE AND DETAILS	1-118-A-795-1
47	BB-A-93	PARTITION TYPES & WALL DETAILS	1-118-A-796-1
STRUCTURAL			
48	BB-S-01	STRUCTURAL NOTES	1-118-S-797-1
49	BB-S-02	STRUCTURAL ABBREVIATIONS & SYMBOLS	1-118-S-798-0
50	BB-S-03	DEMOLITION - GROUND FLOOR PLAN	1-118-S-799-1
51	BB-S-04	DEMOLITION - ROOF PLAN	1-118-S-800-1
52	BB-S-05	FOUNDATION PLAN	1-118-S-801-1
53	BB-S-06	GROUND FLOOR PLAN	1-118-S-802-1
54	BB-S-07	ROOF PLAN	1-118-S-803-1
55	BB-S-08	SECTIONS AND DETAILS	1-118-S-804-1
56	BB-S-09	SECTIONS	1-118-S-805-1
57	BB-S-10	SECTIONS AND DETAILS	1-118-S-806-0
58	BB-S-11	SECTIONS AND DETAILS	1-118-S-807-0
59	BB-S-12	SECTIONS AND DETAILS	1-118-S-808-1
60	BB-S-13	SECTIONS AND DETAILS	1-118-S-809-1
61	BB-S-14	TYPICAL SECTIONS AND DETAILS	1-118-S-810-1
FIRE PROTECTION			
62	BB-FP-01	FIRE PROTECTION NOTES, SYMBOLS, ABBREVIATIONS & DWG LIST	1-118-FP-811-1
63	BB-FP-11	FIRE PROTECTION GROUND FLOOR DEMOLITION PLAN	1-118-FP-812-0
64	BB-FP-21	FIRE PROTECTION GROUND FLOOR CONSTRUCTION PLAN AND RCP	1-118-FP-813-1
65	BB-FP-81	FIRE PROTECTION DETAILS	1-118-FP-814-0
PLUMBING			
66	BB-P-01	PLUMBING NOTES, SYMBOLS, ABBREVIATIONS AND DRAWING LIST	1-118-P-815-1
67	BB-P-21	PLUMBING GROUND FLOOR CONSTRUCTION PLAN	1-118-P-816-1
68	BB-P-81	PLUMBING DETAILS	1-118-P-817-0
MECHANICAL			
69	BB-M-01	MECHANICAL NOTES, SYMBOLS & LEGENDS	1-118-M-818-1
70	BB-M-11	MECHANICAL FIRST FLOOR DEMOLITION PLAN	1-118-M-819-0
71	BB-M-21	MECHANICAL FIRST FLOOR CONSTRUCTION PLAN	1-118-M-820-0
72	BB-M-22	MECHANICAL ROOF CONSTRUCTION PLAN	1-118-M-821-0
73	BB-M-23	MECHANICAL EXTERIOR BUILDING ELEVATIONS	1-118-M-822-1
74	BB-M-61	MECHANICAL SCHEDULES	1-118-M-823-0
75	BB-M-81	MECHANICAL DETAILS 1 OF 2	1-118-M-824-1
76	BB-M-82	MECHANICAL DETAILS 2 OF 2	1-118-M-825-0
77	BB-M-91	MECHANICAL CONTROLS	1-118-M-826-0
ELECTRICAL			
78	BB-E-01	ONE LINE DIAGRAM & PANEL SCHEDULES - DEMOLITION	1-118-E-827-0
79	BB-E-02	GROUND FLOOR - DEMOLITION PLAN	1-118-E-828-1
80	BB-E-03	ROOF DEMOLITION PLAN	1-118-E-829-0
81	BB-E-04	SITE DUCTBANK PLAN	1-118-E-830-0
82	BB-E-05	ONE LINE DIAGRAMS	1-118-E-831-0
83	BB-E-06	GROUND FLOOR - POWER PLAN	1-118-E-832-1
84	BB-E-07	GROUND FLOOR - LIGHTING PLAN	1-118-E-833-1
85	BB-E-08	ROOF PLAN - POWER & LIGHTNING PROTECTION	1-118-E-834-1
86	BB-E-09	PANEL SCHEDULES	1-118-E-835-0
FIRE ALARM			
87	BB-FA-01	FIRE ALARM NOTES, SYMBOLS, AND LEGEND	1-118-FA-836-1
88	BB-FA-11	FIRE ALARM FIRST FLOOR DEMOLITION PLAN	1-118-FA-837-0
89	BB-FA-21	FIRE ALARM FIRST FLOOR CONSTRUCTION PLAN	1-118-FA-838-0
90	BB-FA-22	FIRE ALARM ROOF CONSTRUCTION PLAN	1-118-FA-839-0
91	BB-FA-81	FIRE ALARM RISER DIAGRAM AND DETAILS	1-118-FA-840-1
CIVIL			
92	BB-C-01	GENERAL NOTES	1-118-C-841-0
93	BB-C-02	EXISTING CONDITIONS/ DEMOLITION PLAN	1-118-C-842-1
94	BB-C-03	SITE CONSTRUCTION PLAN	1-118-C-843-1
95	BB-C-04	UTILITY CONSTRUCTION PLAN	1-118-C-844-1
96	BB-C-05	GRADING AND EROSION CONTROL PLAN	1-118-C-845-1
97	BB-C-06	CIVIL DETAILS 1	1-118-C-846-0
98	BB-C-07	CIVIL DETAILS 2	1-118-C-847-0

CXA BUILDING

GENERAL			
99	CXA-G-01	BUILDING INTRO	1-118-G-848-0
100	CXA-G-02	CXA- LIFE SAFETY PLANS	1-118-G-849-0
101	CXA-G-02.1	CXA- FIRE SEPARATION PLAN	1-118-G-850-0
102	CXA-G-03	CXA- SITE RESTORATION	1-118-G-851-0
ENVIRONMENTAL			
103	CXA-H-10	GENERAL ASBESTOS ABATEMENT NOTES	1-118-G-852-0
104	CXA-H-11	GROUND FLOOR- ASBESTOS ABATEMENT PLAN	1-118-G-853-0
105	CXA-H-20	GENERAL LEAD REMEDIATION NOTES	1-118-G-854-0
106	CXA-H-21	EAST AND WEST ELEVATION- LEAD REMEDIATION PLAN	1-118-G-855-0
107	CXA-H-81	NORTH AND SOUTH ELEVATION- LEAD REMEDIATION PLAN	1-118-G-856-0
ARCHITECTURAL			
108	CXA-A-01	CXA- GROUND FLOOR DEMOLITION PLAN	1-118-A-857-0
109	CXA-A-02	CXA- ROOF FLOOR DEMOLITION PLAN	1-118-A-858-0
110	CXA-A-03	CXA- DEMOLITION ELEVATIONS	1-118-A-859-0
111	CXA-A-04	CXA- DEMOLITION ELEVATIONS	1-118-A-860-0
112	CXA-A-05	CXA- DEMOLITION REFLECTED CEILING PLAN	1-118-A-861-0
113	CXA-A-11	CXA- GROUND FLOOR PLAN	1-118-A-862-1
114	CXA-A-12	CXA- ATTIC LEVEL PLAN	1-118-A-863-1
115	CXA-A-13	CXA- ROOF PLAN	1-118-A-864-1
116	CXA-A-21	CXA- EXTERIOR BUILDING ELEVATIONS	1-118-A-865-1
117	CXA-A-22	CXA- EXTERIOR BUILDING ELEVATIONS	1-118-A-866-1
118	CXA-A-23	CXA- PORCH BUILDING ELEVATIONS	1-118-A-867-0
119	CXA-A-24	CXA- DRIVE-THROUGH ELEVATIONS	1-118-A-868-1
120	CXA-A-31	CXA- BUILDING SECTIONS	1-118-A-869-0
121	CXA-A-32	CXA- BUILDING SECTIONS	1-118-A-870-1
122	CXA-A-33	CXA- ENLARGED SECTIONS	1-118-A-871-1
123	CXA-A-34	CXA- WALL ENLARGED SECTIONS 2	1-118-A-872-1
124	CXA-A-41	CXA- GROUND LEVEL RCP	1-118-A-873-1
125	CXA-A-42	CXA- ATTIC LEVEL RCP	1-118-A-874-1
126	CXA-A-80	COLUMN DETAILS	1-118-A-875-0
127	CXA-A-81	COLUMN DETAILS 2	1-118-A-876-0
128	CXA-A-82	WOOD RESTORATION DETAILS	1-118-A-877-0
129	CXA-A-83	ROOFING DETAILS	1-118-A-878-1
130	CXA-A-84	PARTITION DETAILS	1-118-A-879-0
131	CXA-A-85	OVERHEAD DOOR DETAIL	1-118-A-880-0
132	CXA-A-86	DETAILS	1-118-A-881-1
133	CXA-A-87	FENCE AND GATE DETAILS	1-118-A-882-1
134	CXA-A-88	DRIVE THROUGH GATE DETAILS	1-118-A-883-1
135	CXA-A-91	FINISH PLAN AND FINISH SCHEDULE	1-118-A-884-0
136	CXA-A-92	DOOR & HARDWARE SCHEDULES & DETAILS	1-118-A-885-1
137	CXA-A-93	WINDOW SCHEDULE	1-118-A-886-0
138	CXA-A-94	SIGNAGE TYPES AND DETAILS	1-118-A-887-0
STRUCTURAL			
139	CXA-S-01	STRUCTURAL NOTES	1-118-S-888-1
140	CXA-S-02	STRUCTURAL ABBREVIATIONS AND SYMBOLS	1-118-S-889-0
141	CXA-S-03	DEMOLITION - GROUND FLOOR PLAN	1-118-S-890-0
142	CXA-S-04	DEMOLITION - ROOF PLAN	1-118-S-891-0
143	CXA-S-05	FOUNDATION PLAN	1-118-S-892-1
144	CXA-S-06	GROUND FLOOR PLAN	1-118-S-893-1
145	CXA-S-07	ROOF PLAN	1-118-S-894-1
146	CXA-S-08	SECTION	1-118-S-895-1
147	CXA-S-09	SECTIONS	1-118-S-896-1
148	CXA-S-10	SECTIONS AND DETAILS	1-118-S-897-1
149	CXA-S-11	SECTIONS	1-118-S-898-1
150	CXA-S-12	SECTIONS	1-118-S-899-1
FIRE PROTECTION			
151	CXA-FP-01	FIRE PROTECTION NOTES, SYMBOLS, ABBREVIATIONS & DWG LIST	1-118-FP-900-1
152	CXA-FP-11	FIRE PROTECTION FIRST FLOOR DEMOLITION RCP	1-118-FP-901-1
153	CXA-FP-21	FIRE PROTECTION FIRST FLOOR AND ATTIC CONSTRUCTION RCP	1-118-FP-902-1
154	CXA-FP-81	FIRE PROTECTION DETAILS	1-118-FP-903-0
PLUMBING			
155	CXA-P-01	PLUMBING NOTES, SYMBOLS, ABBREVIATIONS AND DRAWING LIST	1-118-P-904-0
156	CXA-P-21	PLUMBING FIRST FLOOR CONSTRUCTION PLAN	1-118-P-905-1
157	CXA-P-81	PLUMBING DETAILS	1-118-P-906-0
MECHANICAL			
158	CXA-M-01	MECHANICAL NOTES, SYMBOLS AND LEGENDS	1-118-M-907-0
159	CXA-M-11	MECHANICAL FIRST FLOOR DEMOLITION PLAN	1-118-M-908-0
160	CXA-M-21	MECHANICAL FIRST FLOOR CONSTRUCTION PLAN	1-118-M-909-0
161	CXA-M-61	MECHANICAL SCHEDULES	1-118-M-910-0
162	CXA-M-81	MECHANICAL DETAILS	1-118-M-911-0
163	CXA-M-91	MECHANICAL CONTROLS	1-118-M-912-0
ELECTRICAL			
164	CXA-E-01	ONE LINE DIAGRAM- DEMOLITION	1-118-E-913-0
165	CXA-E-02	GROUND FLOOR DEMOLITION PLAN	1-118-E-914-1
166	CXA-E-03	SITE DUCTBANK PLAN	1-118-E-915-0
167	CXA-E-04	ONE LINE DIAGRAMS	1-118-E-916-1
168	CXA-E-05	GROUND FLOOR - POWER PLAN	1-118-E-917-1
169	CXA-E-06	GROUND FLOOR - LIGHTING PLAN	1-118-E-918-1
170	CXA-E-07	ATTIC LEVEL - POWER & LIGHTING PLAN	1-118-E-919-0
171	CXA-E-08	ROOF - LIGHTING & LIGHTING PROTECTION PLAN	1-118-E-920-1
172	CXA-E-09	PANEL SCHEDULES	1-118-E-921-1
FIRE ALARM			
173	CXA-FA-01	FIRE ALARM NOTES, SYMBOLS, LEGEND, AND RISER DIAGRAM	1-118-FA-922-0
174	CXA-FA-11	FIRE ALARM FIRST FLOOR DEMOLITION PLAN	1-118-FA-923-0
175	CXA-FA-12	FIRE ALARM ATTIC DEMOLITION PLAN	1-118-FA-924-0
176	CXA-FA-21	FIRE ALARM FIRST FLOOR PLAN	1-118-FA-925-1
177	CXA-FA-22	FIRE ALARM ATTIC PLAN	1-118-FA-926-1
178	CXF-FA-81	FIRE ALARM DETAILS	1-118-FA-927-0
CIVIL			
179	CXA-C-01	GENERAL NOTES	1-118-C-928-0
180	CXA-C-02	EXISTING CONDITIONS/ DEMOLITION PLAN	1-118-C-929-1
181	CXA-C-03	SITE CONSTRUCTION PLAN	1-118-C-930-1
182	CXA-C-04	UTILITY CONSTRUCTION PLAN	1-118-C-931-1
183	CXA-C-05	GRADING AND EROSION CONTROL PLAN	1-118-C-932-1
184	CXA-C-06	CIVIL DETAILS 1	1-118-C-933-0
185	CXA-C-07	CIVIL DETAILS 2	1-118-C-934-0

CXD BUILDING

GENERAL			
186	CXD-G-01	BUILDING INTRO	1-118-G-935-0
187	CXD-G-02	CXD- LIFE SAFTEY PLANS	1-118-G-936-0
188	CXD-G-03	CXD- SITE RESTORATION	1-118-G-937-0
ENVIRONMENTAL			
189	CXD-H-10	GROUND FLOOR- ASBESTOS ABATEMENT PLAN	1-118-G-938-0
190	CXD-H-11	GROUND FLOOR- ASBESTOS ABATEMENT PLAN	1-118-G-939-0
191	CXD-H-20	GENERAL LEAD REMEDIATION NOTES	1-118-G-940-0
192	CXD-H-21	NORTH AND EAST ELEVATIONS- LEAD REMEDIATION PLAN	1-118-G-941-0
193	CXD-H-22	SOUTH AND WEST ELEVATIONS- LEAD REMEDIATION PLAN	1-118-G-942-0
ARCHITECTURAL			
194	CXD-A-01	CXD- GROUND FLOOR DEMOLITION PLAN	1-118-A-943-0
195	CXD-A-02	CXD- ROOF DEMOLITION PLAN	1-118-A-944-0
196	CXD-A-03	CXD- EXTERIOR BUILDING ELEVATIONS	1-118-A-945-0
197	CXD-A-04	CXD- RCP DEMO PLAN	1-118-A-946-0
198	CXD-A-11	CXD- GROUND FLOOR PLAN	1-118-A-947-0
199	CXD-A-12	CXD- ROOF PLAN	1-118-A-948-0
200	CXD-A-21	CXD- EXTERIOR BUILDING ELEVATIONS	1-118-A-949-0
201	CXD-A-22	CXD- EXTERIOR BUILDING PORCH ELEVATIONS	1-118-A-950-0
202	CXD-A-31	CXD- BUILDING SECTIONS	1-118-A-951-0
203	CXD-A-32	CXD- ENLARGED SECTION	1-118-A-952-0
204	CXD-A-41	CXD- GROUND FLOOR REFLECTED CEILING PLAN	1-118-A-953-0
205	CXD-A-51	COURTYARD PLAN AND SECTIONS	1-118-A-954-0
206	CXD-A-80	PARTITION TYPE DETAILS	1-118-A-955-0
207	CXD-A-81	ROOF DETAILS	1-118-A-956-1
208	CXD-A-82	CXD COLUMN DETAILS	1-118-A-957-0
209	CXD-A-83	ROLL UP DOOR DETAILS	1-118-A-958-0
210	CXD-A-84	FENCE AND GATE DETAILS	1-118-A-959-1
211	CXD-A-85	DETAILS	1-118-A-960-1
212	CXD-A-91	CDX FINISH PLAN AND FINISH SCHEDULE	1-118-A-961-0
213	CXD-A-92	DOOR SCHEDULE AND DOOR DETAILS	1-118-A-962-1
214	CXD-A-93	WINDOW SCHEDULE AND WINDOW DETAILS	1-118-A-963-0
215	CXD-A-94	SIGNAGE TYPES AND DETAILS	1-118-A-964-1
STRUCTURAL			
216	CXD-S-01	STRUCTURAL NOTES	1-118-S-965-0
217	CXD-S-02	STRUCTURAL ABBREVIATIONS AND SYMBOLS	1-118-S-966-0
218	CXD-S-03	DEMOLITION- GROUND FLOOR PLAN	1-118-S-967-0
219	CXD-S-04	DEMOLITION- ROOF PLAN	1-118-S-968-0
220	CXD-S-05	GROUND FLOOR PLAN	1-118-S-969-0
221	CXD-S-06	SECTIONS	1-118-S-970-0
222	CXD-S-07	SECTIONS AND DETAILS	1-118-S-971-0
FIRE PROTECTION			
223	CXD-FP-01	FIRE PROTECTION NOTES, SYMBOLS, ABBREVIATIONS & DWG LIST	1-118-FP-972-1
224	CXD-FP-11	FIRE PROTECTION GROUND FLOOR AND ATTIC DEMOLITION PLAN	1-118-FP-973-0
225	CXD-FP-21	FIRE PROTECTION GROUND FL. AND ATTIC CONSTRUCTION RCP	1-118-FP-974-0
226	CXD-FP-81	FIRE PROTECTION DETAILS	1-118-FP-975-0
MECHANICAL			
227	CXD-M-01	MECHANICAL NOTES, SYMBOLS AND LEGENDS	1-118-M-976-0
228	CXD-M-11	MECHANICAL FIRST FLOOR DEMOLITION	1-118-M-977-0
229	CXD-M-21	MECHANICAL FIRST FLOOR CONSTRUCTION PLAN	1-118-M-978-0
230	CXD-M-61	MECHANICAL SCHEDULE, DETAILS AND CONTROLS	1-118-M-979-0
ELECTRICAL			
231	CXD-E-01	ONE LINE DIAGRAM- DEMOLITION	1-118-E-980-1
232	CXD-E-02	GROUND FLOOR DEMOLITION- POWER & LIGHTING PLAN	1-118-E-981-1
233	CXD-E-03	SITE DUCTBANK PLAN	1-118-E-982-0
234	CXD-E-04	ONE LINE DIAGRAM	1-118-E-983-0
235	CXD-E-05	GROUND FLOOR - POWER PLAN	1-118-E-984-1
236	CXD-E-06	GROUND FLOOR - LIGHTING PLAN	1-118-E-985-1
237	CXD-E-07	PANEL SCHEDULES	1-118-E-986-1
FIRE ALARM			
238	CXD-FA-01	FIRE ALARM NOTES, SYMBOLS, LEGEND, AND RISER DIAGRAM	1-118-FA-987-0
239	CXD-FA-11	FIRE ALARM FIRST FLOOR DEMOLITION PLAN	1-118-FA-988-0
240	CXD-FA-12	FIRE ALARM ATTIC DEMOLITION PLAN	1-118-FA-989-0
241	CXD-FA-21	FIRE ALARM FIRST FLOOR PLAN	1-118-FA-990-0
242	CXD-FA-22	FIRE ALARM ATTIC PLAN	1-118-FA-991-0
243	CXD-FA-81	FIRE ALARM DETAILS	1-118-FA-992-0
CIVIL			
244	CXD-C-01	GENERAL NOTES	1-118-C-993-0
245	CXD-C-02	EXISTING CONDITIONS/ DEMOLITION PLAN	1-118-C-994-1
246	CXD-C-03	SITE CONSTRUCTION PLAN	1-118-C-995-1
247	CXD-C-04	UTILITY CONSTRUCTION PLAN	1-118-C-996-1
248	CXD-C-05	GRADING AND EROSION CONTROL PLAN	1-118-C-997-1
249	CXD-C-06	CIVIL DETAILS 1	1-118-C-998-1
250	CXD-C-07	CIVIL DETAILS 2	1-118-C-999-0

CXE BUILDING

GENERAL			
251	CXE-G-01	BUILDING INTRO	1-118-G-1000-0
252	CXE-G-02	CXE & CXF- LIFE SAFETY PLANS	1-118-G-1001-0
253	CXE-G-03	CXE- SITE RESTORATION	1-118-G-1002-0
ENVIRONMENTAL			
254	CXE-H-10	GENERAL ASBESTOS ABATEMENT NOTES	1-118-G-1003-0
255	CXE-H-11	ROOF- ASBESTOS ABATEMENT PLAN	1-118-G-1004-0
256	CXE-H-12	GROUND FLOOR- ASBESTOS ABATEMENT PLAN	1-118-G-1005-0
257	CXE-H-20	GENERAL LEAD REMEDIATION NOTES	1-118-G-1006-0
258	CXE-H-21	NORTH & EAST ELEVATION- LEAD REMEDIATION PLAN	1-118-G-1007-0
259	CXE-H-22	SOUTH & WEST ELEVATION- LEAD REMEDIATION PLAN	1-118-G-1008-0
ARCHITECTURAL			
260	CXE-A-01	CXE- GROUND FLOOR DEMOLITION PLAN	1-118-A-1009-0
261	CXE-A-02	CXE- ROOF DEMOLITION PLAN	1-118-A-1010-0
262	CXE-A-03	CXE- EXTERIOR DEMOLITION ELEVATIONS	1-118-A-1011-0
263	CXE-A-04	CXE- RCP DEMO PLAN	1-118-A-1012-0
264	CXE-A-11	CXE- GROUND FLOOR PLAN	1-118-A-1013-0
265	CXE-A-12	CXE- ATTIC PLAN	1-118-A-1014-1
266	CXE-A-13	CXE- ROOF PLAN	1-118-A-1015-0
267	CXE-A-21	CXE- EXTERIOR BUILDING ELEVATIONS	1-118-A-1016-1
268	CXE-A-22	CXE- EXTERIOR BUILDING PORCH ELEVATIONS	1-118-A-1017-0
269	CXE-A-31	CXE- BUILDING SECTIONS	1-118-A-1018-1
270	CXE-A-32	CXE- BUILDING SECTIONS	1-118-A-1019-1
271	CXE-A-41	CXE- GROUND FLOOR REFLECTED CEILING PLAN	1-118-A-1020-0
272	CXE-A-42	CXE- ATTIC REFLECTED CEILING PLAN	1-118-A-1021-0
273	CXE-A-80	PARTITION TYPES	1-118-A-1022-0
274	CXE-A-81	ROOF DETAILS	1-118-A-1023-1
275	CXE-A-82	CXE - COLUMN DETAILS	1-118-A-1024-0
276	CXE-A-83	CXE - COLUMN DETAILS 2	1-118-A-1025-0
277	CXE-A-84	ROLL UP DOOR DETAILS	1-118-A-1026-0
278	CXE-A-85	DETAILS	1-118-A-1027-1
279	CXE-A-91	FINISH PLAN AND FINISH SCHEDULE	1-118-A-1028-1
280	CXE-A-92	DOOR SCHEDULE AND DOOR DETAILS	1-118-A-1029-1
281	CXE-A-93	SIGNAGE TYPES AND DETAILS	1-118-A-1030-0
STRUCTURAL			
282	CXE-S-01	STRUCTURAL NOTES	1-118-S-1031-0
283	CXE-S-02	STRUCTURAL ABBREVIATIONS AND SYMBOLS	1-118-S-1032-0
284	CXE-S-03	DEMOLITION - GROUND FLOOR PLAN	1-118-S-1033-0
285	CXE-S-04	DEMOLITION - ROOF PLAN	1-118-S-1034-0
286	CXE-S-05	GROUND FLOOR PLAN	1-118-S-1035-0
287	CXE-S-06	SECTIONS	1-118-S-1036-0
288	CXE-S-07	SECTIONS AND DETAILS	1-118-S-1037-0
FIRE PROTECTION			
289	CXE-FP-01	FIRE PROTECTION NOTES, SYMBOLS, ABBREVIATIONS & DWG LIST	1-118-FP-1038-1
290	CXE-FP-11	FIRE PROTECTION GROUND FLOOR AND ATTIC DEMOLITION PLAN	1-118-FP-1039-0
291	CXE-FP-21	FIRE PROTECTION GROUND FL. AND ATTIC CONSTRUCTION RCP	1-118-FP-1040-0
292	CXE-FP-81	FIRE PROTECTION DETAILS	1-118-FP-1041-0
MECHANICAL			
293	CXE-M-01	MECHANICAL NOTES, SYMBOLS AND LEGENDS	1-118-M-1042-0
294	CXE-M-11	MECHANICAL FIRST FLOOR DEMOLITION PLAN	1-118-M-1043-0
ELECTRICAL			
295	CXE-E-01	ONE LINE DIAGRAM- DEMOLITION	1-118-E-1044-1
296	CXE-E-02	GROUND FLOOR DEMOLITION- POWER AND LIGHTING PLAN	1-118-E-1045-1
297	CXE-E-03	SITE DUCTBANK PLAN	1-118-E-1046-1
298	CXE-E-04	ONE LINE DIAGRAMS	1-118-E-1047-0
299	CXE-E-05	GROUND FLOOR - POWER PLAN	1-118-E-1048-1
300	CXE-E-06	GROUND FLOOR- LIGHTING PLAN	1-118-E-1049-1
301	CXE-E-07	ATTIC LEVEL- LIGHTING PLAN	1-118-E-1050-1
302	CXE-E-08	ROOF LEVEL- LIGHTING & LIGHTNING PROTECTION PLAN	1-118-E-1051-1
303	CXE-E-09	PANEL SCHEDULES	1-118-E-1052-1
FIRE ALARM			
304	CXE-FA-01	FIRE ALARM NOTES, SYMBOLS, LEGEND, AND RISER DIAGRAM	1-118-FA-1053-0
305	CXE-FA-11	FIRE ALARM FIRST FLOOR DEMOLITION PLAN	1-118-FA-1054-0
306	CXE-FA-12	FIRE ALARM ATTIC DEMOLITION PLAN	1-118-FA-1055-0
307	CXE-FA-21	FIRE ALARM FIRST FLOOR PLAN	1-118-FA-1056-0
308	CXE-FA-22	FIRE ALARM ATTIC PLAN	1-118-FA-1057-0
309	CXE-FA-81	FIRE ALARM DETAILS	1-118-FA-1058-0
CIVIL			
310	CXE-C-01	GENERAL NOTES	1-118-C-1059-0
311	CXE-C-02	EXISTING CONDITIONS/ DEMOLITION PLAN	1-118-C-1060-1
312	CXE-C-03	SITE CONSTRUCTION PLAN	1-118-C-1061-1
313	CXE-C-04	UTILITY CONSTRUCTION PLAN	1-118-C-1062-1
314	CXE-C-05	GRADING AND EROSION CONTROL PLAN	1-118-C-1063-1
315	CXE-C-06	CIVIL DETAILS 1	1-118-C-1064-1
316	CXE-C-07	CIVIL DETAILS 2	1-118-C-1065-0

1

9/22/2022 12:37:10 PM

CONSULTANT INFORMATION

The LiRo Group

3 Aerial Way, Syosset, New York 11791
(516) 938-5476 www.liro.com

CONSULTANT SEAL

REGISTERED ARCHITECT ROBERT D. YOUNG JR. 023200 STATE OF NEW YORK

REVISION NUMBER	DATE	MADE BY	APP'D BY	REVISION
1	9/21/22			BID ADDENDUM #3

RECORD DRAWING CERTIFICATION

☐ AS BUILT – CHANGES AS NOTED ☐ AS BUILT – NO CHANGES

CONTRACTOR
NAME ____
SIGNATURE ____
TITLE ____ DATE ____

PROJECT COORDINATOR
NAME ____
SIGNATURE ____
TITLE ____ DATE ____

WESTCHESTER COUNTY, NEW YORK
DEPARTMENT OF PUBLIC WORKS AND TRANSPORTATION
DIVISION OF ENGINEERING

INFRASTRUCTURE REHABILITATION - PHASE 3
PLAYLAND PARK, RYE, NEW YORK
DRAWING LIST

CONTRACT NUMBER: **22-523**
SHEET NUMBER: **T-02**
DWG NO.: **2 of 664**
SCALE:
DATE: **08/23/2022**
DPW FILE NUMBER: **1-118-G-752-1**
REV. NO. **1**

DRAWING LIST- VOLUME 2

CXF BUILDING

GENERAL			
317	CXF-G-01	BUILDING INTRO	1-118-G-1066-0
318	CXF-G-02	CXE & CXF - LIFE SAFETY PLANS	1-118-G-1067-0
319	CXF-G-03	CXE - SITE RESTORATION	1-118-G-1068-0
ENVIRONMENTAL			
320	CXF-H-10	GENERAL ASBESTOS ABATEMENT NOTES	1-118-G-1069-0
321	CXF-H-11	ROOF ASBESTOS ABATEMENT PLAN	1-118-G-1070-0
322	CXF-H-20	GENERAL LEAD REMEDIATION NOTES	1-118-G-1071-0
323	CXF-H-21	NORTH, SOUTH & EAST LEAD REMEDIATION PLAN	1-118-G-1072-0
ARCHITECTURAL			
324	CXF-A-01	CXF - GROUND FLOOR DEMOLITION PLAN	1-118-A-1073-0
325	CXF-A-02	CXF - ROOF DEMOLITION PLAN	1-118-A-1074-0
326	CXF-A-03	CXF - EXTERIOR DEMOLITION ELEVATIONS	1-118-A-1075-0
327	CXF-A-04	CXF - RCP DEMOLITION PLAN	1-118-A-1076-0
328	CXF-A-11	CXF - GROUND FLOOR PLAN	1-118-A-1077-0
329	CXF-A-12	CXF - ROOF PLAN	1-118-A-1078-1
330	CXF-A-21	CXF - EXTERIOR ELEVATIONS	1-118-A-1079-0
331	CXF-A-22	CXF - INTERIOR COLONNADE ELEVATIONS	1-118-A-1080-0
332	CXF-A-31	CXF - SECTIONS	1-118-A-1081-0
333	CXF-A-32	CXF - ENLARGED SECTION	1-118-A-1082-0
334	CXF-A-33	CXF - CANOPY SECTIONS	1-118-A-1083-0
335	CXF-A-34	CXF - COLONNADE SECTIONS	1-118-A-1084-0
336	CXF-A-41	CXF - GROUND FLOOR REFLECTED CEILING PLAN	1-118-A-1085-1
337	CXF-A-80	PARTITION TYPES AND DETAILS	1-118-A-1086-0
338	CXF-A-81	ROOF AND CEILING DETAILS	1-118-A-1087-0
339	CXF-A-82	CXF COLONNADE COLUMN DETAILS	1-118-A-1088-0
340	CXF-A-83	BALUSTRADE DETAILS	1-118-A-1089-0
341	CXF-A-84	BALUSTRADE DETAILS	1-118-A-1090-0
342	CXF-A-85	FENCE AND RAMP DETAIL	1-118-A-1091-1
343	CXF-A-86	COUNTER DOOR DETAILS	1-118-A-1092-0
344	CXF-A-87	BENCH AND MURAL DETAILS	1-118-A-1093-0
345	CXF-A-88	STEEL FENCE AND GATE DETAIL	1-118-A-1094-1
346	CXF-A-91	FINISH PLAN AND FINISH SCHEDULE	1-118-A-1095-0
347	CXF-A-92	DOOR SCHEDULE AND DOOR DETAILS	1-118-A-1096-1
348	CXF-A-93	WINDOW SCHEDULE AND WINDOW DETAILS	1-118-A-1097-0
349	CXF-A-94	SIGNAGE TYPES, SCHEDULES AND DETAILS	1-118-A-1098-1
STRUCTURAL			
350	CXF-S-01	STRUCTURAL NOTES	1-118-S-1099-0
351	CXF-S-02	STRUCTURAL SYMBOLS & ABBREVIATIONS	1-118-S-1100-0
352	CXF-S-03	DEMOLITION- GROUND FLOOR PLAN	1-118-S-1101-0
353	CXF-S-04	DEMOLITION- SECTIONS & DETAILS	1-118-S-1102-0
354	CXF-S-05	FOUNDATION PLAN	1-118-S-1103-0
355	CXF-S-06	GROUND FLOOR PLAN	1-118-S-1104-0
356	CXF-S-07	ROOF PLAN	1-118-S-1105-0
357	CXF-S-08	SECTIONS & DETAILS	1-118-S-1106-0
358	CXF-S-09	TYPICAL SECTIONS & DETAILS	1-118-S-1107-0
359	CXF-S-10	SECTIONS & DETAILS	1-118-S-1108-0
FIRE PROTECTION			
360	CXF-FP-01	FIRE PROTECTION NOTES, SYMBOLS, ABBREVIATIONS & DWG LIST	1-118-FP-1109-1
361	CXF-FP-11	FIRE PROTECTION GROUND FLOOR DEMOLITION RCP	1-118-FP-1110-0
362	CXF-FP-21	FIRE PROTECTION GROUND FLOOR CONSTRUCTION RCP	1-118-FP-1111-1
363	CXF-FP-81	FIRE PROTECTION DETAILS	1-118-FP-1112-0
PLUMBING			
364	CXF-P-01	PLUMBING NOTES, SYMBOLS, ABBREVIATIONS, AND DRAWING LIST	1-118-P-1113-0
365	CXF-P-11	PLUMBING GROUND FLOOR DEMOLITION PLAN	1-118-P-1114-0
366	CXF-P-21	PLUMBING FIRST FLOOR CONSTRUCTION PLAN	1-118-P-1115-0
367	CXF-P-81	PLUMBING DETAILS	1-118-P-1116-0
MECHANICAL			
368	CXF-M-01	MECHANICAL NOTES, SYMBOLS AND LEGENDS	1-118-M-1117-0
369	CXF-M-21	MECHANICAL FIRST FLOOR CONSTRUCTION PLAN	1-118-M-1118-0
370	CXF-M-22	MECHANICAL ROOF CONSTRUCTION PLAN	1-118-M-1119-0
371	CXF-M-61	MECHANICAL SCHEDULES	1-118-M-1120-0
372	CXF-M-81	MECHANICAL DETAILS	1-118-M-1121-0
373	CXF-M-91	MECHANICAL CONTROLS	1-118-M-1122-0
ELECTRICAL			
374	CXF-E-01	ONE LINE DIAGRAM- DEMOLITION	1-118-E-1123-0
375	CXF-E-02	GROUND FLOOR DEMOLITION- POWER & LIGHTING PLAN	1-118-E-1124-0
376	CXF-E-03	SITE DUCTBANK PLAN	1-118-E-1125-0
377	CXF-E-04	ONE LINE DIAGRAM	1-118-E-1126-0
378	CXF-E-05	GROUND FLOOR- POWER PLAN	1-118-E-1127-1
379	CXF-E-06	GROUND FLOOR - LIGHTING PLAN	1-118-E-1128-1
380	CXF-E-07	ROOF LEVEL - POWER & LIGHTING PLAN	1-118-E-1129-1
381	CXF-E-08	PANEL SCHEDULES	1-118-E-1130-0
FIRE ALARM			
382	CXF-FA-01	FIRE ALARM NOTES, SYMBOLS, LEGEND, AND RISER DIAGRAM	1-118-FA-1131-0
383	CXF-FA-11	FIRE ALARM FIRST FLOOR DEMOLITION PLAN	1-118-FA-1132-0
384	CXF-FA-21	FIRE ALARM FIRST FLOOR PLAN	1-118-FA-1133-0
385	CXF-FA-81	FIRE ALARM DETAILS	1-118-FA-1134-0
CIVIL			
386	CXF-C-01	OVERALL SITE PLAN	1-118-C-1135-0
387	CXF-C-02	EXISTING CONDITIONS/ DEMOLITION PLAN	1-118-C-1136-0
388	CXF-C-03	SITE CONSTRUCTION PLAN	1-118-C-1137-0
389	CXF-C-04	UTILITY CONSTRUCTION PLAN	1-118-C-1138-0
390	CXF-C-05	GRADING AND EROSION CONTROL PLAN	1-118-C-1139-0
391	CXF-C-06	OVERALL SITE PLAN	1-118-C-1140-0
392	CXF-C-07	OVERALL SITE PLAN	1-118-C-1141-0

DRAGON COASTER VENDORS (DCV)

GENERAL			
393	DCV-G-01	BUILDING INTRO	1-118-G-1142-0
394	DCV-G-02	LIFE SAFETY PLAN	1-118-G-1143-1
395	DCV-G-03	SITE RESTORATION PLAN	1-118-G-1144-0
ENVIRONMENTAL			
396	DCV-H-10	GENERAL ASBESTOS ABATEMENT NOTES	1-118-G-1145-0
397	DCV-H-11	GROUND FLOOR- ASBESTOS ABATEMENT PLAN	1-118-G-1146-0
398	DCV-H-20	GENERAL LEAD REMEDIATION NOTES	1-118-G-1147-0
399	DCV-H-21	NORTH AND SOUTH ELEVATION LEAD REMEDIATION PLAN	1-118-G-1148-0
ARCHITECTURAL			
400	DCV-A-01	DEMOLITION PLAN	1-118-A-1149-1
401	DCV-A-02	DEMOLITION REFLECTED CEILING PLAN	1-118-A-1150-1
402	DCV-A-03	DEMOLITION ROOF PLAN	1-118-A-1151-0
403	DCV-A-04	DEMOLITION ELEVATIONS 1 OF 3	1-118-A-1152-0
404	DCV-A-05	DEMOLITION ELEVATIONS 2 OF 3	1-118-A-1153-0
405	DCV-A-06	DEMOLITION ELEVATIONS 3 OF 3	1-118-A-1154-0
406	DCV-A-07	DEMOLITION SECTION	1-118-A-1155-1
407	DCV-A-10	GROUND FLOOR- CONSTRUCTION PLAN	1-118-A-1156-1
408	DCV-A-11	GROUND FLOOR- REFLECTED CEILING PLAN	1-118-A-1157-1
409	DCV-A-12	ATTIC PLAN	1-118-A-1158-1
410	DCV-A-13	ROOF PLAN	1-118-A-1159-0
411	DCV-A-14	FINISH PLAN	1-118-A-1160-1
412	DCV-A-20	EXTERIOR ELEVATIONS 1 OF 3	1-118-A-1161-1
413	DCV-A-21	EXTERIOR ELEVATIONS 2 OF 3	1-118-A-1162-1
414	DCV-A-22	EXTERIOR ELEVATIONS 3 OF 3	1-118-A-1163-1
415	DCV-A-30	SECTION AT DIAGONAL COLONNADE AND DRAGON COASTER STATION	1-118-A-1164-0
416	DCV-A-31	SECTION AT TOWER 6 AND GUEST SERVICES	1-118-A-1165-1
417	DCV-A-32	SECTION AT TICKET ROOM	1-118-A-1166-1
418	DCV-A-33	SECTION AT VENDOR SPACE	1-118-A-1167-1
419	DCV-A-50	ENLARGED COLONNADE SECTION AND ELEVATION- EXTERIOR	1-118-A-1168-0
420	DCV-A-51	ENLARGED COLONNADE SECTION- INTERIOR	1-118-A-1169-0
421	DCV-A-52	ENLARGED TOWER SECTIONS	1-118-A-1170-0
422	DCV-A-53	ENLARGED EXTERIOR ELEVATIONS	1-118-A-1171-1
423	DCV-A-54	ENLARGED PLANS AT COURTYARD	1-118-A-1172-0
424	DCV-A-80	CUSTOM FABRICATIONS	1-118-A-1173-1
425	DCV-A-81	TOWER DETAILS	1-118-A-1174-0
426	DCV-A-82	TOWER PIER DETAILS	1-118-A-1175-0
427	DCV-A-83	COLUMN DETAILS 1 OF 2	1-118-A-1176-0
428	DCV-A-84	COLUMN DETAILS 2 OF 2	1-118-A-1177-0
429	DCV-A-85	BALUSTRADE AND MOUNTING DETAILS	1-118-A-1178-0
430	DCV-A-86	MILLWORK DETAILS	1-118-A-1179-0
431	DCV-A-87	LIGHTING AND FLAG MOUNTING DETAILS AT BALUSTRADE	1-118-A-1180-0
432	DCV-A-88	ROOF DETAILS	1-118-A-1181-0
433	DCV-A-90	DRAGON COASTER TICKET BOOTH DETAILS	1-118-A-1182-0
434	DCV-A-91	COUNTER DOOR DETAILS	1-118-A-1183-0
435	DCV-A-92	ROLL UP DOOR DETAILS	1-118-A-1184-0
436	DCV-A-93	FENCE DETAILS	1-118-A-1185-0
437	DCV-A-94	SIGNAGE DETAILS	1-118-A-1186-0
438	DCV-A-95	DOOR AND HARDWARE SCHEDULE	1-118-A-1187-1
439	DCV-A-96	WINDOW SCHEDULE AND WINDOW DETAILS	1-118-A-1188-1
440	DCV-A-97	WALL PARTITION SCHEDULE	1-118-A-1189-1
441	DCV-A-98	EXTERIOR PAINT FINISH SCHEDULE 1 OF 2	1-118-A-1190-0
442	DCV-A-99	EXTERIOR PAINT FINISH SCHEDULE 2 OF 2	1-118-A-1191-0
STRUCTURAL			
443	DCV-S-01	STRUCTURAL NOTES	1-118-S-1192-0
444	DCV-S-02	STRUCTURAL ABBREVIATIONS & SYMBOLS	1-118-S-1193-0
445	DCV-S-03	DEMOLITION- GROUND FLOOR PLAN	1-118-S-1194-0
446	DCV-S-04	DEMOLITION- SECTION	1-118-S-1195-0
447	DCV-S-05	SHORING PLAN	1-118-S-1196-0
448	DCV-S-06	FOUNDATION PLAN	1-118-S-1197-0
449	DCV-S-07	TOWER FOUNDATION PLAN, SECTION AND DETAILS	1-118-S-1198-0
450	DCV-S-08	GROUND FLOOR PLAN	1-118-S-1199-0
451	DCV-S-09	TOWER SUPERSTRUCTURE- PLANS	1-118-S-1200-0
452	DCV-S-10	CEILING FRAMING PLAN	1-118-S-1201-0
453	DCV-S-11	TOWER SUPERSTRUCTURE- PLANS II	1-118-S-1202-0
454	DCV-S-12	SECTION	1-118-S-1203-0
455	DCV-S-13	SECTION	1-118-S-1204-0
456	DCV-S-14	TOWER SUPERSTRUCTURE - SECTIONS AND DETAILS	1-118-S-1205-0
457	DCV-S-15	TYPICAL SECTIONS AND DETAILS	1-118-S-1206-0
458	DCV-S-16	SECTIONS AND DETAILS	1-118-S-1207-0
459	DCV-S-17	PART PLAN AND SECTIONS	1-118-S-1208-0
FIRE PROTECTION			
460	DCV-FP-01	FIRE PROTECTION NOTES, SYMBOLS, ABBREVIATIONS & DWG LIST	1-118-FP-1209-1
461	DCV-FP-11	FIRE PROTECTION FIRST FLOOR DEMOLITION RCP	1-118-FP-1210-1
462	DCV-FP-21	FIRE PROTECTION FIRST FLOOR CONSTRUCTION RCP	1-118-FP-1211-1
463	DCV-FA-81	FIRE PROTECTION DETAILS	1-118-FP-1212-0
PLUMBING			
464	DCV-P-01	PLUMBING NOTES, SYMBOLS, ABBREVIATIONS, AND DRAWING LIST	1-118-P-1213-1
465	DCV-P-11	PLUMBING FIRST FLOOR AND ROOF DEMOLITION PLANS	1-118-P-1214-0
466	DCV-P-21	PLUMBING FIRST FLOOR AND ROOF CONSTRUCTION PLAN	1-118-P-1215-1
467	DCV-P-81	PLUMBING DETAILS	1-118-P-1216-0
MECHANICAL			
468	DCV-M-01	MECHANICAL NOTES, SYMBOLS & LEGENDS	1-118-M-1217-0
469	DCV-M-11	MECHANICAL FIRST FLOOR DEMOLITION PLAN	1-118-M-1218-0
470	DCV-M-12	MECHANICAL ROOF DEMOLITION PLAN	1-118-M-1219-0
471	DCV-M-21	MECHANCIAL FIRST FLOOR CONSTRUCTION PLAN	1-118-M-1220-0
472	DCV-M-22	MECHANICAL ATTIC CONSTUCTION PLAN	1-118-M-1221-1
473	DCV-M-61	MECHANICAL SCHEDULES	1-118-M-1222-0
474	DCV-M-81	MECHANCAL DETAILS AND CONTROLS	1-118-M-1223-0
ELECTRICAL			
475	DCV-E-01	ONE LINE DIAGRAM- DEMOLITION	1-118-E-1224-0
476	DCV-E-02	VENDORS GROUND FLOOR- DEMOLITION	1-118-E-1225-1
477	DCV-E-03	COLONNADE & TOWERS - DEMOLITION	1-118-E-1226-0
478	DCV-E-04	ROOF PLAN - DEMOLITION	1-118-E-1227-1
479	DCV-E-05	ONE LINE DIAGRAM & PANEL SCHEDULES	1-118-E-1228-1
480	DCV-E-06	GROUND FLOOR - POWER PLAN	1-118-E-1229-1
481	DCV-E-07	GROUND FLOOR - LIGHTING PLAN	1-118-E-1230-1
482	DCV-E-08	ROOF PLAN- POWER, LIGHTING & LIGHTNING PROTECTION	1-118-E-1231-1
483	DCV-E-09	EXTERIOR LIGHTING CONTROLS	1-118-E-1232-1
FIRE ALARM			
484	DCV-FA-01	FIRE ALARM NOTES, SYMBOLS, LEGEND, AND RISER DIAGRAM	1-118-FA-1233-0
485	DCV-FA-11	FIRE ALARM FIRST FLOOR DEMOLITION PLAN	1-118-FA-1234-1
486	DCV-FA-21	FIRE ALARM GROUND FLOOR PLAN	1-118-FA-1235-1
487	DCV-FA-22	FIRE ALARM ROOF PLAN	1-118-FA-1236-1
488	DCV-FA-81	FIRE ALARM DETAILS	1-118-FA-1237-0
CIVIL			
489	DCV-C-01	GENERAL NOTES	1-118-C-1238-0
490	DCV-C-02	EXISTING CONDITIONS/ DEMOLITION PLAN	1-118-C-1239-0
491	DCV-C-03	SITE CONSTRUCTION PLAN	1-118-C-1240-1
492	DCV-C-04	UTILITY CONSTRUCTION PLAN	1-118-C-1241-1
493	DCV-C-05	GRADING AND EROSION CONTROL PLAN	1-118-C-1242-1
494	DCV-C-06	CIVIL DETAILS 1	1-118-C-1243-0
495	DCV-C-07	CIVIL DETAILS 2	1-118-C-1244-0

RESTAURANT KITCHEN WITH FOOD VENDING (K)

GENERAL			
496	K-G-01	BUILDING 3D VIEW	1-118-G-1245-0
497	K-G-02	CODE PLAN	1-118-G-1246-1
ENVIRONMENTAL			
498	K-H-10	GENERAL ASBESTOS ABATEMENT NOTES	1-118-G-1247-0
499	K-H-11	GROUND FLOOR AND ELEVATIONS ASBESTOS REMOVAL PLAN	1-118-G-1248-0
500	K-H-20	GENERAL LEAD REMEDIATION NOTES	1-118-G-1249-0
501	K-H-21	GROUND FLOOR AND ELEVATION LEAD REMEDIATION PLAN	1-118-G-1250-0
ARCHITECTURAL			
502	K-A-01	GROUND FLOOR DEMOLITION PLAN	1-118-A-1251-1
503	K-A-02	GROUND FLOOR DEMOLITION- REFLECTED CEILING PLANS	1-118-A-1252-1
504	K-A-03	ROOF DEMOLITION PLAN	1-118-A-1253-1
505	K-A-04	EXTERIOR DEMOLITION ELEVATIONS	1-118-A-1254-1
506	K-A-05	EXTERIOR DEMOLITION ELEVATIONS	1-118-A-1255-1
507	K-A-11	GROUND FLOOR CONSTRUCTION PLAN	1-118-A-1256-1
508	K-A-12	ATTIC AND LOW ROOF CONSTRUCTION PLAN	1-118-A-1257-1
509	K-A-13	GROUND FLOOR- REFLECTED CEILING PLANS	1-118-A-1258-0
510	K-A-14	ATTIC REFLECTED CEILING PLAN	1-118-A-1259-0
511	K-A-15	ROOF CONSTRUCTION PLAN	1-118-A-1260-1
512	K-A-21	EXTERIOR BUILDING ELEVATIONS- EAST AND SOUTH	1-118-A-1261-1
513	K-A-22	EXTERIOR BUILDING ELEVATIONS- NORTH AND WEST	1-118-A-1262-1
514	K-A-31	BUILDING SECTIONS	1-118-A-1263-1
515	K-A-32	BUILDING SECTIONS 2	1-118-A-1264-0
516	K-A-81	CEILING, FLOOR, AND PLANTER DETAILS	1-118-A-1265-1
517	K-A-82	ROOF DETAILS	1-118-A-1266-0
518	K-A-83	ROOF SIGNAGE DETAILS	1-118-A-1267-1
519	K-A-84	COLUMN DETAILS	1-118-A-1268-0
520	K-A-85	CANOPY DETAILS	1-118-A-1269-1
521	K-A-86	COUNTER ROLL UP DOOR DETAILS	1-118-A-1270-1
522	K-A-87	SIGNAGE DETAILS	1-118-A-1271-0
523	K-A-88	WINDOW SCHEDUES & DETAILS	1-118-A-1272-0
524	K-A-91	FINISHES & MATERIAL SCHEDULE	1-118-A-1273-1
525	K-A-92	EXTERIOR FINISH ELEVATIONS & DETAILS	1-118-A-1274-0
526	K-A-93	DOOR & FRAME DETAILS	1-118-A-1275-1
527	K-A-94	WALL PARTITION SCHEDULE	1-118-A-1276-1
STRUCUTRAL			
528	K-S-01	STRUCTURAL NOTES	1-118-S-1277-0
529	K-S-02	STRUCTURAL ABBREVIATIONS & SYMBOLS	1-118-S-1278-0
530	K-S-03	DEMOLITION- GROUND FLOOR PLAN	1-118-S-1279-0
531	K-S-04	DEMOLITION- ROOF PLAN	1-118-S-1280-0
532	K-S-05	SHORING PLAN	1-118-S-1281-0
533	K-S-06	FOUNDATION PLAN	1-118-S-1282-0
534	K-S-07	GROUND FLOOR PLAN	1-118-S-1283-0
535	K-S-08	CEILING FRAMING PLAN	1-118-S-1284-0
536	K-S-09	ROOF PLAN	1-118-S-1285-0
537	K-S-10	SECTION	1-118-S-1286-0
538	K-S-11	SECTIONS AND DETAILS	1-118-S-1287-0
539	K-S-12	SECTIONS AND DETAILS	1-118-S-1288-0
540	K-S-13	SECTIONS AND DEAILS	1-118-S-1289-0
FIRE PROTECTION			
541	K-FP-01	FIRE PROTECTION NOTES, SYMBOLS, ABBREVIATIONS & DWG LIST	1-118-FP-1290-1
542	K-FP-11	FIRE PROTECTION GROUND FLOOR DEMOLITION PLAN	1-118-FP-1291-0
543	K-FP-21	FIRE PROTECTION GROUND FLOOR AND ATTIC CONSTRUCTION RCP	1-118-FP-1292-1
544	K-FP-81	FIRE PROTECTION DETAILS	1-118-FP-1293-1
PLUMBING			
545	K-P-01	PLUMBING NOTES, SYMBOLS, ABBREVIATIONS AND DRAWING LIST	1-118-P-1294-0
546	K-P-11	PLUMBING GROUND FLOOR DEMOLITION PLAN	1-118-P-1295-0
547	K-P-21	PLUMBING GROUND FLOOR CONSTRUCTION PLAN	1-118-P-1296-0
548	K-P-81	PLUMBING DETAILS	1-118-P-1297-0
MECHANICAL			
549	K-M-01	MECHANICAL NOTES, SYMBOLS AND LEGENDS	1-118-M-1298-1
550	K-M-11	MECHANICAL FIRST FLOOR DEMOLITION PLAN	1-118-M-1299-0
551	K-M-12	MECHANICAL ROOF DEMOLITION PLAN	1-118-M-1300-0
552	K-M-21	MECHANICAL FIRST FLOOR CONSTRUCTION PLAN	1-118-M-1301-1
553	K-M-22	MECHANICAL ATTIC FLOOR CONSTRUCTION PLAN	1-118-M-1302-1
554	K-M-23	MECHANICAL ROOF CONSTRUCTION PLAN	1-118-M-1303-1
555	K-M-61	MECHANICAL SCHEDULES	1-118-M-1304-1
556	K-M-81	MECHANICAL DETAILS 1 OF 2	1-118-M-1305-0
557	K-M-82	MECHANICAL DETAILS 2 OF 2	1-118-M-1306-0
558	K-M-91	MECHANICAL CONTROLS	1-118-M-1307-0
ELECTRICAL			
559	K-E-01	ONE LINE DIAGRAM- DEMOLITION	1-118-E-1308-0
560	K-E-02	GROUND FLOOR - DEMOLITION POWER & LIGHTING PLAN	1-118-E-1309-0
561	K-E-03	ROOF DEMOLITION PLAN	1-118-E-1310-0
562	K-E-04	SITE DUCTBANK PLAN	1-118-E-1311-0
563	K-E-05	ONE LINE DIAGRAMS & EXTERIOR LIGHTING CONTROL	1-118-E-1312-0
564	K-E-06	PANEL SCHEDULES	1-118-E-1313-1
565	K-E-07	GROUND FLOOR - POWER PLAN	1-118-E-1314-1
566	K-E-08	SECOND LEVEL- POWER PLAN	1-118-E-1315-1
567	K-E-09	GROUND FLOOR - LIGHTING PLAN	1-118-E-1316-1
568	K-E-10	SECOND FLOOR - LIGHTING PLAN	1-118-E-1317-1
569	K-E-11	ROOF PLAN - POWER & LIGHTING PROTECTION	1-118-E-1318-1
FIRE ALARM			
570	K-FA-01	FIRE ALARM NOTES, SYMBOLS, LEGEND, AND RISER DIAGRAM	1-118-FA-1319-0
571	K-FA-11	FIRE ALARM FIRST FLOOR DEMOLITION PLAN	1-118-FA-1320-1
572	K-FA-21	FIRE ALARM FIRST FLOOR PLAN	1-118-FA-1321-1
573	K-FA-22	FIRE ALARM ATTIC FLOOR PLAN	1-118-FA-1322-1
574	K-FA-81	FIRE ALARM DETAILS	1-118-FA-1323-0
CIVIL			
575	K-C-01	GENERAL NOTES	1-118-C-1324-0
576	K-C-02	EXISTING CONDITIONS/ DEMOLITION PLAN	1-118-C-1325-0
577	K-C-03	SITE CONSTRUCTION PLAN	1-118-C-1326-0
578	K-C-04	UTILITY CONSTRUCTION PLAN	1-118-C-1327-1
579	K-C-05	GRADING AND EROSION CONTROL PLAN	1-118-C-1328-0
580	K-C-06	CIVIL DETAILS 1	1-118-C-1329-0
581	K-C-07	CIVIL DETAILS 2	1-118-C-1330-0

SOUTHEAST ARCADE (SA)

GENERAL			
582	SA-G-01	BUILDING INTRO	1-118-G-1331-0
583	SA-G-02	EGRESS PLANS AND CODE ANALYSIS	1-118-G-1332-0
584	SA-G-03	SITE RESTORATION PLAN	1-118-G-1333-0
ENVIRONMENTAL			
585	SA-H-20	GENERAL LEAD REMEDIATION NOTES	1-118-G-1334-0
586	SA-H-21	NORTH AND EAST ELEVATIONS- LEAD REMEDIATION PLAN	1-118-G-1335-0
587	SA-H-22	WEST ELEVATION- LEAD REMEDIATION PLAN	1-118-G-1336-0
ARCHITECTURAL			
588	SA-A-01	SE ARCADE GROUND FLOOR - DEMOLITION PLAN	1-118-A-1337-0
589	SA-A-02	SE GROUND FLOOR DEMOLITION - REFLECTED CEILING PLAN	1-118-A-1338-0
590	SA-A-03	SE ARCADE SECOND FLOOR - DEMOLITION PLAN & RCP	1-118-A-1339-0
591	SA-A-04	SE ARCADE ROOF FLOOR - DEMOLITION PLAN	1-118-A-1340-0
592	SA-A-05	SE ARCADE EXTERIOR DEMOLITION ELEVATIONS 1	1-118-A-1341-0
593	SA-A-06	SE ARCADE EXTERIOR DEMOLITION ELEVATIONS 2	1-118-A-1342-0
594	SA-A-11	SE ARCADE GROUND FLOOR PLAN	1-118-A-1343-0
595	SA-A-12	SE ARCADE REFLECTED CEILING PLANS	1-118-A-1344-1
596	SA-A-13	SE ARCADE MEZZANINE - PLANS & RCP	1-118-A-1345-1
597	SA-A-14	SE ARCADE ROOF PLAN	1-118-A-1346-0
598	SA-A-15	SE ARCADE FINISH PLANS	1-118-A-1347-0
599	SA-A-21	EXTERIOR BUILDING ELEVATIONS 1	1-118-A-1348-1
600	SA-A-22	EXTERIOR BUILDING ELEVATIONS 2	1-118-A-1349-1
601	SA-A-31	INTERIOR BUILDING SECTIONS 1 OF 2	1-118-A-1350-1
602	SA-A-32	INTERIOR BUILDING SECTIONS 2 OF 2	1-118-A-1351-1
603	SA-A-71	STAIR DETAILS	1-118-A-1352-1
604	SA-A-81	CANOPY DETAILS	1-118-A-1353-1
605	SA-A-82	SIGNAGE DETAILS	1-118-A-1354-0
606	SA-A-83	FENCE DETAILS	1-118-A-1355-1
607	SA-A-84	CEILING DETAILS	1-118-A-1356-1
608	SA-A-85	ROOF MONITOR DETAILS	1-118-A-1357-1
609	SA-A-91	DOOR & HARDWARE SCHEDULE	1-118-A-1358-1
610	SA-A-92	WINDOW, LOUVERS SCHEDULES & DETAILS	1-118-A-1359-1
611	SA-A-93	PARTITION TYPES AND FLOORING DETAILS	1-118-A-1360-1
612	SA-A-94	COLUMN DETAILS	1-118-A-1361-0
STRUCTURAL			
613	SA-S-01	STRUCTURAL NOTES	1-118-S-1362-0
614	SA-S-02	STRUCTURAL ABBREVIATIONS & SYMBOLS	1-118-S-1363-0
615	SA-S-03	DEMOLITION- GROUND FLOOR PLAN	1-118-S-1364-0
616	SA-S-04	DEMOLITION- ROOF PLAN	1-118-S-1365-0
617	SA-S-05	FOUNDATION PLAN	1-118-S-1366-0
618	SA-S-06	GROUND FLOOR PLAN	1-118-S-1367-0
619	SA-S-07	SECTIONS AND DETAILS	1-118-S-1368-0
620	SA-S-08	SECTIONS	1-118-S-1369-0
621	SA-S-09	SECTIONS AND DETAILS	1-118-S-1370-0
622	SA-S-10	SECTIONS AND DETAILS	1-118-S-1371-0
623	SA-S-11	SECTIONS AND DETAILS	1-118-S-1372-0
624	SA-S-12	SECTIONS AND DETAILS	1-118-S-1373-0
FIRE PROTECTION			
625	SA-FP-01	FIRE PROTECTION NOTES, SYMBOLS, ABBREVIATIONS & DWG LIST	1-118-FP-1374-1
626	SA-FP-11	FIRE PROTECTION GROUND AND SECOND FLOOR DEMOLITION RCP	1-118-FP-1375-0
627	SA-FP-21	FIRE PROTECTION GROUND AND SECOND FLOOR CONSTRUCTION RCP	1-118-FP-1376-0
628	SA-FP-81	FIRE PROTECTION DETAILS	1-118-FP-1377-0
PLUMBING			
629	SA-P-01	PLUMBING NOTES, SYMBOLS, ABBREVIATIONS AND DRAWING LIST	1-118-P-1378-0
630	SA-P-11	PLUMBING GROUND FLOOR AND 2ND LEVEL DEMOLITION PLANS	1-118-P-1379-0
631	SA-P-21	PLUMBING GROUND FLOOR AND 2ND LEVEL CONSTRUCTION PLANS	1-118-P-1380-1
632	SA-P-81	PLUMBING DETAILS	1-118-P-1381-0
MECHANICAL			
633	SA-M-01	MECHANICAL NOTES, SYMBOLS & LEGENDS	1-118-M-1382-0
634	SA-M-11	MECHANICAL FIRST FLOOR DEMOLITION PLAN	1-118-M-1383-0
635	SA-M-12	MECHANICAL SECOND FLOOR DEMOLITION PLAN	1-118-M-1384-0
636	SA-M-21	MECHANICAL FIRST FLOOR CONSTRUCTION PLAN	1-118-M-1385-0
637	SA-M-22	MECHANICAL SECOND FLOOR CONSTRUCTION PLAN	1-118-M-1386-0
638	SA-M-23	MECHANICAL EXTERIOR BUILDING ELEVATIONS	1-118-M-1387-0
639	SA-M-61	MECHANICAL SCHEDULES	1-118-M-1388-0
640	SA-M-81	MECHANICAL DETAILS	1-118-M-1389-0
641	SA-M-91	MECHANICAL CONTROLS	1-118-M-1390-0
ELECTRICAL			
642	SA-E-01	ONE LINE DIAGRAMS & PANEL SCHEDULES - DEMOLITION	1-118-E-1391-0
643	SA-E-02	GROUND FLOOR - DEMOLITION POWER & LIGHTING PLAN	1-118-E-1392-0
644	SA-E-03	SECOND LEVEL - DEMOLITION PLAN	1-118-E-1393-0
645	SA-E-04	ONE LINE DIAGRAM & PANEL SCHEDULES	1-118-E-1394-1
646	SA-E-05	GROUND FLOOR - POWER PLAN	1-118-E-1395-1
647	SA-E-06	SECOND LEVEL - POWER PLAN	1-118-E-1396-1
648	SA-E-07	GROUND FLOOR - LIGHTING PLAN	1-118-E-1397-1
649	SA-E-08	SECOND LEVEL - LIGHTING PLAN	1-118-E-1398-1
650	SA-E-09	ROOF PLAN - LIGHTNING PROTECTION	1-118-E-1399-1
FIRE ALARM			
651	SA-FA-01	FIRE ALARM NOTES, SYMBOLS, LEGEND, AND RISER DIAGRAM	1-118-FA-1400-0
652	SA-FA-11	FIRE ALARM FIRST FLOOR DEMOLITION PLAN	1-118-FA-1401-0
653	SA-FA-21	FIRE ALARM FIRST FLOOR PLAN	1-118-FA-1402-0
654	SA-FA-22	FIRE ALARM SECOND FLOOR PLAN	1-118-FA-1403-0
655	SA-FA-81	FIRE ALARM DETAILS	1-118-FA-1404-0
CIVIL			
656	SA-C-01	GENERAL NOTES	1-118-C-1405-0
657	SA-C-02	EXISTING CONDITIONS/ DEMOLITION PLAN	1-118-C-1406-1
658	SA-C-03	SITE CONSTRUCTION PLAN	1-118-C-1407-1
659	SA-C-04	UTILITY CONSTRUCTION PLAN	1-118-C-1408-0
660	SA-C-05	GRADING AND EROSION CONTROL PLAN	1-118-C-1409-0
661	SA-C-06	CIVIL DETAILS 1	1-118-C-1410-0
662	SA-C-07	CIVIL DETAILS 2	1-118-C-1411-0

DETAILS (ELECTRICAL)

663	DT-E-01	DETAILS 1	1-118-E-1412-0
664	DT-E-02	DETAILS 2	1-118-E-1413-0

1

9/22/2022 12:37:10 PM

CONSULTANT INFORMATION

The LiRo Group

3 Aerial Way, Syosset, New York 11791
(516) 938-5476 www.liro.com

CONSULTANT SEAL

REGISTERED ARCHITECT ROBERT D. YOUNG JR 023220 STATE OF NEW YORK

REVISION NUMBER	DATE	MADE BY	APP'D BY	REVISION
1	9/21/22			BID ADDENDUM #3

RECORD DRAWING CERTIFICATION

☐ AS BUILT – CHANGES AS NOTED ☐ AS BUILT – NO CHANGES

CONTRACTOR
NAME ____
SIGNATURE ____
TITLE ____ DATE ____

PROJECT COORDINATOR
NAME ____
SIGNATURE ____
TITLE ____ DATE ____

WESTCHESTER COUNTY, NEW YORK
DEPARTMENT OF PUBLIC WORKS AND TRANSPORTATION
DIVISION OF ENGINEERING

INFRASTRUCTURE REHABILITATION - PHASE 3
PLAYLAND PARK, RYE, NEW YORK
DRAWING LIST

CONTRACT NUMBER: **22-523**
SHEET NUMBER: **T-02A**
DWG NO.: **3 of 664**
SCALE:
DATE: **08/23/2022**
DPW FILE NUMBER: **1-118-G-752A-1**
REV. NO.: **1**

INFRASTRUCTURE REHABILITATION PHASE 3
DESIGN SCOPES

SA • SOUTHEAST ARCADE: EXTERIOR ALTERNATION OF BUILDING ENVELOPE INCLUDING SIDING AND ROOFING. RECONSTRUCTION OF DETERIORATED TIMBER FLOOR AND FLOOR FRAMING. VENDOR-READY INTERIOR FOR GAMES OR ARCADE VENDORS (MINIMAL UTILITIES). SEASONAL USE (NO HEAT OR AC) WITH LIGHTING FIXTURES, OUTLETS AND RELATED CONDUIT AND WIRING WORK.

BB • NORTHEAST BURGER BARN: EXTERIOR ALTERNATION OF BUILDING ENVELOPE INCLUDING SIDING AND ROOFING. NEW ADDITION IN EXISTING FOOTPRINT. VENDOR-READY INTERIOR FOR CONVERSION TO RESTAURANT, INCLUDING UTILITIES FOR FIT-OUT OF KITCHEN BY FOOD SERVICE VENDOR. SEASONAL USE (NO HEAT OR AC) WITH LIGHTING FIXTURES, OUTLETS AND RELATED CONDUIT AND WIRING WORK.

DCV • DRAGON COASTER VENDORS: REMOVE NON-HISTORICAL "DIPPIN DOTS" CONSTRUCTION. REMOVE AND REBUILD TOWERS # 6 AND #7 IN ENTIRETY, INCLUDING NEW FOUNDATIONS. EXTERIOR ALTERNATION COLONNADE, BOARDWALK AND BOARDWALK FOUNDATIONS, AND VENDOR FAÇADES. DEMOLISH INTERIOR SPACES AND REHAB TO VENDOR-READY FOR FOOD SERVICE FIT-OUT FOR SEASONAL USE (NO HEAT OR AC). PROVIDE REROOFING OF ENTIRE DRAGON COASTER STATION.

K • RESTAURANT KITCHEN WITH FOOD VENDING (A.K.A. NATHAN'S): EXTERIOR ALTERNATION AND/OR REBUILDING. BUILDING MODIFICATIONS FOR NEW ADDITION CONNECTING TO PLAZA RESTAURANT BUILDING. INTERIOR "VENDOR READY" FOR KITCHEN FIT-OUT BY FOOD SERVICE VENDOR. BUILDING SHELL AND MECHANICAL SYSTEMS TO ANTICIPATE FOUR-SEASON USE.

CXA • CROSS AXIS BUILDING A (NORTH GAMES): EXTERIOR ALTERNATION INCLUDING ROOFING AND REHABILITATION OF PORCH & BOARDWALK. INTERIOR REHABILITATION, INCLUDING SELECTIVE REPLACEMENT OF EXISTING DETERIORATED TIMBER FRAMING ELEMENTS, TO VENDOR-READY SPACES FOR GAMES VENDORS (MINIMAL UTILITIES). SEASONAL USE (NO HEAT OR AC) WITH LIGHTING FIXTURES, OUTLETS AND RELATED CONDUIT AND WIRING WORK. IN THE BACK, REMOVE AND REBUILD BUILDING ADDITIONS (VENDOR OFFICE/LOUNGE AND STORAGE SHED).

CXD • CROSS AXIS BUILDING D: EXTERIOR ALTERNATION INCLUDING ROOFING AND REHABILITATION OF PORCH & BOARDWALK. INTERIOR REHABILITATION, INCLUDING SELECTIVE REPLACEMENT OF EXIS SELECTIVE DETERIORATED TIMBER FRAMING ELEMENTS, TO VENDOR-READY SPACES FOR GAMES VENDORS (MINIMAL UTILITIES). SEASONAL USE (NO HEAT OR AC) WITH LIGHTING FIXTURES, OUTLETS AND RELATED CONDUIT AND WIRING WORK.

CXE • CROSS AXIS BUILDING E (SOUTH GAMES): EXTERIOR ALTERNATION INCLUDING ROOFING AND REHABILITATION OF PORCH & BOARDWALK. INTERIOR REHABILITATION, INCLUDING SELECTIVE REPLACEMENT OF EXISTING DETERIORATED TIMBER FRAMING ELEMENTS, TO VENDOR READY SPACES FOR GAMES VENDORS (MINIMAL UTILITIES). SEASONAL USE (NO HEAT OR AC) WITH LIGHTING FIXTURES, OUTLETS AND RELATED CONDUIT AND WIRING WORK.

CXF • CROSS AXIS BUILDING F: REMOVE "LITTLE CARVEL/LUIGI'S" AND REBUILD, INCLUDING NEW STRUCTURAL FOUNDATIONS, SUPERSTRUCTURE, AND INTERIOR VENDOR-READY FOR FOOD SERVICE FIT-OUT. SEASONAL USE (NO HEAT OR AC) WITH LIGHTING FIXTURES, OUTLETS AND RELATED CONDUIT AND WIRING WORK. REMOVE DEMISING WALL TO INTEGRATE WITH THE ADJACENT NEWLY-BUILT VENDOR BUILDING TO THE EAST.

NOTE FOR ALL:
1. CONTRACTOR SHALL PRESERVE AND PROTECT ALL EXISTING FIBER OPTIC CAT-6, AND OTHER DATA SYSTEMS, RELOCATING AS REQUIRED FOR COORDINATION WITH DEMOLITION AND CONSTRUCTION SCOPES OF WORK AND AS REQUIRED TO MAINTAIN FULLY OPERATIONAL POINT OF SALE AND SECURITY SYSTEMS.

LEGEND

EXISTING STRUCTURE

FIRE RATED EXTERIOR WALL (REFER TO BUILDING FOR MORE INFORMATION)

PHASE 3 OVERHEAD STRUCTURE

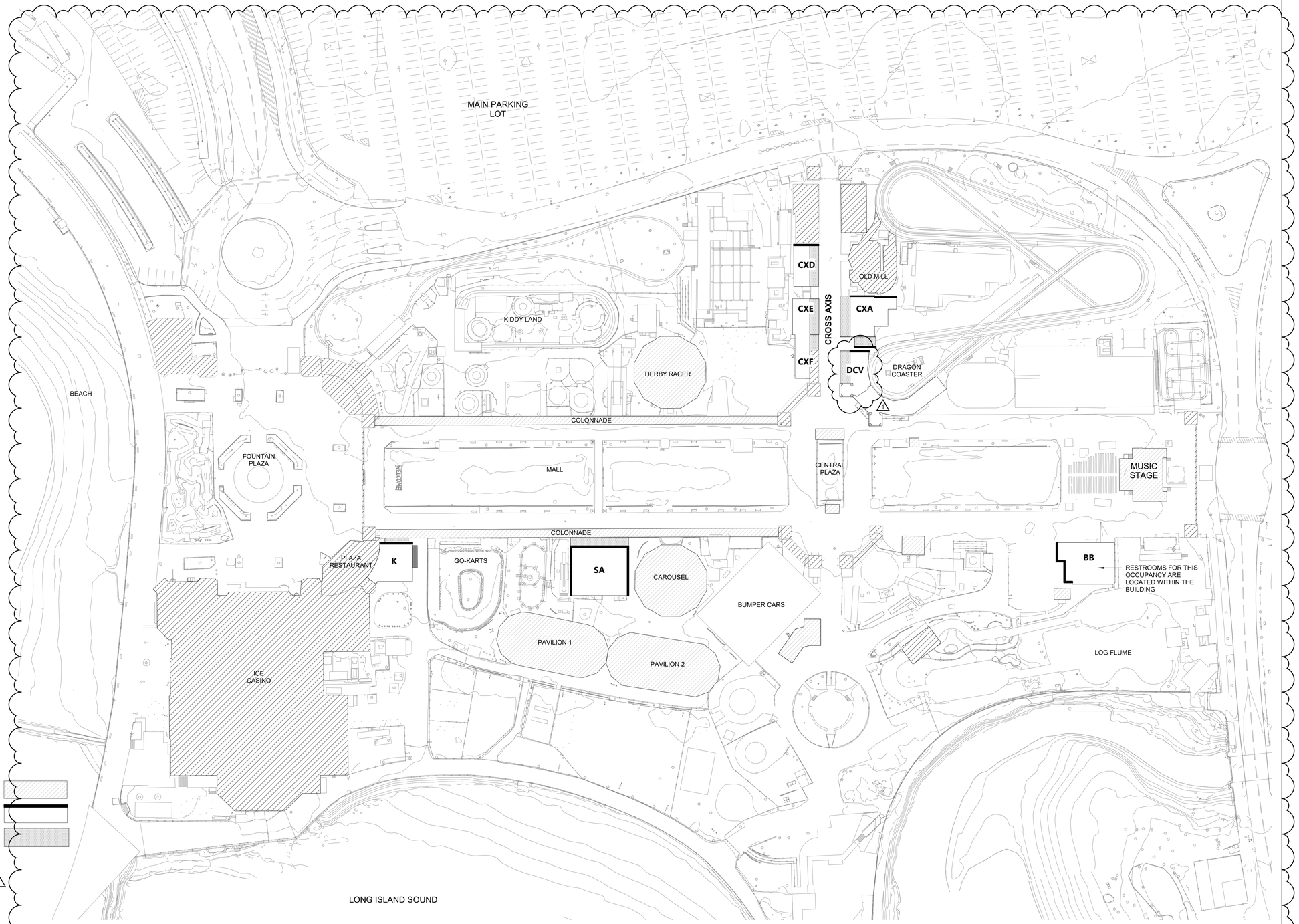

1 PLAYLAND PARK SITE PLAN
1" = 60'-0"

9/27/2022 10:46:44 AM

CONSULTANT INFORMATION

The LiRo Group
3 Aerial Way, Syosset, New York 11791
(516) 938-5476 www.liro.com

CONSULTANT SEAL

REGISTERED ARCHITECT ROBERT D. CORNIGLIA 023292 STATE OF NEW YORK

REVISION NUMBER	DATE	MADE BY	APP'D BY	REVISION
1	9/21/22			BID ADDENDUM #3

RECORD DRAWING CERTIFICATION

☐ AS BUILT – CHANGES AS NOTED ☐ AS BUILT – NO CHANGES

CONTRACTOR
NAME
SIGNATURE
TITLE DATE

PROJECT COORDINATOR
NAME
SIGNATURE
TITLE DATE

WESTCHESTER COUNTY, NEW YORK
DEPARTMENT OF PUBLIC WORKS AND TRANSPORTATION
DIVISION OF ENGINEERING

INFRASTRUCTURE REHABILITATION - PHASE 3
PLAYLAND PARK, RYE, NEW YORK
SITE PLAN & SCOPE OF WORK

CONTRACT NUMBER	22-523
SHEET NUMBER	T-04
DWG NO.:	5 of 664
SCALE:	1" = 60'-0"
DATE:	08/23/2022
DPW FILE NUMBER	1-118-G-754-1
REV. NO.	1

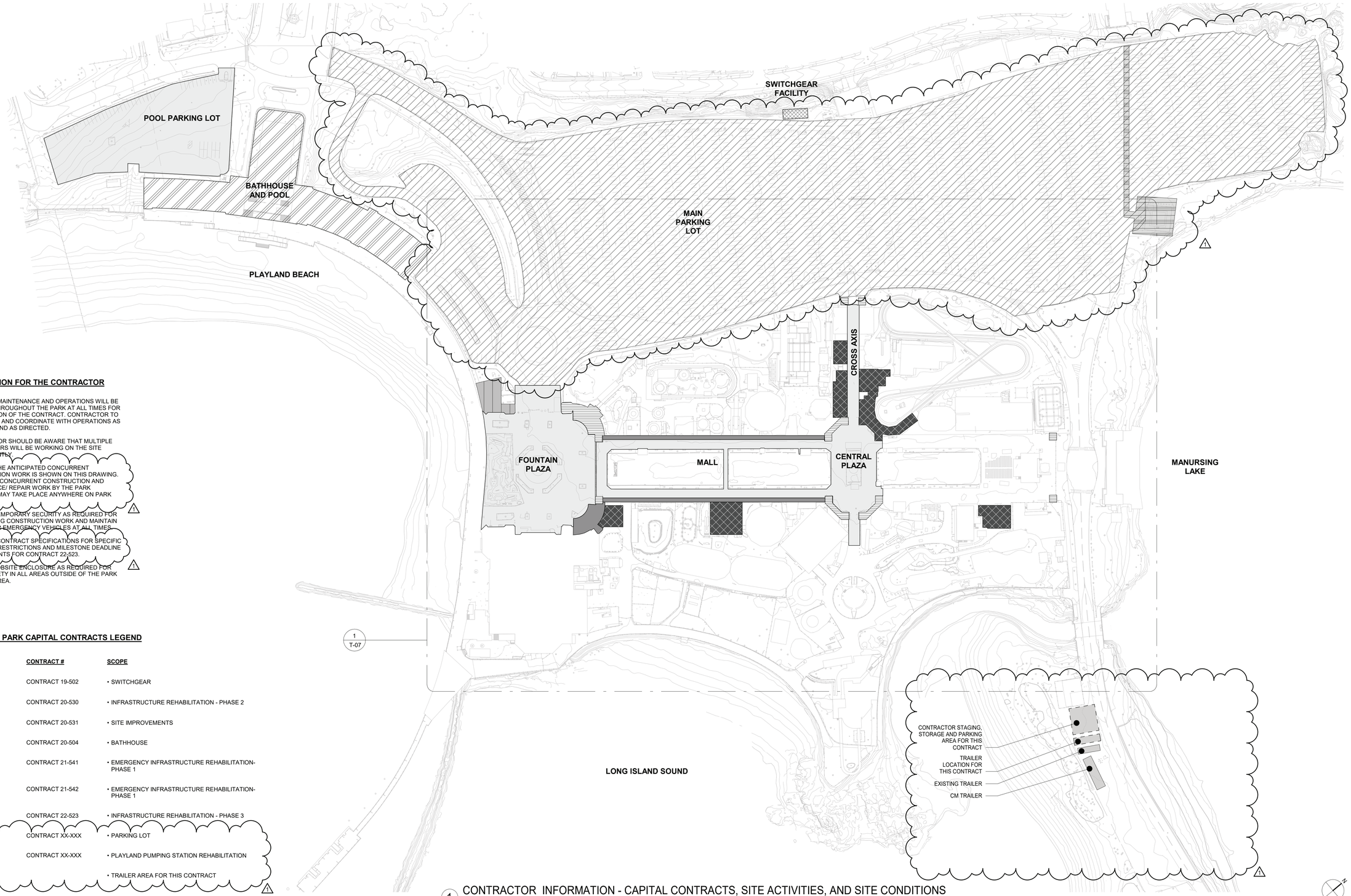

1 CONTRACTOR INFORMATION - CAPITAL CONTRACTS, SITE ACTIVITIES, AND SITE CONDITIONS
1" = 100'-0"

INFORMATION FOR THE CONTRACTOR

1. PLAYLAND MAINTENANCE AND OPERATIONS WILL BE ONGOING THROUGHOUT THE PARK AT ALL TIMES FOR THE DURATION OF THE CONTRACT. CONTRACTOR TO COOPERATE AND COORDINATE WITH OPERATIONS AS REQUIRED AND AS DIRECTED.
2. CONTRACTOR SHOULD BE AWARE THAT MULTIPLE CONTRACTORS WILL BE WORKING ON THE SITE CONSURRENTLY.
3. SOME OF THE ANTICIPATED CONCURRENT CONSTRUCTION WORK IS SHOWN ON THIS DRAWING. ADDITIONAL CONCURRENT CONSTRUCTION AND MAINTENANCE/ REPAIR WORK BY THE PARK OPERATOR MAY TAKE PLACE ANYWHERE ON PARK PROPERTY.
4. PROVIDE TEMPORARY SECURITY AS REQUIRED FOR ANY ONGOING CONSTRUCTION WORK AND MAINTAIN ACCESS FOR EMERGENCY VEHICLES AT ALL TIMES.
5. REFER TO CONTRACT SPECIFICATIONS FOR SPECIFIC SEQUENCE RESTRICTIONS AND MILESTONE DEADLINE REQUIREMENTS FOR CONTRACT 22-523.
6. PROVIDE JOBSITE ENCLOSURE AS REQUIRED FOR PUBLIC SAFETY IN ALL AREAS OUTSIDE OF THE PARK SECURED AREA.

PLAYLAND PARK CAPITAL CONTRACTS LEGEND

KEY	CONTRACT #	SCOPE
	CONTRACT 19-502	• SWITCHGEAR
	CONTRACT 20-530	• INFRASTRUCTURE REHABILITATION - PHASE 2
	CONTRACT 20-531	• SITE IMPROVEMENTS
	CONTRACT 20-504	• BATHHOUSE
	CONTRACT 21-541	• EMERGENCY INFRASTRUCTURE REHABILITATION-PHASE 1
	CONTRACT 21-542	• EMERGENCY INFRASTRUCTURE REHABILITATION-PHASE 1
	CONTRACT 22-523	• INFRASTRUCTURE REHABILITATION - PHASE 3
	CONTRACT XX-XXX	• PARKING LOT
	CONTRACT XX-XXX	• PLAYLAND PUMPING STATION REHABILITATION
		• TRAILER AREA FOR THIS CONTRACT

9/26/2022 5:03:32 PM

CONSULTANT INFORMATION
The LiRo Group
3 Aerial Way, Syosset, New York 11791
(516) 938-5476 www.liro.com

CONSULTANT SEAL
REGISTERED ARCHITECT ROBERT D. VIGNOLA 023220 STATE OF NEW YORK

REVISION NUMBER	DATE	MADE BY	APP'D BY	REVISION
1	9/21/22			BID ADDENDUM #3

RECORD DRAWING CERTIFICATION
☐ AS BUILT – CHANGES AS NOTED ☐ AS BUILT – NO CHANGES

CONTRACTOR
NAME
SIGNATURE
TITLE DATE

PROJECT COORDINATOR
NAME
SIGNATURE
TITLE DATE

WESTCHESTER COUNTY, NEW YORK
DEPARTMENT OF PUBLIC WORKS AND TRANSPORTATION
DIVISION OF ENGINEERING

INFRASTRUCTURE REHABILITATION - PHASE 3
PLAYLAND PARK, RYE, NEW YORK
CONTRACTOR INFORMATION - CAPITAL CONTRACTS, SITE ACTIVITIES, AND SITE CONDITIONS

CONTRACT NUMBER	22-523
SHEET NUMBER	T-06
DWG NO.:	7 of 664
SCALE:	1" = 100'-0"
DATE:	08/23/2022
DPW FILE NUMBER	1-118-G-756-1
REV. NO.	1

LIGHTING FIXTURE SCHEDULE

SYMBOL	TYPE	MOUNTING	LUMENS-WATTS	DESCRIPTION	ACCEPTABLE MANUFACTURER'S CATALOG NUMBERS	
	B1	BOLLARD	1242-25	EXTERIOR BOLLARD (PARKS STANDARD - MATCH EXISTING)	CYCLONE LIGHTING CBM1701C FGF 5 25W 3K 120 NONE NONE BZ TX MG	PARKS STANDARD - NO EXCEPTIONS TAKEN
	C1	CEILING	5358-45	TOWER CEILING LIGHTING (SURFACE MOUNT)	BEGHELLI USA BS400LED HT MO WT30 120-277V	OR APPROVED EQUAL
	EM	WALL / CEILING	-	INTERIOR EMERGENCY LIGHT (ALL AREAS)	HOLOPHANE DSL46 SP1100L UVOLT LTP SDRT	OR APPROVED EQUAL
	EX	WALL / CEILING	-	EXIT LIGHT - SINGLE FACE/DOUBLE FACE LED SELF POWERED WITH DUAL VOLTAGE 120V. RED LETTERS ON STENCIL FACE PANEL. UNIVERSAL ARROWS	LITHONIA LIGHTING LE P W 2 R EL N TP SD	OR APPROVED EQUAL
-	F1	-	-	-	-	NOT USED
	F2	ROOF	39000-300	DRAGON COASTER FLOOD LIGHTS	TOPAZ LIGHTING F-FL/300/40K/TR-87	OR APPROVED EQUAL
	H2	ROOF	-	HALF LANTERN FIXTURES (TOWERS) 3000 LUMENS, 0-10V DIMMING CUSTOM - SEE ARCH. DWGS	AURORA LAMPWORKS, INC. (718) 384-6039	GRAND LIGHT https://grandlight.com/ 203-828-6596
	H3	ROOF	-	ACORN HISTORICAL GLASS FIXTURE (NORTH COLONNADE ROOFTOP - TOWER ROOF) CUSTOM - SEE ARCH. DWGS	AURORA LAMPWORKS, INC. (718) 384-6039	GRAND LIGHT https://grandlight.com/ 203-828-6596
	H6	ROOF	-	EXTERIOR REFURBISHED FINIAL HISTORICAL FIXTURE (LOCATED ON "GAMES" SIGNAGE FOR CXA, CXE) CUSTOM - SEE ARCH. DWGS	AURORA LAMPWORKS, INC. (718) 384-6039	GRAND LIGHT https://grandlight.com/ 203-828-6596
	L1	SURFACE	2800-28	INTERIOR LINEAR LIGHT	DAYOLITE PRFL24 D FL 35 SO 4 S W DIM10	OR APPROVED EQUAL
	L3	PENDANT	6023-45	PENDANT LIGHT FOR SERVICE ROOMS & ATTIC SPACES	UTOPIA LIGHTING DW LP 4 45LED 40K HE UNV IAF GR DP EMG8	OR APPROVED EQUAL
	L4	PENDANT	2800-28	INTERIOR LINEAR LIGHT	DAYOLITE PRFL24 D FL 35 SO 4 PD W DIM10	OR APPROVED EQUAL
	L5	WALL	3.5W/FT 115LPW LENGTHS VARY	RIBBON EMBEDDED LED / ASSOCIATED FIXTURE DRIVER (TOWER MURAL PANELS) SEE ARCH. DWGS	LUMEN WARM LWDY1 *XCU ACL CFDY DYBK HPC420 35K *XCU - CONFIRM LENGTHS WITH ARCHITECT /	OR APPROVED EQUAL
	L6	POST	1100-75	RESTAURANT KITCHEN ROOFTOP SIGNAGE HOUSING / LED BULB	INCON LIGHTING 85315-E26 / CREE LIGHTING A19 75W P1 30K E26 U1	OR APPROVED EQUAL
	M1	ROOF	600-10	MARQUEE SKYWARD FACING CUSTOM BENDING (COLONNADE ROOF)	CELESTIAL LIGHTING AQR-Q-GC-12-SC-SAT-*XRCV *XRCV SEE ARCHITECTURAL PLANVIEWS FOR LINEAR FOOT	OR APPROVED EQUAL
	M2	CEILING / EXTERIOR SOFFIT	600-10	MARQUEE DOWNWARD FACING SKY LIGHTS (CXD EXTERIOR SOFFIT, CANOPY)	CELESTIAL LIGHTING AQR-Q-GC-12-SC-SAT	OR APPROVED EQUAL
	M2A	EXTERIOR SOFFIT	600-10	MARQUEE DOWNWARD FACING SKY LIGHTS (DRAGON COASTER TICKET BOOTH) SEE ARCH PLANS	CELESTIAL LIGHTING AQR-Q-GC-6-SC-SAT	OR APPROVED EQUAL
	R2	EXTERIOR SOFFIT	1000-12	RECESSED CAN FIXTURE / HOUSING (EXTERIOR SOFFIT - VARIOUS BUILDINGS - SEE PLANS)	LIGHTHEADED LIGHTING 2 115 T 11 C BRO40-30-8010 / D4B-F-R-T-3-P-120	OR APPROVED EQUAL
	R2A	INTERIOR SOFFIT	1000-9	RECESSED CAN FIXTURE / HOUSING (INTERIOR HALLWAY - SEE PLANS)	LIGHTHEADED LIGHTING 2 120 T 11 NICS BRO40 30 8010 / D4B-F-RT-3-P-120	OR APPROVED EQUAL
	R6	CEILING	1302-13	CROSS AXIS PORCH LIGHTING (CEILING - SURFACE MOUNT)	INTENSE LIGHTING SS4G4DS L2 358 I200 ICS430 HZ SFW	OR APPROVED EQUAL
	R7	EXTERIOR SOFFIT	1131-20	2" RECESSED DOWNLIGHT (LOCATED IN "GAMES" SIGNAGE FOR CXA, CXE)	GOTHAM LIGHTING EV02HYP 30/15 X* X* X* MVOLT UGZ *X COORDINATE COLOR FINISHES WITH ARCHITECT	OR APPROVED EQUAL
	S2	CEILING	-	INTERIOR SUSPENDED LED LIGHT LARGE (BURGER BARN)	HOLOPHANE INDOOR LIGHTING 02454 SERIES 24N 20DIN 12 L W X* F1 LAMP *XFT COORDINATE STEM LENGTH WITH ARCHITECT	OR APPROVED EQUAL
	T1	KNUCKLE UP LIGHT	1466-18	TREE UPLIGHT WITH SHORT FLUSH EXTERNAL CAP AND INTEGRAL HONEYCOMB LOUVER. 30K COLOR TEMPERATURE.	ACUITY BRANDS LIGHTING - HYDREL PALM BR P1 80CRI 30K 120 25DEG WSL KM IHL C1 BRT	OR APPROVED EQUAL
	U1	INTERIOR SOFFIT	2300-24	INTERIOR SOFFIT - SERVICE & UTILITY ROOMS	LIGHTHEADED LIGHTING 2 120 T 01 WHO BRO40 30 8023	OR APPROVED EQUAL
	U3	CEILING	4700-42	RECESSED WET LOCATION TROFFER 2x2 (KITCHENS)	LITHONIA LIGHTING 2WRTL F L24 5000LM MVOLT GZ1 40K 90CRI E10WCP	OR APPROVED EQUAL
	U4	WALL UP LIGHT	750-10	BURGER BARN DECORATIVE TOWER INTERIOR UPLIGHT	ACUITY BRANDS LIGHTING MKS101 LSL 3FT MSL1 M100ADJH2 80CRI 30K 250LMF 60X60DEG MIN1 MVOLT WTP ZT	OR APPROVED EQUAL

SEQUENCE OF LIGHTING OPERATIONS:

GENERAL: ALL LIGHTING CONTROLS SHALL BE FROM THE SAME MANUFACTURER. ALL LIGHTING CONTROL DEVICES MUST BE CAPABLE OF CONNECTION TO MASTER SYSTEM (FUTURE CONTRACT).

DINING ROOM, OFFICES & GAMES:

- ALL THE DEVICES ARE CONNECTED TO THE LOCAL SPACE'S OWN NETWORK AND ALL LIGHTING CONTROL SHALL CONTROL ONLY THAT SPACE. BY DEFAULT, NORMAL LIGHTING LOAD IS TURNED ON AUTOMATICALLY BY CEILING MOUNTED OCCUPANCY SENSORS. UPON 15 MINUTES OF VACANCY DETECTED, THE NORMAL LIGHTING LOAD SHALL TURN THE SPACE'S LIGHTING FIXTURES OFF.
- OCCUPANCY SENSORS ARE THE ONLY CONTROLS ASSOCIATED WITH THE SPACE'S LIGHTING FIXTURES. THE SPACE SHALL BE PROGRAMMED TO TURN ON THE LIGHTS AT 100% OF THE LIGHTING FIXTURE OUTPUT RATING UPON DETECTION OF OCCUPANCY OR TURN OFF THE LIGHTS TO 0% OF THE LIGHTING FIXTURE OUTPUT RATING UPON DETECTION OF VACANCY AFTER 15 MINUTES. THE OCCUPANCY SENSORS SHALL USE BOTH PASSIVE INFRARED AND MICROPHONIC TECHNOLOGIES. BOTH TECHNOLOGIES WITHIN THE SENSOR MUST DETECT AN OCCUPANT IN THE SPACE IN ORDER TO TURN ON THE SPACE'S LIGHTING FIXTURES, BUT ONLY ONE OF THE TECHNOLOGIES NEED TO REMAIN ACTIVATED AND CONTINUALLY SENSE OCCUPANCY IN ORDER FOR THE LIGHTING FIXTURES TO REMAIN ON. DUAL–TECHNOLOGY SENSORS SHALL BE SELF–ADAPTIVE TO AUTOMATICALLY ADJUST SENSITIVITY AND TIMING.

SPRINKLER/ELECTRICAL/UTILITY ROOMS, STORAGE/ATTIC SPACES & KITCHENS:

- DUE TO LIFE SAFETY REQUIREMENTS, ALL NORMAL LIGHTING ASSOCIATED FIXTURES WITHIN THE SPACE SHALL BE CONTROLLED AND OPERATED VIA A MANUAL 120 VOLT ON/OFF LIGHT SWITCH.

EXTERIOR LIGHTING:

SUMMARY: PHOTOSENSOR–CONTROLLED NORMAL LIGHTING LOAD

- ALL EXTERIOR LIGHTING SHALL BE PHOTOSENSOR CONTROLLED VIA A RELAY PANEL. OUTDOOR LIGHTING SHALL BE ON DURING DUSK TO DAWN.
- APPLIES TO EXTERIOR SOFFITS, FLOODLIGHTS, COLONNADE LIGHTING, CROSS AXIS PORCH LIGHTING, AND TOWER LIGHTING.
- REFER TO DT–E–01 FOR EXTERIOR LIGHTING WIRING DETAIL.
-

CONSULTANT INFORMATION

Savin Engineers, P.C.

CONSULTANT SEAL

STATE OF NEW YORK · STEVEN A. MARTINO · 083691 · LICENSED PROFESSIONAL ENGINEER

REVISION NUMBER	DATE	MADE BY	APP'D BY	REVISION
1	09/21/2022	RKC	SM	BID ADDENDUM #3

RECORD DRAWING CERTIFICATION

☐ AS BUILT – CHANGES AS NOTED ☐ AS BUILT – NO CHANGES

CONTRACTOR: NAME ____ SIGNATURE ____ TITLE ____ DATE ____

PROJECT COORDINATOR: NAME ____ SIGNATURE ____ TITLE ____ DATE ____

WESTCHESTER COUNTY, NEW YORK
DEPARTMENT OF PUBLIC WORKS AND TRANSPORTATION
DIVISION OF ENGINEERING

INFRASTRUCTURE REHABILITATION - PHASE 3
PLAYLAND PARK, RYE, NEW YORK
GENERAL
LIGHTING FIXTURE SCHEDULE

CONTRACT NUMBER	22-523
SHEET NUMBER	GE-E-03
DWG NO.:	
SCALE:	AS SHOWN
DATE:	8/23/2022
DPW FILE NUMBER	1-118-G-762-1
REV. NO.	1

Drawing Name: G:\SavinAutocad\2060\25-Playland-Mega-3\GE\GE003.dwg
Projectname: 211001F02 Comments: ----
Printed by: MGodby Date: 21 September 2022 1:29 PM Designed by: ----
Reqf: Xrefs: [TB_24X36_WestchesterCo_3.dwg] [TSG-SVLOGO.dwg]

EXISTING BUILDING CODE

EBC 302.4 - EXISTING MATERIALS
MATERIALS ALREADY IN USE IN A BUILDING IN COMPLIANCE WITH REQUIREMENTS OR APPROVALS IN EFFECT AT THE TIME OF THEIR ERECTION OR INSTALLATION SHALL BE PERMITTED TO REMAIN IN USE UNLESS DETERMINED BY THE BUILDING OFFICIAL TO BE UNSAFE.

EBC 302.5 - NEW REPLACEMENT MATERIALS
EXCEPT AS OTHERWISE REQUIRED OR PERMITTED BY THIS CODE, MATERIALS PERMITTED BY THE APPLICABLE CODE FOR NEW CONSTRUCTION SHALL BE USED. LIKE MATERIALS SHALL BE PERMITTED FOR REPAIRS AND ALTERATIONS, PROVIDED THAT UNSAFE CONDITIONS ARE NOT CREATED. HAZARDOUS MATERIALS SHALL NOT BE USED WHERE THE CODE FOR NEW CONSTRUCTION WOULD NOT PERMIT THEIR USE IN BUILDINGS OF SIMILAR OCCUPANCY, PURPOSE AND LOCATION.

EBC 305.5 - ADDITIONS
PROVISIONS FOR NEW CONSTRUCTION SHALL APPLY TO ADDITIONS.

EBC 907.1 - ENERGY CONSERVATION MINIMUM REQUIREMENTS
LEVEL 3 ALTERATIONS TO EXISTING BUILDINGS OR STRUCTURES ARE PERMITTED WITHOUT REQUIRING THE ENTIRE BUILDING OR STRUCTURE TO COMPLY WITH THE ENERGY REQUIREMENTS OF THE ENERGY CONSERVATION CONSTRUCTION CODE OF NEW YORK STATE OR RESIDENTIAL CODE OF NEW YORK STATE. THE ALTERATIONS SHALL CONFORM TO THE ENERGY REQUIREMENTS OF THE ENERGY CONSERVATION CONSTRUCTION CODE OF NEW YORK STATE OR RESIDENTIAL CODE OF NEW YORK STATE AS THEY RELATE TO NEW CONSTRUCTION ONLY.

2020 NYS ENERGY CONSERVATION CODE

[NY] C501.6 HISTORIC BUILDINGS
PROVISIONS OF THIS CODE RELATING TO THE CONSTRUCTION, REPAIR, ALTERATION, RESTORATION AND MOVEMENT OF STRUCTURES, AND CHANGE OF OCCUPANCY SHALL NOT BE MANDATORY FOR HISTORIC BUILDINGS.

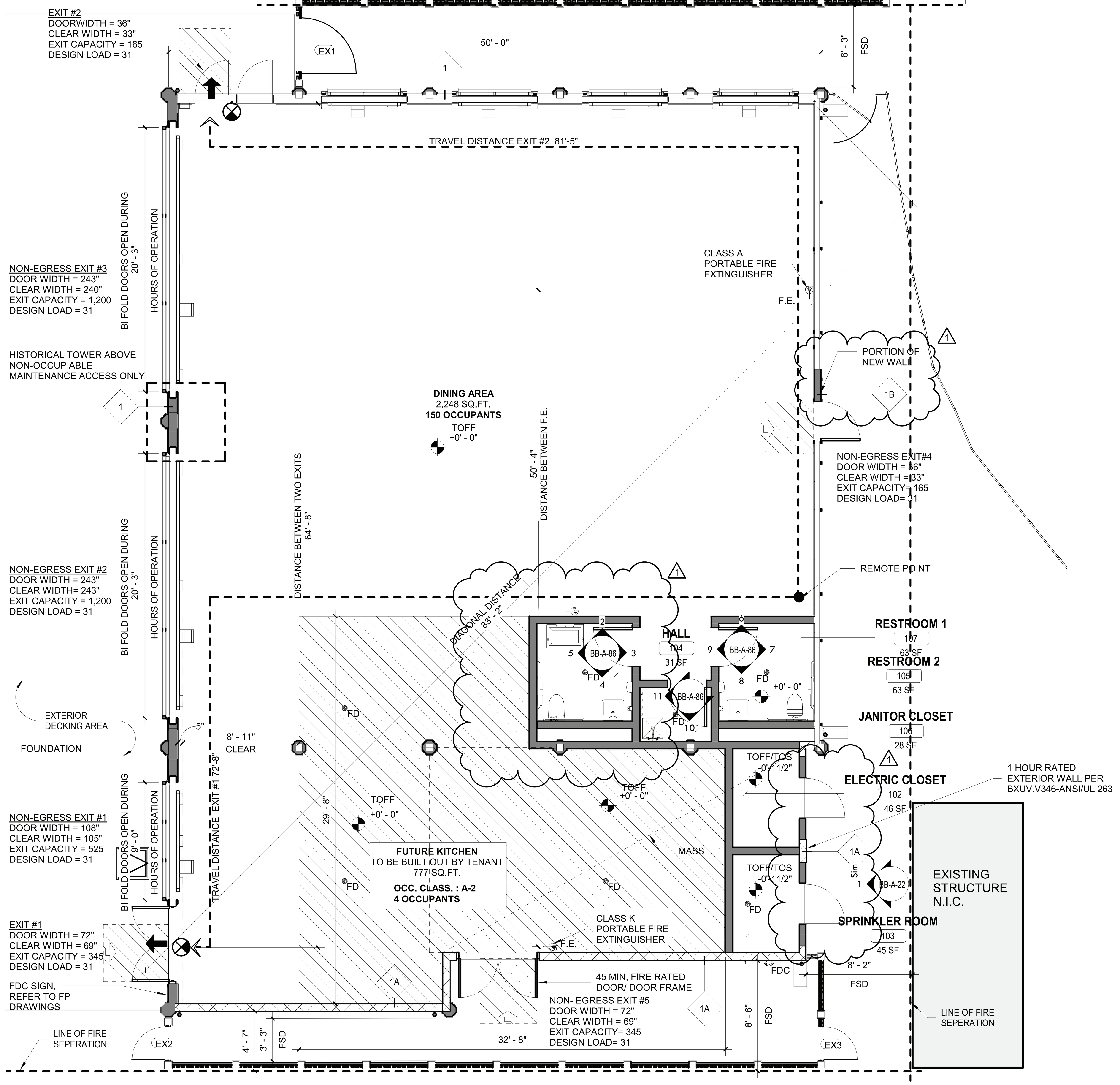

1 GROUND LEVEL PLAN EGRESS PLAN
3/16" = 1'-0"

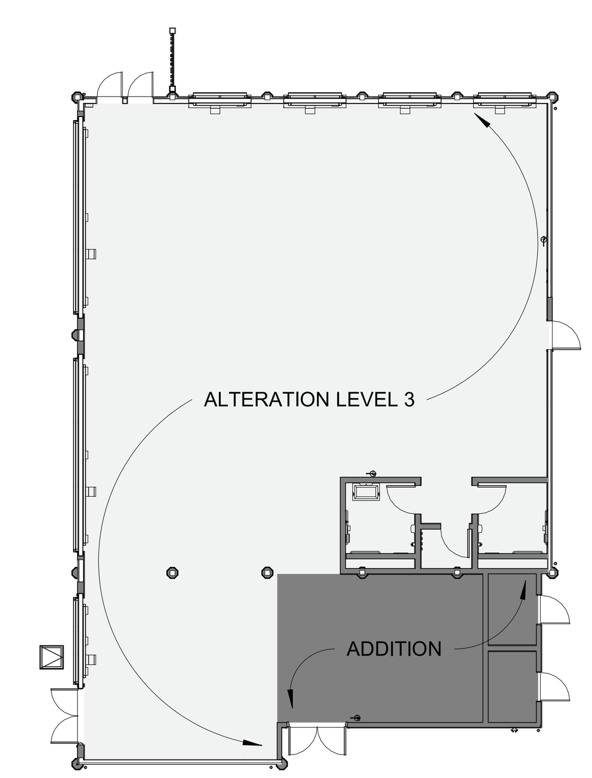

2 GROUND LEVEL KEY PLAN
1/16" = 1'-0"

CODE ANALYSIS

NEW YORK STATE BUILDING CODE 2020	(BC)	
NEW YORK STATE EXISTING BUILDING CODE 2020	(EBC)	
ENERGY CONSERVATION CONSTRUCTION CODE OF NEW YORK STATE	(ECCC)	
NFPA 13 2016	(NFPA 13)	
OCCUPANCY CLASSIFICATION	A-2 RESTAURANT	
CONSTRUCTION TYPE (TBL 601)	VB (FULLY SPRINKLERED)	
HEIGHT (FT) (TBL 504.3)	33.00'	< 60 (MAX. ALLOWABLE)
NUMBER OF STORIES (TBL 504.4)	1	< 2 (MAX. ALLOWABLE)
BUIDLING ALLOWABLE AREA (SF) (506.2 & 506.2)	3,701	< 24,000 (MAX. ALLOWABLE)

FIRE-RESISTANCE RATING REQUIREMENTS (TBL 601)	**REQUIRED**	**PROPOSED**	
PRIMARY STRUCTURE FRAME	0	0	
BEARING WALLS			
EXTERIOR (TBL 602)			
FIRE SEPARATION DISTANCE < = 10 FT	1 HOUR	1 HOUR	
FIRE SEPARATION DISTANCE > = 10 FT	0	0	
INTERIOR			
NON BEARING WALLS AND PARTITIONS			
EXTERIOR (TBL 602)			
FIRE SEPARATION DISTANCE < = 10 FT	1	N/A	
FIRE SEPARATION DISTANCE > = 10 FT	0	0	
INTERIOR			
FLOOR CONSTRUCTION			
INCLUDING SUPPORTING BEAM AND JOINTS	0	0	
ROOF CONSTRUCTION			
INCLUDING SUPPORTING BEAM AND JOINTS	0	0	
ALLOWABLE AREA OF OPENINGS (BC 705.8)			
FIRE SEPARATION DISTANCE 5FT; < 10FT (UNPROTECTED, SPRINKLERED)	25%	NORTH EAST = 24.6%; SOUTH EAST =22%; SOUTH WEST = 14%	
FIRE SEPARATION DISTANCE > 30 FT (UNPROTECTED, SPRINKLER)	NO LIMIT	WEST = 36%	
INTERIOR FINISHES CLASS (BC 803)			
WALL AND CEILING	C	C	
FLOORS - RADIANT FLUX	CLASS II	CLASS II	
PORTABLE FIRE EXTINGUISHERS (BC 906)			
FIRE HAZARD	CLASS A	CLASS A	
HAZARD OCCUPANCY	ORDINARY	ORDINARY	
MINIMUM RATED SINGLE EXTINGUISHER	2-A	2-A	
MAXIMUM FLOOR AREA PER UNIT OF A	1,500 SF	3,025 SF	
MAXIMUM FLOOR AREA FOR EXTINGISHER	11, 250 SF	3,025 SF	
MAXIMUM DISTANCE OF TRAVEL TO EXTINGUSHER	75'	50'-4"	
NUMBER OF TYPE 2-A EXINGUISHERS	**REQUIRED**	**PROPOSED**	
FIRST FLOOR	2	2	
MEANS OF EGRESS			
MAX. FLOOR AREA ALLOWANCES PER OCCUPANT (TBL 1004.5) (SF)			
UNCONCENTRATED TABLES AND CHAIRS	15 GROSS		
KTCHEN	200 GROSS		
OCCUPANT LOAD			
DINING AREA , UNCONCENTRATED (TABLES & CHAIRS) (2,248 SF)	149.86	150 PROPOSED	
KITCHEN, COMMERCIAL (777 SF)	3.885	4 PROPOSED	
MINIMUM NUMBER OF EXISTS	**REQUIRED**	**PROPOSED**	
OCCUPANT LOAD: 1 - 500	2	2	NON-EGRESS EXITS PROVIDED; BIFOLD OPEN DURING BUSINESS HOURS
DIAGONAL DISTANCE (FT)		83'-2"	
EXIT CONFIGURATION			
DISTANCE BETWEEN TWO EXISTS NOT LESS THAN 1/3 OF THE DIAGONAL DIMENSION (BC 1007.1.1(b)) (FT)	27'-8"	64'-8"	
EGRESS WIDTH FACTOR	0.2	SEE PLAN	
MAXIMUM COMMON PATH OF EGRESS TRAVEL (TBL10006.2.1)	**REQUIRED**	**PROPOSED**	
A OCCUPANY WITH SPRINKLER SYSTEM	30'	NOT REQUIRED	
MAXIMUM TRAVEL DISTANCE (BC 1017.2)			
A OCCUPANCY WITH SPRINKELR SYSTEM	250'	57'-11"	
MINIMUM NUMBER OF REQUIRED PLUMBING FIXTURES (TABLE 2902.1)			
ASSEMBLY- RESTAURANT	**REQUIRED**	**PROPOSED**	

	REQUIRED MALE	REQUIRED FEMALE	PROPOSED MALE	PROPOSED FEMALE
WATER CLOSETS	1 PER 75	1 PER 75	2	2
LAVATORIES	1 PER 200	1 PER 200	1	1
DRINKING FOUNTAINS	1 PER 500		NOT REQUIRED PER 2902.5 & PC 410.4	
SERVICE SINK	1 SERVICE SINK		1 SERVICE SINK	

RISK CATEGORY **(TBL 1604.5)** — RISK CATEGORY II

ENERGY CODE COMPLIANCE

2020 ENERGY CODE COMPLIANCE
CLIMATE ZONE 4 MARINE
TABLE C402.1.4_THERMAL ENVELOPE U-FACTOR

ROOFS	
INSULATION ENTIRELY ABOVE ROOF DECK	R 38
WALLS, ABOVE GRADE	
WOOD FRAMED AND OTHER	R 20
FLOORS	
MASS	R 10
JOISTS/ FRAMING	R 30
OPAQUE DOORS	
SWINGING DOORS	U-0.61
GARAGE DOORS <14% GLAZING	U-0.31

TABLE 508.4 _REQUIRED SEPARTATION OF OCCUPANCIES
SPRINKLERED
A-2 TO A-2 NOT REQUIRED
A-2 TO U NOT REQUIRED
TABLE 602 _REQUIREMENTS FOR EXTERIOR WALLS BASED ON FIRE SEPARATION

FIRE SEPARATION DISTANCE	TYPE OF CONSTRUCTION	HOURS REQ'D
X < 5	ALL	1
5≤ X <10	OTHERS	1
10 ≤ X < 30	VB	0

SOUTH WEST WALL PROPOSED TO BE 1 HOUR RATED
ADDITION TO MEET PRESCRITIVE METHOD C502.2 IN 2020 ENERGY CONSERVATION CONSTRUCTION CODE OF NEW YORK STATE.

LEGEND

- EX. WOOD FENCE
- NEW WOOD FENCE UNDER SITE IMPROVEMENTS TO BE PROTECTED DURING CONSTRUCTION.
- 101 — DOOR TAG
- 1i — WINDOW TAG
- 1i — WALL TAG
- FE — FIRE EXTINGUISHER
- N.I.C. — NOT IN CONTRACT
- Room name / 101 / 150 SF — ROOM TAG
- FD — FLOOR DRAIN
- EGRESS LIGHT FIXTURE: SEE ELECTRICAL DWGS FOR MORE INFO
- INDICATES REMOVAL
- 1 HR FIRE RATED WALL
- LINE OF FIRE SEPERATION

HISTORIC BUILDING

PLAYLAND AMUSEMENT PARK IS A DESIGNATED NATIONAL HISTORIC LANDMARK AND IS LISTED ON THE NATIONAL REGISTER OF HISTORIC PLACES.
NATIONAL HISTORIC PLACES REGISTER REFERNCE NUMBER 80004529 _NHL
NATIONAL ARCHIVES IDENTIFIER 75316138
THE NORTH EAST BURGER BARN IS A LISTED STRUCTURE OF THE LANDMARK AND THEREFORE AN *HISTORIC BUILDING* UNDER THE 2020 BUILDING CODE AND THE 2020 EXISTING BUILDING CODE OF NEW YORK STATE.

EXISTING BUILDING CODE

EBC 302.4 - EXISTING MATERIALS
MATERIALS ALREADY IN USE IN A BUILDING IN COMPLIANCE WITH REQUIREMENTS OR APPROVALS IN EFFECT AT THE TIME OF THEIR ERECTION OR INSTALLATION SHALL BE PERMITTED TO REMAIN IN USE UNLESS DETERMINED BY THE BUILDING OFFICIAL TO BE UNSAFE.
EBC 302.5 - NEW REPLACEMENT MATERIALS
EXCEPT AS OTHERWISE REQUIRED OR PERMITTED BY THIS CODE, MATERIALS PERMITTED BY THE APPLICABLE CODE FOR NEW CONSTRUCTION SHALL BE USED. LIKE MATERIALS SHALL BE PERMITTED FOR REPAIRS AND ALTERATIONS, PROVIDED THAT UNSAFE CONDITIONS ARE NOT CREATED. HAZARDOUS MATERIALS SHALL NOT BE USED WHERE THE CODE FOR NEW CONSTRUCTION WOULD NOT PERMIT THEIR USE IN BUILDINGS OF SIMILAR OCCUPANCY, PURPOSE AND LOCATION.
EBC 305.5 - ADDITIONS
PROVISIONS FOR NEW CONSTRUCTION SHALL APPLY TO ADDITIONS.

GENERAL NOTE

FOUNDATION VENTILATION FROM EXTERIOR DECKING

9/26/2022 2:07:24 PM

CONSULTANT INFORMATION
The LiRo Group
3 Aerial Way, Syosset, New York 11791
(516) 938-5476 www.liro.com

CONSULTANT SEAL
REGISTERED ARCHITECT ROBERT D. YOUNG JR 023200 STATE OF NEW YORK

REVISION NUMBER	DATE	MADE BY	APP'D BY	REVISION
1	09/21/22			BID ADDENDUM # 3

RECORD DRAWING CERTIFICATION
AS BUILT – CHANGES AS NOTED   AS BUILT – NO CHANGES

CONTRACTOR
NAME
SIGNATURE
TITLE DATE

PROJECT COORDINATOR
NAME
SIGNATURE
TITLE DATE

WESTCHESTER COUNTY, NEW YORK
DEPARTMENT OF PUBLIC WORKS AND TRANSPORTATION
DIVISION OF ENGINEERING

INFRASTRUCTURE REHABILITATION - PHASE 3
PLAYLAND PARK, RYE, NEW YORK
NORTH EAST BURGER BARN
EGRESS PLANS AND CODE ANALYSIS

CONTRACT NUMBER	22-523
SHEET NUMBER	BB-G-02
DWG NO.:	15 of 664
SCALE:	As indicated
DATE:	08/23/2022
DPW FILE NUMBER	1-118-G-764-1
REV. NO.	1

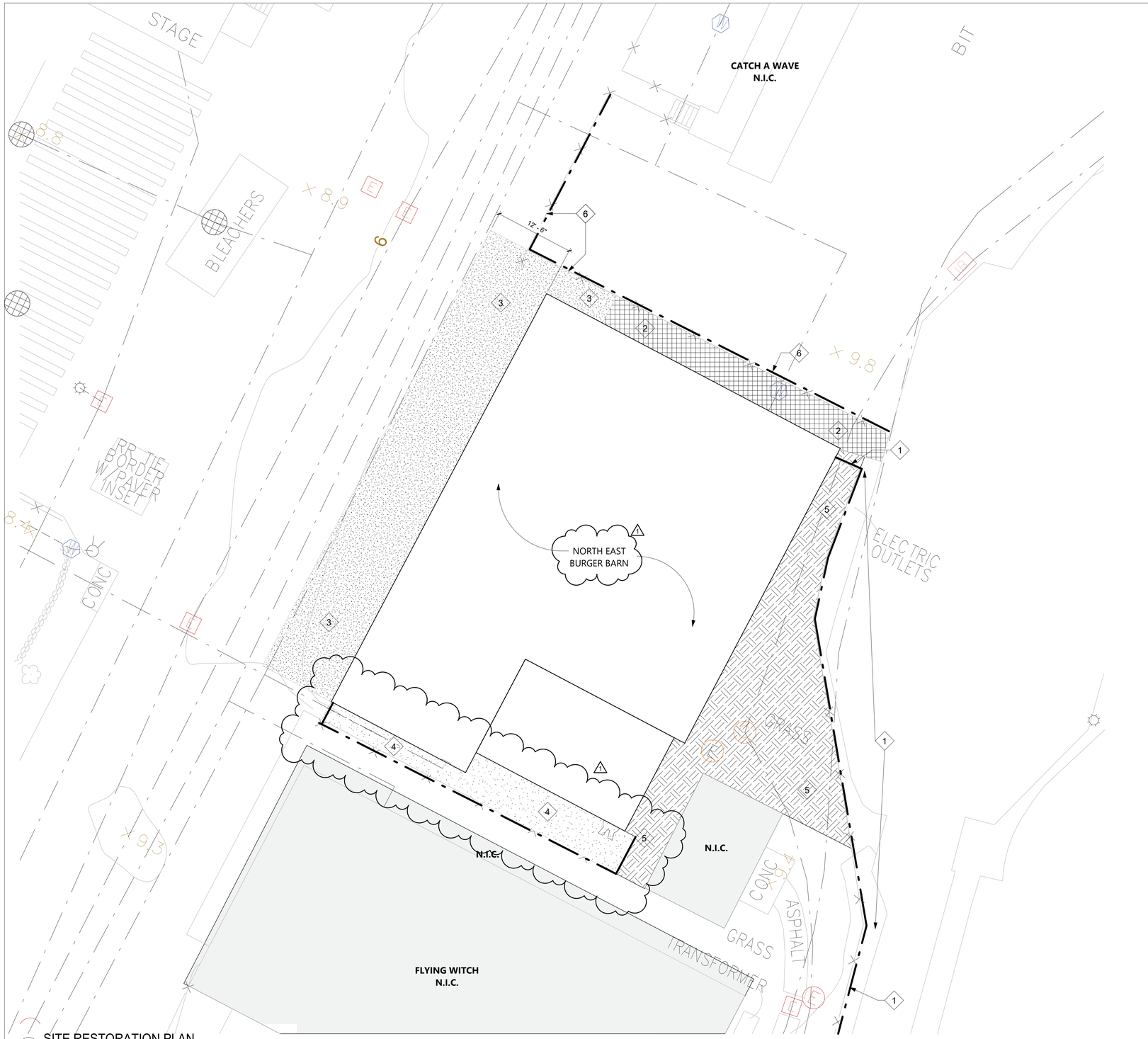

1 SITE RESTORATION PLAN
1/8" = 1'-0"

RESTORATION KEY NOTES

1. EXISTING CHAINLINK FENCE TO BE REMOVED DURING CONSTRUCTION AND STORED FOR FUTURE REUSE.
2. EXISTING ASPHALT TO BE REMOVED AND REPLACED
3. EXISTING ASPHALT TO BE REMOVED AND NEW IPE BOARDWALK TO BE INSTALLED.
4. EXISTING WOODEN BOARDWALK TO BE REMOVED AND REPLACED WITH NEW ASPHALT TO MATCH.
5. EXISTING GRASS TO BE RESTORED WITH NEW SOD. REFER TO LANDSCAPE ENGINEERS DRAWINGS FOR MORE INFORMATION.
6. EXISTING WOOD FENCE TO BE REMOVED AND REPLACED.
7. NEW CHAIN LINK GATE TO BE INSTALLED DURING CONSTRUCTION.

SHEET NOTES

1. PROVIDE PROTECTION FOR EXISTING FEATURES TO REMAIN. PROVIDE PROTECTION PLAN FOR APPROVAL.
2. SCHEDULE AND COMPLETE WORK AS REQUIRED TO GIVE THE SITE IMPROVEMENT CONTRACTORS ACCESS TO THEIR JOBSITE.

CONSTRUCTION NOTES

A. CONTRACTOR TO ENSURE NO DAMAGE OCCURS TO ANY EXISTING CONSTRUCTION ON PARK PROPERTY NOT CALLED OUT TO HAVE ANY WORK DONE ON. IT IS THE RESPONSIBILITY OF THE CONTRACTOR TO PROTECT AS REQUIRED. CONTRACTOR IS RESPONSIBLE FOR ANY DAMAGES THAT OCCUR DURING COURSE OF PROJECT.

B. CONTRACTOR TO REPLACE ALL PLANTED MATTER DISTRIBUTED DURING CONSTRUCTION UNLESS OTHERWISE NOTED.

C. CONTRACTOR TO REPAIR EXISTING ASPHALT AS REQUIRED TO MATCH ADJACENT LOOK, FINISH AND UNIFORM APPEARANCE.

D. CONTRACTOR TO REPAIR SOD AS REQUIRED.

RESTORATION LEGEND

- EXISTING ASPHALT TO BE REMOVED AND REPLACED WITH IPE DECKING.
- EXISTING WOODEN BOARDWALK TO BE REMOVED AND REPLACED WITH ASPHALT.
- EXISTING GRASS TO BE RESTORED. REFER TO LANDSCAPE ARCHITECT'S DRAWINGS FOR MORE INFORMATION.
- EXISTING ASPHALT TO BE REMOVED AND REPLACED
- EXISTING CHAIN LINK FENCE
- N.I.C. — EXISTING SCOPE NOT IN CONTRACT
- EXISTING WOODEN FENCE

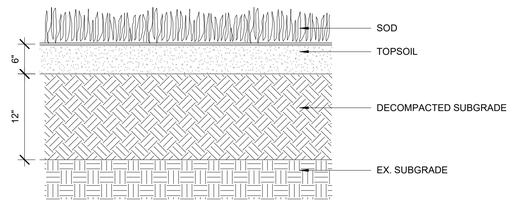

2 SOD DETAIL
3" = 1'-0"

9/26/2022 2:07:24 PM

CONSULTANT INFORMATION
The LiRo Group
3 Aerial Way, Syosset, New York 11791
(516) 938-5476 www.liro.com

CONSULTANT SEAL
REGISTERED ARCHITECT ROBERT D. YOUNG JR. 023220 STATE OF NEW YORK

REVISION NUMBER	DATE	MADE BY	APP'D BY	REVISION
1	09/21/22			BID ADDENDUM # 3

RECORD DRAWING CERTIFICATION
☐ AS BUILT – CHANGES AS NOTED ☐ AS BUILT – NO CHANGES

CONTRACTOR
NAME
SIGNATURE
TITLE DATE

PROJECT COORDINATOR
NAME
SIGNATURE
TITLE DATE

WESTCHESTER COUNTY, NEW YORK
DEPARTMENT OF PUBLIC WORKS AND TRANSPORTATION
DIVISION OF ENGINEERING

INFRASTRUCTURE REHABILITATION - PHASE 3
PLAYLAND PARK, RYE, NEW YORK
NORTH EAST BURGER BARN
SITE RESTORATION PLAN

CONTRACT NUMBER	22-523
SHEET NUMBER	BB-G-03
DWG NO.:	16 of 664
SCALE:	As indicated
DATE:	08/23/2022
DPW FILE NUMBER	1-118-G-765-1
REV. NO.	1

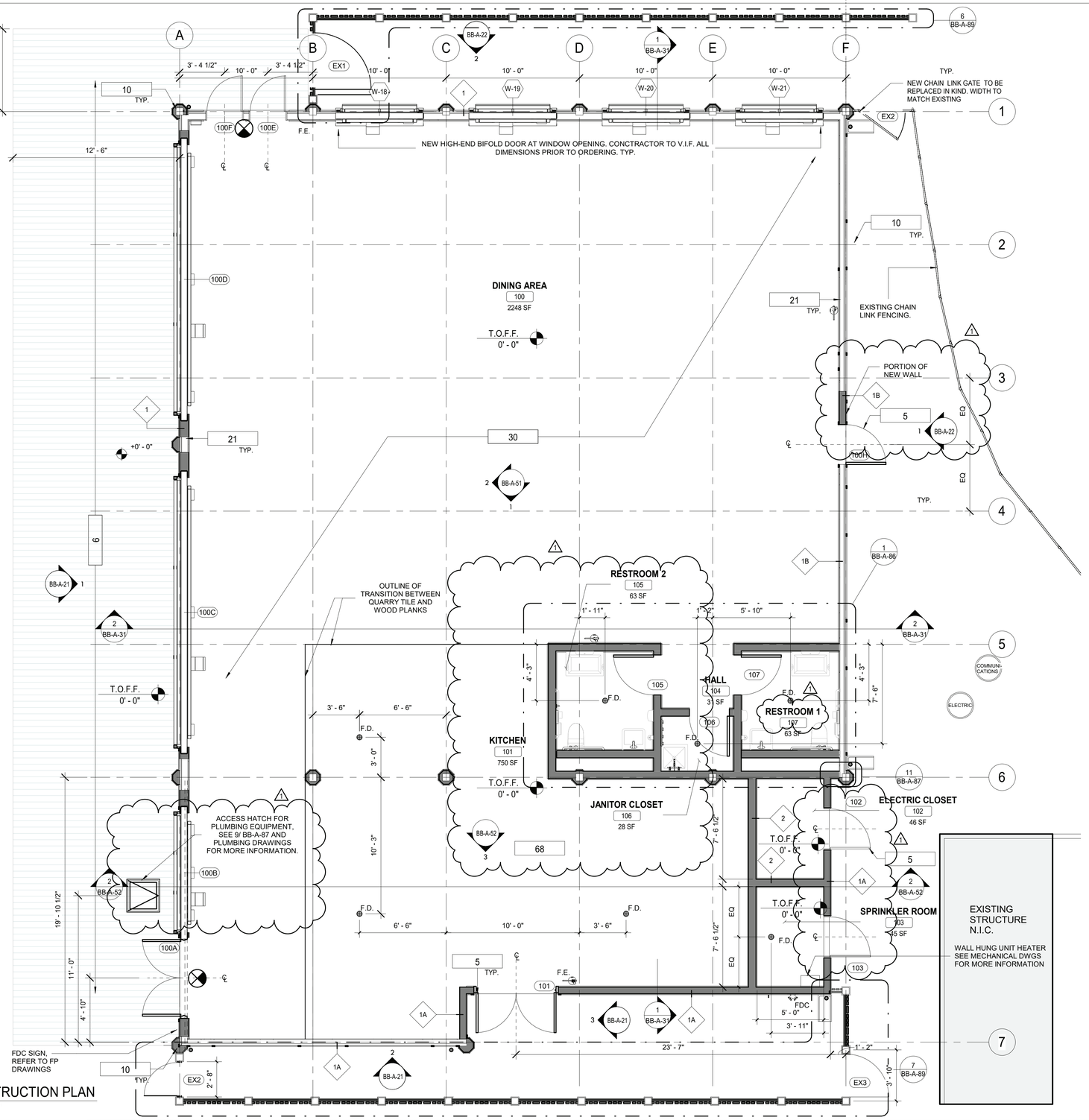

1 CONSTRUCTION PLAN
1/4" = 1'-0"

FLOOR PLAN GENERAL NOTES

1. ALL METAL STUDS 20 GA- TYPICAL NON-LOAD BEARING PARTITIONS. SEE USG STEEL- FRAMED DRYWALL SYSTEMS " LIMITING HEIGHT"- STEEL STUD ASSEMBLIES CHART. USE THE L/240 ALLOWABLE DEFLECTION FIGURES ONLY.
2. DIMENSIONS ARE TO FACE OF GYPSUM WALL BOARD, EXISTING WALL, GRID LINES, OR CENTERLINE OF COLUMN. ALL ELEVATIONS ARE NOTED FROM FINISH FLOOR ELEVATIONS.
3. PROVIDE DRYWALL TRIM AT ALL EXPOSED EDGES AND CORNERS.
4. MINIMUM DIMENSION FROM ANY CORNER OR WALL TO FRAMING STUD AT DOOR JAMB OPENING SHALL BE 4" (U.O.N.).
5. PROVIDE METAL BLOCKING FOR ANY WALL MOUNTED EQUIPMENT OR ACCESSORIES. COORDINATE ALL BLOCKING REQUIREMENTS NECESSARY WITH OTHER TRADES.
6. THE G.C. SHALL VERIFY DIMENSIONS OF THE EXISTING SPACE AND OF ANY EXISTING CONSTRUCTION TO REMAIN BY ACTUAL MEASUREMENT BEFORE ANY WORK IS PERFORMED. IF ANY MEASUREMENTS DIFFER FROM DIMENSIONS SHOWN ON PLAN, G.C. IS TO NOTIFY THE ARCHITECT IMMEDIATELY. THE G.C. SHALL BE RESPONSIBLE FOR CORRECTING ANY AND ALL DISCREPANCIES FOUND AFTER THE WORK IS PERFORMED, AT NO ADDITIONAL EXPENSE TO THE OWNER.
7. G.C. TO VERIFY ALL FINISHED DIMENSIONS. FIELD CONDITIONS ALTERING ANY DIMENSIONS SHOULD BE BROUGHT TO THE ATTENTION OF THE OWNER AND ARCHITECT.
8. THE G.C. SHALL PROVIDE CAULK JOINTS WHERE GYP. BD. MEETS THE FLOOR OR ROOF DECK.
9. THE G.C. SHALL BE RESPONSIBLE FOR COORDINATING WITH OWNER ON ALL WORK TO BE PERFORMED BY THE OWNER. ANY POTENTIAL CONFLICTS OR DELAYS CAUSED BY THE OWNER'S SUBCONTRACTORS MUST BE DOCUMENTED IN WRITING TO THE OWNER BEFORE THE DELAY IS ACTUALLY INCURRED FOR IT TO BE CONSIDERED. OTHERWISE THE G.C. WILL BE RESPONSIBLE FOR MEETING THE SCHEDULE AS OUTLINED IN THE CONTRACT.
10. THE G.C. SHALL SUPPLY ALL MATERIAL, LABOR, AND COORDINATION REQUIRED FOR THE INSTALLATION OF ALL OWNER- SUPPLIED ITEMS AS DESCRIBED IN THE DOCUMENTS, U.N.O.
11. THE G.C. IS RESPONSIBLE FOR ALL FLOOR AND WALL PENETRATIONS FOR ELECTRICAL AND MECHANICAL WORK. ALL SUCH OPENING SHALL BE FRAMED AND REINFORCED.
12. FLOOR SURFACES SHALL BE LEVELED TO ASSURE SMOOTH SURFACE FOR FINISH FLOOR INSTALLATION. G.C. SHALL ALSO PAY SPECIAL ATTENTION THAT ALL WALL SURFACES ARE SMOOTH WHERE MURALS WILL BE DIRECTLY APPLIED TO WALL.
13. G.C. TO COORDINATE ALL UTILITY STUB-UPS AND LOCATION OF ALL EQUIPMENT PRIOR TO INSTALLING ANY ONE ITEM.
14. REFER TO SHEET PR-A-63 FOR PARTITION TYPE INFORMATION.
15. PROVIDE PAINTED ACCESS PANELS IN WALLS & CEILING AT CONCEALED ITEMS. SUCH AS VALVES, CONTROLS, SWITCHES OR ANY OTHER ITEMS THAT REQUIRES ACCESS. G.C. TO DETERMINE ACCESS PANEL LOCATION W/ ARCHITECT PRIOR TO INSTALLATION.

CONSTRUCTION NOTES

1. DIMENSIONS ARE TO FACE OF GYPSUM WALL BOARD, GRID LINES, OR CENTERLINE OF COLUMN. ALL ELEVATIONS ARE NOTED FROM FINISH FLOOR ELEVATIONS.
2. PROVIDE DRYWALL TRIM AT ALL EXPOSED EDGES AND CORNERS.
3. MINIMUM DIMENSION FROM ANY CORNER OR WALL TO FRAMING STUD AT DOOR JAMB OPENING SHALL BE 4" (U.O.N.).
4. PROVIDE FIRE RETARDANT WOOD BLOCKING FOR ANY WALL MOUNTED EQUIPMENT OR ACCESSORIES. COORDINATE ALL BLOCKING REQUIREMENTS NECESSARY WITH OTHER TRADES.
5. THE CONTRACTOR SHALL VERIFY DIMENSIONS OF THE EXISTING SPACE AND OF ANY EXISTING CONSTRUCTION TO REMAIN BY ACTUAL MEASUREMENT BEFORE ANY WORK IS PERFORMED. IF ANY MEASUREMENTS DIFFER FROM DIMENSIONS SHOWN ON PLAN, G.C. IS TO NOTIFY THE ARCHITECT IMMEDIATELY. THE CONTRACTOR SHALL BE RESPONSIBLE FOR CORRECTING ANY AND ALL DISCREPANCIES FOUND AFTER THE WORK IS PERFORMED, AT NO ADDITIONAL EXPENSE TO THE OWNER.
6. THE G.C. SHALL PROVIDE CAULK JOINTS WHERE GYP. BD. MEETS THE FLOOR OR ROOF DECK.
7. THE G.C. SHALL BE RESPONSIBLE FOR COORDINATING WITH OWNER ON ALL WORK TO BE PERFORMED BY THE OWNER. ANY POTENTIAL CONFLICTS OR DELAYS CAUSED BY THE OWNER'S SUBCONTRACTORS MUST BE DOCUMENTED IN WRITING TO THE OWNER BEFORE THE DELAY IS ACTUALLY INCURRED FOR IT TO BE CONSIDERED. OTHERWISE THE G.C. WILL BE RESPONSIBLE FOR MEETING THE SCHEDULE AS OUTLINED IN THE CONTRACT.
8. THE CONTRACTOR TO VERIFY ALL FINISHED DIMENSIONS. FIELD CONDITIONS ALTERING ANY DIMENSIONS SHOULD BE BROUGHT TO THE ATTENTION OF THE OWNER AND ARCHITECT.
9. THE CONTRACTOR SHALL SUPPLY ALL MATERIAL, LABOR, AND COORDINATION REQUIRED FOR THEINSTALLATION OF ALL OWNER-SUPPLIED ITEMS AS DESCRIBED IN THE DOCUMENTS, U.N.O.
10. THE CONTRACTOR IS RESPONSIBLE FOR ALL FLOOR AND WALL PENETRATIONS FOR ELECTRICAL AND MECHANICAL WORK. ALL SUCH OPENING SHALL BE FRAMED AND REINFORCED.
11. FLOOR SURFACES SHALL BE LEVELED TO ASSURE SMOOTH SURFACE FOR FINISH FLOOR INSTALLATION.
12. THE CONTRACTOR. TO COORDINATE ALL UTILITY STUB-UPS AND LOCATION OF ALL EQUIPMENT PRIOR TO INSTALLING ANY ONE ITEM.
13. PROVIDE PAINTED ACCESS PANELS IN WALLS & CEILING AT CONCEALED ITEMS SUCH AS VALVES, CONTROLS, SWITCHES OR ANY OTHER ITEMS THAT REQUIRES ACCESS. G.C. TO DETERMINE ACCESS PANEL LOCATION W/ ARCHITECT PRIOR TO INSTALLATION.
14. CONTRACTOR SHALL PROVIDE A SEPARATE PERMIT FOR TENANT LAYOUT OF SPACE.

CONSTRUCTION LEGEND

	INDICATES PATCH/REPAIR	1i	WALL TAG	FD	FLOOR DRAIN
N.I.C.	INDICATES SCOPE NOT IN CONTRACT	1t	WINDOW TAG	?	PLUMBING FIXTURE
?	KEY NOTES	101	DOOR TAG	FE	FIRE EXTINGUISHER
Ref 1 A101 1 Ref	ELEVATION MARKER	Room name 101 150 SF	ROOM TAG		EGRESS LIGHT FIXTURE: LED FLOOD LIGHT SEE ELECTRICAL DWGS FOR MORE INFO
			IPE DECKING		

KEYNOTE LEGEND CONST.

KEY VALUE	KEYNOTE TEXT
5	PROVIDE AND INSTALL DOOR INCLUDING FRAME, SILL, LINTEL AND ANY ASSOCIATE HARDWARE. SEE DOOR SCHEDULE.
6	INSTALL NEW IPE DECKING. SEE STRUCTURAL FOR DETAILS.
10	PROVIDE AND INSTALL COLUMN ENCLOSURES. SEE DETAILS.
21	NEW INTERIOR WALL. SEE WALL SCHEDULE.
30	NEW 2x6 WOOD FLOOR.
68	NEW QUARRY TILE WITH 6" QUARRY TILE COVE BASE. SUPPRESS CONCRETE SLAB AS SHOWN IN STRUCTURAL DRAWING SO QUARRY TILE IS FLUSH WITH ADJACENT SURFACE.

9/26/2022 2:06:36 PM

CONSULTANT INFORMATION
The LiRo Group
3 Aerial Way, Syosset, New York 11791
(516) 938-5476 www.liro.com

CONSULTANT SEAL
REGISTERED ARCHITECT ROBERT D. YOUNGER 023280 STATE OF NEW YORK

REVISION NUMBER	DATE	MADE BY	APP'D BY	REVISION
1	09/21/22			BID ADDENDUM # 3

RECORD DRAWING CERTIFICATION
☐ AS BUILT – CHANGES AS NOTED ☐ AS BUILT – NO CHANGES

CONTRACTOR
NAME
SIGNATURE
TITLE DATE

PROJECT COORDINATOR
NAME
SIGNATURE
TITLE DATE

WESTCHESTER COUNTY, NEW YORK
DEPARTMENT OF PUBLIC WORKS AND TRANSPORTATION
DIVISION OF ENGINEERING

INFRASTRUCTURE REHABILITATION - PHASE 3
PLAYLAND PARK, RYE, NEW YORK
NORTH EAST BURGER BARN
CONSTRUCTION PLANS

CONTRACT NUMBER	22-523
SHEET NUMBER	BB-A-11
DWG NO.:	27 of 664
SCALE:	1/4" = 1'-0"
DATE:	08/23/2022
DPW FILE NUMBER	1-118-A-776-1
REV. NO.	1

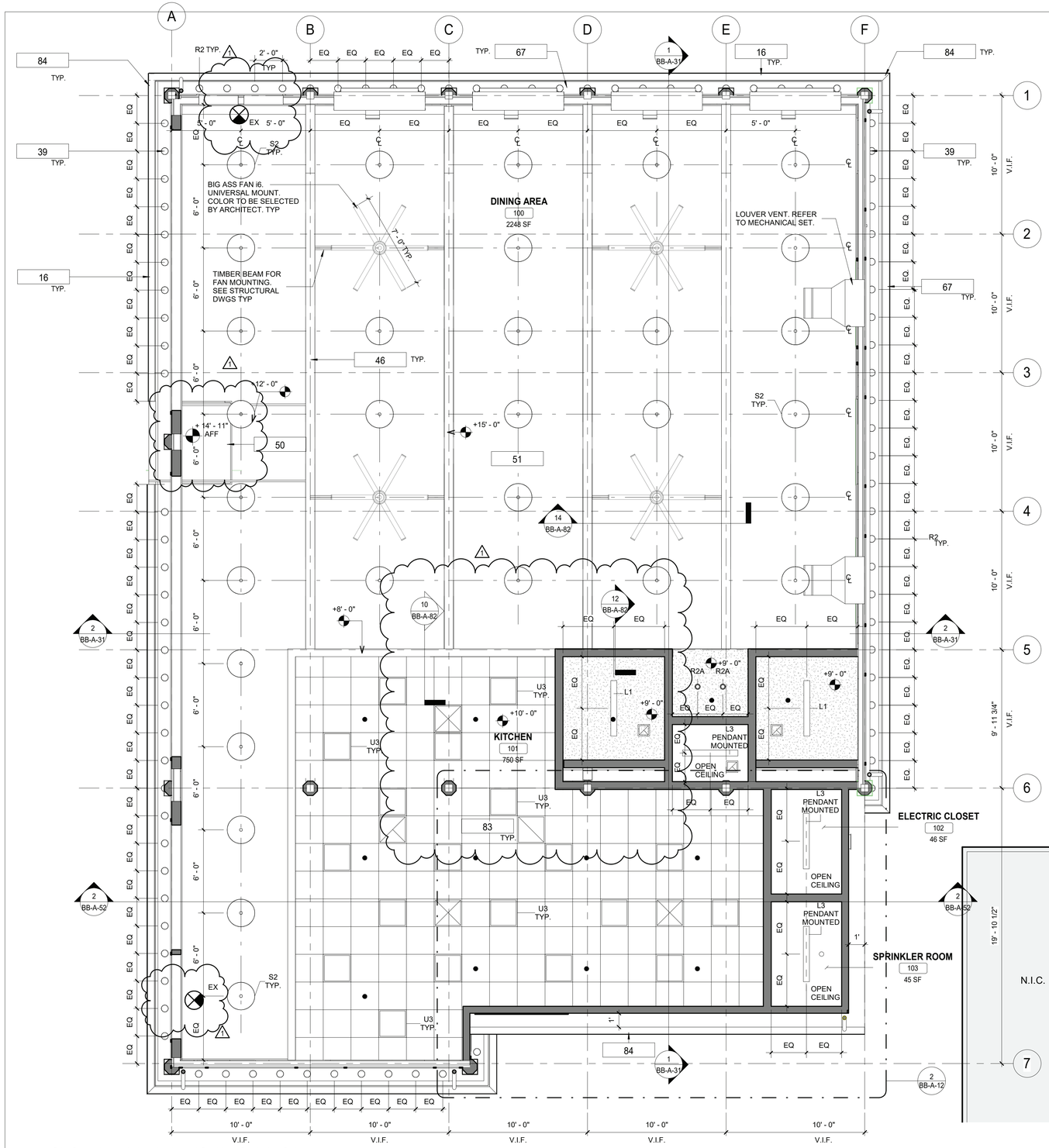

1 GROUND LEVEL REFLECTED CEILING PLAN
1/4" = 1'-0"

GENERAL NOTES

1. CEILING TILES TO BE CENTERED BOTH WAYS IN EACH OR UNLESS DIMENSIONED OTHERWISE.
2. ALL DIMENSIONS ARE TO THE CENTER OF LIGHT FIXTURE, U.N.O.
3. FIXTURES LOCATED WITHIN THE CEILING GRID, ARE NOT NECESSARILY CENTERED IN EACH CEILING TILE. FOLLOW DIMENSIONS ON PLAN. IF NO DIMENSION IS PRESENT CONTACT ARCHITECT TO VERIFY LOCATION.
4. LIGHT FIXTURES TO BE LOCATED AS INDICATED ON THIS PLAN. REFER TO ELECTRICAL DRAWINGS FOR EXACT NUMBER AND TYPE OF LIGHT FIXTURE. CONTACT ARCHITECT/ ENGINEER IMMEDIATELY IF THERE ARE ANY DISCREPANCIES.
5. REFER TO MECHANICAL DRAWINGS FOR MECHANICAL DUCT DISTRIBUTION SYSTEM.
6. THE G.C. SHALL SET ALL CEILING AND SOFFITS USING A LASER LEVEL TO ACHIEVE A CEILING THAT IS PLUMBING, LEVEL, AND SQUARE TO ALL WALLS AND SOFFITS.
7. ALL NOTED CEILING DIMENSIONS ARE INDICATED AS CLEAR ABOVE FINISHED FLOOR DIMENSIONS. VERIFY THICKNESS OF FLOOR CONSTRUCTION WITH FLOOR SUBCONTRACTOR PRIOR TO THE INSTALLATION OF ANY NEW CEILING CONSTRUCTION IN ORDER TO ACHIEVE NOTED REQUIRED DIMENSIONS.
8. ALL SOFFIT DIMENSIONS ARE TO FINISH FACE, U.N.O.
9. ALL EXTERIOR DIMENSIONS ARE TO THE FACE OF EXTERIOR FINISH, U.N.O.
10. G.C. TO PROVIDE ADEQUATE CLEARANCES FOR FIXTURES, DUCTS, CEILINGS, AND PERTINENT ITEMS NECESSARY TO MAINTAIN THE SPECIFIC HEIGHTS ABOVE FINISH FLOOR. COORDINATE MECHANICAL, ELECTRICAL AND PLUMBING AS REQUIRED.
11. ADDITIONAL HANGER AND SAFETY WIRES FOR LIGHT FIXTURES AND AIR SUPPLY/ RETURN DIFFUSERS AS REQUIRED BY LOCAL CODES TO BE THE RESPONSIBILITY OF THE SUB-CONTRACTOR. ALL WIRING SUPPORT TO BE "CEILING GRADE" AS CONCURRENT WITH ELECTRICAL CODE ADOPTED FOR JURISDICTION OF PROJECT.
12. ALL CEILING ELEVATIONS DIMENSIONED FROM FINISH FLOOR BELOW.

PLAN NOTES

1. CONTRACTOR SHALL PROVIDE THE NECESSARY FRAMING OR BRIDGING FOR ALL LIGHT FIXTURES, ETC., AS WELL AS REQUIRED CUTOUTS.
2. CONTRACTOR SHALL NOTIFY THE ARCHITECT OF ANY POSSIBLE INTERFERENCES BEFORE PROCEEDING WITH CEILING INSTALLATION.
3. CEILING CONSTRUCTION SHALL NOT BE CLOSED IN UNTIL THE CONSTRUCTION MANAGER AND AUTHORITIES HAVING JURISDICTION HAVE HAD AN OPPORTUNITY TO INSPECT THE AREA AND ASCERTAIN THAT ALL PLUMBING, ELECTRICAL CONDUITS AND LINES HAVE BEEN INSTALLED PROPERLY.
4. FASCIAS OR ANY BREAK IN THE CEILING HEIGHTS CREATED BY THE INSTALLATION AND/OR ALTERATION OF PIPING OR OTHER EQUIPMENT SHALL BE FORMED OF GYPSUM WALLBOARD ON FURRING CHANNELS.
5. THE CEILING PANEL JOINTS SHALL BE ALIGNED PERFECTLY WITH RECESSED LIGHTING FIXTURES.
6. ALL JOINTS IN THE CEILING PANELS SHALL BE SQUARE, LEVEL AND PERFECTLY ALIGNED WITH EACH OTHER AND WITH BUILDING FIXTURES.
7. CONTRACTOR SHALL PROVIDE CUTOUTS AND OTHER SPECIAL PROVISIONS IN ACOUSTICAL WORK AS REQUIRED FOR LIGHTING FIXTURES, AND OTHER INSERTED ITEMS. GENERAL CONSTRUCTION CONTRACTOR SHALL INSTALL ACCESS PANELS IN T1-11 BOARD CEILINGS FOR ACCESS TO PLUMBING, TELEPHONE & ELECTRICAL CONTROL EQUIPMENT REQUIRING ACCESS.
8. IN GENERAL, WITHIN EACH AREA, CEILING WORK REQUIREMENTS SHALL BE EXECUTED IN SUCH A MANNER AS TO PROVIDE CONTINUOUS MATCHED AND ALIGNED CEILINGS. THE FINAL CEILING INSTALLATION SHALL BE FREE OF ALL VISUAL DEFECTS.
9. * COMMERCIAL KITCHEN CEILING TILES SHALL MEET GUIDELINES FOR FOOD PREPARATION AND PROCESSING.

RCP LEGEND

- R-2 EXTERIOR RECESSED CAN IN SOFFIT
- S-2 INTERIOR SUSPENDED LED LIGHT
- R-1 2x2 RECESSED LIGHT
- U-3 INTERIOR RECESSED CAN LIGHT
- GYPSUM WALL BOARD CEILING GYP-1
- 2x2 ACT CEILING TILE; *SEE RCP NOTES
- N.I.C. — INDICATES SCOPE NOT IN CONTRACT
- ? — KEY NOTES
- EX — EX- EXIT SIGN
- SUPPLY DIFFUSER. SEE MECHANICAL DRAWINGS
- EXHAUST GRILL. SEE MECHANICAL DRAWINGS
- RETURN GRILL. SEE MECHANICAL DRAWINGS
- OS — OS - OCCUPANCY SENSOR
- CEILING FAN

KEYNOTE LEGEND CONST.

KEY VALUE	KEYNOTE TEXT
16	PROVIDE AND INSTALL ALUMINUM METAL DRIP EDGE, DOWNSPOUT AND GUTTER AT PERIMETER OF ROOF.
39	NEW SOFFIT WITH RECESSED LIGHTS AS INDICATED ON RCP
46	EXISTING ROOF BEAMS AND TRUSSES TO NOT BE PAINTED.
50	CONSTRUCT NEW DECORATIVE TOWER. SEE DETAILS.
51	NEW BIRD NETTING INSTALLED TIGHT UNDER ALL INTERIOR WOOD TRUSSES. ENSURE NO DAMAGE OCCURS TO EXISTING STRUCTURE SO AS TO ALTER ITS STRUCTURAL INTEGRITY. ZIPPERS TO BE COORDINATED WITH LOCATION OF SPRINKLER HEADS.
67	NEW FASCIA BOARD AND SOFFIT.
83	WESTCHESTER COUNTY HEALTH DEPARTMENT COMPLIANT SQUARE LAY IN ACT TILES AS PER 10 CRR-NY-1.171.
84	HALF ROUND ALUMINUM GUTTER AND DOWNSPOUT.

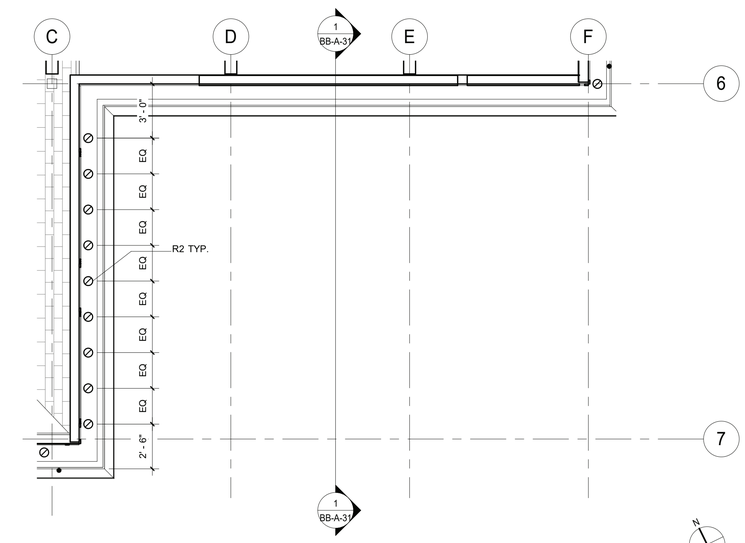

2 GROUND LEVEL REFLECTED CEILING PLAN CALLOUT
1/4" = 1'-0"

9/26/2022 2:06:42 PM

CONSULTANT INFORMATION
The LiRo Group
3 Aerial Way, Syosset, New York 11791
(516) 938-5476 www.liro.com

CONSULTANT SEAL
REGISTERED ARCHITECT ROBERT D. YOUNG JR. 023280 STATE OF NEW YORK

REVISION NUMBER	DATE	MADE BY	APP'D BY	REVISION
1	09/21/22			BID ADDENDUM # 3

RECORD DRAWING CERTIFICATION
☐ AS BUILT – CHANGES AS NOTED ☐ AS BUILT – NO CHANGES

CONTRACTOR: NAME / SIGNATURE / TITLE / DATE
PROJECT COORDINATOR: NAME / SIGNATURE / TITLE / DATE

WESTCHESTER COUNTY, NEW YORK
DEPARTMENT OF PUBLIC WORKS AND TRANSPORTATION
DIVISION OF ENGINEERING

INFRASTRUCTURE REHABILITATION - PHASE 3
PLAYLAND PARK, RYE, NEW YORK
NORTH EAST BURGER BARN
REFLECTED CEILING PLAN

CONTRACT NUMBER: 22-523
SHEET NUMBER: BB-A-12
DWG NO.: 28 of 664
SCALE: As indicated
DATE: 08/23/2022
DPW FILE NUMBER: 1-118-A-777-1
REV. NO.: 1

2 PROPOSED ELEVATION- NORTH EAST
1/4" = 1'-0"

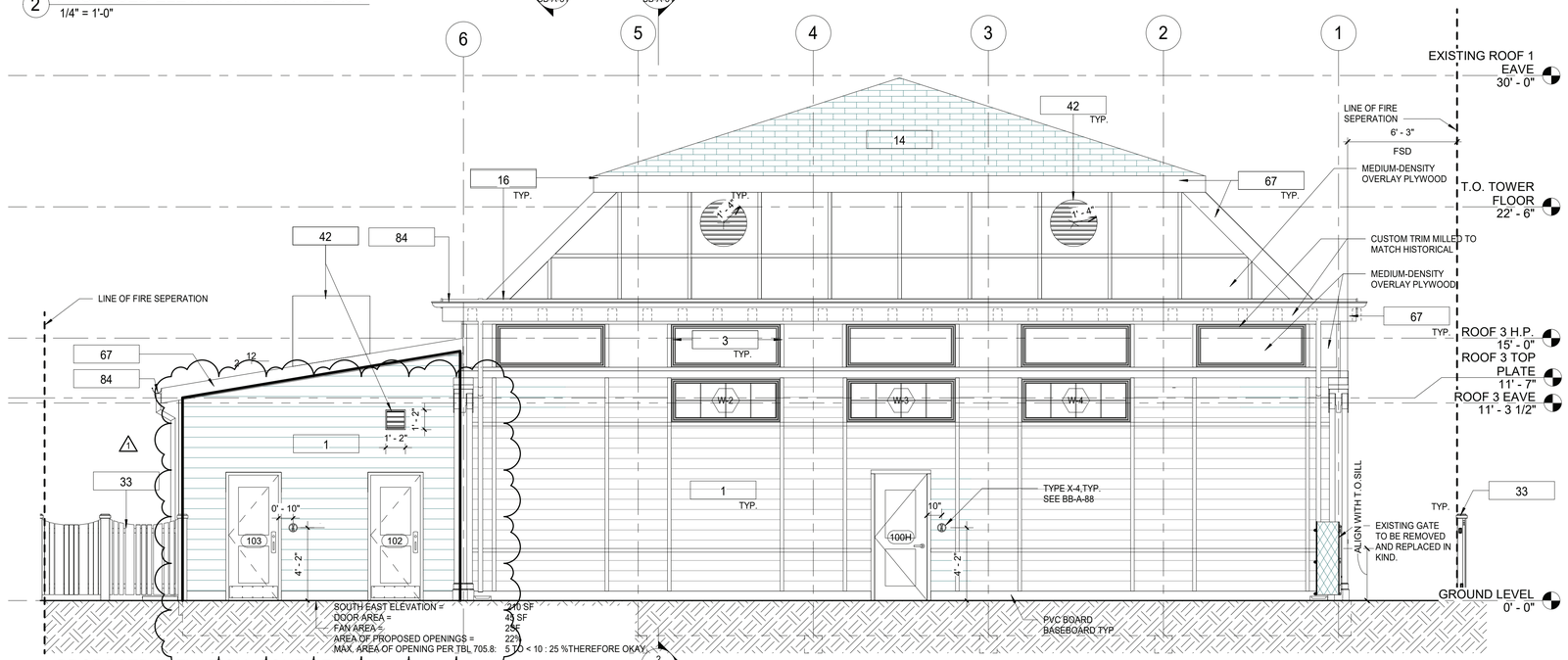

1 PROPOSED ELEVATION- SOUTH EAST 2
1/4" = 1'-0"

CONSTRUCTION GENERAL NOTES

1. THE ARCHITECT DOES NOT CERTIFY DIMENSIONS OR CONDITIONS OF EXISTING CONSTRUCTION. CONTRACTOR SHALL NOTIFY ARCHITECT IMMEDIATELY OF ANY DISCREPANCY BETWEEN DRAWINGS AND EXISTING CONDITIONS. IN ADDITION, CONTRACTOR SHALL NOTIFY THE ARCHITECT OF ANY DEFECTIVE CONSTRUCTION UNCOVERED DURING CONSTRUCTION.
2. CONTRACTOR SHALL KEEP WORK SITE FREE FROM DEBRIS AND ACCUMULATED REFUSE, AND SHALL HAVE SOLE RESPONSIBILITY FOR PROTECTING ALL DANGEROUS AREAS FROM ENTRY BY UNAUTHORIZED PARTIES. ALL CONSTRUCTION SCRAPS, DIRT, AND DEBRIS SHALL BE REMOVED FROM THE PREMISES DAILY. SITE SHALL BE LEFT BROOM CLEAN AT THE END OF EACH WORKING DAY. AT THE COMPLETION OF THE WORK, HE PREMISES SHALL BE LEFT IN A BROOM CLEAN CONDITION.
3. ALL WORK TO BE PERFORMED IN A WORKMANLIKE FASHION. MATERIALS UTILIZED SHALL BE AS SPECIFIED ON THE DRAWINGS OR IN THE JOB SPECIFICATIONS, OR, IF GENERIC, IN COMPLIANCE WITH ASTM, NEW YORK CODE, OR OTHER GENERALLY ACCEPTED STANDARDS.
4. WHERE EXISTING EQUIPMENT OR CONSTRUCTION IS REMOVED OR ALTERED, ALL REMAINING SURFACES AND FINISHES AFFECTED SHALL BE PATCHED AND FINISHED TO MATCH ADJACENT CONSTRUCTION/PRE- EXISTING CONDITION.
5. ALL EXITS SHALL BE KEPT READILY ACCESSIBLE AND UNOBSTRUCTED AT ALL TIMES. ALL EXITS SHALL BE KEPT READILY ACCESSIBLE AND UNOBSTRUCTED AT ALL TIMES.
6. ALL INFILLED OPENINGS TO BE FLUSH WITH EXISTING MASONRY WALL SURFACES, EXTERIOR OF NEW AND OLD TO BE FLUSH AND MATCH WITH EXISTING ADJACENT WALL SYSTEM.
7. THE G.C. SHALL VERIFY DIMENSIONS OF THE EXISTING SPACE AND OF ANY EXISTING CONSTRUCTION TO REMAIN BY ACTUAL MEASUREMENT BEFORE ANY WORK IS PERFORMED. IF ANY MEASUREMENTS DIFFER FROM DIMENSIONS SHOWN ON PLAN, G.C. IS TO NOTIFY THE ARCHITECT IMMEDIATELY. THE G.C. SHALL BE RESPONSIBLE FOR CORRECTING ANY AND ALL DISCREPANCIES FOUND AFTER THE WORK IS PERFORMED, AT NO ADDITIONAL EXPENSE TO THE OWNER.
8. G.C. TO VERIFY ALL FINISHED DIMENSIONS. FIELD CONDITIONS ALTERING ANY DIMENSIONS SHOULD BE BROUGHT TO THE ATTENTION OF THE OWNER AND ARCHITECT.
9. THE G.C. SHALL BE RESPONSIBLE FOR COORDINATING WITH OWNER ON ALL WORK TO BE PERFORMED BY THE OWNER. ANY POTENTIAL CONFLICTS OR DELAYS CAUSED BY THE OWNER'S SUBCONTRACTORS MUST BE DOCUMENTED IN WRITING TO THE OWNER BEFORE THE DELAY IS ACTUALLY INCURRED FOR IT TO BE CONSIDERED. OTHERWISE THE G.C. WILL BE RESPONSIBLE FOR MEETING THE SCHEDULE AS OUTLINED IN THE CONTRACT.

CONSTRUCTION LEGEND

	INDICATES NEW/ RESTORED STUCCO & NEW PAINT
	INDICATES SCOPE NOT IN CONTRACT
?	KEY NOTES
1t	WINDOW TAG
101	DOOR TAG

KEYNOTE LEGEND CONST.

KEY VALUE	KEYNOTE TEXT
1	PROVIDE AND INSTALL NEW 1x8 MILLED YELLOW PINE - TONGUE AND GROOVE - NO BEVEL
3	REPLICATE TRIMS TO MATCH DOCUMENTED TRIM, LOCATIONS, SIZE AND SHAPE. FINISH PAINT COLORS AS SCHEDULED.
10	PROVIDE AND INSTALL COLUMN ENCLOSURES. SEE DETAILS.
14	PROVIDE NEW ASPHALT SHINGLE ROOFING,UNDERLAYMENT, AND REPLACE IN KIND EXISTING DECKING AS REQUIRED (COORDINATE WITH STRUCTURAL).
16	PROVIDE AND INSTALL ALUMINUM METAL DRIP EDGE, DOWNSPOUT AND GUTTER AT PERIMETER OF ROOF.
33	NEW WOOD FENCE. SEE DETAILS.
39	NEW SOFFIT WITH RECESSED LIGHTS AS INDICATED ON RCP
42	NEW MECHANICAL EQUIPMENT. SEE MECHANICAL DRAWINGS.
50	CONSTRUCT NEW DECORATIVE TOWER. SEE DETAILS.
67	NEW FASCIA BOARD AND SOFFIT.
84	HALF ROUND ALUMINUM GUTTER AND DOWNSPOUT.

PLAYLAND MASTER PAINT SCHEDULE

KEY	COLOR	MANUFACTURER	REMARKS
P-1	MYSTICAL POWERS #901	BENJAMIN MOORE	
P-2	HERITAGE RED #HC-181	BENJAMIN MOORE	
P-3	NEW YORK STATE OF MIND #805	BENJAMIN MOORE	
P-4	LAZY SUNDAY #803	BENJAMIN MOORE	
P-5	DEEP JUNGLE #595	BENJAMIN MOORE	
P-6	LUCK OF THE IRISH #588	BENJAMIN MOORE	
P-7	MAJOLICA GREEN #0013	SHERWIN WILLIAMS	
P-8	ANTELOPE CANYON #125	BENJAMIN MOORE	
P-9	FORSYTHIA #6907	SHERWIN WILLIAMS	
P-10	CAPE BLUE #1642	BENJAMIN MOORE	
P-11	WHITE SNOW #9541	SHERWIN WILLIAMS	
P-12	TRICORN BLACK #6258	SHERWIN WILLIAMS	
P-13	READY WHITE MIX		INTERIOR USE ONLY
P-14	STUCCO TO MATCH P-1		FOR ALL NEW STUCCO SURFACES
P-15	VAN DEUSEN BLUE #HC-156	BENJAMIN MOORE	
P-16	#RAL9001		TYPICAL ROLL UP DOOR COLOR
P-17	FLORIDA BEACHES #900	BENJAMIN MOORE	
P-18	PIRATES COVE PEACH #903	BENJAMIN MOORE	
P-19	JADITE #6459	SHERWIN WILLIAMS	
P-20	DECISIVE YELLOW #6902	SHERWIN WILLIAMS	

9/26/2022 2:06:53 PM

CONSULTANT INFORMATION
The LiRo Group
3 Aerial Way, Syosset, New York 11791
(516) 938-5476 www.liro.com

CONSULTANT SEAL
REGISTERED ARCHITECT ROBERT D. LIRO JR. 023220 STATE OF NEW YORK

REVISION NUMBER	DATE	MADE BY	APP'D BY	REVISION
1	09/21/22			BID ADDENDUM # 3

RECORD DRAWING CERTIFICATION
☐ AS BUILT – CHANGES AS NOTED ☐ AS BUILT – NO CHANGES

CONTRACTOR
NAME
SIGNATURE
TITLE DATE

PROJECT COORDINATOR
NAME
SIGNATURE
TITLE DATE

WESTCHESTER COUNTY, NEW YORK
DEPARTMENT OF PUBLIC WORKS AND TRANSPORTATION
DIVISION OF ENGINEERING

INFRASTRUCTURE REHABILITATION - PHASE 3
PLAYLAND PARK, RYE, NEW YORK
NORTH EAST BURGER BARN
EXTERIOR ELEVATION 2

CONTRACT NUMBER	22-523
SHEET NUMBER	BB-A-22
DWG NO.:	32 of 664
SCALE:	1/4" = 1'-0"
DATE:	08/23/2022
DPW FILE NUMBER	1-118-A-781-1
REV. NO.	1

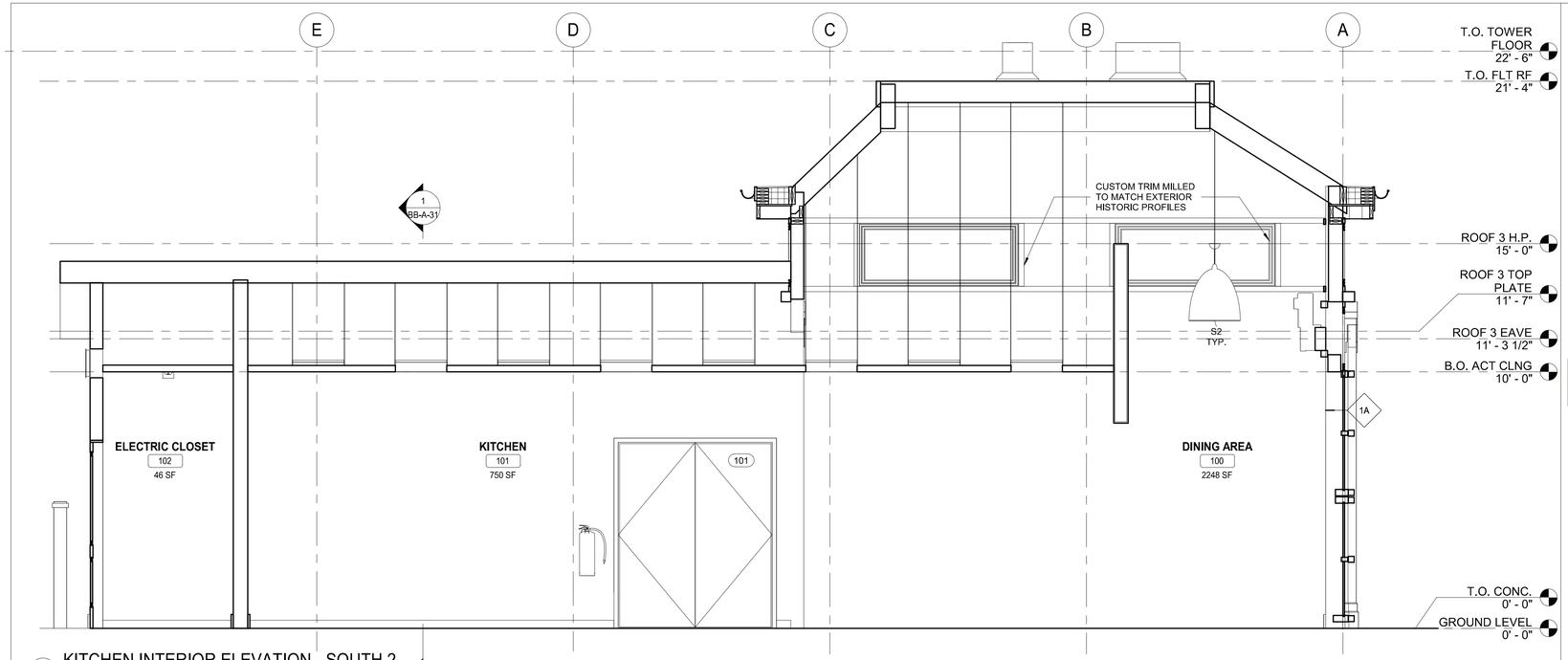

3 KITCHEN INTERIOR ELEVATION - SOUTH 2
3/8" = 1'-0"

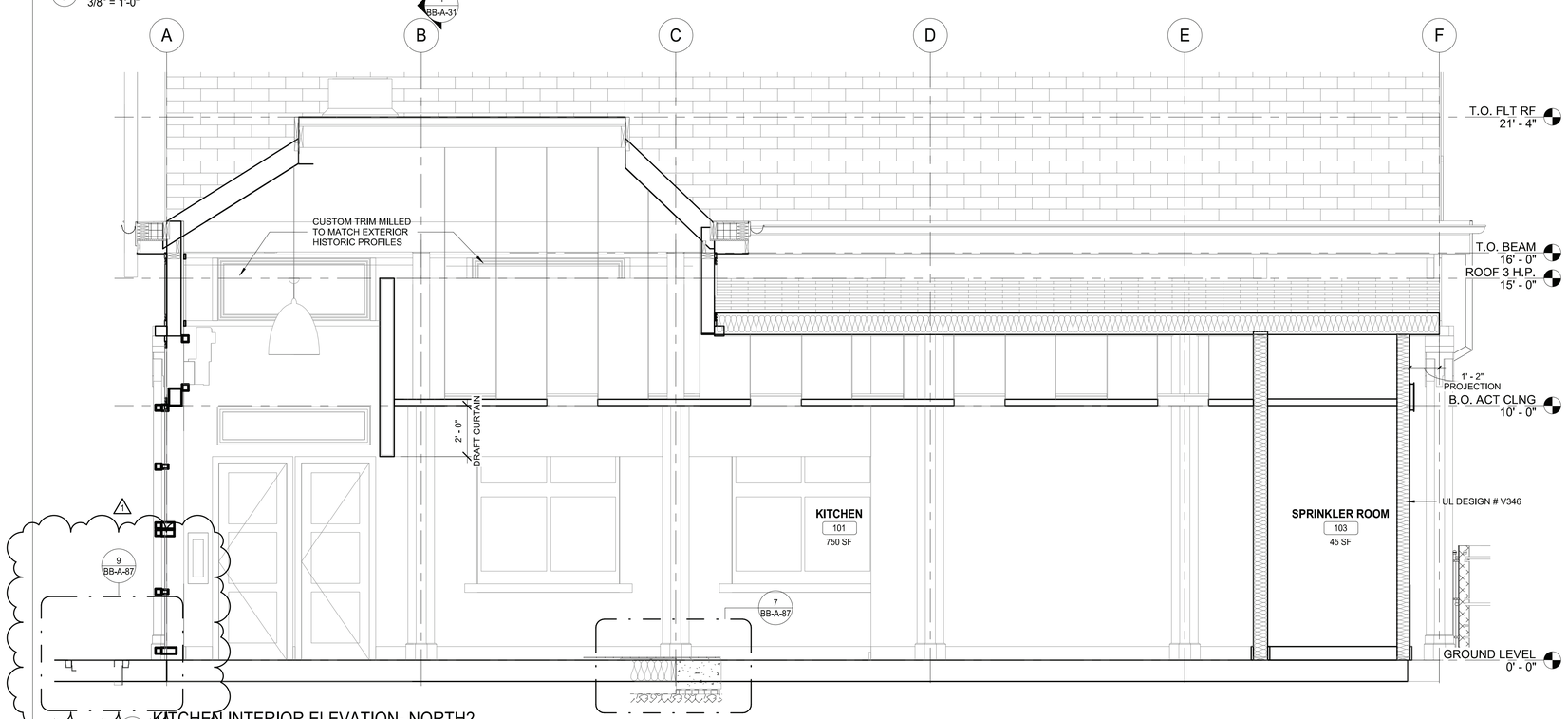

2 KITCHEN INTERIOR ELEVATION- NORTH2
3/8" = 1'-0"

LEGEND

- INDICATES SCOPE NOT IN CONTRACT
- ? KEY NOTES
- 1l WALL TAG
- 1t WINDOW TAG
- 101 DOOR TAG
- Room name 101 150 SF ROOM TAG

KEYNOTE LEGEND CONST.

KEY VALUE	KEYNOTE TEXT

9/26/2022 4:12:10 PM

CONSULTANT INFORMATION

The LiRo Group
3 Aerial Way, Syosset, New York 11791
(516) 938-5476 www.liro.com

CONSULTANT SEAL

REGISTERED ARCHITECT ROBERT D. YOUNG JR. 023290 STATE OF NEW YORK

REVISION NUMBER	DATE	MADE BY	APP'D BY	REVISION
1	09/21/22			BID ADDENDUM # 3

RECORD DRAWING CERTIFICATION

☐ AS BUILT – CHANGES AS NOTED ☐ AS BUILT – NO CHANGES

CONTRACTOR
NAME
SIGNATURE
TITLE DATE

PROJECT COORDINATOR
NAME
SIGNATURE
TITLE DATE

WESTCHESTER COUNTY, NEW YORK
DEPARTMENT OF PUBLIC WORKS AND TRANSPORTATION
DIVISION OF ENGINEERING

INFRASTRUCTURE REHABILITATION - PHASE 3
PLAYLAND PARK, RYE, NEW YORK
NORTH EAST BURGER BARN
KITCHEN INTERIOR ELEVATIONS

CONTRACT NUMBER	22-523
SHEET NUMBER	BB-A-52
DWG NO.:	35 of 664
SCALE:	As indicated
DATE:	08/23/2022
DPW FILE NUMBER	1-118-A-784-1
REV. NO.	1

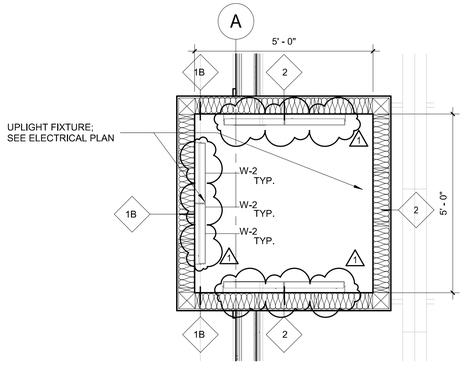

7 TOWER RCP
1/2" = 1'-0"

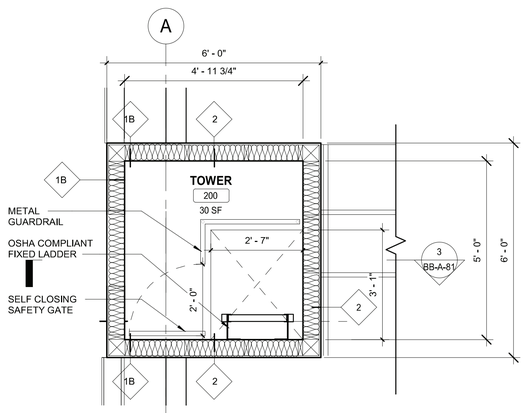

5 TOWER MEZZ FLOOR PLAN
1/2" = 1'-0"

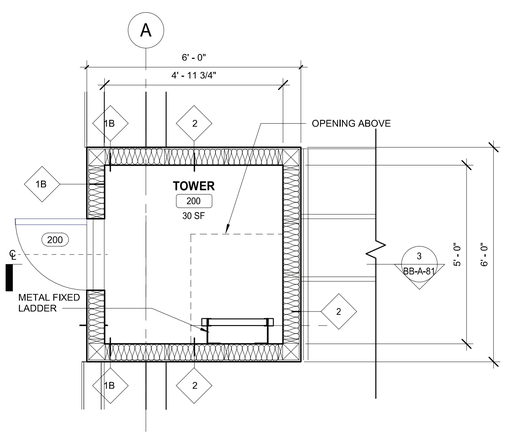

4 TOWER FLOOR PLAN
1/2" = 1'-0"

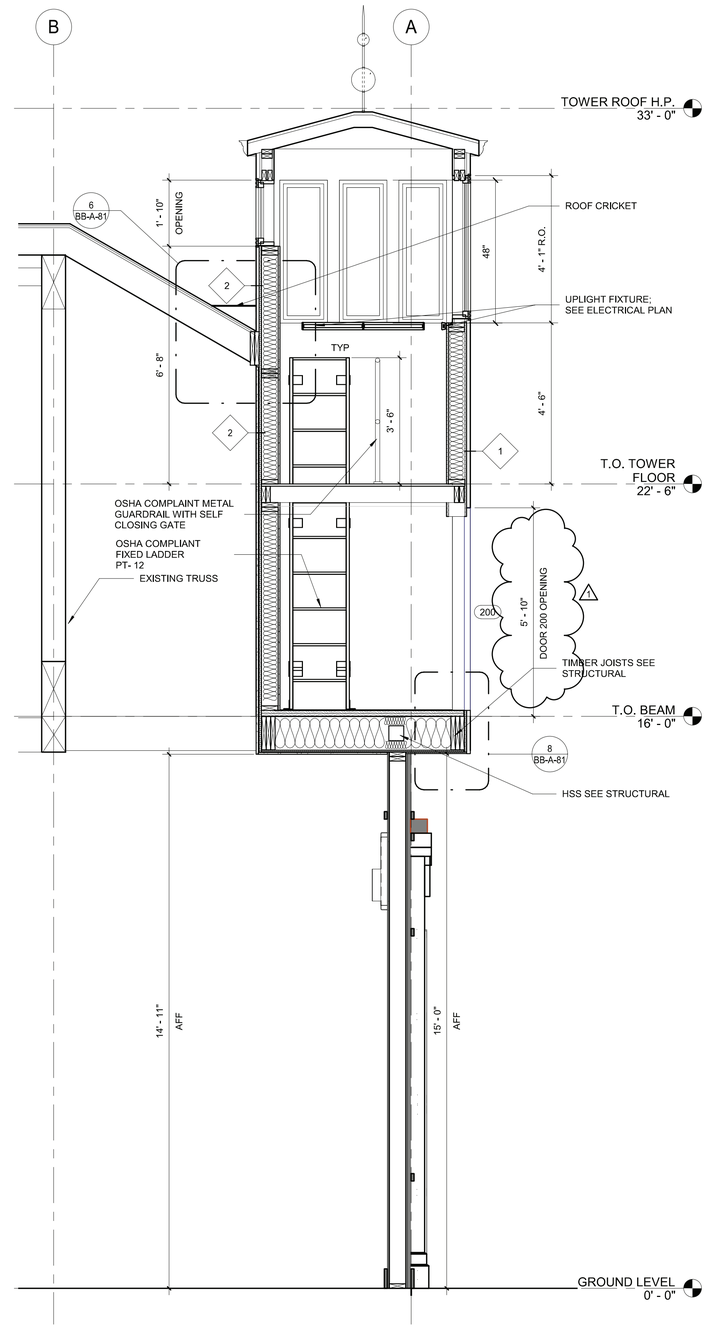

3 BUILDING TOWER SECTION
1/2" = 1'-0"

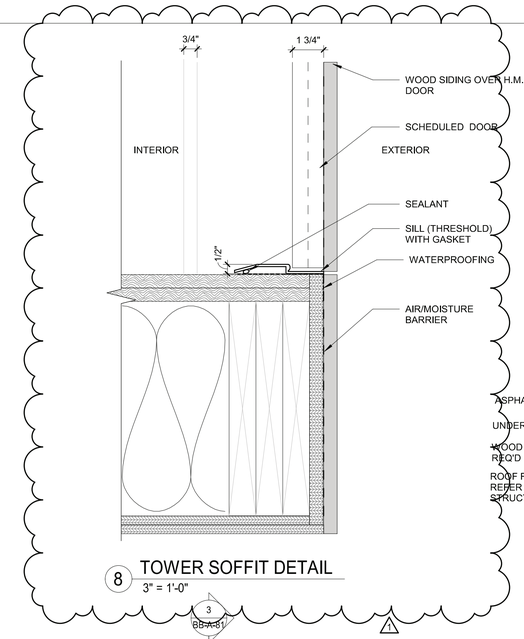

8 TOWER SOFFIT DETAIL
3" = 1'-0"

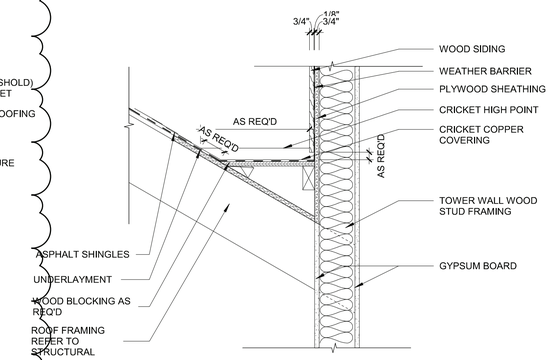

6 ROOF CRICKET DETAIL
1" = 1'-0"

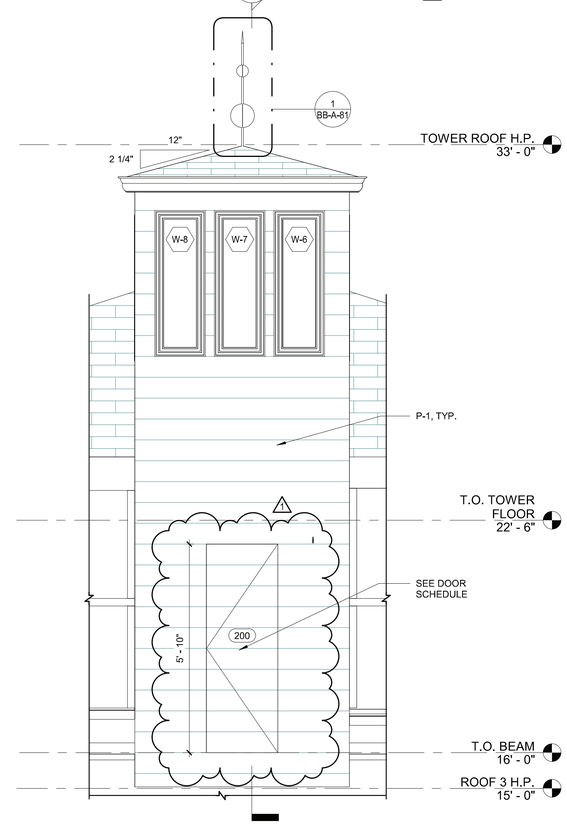

2 BUILDING TOWER ELEVATION
1/2" = 1'-0"

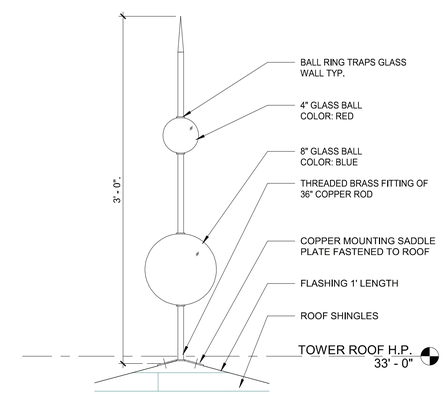

1 BUILDING TOWER FINIAL DETAIL
1 1/2" = 1'-0"

9/26/2022 4:21:47 PM

CONSULTANT INFORMATION

The LiRo Group
3 Aerial Way, Syosset, New York 11791
(516) 938-5476 www.liro.com

CONSULTANT SEAL

REGISTERED ARCHITECT ROBERT D. TOWNSEND 023280 STATE OF NEW YORK

REVISION NUMBER	DATE	MADE BY	APP'D BY	REVISION
1	09/21/22			BID ADDENDUM # 3

RECORD DRAWING CERTIFICATION

☐ AS BUILT – CHANGES AS NOTED ☐ AS BUILT – NO CHANGES

CONTRACTOR
NAME
SIGNATURE
TITLE DATE

PROJECT COORDINATOR
NAME
SIGNATURE
TITLE DATE

WESTCHESTER COUNTY, NEW YORK
DEPARTMENT OF PUBLIC WORKS AND TRANSPORTATION
DIVISION OF ENGINEERING

INFRASTRUCTURE REHABILITATION - PHASE 3
PLAYLAND PARK, RYE, NEW YORK
NORTH EAST BURGER BARN
BUILDING TOWER DETAILS

CONTRACT NUMBER	22-523
SHEET NUMBER	BB-A-81
DWG NO.:	36 of 664
SCALE:	As indicated
DATE:	08/23/2022
DPW FILE NUMBER	1-118-A-785-1
REV. NO.	1

SHEET NOTE	
1	HYDRAULIC AND ELECTRICALLY ACTUATED BIFOLD DOORS AND WINDOW BY CROWN USED AS BASIS OF DESIGN.

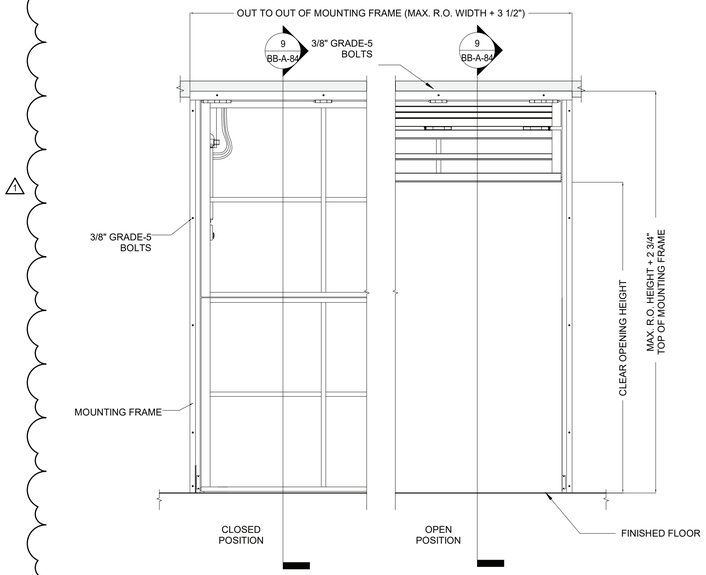

10 HYDRAULIC BIFOLD DOOR ELEVATION
3/8" = 1'-0"

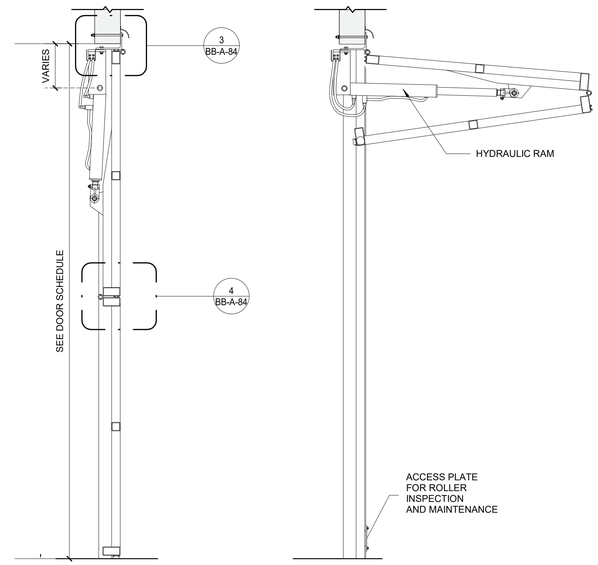

9 HYDRAULIC BIFOLD DOOR SECTION
1/2" = 1'-0"

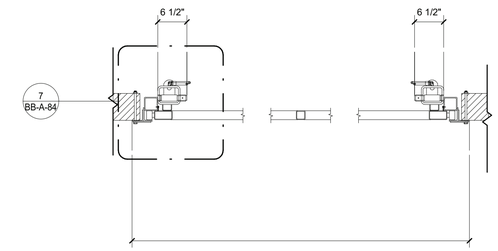

8 HYDRAULIC BIFOLD DOOR PLAN
3/4" = 1'-0"

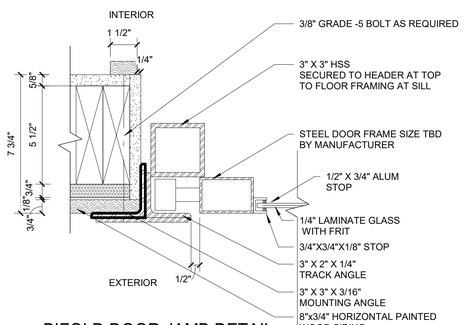

7 BIFOLD DOOR JAMB DETAIL
3" = 1'-0"

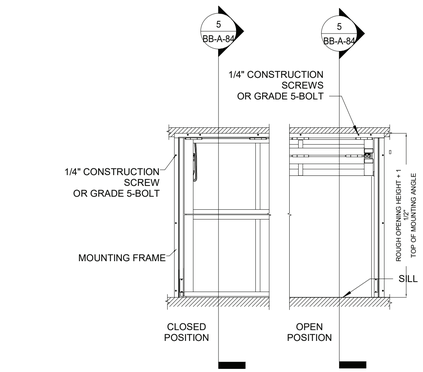

6 ELECTRIC BIFOLD WINDOW ELEVATION
3/8" = 1'-0"

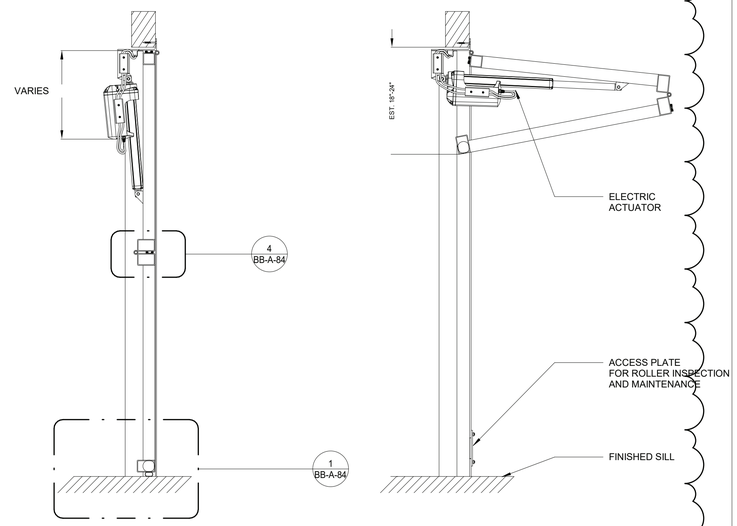

5 ELECTRIC BIFOLD WINDOW SECTION
1" = 1'-0"

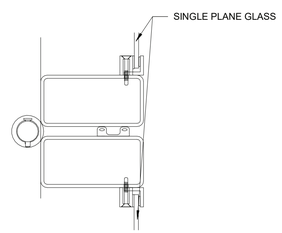

4 BIFOLD DOOR INSIDE SASH ASSEMBLY
3" = 1'-0"

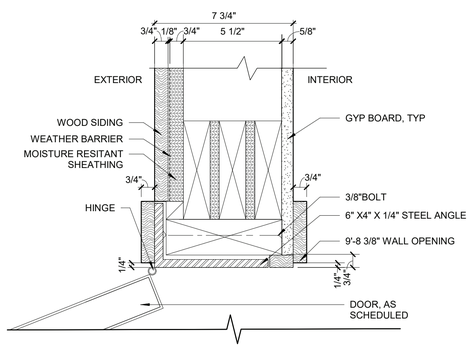

3 BI- FOLD DOOR HEAD DETAIL
3" = 1'-0"

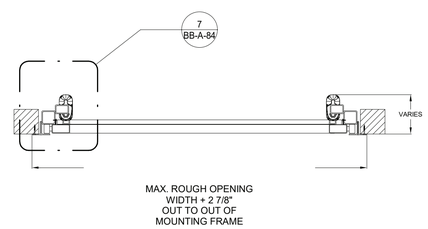

2 ELECTRIC BIFOLD WINDOW PLAN
3/4" = 1'-0"

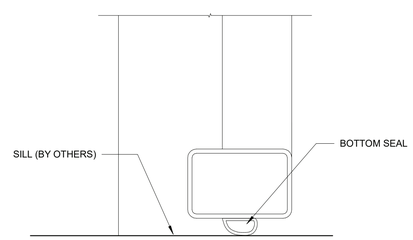

1 ELECTRIC BIFOLD WINDOW BOTTOM DETAIL
3" = 1'-0"

9/26/2022 2:07:06 PM

CONSULTANT INFORMATION
The LiRo Group
3 Aerial Way, Syosset, New York 11791
(516) 938-5476 www.liro.com

CONSULTANT SEAL
REGISTERED ARCHITECT ROBERT D. TOWNSEND 023200 STATE OF NEW YORK

REVISION NUMBER	DATE	MADE BY	APP'D BY	REVISION
1	09/21/22			BID ADDENDUM # 3

RECORD DRAWING CERTIFICATION
☐ AS BUILT – CHANGES AS NOTED ☐ AS BUILT – NO CHANGES

CONTRACTOR
NAME
SIGNATURE
TITLE DATE

PROJECT COORDINATOR
NAME
SIGNATURE
TITLE DATE

WESTCHESTER COUNTY, NEW YORK
DEPARTMENT OF PUBLIC WORKS AND TRANSPORTATION
DIVISION OF ENGINEERING

INFRASTRUCTURE REHABILITATION - PHASE 3
PLAYLAND PARK, RYE, NEW YORK
NORTH EAST BURGER BARN
BIFOLD DOOR DETAILS

CONTRACT NUMBER	22-523
SHEET NUMBER	BB-A-84
DWG NO.:	39 of 664
SCALE:	As indicated
DATE:	08/23/2022
DPW FILE NUMBER	1-118-A-788-1
REV. NO.	1

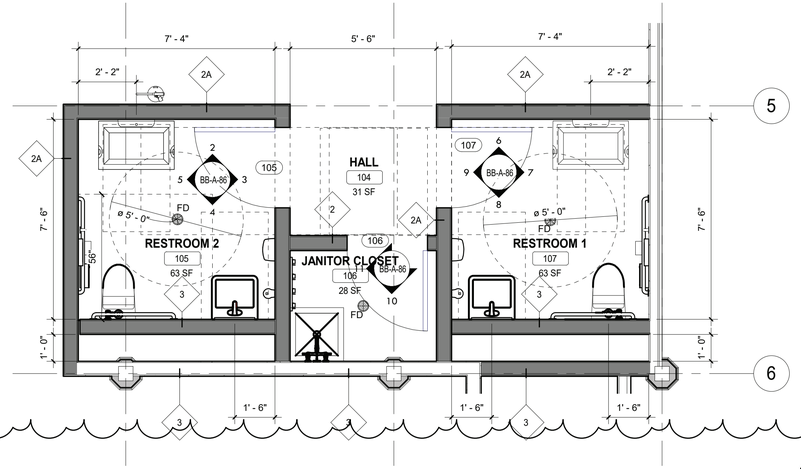

1 ENLARGED BATHROOM PLAN
3/8" = 1'-0"

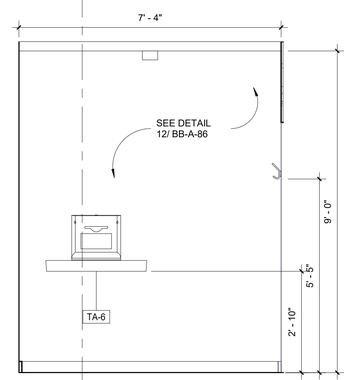

2 ADA RESTROOM 2- 2
1/2" = 1'-0"

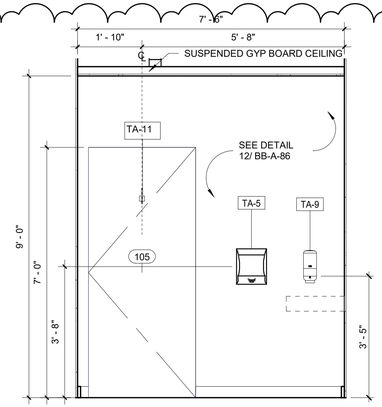

3 ADA RESTROOM 2- 3
1/2" = 1'-0"

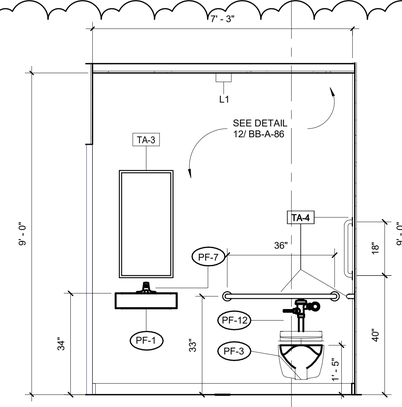

4 ADA RESTROOM 2- 4
1/2" = 1'-0"

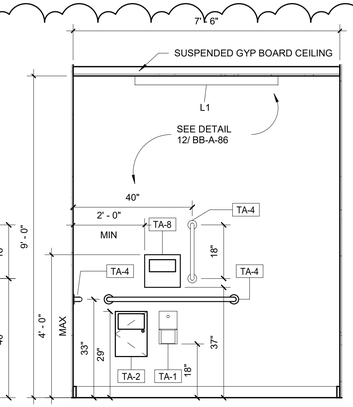

5 ADA RESTROOM 2- 5
1/2" = 1'-0"

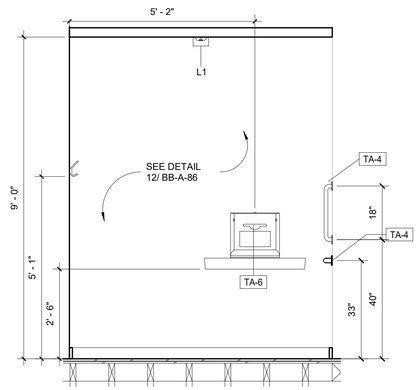

6 ADA RESTROOM 1- 6
1/2" = 1'-0"

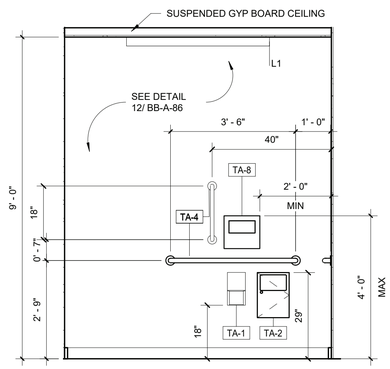

7 ADA RESTROOM 1- 7
1/2" = 1'-0"

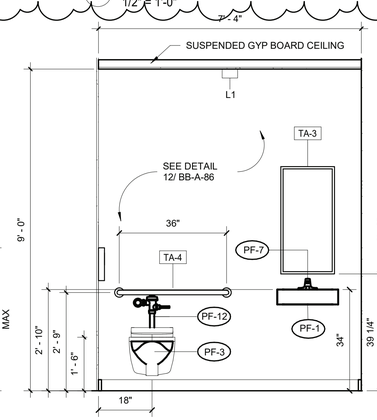

8 ADA RESTROOM 1- 8
1/2" = 1'-0"

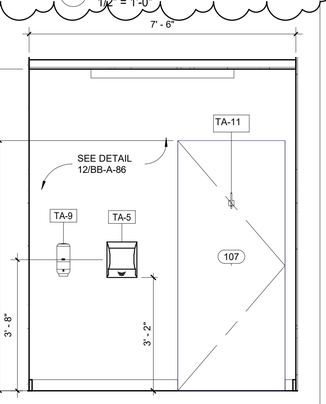

9 ADA RESTROOM 1- 9
1/2" = 1'-0"

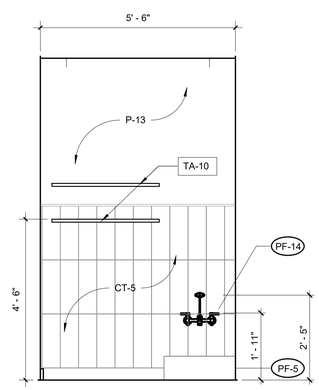

10 JANITOR CLOSET- 10
1/2" = 1'-0"

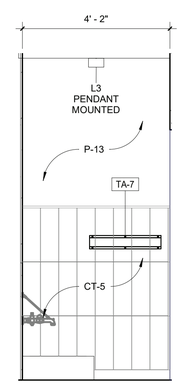

11 JANITOR CLOSET- 11
1/2" = 1'-0"

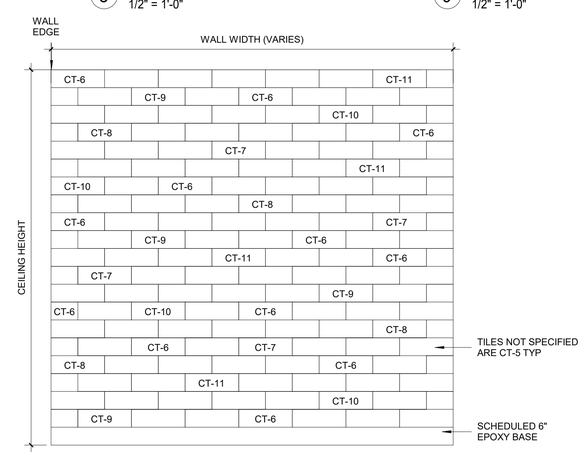

12 TYPICAL BATHROOM TILE LAYOUT
1/2" = 1'-0"

NOTE:
SEE BATHROOM TILE COLOR SCHEDULE ON SHEET BB-A-86

BATHROOM TILE COLOR SCHEDULE

KEY	COLOR	MANUFACTURER	MODEL	SIZE	REMARKS
CT-5	ARTIC WHITE	DALTILE	COLOR WHEEL LINEAR	6" x 18"	80% OF TOTAL WALL
CT-6	BISCUIT	DALTILE	COLOR WHEEL LINEAR	6" x 18"	5% OF TOTAL WALL
CT-7	MUSTARD	DALTILE	COLOR WHEEL LINEAR	6" x 18"	3% OF TOTAL WALL
CT-8	CURRANT	DALTILE	COLOR WHEEL LINEAR	6" x 18"	3% OF TOTAL WALL
CT-9	SEA BREEZE	DALTILE	COLOR WHEEL LINEAR	6" x 18"	3% OF TOTAL WALL
CT-10	OCEAN BLUE	DALTILE	COLOR WHEEL LINEAR	6" x 18"	3% OF TOTAL WALL
CT-11	PLUB CRAZY	DALTILE	COLOR WHEEL LINEAR	6" x 18"	3% OF TOTAL WALL

TOILET ACCESSORIES SCHEDULE - "TA"

TAG	DESCRIPTION
TA-1	RECESSED TOILET TISSUE DISPENSER
TA-2	RECESSED SANITARY NAPKIN DISPOSAL
TA-3	FRAMED MIRROR
TA-4	ADA GRAB BARS - MULTIPLE LENGTHS
TA-5	SENSOR OPERATED HAND DRYER
TA-6	BABY CHANGING STATION
TA-7	4 POLE MOP HOLDER
TA-8	RECESSED SEAT COVER DISPENSER
TA-9	AUTOMATIC SOAP DISPENSER
TA-10	18"X 36" HEAVY DUTY WALL SHELF
TA-11	COAT HOOK

PLUMBING FIXTURE SCHEDULE - "PF"

TAG	DESCRIPTION	REMARKS
PF-1	WALL MOUNTED WATER CLOSET	
PF-3	WALL MOUNTED LAVATORY	
PF-5	SERVICE SINK	COMPATIABLE STAINLESS STEEL WALL GUARDS
PF-7	LAVATORY FAUCET	BATTERY OPERATED
PF-12	FLUSHOMETER - LAVATORY	BATTERY OPERATED. FLUSH CONTROL ON OPEN SIDE.
PF-14	SERVICE SINK FAUCET	

GENERAL NOTES:

1. ALL GYPSUM BOARD IN RESTROOM & "WET" AREAS TO BE MOISTURE RESISTANT (MR).
2. FOR INTERIOR FINISHES. REFER TO BB-A-14
3. PLUMBING FIXTURES TO BE PROVIDED BY THE GENERAL CONTRACTOR
4. ALL PLUMBING FIXTURES, FAUCETS AND ACCESSORIES TO BE ADA COMPLIANT.
5. ALL EXPOSED PIPING UNDER LAVATORIES TO BE INSULATED TO PROTECT FROM CONTACT. THERE SHALL BE NO SHARP OR ABRASIVE SURFACES UNDER LAVATORIES.

FOR CERAMIC TILE PATTERNS & STAINLESS STEEL EDGE (TYPICAL FOR ALL CERAMIC TILE WALLS):

1. STAINLESS STEEL EDGE (BOTH FOR WALLS & FLOORS WHERE NECESSARY SHALL BE SS 304 E100 SCHLUTER- SCHIENE OR APPROVED EQUAL

2. BEFORE INSTALLATION OF CERAMIC TILE WALLS CONTRACTOR TO BUILK MOCK- UPS AS LISTED BELOW FOR ARCHITECT'S REVIEW & APPROVAL:
   - (1) FOR SS EDGE/ CERAMIC TILE TRANSITION
   - (1) FOR CERAMIC PATTERN

3. ALL WALL CORNERS/ EDGE CERAMIC TILES TO BE BULLNOSE AS SPECIFIED, TYP. FOR ALL CORNERS

4. ALL CERAMIC TILE SPACING SHALL BE 1/8".

5. ALL GROUTS SHALL BE EPOXY BASE. SEE SPECIFICATION, TYPICAL FOR ALL AREAS

LEGEND:

- 1i — WALL TAG
- 101 — DOOR TAG
- Room name / 101 / 150 SF — ROOM TAG
- 1 Ref / Ref 1 / A101 — ELEVATION MARKER
- FD — FLOOR DRAIN
- ? — PLUMBING FIXTURE
- 1i — TOILET ACCESSORIE
- DASHED LINE DENOTES ADA CLEARANCES; SEE SHEET T-03 FOR MORE INFORMATION

9/26/2022 2:07:10 PM

CONSULTANT INFORMATION

The LiRo Group
3 Aerial Way, Syosset, New York 11791
(516) 938-5476 www.liro.com

CONSULTANT SEAL
REGISTERED ARCHITECT ROBERT D. YOUNG JR. 023280 STATE OF NEW YORK

REVISION NUMBER	DATE	MADE BY	APP'D BY	REVISION
1	09/21/22			BID ADDENDUM # 3

RECORD DRAWING CERTIFICATION
☐ AS BUILT – CHANGES AS NOTED ☐ AS BUILT – NO CHANGES

CONTRACTOR
NAME
SIGNATURE
TITLE DATE

PROJECT COORDINATOR
NAME
SIGNATURE
TITLE DATE

WESTCHESTER COUNTY, NEW YORK
DEPARTMENT OF PUBLIC WORKS AND TRANSPORTATION
DIVISION OF ENGINEERING

INFRASTRUCTURE REHABILITATION - PHASE 3
PLAYLAND PARK, RYE, NEW YORK
NORTH EAST BURGER BARN
ENLARGED BATHROOM PLANS

CONTRACT NUMBER	22-523
SHEET NUMBER	BB-A-86
DWG NO.:	41 of 664
SCALE:	As indicated
DATE:	08/23/2022
DPW FILE NUMBER	1-118-A-790-1
REV. NO.	1

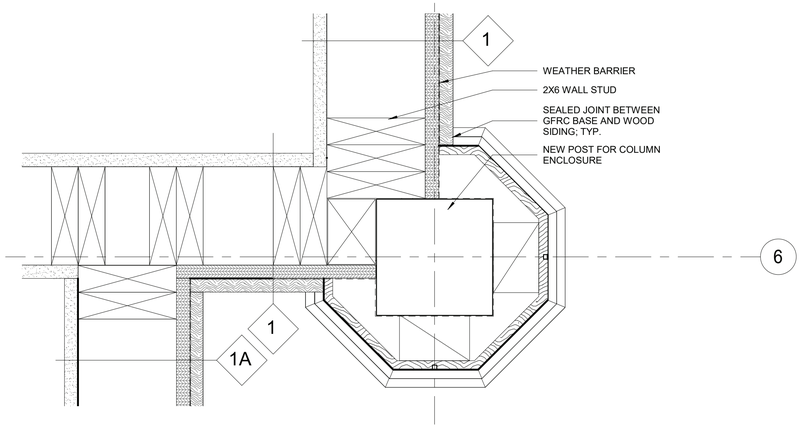

11 COLUMN PLAN DETAIL
3" = 1'-0"

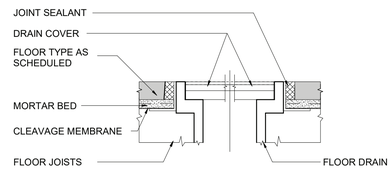

10 FLOOR DRAIN DETAIL
6" = 1'-0"

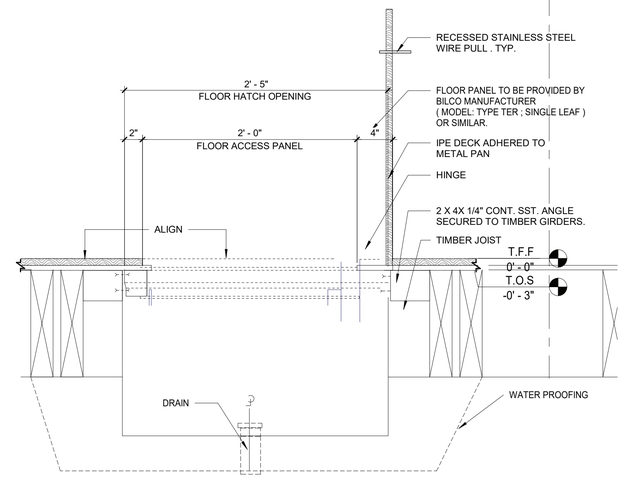

9 FLOOR ACCESS PANEL SECTION
1 1/2" = 1'-0"

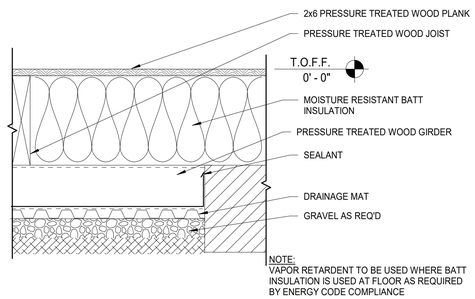

8 WOOD FLOOR CONSTRUCTION DETAIL
1 1/2" = 1'-0"

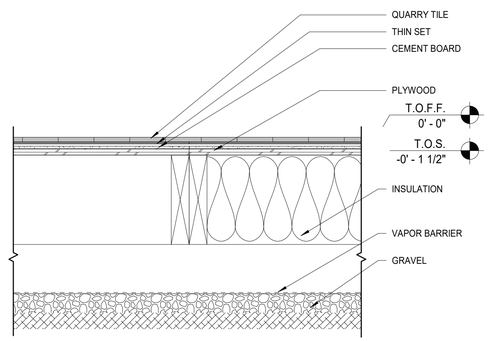

7 QUARRY TILE FLOOR CONSTRUCTION
1 1/2" = 1'-0"

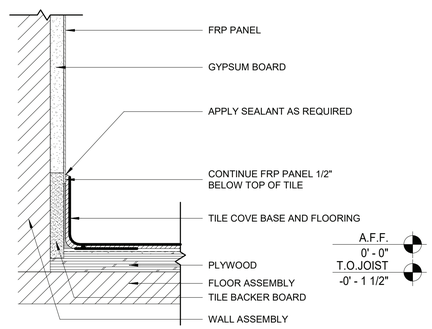

6 QUARRY TILE BASE WITH FRP WALL BASE DETAIL
3" = 1'-0"

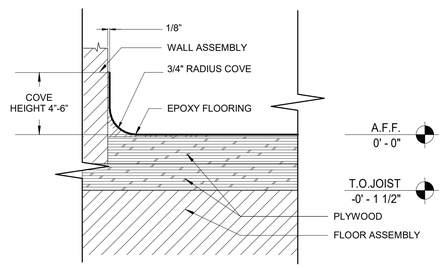

5 EPOXY FLOORING- CAPLESS COVE BASE DETAIL
6" = 1'-0"

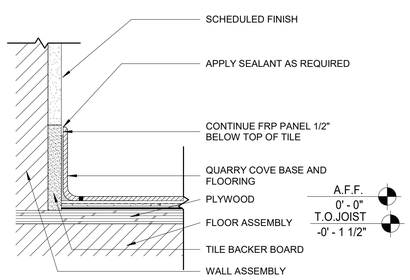

4 QUARRY TILE BASE DETAIL
3" = 1'-0"

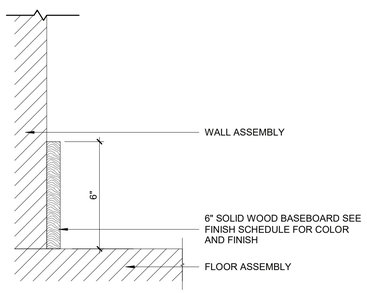

3 WOOD BASE
3" = 1'-0"

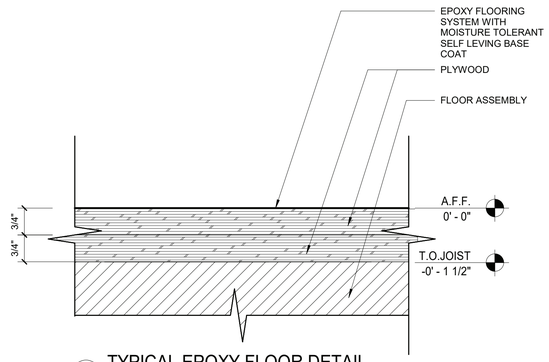

2 TYPICAL EPOXY FLOOR DETAIL
6" = 1'-0"

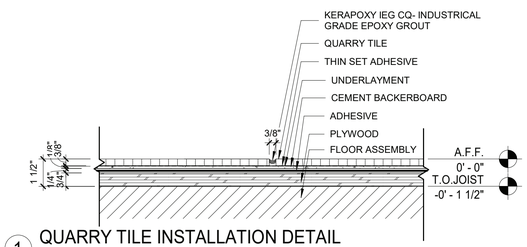

1 QUARRY TILE INSTALLATION DETAIL
3" = 1'-0"

9/26/2022 2:07:12 PM

CONSULTANT INFORMATION

The LiRo Group
3 Aerial Way, Syosset, New York 11791
(516) 938-5476 www.liro.com

CONSULTANT SEAL

REGISTERED ARCHITECT ROBERT D. VOMBURG 023220 STATE OF NEW YORK

REVISION NUMBER	DATE	MADE BY	APP'D BY	REVISION
1	09/21/22			BID ADDENDUM # 3

RECORD DRAWING CERTIFICATION

☐ AS BUILT – CHANGES AS NOTED ☐ AS BUILT – NO CHANGES

CONTRACTOR
NAME
SIGNATURE
TITLE DATE

PROJECT COORDINATOR
NAME
SIGNATURE
TITLE DATE

WESTCHESTER COUNTY, NEW YORK
DEPARTMENT OF PUBLIC WORKS AND TRANSPORTATION
DIVISION OF ENGINEERING

INFRASTRUCTURE REHABILITATION - PHASE 3
PLAYLAND PARK, RYE, NEW YORK
NORTH EAST BURGER BARN
FLOORING DETAILS

CONTRACT NUMBER	22-523
SHEET NUMBER	BB-A-87
DWG NO.:	42 of 664
SCALE:	As indicated
DATE:	08/23/2022
DPW FILE NUMBER	1-118-A-791-1
REV. NO.	1

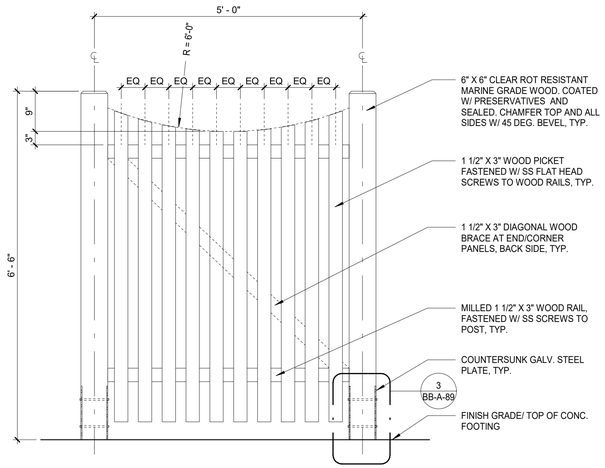

1 TYPICAL WOOD PICKET ELEVATION
3/4" = 1'-0"

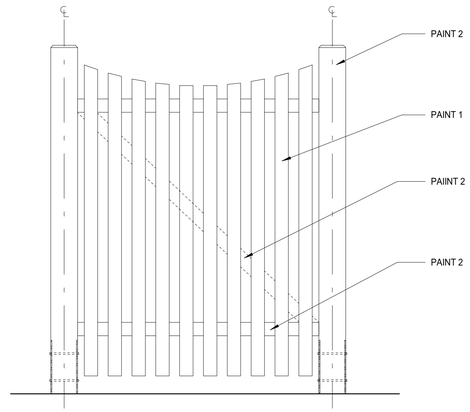

2 TYPICAL WOOD PICKET PAINT ELEVATION
3/4" = 1'-0"

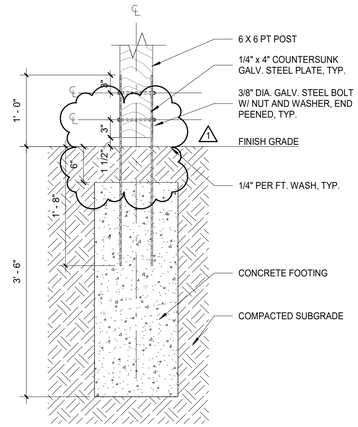

3 WOOD FENCE PIER DETAIL
1" = 1'-0"

GATE SCHEDULE

DOOR NUMBER	DOOR TYPE	WIDTH	HEIGHT	GATE MATERIAL	FINISH	HDWR SET	REMARKS
EX1	GATE	5'-6"	6'-0"	WOOD	PAINT	SEE DETAIL 4	
EX2	GATE	2'-8"	6'-0"	WOOD	PAINT	SEE EX1	EXIT DEVICE
EX3	GATE	3'-3"	6'-0"	WOOD	PAINT	SEE EX1	EXIT DEVICE

PLAYLAND MASTER PAINT SCHEDULE

KEY	COLOR	MANUFACTURER	REMARKS
P-1	MYSTICAL POWERS #901	BENJAMIN MOORE	
P-2	HERITAGE RED #HC-181	BENJAMIN MOORE	
P-3	NEW YORK STATE OF MIND #805	BENJAMIN MOORE	
P-4	LAZY SUNDAY #803	BENJAMIN MOORE	
P-5	DEEP JUNGLE #595	BENJAMIN MOORE	
P-6	LUCK OF THE IRISH #588	BENJAMIN MOORE	
P-7	MAJOLICA GREEN #0013	SHERWIN WILLIAMS	
P-8	ANTELOPE CANYON #125	BENJAMIN MOORE	
P-9	FORSYTHIA #6907	SHERWIN WILLIAMS	
P-10	CAPE BLUE #1642	BENJAMIN MOORE	
P-11	WHITE SNOW #9541	SHERWIN WILLIAMS	
P-12	TRICORN BLACK #6258	SHERWIN WILLIAMS	
P-13	READY WHITE MIX		INTERIOR USE ONLY
P-14	STUCCO TO MATCH P-1		FOR ALL NEW STUCCO SURFACES
P-15	VAN DEUSEN BLUE #HC-156	BENJAMIN MOORE	
P-16	#RAL9001		TYPICAL ROLL UP DOOR COLOR
P-17	FLORIDA BEACHES #900	BENJAMIN MOORE	
P-18	PIRATES COVE PEACH #903	BENJAMIN MOORE	
P-19	JADITE #6459	SHERWIN WILLIAMS	
P-20	DECISIVE YELLOW #6902	SHERWIN WILLIAMS	

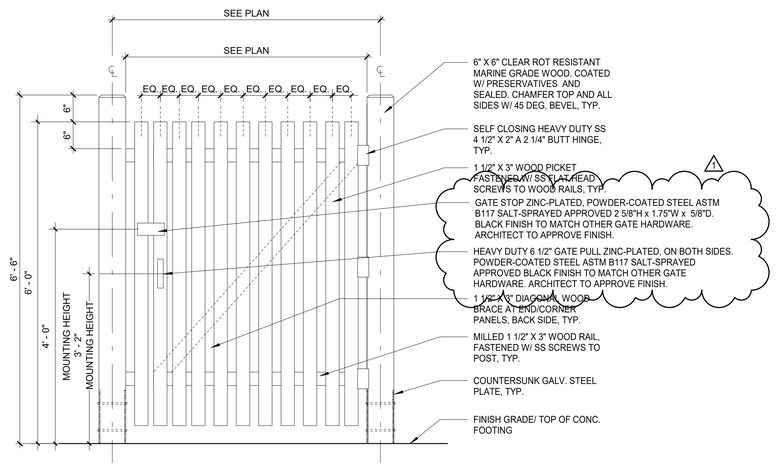

4 TYPICAL WOOD PICKET SINGLE GATE ELEVATION
3/4" = 1'-0"

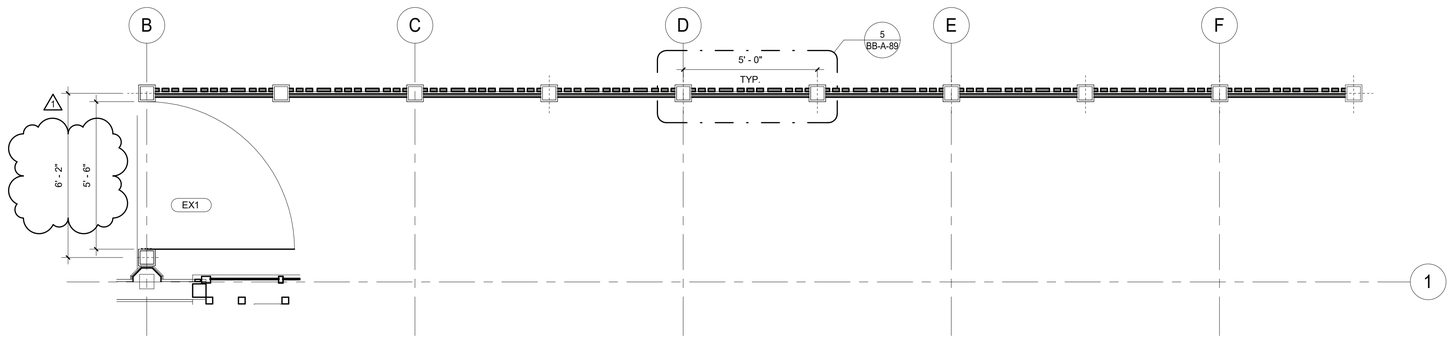

6 NORTH EAST FENCE PLAN
3/8" = 1'-0"

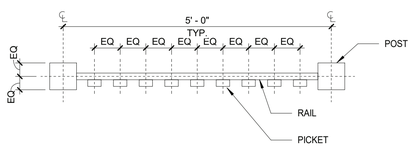

5 TYPICAL WOOD PICKET PLAN
3/4" = 1'-0"

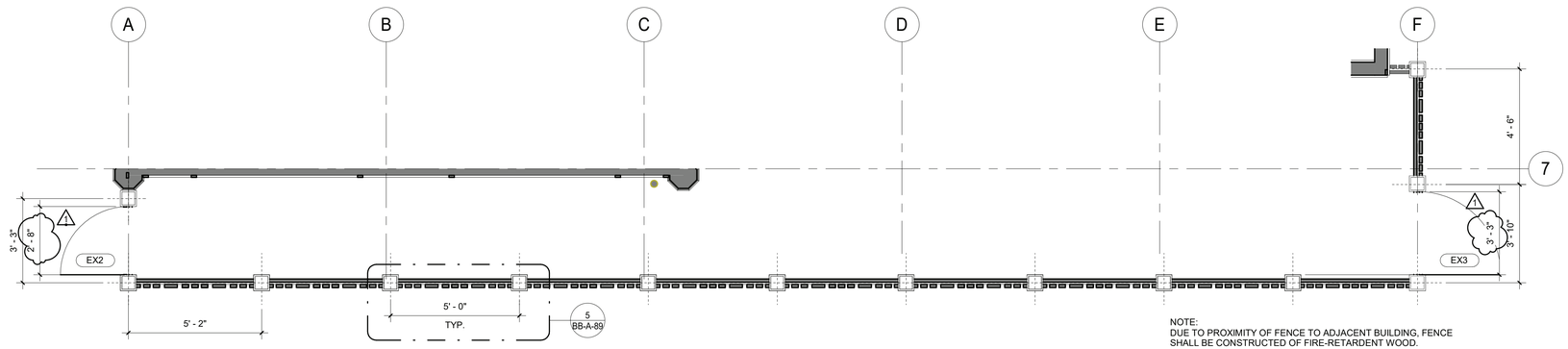

NOTE:
DUE TO PROXIMITY OF FENCE TO ADJACENT BUILDING, FENCE SHALL BE CONSTRUCTED OF FIRE-RETARDENT WOOD.

7 SOUTH WEST FENCE PLAN
3/8" = 1'-0"

9/26/2022 2:07:13 PM

CONSULTANT INFORMATION
The LiRo Group
3 Aerial Way, Syosset, New York 11791
(516) 938-5476 www.liro.com

CONSULTANT SEAL
REGISTERED ARCHITECT ROBERT D. YOUNG JR. 023280 STATE OF NEW YORK

REVISION NUMBER	DATE	MADE BY	APP'D BY	REVISION
1	09/21/22			BID ADDENDUM # 3

RECORD DRAWING CERTIFICATION
☐ AS BUILT – CHANGES AS NOTED ☐ AS BUILT – NO CHANGES

CONTRACTOR
NAME
SIGNATURE
TITLE DATE

PROJECT COORDINATOR
NAME
SIGNATURE
TITLE DATE

WESTCHESTER COUNTY, NEW YORK
DEPARTMENT OF PUBLIC WORKS AND TRANSPORTATION
DIVISION OF ENGINEERING

INFRASTRUCTURE REHABILITATION - PHASE 3
PLAYLAND PARK, RYE, NEW YORK
NORTH EAST BURGER BARN
FENCE DETAILS

CONTRACT NUMBER **22-523**
SHEET NUMBER **BB-A-89**
DWG NO.: 44 of 664
SCALE: **As indicated**
DATE: **08/23/2022**
DPW FILE NUMBER **1-118-A-793-1**
REV. NO. **1**

NORTH EAST ARCADE AKA BURGER BARN DOOR SCHEDULE

				DOOR										FRAME			DETAIL						
												FINISH/COLOR											
DOOR NUMBER	FROM ROOM	TO ROOM	TYPE	NEW OPENING	EX. OPENING	PANEL TYPE	WIDTH	HEIGHT	DOOR THICKNESS	MATERIAL	GLASS	INSIDE	OUTSIDE	FRAME TYPE	MATL	FINISH	HEAD	JAMB	THRESHOLD	R-VALUE	FIRE RATING	HARDWARE SET	REMARKS
100A	DINING	EXTERIOR	PANEL	X	-	F	5' - 9"	7' - 9"	0' - 1 3/4"	H.M.	YES	TBD	TBD	2	H.M.	TBD	4	3	8	-		-	1/4" CLEAR GLASS AT TRANSOM & 1/4" LAMINATED CLEAR GLASS AT DOOR
100B	DINING	EXTERIOR	BIFOLD	X	-	C-2	9' - 0"	10' - 0"		Aluminum	YES	BLACK 70% KYNAR 500 PVDF (2605)	BLACK 70% KYNAR 500 PVDF (2605)	BY MANU.	Steel	BLACK 70% KYNAR 500 PVDF (2605)	A-84-3	A-84-7	11	-	-	BY MANU.	FRITTED LAMINATED GLASS. MOTORIZED
100C	DINING	EXTERIOR	BIFOLD	X	-	C-2	20' - 3"	10' - 0"		Aluminium	YES	BLACK 70% KYNAR 500 PVDF (2605)	BLACK 70% KYNAR 500 PVDF (2605)	BY MANU.	Steel	BLACK 70% KYNAR 500 PVDF (2605)	A-84-3	A-84-7	11	-	-	BY MANU.	FRITTED LAMINATED GLASS. MOTORIZED
100D	DINING	EXTERIOR	BIFOLD	X	-	C-2	20' - 3"	10' - 0"		Aluminium	YES	BLACK 70% KYNAR 500 PVDF (2605)	BLACK 70% KYNAR 500 PVDF (2605)	BY MANU.	Steel	BLACK 70% KYNAR 500 PVDF (2605)	A-84-3	A-84-7	11	-	-	BY MANU.	FRITTED LAMINATED GLASS. MOTORIZED
100E	DINING	EXTERIOR	PANEL	X	-	E	2' - 8"	7' - 9"	0' - 1 3/4"	H.M.	YES	TBD	TBD	4	H.M.	TBD	4	2,3	8	-	-	11	1/4" CLEAR GLASS AT TRANSOM & 1/4" LAMINATED CLEAR GLASS AT DOOR
100F	DINING	EXTERIOR	PANEL	X	-	E	2' - 8"	7' - 9"	0' - 1 3/4"	H.M.	YES	TBD	TBD	4	H.M.	TBD	4	2,3	8	-	-	11	1/4" CLEAR GLASS AT TRANSOM & 1/4" LAMINATED CLEAR GLASS AT DOOR
100H	DINING	EXTERIOR	PANEL	X	-	B	3' - 0"	7' - 3"	0' - 1 3/4"	H.M.	NO	TBD	TBD	2	H.M.	TBD	2	3	8	-	-	11	
101	KITCHEN	EXTERIOR	DOUBLE	X	-	D	6' - 0"	7' - 3"	0' - 1 3/4"	H.M.	NO	TBD	TBD	1	H.M.	TBD	4	3	8	4.75	45 MIN.	1	FIRE RATED DOOR AND FRAME
102	ELECTRIC CLOSET	EXTERIOR	DOUBLE	X	-	A-1	3' - 0"	7' - 3"	0' - 1 3/4"	H.M.	NO	TBD	TBD	1	H.M.	TBD	4	3	8	4.75	45 MIN.	11	FIRE RATED DOOR AND FRAME
103	SPRINKLER ROOM	EXTERIOR	DOUBLE	X	-	A-1	3' - 0"	7' - 3"	0' - 1 3/4"	H.M.	NO	TBD	TBD	1	H.M.	TBD	4	3	8	4.75	45 MIN.	11	FIRE RATED DOOR AND FRAME
105	HALL	RESTROOM 2	PANEL	X	-	B	3' - 0"	7' - 0"	0' - 1 3/4"	H.M.	NO	TBD	TBD	1	H.M.	TBD	5	6	10	-	-	15	
106	HALL	JANITOR CLOSET	PANEL	X	-	B	3' - 0"	7' - 0"	0' - 1 3/4"	H.M.	NO	TBD	TBD	1	H.M.	TBD	5	6	10	-	-	15	
107	HALL	RESTROOM 1	PANEL	X	-	B	3' - 0"	7' - 0"	0' - 1 3/4"	H.M.	NO	TBD	TBD	1	H.M.	TBD	5	6	10	-	-	16	
200	TOWER	EXTERIOR	FLUSH	X	-	G	2' - 0"	5' - 10"	0' - 1 3/4"	H.M.	NO	TBD	TBD	-	H.M.	TBD		7	-	-	-	17	HM DOOR WITH WOOD SIDING CLADDING TO MATCH

NOTE: GC TO CONFIRM DOOR SIZES IN FIELD PRIOR TO ORDERING

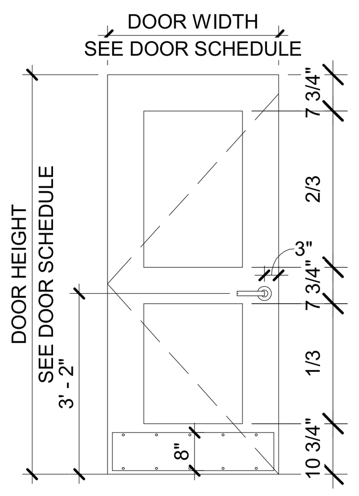

TYPE A-1
DOUBLE PANEL
H.M. DOOR

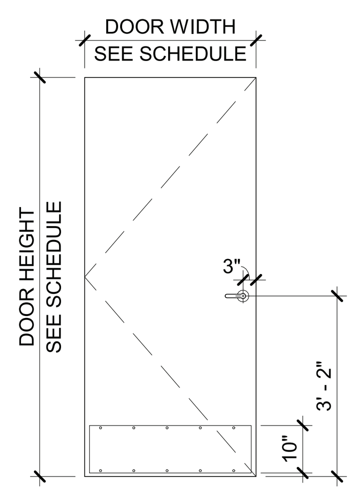

TYPE A-2
FLUSH
H.M. DOOR

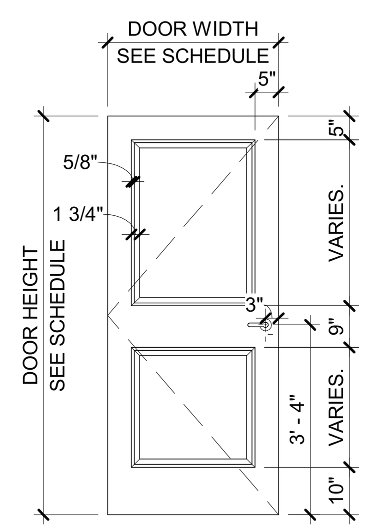

TYPE B
DOUBLE PANEL
WOOD DOOR

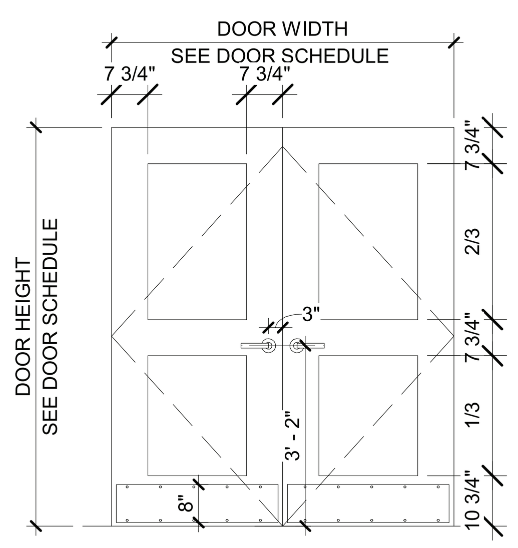

TYPE D
DOUBLE PANEL
DOUBLE H.M. DOOR

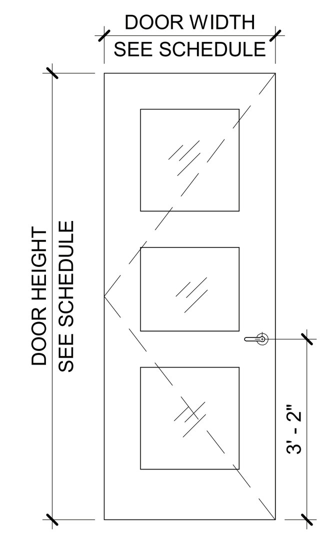

TYPE E
TRIPLE PANEL
INSULATED GLASS DOOR

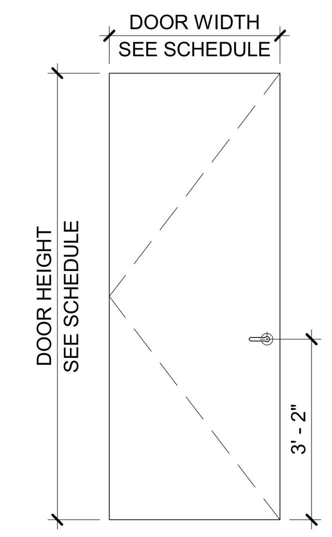

TYPE G
FLUSH
WOOD DOOR

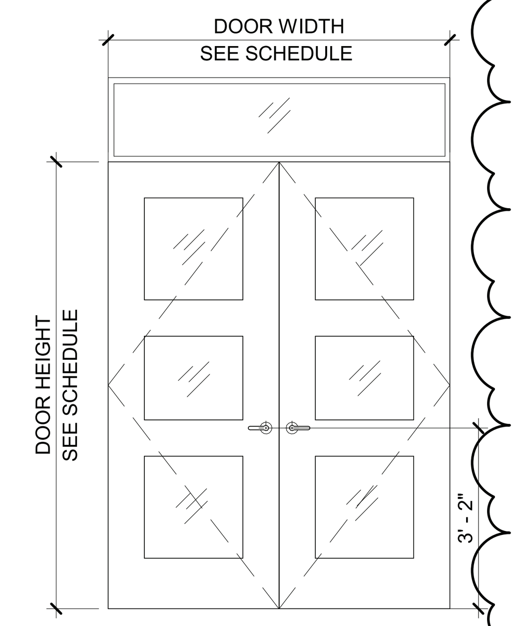

TYPE F
TRIPLE PANEL
DOUBLE INSULATED GLASS DOOR

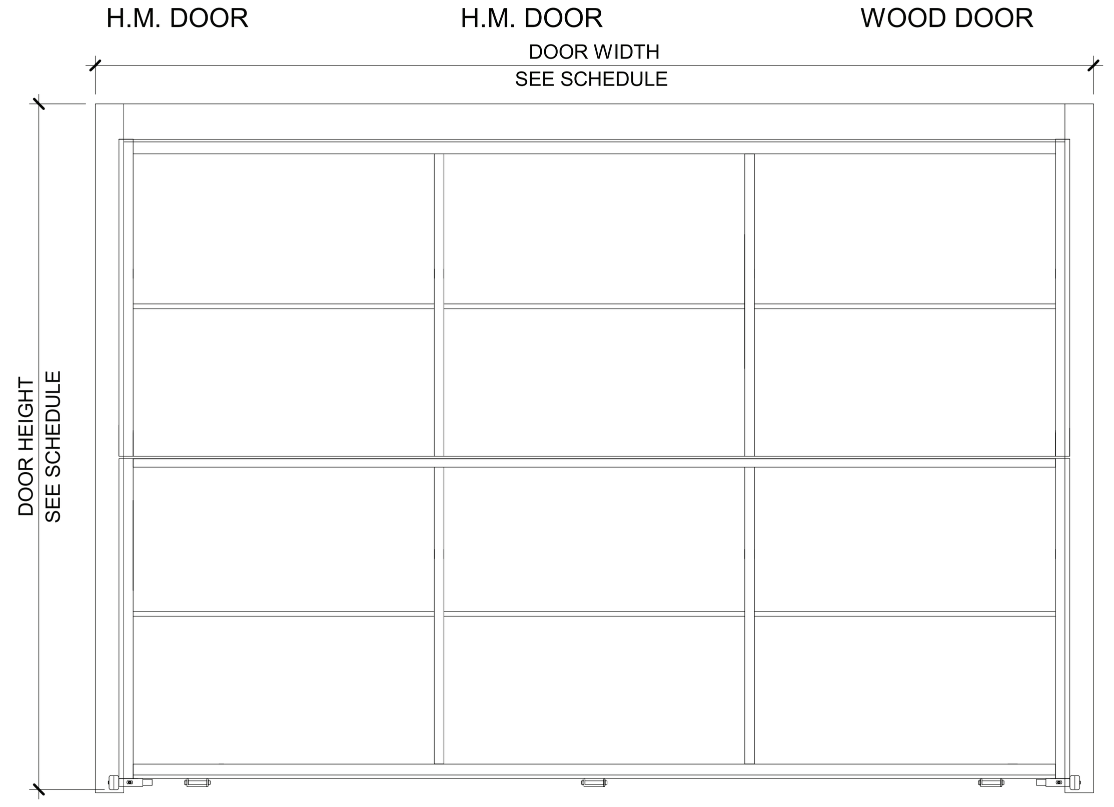

TYPE C-2
BI-FOLD
ROLL-UP DOOR

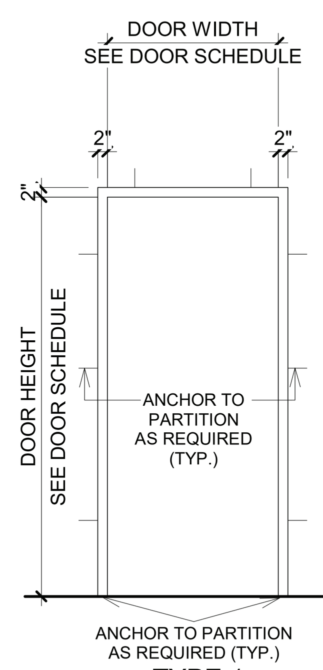

TYPE 1
H.M. FRAME

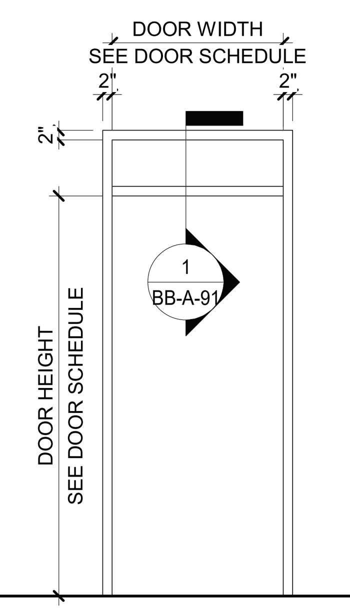

TYPE 2
H.M. FRAME WITH TRANSOM
12 GAUGE

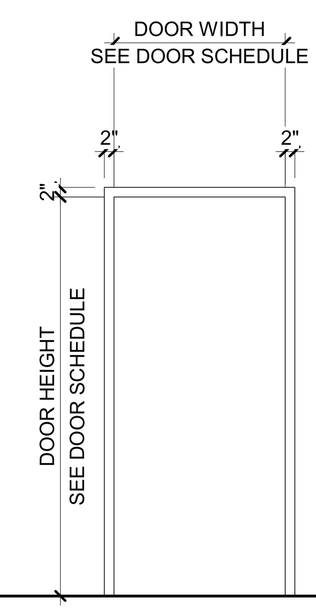

TYPE 3
WOOD FRAME

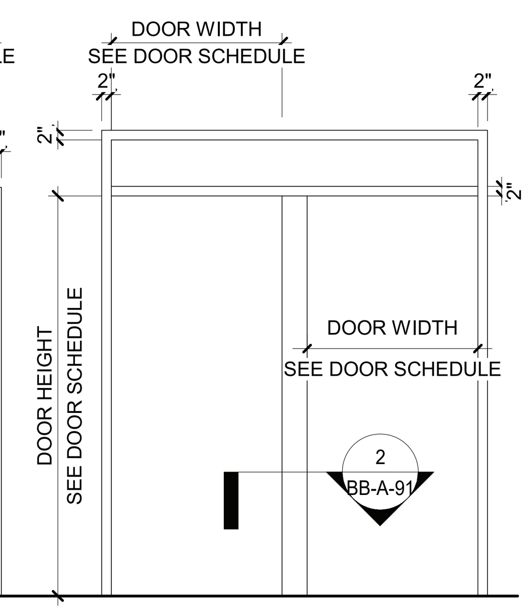

TYPE 4
H.M. FRAME WITH TRANSOM
12 GAUGE

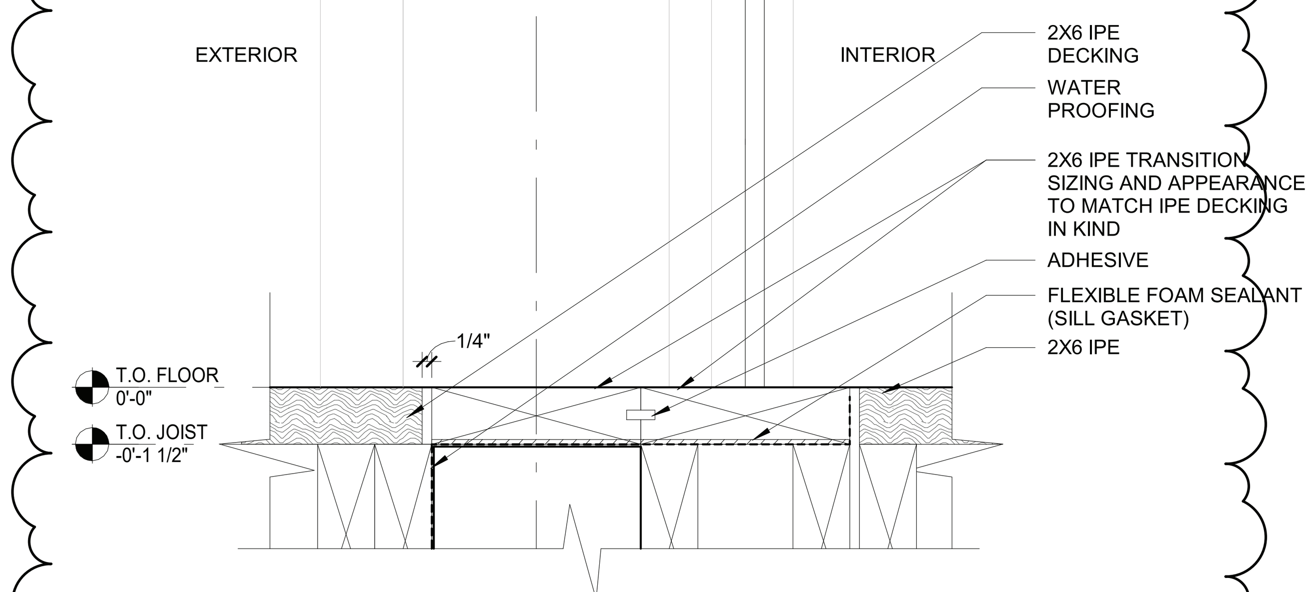

11 IPE TO WOOD PLANK TRANSITION- TR-04
3" = 1'-0"

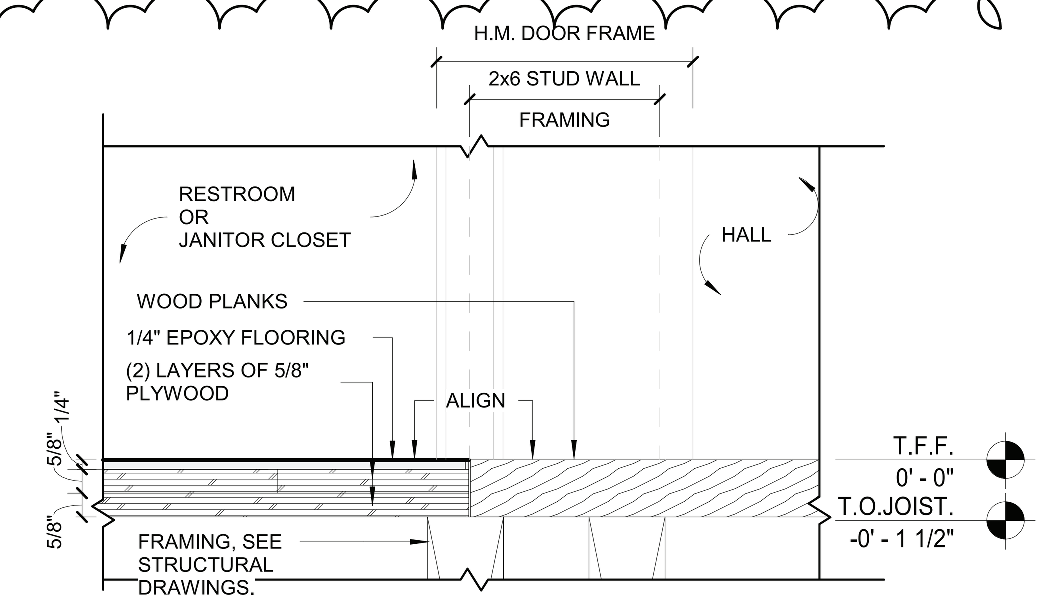

10 WOOD PLANK TO EPOXY DETAIL_ TR-03
3" = 1'-0"

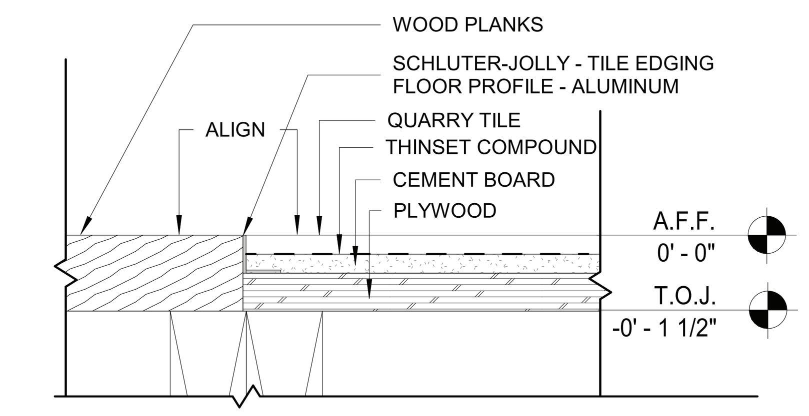

9 WOOD PLANK TO QUARRY TILE DETAIL_ TR-02
3" = 1'-0"

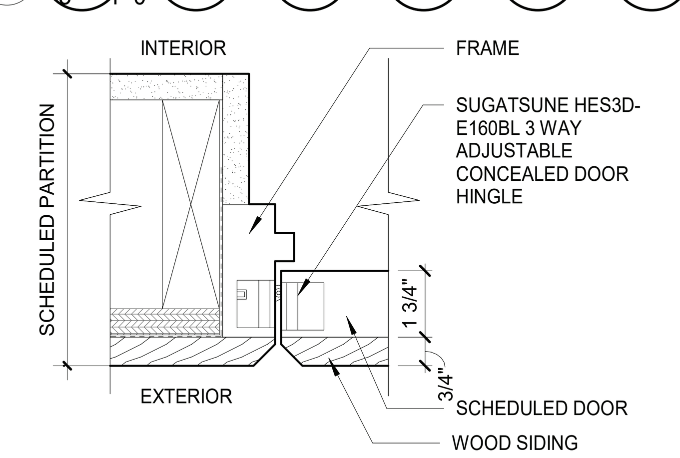

7 CONCEALED HINGES- JAMB DETAIL
3" = 1'-0"

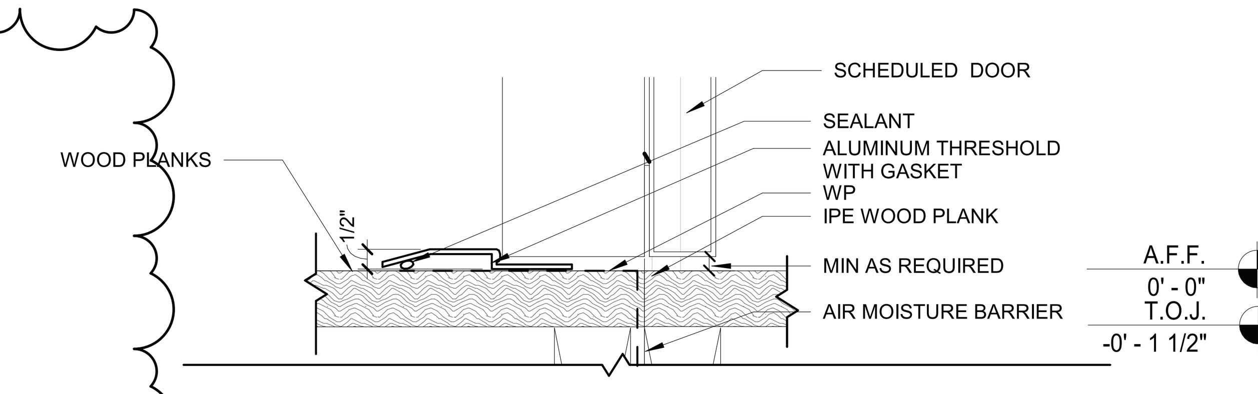

8 EXTERIOR DOOR SILL DETAIL - TR-01
3" = 1'-0"

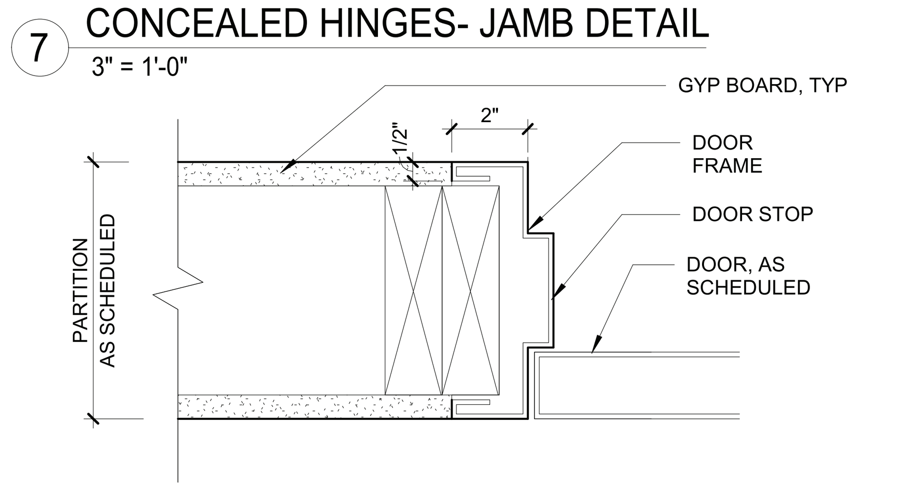

6 H.M. DOOR FRAME-JAMB DETAIL- INTERIOR
3" = 1'-0"

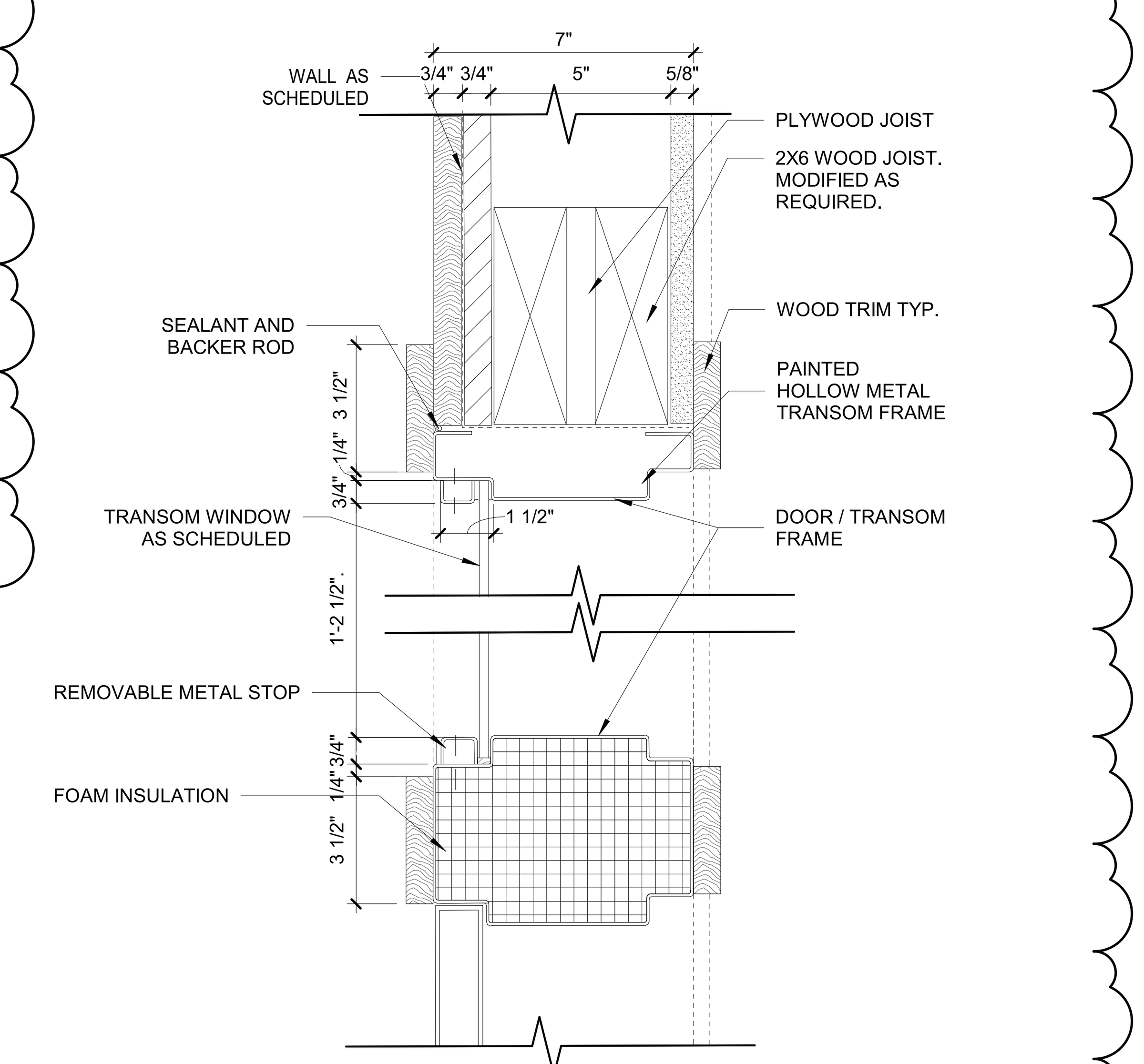

1 HM DOOR AND TRANSOM FRAME DETAIL
3" = 1'-0"

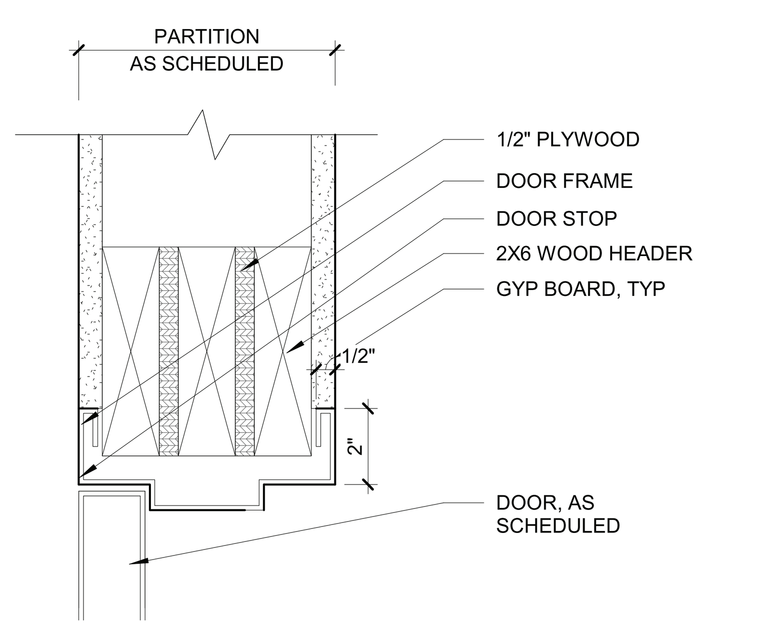

5 H.M. DOOR FRAME-HEAD DETAIL- INTERIOR
3" = 1'-0"

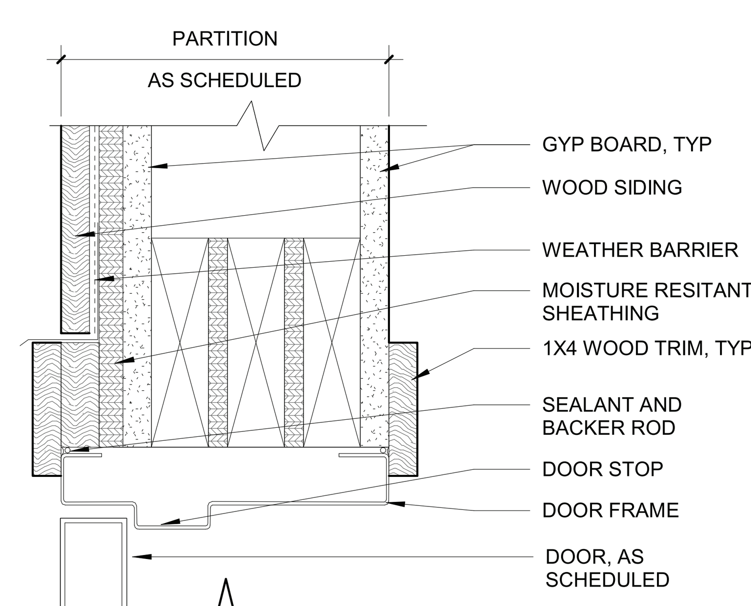

4 HM DOOR HEAD DETAIL - EXTERIOR
3" = 1'-0"

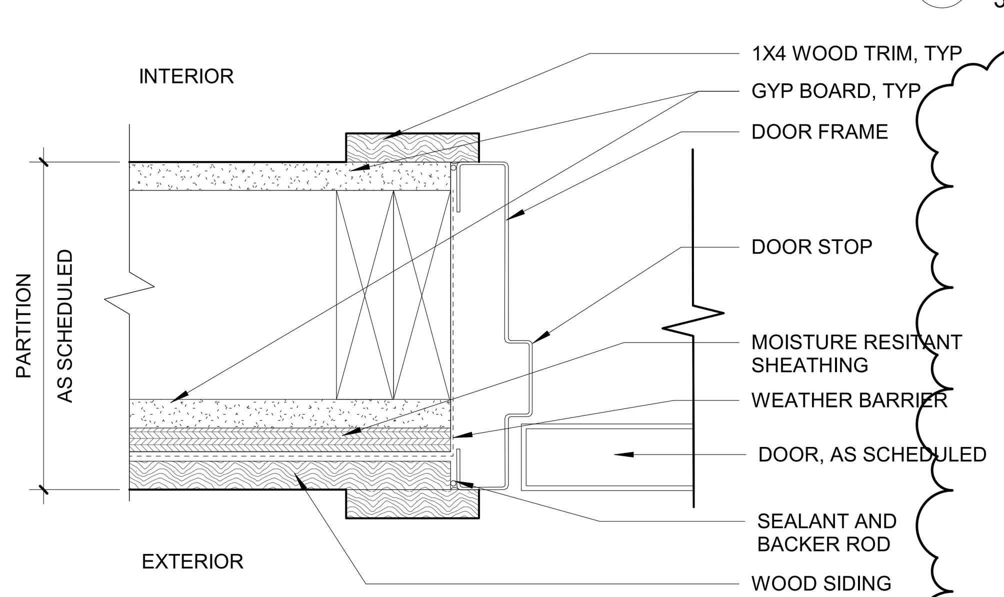

3 HM DOOR JAMB DETAIL- EXTERIOR
3" = 1'-0"

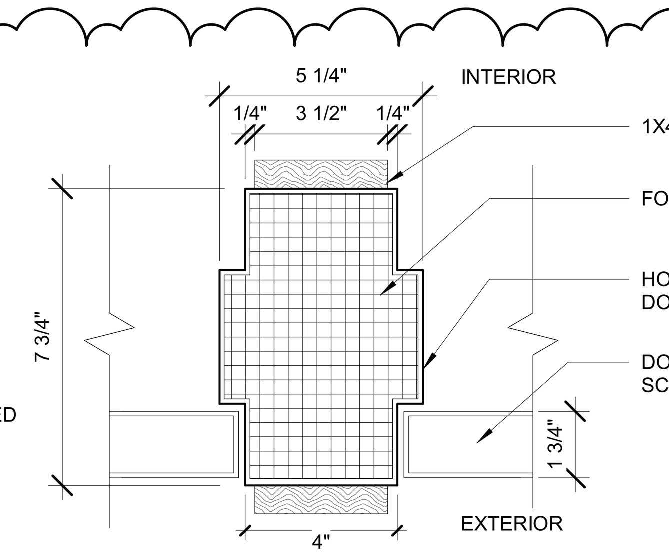

2 H.M. FRAME- TYPE 4 INTERMEDIATE JAMB DETAIL
3" = 1'-0"

9/26/2022 2:07:16 PM

CONSULTANT INFORMATION

The LiRo Group
3 Aerial Way, Syosset, New York 11791
(516) 938-5476 www.liro.com

CONSULTANT SEAL
REGISTERED ARCHITECT ROBERT D YOUNG JR 023200 STATE OF NEW YORK

REVISION NUMBER	DATE	MADE BY	APP'D BY	REVISION
1	09/21/22			BID ADDENDUM # 3

RECORD DRAWING CERTIFICATION
AS BUILT – CHANGES AS NOTED   AS BUILT – NO CHANGES

CONTRACTOR
NAME
SIGNATURE
TITLE DATE

PROJECT COORDINATOR
NAME
SIGNATURE
TITLE DATE

WESTCHESTER COUNTY, NEW YORK
DEPARTMENT OF PUBLIC WORKS AND TRANSPORTATION
DIVISION OF ENGINEERING

INFRASTRUCTURE REHABILITATION - PHASE 3
PLAYLAND PARK, RYE, NEW YORK
NORTH EAST BURGER BARN
DOOR & HARDWARE SCHEDULE

CONTRACT NUMBER: **22-523**
SHEET NUMBER: **BB-A-91**
DWG NO.: 45 of 664
SCALE: **As indicated**
DATE: **08/23/2022**
DPW FILE NUMBER: **1-118-A-794-1**
REV. NO. **1**

NORTH EAST ARCADE AKA BURGER BARN WINDOW SCHEDULE

WINDOW NUMBER	LEVEL	WINDOW TYPE	OPERATION	ROUGH WIDTH	ROUGH HEIGHT	SILL HEIGHT	WINDOW MATERIAL	FINISH	EXTERIOR TRIM	INTERIOR TRIM	REMARK
W-1	GROUND LEVEL	2	AWNING	6' - 0"	1' - 6"	8' - 3 3/4"	ALUMINUM	BLACK 70% KYNAR 500 PVDF (2605)	P-2	P-13	1/4" GLASS
W-2	GROUND LEVEL	2	AWNING	6' - 2 1/2"	2' - 5 1/2"	10' - 3"	ALUMINUM	BLACK 70% KYNAR 500 PVDF (2605)	P-2	P-13	1/4" GLASS
W-3	GROUND LEVEL	2	AWNING	6' - 2 1/2"	2' - 5 1/2"	10' - 3"	ALUMINUM	BLACK 70% KYNAR 500 PVDF (2605)	P-2	P-13	1/4" GLASS
W-4	GROUND LEVEL	2	AWNING	6' - 2 1/2"	2' - 5 1/2"	10' - 3"	ALUMINUM	BLACK 70% KYNAR 500 PVDF (2605)	P-2	P-13	1/4" GLASS
W-5	GROUND LEVEL	2	AWNING	6' - 0"	1' - 6"	8' - 5 1/2"	ALUMINUM	BLACK 70% KYNAR 500 PVDF (2605)	P-2	P-13	1/4" GLASS
W-6	T.O. TOWER FLOOR	1	CASEMENT	1' - 4"	4' - 0"	4' - 7 1/2"	ALUMINUM	BLACK 70% KYNAR 500 PVDF (2605)	P-2	P-13	BEDHEIM EXTERIOR SPG - SENTRY GLASS PLUS. COLOR: FLAME RED
W-7	T.O. TOWER FLOOR	1	CASEMENT	1' - 4"	4' - 0"	4' - 7 1/2"	ALUMINUM	BLACK 70% KYNAR 500 PVDF (2605)	P-2	P-13	BEDHEIM EXTERIOR SPG - SENTRY GLASS PLUS. COLOR: FOREST GREEN
W-8	T.O. TOWER FLOOR	1	CASEMENT	1' - 4"	4' - 0"	4' - 7 1/2"	ALUMINUM	BLACK 70% KYNAR 500 PVDF (2605)	P-2	P-13	BEDHEIM EXTERIOR SPG - SENTRY GLASS PLUS. COLOR: HONEY
W-9	T.O. TOWER FLOOR	1	CASEMENT	1' - 4"	4' - 0"	4' - 6"	ALUMINUM	BLACK 70% KYNAR 500 PVDF (2605)	P-2	P-13	BEDHEIM EXTERIOR SPG - SENTRY GLASS PLUS. COLOR: FLAME RED
W-10	T.O. TOWER FLOOR	1	CASEMENT	1' - 4"	4' - 0"	4' - 6"	ALUMINUM	BLACK 70% KYNAR 500 PVDF (2605)	P-2	P-13	BEDHEIM EXTERIOR SPG - SENTRY GLASS PLUS. COLOR: FOREST GREEN
W-11	T.O. TOWER FLOOR	1	CASEMENT	1' - 4"	4' - 0"	4' - 6"	ALUMINUM	BLACK 70% KYNAR 500 PVDF (2605)	P-2	P-13	BEDHEIM EXTERIOR SPG - SENTRY GLASS PLUS. COLOR: HONEY
W-12	T.O. TOWER FLOOR	1	CASEMENT	1' - 4"	1' - 10"	6' - 8"	ALUMINUM	BLACK 70% KYNAR 500 PVDF (2605)	P-2	P-13	BEDHEIM EXTERIOR SPG - SENTRY GLASS PLUS. COLOR: FLAME RED
W-13	T.O. TOWER FLOOR	1	CASEMENT	1' - 4"	1' - 10"	6' - 8"	ALUMINUM	BLACK 70% KYNAR 500 PVDF (2605)	P-2	P-13	BEDHEIM EXTERIOR SPG - SENTRY GLASS PLUS. COLOR: FOREST GREEN
W-14	T.O. TOWER FLOOR	1	CASEMENT	1' - 4"	1' - 10"	6' - 8"	ALUMINUM	BLACK 70% KYNAR 500 PVDF (2605)	P-2	P-13	BEDHEIM EXTERIOR SPG - SENTRY GLASS PLUS. COLOR: HONEY
W-15	T.O. TOWER FLOOR	1	CASEMENT	1' - 4"	4' - 0"	4' - 6"	ALUMINUM	BLACK 70% KYNAR 500 PVDF (2605)	P-2	P-13	BEDHEIM EXTERIOR SPG - SENTRY GLASS PLUS. COLOR: FLAME RED
W-16	T.O. TOWER FLOOR	1	CASEMENT	1' - 4"	4' - 0"	4' - 6"	ALUMINUM	BLACK 70% KYNAR 500 PVDF (2605)	P-2	P-13	BEDHEIM EXTERIOR SPG - SENTRY GLASS PLUS. COLOR: FOREST GREEN
W-17	T.O. TOWER FLOOR	1	CASEMENT	1' - 4"	4' - 0"	4' - 6"	ALUMINUM	BLACK 70% KYNAR 500 PVDF (2605)	P-2	P-13	BEDHEIM EXTERIOR SPG - SENTRY GLASS PLUS. COLOR: HONEY
W-18	GROUND LEVEL	3	VERTICAL BIFOLD	2' - 0"	6' - 10"	2' - 8"	ALUMINUM	BLACK 70% KYNAR 500 PVDF (2605)	P-2	P-13	FRITTED LAMINATED GLASS. MOTORIZED
W-19	GROUND LEVEL	3	VERTICAL BIFOLD	6' - 0"	6' - 10"	2' - 8"	ALUMINUM	BLACK 70% KYNAR 500 PVDF (2605)	P-2	P-13	FRITTED LAMINATED GLASS. MOTORIZED
W-20	GROUND LEVEL	3	VERTICAL BIFOLD	6' - 0"	6' - 10"	2' - 8"	ALUMINUM	BLACK 70% KYNAR 500 PVDF (2605)	P-2	P-13	FRITTED LAMINATED GLASS. MOTORIZED
W-21	GROUND LEVEL	3	VERTICAL BIFOLD	6' - 0"	6' - 10"	2' - 8"	ALUMINUM	BLACK 70% KYNAR 500 PVDF (2605)	P-2	P-13	FRITTED LAMINATED GLASS. MOTORIZED

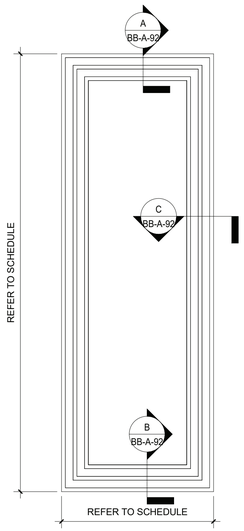

1 WINDOW ELEVATION TYPE 1 -CASEMENT
1 1/2" = 1'-0"

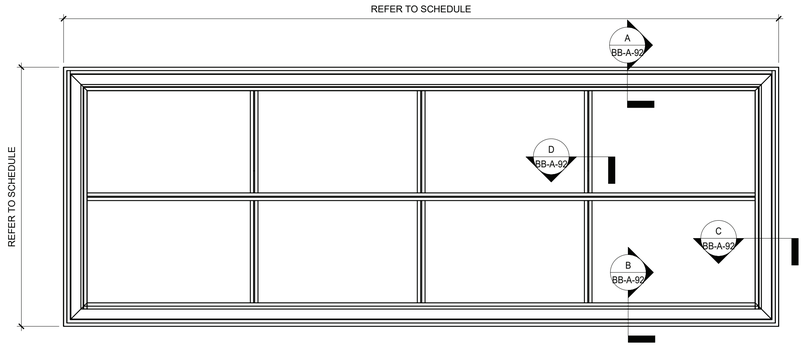

2 WINDOW ELEVATION TYPE 2
1 1/2" = 1'-0"

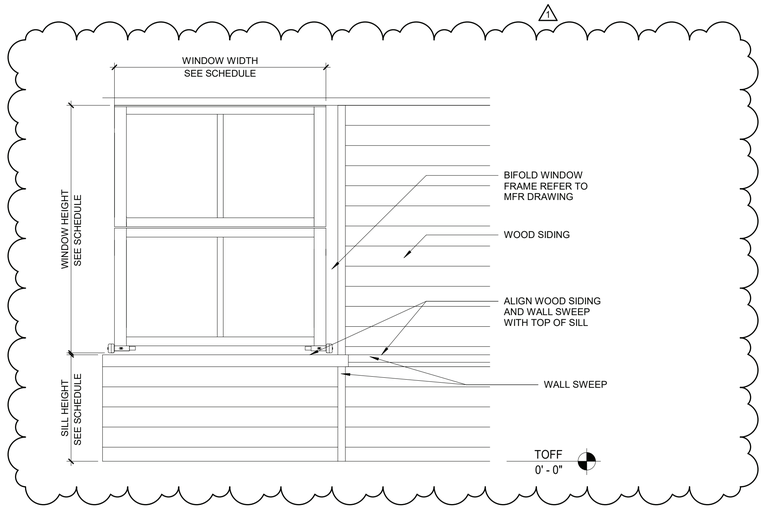

3 BI-FOLD WINDOW ELEVATION TYPE 3
1/2" = 1'-0"

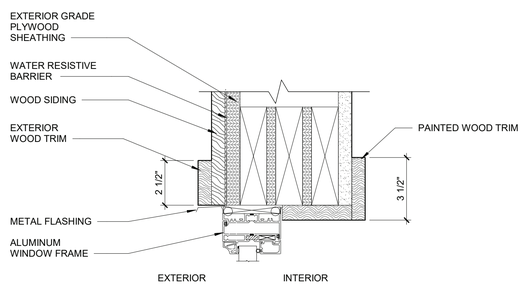

A WINDOW HEAD - DETAIL
3" = 1'-0"

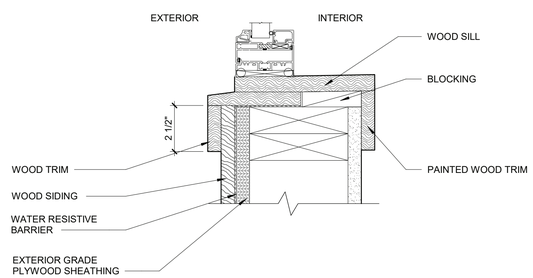

B WINDOW SILL - DETAIL
3" = 1'-0"

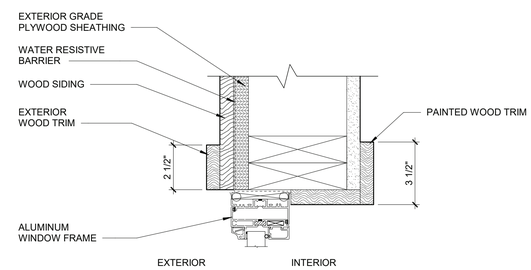

C WINDOW JAMB - DETAIL
3" = 1'-0"

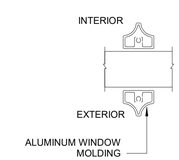

D WINDOW MULLION - DETAIL
6" = 1'-0"

9/26/2022 2:07:17 PM

CONSULTANT INFORMATION
The LiRo Group
3 Aerial Way, Syosset, New York 11791
(516) 938-5476 www.liro.com

CONSULTANT SEAL
REGISTERED ARCHITECT ROBERT D. TOWNSEND 023280 STATE OF NEW YORK

REVISION NUMBER	DATE	MADE BY	APP'D BY	REVISION
1	09/21/22			BID ADDENDUM # 3

RECORD DRAWING CERTIFICATION
☐ AS BUILT – CHANGES AS NOTED ☐ AS BUILT – NO CHANGES

CONTRACTOR
NAME
SIGNATURE
TITLE DATE

PROJECT COORDINATOR
NAME
SIGNATURE
TITLE DATE

WESTCHESTER COUNTY, NEW YORK
DEPARTMENT OF PUBLIC WORKS AND TRANSPORTATION
DIVISION OF ENGINEERING

INFRASTRUCTURE REHABILITATION - PHASE 3
PLAYLAND PARK, RYE, NEW YORK
NORTH EAST BURGER BARN
WINDOW SCHEDULE AND DETAILS

CONTRACT NUMBER **22-523**
SHEET NUMBER **BB-A-92**
DWG NO.: 46 of 664
SCALE: **As indicated**
DATE: **08/23/2022**
DPW FILE NUMBER **1-118-A-795-1**
REV. NO. **1**

GENERAL PARTITION NOTES:

1. SEE SPECIFICATIONS FOR GYPSUM BOARD AND OTHER WALL BOARD TYPES, APPLICATIONS AND THICKNESS UNLESS NOTED OTHERWISE ON THE DRAWINGS.
2. REFER TO THE LATEST EDITION OF UNDERWRITERS LABORATORIES INC. FIRE RESISTANCE DIRECTORY FOR ADDITIONAL REQUIREMENTS ON UL RATED ASSEMBLIES AS NOTED IN THE PARTITION DESCRIPTIONS. WHERE UL# IS NOTED USE UL IN LIEU OF CHART ABOVE.
3. SOUND RATED PARTITIONS TYPES: WALL TYPE DESIGNATIONS ARE SOUND RATED AND REQUIRE SAFB (SOUND ATTENUATION FIRE BATT/BLANKET INSULATION) .

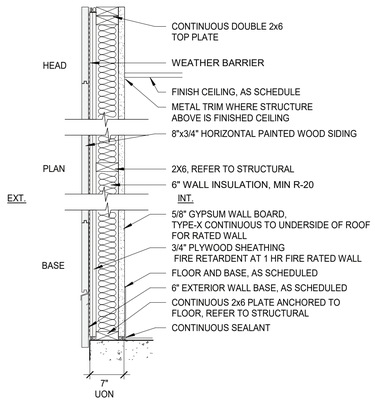

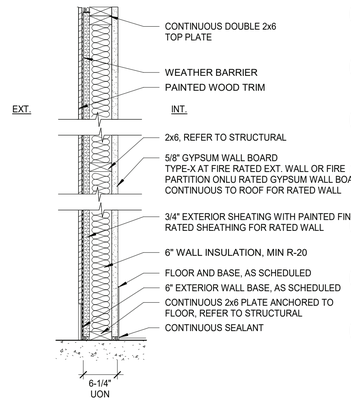

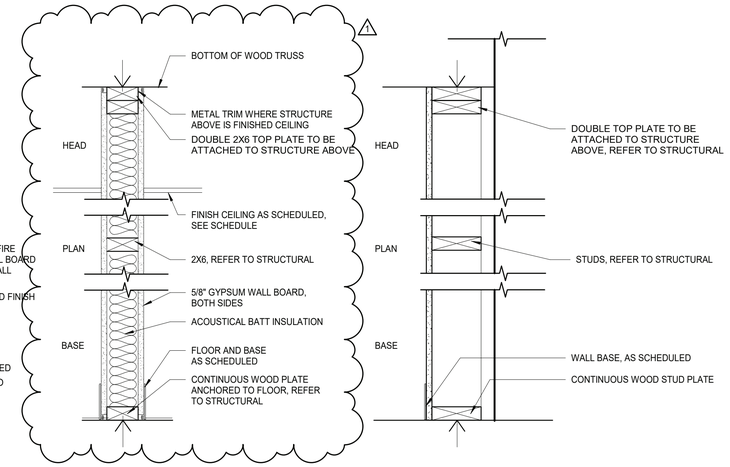

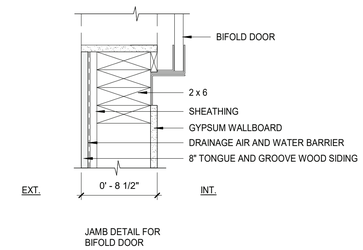

JAMB DETAIL FOR BIFOLD DOOR

1 EXTERIOR WALL - NOT RATED
1 LAYER 5/8" IMPACT & MOLD-RESISTANT GYP. BD. UP TO 8' A.F.F. AND 5/8" MOLD-RESISTANT GYP. BD. TO CEILING ON THE INTERIOR SIDE

1A EXTERIOR WALL - 1 HR RATED - BXUV.V346-ANSI/UL 263
5/8" GWB-X , M-BLOC – MOISTURE RESISTANT, 2X6 WOOD STUD, 5/8" GWB-X, M-BLOC , ½" FIRE-RETARDANT SHEATHING, 1/8" DRAINAGE TYPE WEATHER BARRIER ,WOOD SIDING

1B EXTERIOR WALL - NOT RATED
1 LAYER 3/4" EXTERIOR PAINTED FINISH PLYWOOD
1 LAYER 5/8" GYPSUM BOARD FLOOR TO CEILING

1C EXTERIOR WALL - 1 HR RATED - BXUV.V346-ANSI/UL 263
5/8" GWB-X , M-BLOC – MOISTURE RESISTANT, 2X6 WOOD STUD, 5/8" GWB-X, M-BLOC , ½" FIRE-RETARDANT SHEATHING, 1/8" DRAINAGE TYPE WEATHER BARRIER ,WOOD TRIM

2 INTERIOR PARTITION - NO RATING
6" WOOD STUDS
1 LAYER 5/8" GYP. BD. EACH SIDE

2A INTERIOR PARTITION - NO RATING
6" WOOD STUDS
1 LAYER 5/8" GYP. BD. EACH SIDE. WITH ACOUSTICAL BATT INSUALTION BETWEEN STUDS.

3 CHASE WALL
6" WOOD STUDS
1 LAYER 5/8" GYP. BD.

2 NO RATING
1 LAYER 5/8" IMPACT & MOLD-RESISTANT GYP. BD. UPTO 8' A.F.F. AND 5/8" MOLD-RESISTANT GYP. BD. TO CEILING ON THE INTERIOR SIDE

6 PARTITIONS AND EXTERIOR WALL TYPES

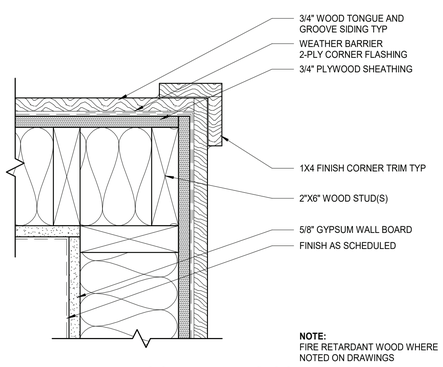

1 TYP WOOD FRAMING CORNER DETAIL
3" = 1'-0"

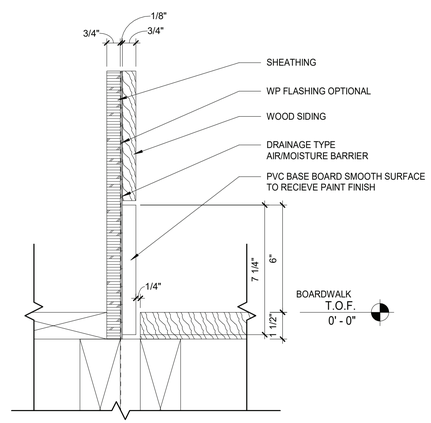

2 EXTERIOR BASE BOARD DETAIL
3" = 1'-0"

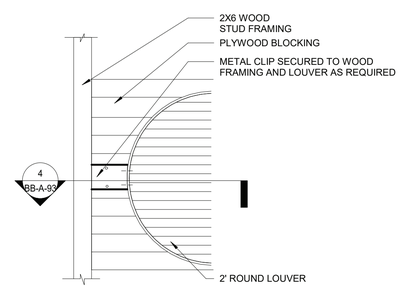

3 TYPICAL ROUND LOUVER ELEVATION DETAIL
1 1/2" = 1'-0"

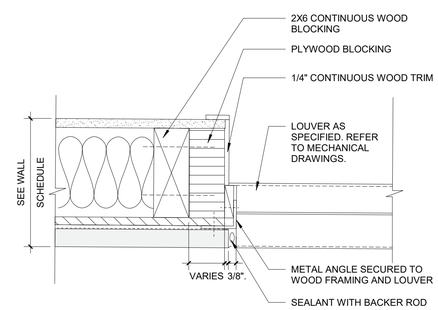

4 TYPICAL ROUND LOUVER JAMB DETAIL
6" = 1'-0"

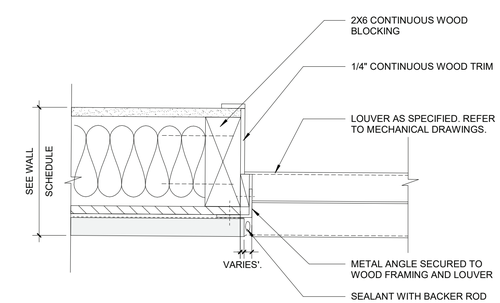

5 TYPICAL NON-ROUND LOUVER JAMB DETAIL
6" = 1'-0"

9/26/2022 2:07:18 PM

CONSULTANT INFORMATION
The LiRo Group
3 Aerial Way, Syosset, New York 11791
(516) 938-5476 www.liro.com

CONSULTANT SEAL
REGISTERED ARCHITECT ROBERT D. YOUNG JR. 023280 STATE OF NEW YORK

REVISION NUMBER	DATE	MADE BY	APP'D BY	REVISION
1	09/21/22			BID ADDENDUM # 3

RECORD DRAWING CERTIFICATION
☐ AS BUILT – CHANGES AS NOTED ☐ AS BUILT – NO CHANGES

CONTRACTOR
NAME
SIGNATURE
TITLE DATE

PROJECT COORDINATOR
NAME
SIGNATURE
TITLE DATE

WESTCHESTER COUNTY, NEW YORK
DEPARTMENT OF PUBLIC WORKS AND TRANSPORTATION
DIVISION OF ENGINEERING

INFRASTRUCTURE REHABILITATION - PHASE 3
PLAYLAND PARK, RYE, NEW YORK
NORTH EAST BURGER BARN
PARTITION TYPES & WALL DETAILS

CONTRACT NUMBER	22-523
SHEET NUMBER	BB-A-93
DWG NO.:	47 of 664
SCALE:	As indicated
DATE:	08/23/2022
DPW FILE NUMBER	1-118-A-796-1
REV. NO.	1

STRUCTURAL NOTES

GENERAL

G-1 THESE NOTES ARE GENERAL AND SUPPLEMENTAL TO THE SPECIFICATIONS. THESE NOTES APPLY TO THE ENTIRE PROJECT UNLESS MODIFIED OR NOTED OTHERWISE IN THE CONTRACT DOCUMENTS.

G-2 STANDARD DETAILS, SHOWN ON DRAWINGS AR-S-12 THRU AR-S-14 SHALL BE USED WHEN REFERRED TO OR WHEN NO MORE RESTRICTIVE OR DIFFERENT DETAILS ARE SHOWN ON THE DRAWINGS.

G-3 DESIGN WAS IN ACCORDANCE WITH AND CONSTRUCTION SHALL COMPLY WITH THE PROVISIONS OF THE NEW YORK STATE BUILDING CODE (2020 NYSBC). THE DESIGN LOADS AND OTHER DESIGN VALUES GIVEN BELOW WERE USED FOR DESIGN OF STRUCTURES UON ON THE DRAWINGS.

G-4 DESIGN LOADS FOR NEW ELEMENTS:
LIVE LOADS:
NORTHEAST BURGER BARN:
FLOOR.: 100 PSF
SNOW LOADS:
GROUND SNOW LOAD, Pg = 30 PSF
FLAT ROOF SNOW LOAD = 21 PSF
SNOW EXPOSURE FACTOR, Ce = 0.9
SNOW LOAD IMPORTANCE FACTOR, I = 1.1
THERMAL FACTOR, Ct = 1.0

WIND DESIGN:
BASIC WIND SPEED, V = 126 MPH
BUILDING CATEGORY III
WIND EXPOSURE CATEGORY B
INTERNAL PRESSURE COEFFICIENT, GCpi = ±0.18

SEISMIC DESIGN:
SPECTRAL RESPONSE COEFFICIENTS:
SDS = 0.296
SD1 = 0.096
SITE CLASS E
SEISMIC DESIGN CATEGORY B
SEISMIC IMPORTANCE FACTOR I = 1.25
BASIC SEISMIC FORCE RESISTING SYSTEM IS AS SHOWN ON DRAWINGS
DESIGN BASE SHEAR, V = AS SHOWN ON DRAWINGS
ANALYSIS PROCEDURE IS EQUIVALENT LATERAL FORCE METHOD, UON.
RESPONSE MODIFICATION FACTOR, R:
NORTHEAST BURGER BARN: R = 7

LOADS INDICATED ABOVE REFLECT DESIGN LOADS FOR ANY NEW OR REHABILITATED STRUCTURAL ELEMENTS. THEY SHOULD NOT BE TAKEN AS DESIGN LOADS FOR THE STRUCTURE AS A WHOLE.

G-5 ALL DIMENSIONS INDICATED (*) ARE TO BE VERIFIED EITHER BY FIELD MEASUREMENTS FOR EXISTING STRUCTURES OR BY SHOP DRAWINGS FOR EQUIPMENT FURNISHED. STRUCTURAL DIMENSIONS NOT SHOWN BUT CONTROLLED BY OR RELATED TO EQUIPMENT SHALL BE VERIFIED BY THE CONTRACTOR WITH THE MANUFACTURER PRIOR TO CONSTRUCTION.

G-6 STRUCTURAL DRAWINGS SHALL BE USED IN COORDINATION WITH THE DRAWINGS OF ALL OTHER DISCIPLINES AND MANUFACTURER'S SHOP DRAWINGS.

G-7 IF A CONFLICT IS FOUND BETWEEN DIFFERENT PORTIONS OF THE CONTRACT DOCUMENTS, THE CONTRACTOR SHALL NOTIFY THE ENGINEER IMMEDIATELY. CONTINUED CONSTRUCTION OF THE AREA IN CONFLICT SHALL BE AT THE CONTRACTOR'S OWN RISK UNTIL THE CONFLICT IS RESOLVED BY THE ENGINEER.

G-8 WHENEVER ONE MEMBER IS FASTENED TO ANOTHER WITH FASTENINGS (BOLTS, WELDS, ETC.) SET AT A UNIFORM SPACING, THERE SHALL BE A MINIMUM OF TWO FASTENINGS PER PIECE CONNECTED AND THE FIRST AND LAST FASTENINGS SHALL BE LOCATED NOT TO EXCEED 0.25 OF FASTENER SPACING FROM EACH END.

G-9 STRUCTURES HAVE BEEN DESIGNED FOR OPERATIONAL LOADS ON THE COMPLETED STRUCTURE. DURING CONSTRUCTION, THE STRUCTURES SHALL BE PROTECTED BY BRACING AND TEMPORARY SUPPORTS WHEREVER EXCESSIVE CONSTRUCTION LOADS MAY OCCUR. OVERSTRESSING OF ANY STRUCTURAL ELEMENT IS PROHIBITED.

G-10 NO BACKFILL SHALL BE PLACED AGAINST ANY WALL UNLESS ALL SUPPORTING ELEMENTS OF THE STRUCTURE HAVE BEEN CONSTRUCTED AND HAVE REACHED THE SPECIFIED MINIMUM CONCRETE STRENGTH.

G-11 THE CONTRACTOR IS RESPONSIBLE FOR VERIFYING ALL EXISTING INFORMATION IN THE FIELD AS REQUIRED FOR NEW WORK.

FOUNDATIONS

F-1 DESIGN ASSUMPTIONS:
A) ALLOWABLE BEARING PRESSURE: 1. SOUND ROCK – 8 TSF, 2. OVERBURDEN – 1 TSF.

B) GROUNDWATER: EXISTING GROUNDWATER ELEVATIONS VARY ACROSS SITE.

F-2 GRAVITY UNDER DRAINS SHALL BE PROVIDED TO PERMANENTLY LOWER GROUNDWATER.

F-3 CONCRETE GENERAL NOTES APPLY TO FOUNDATIONS.

F-4 MINIMUM DEPTH FROM ADJACENT FINISHED GRADE TO BOTTOM OF FOUNDATION, 4'-0"

F-5 FOUNDATIONS BEARING ON ROCK SHALL BE CONSTRUCTED SUCH THAT ROCK SURFACE IS LEVEL, UNLESS APPROVED BY ENGINEER.

F-6 COMPACTED SELECT GRANULAR FILL 12 INCHES THICK MINIMUM, SHALL BE PLACED BELOW ALL CONCRETE FOUNDATIONS UNLESS DIRECTLY BEARING ON SOUND ROCK.

STRUCTURAL METALS

S-1 DETAIL, FABRICATE, AND ERECT STRUCTURAL STEEL IN ACCORDANCE WITH AISC SPECIFICATION FOR STRUCTURAL STEEL BUILDINGS, ALLOWABLE STRESS DESIGN AND LRFD DESIGN (LRFD MANUAL OF STEEL CONSTRUCTION, CURRENT EDITION).

S-2 STEEL MATERIAL:
A) STRUCTURAL TUBING, ASTM A 500, GRADE B.
B) STRUCTURAL PIPE, ASTM A 53, GRADE B.
C) PLATES AND ANGLES, ASTM A 36 UNO.
D) STRUCTURAL W SHAPES, ASTM A 992 (MIN. YIELD STRENGTH OF 50 KSI).
E) STRUCTURAL S, M, & H SHAPES ASTM A572 GRADE 50.

S-3 PROVIDE MIN 3/4" DIAMETER ASTM A 325 HIGH STRENGTH BOLTS WITH FULLY TIGHTENED TYPE N CONNECTIONS FOR STRUCTURAL STEEL UON.

S-4 PROVIDE TYPICAL STEEL BEAM CONNECTIONS FOR A CAPACITY NOT LESS THAN THE TOTAL UNIFORM LOAD CAPACITY TABULATED IN THE AISC TABLES FOR ALLOWABLE LOADS OF BEAMS UNLESS NOTED OTHERWISE.

S-5 CAST IN PLACE ANCHOR BOLTS FOR STRUCTURAL STEEL SHALL CONFORM TO ASTM A307 UON.

S-6 DO NOT PAINT STEEL SURFACES WHICH ARE TO BE WELDED OR ARE TO BE ENCASED IN CONCRETE.

S-7 STAINLESS STEEL SHALL BE TYPE 316 FOR BOLTED CONSTRUCTIONS AND 316L FOR WELDED CONSTRUCTIONS.

S-8 ALUMINUM SHALL BE ALLOY 6061-T6.

S-9 ALL GROOVE AND BUTT WELDS SHALL BE FULL PENETRATION.

S-10 FILLET WELD SIZES SHALL BE THE MINIMUM SIZE REQUIRED BY AISC CODE FOR PLATE SIZES TO BE CONNECTED AND SHALL BE APPLIED TO THE ENTIRE JOINT CONTACT LENGTH, BUT NOT LESS THAN 3/16".

S-11 DETAIL, FABRICATE, AND ERECT ALUMINUM IN ACCORDANCE WITH THE ALUMINUM ASSOCIATION CONSTRUCTION MANUAL CURRENT EDITION.

S-12 ALL BOLTS, ANCHOR BOLTS, AND CONCRETE ANCHORS CONNECTING ALUMINUM SHALL BE TYPE 316 STAINLESS STEEL UON.

S-13 ALUMINUM SHALL BE ISOLATED FROM CONTACT WITH CONCRETE OR DISSIMILAR METALS.

EXCAVATION

E-1 CONTRACTOR SHALL PERFORM ALL EXCAVATION IN ACCORDANCE WITH STATE, LOCAL AND FEDERAL REQUIREMENTS INCLUDING OSHA BRACING AND EXCAVATION REQUIREMENTS.

E-2 TEMPORARY SHEETING AND BRACING IS NOT SHOWN ON CONTRACT DRAWINGS. ALL EXCAVATIONS WITH A POTENTIAL FOR CAVE-IN SHALL BE PROVIDED WITH EXCAVATION PROTECTION SYSTEMS IN ACCORDANCE WITH OSHA 1926. SLOPING AND BENCHING WHICH WILL ENCROACH ON AREAS SLATED TO REMAIN ACCESSIBLE OR THAT MAY ENCROACH ON EXISTING FOOTINGS AND STRUCTURES SHALL NOT BE PERMITTED.

E-3 CONTRACTOR SHALL ENGAGE THE SERVICES OF A LICENSED PROFESSIONAL ENGINEER REGISTERED IN THE STATE OF NEW YORK TO DESIGN ALL TEMPORARY SHEETING AND BRACING AND RELATED APPURTENANCES. CONTRACTOR TO SUBMIT SUCH PLANS TO ENGINEER FOR INFORMATION.

E-4 CONTRACTOR SHALL BE RESPONSIBLE FOR DEWATERING OF OPEN EXCAVATIONS.

E-5 ALL EXCAVATED MATERIALS SHALL BE REMOVED FROM SITE TO A FACILITY AS REQUIRED BY STATE, LOCAL FEDERAL LAW.

TIMBER

T-1 ALL WOOD FRAMING MEMBERS INCLUDING, BUT NOT LIMITED TO, WALL STUDS AND JOISTS, ARE INTENDED TO ACT AS A SYSTEM AS DETAILED IN THE STRUCTURAL DRAWINGS AND ONCE CONSTRUCTION IS COMPLETE. IT IS THE RESPONSIBILITY OF THE CONTRACTOR TO ENSURE SAFETY AND STABILITY OF WOOD FRAMING SYSTEMS (I.E. TEMPORARY BRACING IF REQUIRED) DURING CONSRTUCTION AS A RESULT OF CONSTRUCTION METHODS AND SEQUENCES.

T-2 ALL TIMBER BELOW FLOOR DECKING SHALL BE PRESSURE-TREATED SOUTHERN PINE LUMBER.

T-3 STORAGE OF ALL LUMBER AND TIMBER ON SITE SHALL BE KEPT OFF GROUND, UNDER COVER AND PROTECTED FROM DAMAGE.

T-4 ALL DIMENSIONAL LUMBER SHALL BE CERTIFIED BY THE SUPPLIER IN WRITING TO BE KILN DRIED.

T-5 STRUCTURE SHALL NOT BE ENCLOSED UNLESS LUMBER MOISTURE CONTENT HAS BEEN VERIFIED TO BE AT OR BELOW 15%. ANY SIGNS OF MOLD SHALL BE REMOVED AND TREATED IN ACCORDANCE WITH PROJECT SPECIFICATIONS OR INDUSTRY STANDARDS.

T-6 ALL LUMBER IN CONTACT WITH THE GROUND OR CONCRETE SHALL BE PRESSURE TREATED.

T-7 FASTENERS FOR PRESERVATIVE TREATED AND FIRE RETARDANT TREATED WOOD SHALL BE OF HOT DIPPED ZINC COATED GALVANIZED STEEL OR STAINLESS STEEL AND SHALL FOLLOW CURRENT SIMPSON GUIDELINES BASED ON WEATHER EXPOSURE. WHERE STAINLESS STEEL CONNECTORS OR HOT DIPPED GALVANIZED CONNECTORS ARE SPECIFIED IN THE DRAWINGS, STAINLESS STEEL OR HOT DIPPED GALVANIZED FASTENERS SHALL BE USED TO MATCH CONNECTOR TYPE.

T-8 ALL PLATES AND LEDGERS SHALL BE FASTENED WITH A MINIMUM (3) ANCHORS PER PIECE UNLESS NOTED OTHERWISE.

T-9 ALL METAL HARDWARE AND FRAMING ACCESSORIES SHALL BE MANUFACTURED BY SIMPSON STRONG-TIE COMPANY. ALL ITEMS SHALL BE INSTALLED PER THE SIMPSON'S INSTALLATION REQUIREMENTS. ALL NAIL HOLES SHALL BE FILLED WITH THE RECOMMENDED FASTENER UNLESS NOTED OTHERWISE ON THE DRAWING.

T-10 HOLES FOR BOLTS SHALL BE DRILLED WITH A BIT OF THE SAME NOMIMAL DIAMETER AS THE BOLT + 1/16". LEAD HOLES FOR LAG SCREWS SHALL BE BORED PER NDS 11.1.3.

T-11 ALL BOLTS, CARRIAGE BOLTS, LAG SCREWS, EXPANSION BOLTS AND EPOXY BOLTS SHALL BE INSTALLED WITH STANDARD CUT WASHERS UNDER THE BOLT HEAD AND NUTS THAT BEAR DIRECTLY ON THE WOOD. ALL NUTS SHALL BE TIGHTENED AT THE TIME OF INSTALLATION AND RE-TIGHTENED IF NECESSARY, DUE TO WOOD SHRINKAGE, PRIOR TO CLOSE OUT OR COMPLETION OF THE PROJECT. BOLTS AND LAG SCREWS SHALL CONFORM TO ANSI/ASME STANDARD B18.2.1. WOOD SCREWS SHALL CONFORM TO B18.6.1. ALL BOLTS SHALL CONFORM TO ASTM A307 GRADE A UNLESS NOTED OTHERWISE.

T-12 CUTTING AND NOTCHING OF SAWN LUMBER RAFTERS AND STUDS SHALL BE IN CONFORMANCE WITH THE FOLLOWING CRITERIA:

A. JOISTS NOTCHES AT THE ENDS OF JOISTS SHALL NOT EXCEED 1/5 OF THE JOIST DEPTH. HOLES IN JOISTS SHALL NOT BE WITHIN 2½ INCHES OF THE TOP OR BOTTOM OF THE JOIST, AND THE DIAMETER OF ANY SUCH HOLE SHALL NOT EXCEED 1/4 THE DEPTH OF THE JOIST. NOTCHES IN THE TOP OR BOTTOM OF THE JOISTS SHALL NOT EXCEED 1/6 THE DEPTH AND SHALL NOT BE LOCATED IN THE MIDDLE OF THE THIRD SPAN.

B. RAFTERS NOTCHES AT THE ENDS OF RAFTERS OR CEILING JOISTS SHALL NOT EXCEED 1/5 OF THE DEPTH. NOTCHES IN THE TOP OR BOTTOM OF THE RAFTER OR CEILING JOIST SHALL NOT EXCEED 1/6 THE DEPTH AND SHALL NOT BE LOCATED IN THE MIDDLE 1/3 OF THE SPAN. EXCEPT THAT A NOTCH NOT EXCEEDING 1/3 OF THE DEPTH IS PERMITTED IN THE TOP OF THE RAFTERS OR CEILING JOIST NOT FURTHER FROM THE FACE OF THE SUPPORT THAN THE DEPTH OF THE MEMBER. HOLES BORED IN RAFTERS OR CEILING JOISTS SHALL NOT BE WITHIN 2½" INCHES OF THE TOP AND BOTTOM AND THEIR DIAMETER SHALL NOT EXCEED 1/4 THE DEPTH OF THE MEMBER.

C. WALL STUDS A MAXIMUM OF 2¼" DIAMETER NEATLY BORED HOLE MAY BE PLACED IN THE CENTER OF ALL BEARING 2x6 STUDS WITH NO ADDITIONAL REINFORCEMENT REQUIRED.

1 T-13 ALL STRUCTURAL TIMBER FRAMING SHALL COMPLY WITH CHAPTER 16 OF THE 2020 NYSBC.

SPECIAL INSPECTIONS – NORTHEAST BURGER BARN

S-1 SPECIAL INSPECTION SHALL COMPLY WITH SPECIFICATIONS.

S-2 SPECIAL INSPECTION WILL BE PERFORMED IN ACCORDANCE WITH CHAPTER 17 OF THE NYS BUILDING CODE.

S-3 SPECIAL INSPECTION WILL BE PERFORMED ON THE FOLLOWING STRUCTURAL SYSTEMS:

A) STRUCTURAL STEEL CONSTRUCTION (1705.2).

B) WOOD CONSTRUCTION (1705.5).

C) CONCRETE CONSTRUCTION (1705.3).

D) SOILS (1705.6).

E) DRIVEN DEEP FOUNDATIONS (1705.7)

F) WIND RESISTANCE (1705.11)

G) SISMIC RESISTANCE (1705.12)

DEMOLITION

LEGEND

EXISTING REINFORCED CONCRETE WALL OR STRUCTURE TO BE DEMOLISHED

SAW CUT LINE – FULL DEPTH UNLESS NOTED OTHERWISE

D-1 CONTRACTOR IS ALERTED THAT LIMITS OF DEMOLITION SHOWN IS APPROXIMATE. ACTUAL LIMITS SHALL BETHE MINIMUM REQUIRED FOR NEW STRUCTURE. CONTRACTOR TO CO-ORDINATE AND SUBMIT DEMOLITION PROCEDURE PER SPECIFICATIONS.

D-2 ALL ITEMS SHOWN ARE EXISTING TO REMAIN UNLESS NOTED OTHERWISE.

D-3 FOR ADDITIONAL DEMOLITION REQUIREMENTS SEE SPECIFICATIONS (024116).

D-4 ALL EXISTING CONCRETE TO BE DEMOLISHED IS STEEL REINFORCED UNLESS NOTED OTHERWISE. REINFORCING STEEL NOT SHOWN FOR CLARITY.

D-5 FOR ADDITIONAL DEMOLITION NOT SHOWN, SEE G, A, M, E, H, AND P DRAWINGS.

1 D-6 PRIOR TO DEMOLITION, CONTRACTOR IS REQUIRED TO POSESS AN ASBESTOS CONTAINMENT MATERIALS (ACM) PERMIT FROM THE DEPATMENT OF LABOR.

PILE NOTES

P-1 PILES SHALL BE DESIGNED AND INSTALLED BY A QUALIFIED PILE CONTRACTOR IN ACCORDANCE WITH THE BORED-IN PILE SPECIFICATIONS AND SUBJECT TO THE REQUIREMENTS LISTED HEREIN.

P-2 THE CONTRACTOR SHALL ENGAGE A LICENSED PROFESSIONAL ENGINEER REGISTERED IN THE STATE OF NEW YORK TO DESIGN PILE AND SUBMIT THE DESIGN TO THE ENGINEER FOR APPROVAL.

P-3 THE BORED-IN PILE SHALL BE 10 INCHES IN DIAMETER AND DESIGNED AND INSTALLED FOR
ULTIMATE LOAD IN COMPRESSION = 60 TONS
ALLOWABLE LOAD IN COMPRESSION = 30 TONS

P-4 ALL BORED-IN PILES SHALL BE GROUTED WITH A MINIMUM 28 DAY COMPRESSIVE STRENGTH OF 4000 PSI.

P-5 ALL BORED-IN PILES SHALL HAVE FULL LENGTH 1-1/4" Ø THREADBARS. THE THREADBARS SHALL CONFORM TO THE REQUIREMENTS OF ASTM A722, GRADE 150 AS MANUFACTURED BY DYWIDAG OR APPROVED EQUAL, UNLESS NOTED OTHERWISE. PROVIDE BEARING PLATES AND NUTS IN ACCORDANCE WITH THE THREADBAR MANUFACTURER'S RECOMMENDATIONS.

P-6 PROVIDE CENTRALIZERS FOR THREADBARS AT 10 FEET MAXIMUM VERTICAL SPACING.

P-7 CUT OFF THE ELEVATIONS OF THE BORED-IN PILES AS SHOWN ON DRAWINGS.

P-8 ALL BORED-IN PILES SHALL BE INSTALLED WITH A MAXIMUM LATERAL TOLERANCE OF THREE INCHES.

P-9 DRILLING OPERATION SHALL BE PERFORMED IN THE PRESENCE OF THE ENGINEER.

P-10 ONE (1) STATIC AXIAL COMPRESSION LOAD TEST WILL BE REQUIRED.

P-11 THE INSTALLATION METHOD USED FOR THE SUCCESSFUL COMPLETION OF LOAD TESTING SHALL BE USED FOR ALL THE PRODUCTION PILES.

P-12 THE CONTRACTOR SHALL SUBMIT A STATIC AXIAL LOAD TESTING PROGRAM CONSISTING OF ONE (1) COMPRESSION TEST AND ONE (1) TENSION TEST SHOWING PROPOSED PILE LOAD TEST LOCATIONS FOR APPROVAL OF THE ENGINEER.

P-13 COMPRESSION LOAD TESTING SHALL CONFORM TO ASTM D1143 AND THE PROJECT SPECIFICATIONS. UPLIFT LOAD TESTING SHALL CONFORM TO THE PROJECT SPECIFICATIONS AND ASTM D3689.

P-14 A MINIMUM PERIOD OF TWO (2) WEEKS SHALL ELAPSE FROM THE INSTALLATION OF THE TEST PILE TO THE COMMENCEMENT OF THE LOAD TEST.

P-15 TWO (2) TELLTALE RODS SHALL BE INSTALLED IN THE LOAD TEST PILE. THE BOTTOM END OF ONE TELLTALE ROD SHALL BE AT THE BOTTOM OF THE TEST PILE, AND THE BOTTOM END OF THE OTHER ROD SHALL BE TERMINATED MIDWAY BETWEEN PILE CUT-OFF AND PILE TIP. THE TELLTALE SHALL CONSIST OF A STEEL SOUNDING ROD EXTENDED TO AN ELEVATION DESIGNATED BY THE ENGINEER. THE TELLTALES SHALL BE PROTECTED BY A STEEL TUBE EMBEDDED IN GROUT. THE TELLTALE SHALL BE CENTERED IN THE TUBE IN A MANNER TO AVOID FRICTION BETWEEN THE TELLTALE AND THE TUBE.

P-16 THE LOADING PROCEDURE FOR STATIC AXIAL COMPRESSION TEST SHALL BE IN ACCORDANCE WITH NEW YORK STATE BUILDING CODE.

P-17 MEASUREMENTS OF MOVEMENT OF THE PILE BUTT, TELLTALES, REFERENCE BEAMS, ETC. SHALL BE TAKEN BY LICENSED SURVEYOR (REGISTERED IN THE STATE OF NEW YORK) ENGAGED BY THE OWNER.

P-18 MONITORING OF LOAD TEST SHALL BE PERFORMED BY A PROFESSIONAL ENGINEER REGISTERED IN THE STATE OF NEW YORK AND HIRED BY THE OWNER.

P-19 THE DIAL GAUGES FOR MONITORING THE MOVEMENT OF THE PILE SHALL HAVE A MINIMUM TRAVEL OF THREE (3) INCHES AND SHALL BE AT LEAST THREE (3) INCHES IN DIAMETER.

CONCRETE (EXCEPT PRECAST)

C-1 CONCRETE STRENGTH CLASSES (28-DAY COMPRESSIVE STRENGTH): CLASS A (5000 PSI) STRUCTURES, REINFORCED DUCT BANKS, AND PIPE ENCASEMENT. FOR CONCRETE WALLS GREATER THAN 2 FEET THICK FOLLOW ACI RECOMMENDATIONS FOR MASS CONCRETE. CLASS D (2500 PSI) SIDEWALKS, CURBS AND GUTTERS, CONCRETE FILL, THRUST BLOCKS, UNREINFORCED DUCT BANKS AND PIPE ENCASEMENT, FENCE POST EMBEDMENT.

C-2 REINFORCEMENT: ASTM A615, GRADE 60, OR ASTM A706, GRADE 60 WHERE REINFORCEMENT IS TO BE WELDED.

C-3 CONCRETE COVER FOR REINFORCING:
A) SURFACES CAST AGAINST SUBGRADE 3" MIN.
B) FORMED SURFACES IN CONTACT WITH SOIL OR LIQUID 2" MIN.
C) SURFACES NOT IN CONTACT WITH WEATHER, SOIL, OR LIQUID 1 1/2" MIN.

C-4 CONSTRUCTION JOINTS & CONTROL JOINTS SHALL BE LOCATED AS SHOWN ON THE DRAWINGS. WHERE NOT SHOWN, CONSTRUCTION JOINTS SHALL BE LOCATED AT NO MORE THAN 30 FEET ON CENTER. JOINT LOCATIONS SHALL BE AS APPROVED BY THE ENGINEER.

C-5 EQUIPMENT SUPPORTS, ANCHORAGES, OPENINGS, RECESSES AND REVEALS NOT SHOWN ON THE STRUCTURAL DRAWINGS BUT REQUIRED BY OTHER DISCIPLINES, SHALL BE PROVIDED FOR PRIOR TO PLACING CONCRETE.

C-6 SPLICES SHALL BE CLASS 'B' CONFORMING TO THE PROVISIONS OF ACI 318 UNLESS NOTED OTHERWISE.

C-7 AT ALL TYPICAL CURBS, EQUIPMENT PADS, AND PIPE SUPPORT PIERS, REINFORCING DOWELS SHOWN MAY BE REPLACED WITH MATCHING DOWELS SET IN EPOXY IN DRILLED HOLES AS SPECIFIED. DOWELS LOCATED CLOSER THAN 3" FROM ANY EDGE OF CONCRETE SHALL NOT BE REPLACED WITH DRILLED DOWELS.

C-8 DRILLED EPOXY DOWELS (WHERE DOWELS ARE SHOWN TO BE PLACED INTO HARDENED CONCRETE):
A) THE HOLE DIAMETER SHALL BE NO LARGER THAN 1/8" GREATER THAN THE DIAMETER OF THE REINFORCING BAR AT THE DEFORMATIONS.
B) THE DEPTH OF EMBEDMENT SHALL BE 12 BAR DIAMETERS, UNLESS SHOWN OTHERWISE.
C) ADJUST THE DOWEL LOCATIONS AS NEEDED TO AVOID DRILLING THROUGH ANY REINFORCING BARS.IF THE DOWEL LOCATION NEEDS TO BE MODIFIED, CONTACT THE ENGINEER.

C-9 SLABS WITH SLOPING SURFACES SHALL HAVE THE INDICATED SLAB THICKNESS MAINTAINED AS THE MINIMUM. SLAB BOTTOMS CAN EITHER SLOPE WITH THE TOP SURFACE OR BE LEVEL. REINFORCEMENT IN SLABS WITH SLOPING SURFACES SHALL BE PLACED AT THE REQUIRED CLEARANCE FROM THE SLAB SURFACE.

C-10 SLOPES SHOWN ON SLAB SURFACES BY FLOW ARROWS SHALL BE 1.0 PERCENT UNLESS NOTED OTHERWISE.

C-11 WHERE HORIZONTAL CONSTRUCTION JOINTS, LOCATED ABOVE THE FOUNDATION SLAB, EXTEND BEYOND WHERE NEEDED, THEY SHALL BE TERMINATED AT A VERTICAL CONSTRUCTION JOINT APPROVED BY THE ENGINEER.

C-12 DOWELS, ANCHOR BOLTS, PIPES, WATERSTOPS AND OTHER EMBEDDED ITEMS SHALL BE HELD SECURELY IN POSITION WHILE CONCRETE IS BEING PLACED.

C-13 CONDUITS AND OTHER SIMILAR ITEMS EMBEDDED IN OR PENETRATING THROUGH CONCRETE SHALL BE SPACED ON CENTER NOT LESS THAN 3 TIMES THEIR OUTSIDE DIMENSION, BUT NOT LESS THAN 2 1/2" CLEAR IN CLASS 45F CONCRETE OR 2" CLEAR IN CLASS 45 CONCRETE. SUCH ITEMS SHALL NOT EXCEED 1/3 OF THE MEMBER THICKNESS.

C-14 REINFORCING BARS AND ACCESSORIES SHALL NOT BE IN CONTACT WITH ANY METAL PIPE, PIPE FLANGE, METAL CONDUIT, OR OTHER METAL PARTS EMBEDDED IN CONCRETE. A MINIMUM CLEARANCE OF 2 INCHES SHALL BE PROVIDED.

C-15 ALL JOINTS WHICH ARE IN MEMBERS IN CONTACT WITH LIQUID OR BELOW GRADE SHALL HAVE A WATERSTOP. CONSTRUCTION JOINTS SHALL HAVE A 6" PVC FLATSTRIP WATERSTOP. EXPANSION JOINTS SHALL HAVE A 9" PVC CENTERBULB WATERSTOP.

C-16 IN VERTICAL JOINTS, WATERSTOP SHALL STOP NO LESS THAN 18" ABOVE THE MAXIMUM WATER SURFACE OR 18" ABOVE GRADE, WHICHEVER IS HIGHER.

C-17 AT JOINT INTERSECTIONS, WATERSTOPS SHALL BE CONNECTED SO AS TO FORM A COMPLETE SEAL USING CONNECTION PIECES AS NEEDED.

C-18 ALL EXPOSED CORNERS SHALL HAVE A 3/4" CHAMFER OR A 1/2" RADIUS TOOLED CORNER.

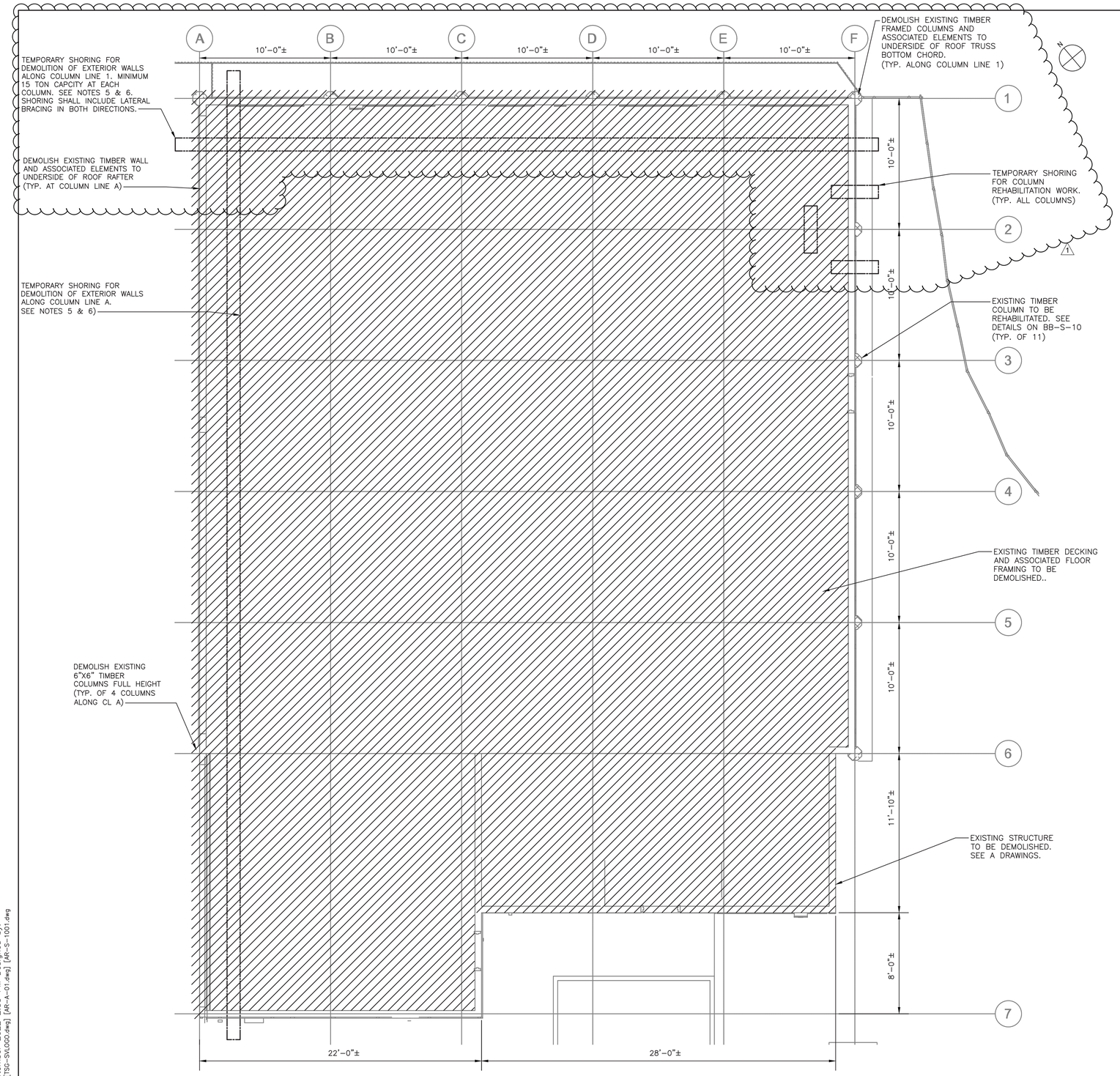

DEMOLITION – GROUND FLOOR PLAN
1/4"=1'-0"

NOTES:

1. FOR STRUCTURAL NOTES, SEE DRAWING BB–S–01.
2. FOR STRUCTURAL ABBREVIATIONS AND SYMBOLS, SEE DRAWING BB–S–02.
3. REHABILITATION OF THE NORTH EAST ARCADES INCLUDES VARIOUS ELEMENTS SLATED FOR REMOVAL AND REPLACEMENT IN–KIND FOR DETERIORATED MEMBERS. CONTRACTOR IS TO ALERT THE ENGINEER 6 WEEKS PRIOR TO START OF REHABILITATION WORK TO PERFORM FIELD INSPECTIONS OF THE REPAIR ITEMS IDENTIFIED BELOW. UPON COMPLETION OF THE FIELD INSPECTION WORK, THE ENGINEER WILL PROVIDE TO THE CONTRACTOR IN WRITING THE DEFINED LIMITS OF REPLACEMENT WORK. REHABILITATION WORK FOR VARIOUS ELEMENTS SHALL BE PERFORMED PER DETAILS AND SEQUENCES AS OUTLINED DRAWINGS, AR–S–03, AR–S–04, AR–S–05, AR–S–06, AR–S–07, AND AR–S–08. FOR THE PURPOSES OF BIDDING, CONTRACTOR SHALL INCLUDE IN THEIR BID THE QUANTITIES FOR EACH ELEMENT AS MENTIONED BELOW.

STRUCTURAL ELEMENTS TO BE REPAIRED/REPLACED	QUANTITY	UNITS	REMARKS
COLUMN EPOXY CRACK REPAIR	80	LF	SEE DETAILS ON AR–S–09

EXECUTIONS OF THE ABOVE REHABILITATING WORK SHALL BE COORDINATED WITH OVERALL CONSTRUCTION SEQUENCE AND PHASING. SEE SPECIFICATION.

4. EXISTING FRAMING INCLUDES 3"X12" TIMBER GIRDERS AT 6'–0" O.C. RUNNING NORTH TO SOUTH AND 3"X6" TIMBER FLOOR JOISTS AT 16" O.C. RUNNING EAST TO WEST.
5. TEMPORARY SHORING SHALL BEAR ON ASPHALT, CONCRETE, OR SUBSURFACE. BEARING ON TIMBER DECKING/FRAMING IS NOT PERMITTED (TYPICAL).
6. DEMOLITION OF EXTERIOR WALLS/COLUMNS AND PROPOSED WORK ALONG COLUMN LINES A AND 1 SHALL NOT OCCUR CONCURRENTLY.

0 4' 8'
SCALE: 1/4" = 1'–0"

CONSULTANT INFORMATION
Savin Engineers, P.C.

CONSULTANT SEAL
STATE OF NEW YORK · REGISTERED PROFESSIONAL ENGINEER · No. 085364

REVISION NUMBER	DATE	MADE BY	APP'D BY	REVISION
1	09/21/2022	DH	HME	BID ADDENDUM #3

RECORD DRAWING CERTIFICATION
☐ AS BUILT – CHANGES AS NOTED ☐ AS BUILT – NO CHANGES

CONTRACTOR
NAME
SIGNATURE
TITLE DATE

PROJECT COORDINATOR
NAME
SIGNATURE
TITLE DATE

WESTCHESTER COUNTY, NEW YORK
DEPARTMENT OF PUBLIC WORKS AND TRANSPORTATION
DIVISION OF ENGINEERING

INFRASTRUCTURE REHABILITATION - PHASE 3
PLAYLAND PARK, RYE, NEW YORK
NORTHEAST BURGER BARN
DEMOLITION - GROUND FLOOR PLAN

CONTRACT NUMBER	22-523
SHEET NUMBER	BB-S-03
DWG NO.:	50 of 664
SCALE:	AS SHOWN
DATE:	8/23/2022
DPW FILE NUMBER	1-118-S-799-1
REV. NO.	1

Drawing Name: G:\SavinAutocad\2060\25-Playland-Mega-3\S\BBS-1003.dwg
Reqd: Projectname: 211001F02 Comments: ----
Printed by: MGodby Date: 20 September 2022 2:35 PM Designed by: ----
Xrefs: [TB_24X36_WestchesterCo_3.dwg] [TSG-SVLOGO.dwg] [AR-A-01.dwg] [AR-S-1001.dwg]

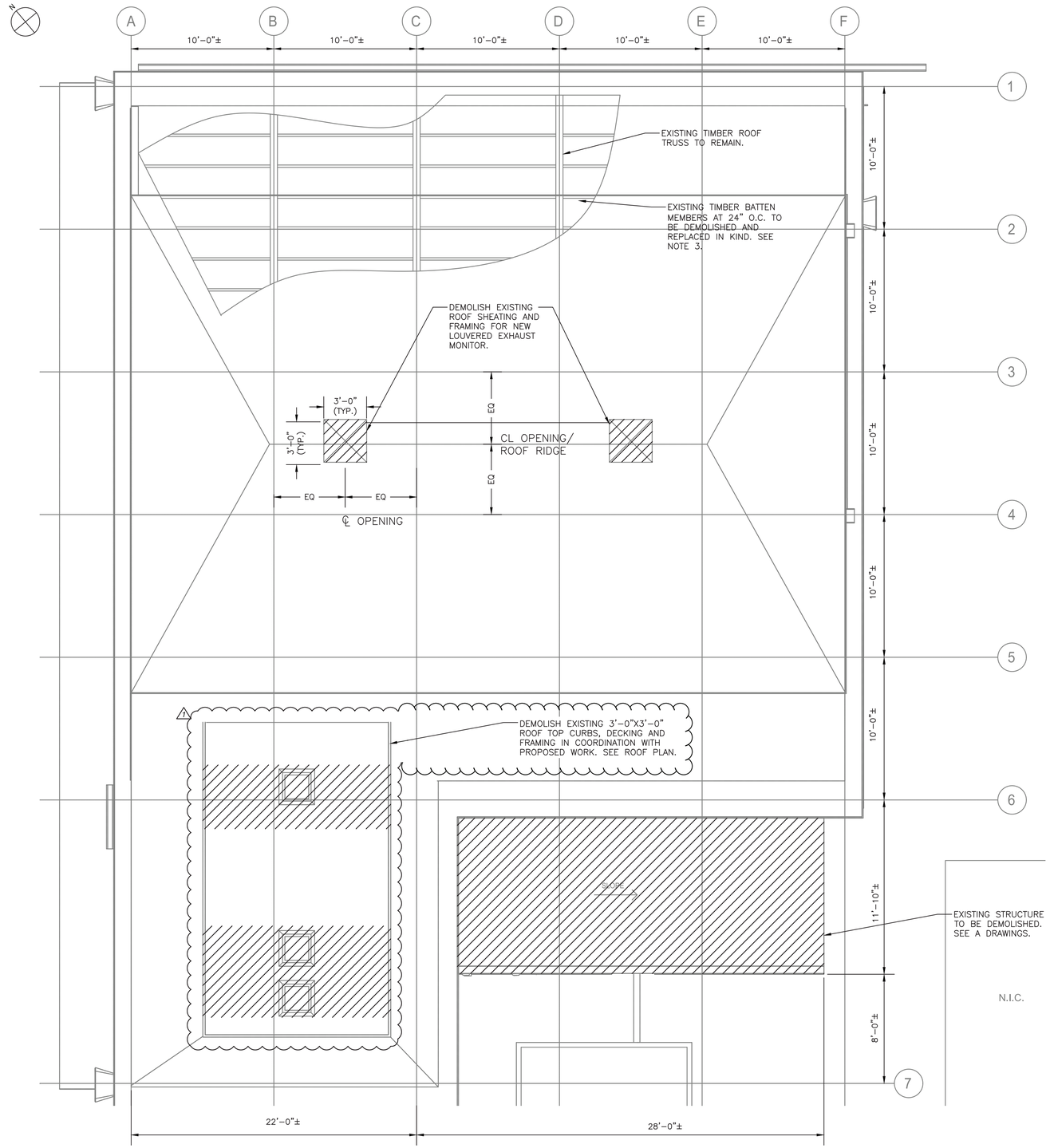

DEMOLITION – ROOF PLAN

1/4"=1'-0"

NOTES:

1. FOR STRUCTURAL NOTES, SEE DRAWING BB–S–01.
2. FOR STRUCTURAL ABBREVIATIONS AND SYMBOLS, SEE DRAWING BB–S–02.
3. REHABILITATION OF THE NORTH EAST ARCADES INCLUDES VARIOUS ELEMENTS SLATED FOR REMOVAL AND REPLACEMENT IN–KIND FOR DETERIORATED MEMBERS. CONTRACTOR IS TO ALERT THE ENGINEER 6 WEEKS PRIOR TO START OF REHABILITATION WORK TO PERFORM FIELD INSPECTIONS OF THE REPAIR ITEMS IDENTIFIED BELOW. UPON COMPLETION OF THE FIELD INSPECTION WORK, THE ENGINEER WILL PROVIDE TO THE CONTRACTOR IN WRITING THE DEFINED LIMITS OF REPLACEMENT WORK. REHABILITATION WORK FOR VARIOUS ELEMENTS SHALL BE PERFORMED PER DETAILS AND SEQUENCES AS OUTLINED DRAWINGS, AR–S–03, AR–S–04, AR–S–05, AR–S–06, AR–S–07, AND AR–S–08. FOR THE PURPOSES OF BIDDING, CONTRACTOR SHALL INCLUDE IN THEIR BID THE QUANTITIES FOR EACH ELEMENT AS MENTIONED BELOW.

STRUCTURAL ELEMENTS TO BE REPAIRED/REPLACED	QUANTITY	UNITS	REMARKS
2"x6" TIMBER BATTEN MEMBERS	25	EA	APPROXIMATELY 10 FT EACH
1"x6" TIMBER ROOF DECKING	1000	EA	

NOTE THAT BATTEN MEMBER AND ROOF DECKING LOCATIONS MAY BE ANYWHERE WITHIN THE LIMITS OF THE ROOF. EXECUTIONS OF THE ABOVE REHABILITATING WORK SHALL BE COORDINATED WITH OVERALL CONSTRUCTION SEQUENCE AND PHASING. SEE SPECIFICATION.

0 4' 8'
SCALE: 1/4" = 1'-0"

CONSULTANT INFORMATION
Savin Engineers, P.C.

CONSULTANT SEAL
STATE OF NEW YORK · MICHAEL J. GRIFFITH · 065364 · LICENSED PROFESSIONAL ENGINEER

REVISION NUMBER	DATE	MADE BY	APP'D BY	REVISION
1	09/21/2022	DH	HME	BID ADDENDUM #3

RECORD DRAWING CERTIFICATION
☐ AS BUILT – CHANGES AS NOTED ☐ AS BUILT – NO CHANGES

CONTRACTOR
NAME
SIGNATURE
TITLE DATE

PROJECT COORDINATOR
NAME
SIGNATURE
TITLE DATE

WESTCHESTER COUNTY, NEW YORK
DEPARTMENT OF PUBLIC WORKS AND TRANSPORTATION
DIVISION OF ENGINEERING

INFRASTRUCTURE REHABILITATION - PHASE 3
PLAYLAND PARK, RYE, NEW YORK
NORTHEAST BURGER BARN
DEMOLITION - ROOF PLAN

CONTRACT NUMBER	22-523
SHEET NUMBER	BB-S-04
DWG NO.:	51 of 664
SCALE:	AS SHOWN
DATE:	8/23/2022
DPW FILE NUMBER	1-118-S-800-1
REV. NO.	1

Drawing Name: G:\SavinAutocad\2060\25-Playland-Mega-3\S\BBS-1004.dwg
Projectname: 211001F02 Comments: ----
Printed by: MGodby Date: 20 September 2022 2:36 PM Designed by: ----
Xrefs: [TB_24X36_WestchesterCo_3.dwg] [TSG-SVLOGO.dwg] [AR-A-03.dwg] [AR-S-1002.dwg]

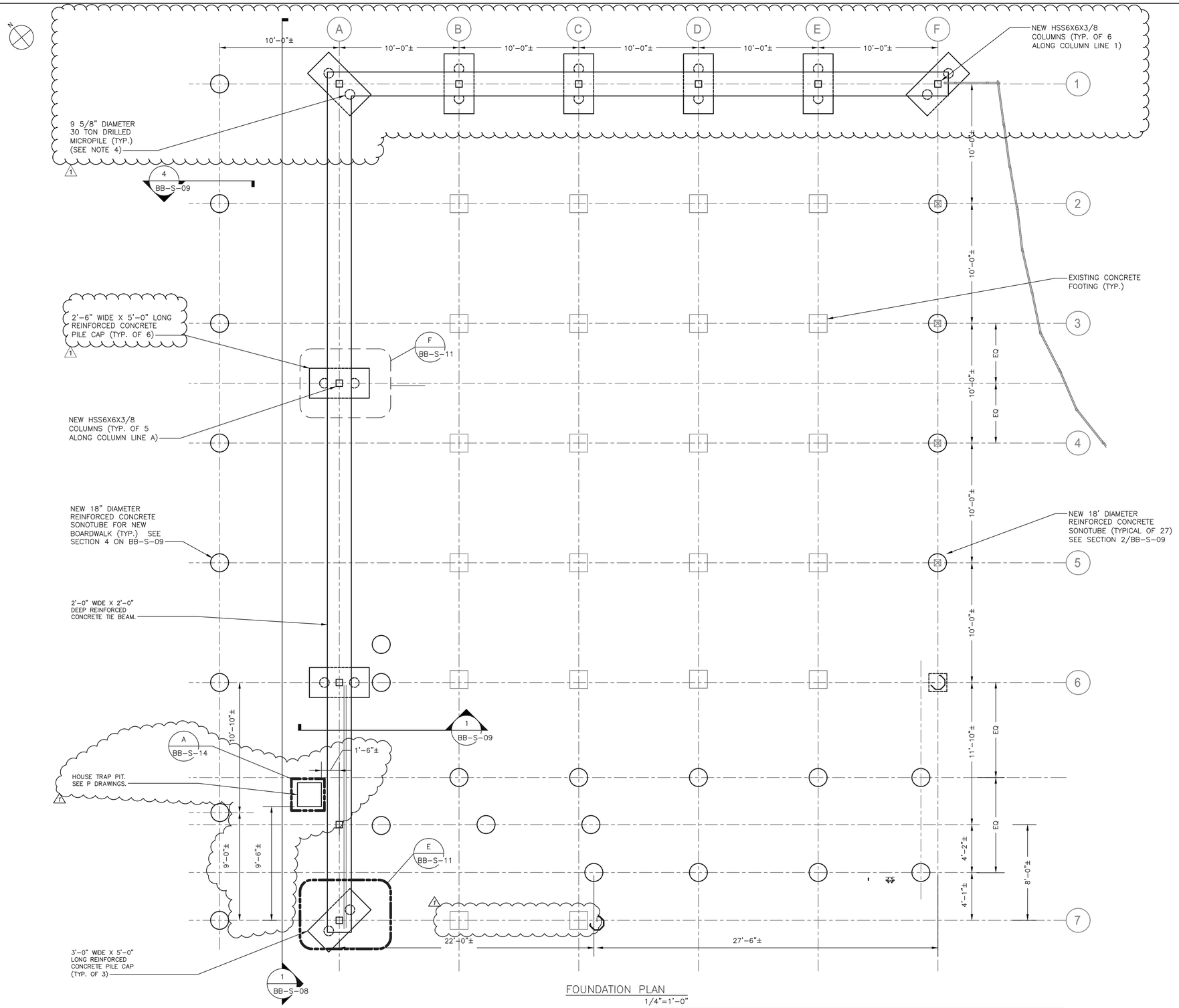

FOUNDATION PLAN
1/4"=1'-0"

NOTES:

1. FOR STRUCTURAL NOTES, SEE DRAWING BB-S-01.
2. FOR STRUCTURAL ABBREVIATIONS AND SYMBOLS, SEE DRAWING BB-S-02.
3. CONTRACTOR SHALL ASSUME EXISTING FOOTINGS TO BE 2'-0" X 2'-0" WIDE X 4'-0" DEEP AND INCLUDE IN THEIR BID THE DEMOLITION OF (17) FOOTINGS IN COORDINATION WITH NEW PILE AND CONCRETE WORK.
4. CONTRACTOR IS ALERTED OF REDUCED VERTICAL CLEARANCE AND SPACE RESTRICTIONS FOR PILE DRIVING OPERATIONS. CONTRACTOR SHALL INCLUDE IN THEIR BID THE USE OF A LOW HEADROOM PILE DRIVING RIG TO ACCOMMODATE EXISTING CONDITIONS.

SCALE: 1/4" = 1'-0"

Drawing Name: G:\SavinAutocad\2060\25-Playland-Mega-3\S\BBS-1012.dwg
Rev#: Projectname: 211001F02 Comments: ----
Printed by: MGodby Date: 20 September 2022 2:36 PM Designed by: ----
Xrefs: [TB_24X36_WestchesterCo_3.dwg] [TSG-SVLOGO.dwg] [AR-A-11.dwg] [AR-S-1003.dwg]

CONSULTANT INFORMATION
Savin Engineers, P.C.

CONSULTANT SEAL

REVISION NUMBER	DATE	MADE BY	APP'D BY	REVISION
1	09/21/2022	DH	HME	BID ADDENDUM #3

RECORD DRAWING CERTIFICATION
AS BUILT – CHANGES AS NOTED
AS BUILT – NO CHANGES

CONTRACTOR
NAME
SIGNATURE
TITLE DATE

PROJECT COORDINATOR
NAME
SIGNATURE
TITLE DATE

WESTCHESTER COUNTY, NEW YORK
DEPARTMENT OF PUBLIC WORKS AND TRANSPORTATION
DIVISION OF ENGINEERING

INFRASTRUCTURE REHABILITATION - PHASE 3
PLAYLAND PARK, RYE, NEW YORK
NORTHEAST BURGER BARN
FOUNDATION PLAN

CONTRACT NUMBER 22-523
SHEET NUMBER BB-S-05
DWG NO.: 52 of 664
SCALE: AS SHOWN
DATE: 8/23/2022
DPW FILE NUMBER 1-118-S-801-1
REV. NO. 1

NOTES:

1. FOR STRUCTURAL NOTES, SEE DRAWING BB–S–01.
2. FOR STRUCTURAL ABBREVIATIONS AND SYMBOLS, SEE DRAWING BB–S–02.

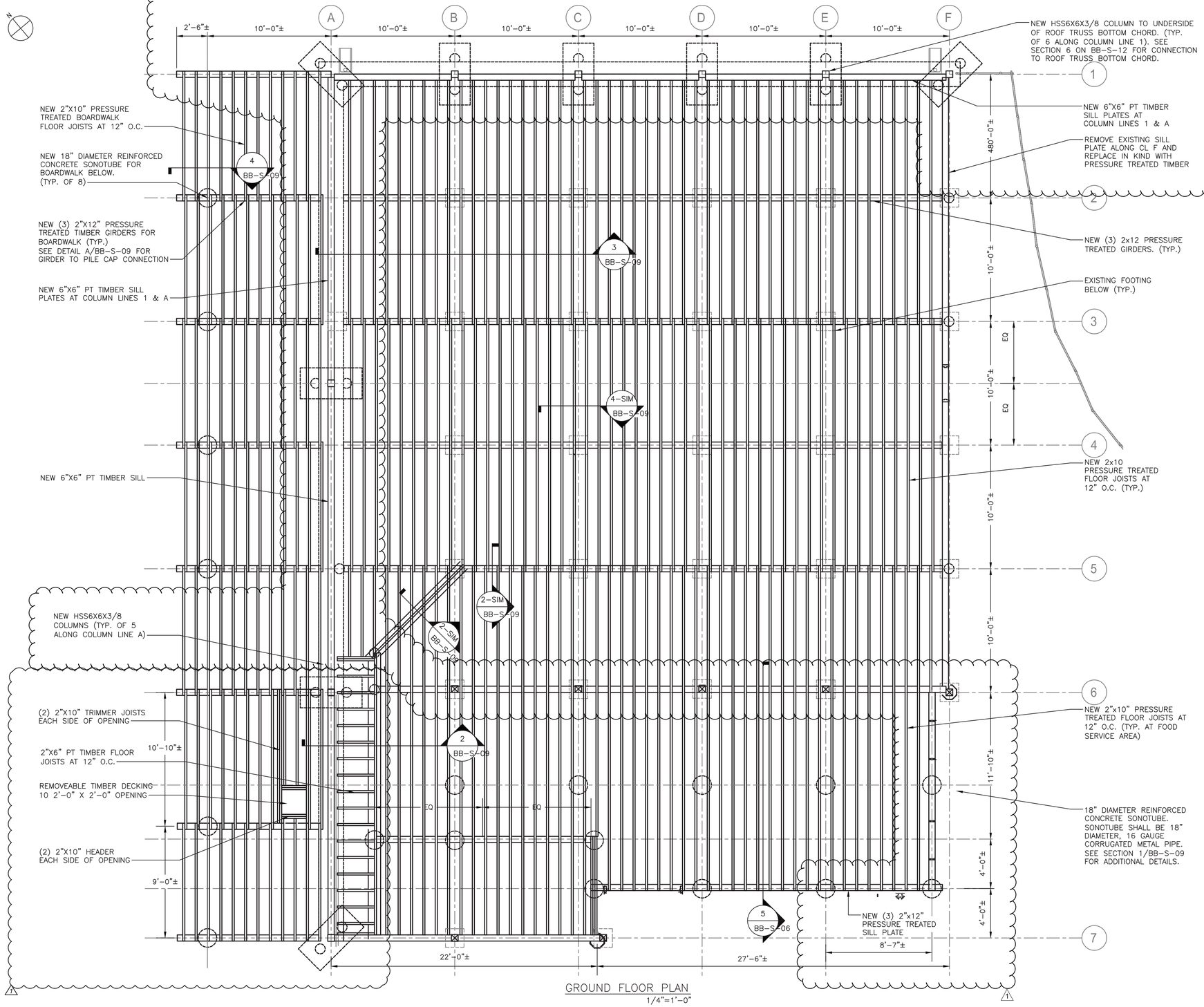

GROUND FLOOR PLAN
1/4"=1'–0"

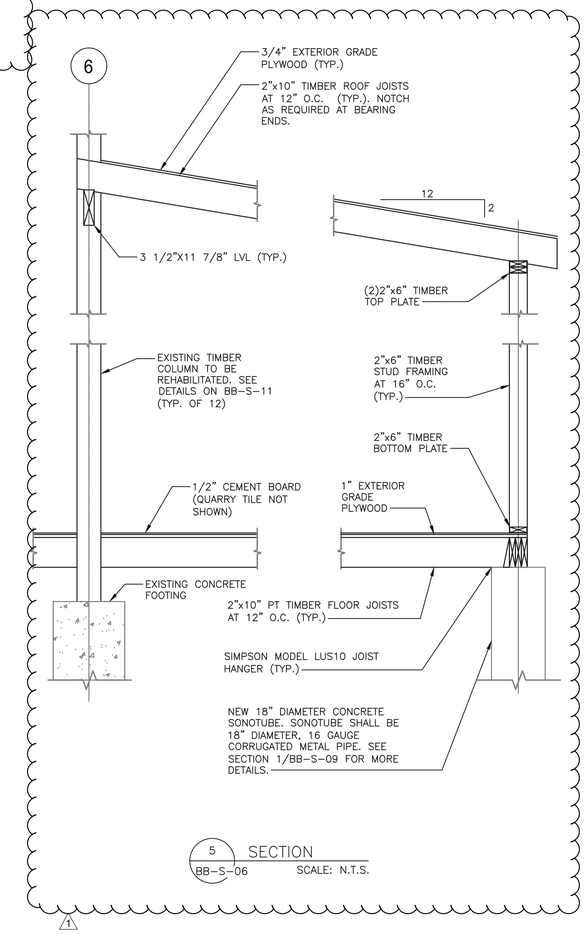

5 BB–S–06 SECTION
SCALE: N.T.S.

SCALE: 1/4" = 1'–0"

CONSULTANT INFORMATION

Savin Engineers, P.C.

CONSULTANT SEAL

REVISION NUMBER	DATE	MADE BY	APP'D BY	REVISION
1	09/21/2022	DH	HME	BID ADDENDUM #3

RECORD DRAWING CERTIFICATION

☐ AS BUILT – CHANGES AS NOTED ☐ AS BUILT – NO CHANGES

CONTRACTOR
NAME
SIGNATURE
TITLE DATE

PROJECT COORDINATOR
NAME
SIGNATURE
TITLE DATE

WESTCHESTER COUNTY, NEW YORK
DEPARTMENT OF PUBLIC WORKS AND TRANSPORTATION
DIVISION OF ENGINEERING

INFRASTRUCTURE REHABILITATION - PHASE 3
PLAYLAND PARK, RYE, NEW YORK
NORTHEAST BURGER BARN
GROUND FLOOR PLAN

CONTRACT NUMBER	22-523
SHEET NUMBER	BB-S-06
DWG NO.:	53 of 664
SCALE:	AS SHOWN
DATE:	8/23/2022
DPW FILE NUMBER	1-118-S-802-1
REV. NO.	1

Drawing Name: G:\SavinAutocad\2060\25-Playland-Mega-3\S\BBS-1005.dwg
Projectname: 211001F02 Comments: ----
Printed by: MGodby Date: 20 September 2022 2:36 PM Designed by: ----
Xrefs: [TB_24X36_WestchesterCo_3.dwg] [TSG-SVLOGO.dwg] [AR-A-11.dwg] [AR-S-1007.dwg]

NOTES:

1. FOR STRUCTURAL NOTES, SEE DRAWING BB-S-01.
2. FOR STRUCTURAL ABBREVIATIONS AND SYMBOLS, SEE DRAWING BB-S-02.

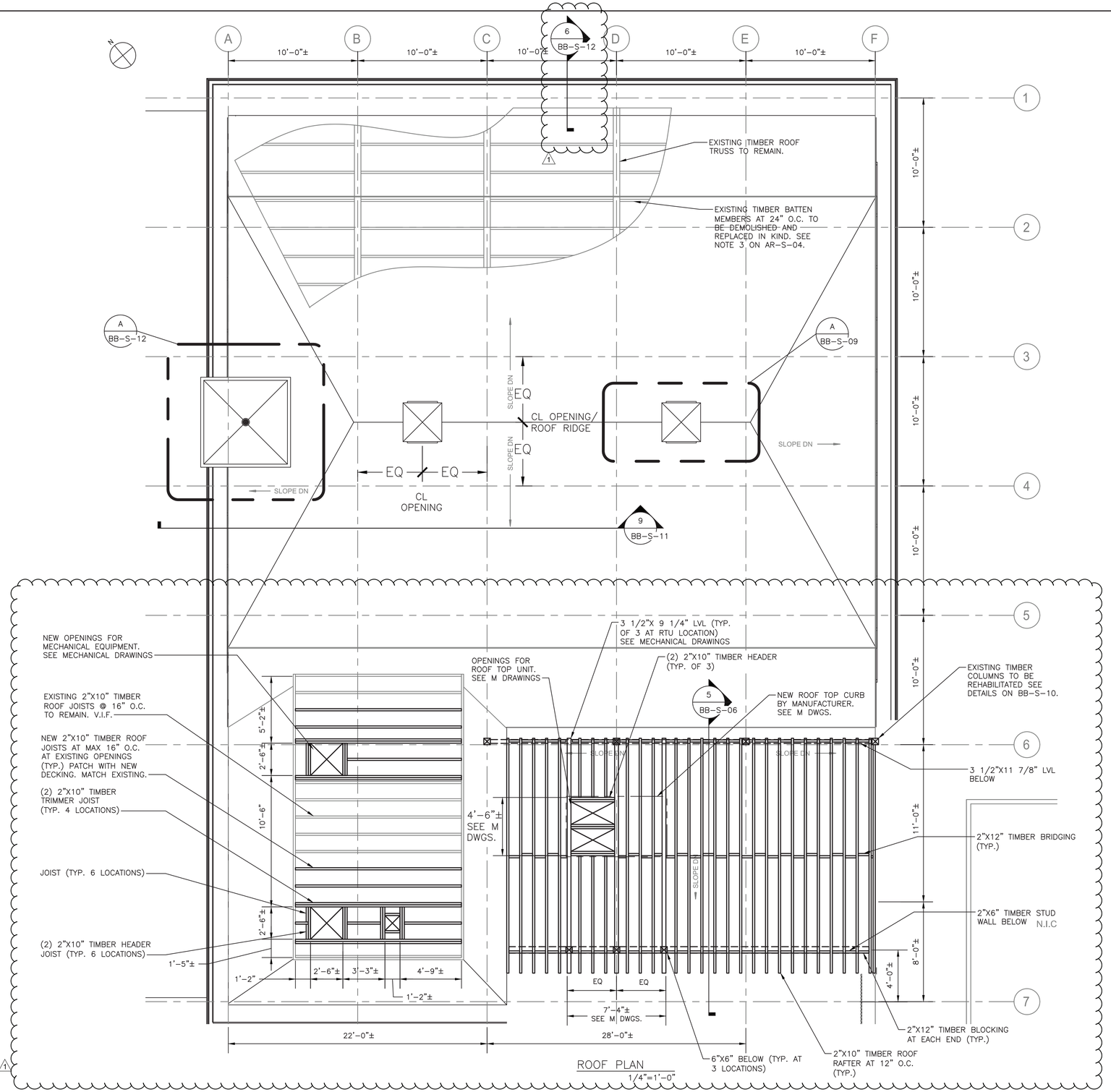

ROOF PLAN
1/4"=1'-0"

0 4' 8'
SCALE: 1/4" = 1'-0"

Drawing Name: G:\SavinAutocad\2060\25-Playland-Mega-3\S\BBS-1006.dwg
Reef: Projectname: 211001F02 Comments: ----
Printed by: MGodby Date: 20 September 2022 2:36 PM Designed by: ----
Xrefs: [TB_24X36_WestchesterCo_3.dwg] [TSC-SYLOGO.dwg] [AR-A-13.dwg] [AR-S-1004.dwg]

CONSULTANT INFORMATION

Savin Engineers, P.C.

CONSULTANT SEAL

STATE OF NEW YORK
REGISTERED PROFESSIONAL ENGINEER
No. 085352

REVISION NUMBER	DATE	MADE BY	APP'D BY	REVISION
1	9/21/22	DH	HME	BID ADDENDUM #3

RECORD DRAWING CERTIFICATION

☐ AS BUILT – CHANGES AS NOTED ☐ AS BUILT – NO CHANGES

CONTRACTOR
NAME
SIGNATURE
TITLE DATE

PROJECT COORDINATOR
NAME
SIGNATURE
TITLE DATE

WESTCHESTER COUNTY, NEW YORK
DEPARTMENT OF PUBLIC WORKS AND TRANSPORTATION
DIVISION OF ENGINEERING

INFRASTRUCTURE REHABILITATION - PHASE 3
PLAYLAND PARK, RYE, NEW YORK
NORTHEAST BURGER BARN
ROOF PLAN

CONTRACT NUMBER	SHEET NUMBER
22-523	BB-S-07

DWG NO.: 54 of 664
SCALE: AS SHOWN
DATE: 8/23/2022
DPW FILE NUMBER 1-118-S-803-1 REV. NO. 1

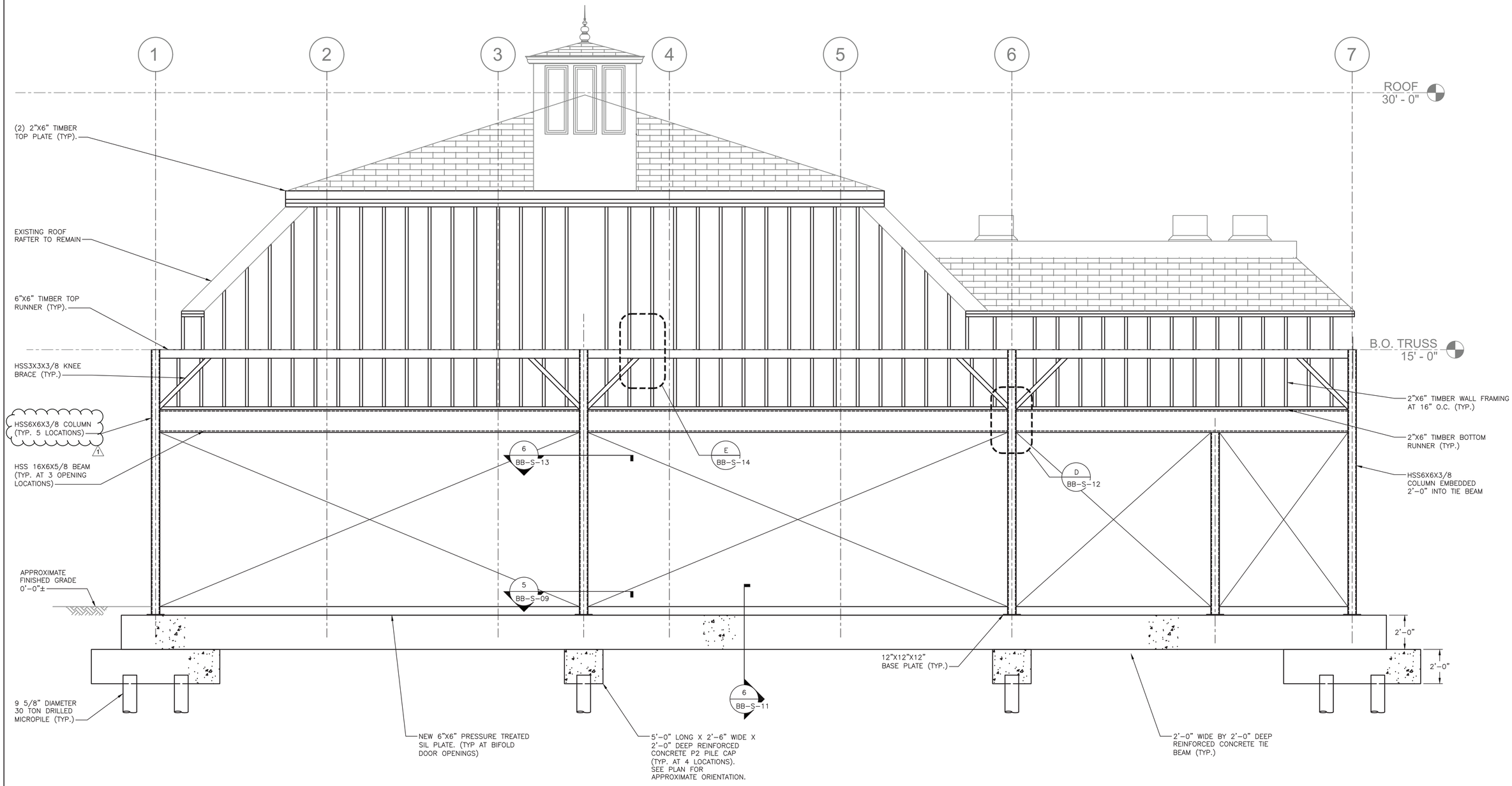

1 SECTION
BB-S-05 SCALE: 3/8 = 1'-0"

Drawing Name: G:\SavinAutocad\2060\25-Playland-Mega-3\S\BBS-1010.dwg
Rev#: Projectname: ----- Comments: ----
Printed by: MGodby Date: 20 September 2022 2:37 PM Designed by: ----
Xrefs: [TSG-SVLOGO.dwg] [TB_24X36_WestchesterCo_3.dwg] [AR-S-1008.dwg]

CONSULTANT INFORMATION

Savin Engineers, P.C.

CONSULTANT SEAL

REVISION NUMBER	DATE	MADE BY	APP'D BY	REVISION
1	9/21/22	DH	HME	BID ADDENDUM #3

RECORD DRAWING CERTIFICATION

☐ AS BUILT – CHANGES AS NOTED ☐ AS BUILT – NO CHANGES

CONTRACTOR
NAME
SIGNATURE
TITLE DATE

PROJECT COORDINATOR
NAME
SIGNATURE
TITLE DATE

WESTCHESTER COUNTY, NEW YORK
DEPARTMENT OF PUBLIC WORKS AND TRANSPORTATION
DIVISION OF ENGINEERING

INFRASTRUCTURE REHABILITATION - PHASE 3
PLAYLAND PARK, RYE, NEW YORK
NORTHEAST BURGER BARN
SECTIONS AND DETAILS

CONTRACT NUMBER	22-523
SHEET NUMBER	BB-S-08
DWG NO.:	55 of 664
SCALE:	AS SHOWN
DATE:	8/23/2022
DPW FILE NUMBER	1-118-S-804-1
REV. NO.	1

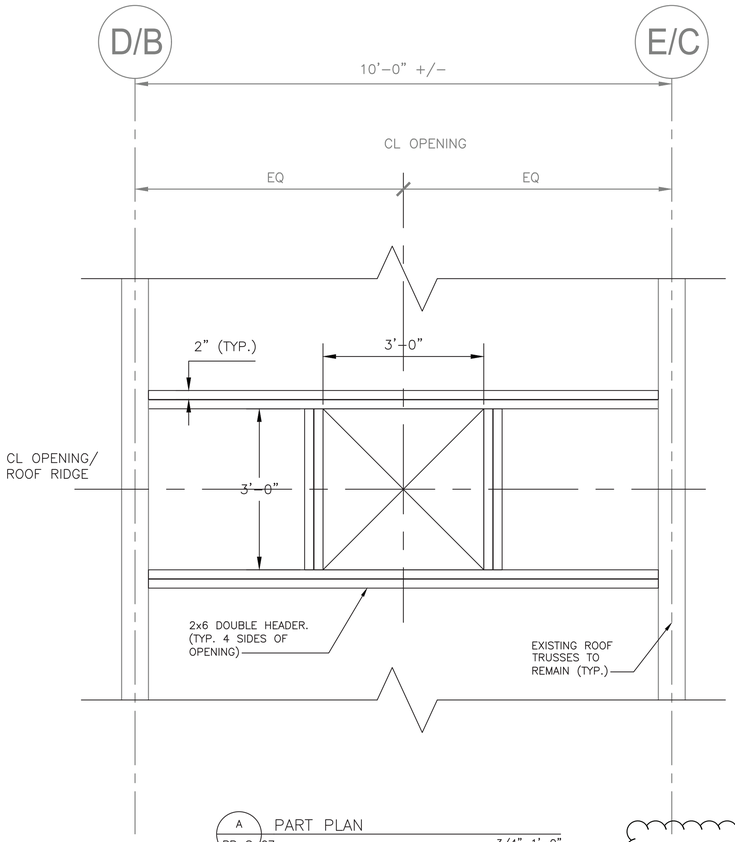

A BB-S-07 PART PLAN 3/4"=1'-0"

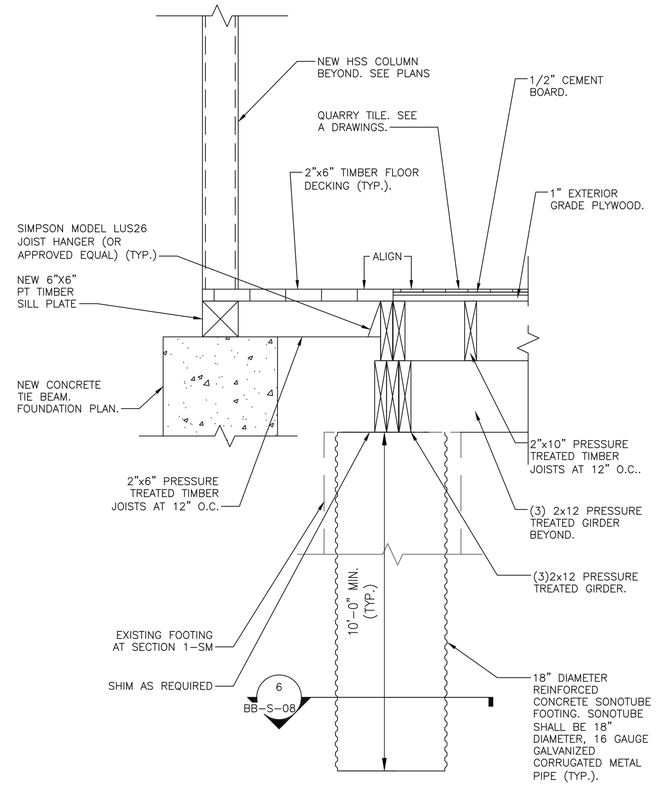

2 BB-S-06 SECTION 1"=1'-0"

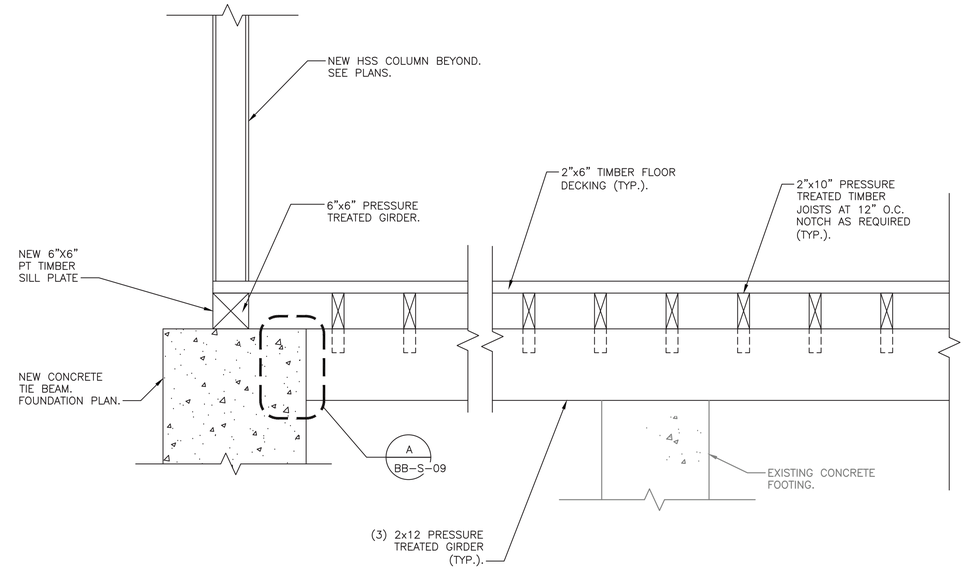

3 BB-S-06 SECTION 1"=1'-0"

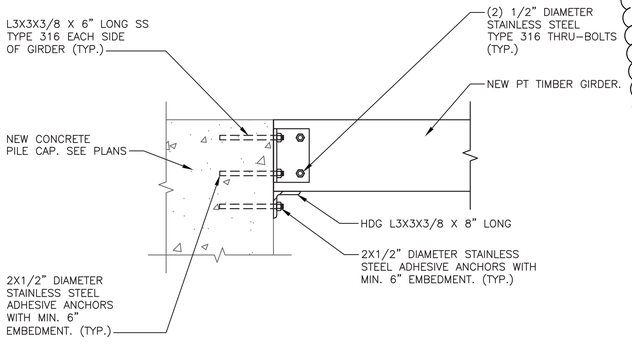

A BB-S-09 DETAIL – TYPICAL GIRDER TO CONCRETE CONNECTION N.T.S.

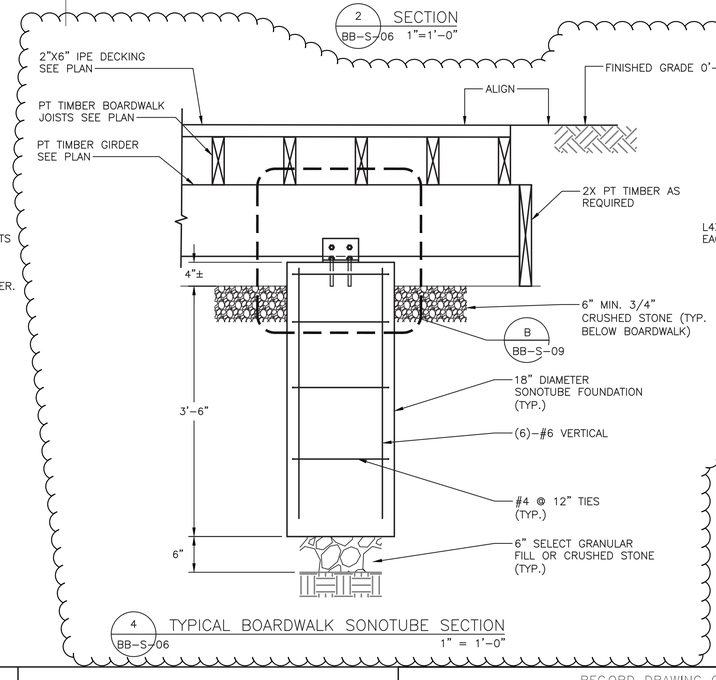

4 BB-S-06 TYPICAL BOARDWALK SONOTUBE SECTION 1" = 1'-0"

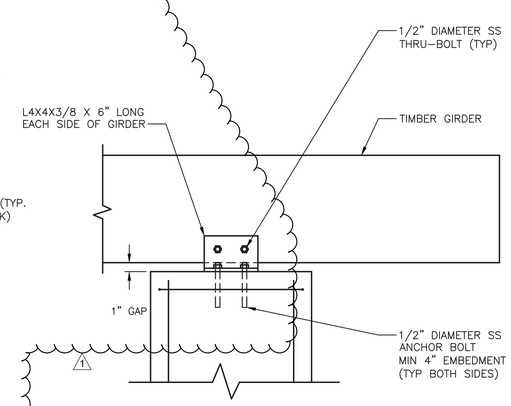

B BB-S-09 DETAIL 1 1/2" = 1'-0"

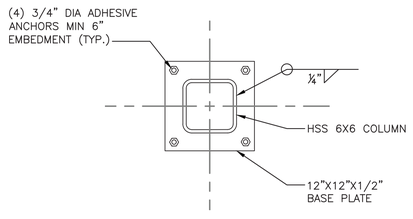

5 BB-S-05 SECTION SCALE: N.T.S.

Drawing Name: G:\SavinAutocad\2060\25-Playland-Mega-3\S\BBS-1009.dwg
Rev#: Projectname: ---- Comments: All inquiries regarding this drawing(s) or project should be made to NYC Environmental Protection, Bureau of Engineering Design and Construction.
Printed: Thu,24-Nov-2022 2:37 PM Designed by: ____

CONSULTANT INFORMATION
Savin Engineers, P.C.

CONSULTANT SEAL

REVISION NUMBER	DATE	MADE BY	APP'D BY	REVISION
1	9/21/22	DH	HME	BID ADDENDUM #3

RECORD DRAWING CERTIFICATION
☐ AS BUILT – CHANGES AS NOTED ☐ AS BUILT – NO CHANGES

CONTRACTOR
NAME
SIGNATURE
TITLE DATE

PROJECT COORDINATOR
NAME
SIGNATURE
TITLE DATE

WESTCHESTER COUNTY, NEW YORK
DEPARTMENT OF PUBLIC WORKS AND TRANSPORTATION
DIVISION OF ENGINEERING

INFRASTRUCTURE REHABILITATION - PHASE 3
PLAYLAND PARK, RYE, NEW YORK
NORTHEAST BURGER BARN
SECTIONS

CONTRACT NUMBER	SHEET NUMBER
22-523	BB-S-09

DWG NO.: 56 of 664
SCALE: AS SHOWN
DATE: 8/23/2022
DPW FILE NUMBER 1-118-S-805-1 REV. NO. 1

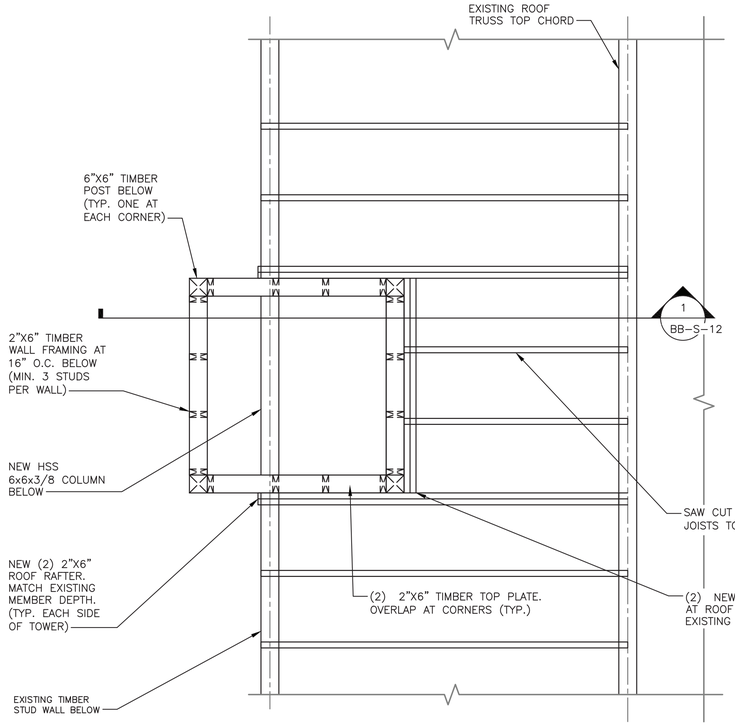

A PART PLAN AT ROOF TRUSS TOP CHORD
BB-S-07 1/2"=1'-0"

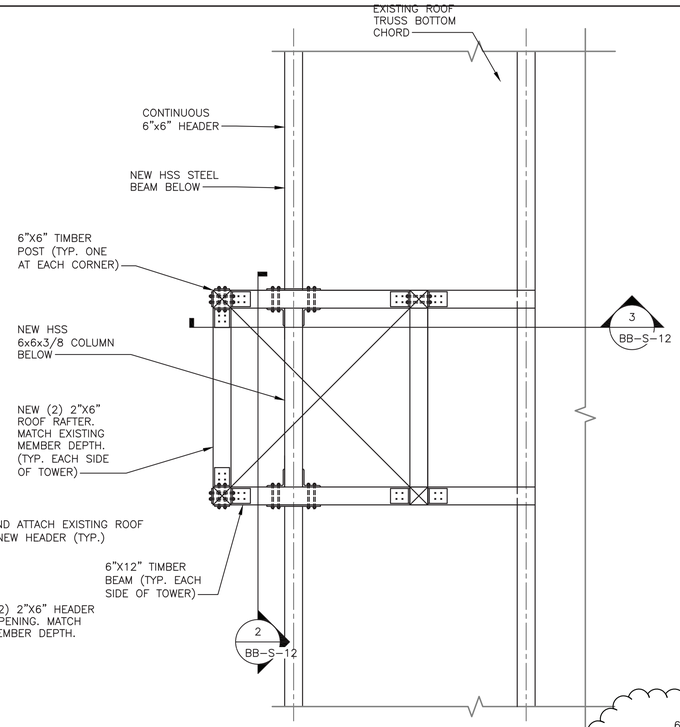

B PART PLAN AT ROOF TRUSS BOT CHORD
BB-S-12 1/2"=1'-0"

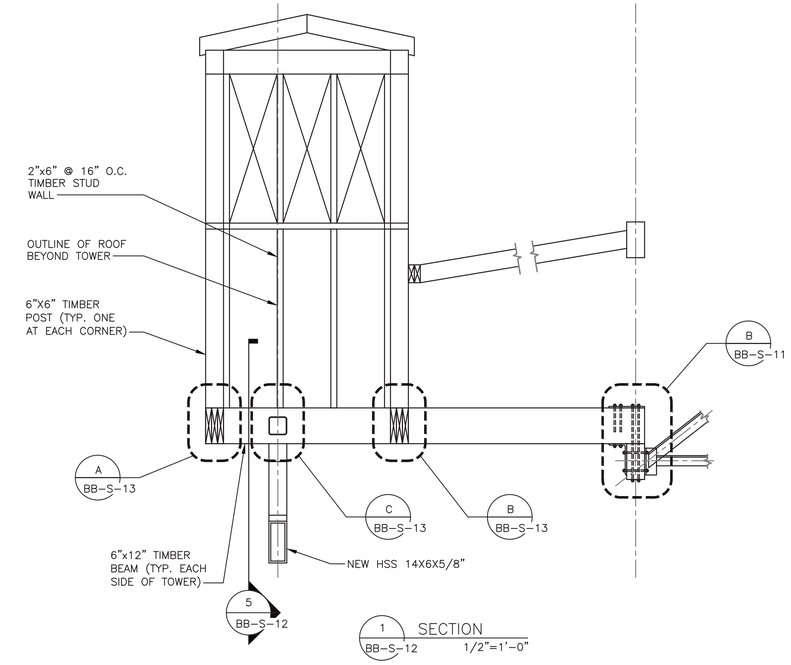

1 SECTION
BB-S-12 1/2"=1'-0"

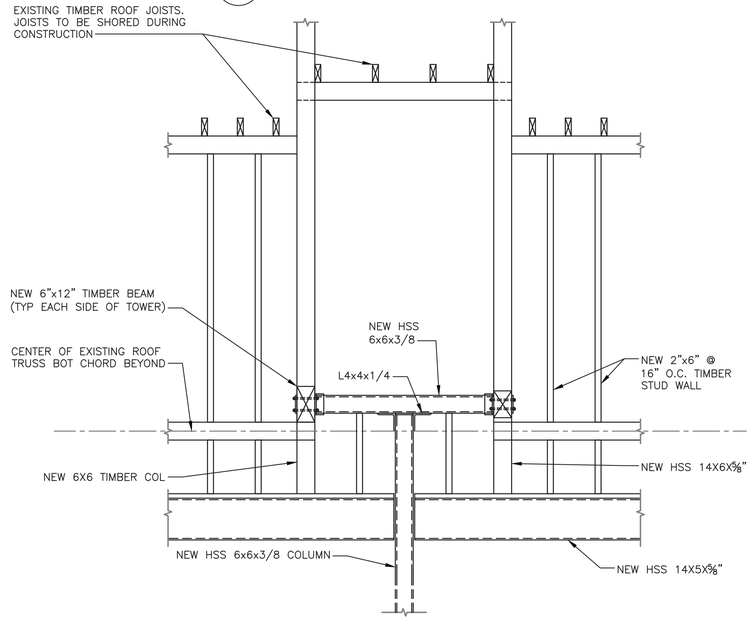

2 SECTION
BB-S-12 1/2"=1'-0"

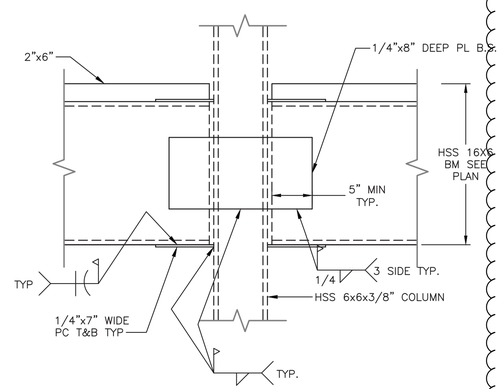

D DETAIL
BB-S-08 1/2"=1'-0"

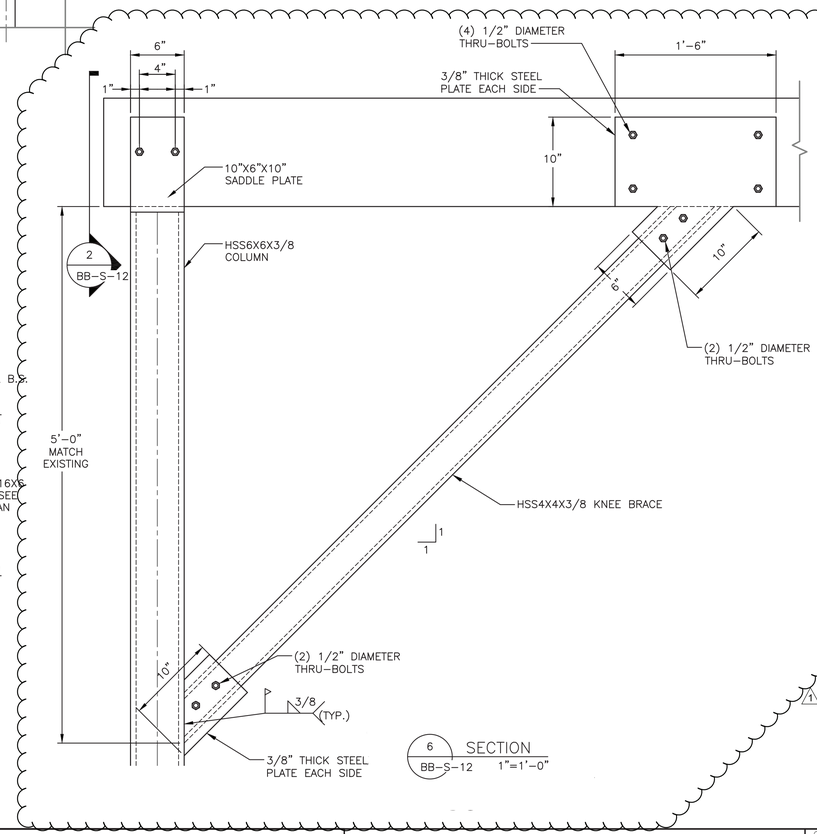

6 SECTION
BB-S-12 1"=1'-0"

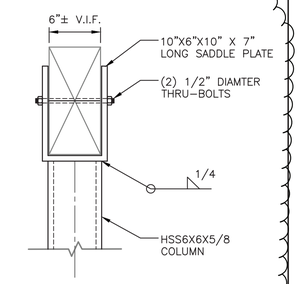

7 DETAIL
BB-S-12 1"=1'-0"

SCALE: 1/4" = 1'-0"
SCALE: 3/8" = 1'-0"
SCALE: 3/4" = 1'-0"
SCALE: 1 1/2" = 1'-0"

CONSULTANT INFORMATION
Savin Engineers, P.C.

CONSULTANT SEAL

REVISION NUMBER	DATE	MADE BY	APP'D BY	REVISION
1	09/21/2022	DH	HME	BID ADDENDUM #3

RECORD DRAWING CERTIFICATION
☐ AS BUILT – CHANGES AS NOTED ☐ AS BUILT – NO CHANGES

CONTRACTOR
NAME
SIGNATURE
TITLE DATE

PROJECT COORDINATOR
NAME
SIGNATURE
TITLE DATE

WESTCHESTER COUNTY, NEW YORK
DEPARTMENT OF PUBLIC WORKS AND TRANSPORTATION
DIVISION OF ENGINEERING

INFRASTRUCTURE REHABILITATION - PHASE 3
PLAYLAND PARK, RYE, NEW YORK
NORTHEAST BURGER BARN
SECTIONS AND DETAILS

CONTRACT NUMBER	22-523
SHEET NUMBER	BB-S-12
DWG NO.:	59 of 664
SCALE:	AS SHOWN
DATE:	8/23/2022
DPW FILE NUMBER	1-118-S-808-1
REV. NO.	1

Drawing Name: G:\SavinAutocad\2060\25-Playland-Mega-3\S\BBS-1016.dwg
Rev#: Projectname: ---- Comments: ----
Printed by: MGodby Date: 20 September 2022 2:38 PM Designed by: ----
Xrefs: [TSC-SYL060.dwg] [TB_24X36_WestchesterCo_3.dwg] [AR-S-1006.dwg]

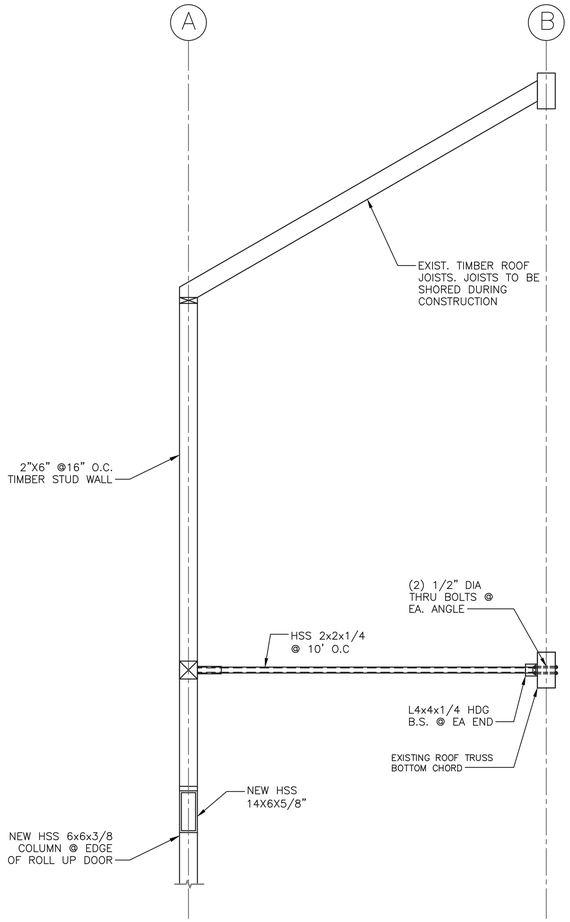

3 SECTION
BB-S-12 1/2"=1'-0"

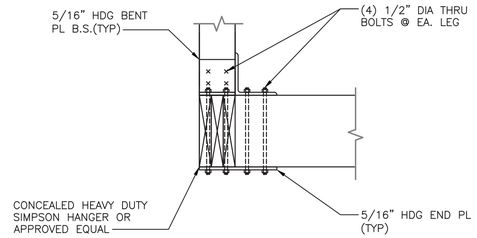

A DETAIL
BB-S-12 1"=1'-0"

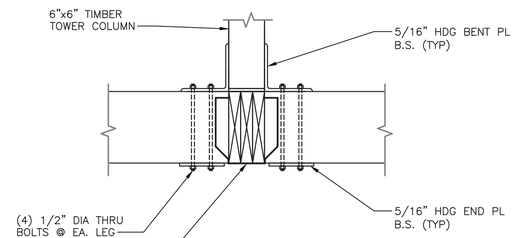

B DETAIL
BB-S-12 1"=1'-0"

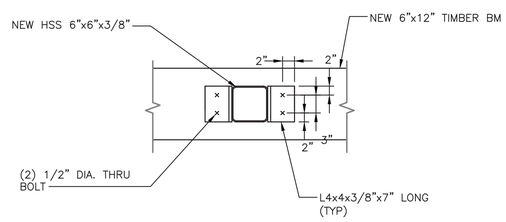

C DETAIL
BB-S-12 1"=1'-0"

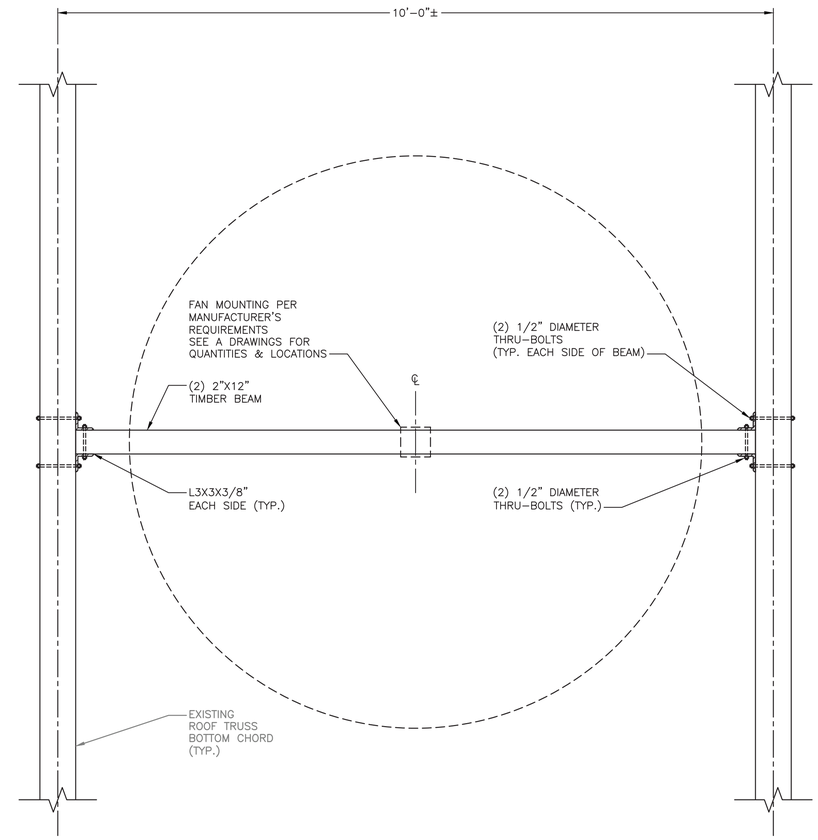

PART PLAN – TYPICAL BEAM FOR FAN MOUNTING
1"=1'-0"

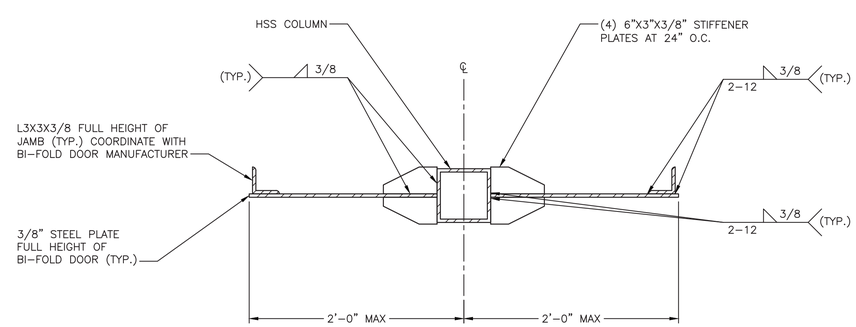

6 SECTION DETAIL – BIFOLD DOOR JAM
BB-S-08 1 1/2"=1'-0"

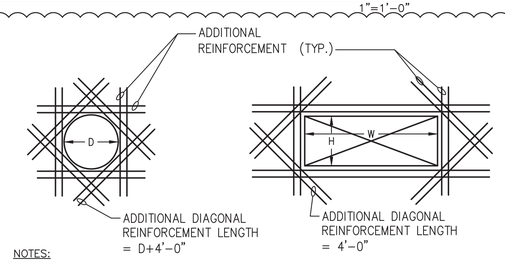

NOTES:

1. PROVIDE ADDITIONAL REINFORCEMENT WHEN OPENING SIZE (D, W, OR H) IS EQUAL TO OR GREATER THAN SPECIFIED BAR SPACING
2. EXTEND REINFORCEMENT A MINIMUM OF 48 BAR DIAMETERS BEYOND THE FACE OF THE OPENING.
3. PROVIDE ONE HALF THE AREA OF CUT BARS, EACH SIDE, MINIMUM 2 #4 @ 6" EF.
4. PROVIDE ADDITIONAL DIAGONAL REINFORCEMENT AT ALL OPENINGS.
   A. OPENINGS (D, H, OR W) UP TO 1'-0": 2 #4 @ 6" EF
   A. OPENINGS (D, H, OR W) UP TO 2'-0": 2 #5 @ 6" EF
   A. OPENINGS (D, H, OR W) UP TO 4'-0": 2 #6 @ 6" EF
5. WHERE REINFORCING AROUND OPENINGS IS SHOWN ON OTHER DRAWINGS PROVIDE ADDITIONAL REINFORCING AS PER THIS DETAIL.

TYPICAL ADDITIONAL REINFORCEMENT AT OPENING > 12" DIAMETER
SCALE: N.T.S.

CONSULTANT INFORMATION
Savin Engineers, P.C.

CONSULTANT SEAL

REVISION NUMBER	DATE	MADE BY	APP'D BY	REVISION
1	09/21/2022	DH	HME	BID ADDENDUM #3

RECORD DRAWING CERTIFICATION
☐ AS BUILT – CHANGES AS NOTED ☐ AS BUILT – NO CHANGES

CONTRACTOR
NAME
SIGNATURE
TITLE DATE

PROJECT COORDINATOR
NAME
SIGNATURE
TITLE DATE

WESTCHESTER COUNTY, NEW YORK
DEPARTMENT OF PUBLIC WORKS AND TRANSPORTATION
DIVISION OF ENGINEERING

INFRASTRUCTURE REHABILITATION - PHASE 3
PLAYLAND PARK, RYE, NEW YORK
NORTHEAST BURGER BARN
SECTIONS AND DETAILS

CONTRACT NUMBER	22-523
SHEET NUMBER	BB-S-13
DWG NO.:	60 of 664
SCALE:	AS SHOWN
DATE:	8/23/2022
DPW FILE NUMBER	1-118-S-809-1
REV. NO.	1

Drawing Name: G:\SavinAutocad\2060\25-Playland-Mega-3\S\BBS-1017.dwg
Projectname: ---- Comments: ----
Printed by: MGodby Date: 20 September 2022 2:38 PM Designed by: ----
Xrefs: [TSC-SVLOGO.dwg] [TB_24X36_WestchesterCo_3.dwg] [AR-S-1006.dwg

NOTES:

1. FOR STRUCTURAL NOTES, SEE DRAWING BB–S–02.
2. FOR STRUCTURAL ABBREVIATIONS AND SYMBOLS, SEE DRAWING – K–S–02.

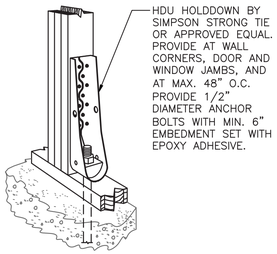

HOLD DOWN/TENSION TIE
SCALE: N.T.S.

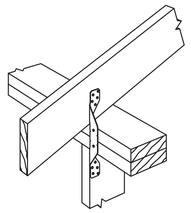

SIMPSON STRONG TIE H2 (OR APPROVED EQUAL). TYPICAL AT EACH RAFTER.

HURRICANE TIE
SCALE: N.T.S.

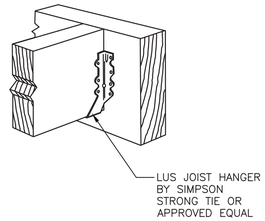

FACE MOUNTED JOIST HANGER
SCALE: N.T.S.

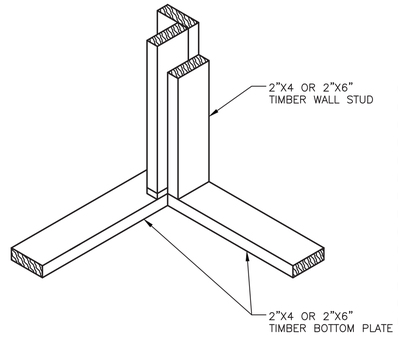

TYPICAL STUDS AT CORNERS DETAIL
N.T.S.

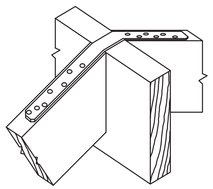

SIMPSON STRONG TIE (OR APPROVED EQUAL) AT EACH RAFTER. ATTACH DIRECTLY TO RAFTER

RIDGE STRAPPING
SCALE: N.T.S.

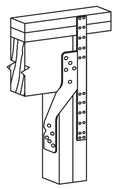

SIMPSON STRONG TIE H6 (OR APPROVED EQUAL) TYPICAL AT ALL EXTERIOR HEADER LOCATIONS.

HEADER TO JACK STUD CONNECTION
SCALE: N.T.S.

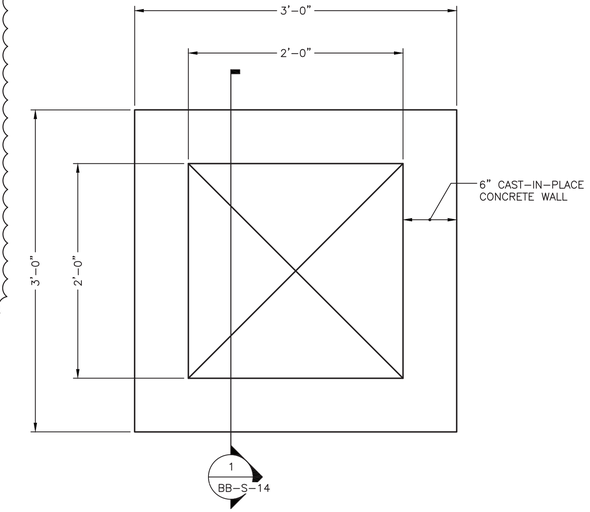

A
BB–S–05
PART PLAN
1 1/2"=1'–0"

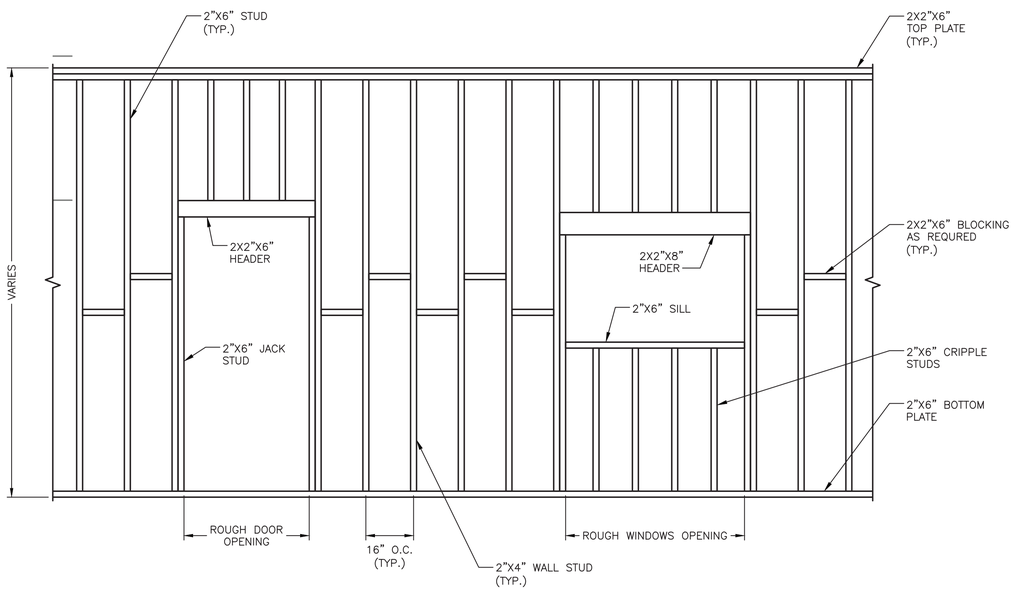

DETAIL WALL ELEVATION
N.T.S.

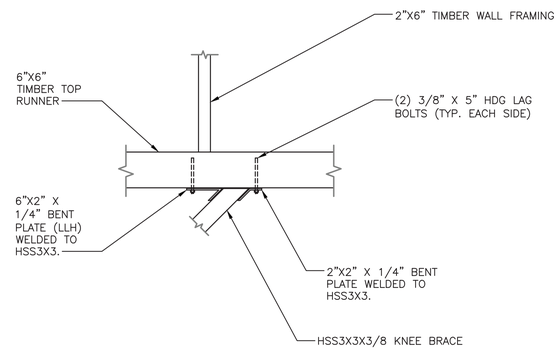

E
BB–S–08
DETAIL
1"=1'–0"

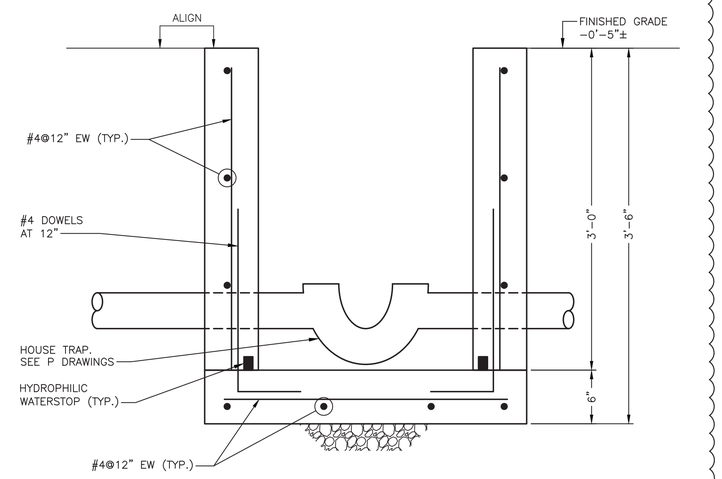

A
BB–S–05
SECTION
1 1/2"=1'–0"

0 1' 2'
SCALE: 3/4" = 1'–0"

0 6" 1'
SCALE: 1 1/2" = 1'–0"

CONSULTANT INFORMATION

Savin Engineers, P.C.

CONSULTANT SEAL

STATE OF NEW YORK · LICENSED PROFESSIONAL ENGINEER · No. 095362

REVISION NUMBER	DATE	MADE BY	APP'D BY	REVISION
1	09/21/2022	DH	HME	BID ADDENDUM #3

RECORD DRAWING CERTIFICATION

☐ AS BUILT – CHANGES AS NOTED ☐ AS BUILT – NO CHANGES

CONTRACTOR
NAME
SIGNATURE
TITLE DATE

PROJECT COORDINATOR
NAME
SIGNATURE
TITLE DATE

WESTCHESTER COUNTY, NEW YORK
DEPARTMENT OF PUBLIC WORKS AND TRANSPORTATION
DIVISION OF ENGINEERING

INFRASTRUCTURE REHABILITATION - PHASE 3
PLAYLAND PARK, RYE, NEW YORK
NORTHEAST BURGER BARN
TYPICAL SECTIONS AND DETAILS

CONTRACT NUMBER	22-523
SHEET NUMBER	BB-S-14
DWG NO.:	61 of 664
SCALE:	AS SHOWN
DATE:	8/23/2022
DPW FILE NUMBER	1-118-S-810-1
REV. NO.	1

Drawing Name: G:\SavinAutocad\2060\25-Playland-Mega-3\S\BBS-1018.dwg
Projectname: ---- Comments: ----
Printed by: MGodby Date: 20 September 2022 2:38 PM Designed by: ----
Rev#:
Xrefs: [TSG-SVL060.dwg] [TB_24X36_WestchesterCo_3.dwg] [AR-S-1006.dwg]

FIRE PROTECTION SAFETY NOTES:

1. SPECIAL PRECAUTION SHALL BE TAKEN BY THE CONTRACTOR SO THAT EQUIPMENT OF THIS APPLICATION AND ITS INSTALLATION WILL NOT AFFECT THE FOLLOWING: EGRESS TO AND FROM THE BUILDING. FIRE SAFETY OR CREATE A FIRE HAZARD. STRUCTURAL SAFETY OF THE BUILDING. ACCUMULATION OF DUST AND DEBRIS. (THE CONTRACTOR SHALL LEAVE THE SITE BROOM CLEANED EACH DAY.)

FIRE PROTECTION GENERAL NOTES:

1. DIMENSIONS, LOCATIONS AND SIZES INDICATED ON THE PLANS AND THE ELEVATION ARE APPROXIMATE AND SHALL BE VERIFIED BY FIELD INSPECTION BY THE CONTRACTOR.

2. SOME EXISTING PIPE AND EQUIPMENT IS SHOWN FOR CLARIFICATION OF THIS CONTRACT, BUT MUST BE PROTECTED BY THE CONTRACTOR.

3. NO WORK SHALL BE INITIATED UNTIL A WORK PERMIT IS OBTAINED BY THE CONTRACTOR AND A SAFETY PLAN IS SUBMITTED AND IS APPROVED.

4. CONTRACTOR IS RESPONSIBLE FOR OBTAINING ALL PERMITS, EQUIPMENT USE PERMITS, ALL INSPECTION APPROVALS, AND LETTER OF COMPLETION FROM THE DEPARTMENT OF BUILDINGS FOR WORK UNDER THIS CONTRACT AS APPLICABLE.

5. ANY EXISTING MATERIALS, PIPING, ETC., NOT INDICATED FOR DEMOLITION WHICH ARE REMOVED BY THE CONTRACTOR IN ORDER TO INSTALL NEW WORK SHALL BE REINSTALLED BY THE CONTRACTOR. IF EXISTING WORK IS DAMAGED IT SHALL BE REPLACED AT THE CONTRACTOR'S EXPENSE. ALL SURFACES OR FINISHES THAT ARE DAMAGED OR OTHERWISE AFFECTED BY WORK OF THIS CONTRACT SHALL BE PATCHED, REPAIRED, PAINTED OR REPLACED TO MATCH THE PRE-EXISTING CONDITION AND THE NEW WORK.

6. CONTRACTOR MAY PROPOSE ALTERNATE ROUTING IN DIFFICULT AREAS WHERE REPLACEMENT IN KIND IS NOT PRACTICAL. ANY AND ALL ALTERNATE ROUTING IS SUBJECT TO PRIOR REVIEW AND APPROVAL BY THE ENGINEER.

7. A FIRE WATCH SHALL BE PROVIDED WHEN SPRINKLER COVERAGE IS IMPACTED TO MAINTAIN BUILDING OPERATIONS OR AS REQUIRED.

FIRE PROTECTION SYMBOL LIST

— — — — — FS DRY— —	NEW DRY SPRINKLER PIPING
— — — — — DRY(E) —	EXISTING TO REMAIN DRY SPRINKLER PIPING
○	NEW UPRIGHT SPRINKLER HEAD
○	EXISTING UPRIGHT SPRINKLER HEAD
●	NEW CONCEALED PENDENT SPRINKLER HEAD-ORDINARY TEMPERATURE
	SPRINKLER DRY PIPE VALVE
	FIRE HOSE CABINET
	SIAMESE CONNECTION
	CHECK VALVE
	CHECK VALVE W/ ALARM
	WATER MOTOR ALARM BELL
⊗	PIPE RISER
	PIPE DROP
	PIPE UP
	POINT OF CONNECTION
	POINT OF DISCONNECTION
	PREACTION 6" BELL
	SOLENOID VALVE
	OS & Y VALVE
#	REVISION SYMBOL
F#	REFER TO SUPPLEMENTAL FIGURE INDICATED BY NUMBER (I.E. F2 REFERS TO FIGURE 2)
XXX / X	EQUIPMENT TAG / EQUIPMENT NUMBER
X / X-XXX	DETAIL TAG/ CALL OUT TAG / FIRE PROTECTION SHEET NUMBER

SHOP DWGS/EQUIPMENT SUBMITTALS

THE CONTRACTOR MUST SUBMIT ANY EQUIPMENT ALTERNATES 2 WEEKS PRIOR TO BIDS DUE FOR REVIEW AND COMMENTS. ALTERNATES MUST BE ACCEPTED BY LIRO ENGINEERS, INC., THE ARCHITECT, AND THE OWNER PRIOR TO INCLUSION IN BID. THE CONTRACTOR IS RESPONSIBLE TO COORDINATE EQUIPMENT ALTERNATES WITH OTHER TRADES AND MAKE ADJUSTMENTS TO THE MECHANICAL SYSTEMS, AS REQUIRED, TO ACCOMMODATE THESE NEW ALTERNATES.

THE CONTRACTOR IS RESPONSIBLE TO SUBMIT ALL OF THE FOLLOWING ITEMS FOR REVIEW/APPROVAL BY NO MORE THAN 3 WEEKS AFTER THE CONTRACTOR'S CONTRACT/BID HAS BEEN AWARDED. ALL SUBMITTALS MUST BE SENT TOGETHER AS A **SINGLE PACKAGE** WITH MANUFACTURER'S SPECIFIC MODELS AND SPECIFICATIONS OUTLINED TO MATCH THE SCHEDULED REQUIREMENTS. EACH SUBMITTAL MUST BE LABELED WITH THE UNIT DESIGNATION USED WITHIN THIS DRAWING SET. IF THE SUBMITTAL PACKAGE IS FOUND TO BE INCOMPLETE UPON RECEIPT, THE PACKAGE WILL BE HELD AND WILL NOT BE REVIEWED UNTIL THE REMAINDER OF THE PACKAGE IS RECEIVED. SIX (6) HARD COPIES OF THE SUBMITTAL PACKAGE MUST BE SENT TO LIRO ENGINEERS, INC. DIGITAL SHOP DRAWING SUBMISSIONS ARE ACCEPTABLE.

SCOPE OF WORK:

1. THE INSTALLATION OF NEW DRY FS EQUIPMENT.

2. PROPOSED FIRE SPRINKLER HEAD LOCATIONS AND PIPING ARE AS NOTED ON PLANS. EXACT PIPING FROM THE FIRE SPRINKLER MAIN TO ALL HEADS IS TO BE COORDINATED AND HYDRAULICALLY CALCULATED BY THE F.S.C. & SUBMITTED TO THE ENGINEER FOR APPROVAL.

NOTE: THIS SCOPE OF WORK DESCRIPTION IS PROVIDED TO GIVE AN OVERALL "MACRO" DESCRIPTION OF THIS PROJECT. F.S.C. IS RESPONSIBLE TO REVIEW ALL ENGINEERING AND ARCHITECTURAL DRAWINGS AND VISIT THE SITE IF NEEDED, PRIOR TO SUBMISSION OF BID.

SPRINKLER HEAD SCHEDULE

	MANUFACTURER	MODEL	DESCRIPTION	K-FACTOR	QUANTITY
○	RELIABLE	F1FR	DRY ORDINARY UPRIGHT SPRINKLE HEAD	5.6	37
●	RELIABLE	F1FR	DRY ORDINARY CONCEALED SPRINKLE HEAD	5.6	13

ABBREVIATION

ACV	ALARM CHECK VALVE
B.O.P.	BOTTOM OF PIPE
(E)	EXISTING TO REMAIN
F.S.C.	FIRE SPRINKLER CONTRACTOR
P.C	PLUMBING CONTRACTOR
TYP	TYPICAL
W/	WITH
NYS	NEW YORK STATE
U/P	UNDERGROUND PIPING
W	WATER

DRAWING NOTATIONS

	DRAWING NOTE TAB
	RISER DESIGNATION
	POINT OF CONNECTION
	POINT OF DISCONNECTION

1

DESIGN CRITERIA

1. AREA OF APPLICATION = 2535 SQ. FT. (DRY SYSTEM, ROOF PITCH >/= 2 IN 12)

2. OCCUPANCY CLASSIFICATION = ORDINARY HAZARD GROUP 1

3. MAXIMUM COVERAGE PER SPRINKLER HEAD = 130 SQ. FT

4. DESIGN DENSITY = 0.15 GPM/SQ. FT

5. "K" FACTOR OF SPRINKLER HEADS = 5.6

6. DESIGN CRITERIA REQUIREMENTS BASED ON:
   - 2020 BUILDING CODE OF NEW YORK STATE
   - 2016 NFPA 13

ORDINARY HAZARD PIPE SCHEDULE

STEEL		COPPER	
1IN.	2 SPRINKLERS	1IN.	2 SPRINKLERS
1 1/4 IN.	3 SPRINKLERS	1 1/4 IN.	3 SPRINKLERS
1 1/2IN.	5 SPRINKLERS	1 1/2IN.	5 SPRINKLERS
2 IN.	10 SPRINKLERS	2 IN.	12 SPRINKLERS
2 1/2 IN.	20 SPRINKLERS	2 1/2 IN.	25 SPRINKLERS
3 IN.	40 SPRINKLERS	3 IN.	45 SPRINKLERS
3 1/2 IN.	65 SPRINKLERS	3 1/2 IN.	75 SPRINKLERS
4 IN.	100 SPRINKLERS	4 IN.	115 SPRINKLERS
5 IN.	160 SPRINKLERS	5 IN.	180 SPRINKLERS
6 IN.	275 SPRINKLERS	6 IN.	300 SPRINKLERS
8 IN.	SEE SECTION 8.2	8 IN.	SEE SECTION 8.2

FOR SI UNITS, 1 IN. = 25.4 MM.

MAX DISTANCE BETWEEN HANGERS (FT.-IN.)

	NOMINAL PIPE SIZE (IN.)											
	3/4	1	1 1/4	1 1/2	2	2 1/2	3	3 1/2	4	5	6	8
STEEL PIPE EXCEPT THREADED LIGHTWALL	N/A	12-0	12-0	15-0	15-0	15-0	15-0	15-0	15-0	15-0	15-0	15-0
THREADED LIGHTWALL STEEL PIPE	N/A	12-0	12-0	12-0	12-0	12-0	12-0	N/A	N/A	N/A	N/A	N/A
COPPER TUBE	8-0	8-0	10-0	10-0	12-0	12-0	12-0	15-0	15-0	15-0	15-0	15-0

CODE REFERENCE

2020 NEW YORK STATE BUILDING CODE
2016 NFPA 13

1

NYS BUILDING CODE LIST OF REQUIRED SPECIAL INSPECTIONS

REQUIRED	NOT PRESENT	REF CODE SECTION	DESCRIPTION
*	*	1705.17	FIRE-RESISTANT PENETRATIONS AND JOINTS

FIRE PROTECTION NOTES

1. THE DRAWINGS SHOW THE LAYOUT OF THE SYSTEM AND INDICATE THE APPROXIMATE LOCATIONS OF EQUIPMENT AND PIPING. CONTRACTOR IS CAUTIONED NOT TO SCALE THE DRAWINGS. THE PIPING SHALL BE RUN APPROXIMATELY IN THE AREAS AS INDICATED ON THE DRAWINGS, [HOWEVER, TO THE ARRANGEMENT OF THE PIPING SYSTEMS AS MAY BE REFERENCED WITH WORK OF OTHER TRADES]. CONTRACTOR SHALL REVIEW AND COORDINATE WITH STRUCTURAL, ELECTRICAL AND MECHANICAL DRAWINGS. PARTITIONS, STRUCTURAL MEMBERS, ETC. ARE DESIGNED TO BE FURRED OR CLOSED IN AND TO INCLUDE ROUGH-IN PIPING. CONTRACTOR SHALL FURNISH ALL OFFSETS, ADDITIONAL FITTINGS, ETC. WHETHER SHOWN ON DRAWINGS OR NOT, AS REQUIRED TO MEET INSTALLATION CONDITIONS.

2. CONTRACTOR IS TO COMPLY WITH LATEST NFPA AND N.Y.S. CODES, AND COORDINATE HIS WORK WITH OTHER TRADES AND MAKE NECESSARY ADJUSTMENTS.

3. CONTRACTOR IS TO PREPARE SHOP DRAWINGS FOR ENGINEERS REVIEW AFTER MAKING A COMPLETE FIELD SURVEY.

4. CONTRACTOR IS TO REPORT ANY CONDITION REQUIRING CHANGES FROM PLANS TO ENGINEER PRIOR TO STARTING WORK.

5. BRANCH LINES AND MAINS (1 1/2" OR LESS) - SCHEDULE 40 FM APPROVED

6. BRANCH LINES AND MAINS (2" OR LARGER) - THINWALL (THICKNESS LESS THEN SCHEDULE 40 MORE THEN SCHEDULE 10 & FM APPROVED)

7. CONTRACTOR IS TO PERFORM A HYDROSTATIC TEST FOR 2 HRS. @ 200 PSI WITH NO LEAKAGE AND PROVIDE A TEST CERTIFICATE TO ENGINEER

8. CONTRACTOR IS TO EMPLOY EXPERIENCED WORKMEN WHO ARE TO FAMILIARIZE THEMSELVES WITH THE BUILDING AND OBSERVE SAFETY REQUIREMENTS.

9. CONTRACTOR TO ADJUST HEAD LOCATION TO COORDINATE WITH LIGHTS, DUCTS, ETC.

10. PERMIT FROM LOCAL AUTHORITY, TO BE OBTAINED BY CONTRACTOR.

11. ALL WORK TO BE APPROVED BY OWNERS ENGINEER, STATE AUTHORITIES HAVING JURISDICTION AND MUNICIPAL FIRE, PLUMBING, BUILDING AND WATER DEPARTMENTS.

12. U.L. AND/OR FM APPROVED EQUIPMENT TO BE USED.

13. WORK TO BE IN ACCORDANCE WITH MUNICIPAL WATER DEPT. RULES

14. SYSTEM IS TO BE MAINTAINED AND TESTED BY THE OWNER OR HIS AGENT IN ACCORDANCE WITH APPLICABLE LOCAL AND STATE CODES AND IN CONFORMANCE WITH NFPA 13A, LATEST EDITION.

15. IF BUILDING OCCUPANCY OR CONSTRUCTION CHANGES, THE SPRINKLER SYSTEM IS TO BE UPDATED ACCORDINGLY BY THE OWNER OR HIS AGENT.

16. CONTRACTOR IS TO NEATLY CUT AND PATCH IN A FIRST CLASS WORKMANLIKE MANNER, ALL HOLES AND PENETRATIONS IN WALLS, CEILINGS, FLOORS, PARTITIONS, ETC.

17. THE ENGINEER IS NOT RETAINED FOR SUPERVISION.

18. THE INSTALLATION OF THIS SYSTEM WILL REQUIRE THE CLOSING OF ONE OR MORE FIRE PROTECTION CONTROL VALVES. THESE VALVE CLOSURES SHOULD BE CLOSELY COORDINATED WITH THE OWNERS WHO SHOULD CONTACT THE LOCAL FIRE DEPARTMENT, INSURANCE INTERESTS, ETC. PRIOR TO VALVE CLOSURES.

19. ACTUAL DESIGN DENSITY MAY EXCEED STANDARDS, HOWEVER, IT IS A MINIMUM TO BE USED BY THE CONTRACTOR.

20. ALL ALARMS RELATING TO THE SPRINKLER SYSTEM SHOULD BE ACTIVATED UPON PLACING THE SPRINKLER SYSTEM IN SERVICE.

21. THE INSTALLATION COMPONENTS, SIZING, SPACING, MATERIALS LOCATION CLEARANCES, POSITION AND TYPE OF SYSTEM SHALL CONFORM TO NFPA 13 AND NYS UNIFORM FIRE PREVENTION BUILDING CODE LATEST EDITION.

22. SPRINKLERS SHALL BE PROTECTED AGAINST FREEZING AND INJURY AS PER NFPA CODE.

23. INSPECTION AND TESTS OF SPRINKLER SYSTEM SHALL BE CONDUCTED AS SPECIFIED IN NFPA CODE.

24. WATER SUPPLY TEST PIPES AND GAUGES SHALL BE PROVIDED AS SPECIFIED IN CHAPTER 2-9 OF NPPA 13.

25. PIPING SPECIFICATIONS, PIPE SCHEDULES, SYSTEM TEST PIPES, PROTECTION AGAINST CORROSION, DAMAGE FITTINGS, VALVES, HANGERS, SPRINKLERS, GUARDS AND SHIELDS SHALL BE IN ACCORDANCE WITH CHAPTER 3 AND CHAPTER 8 OF NFPA 13, LATEST EDITION. PIPING SHALL BE PAINTED TO PREVENT CORROSION.

26. STOCK OF EXTRA SPRINKLERS WILL BE FURNISHED AS PER CHAPTER 3 OF NFPA 13 (REQUIRED FOR EACH TEMPERATURE RATING).

27. SPRINKLER ALARMS WILL BE IN ACCORDANCE WITH NFPA 13.

28. SPACING, LOCATION AND POSITION OF SPRINKLERS SHALL BE IN ACCORDANCE WITH CHAPTER 4 OF NFPA 13.

29. ALL PIPING PASSING THROUGH WALLS SHALL COMPLY WITH NFPA FOR FIRE PROOFING.

30. DISTANCE OF SPRINKLERS FROM HEAT SOURCES SHALL BE IN ACCORDANCE WITH TABLE 3-16.6.3 OF NFPA 13.

31. PROVIDE WATER SUPPLY LETTER WITH FLOW TEST DATA.

32. ALL PIPES PASSING THROUGH FOUNDATION WALLS TO BE PROTECTED.

33. ALL VALVES SHALL BE IDENTIFIED AS REQUIRED BY NFPA 13.

34. DRAINAGE TO CONFORM TO CHAPTER 3-11 OF NFPA 13.

35. A ONE PIECE REDUCING FITTING OF GOOD DESIGN SHOULD BE USED WHEREVER A CHANGE IS MADE IN THE SIZE OF PIPE AS PER SECTION 3-12.2.7 OF NFPA 13.

36. ALL VALVES ON CONNECTIONS TO WATER SUPPLIES AND IN SUPPLY TO SPRINKLERS SHALL BE APPROVED O.S. &Y. OR APPROVED INDICATOR TYPE WITH TAMPER SWITCHES.

37. DRAIN VALVES AND TEST VALVES SHALL BE APPROVED TYPE AS PER SECTION 3-14.1.2 OF NFPA 13.

38. HANGERS SHALL BE OF A TYPE APPROVED FOR USE WITH THE PIPE OR TUBE INVOLVED, SPRINKLER PIPING SHOULD BE SUPPORTED BY ADJUSTABLE HANGERS PER NFPA 13, SECTION 3-15.

39. PROVISIONS SHOULD BE MADE TO FACILITATE FLUSHING SYSTEM PIPING BY PROVIDING FLUSHING CONNECTIONS CONSISTING OF A CAPPED NIPPLE 4" LONG ON THE END OF THE CROSS MAIN, AS PER SECTION 3- 8.2 OF NFPA 13.

40. SPRINKLER SHALL BE AN APPROVED TYPE AS PER SECTION 3-16 OF NFPA 13.

41. TEMPERATURE RATING SHALL COMPLY WITH SEC. 3-16.6 OF NFPA 13.

42. CLEARANCES BETWEEN SPRINKLERS AND STORAGE OR PARTITIONS AS PER NFPA 13, SECTION 4-2.5

43. SPACING AND LOCATION OF SPRINKLER SHALL COMPLY WITH CHAPTER 4 NFPA 13.

44. CONTRACTOR TO COORDINATE HIS WORK WITH OTHER TRADES.

45. ONLY EXPERIENCED SPRINKLER MECHANICS TO WORK ON THE SYSTEM.

46. ALL PIPING TO BE A MINIMUM OF 1" UNLESS OTHERWISE NOTED.

47. PROVIDE SHOP DRAWINGS WITH HYDRAULIC CALCULATIONS FOR REVIEW TO LOCAL FIRE MARSHALL AND INSURANCE UNDERWRITER AND ENGINEER FOR APPROVAL PRIOR TO INSTALLATION.

48. ALL FIRE PROTECTION EQUIPMENT SHALL BE INSTALLED PER MANUFACTURER'S REQUIREMENTS/SPECIFICATIONS.

49. ALL FIRE PROTECTION EQUIPMENT SHALL BE MOUNTED ON MINIMUM 6" HIGH CONCRETE PAD UNLESS OTHERWISE NOTED (PAVER AND CINDER BLOCK IS NOT ACCEPTABLE).

50. PERMIT IS REQUIRED PRIOR TO INSTALLATION, TO INCLUDE SIGNED AND SEALED SHOP DRAWINGS, HYDRAULIC CALCULATION, SHOP DRAWINGS, MANUFACTURERS INFORMATION ON HEADS AND APPLIANCES, COMPLIANCE WITH NFPA 13 AND SECTION 903 2020 NYSBC/FC.

DRY SYSTEM COMPRESSOR SCHEDULE

TAG	MANUFACTURER	MODEL	SERVICE	LOCATION	AVERAGE CFM	V.P.H.HZ	HP	RECOMMENDED WIRE SIZE	DIMENSION (L"xW"xH")	WEIGHT (LBS)	NOTES
DC-1	GENERAL AIR PRODUCT	LT20033A	DRY SYSTEM	SPRINKLER ROOM	2.43	230.1.60	1/3	12	33x13x28	115	1,2,3

NOTES:

1. MOUNTING BRACKET.
2. PROVIDE AIR MAINTENANCE DEVICE (RELIABLE MODEL AMD-1)
3. PROVIDE WITH A 10 GALLON GENERAL AIR TANK
4. UL LISTED PRESSURE SWITCH. SET FOR 20 PSI ON AND 25 PSI OFF. REFER TO MANUFACTURER'S RECOMMENDATIONS FOR PROPER AIR PRESSURE.

DRY PIPE VALVE SCHEDULE

MANUFACTURER	MODEL	SERVICE	LOCATION	SIZE (INCH)
RELIABLE	D	DRY SYSTEM	SPRINKLER EQUIP. ROOM	4

NOTES:

1. FACTORY PREASSEMBLED TRIM - BASIC
2. PROVIDE WITH RELIABLE B1 ACCELERATOR. INSTALL AS PER MANUFACTURER'S RECOMMENDATIONS

FIRE PROTECTION DRAWING LIST

SHEET NO.	SHEET NAME	REVISON NO.	REVISION DATE
BB-FP-01	FIRE PROTECTION NOTES, SYMBOLS, ABBREVIATIONS, AND DRAWING LIST	0	-
BB-FP-11	FIRE PROTECTION GROUND FLOOR DEMOLITION RCP	0	-
BB-FP-21	FIRE PROTECTION GROUND FLOOR CONSTRUCTION PLAN AND RCP	0	-
BB-FP-81	FIRE PROTECTION DETAILS	0	-

CONSULTANT INFORMATION

LiRo Engineers, Inc.
A LiRo Group Company
Syosset, N.Y. 516-214-8157[T]

CONSULTANT SEAL
STATE OF NEW YORK — FRANK F. DUSSE — LICENSED PROFESSIONAL ENGINEER — No. 090114

REVISION NUMBER	DATE	MADE BY	APP'D BY	REVISION
1	09/21/22			BID ADDENDUM # 3

RECORD DRAWING CERTIFICATION
☐ AS BUILT – CHANGES AS NOTED ☐ AS BUILT – NO CHANGES

CONTRACTOR
NAME
SIGNATURE
TITLE DATE

PROJECT COORDINATOR
NAME
SIGNATURE
TITLE DATE

WESTCHESTER COUNTY, NEW YORK
DEPARTMENT OF PUBLIC WORKS AND TRANSPORTATION
DIVISION OF ENGINEERING

INFRASTRUCTURE REHABILITATION - PHASE 3
PLAYLAND PARK, RYE, NEW YORK
NORTHEAST BURGER BARN
FIRE PROTECTION NOTES, SYMBOLS, ABBREVIATIONS & DWG LIST

CONTRACT NUMBER	22-523
SHEET NUMBER	BB-FP-01
DWG NO.:	62 of 664
SCALE:	AS INDICATED
DATE:	08/23/2022
DPW FILE NUMBER	1-118-FP-811-1
REV. NO.	1

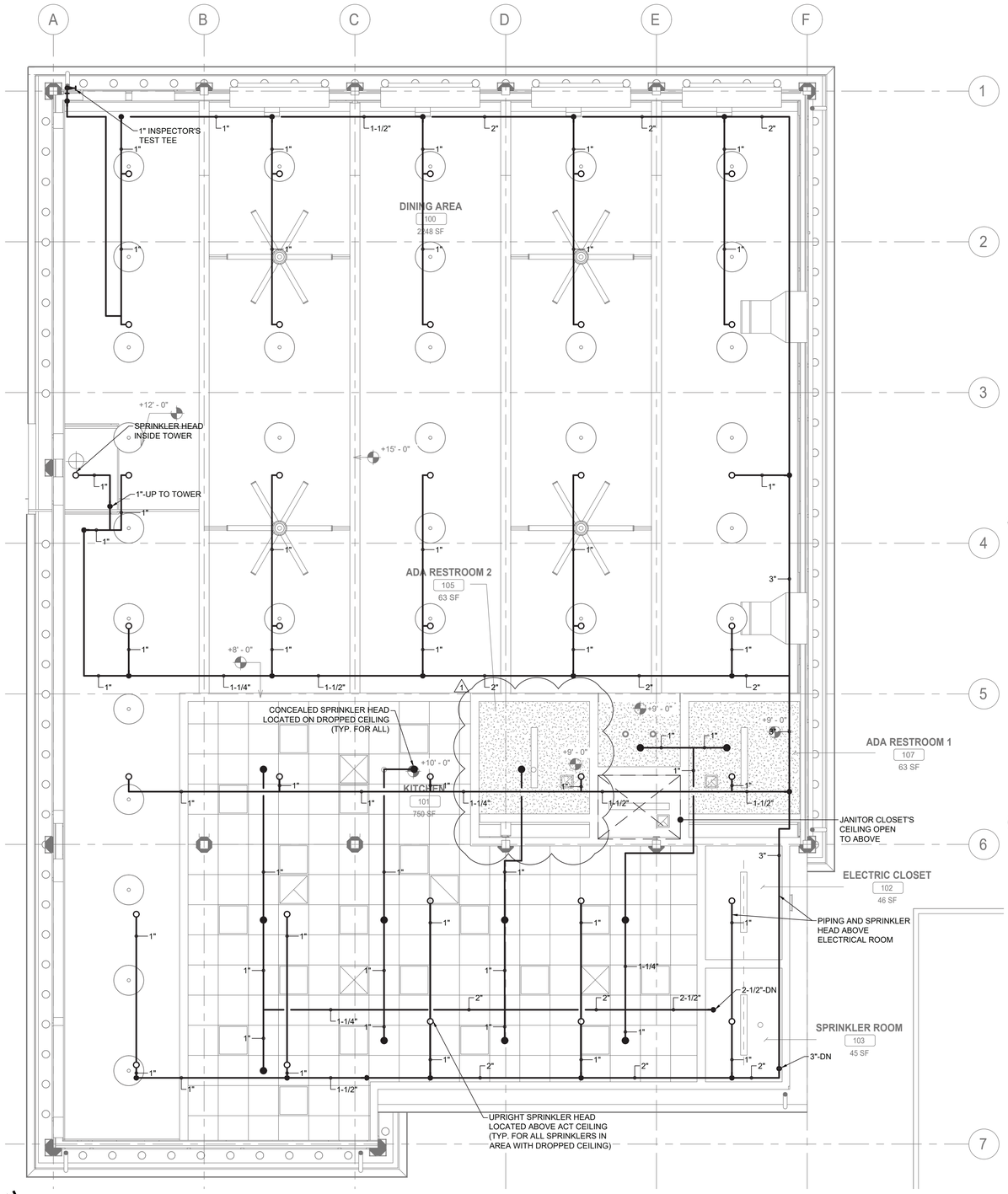

N

FIRE PROTECTION GROUND FLOOR CONSTRUCTION PLAN

SCALE: 1/4" = 1'-0

FIRE PROTECTION CONSTRUCTION NOTES:

1. RECONNECT NEW 6" FIRE SERVICE TO EXISTING.
2. INSTALL NEW SIGNAGE AND NEW FLUSH SIAMESE CONNECTION. SUCH SIGN SHALL HAVE THE LETTERS "FDC" AT LEAST 6 INCHES (152 MM) HIGH AND AN ARROW TO INDICATE THE LOCATION OF THE SIAMESE CONNECTION. SIGN SHALL BE LOCATED IN FRONT OF THE BUILDING AND POINTING IN THE DIRECTION OF THE SIAMESE CONNECTION. SIGN SHALL BE SUBJECT TO THE APPROVAL OF THE FIRE CODE OFFICIAL.
3. INSTALL NEW FIRE BELLS AND CONNECT TO FIRE ALARM SYSTEM.
4. INSTALL NEW AIR COMPRESSOR AND AIR PIPING. AIR COMPRESSOR SHALL BE INSTALLED ON A CONCRETE PAD. LOCATION OF THE NEW AIR COMPRESSOR AND TANK SHALL BE LOCATED IN THE FIELD. PROVIDE A SHUT OFF VALVE ON THE PIPING FROM THE AIR COMPRESSOR.

GENERAL NOTES:

1. ALL DISTRIBUTION PIPING, SHALL BE PAINTED AS DIRECTED BY ARCHITECT. REFER TO SPECIFICATION FOR PAINT TYPE AND APPLICATION PROCEDURE.
2. COORDINATE WITH FACILITY PRIOR TO SHUTDOWN OF FIRE PROTECTION SYSTEM FOR ANY DEMOLITION AND CONSTRUCTION WORK.
3. CONTRACTOR SHALL PROVIDE FIRE WATCH AS NEEDED FOR ALL AFFECTED BUILDINGS WHILE SPRINKLER COVERAGE IS IMPACTED.
4. CONTRACTOR TO COORDINATE WITH FACILITY WHEN WORKING AROUND OR ABOVE THE RIDE COMPONENTS, AND PROVIDE ALL NECESSARY MEASURES TO PROTECT THESE COMPONENTS PER THE REQUIREMENTS OF THE FACILITY.
5. UPON COMPLETION, SYSTEM SHALL BE TESTED FOR PROPER OPERATION.

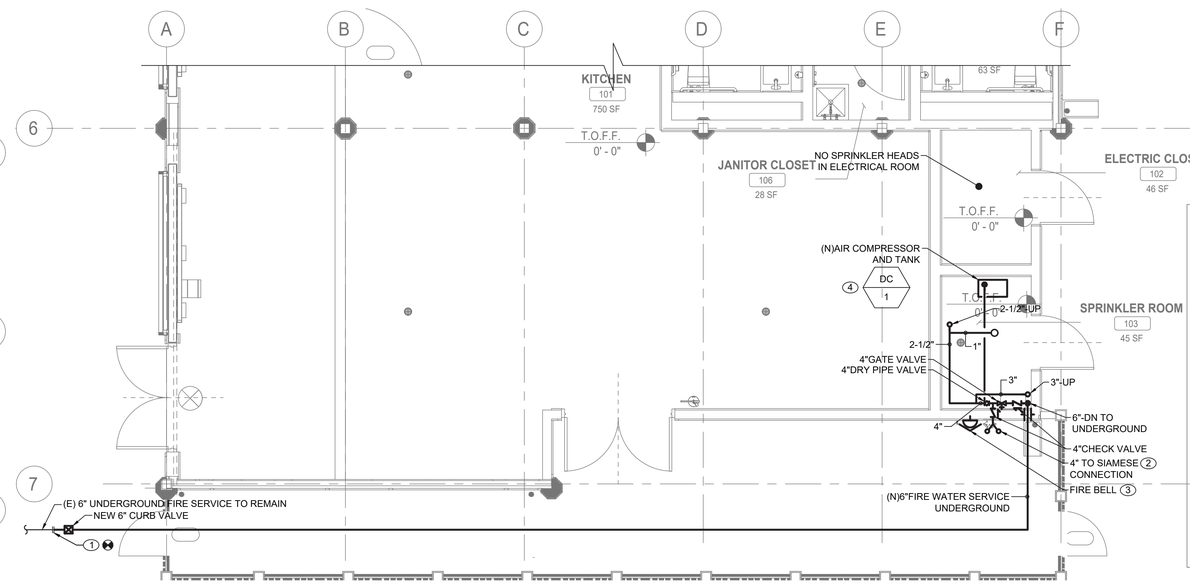

N

FIRE PROTECTION SPRINKLER ROOM AND ELECTRICAL CLOSET CONSTRUCTION PARTIAL GROUND FLOOR PLAN

SCALE: 1/4" = 1'-0

CONSULTANT INFORMATION

LiRo Engineers, Inc.
A LiRo Group Company
Syosset, N.Y. 516-214-8157[T]

CONSULTANT SEAL

STATE OF NEW YORK · FRANK F. ULISSE · LICENSED PROFESSIONAL ENGINEER · 090171

REVISION NUMBER	DATE	MADE BY	APP'D BY	REVISION
1	09/21/22			BID ADDENDUM # 3

RECORD DRAWING CERTIFICATION

☐ AS BUILT – CHANGES AS NOTED ☐ AS BUILT – NO CHANGES

CONTRACTOR: NAME / SIGNATURE / TITLE / DATE

PROJECT COORDINATOR: NAME / SIGNATURE / TITLE / DATE

WESTCHESTER COUNTY, NEW YORK
DEPARTMENT OF PUBLIC WORKS AND TRANSPORTATION
DIVISION OF ENGINEERING

INFRASTRUCTURE REHABILITATION - PHASE 3
PLAYLAND PARK, RYE, NEW YORK
NORTHEAST BURGER BARN
FIRE PROTECTION GROUND FLOOR CONSTRUCTION PLAN AND RCP

CONTRACT NUMBER	22-523
SHEET NUMBER	BB-FP-21
DWG NO.:	64 of 664
SCALE:	AS INDICATED
DATE:	08/23/2022
DPW FILE NUMBER	1-118-FP-813-1
REV. NO.	1

PLUMBING SYMBOL LIST

IDENTIFIER	DESCRIPTION
—— — ——CW	DOMESTIC COLD WATER
——— W ———	WASTE PIPING (ABOVE SLAB)
— — — - W - — — — —	WASTE PIPING (UNDER SLAB)
——— S ———	SANITARY PIPING (ABOVE SLAB)
— — — - S - — — — —	SANITARY PIPING (UNDER SLAB)
--------- V -----------	SANITARY VENT PIPING
◕	FIELD CONNECT
◐	FIELD DISCONNECT
(F#)	REFER TO SUPPLEMENTAL FIGURE INDICATED BY NUMBER (I.E. F2 REFERS TO FIGURE 2)
XXX / XX	EQUIPMENT TAG EQUIPMENT NUMBER
XXX / X-XXX	DETAIL TAG/CALL OUT TAG PLUMBING SHEET NUMBER

PIPING ELEMENTS/VALVING

- BACKFLOW PREVENTER (DOUBLE CHECK VALVE ASSEMBLY)
- BALL VALVE
- CAP ON END OF PIPE
- CO / CO — CLEANOUT
- FD — FLOOR DRAIN
- GATE VALVE
- HB — HOSE BIBB
- VALVE IN VALVE BOX
- PIPE DROPPING DOWN
- PIPE RISING UP
- TEE OUTLET DOWN
- TEE OUTLET UP
- VALVE IN RISE OR DROP
- NFHB — NON FREEZE HOSE BIBB IN BOX W/VACUUM BREAKER

SCOPE OF WORK

PLUMBING SCOPE OF WORK INCLUDES, BUT IS NOT LIMITED TO:

1. REMOVAL OF EXISTING WATER SERVICE.

2. THE INSTALLATION OF NEW PLUMBING FIXTURES AND ALL ASSOCIATED PIPING AND ACCESSORIES.

3. THE INSTALLATION OF NEW SANITARY AND DOMESTIC WATER SERVICES.

NOTE: THIS SCOPE OF WORK DESCRIPTION IS PROVIDED TO GIVE AN OVERALL "MACRO" DESCRIPTION OF THIS PROJECT .P.C. IS RESPONSIBLE TO REVIEW ALL ENGINEERING & ARCHITECTURAL DRAWINGS & VISIT THE SITE IF NEEDED, PRIOR TO SUBMISSION OF BID.

CODE REFERENCE

2020 NEW YORK STATE BUILDING CODE
2020 NEW YORK STATE MECHANICAL CODE
2020 NEW YORK STATE PLUMBING CODE
2020 NEW YORK STATE ENERGY CONSERVATION CODE

SECTION 704
DRAINAGE PIPING INSTALLATION

704.1 SLOPE OF HORIZONTAL DRAINAGE PIPING.

HORIZONTAL DRAINAGE PIPING SHALL BE INSTALLED IN UNIFORM ALIGNMENT AT UNIFORM SLOPES. THE MINIMUM SLOPE OF HORIZONTAL DRAINAGE PIPE SHALL BE IN ACCORDANCE WITH TABLE 704.1.

TABLE 704.1
SLOPE OF HORIZONTAL DRAINAGE PIPE

SIZE (INCHES)	MINIMUM SLOPE (INCH PER FOOT)
2 1/2 OR LESS	1/4
3 TO 6	1/8
8 OR LARGER	1/16

LEED NOTES

1. ALL ADHESIVES, SEALANTS, PAINTS & COATINGS APPLIED TO THE INTERIOR OF THE BUILDING (WITHIN THE WEATHER PROOFING SYSTEM, INCLUDING WALL CAVITIES) MUST NOT EXCEED THE LEED VOC LIMITS. PROVIDE A VOC SUBMITTAL AND MSDS FOR ALL ADHESIVES, SEALANTS, PAINTS AND COATINGS TO BE APPLIED.

1

NYS BUILDING CODE LIST OF REQUIRED SPECIAL INSPECTIONS

REQUIRED	NOT PRESENT	REF. CODE SECTION	DESCRIPTION
*	*	1705.17	FIRE-RESISTANT PENETRATIONS AND JOINTS

PLUMBING GENERAL NOTES:

1. ALL PLUMBING WORK UNDER THIS CONTRACT SHALL CONFORM TO THE LATEST EDITION OF THE PLUMBING CODE OF NEW YORK STATE (PC-NYS), THE NEW YORK STATE ENERGY CODE, AND THE REQUIREMENTS OF THE UTILITY AND THE LOCAL WATER COMPANY.
2. ALL MATERIALS SHALL BE NEW UNLESS NOTED OTHERWISE.
3. THE PLUMBING CONTRACTOR SHALL ASSUME RESPONSIBILITY FOR ALL LABOR AND MATERIALS SUPPLIED AND INSTALLED UNDER THIS CONTRACT AND SHALL GUARANTEE THE WORK PERFORMED UNDER THIS CONTRACT FOR A PERIOD OF ONE (1) YEAR FROM THE DATE OF ACCEPTANCE OF THIS WORK.
4. PLUMBING CONTRACTOR SHALL CONSULT WITH, COOPERATE AND COORDINATE WITH THE GENERAL CONTRACTOR, MECHANICAL CONTRACTOR, SPRINKLER CONTRACTOR, ELECTRICAL CONTRACTOR, ETC. IN ORDER TO MINIMIZE INTERFERENCES BETWEEN TRADES DURING PERFORMANCE OF THIS WORK.
5. THE PLUMBING CONTRACTOR SHALL PREPARE AND FILE ALL REQUIRED PLANS AND PERMITS WITH THE LOCAL AUTHORITIES. PC SHALL PAY THE FILING FEES AS REQUIRED. PC SHALL OBTAIN ALL APPROVALS AND SHALL PAY FOR ALL WORK PERMITS, INSPECTIONS AND SIGN-OFFS AS REQUIRED TO EXECUTE THIS WORK IN A MANNER IN CONFORMANCE WITH THE CODES AND AUTHORITIES HAVING JURISDICTION.
6. THE PLUMBING CONTRACTOR SHALL PERFORM ALL TESTS AND ARRANGE FOR ALL INSPECTIONS FOR WORK UNDER HIS CONTRACT AS REQUIRED BY LAW AND SHALL SUPPLY ALL CERTIFICATES OF INSURANCE AS REQUIRED BY THE LAW AND THE OWNER. REFER TO SECTION 107 (INSPECTIONS) OF THE PC-NYS.
7. THE PLUMBING CONTRACTOR SHALL MAKE ALL FINAL CONNECTIONS TO ALL PLUMBING EQUIPMENT REGARDLESS WHETHER ILLUSTRATED HEREIN WITHOUT ANY ADDITIONAL COSTS TO THE OWNER.
8. PLUMBING CONTRACTOR SHALL VISIT THE SITE & BECOME FAMILIAR WITH THE EXISTING CONDITIONS, INCLUDING THE SIZE OF CONNECTIONS, ROUGHING DIMENSIONS, ETC. BEFORE SUBMITTING A QUOTATION FOR THE WORK.
9. PLUMBING CONTRACTOR SHALL PERFORM ALL CUTTING, EXCAVATION, BACKFILLING, ROUGH & FINISH PATCHING AS PER THE SPECIFICATIONS AS REQUIRED FOR THE INSTALLATION OF THE WORK, UNLESS NOTED OTHERWISE.
10. ALL CONNECTIONS TO NEW AND/OR EXISTING EQUIPMENT SHALL BE SIZED AND INSTALLED IN ACCORDANCE WITH THE MANUFACTURER'S INSTRUCTIONS.
11. IT IS THE INTENT OF THIS CONTRACT THAT THE COMPLETED WORK BE FULLY OPERATIONAL.
12. ALL PIPE HANGERS AND SUPPORTS SHALL BE INSTALLED AT INTERVALS AND BE FABRICATED OF MATERIALS AS REQUIRED BY THE PC-NYS.
13. ALL NEW PLUMBING FIXTURES SHALL BE INSTALLED WITH ANGLE STOP VALVES IN THE SUPPLY LINES SERVING THE FIXTURE.
14. ALL NEW EXPOSED WATER AND WASTE PIPING SERVING THE FIXTURES SHALL BE CHROME PLATED AND SHALL HAVE CHROME PLATED ESCUTCHEONS RIGIDLY ATTACHED TO THE PIPING AT THE POINT OF WALL OR FLOOR PENETRATIONS.
15. PLUMBING CONTRACTOR SHALL SUBMIT SHOP DRAWINGS FOR ALL NEW PLUMBING FIXTURES AND EQUIPMENT TO BE SUPPLIED AND INSTALLED UNDER THIS CONTRACT FOR APPROVAL BEFORE INSTALLATION OF SAME.
16. WATERPROOF PIPE SLEEVES SHALL BE INSTALLED AT ALL PENETRATIONS THROUGH EXTERIOR WALLS. PIPE SLEEVES SHALL BE INSTALLED AT ALL WALL PENETRATIONS THROUGH INTERIOR WALLS AND FLOORS.
17. WATER HAMMER ELIMINATORS (APPROVED - FIELD FABRICATED OR MANUFACTURED) SHALL BE INSTALLED AT ALL RUN OUTS IN HOT AND/OR COLD WATER LINES SERVING TOILET ROOMS AND OTHER AREAS WHICH INCORPORATE "RAPID - ACTION" VALVES SUCH AS FLUSHOMETERS, SOLENOID VALVES, ETC.
18. ALL PIPING SHALL BE TESTED AT A MINIMUM PRESSURE OF 1-1/2 TIMES THE MAXIMUM OPERATING PRESSURE UNLESS OTHERWISE NOTED ON THE DOCUMENTS OR THE PLUMBING CODE AND IN ACCORDANCE WITH THE UTILITY REQUIREMENTS.
19. ALL REMOVALS PERFORMED UNDER THIS CONTRACT SHALL INCLUDE REMOVAL OF ALL DEBRIS AND DISPOSAL AT AN APPROPRIATE SITE.
20. ALL LAVATORIES DESIGNED FOR USE BY PERSONS CONFINED TO WHEELCHAIRS SHALL HAVE THE HOT & COLD WATER SERVICES, AS WELL AS THE TRAP, RECESSED & INSULATED IN ACCORDANCE WITH ADA REQUIREMENTS.
21. REFER TO THE ARCHITECTURAL PLANS FOR ALL STRUCTURAL DIMENSIONS.
22. ALL WORK TO BE COORDINATED WITH OTHER TRADES.
23. ALL PIPING PENETRATIONS TO BE SEALED AROUND WITH "NELSON" FIRE SEAL.
24. ALL WATER SERVICE PIPING WITHIN THE BUILDING IS TO BE INSULATED IN ACCORDANCE WITH ALL NEW YORK STATE PLUMBING CODE (NYS-PC) AND NYS ENERGY CODES.
25. ALL PLUMBING FIXTURES TO BE INSTALLED AS PER FACTORY RECOMMENDATIONS.
26. ALL PLUMBING FIXTURES TO BE TRAPPED, VENTED AND PROVIDED WITH AIR SHOCKS WHEN REQUIRED.
27. PLUMBING FIXTURES SHALL COMPLY WITH "WATER CONSERVATION" REQUIREMENT AS DETAILED IN THE NYS-PC.
28. GC IS RESPONSIBLE TO SUBMIT APPLICATION AND TAP FEES TO LOCAL WATER AUTHORITY AND HAVE OWNER FILL OUT APPLICATION UPON COMPLETION OF PLUMBING ROUGH-IN INSPECTION.
29. ALL WATER AND HORIZONTAL STORM DRAIN PIPING INCLUDING ROOF DRAIN BODY SHALL BE INSULATED.
30. FLOOR DRAINS AND FLOOR CLEAN-OUTS SHALL BE SET LEVEL WITH FINISHED FLOORS.
31. ALL PIPE DIMENSIONS ARE INSIDE CLEAR.
32. ALL PLUMBING FIXTURES TO HAVE ISOLATION VALVES.
33. P.C. IS RESPONSIBLE TO ADJUST HOT WATER HEATER (WH) TEMPERATURE TO ENSURE A TEMPERATURE RANGE OF 110°F TO 120°F AT THE INDIVIDUAL FIXTURE OUTPUT. P.C. MUST ENSURE A TEMPERATURE OF 120° F MAXIMUM AT THE FIXTURES TO PREVENT SCALDING.
34. BUILDING DOMESTIC WATER DEMAND & SIZING IS CALCULATED FROM NYS-PC SECTION 603, 604 & APPENDIX E.
35. BUILDING SANITARY DEMAND & SIZING IS CALCULATED FROM NYS-PC SECTIONS 709 AND 710.
36. ALL DFU CALCULATIONS ARE BASED OFF OF TABLE 709.1 OF THE NYS-PC.
37. ALL SANITARY WATER PIPING SHALL BE PITCHED IN ACCORDANCE WITH NYS-PC SECTION 704 BASED ON TABLE 704.1 SLOPE OF HORIZONTAL DRAINAGE PIPE.
38. ALL VENT SIZING IS BASED OFF OF SECTION 916 OF THE NYS PLUMBING CODE.
39. ALL PLUMBING EQUIPMENT SHALL BE INSTALLED PER MANUFACTURER'S REQUIREMENTS/SPECIFICATIONS.

ABBREVIATIONS:

AD	ACCESS DOOR
BFP	BACKFLOW PREVENTER
CO	CLEAN OUT
CW	COLD WATER
DCV	DOUBLE CHECK VALVE
DFU	DRAINAGE FIXTURE UNIT
DPCO	DECK PLATE CLEAN OUT
FC	FIELD CONNECT
FD	FLOOR DRAIN
FFD	FUNNEL FLOOR DRAIN
FU	FIXTURE UNIT
HW	HOT WATER
HWR	HOT WATER RETURN
IAW	IN ACCORDANCE WITH
IWFD	INDIRECT WASTE FUNNEL DRAIN
LAV	LAVATORY
JS	JANITOR'S SINK
NC	NORMALLY CLOSED
NO	NORMALLY OPEN
NYS-PC	NEW YORK STATE PLUMBING CODE
RD	ROOF DRAIN
S	SANITARY
SD	STORM DRAIN
TMV	THERMOSTATIC MIXING VALVE
U.O.N.	UNLESS OTHERWISE NOTED
UR	URINAL
V	VENT
WC	WATER CLOSET
PC	PLUMBING CONTRACTOR
MC	MECHANICAL CONTRACTOR
TYP.	TYPICAL
VIF	VERIFY IN FIELD
WCO	WALL CLEAN OUT
WFU	WATER FIXTURE UNITS
(N)	NEW
(E)	EXISTING
(D)	DEMO

THE ABBREVIATIONS ARE SHOWN FOR GENERAL REFERENCE ONLY. THE PRESENCE OF AN ABBREVIATION ON THIS LIST DOES NOT IMPLY ITS USE ON THIS PROJECT. REFER TO DRAWINGS FOR SPECIFIC ABBREVIATIONS USED.

PLUMBING FIXTURE SCHEDULE

MARK	DESCRIPTION	SERVICE						BASED ON:			REMARKS
		TRAP	S/W	V	CW	TW	HW	ITEM	MANUFACTURER	MODEL	
PF-1	WALL MOUNTED WATER CLOSET	-	4"	2"	1-1/2"	-	-	BOWL FLUSH VALVE SEAT CARRIER	SLOAN	ST-2459	FLUSH VALVE SLOAN 8111 SFSM-1.28
PF-3	LAVATORY - WALL-MOUNT	1-1/2"	1-1/2"	1-1/2"	-	1/2"	-	FAUCET SUPPORT DRAIN TRIM	DURAVIT	2350500030	FAUCET AMERICAN STANDARD 702B.103
PF-5	SERVICE SINK	3"	3"	2"	1/2"	-	1/2"	FAUCET DRAIN TRIM	MUSTEE	63M	FAUCET AMERICAN STANDARD 8344.212

NOTES:
1. PROVIDE ALL REQUIRED HANGERS, MOUNTING BRACKETS, AND HARDWARE FOR A COMPLETE INSTALLATION PER MANUFACTURES INSTRUCTIONS.
2. PROVIDE ALL LAVATORIES WITH POWER KIT PK00.WRK BATTERY PACK W/HOLDER AND MIXING VALVE 605XTMV1070.

ELECTRIC DOMESTIC HOT WATER HEATER SCHEDULE

TAG	MANUFACTURER	MODEL	LOCATION	HEATER KW	STORAGE CAPACITY GAL.	STORAGE WATER TEMP SETPOINT (DEG F)	ELECTRICAL		DIMENSION	APPROX. SHIPPING WEIGHT (LBS)
							V-PH-HZ	AMPS	HxD (IN)	
WH-1	BRADFORD WHITE	LE150L3-3	JANITOR CLOSET	3	47	110	240-1-60	12.5	34.5x24	140

NOTES:

FLOOR DRAIN SCHEDULE

TAG	TYPE	MANUFACTURER	MODEL	SERVICE
FD-1	ADJUSTABLE	ZURN	FD-2320-R5	ALL SPACES

NOTES:
1. PROVIDE THE FOLLOWING FOR FD-1; CHORME PLATED STRAINER ASSEMBLY, 6" NICKEL HEAD ASSEMBLY, AND VANDAL PROOF.
2. PROVIDE BARRIER-TYPE TRAP SEAL PROTECTION DEVICE ZURN Z1072 OR APPROVED EQUAL.

CLEANOUT SCHEDULE

TAG	TYPE	MANUFACTURER	MODEL
CO	ADJUSTABLE DECK PLATE CLEAN OUT	WATTS	CO-1200-R

WALL HYDRANT SCHEDULE

TAG	TYPE	MANUFACTURER	MODEL
NFHB	WALL HYDRANT	ZURN	Z1320XL

REDUCED PRESSURE ZONE VALVE SCHEDULE

TAG	MANUFACTURER	MODEL	LOCATION	SIZE (IN)	PRESSURE DROP (PSI)
RPZ-1	WATTS	LF009-S	SPRINKLER ROOM	2	10

NOTES:
1. PROVIDE STRAINER.

PLUMBING DRAWING LIST

SHEET NO.	SHEET NAME	REVISON NO.	REVISION DATE
BB-P-01	PLUMBING NOTES, SYMBOLS, ABBREVIATIONS AND DRAWING LIST	0	-
BB-P-21	PLUMBING GROUND FLOOR CONSTRUCTION PLAN	0	-
BB-P-81	PLUMBING DETAILS	0	-

CONSULTANT INFORMATION

LiRo Engineers, Inc.
A LiRo Group Company
Syosset, N.Y. 516-214-8157[T]

CONSULTANT SEAL

REVISION NUMBER	DATE	MADE BY	APP'D BY	REVISION
1	09/21/22			BID ADDENDUM # 3

RECORD DRAWING CERTIFICATION
☐ AS BUILT – CHANGES AS NOTED ☐ AS BUILT – NO CHANGES

CONTRACTOR
NAME
SIGNATURE
TITLE DATE

PROJECT COORDINATOR
NAME
SIGNATURE
TITLE DATE

WESTCHESTER COUNTY, NEW YORK
DEPARTMENT OF PUBLIC WORKS AND TRANSPORTATION
DIVISION OF ENGINEERING

INFRASTRUCTURE REHABILITATION - PHASE 3
PLAYLAND PARK, RYE, NEW YORK
NORTHEAST BURGER BARN
PLUMBING NOTES, SYMBOLS, ABBREVIATIONS AND DRAWING LIST

CONTRACT NUMBER 22-523
SHEET NUMBER **BB-P-01**
DWG NO.: 66 of 664
SCALE: **AS INDICATED**
DATE: 08/23/2022
DPW FILE NUMBER **1-118-P-815-1**
REV. NO. 1

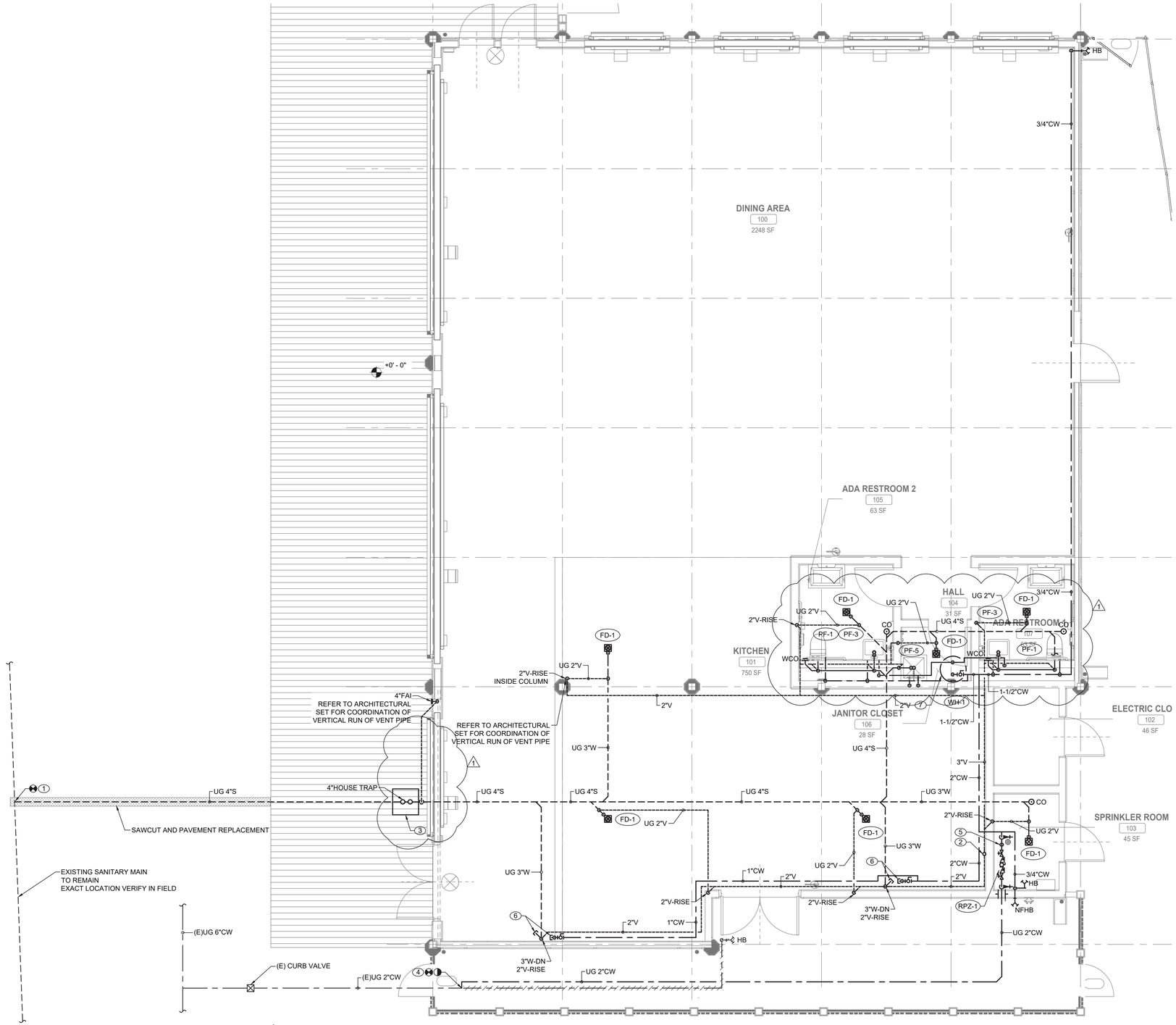

1 P-21 **PLUMBING GROUND FLOOR CONSTRUCTION PLAN**
SCALE: 1/4" = 1'-0

PLUMBING CONSTRUCTION NOTES:

1. CONNECT NEW 4" SANITARY SERVICE TO EXISTING SEWER MAIN. CONTRACTOR TO VERIFY THE INVERT, SIZE, AND MATERIAL OF THE EXISTING SEWER PIPING TO FACILITATE NEW SANITARY SERVICE CONNECTION.
2. PROVIDE NEW 4" VENT THRU ROOF.
3. PROVIDE NEW 4"HOUSE TRAP IN PIT. PROVIDE ACCESS DOOR FOR MAINTENANCE. PROVIDE 4" FRESH AIR INTAKE THRU EXTERIOR WALL. TERMINATE VENT WITH INSECT SCREEN. HOUSE TRAP SHALL BE PROTECTED FROM FREEZING.
4. CUT EXISTING WATER SERVICE BELOW GROUND. ABANDON IN PLACE EXISTING WATER SERVICE PIPING, REMOVE PORTIONS OF PIPING THAT EXPOSED OR IN CONFLICT WITH NEW CONSTRUCTION. REMOVE EXISTING HOSE BIB FROM EXTERIOR OF THE BUILDING. VERIFY IN FIELD IF ANY OTHER FACILITIES CONNECTED TO THE SAME WATER SERVICE AND RECONNECT THEM AS NECESSARY. RECONNECT NEW 2" DOMESTIC COLD WATER SERVICE TO EXISTING WATER MAIN.
5. PROVIDE A COMPRESSED AIR CONNECTION FOR WINTERIZING.
6. PROVIDE 3"W AND 1"CW STUB-UP FOR FUTURE KITCHEN FIXTURES WITHIN EXPOSED NEXT TO THE WALL. CONNECTION SHALL BE ACCESSIBLE AFTER CONSTRUCTION.
7. PROVIDE NEW CEILING MOUNTED ELECTRIC WATER HEATER.
   ALL FAUCETS FOR LAVATORIES WITH MIXING VALVE TO PROVIDE TEMPERED WATER.

GENERAL NOTES:

1. COORDINATE WITH FACILITY PRIOR TO SHUTDOWN OF WATER DISTRIBUTION SYSTEM FOR ANY DEMOLITION AND CONSTRUCTION WORK.
2. PROVIDE DRAIN VALVES AT BOTTOM FOR EACH BRANCH. PROVIDE ACCESS PANELS TO ALL VALVES ABOVE CEILING AND BEHIND WALLS.
3. INSTALL NEW WATER PIPING WITH PROPER SLOPES TO AVOID WATER TRAPS DURING WINTER SEASON.
4. CONTRACTOR TO COORDINATE WITH FACILITY WHEN WORKING AROUND OR ABOVE THE RIDE COMPONENTS, AND PROVIDE ALL NECESSARY MEASURES TO PROTECT THESE COMPONENTS PER THE REQUIREMENTS OF THE FACILITY.
5. UPON COMPLETION, SYSTEM SHALL BE TESTED FOR PROPER OPERATION.
6. SEWER CROSSING WATER MAINS, CONDUITS, OR OTHER UTILITY SHALL BE MINIMUM 18" CLEARANCE BETWEEN THE OUTSIDE OF THE UTILITY AND OUTSIDE OF THE SEWER. THE CROSSINGS SHALL BE ARRANGED SO THAT THE SEWER JOINTS WILL BE EQUIDISTANT AND AS FAR AS POSSIBLE FROM THE WATER MAIN JOINTS.

RISER DIAGRAMS NOTES:

1. SANITARY AND DOMESTIC WATER RISER DIAGRAM IS PROVIDED AS A SCHEMATIC AID DELINEATING PROJECT SCOPE. CONTRACTOR SHALL FIELD-VERIFY CONDITIONS AND COMPLY WITH ALL PLUMBING REQUIREMENTS OF THE NEW YORK STATE BUILDING CODE.
2. ALL DOMESTIC WATER AND SANITARY PIPING SHALL BE IN FULL CONFORMANCE WITH THE NEW YORK STATE PLUMBING CODE.
3. PROVIDE AN AIR CHAMBER AT LEAST THE SIZE OF THE SUPPLY PIPE AT THE TOP OF EACH HOT AND COLD WATER RISER.
4. PROVIDE ALL REQUIRED OFFSETS, FITTINGS, VALVES, TRAPS, DRAINS, ETC., EVEN THOUGH TROUGH NOT INDICATED DUE TO SMALL SCALE OF THE DRAWING.
5. CHECK DRAWINGS OF OTHER TRADES AND ARRANGE WORK TO AVOID CONFLICTS.
6. USE REDUCING FITTINGS FOR CHANGES OF PIPE SIZE. USE NO BUSHING EXCEPT WITH SPECIAL PERMISSION.
7. PROVIDE CONTROL GATE VALVES WHERE NOTED OR REQUIRED FOR COMPLETE REGULATING CONTROL OF ALL SYSTEM, PLUMBING FIXTURES, AND EQUIPMENT. VALVES: ACCESSIBLE BUT NO VALVES INSTALLED WITH HANDLES POINTING DOWN.
8. PROVIDE DRAIN VALVES FOR EACH BRANCH AT BOTTOM OF CHASES. PROVIDE ACCESS PANELS TO ALL VALVES ABOVE CEILING AND BEHIND WALLS.
9. INSTALL NEW WATER PIPING WITH PROPER SLOPES TO AVOID WATER TRAPS DURING WINTER SEASON.

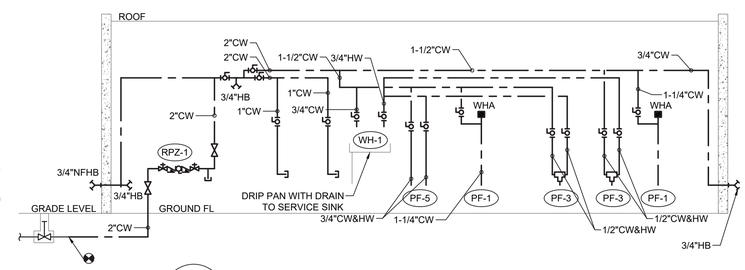

2 P-21 **DOMESTIC WATER RISER DIAGRAM**
SCALE: NOT TO SCALE

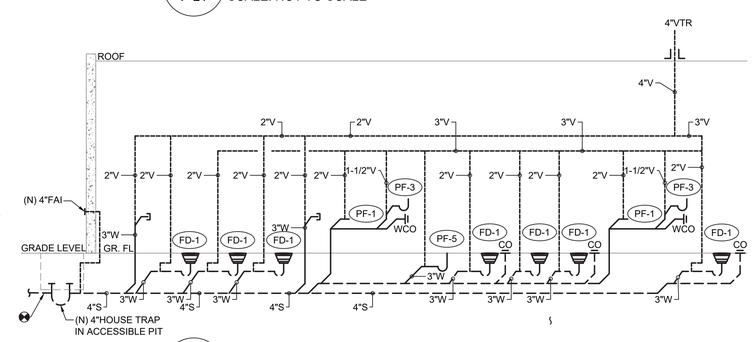

3 P-21 **SANITARY RISER DIAGRAM**
SCALE: NOT TO SCALE

CONSULTANT INFORMATION

LiRo Engineers, Inc.
A LiRo Group Company
Syosset, N.Y. 516-214-8157[T]

CONSULTANT SEAL

STATE OF NEW YORK · FRANK F. ULISSE · LICENSED PROFESSIONAL ENGINEER · LIC. NO. 090117

REVISION NUMBER	DATE	MADE BY	APP'D BY	REVISION
1	09/21/22			BID ADDENDUM # 3

RECORD DRAWING CERTIFICATION
☐ AS BUILT – CHANGES AS NOTED ☐ AS BUILT – NO CHANGES

CONTRACTOR: NAME / SIGNATURE / TITLE / DATE
PROJECT COORDINATOR: NAME / SIGNATURE / TITLE / DATE

WESTCHESTER COUNTY, NEW YORK
DEPARTMENT OF PUBLIC WORKS AND TRANSPORTATION
DIVISION OF ENGINEERING

INFRASTRUCTURE REHABILITATION - PHASE 3
PLAYLAND PARK, RYE, NEW YORK
NORTHEAST BURGER BARN
PLUMBING GROUND FLOOR CONSTRUCTION PLAN

CONTRACT NUMBER: 22-523
SHEET NUMBER: BB-P-21
DWG NO.: 67 of 664
SCALE: AS INDICATED
DATE: 08/23/2022
DPW FILE NUMBER: 1-118-P-816-1
REV. NO.: 1

MECHANICAL GENERAL NOTES

1. ALL WORK AND MATERIALS SHALL BE PURCHASED AND INSTALLED IN ACCORDANCE WITH ALL NATIONAL & NEW YORK STATE CODES AND REGULATIONS (AS WELL AS ALL APPLICABLE LOCAL CODES & REGULATIONS). THE CONTRACTOR SHALL BE RESPONSIBLE TO ENSURE THAT ALL HVAC WORK IS PROVIDED AND INSTALLED IN STRICT ACCORDANCE WITH SEISMIC REQUIREMENTS.
2. DO NOT SCALE FROM THESE DRAWINGS.
3. THE EXACT MOUNTING HEIGHTS AND LOCATIONS OF ALL HVAC EQUIPMENT SHALL BE FIELD VERIFIED AND COORDINATED WITH ALL OTHER MECHANICAL, ELECTRICAL, PLUMBING, FIRE SPRINKLER, ARCHITECTURAL AND STRUCTURAL SYSTEMS. DURING SHOP DRAWINGS SUBMISSIONS, SHOW ALL MOUNTING HEIGHTS OF DUCTWORK, UNITS, ETC.
4. VERIFY ALL EQUIPMENT VOLTAGES WITH THE ELECTRICAL DESIGN PRIOR TO ORDERING EQUIPMENT.
5. PROVIDE PHASE LOSS PROTECTION FOR ALL POLY-PHASE MOTOR DEVICES.
6. DUCTWORK SHALL BE CONSTRUCTED OF GALVANIZED SHEET STEEL IN STRICT COMPLIANCE WITH THE LATEST EDITION OF THE ASHRAE, NFPA, AND SMACNA GUIDE RECOMMENDATIONS. ALL DUCTS TO HAVE PITTSBURGH TYPE LOCK FOR LONGITUDINAL SEAMS AND DRIVE SLIP / "S" SLIP FOR TRANSVERSE JOINTS. "DUCT-MATE" JOINT SYSTEM IS ACCEPTABLE IN LIEU OF PRIOR SEAM SYSTEMS. SIZES AS SHOWN INDICATE INSIDE CLEAR DIMENSIONS OF THE AIR PASSAGE. DUCTWORK SHALL BE FULLY INSULATED AS PER APPLICABLE CODES AND WRITTEN SPECIFICATIONS.
7. DUCT SIZES MUST BE VERIFIED FOR CLEARANCES AT THE JOB SITE PRIOR TO FABRICATION. DIMENSIONS MAY BE CHANGED TO ACCOMMODATE CONSTRUCTION AS LONG AS EFFECTIVE CROSS-SECTIONAL AREA IS MAINTAINED. DUCT TRANSITIONS SHALL BE CONSTRUCTED WITH A SLOPE OF 1" TO 4". ALL DEVIATIONS FROM ORIGINAL CONTRACT DRAWINGS SHALL BE REVIEWED BY ENGINEER DURING THE SHOP DRAWING PROCESS.
8. PROVIDE MANUAL BALANCING DAMPERS AS REQUIRED TO PROPERLY BALANCE EACH INDIVIDUAL AIR DISTRIBUTION SYSTEM. IF THE LOCATION OF THE BALANCING DAMPER IS NOT DEFINED ON THE DRAWINGS, THE FOLLOWING MINIMUMS STANDARDS SHALL GOVERN. ALL SUPPLY, RETURN, AND EXHAUST MAIN BRANCHES FROM TRUNKS, EACH SPLIT AND ALL SUB- BRANCHES FROM MAIN SHALL INCORPORATE BALANCING DAMPERS.
9. PROVIDE FLEXIBLE CONNECTORS AT ALL DUCT CONNECTIONS TO VIBRATING EQUIPMENT. THESE CONNECTORS SHALL BE INSTALLED IN CLOSE PROXIMITY TO SUCH EQUIPMENT.
10. PROVIDE FIRE DAMPERS WITH RATED ACCESS DOORS AT ALL DUCT PENETRATIONS THROUGH FIRE RATED WALLS, SMOKE AND FIRE STOPPING, SHAFT, FLOORS, RATED CEILINGS AND PARTITIONS AS REQUIRED TO MAINTAIN ARCHITECTURAL FIRE RATINGS. REFER TO THE ARCHITECTURAL PLANS AND SPECIFICATIONS FOR LOCATIONS AND FIRE RATING REQUIREMENTS. CONTRACTOR MUST FULLY REVIEW ALL ARCHITECTURAL AND ENGINEERING DRAWINGS AND VISIT THE SITE PRIOR TO SUBMITTING THE BID. NO EXTRAS WILL BE ALLOWED.
11. ALL ACCESS DOORS REQUIRED IN GENERAL CONSTRUCTION ARE TO BE PROVIDED AND INSTALLED BY THE CONTRACTOR. IT IS THE RESPONSIBILITY OF THE CONTRACTOR TO IDENTIFY SIZE, TYPE AND LOCATION OF SUCH DOORS FOR PROPER ACCESS TO ALL CONCEALED HVAC EQUIPMENT, VALVES AND OTHER RELATED EQUIPMENT. THE CONTRACTOR SHALL IDENTIFY THESE REQUIREMENTS ON A COORDINATED SHOP DRAWING PRIOR TO SYSTEM FABRICATION AND INSTALLATION.
12. ALL CEILING MOUNTED EQUIPMENT MUST BE SUPPORTED DIRECTLY FROM BUILDING STRUCTURE WITH COMBINATION SPRING AND NEOPRENE-IN-SHEAR HANGERS AND ROD. PROVIDE SUPPLEMENTARY STEEL AS REQUIRED TO ADEQUATELY SUPPORT THE LOAD.
13. THE CONTRACTOR MUST CONTRACT AN INDEPENDENT NEBB CERTIFIED AIR BALANCING & TESTING COMPANY TO PERFORM THE AIR BALANCING WORK AND ASSOCIATED SYSTEM AIR BALANCING REPORT. ALL WORK SHALL BE PERFORMED IN STRICT COMPLIANCE WITH ALL APPLICABLE CODES, REGULATIONS, PLANS AND WRITTEN SPECIFICATIONS. SUBMIT THE FINAL AIR BALANCE REPORT TO THE ENGINEER FOR REVIEW AND APPROVAL PRIOR TO SUBSTANTIAL COMPLETION OF THE PROJECT, AS DETERMINED BY THE AND OWNER/CLIENT. THE AIR BALANCE REPORT MUST INCLUDE ALL SUPPLY, RETURN, & EXHAUST AIR TERMINALS, FRESH AIR (OUTSIDE AIR) INTAKE AND VENTILATION EXHAUST CFM RATES FOR ALL UNITS. ALSO INCLUDE ACTUAL SUPPLY & RETURN AIR VELOCITY & STATIC PRESSURE READINGS ALONG WITH ALL MOTOR AMPERAGES FOR ALL UNITS.
14. THE CONTRACTOR IS TO INCLUDE IN THEIR BID ALL LOW VOLTAGE CONTROL WIRING, THERMOSTATS, RELAYS, TRANSFORMERS, STARTERS ETC FOR A COMPLETE OPERATING CONTROL SYSTEM AS DESCRIBED IN THE SEQUENCE OF OPERATIONS, THE CONTRACTOR IS ALSO RESPONSIBLE FOR LINE VOLTAGE CONTROL FOR EXHAUST FANS CONTROLLED FROM LIGHT SWITCH AND THERMOSTATS. ALL CONTROL WIRING IN THE AREAS THAT DO NOT HAVE DROPPED CEILINGS THE CONTRACTOR MUST PROVIDE ALL CONTROL WIRING CONDUIT. IN AREAS OF DROPPED CEILING PLENUM RATED CONTROL WIRING CAN BE RUN EXPOSED ABOVE CEILING.
15. ALL MECHANICAL EQUIPMENT SHALL BE INSTALLED PER MANUFACTURER'S REQUIREMENTS/SPECIFICATIONS.

CODE REFERENCE

2020 NEW YORK STATE BUILDING CODE
2020 NEW YORK STATE MECHANICAL CODE
2020 NEW YORK STATE ENERGY CONSERVATION CODE

NYS BUILDING CODE LIST OF REQUIRED SPECIAL INSPECTIONS

REQUIRED	NOT PRESENT	REF. CODE SECTION	DESCRIPTION
*	*	1705.17	FIRE-RESISTANT PENETRATIONS AND JOINTS

MECHANICAL DEMOLITION NOTES

1. CONTRACTOR SHALL BE RESPONSIBLE FOR DEMOLITION OF MECHANICAL EQUIPMENT AND MATERIAL RELATING TO THEIR RESPECTIVE TRADE.

2. THE CONTRACTOR SHALL REMOVE, RELOCATE, REPLACE, ADJUST, ADAPT AND MODIFY EXISTING EQUIPMENT AND/OR SYSTEMS AS REQUIRED WHEN SUCH WORK IS UNCOVERED AND FOUND TO INTERFERE WITH COMPLETION OF WORK IN THIS CONTRACT OR OTHER CONTRACT WORK.

3. EXECUTE THE DEMOLITION IN CAREFUL AND ORDERLY MANNER WITH THE LEAST POSSIBLE DISTURBANCE TO THE PUBLIC, EGRESS OR THE FUNCTIONING OF THE EXISTING BUILDING.

4. TAKE NECESSARY PRECAUTIONS TO PREVENT DUST AND DIRT FROM RISING BY WETTING DEMOLISHED DEBRIS. EXCESSIVE USE OF WATER WILL NOT BE PERMITTED.

5. PRIOR TO DEMOLITION, CONTRACTOR SHALL REVIEW WITH OWNER ALL MATERIALS TO BE REMOVED, SHOULD THE OWNER WANT TO KEEP ANY MATERIALS THE CONTRACTOR SHALL REMOVE AND DELIVER THE PARTS TO THE OWNER ON THE SITE WHERE SO DIRECTED. OTHERWISE ALL DEMOLISHED OR REMOVED MATERIALS SHALL BECOME THE PROPERTY OF THE CONTRACTOR AND SHALL BE REMOVED FROM THE SITE AND BE DISPOSED OF IN A LEGAL MANNER.

6. DEMOLITION SHALL INCLUDE REMOVAL OF ALL PARTS AND PIECES IN THEIR ENTIRETY BACK TO POINTS INDICATED OR IF NOT INDICATED BACK TO THEIR POINT OF SOURCE.

7. WHERE CONDITIONS PROHIBIT TOTAL REMOVAL OF THE WORK, THE REMAINING PORTION SHALL BE CUT FLUSH WITH THE SURROUNDING SURFACE AND BE CAPPED, PLUGGED OR SEALED AND THE SURROUNDING SURFACE SHALL BE REFINISHED IN AN APPROVED MANNER.

9. DO NOT REMOVE EXISTING STRUCTURAL WORK. DO NOT REMOVE OPERATIONAL ELEMENTS AND SAFETY-RELATED COMPONENTS IN A MANNER RESULTING IN A REDUCTION OF CAPACITIES TO PERFORM IN THE MANNER INTENDED OR RESULTING IN DECREASED OPERATIONAL LIFE, INCREASED MAINTENANCE, OR DECREASED SAFETY.

10. REMOVALS, DISCONNECTIONS, AND RELOCATIONS SHALL BE PERFORMED BY WORKMEN SKILLED IN THE TRADE INVOLVED AND SHALL BE EMPLOYED BY A CONTRACTOR LICENSED IN THE TRADE INVOLVED. ALL WORK SHALL BE DONE IN ACCORDANCE WITH ACCEPTED TRADE PRACTICES.

11. PROVIDE ADEQUATE TEMPORARY SUPPORT FOR WORK TO REMAIN, TO PREVENT FAILURE. DO NOT ENDANGER OTHER WORK.

12. PROTECTION: PROVIDE ADEQUATE PROTECTION WHERE REQUIRED FOR THE PRESENT BUILDING AND ITS CONTENTS. TEMPORARY DUSTPROOF BARRIERS AND BARRICADES SHALL BE ERECTED WHERE REQUIRED FOR PROTECTION OF PERSONNEL, PROTECTION FROM DUST AND DIRT, FOR SECURITY, FIRE AND WEATHER PROTECTIVE REASONS.

13. CONTRACTOR SHALL TAKE EVERY PRECAUTION AGAINST FIRE BY EMPLOYING FIRE DEPARTMENT TYPE HOSES AND PORTABLE FIRE EXTINGUISHERS AS REQUIRED BY OSHA AND/OR THE OWNER'S INSURANCE UNDERWRITER.

14. BEFORE STARTING DEMOLITION OPERATIONS, PROVIDE THE NECESSARY PROTECTIVE DEVICES, WHERE REQUIRED, AND IN STRICT ACCORDANCE WITH OSHA RULES AND REGULATIONS.

14. USE TEMPORARY ENCLOSURES, OR OTHER SUITABLE METHODS TO LIMIT DUST AND DIRT RISING AND SCATTERING TO LOWEST PRACTICAL LEVEL. COMPLY WITH GOVERNING REGULATIONS PERTAINING TO ENVIRONMENTAL PROTECTION.

15. FIELD VERIFY DEMOLITION REQUIREMENTS AND EXISTING CONDITIONS. DEMOLITION NOTES ARE INDICATED IN NOTE FORM.

16. CONTRACTOR SHALL ESTABLISH A PATH OF TRAVEL AND TIME SCHEDULE FOR THE REMOVAL OF ALL DEBRIS AND WASTE, AND HAVE THIS APPROVED BY OWNER. CONTRACTOR IS TO ENSURE THAT ALL CORRIDORS AND PUBLIC AREAS BE KEPT FREE OF OBSTRUCTIONS, DEBRIS, AND ARE TO BE BROOM SWEPT CLEAN AT ALL TIMES.

17. CONTRACTOR SHALL VISIT THE SITE AND BECOME INFORMED AS TO THE CONDITION OF THE PREMISES AND THE EXTENT AND CHARACTER OF WORK REQUIRED. NO ADDITIONAL COMPENSATION WILL BE APPROVED DUE TO FIELD CONDITIONS.

NYSECC ENERGY COMPLIANCE STATEMENT:

PER SECTION C101.7 OF THE 2020 NYSECC HISTORIC BUILDINGS ARE EXEMPT FROM THE REQUIREMENTS OF THE ENERGY CODE.

HVAC SYMBOL LIST

IDENTIFIER	DESCRIPTION
	NEW DUCTWORK OR PIPING
	EXISTING DUCTWORK OR PIPING TO BE REMOVED
	EXISTING DUCTWORK OR PIPING TO REMAIN
24X12 / 24X12	DOUBLE-LINE AND SINGLE-LINE RECTANGULAR DUCT, FIRST NUMBER INDICATES SIDE IN VIEW IN INCHES, SECOND NUMBER INDICATES SIDE IN DEPTH IN INCHES
	FLEXIBLE DUCTWORK
	REGULAR SUPPLY AIR DUCT (UP AND DOWN)
	REGULAR RETURN AIR DUCT (UP AND DOWN)
	REGULAR EXHAUST AIR DUCT (UP AND DOWN)
	REGULAR OUTSIDE AIR DUCT (UP AND DOWN)
VD	VOLUME DAMPER
BD	BACKDRAFT DAMPER
S	MOTOR OPERATED DAMPER
XXX / XX	EQUIPMENT TAG EQUIPMENT NUMBER
XXX / X-XXX	DETAIL TAG/CALL OUT TAG MECHANICAL SHEET NUMBER
T	THERMOSTAT
H	HUMIDISTAT
	EXHAUST GRILLE
F#	REFER TO SUPPLEMENTAL FIGURE INDICATED BY NUMBER (I.E. F2 REFERS TO FIGURE 2)

HVAC ABBREVIATIONS

IDENTIFIER	DESCRIPTION
AC	DIRECT EXPANSION AIR CONDITION UNIT
CFM	CUBIC FEET PER MINUTE
COND	CONDENSATE
CU	CONDENSING UNIT
CUH	CABINET UNIT HEATER
DB	DRY BULB
DN	DOWN
EA	EXHAUST AIR
EF	EXHAUST FAN
EG	EXHAUST GRILLE
EUH	ELECTRIC UNIT HEATER
EER	ENERGY EFFICIENCY RATIO
EG	EXHAUST GRILLE
FAI	FRESH AIR INTAKE
GC	GENERAL CONTRACTOR
MBH	THOUSAND BTU PER HOUR
PC	PLUMBING CONTRACTOR
RG	RETURN GRILLE
RTU	ROOFTOP UNIT
SA	SUPPLY AIR
SD	SUPPLY DIFFUSER
TYP.	TYPICAL
VIF	VERIFY IN FIELD
WWM	WELDED WIRE MESH

SCOPE OF WORK

DEMOLITION

1. REMOVE TWO (2) EXISTING THRU WALL AC UNITS AS INDICATED.
2. REMOVE THREE (3) EXISTING WALL MOUNTED PROPELLER FANS AS INDICATED.
3. REMOVE THREE (3) EXISTING LOUVERS AS INDICATED.
4. REMOVE ONE (1) EXISTING UNIT HEATERS AND ASSOCIATED SUPPORTS, WIRING AND ACCESSORIES.

CONSTRUCTION

1. PROVIDE ONE (1) NEW ROOFTOP AIR HANDLING UNIT RTU-1. PROVIDE DUCTWORK TO NEW SPACES AS INDICATED.
2. PROVIDE ONE (1) NEW GENERAL KITCHEN EXHAUST FAN ON ROOF AND ASSOCIATED DUCTWORK AS INDICATED.
3. PROVIDE TWO (2) NEW INLINE EXHAUST FANS IN DINING AREA AS INDICATED.
4. PROVIDE ONE (1) NEW INLINE EXHAUST FANS FOR BATHROOM EXHAUST AS INDICATED.
5. PROVIDE SEVEN (7) NEW RAIN RESISTANT LOUVERS AS INDICATED.
6. PROVIDE ONE (1) NEW WALL MOUNTED ELECTRIC UNIT HEATER AS INDICATED.

MECHANICAL DRAWING LIST

SHEET NO.	SHEET NAME	REVISON NO.	REVISION DATE
BB-M-01	MECHANICAL NOTES, SYMBOLS & LEGENDS	1	9/21/2022
BB-M-11	MECHANICAL 1ST FLOOR DEMOLITION PLAN	0	-
BB-M-21	MECHANICAL 1ST FLOOR CONSTRUCTION PLAN	0	-
BB-M-22	MECHANICAL ROOF CONSTRUCTION PLAN	0	-
BB-M-23	MECHANICAL EXTERIOR BUILDING ELEVATIONS	1	9/21/2022
BB-M-61	MECHANICAL SCHEDULES	0	-
BB-M-81	MECHANICAL DETAILS 1 OF 2	1	9/21/2022
BB-M-82	MECHANICAL DETAILS 2 OF 2	0	-
BB-M-91	MECHANICAL CONTROLS	0	-

MECHANICAL VENTILATION SCHEDULE

SPACE DETAILS		MECH CODE REQUIREMENTS							DESIGN				
ROOM	AREA (FT²)	# PEOPLE	OA / SQ FT	OA PER PERSON	# OF FIXT (TOILET/URINALS/SLOP SINK)	EXH CFM/SQFT	EXH CFM/FIXTURE	NET OA	MIN DESIGN OA FLOW (CFM)	ACTUAL SA FLOW (CFM)	ACTUAL RA FLOW (CFM)	ACTUAL EA FLOW (CFM)	NOTES
101 KITCHEN	775	16	0.12	7.5	-	0.7	-	543	680	1500	820	680	1
105 UNISEX BATHROOM	105	-	-	-	1.0	-	70.0	70	70	-	-	100	1
106 JANITOR CLOSET	28	-	-	-	1.0	1.0	-	30	70	-	-	100	2
107 ADA RESTROOM	63	-	-	-	1.0	-	70.0	70	70	-	-	100	1

NOTES:
1. NEW YORK STATE MECHANICAL CODE.
2. ASHRAE 62.1 2019

NATURAL VENTILATION SCHEDULE

SPACE DETAILS			DESIGN			
ROOM	AREA (SF)	4% FLOOR AREA (SF)	WINDOW FREE AREA (SF)	DOOR AREA (SF)	TOTAL OPENABLE AREA (SF)	NOTES
100 RESTAURANT & DINING AREA	2248	90	-	491	491	1,2

NOTES:
1. NEW YORK STATE MECHANICAL CODE.
2. NATURAL VENTILATION OF AN OCCUPIED SPACE SHALL BE THROUGH WINDOWS, DOORS, LOUVERS, AND OTHER OPENINGS TO THE OUTDOORS. THE MINIMUM OPENABLE AREA TO THE OUTDOORS SHALL BE 4 PERCENT OF THE FLOOR AREA BEING VENTILATED.

TABLE 1: ENERGY CODE ANALYSIS TABLE FOR MECHANICAL SYSTEMS

(PER 2020 NYS ENERGY CODE)

ITEM DESCRIPTION			PROPOSED VALUE	MINIMUM EFFECIENCY	CODE PRECRIBED VALUE AND CITATION	CITATION	SUPPORTING DOCUMENTATION
	UNIT TAG	EQUIPMENT TYPE					
HVAC EQUIPMENT PERFORMANCE	RTU-1	SINGLE PACKAGED UNIT	SEER= 19.4	SEER=14.0	MINIMUM EFFICIENCY REQUIREMENTS: ELECTRICALLY OPERATED UNITARY AIR CONDITIONERS AND CONDENSING UNITS < 65,000 Btu/hb	C403.2.3(1)	MECHANICAL SCHEDULES
HVAC SYSTEM CONTROLS	ALL HEATING COOLING EQUIPMENT	THERMOSTATIC CONTROLS	DIGITAL THERMOSTATS	-	THERMOSTATIC CONTROLS FOR HVAC SYSTEM	C403.2.6	MECHANICAL SCHEDULES AND PLANS
SHUTOFF DAMPERS			GRAVITY/BACKDRAFT DAMPERS PROVIDED IN LIEU OF MOTORIZED DAMPER MOTORIZED DAMPERS PER EXCEPTIONS 1	-	BACKDRAFT DAMPER INSTALLED AT EXHAUST OPENINGS	C403.7.7	MECHANICAL SCHEDULES AND PLANS
DUCT LEAKAGE			SMACNA HVAC DUCT LEAKAGE TEST	-	SMACNA HVAC DUCT LEAKAGE TEST	PER C403	MECHANICAL DWGS. & SPECS

TABLE 2: ENERGY CODE COMPLIANCE INSPECTIONS FOR MECHANICAL SYSTEMS

(IIB - MECHANICAL AND SERVICE WATER HEATING INSPECTIONS)

	INSPECTION TEST	FREQUENCY	REFERENCE STANDARDS	INSPECTION DESCRIPTION	ECC CITATION
IIB2	SHUT-OFF DAMPERS	AS REQUIRED DURING INSTALLATION	APPROVED CONSTRUCTION DOCUMENTS	DAMPERS FOR STAIR AND ELEVATOR SHAFT VENTS AND OTHER OUTDOOR AIR INTAKES AND EXHAUST OPENINGS INTEGRAL TO THE BUILDING ENVELOPE SHALL BE VISUALLY INSPECTED TO VERIFY THAT SUCH DAMPERS, EXCEPT WHERE PERMITTED TO BE GRAVITY DAMPERS, COMPLY WITH APPROVED CONSTRUCTION DRAWINGS. MANUFACTURER'S LITERATURE SHALL BE REVIEWED TO VERIFY THAT THE PRODUCT HAS BEEN TESTED AND FOUND TO MEET THE STANDARD.	NYSECC C403.2.4.4, C403.7.7, OR ASHRAE 90.1-6.4.3.4
IIB3	HVAC AND SERVICE WATER HEATING EQUIPMENT	PRIOR TO FINAL MECHANICAL AND CONSTRUCTION INSPECTION	APPROVED CONSTRUCTION DOCUMENTS	EQUIPMENT SIZING, EFFICIENCIES AND OTHER PERFORMANCE FACTORS OF ALL MAJOR EQUIPMENT UNITS, AS DETERMINED BY THE APPLICANT OF RECORD, AND NO LESS THAN 15% OF MINOR EQUIPMENT UNITS, SHALL BE VERIFIED BY VISUAL INSPECTION AND, WHERE NECESSARY, REVIEW OF MANUFACTURER'S DATA. POOL HEATERS AND COVERS SHALL BE VERIFIED BY VISUAL INSPECTION	NYSECC C403.2, C404.2, C404.7, C406.2
IIB4	HVAC AND SERVICE WATER HEATING SYSTEM CONTROLS	AFTER INSTALLATION AND PRIOR TO FINAL ELECTRICAL AND CONSTRUCTION INSPECTION, EXCEPT THAT FOR CONTROLS WITH SEASONALLY DEPENDENT FUNCTIONALITY, SUCH TESTING SHALL BE PERFORMED BEFORE SIGN-OFF FOR ISSUANCE OF A FINAL CERTIFICATE OF OCCUPANCY	APPROVED CONSTRUCTION DOCUMENTS INCLUDING CONTROL SYSTEM NARRATIVES	NO LESS THAN 20% OF EACH TYPE OF REQUIRED CONTROLS AND ECONOMIZERS SHALL BE VERIFIED BY VISUAL INSPECTION AND TESTED FOR FUNCTIONALITY AND PROPER OPERATION. SUCH CONTROLS SHALL INCLUDE, BUT ARE NOT LIMITED TO, THERMOSTATIC AND ECONOMIZER CONTROLS	NYSECC C403.2.4, C403.2.5.1, C403.2.11, C403.3, C403.4, C404.3, C404.6, C404.7
IIB6	HVAC DUCT LEAKAGE TESTING	PRIOR TO CLOSING CEILINGS AND WALLS AND PRIOR TO FINAL CONSTRUCTION INSPECTION	APPROVED CONSTRUCTION DOCUMENTS; NYC MECHANICAL CODE	WHERE THE AIR HANDLER AND/OR SOME DUCTWORK IS IN UNCONDITIONED SPACE, DUCT-LEAKAGE TESTING SHALL BE PERFORMED EITHER AFTER ROUGH-IN OR POST-CONSTRUCTION TO ENSURE COMPLIANCE WITH ECC R403.3.3 AND R403.3.4. NOT LESS THAN 20% OF SUCH DUCTWORK SHALL BE TESTED	NYSECC C403

1 **MECHANICAL BUILDING ELEVATION - NORTH**
1/4" = 1'-0"

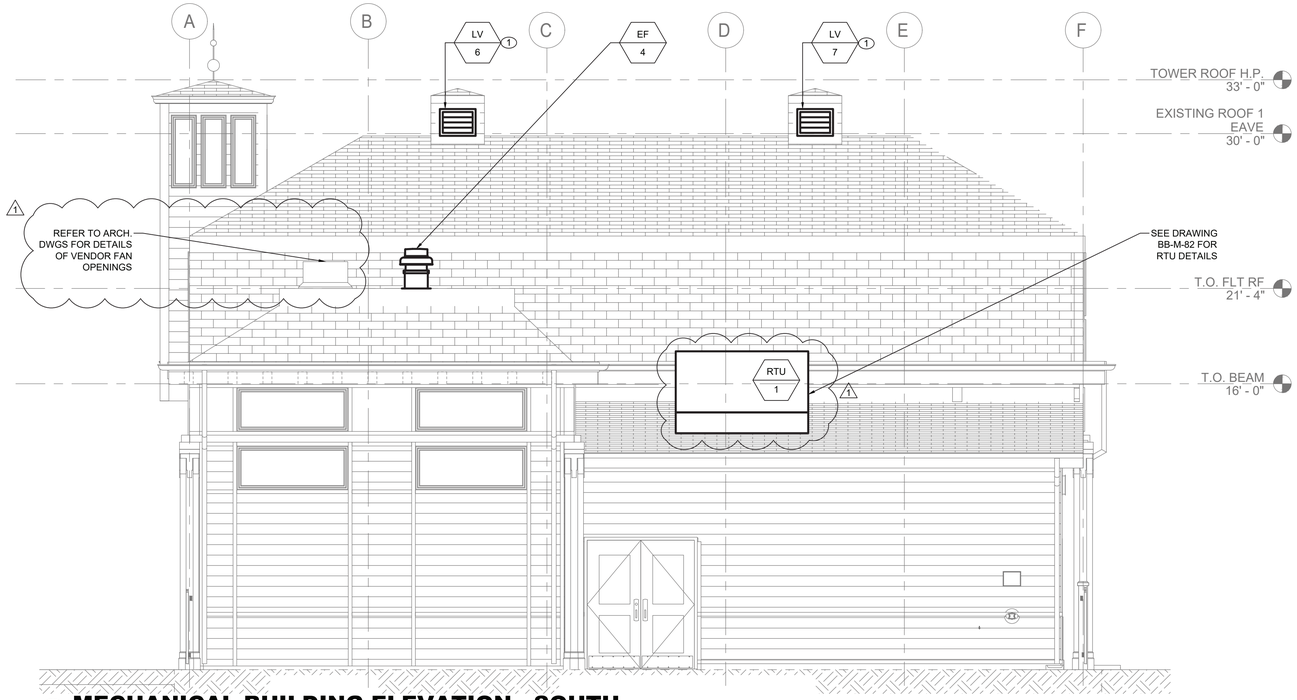

2 **MECHANICAL BUILDING ELEVATION - SOUTH**
1/4" = 1'-0"

GENERAL NOTES:

1. CONTRACTOR TO COORDINATE WITH FACILITY WHEN WORKING AROUND OR ABOVE THE RIDE COMPONENTS, AND PROVIDE ALL NECESSARY MEASURES TO PROTECT THESE COMPONENTS PER THE REQUIREMENTS OF THE FACILITY.
2. UPON COMPLETION, SYSTEM SHALL BE TESTED FOR PROPER OPERATION.

MECHANICAL CONSTRUCTION NOTES:

1 PROVIDE NEW RAIN RESISTANT LOUVER AS SCHEDULED. REFER TO DETAIL ON BB-M-81.

CONSULTANT INFORMATION

LiRo Engineers, Inc.
A LiRo Group Company
Syosset, N.Y. 516-214-8157[T]

CONSULTANT SEAL

STATE OF NEW YORK · FRANK F. DUDSE · LICENSED PROFESSIONAL ENGINEER · No. 090114

Frank Dudse

REVISION NUMBER	DATE	MADE BY	APP'D BY	REVISION
1	09/21/22			BID ADDENDUM #3

RECORD DRAWING CERTIFICATION

☐ AS BUILT – CHANGES AS NOTED ☐ AS BUILT – NO CHANGES

CONTRACTOR
NAME
SIGNATURE
TITLE DATE

PROJECT COORDINATOR
NAME
SIGNATURE
TITLE DATE

WESTCHESTER COUNTY, NEW YORK
DEPARTMENT OF PUBLIC WORKS AND TRANSPORTATION
DIVISION OF ENGINEERING

INFRASTRUCTURE REHABILITATION - PHASE 3
PLAYLAND PARK, RYE, NEW YORK
NORTHEAST BURGER BARN
MECHANICAL EXTERIOR BUILDING ELEVATIONS

CONTRACT NUMBER 22-523
SHEET NUMBER **BB-M-23**
DWG NO.: 73 of 664
SCALE: **AS INDICATED**
DATE: 08/23/2022
DPW FILE NUMBER **1-118-M-822-1**
REV. NO. **1**

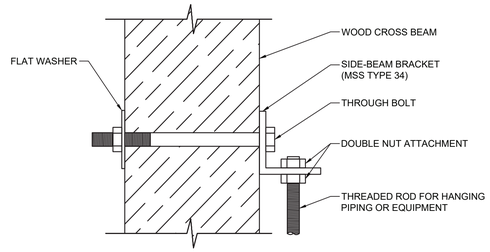

1 / M-81 MECHANICAL ANCHORING DETAIL

SCALE: NOT TO SCALE

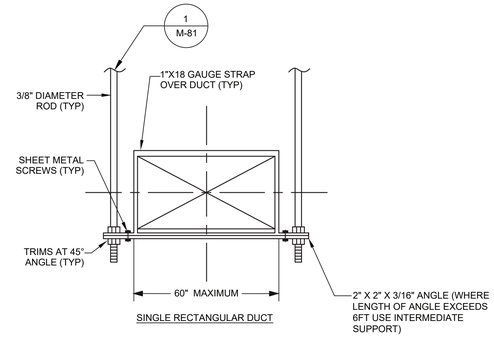

2 / M-81 MECHANICAL DUCT HANGER DETAIL

SCALE: NOT TO SCALE

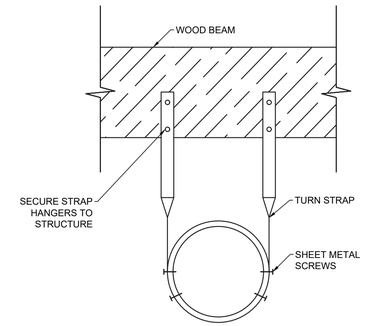

3 / M-81 MECHANICAL ROUND DUCT HANGER DETAIL

SCALE: NOT TO SCALE

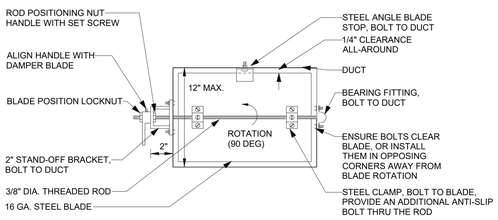

NOTES:

1. DAMPERS FOR ROUND DUCTS SHALL BE SIMILAR TO THE DAMPER SHOWN ABOVE.
2. ENSURE THAT FULL 90 DAMPER BLADE MOVEMENT IS UNOBSTRUCTED.
3. FOR DUCT HEIGHTS MORE THAN 12", PROVIDE FACTORY-FABRICATED OPPOSED BLADE DAMPERS.

4 / M-81 MECHANICAL VOLUME DAMPER DETAIL

SCALE: NOT TO SCALE

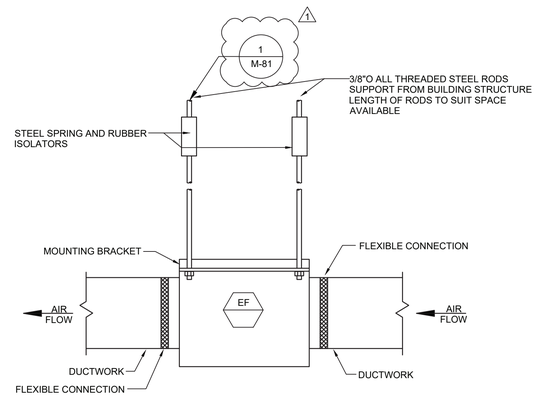

5 / M-81 MECHANICAL FAN HANGING DETAIL

SCALE: NOT TO SCALE

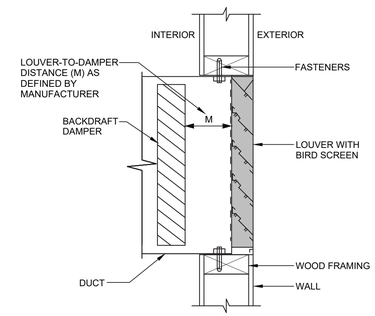

6 / M-81 MECHANICAL LOUVER

SCALE: NOT TO SCALE

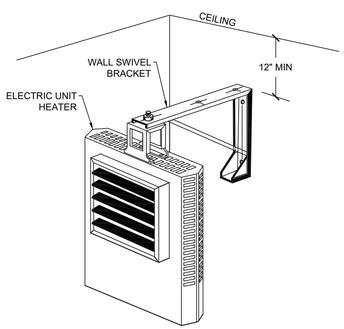

7 / M-81 MECHANICAL WALL MOUNTED ELECTRIC UNIT HEATER DETAIL

SCALE: NOT TO SCALE

CONSULTANT INFORMATION

LiRo Engineers, Inc.
A LiRo Group Company
Syosset, N.Y. 516-214-8157[T]

CONSULTANT SEAL

STATE OF NEW YORK · FRANK F. ULISSE · LICENSED PROFESSIONAL ENGINEER · No. 090117

REVISION NUMBER	DATE	MADE BY	APP'D BY	REVISION
1	09/21/22			BID ADDENDUM #3

RECORD DRAWING CERTIFICATION

☐ AS BUILT – CHANGES AS NOTED ☐ AS BUILT – NO CHANGES

CONTRACTOR: NAME / SIGNATURE / TITLE / DATE

PROJECT COORDINATOR: NAME / SIGNATURE / TITLE / DATE

WESTCHESTER COUNTY, NEW YORK
DEPARTMENT OF PUBLIC WORKS AND TRANSPORTATION
DIVISION OF ENGINEERING

INFRASTRUCTURE REHABILITATION - PHASE 3
PLAYLAND PARK, RYE, NEW YORK
NORTHEAST BURGER BARN
MECHANICAL DETAILS 1 OF 2

CONTRACT NUMBER	22-523
SHEET NUMBER	BB-M-81
DWG NO.:	75 of 664
SCALE:	AS INDICATED
DATE:	08/23/2022
DPW FILE NUMBER	1-118-M-824-1
REV. NO.	1

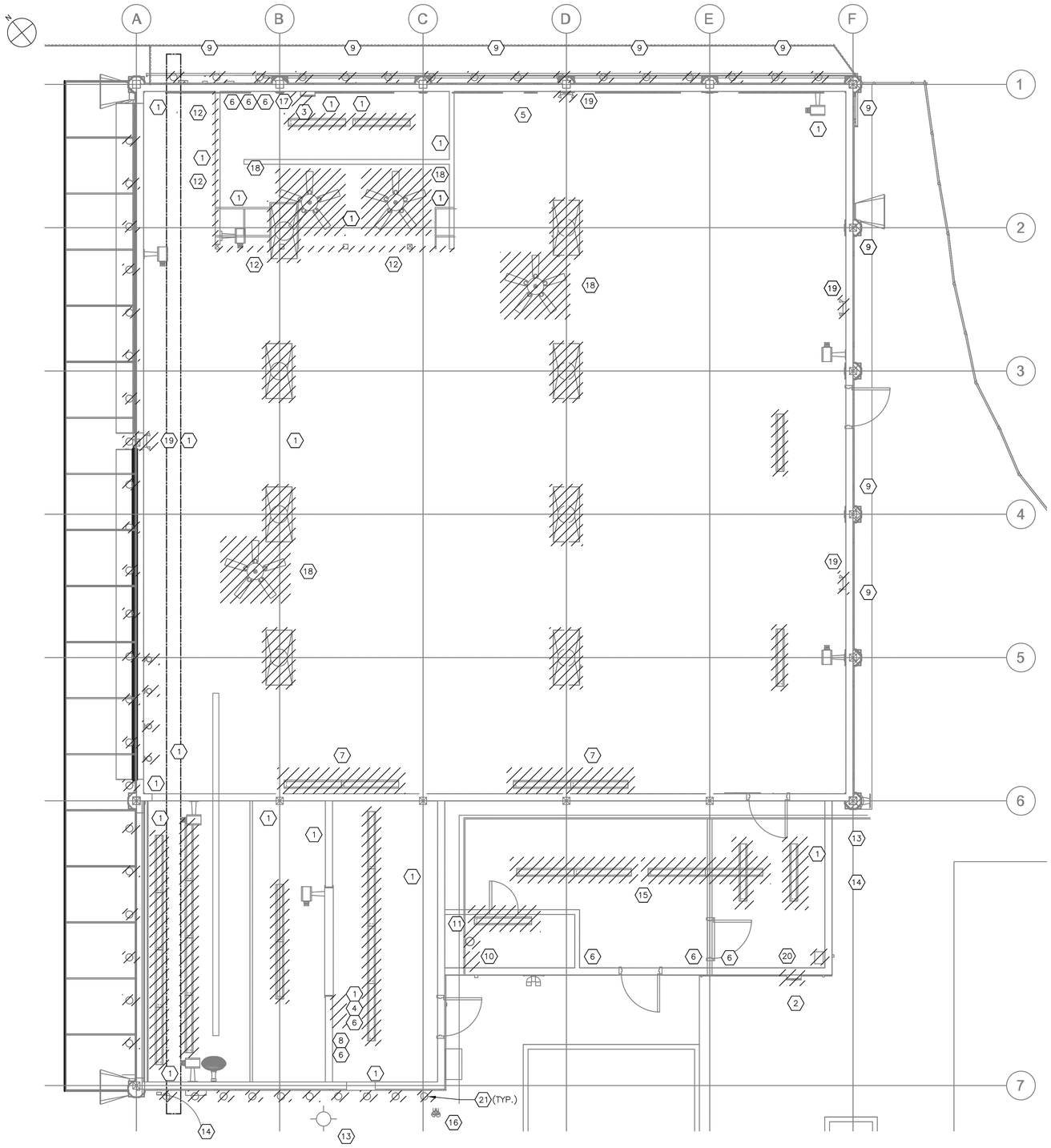

GROUND FLOOR DEMOLITION POWER AND LIGHTING PLAN

1/4"=1'-0"

DEMOLITION LEGEND	
1	RECEPTACLE
2	HEAVY DUTY DISCONNECT SWITCH (SEE NOTE 12)
3	30 CKT PANEL (150A)
4	24 CKT PANEL (200A)
5	FIRE ALARM PANEL (SEE NOTE 8)
6	LIGHT SWITCH
7	WALL MOUNTED CABINET W/LIGHTS
8	GENERAL DUTY SAFETY SWITCH
9	SEE NOTE 9
10	UNIT HEATER
11	30A SERVICE DISCONNECT SWITCH (SPRINKLER ROOM)
12	PRIZE BOOTH LIGHTS (SEE NOTE 10)
13	THRU-WALL AIR CONDITIONING UNIT (REMOVED BY OTHERS) – DISCONNECT POWER
14	COMMUNICATIONS BOX (SEE NOTE 6)
15	EXISTING STRUCTURE (SEE NOTE 11)
16	EXTERIOR LIGHT
17	OUT OF SERVICE ELECTRIC METER
18	CEILING MOUNTED FAN (REMOVED BY OTHERS) – DISCONNECT POWER
19	EMERGENCY LIGHT
20	20 CKT PUSHMATIC PANEL
21	COVE LIGHTS (SEE NOTE 14)

NOTES:

1. FOR ADDITIONAL NOTES, ABBREVIATIONS AND SYMBOLS, SEE DRAWING GE-E-01.
2. ALL REMOVED EQUIPMENT SHALL BE RETURNED TO OWNER UPON REQUEST. OTHERWISE, ALL REMOVED MATERIAL SHALL BE LEGALLY DISPOSED OF.
3. DISCONNECT AND REMOVE ALL ELECTRICAL EQUIPMENT, LIGHTING, POWER, CONDUIT AND WIRE BACK TO SOURCE. REMOVE ALL PANELBOARDS.
4. CONTRACTOR SHALL DISCONNECT AND REMOVE ALL EXISTING, ABANDONED FLUORESCENT LIGHTING FIXTURES.
5. CONTRACTOR SHALL DEMOLISH ALL EXISTING JUNCTION BOXES AND ALL ASSOCIATED CONDUITS, WIRES, AND APPURTENANCES, UNLESS OTHERWISE NOTED. FOR BIDDING PURPOSES, ASSUME 2000 FEET OF 1" CONDUIT WITH 3#12 & 1#12 GND.
6. DISPOSITION OF EXISTING CCTV/DATA/COMMUNICATIONS CABINET(S) SHALL BE BY OTHERS. THIS INCLUDES BOTH INCOMING AND OUTGOING CONDUITS AND CABLES. REFER TO ARCHITECTURAL DRAWINGS.
7. SEE DRAWING BB-E-01 FOR PANEL SCHEDULE DEMOLITION.
8. DISPOSITION OF EXISTING FIRE ALARM SYSTEM, INCLUDING DEVICES, CONTROL PANELS, AND ALL ASSOCIATED CONDUIT AND WIRE SHALL BE BY OTHERS. REFER TO FIRE ALARM DRAWINGS
9. ALL EXISTING CONDUIT AND WIRE SHALL BE DOCUMENTED PRIOR TO REMOVAL. CONTRACTOR IS ADVISED, THERE IS A SUBSTANTIAL AMOUNT OF EXISTING CONDUIT RUNNING ALONG THE NORTH AND EAST SIDES OF THE BUILDING. CONTRACTOR SHALL TRACE OUT/ COORDINATE WITH OWNER TO DETERMINE CONDUIT TO REMAIN AND BE PROTECTED DURING CONSTRUCTION OR TO BE REMOVED.
10. LIGHTS SURROUND THE NORTHEAST AND NORTHWEST SIDES ALONG THE TOP PERIMETER OF THE PRIZE BOOTH. LIGHTS ARE APPROXIMATELY 7 FEET AFF. CONTRACTOR SHALL DISCONNECT AND REMOVE LIGHTS.
11. EXISTING STRUCTURE TO BE REMOVED IN ITS ENTIRETY BY OTHERS. COORDINATE WITH ARCHITECTURAL DRAWINGS. MINIMAL ELECTRICAL EQUIPMENT IN THIS SPACE. CONTRACTOR SHALL DISCONNECT AND REMOVE LIGHTING FIXTURES, UNIT HEATERS, RECEPTACLES, LIGHT SWITCHES, PANELBOARDS, AND ALL ASSOCIATED CONDUIT AND WIRE BACK TO SOURCE. FOR BIDDING PURPOSES, ASSUME 400 FEET OF 1" CONDUIT, 3#12 & 1#12 GND.
12. EXISTING 200 AMP HEAVY-DUTY DISCONNECT SWITCH FUSED AT 175 AMPS. CONTRACTOR SHALL DISCONNECT AND REMOVE SWITCH, AND REUSE THE EXISTING INCOMING SERVICE. SEE DRAWINGS BB-E-01, BB-E-04 AND BB-E-05 FOR MORE INFORMATION.
13. CONTRACTOR IS ADVISED, NEW INTRUSION/SECURITY SYSTEM AND ASSOCIATED EQUIPMENT PREVIOUSLY INSTALLED. DISPOSITION OF SYSTEM SHALL BE BY OTHERS. CONTRACTOR SHALL COORDINATE WITH THE OWNER.
14. DISCONNECT AND REMOVE ALL RECESSED MOUNTED EXTERIOR COVE LIGHTING.

0 4' 8'

SCALE: 1/4" = 1'-0"

CONSULTANT INFORMATION

Savin Engineers, P.C.

STATE OF NEW YORK · STEVEN A. MARTINO · 093631 · LICENSED PROFESSIONAL ENGINEER

REVISION NUMBER	DATE	MADE BY	APP'D BY	REVISION
1	09/21/2022	RKC	SM	BID ADDENDUM #3

RECORD DRAWING CERTIFICATION

☐ AS BUILT – CHANGES AS NOTED ☐ AS BUILT – NO CHANGES

CONTRACTOR: NAME / SIGNATURE / TITLE / DATE

PROJECT COORDINATOR: NAME / SIGNATURE / TITLE / DATE

WESTCHESTER COUNTY, NEW YORK
DEPARTMENT OF PUBLIC WORKS AND TRANSPORTATION
DIVISION OF ENGINEERING

INFRASTRUCTURE REHABILITATION - PHASE 3
PLAYLAND PARK, RYE, NEW YORK
NORTHEAST BURGER BARN
GROUND FLOOR DEMOLITION PLAN

CONTRACT NUMBER	22-523
SHEET NUMBER	BB-E-02
DWG NO.:	79 of 664
SCALE:	AS SHOWN
DATE:	8/23/2022
DPW FILE NUMBER	1-118-E-828-1
REV. NO.	1

Drawing Name: G:\Savin\Autocad\2060\25-Playland-Mega-3\E\BBE-1002.dwg
Projectname: 211001F02 Comments: ----
Printed by: MGodby Date: 21 September 2022 1:38 PM Designed by: ----
Rev#:
Xrefs: [TB_24X36_WestchesterCo_3.dwg] [TSG-SVLOGO.dwg] [AR-E-1003.dwg] [AR-A-01.dwg]

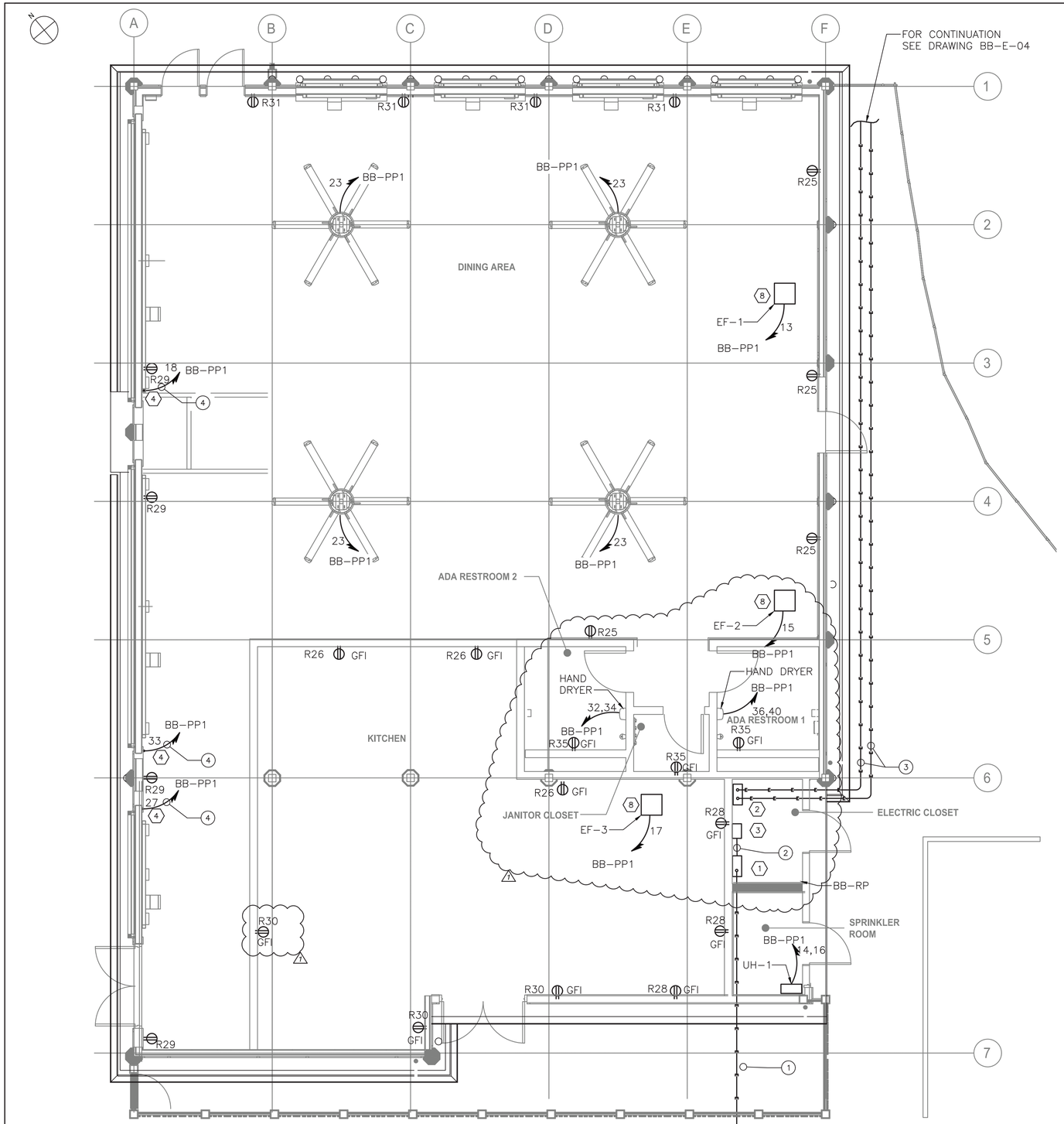

NORTHEAST BURGER BARN GROUND FLOOR POWER PLAN
1/4"=1'-0"

CONDUIT AND WIRE LEGEND	
NO.	DESCRIPTION
1	2 1/2"C 4#2/0 & 1#6 GND
2	2"C, 12#12 & 6#12 GND
3	2 SETS OF 3 1/2"C, 4-350KCMIL & 1#2 GND
4	3/4"C, 2#10 & 1#10 GND

NOTES:

1. FOR ADDITIONAL NOTES, ABBREVIATIONS AND SYMBOLS, SEE DRAWING GE-E-01.
2. ALL RECEPTACLES DESIGNATORS ARE POWERED VIA PANEL BB-PP1, UNLESS OTHERWISE NOTED.
3. ALL CIRCUITS SHOWN ON THE DRAWING BUT NOT SPECIFICALLY CALLED OUT ON THE CABLE AND CONDUIT SCHEDULE SHALL BE 3/4" CONDUIT 2#12, 1#12G AWG.
4. ALL HVAC LOW VOLTAGE WIRING SHALL BE PERFORMED BY THE HVAC CONTRACTOR, INCLUDING BUT NOT LIMITED TO LOW VOLTAGE THERMOSTAT WIRING.
5. EXHAUST FAN STARTERS SHALL BE FURNISHED BY THE EXHAUST FAN MANUFACTURER. FOR EXHAUST FAN STARTER REQUIREMENTS, SEE HVAC CONTRACT DRAWINGS AND SPECIFICATIONS.
6. DISCONNECT SWITCHES OUTDOORS, IN RESTROOMS AND/OR IN JANITORS CLOSETS SHALL BE IN A NEMA 3R ELCLOSURE.
7. FOR PANEL SCHEDULE, SEE DRAWING BB-E-09.

KEY NOTES:

1. NEW 208Y/120V, 3-PHASE, 4-WIRE PANEL BB-PP1 WITH 225 AMP MAINS AND 175 AMP MAIN CIRCUIT BREAKER.
2. NEW 208Y/120V, 3-PHASE, 4-WIRE PANEL BB-PP2 WITH 600 AMP MAINS AND 600 AMP MAIN CIRCUIT BREAKER.
3. NEW EXTERIOR LIGHTING RELAY PANEL BB-RP.
4. APPROXIMATE LOCATION OF MOTOR FOR NEW ROLL-UP DOOR. CONTRACTOR SHALL CONFIRM MOTOR LOCATION IN THE FIELD. PROVIDE 30 AMP, 2 POLE DISCONNECT SWITCH AT ROLL-UP DOOR MOTOR.
5. CONTRACTOR SHALL COORDINATE BOTH THE POWER AND CONTROL OF FANS. CONTRACTOR SHALL PROVIDE FOR SWITCH CONTROL IN LOCATION AS REQUIRED BY STANDARD AMUSEMENTS. ADDITIONALLY ASSUME A TOTAL OF 100 FEET OF 3/4" CONDUIT WITH CAT 6 WIRE TO AGAIN A DESTINATION AS REQUIRED BY STANDARD AMUSEMENTS.

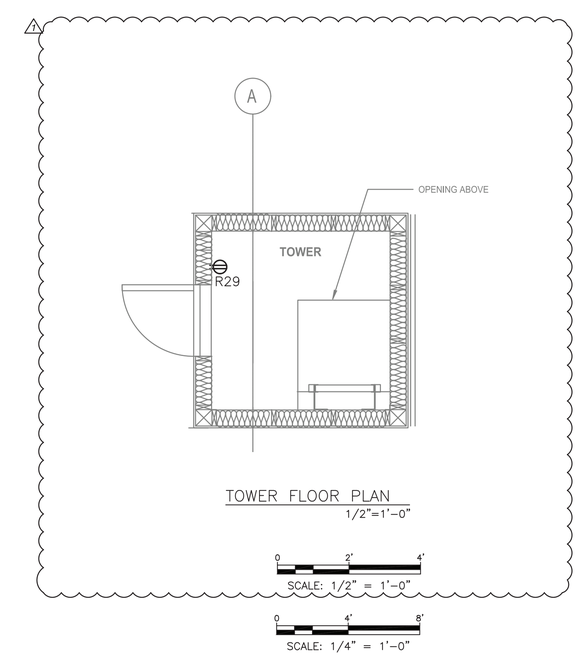

TOWER FLOOR PLAN
1/2"=1'-0"

CONSULTANT INFORMATION

Savin Engineers, P.C.

CONSULTANT SEAL

STATE OF NEW YORK · STEVEN A. MARTINO · 083631 · LICENSED PROFESSIONAL ENGINEER

REVISION NUMBER	DATE	MADE BY	APP'D BY	REVISION
1	09/21/2022	RKC	SM	BID ADDENDUM #3

RECORD DRAWING CERTIFICATION

☐ AS BUILT – CHANGES AS NOTED ☐ AS BUILT – NO CHANGES

CONTRACTOR: NAME / SIGNATURE / TITLE / DATE

PROJECT COORDINATOR: NAME / SIGNATURE / TITLE / DATE

WESTCHESTER COUNTY, NEW YORK
DEPARTMENT OF PUBLIC WORKS AND TRANSPORTATION
DIVISION OF ENGINEERING

INFRASTRUCTURE REHABILITATION - PHASE 3
PLAYLAND PARK, RYE, NEW YORK
NORTHEAST BURGER BARN
GROUND FLOOR POWER PLAN

CONTRACT NUMBER	22-523
SHEET NUMBER	BB-E-06
DWG NO.:	83 of 664
SCALE:	AS SHOWN
DATE:	8/23/2022
DPW FILE NUMBER	1-118-E-832-1
REV. NO.	1

Drawing Name: G:\SavinAutocad\2060\25-Playland-Mega-3\E\BBE-1006.dwg
Projectname: 211001F02 Comments: ----
Printed by: MGodby Date: 21 September 2022 1:39 PM Designed by: ----
Xrefs: [TB_24X36_WestchesterCo_3.dwg] [TSG-SVLOGO.dwg] [AR-E-1007.dwg] [BB-A-11.dwg]

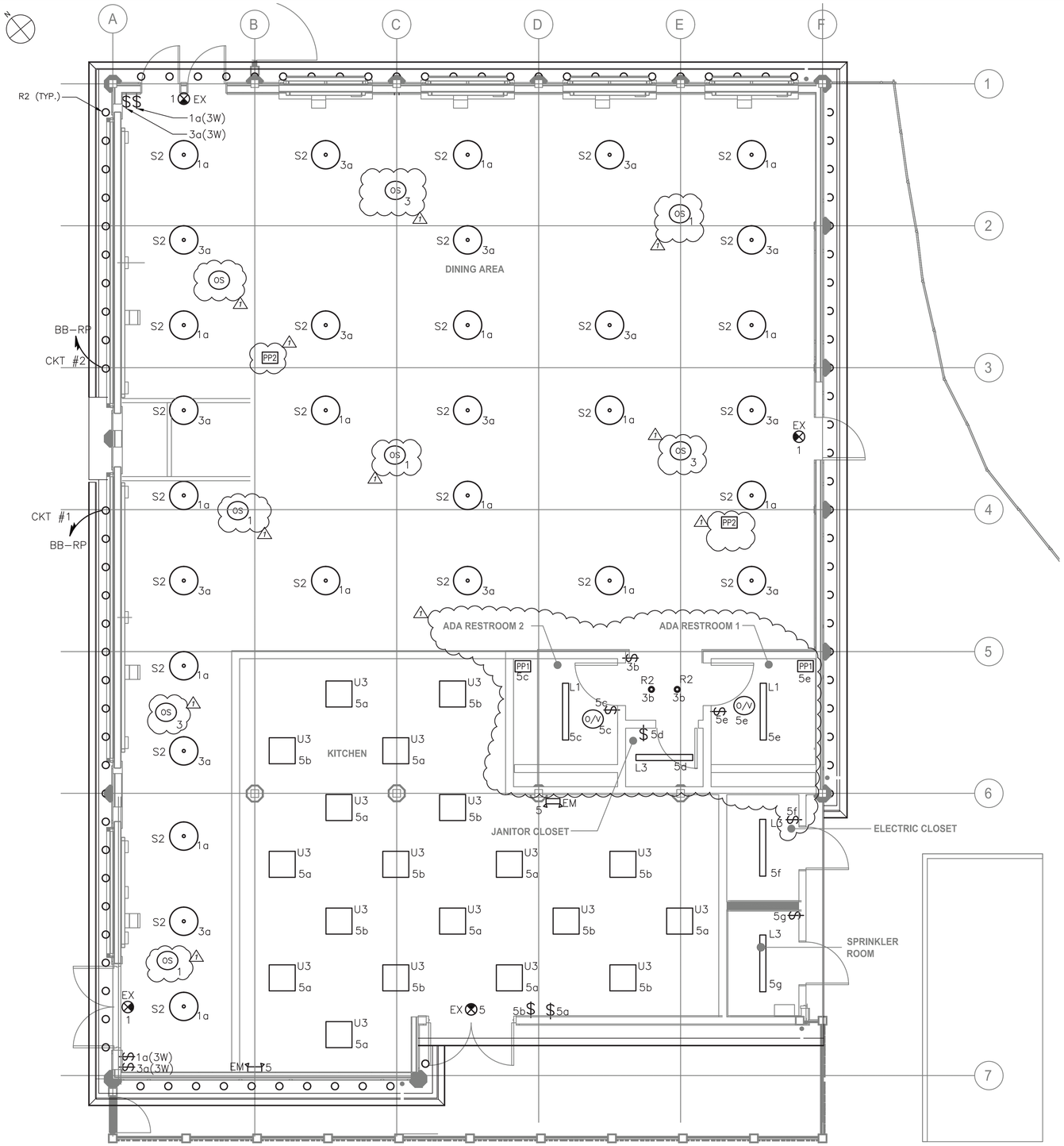

NORTHEAST BURGER BARN GROUND FLOOR LIGHTING PLAN

1/4"=1'-0"

NOTES:

1. FOR ADDITIONAL NOTES, ABBREVIATIONS AND SYMBOLS, SEE DRAWING GE-E-01.
2. ALL INTERIOR LIGHTING IS POWERED VIA LIGHTING PANEL BB-PP1, UNLESS NOTED OTHERWISE. CONTRACTOR SHALL CIRCUIT LIGHTING FIXTURES WITH 3/4" CONDUIT WITH 2#12 & 1#12GND.
3. EXIT SIGNS SHALL BE WIRED TO THE UN-SWITCHED LEG OF THE DESIGNATED CIRCUIT.
4. EMERGENCY FIXTURES SHALL BE WIRED TO THE UN-SWITCHED LEG OF THE DESIGNATED CIRCUIT.
5. ALL EXTERIOR LIGHTING SHALL BE CIRCUITED TO RELAY PANEL BB-RP. CONTRACTOR SHALL CIRCUIT LIGHTING FIXTURES WITH 3/4" CONDUIT WITH 2#12 & 1#12GND, UNLESS NOTED OTHERWISE. CONTRACTOR SHALL DAISY-CHAIN ALL EXTERIOR LIGHT FIXTURES WITH SAME CIRCUIT NUMBER BACK TO RELAY PANEL.
6. FOR LIGHTING PANEL SCHEDULE, REFER TO DRAWING BB-E-09.
7. ALL POWER PACKS SHOWN ON DRAWINGS SHALL BE CIRCUITED FROM PANEL BB-DINING-PP.
8. NUMBER DESIGNATORS NEXT TO FIXTURES AND/OR CONTROLS INDICATE CIRCUIT NUMBERS.
9. POWER PACKS SHALL BE MOUNTED ABOVE FINISHED CEILING.
10. NEW LIGHTING CONTROLS SHALL BE FULLY COMPATIBLE WITH THE EXISTING SYSTEM AS PROVIDED ELSEWHERE AT THE PLAYLAND FACILITY. EQUIPMENT INCLUDES, BUT NOT LIMITED TO OCCUPANCY SENSORS, RELAY/POWER PACKS, SWITCHES, RELAY PANELS, PHOTO SENSORS, ETC.
11. LIGHTING CONTROLS SELECTED SHALL HAVE THE CAPABILITY TO BE CONNECTED TO A MASTER HEAD-END SYSTEM (FUTURE CONTRACT).
12. RELAY PANEL SHALL BE EQUIPPED WITH BOTH A BUILT-IN TIME CLOCK AND A PHOTOSENSOR CONTROL.
13. FOR EXTERIOR LIGHTING CONTROL WIRING INFORMATION, SEE EXTERIOR WIRING DETAIL SHOWN ON BB-E-09.
14. LIGHTING CONTROL ZONES ARE SEGREGATED BY AREA POWER-PACKS AS SHOWN ON THE DRAWING.
15. FOR INTERIOR LIGHTING CONTROL WIRING (INCLUDING BUT NOT LIMITED TO ETHERNET AND LOW VOLTAGE WIRING) INFORMATION SEE TYPICAL INTERIOR SPACE WIRING DIAGRAM DETAIL ON DT-E-01.
16. FOR LIGHTING FIXTURE SCHEDULE SEE DRAWING GE-E-03.

LIGHTING CONTROL LEGEND

SYMBOL	DESCRIPTION
O/V	OCCUPANCY / VACANCY SENSOR - SMALL MOTION, DUAL TECHNOLOGY, SINGLE POLE DOUGLAS LIGHTING CONTROLS, DIALOG SYSTEM CATALOG NUMBER: DIVERSA WORSDD1-R-N OR APPROVED EQUAL.
OS	OCCUPANCY SENSOR - DUAL TECHNOLOGY SENSOR, OCCUPANCY DETECTION ONLY DOUGLAS LIGHTING CONTROLS, DIALOG SYSTEM CATALOG NUMBER: WORSDG1-R-T OR APPROVED EQUAL.
PP1	POWER / RELAY PACK - 120/277 VOLT, SINGLE POLE, SELF CONTROLLED RELAY SWITCH DOUGLAS LIGHTING CONTROLS, DIALOG SYSTEM CATALOG NUMBER: WP-PP20-D OR APPROVED EQUAL.
PP2	POWER / RELAY PACK - 120/277 VOLT, SELF CONTROLLED RELAY SWITCH, TWO DIMMING CHANNELS DOUGLAS LIGHTING CONTROLS, DIALOG SYSTEM CATALOG NUMBER: WRC-4222 OR APPROVED EQUAL.
$ m	120 VOLT RATED LIGHTING SINGLE POLE SWITCH
RP	RELAY TIME CONTROL PANEL, DIGITAL CENTRAL PANEL DOUGLAS LIGHTING CONTROLS, DIALOG SYSTEM CATALOG NUMBER: WLCP-CPx/x OR APPROVED EQUAL. *x/x IS CAPACITY/QTY OF RELAYS - VARIES BY BUILDING.
PS	DIGITAL PHOTOCELL - PHOTOSENSOR SUITABLE FOR OUTDOOR APPLICATIONS DOUGLAS LIGHTING CONTROLS, DIALOG SYSTEM CATALOG NUMBER: WPS-3741B OR APPROVED EQUAL.

0 4' 8'

SCALE: 1/4" = 1'-0"

CONSULTANT INFORMATION

Savin Engineers, P.C.

CONSULTANT SEAL

STATE OF NEW YORK · STEVEN A. MARTINO · 089691 · LICENSED PROFESSIONAL ENGINEER

REVISION NUMBER	DATE	MADE BY	APP'D BY	REVISION
1	09/21/2022	RKC	SM	BID ADDENDUM #3

RECORD DRAWING CERTIFICATION

☐ AS BUILT – CHANGES AS NOTED ☐ AS BUILT – NO CHANGES

CONTRACTOR: NAME / SIGNATURE / TITLE / DATE

PROJECT COORDINATOR: NAME / SIGNATURE / TITLE / DATE

WESTCHESTER COUNTY, NEW YORK
DEPARTMENT OF PUBLIC WORKS AND TRANSPORTATION
DIVISION OF ENGINEERING

INFRASTRUCTURE REHABILITATION - PHASE 3
PLAYLAND PARK, RYE, NEW YORK
NORTHEAST BURGER BARN
GROUND FLOOR LIGHTING PLAN

CONTRACT NUMBER	22-523
SHEET NUMBER	BB-E-07
DWG NO.:	84 of 664
SCALE:	AS SHOWN
DATE:	8/23/2022
DPW FILE NUMBER	1-118-E-833-1
REV. NO.	1

Drawing Name: G:\SavinAutocad\2060\25-Playland-Mega-3\E\ARE-1007.dwg
Projectname: 211001F02 Comments: ----
Printed by: MGodby Date: 21 September 2022 1:39 PM Designed by: ----
Xrefs: [TB_24X36_WestchesterCo_3.dwg] [TSG-SVLOGO.dwg] [AR-E-1004.dwg] [BB-A-11.dwg]

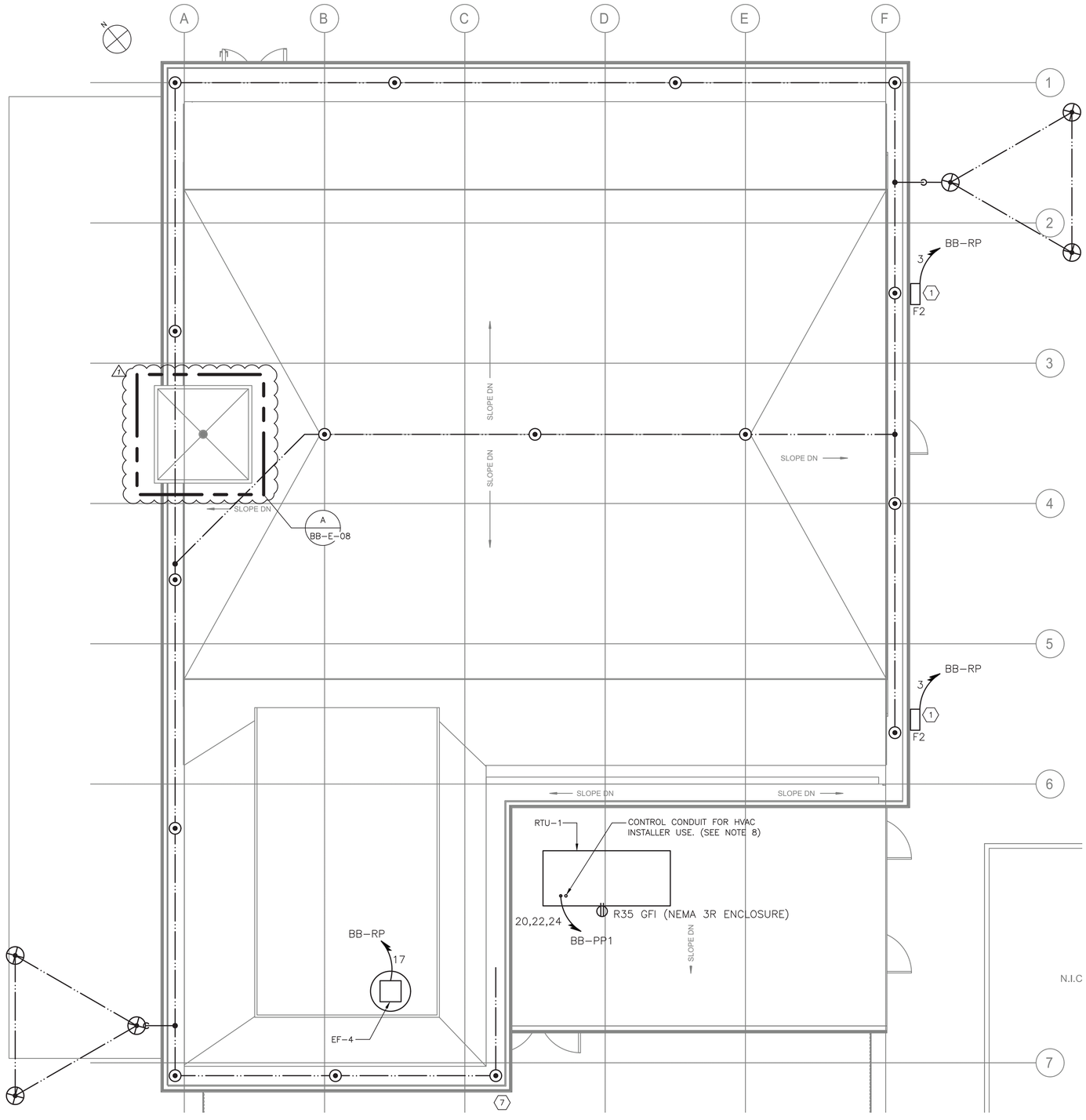

NORTHEAST BURGER BARN ROOF PLAN – POWER AND LIGHTNING PROTECTION

1/4"=1'-0"

NOTES:

1. FOR ADDITIONAL NOTES, ABBREVIATIONS AND SYMBOLS, SEE DRAWING GE-E-01.
2. CONTRACTOR IS ADVISED, THE LIGHTNING PROTECTION SYSTEM SHOWN SHALL BE USED AS A GUIDE AND FOR BIDDING PURPOSES. CONTRACTOR SHALL HIRE A CERTIFIED LIGHTNING PROTECTION SPECIALIST FOR INSTALLATION OF NEW SYSTEM. INSTALLER SHALL PROVIDE ALL THAT IS REQUIRED (PER NFPA 780) AND SHALL OBTAIN UL96A CERTIFICATION (MASTER LABEL) UPON COMPLETION. ADDITIONALLY, INSTALLER SHALL PROVIDE FOR ALL NECESSARY BONDING FOR COMPLETE SYSTEM.
3. CONTRACTOR SHALL COORDINATE WITH THE ARCHITECTURAL DRAWINGS FOR SPECIFIC INFORMATION ON THE NEW ROOF STRUCTURE AND MATERIALS.
4. TO MINIMIZE THE VISUAL IMPACT OF THE BUILDING ALL NEW DOWN CONDUCTORS SHALL BE ROUTED DOWN SIDE OF BUILDING. COORDINATE WITH ARCHITECTURAL FEATURES TO CONCEAL DOWN CONDUCTORS. CONTRACTOR SHALL COORDINATE WITH OTHER TRADES TO ACCOMPLISH THIS WORK. PROVIDE LPS BARE COPPER CABLE TO GROUND RODS.
5. CONTRACTOR IS ADVISED THE NEW DOWN CONDUCTOR SHALL BE BONDED TO THE LOWER METAL OVERHANG ROOF AND CONNECT TO THE EXISTING GROUND WIRE AND GROUND ROD AT GROUND LEVEL.
6. AT EACH LPS DOWN CONDUCTOR, PROVIDE TRIANGULAR GROUND GRID AS SHOWN (NOT ALL SHOWN).
7. EXHAUST FAN STARTERS SHALL BE FURNISHED BY THE EXHAUST FAN MANUFACTURER. FOR EXHAUST FAN STARTER REQUIREMENTS, SEE HVAC CONTRACT DRAWINGS AND SPECIFICATIONS.
8. ALL ROOF PENETRATIONS SHALL BE WATERPROOF. PENETRATION COMPONENTS FOR CONDUIT SHALL BE SUITABLE AND COMPATIBLE FOR INSTALLED ROOF. SEE ARCHITECTURAL AND PLUMBING DRAWINGS FOR ADDITIONAL INFORMATION.

KEY NOTES:

1. PROVIDE NEW FLOODLIGHT. FIXTURE TYPE F2, CONTRACTOR SHALL PROVIDE ALL NECESSARY CONDUIT AND WIRE. FLOODLIGHT SHALL BE CIRCUITED FROM RELAY PANEL BB-RP.

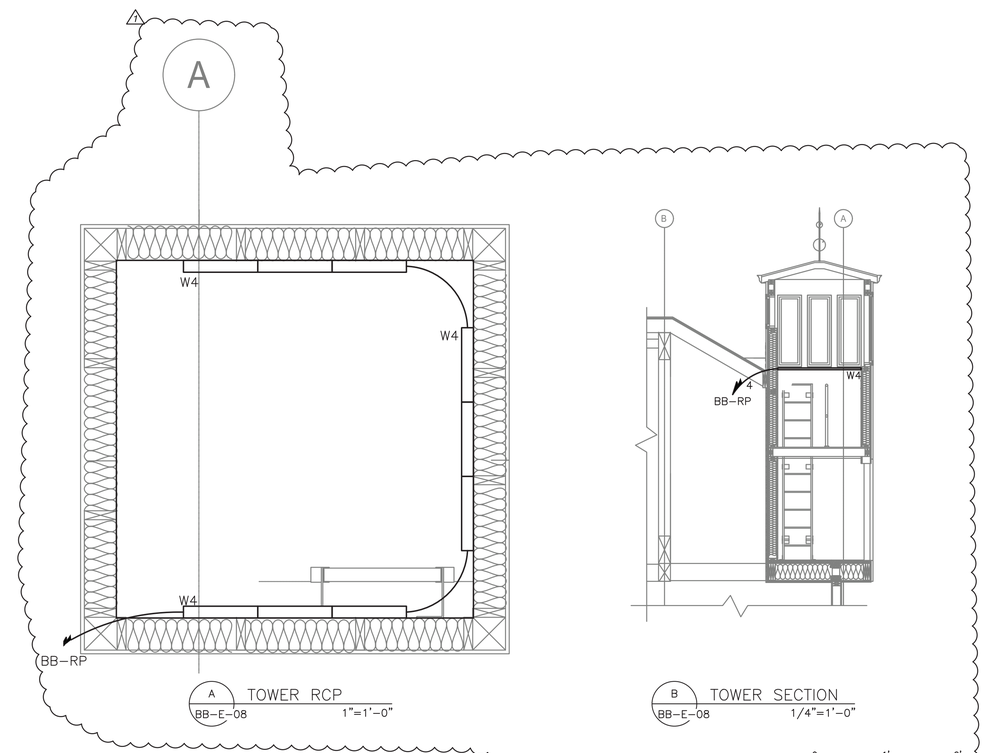

A BB-E-08 TOWER RCP 1"=1'-0"

B BB-E-08 TOWER SECTION 1/4"=1'-0"

SCALE: 1" = 1'-0"

SCALE: 1/4" = 1'-0"

CONSULTANT INFORMATION

Savin Engineers, P.C.

STATE OF NEW YORK · STEVEN A. MARTINO · 083631 · LICENSED PROFESSIONAL ENGINEER

REVISION NUMBER	DATE	MADE BY	APP'D BY	REVISION
1	09/21/2022	RKC	SM	BID ADDENDUM #3

RECORD DRAWING CERTIFICATION

☐ AS BUILT – CHANGES AS NOTED ☐ AS BUILT – NO CHANGES

CONTRACTOR: NAME / SIGNATURE / TITLE / DATE

PROJECT COORDINATOR: NAME / SIGNATURE / TITLE / DATE

WESTCHESTER COUNTY, NEW YORK
DEPARTMENT OF PUBLIC WORKS AND TRANSPORTATION
DIVISION OF ENGINEERING

INFRASTRUCTURE REHABILITATION - PHASE 3
PLAYLAND PARK, RYE, NEW YORK
NORTHEAST BURGER BARN
ROOF PLAN - POWER AND LIGHTNING PROTECTION

CONTRACT NUMBER	22-523
SHEET NUMBER	BB-E-08
DWG NO.:	85 of 664
SCALE:	AS SHOWN
DATE:	8/23/2022
DPW FILE NUMBER	1-118-E-834-1
REV. NO.	1

Drawing Name: G:\SavinAutocad\2060\25-Playland-Mega-3\E\ARE-1008.dwg
Projectname: 211001F02 Comments: ----
Printed by: MGodby Date: 21 September 2022 1:39 PM Designed by: ----
Xrefs: [TB_24X36_WestchesterCo_3.dwg] [TSG-SVLOGO.dwg] [BB-A-13.dwg] [AR-E-1001.dwg] [AR-E-1008.dwg]

FIRE ALARM GENERAL NOTES:

1. THE FIRE ALARM AND SMOKE DETECTION SYSTEM SHALL BE INSTALLED IN COMPLIANCE WITH THE NATIONAL FIRE PREVENTION CODE (NFPA 72 - 2016), NATIONAL LIFE SAFETY CODE (NFPA 101 - 2018), NATIONAL ELECTRICAL CODE (NFPA 70 - 2017), 2020 NEW YORK STATE BUILDING CODE, AND ALL LOCAL MUNICIPAL CODES HAVING JURISDICTION.
2. THE FIRE ALARM AND SMOKE DETECTION SYSTEM SHALL BE MAINTAINED AND TESTED IN COMPLIANCE WITH NFPA 72.
3. A CONTINUOUS FIRE WATCH SHALL BE PROVIDED IF THERE IS FIRE SYSTEM IMPAIRMENT.
4. ALL FIRE ALARM STROBES SHALL BE SYNCHRONIZED AND SHALL REMAIN FLASHING AFTER SYSTEM SILENCE FUNCTION.
5. CONTRACTOR TO UPDATE ALL NECESSARY CORRESPONDING FIRE ALARM SIGNALS WHEN PERFORMING ANY MODIFICATION TO THE BUILDING, WHERE APPLICABLE, MAKE SURE THE SAME UPDATES ARE COORDINATED AND TRANSMITTED TO THE CENTRAL STATION.
6. HORNS WILL SOUND A TEMPORAL 3-SIGNALING RHYTHM PER NFPA 72.
7. EXACT PLACEMENT OF DEVICES TO BE VERIFIED IN FIELD.
8. ALL SMOKE DETECTORS SHALL BE INSTALLED A MINIMUM OF 36" FROM ANY HVAC SUPPLY OR RETURN REGISTER.
9. FIRE ALARM WIRING SHALL BE INSTALLED IN A MINIMUM OF 3/4" RIGID GALVANIZED CONDUIT OR BY NEW YORK STATE BUILDING CODE APPROVED WIRING METHODS.
10. WALL MOUNTED HORNS AND VISUAL FIRE ALARMS (STROBES) SHALL BE MOUNTED NOT LESS THAN 6'-8" AND NOT GREATER THAN 8'-0" A.F.F. WHERE LOCAL CONDITIONS ARE TOO LOW TO PERMIT THE REQUIRED MINIMUM INSTALLATION HEIGHT, INSTALL THE STROBES AT 6" BELOW THE CEILING.
11. MANUAL PULL STATIONS SHALL BE MOUNTED AT 4'-0" A.F.F. AND SHALL BE INSTALLED WITHIN 5'-0" OF EXIT DOOR.
12. WIRING SHALL BE INSTALLED IN ACCORDANCE WITH NFPA 70 AND AS RECOMMENDED BY THE MANUFACTURER OF THE FIRE ALARM SYSTEM.
13. ALL EQUIPMENT AND COMPONENTS SHALL BE NEW AND SHALL BE TESTED AND LISTED BY A NATIONALLY RECOGNIZED APPROVALS AGENCY.
14. ALL EQUIPMENT SHALL BE ATTACHED TO WALLS AND CEILING/FLOOR ASSEMBLIES AND SHALL BE HELD FIRMLY IN PLACE. FASTENERS AND SUPPORTS SHALL BE ADEQUATE TO SUPPORT REQUIRED LOAD.
15. ALL FIELD WIRING SHALL BE ELECTRICALLY SUPERVISED FOR OPEN CIRCUIT AND GROUND FAULTS.
16. ALL BOXES AND CABINETS SHALL BE UL LISTED FOR THEIR USE AND PURPOSE.
17. DIALER OR ALARM COMMUNICATOR TRANSMITTER SHALL TRANSMIT ALL POINTS AS THEY ARE REPORTED TO THE HOST PANEL.
18. ALL DEVICES SHALL BE COMPATIBLE WITH EXISTING SYSTEM (EST3 BY EDWARDS). FIRE ALARM PRODUCTS SHALL BE APPROVED BY THE ENGINEER OR OWNER.
19. ALL PENETRATIONS SHALL BE FIRE PROOFED AS REQUIRED.

FIRE ALARM CONSTRUCTION NOTES:

1. ELECTRICIAN SHALL COORDINATE WITH THE FIRE ALARM VENDOR TO PRODUCE A SEPARATE FIXED PRICE TO PERFORM THE SCOPE OF WORK CONTAINED ON THESE DRAWINGS IN CONNECTION WITH THE FIRE ALARM SYSTEM. THESE DRAWINGS ARE PROVIDED FOR BID PURPOSES ONLY AND TO ILLUSTRATE THE SCOPE OF WORK INTENT OF THIS PROJECT.
2. ELECTRICIAN SHALL OBTAIN SEPARATE PERMIT FOR FIRE ALARM PRIOR TO INSTALLATION.
3. PRIOR TO SUBMISSION OF THE FIRE ALARM SYSTEM BID, THE FIRE ALARM VENDOR IS RESPONSIBLE TO REVIEW ALL DRAWINGS (I.E., MECHANICAL/HVAC, ELECTRICAL, PLUMBING, FIRE SPRINKLER, AND ARCHITECTURAL). UPON SUBMISSION OF THE FIRE ALARM BID, THE FIRE ALARM VENDOR CERTIFIES THAT ALL DRAWINGS HAVE BEEN REVIEWED, THE SITE HAS BEEN VISITED/INSPECTED (IF APPLICABLE), AND THAT ALL LOCAL FIRE DEPARTMENT REQUIRED ITEMS ARE FULLY UNDERSTOOD AND INCLUDED IN THE BID PRICE (NO CHANGE ORDERS ALLOWED).
4. FIRE ALARM VENDOR MUST ADHERE TO NFPA 72, NFPA 101, AND ALL LOCAL CODES AND AUTHORITIES HAVING JURISDICTION. THE ENTIRE SYSTEM MUST BE DESIGNED IN ACCORDANCE WITH THESE AUTHORITIES HAVING JURISDICTION.
5. FIRE ALARM VENDOR SHALL INCLUDE THE COST OF THE ENGINEERING FEE, PROGRAMMING CHARGE, NEW EQUIPMENT, CONNECTION & TESTING, TROUBLESHOOTING, ATTENDANCE AT THE FIRE ALARM INSPECTION, ETC. AS PART OF THE TOTAL PRICE.
6. FIRE ALARM VENDOR MUST SUBMIT APPROVED, SIGNED AND SEALED DESIGN/BUILD DRAWINGS TO THE ENGINEER AND OWNER, INCLUDING: FIRE ALARM RISER DIAGRAM, LAYOUT, EQUIPMENT LIST, SPECIFICATIONS PRIOR TO START OF INSTALLATION. INSTALLATION OF THE NEW FIRE ALARM SYSTEM SHALL NOT PROCEED PRIOR TO WRITTEN APPROVAL BY THE ENGINEER.
7. FIRE ALARM VENDOR SHALL SUBMIT SHOP DRAWINGS IN COMPLIANCE WITH NFPA 72, 2020 NEW YORK STATE BUILDING CODE, AND 2020 NEW YORK STATE FIRE CODE SECTION 907.1.1.
8. ALL FIRE ALARM CABLES AND WIRING MUST BE PLENUM RETURN RATED CABLES.

SCOPE OF WORK:

1. DEMOLISH EXISTING FIRE ALARM DEVICES IN NORTHEAST ARCADE AND FLYING WITCH. DEMOLISH ASSOCIATED WIRING BACK TO EXISTING PANEL. REMOVE, PROTECT, AND STORE EXISTING EXISTING FIRE ALARM CONTROL PANEL.
2. TEMPORARILY DISCONNECT FIRE ALARM DEVICES IN SHED OUTSIDE OF NORTHEAST ARCADE. POST TEMPORARY SIGNAGE NOTING FIRE ALARM DEVICES ARE OFFLINE. DO NOT PERFORM HOT WORK IN SHED WHILE FIRE ALARM DEVICES ARE TEMPORARILY OFFLINE.
3. INSTALL NEW FIRE ALARM DEVICES AS PER DRAWINGS. PROVIDE ALL NECESSARY WIRING, CONNECTIONS, CONDUIT, AND FITTINGS.
4. RE-INSTALL EXISTING FIRE ALARM PANEL IN NEW BURGER BARN ELECTRICAL ROOM. CONNECT NEW FIRE ALARM DEVICES TO PANEL AT NEW LOCATION. RE-CONNECT PANEL TO CENTRAL FIRE ALARM CONTROL PANEL IN MAIN ADMINISTRATION BUILDING VIA QUAD 2. PROVIDE ALL REQUIRED PROGRAMMING.
5. RE-CONNECT FIRE ALARM DEVICES IN SHED TO FIRE ALARM PANEL IN BURGER BARN ELECTRICAL ROOM. PROVIDE ALL NECESSARY WIRING, CONNECTIONS, CONDUIT, AND FITTINGS. TRENCH AND INSTALL NEW UNDERGROUND CONDUIT AS NECESSARY. COORDINATE WITH FIELD CONDITIONS.
6. NEW FIRE ALARM SYSTEM SHALL BE INSPECTED BY A THIRD PARTY INSPECTION AGENCY CERTIFIED BY WESTCHESTER COUNTY. ELECTRICIAN SHALL INCLUDE INSPECTION IN BASE BID SCOPE AND COORDINATE WITH INSPECTION AGENCY TO CERTIFY THE SYSTEM.
7. ELECTRICIAN SHALL COORDINATE WITH THE FIRE ALARM VENDOR (OPEN SYSTEMS METRO) TO RE-PROGRAM AND TEST THE CENTRAL FIRE ALARM SYSTEM IN THE PLAYLAND MAIN ADMINISTRATION BUILDING FOLLOWING THE INSTALLATION OF NEW SYSTEM AND DEVICES.
8. ELECTRICIAN SHALL COORDINATE WITH THE FIRE ALARM CENTRAL MONITORING PROVIDER (STATEWIDE MONITORING) TO TEST AND VERIFY CENTRAL MONITORING OF PARKWIDE SYSTEM FOLLOWING THE INSTALLATION OF NEW SYSTEM AND DEVICES.

FIRE ALARM SYSTEM RISER NOTES:

1. REFER TO FA-81 FOR FIRE ALARM RISER DIAGRAMS.
2. LOCATION OF DEVICES AND EQUIPMENT ARE APPROXIMATE. FINAL LOCATIONS MUST BE DETERMINED ACCORDING TO THE SITE CONDITIONS.
3. VISUAL FIRE ALARMS (STROBES) SHALL HAVE MINIMUM 5'-0" CLEARANCE FROM ANY OBSTRUCTIONS, SHALL BE FIELD ADJUSTABLE, AND SHALL BE RATED AT 75 CANDELA MINIMUM, UNLESS OTHERWISE NOTED. ALL STROBES SHALL BE SYNCHRONIZED AT LINE OF SIGHT.
4. WALL MOUNTED HORNS AND VISUAL FIRE ALARMS (STROBES) SHALL BE MOUNTED NOT LESS THAN 6'-8" AND NOT GREATER THAN 8'-0" A.F.F. WHERE LOCAL CONDITIONS ARE TOO LOW TO PERMIT THE REQUIRED MINIMUM INSTALLATION HEIGHT, INSTALL THE STROBES AT 6" BELOW THE CEILING.
5. MANUAL PULL STATIONS SHALL BE MOUNTED AT 4'-0" A.F.F. AND SHALL BE INSTALLED WITHIN 5'-0" OF EXIT DOOR.
6. FUSE CUT OUT BOX SHALL COMPLY WITH THE NATIONAL ELECTRICAL CODE AND HAVE A REMOVABLE SOLID COPPER NEUTRAL BAR.
7. ALL CONDUITS AND CONTROL PANELS SHALL BE GROUNDED TO BUILDING STEEL/GROUND GRID WITH A MINIMUM #8 CONDUCTOR.
8. RISER DIAGRAM ON THIS DRAWING IS FOR DESIGN PURPOSE ONLY. FIRE ALARM CONTRACTOR SHALL PROVIDE A COMPLETE RISER DIAGRAM WITH ACTUAL FIELD WIRING REQUIRED.
9. EACH FIRE ALARM INITIATING AND INDICATING CIRCUIT SHALL BE ELECTRICALLY SUPERVISED.
10. EACH VISUAL FIRE ALARM CIRCUIT SHALL CONTAIN AT LEAST 20% SPARE CAPACITY.
11. ALL CONTROL PANELS, FUSE CUTOUTS, TROUBLE BELLS, ALARM BELLS AND SILENCE SWITCHES SHALL BE PROPERLY LABELED WITH MINIMUM 1/4" HIGH LETTERS.
12. WIRING FOR AUDIBLE AND VISUAL ALARM NOTIFICATION DEVICES SHALL BE ARRANGED SO THAT A LOSS OF A PORTION OF THE WIRING ON A FLOOR WILL NOT RENDER MORE THAN 60% OF THE DEVICES OF EACH TYPE INOPERATIVE, AND THE DEVICES SHALL BE SO CONNECTED TO THE CIRCUITRY (i.e., BY MEANS OF ALTERNATE CIRCUITS) AS TO MAINTAIN AT LEAST PARTIAL AUDIBILITY/VISIBILITY THROUGHOUT THE ENTIRE FLOOR.
13. THE FIRE ALARM CONTROL PANEL SHALL BE PROVIDED WITH A KEY SWITCH. DURING DAILY TESTS, THE KEY SWITCH SHALL BE USED TO BYPASS THE CIRCUITS THAT CONTROL DAMPERS AND FAN SHUTDOWN.
14. THE DAMPERS AND FAN BYPASS FUNCTION SHALL BE AUTOMATICALLY RESTORED TO BE NORMAL UN-SHUNTED CONDITION WITHIN FORTY-FIVE MINUTES, IF NOT DONE SO MANUALLY BEFORE FORTY-FIVE MINUTES.
15. PERFORM FIRE ALARM SYSTEM TESTING PER THE 2020 NEW YORK STATE FIRE CODE AND NFPA 72.

FIRE ALARM LEGEND:

SYMBOL	DESCRIPTION
FA	FIRE ALARM SUB PANEL
Ⓢ	SMOKE DETECTOR
Ⓗ	HEAT DETECTOR
F	MANUAL FIRE ALARM PULL STATION
▼# H	FIRE ALARM WALL MOUNTED HORN/STROBE # = CANDELA RATING
FCO	FUSED CUT OUT SWITCH/FUSED LOCKABLE DISCONNECT SWITCH
ST #	WALL MOUNTED STROBE # = CANDELA RATING
◇	FLOW SWITCH CONNECTED TO FIRE ALARM SYSTEM
GV	SPRINKLER VALVE TAMPER SWITCH CONNECTED TO FIRE ALARM SYSTEM
Ⓢ	DUCT MOUNTED SMOKE DETECTOR
FSR	FIRE ALARM INTERFACE RELAY FOR HVAC FAN SHUTDOWN

FIRE ALARM ABBREVIATIONS:

E	EXISTING TO REMAIN
ER	EXISTING TO BE RELOCATED
EL	EXISTING AS SHOWN IN NEW LOCATION
FACP	FIRE ALARM CONTROL PANEL
FCO	FUSED CUT OUT
FCU	FIRE ALARM CONTROL UNIT
FP	FIRE PROTECTION
N	NEW
RTU	ROOFTOP UNIT
SP	SPRINKLER
WP	WEATHERPROOF
X	EXISTING TO BE DEMOLISHED

NYS BUILDING CODE LIST OF REQUIRED SPECIAL INSPECTIONS

△1

REQUIRED	NOT PRESENT	REF. CODE SECTION	DESCRIPTION
*		1705.17	FIRE-RESISTANT PENETRATIONS AND JOINTS

	SYSTEM OUTPUTS																
	Control Unit Annunciation						Notification									Supp.	
	ACTUATE COMMON ALARM SIGNAL	ACTUATE AUDIBLE ALARM SIGNAL	INDICATE COMMON SUPERVISORY STATUS	ACTUATE AUDIBLE SUPERVISORY SIGNAL	INDICATE COMMON TROBLE SIGNAL	ACTUATE AUDIBLE COMMON TROUBLE SIGNAL	ACTIVATE HORNS AND STROBES THROUGHOUT THE PROTECTED AREA	DISPLAY/PRINT CHANGE OF STATUS	TRANSMIT AUTOMATIC ALARM SIGNAL TO SUPERVISING STATION	TRANSMIT MANUAL ALARM SIGNAL TO SUPERVISING STATION	TRANSMIT WATERFLOW ALARM SIGNAL TO SUPERVISING STATION	TRANSMIT SUPERVISORY SIGNAL TO SUPERVISING STATION	TRANSMIT CO ALARM SIGNAL TO SUPERVISING STATION	TRANSMIT TROUBLE SIGNAL TO SUPERVISING STATION	ACTIVATE TEMPORAL 4 SIGNAL ON ACTIVATED CO DETECTOR SOUNDER BASES	SHUT DOWN CO PRODUCING EQUIPMENT	SHUT DOWN FANS/AIR HANDLING UNITS
EVENT	A	B	C	D	E	F	G	H	I	J	K	L	M	N	O	P	Q
1 ACTIVATION OF MANUAL PULL STATION	X	X					X	X		X							
2 ACTIVATION OF SMOKE DETECTOR	X	X					X	X	X								X
3 ACTIVATION OF DUCT MOUNTED SMOKE DETECTOR	X	X					X	X	X								X
4 ACTIVATION OF HEAT DETECTOR	X	X					X	X	X								X
5 WATERFLOW SWITCH FOR FIRE SPRINKLER SYSTEM	X	X					X	X			X						X
6 ACTIVATION OF CARBON MONOXIDE DETECTOR			X	X			X	X					X		X	X	
7 SPRINKLER VALVE (TAMPER SWITCH)			X	X				X				X					
8 FIRE ALARM LOSS OF PRIMARY/SECONDARY POWER					X	X		X						X			
9 FIRE ALARM SYSTEM WIRING FAILURE					X	X		X						X			

1 FIRE ALARM SEQUENCE OF OPERATIONS MATRIX

SCALE: NOT TO SCALE

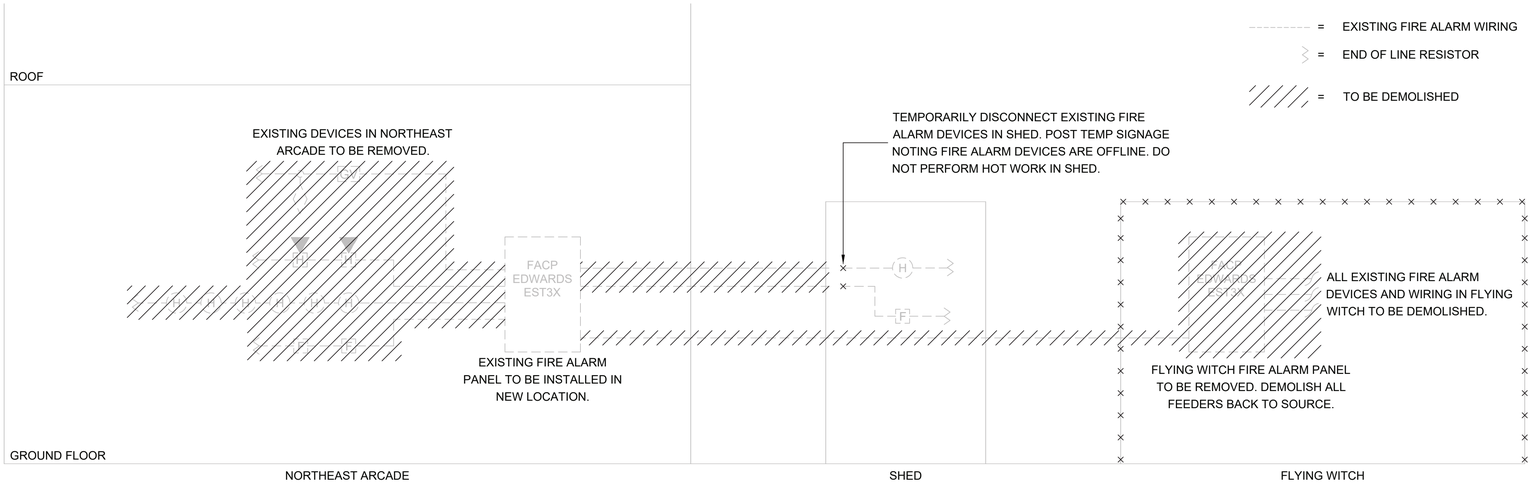

1 FA-81 FIRE ALARM DEMOLITION RISER DIAGRAM
NOT TO SCALE

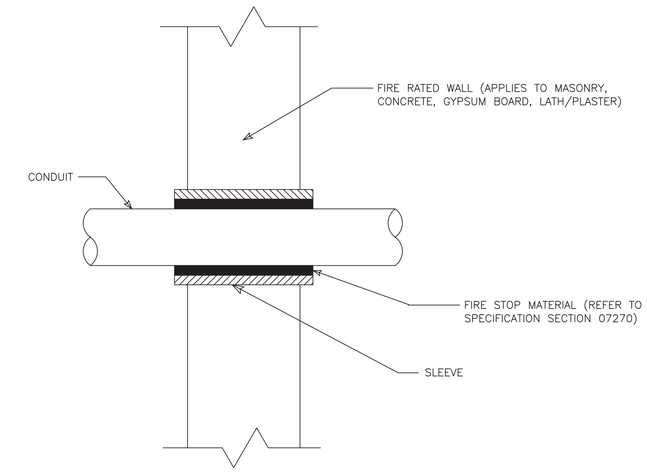

3 FA-81 CONDUIT PENETRATION THRU FIRE RATED WALL
NOT TO SCALE

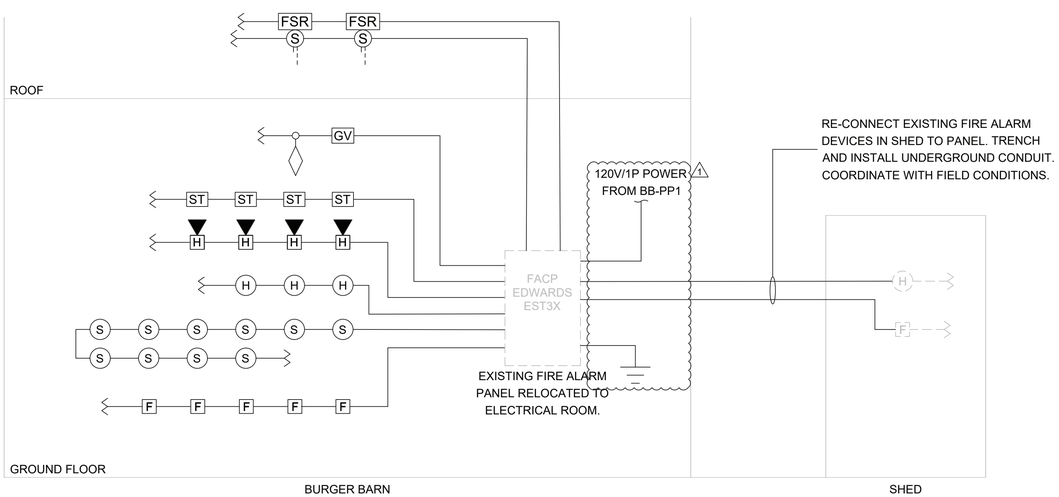

= EXISTING FIRE ALARM WIRING
= NEW FIRE ALARM WIRING
= END OF LINE RESISTOR

NOTES:

1. WIRING SHOWN ON RISER IS DIAGRAMMATICAL. PROVIDE NEW FIRE ALARM CABLE AS REQUIRED AND INSTALL WIRING LOOPS AS BEST SUITED FOR FIELD CONDITIONS.
2. THE BUILDING IS FULLY SPRINKLERED.
3. COORDINATE CIRCUITING OF FIRE ALARM PANEL WITH SAVIN ELECTRICAL DRAWINGS.

2 FA-81 FIRE ALARM NEW CONSTRUCTION RISER DIAGRAM
NOT TO SCALE

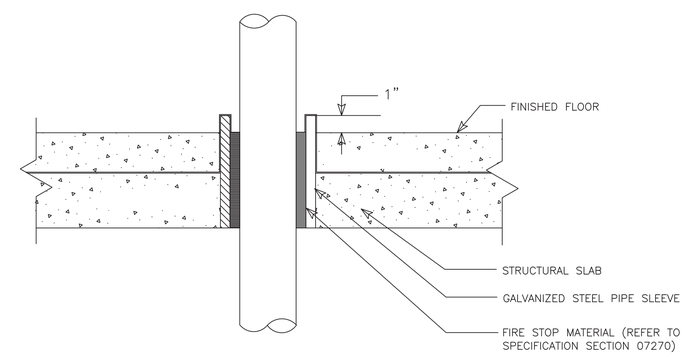

4 FA-81 CONDUIT PENETRATION THRU FLOOR SLAB
NOT TO SCALE

CONSULTANT INFORMATION
LiRo Engineers, Inc.
A LiRo Group Company
Syosset, N.Y. 516-214-8157[T]

CONSULTANT SEAL
STATE OF NEW YORK · FRANK F. ULISSE · LICENSED PROFESSIONAL ENGINEER · 090111

REVISION NUMBER	DATE	MADE BY	APP'D BY	REVISION
1	9/21/22			BID ADDENDUM #3

RECORD DRAWING CERTIFICATION
☐ AS BUILT – CHANGES AS NOTED ☐ AS BUILT – NO CHANGES

CONTRACTOR
NAME
SIGNATURE
TITLE DATE

PROJECT COORDINATOR
NAME
SIGNATURE
TITLE DATE

WESTCHESTER COUNTY, NEW YORK
DEPARTMENT OF PUBLIC WORKS AND TRANSPORTATION
DIVISION OF ENGINEERING

INFRASTRUCTURE REHABILITATION - PHASE 3
PLAYLAND PARK, RYE, NEW YORK
NORTH EAST BURGER BARN
FIRE ALARM RISER DIAGRAM AND DETAILS

CONTRACT NUMBER 22-523
SHEET NUMBER BB-FA-81
DWG NO.: 91 of 664
SCALE: As indicated
DATE: 08/23/2022
DPW FILE NUMBER 1-118-FA-840-1
REV. NO. 1

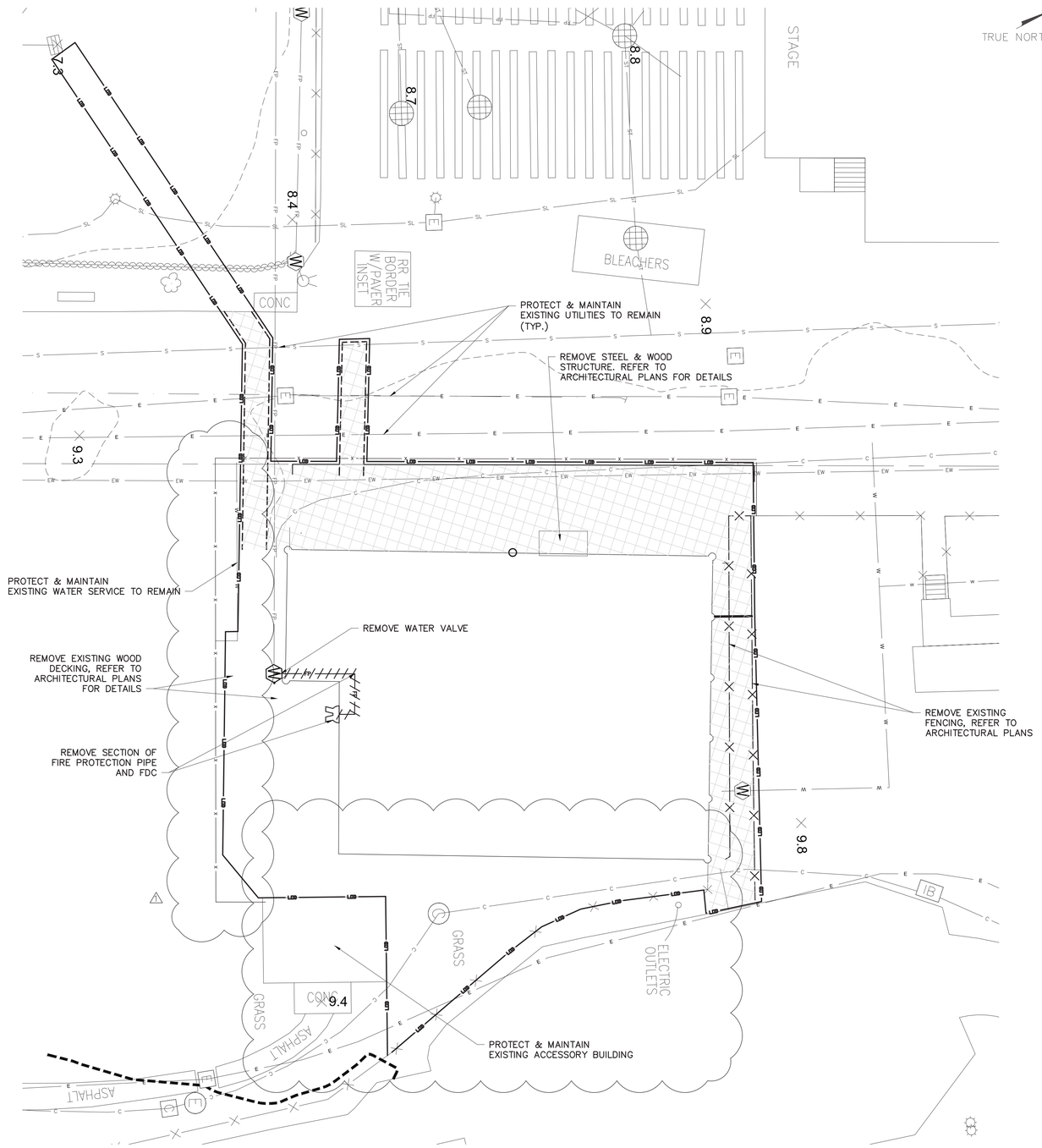

KEY MAP
NOT TO SCALE

EXISTING LEGEND

- POST
- UTILITY POLE
- SIGN
- HANDICAP PARKING
- GROUND LIGHT
- LIGHT POLE
- UTILITY POLE WITH LIGHT
- LIGHT POLE (SINGLE LIGHT)
- LIGHT POLE (DOUBLE LIGHT)
- LIGHT POLE (MULTI LIGHT)
- BOAT TIE-OFF CLEAT
- CATCH BASIN
- TRENCH DRAIN
- MAILBOX
- UNKNOWN MANHOLE
- COMMUNICATIONS BOX/HAND HOLE
- ELECTRIC HAND HOLE
- ELECTRIC BOX
- GAS METER
- IRRIGATION BOX
- UNKNOWN UTILITY BOX/HAND HOLE
- COMMUNICATION MANHOLE
- DRAINAGE MANHOLE
- ELECTRIC MANHOLE
- SEWER MANHOLE
- STORM SEWER MANHOLE
- SEWER CLEANOUT
- HYDRANT
- SIAMESE CONNECTION
- UNKNOWN VALVE
- WATER VALVE
- GAS VALVE
- WATER SPIGOT OR FOUNTAIN
- MONITORING WELL
- DECIDUOUS BUSH
- EVERGREEN BUSH
- DECIDUOUS TREE
- EVERGREEN TREE
- STUMP
- HEDGE ROW
- TREELINE
- BRUSHLINE
- RETAINING WALL
- GUIDE RAIL
- STONE WALL
- WATERLINE
- FENCE
- UNDERGROUND COMMUNICATION
- UNDERGROUND PROPANE
- UNDERGROUND ELECTRICAL
- UNDERGROUND STREET LIGHTING
- UNDERGROUND ENVIRONMENTAL WASTEWATER
- UNDERGROUND SEWER
- UNDERGROUND STORM SEWER
- UNDERGROUND WATER
- UNDERGROUND FIRE PROTECTION
- EXISTING MAJOR CONTOUR
- EXISTING MINOR CONTOUR

PROPOSED LEGEND:

- SAW CUTTING ASPHALT CONCRETE
- LIMITS OF DISTURBANCE
- LIMITS OF PAVEMENT REMOVAL
- AREA OF ASPHALT PAVEMENT REMOVAL (FULL DEPTH & EXCAVATION)
- DRAINAGE STRUCTURE INLET PROTECTION

NOTES:

1. PAVEMENT REMOVAL, MILLING AND EXCAVATION, MATERIAL SHALL NOT BE STOCKPILED ON SITE.

2. EXISTING GRADES, PIPE LOCATIONS, SIZES, MATERIAL, INVERTS AND OTHER EXISTING CONDITIONS ARE SHOWN ON THE DRAWINGS FROM AVAILABLE AS-BUILT DRAWINGS AND FIELD SURVEY BY OTHERS. IT SHALL BE THE RESPONSIBILITY OF THE CONTRACTOR TO VERIFY ALL EXISTING CONDITIONS.

3. THE CONTRACTOR SHALL TAKE PROPER PRECAUTIONS NOT TO DAMAGE ANY EXISTING SITE CONDITIONS SPECIFICALLY EXCLUDED FROM THE CONTRACT AND WILL BE HELD SOLELY RESPONSIBLE FOR ANY DAMAGE OCCURRING DURING THE COURSE OF THE WORK DURING CONSTRUCTION. THE CONTRACTOR SHALL, AT THEIR OWN EXPENSE, MAKE ALL REPAIRS REQUIRED TO RESTORE ANY DAMAGED AREAS TO ORIGINAL CONDITIONS.

New York 811 — Know what's below. Call before you dig.

0 10 20 30
1"=10' SCALE BAR

6/15/2022 4:10:27 PM

CONSULTANT INFORMATION
LiRo Engineers, Inc.
A LiRo Group Company
Mineola, N.Y. 516-746-2350[T]

CONSULTANT SEAL
STATE OF NEW YORK — KENNETH J. HOLOHAN — LICENSED PROFESSIONAL ENGINEER — NO. 059134

REVISION NUMBER	DATE	MADE BY	APP'D BY	REVISION
1	9/21/22	HIK	LK	BID ADDENDUM #3

RECORD DRAWING CERTIFICATION
☐ AS BUILT – CHANGES AS NOTED ☐ AS BUILT – NO CHANGES

CONTRACTOR
NAME
SIGNATURE
TITLE DATE

PROJECT COORDINATOR
NAME
SIGNATURE
TITLE DATE

WESTCHESTER COUNTY, NEW YORK
DEPARTMENT OF PUBLIC WORKS AND TRANSPORTATION
DIVISION OF ENGINEERING

INFRASTRUCTURE REHABILITATION PHASE 3
PLAYLAND PARK, RYE, NEW YORK
NORTHEAST BURGER BARN
EXISTING CONDITIONS/DEMOLITION PLAN

CONTRACT NUMBER	22-523
SHEET NUMBER	BB-C-02
DWG NO.	93 of 664
SCALE:	1"=10'
DATE:	08/23/2022
DPW FILE NUMBER	1-118-C-842-1
REV. NO.	1

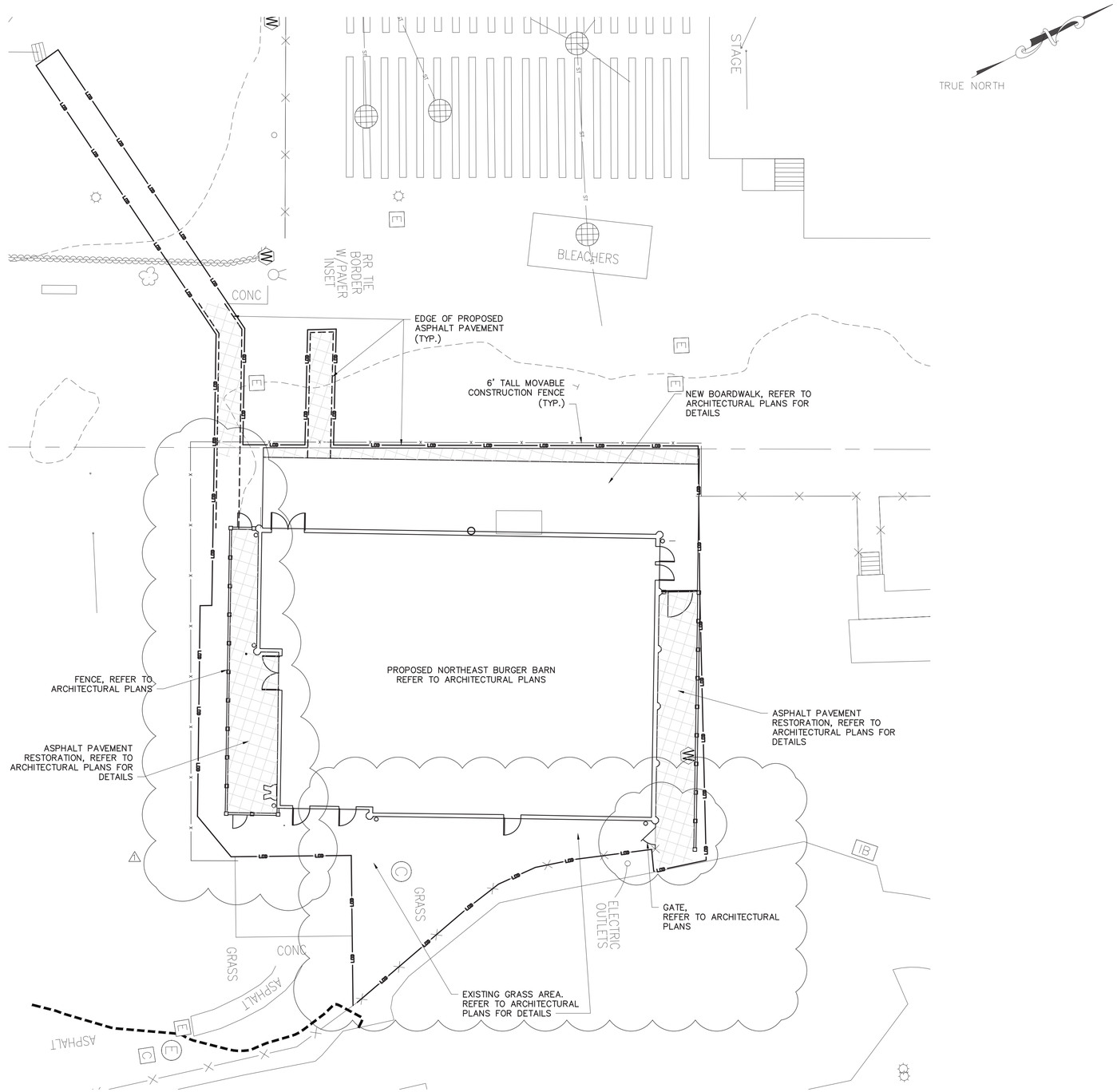

EXISTING LEGEND

- POST
- UTILITY POLE
- SIGN OR
- HANDICAP PARKING
- GROUND LIGHT
- LIGHT POLE
- UTILITY POLE WITH LIGHT
- LIGHT POLE (SINGLE LIGHT)
- LIGHT POLE (DOUBLE LIGHT)
- LIGHT POLE (MULTI LIGHT)
- BOAT TIE-OFF CLEAT
- CATCH BASIN OR OR
- TRENCH DRAIN
- MAILBOX
- UNKNOWN MANHOLE
- COMMUNICATIONS BOX/HAND HOLE OR
- ELECTRIC HAND HOLE
- ELECTRIC BOX
- GAS METER
- IRRIGATION BOX
- UNKNOWN UTILITY BOX/HAND HOLE
- COMMUNICATION MANHOLE
- DRAINAGE MANHOLE OR
- ELECTRIC MANHOLE
- SEWER MANHOLE OR
- STORM SEWER MANHOLE
- SEWER CLEANOUT
- HYDRANT
- SIAMESE CONNECTION
- UNKNOWN VALVE OR
- WATER VALVE
- GAS VALVE
- WATER SPIGOT OR FOUNTAIN
- MONITORING WELL
- DECIDUOUS BUSH
- EVERGREEN BUSH
- DECIDUOUS TREE
- EVERGREEN TREE
- STUMP
- HEDGE ROW
- TREELINE
- BRUSHLINE
- RETAINING WALL
- GUIDE RAIL
- STONE WALL
- FENCE

PROPOSED LEGEND:

- MOVABLE CONSTRUCTION FENCE
- SAW CUTTING ASPHALT CONCRETE
- LIMITS OF DISTURBANCE
- LIMITS OF PAVEMENT REMOVAL
- AREA OF FULL DEPTH ASPHALT PAVEMENT
- DRAINAGE STRUCTURE INLET PROTECTION

0 10 20 30

1"=10' SCALE BAR

6/15/2022 4:10:27 PM

CONSULTANT INFORMATION

LiRo Engineers, Inc.
A LiRo Group Company
Mineola, N.Y. 516-746-2350[T]

CONSULTANT SEAL

STATE OF NEW YORK · KENNETH J. HOUSTON · LICENSED PROFESSIONAL ENGINEER · 059134

REVISION NUMBER	DATE	MADE BY	APP'D BY	REVISION
1	9/21/22	HIK	LK	BID ADDENDUM #3

RECORD DRAWING CERTIFICATION

☐ AS BUILT – CHANGES AS NOTED ☐ AS BUILT – NO CHANGES

CONTRACTOR
NAME
SIGNATURE
TITLE DATE

PROJECT COORDINATOR
NAME
SIGNATURE
TITLE DATE

WESTCHESTER COUNTY, NEW YORK
DEPARTMENT OF PUBLIC WORKS AND TRANSPORTATION
DIVISION OF ENGINEERING

INFRASTRUCTURE REHABILITATION PHASE 3
PLAYLAND PARK, RYE, NEW YORK
NORTHEAST BURGER BARN
SITE CONSTRUCTION PLAN

CONTRACT NUMBER	22-523
SHEET NUMBER	BB-C-03
DWG NO.	94 of 664
SCALE:	1"=10'
DATE:	08/23/2022
DPW FILE NUMBER	1-118-C-843-1
REV. NO.	1

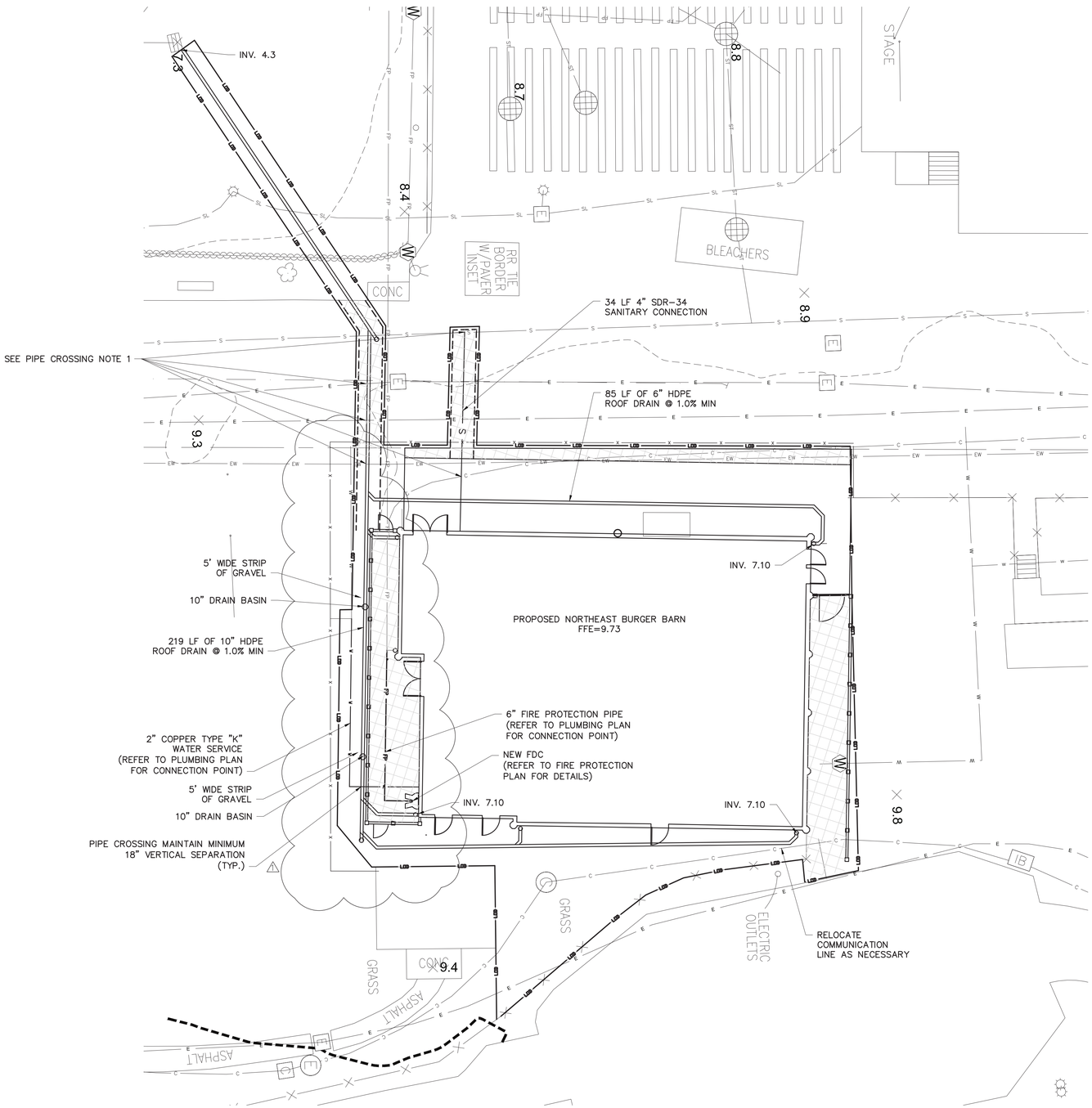

NOTES:
1. CONTRACTOR TO VERIFY DEPTH OF EXISTING UTILITIES PRIOR TO START OF PIPE LAYOUT TO CONFIRM CLEAR AND RECONCILE CROSSINGS.

EXISTING LEGEND

- POST
- UTILITY POLE
- SIGN
- HANDICAP PARKING
- GROUND LIGHT
- LIGHT POLE
- UTILITY POLE WITH LIGHT
- LIGHT POLE (SINGLE LIGHT)
- LIGHT POLE (DOUBLE LIGHT)
- LIGHT POLE (MULTI LIGHT)
- BOAT TIE-OFF CLEAT
- CATCH BASIN
- TRENCH DRAIN
- MAILBOX
- UNKNOWN MANHOLE
- COMMUNICATIONS BOX/HAND HOLE
- ELECTRIC HAND HOLE
- ELECTRIC BOX
- GAS METER
- IRRIGATION BOX
- UNKNOWN UTILITY BOX/HAND HOLE
- COMMUNICATION MANHOLE
- DRAINAGE MANHOLE
- ELECTRIC MANHOLE
- SEWER MANHOLE
- STORM SEWER MANHOLE
- SEWER CLEANOUT
- HYDRANT
- SIAMESE CONNECTION
- UNKNOWN VALVE
- WATER VALVE
- GAS VALVE
- WATER SPIGOT OR FOUNTAIN
- MONITORING WELL
- DECIDUOUS BUSH
- EVERGREEN BUSH
- DECIDUOUS TREE
- EVERGREEN TREE
- STUMP
- HEDGE ROW
- TREELINE
- BRUSHLINE
- RETAINING WALL
- GUIDE RAIL
- STONE WALL
- WATERLINE
- FENCE
- UNDERGROUND COMMUNICATION
- UNDERGROUND PROPANE
- UNDERGROUND ELECTRICAL
- UNDERGROUND STREET LIGHTING
- UNDERGROUND ENVIRONMENTAL WASTEWATER
- UNDERGROUND SEWER
- UNDERGROUND STORM SEWER
- UNDERGROUND WATER
- UNDERGROUND FIRE PROTECTION

PROPOSED LEGEND:

- SAW CUTTING ASPHALT CONCRETE
- LIMITS OF DISTURBANCE
- LIMITS OF PAVEMENT REMOVAL (MILLING & EXCAVATION)
- PROPOSED WATER LINE
- PROPOSED CATCH BASIN
- PROPOSED STORM PIPE
- PROPOSED SANITARY MANHOLE
- PROPOSED SANITARY PIPE
- PROPOSED UNDERGROUND ELECTRIC

New York 811 — Know what's below. Call before you dig.

0 10 20 30
1"=10' SCALE BAR

6/15/2022 4:10:27 PM

CONSULTANT INFORMATION
LiRo Engineers, Inc.
A LiRo Group Company
Mineola, N.Y. 516-746-2350[T]

CONSULTANT SEAL
STATE OF NEW YORK · KENNETH J. HOLDEN · LICENSED PROFESSIONAL ENGINEER · 059134

REVISION NUMBER	DATE	MADE BY	APP'D BY	REVISION
1	9/21/22	HIK	LK	BID ADDENDUM #3

RECORD DRAWING CERTIFICATION
☐ AS BUILT – CHANGES AS NOTED ☐ AS BUILT – NO CHANGES

CONTRACTOR
NAME
SIGNATURE
TITLE DATE

PROJECT COORDINATOR
NAME
SIGNATURE
TITLE DATE

WESTCHESTER COUNTY, NEW YORK
DEPARTMENT OF PUBLIC WORKS AND TRANSPORTATION
DIVISION OF ENGINEERING

INFRASTRUCTURE REHABILITATION PHASE 3
PLAYLAND PARK, RYE, NEW YORK
NORTHEAST BURGER BARN
UTILITY CONSTRUCTION PLAN

CONTRACT NUMBER	22-523
SHEET NUMBER	BB-C-04
DWG NO.	95 of 664
SCALE:	1"=10'
DATE:	08/23/2022
DPW FILE NUMBER	1-118-C-844-1
REV. NO.	1

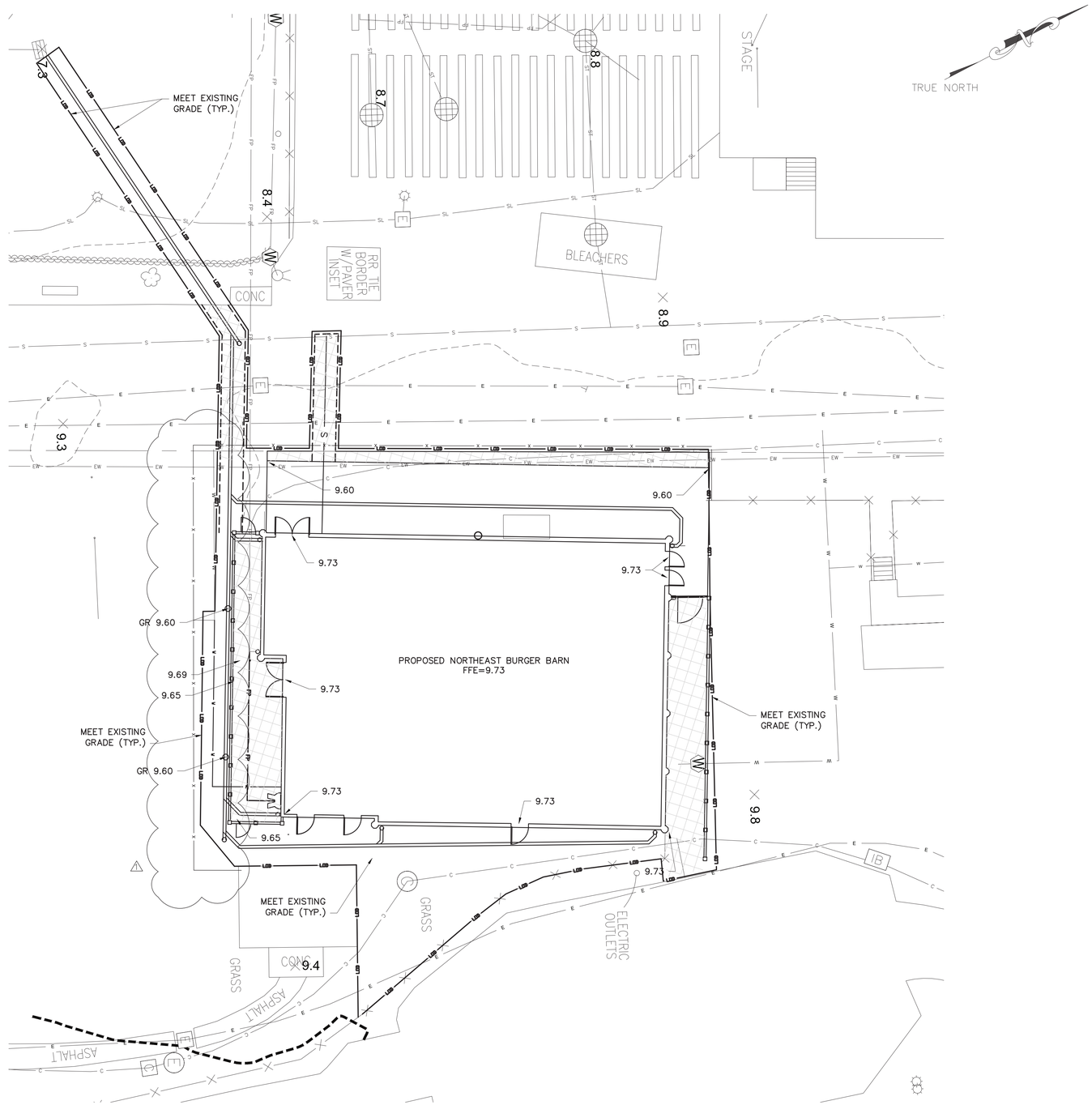

EXISTING LEGEND

- POST
- UTILITY POLE
- SIGN
- HANDICAP PARKING
- GROUND LIGHT
- LIGHT POLE
- UTILITY POLE WITH LIGHT
- LIGHT POLE (SINGLE LIGHT)
- LIGHT POLE (DOUBLE LIGHT)
- LIGHT POLE (MULTI LIGHT)
- BOAT TIE-OFF CLEAT
- CATCH BASIN
- TRENCH DRAIN
- MAILBOX
- UNKNOWN MANHOLE
- COMMUNICATIONS BOX/HAND HOLE
- ELECTRIC HAND HOLE
- ELECTRIC BOX
- GAS METER
- IRRIGATION BOX
- UNKNOWN UTILITY BOX/HAND HOLE
- COMMUNICATION MANHOLE
- DRAINAGE MANHOLE
- ELECTRIC MANHOLE
- SEWER MANHOLE
- STORM SEWER MANHOLE
- SEWER CLEANOUT
- HYDRANT
- SIAMESE CONNECTION
- UNKNOWN VALVE
- WATER VALVE
- GAS VALVE
- WATER SPIGOT OR FOUNTAIN
- MONITORING WELL
- DECIDUOUS BUSH
- EVERGREEN BUSH
- DECIDUOUS TREE
- EVERGREEN TREE
- STUMP
- HEDGE ROW
- TREELINE
- BRUSHLINE
- RETAINING WALL
- GUIDE RAIL
- STONE WALL
- WATERLINE
- FENCE
- UNDERGROUND COMMUNICATION
- UNDERGROUND PROPANE
- UNDERGROUND ELECTRICAL
- UNDERGROUND STREET LIGHTING
- UNDERGROUND ENVIRONMENTAL WASTEWATER
- UNDERGROUND SEWER
- UNDERGROUND STORM SEWER
- UNDERGROUND WATER
- UNDERGROUND FIRE PROTECTION

PROPOSED LEGEND:

- SAW CUTTING ASPHALT CONCRETE
- LIMITS OF DISTURBANCE
- LIMITS OF PAVEMENT REMOVAL (MILLING & EXCAVATION)
- PROPOSED WATER LINE
- PROPOSED CATCH BASIN
- PROPOSED STORM PIPE
- PROPOSED SANITARY MANHOLE
- PROPOSED SANITARY PIPE
- PROPOSED UNDERGROUND ELECTRIC

New York 811 — Know what's below. Call before you dig.

0 10 20 30
1"=10' SCALE BAR

6/15/2022 4:10:27 PM

CONSULTANT INFORMATION

LiRo Engineers, Inc.
A LiRo Group Company
Mineola, N.Y. 516-746-2350[T]

CONSULTANT SEAL

STATE OF NEW YORK · KENNETH J. HOLDEN · LICENSED PROFESSIONAL ENGINEER · 059134

REVISION NUMBER	DATE	MADE BY	APP'D BY	REVISION
1	9/21/22	HIK	LK	BID ADDENDUM #3

RECORD DRAWING CERTIFICATION

☐ AS BUILT – CHANGES AS NOTED ☐ AS BUILT – NO CHANGES

CONTRACTOR
NAME
SIGNATURE
TITLE DATE

PROJECT COORDINATOR
NAME
SIGNATURE
TITLE DATE

WESTCHESTER COUNTY, NEW YORK
DEPARTMENT OF PUBLIC WORKS AND TRANSPORTATION
DIVISION OF ENGINEERING

INFRASTRUCTURE REHABILITATION PHASE 3
PLAYLAND PARK, RYE, NEW YORK
NORTHEAST BURGER BARN
GRADING AND EROSION CONTROL PLAN

CONTRACT NUMBER	22-523
SHEET NUMBER	BB-C-05
DWG NO.	96 of 664
SCALE:	1"=10'
DATE:	08/23/2022
DPW FILE NUMBER	1-118-C-845-1
REV. NO.	1

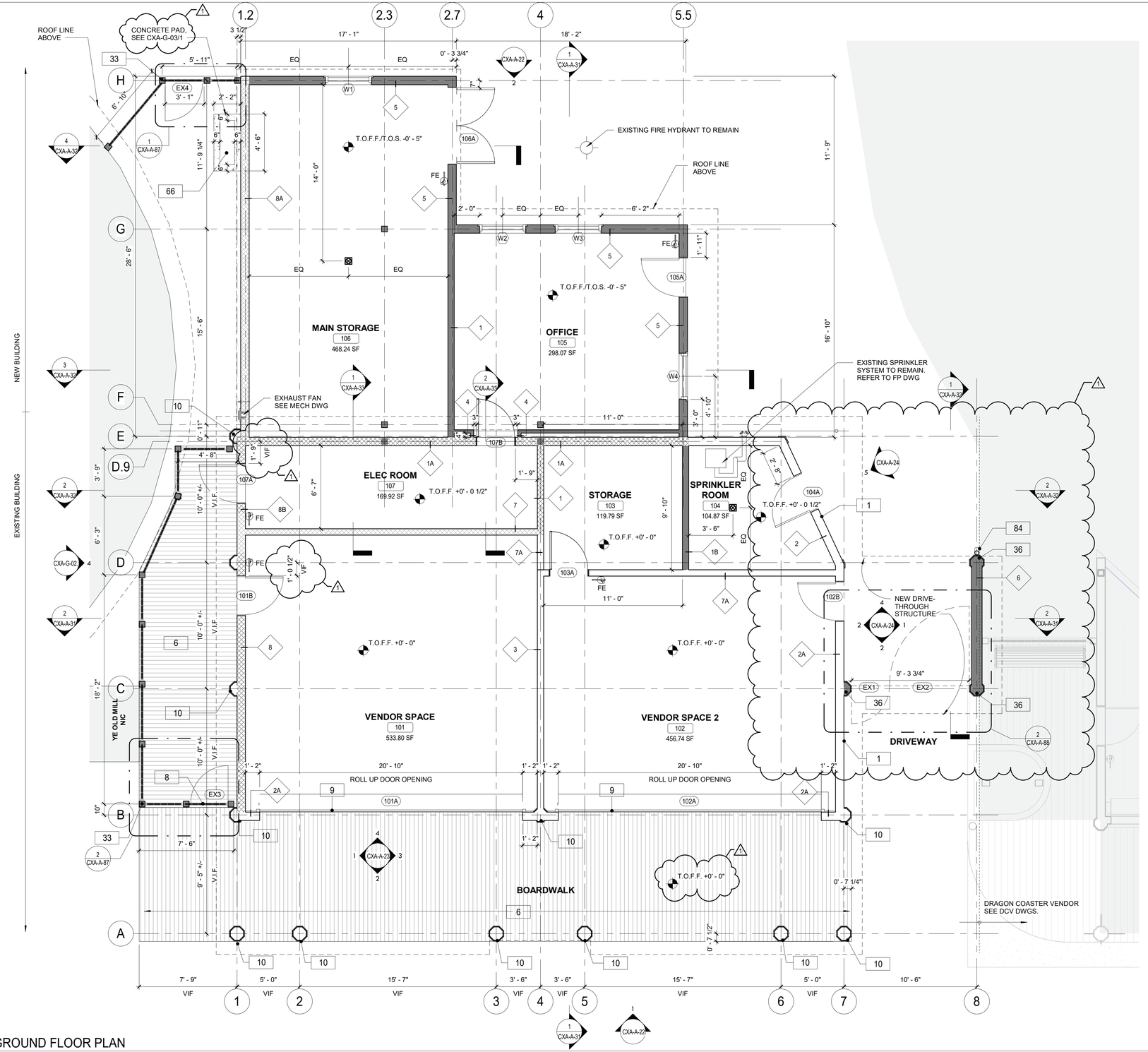

1 GROUND FLOOR PLAN
1/4" = 1'-0"

FLOOR PLAN NOTES:

1. DIMENSIONS ARE TO FACE OF GYPSUM WALL BOARD, GRID LINES, OR CENTERLINE OF COLUMN. ALL ELEVATIONS ARE NOTED FROM FINISH FLOOR ELEVATIONS.
2. PROVIDE DRYWALL TRIM AT ALL EXPOSED EDGES AND CORNERS.
3. MINIMUM DIMENSION FROM ANY CORNER OR WALL TO FRAMING STUD AT DOOR JAMB OPENING SHALL BE 4" (U.N.O.).
4. PROVIDE FIRE RETARDANT WOOD BLOCKING FOR ANY WALL MOUNTED EQUIPMENT OR ACCESSORIES. COORDINATE ALL BLOCKING REQUIREMENTS NECESSARY WITH OTHER TRADES.
5. THE CONTRACTOR SHALL VERIFY DIMENSIONS OF THE EXISTING SPACE AND OF ANY EXISTING CONSTRUCTION TO REMAIN BY ACTUAL MEASUREMENT BEFORE ANY WORK IS PERFORMED. IF ANY MEASUREMENTS DIFFER FROM DIMENSIONS SHOWN ON PLAN, GC IS TO NOTIFY THE ARCHITECT IMMEDIATELY. THE CONTRACTOR SHALL BE RESPONSIBLE FOR CORRECTING ANY AND ALL DISCREPANCIES FOUND AFTER THE WORK IS PERFORMED, AT NO ADDITIONAL EXPENSE TO THE OWNER.
6. THE GC SHALL PROVIDE CAULK JOINTS WHERE GYP. BD. MEETS THE FLOOR OR ROOF DECK.
7. THE GC SHALL BE RESPONSIBLE FOR COORDINATING WITH OWNER ON ALL WORK TO BE PERFORMED BY THE OWNER. ANY POTENTIAL CONFLICTS OR DELAYS CAUSED BY THE OWNER'S SUBCONTRACTORS MUST BE DOCUMENTED IN WRITING TO THE OWNER BEFORE THE DELAY IS ACTUALLY INCURRED FOR IT TO BE CONSIDERED. OTHERWISE THE GC WILL BE RESPONSIBLE FOR MEETING THE SCHEDULE AS OUTLINED IN THE CONTRACT.
8. THE CONTRACTOR TO VERIFY ALL FINISHED DIMENSIONS. FIELD CONDITIONS ALTERING ANY DIMENSIONS SHOULD BE BROUGHT TO THE ATTENTION OF THE OWNER AND ARCHITECT.
9. THE CONTRACTOR SHALL SUPPLY ALL MATERIAL, LABOR, AND COORDINATION REQUIRED FOR THEINSTALLATION OF ALL OWNER-SUPPLIED ITEMS AS DESCRIBED IN THE DOCUMENTS, U.N.O.
10. THE CONTRACTOR IS RESPONSIBLE FOR ALL FLOOR AND WALL PENETRATIONS FOR ELECTRICAL AND MECHANICAL WORK. ALL SUCH OPENING SHALL BE FRAMED AND REINFORCED.
11. FLOOR SURFACES SHALL BE LEVELED TO ASSURE SMOOTH SURFACE FOR FINISH FLOOR INSTALLATION.
12. THE CONTRACTOR. TO COORDINATE ALL UTILITY STUB-UPS AND LOCATION OF ALL EQUIPMENT PRIOR TO INSTALLING ANY ONE ITEM.
13. PROVIDE PAINTED ACCESS PANELS IN WALLS & CEILING AT CONCEALED ITEMS SUCH AS VALVES, ONTROLS, SWITCHES OR ANY OTHER ITEMS THAT REQUIRES ACCESS. GC O DETERMINE ACCESS ANEL LOCATION W/ ARCHITECT PRIOR TO INSTALLATION.

PLAN LEGEND:

	NEW IPE WOOD DECK	101	DOOR TAG
	NEW CONSTRUCTION	1i	WINDOW TAG
	1-HR RATED	FE	FIRE EXTINGUISHER
	NOT IN CONTRACT	1i	WALL TAG
?	KEY NOTES	FD	FLOOR DRAIN

CONSTRUCTION KEY NOTES

1	PROVIDE AND INSTALL NEW 1x8 MILLED YELLOW PINE - TONGUE AND GROOVE - NO BEVEL
6	INSTALL NEW IPE DECKING. SEE STRUCTURAL FOR DETAILS.
8	PROVIDE AND INSTALL GATE. SEE DETAILS.
9	PROVIDE AND INSTALL ROLL DOWN DOOR. SEE DETAILS AND SCHEDULE.
10	PROVIDE AND INSTALL COLUMN ENCLOSURES. SEE DETAILS.
33	NEW WOOD FENCE. SEE DETAILS.
36	NEW PILASTER TO MATCH COLUMN ENCLOSURE AS INDICATED
66	INSTALL NEW MINI SPLIT MECHANICAL UNIT. SEE MECHANICAL DRAWINGS.
84	HALF ROUND ALUMINUM GUTTER AND DOWNSPOUT.

9/23/2022 6:46:36 AM

CONSULTANT INFORMATION

The LiRo Group
3 Aerial Way, Syosset, New York 11791
(516) 938-5476 www.liro.com

CONSULTANT SEAL

REGISTERED ARCHITECT ROBERT D. JOHNSON 023220 STATE OF NEW YORK

REVISION NUMBER	DATE	MADE BY	APP'D BY	REVISION
1	09/21/22	EZ		BID ADDENDUM #3

RECORD DRAWING CERTIFICATION

☐ AS BUILT – CHANGES AS NOTED ☐ AS BUILT – NO CHANGES

CONTRACTOR
NAME
SIGNATURE
TITLE DATE

PROJECT COORDINATOR
NAME
SIGNATURE
TITLE DATE

WESTCHESTER COUNTY, NEW YORK
DEPARTMENT OF PUBLIC WORKS AND TRANSPORTATION
DIVISION OF ENGINEERING

INFRASTRUCTURE REHABILITATION PHASE 3
PLAYLAND PARK, RYE, NEW YORK
CROSS AXIS BUILDING A
CXA - GROUND FLOOR PLAN

CONTRACT NUMBER 22-523
SHEET NUMBER CXA-A-11
DWG NO.: 113 of 664
SCALE: As indicated
DATE: 08/23/2022
DPW FILE NUMBER 1-118-A-862-1
REV. NO. 1

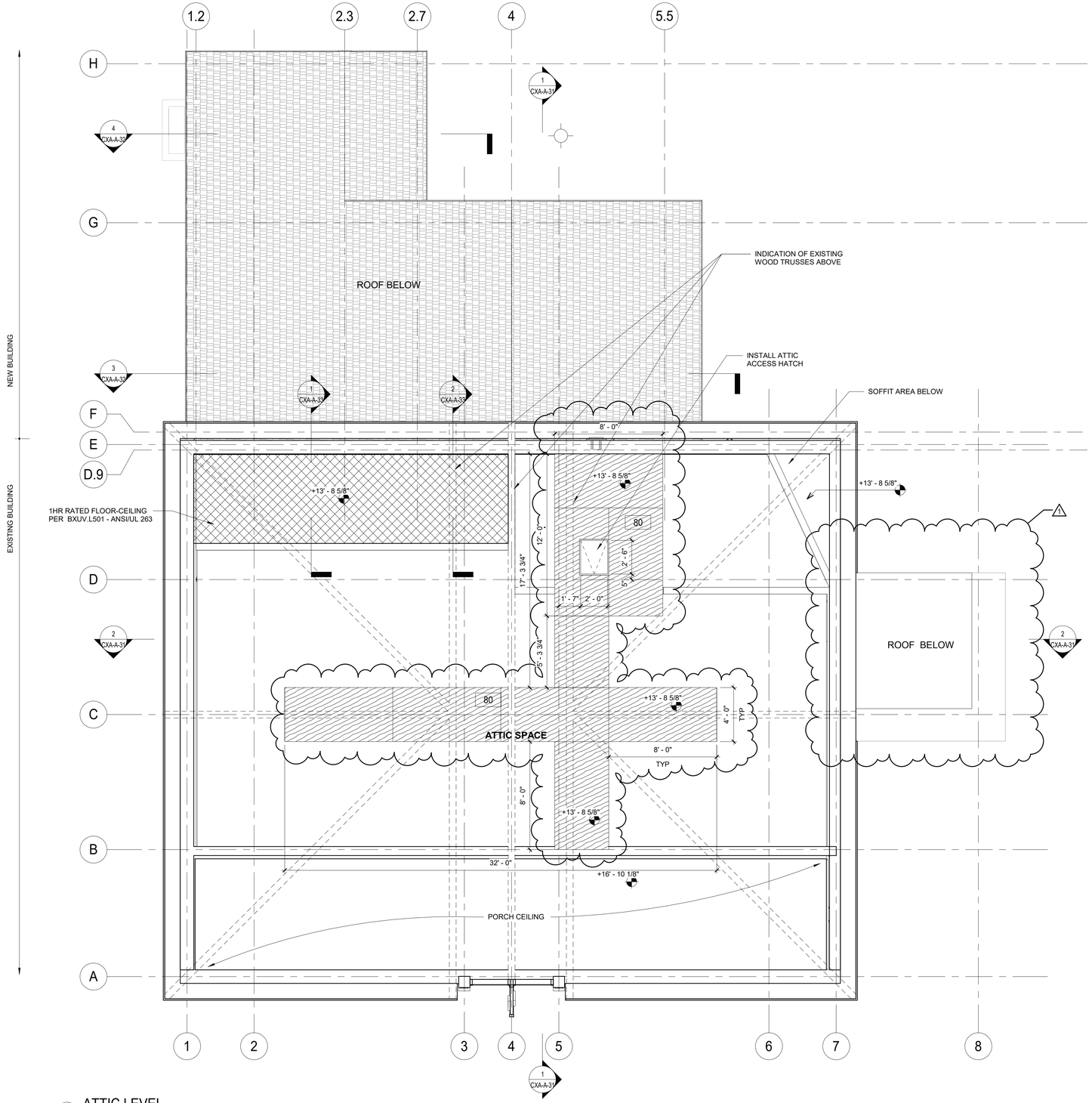

1 ATTIC LEVEL
1/4" = 1'-0"

FLOOR PLAN NOTES:

1. DIMENSIONS ARE TO FACE OF GYPSUM WALL BOARD, GRID LINES, OR CENTERLINE OF COLUMN. ALL ELEVATIONS ARE NOTED FROM FINISH FLOOR ELEVATIONS.
2. PROVIDE DRYWALL TRIM AT ALL EXPOSED EDGES AND CORNERS.
3. MINIMUM DIMENSION FROM ANY CORNER OR WALL TO FRAMING STUD AT DOOR JAMB OPENING SHALL BE 4" (U.N.O.).
4. PROVIDE FIRE RETARDANT WOOD BLOCKING FOR ANY WALL MOUNTED EQUIPMENT OR ACCESSORIES. COORDINATE ALL BLOCKING REQUIREMENTS NECESSARY WITH OTHER TRADES.
5. THE CONTRACTOR SHALL VERIFY DIMENSIONS OF THE EXISTING SPACE AND OF ANY EXISTING CONSTRUCTION TO REMAIN BY ACTUAL MEASUREMENT BEFORE ANY WORK IS PERFORMED. IF ANY MEASUREMENTS DIFFER FROM DIMENSIONS SHOWN ON PLAN, GC IS TO NOTIFY THE ARCHITECT IMMEDIATELY. THE CONTRACTOR SHALL BE RESPONSIBLE FOR CORRECTING ANY AND ALL DISCREPANCIES FOUND AFTER THE WORK IS PERFORMED, AT NO ADDITIONAL EXPENSE TO THE OWNER.
6. THE GC SHALL PROVIDE CAULK JOINTS WHERE GYP. BD. MEETS THE FLOOR OR ROOF DECK.
7. THE GC SHALL BE RESPONSIBLE FOR COORDINATING WITH OWNER ON ALL WORK TO BE PERFORMED BY THE OWNER. ANY POTENTIAL CONFLICTS OR DELAYS CAUSED BY THE OWNER'S SUBCONTRACTORS MUST BE DOCUMENTED IN WRITING TO THE OWNER BEFORE THE DELAY IS ACTUALLY INCURRED FOR IT TO BE CONSIDERED. OTHERWISE THE GC WILL BE RESPONSIBLE FOR MEETING THE SCHEDULE AS OUTLINED IN THE CONTRACT.
8. THE CONTRACTOR TO VERIFY ALL FINISHED DIMENSIONS. FIELD CONDITIONS ALTERING ANY DIMENSIONS SHOULD BE BROUGHT TO THE ATTENTION OF THE OWNER AND ARCHITECT.
9. THE CONTRACTOR SHALL SUPPLY ALL MATERIAL, LABOR, AND COORDINATION REQUIRED FOR THEINSTALLATION OF ALL OWNER-SUPPLIED ITEMS AS DESCRIBED IN THE DOCUMENTS, U.N.O.
10. THE CONTRACTOR IS RESPONSIBLE FOR ALL FLOOR AND WALL PENETRATIONS FOR ELECTRICAL AND MECHANICAL WORK. ALL SUCH OPENING SHALL BE FRAMED AND REINFORCED.
11. FLOOR SURFACES SHALL BE LEVELED TO ASSURE SMOOTH SURFACE FOR FINISH FLOOR INSTALLATION.
12. THE CONTRACTOR. TO COORDINATE ALL UTILITY STUB-UPS AND LOCATION OF ALL EQUIPMENT PRIOR TO INSTALLING ANY ONE ITEM.
13. PROVIDE PAINTED ACCESS PANELS IN WALLS & CEILING AT CONCEALED ITEMS SUCH AS VALVES, ONTROLS, SWITCHES OR ANY OTHER ITEMS THAT REQUIRES ACCESS. GC O DETERMINE ACCESS ANEL LOCATION W/ ARCHITECT PRIOR TO INSTALLATION.

PLAN LEGEND:

	NEW IPE WOOD DECK	101	DOOR TAG
	NEW CONSTRUCTION	1i	WINDOW TAG
	1-HR RATED	FE	FIRE EXTINGUISHER
	NOT IN CONTRACT	1i	WALL TAG
?	KEY NOTES	FD	FLOOR DRAIN

CONSTRUCTION KEY NOTES

80	NEW 3/4" PLYWOOD FLOOR

9/23/2022 6:46:37 AM

CONSULTANT INFORMATION

The LiRo Group
3 Aerial Way, Syosset, New York 11791
(516) 938-5476 www.liro.com

CONSULTANT SEAL

REGISTERED ARCHITECT ROBERT D. JOHNSON 023293 STATE OF NEW YORK

REVISION NUMBER	DATE	MADE BY	APP'D BY	REVISION
1	09/21/22	EZ		BID ADDENDUM #3

RECORD DRAWING CERTIFICATION

☐ AS BUILT – CHANGES AS NOTED ☐ AS BUILT – NO CHANGES

CONTRACTOR
NAME
SIGNATURE
TITLE DATE

PROJECT COORDINATOR
NAME
SIGNATURE
TITLE DATE

WESTCHESTER COUNTY, NEW YORK
DEPARTMENT OF PUBLIC WORKS AND TRANSPORTATION
DIVISION OF ENGINEERING

INFRASTRUCTURE REHABILITATION PHASE 3
PLAYLAND PARK, RYE, NEW YORK
CROSS AXIS BUILDING A
CXA - ATTIC LEVEL PLAN

CONTRACT NUMBER	22-523
SHEET NUMBER	CXA-A-12
DWG NO.:	114 of 664
SCALE:	As indicated
DATE:	08/23/2022
DPW FILE NUMBER	1-118-A-863-1
REV. NO.	1

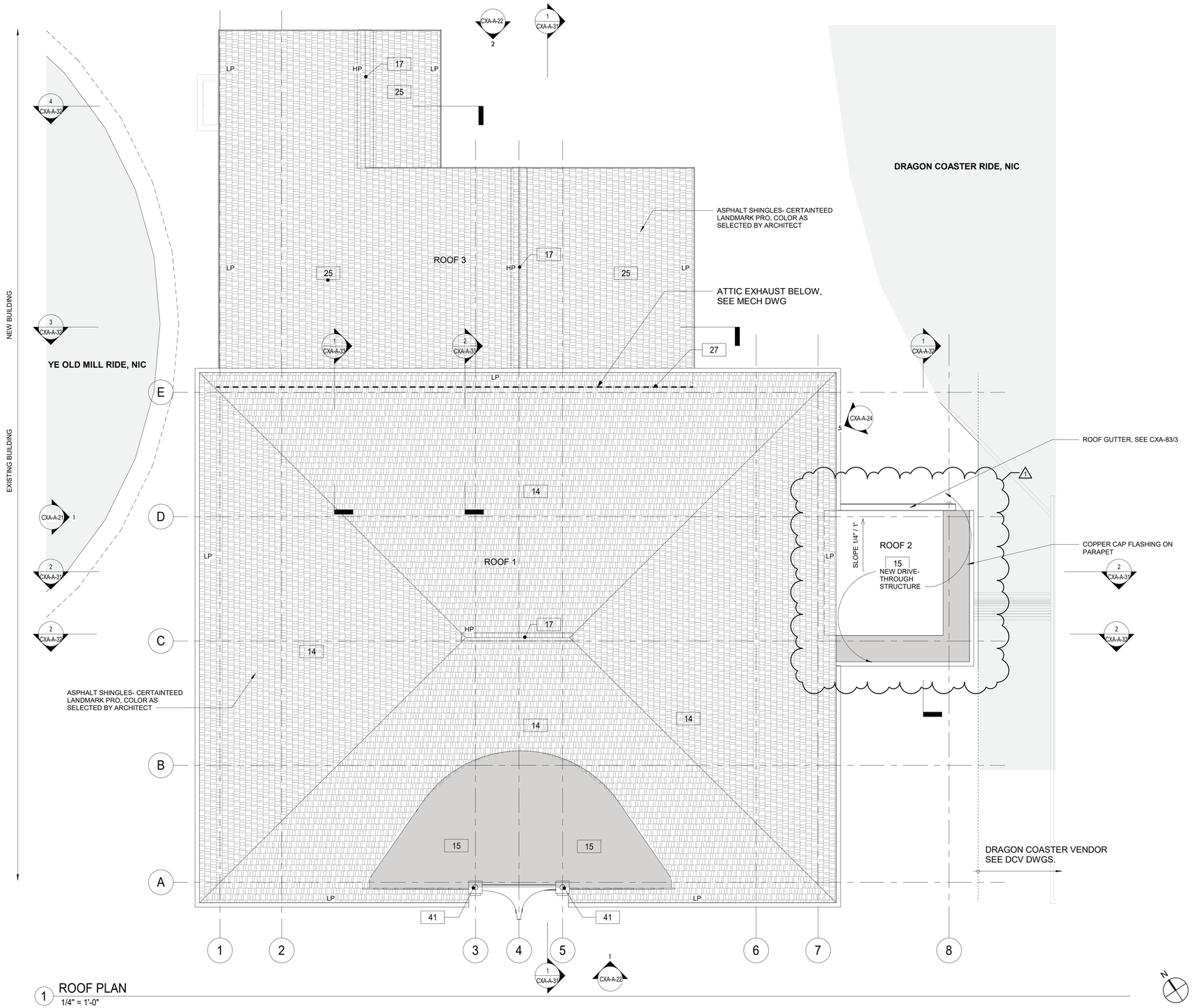

1 ROOF PLAN
1/4" = 1'-0"

FLOOR PLAN NOTES:

1. DIMENSIONS ARE TO FACE OF GYPSUM WALL BOARD, GRID LINES, OR CENTERLINE OF COLUMN. ALL ELEVATIONS ARE NOTED FROM FINISH FLOOR ELEVATIONS.
2. PROVIDE DRYWALL TRIM AT ALL EXPOSED EDGES AND CORNERS.
3. MINIMUM DIMENSION FROM ANY CORNER OR WALL TO FRAMING STUD AT DOOR JAMB OPENING SHALL BE 4" (U.N.O.).
4. PROVIDE FIRE RETARDANT WOOD BLOCKING FOR ANY WALL MOUNTED EQUIPMENT OR ACCESSORIES. COORDINATE ALL BLOCKING REQUIREMENTS NECESSARY WITH OTHER TRADES.
5. THE CONTRACTOR SHALL VERIFY DIMENSIONS OF THE EXISTING SPACE AND OF ANY EXISTING CONSTRUCTION TO REMAIN BY ACTUAL MEASUREMENT BEFORE ANY WORK IS PERFORMED. IF ANY MEASUREMENTS DIFFER FROM DIMENSIONS SHOWN ON PLAN, GC IS TO NOTIFY THE ARCHITECT IMMEDIATELY. THE CONTRACTOR SHALL BE RESPONSIBLE FOR CORRECTING ANY AND ALL DISCREPANCIES FOUND AFTER THE WORK IS PERFORMED, AT NO ADDITIONAL EXPENSE TO THE OWNER.
6. THE GC SHALL PROVIDE CAULK JOINTS WHERE GYP. BD. MEETS THE FLOOR OR ROOF DECK.
7. THE GC SHALL BE RESPONSIBLE FOR COORDINATING WITH OWNER ON ALL WORK TO BE PERFORMED BY THE OWNER. ANY POTENTIAL CONFLICTS OR DELAYS CAUSED BY THE OWNER'S SUBCONTRACTORS MUST BE DOCUMENTED IN WRITING TO THE OWNER BEFORE THE DELAY IS ACTUALLY INCURRED FOR IT TO BE CONSIDERED. OTHERWISE THE GC WILL BE RESPONSIBLE FOR MEETING THE SCHEDULE AS OUTLINED IN THE CONTRACT.
8. THE CONTRACTOR TO VERIFY ALL FINISHED DIMENSIONS. FIELD CONDITIONS ALTERING ANY DIMENSIONS SHOULD BE BROUGHT TO THE ATTENTION OF THE OWNER AND ARCHITECT.
9. THE CONTRACTOR SHALL SUPPLY ALL MATERIAL, LABOR, AND COORDINATION REQUIRED FOR THEINSTALLATION OF ALL OWNER-SUPPLIED ITEMS AS DESCRIBED IN THE DOCUMENTS, U.N.O.
10. THE CONTRACTOR IS RESPONSIBLE FOR ALL FLOOR AND WALL PENETRATIONS FOR ELECTRICAL AND MECHANICAL WORK. ALL SUCH OPENING SHALL BE FRAMED AND REINFORCED.
11. FLOOR SURFACES SHALL BE LEVELED TO ASSURE SMOOTH SURFACE FOR FINISH FLOOR INSTALLATION.
12. THE CONTRACTOR. TO COORDINATE ALL UTILITY STUB-UPS AND LOCATION OF ALL EQUIPMENT PRIOR TO INSTALLING ANY ONE ITEM.
13. PROVIDE PAINTED ACCESS PANELS IN WALLS & CEILING AT CONCEALED ITEMS SUCH AS VALVES, ONTROLS, SWITCHES OR ANY OTHER ITEMS THAT REQUIRES ACCESS. GC O DETERMINE ACCESS ANEL LOCATION W/ ARCHITECT PRIOR TO INSTALLATION.

PLAN LEGEND:

	NEW IPE WOOD DECK	101	DOOR TAG
	NEW CONSTRUCTION	1i	WINDOW TAG
	1-HR RATED	FE	FIRE EXTINGUISHER
	NOT IN CONTRACT	1i	WALL TAG
?	KEY NOTES	FD	FLOOR DRAIN

CONSTRUCTION KEY NOTES

14	PROVIDE NEW ASPHALT SHINGLE ROOFING,UNDERLAYMENT, AND REPLACE IN KIND EXISTING DECKING AS REQUIRED (COORDINATE WITH STRUCTURAL).
15	PROVIDE AND INSTALL SBS MODIFIED BITUMEN ROOFING AND UNDERLAYMENT.
17	PROVIDE AND INSTALL RIDGE VENT AT ROOF HIPS.
25	NEW ROOF WITH ASPHALT SHINGLE ROOFING WITH TWO LAYERS OF UNDERLAYMENT, AND SHEATHING.
27	PROVIDE AND INSTALL STEP FLASHING WHERE SLOPE ROOFS MEET VERTICAL WALLS.
41	INSTALL REFURBISHED FINIAL LIGHTS (H6). ARCHITECT TO APPROVE FINISH AND ANY NEEDED MODIFICATIONS TO H6 LIGHTS DURING REFURBISHMENT.

9/23/2022 6:46:39 AM

CONSULTANT INFORMATION
The LiRo Group
3 Aerial Way, Syosset, New York 11791
(516) 938-5476 www.liro.com

CONSULTANT SEAL
REGISTERED ARCHITECT ROBERT D. YOUNG JR. 023280 STATE OF NEW YORK

REVISION NUMBER	DATE	MADE BY	APP'D BY	REVISION
1	09/21/22	EZ		BID ADDENDUM #3

RECORD DRAWING CERTIFICATION
☐ AS BUILT – CHANGES AS NOTED ☐ AS BUILT – NO CHANGES

CONTRACTOR
NAME
SIGNATURE
TITLE DATE

PROJECT COORDINATOR
NAME
SIGNATURE
TITLE DATE

WESTCHESTER COUNTY, NEW YORK
DEPARTMENT OF PUBLIC WORKS AND TRANSPORTATION
DIVISION OF ENGINEERING

INFRASTRUCTURE REHABILITATION PHASE 3
PLAYLAND PARK, RYE, NEW YORK
CROSS AXIS BUILDING A
CXA - ROOF PLAN

CONTRACT NUMBER	22-523
SHEET NUMBER	CXA-A-13
DWG NO.:	115 of 664
SCALE:	As indicated
DATE:	08/23/2022
DPW FILE NUMBER	1-118-A-864-1
REV. NO.	1

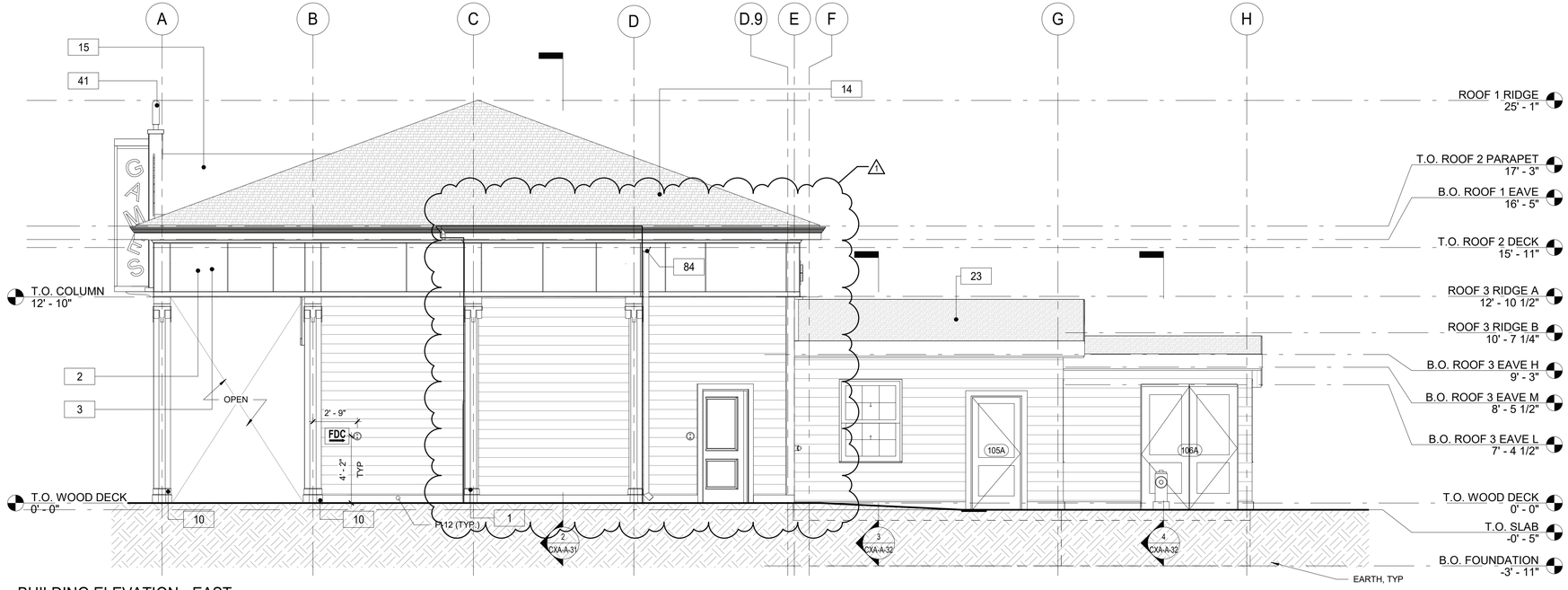

2 BUILDING ELEVATION - EAST
1/4" = 1'-0"

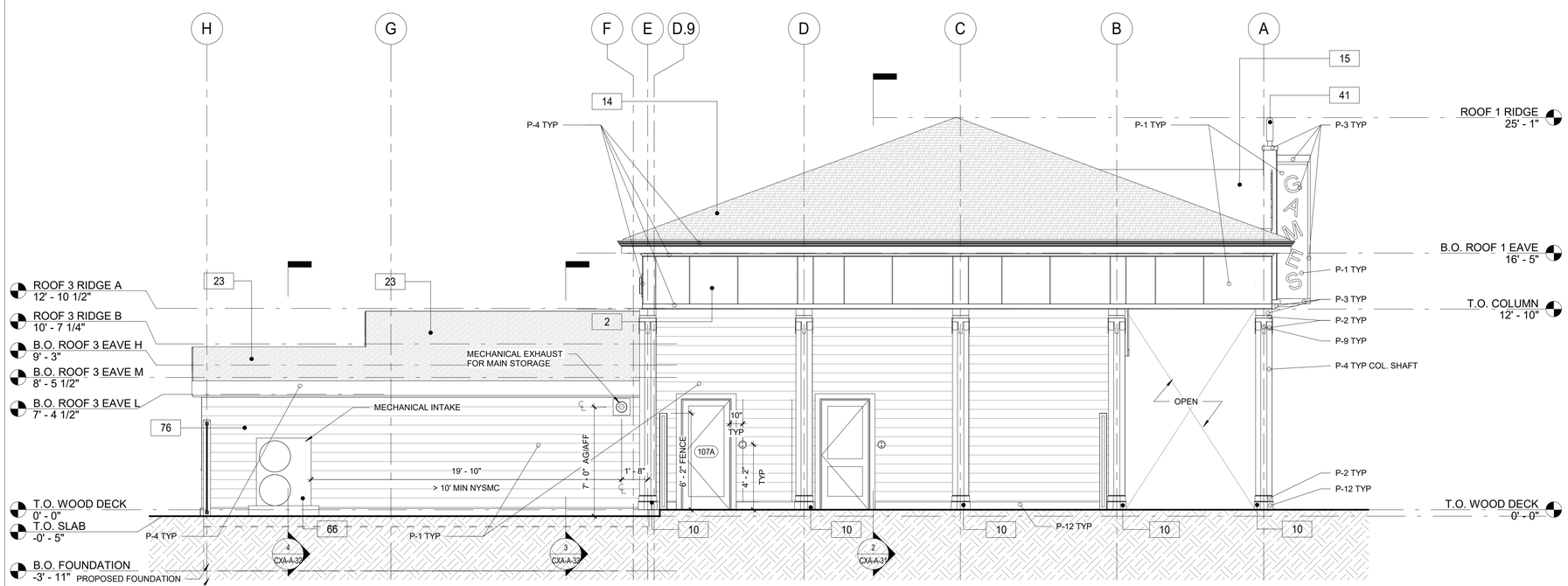

1 BUILDING ELEVATION - WEST
1/4" = 1'-0"

FLOOR PLAN GENERAL NOTES

1. DIMENSIONS ARE TO FACE OF GYPSUM WALL BOARD, GRID LINES, OR CENTERLINE OF COLUMN. ALL ELEVATIONS ARE NOTED FROM FINISH FLOOR ELEVATIONS.
2. PROVIDE DRYWALL TRIM AT ALL EXPOSED EDGES AND CORNERS.
3. MINIMUM DIMENSION FROM ANY CORNER OR WALL TO FRAMING STUD AT DOOR JAMB OPENING SHALL BE 4" (UNO).
4. PROVIDE METAL BLOCKING FOR ANY WALL MOUNTED EQUIPMENT OR ACCESSORIES. COORDINATE ALL BLOCKING REQUIREMENTS NECESSARY WITH OTHER TRADES.
5. THE GC SHALL VERIFY DIMENSIONS OF THE EXISTING SPACE AND OF ANY EXISTING CONSTRUCTION TO REMAIN BY ACTUAL MEASUREMENT BEFORE ANY WORK IS PERFORMED. IF ANY MEASUREMENTS DIFFER FROM DIMENSIONS SHOWN ON PLAN, GC IS TO NOTIFY THE ARCHITECT IMMEDIATELY. THE GC SHALL BE RESPONSIBLE FOR CORRECTING ANY AND ALL DISCREPANCIES FOUND AFTER THE WORK IS PERFORMED, AT NO ADDITIONAL EXPENSE TO THE OWNER.
6. GC TO VERIFY ALL FINISHED DIMENSIONS. FIELD CONDITIONS ALTERING ANY DIMENSIONS SHOULD BE BROUGHT TO THE ATTENTION OF THE OWNER AND ARCHITECT.
7. THE GC SHALL PROVIDE CAULK JOINTS WHERE GYP. BD. MEETS THE FLOOR OR ROOF DECK.
8. THE GC SHALL BE RESPONSIBLE FOR COORDINATING WITH OWNER ON ALL WORK TO BE PERFORMED BY THE OWNER. ANY POTENTIAL CONFLICTS OR DELAYS CAUSED BY THE OWNER'S SUBCONTRACTORS MUST BE DOCUMENTED IN WRITING TO THE OWNER BEFORE THE DELAY IS ACTUALLY INCURRED FOR IT TO BE CONSIDERED. OTHERWISE THE GC WILL BE RESPONSIBLE FOR MEETING THE SCHEDULE AS OUTLINED IN THE CONTRACT.
9. THE GC SHALL SUPPLY ALL MATERIAL, LABOR, AND COORDINATION REQUIRED FOR THE INSTALLATION OF ALL OWNER-SUPPLIED ITEMS AS DESCRIBED IN THE DOCUMENTS, UNO
10. THE GC IS RESPONSIBLE FOR ALL FLOOR AND WALL PENETRATIONS FOR ELECTRICAL AND MECHANICAL WORK. ALL SUCH OPENING SHALL BE FRAMED AND REINFORCED.
11. FLOOR SURFACES SHALL BE LEVELED TO ASSURE SMOOTH SURFACE FOR FINISH FLOOR INSTALLATION. GC SHALL ALSO PAY SPECIAL ATTENTION THAT ALL WALL SURFACES ARE SMOOTH WHERE MURALS WILL BE DIRECTLY APPLIED TO WALL.
12. GC TO COORDINATE ALL UTILITY STUB-UPS AND LOCATION OF ALL EQUIPMENT PRIOR TO INSTALLING ANY ONE ITEM.
13. REFER TO SHEET CXA-A-83 FOR PARTITION TYPE INFORMATION.
14. PROVIDE PAINTED ACCESS PANELS IN WALLS & CEILING AT CONCEALED ITEMS SUCH AS VALVES, CONTROLS, SWITCHES OR ANY OTHER ITEMS THAT REQUIRES ACCESS. GC TO DETERMINE ACCESS PANEL LOCATION W/ ARCHITECT PRIOR TO INSTALLATION.

PAINTING SCHEDULE

KEY	COLOR	MANUFACTURER	REMARKS
P- 1	MYSTICAL POWERS #901	BENJAMIN MOORE	
P- 2	HERITAGE RED #HC-181	BENJAMIN MOORE	
P- 3	NEW YORK STATE OF MIND #805	BENJAMIN MOORE	
P- 4	LAZY SUNDAY #803	BENJAMIN MOORE	
P- 5	DEEP JUNGLE #595	BENJAMIN MOORE	
P- 6	LUCK OF THE IRISH #588	BENJAMIN MOORE	
P- 7	MAJOLICA GREEN #0013	SHERWIN WILLIAMS	
P- 8	ANTELOPE CANYON #125	BENJAMIN MOORE	
P- 9	FORSYTHIA #6907	SHERWIN WILLIAMS	
P- 10	CAPE BLUE #1642	BENJAMIN MOORE	
P- 11	WHITE SNOW #9541	SHERWIN WILLIAMS	
P- 12	TRICORN BLACK #6258	SHERWIN WILLIAMS	
P- 13	READY MIX WHITE	BENJAMIN MOORE	INTERIOR USE ONLY
P- 14	STUCCO PAINT TO MATCH P-1	KEIM	
P- 15	VAN DEUSEN BLUE #HC-156	BENJAMIN MOORE	
P- 16	#RAL9001	-	TYP. ROLL UP DOOR
P- 17	FLORIDA BEACHES #900	BENJAMIN MOORE	
P- 18	PIRATES COVE PEACH #903	BENJAMIN MOORE	
P- 19	JADITE #6459	SHERWIN WILLIAMS	
P- 20	DECISIVE YELLOW #6902	SHERWIN WILLIAMS	

CONSTRUCTION KEY NOTES

1	PROVIDE AND INSTALL NEW 1x8 MILLED YELLOW PINE - TONGUE AND GROOVE - NO BEVEL
2	PROVIDE AND INSTALL EXTERIOR GRADE SIDING WITH BATTENS.
3	REPLICATE TRIMS TO MATCH DOCUMENTED TRIM, LOCATIONS, SIZE AND SHAPE. FINISH PAINT COLORS AS SCHEDULED.
10	PROVIDE AND INSTALL COLUMN ENCLOSURES. SEE DETAILS.
14	PROVIDE NEW ASPHALT SHINGLE ROOFING,UNDERLAYMENT, AND REPLACE IN KIND EXISTING DECKING AS REQUIRED (COORDINATE WITH STRUCTURAL).
15	PROVIDE AND INSTALL SBS MODIFIED BITUMEN ROOFING AND UNDERLAYMENT.
23	NEW ROOF WITH BATT INSULATION (R-38 MIN) PACKED BETWEEN JOISTS. PROVIDE AND INSTALL SHINGLES, UNDERLAYMENT SHEATHING AND FLASHING SYSTEM.
41	INSTALL REFURBISHED FINIAL LIGHTS (H6). ARCHITECT TO APPROVE FINISH AND ANY NEEDED MODIFICATIONS TO H6 LIGHTS DURING REFURBISHMENT.
66	INSTALL NEW MINI SPLIT MECHANICAL UNIT. SEE MECHANICAL DRAWINGS.
76	INSTALL NEW EXHAUST SYSTEM. SEE MECHANICAL DRAWINGS.
84	HALF ROUND ALUMINUM GUTTER AND DOWNSPOUT.

9/23/2022 6:46:41 AM

CONSULTANT INFORMATION
The LiRo Group
3 Aerial Way, Syosset, New York 11791
(516) 938-5476 www.liro.com

CONSULTANT SEAL
REGISTERED ARCHITECT ROBERT D. TOWNSEND 023280 STATE OF NEW YORK

REVISION NUMBER	DATE	MADE BY	APP'D BY	REVISION
1	09/21/22	EZ		BID ADDENDUM #3

RECORD DRAWING CERTIFICATION
☐ AS BUILT – CHANGES AS NOTED ☐ AS BUILT – NO CHANGES

CONTRACTOR
NAME
SIGNATURE
TITLE DATE

PROJECT COORDINATOR
NAME
SIGNATURE
TITLE DATE

WESTCHESTER COUNTY, NEW YORK
DEPARTMENT OF PUBLIC WORKS AND TRANSPORTATION
DIVISION OF ENGINEERING

INFRASTRUCTURE REHABILITATION PHASE 3
PLAYLAND PARK, RYE, NEW YORK
CROSS AXIS BUILDING A
CXA - EXTERIOR BUILDING ELEVATIONS

CONTRACT NUMBER	22-523
SHEET NUMBER	CXA-A-21
DWG NO.:	116 of 664
SCALE:	As indicated
DATE:	08/23/2022
DPW FILE NUMBER	1-118-A-865-1
REV. NO.	1

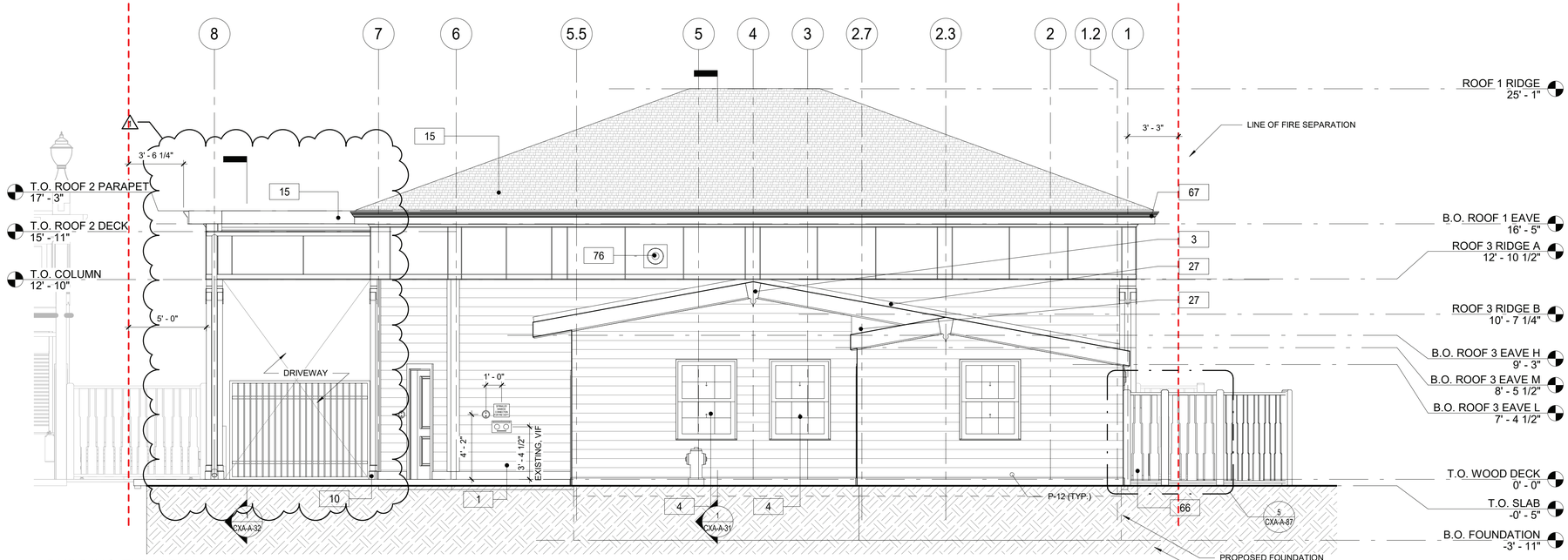

2 BUILDING ELEVATION - NORTH
1/4" = 1'-0"

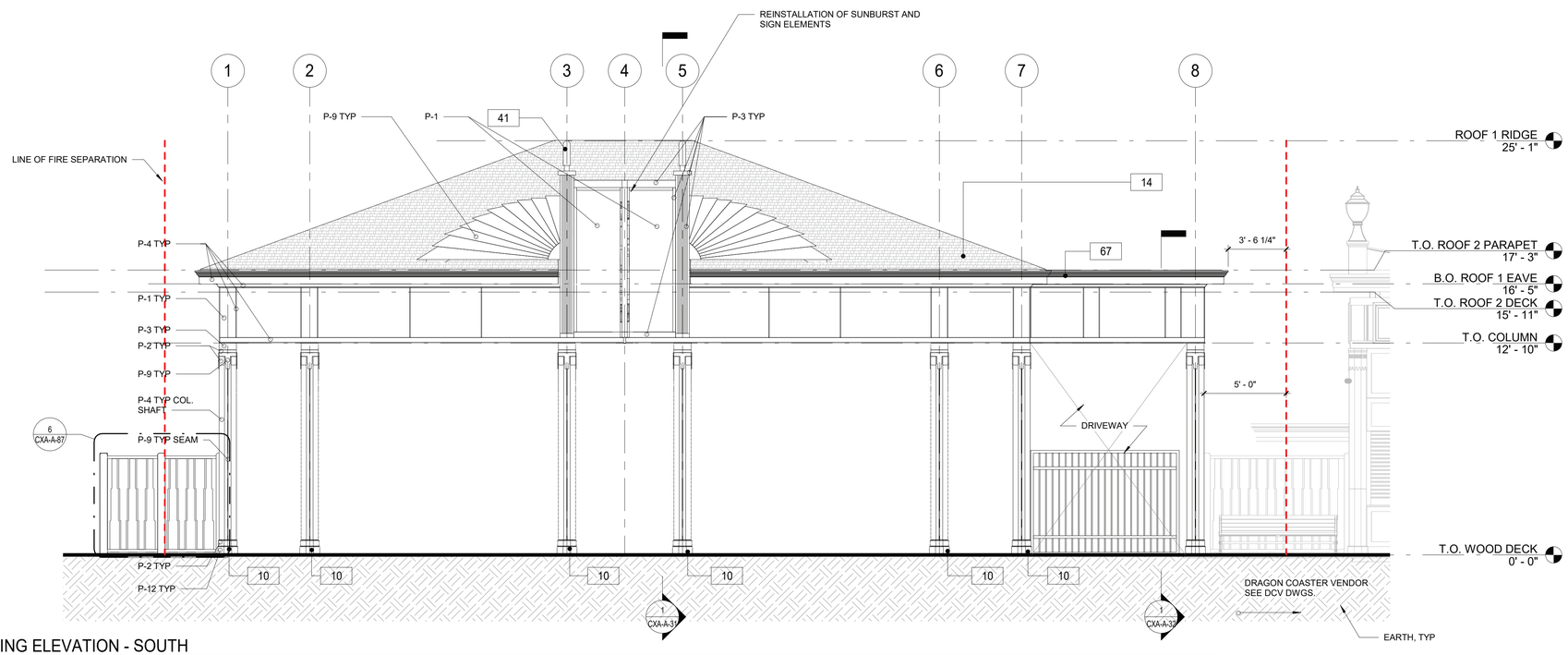

1 BUILDING ELEVATION - SOUTH
1/4" = 1'-0"

FLOOR PLAN GENERAL NOTES

1. DIMENSIONS ARE TO FACE OF GYPSUM WALL BOARD, GRID LINES, OR CENTERLINE OF COLUMN. ALL ELEVATIONS ARE NOTED FROM FINISH FLOOR ELEVATIONS.
2. PROVIDE DRYWALL TRIM AT ALL EXPOSED EDGES AND CORNERS.
3. MINIMUM DIMENSION FROM ANY CORNER OR WALL TO FRAMING STUD AT DOOR JAMB OPENING SHALL BE 4" (UNO).
4. PROVIDE METAL BLOCKING FOR ANY WALL MOUNTED EQUIPMENT OR ACCESSORIES. COORDINATE ALL BLOCKING REQUIREMENTS NECESSARY WITH OTHER TRADES.
5. THE GC SHALL VERIFY DIMENSIONS OF THE EXISTING SPACE AND OF ANY EXISTING CONSTRUCTION TO REMAIN BY ACTUAL MEASUREMENT BEFORE ANY WORK IS PERFORMED. IF ANY MEASUREMENTS DIFFER FROM DIMENSIONS SHOWN ON PLAN, GC IS TO NOTIFY THE ARCHITECT IMMEDIATELY. THE GC SHALL BE RESPONSIBLE FOR CORRECTING ANY AND ALL DISCREPANCIES FOUND AFTER THE WORK IS PERFORMED, AT NO ADDITIONAL EXPENSE TO THE OWNER.
6. GC TO VERIFY ALL FINISHED DIMENSIONS. FIELD CONDITIONS ALTERING ANY DIMENSIONS SHOULD BE BROUGHT TO THE ATTENTION OF THE OWNER AND ARCHITECT.
7. THE GC SHALL PROVIDE CAULK JOINTS WHERE GYP. BD. MEETS THE FLOOR OR ROOF DECK.
8. THE GC SHALL BE RESPONSIBLE FOR COORDINATING WITH OWNER ON ALL WORK TO BE PERFORMED BY THE OWNER. ANY POTENTIAL CONFLICTS OR DELAYS CAUSED BY THE OWNER'S SUBCONTRACTORS MUST BE DOCUMENTED IN WRITING TO THE OWNER BEFORE THE DELAY IS ACTUALLY INCURRED FOR IT TO BE CONSIDERED. OTHERWISE THE GC WILL BE RESPONSIBLE FOR MEETING THE SCHEDULE AS OUTLINED IN THE CONTRACT.
9. THE GC SHALL SUPPLY ALL MATERIAL, LABOR, AND COORDINATION REQUIRED FOR THE INSTALLATION OF ALL OWNER-SUPPLIED ITEMS AS DESCRIBED IN THE DOCUMENTS, UNO
10. THE GC IS RESPONSIBLE FOR ALL FLOOR AND WALL PENETRATIONS FOR ELECTRICAL AND MECHANICAL WORK. ALL SUCH OPENING SHALL BE FRAMED AND REINFORCED.
11. FLOOR SURFACES SHALL BE LEVELED TO ASSURE SMOOTH SURFACE FOR FINISH FLOOR INSTALLATION. GC SHALL ALSO PAY SPECIAL ATTENTION THAT ALL WALL SURFACES ARE SMOOTH WHERE MURALS WILL BE DIRECTLY APPLIED TO WALL.
12. GC TO COORDINATE ALL UTILITY STUB-UPS AND LOCATION OF ALL EQUIPMENT PRIOR TO INSTALLING ANY ONE ITEM.
13. REFER TO SHEET CXA-A-83 FOR PARTITION TYPE INFORMATION.
14. PROVIDE PAINTED ACCESS PANELS IN WALLS & CEILING AT CONCEALED ITEMS SUCH AS VALVES, CONTROLS, SWITCHES OR ANY OTHER ITEMS THAT REQUIRES ACCESS. GC TO DETERMINE ACCESS PANEL LOCATION W/ ARCHITECT PRIOR TO INSTALLATION.

PAINTING SCHEDULE

KEY	COLOR	MANUFACTURER	REMARKS
P- 1	MYSTICAL POWERS #901	BENJAMIN MOORE	
P- 2	HERITAGE RED #HC-181	BENJAMIN MOORE	
P- 3	NEW YORK STATE OF MIND #805	BENJAMIN MOORE	
P- 4	LAZY SUNDAY #803	BENJAMIN MOORE	
P- 5	DEEP JUNGLE #595	BENJAMIN MOORE	
P- 6	LUCK OF THE IRISH #588	BENJAMIN MOORE	
P- 7	MAJOLICA GREEN #0013	SHERWIN WILLIAMS	
P- 8	ANTELOPE CANYON #125	BENJAMIN MOORE	
P- 9	FORSYTHIA #6907	SHERWIN WILLIAMS	
P- 10	CAPE BLUE #1642	BENJAMIN MOORE	
P- 11	WHITE SNOW #9541	SHERWIN WILLIAMS	
P- 12	TRICORN BLACK #6258	SHERWIN WILLIAMS	
P- 13	READY MIX WHITE	BENJAMIN MOORE	INTERIOR USE ONLY
P- 14	STUCCO PAINT TO MATCH P-1	KEIM	
P- 15	VAN DEUSEN BLUE #HC-156	BENJAMIN MOORE	
P- 16	#RAL9001	-	TYP. ROLL UP DOOR
P- 17	FLORIDA BEACHES #900	BENJAMIN MOORE	
P- 18	PIRATES COVE PEACH #903	BENJAMIN MOORE	
P- 19	JADITE #6459	SHERWIN WILLIAMS	
P- 20	DECISIVE YELLOW #6902	SHERWIN WILLIAMS	

CONSTRUCTION KEY NOTES

1	PROVIDE AND INSTALL NEW 1x8 MILLED YELLOW PINE - TONGUE AND GROOVE - NO BEVEL
3	REPLICATE TRIMS TO MATCH DOCUMENTED TRIM, LOCATIONS, SIZE AND SHAPE. FINISH PAINT COLORS AS SCHEDULED.
4	NEW WINDOWS. SEE WINDOW SCHEDULE.
10	PROVIDE AND INSTALL COLUMN ENCLOSURES. SEE DETAILS.
14	PROVIDE NEW ASPHALT SHINGLE ROOFING,UNDERLAYMENT, AND REPLACE IN KIND EXISTING DECKING AS REQUIRED (COORDINATE WITH STRUCTURAL)
15	PROVIDE AND INSTALL SBS MODIFIED BITUMEN ROOFING AND UNDERLAYMENT.
27	PROVIDE AND INSTALL STEP FLASHING WHERE SLOPE ROOFS MEET VERTICAL WALLS.
41	INSTALL REFURBISHED FINIAL LIGHTS (H6). ARCHITECT TO APPROVE FINISH AND ANY NEEDED MODIFICATIONS TO H6 LIGHTS DURING REFURBISHMENT.
66	INSTALL NEW MINI SPLIT MECHANICAL UNIT. SEE MECHANICAL DRAWINGS.
67	NEW FASCIA BOARD AND SOFFIT.
76	INSTALL NEW EXHAUST SYSTEM. SEE MECHANICAL DRAWINGS.

9/23/2022 6:46:44 AM

CONSULTANT INFORMATION

The LiRo Group
3 Aerial Way, Syosset, New York 11791
(516) 938-5476 www.liro.com

CONSULTANT SEAL

REGISTERED ARCHITECT ROBERT D. TOMASINO 023293 STATE OF NEW YORK

REVISION NUMBER	DATE	MADE BY	APP'D BY	REVISION
1	09/21/22	EZ		BID ADDENDUM #3

RECORD DRAWING CERTIFICATION

☐ AS BUILT – CHANGES AS NOTED ☐ AS BUILT – NO CHANGES

CONTRACTOR
NAME
SIGNATURE
TITLE DATE

PROJECT COORDINATOR
NAME
SIGNATURE
TITLE DATE

WESTCHESTER COUNTY, NEW YORK
DEPARTMENT OF PUBLIC WORKS AND TRANSPORTATION
DIVISION OF ENGINEERING

INFRASTRUCTURE REHABILITATION PHASE 3
PLAYLAND PARK, RYE, NEW YORK
CROSS AXIS BUILDING A
CXA - EXTERIOR BUILDING ELEVATIONS

CONTRACT NUMBER 22-523
SHEET NUMBER **CXA-A-22**
DWG NO.: 117 of 664
SCALE: **As indicated**
DATE: **08/23/2022**
DPW FILE NUMBER **1-118-A-866-1**
REV. NO. **1**

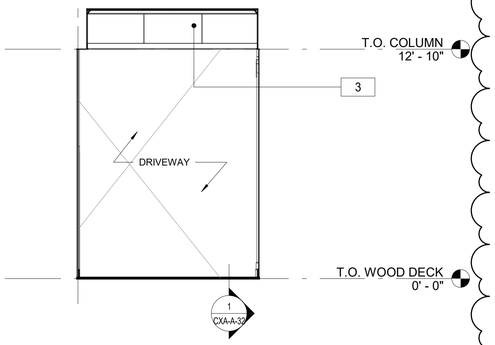

4 DRIVE-THROUGH NORTH ELEVATION
1/4" = 1'-0"

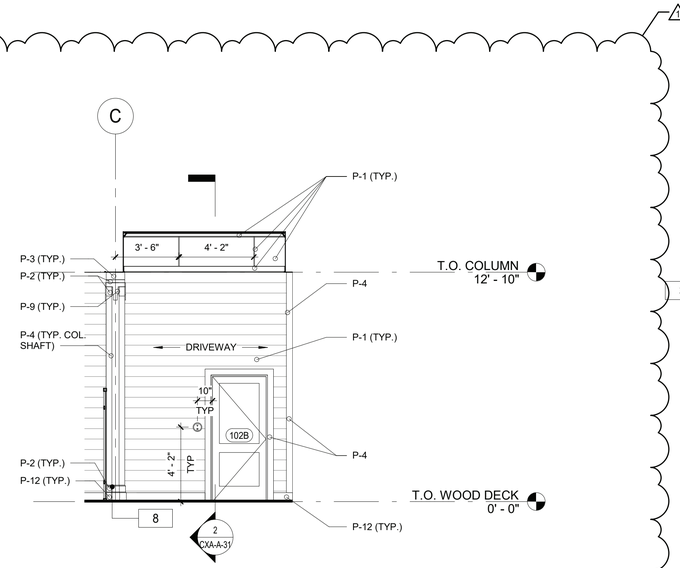

3 DRIVE-THROUGH EAST ELEVATION
1/4" = 1'-0"

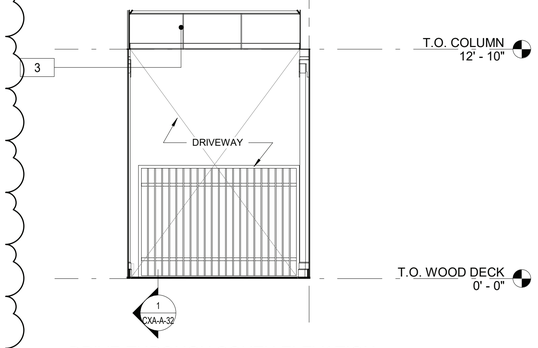

2 DRIVE-THROUGH SOUTH ELEVATION
1/4" = 1'-0"

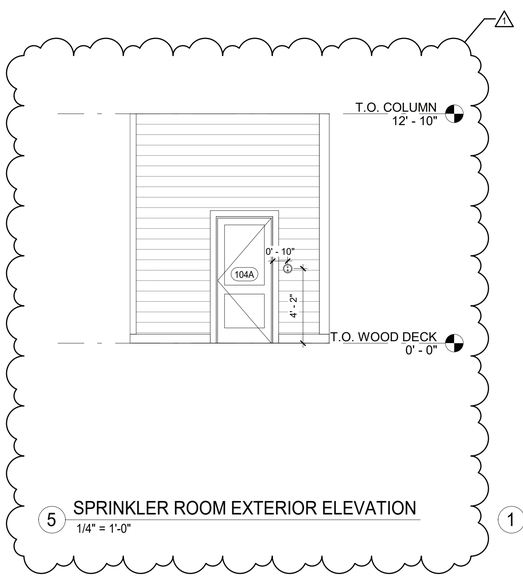

5 SPRINKLER ROOM EXTERIOR ELEVATION
1/4" = 1'-0"

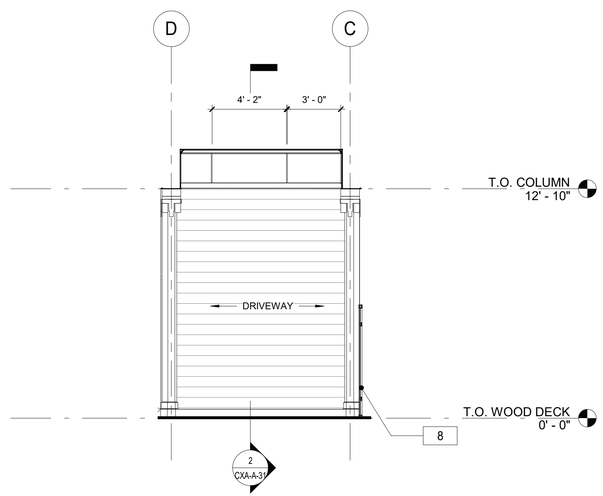

1 DRIVE-THROUGH WEST ELEVATION
1/4" = 1'-0"

FLOOR PLAN GENERAL NOTES

1. DIMENSIONS ARE TO FACE OF GYPSUM WALL BOARD, GRID LINES, OR CENTERLINE OF COLUMN. ALL ELEVATIONS ARE NOTED FROM FINISH FLOOR ELEVATIONS.
2. PROVIDE DRYWALL TRIM AT ALL EXPOSED EDGES AND CORNERS.
3. MINIMUM DIMENSION FROM ANY CORNER OR WALL TO FRAMING STUD AT DOOR JAMB OPENING SHALL BE 4" (UNO).
4. PROVIDE METAL BLOCKING FOR ANY WALL MOUNTED EQUIPMENT OR ACCESSORIES. COORDINATE ALL BLOCKING REQUIREMENTS NECESSARY WITH OTHER TRADES.
5. THE GC SHALL VERIFY DIMENSIONS OF THE EXISTING SPACE AND OF ANY EXISTING CONSTRUCTION TO REMAIN BY ACTUAL MEASUREMENT BEFORE ANY WORK IS PERFORMED. IF ANY MEASUREMENTS DIFFER FROM DIMENSIONS SHOWN ON PLAN, GC IS TO NOTIFY THE ARCHITECT IMMEDIATELY. THE GC SHALL BE RESPONSIBLE FOR CORRECTING ANY AND ALL DISCREPANCIES FOUND AFTER THE WORK IS PERFORMED, AT NO ADDITIONAL EXPENSE TO THE OWNER.
6. GC TO VERIFY ALL FINISHED DIMENSIONS. FIELD CONDITIONS ALTERING ANY DIMENSIONS SHOULD BE BROUGHT TO THE ATTENTION OF THE OWNER AND ARCHITECT.
7. THE GC SHALL PROVIDE CAULK JOINTS WHERE GYP. BD. MEETS THE FLOOR OR ROOF DECK.
8. THE GC SHALL BE RESPONSIBLE FOR COORDINATING WITH OWNER ON ALL WORK TO BE PERFORMED BY THE OWNER. ANY POTENTIAL CONFLICTS OR DELAYS CAUSED BY THE OWNER'S SUBCONTRACTORS MUST BE DOCUMENTED IN WRITING TO THE OWNER BEFORE THE DELAY IS ACTUALLY INCURRED FOR IT TO BE CONSIDERED. OTHERWISE THE GC WILL BE RESPONSIBLE FOR MEETING THE SCHEDULE AS OUTLINED IN THE CONTRACT.
9. THE GC SHALL SUPPLY ALL MATERIAL, LABOR, AND COORDINATION REQUIRED FOR THE INSTALLATION OF ALL OWNER-SUPPLIED ITEMS AS DESCRIBED IN THE DOCUMENTS, UNO
10. THE GC IS RESPONSIBLE FOR ALL FLOOR AND WALL PENETRATIONS FOR ELECTRICAL AND MECHANICAL WORK. ALL SUCH OPENING SHALL BE FRAMED AND REINFORCED.
11. FLOOR SURFACES SHALL BE LEVELED TO ASSURE SMOOTH SURFACE FOR FINISH FLOOR INSTALLATION. GC SHALL ALSO PAY SPECIAL ATTENTION THAT ALL WALL SURFACES ARE SMOOTH WHERE MURALS WILL BE DIRECTLY APPLIED TO WALL.
12. GC TO COORDINATE ALL UTILITY STUB-UPS AND LOCATION OF ALL EQUIPMENT PRIOR TO INSTALLING ANY ONE ITEM.
13. REFER TO SHEET CXA-A-83 FOR PARTITION TYPE INFORMATION.
14. PROVIDE PAINTED ACCESS PANELS IN WALLS & CEILING AT CONCEALED ITEMS SUCH AS VALVES, CONTROLS, SWITCHES OR ANY OTHER ITEMS THAT REQUIRES ACCESS. GC TO DETERMINE ACCESS PANEL LOCATION W/ ARCHITECT PRIOR TO INSTALLATION.

PAINTING SCHEDULE

KEY	COLOR	MANUFACTURER	REMARKS
P- 1	MYSTICAL POWERS #901	BENJAMIN MOORE	
P- 2	HERITAGE RED #HC-181	BENJAMIN MOORE	
P- 3	NEW YORK STATE OF MIND #805	BENJAMIN MOORE	
P- 4	LAZY SUNDAY #803	BENJAMIN MOORE	
P- 5	DEEP JUNGLE #595	BENJAMIN MOORE	
P- 6	LUCK OF THE IRISH #588	BENJAMIN MOORE	
P- 7	MAJOLICA GREEN #0013	SHERWIN WILLIAMS	
P- 8	ANTELOPE CANYON #125	BENJAMIN MOORE	
P- 9	FORSYTHIA #6907	SHERWIN WILLIAMS	
P- 10	CAPE BLUE #1642	BENJAMIN MOORE	
P- 11	WHITE SNOW #9541	SHERWIN WILLIAMS	
P- 12	TRICORN BLACK #6258	SHERWIN WILLIAMS	
P- 13	READY MIX WHITE	BENJAMIN MOORE	INTERIOR USE ONLY
P- 14	STUCCO PAINT TO MATCH P-1	KEIM	
P- 15	VAN DEUSEN BLUE #HC-156	BENJAMIN MOORE	
P- 16	#RAL9001	-	TYP. ROLL UP DOOR
P- 17	FLORIDA BEACHES #900	BENJAMIN MOORE	
P- 18	PIRATES COVE PEACH #903	BENJAMIN MOORE	
P- 19	JADITE #6459	SHERWIN WILLIAMS	
P- 20	DECISIVE YELLOW #6902	SHERWIN WILLIAMS	

CONSTRUCTION KEY NOTES

3	REPLICATE TRIMS TO MATCH DOCUMENTED TRIM, LOCATIONS, SIZE AND SHAPE. FINISH PAINT COLORS AS SCHEDULED.
8	PROVIDE AND INSTALL GATE. SEE DETAILS.

9/23/2022 6:46:49 AM

CONSULTANT INFORMATION
The LiRo Group
3 Aerial Way, Syosset, New York 11791
(516) 938-5476 www.liro.com

CONSULTANT SEAL
REGISTERED ARCHITECT ROBERT D. VOLKMANN 023220 STATE OF NEW YORK

REVISION NUMBER	DATE	MADE BY	APP'D BY	REVISION
1	09/21/22	EZ		BID ADDENDUM #3

RECORD DRAWING CERTIFICATION
☐ AS BUILT – CHANGES AS NOTED ☐ AS BUILT – NO CHANGES

CONTRACTOR
NAME
SIGNATURE
TITLE DATE

PROJECT COORDINATOR
NAME
SIGNATURE
TITLE DATE

WESTCHESTER COUNTY, NEW YORK
DEPARTMENT OF PUBLIC WORKS AND TRANSPORTATION
DIVISION OF ENGINEERING

INFRASTRUCTURE REHABILITATION PHASE 3
PLAYLAND PARK, RYE, NEW YORK
CROSS AXIS BUILDING A
CXA - DRIVE-THROUGH ELEVATIONS

CONTRACT NUMBER 22-523
SHEET NUMBER **CXA-A-24**
DWG NO.: 119 of 664
SCALE: **As indicated**
DATE: **08/23/2022**
DPW FILE NUMBER **1-118-A-868-1**
REV. NO. **1**

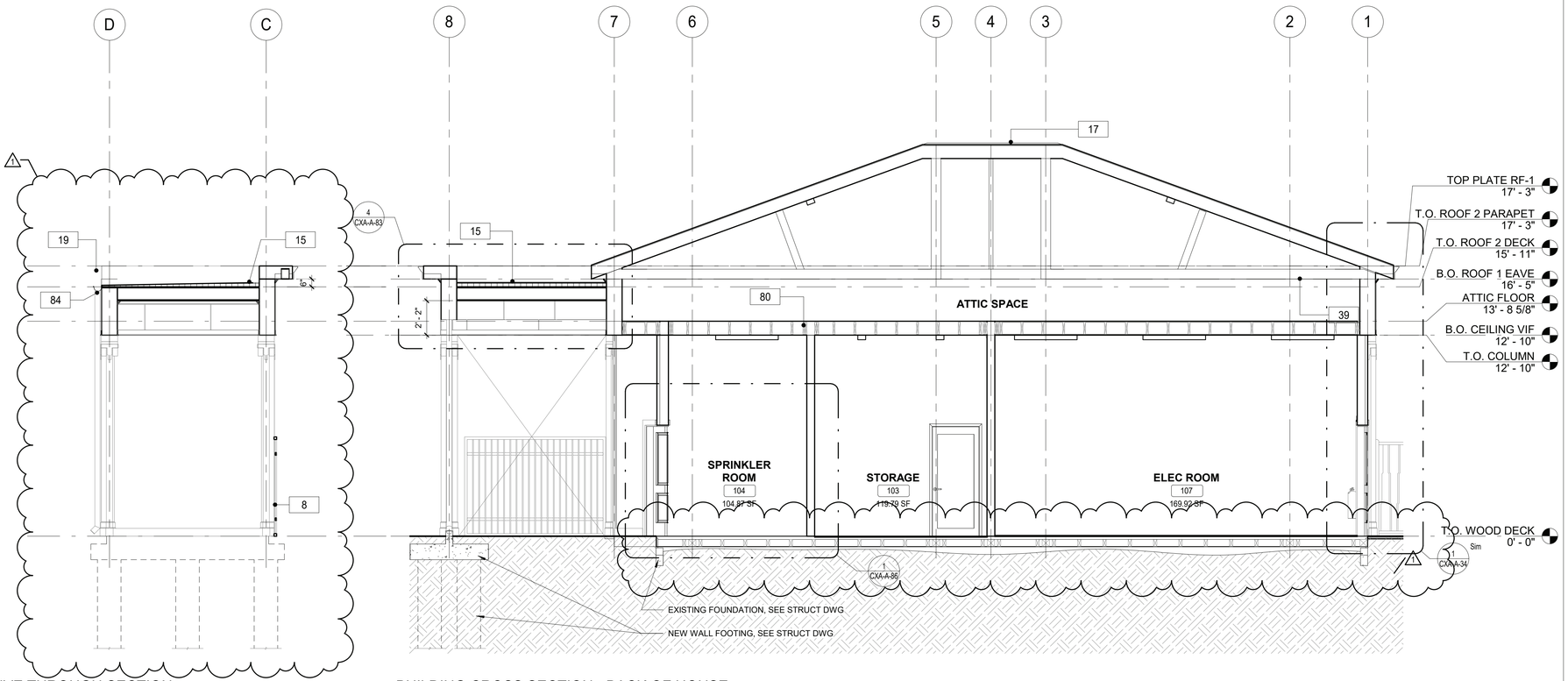

1 DRIVE THROUGH SECTION
1/4" = 1'-0"

2 BUILDING CROSS SECTION - BACK OF HOUSE
1/4" = 1'-0"

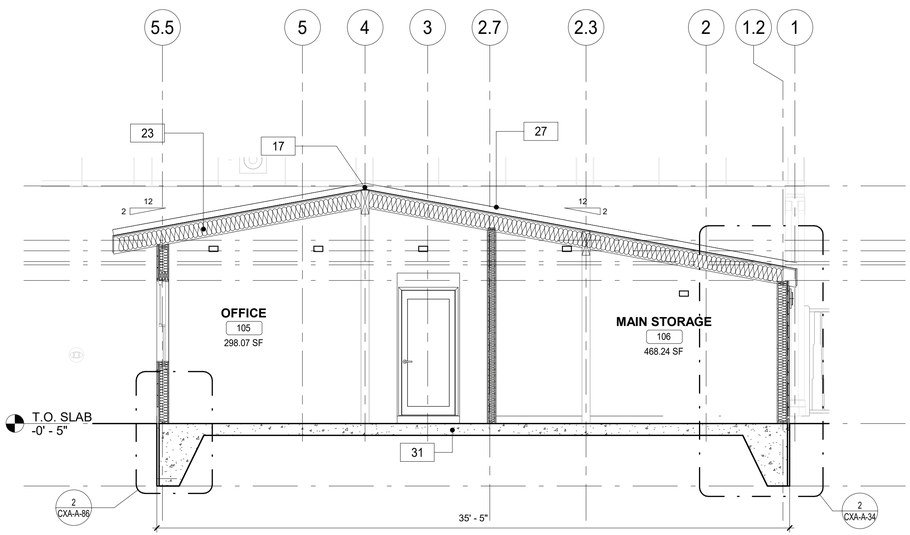

3 BUILDING CROSS SECTION - EMPLOYEE AREA
1/4" = 1'-0"

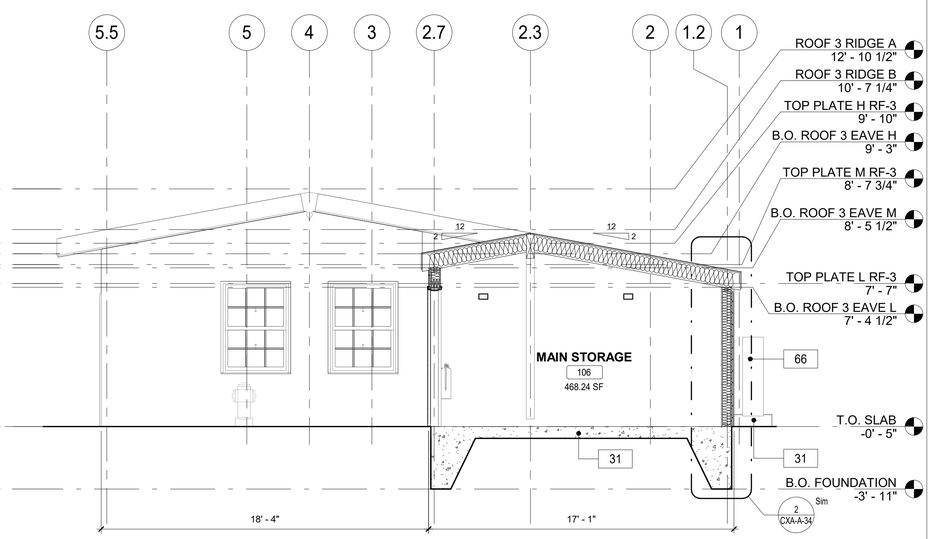

4 BUILDING CROSS SECTION - MAIN STORAGE
1/4" = 1'-0"

FLOOR PLAN GENERAL NOTES

1. DIMENSIONS ARE TO FACE OF GYPSUM WALL BOARD, GRID LINES, OR CENTERLINE OF COLUMN. ALL ELEVATIONS ARE NOTED FROM FINISH FLOOR ELEVATIONS.
2. PROVIDE DRYWALL TRIM AT ALL EXPOSED EDGES AND CORNERS.
3. MINIMUM DIMENSION FROM ANY CORNER OR WALL TO FRAMING STUD AT DOOR JAMB OPENING SHALL BE 4" (UNO).
4. PROVIDE METAL BLOCKING FOR ANY WALL MOUNTED EQUIPMENT OR ACCESSORIES. COORDINATE ALL BLOCKING REQUIREMENTS NECESSARY WITH OTHER TRADES.
5. THE GC SHALL VERIFY DIMENSIONS OF THE EXISTING SPACE AND OF ANY EXISTING CONSTRUCTION TO REMAIN BY ACTUAL MEASUREMENT BEFORE ANY WORK IS PERFORMED. IF ANY MEASUREMENTS DIFFER FROM DIMENSIONS SHOWN ON PLAN, GC IS TO NOTIFY THE ARCHITECT IMMEDIATELY. THE GC SHALL BE RESPONSIBLE FOR CORRECTING ANY AND ALL DISCREPANCIES FOUND AFTER THE WORK IS PERFORMED, AT NO ADDITIONAL EXPENSE TO THE OWNER.
6. GC TO VERIFY ALL FINISHED DIMENSIONS. FIELD CONDITIONS ALTERING ANY DIMENSIONS SHOULD BE BROUGHT TO THE ATTENTION OF THE OWNER AND ARCHITECT.
7. THE GC SHALL PROVIDE CAULK JOINTS WHERE GYP. BD. MEETS THE FLOOR OR ROOF DECK.
8. THE GC SHALL BE RESPONSIBLE FOR COORDINATING WITH OWNER ON ALL WORK TO BE PERFORMED BY THE OWNER. ANY POTENTIAL CONFLICTS OR DELAYS CAUSED BY THE OWNER'S SUBCONTRACTORS MUST BE DOCUMENTED IN WRITING TO THE OWNER BEFORE THE DELAY IS ACTUALLY INCURRED FOR IT TO BE CONSIDERED. OTHERWISE THE GC WILL BE RESPONSIBLE FOR MEETING THE SCHEDULE AS OUTLINED IN THE CONTRACT.
9. THE GC SHALL SUPPLY ALL MATERIAL, LABOR, AND COORDINATION REQUIRED FOR THE INSTALLATION OF ALL OWNER-SUPPLIED ITEMS AS DESCRIBED IN THE DOCUMENTS, UNO
10. THE GC IS RESPONSIBLE FOR ALL FLOOR AND WALL PENETRATIONS FOR ELECTRICAL AND MECHANICAL WORK. ALL SUCH OPENING SHALL BE FRAMED AND REINFORCED.
11. FLOOR SURFACES SHALL BE LEVELED TO ASSURE SMOOTH SURFACE FOR FINISH FLOOR INSTALLATION. GC SHALL ALSO PAY SPECIAL ATTENTION THAT ALL WALL SURFACES ARE SMOOTH WHERE MURALS WILL BE DIRECTLY APPLIED TO WALL.
12. GC TO COORDINATE ALL UTILITY STUB-UPS AND LOCATION OF ALL EQUIPMENT PRIOR TO INSTALLING ANY ONE ITEM.
13. REFER TO SHEET CXA-A-83 FOR PARTITION TYPE INFORMATION.
14. PROVIDE PAINTED ACCESS PANELS IN WALLS & CEILING AT CONCEALED ITEMS SUCH AS VALVES, CONTROLS, SWITCHES OR ANY OTHER ITEMS THAT REQUIRES ACCESS. GC TO DETERMINE ACCESS PANEL LOCATION W/ ARCHITECT PRIOR TO INSTALLATION.

CONSTRUCTION KEY NOTES

8	PROVIDE AND INSTALL GATE. SEE DETAILS.
15	PROVIDE AND INSTALL SBS MODIFIED BITUMEN ROOFING AND UNDERLAYMENT.
17	PROVIDE AND INSTALL RIDGE VENT AT ROOF HIPS.
19	PROVIDE AND INSTALL ROOF DRAIN. SEE PLUMBING DRAWINGS.
23	NEW ROOF WITH BATT INSULATION (R-38 MIN) PACKED BETWEEN JOISTS. PROVIDE AND INSTALL SHINGLES, UNDERLAYMENT SHEATHING AND FLASHING SYSTEM.
27	PROVIDE AND INSTALL STEP FLASHING WHERE SLOPE ROOFS MEET VERTICAL WALLS.
31	NEW CONCRETE PAD FOUNDATION. SEE STRUCTURAL DRAWINGS.
39	NEW SOFFIT WITH RECESSED LIGHTS AS INDICATED ON RCP
66	INSTALL NEW MINI SPLIT MECHANICAL UNIT. SEE MECHANICAL DRAWINGS.
80	NEW 3/4" PLYWOOD FLOOR
84	HALF ROUND ALUMINUM GUTTER AND DOWNSPOUT.

9/23/2022 6:46:55 AM

CONSULTANT INFORMATION
The LiRo Group
3 Aerial Way, Syosset, New York 11791
(516) 938-5476 www.liro.com

CONSULTANT SEAL
REGISTERED ARCHITECT ROBERT D. TOMASULO 023293 STATE OF NEW YORK

REVISION NUMBER	DATE	MADE BY	APP'D BY	REVISION
1	09/21/22	EZ		BID ADDENDUM #3

RECORD DRAWING CERTIFICATION
☐ AS BUILT – CHANGES AS NOTED ☐ AS BUILT – NO CHANGES

CONTRACTOR
NAME
SIGNATURE
TITLE DATE

PROJECT COORDINATOR
NAME
SIGNATURE
TITLE DATE

WESTCHESTER COUNTY, NEW YORK
DEPARTMENT OF PUBLIC WORKS AND TRANSPORTATION
DIVISION OF ENGINEERING

INFRASTRUCTURE REHABILITATION PHASE 3
PLAYLAND PARK, RYE, NEW YORK
CROSS AXIS BUILDING A
CXA - BUILDING SECTIONS

CONTRACT NUMBER 22-523	SHEET NUMBER CXA-A-32
DWG NO.: 121 of 664	
SCALE: 1/4" = 1'-0"	
DATE: 08/23/2022	
DPW FILE NUMBER 1-118-A-870-1	REV. NO. 1

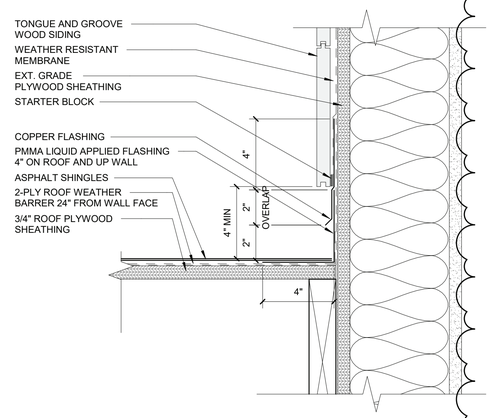

3 NEW ROOF FLASHING DETAIL
3" = 1'-0"

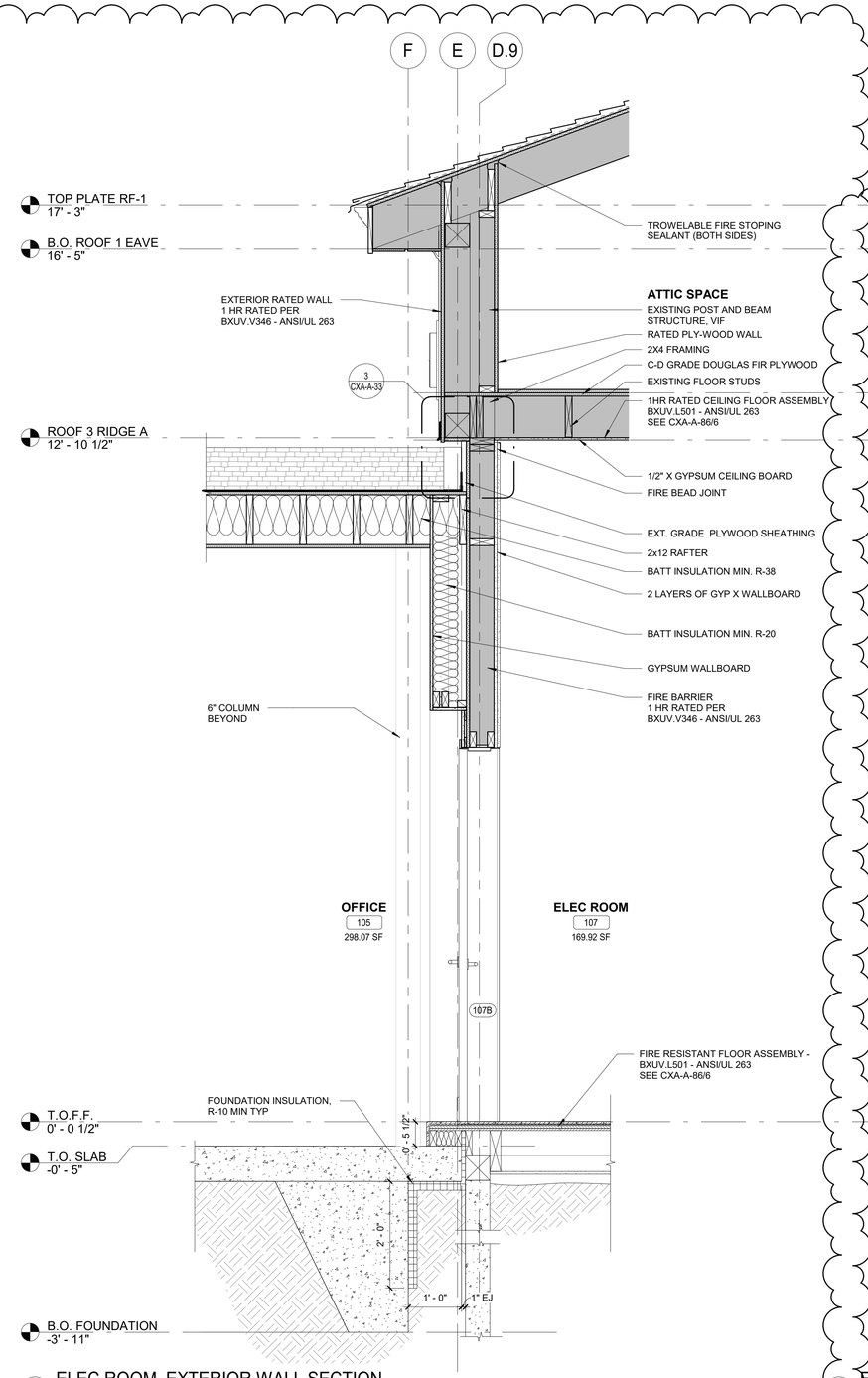

2 ELEC ROOM EXTERIOR WALL SECTION
3/4" = 1'-0"

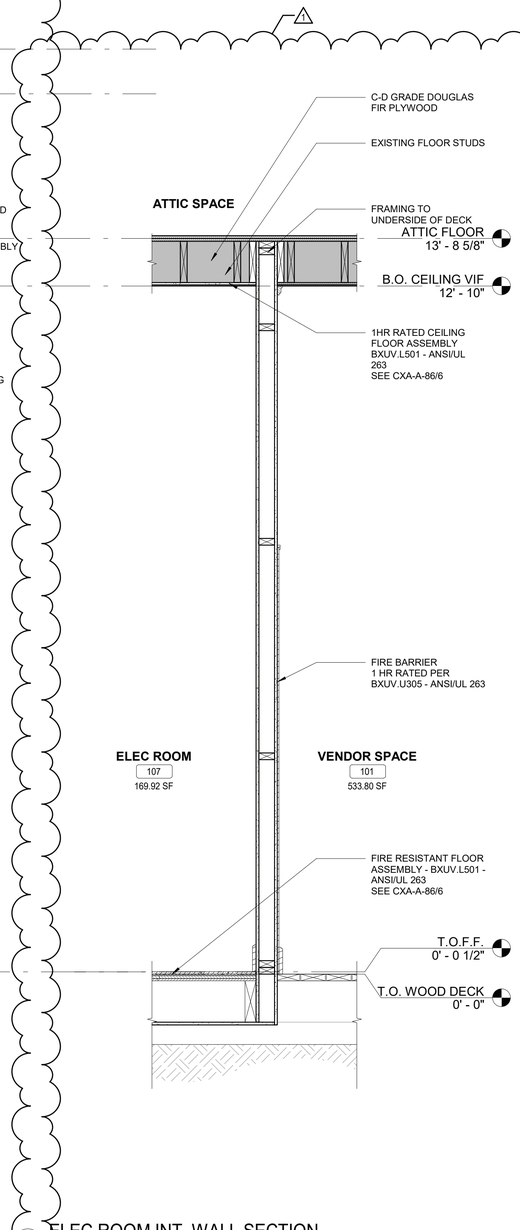

1 ELEC ROOM INT. WALL SECTION
3/4" = 1'-0"

9/23/2022 6:46:56 AM

CONSULTANT INFORMATION
The LiRo Group
3 Aerial Way, Syosset, New York 11791
(516) 938-5476 www.liro.com

CONSULTANT SEAL
REGISTERED ARCHITECT ROBERT D. YOUNG JR. 023280 STATE OF NEW YORK

REVISION NUMBER	DATE	MADE BY	APP'D BY	REVISION
1	09/21/22	EZ		BID ADDENDUM #3

RECORD DRAWING CERTIFICATION
☐ AS BUILT – CHANGES AS NOTED ☐ AS BUILT – NO CHANGES

CONTRACTOR
NAME
SIGNATURE
TITLE DATE

PROJECT COORDINATOR
NAME
SIGNATURE
TITLE DATE

WESTCHESTER COUNTY, NEW YORK
DEPARTMENT OF PUBLIC WORKS AND TRANSPORTATION
DIVISION OF ENGINEERING

INFRASTRUCTURE REHABILITATION PHASE 3
PLAYLAND PARK, RYE, NEW YORK
CROSS AXIS BUILDING A
CXA - ENLARGED SECTIONS

CONTRACT NUMBER 22-523
SHEET NUMBER CXA-A-33
DWG NO.: 122 of 664
SCALE: As indicated
DATE: 08/23/2022
DPW FILE NUMBER 1-118-A-871-1
REV. NO. 1

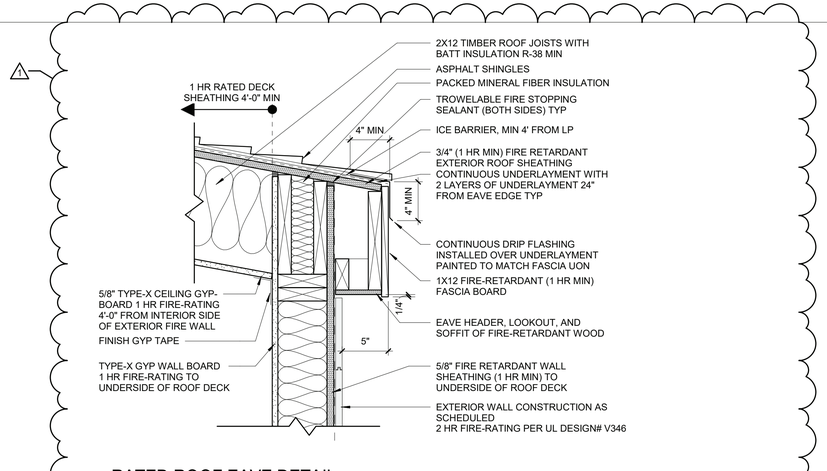

5 RATED ROOF EAVE DETAIL
1 1/2" = 1'-0"

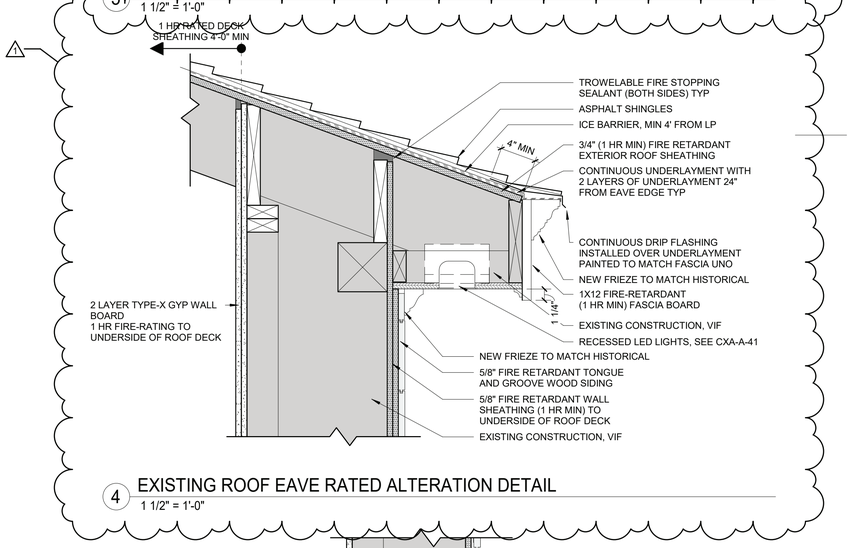

4 EXISTING ROOF EAVE RATED ALTERATION DETAIL
1 1/2" = 1'-0"

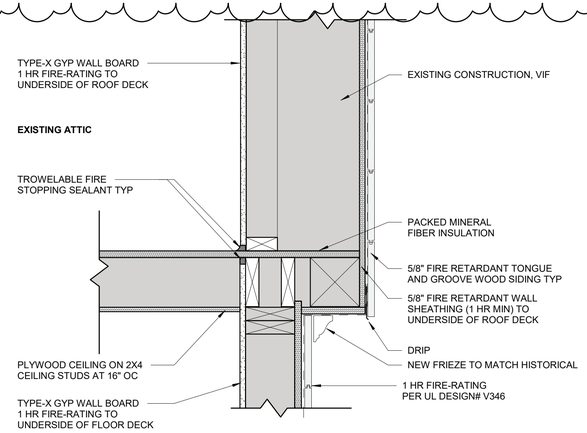

3 EXISTING MID-WALL RATED ALTERATION DETAIL
1 1/2" = 1'-0"

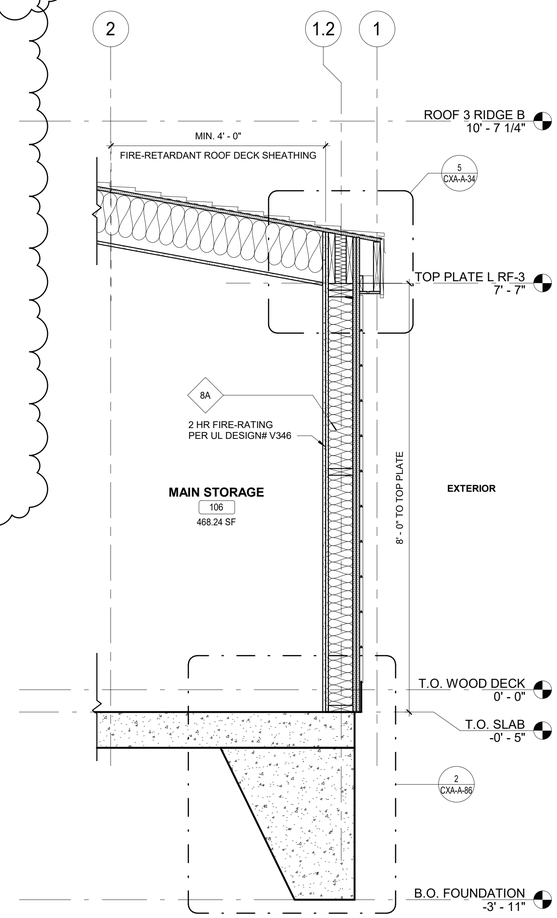

2 CXA - EXTERIOR RATED WALL SECTION
3/4" = 1'-0"

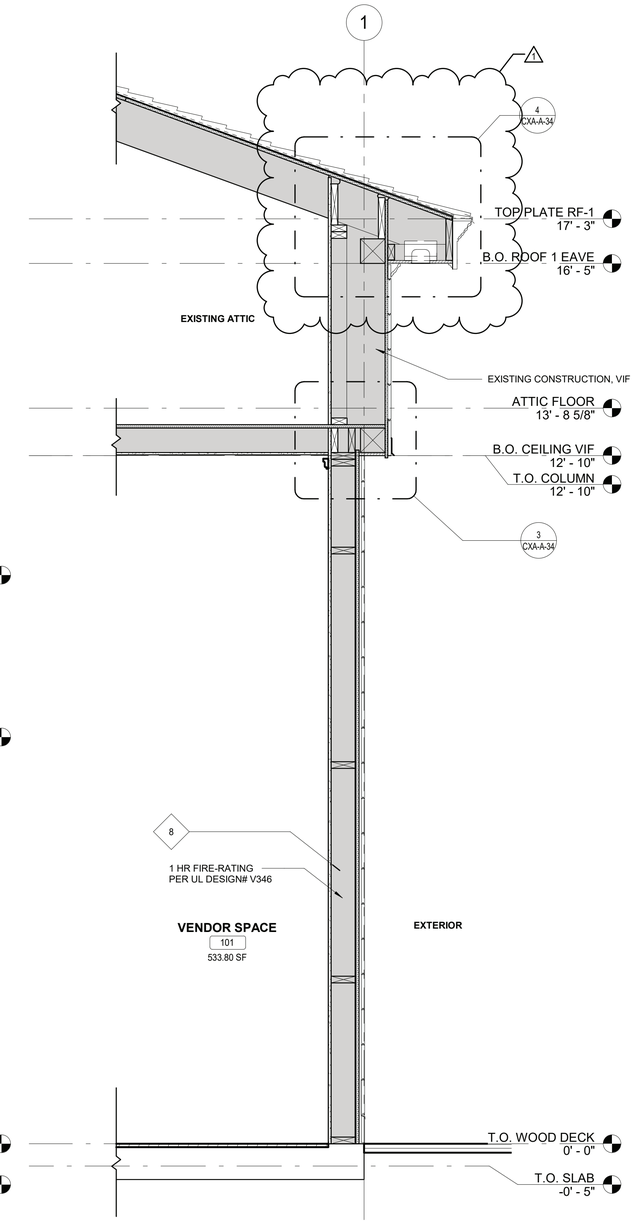

1 CXA - EXTERIOR RATED WALL SECTION
3/4" = 1'-0"

9/23/2022 6:46:57 AM

CONSULTANT INFORMATION

The LiRo Group
3 Aerial Way, Syosset, New York 11791
(516) 938-5476 www.liro.com

CONSULTANT SEAL

REGISTERED ARCHITECT ROBERT D. YOUNG 023280 STATE OF NEW YORK

REVISION NUMBER	DATE	MADE BY	APP'D BY	REVISION
1	09/21/22	EZ		BID ADDENDUM #3

RECORD DRAWING CERTIFICATION

☐ AS BUILT – CHANGES AS NOTED ☐ AS BUILT – NO CHANGES

CONTRACTOR
NAME
SIGNATURE
TITLE DATE

PROJECT COORDINATOR
NAME
SIGNATURE
TITLE DATE

WESTCHESTER COUNTY, NEW YORK
DEPARTMENT OF PUBLIC WORKS AND TRANSPORTATION
DIVISION OF ENGINEERING

INFRASTRUCTURE REHABILITATION PHASE 3
PLAYLAND PARK, RYE, NEW YORK
CROSS AXIS BUILDING A
CXA - WALL ENLARGED SECTONS 2

CONTRACT NUMBER 22-523
SHEET NUMBER **CXA-A-34**
DWG NO.: 123 of 664
SCALE: **As indicated**
DATE: **08/23/2022**
DPW FILE NUMBER **1-118-A-872-1**
REV. NO. **1**

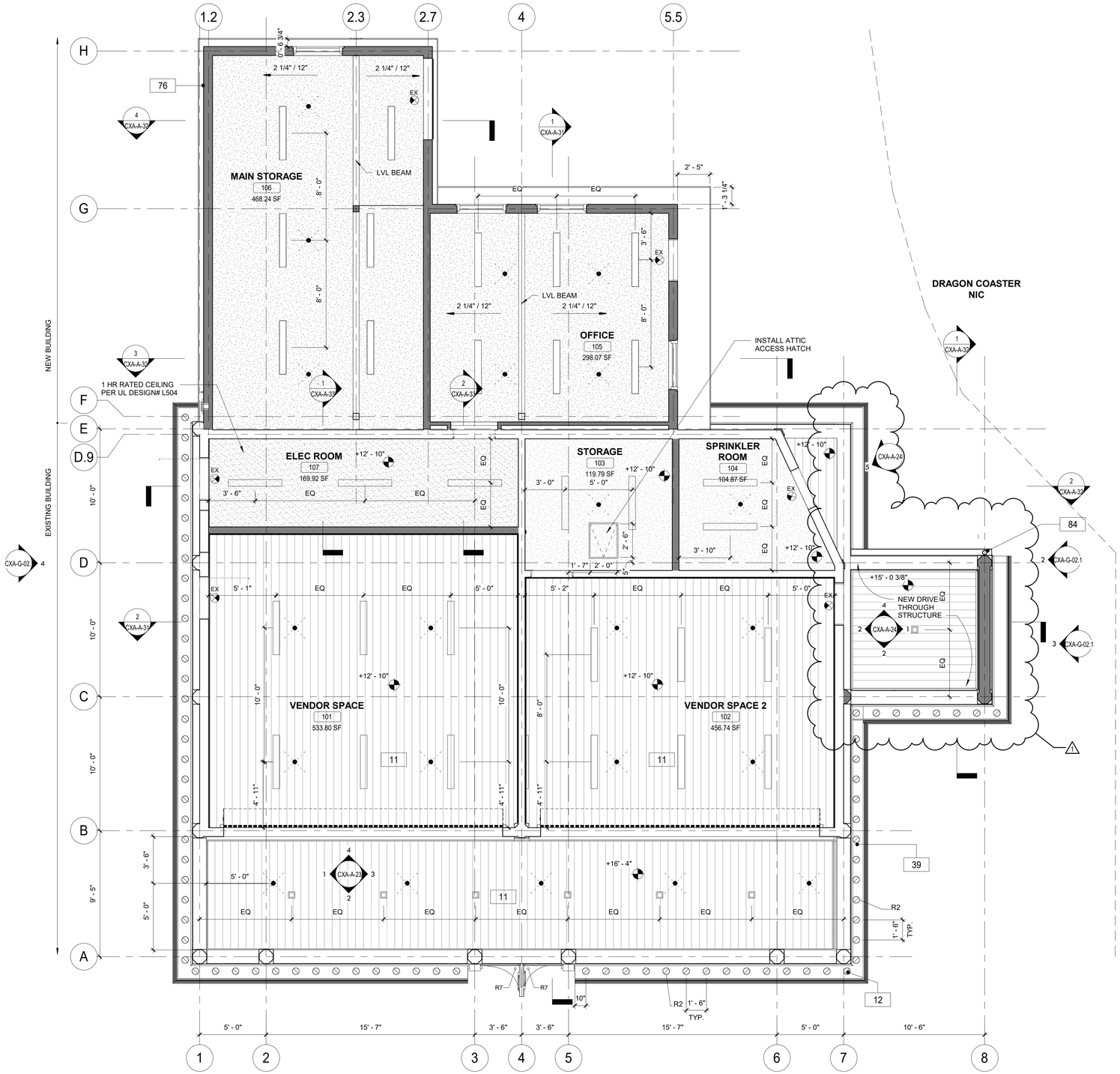

1 RCP - GROUND FLOOR
1/4" = 1'-0"

GENERAL REFLECTED CEILING PLAN NOTES

1. CONTRACTOR SHALL PROVIDE THE NECESSARY FRAMING OR BRIDGING FOR ALL LIGHT FIXTURES, DIFFUSERS, RETURNS, ETC., AS WELL AS REQUIRED CUTOUTS.
2. CONTRACTOR SHALL NOTIFY THE ARCHITECT OF ANY POSSIBLE INTERFERENCES BEFORE PROCEEDING WITH CEILING INSTALLATION.
3. CEILING CONSTRUCTION SHALL NOT BE CLOSED IN UNTIL THE CONSTRUCTION MANAGER AND AUTHORITIES HAVING JURISDICTION HAVE HAD AN OPPORTUNITY TO INSPECT THE AREA AND ASCERTAIN THAT ALL DUCTWORK, PLUMBING, ELECTRICAL CONDUITS AND LINES HAVE BEEN INSTALLED PROPERLY.
4. FASCIAS OR ANY BREAK IN THE CEILING HEIGHTS CREATED BY THE INSTALLATION AND/OR ALTERATION OF HEATING, VENTILATING, A/C OR MECHANICAL DUCTS, PIPING OR OTHER EQUIPMENT SHALL BE FORMED OF GYPSUM WALLBOARD ON FURRING CHANNELS.
5. THE CEILING PANEL JOINTS SHALL BE ALIGNED PERFECTLY WITH LIGHTING FIXTURES.
6. ALL JOINTS IN THE PANEL SHALL BE SQUARE, LEVEL AND PERFECTLY ALIGNED WITH EACH OTHER AND WITH BUILDING FIXTURES.
7. CONTRACTOR SHALL PROVIDE CUTOUTS AND OTHER SPECIAL PROVISIONS IN ACOUSTICAL WORK AS REQUIRED FOR LIGHTING FIXTURES, REGISTERS, DIFFUSERS AND OTHER INSERTED ITEMS. GENERAL CONSTRUCTION CONTRACTOR SHALL INSTALL ACCESS PANELS IN GYPSUM DRYWALL CEILINGS FOR ACCESS TO AIR CONDITIONING, PLUMBING, TELEPHONE & ELECTRICAL CONTROL EQUIPMENT REQUIRING ACCESS.
8. IN GENERAL, WITHIN EACH AREA, CEILING WORK REQUIREMENTS SHALL BE EXECUTED IN SUCH A MANNER AS TO PROVIDE CONTINUOUS MATCHED AND ALIGNED CEILINGS. THE FINAL CEILING INSTALLATION SHALL BE FREE OF ALL VISUAL DEFECTS.
9. CEILING BOARD OVER VENDOR SPACES SHOULD BE MOISTURE RESISTANT, PRESSURE TREATED WOOD

RCP LEGEND

- R-2 EXTERIOR RECESSED CAN IN SOFFIT (SEE ELEC. DWGS)
- R-6: 4" SQUARE RECESSED LIGHT FIXTURE (SEE ELEC. DWGS)
- L-1 LINEAR LIGHT (SEE ELEC. DWGS)
- M-2 MARQUEE LIGHTING AT BALUSTRADE
- SPRINKLER (SEE FIRE PROTECTION DWGS)
- SUPPLY DIFFUSER. SEE MECHANICAL DRAWINGS
- EXHAUST GRILL. SEE MECHANICAL DRAWINGS
- EX- EXIT SIGN
- NEW CONSTRUCTION
- T1-11 CEILING BOARD
- GYP. CEILING BOARD
- INDICATES SCOPE NOT IN CONTRACT

CONSTRUCTION KEY NOTES

11	PROVIDE AND INSTALL T1-11 CEILING.
12	PROVIDE DROP CEILING AND ALL HANGERS/ ACCESSORIES.
39	NEW SOFFIT WITH RECESSED LIGHTS AS INDICATED ON RCP
76	INSTALL NEW EXHAUST SYSTEM. SEE MECHANICAL DRAWINGS.
84	HALF ROUND ALUMINUM GUTTER AND DOWNSPOUT.

9/23/2022 6:47:01 AM

CONSULTANT INFORMATION

The LiRo Group
3 Aerial Way, Syosset, New York 11791
(516) 938-5476 www.liro.com

CONSULTANT SEAL

REVISION NUMBER	DATE	MADE BY	APP'D BY	REVISION
1	09/21/22	EZ		BID ADDENDUM #3

RECORD DRAWING CERTIFICATION
☐ AS BUILT – CHANGES AS NOTED ☐ AS BUILT – NO CHANGES

CONTRACTOR
NAME
SIGNATURE
TITLE DATE

PROJECT COORDINATOR
NAME
SIGNATURE
TITLE DATE

WESTCHESTER COUNTY, NEW YORK
DEPARTMENT OF PUBLIC WORKS AND TRANSPORTATION
DIVISION OF ENGINEERING

INFRASTRUCTURE REHABILITATION PHASE 3
PLAYLAND PARK, RYE, NEW YORK
CROSS AXIS BUILDING A
CXA - GROUND LEVEL RCP

CONTRACT NUMBER	22-523
SHEET NUMBER	CXA-A-41
DWG NO.:	124 of 664
SCALE:	As indicated
DATE:	08/23/2022
DPW FILE NUMBER	1-118-A-873-1
REV. NO.	1

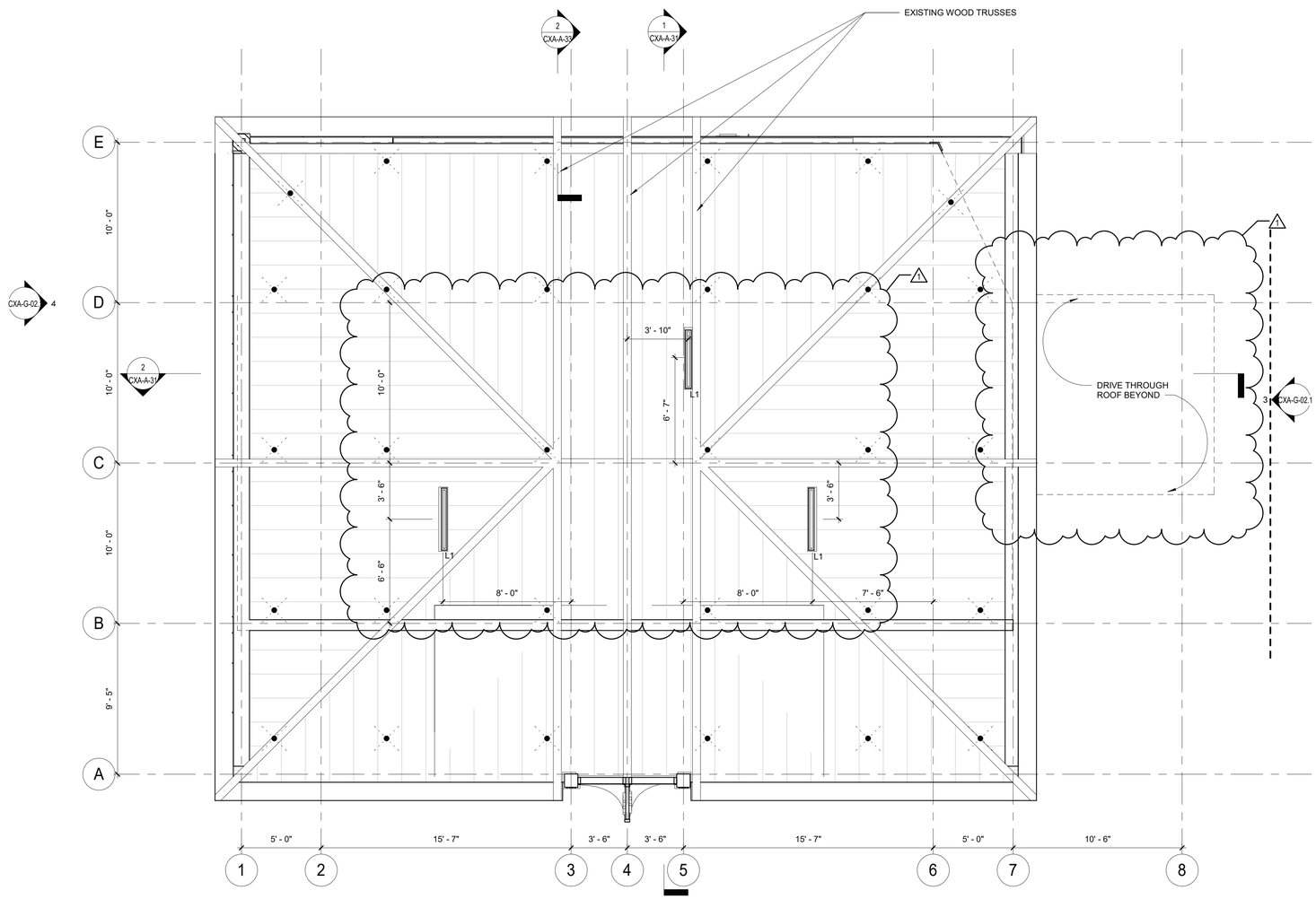

1 ATTIC LEVEL RCP
1/4" = 1'-0"

GENERAL REFLECTED CEILING PLAN NOTES

1. CONTRACTOR SHALL PROVIDE THE NECESSARY FRAMING OR BRIDGING FOR ALL LIGHT FIXTURES, DIFFUSERS, RETURNS, ETC., AS WELL AS REQUIRED CUTOUTS.
2. CONTRACTOR SHALL NOTIFY THE ARCHITECT OF ANY POSSIBLE INTERFERENCES BEFORE PROCEEDING WITH CEILING INSTALLATION.
3. CEILING CONSTRUCTION SHALL NOT BE CLOSED IN UNTIL THE CONSTRUCTION MANAGER AND AUTHORITIES HAVING JURISDICTION HAVE HAD AN OPPORTUNITY TO INSPECT THE AREA AND ASCERTAIN THAT ALL DUCTWORK, PLUMBING, ELECTRICAL CONDUITS AND LINES HAVE BEEN INSTALLED PROPERLY.
4. FASCIAS OR ANY BREAK IN THE CEILING HEIGHTS CREATED BY THE INSTALLATION AND/OR ALTERATION OF HEATING, VENTILATING, A/C OR MECHANICAL DUCTS, PIPING OR OTHER EQUIPMENT SHALL BE FORMED OF GYPSUM WALLBOARD ON FURRING CHANNELS.
5. THE CEILING PANEL JOINTS SHALL BE ALIGNED PERFECTLY WITH LIGHTING FIXTURES.
6. ALL JOINTS IN THE PANEL SHALL BE SQUARE, LEVEL AND PERFECTLY ALIGNED WITH EACH OTHER AND WITH BUILDING FIXTURES.
7. CONTRACTOR SHALL PROVIDE CUTOUTS AND OTHER SPECIAL PROVISIONS IN ACOUSTICAL WORK AS REQUIRED FOR LIGHTING FIXTURES, REGISTERS, DIFFUSERS AND OTHER INSERTED ITEMS. GENERAL CONSTRUCTION CONTRACTOR SHALL INSTALL ACCESS PANELS IN GYPSUM DRYWALL CEILINGS FOR ACCESS TO AIR CONDITIONING, PLUMBING, TELEPHONE & ELECTRICAL CONTROL EQUIPMENT REQUIRING ACCESS.
8. IN GENERAL, WITHIN EACH AREA, CEILING WORK REQUIREMENTS SHALL BE EXECUTED IN SUCH A MANNER AS TO PROVIDE CONTINUOUS MATCHED AND ALIGNED CEILINGS. THE FINAL CEILING INSTALLATION SHALL BE FREE OF ALL VISUAL DEFECTS.
9. CEILING BOARD OVER VENDOR SPACES SHOULD BE MOISTURE RESISTANT, PRESSURE TREATED WOOD

RCP LEGEND

- R2 — R-2 EXTERIOR RECESSED CAN IN SOFFIT (SEE ELEC. DWGS)
- R6 — R-6: 4" SQUARE RECESSED LIGHT FIXTURE (SEE ELEC. DWGS)
- L1 — L-1 LINEAR LIGHT (SEE ELEC. DWGS)
- M2 — M-2 MARQUEE LIGHTING AT BALUSTRADE
- SPRINKLER (SEE FIRE PROTECTION DWGS)
- SUPPLY DIFFUSER. SEE MECHANICAL DRAWINGS
- EXHAUST GRILL. SEE MECHANICAL DRAWINGS
- EX — EX- EXIT SIGN
- NEW CONSTRUCTION
- T1-11 CEILING BOARD
- GYP. CEILING BOARD
- INDICATES SCOPE NOT IN CONTRACT

9/23/2022 6:47:02 AM

CONSULTANT INFORMATION

The LiRo Group
3 Aerial Way, Syosset, New York 11791
(516) 938-5476 www.liro.com

CONSULTANT SEAL

REGISTERED ARCHITECT ROBERT D. JOHNSON 023220 STATE OF NEW YORK

REVISION NUMBER	DATE	MADE BY	APP'D BY	REVISION
1	09/21/22	EZ		BID ADDENDUM #3

RECORD DRAWING CERTIFICATION

☐ AS BUILT – CHANGES AS NOTED ☐ AS BUILT – NO CHANGES

CONTRACTOR
NAME
SIGNATURE
TITLE DATE

PROJECT COORDINATOR
NAME
SIGNATURE
TITLE DATE

WESTCHESTER COUNTY, NEW YORK
DEPARTMENT OF PUBLIC WORKS AND TRANSPORTATION
DIVISION OF ENGINEERING

INFRASTRUCTURE REHABILITATION PHASE 3
PLAYLAND PARK, RYE, NEW YORK
CROSS AXIS BUILDING A
CXA - ATTIC LEVEL RCP

CONTRACT NUMBER	22-523
SHEET NUMBER	CXA-A-42
DWG NO.:	125 of 664
SCALE:	As indicated
DATE:	08/23/2022
DPW FILE NUMBER	1-118-A-874-1
REV. NO.	1

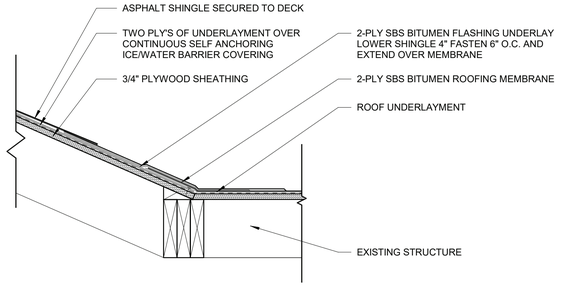

6 TYP ASPHALT TO SBS ROOF CONNECTION
1 1/2" = 1'-0"

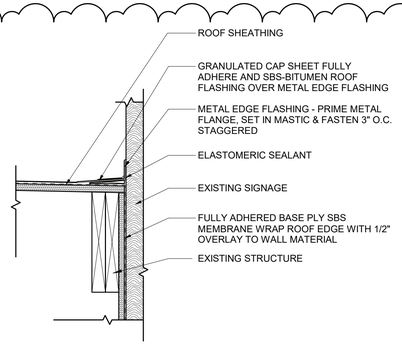

5 SBS ROOF EDGE AT SIGNAGE
1 1/2" = 1'-0"

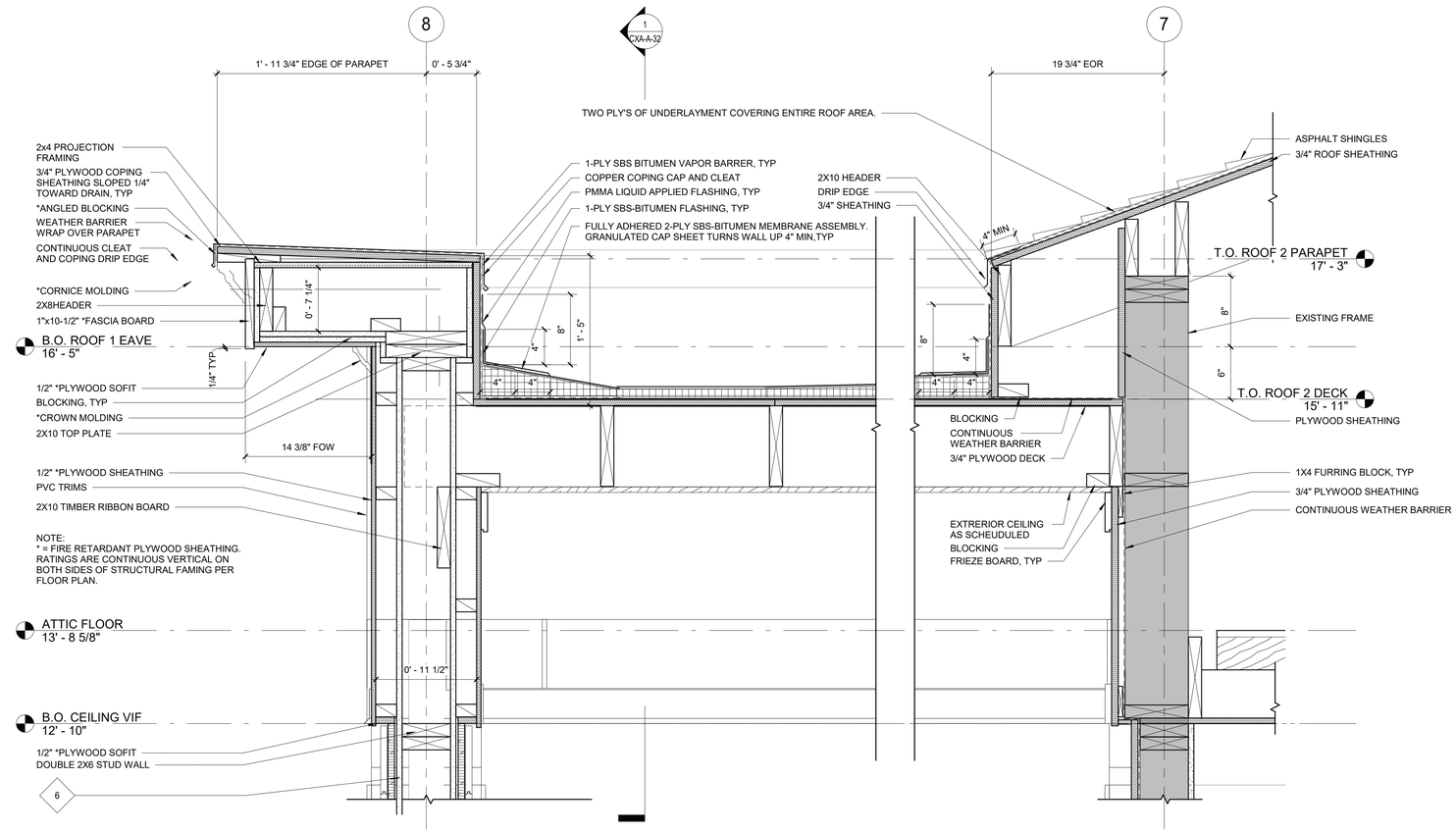

4 DRIVE THROUGH ROOF DETAILS
1 1/2" = 1'-0"

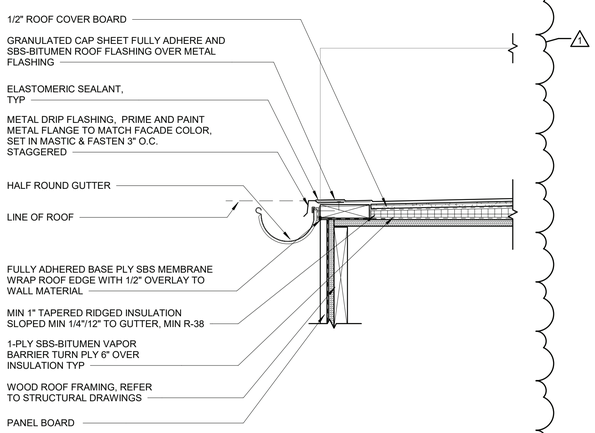

3 ROOF 2 AT GUTTER DETAIL
1 1/2" = 1'-0"

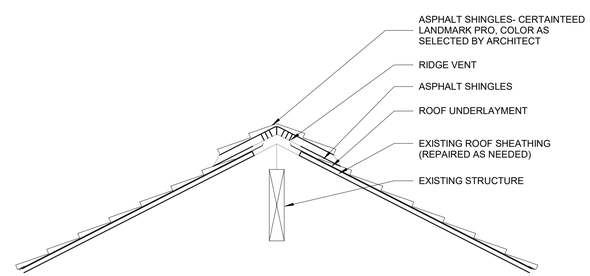

2 RIDGE VENT DETAIL
1" = 1'-0"

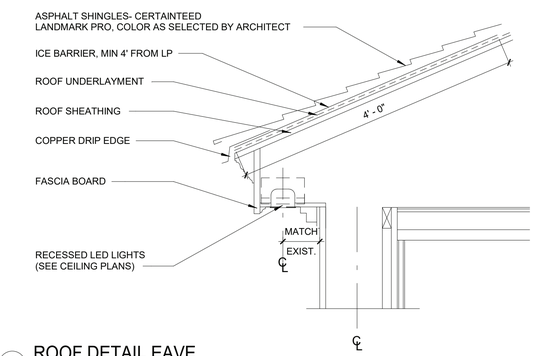

1 ROOF DETAIL EAVE
1" = 1'-0"

9/23/2022 6:47:05 AM

CONSULTANT INFORMATION
The LiRo Group
3 Aerial Way, Syosset, New York 11791
(516) 938-5476 www.liro.com

CONSULTANT SEAL
REGISTERED ARCHITECT ROBERT D. YOUNG JR. 023280 STATE OF NEW YORK

REVISION NUMBER	DATE	MADE BY	APP'D BY	REVISION
1	09/21/22	EZ		BID ADDENDUM #3

RECORD DRAWING CERTIFICATION
☐ AS BUILT – CHANGES AS NOTED ☐ AS BUILT – NO CHANGES

CONTRACTOR
NAME
SIGNATURE
TITLE DATE

PROJECT COORDINATOR
NAME
SIGNATURE
TITLE DATE

WESTCHESTER COUNTY, NEW YORK
DEPARTMENT OF PUBLIC WORKS AND TRANSPORTATION
DIVISION OF ENGINEERING

INFRASTRUCTURE REHABILITATION PHASE 3
PLAYLAND PARK, RYE, NEW YORK
CROSS AXIS BUILDING A
ROOF DETAILS

CONTRACT NUMBER 22-523
SHEET NUMBER **CXA-A-83**
DWG NO.: 129 of 664
SCALE: **As indicated**
DATE: **08/23/2022**
DPW FILE NUMBER **1-118-A-878-1**
REV. NO. **1**

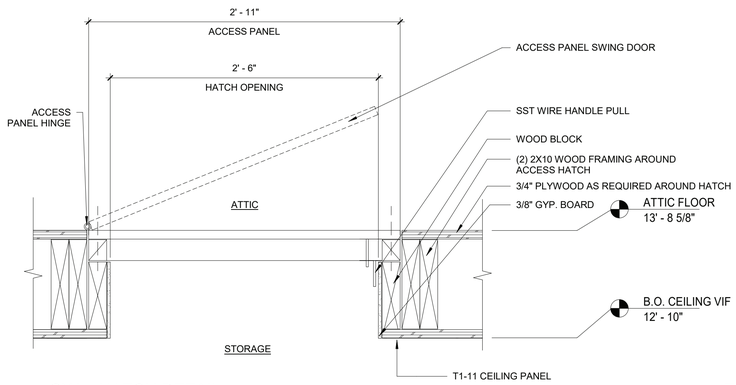

9 CXA - HATCH DETAIL
1 1/2" = 1'-0"

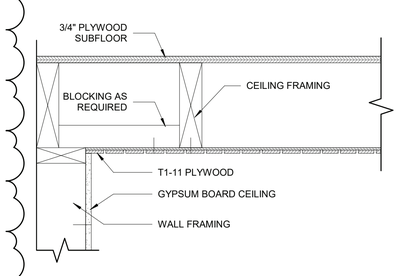

8 T1-11 CEILING FRAMING PARALLEL TO WALL
1 1/2" = 1'-0"

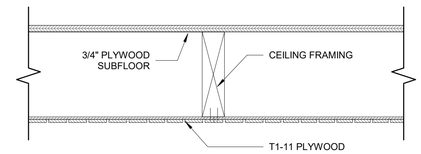

7 T1-11 FRAMING DETAIL
1 1/2" = 1'-0"

2020 NYS BC
711.2.6 UNUSABLE SPACE

IN 1-HOUR FIRE-RESISTANCE-RATED FLOOR/CEILING ASSEMBLIES, THE CEILING MEMBRANE IS NOT REQUIRED TO BE INSTALLED OVER UNUSABLE CRAWL SPACES. IN 1-HOUR FIRE-RESISTANCE-RATED ROOF ASSEMBLIES, THE FLOOR MEMBRANE IS NOT REQUIRED TO BE INSTALLED WHERE UNUSABLE ATTIC SPACE OCCURS ABOVE.

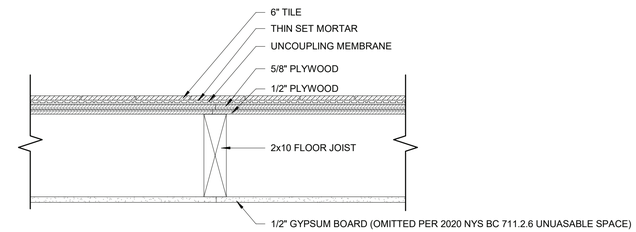

6 1 HOUR NON-COMBUSTILE FLOOR ASSEMBLY - BXUV.L501 - ANSI/UL 263
1 1/2" = 1'-0"

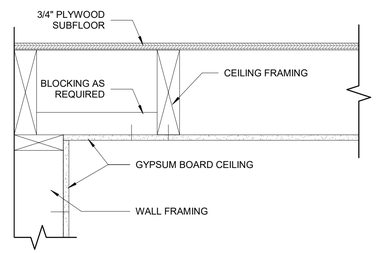

5 GYPSUM CEILING FRAMING PARALLEL TO WALL
1 1/2" = 1'-0"

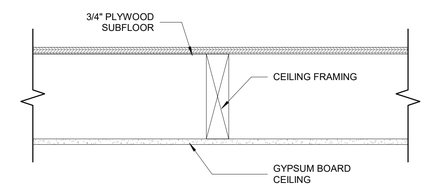

4 GYPSUM CEILING FRAMING
1 1/2" = 1'-0"

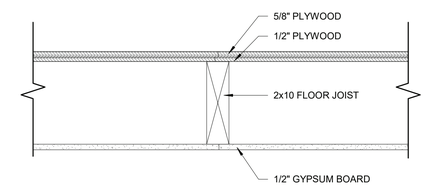

3 1 HOUR NON-COMBUSTILE FLOOR CEILING ASSEMBLY - BXUV.L501 - ANSI/UL 263
1 1/2" = 1'-0"

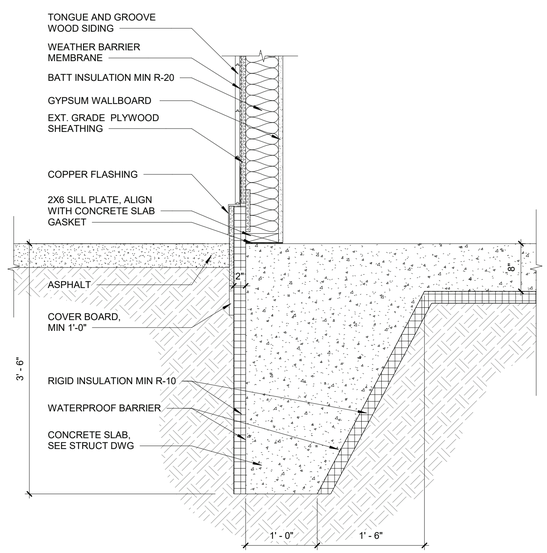

2 NEW BASE CONDITION DETAIL
1" = 1'-0"

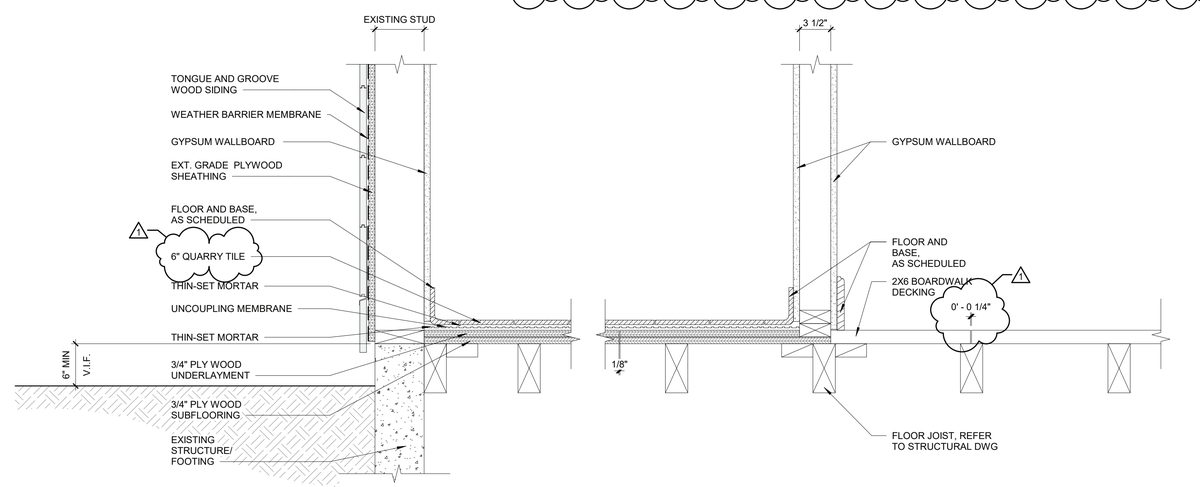

1 SPRINKLER ROOM EXTERIOR WALLS
1 1/2" = 1'-0"

9/23/2022 6:47:07 AM

CONSULTANT INFORMATION

The LiRo Group
3 Aerial Way, Syosset, New York 11791
(516) 938-5476 www.liro.com

CONSULTANT SEAL

REGISTERED ARCHITECT ROBERT D. TOMASULO JR. 023290 STATE OF NEW YORK

REVISION NUMBER	DATE	MADE BY	APP'D BY	REVISION
1	09/21/22	EZ		BID ADDENDUM #3

RECORD DRAWING CERTIFICATION

☐ AS BUILT – CHANGES AS NOTED ☐ AS BUILT – NO CHANGES

CONTRACTOR
NAME
SIGNATURE
TITLE DATE

PROJECT COORDINATOR
NAME
SIGNATURE
TITLE DATE

WESTCHESTER COUNTY, NEW YORK
DEPARTMENT OF PUBLIC WORKS AND TRANSPORTATION
DIVISION OF ENGINEERING

INFRASTRUCTURE REHABILITATION PHASE 3
PLAYLAND PARK, RYE, NEW YORK
CROSS AXIS BUILDING A
DETAILS

CONTRACT NUMBER 22-523
SHEET NUMBER **CXA-A-86**
DWG NO.: 132 of 664
SCALE: **As indicated**
DATE: **08/23/2022**
DPW FILE NUMBER **1-118-A-881-1**
REV. NO. **1**

PAINTING SCHEDULE

KEY	COLOR	MANUFACTURER	REMARKS
P- 1	MYSTICAL POWERS #901	BENJAMIN MOORE	
P- 2	HERITAGE RED #HC-181	BENJAMIN MOORE	
P- 3	NEW YORK STATE OF MIND #805	BENJAMIN MOORE	
P- 4	LAZY SUNDAY #803	BENJAMIN MOORE	
P- 5	DEEP JUNGLE #595	BENJAMIN MOORE	
P- 6	LUCK OF THE IRISH #588	BENJAMIN MOORE	
P- 7	MAJOLICA GREEN #0013	SHERWIN WILLIAMS	
P- 8	ANTELOPE CANYON #125	BENJAMIN MOORE	
P- 9	FORSYTHIA #6907	SHERWIN WILLIAMS	
P- 10	CAPE BLUE #1642	BENJAMIN MOORE	
P- 11	WHITE SNOW #9541	SHERWIN WILLIAMS	
P- 12	TRICORN BLACK #6258	SHERWIN WILLIAMS	
P- 13	READY MIX WHITE	BENJAMIN MOORE	INTERIOR USE ONLY
P- 14	STUCCO PAINT TO MATCH P-1	KEIM	
P- 15	VAN DEUSEN BLUE #HC-156	BENJAMIN MOORE	
P- 16	#RAL9001	-	TYP. ROLL UP DOOR
P- 17	FLORIDA BEACHES #900	BENJAMIN MOORE	
P- 18	PIRATES COVE PEACH #903	BENJAMIN MOORE	
P- 19	JADITE #6459	SHERWIN WILLIAMS	
P- 20	DECISIVE YELLOW #6902	SHERWIN WILLIAMS	

FENCE & GATE PAINTING SCHEDULE

COMPONENTS	COLOR
POSTS	P- 7
RAILS	P- 1
BALLUSTER, A	P- 15
BALLUSTER, B	P- 1
GATE FRAME	P- 15
GATE CROSS FRAME	P- 1
HARDWARE	BLACK

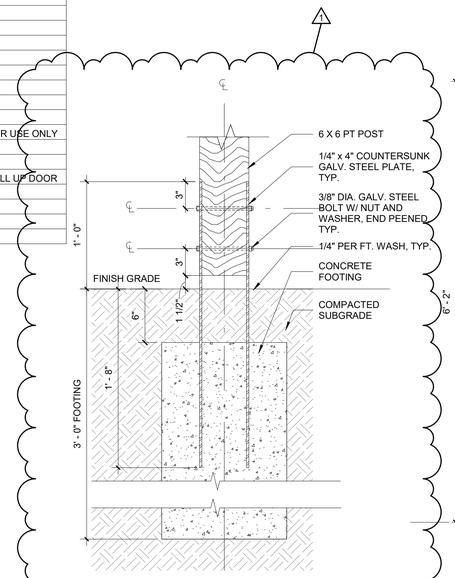

7 CXA - POST SECTION
1 1/2" = 1'-0"

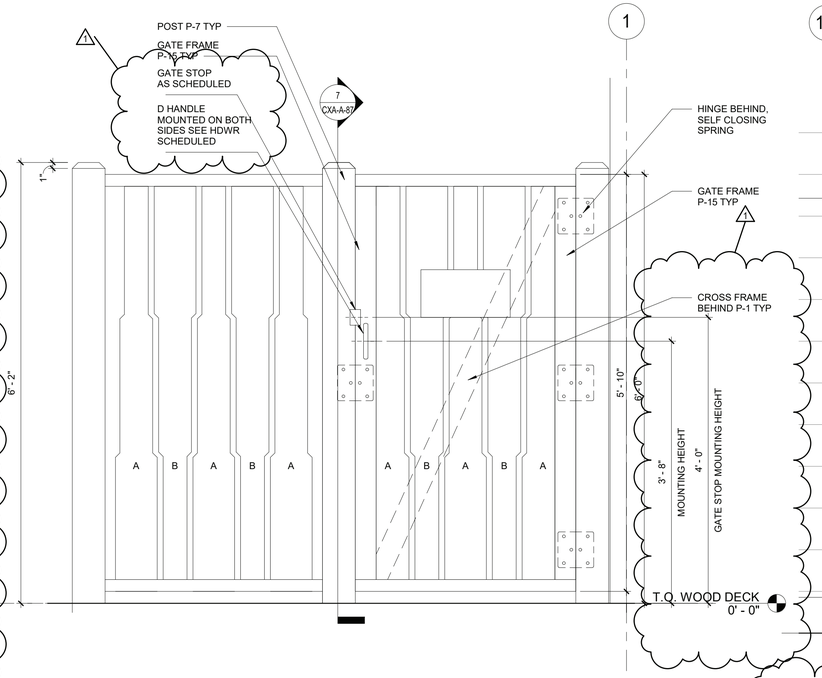

6 GATE ELEVATION
1" = 1'-0"

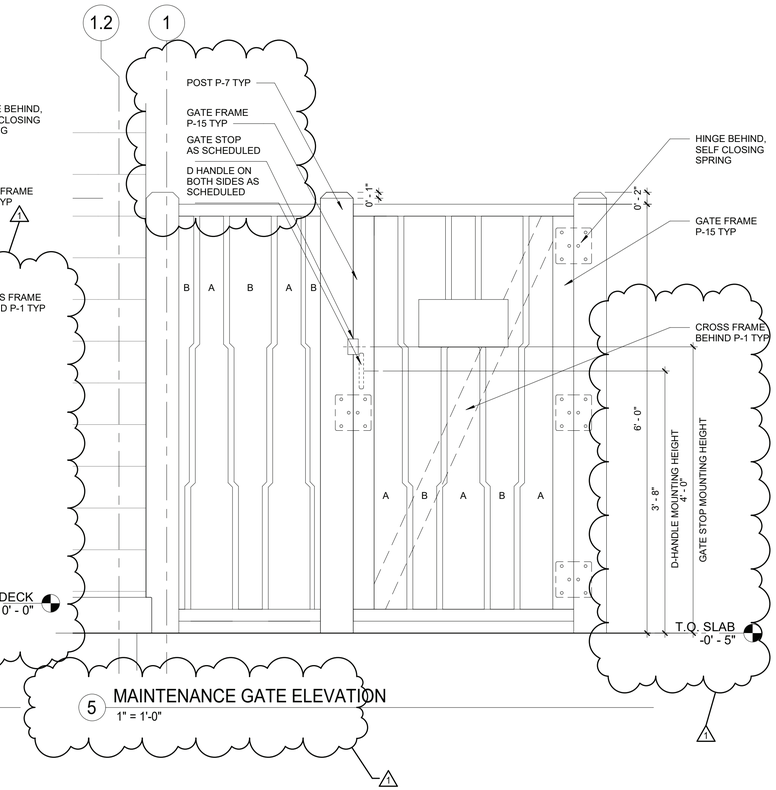

5 MAINTENANCE GATE ELEVATION
1" = 1'-0"

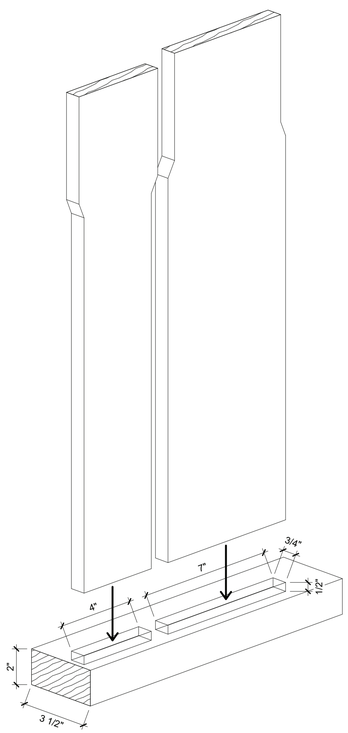

4 RAIL NOTCH DETAIL
3" = 1'-0"

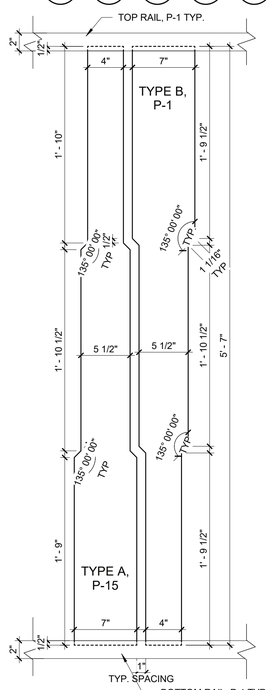

3 TYPICAL FENCE
1 1/2" = 1'-0"

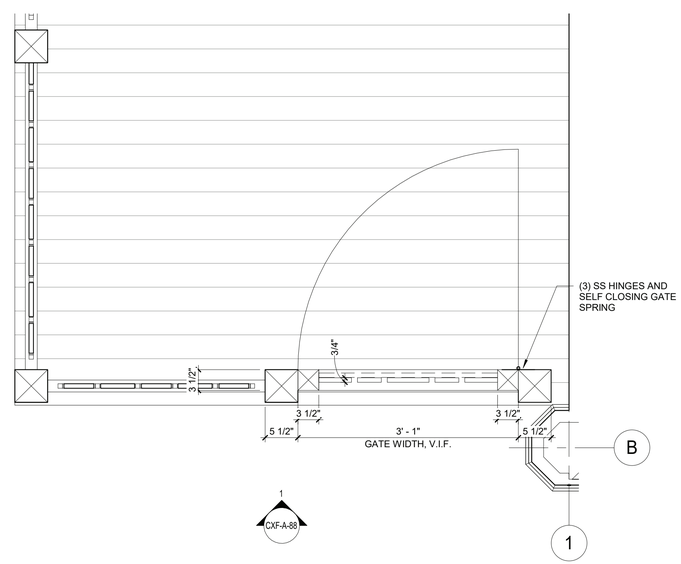

2 GATE PLAN
1" = 1'-0"

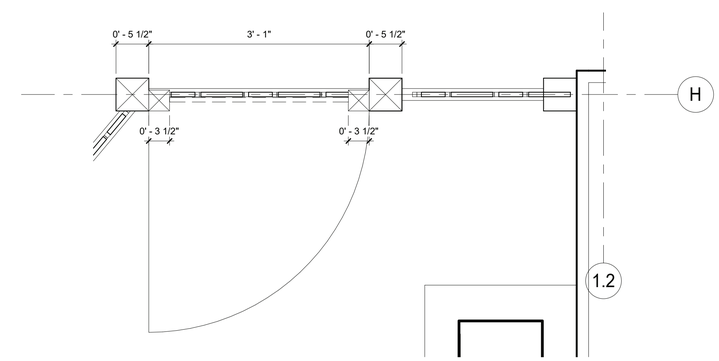

1 MAINTENANCE GATE
1" = 1'-0"

9/23/2022 6:47:10 AM

CONSULTANT INFORMATION
The LiRo Group
3 Aerial Way, Syosset, New York 11791
(516) 938-5476 www.liro.com

CONSULTANT SEAL
REGISTERED ARCHITECT ROBERT D. VOLANTE 023290 STATE OF NEW YORK

REVISION NUMBER	DATE	MADE BY	APP'D BY	REVISION
1	09/21/22	EZ		BID ADDENDUM #3

RECORD DRAWING CERTIFICATION
☐ AS BUILT – CHANGES AS NOTED ☐ AS BUILT – NO CHANGES

CONTRACTOR
NAME
SIGNATURE
TITLE DATE

PROJECT COORDINATOR
NAME
SIGNATURE
TITLE DATE

WESTCHESTER COUNTY, NEW YORK
DEPARTMENT OF PUBLIC WORKS AND TRANSPORTATION
DIVISION OF ENGINEERING

INFRASTRUCTURE REHABILITATION PHASE 3
PLAYLAND PARK, RYE, NEW YORK
CROSS AXIS BUILDING A
FENCE AND GATE DETAILS

CONTRACT NUMBER 22-523
SHEET NUMBER CXA-A-87
DWG NO.: 133 of 664
SCALE: As indicated
DATE: 08/23/2022
DPW FILE NUMBER 1-118-A-882-1
REV. NO. 1

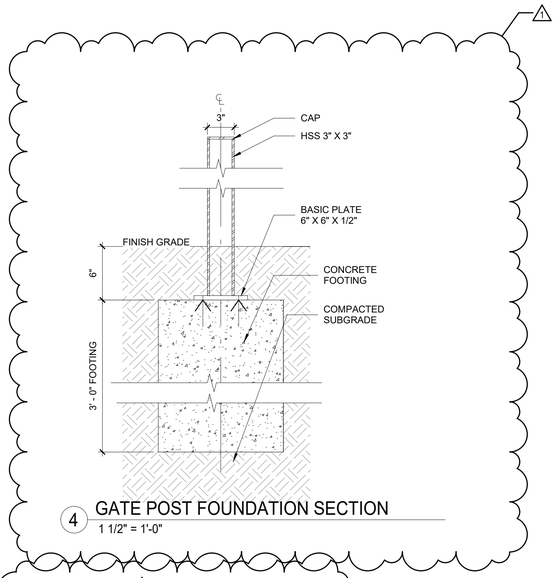

4 GATE POST FOUNDATION SECTION
1 1/2" = 1'-0"

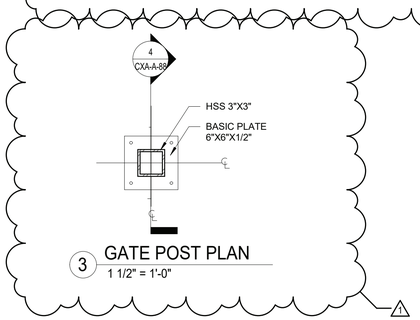

3 GATE POST PLAN
1 1/2" = 1'-0"

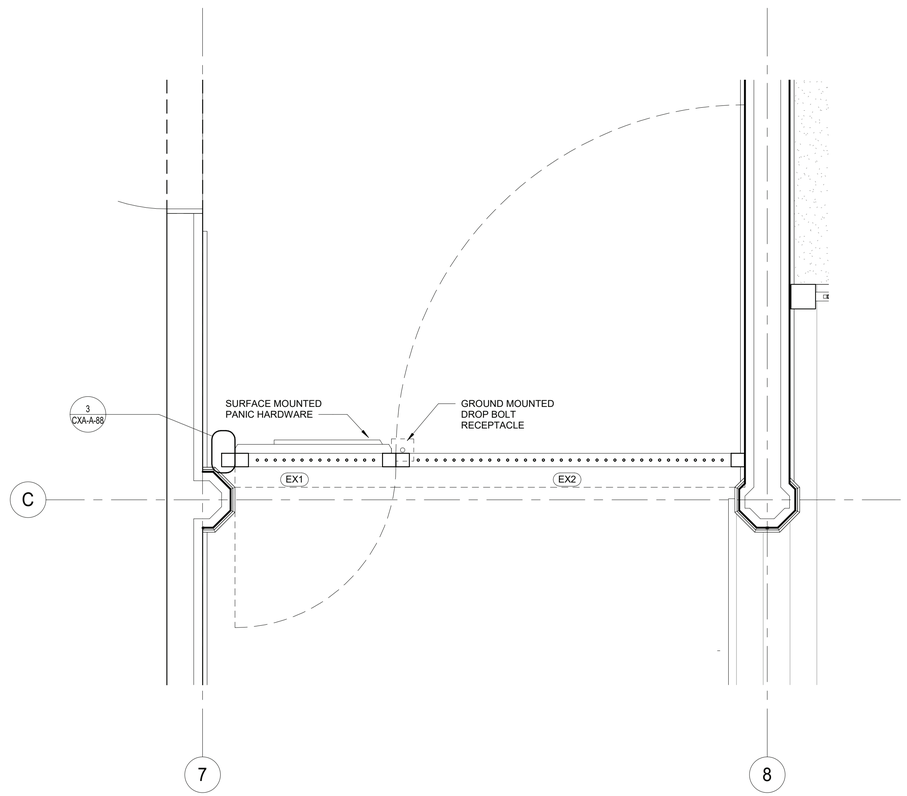

2 DRIVE THROUGH GATE PLAN DETAIL
3/4" = 1'-0"

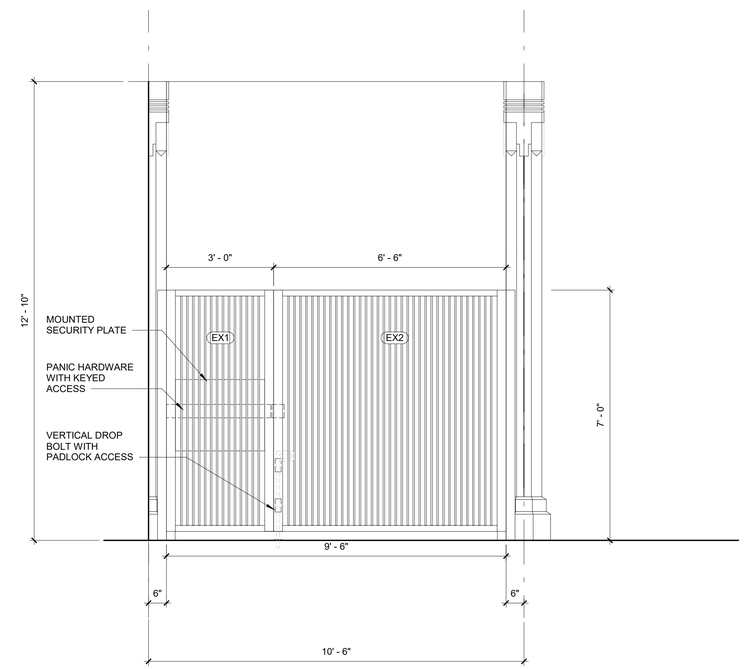

1 DRIVE GATE ELEVATION
1/2" = 1'-0"

9/23/2022 6:47:11 AM

CONSULTANT INFORMATION

The LiRo Group

3 Aerial Way, Syosset, New York 11791
(516) 938-5476 www.liro.com

CONSULTANT SEAL

REGISTERED ARCHITECT ROBERT D. TOMINO JR. 023280 STATE OF NEW YORK

REVISION NUMBER	DATE	MADE BY	APP'D BY	REVISION
1	09/21/22	EZ		BID ADDENDUM #3

RECORD DRAWING CERTIFICATION

☐ AS BUILT – CHANGES AS NOTED ☐ AS BUILT – NO CHANGES

CONTRACTOR
NAME
SIGNATURE
TITLE DATE

PROJECT COORDINATOR
NAME
SIGNATURE
TITLE DATE

WESTCHESTER COUNTY, NEW YORK
DEPARTMENT OF PUBLIC WORKS AND TRANSPORTATION
DIVISION OF ENGINEERING

INFRASTRUCTURE REHABILITATION PHASE 3
PLAYLAND PARK, RYE, NEW YORK
CROSS AXIS BUILDING A
DRIVE THROUGH GATE DETAILS

CONTRACT NUMBER	22-523
SHEET NUMBER	CXA-A-88
DWG NO.:	134 of 664
SCALE:	As indicated
DATE:	08/23/2022
DPW FILE NUMBER	1-118-A-883-1
REV. NO.	1

DOOR SCHEDULE

DOOR NUMBER	DOOR TYPE	DOOR WIDTH	DOOR HEIGHT	DOOR THICKNESS	DOOR MATERIAL	DOOR GLASS	DOOR EXTERIOR FINISH	DOOR INTERIOR FINISH	FRAME TYPE	FRAME MATERIAL	FRAME EXTERIOR	FRAME INTERIOR	HDWR SET	REMARKS
101A	C	20' - 10"	11' - 3"	-	ALUM	NO	PAINT, P-16	PAINT, P-16	-	-	-	PAINT, P-16	4.0	MOTOR OPERATED
101B	E	3' - 0"	7' - 0"	1 3/4"	H.M.	NO	PAINT, P-1	PAINT, P-13	1	HM.	PAINT, P-4	PAINT, P-13	9.0	STOREFRONT LOCK SET, 45 MIN RATING
102A	C	20' - 10"	11' - 3"	-	ALUM	NO	PAINT, P-16	PAINT, P-16	-	-	-	PAINT, P-16	4.0	MOTOR OPERATED
102B	B	3' - 0"	7' - 0"	1 3/4"	WOOD	NO	PAINT, P-1	PAINT, P-13	2	WD.	PAINT, P-4	PAINT, P-13	10.0	STOREFRONT LOCK SET
103A	A	3' - 0"	7' - 0"	1 3/4"	H.M.	NO	PAINT, P-13	PAINT, P-13	1	H.M.	PAINT, P-13	PAINT, P-13	7.0	STOREFRONT LOCK SET
104A	B	3' - 0"	7' - 0"	1 3/4"	WOOD	NO	PAINT, P-1	PAINT, P-13	2	WD.	PAINT, P-4	PAINT, P-13	9.0	STOREFRONT LOCK SET
105A	B	3' - 0"	7' - 0"	1 3/4"	WOOD	NO	PAINT, P-1	PAINT, P-13	2	WD.	PAINT, P-4	PAINT, P-13	13.0	STOREFRONT LOCK SET
106A	D	6' - 0"	7' - 8"	1 3/4"	H.M.	NO	PAINT, P-1	PAINT, P-13	1	H.M.	PAINT, P-4	PAINT, P-13	10.0	STOREFRONT LOCK SET
107A	E	3' - 0"	7' - 0"	1 3/4"	H.M.	NO	PAINT, P-1	PAINT, P-13	1	HM	PAINT, P-4	PAINT, P-13	11.0	STOREFRONT LOCK SET, 45 MIN RATING
107B	A	3' - 0"	7' - 0"	1 3/4"	H.M.	NO	PAINT, P-13	PAINT, P-13	1	H.M.	PAINT, P-13	PAINT, P-13	12.0	45 MIN RATING

PAINTING SCHEDULE

KEY	COLOR	MANUFACTURER	REMARKS
P- 1	MYSTICAL POWERS #901	BENJAMIN MOORE	
P- 2	HERITAGE RED #HC-181	BENJAMIN MOORE	
P- 3	NEW YORK STATE OF MIND #805	BENJAMIN MOORE	
P- 4	LAZY SUNDAY #803	BENJAMIN MOORE	
P- 5	DEEP JUNGLE #595	BENJAMIN MOORE	
P- 6	LUCK OF THE IRISH #588	BENJAMIN MOORE	
P- 7	MAJOLICA GREEN #0013	SHERWIN WILLIAMS	
P- 8	ANTELOPE CANYON #125	BENJAMIN MOORE	
P- 9	FORSYTHIA #6907	SHERWIN WILLIAMS	
P- 10	CAPE BLUE #1642	BENJAMIN MOORE	
P- 11	WHITE SNOW #9541	SHERWIN WILLIAMS	
P- 12	TRICORN BLACK #6258	SHERWIN WILLIAMS	
P- 13	READY MIX WHITE	BENJAMIN MOORE	INTERIOR USE ONLY
P- 14	STUCCO PAINT TO MATCH P-1	KEIM	
P- 15	VAN DEUSEN BLUE #HC-156	BENJAMIN MOORE	
P- 16	#RAL9001	-	TYP. ROLL UP DOOR
P- 17	FLORIDA BEACHES #900	BENJAMIN MOORE	
P- 18	PIRATES COVE PEACH #903	BENJAMIN MOORE	
P- 19	JADITE #6459	SHERWIN WILLIAMS	
P- 20	DECISIVE YELLOW #6902	SHERWIN WILLIAMS	

GATE SCHEDULE

DOOR NUMBER	DOOR TYPE	WIDTH	HEIGHT	GATE MATERIAL	FINISH	HDWR SET	REMARKS
EX1	SEE CXA-A-87	3'-0"	7'-0"	STEEL	BLACK	PROVIDE SELF CLOSING HINGES, PANIC HARDWARE WITH LOCKING HANDLE ON OUTSIDE TO BE APPROVED BY ARCHITECT	EXIT DEVICE REQUIRED, SEE DETAILS ON CXA-A-87
EX2	SEE CXA-A-87	6'-6" VIF	7'-0"	STEEL	BLACK	PROVIDE VERTICAL DROP BAR WITH LOCK	SEE DETAILS ON CXA-A-87
EX3	SEE CXA-A-86	3'-0"	6'-0"	WOOD	SEE CXA-A-86	PROVIDE SELF CLOSING HINGES TO BE APPROVED BY ARCHITECT.D-HANDLE USE HEAVY DUTY 6 ½" GATE PULL ZINC-PLATED, POWDER-COATED STEEL ASTM B117 SALT-SPRAYED APPROVED BLACK FINISH TO MATCH OTHER GATE HARDWARE.GATE STOP USE ZINC-PLATED, POWDER-COATED STEEL ASTM B117 SALT-SPRAYED APPROVED 2 5/8"H X 1.75"W X 5/8"D. BLACK FINISH TO MATCH OTHER GATE HARDWARE. ARCHITECT TO APPROVE FINISH.	SEE DETAILS ON CXA-A-86
EX4	SEE CXA-A-86	3'-0"	6'-0"	WOOD	SEE CXA-A-86	PROVIDE SELF CLOSING HINGES TO BE APPROVED BY ARCHITECT.D-HANDLE USE HEAVY DUTY 6 ½" GATE PULL ZINC-PLATED, POWDER-COATED STEEL ASTM B117 SALT-SPRAYED APPROVED BLACK FINISH TO MATCH OTHER GATE HARDWARE.GATE STOP USE ZINC-PLATED, POWDER-COATED STEEL ASTM B117 SALT-SPRAYED APPROVED 2 5/8"H X 1.75"W X 5/8"D. BLACK FINISH TO MATCH OTHER GATE HARDWARE. ARCHITECT TO APPROVE FINISH.	SEE DETAILS ON CXA-A-86

GENERAL DOOR SCHEDULE NOTES:

1. REFER TO CXA-A-92 SHEET FOR DOOR SILL & TRANSITION DETAILS. SILL TRANSITION INFORMATION IS INDICATED ON FINISH PLAN UNLESS OTHERWISE NOTED.
2. REFER TO SHEET CXA-A-91 FOR FINISH SCHEDULE AND LEGEND.
3. THE CONTRACTOR SHALL EXAMINE THE DRAWINGS, SCHEDULE AND SPECIFICATIONS AND FURNISH PROPER HARDWARE FOR ALL OPENINGS WHETHER LISTED OR NOT. COMPLETE SHOP DRAWINGS SHALL BE PROVIDED FOR APPROVAL PRIOR TO PURCHASE.
4. ALL EXIT DOORS SHALL BE OPENABLE FROM THE EGRESS SIDE WITHOUT THE USE OF A KEY OR SPECIAL KNOWLEDGE.
5. VERIFY DIMENSIONS OF EXISTING OPENINGS AND DOORS BEFORE ORDERING.
6. THE CONTRACTOR SHALL COORDINATE & VERIFY LOCATION OF RECESSED FLOOR CLOSERS, PIVOTS, ETC. WITH EXISTING FLOOR SLABS AND OTHER FIELD CONDITIONS PRIOR TO ORDERING TO ENSURE PROPER CLEARANCES & DEPTHS ARE ALLOWED.

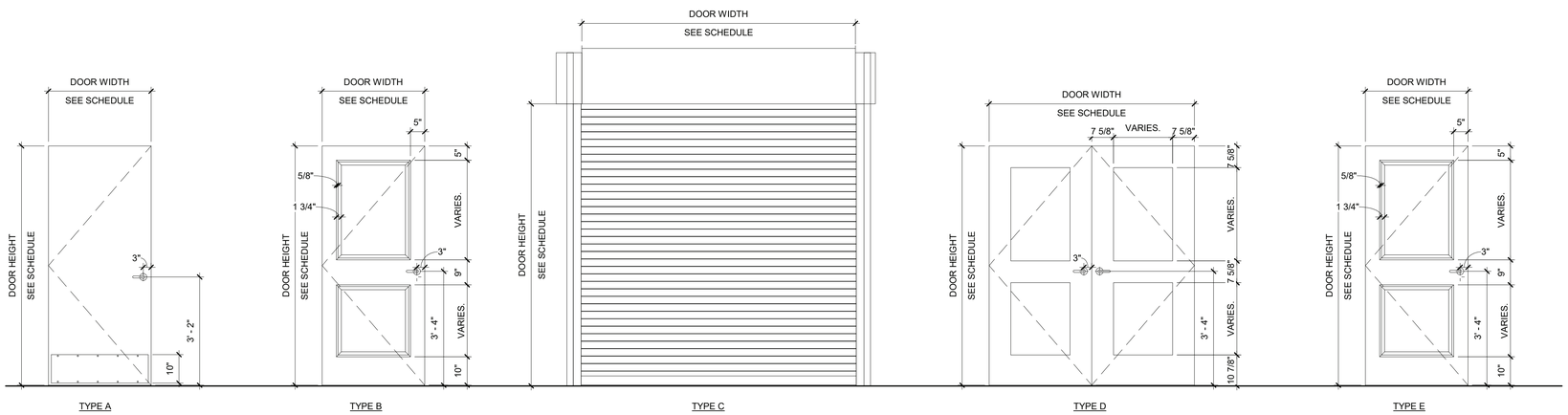

7 DOOR TYPES
1/2" = 1'-0"

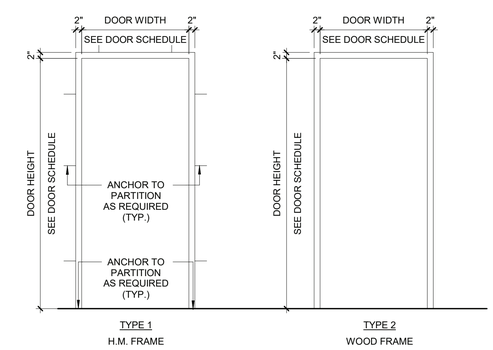

6 DOOR FRAME ELEVATIONS
1/2" = 1'-0"

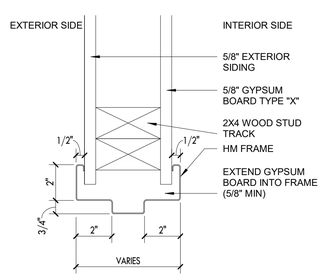

5 DOOR HEAD DETAIL
3" = 1'-0"

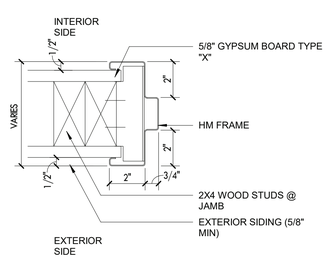

4 DOOR JAMB DETAIL
3" = 1'-0"

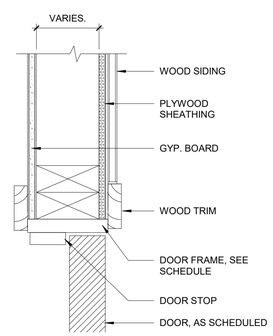

3 DOOR HEAD DETAIL- WOOD DR FR
3" = 1'-0"

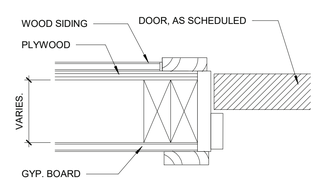

2 DOOR JAMB DETAIL- WOOD DR FR
3" = 1'-0"

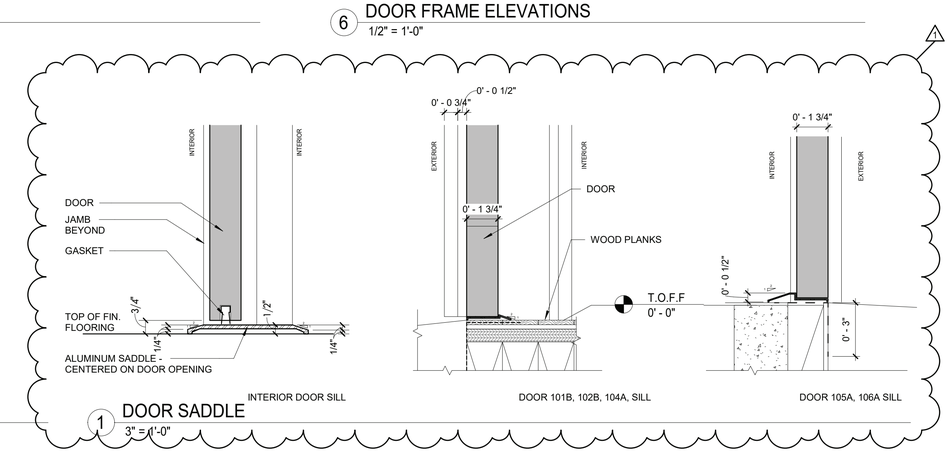

1 DOOR SADDLE
3" = 1'-0"

9/23/2022 6:47:16 AM

CONSULTANT INFORMATION

The LiRo Group
3 Aerial Way, Syosset, New York 11791
(516) 938-5476 www.liro.com

CONSULTANT SEAL

REGISTERED ARCHITECT ROBERT D. TOWNSEND 023280 STATE OF NEW YORK

REVISION NUMBER	DATE	MADE BY	APP'D BY	REVISION
1	09/21/22	EZ		BID ADDENDUM #3

RECORD DRAWING CERTIFICATION
☐ AS BUILT – CHANGES AS NOTED ☐ AS BUILT – NO CHANGES

CONTRACTOR
NAME
SIGNATURE
TITLE DATE

PROJECT COORDINATOR
NAME
SIGNATURE
TITLE DATE

WESTCHESTER COUNTY, NEW YORK
DEPARTMENT OF PUBLIC WORKS AND TRANSPORTATION
DIVISION OF ENGINEERING

INFRASTRUCTURE REHABILITATION PHASE 3
PLAYLAND PARK, RYE, NEW YORK
CROSS AXIS BUILDING A
DOOR & HARDWARE SCHEDULES & DETAILS

CONTRACT NUMBER 22-523
SHEET NUMBER CXA-A-92
DWG NO.: 136 of 664
SCALE: As indicated
DATE: 08/23/2022
DPW FILE NUMBER 1-118-A-885-1
REV. NO. 1

STRUCTURAL NOTES

GENERAL

G–1 THESE NOTES ARE GENERAL AND SUPPLEMENTAL TO THE SPECIFICATIONS. THESE NOTES APPLY TO THE ENTIRE PROJECT UNLESS MODIFIED OR NOTED OTHERWISE IN THE CONTRACT DOCUMENTS.

G–2 STANDARD DETAILS, SHOWN ON DRAWINGS CXA–S–14 THRU CXA–S–17 SHALL BE USED WHEN REFERRED TO OR WHEN NO MORE RESTRICTIVE OR DIFFERENT DETAILS ARE SHOWN ON THE DRAWINGS.

G–3 DESIGN WAS IN ACCORDANCE WITH AND CONSTRUCTION SHALL COMPLY WITH THE PROVISIONS OF THE NEW YORK STATE BUILDING CODE (2020 NYSBC). THE DESIGN LOADS AND OTHER DESIGN VALUES GIVEN BELOW WERE USED FOR DESIGN OF STRUCTURES UON ON THE DRAWINGS.

G–4 DESIGN LOADS FOR NEW ELEMENTS:
LIVE LOADS:
NORTH GAMES BUILDING::
FLOOR: 60 PSF
SNOW LOADS:

GROUND SNOW LOAD,	Pg = 30 PSF
ROOF SNOW LOAD,	Pf= 21 PSF
SNOW EXPOSURE FACTOR,	Ce = 0.9
SNOW LOAD IMPORTANCE FACTOR,	I = 1.1
THERMAL FACTOR,	Ct = 1.0

WIND DESIGN:

BASIC WIND SPEED,	V = 126 MPH
BUILDING CATEGORY:	II
WIND EXPOSURE CATEGORY:	D
INTERNAL PRESSURE COEFFICIENT,	GCpi = ±0.18

SEISMIC DESIGN:
SPECTRAL RESPONSE COEFFICIENTS:

SDS =	0.296
SD1 =	0.096
~~SITE CLASS:~~	B
SEISMIC DESIGN CATEGORY:	B
~~SEISMIC IMPORTANCE FACTOR:~~	I = 1.25

1 (revision)

BASIC SEISMIC FORCE RESISTING SYSTEM IS AS SHOWN ON DRAWINGS
DESIGN BASE SHEAR, V = AS SHOWN ON DRAWINGS
ANALYSIS PROCEDURE IS EQUIVALENT LATERAL FORCE METHOD, UON.
RESPONSE MODIFICATION FACTOR, R:
CROSS AXIS BUILDING A: R = 1 1/2

LOADS INDICATED ABOVE REFLECT DESIGN LOADS FOR ANY NEW OR REHABILITATED STRUCTURAL ELEMENTS. THEY SHOULD NOT BE TAKEN AS DESIGN LOADS FOR THE STRUCTURE AS A WHOLE.

G–5 ALL DIMENSIONS INDICATED (*) ARE TO BE VERIFIED EITHER BY FIELD MEASUREMENTS FOR EXISTING STRUCTURES OR BY SHOP DRAWINGS FOR EQUIPMENT FURNISHED. STRUCTURAL DIMENSIONS NOT SHOWN BUT CONTROLLED BY OR RELATED TO EQUIPMENT SHALL BE VERIFIED BY THE CONTRACTOR WITH THE MANUFACTURER PRIOR TO CONSTRUCTION.

G–6 STRUCTURAL DRAWINGS SHALL BE USED IN COORDINATION WITH THE DRAWINGS OF ALL OTHER DISCIPLINES AND MANUFACTURER'S SHOP DRAWINGS.

G–7 IF A CONFLICT IS FOUND BETWEEN DIFFERENT PORTIONS OF THE CONTRACT DOCUMENTS, THE CONTRACTOR SHALL NOTIFY THE ENGINEER IMMEDIATELY. CONTINUED CONSTRUCTION OF THE AREA IN CONFLICT SHALL BE AT THE CONTRACTOR'S OWN RISK UNTIL THE CONFLICT IS RESOLVED BY THE ENGINEER.

G–8 WHENEVER ONE MEMBER IS FASTENED TO ANOTHER WITH FASTENINGS (BOLTS, WELDS, ETC.) SET AT A UNIFORM SPACING, THERE SHALL BE A MINIMUM OF TWO FASTENINGS PER PIECE CONNECTED AND THE FIRST AND LAST FASTENINGS SHALL BE LOCATED NOT TO EXCEED 0.25 OF FASTENER SPACING FROM EACH END.

G–9 STRUCTURES HAVE BEEN DESIGNED FOR OPERATIONAL LOADS ON THE COMPLETED STRUCTURE. DURING CONSTRUCTION, THE STRUCTURES SHALL BE PROTECTED BY BRACING AND TEMPORARY SUPPORTS WHEREVER EXCESSIVE CONSTRUCTION LOADS MAY OCCUR. OVERSTRESSING OF ANY STRUCTURAL ELEMENT IS PROHIBITED.

G–10 NO BACKFILL SHALL BE PLACED AGAINST ANY WALL UNLESS ALL SUPPORTING ELEMENTS OF THE STRUCTURE HAVE BEEN CONSTRUCTED AND HAVE REACHED THE SPECIFIED MINIMUM CONCRETE STRENGTH.

G–11 THE CONTRACTOR IS RESPONSIBLE FOR VERIFYING ALL EXISTING INFORMATION IN THE FIELD AS REQUIRED FOR NEW WORK.

FOUNDATIONS

F–1 DESIGN ASSUMPTIONS:
A) ALLOWABLE BEARING PRESSURE: 1. SOUND ROCK – 8 TSF, 2. OVERBURDEN – 1 TSF.
B) GROUNDWATER: EXISTING GROUNDWATER ELEVATIONS VARY ACROSS SITE.

F–2 GRAVITY UNDER DRAINS SHALL BE PROVIDED TO PERMANENTLY LOWER GROUNDWATER.

F–3 CONCRETE GENERAL NOTES APPLY TO FOUNDATIONS.

F–4 MINIMUM DEPTH FROM ADJACENT FINISHED GRADE TO BOTTOM OF FOUNDATION, 4'–0"

F–5 FOUNDATIONS BEARING ON ROCK SHALL BE CONSTRUCTED SUCH THAT ROCK SURFACE IS LEVEL, UNLESS APPROVED BY ENGINEER.

F–6 COMPACTED SELECT GRANULAR FILL 12 INCHES THICK MINIMUM, SHALL BE PLACED BELOW ALL CONCRETE FOUNDATIONS UNLESS DIRECTLY BEARING ON SOUND ROCK.

STRUCTURAL METALS

S–1 DETAIL, FABRICATE, AND ERECT STRUCTURAL STEEL IN ACCORDANCE WITH AISC SPECIFICATION FOR STRUCTURAL STEEL BUILDINGS, ALLOWABLE STRESS DESIGN AND LRFD DESIGN (LRFD MANUAL OF STEEL CONSTRUCTION, CURRENT EDITION).

S–2 STEEL MATERIAL:
A) STRUCTURAL TUBING, ASTM A 500, GRADE B.
B) STRUCTURAL PIPE, ASTM A 53, GRADE B.
C) PLATES AND ANGLES, ASTM A 36 UNO.
D) STRUCTURAL W SHAPES, ASTM A 992 (MIN. YIELD STRENGTH OF 50 KSI).
E) STRUCTURAL S, M, & H SHAPES ASTM A572 GRADE 50.

S–3 PROVIDE MIN 3/4" DIAMETER ASTM A 325 HIGH STRENGTH BOLTS WITH FULLY TIGHTENED TYPE N CONNECTIONS FOR STRUCTURAL STEEL UON.

S–4 PROVIDE TYPICAL STEEL BEAM CONNECTIONS FOR A CAPACITY NOT LESS THAN THE TOTAL UNIFORM LOAD CAPACITY TABULATED IN THE AISC TABLES FOR ALLOWABLE LOADS OF BEAMS UNLESS NOTED OTHERWISE.

S–5 CAST IN PLACE ANCHOR BOLTS FOR STRUCTURAL STEEL SHALL CONFORM TO ASTM A307 UON.

S–6 DO NOT PAINT STEEL SURFACES WHICH ARE TO BE WELDED OR ARE TO BE ENCASED IN CONCRETE.

S–7 STAINLESS STEEL SHALL BE TYPE 316 FOR BOLTED CONSTRUCTIONS AND 316L FOR WELDED CONSTRUCTIONS.

S–8 ALUMINUM SHALL BE ALLOY 6061–T6.

S–9 ALL GROOVE AND BUTT WELDS SHALL BE FULL PENETRATION.

S–10 FILLET WELD SIZES SHALL BE THE MINIMUM SIZE REQUIRED BY AISC CODE FOR PLATE SIZES TO BE CONNECTED AND SHALL BE APPLIED TO THE ENTIRE JOINT CONTACT LENGTH, BUT NOT LESS THAN 3/16".

S–11 DETAIL, FABRICATE, AND ERECT ALUMINUM IN ACCORDANCE WITH THE ALUMINUM ASSOCIATION CONSTRUCTION MANUAL CURRENT EDITION.

S–12 ALL BOLTS, ANCHOR BOLTS, AND CONCRETE ANCHORS CONNECTING ALUMINUM SHALL BE TYPE 316 STAINLESS STEEL UON.

S–13 ALUMINUM SHALL BE ISOLATED FROM CONTACT WITH CONCRETE OR DISSIMILAR METALS.

EXCAVATION

E–1 CONTRACTOR SHALL PERFORM ALL EXCAVATION IN ACCORDANCE WITH STATE, LOCAL AND FEDERAL REQUIREMENTS INCLUDING OSHA BRACING AND EXCAVATION REQUIREMENTS.

E–2 TEMPORARY SHEETING AND BRACING IS NOT SHOWN ON CONTRACT DRAWINGS. ALL EXCAVATIONS WITH A POTENTIAL FOR CAVE–IN SHALL BE PROVIDED WITH EXCAVATION PROTECTION SYSTEMS IN ACCORDANCE WITH OSHA 1926. SLOPING AND BENCHING WHICH WILL ENCROACH ON AREAS SLATED TO REMAIN ACCESSIBLE OR THAT MAY ENCROACH ON EXISTING FOOTINGS AND STRUCTURES SHALL NOT BE PERMITTED.

E–3 CONTRACTOR SHALL ENGAGE THE SERVICES OF A LICENSED PROFESSIONAL ENGINEER REGISTERED IN THE STATE OF NEW YORK TO DESIGN ALL TEMPORARY SHEETING AND BRACING AND RELATED APPURTENANCES. CONTRACTOR TO SUBMIT SUCH PLANS TO ENGINEER FOR INFORMATION.

E–4 CONTRACTOR SHALL BE RESPONSIBLE FOR DEWATERING OF OPEN EXCAVATIONS.

E–5 ALL EXCAVATED MATERIALS SHALL BE REMOVED FROM SITE TO A FACILITY AS REQUIRED BY STATE, LOCAL FEDERAL LAW.

TIMBER

T–1 ALL WOOD FRAMING MEMBERS INCLUDING, BUT NOT LIMITED TO, WALL STUDS AND JOISTS, ARE INTENDED TO ACT AS A SYSTEM AS DETAILED IN THE STRUCTURAL DRAWINGS AND ONCE CONSTRUCTION IS COMPLETE. IT IS THE RESPONSIBILITY OF THE CONTRACTOR TO ENSURE SAFETY AND STABILITY OF WOOD FRAMING SYSTEMS (I.E. TEMPORARY BRACING IF REQUIRED) DURING CONSRTUCTION AS A RESULT OF CONSTRUCTION METHODS AND SEQUENCES.

T–2 ALL TIMBER BELOW FLOOR DECKING SHALL BE PRESSURE–TREATED SOUTHERN PINE LUMBER.

T–3 STORAGE OF ALL LUMBER AND TIMBER ON SITE SHALL BE KEPT OFF GROUND, UNDER COVER AND PROTECTED FROM DAMAGE.

T–4 ALL DIMENSIONAL LUMBER SHALL BE CERTIFIED BY THE SUPPLIER IN WRITING TO BE KILN DRIED.

T–5 STRUCTURE SHALL NOT BE ENCLOSED UNLESS LUMBER MOISTURE CONTENT HAS BEEN VERIFIED TO BE AT OR BELOW 15%. ANY SIGNS OF MOLD SHALL BE REMOVED AND TREATED IN ACCORDANCE WITH PROJECT SPECIFICATIONS OR INDUSTRY STANDARDS.

T–6 ALL LUMBER IN CONTACT WITH THE GROUND OR CONCRETE SHALL BE PRESSURE TREATED.

T–7 FASTENERS FOR PRESERVATIVE TREATED AND FIRE RETARDANT TREATED WOOD SHALL BE OF HOT DIPPED ZINC COATED GALVANIZED STEEL OR STAINLESS STEEL AND SHALL FOLLOW CURRENT SIMPSON GUIDELINES BASED ON WEATHER EXPOSURE. WHERE STAINLESS STEEL CONNECTORS OR HOT DIPPED GALVANIZED CONNECTORS ARE SPECIFIED IN THE DRAWINGS, STAINLESS STEEL OR HOT DIPPED GALVANIZED FASTENERS SHALL BE USED TO MATCH CONNECTOR TYPE.

T–8 ALL PLATES AND LEDGERS SHALL BE FASTENED WITH A MINIMUM (3) ANCHORS PER PIECE UNLESS NOTED OTHERWISE.

T–9 ALL METAL HARDWARE AND FRAMING ACCESSORIES SHALL BE MANUFACTURED BY SIMPSON STRONG–TIE COMPANY. ALL ITEMS SHALL BE INSTALLED PER THE SIMPSON'S INSTALLATION REQUIREMENTS. ALL NAIL HOLES SHALL BE FILLED WITH THE RECOMMENDED FASTENER UNLESS NOTED OTHERWISE ON THE DRAWING.

T–10 HOLES FOR BOLTS SHALL BE DRILLED WITH A BIT OF THE SAME NOMIMAL DIAMETER AS THE BOLT + 1/16". LEAD HOLES FOR LAG SCREWS SHALL BE BORED PER NDS 11.1.3.

T–11 ALL BOLTS, CARRIAGE BOLTS, LAG SCREWS, EXPANSION BOLTS AND EPOXY BOLTS SHALL BE INSTALLED WITH STANDARD CUT WASHERS UNDER THE BOLT HEAD AND NUTS THAT BEAR DIRECTLY ON THE WOOD. ALL NUTS SHALL BE TIGHTENED AT THE TIME OF INSTALLATION AND RE–TIGHTENED IF NECESSARY, DUE TO WOOD SHRINKAGE, PRIOR TO CLOSE OUT OR COMPLETION OF THE PROJECT. BOLTS AND LAG SCREWS SHALL CONFORM TO ANSI/ASME STANDARD B18.2.1. WOOD SCREWS SHALL CONFORM TO B18.6.1. ALL BOLTS SHALL CONFORM TO ASTM A307 GRADE A UNLESS NOTED OTHERWISE.

T–12 CUTTING AND NOTCHING OF SAWN LUMBER RAFTERS AND STUDS SHALL BE IN CONFORMANCE WITH THE FOLLOWING CRITERIA:

A. JOISTS NOTCHES AT THE ENDS OF JOISTS SHALL NOT EXCEED 1/5 OF THE JOIST DEPTH. HOLES IN JOISTS SHALL NOT BE WITHIN 2 1/2 INCHES OF THE TOP OR BOTTOM OF THE JOIST, AND THE DIAMETER OF ANY SUCH HOLE SHALL NOT EXCEED 1/4 THE DEPTH OF THE JOIST. NOTCHES IN THE TOP OR BOTTOM OF THE JOISTS SHALL NOT EXCEED 1/6 THE DEPTH AND SHALL NOT BE LOCATED IN THE MIDDLE OF THE THIRD SPAN.

B. RAFTERS NOTCHES AT THE ENDS OF RAFTERS OR CEILING JOISTS SHALL NOT EXCEED 1/5 OF THE DEPTH. NOTCHES IN THE TOP OR BOTTOM OF THE RAFTER OR CEILING JOIST SHALL NOT EXCEED 1/6 THE DEPTH AND SHALL NOT BE LOCATED IN THE MIDDLE 1/3 OF THE SPAN. EXCEPT THAT A NOTCH NOT EXCEEDING 1/3 OF THE DEPTH IS PERMITTED IN THE TOP OF THE RAFTERS OR CEILING JOIST NOT FURTHER FROM THE FACE OF THE SUPPORT THAN THE DEPTH OF THE MEMBER. HOLES BORED IN RAFTERS OR CEILING JOISTS SHALL NOT BE WITHIN 2 1/2" INCHES OF THE TOP AND BOTTOM AND THEIR DIAMETER SHALL NOT EXCEED 1/4 THE DEPTH OF THE MEMBER.

C. WALL STUDS A MAXIMUM OF 2 1/4" DIAMETER NEATLY BORED HOLE MAY BE PLACED IN THE CENTER OF ALL BEARING 2x6 STUDS WITH NO ADDITIONAL REINFORCEMENT REQUIRED.

T–13 ALL STRUCTURAL TIMBER FRAMING SHALL COMPLY WITH CHAPTER 16 OF THE 2020 NYSBC.

1

SPECIAL INSPECTIONS – CROSS AXIS BUILDING A

S–1 SPECIAL INSPECTION SHALL COMPLY WITH SPECIFICATIONS.

S–2 SPECIAL INSPECTION WILL BE PERFORMED IN ACCORDANCE WITH CHAPTER 17 OF THE NYS BUILDING CODE.

S–3 SPECIAL INSPECTION WILL BE PERFORMED ON THE FOLLOWING STRUCTURAL SYSTEMS:
A) STRUCTURAL STEEL CONSTRUCTION (1705.5).
B) WOOD CONSTRUCTION (1705.4).
C) CONCRETE CONSTRUCTION (1705.3).
D) SOILS (1705.6).
E) WIND RESISTANCE (1705.11).
F) SEISMIC RESISTANCE (1705.11).

CONCRETE (EXCEPT PRECAST)

C–1 CONCRETE STRENGTH CLASSES (28–DAY COMPRESSIVE STRENGTH):
CLASS A (5000 PSI) STRUCTURES, REINFORCED DUCT BANKS, AND PIPE ENCASEMENT. FOR CONCRETE WALLS GREATER THAN 2 FEET THICK FOLLOW ACI RECOMMENDATIONS FOR MASS CONCRETE.
CLASS D (2500 PSI) SIDEWALKS, CURBS AND GUTTERS, CONCRETE FILL, THRUST BLOCKS, UNREINFORCED DUCT BANKS AND PIPE ENCASEMENT, FENCE POST EMBEDMENT.

C–2 REINFORCEMENT: ASTM A615, GRADE 60, OR ASTM A706, GRADE 60 WHERE REINFORCEMENT IS TO BE WELDED.

C–3 CONCRETE COVER FOR REINFORCING:
A) SURFACES CAST AGAINST SUBGRADE 3" MIN.
B) FORMED SURFACES IN CONTACT WITH SOIL OR LIQUID 2" MIN.
C) SURFACES NOT IN CONTACT WITH WEATHER, SOIL, OR LIQUID 1 1/2" MIN.

C–4 CONSTRUCTION JOINTS & CONTROL JOINTS SHALL BE LOCATED AS SHOWN ON THE DRAWINGS. WHERE NOT SHOWN, CONSTRUCTION JOINTS SHALL BE LOCATED AT NO MORE THAN 30 FEET ON CENTER. JOINT LOCATIONS SHALL BE AS APPROVED BY THE ENGINEER.

C–5 EQUIPMENT SUPPORTS, ANCHORAGES, OPENINGS, RECESSES AND REVEALS NOT SHOWN ON THE STRUCTURAL DRAWINGS BUT REQUIRED BY OTHER DISCIPLINES, SHALL BE PROVIDED FOR PRIOR TO PLACING CONCRETE.

C–6 SPLICES SHALL BE CLASS 'B' CONFORMING TO THE PROVISIONS OF ACI 318 UNLESS NOTED OTHERWISE.

C–7 AT ALL TYPICAL CURBS, EQUIPMENT PADS, AND PIPE SUPPORT PIERS, REINFORCING DOWELS SHOWN MAY BE REPLACED WITH MATCHING DOWELS SET IN EPOXY IN DRILLED HOLES AS SPECIFIED. DOWELS LOCATED CLOSER THAN 3" FROM ANY EDGE OF CONCRETE SHALL NOT BE REPLACED WITH DRILLED DOWELS.

C–8 DRILLED EPOXY DOWELS (WHERE DOWELS ARE SHOWN TO BE PLACED INTO HARDENED CONCRETE):
A) THE HOLE DIAMETER SHALL BE NO LARGER THAN 1/8" GREATER THAN THE DIAMETER OF THE REINFORCING BAR AT THE DEFORMATIONS.
B) THE DEPTH OF EMBEDMENT SHALL BE 12 BAR DIAMETERS, UNLESS SHOWN OTHERWISE.
C) ADJUST THE DOWEL LOCATIONS AS NEEDED TO AVOID DRILLING THROUGH ANY REINFORCING BARS.IF THE DOWEL LOCATION NEEDS TO BE MODIFIED, CONTACT THE ENGINEER.

C–9 SLABS WITH SLOPING SURFACES SHALL HAVE THE INDICATED SLAB THICKNESS MAINTAINED AS THE MINIMUM. SLAB BOTTOMS CAN EITHER SLOPE WITH THE TOP SURFACE OR BE LEVEL. REINFORCEMENT IN SLABS WITH SLOPING SURFACES SHALL BE PLACED AT THE REQUIRED CLEARANCE FROM THE SLAB SURFACE.

C–10 SLOPES SHOWN ON SLAB SURFACES BY FLOW ARROWS SHALL BE 1.0 PERCENT UNLESS NOTED OTHERWISE.

C–11 WHERE HORIZONTAL CONSTRUCTION JOINTS, LOCATED ABOVE THE FOUNDATION SLAB, EXTEND BEYOND WHERE NEEDED, THEY SHALL BE TERMINATED AT A VERTICAL CONSTRUCTION JOINT APPROVED BY THE ENGINEER.

C–12 DOWELS, ANCHOR BOLTS, PIPES, WATERSTOPS AND OTHER EMBEDDED ITEMS SHALL BE HELD SECURELY IN POSITION WHILE CONCRETE IS BEING PLACED.

C–13 CONDUITS AND OTHER SIMILAR ITEMS EMBEDDED IN OR PENETRATING THROUGH CONCRETE SHALL BE SPACED ON CENTER NOT LESS THAN 3 TIMES THEIR OUTSIDE DIMENSION, BUT NOT LESS THAN 2 1/2" CLEAR IN CLASS 45F CONCRETE OR 2" CLEAR IN CLASS 45 CONCRETE. SUCH ITEMS SHALL NOT EXCEED 1/3 OF THE MEMBER THICKNESS.

C–14 REINFORCING BARS AND ACCESSORIES SHALL NOT BE IN CONTACT WITH ANY METAL PIPE, PIPE FLANGE, METAL CONDUIT, OR OTHER METAL PARTS EMBEDDED IN CONCRETE. A MINIMUM CLEARANCE OF 2 INCHES SHALL BE PROVIDED.

C–15 ALL JOINTS WHICH ARE IN MEMBERS IN CONTACT WITH LIQUID OR BELOW GRADE SHALL HAVE A WATERSTOP. CONSTRUCTION JOINTS SHALL HAVE A 6" PVC FLATSTRIP WATERSTOP. EXPANSION JOINTS SHALL HAVE A 9" PVC CENTERBULB WATERSTOP.

C–16 IN VERTICAL JOINTS, WATERSTOP SHALL STOP NO LESS THAN 18" ABOVE THE MAXIMUM WATER SURFACE OR 18" ABOVE GRADE, WHICHEVER IS HIGHER.

C–17 AT JOINT INTERSECTIONS, WATERSTOPS SHALL BE CONNECTED SO AS TO FORM A COMPLETE SEAL USING CONNECTION PIECES AS NEEDED.

C–18 ALL EXPOSED CORNERS SHALL HAVE A 3/4" CHAMFER OR A 1/2" RADIUS TOOLED CORNER.

DEMOLITION

LEGEND

EXISTING REINFORCED CONCRETE WALL OR STRUCTURE TO BE DEMOLISHED

SAW CUT LINE – FULL DEPTH UNLESS NOTED OTHERWISE

D–1 CONTRACTOR IS ALERTED THAT LIMITS OF DEMOLITION SHOWN IS APPROXIMATE. ACTUAL LIMITS SHALL BETHE MINIMUM REQUIRED FOR NEW STRUCTURE. CONTRACTOR TO CO–ORDINATE AND SUBMIT DEMOLITION PROCEDURE PER SPECIFICATIONS.

D–2 ALL ITEMS SHOWN ARE EXISTING TO REMAIN UNLESS NOTED OTHERWISE.

D–3 FOR ADDITIONAL DEMOLITION REQUIREMENTS SEE SPECIFICATIONS (024116).

D–4 ALL EXISTING CONCRETE TO BE DEMOLISHED IS STEEL REINFORCED UNLESS NOTED OTHERWISE. REINFORCING STEEL NOT SHOWN FOR CLARITY.

D–5 FOR ADDITIONAL DEMOLITION NOT SHOWN, SEE G, A, M, E, H, AND P DRAWINGS.

D–6 PRIOR TO DEMOLITION, CONTRACTOR IS REQUIRED TO POSESS AN ASBESTOS CONTAINMENT MATERIALS (ACM) PERMIT FROM THE DEPARTMENT OF LABOR.

1

CONSULTANT INFORMATION

Savin Engineers, P.C.

CONSULTANT SEAL

STATE OF NEW YORK · HUSSEIN MOHAMED ELKHATIB · LICENSED PROFESSIONAL ENGINEER · No. 065364

REVISION NUMBER	DATE	MADE BY	APP'D BY	REVISION
1	9/21/22	DH	HME	BID ADDENDUM #3

RECORD DRAWING CERTIFICATION

☐ AS BUILT – CHANGES AS NOTED ☐ AS BUILT – NO CHANGES

CONTRACTOR	PROJECT COORDINATOR
NAME ______	NAME ______
SIGNATURE ______	SIGNATURE ______
TITLE ______ DATE ______	TITLE ______ DATE ______

WESTCHESTER COUNTY, NEW YORK
DEPARTMENT OF PUBLIC WORKS AND TRANSPORTATION
DIVISION OF ENGINEERING

INFRASTRUCTURE REHABILITATION - PHASE 3
PLAYLAND PARK, RYE, NEW YORK
CROSS AXIS BUILDING A
STRUCTURAL NOTES

CONTRACT NUMBER	22-523
SHEET NUMBER	CXA-S-01
DWG NO.:	139 of 664
SCALE:	AS SHOWN
DATE:	8/23/2022
DPW FILE NUMBER	1-118-S-888-1
REV. NO.	1

Drawing Name: G:\SavinAutocad\2060\25–Playland–Mega–3\S\CXAS–1001.dwg
Rev#: Projectname: 211001F02 Comments: ––––
Printed by: MGodby Date: 20 September 2022 2:27 PM Designed by: ––––
Xrefs: [TB_24X36_WestchesterCo_3.dwg] [TSG–SVLOGO.dwg] [BCR–A–04.dwg] [BCRE–101.dwg]

NOTES:

1. CONTRACTOR SHALL SUBMIT A COLUMN REPAIR SEQUENCE OF CONSTRUCTION TO ENGINEER FOR REVIEW. THE FOLLOWING SHALL BE THE MINIMUM REQUIRED.
2. TEMPORARY SHORING AT EACH COLUMN LOCATION SHALL HAVE A MINIMUM 10–TON CAPACITY.
3. COLUMN REPAIR SHALL BE LIMITED TO MAXIMUM 2 COLUMNS AT A TIME. COLUMNS UNDER REPAIR MUST NOT BE ADJACENT TO EACH OTHER.
4. ALL HARDWARE SHALL BE TYPE 316 STAINLESS STEEL, UNLESS OTHERWISE NOTED.
5. SUPPORT OF EXCAVATION SYSTEM SHALL BE DESIGNED BY A NYS LICENSED PROFESSIONAL ENGINEER HAVING KNOWLEDGE IN THIS DISCIPLINE. DRAWINGS SHALL BE SUBMITTED TO WESTCHESTER COUNTY BUILDING AND CODE ENFORCEMENT DIVISION FOR REVIEW PRIOR TO COMMENCEMENT OF WORK. SEE SPECIFICATION 31 41 00 FOR ADDITIONAL REQUIREMENTS.
6. NEW DOMESTIC WATER PIPING SHALL BE ROUTED UNDER EXISTING GRADE BEAMS AND AROUND EXISTING FOOTINGS.

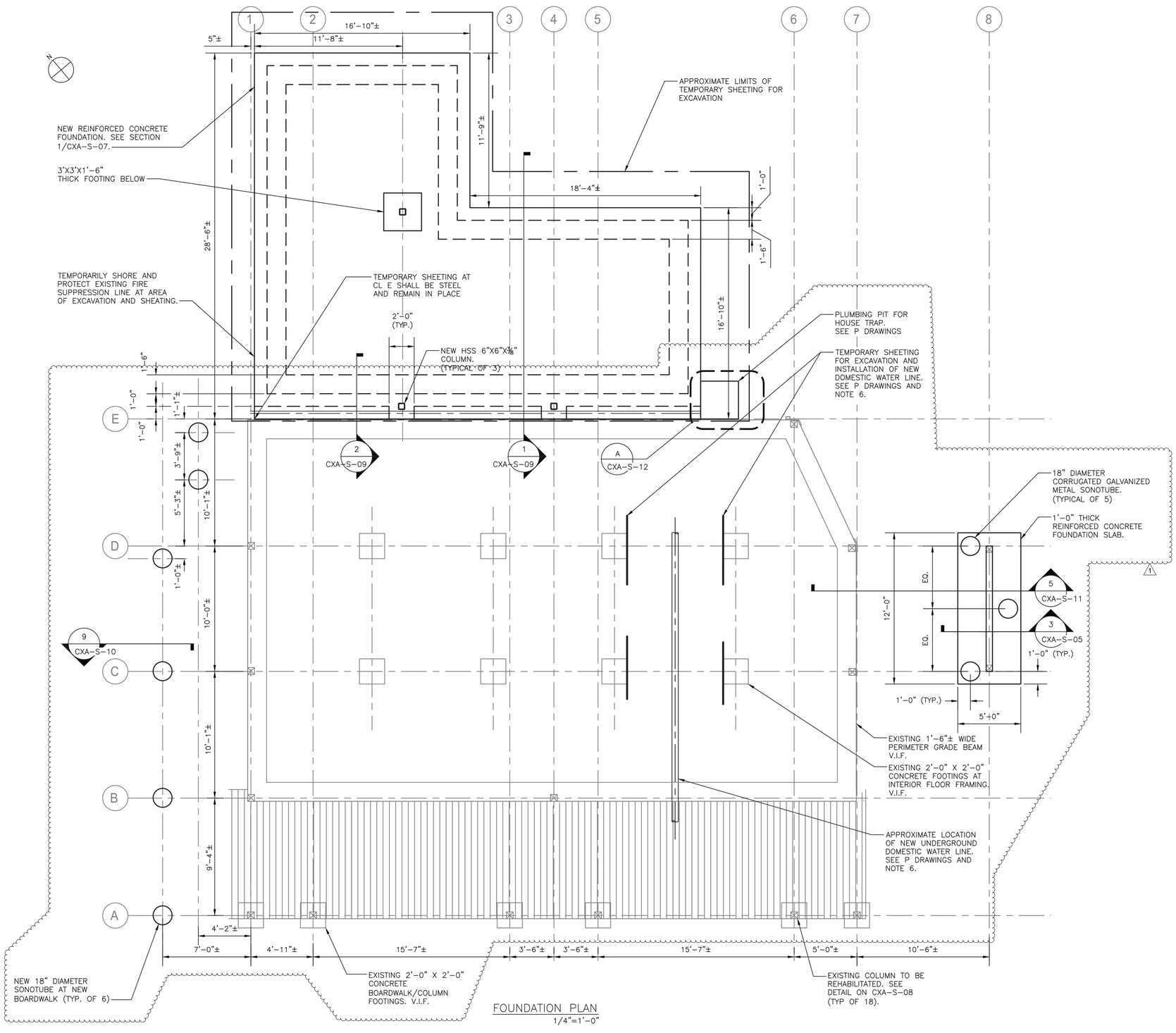

FOUNDATION PLAN
1/4"=1'–0"

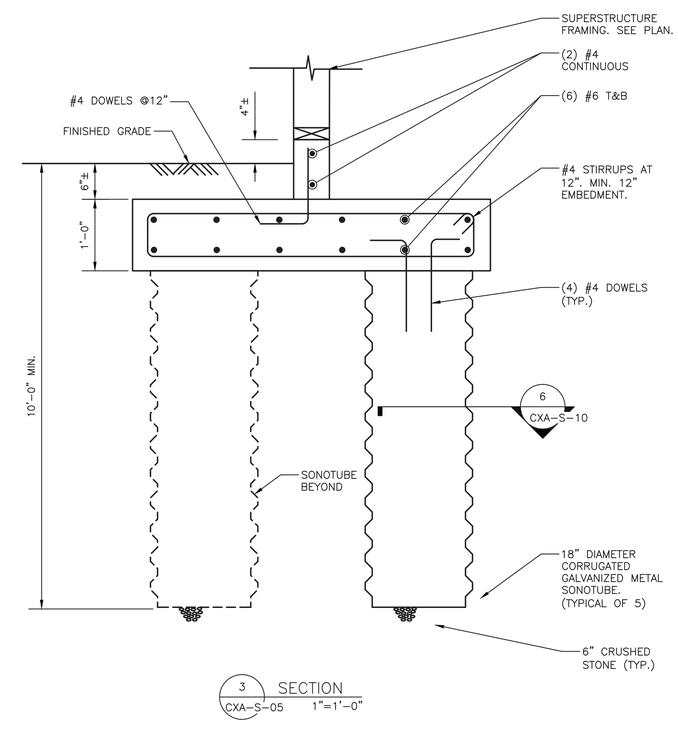

3 SECTION
CXA–S–05 1"=1'–0"

SCALE: 1" = 1'–0"

SCALE: 1/4" = 1'–0"

CONSULTANT INFORMATION	CONSULTANT SEAL
Savin Engineers, P.C.	STATE OF NEW YORK — LICENSED PROFESSIONAL ENGINEER — No. 095383

REVISION NUMBER	DATE	MADE BY	APP'D BY	REVISION
1	9/21/22	DH	HME	BID ADDENDUM #3

RECORD DRAWING CERTIFICATION

☐ AS BUILT – CHANGES AS NOTED ☐ AS BUILT – NO CHANGES

CONTRACTOR: NAME / SIGNATURE / TITLE / DATE

PROJECT COORDINATOR: NAME / SIGNATURE / TITLE / DATE

WESTCHESTER COUNTY, NEW YORK
DEPARTMENT OF PUBLIC WORKS AND TRANSPORTATION
DIVISION OF ENGINEERING

INFRASTRUCTURE REHABILITATION - PHASE 3
PLAYLAND PARK, RYE, NEW YORK
CROSS AXIS BUILDING A
FOUNDATION PLAN

CONTRACT NUMBER	SHEET NUMBER
22-523	CXA-S-05

DWG NO.: 143 of 664
SCALE: AS SHOWN
DATE: 8/23/2022
DPW FILE NUMBER: 1-118-S-892-1 REV. NO. 1

Drawing Name: G:\SavinAutocad\2060\25-Playland-Mega-3\S\CXAS-1005.dwg
Rev# Projectname: 211001F02 Comments: ----
Printed by: MGodby Date: 20 September 2022 2:27 PM Designed by: ----
Xrefs: [TB_24X36_WestchesterCo_3.dwg] [TSIC-SVL000.dwg] [CXA-S-1006.dwg] [CXA-S-Underground.dwg] [CXA-A-00.dwg]

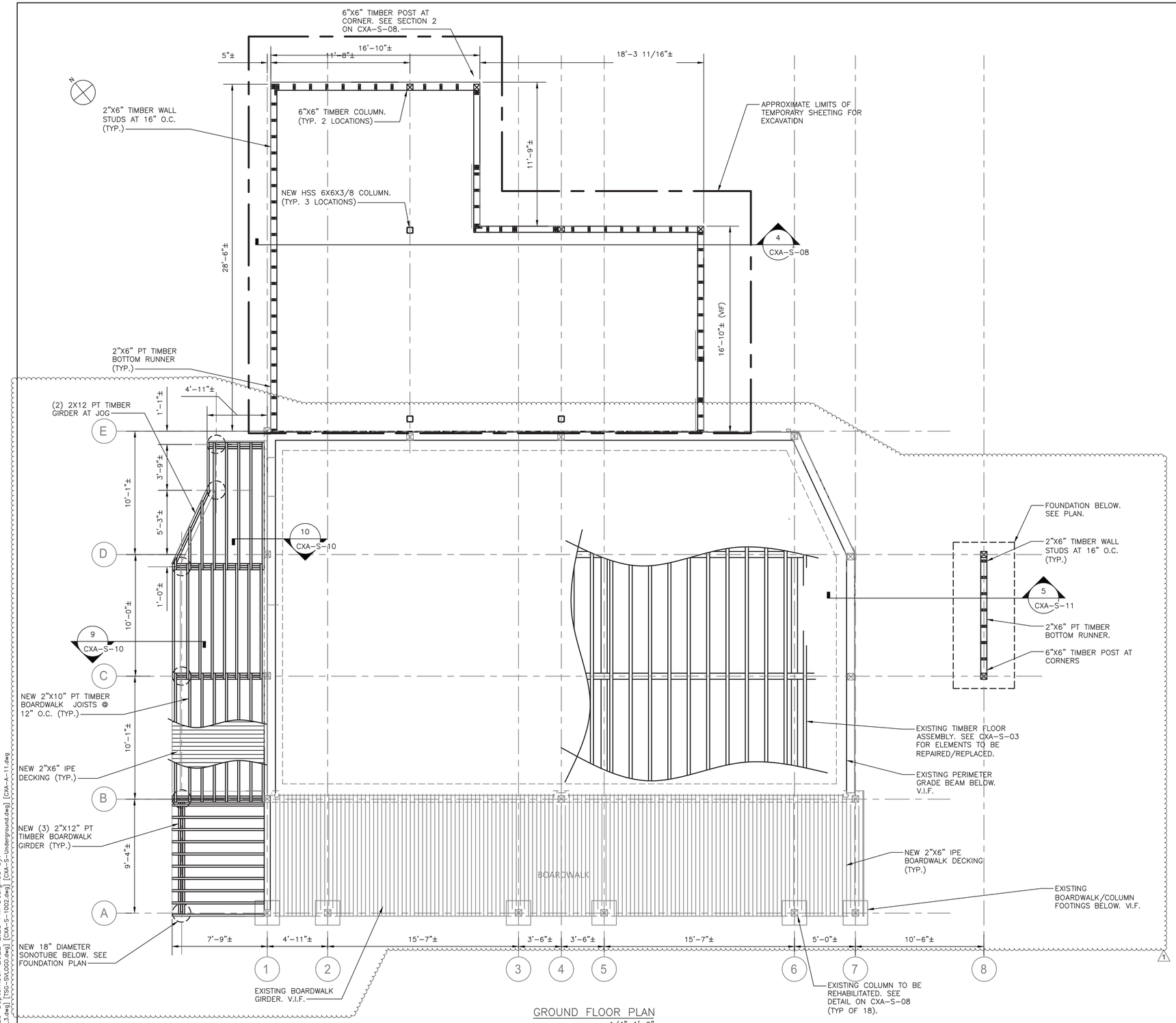

GROUND FLOOR PLAN
1/4"=1'-0"

NOTES:

1. FOR STRUCTURAL NOTES, SEE DRAWING CXA-S-01.
2. FOR STRUCTURAL NOTES AND ABBREVIATIONS, SEE DRAWINGS CXA-S-02.
3. CONTRACTOR IS ALERTED OF HIGH WATER TABLE AND SHALL INCLUDE IN THEIR BID, ALL COSTS ASSOCIATED WITH DEWATERING.
4. SEE CIVIL DRAWINGS FOR SURFACE RESTORATION.
5. COORDINATE INTERIOR WALL LAYOUTS AND OPENINGS WITH ARCHITECTURAL DRAWINGS.

0 4' 8'
SCALE: 1/4" = 1'-0"

CONSULTANT INFORMATION
Savin Engineers, P.C.

CONSULTANT SEAL
STATE OF NEW YORK · LICENSED PROFESSIONAL ENGINEER · No. 065364

REVISION NUMBER	DATE	MADE BY	APP'D BY	REVISION
1	9/21/22	DH	HME	BID ADDENDUM #3

RECORD DRAWING CERTIFICATION
☐ AS BUILT – CHANGES AS NOTED ☐ AS BUILT – NO CHANGES

CONTRACTOR
NAME
SIGNATURE
TITLE DATE

PROJECT COORDINATOR
NAME
SIGNATURE
TITLE DATE

WESTCHESTER COUNTY, NEW YORK
DEPARTMENT OF PUBLIC WORKS AND TRANSPORTATION
DIVISION OF ENGINEERING

INFRASTRUCTURE REHABILITATION - PHASE 3
PLAYLAND PARK, RYE, NEW YORK
CROSS AXIS BUILDING A
GROUND FLOOR PLAN

CONTRACT NUMBER	22-523
SHEET NUMBER	CXA-S-06
DWG NO.:	144 of 664
SCALE:	AS SHOWN
DATE:	8/23/2022
DPW FILE NUMBER	1-118-S-893-1
REV. NO.	1

Drawing Name: G:\SavinAutocad\2060\25-Playland-Mega-3\S\CXAS-1006.dwg
Projectname: 211001F02 Comments: ----
Printed by: MGadby Date: 20 September 2022 2:28 PM Designed by: ----
Reef: ----
Xrefs: [TB_24X36_WestchesterCo_3.dwg] [TSG-SVL000.dwg] [CXA-S-1002.dwg] [CXA-S-Underground.dwg] [CXA-A-11.dwg]

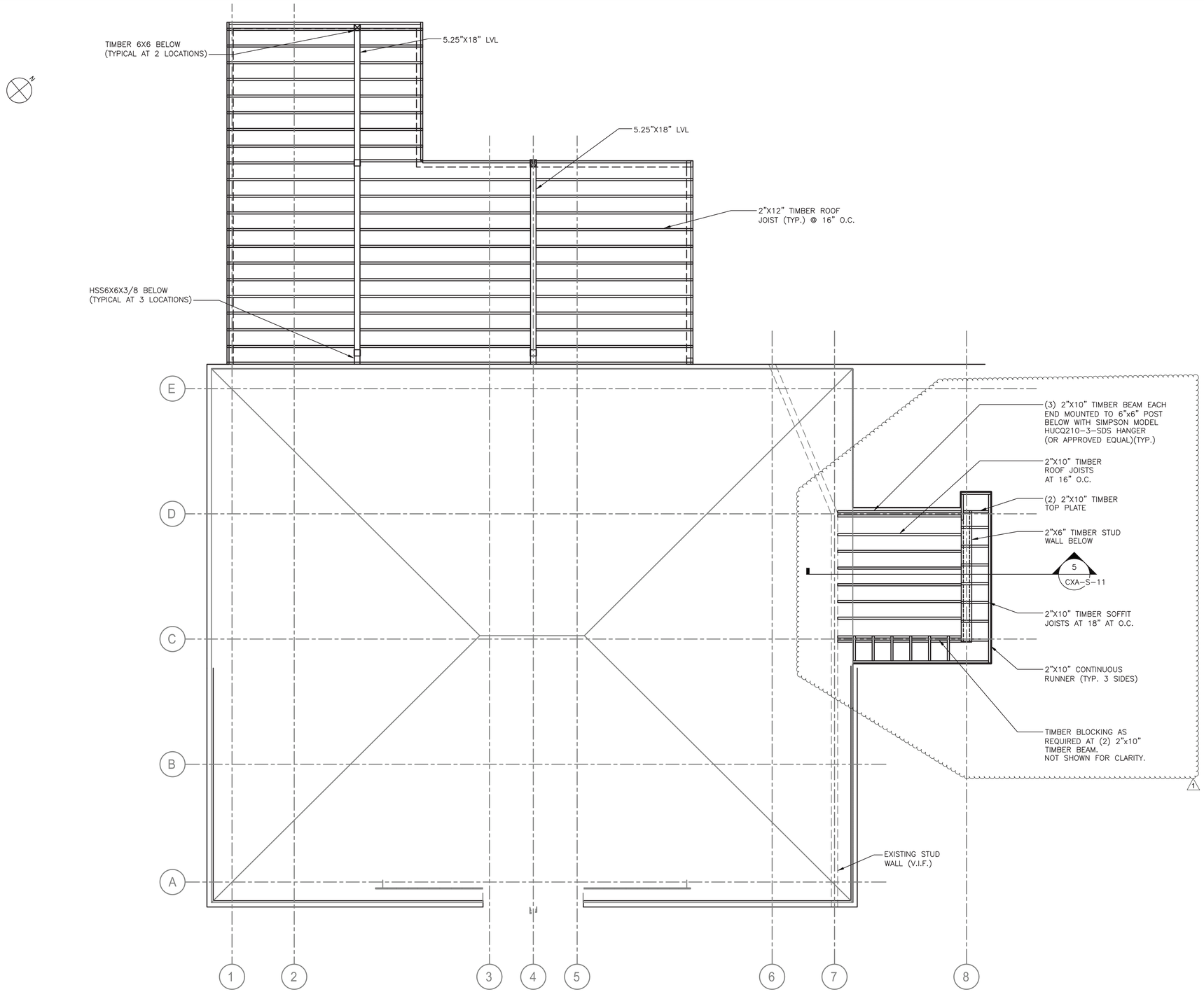

ROOF PLAN
1/4"=1'-0"

SCALE: 1/4" = 1'-0"

Drawing Name: G:\SavinAutocad\2060\25-Playland-Mega-3\S\CXAS-1007.dwg
Rev#: Projectname: 211001F02 Comments: ----
Printed by: MGodby Date: 20 September 2022 2:28 PM Designed by: ----
Xrefs: [TB_24X36_WestchesterCo_3.dwg] [TSG-SVLOGO.dwg] [CXA-S-1004.dwg] [CXA-A-02.dwg]

CONSULTANT INFORMATION

Savin Engineers, P.C.

CONSULTANT SEAL

REVISION NUMBER	DATE	MADE BY	APP'D BY	REVISION
1	9/21/22	DH	HME	BID ADDENDUM #3

RECORD DRAWING CERTIFICATION

☐ AS BUILT – CHANGES AS NOTED ☐ AS BUILT – NO CHANGES

CONTRACTOR
NAME
SIGNATURE
TITLE DATE

PROJECT COORDINATOR
NAME
SIGNATURE
TITLE DATE

WESTCHESTER COUNTY, NEW YORK
DEPARTMENT OF PUBLIC WORKS AND TRANSPORTATION
DIVISION OF ENGINEERING

INFRASTRUCTURE REHABILITATION - PHASE 3
PLAYLAND PARK, RYE, NEW YORK
CROSS AXIS BUILDING A
ROOF PLAN

CONTRACT NUMBER	22-523
SHEET NUMBER	CXA-S-07
DWG NO.:	145 of 664
SCALE:	AS SHOWN
DATE:	8/23/2022
DPW FILE NUMBER	1-118-S-894-1
REV. NO.	1

NOTES:

1. INTERMEDIATE STUD FRAMING NOT SHOWN FOR CLARITY. SEE GROUND FLOOR PLAN AND TYPICAL DETAILS. SEE A DRAWINGS FOR OPENING SIZES AND LOCATIONS.
2. SEE TYPICAL DETAILS FOR FRAMING HARDWARE ON CXA-S-11.

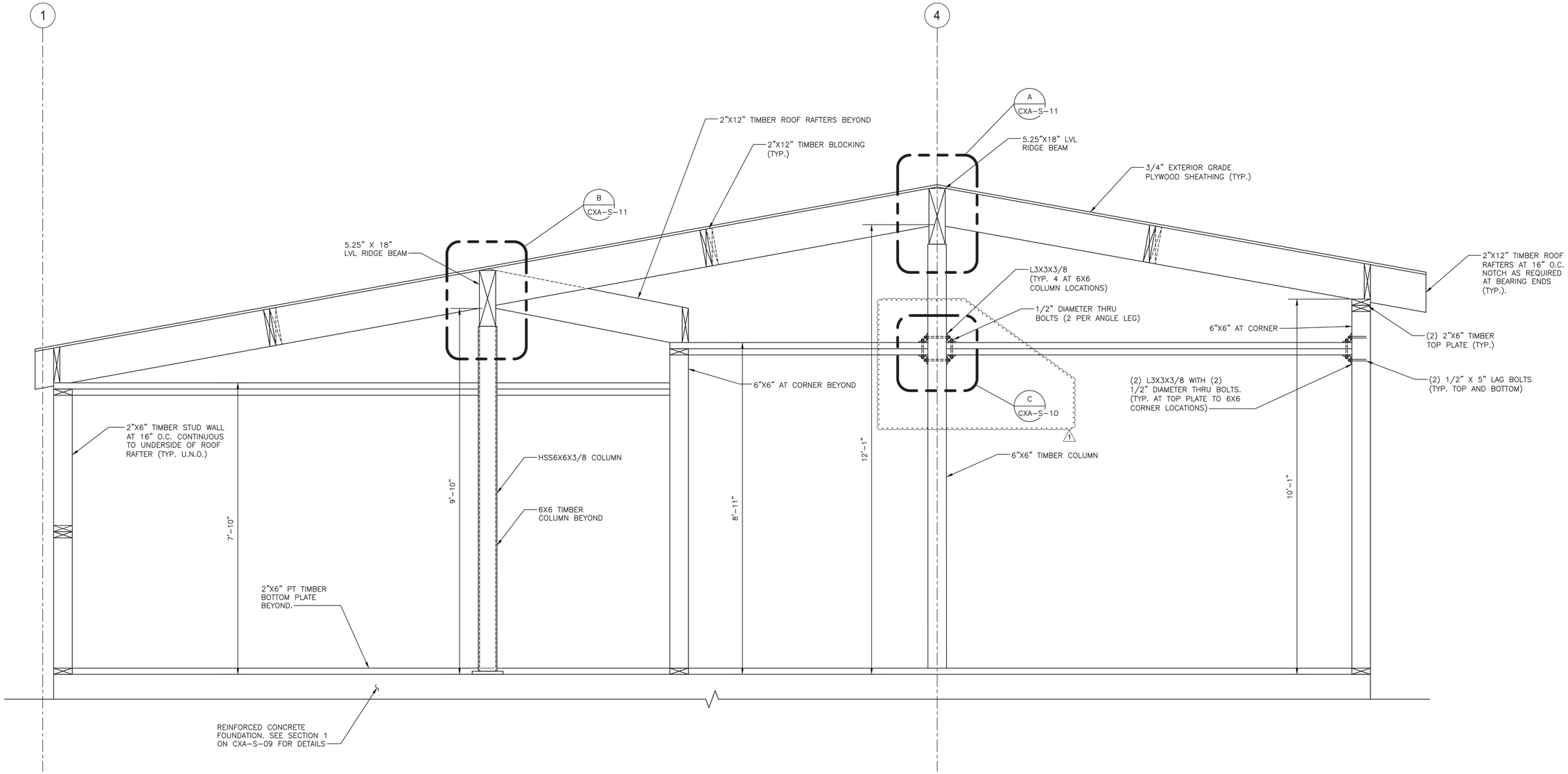

4 CXA-S-06 SECTION 3/4"=1'-0"

SCALE: 3/4" = 1'-0"

Drawing Name: G:\SavinAutocad\2060\25-Playland-Mega-3\S\CXAS-1008.dwg
Projectname: 211001F02 Comments: ----
Printed by: MGodby Date: 20 September 2022 2:28 PM Designed by: ----
Rev#:
Xrefs: [TB_24X36_WestchesterCo_3.dwg] [TSG-SVLOGO.dwg] [CXA-S-SECT0004.dwg]

CONSULTANT INFORMATION

Savin Engineers, P.C.

CONSULTANT SEAL

STATE OF NEW YORK — LICENSED PROFESSIONAL ENGINEER

REVISION NUMBER	DATE	MADE BY	APP'D BY	REVISION
1	9/21/22	DH	HME	BID ADDENDUM #3

RECORD DRAWING CERTIFICATION

☐ AS BUILT – CHANGES AS NOTED ☐ AS BUILT – NO CHANGES

CONTRACTOR
NAME
SIGNATURE
TITLE DATE

PROJECT COORDINATOR
NAME
SIGNATURE
TITLE DATE

WESTCHESTER COUNTY, NEW YORK
DEPARTMENT OF PUBLIC WORKS AND TRANSPORTATION
DIVISION OF ENGINEERING

INFRASTRUCTURE REHABILITATION - PHASE 3
PLAYLAND PARK, RYE, NEW YORK
CROSS AXIS BUILDING A
GROUND FLOOR PLAN

CONTRACT NUMBER	22-523
SHEET NUMBER	CXA-S-08
DWG NO.:	146 of 664
SCALE:	AS SHOWN
DATE:	8/23/2022
DPW FILE NUMBER	1-118-S-895-1
REV. NO.	1

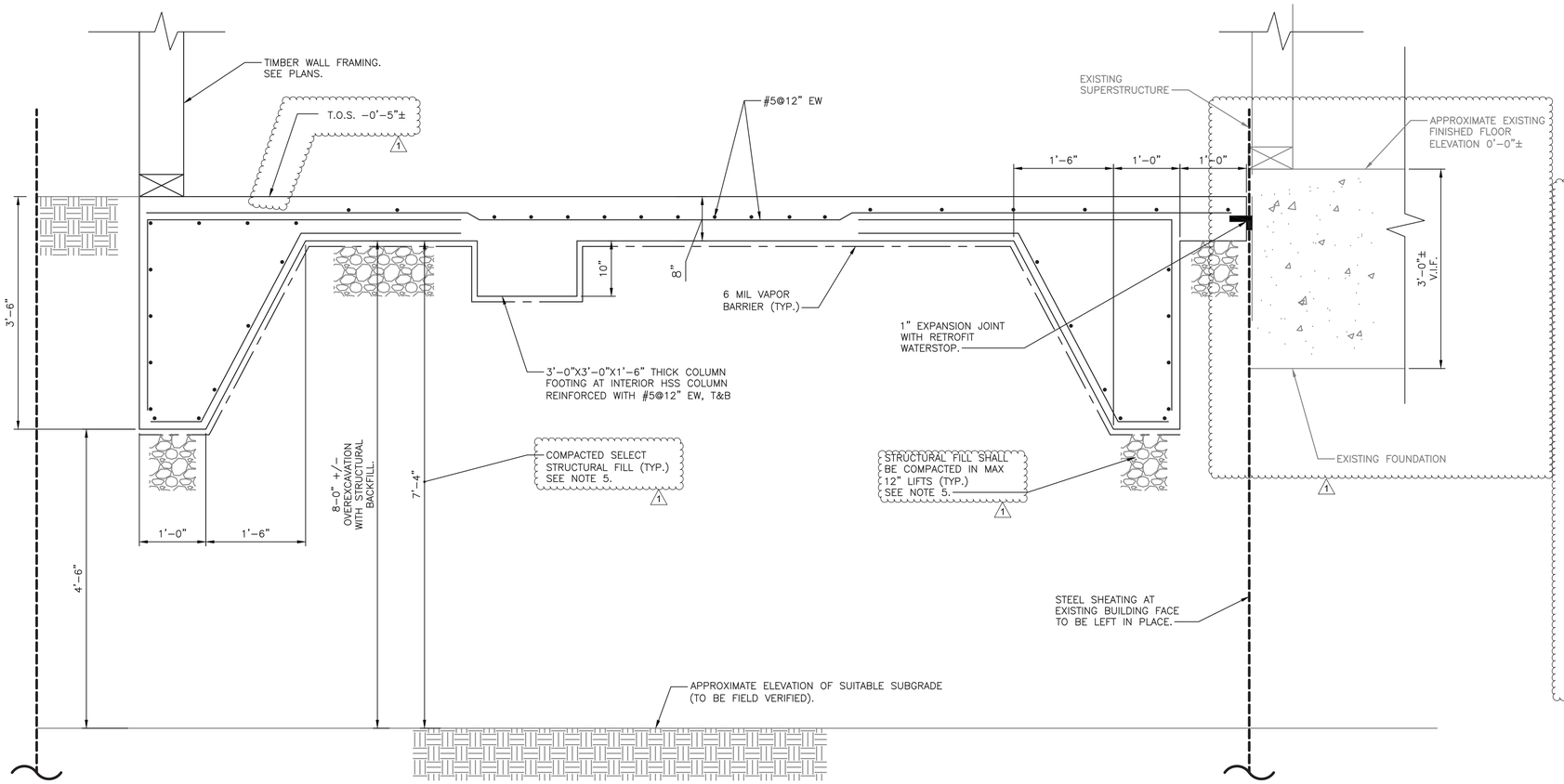

1 CXA-S-05 SECTION 1"=1'-0"

0 1' 2'
SCALE: 1" = 1'-0"

NOTES:

1. FOR STRUCTURAL NOTES, SEE DRAWING CXA-S-01.
2. FOR STRUCTURAL NOTES AND ABBREVIATIONS, SEE DRAWINGS CXA-S-02.
3. CONTRACTOR IS ALERTED OF HIGH WATER TABLE AND SHALL INCLUDE IN THEIR BID, ALL COSTS ASSOCIATED WITH DEWATERING.
4. SEE CIVIL DRAWINGS FOR SURFACE RESTORATION.
5. STRUCTURAL FILL AND COMPACTION SHALL ACHIEVE MINIMUM PROCTOR DENSITY OF 95% PER SPECIFICATION 31 23 24.

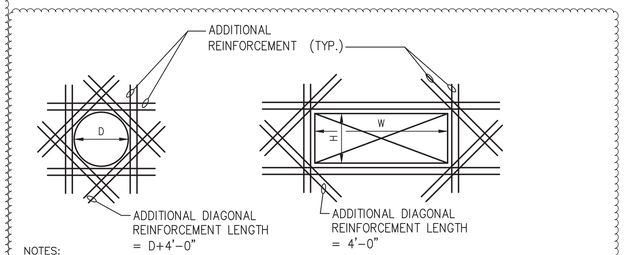

NOTES:

1. PROVIDE ADDITIONAL REINFORCEMENT WHEN OPENING SIZE (D, W, OR H) IS EQUAL TO OR GREATER THAN SPECIFIED BAR SPACING
2. EXTEND REINFORCEMENT A MINIMUM OF 48 BAR DIAMETERS BEYOND THE FACE OF THE OPENING.
3. PROVIDE ONE HALF THE AREA OF CUT BARS, EACH SIDE, MINIMUM 2 #4 @ 6" EF.
4. PROVIDE ADDITIONAL DIAGONAL REINFORCEMENT AT ALL OPENINGS.
   A. OPENINGS (D, H, OR W) UP TO 1'-0": 2 #4 @ 6" EF
   A. OPENINGS (D, H, OR W) UP TO 2'-0": 2 #5 @ 6" EF
   A. OPENINGS (D, H, OR W) UP TO 4'-0": 2 #6 @ 6" EF
5. WHERE REINFORCING AROUND OPENINGS IS SHOWN ON OTHER DRAWINGS PROVIDE ADDITIONAL REINFORCING AS PER THIS DETAIL.

TYPICAL ADDITIONAL REINFORCEMENT AT OPENING > 12" DIAMETER
SCALE: N.T.S.

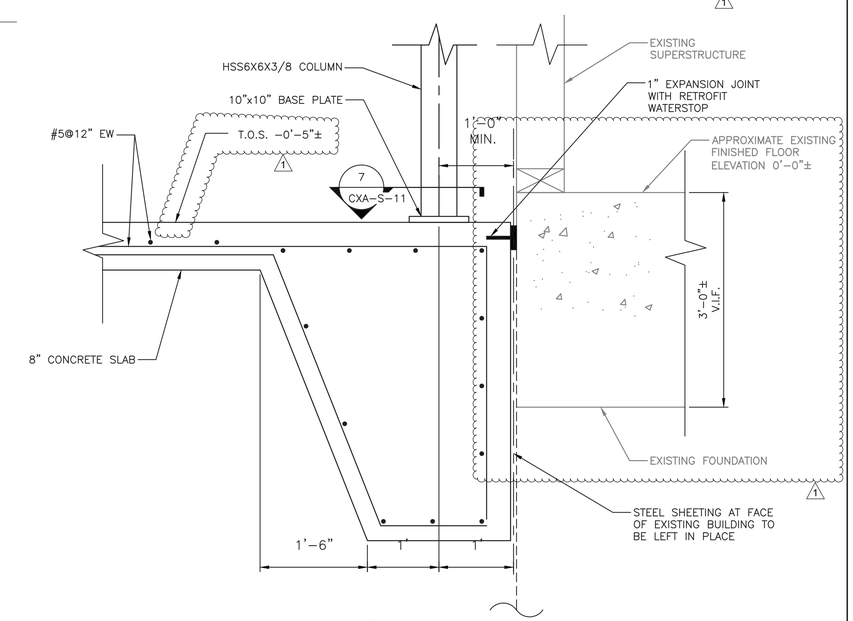

2 CXA-S-05 SECTION 1"=1'-0"

0 1' 2'
SCALE: 1" = 1'-0"

BASIC DEVELOPMENT LENGTH AND SPLICE LENGTH FOR BARS IN TENSION							
fy = 60,000 psi				fc = 4000 psi OR GREATER, NORMAL WEIGHT CONCRETE			
BASIC DEVELOPMENT LENGTH ** l d				BAR SIZE	CLASS B SPLICE LENGTH ** 1.3 x l d		
CLEAR SPACING > 3"		CLEAR SPACING < 3"			CLEAR SPACING > 3"		CLEAR SPACING < 3"
BASIC	TOP *	BASIC	TOP *		BASIC	TOP *	BASIC	TOP *
1'-0"	1'-4"	1'-9"	2'-2"	#3	1'-4"	1'-9"	2'-2"	2'-11"
1'-4"	1'-8"	2'-2"	2'-9"	#4	1'-8"	2'-2"	2'-9"	3'-7"
1'-8"	2'-2"	2'-10"	3'-7"	#5	2'-2"	2'-10"	3'-7"	4'-8"
2'-0"	2'-6"	3'-3"	4'-2"	#6	2'-6"	3'-3"	4'-2"	5'-5"
3'-6"	4'-7"	5'-11"	7'-7"	#7	4'-7"	5'-11"	7'-7"	9'-11"
4'-0"	5'-2"	6'-9"	8'-8"	#8	5'-2"	6'-9"	8'-8"	11'-4"
4'-6"	5'-10"	7'-7"	9'-10"	#9	5'-10"	7'-7"	9'-9"	12'-9"
5'-0"	6'-5"	8'-6"	11'-10"	#10	6'-5"	8'-6"	11'-0"	13'-7"
5'-7"	7'-4"	9'-5"	12'-6"	#11	7'-4"	9'-5"	12'-6"	14'-9"

NOTES:

* TOP REINFORCEMENT IS HORIZONTAL REINFORCEMENT SO PLACED THAT MORE THAN 12 INCHES OF FRESH CONCRETE IS CAST IN THE MEMBER BELOW THE REINFORCEMENT

** LENGTHS SHOWN IN CHART SHALL BE MODIFIED WHERE REQUIRED TO CONFORM TO THE PROVISIONS OF ACI 318, SECTION 12.2

*** UNCOATED REINFORCEMENT

DEVELOPMENT LENGTH OF STANDARD HOOKS FOR BARS IN TENSION		
fy = 60,000 psi	fc = 4000 psi OR GREATER, NORMAL WEIGHT CONCRETE	
	DEVELOPMENT LENGTH, l dh	
BAR SIZE	BASIC	W/CONC. COVER *
#3	8"	6"
#4	10"	7"
#5	1'-0"	9"
#6	1'-3"	11"
#7	1'-5"	1'-0"
#8	1'-7"	1'-2"
#9	1'-10"	1'-4"
#10	2'-1"	1'-6"
#11	2'-3"	1'-7"

NOTES:

* SIDE COVER NORMAL TO PLANE OF HOOK AT LEAST 2 1/2"; AND FOR 90° HOOK, END COVER BEYOND OUTSIDE END OF HOOK AT LEAST 2".

** UNCOATED REINFORCEMENT

CONSULTANT INFORMATION

Savin Engineers, P.C.

CONSULTANT SEAL

REVISION NUMBER	DATE	MADE BY	APP'D BY	REVISION
1	9/21/22	DH	HME	BID ADDENDUM #3

RECORD DRAWING CERTIFICATION

☐ AS BUILT – CHANGES AS NOTED ☐ AS BUILT – NO CHANGES

CONTRACTOR
NAME
SIGNATURE
TITLE DATE

PROJECT COORDINATOR
NAME
SIGNATURE
TITLE DATE

WESTCHESTER COUNTY, NEW YORK
DEPARTMENT OF PUBLIC WORKS AND TRANSPORTATION
DIVISION OF ENGINEERING

INFRASTRUCTURE REHABILITATION - PHASE 3
PLAYLAND PARK, RYE, NEW YORK
CROSS AXIS BUILDING A
SECTIONS

CONTRACT NUMBER	SHEET NUMBER
22-523	CXA-S-09

DWG NO.: 147 of 664
SCALE: AS SHOWN
DATE: 8/23/2022
DPW FILE NUMBER 1-118-S-896-1 REV. NO. 1

Drawing Name: G:\Savin\Autocad\2060\25-Playland-Mega-3\S\CXAS-1009.dwg
Projectname: ---- Comments: ----
Printed by: MGodby Date: 20 September 2022 2:28 PM Designed by: ----
Rev#:
Xrefs: [TSG-SVL000.dwg] [TB_24X36_WestchesterCo_3.dwg

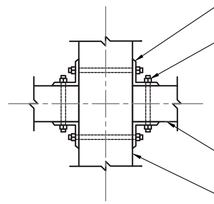

C DETAIL
CXA-S-10 1 1/2" = 1'-0"

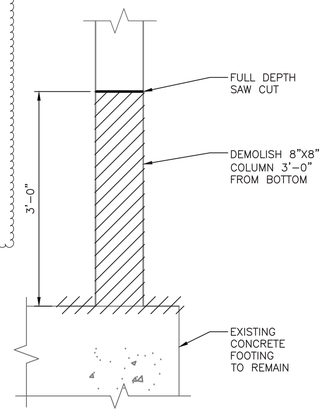

DEMOLITION
SCALE: N.T.S.

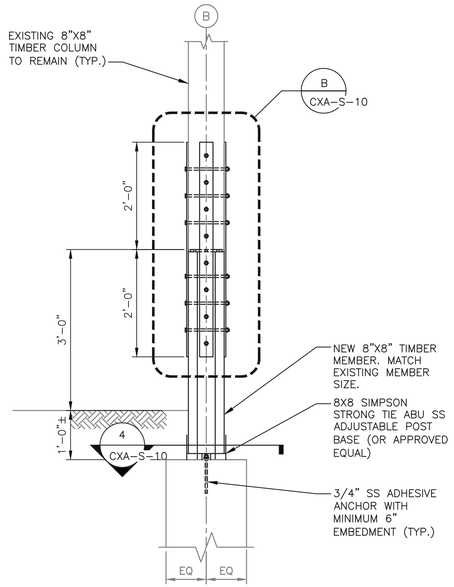

SECTION
SCALE: 3/4 = 1'-0"

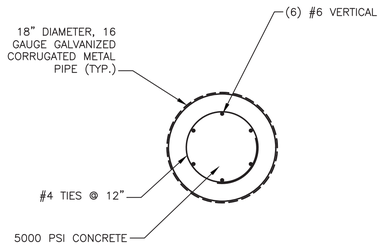

6 SECTION
CXA-S-05 SCALE: N.T.S.

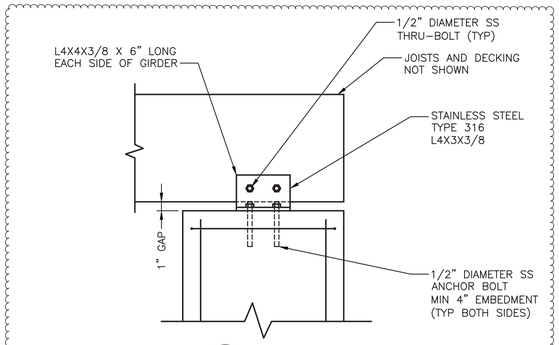

A DETAIL
CXA-S-10 1 1/2" = 1'-0"

NOTES:

CONTRACTOR SHALL SUBMIT A COLUMN REPAIR SEQUENCE OF CONSTRUCTION TO ENGINEER FOR REVIEW. THE FOLLOWING SHALL BE THE MINIMUM REQUIRED.

1. TEMPORARY SHORING AT EACH COLUMN LOCATION SHALL HAVE A MINIMUM 10-TON CAPACITY.
2. COLUMN REPAIR SHALL BE LIMITED TO MAXIMUM 2 COLUMNS AT A TIME. COLUMNS UNDER REPAIR MUST NOT BE ADJACENT TO EACH OTHER.
3. ALL HARDWARE SHALL BE TYPE 316 STAINLESS STEEL, UNLESS OTHERWISE NOTED.

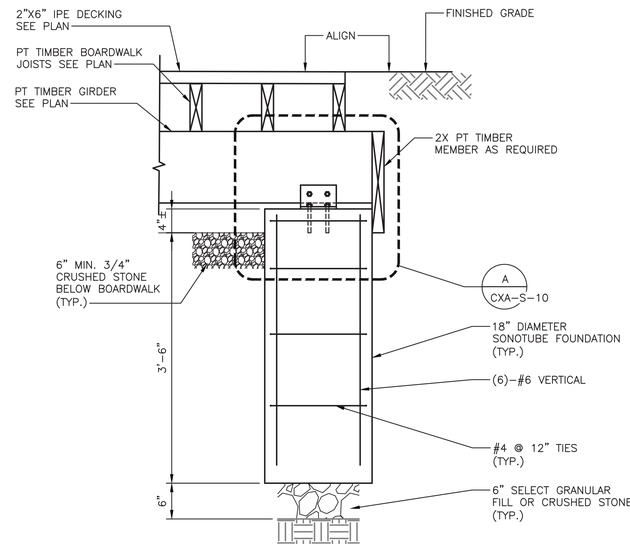

9 TYPICAL BOARDWALK SONOTUBE SECTION
CXA-S-05 1" = 1'-0"

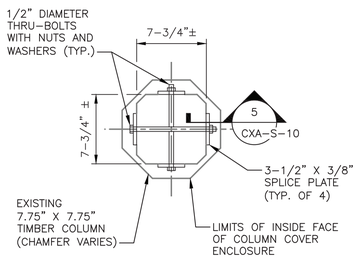

2 SECTION
CXA-S-10 SCALE: N.T.S.

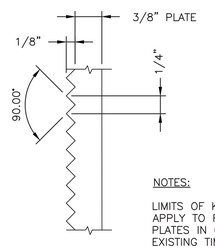

NOTES:

LIMITS OF KNURLING SHALL APPLY TO FACE OF ALL SPLICE PLATES IN CONTACT WITH EXISTING TIMBER COLUMN. KNURLING SHALL RUN AXIALLY AND HORIZONTALLY.

5 SECTION
CXA-S-10 SCALE: N.T.S.

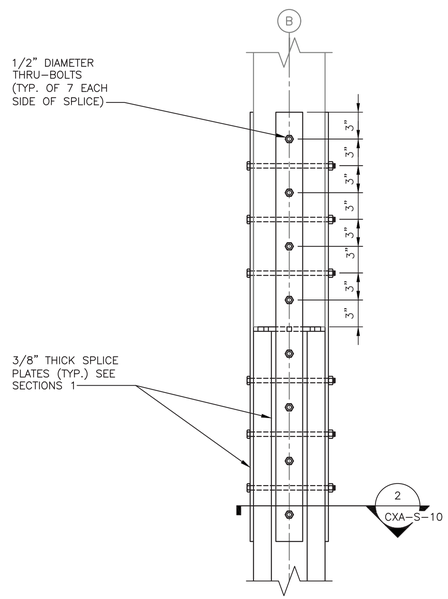

B DETAIL
CXA-S-10 SCALE: 1 1/2 = 1'-0"

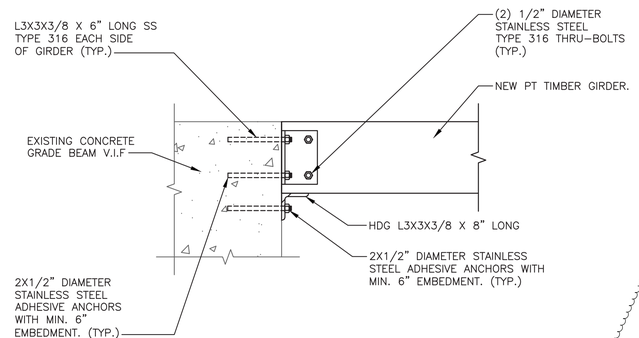

10 SECTION – TYPICAL GIRDER TO CONCRETE CONNECTION
CXA-S-05 N.T.S.

0 1' 2'
SCALE: 1" = 1'-0"
0 1' 2'
SCALE: 3/4" = 1'-0"
0 6" 1'
SCALE: 1 1/2" = 1'-0"

Drawing Name: G:\SavinAutocad\2060\25-Playland-Mega-3\S\CXAS-1010.dwg
Reqf: Projectname: ----- Comments: ----
Printed by: MGodby Date: 20 September 2022 2:29 PM Designed by: ----
Xrefs: [TSG-SVLOGO.dwg] [TB_24X36_WestchesterCo_3.dwg] [CXA-DET-1.dwg]

CONSULTANT INFORMATION

Savin Engineers, P.C.

CONSULTANT SEAL

REVISION NUMBER	DATE	MADE BY	APP'D BY	REVISION
1	9/21/22	DH	HME	BID ADDENDUM #3

RECORD DRAWING CERTIFICATION

☐ AS BUILT – CHANGES AS NOTED ☐ AS BUILT – NO CHANGES

CONTRACTOR
NAME
SIGNATURE
TITLE DATE

PROJECT COORDINATOR
NAME
SIGNATURE
TITLE DATE

WESTCHESTER COUNTY, NEW YORK
DEPARTMENT OF PUBLIC WORKS AND TRANSPORTATION
DIVISION OF ENGINEERING

INFRASTRUCTURE REHABILITATION - PHASE 3
PLAYLAND PARK, RYE, NEW YORK

CROSS AXIS BUILDING A
SECTIONS AND DETAILS

CONTRACT NUMBER	22-523
SHEET NUMBER	CXA-S-10
DWG NO.:	148 of 664
SCALE:	AS SHOWN
DATE:	8/23/2022
DPW FILE NUMBER	1-118-S-897-1
REV. NO.	1

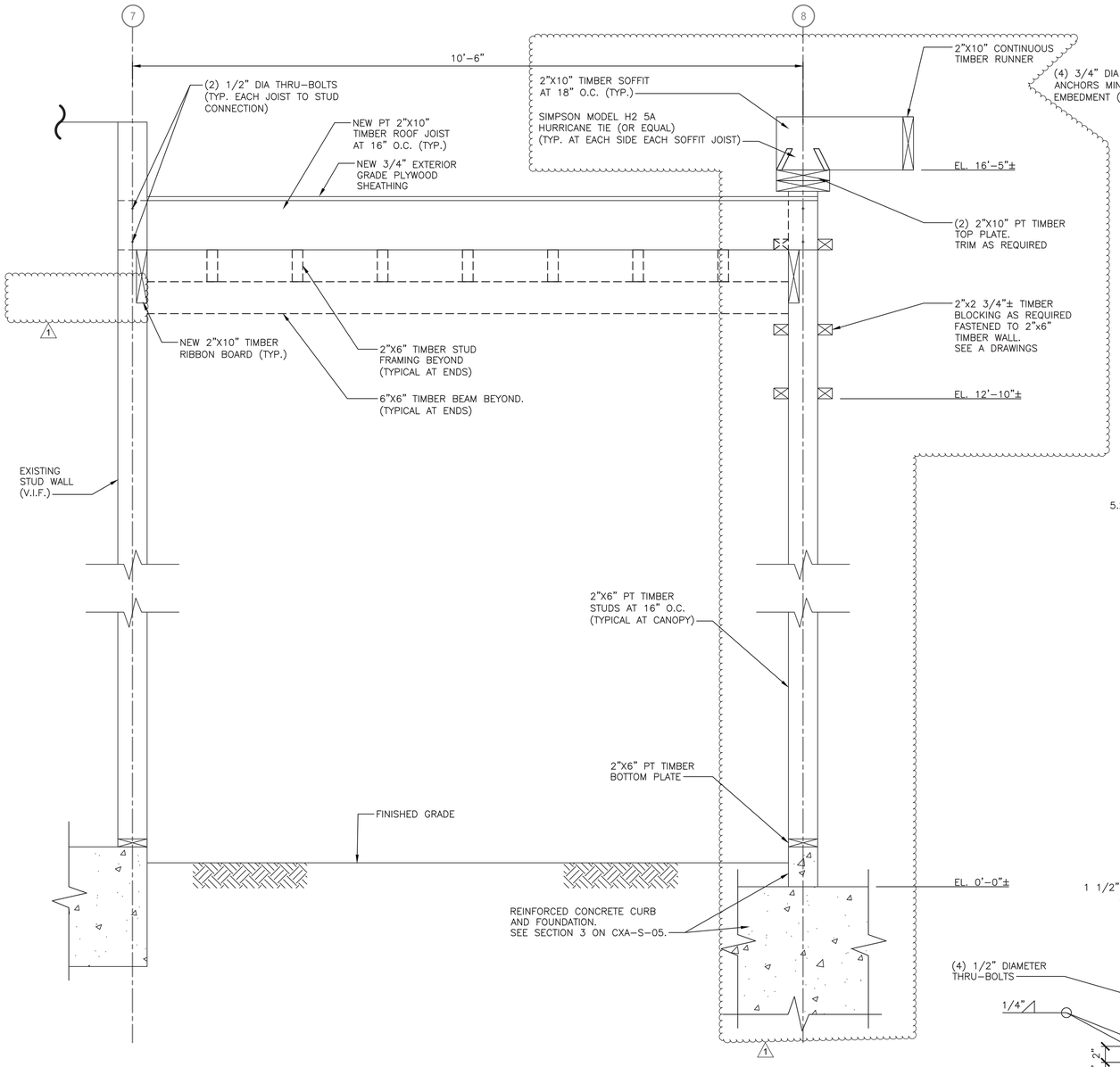

5 SECTION
CXA-S-07 1"=1'-0"

0 1' 2'
SCALE: 1" = 1'-0"

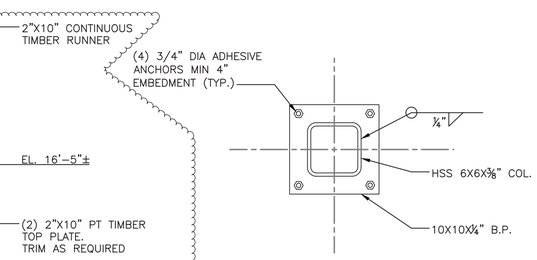

7 SECTION
CXA-S-09 SCALE: N.T.S.

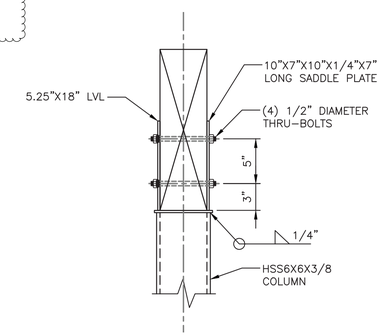

B DETAIL
CXA-S-08 SCALE: 1 1/2" = 1'-0"

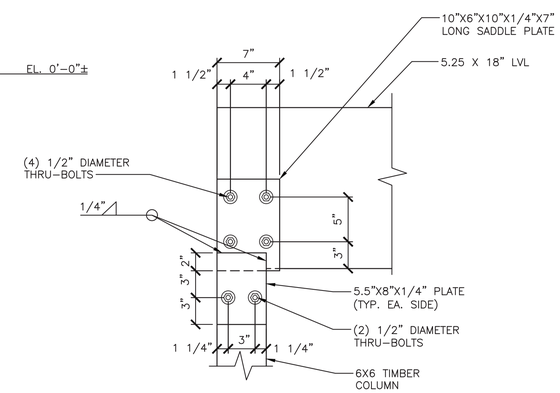

2 SECTION
CXA-S-11 SCALE: 1 1/2" = 1'-0"

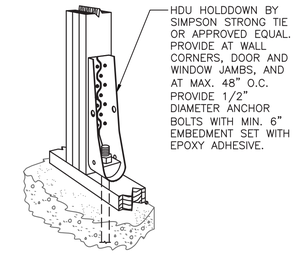

PROVIDE AT WALL CORNERS, DOOR AND WINDOW JAMBS, AND AT MAX. 48" O.C. PROVIDE 1/2" DIAMETER ANCHOR BOLTS WITH MIN. 6" EMBEDMENT SET WITH EPOXY ADHESIVE.

– HOLD DOWN/TENSION TIE
SCALE: N.T.S.

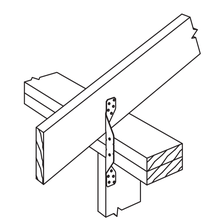

SIMPSON STRONG TIE H2 (OR APPROVED EQUAL). TYPICAL AT EACH RAFTER.

– HURRICANE TIE
SCALE: N.T.S.

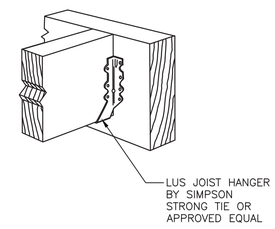

– FACE MOUNTED JOIST HANGER
SCALE: N.T.S.

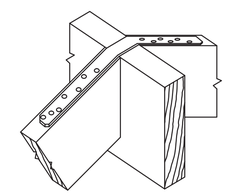

SIMPSON STRONG TIE (OR APPROVED EQUAL) AT EACH RAFTER. ATTACH DIRECTLY TO RAFTER

– RIDGE STRAPPING
SCALE: N.T.S.

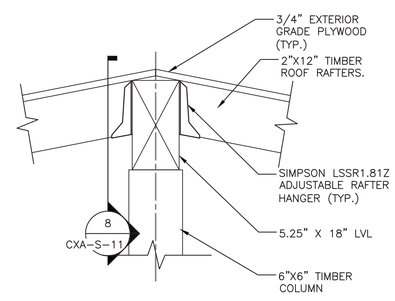

A DETAIL
CXA-S-08 SCALE: N.T.S.

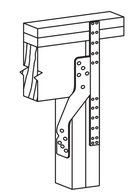

SIMPSON STRONG TIE H6 (OR APPROVED EQUAL) TYPICAL AT ALL EXTERIOR HEADER LOCATIONS.

– HEADER TO JACK STUD CONNECTION
SCALE: N.T.S.

CONSULTANT INFORMATION

Savin Engineers, P.C.

CONSULTANT SEAL

REVISION NUMBER	DATE	MADE BY	APP'D BY	REVISION
1	9/21/22	DH	HME	BID ADDENDUM #3

RECORD DRAWING CERTIFICATION

☐ AS BUILT – CHANGES AS NOTED ☐ AS BUILT – NO CHANGES

CONTRACTOR
NAME
SIGNATURE
TITLE DATE

PROJECT COORDINATOR
NAME
SIGNATURE
TITLE DATE

WESTCHESTER COUNTY, NEW YORK
DEPARTMENT OF PUBLIC WORKS AND TRANSPORTATION
DIVISION OF ENGINEERING

INFRASTRUCTURE REHABILITATION - PHASE 3
PLAYLAND PARK, RYE, NEW YORK
CROSS AXIS BUILDING A
SECTIONS

CONTRACT NUMBER	22-523
SHEET NUMBER	CXA-S-11
DWG NO.:	149 of 664
SCALE:	AS SHOWN
DATE:	8/23/2022
DPW FILE NUMBER	1-118-S-898-1
REV. NO.	1

Drawing Name: G:\SavinAutocad\2060\25-Playland-Mega-3\S\CXAS-1011.dwg
Projectname: ---- Comments: ----
Printed by: MGoodby Date: 20 September 2022 2:29 PM Designed by: ----
Xrefs: [TSG-SVLOGO.dwg] [TB_24X36_WestchesterCo_3.dwg] [CXA-S-1016.dwg]

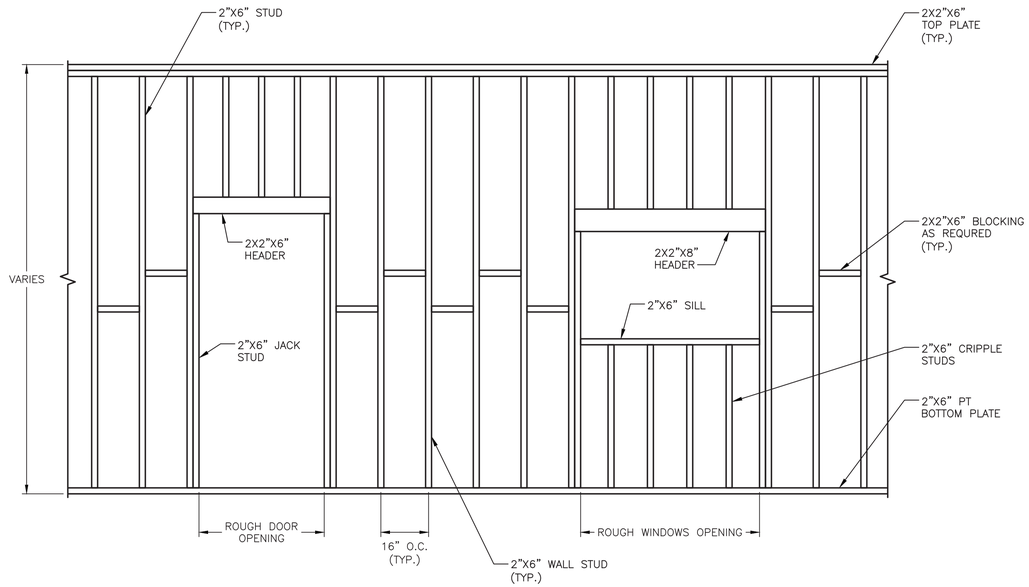

DETAIL WALL ELEVATION
SCALE: N.T.S.

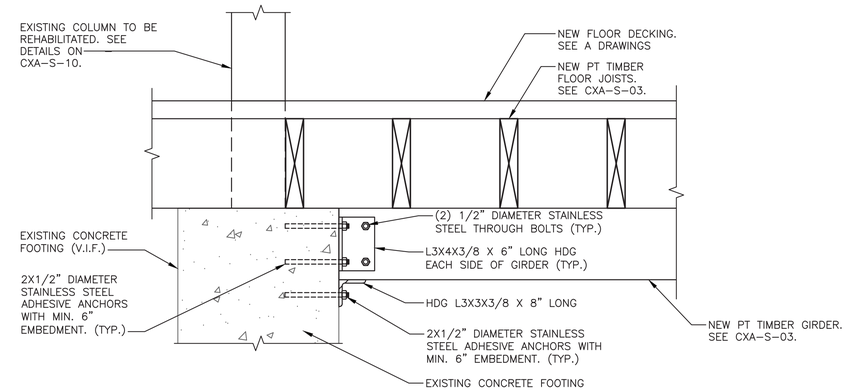

SECTION
SCALE: N.T.S.

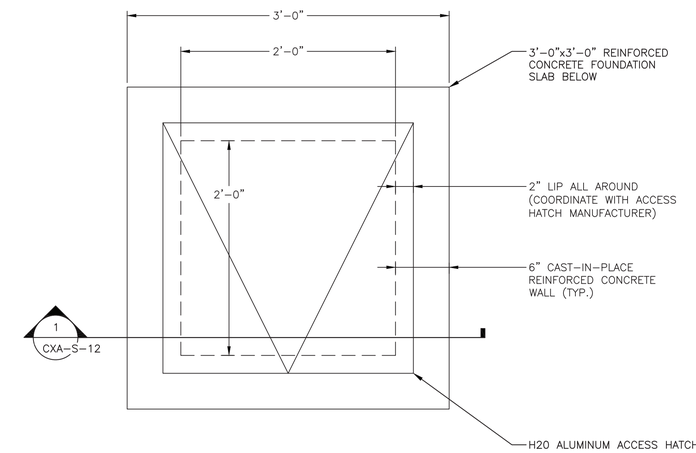

A PART PLAN
CXA-S-05 SCALE: 1 1/2" = 1'-0"

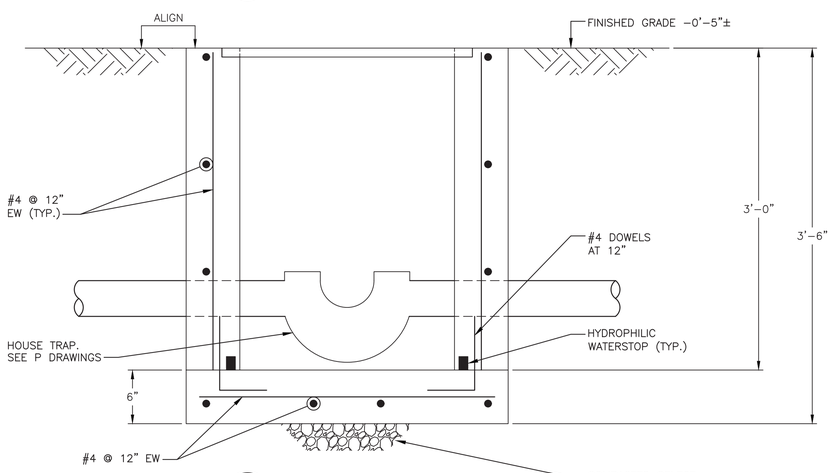

1 PART PLAN
CXA-S-12 SCALE: 1 1/2" = 1'-0"

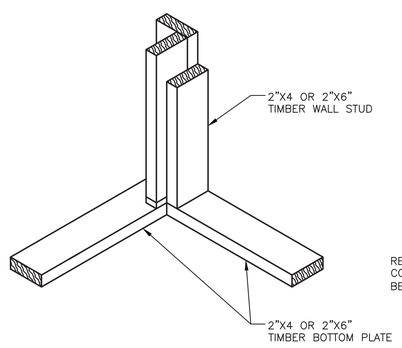

TYPICAL STUDS AT CORNERS DETAIL
SCALE: N.T.S.

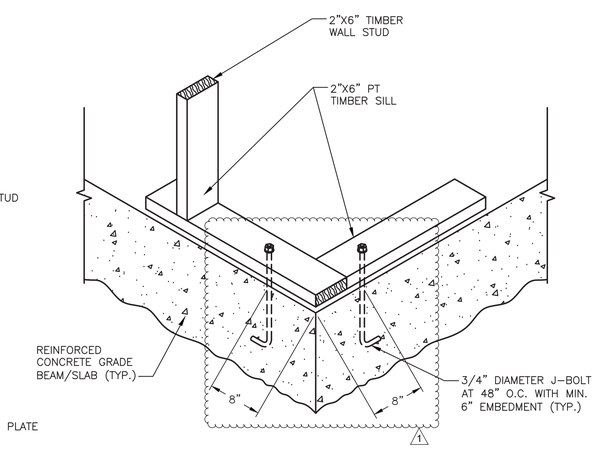

TYPICAL FLOOR FRAMING DETAIL
SCALE: N.T.S.

Drawing Name: G:\SavinAutocad\2060\25-Playland-Mega-3\S\CXAS-1012.dwg
Projectname: ---- Comments: ----
Printed by: MGodby Date: 20 September 2022 2:30 PM Designed by: ----
Reqf: Xrefs: [TSG-SVLOGO.dwg] [TB_24X36_WestchesterCo_3.dwg] [K-A-16.dwg] [CXA-A-12.dwg]

CONSULTANT INFORMATION
Savin Engineers, P.C.

CONSULTANT SEAL

REVISION NUMBER	DATE	MADE BY	APP'D BY	REVISION
1	9/21/22	DH	HME	BID ADDENDUM #3

RECORD DRAWING CERTIFICATION
☐ AS BUILT – CHANGES AS NOTED ☐ AS BUILT – NO CHANGES

CONTRACTOR
NAME
SIGNATURE
TITLE DATE

PROJECT COORDINATOR
NAME
SIGNATURE
TITLE DATE

WESTCHESTER COUNTY, NEW YORK
DEPARTMENT OF PUBLIC WORKS AND TRANSPORTATION
DIVISION OF ENGINEERING

INFRASTRUCTURE REHABILITATION - PHASE 3
PLAYLAND PARK, RYE, NEW YORK
CROSS AXIS BUILDING A
SECTIONS

CONTRACT NUMBER	22-523
SHEET NUMBER	CXA-S-12
DWG NO.:	150 of 664
SCALE:	AS SHOWN
DATE:	8/23/2022
DPW FILE NUMBER	1-118-S-899-1
REV. NO.	1

FIRE PROTECTION SAFETY NOTES:

1. SPECIAL PRECAUTION SHALL BE TAKEN BY THE CONTRACTOR SO THAT EQUIPMENT OF THIS APPLICATION AND ITS INSTALLATION WILL NOT AFFECT THE FOLLOWING: EGRESS TO AND FROM THE BUILDING. FIRE SAFETY OR CREATE A FIRE HAZARD. STRUCTURAL SAFETY OF THE BUILDING. ACCUMULATION OF DUST AND DEBRIS. (THE CONTRACTOR SHALL LEAVE THE SITE BROOM CLEANED EACH DAY.)

FIRE PROTECTION GENERAL NOTES:

1. DIMENSIONS, LOCATIONS AND SIZES INDICATED ON THE PLANS AND THE ELEVATION ARE APPROXIMATE AND SHALL BE VERIFIED BY FIELD INSPECTION BY THE CONTRACTOR.

2. SOME EXISTING PIPE AND EQUIPMENT IS SHOWN FOR CLARIFICATION OF THIS CONTRACT, BUT MUST BE PROTECTED BY THE CONTRACTOR.

3. NO WORK SHALL BE INITIATED UNTIL A WORK PERMIT IS OBTAINED BY THE CONTRACTOR AND A SAFETY PLAN IS SUBMITTED AND IS APPROVED.

4. CONTRACTOR IS RESPONSIBLE FOR OBTAINING ALL PERMITS, EQUIPMENT USE PERMITS, ALL INSPECTION APPROVALS, AND LETTER OF COMPLETION FROM THE DEPARTMENT OF BUILDINGS FOR WORK UNDER THIS CONTRACT AS APPLICABLE.

5. ANY EXISTING MATERIALS, PIPING, ETC., NOT INDICATED FOR DEMOLITION WHICH ARE REMOVED BY THE CONTRACTOR IN ORDER TO INSTALL NEW WORK SHALL BE REINSTALLED BY THE CONTRACTOR. IF EXISTING WORK IS DAMAGED IT SHALL BE REPLACED AT THE CONTRACTOR'S EXPENSE. ALL SURFACES OR FINISHES THAT ARE DAMAGED OR OTHERWISE AFFECTED BY WORK OF THIS CONTRACT SHALL BE PATCHED, REPAIRED, PAINTED OR REPLACED TO MATCH THE PRE-EXISTING CONDITION AND THE NEW WORK.

6. CONTRACTOR MAY PROPOSE ALTERNATE ROUTING IN DIFFICULT AREAS WHERE REPLACEMENT IN KIND IS NOT PRACTICAL. ANY AND ALL ALTERNATE ROUTING IS SUBJECT TO PRIOR REVIEW AND APPROVAL BY THE ENGINEER.

7. A FIRE WATCH SHALL BE PROVIDED WHEN SPRINKLER COVERAGE IS IMPACTED TO MAINTAIN BUILDING OPERATIONS OR AS REQUIRED.

FIRE PROTECTION SYMBOL LIST

— — — — — FS DRY— —	NEW DRY SPRINKLER PIPING
— — — — — DRY(E) —	EXISTING TO REMAIN DRY SPRINKLER PIPING
○	NEW UPRIGHT SPRINKLER HEAD
○	EXISTING UPRIGHT SPRINKLER HEAD
●	NEW CONCEALED PENDENT SPRINKLER HEAD-ORDINARY TEMPERATURE
	SPRINKLER DRY PIPE VALVE
	FIRE HOSE CABINET
	SIAMESE CONNECTION
	CHECK VALVE
	CHECK VALVE W/ ALARM
	WATER MOTOR ALARM BELL
⊗	PIPE RISER
	PIPE DROP
	PIPE UP
	POINT OF CONNECTION
	POINT OF DISCONNECTION
	PREACTION 6" BELL
	SOLENOID VALVE
	OS & Y VALVE
#	REVISION SYMBOL
F#	REFER TO SUPPLEMENTAL FIGURE INDICATED BY NUMBER (I.E. F2 REFERS TO FIGURE 2)
XXX / X	EQUIPMENT TAG / EQUIPMENT NUMBER
X / X-XXX	DETAIL TAG/ CALL OUT TAG / FIRE PROTECTION SHEET NUMBER

SHOP DWGS/EQUIPMENT SUBMITTALS

THE CONTRACTOR MUST SUBMIT ANY EQUIPMENT ALTERNATES 2 WEEKS PRIOR TO BIDS DUE FOR REVIEW AND COMMENTS. ALTERNATES MUST BE ACCEPTED BY LIRO ENGINEERS, INC., THE ARCHITECT, AND THE OWNER PRIOR TO INCLUSION IN BID. THE CONTRACTOR IS RESPONSIBLE TO COORDINATE EQUIPMENT ALTERNATES WITH OTHER TRADES AND MAKE ADJUSTMENTS TO THE MECHANICAL SYSTEMS, AS REQUIRED, TO ACCOMMODATE THESE NEW ALTERNATES.

THE CONTRACTOR IS RESPONSIBLE TO SUBMIT ALL OF THE FOLLOWING ITEMS FOR REVIEW/APPROVAL BY NO MORE THAN 3 WEEKS AFTER THE CONTRACTOR'S CONTRACT/BID HAS BEEN AWARDED. ALL SUBMITTALS MUST BE SENT TOGETHER AS A **SINGLE PACKAGE** WITH MANUFACTURER'S SPECIFIC MODELS AND SPECIFICATIONS OUTLINED TO MATCH THE SCHEDULED REQUIREMENTS. EACH SUBMITTAL MUST BE LABELED WITH THE UNIT DESIGNATION USED WITHIN THIS DRAWING SET. IF THE SUBMITTAL PACKAGE IS FOUND TO BE INCOMPLETE UPON RECEIPT, THE PACKAGE WILL BE HELD AND WILL NOT BE REVIEWED UNTIL THE REMAINDER OF THE PACKAGE IS RECEIVED. SIX (6) HARD COPIES OF THE SUBMITTAL PACKAGE MUST BE SENT TO LIRO ENGINEERS, INC. DIGITAL SHOP DRAWING SUBMISSIONS ARE ACCEPTABLE.

SCOPE OF WORK:

1. THE INSTALLATION OF NEW DRY FS EQUIPMENT.

2. PROPOSED FIRE SPRINKLER HEAD LOCATIONS AND PIPING ARE AS NOTED ON PLANS. EXACT PIPING FROM THE FIRE SPRINKLER MAIN TO ALL HEADS IS TO BE COORDINATED AND HYDRAULICALLY CALCULATED BY THE F.S.C. & SUBMITTED TO THE ENGINEER FOR APPROVAL.

NOTE: THIS SCOPE OF WORK DESCRIPTION IS PROVIDED TO GIVE AN OVERALL "MACRO" DESCRIPTION OF THIS PROJECT. F.S.C. IS RESPONSIBLE TO REVIEW ALL ENGINEERING AND ARCHITECTURAL DRAWINGS AND VISIT THE SITE IF NEEDED, PRIOR TO SUBMISSION OF BID.

SPRINKLER HEAD SCHEDULE

	MANUFACTURER	MODEL	DESCRIPTION	K-FACTOR	QUANTITY
○	RELIABLE	F1FR	DRY ORDINARY UPRIGHT SPRINKLE HEAD	5.6	54

ABBREVIATION

ACV	ALARM CHECK VALVE
B.O.P.	BOTTOM OF PIPE
(E)	EXISTING TO REMAIN
F.S.C.	FIRE SPRINKLER CONTRACTOR
P.C	PLUMBING CONTRACTOR
TYP	TYPICAL
W/	WITH
NYS	NEW YORK STATE
U/P	UNDERGROUND PIPING
W	WATER

DRAWING NOTATIONS

	DRAWING NOTE TAB
	RISER DESIGNATION
	POINT OF CONNECTION
	POINT OF DISCONNECTION

DESIGN CRITERIA

1. AREA OF APPLICATION = 2535 SQ. FT. (DRY SYSTEM, ROOF PITCH >/= 2 IN 12)

2. OCCUPANCY CLASSIFICATION = ORDINARY HAZARD GROUP 1

3. MAXIMUM COVERAGE PER SPRINKLER HEAD = 130 SQ. FT

4. DESIGN DENSITY = 0.15 GPM/SQ. FT

5. "K" FACTOR OF SPRINKLER HEADS = 5.6

6. DESIGN CRITERIA REQUIREMENTS BASED ON:
   - 2020 BUILDING CODE OF NEW YORK STATE
   - 2016 NFPA 13

ORDINARY HAZARD PIPE SCHEDULE

STEEL		COPPER	
1IN.	2 SPRINKLERS	1IN.	2 SPRINKLERS
1 1/4 IN.	3 SPRINKLERS	1 1/4 IN.	3 SPRINKLERS
1 1/2IN.	5 SPRINKLERS	1 1/2IN.	5 SPRINKLERS
2 IN.	10 SPRINKLERS	2 IN.	12 SPRINKLERS
2 1/2 IN.	20 SPRINKLERS	2 1/2 IN.	25 SPRINKLERS
3 IN.	40 SPRINKLERS	3 IN.	45 SPRINKLERS
3 1/2 IN.	65 SPRINKLERS	3 1/2 IN.	75 SPRINKLERS
4 IN.	100 SPRINKLERS	4 IN.	115 SPRINKLERS
5 IN.	160 SPRINKLERS	5 IN.	180 SPRINKLERS
6 IN.	275 SPRINKLERS	6 IN.	300 SPRINKLERS
8 IN.	SEE SECTION 8.2	8 IN.	SEE SECTION 8.2

FOR SI UNITS, 1 IN. = 25.4 MM.

MAX DISTANCE BETWEEN HANGERS (FT.-IN.)

	NOMINAL PIPE SIZE (IN.)											
	3/4	1	1 1/4	1 1/2	2	2 1/2	3	3 1/2	4	5	6	8
STEEL PIPE EXCEPT THREADED LIGHTWALL	N/A	12-0	12-0	15-0	15-0	15-0	15-0	15-0	15-0	15-0	15-0	15-0
THREADED LIGHTWALL STEEL PIPE	N/A	12-0	12-0	12-0	12-0	12-0	12-0	N/A	N/A	N/A	N/A	N/A
COPPER TUBE	8-0	8-0	10-0	10-0	12-0	12-0	12-0	15-0	15-0	15-0	15-0	15-0

CODE REFERENCE

2020 NEW YORK STATE BUILDING CODE
2016 NFPA 13

FIRE PROTECTION NOTES

1. THE DRAWINGS SHOW THE LAYOUT OF THE SYSTEM AND INDICATE THE APPROXIMATE LOCATIONS OF EQUIPMENT AND PIPING. CONTRACTOR IS CAUTIONED NOT TO SCALE THE DRAWINGS. THE PIPING SHALL BE RUN APPROXIMATELY IN THE AREAS AS INDICATED ON THE DRAWINGS, [HOWEVER, TO THE ARRANGEMENT OF THE PIPING SYSTEMS AS MAY BE REFERENCED WITH WORK OF OTHER TRADES]. CONTRACTOR SHALL REVIEW AND COORDINATE WITH STRUCTURAL, ELECTRICAL AND MECHANICAL DRAWINGS. PARTITIONS, STRUCTURAL MEMBERS, ETC. ARE DESIGNED TO BE FURRED OR CLOSED IN AND TO INCLUDE ROUGH-IN PIPING. CONTRACTOR SHALL FURNISH ALL OFFSETS, ADDITIONAL FITTINGS, ETC. WHETHER SHOWN ON DRAWINGS OR NOT, AS REQUIRED TO MEET INSTALLATION CONDITIONS.

2. CONTRACTOR IS TO COMPLY WITH LATEST NFPA AND N.Y.S. CODES, AND COORDINATE HIS WORK WITH OTHER TRADES AND MAKE NECESSARY ADJUSTMENTS.

3. CONTRACTOR IS TO PREPARE SHOP DRAWINGS FOR ENGINEERS REVIEW AFTER MAKING A COMPLETE FIELD SURVEY.

4. CONTRACTOR IS TO REPORT ANY CONDITION REQUIRING CHANGES FROM PLANS TO ENGINEER PRIOR TO STARTING WORK.

5. BRANCH LINES AND MAINS (1 1/2" OR LESS) - SCHEDULE 40 FM APPROVED

6. BRANCH LINES AND MAINS (2" OR LARGER) - THINWALL (THICKNESS LESS THEN SCHEDULE 40 MORE THEN SCHEDULE 10 & FM APPROVED)

7. CONTRACTOR IS TO PERFORM A HYDROSTATIC TEST FOR 2 HRS. @ 200 PSI WITH NO LEAKAGE AND PROVIDE A TEST CERTIFICATE TO ENGINEER

8. CONTRACTOR IS TO EMPLOY EXPERIENCED WORKMEN WHO ARE TO FAMILIARIZE THEMSELVES WITH THE BUILDING AND OBSERVE SAFETY REQUIREMENTS.

9. CONTRACTOR TO ADJUST HEAD LOCATION TO COORDINATE WITH LIGHTS, DUCTS, ETC.

10. PERMIT FROM LOCAL AUTHORITY, TO BE OBTAINED BY CONTRACTOR.

11. ALL WORK TO BE APPROVED BY OWNERS ENGINEER, STATE AUTHORITIES HAVING JURISDICTION AND MUNICIPAL FIRE, PLUMBING, BUILDING AND WATER DEPARTMENTS.

12. U.L. AND/OR FM APPROVED EQUIPMENT TO BE USED.

13. WORK TO BE IN ACCORDANCE WITH MUNICIPAL WATER DEPT. RULES
.
14. SYSTEM IS TO BE MAINTAINED AND TESTED BY THE OWNER OR HIS AGENT IN ACCORDANCE WITH APPLICABLE LOCAL AND STATE CODES AND IN CONFORMANCE WITH NFPA 13A, LATEST EDITION.

15. IF BUILDING OCCUPANCY OR CONSTRUCTION CHANGES, THE SPRINKLER SYSTEM IS TO BE UPDATED ACCORDINGLY BY THE OWNER OR HIS AGENT.

16. CONTRACTOR IS TO NEATLY CUT AND PATCH IN A FIRST CLASS WORKMANLIKE MANNER, ALL HOLES AND PENETRATIONS IN WALLS, CEILINGS, FLOORS, PARTITIONS, ETC.

17. THE ENGINEER IS NOT RETAINED FOR SUPERVISION.

18. THE INSTALLATION OF THIS SYSTEM WILL REQUIRE THE CLOSING OF ONE OR MORE FIRE PROTECTION CONTROL VALVES. THESE VALVE CLOSURES SHOULD BE CLOSELY COORDINATED WITH THE OWNERS WHO SHOULD CONTACT THE LOCAL FIRE DEPARTMENT, INSURANCE INTERESTS, ETC. PRIOR TO VALVE CLOSURES.

19. ACTUAL DESIGN DENSITY MAY EXCEED STANDARDS, HOWEVER, IT IS A MINIMUM TO BE USED BY THE CONTRACTOR.

20. ALL ALARMS RELATING TO THE SPRINKLER SYSTEM SHOULD BE ACTIVATED UPON PLACING THE SPRINKLER SYSTEM IN SERVICE.

21. THE INSTALLATION COMPONENTS, SIZING, SPACING, MATERIALS LOCATION CLEARANCES, POSITION AND TYPE OF SYSTEM SHALL CONFORM TO NFPA 13 AND NYS UNIFORM FIRE PREVENTION BUILDING CODE LATEST EDITION.

22. SPRINKLERS SHALL BE PROTECTED AGAINST FREEZING AND INJURY AS PER NFPA CODE.

23. INSPECTION AND TESTS OF SPRINKLER SYSTEM SHALL BE CONDUCTED AS SPECIFIED IN NFPA CODE.

24. WATER SUPPLY TEST PIPES AND GAUGES SHALL BE PROVIDED AS SPECIFIED IN CHAPTER 2-9 OF NPPA 13.

25. PIPING SPECIFICATIONS, PIPE SCHEDULES, SYSTEM TEST PIPES, PROTECTION AGAINST CORROSION, DAMAGE FITTINGS, VALVES, HANGERS, SPRINKLERS, GUARDS AND SHIELDS SHALL BE IN ACCORDANCE WITH CHAPTER 3 AND CHAPTER 8 OF NFPA 13, LATEST EDITION. PIPING SHALL BE PAINTED TO PREVENT CORROSION.

26. STOCK OF EXTRA SPRINKLERS WILL BE FURNISHED AS PER CHAPTER 3 OF NFPA 13 (REQUIRED FOR EACH TEMPERATURE RATING).

27. SPRINKLER ALARMS WILL BE IN ACCORDANCE WITH NFPA 13.

28. SPACING, LOCATION AND POSITION OF SPRINKLERS SHALL BE IN ACCORDANCE WITH CHAPTER 4 OF NFPA 13.

29. ALL PIPING PASSING THROUGH WALLS SHALL COMPLY WITH NFPA FOR FIRE PROOFING.

30. DISTANCE OF SPRINKLERS FROM HEAT SOURCES SHALL BE IN ACCORDANCE WITH TABLE 3-16.6.3 OF NFPA 13.

31. PROVIDE WATER SUPPLY LETTER WITH FLOW TEST DATA.

32. ALL PIPES PASSING THROUGH FOUNDATION WALLS TO BE PROTECTED.

33. ALL VALVES SHALL BE IDENTIFIED AS REQUIRED BY NFPA 13.

34. DRAINAGE TO CONFORM TO CHAPTER 3-11 OF NFPA 13.

35. A ONE PIECE REDUCING FITTING OF GOOD DESIGN SHOULD BE USED WHEREVER A CHANGE IS MADE IN THE SIZE OF PIPE AS PER SECTION 3-12.2.7 OF NFPA 13.

36. ALL VALVES ON CONNECTIONS TO WATER SUPPLIES AND IN SUPPLY TO SPRINKLERS SHALL BE APPROVED O.S. &Y. OR APPROVED INDICATOR TYPE WITH TAMPER SWITCHES.

37. DRAIN VALVES AND TEST VALVES SHALL BE APPROVED TYPE AS PER SECTION 3-14.1.2 OF NFPA 13.

38. HANGERS SHALL BE OF A TYPE APPROVED FOR USE WITH THE PIPE OR TUBE INVOLVED, SPRINKLER PIPING SHOULD BE SUPPORTED BY ADJUSTABLE HANGERS PER NFPA 13, SECTION 3-15.

39. PROVISIONS SHOULD BE MADE TO FACILITATE FLUSHING SYSTEM PIPING BY PROVIDING FLUSHING CONNECTIONS CONSISTING OF A CAPPED NIPPLE 4" LONG ON THE END OF THE CROSS MAIN, AS PER SECTION 3- 8.2 OF NFPA 13.

40. SPRINKLER SHALL BE AN APPROVED TYPE AS PER SECTION 3-16 OF NFPA 13.

41. TEMPERATURE RATING SHALL COMPLY WITH SEC. 3-16.6 OF NFPA 13.

42. CLEARANCES BETWEEN SPRINKLERS AND STORAGE OR PARTITIONS AS PER NFPA 13, SECTION 4-2.5

43. SPACING AND LOCATION OF SPRINKLER SHALL COMPLY WITH CHAPTER 4 NFPA 13.

44. CONTRACTOR TO COORDINATE HIS WORK WITH OTHER TRADES.

45. ONLY EXPERIENCED SPRINKLER MECHANICS TO WORK ON THE SYSTEM.

46. ALL PIPING TO BE A MINIMUM OF 1" UNLESS OTHERWISE NOTED.

47. PROVIDE SHOP DRAWINGS WITH HYDRAULIC CALCULATIONS FOR REVIEW TO LOCAL FIRE MARSHALL AND INSURANCE UNDERWRITER AND ENGINEER FOR APPROVAL PRIOR TO INSTALLATION.

48. ALL FIRE PROTECTION EQUIPMENT SHALL BE INSTALLED PER MANUFACTURER'S REQUIREMENTS/SPECIFICATIONS.

49. ALL FIRE PROTECTION EQUIPMENT SHALL BE MOUNTED ON MINIMUM 6" HIGH CONCRETE PAD UNLESS OTHERWISE NOTED (PAVER AND CINDER BLOCK IS NOT ACCEPTABLE).

50. PERMIT IS REQUIRED PRIOR TO INSTALLATION, TO INCLUDE SIGNED AND SEALED SHOP DRAWINGS, HYDRAULIC CALCULATION, SHOP DRAWINGS, MANUFACTURERS INFORMATION ON HEADS AND APPLIANCES, COMPLIANCE WITH NFPA 13 AND SECTION 903 2020 NYSBC/FC.

FIRE PROTECTION DRAWING LIST

SHEET NO.	SHEET NAME	REVISON NO.	REVISION DATE
CXA-FP-01	FIRE PROTECTION NOTES, SYMBOLS, ABBREVIATIONS, AND DRAWING LIST	0	-
CXA-FP-11	FIRE PROTECTION FIRST FLOOR DEMOLITION RCP	0	-
CXA-FP-21	FIRE PROTECTION FIRST FLOOR AND ATTIC CONSTRUCTION RCP	0	-
CXA-FP-81	FIRE PROTECTION DETAILS	0	-

CONSULTANT INFORMATION
LiRo Engineers, Inc.
A LiRo Group Company
Syosset, N.Y. 516-214-8157[T]

CONSULTANT SEAL
STATE OF NEW YORK · FRANK F. DUSSE · LICENSED PROFESSIONAL ENGINEER · No. 090114

REVISION NUMBER	DATE	MADE BY	APP'D BY	REVISION
1	09/21/22			BID ADDENDUM # 3

RECORD DRAWING CERTIFICATION
☐ AS BUILT – CHANGES AS NOTED ☐ AS BUILT – NO CHANGES
CONTRACTOR: NAME / SIGNATURE / TITLE / DATE
PROJECT COORDINATOR: NAME / SIGNATURE / TITLE / DATE

WESTCHESTER COUNTY, NEW YORK
DEPARTMENT OF PUBLIC WORKS AND TRANSPORTATION
DIVISION OF ENGINEERING

INFRASTRUCTURE REHABILITATION - PHASE 3
PLAYLAND PARK, RYE, NEW YORK
CROSS AXIS BUILDING A
FIRE PROTECTION NOTES, SYMBOLS, ABBREVIATIONS & DWG LIST

CONTRACT NUMBER: 22-523
SHEET NUMBER: CXA-FP-01
DWG NO.: 151 of 664
SCALE: AS INDICATED
DATE: 08/23/2022
DPW FILE NUMBER: 1-118-FP-900-1
REV. NO.: 1

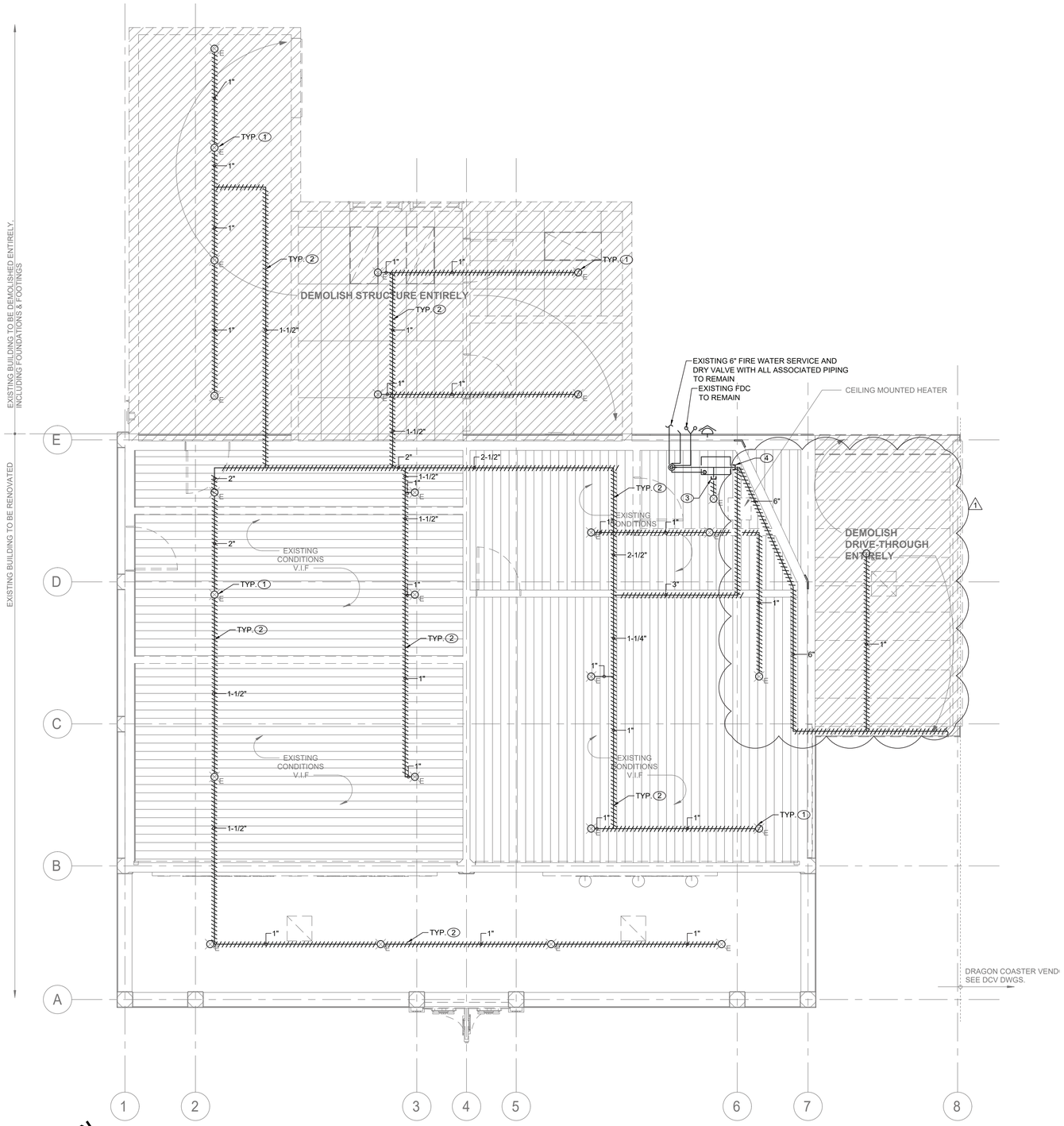

SPRINKLER DEMOLITION NOTES:

1. DEMOLISH ALL EXISTING SPRINKLER HEADS WITHIN THE CXA BUILDING.
2. DEMOLISH ALL EXISTING DRY SPRINKLER PIPING WITHIN THE CXA BUILDING INCLUDING ATTIC SPACE. FIRE SERVICE PIPING, DISTRIBUTION PIPING TO DRAGON COASTER VENDORS AND ACCESSORIES TO REMAIN
3. CUT AND TEMPORARY CAP EXISTING 1" DRY SPRINKLER PIPE FOR FUTURE CONNECTION.
4. CUT AND TEMPORARY CAP EXISTING DRY SPRINKLER PIPE SERVING SPRINKLERS WITHIN CXA AND DCV BUILDINGS FOR FUTURE RECONNECTION.

GENERAL NOTES:

1. COORDINATE WITH FACILITY PRIOR TO SHUTDOWN OF FIRE PROTECTION SYSTEM FOR ANY DEMOLITION AND CONSTRUCTION WORK.

2. CONTRACTOR SHALL PROVIDE FIRE WATCH AS NEEDED FOR THE OLD MILL AND RESTROOMS WHILE SPRINKLER COVERAGE IS IMPACTED.

3. CONTRACTOR TO COORDINATE WITH FACILITY WHEN WORKING AROUND OR ABOVE THE RIDE COMPONENTS, AND PROVIDE ALL NECESSARY MEASURES TO PROTECT THESE COMPONENTS PER THE REQUIREMENTS OF THE FACILITY.

N

FIRE PROTECTION FIRST FLOOR DEMOLITION RCP

SCALE: 1/4" = 1'-0

CONSULTANT INFORMATION

LiRo Engineers, Inc.
A LiRo Group Company
Syosset, N.Y. 516-214-8157[T]

CONSULTANT SEAL

STATE OF NEW YORK · FRANK F. ULISSE · LICENSED PROFESSIONAL ENGINEER · 090713

REVISION NUMBER	DATE	MADE BY	APP'D BY	REVISION
1	09/21/22			BID ADDENDUM # 3

RECORD DRAWING CERTIFICATION

☐ AS BUILT – CHANGES AS NOTED ☐ AS BUILT – NO CHANGES

CONTRACTOR: NAME / SIGNATURE / TITLE / DATE

PROJECT COORDINATOR: NAME / SIGNATURE / TITLE / DATE

WESTCHESTER COUNTY, NEW YORK
DEPARTMENT OF PUBLIC WORKS AND TRANSPORTATION
DIVISION OF ENGINEERING

INFRASTRUCTURE REHABILITATION - PHASE 3
PLAYLAND PARK, RYE, NEW YORK
CROSS AXIS BUILDING A
FIRE PROTECTION FIRST FLOOR DEMOLITION RCP

CONTRACT NUMBER	22-523
SHEET NUMBER	CXA-FP-11
DWG NO.:	152 of 664
SCALE:	AS INDICATED
DATE:	08/23/2022
DPW FILE NUMBER	1-118-FP-901-1
REV. NO.	1

FIRE PROTECTION CONSTRUCTION NOTES:

1. RECONNECT EXISTING 6" DRY SPRINKLER PIPE WITH NEW.
2. PROVIDE NEW DRY 6" SPRINKLER LINE UNDERGROUND AND RECONNECT TO EXISTING SYSTEM AT DCV BUILDING. REFER TO DCV BUILDING FP DRAWINGS FOR CONTINUATION AND MORE INFORMATION.

GENERAL NOTES:

1. ALL DISTRIBUTION PIPING, SHALL BE PAINTED AS DIRECTED BY ARCHITECT. REFER TO SPECIFICATION FOR PAINT TYPE AND APPLICATION PROCEDURE.
2. COORDINATE WITH FACILITY PRIOR TO SHUTDOWN OF FIRE PROTECTION SYSTEM FOR ANY DEMOLITION AND CONSTRUCTION WORK.
3. CONTRACTOR SHALL PROVIDE FIRE WATCH AS NEEDED FOR ALL AFFECTED BUILDINGS WHILE SPRINKLER COVERAGE IS IMPACTED.
4. CONTRACTOR TO COORDINATE WITH FACILITY WHEN WORKING AROUND OR ABOVE THE RIDE COMPONENTS, AND PROVIDE ALL NECESSARY MEASURES TO PROTECT THESE COMPONENTS PER THE REQUIREMENTS OF THE FACILITY.
5. UPON COMPLETION, SYSTEM SHALL BE TESTED FOR PROPER OPERATION.

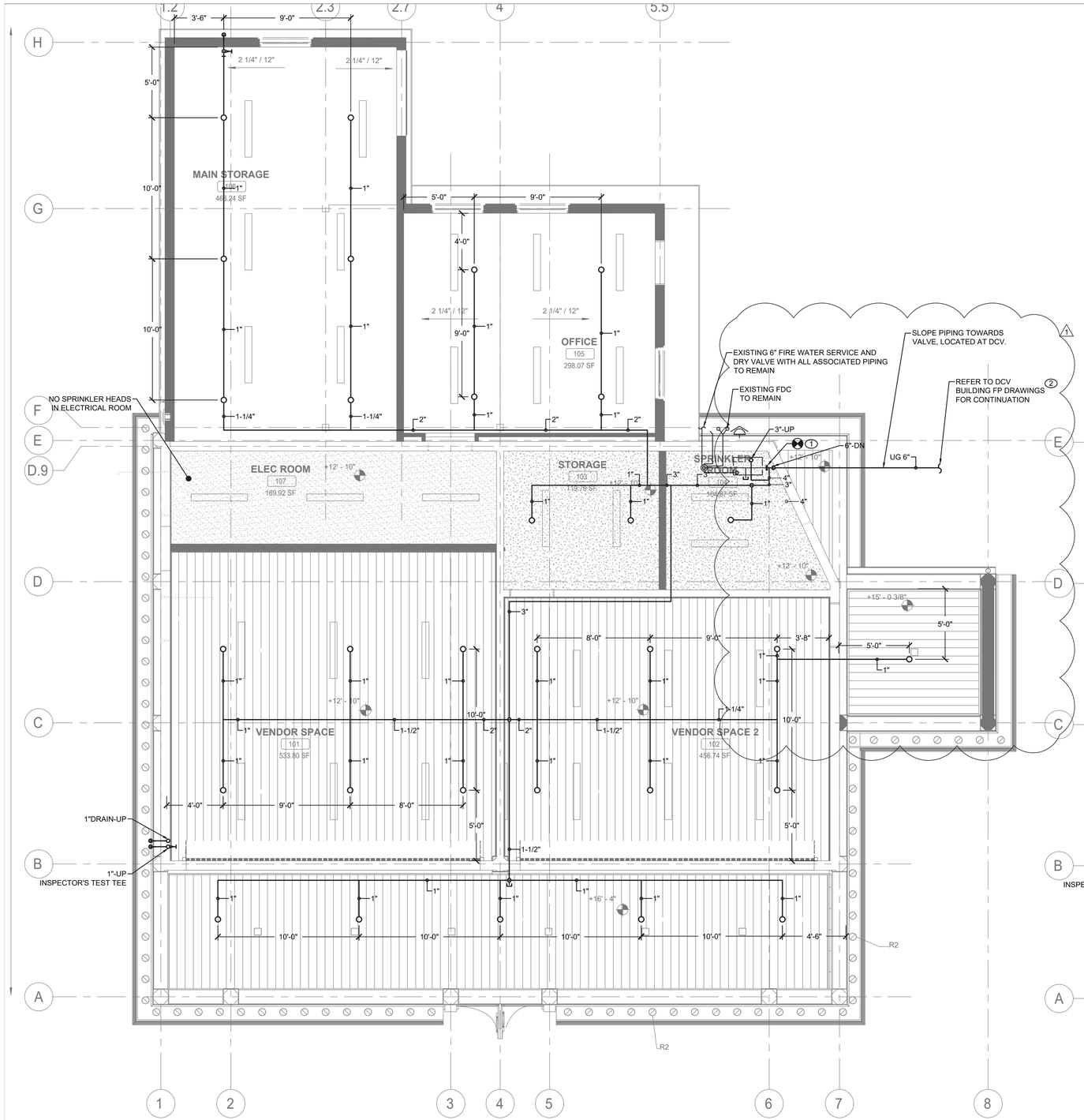

FIRE PROTECTION FIRST FLOOR CONSTRUCTION RCP

SCALE: 1/4" = 1'-0

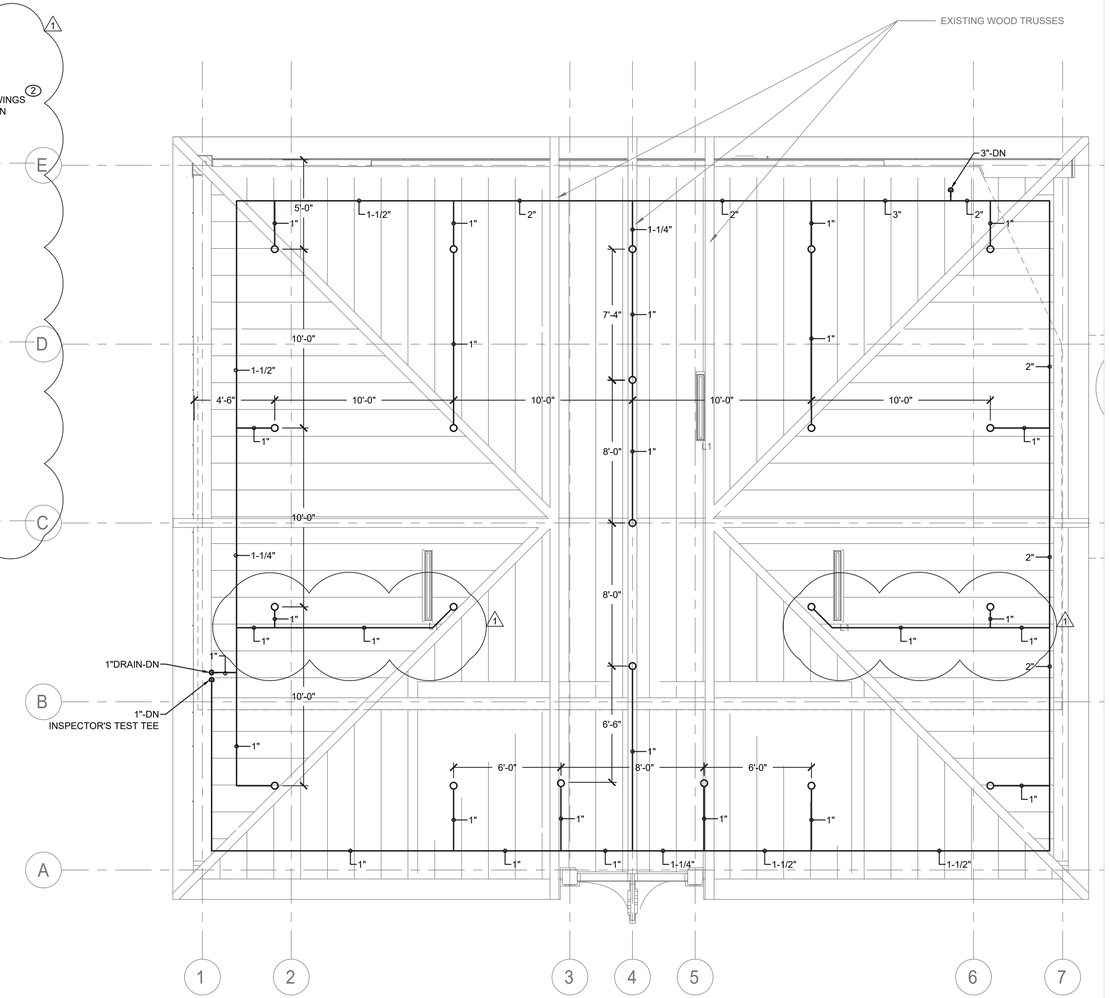

FIRE PROTECTION ATTIC CONSTRUCTION RCP

SCALE: 1/4" = 1'-0

CONSULTANT INFORMATION	CONSULTANT SEAL					
LiRo Engineers, Inc. A LiRo Group Company, Syosset, N.Y. 516-214-8157[T]	STATE OF NEW YORK · FRANK F. ULISSE · LICENSED PROFESSIONAL ENGINEER	1	09/21/22			BID ADDENDUM # 3
		REVISION NUMBER	DATE	MADE BY	APP'D BY	REVISION

RECORD DRAWING CERTIFICATION: ☐ AS BUILT – CHANGES AS NOTED ☐ AS BUILT – NO CHANGES

CONTRACTOR: NAME / SIGNATURE / TITLE / DATE

PROJECT COORDINATOR: NAME / SIGNATURE / TITLE / DATE

WESTCHESTER COUNTY, NEW YORK
DEPARTMENT OF PUBLIC WORKS AND TRANSPORTATION
DIVISION OF ENGINEERING

INFRASTRUCTURE REHABILITATION - PHASE 3
PLAYLAND PARK, RYE, NEW YORK
CROSS AXIS BUILDING A
FIRE PROTECTION FIRST FLOOR AND ATTIC CONSTRUCTION RCP

CONTRACT NUMBER	22-523
SHEET NUMBER	CXA-FP-21
DWG NO.:	153 of 664
SCALE:	AS INDICATED
DATE:	08/23/2022
DPW FILE NUMBER	1-118-FP-902-1
REV. NO.	1

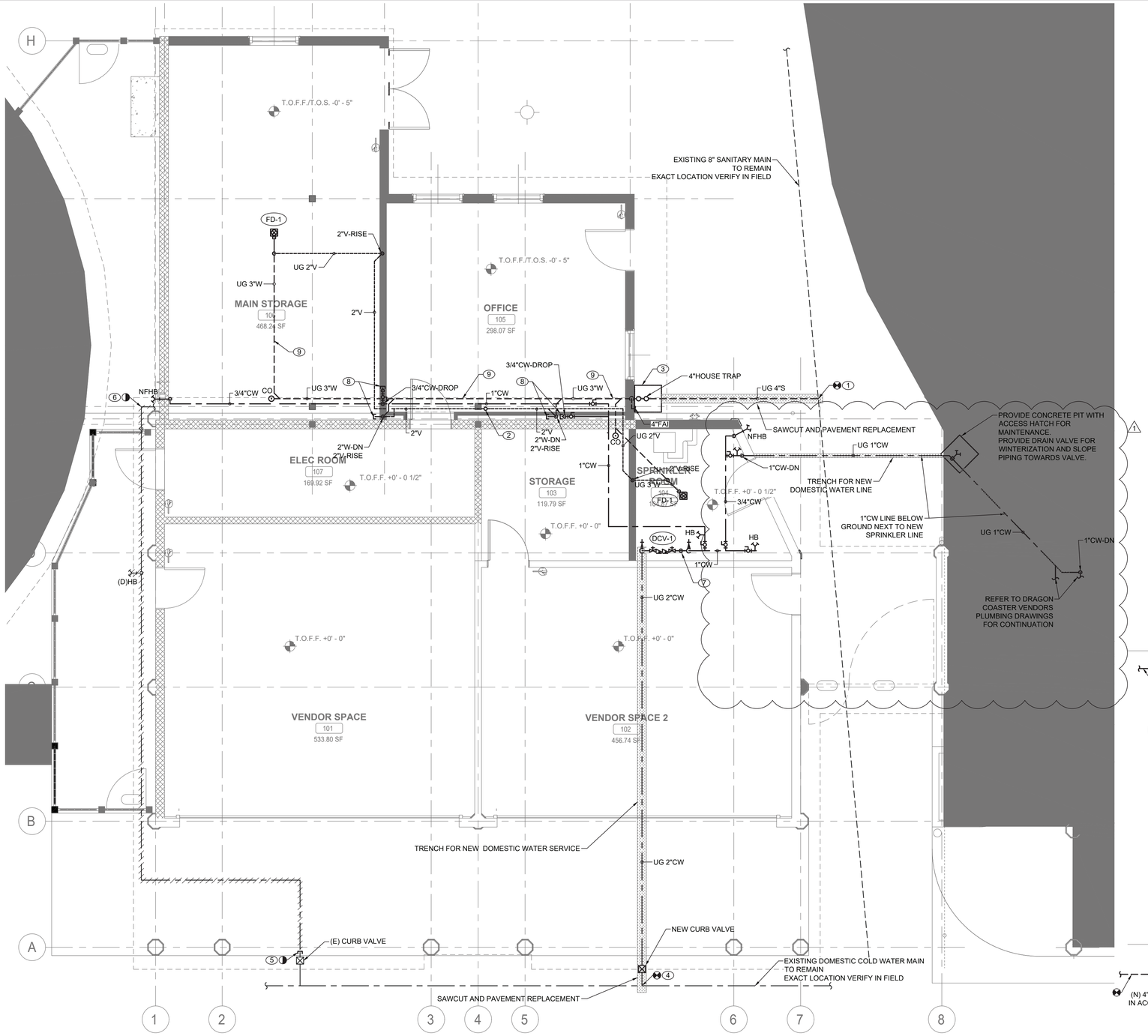

1 P-21 **PLUMBING FIRST FLOOR CONSTRUCTION PLAN**
SCALE: 1/4" = 1'-0

PLUMBING CONSTRUCTION NOTES:

1. CONNECT NEW 4" SANITARY SERVICE TO EXISTING SEWER MAIN LOCATED AT CROSS-AXIS ALLEY WEST. CONTRACTOR TO VERIFY THE INVERT, SIZE, AND MATERIAL OF THE EXISTING SEWER PIPING TO FACILITATE NEW SANITARY SERVICE CONNECTION.
2. PROVIDE NEW 4" VENT THRU ROOF.
3. PROVIDE NEW 4"HOUSE TRAP IN PIT. PROVIDE ACCESS DOOR FOR MAINTENANCE. PROVIDE 4" FRESH AIR INTAKE THRU EXTERIOR WALL. TERMINATE VENT WITH INSECT SCREEN. HOUSE TRAP SHALL BE PROTECTED FROM FREEZING.
4. CONNECT NEW 2" DOMESTIC COLD WATER SERVICE TO EXISTING WATER MAIN LOCATED AT CROSS-AXIS ALLEY WEST. PROVIDE CURB VALVE WITH VALVE BOX.
5. CUT AND PERMANENTLY CAP EXISTING WATER SERVICE BELOW GROUND. ABANDON IN PLACE EXISTING WATER SERVICE PIPING, REMOVE PORTIONS OF PIPING THAT EXPOSED OR IN CONFLICT WITH NEW CONSTRUCTION.
6. REMOVE EXISTING WATER LINE UP TO PLUMBING FIXTURES LOCATED WITHIN DRAGON COASTER VENDOR SPACE.
7. PROVIDE A COMPRESSED AIR CONNECTION FOR WINTERIZING.
8. PROVIDE 2"W AND 3/4"CW STUB-UP FOR FUTURE SINK WITHIN NEW WALL. CONNECTION SHALL BE ACCESSIBLE AFTER CONSTRUCTION.
9. COORDINATE LOCATION OF NEW UNDERGROUND PIPING WITH STRUCTURAL ELEMENTS. PROVIDE REQUIRED SLEEVES AND SUPPORTS.

GENERAL NOTES:

1. COORDINATE WITH FACILITY PRIOR TO SHUTDOWN OF WATER DISTRIBUTION SYSTEM FOR ANY DEMOLITION AND CONSTRUCTION WORK.
2. PROVIDE DRAIN VALVES AT BOTTOM FOR EACH BRANCH. PROVIDE ACCESS PANELS TO ALL VALVES ABOVE CEILING AND BEHIND WALLS.
3. INSTALL NEW WATER PIPING WITH PROPER SLOPES TO AVOID WATER TRAPS DURING WINTER SEASON.
4. CONTRACTOR TO COORDINATE WITH FACILITY WHEN WORKING AROUND OR ABOVE THE RIDE COMPONENTS, AND PROVIDE ALL NECESSARY MEASURES TO PROTECT THESE COMPONENTS PER THE REQUIREMENTS OF THE FACILITY.
5. UPON COMPLETION, SYSTEM SHALL BE TESTED FOR PROPER OPERATION.
6. SEWER CROSSING WATER MAINS, CONDUITS, OR OTHER UTILITY SHALL BE MINIMUM 18" CLEARANCE BETWEEN THE OUTSIDE OF THE UTILITY AND OUTSIDE OF THE SEWER. THE CROSSINGS SHALL BE ARRANGED SO THAT THE SEWER JOINTS WILL BE EQUIDISTANT AND AS FAR AS POSSIBLE FROM THE WATER MAIN JOINTS.

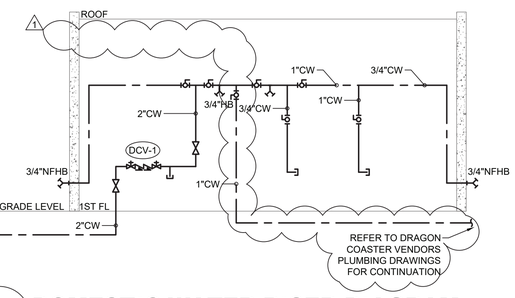

2 P-21 **DOMESTIC WATER RISER DIAGRAM**
SCALE: NOT TO SCALE

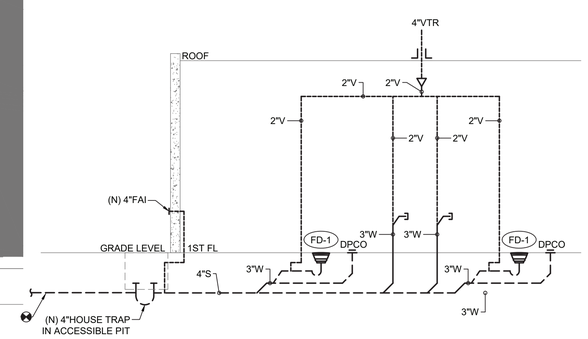

3 P-21 **SANITARY RISER DIAGRAM**
SCALE: NOT TO SCALE

CONSULTANT INFORMATION

LiRo Engineers, Inc.
A LiRo Group Company
Syosset, N.Y. 516-214-8157[T]

CONSULTANT SEAL

STATE OF NEW YORK · FRANK F. ULISSE · LICENSED PROFESSIONAL ENGINEER

REVISION NUMBER	DATE	MADE BY	APP'D BY	REVISION
1	09/21/22			BID ADDENDUM # 3

RECORD DRAWING CERTIFICATION
☐ AS BUILT – CHANGES AS NOTED ☐ AS BUILT – NO CHANGES

CONTRACTOR
NAME
SIGNATURE
TITLE DATE

PROJECT COORDINATOR
NAME
SIGNATURE
TITLE DATE

WESTCHESTER COUNTY, NEW YORK
DEPARTMENT OF PUBLIC WORKS AND TRANSPORTATION
DIVISION OF ENGINEERING

INFRASTRUCTURE REHABILITATION - PHASE 3
PLAYLAND PARK, RYE, NEW YORK
CROSS AXIS BUILDING A
PLUMBING FIRST FLOOR CONSTRUCTION PLAN

CONTRACT NUMBER 22-523
SHEET NUMBER CXA-P-21
DWG NO.: 156 of 664
SCALE: AS INDICATED
DATE: 08/23/2022
DPW FILE NUMBER 1-118-P-905-1
REV. NO. 1

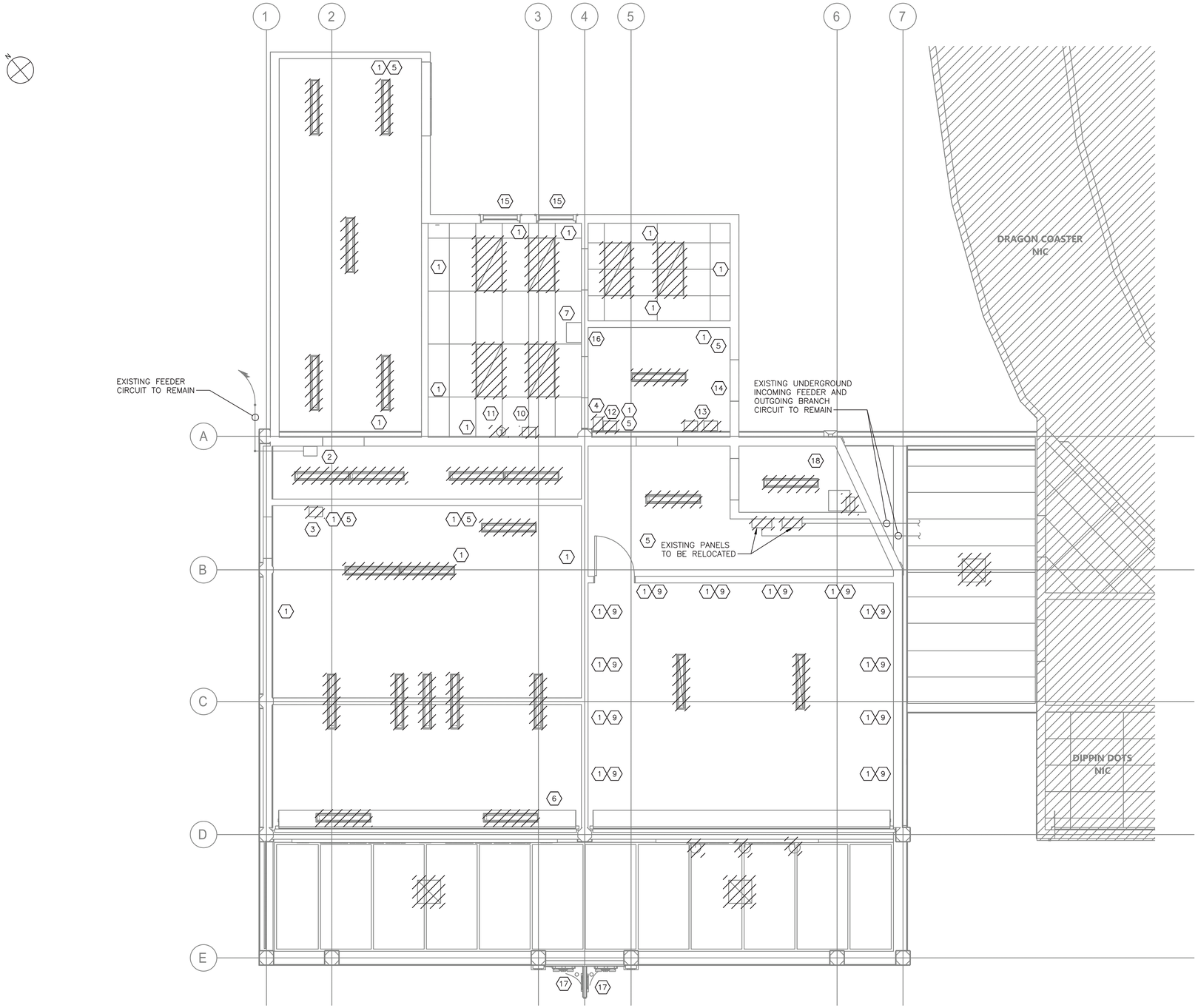

GROUND FLOOR POWER AND LIGHTING PLAN – DEMOLITION
1/4"=1'-0"

NOTES:

1. FOR ADDITIONAL NOTES, ABBREVIATIONS AND SYMBOLS, SEE DRAWING GE-E-01.
2. ALL REMOVED EQUIPMENT SHALL BE RETURNED TO OWNER UPON REQUEST. OTHERWISE ALL REMOVED MATERIAL SHALL BE LEGALLY DISPOSED OF.
3. DISCONNECT AND REMOVE ALL ELECTRICAL EQUIPMENT, LIGHTING, POWER, CONDUIT AND WIRE BACK TO SOURCE. REMOVE ALL PANELBOARDS. COMPLETE ELECTRICAL GUT UNLESS NOTED OTHERWISE. CONTRACTOR IS ADVISED, THE STRUCTURE NORTH COLUMN LINE A WILL BE DEMOLISHED IN ITS ENTIRETY.
4. ALL EXISTING CABLE AND CONDUIT SHALL BE DOCUMENTED PRIOR TO REMOVAL.
5. CONTRACTOR SHALL DISCONNECT AND REMOVE ALL EXISTING FLUORESCENT LIGHTING FIXTURES.
6. DISCONNECT AND REMOVE ALL EXTERIOR LIGHTING, ALL EXPOSED CONDUIT, WIRE, ETC.
7. CONTRACTOR SHALL DEMOLISH ALL EXISTING JUNCTION BOXES AND ASSOCIATED CONDUITS, WIRES, AND APPURTENANCES. FOR BIDDING PURPOSES, ASSUME 2000 FEET 1"C, 3#12 & 1#12 GND.
8. DISPOSITION OF EXISTING CCTV/DATA/COMMUNICATIONS CABINET SHALL BE BY OTHERS. THIS INCLUDES BOTH INCOMING AND OUTGOING CONDUIT AND CABLES. REFER TO ARCHITECTURAL DRAWINGS. (1)
9. SEE DRAWING CXA-E-01 FOR PANEL SCHEDULE DEMOLITION.
10. WALLS WITH DATA PORT ARRAY TO BE REMOVED BY OTHERS. REFER TO ARCHITECTURAL DRAWINGS. (1)
11. LOCATION OF MOTOR FOR ROLL UP DOOR. CONTRACTOR SHALL DISCONNECT AND REMOVE THE MOTOR, AND ALL ASSOCIATED CONDUIT AND WIRE BACK TO SOURCE.
12. LOCATION OF HANDPUNCH BIOMETRIC TIME CLOCK. CONTRACTOR SHALL DISCONNECT THE TIME CLOCK AND RETURN TO OWNER. CONTRACTOR SHALL DISCONNECT AND REMOVE ALL ASSOCIATED CONDUIT AND WIRE BACK TO SOURCE.
13. LOCATION OF SPRINKLER ROOM UNIT HEATER. EQUIPMENT REMOVED BY OTHERS. CONTRACTOR SHALL DISCONNECT AND REMOVE ALL ASSOCIATED CONDUIT AND WIRE. REFER TO MECHANICAL AND PLUMBING DRAWINGS. (1)
14. LOCATION OF EXISTING 200AMP DISCONNECT SWITCH TO REMAIN AND BE REUSED. REFER TO KEYNOTE 1 AND 2 ON DRAWING CXA-E-01.

DEMOLITION LEGEND ⬡	
1	RECEPTACLE
2	200A HEAVY DUTY DISCONNECT SWITCH (SEE NOTE 14)
3	12 CKT PANEL (100A) "SHOOT THE STARS"
4	8 CKT PANEL "VESTIBULE 2"
5	LIGHT SWITCH
6	ROLL-UP DOOR MOTOR (SEE NOTE 11)
7	COMMUNICATIONS HUB (SEE NOTE 8)
8	GENERAL DUTY SAFETY SWITCH
9	DATA PORTS (SEE NOTE 10)
10	UNIT HEATER
11	UNIT HEATER THERMOSTAT
12	30 CKT PANEL (150A) "VESTIBULE 1"
13	4 CKT PUSHMATIC PANEL & ASSOCIATED 30A DISC SW
14	EXIT SIGN AND EMERGENCY LIGHT
15	THROUGH-WALL AIR CONDITIONING UNIT – DISCONNECT AND REMOVE POWER
16	HANDPUNCH TIME CLOCK (SEE NOTE 12)
17	(2) 2" CAN-STYLE FIXTURES RECESSED IN "GAMES" SIGNAGE SOFFIT.
18	SPRINKLER ROOM UNIT HEATER (SEE NOTE 13)

0 4' 8'
SCALE: 1/4" = 1'-0"

CONSULTANT INFORMATION
Savin Engineers, P.C.

CONSULTANT SEAL
STATE OF NEW YORK · STEVEN A. MARTINO · 083631 · LICENSED PROFESSIONAL ENGINEER

REVISION NUMBER	DATE	MADE BY	APP'D BY	REVISION
1	09/21/2022	RKC	SM	BID ADDENDUM #3

RECORD DRAWING CERTIFICATION
☐ AS BUILT – CHANGES AS NOTED ☐ AS BUILT – NO CHANGES

CONTRACTOR
NAME
SIGNATURE
TITLE DATE

PROJECT COORDINATOR
NAME
SIGNATURE
TITLE DATE

WESTCHESTER COUNTY, NEW YORK
DEPARTMENT OF PUBLIC WORKS AND TRANSPORTATION
DIVISION OF ENGINEERING

INFRASTRUCTURE REHABILITATION - PHASE 3
PLAYLAND PARK, RYE, NEW YORK
CROSS AXIS BUILDING A
GROUND FLOOR DEMOLITION PLAN

CONTRACT NUMBER	SHEET NUMBER
22-523	CXA-E-02

DWG NO.: 165 of 664
SCALE: AS SHOWN
DATE: 8/23/2022
DPW FILE NUMBER 1-118-E-914-1 REV. NO. 1

Drawing Name: G:\SavinAutocad\2060\25-Playland-Mega-3\E\CXAE-1002.dwg
Projectname: 211001F02 Comments: ----
Printed by: MGodby Date: 21 September 2022 1:35 PM Designed by: ----
Xrefs: [TB_24X36_WestchesterCo_3.dwg] [TSG-SVLOGO.dwg] [CXA-A-02-E.dwg] [CXA-E-1003.dwg]

NOTES:

1. FOR ADDITIONAL NOTES, ABBREVIATIONS AND SYMBOLS, SEE DRAWING GE–E–01.
2. SEE DRAWING CXA–E–09 FOR PANEL AND LIGHTING CONTROL SCHEDULES.

KEY NOTES:

1. EXISTING INCOMING SERVICE TO BE REUSED. CONTRACTOR SHALL TRACE OUT FEEDER CIRCUIT BACK TO SOURCE. EXISTING CONDUIT RUN TO SOURCE BELOW GRADE SHALL BE REUSED. CONTRACTOR SHALL EXTEND CONDUIT AS NECESSARY FOR NEW EQUIPMENT.
2. EXISTING FUSED SWITCH TO REMAIN AND BE REUSED (FUSED AT 175 AMPS).
3. NEW PANEL CXA–PP1. PANEL SHALL BE 208Y/120 VOLT, 3–PHASE, 4 WIRE WITH 225 AMP MAINS AND 175 AMP MAIN CIRCUIT BREAKER.
4. NEW RELAY PANEL CXA–RP.
5. DISCONNECT EXISTING WIRES AND CABLE FROM EXISTING PANELS AND PULL BACK SLACK TO LOCAL HANDHOLE. THIS IS TO ALLOW FOR CONDUIT EXTENSIONS OF EXISTING CONDUIT TO NEW SPLICE BOXES.
6. NEW SPLICE BOX FOR TOWER 5 LIGHTING AND CONTROL CABLES.
7. NEW SPLICE BOX FOR INCOMING POWER CABLES.
8. RELOCATED PANEL PP–TW5.
9. RELOCATED RELAY PANEL TW5–RP.

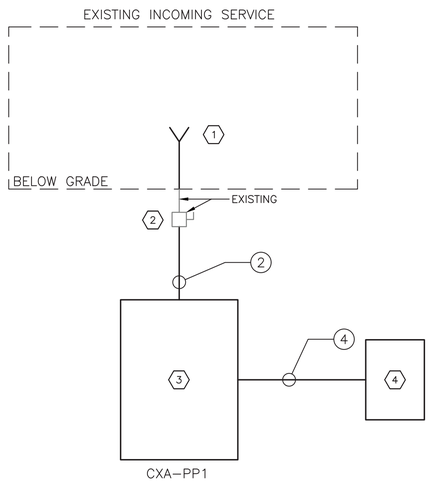

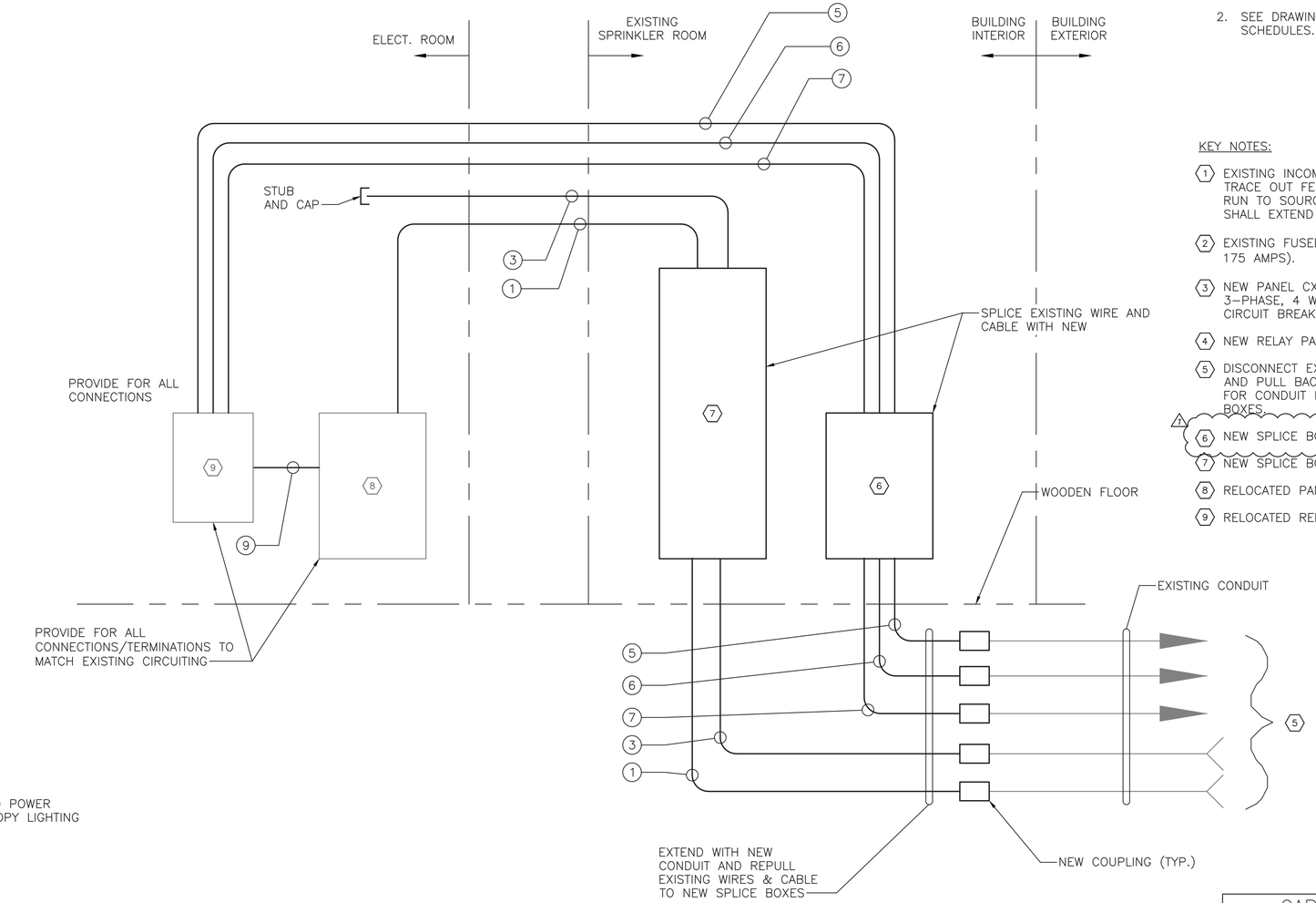

EXTENSION OF EXISTING PANELS

N.T.S.

NOTE:

NEW PANEL CXA–PP1 SHALL BE USED FOR LIGHTING AND POWER REQUIREMENTS FOR VENDOR SPACES 101 AND 102, CANOPY LIGHTING AND EXTERIOR COVE LIGHTING.

CABLE AND CONDUIT

NO.	DESCRIPTION
1	4"C, 4#–500KCMIL & 1#2/0 GND
2	2"C, 4#2/0 & 1#6 GND
3	4"C, SPARE WITH PULL ROPE
4	3/4"C, 8#10 & 1#12 GND
5	2"C, 3#10 (PHOTOCELL)
6	2"C, SPARE WITH PULL ROPE
7	2"C, 16#10 & 8#10 GNDS
8	1"C, 3#10 (PHOTOCELL)
9	2"C, 2#12, 16#10 & 9#10 GNDS

CONSULTANT INFORMATION

Savin Engineers, P.C.

CONSULTANT SEAL

STATE OF NEW YORK · STEVEN A. MARTINO · 083631 · LICENSED PROFESSIONAL ENGINEER

REVISION NUMBER	DATE	MADE BY	APP'D BY	REVISION
1	09/21/2022	RKC	SM	BID ADDENDUM #3

RECORD DRAWING CERTIFICATION

☐ AS BUILT – CHANGES AS NOTED ☐ AS BUILT – NO CHANGES

CONTRACTOR: NAME / SIGNATURE / TITLE / DATE

PROJECT COORDINATOR: NAME / SIGNATURE / TITLE / DATE

WESTCHESTER COUNTY, NEW YORK
DEPARTMENT OF PUBLIC WORKS AND TRANSPORTATION
DIVISION OF ENGINEERING

INFRASTRUCTURE REHABILITATION - PHASE 3
PLAYLAND PARK, RYE, NEW YORK
CROSS AXIS BUILDING A
ONE LINE DIAGRAMS

CONTRACT NUMBER	22-523
SHEET NUMBER	CXA-E-04
DWG NO.:	167 of 664
SCALE:	AS SHOWN
DATE:	8/23/2022
DPW FILE NUMBER	1-118-E-916-1
REV. NO.	1

Drawing Name: G:\Savin\Autocad\2060\25-Playland-Mega-3\E\CXAE-1009.dwg
Rev#: Projectname: 211001F02 Comments: ----
Printed by: MGadby Date: 21 September 2022 1:35 PM Designed by: ----
Xrefs: [TB_24X36_WestchesterCo_3.dwg] [TSG-SVLOGO.dwg] [BCR-A-04.dwg] [BCRE-101.dwg]

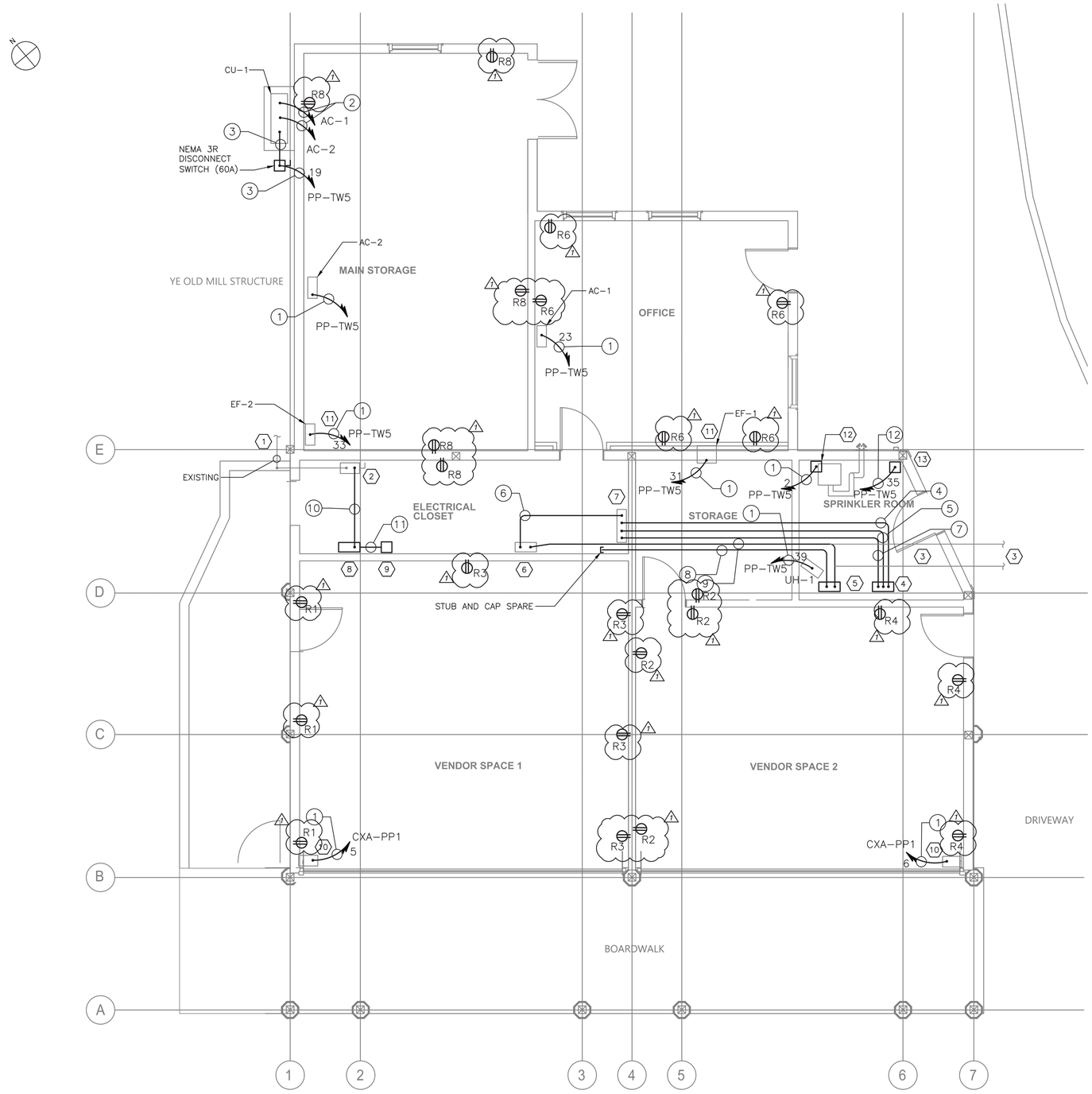

GROUND FLOOR POWER PLAN
1/4"=1'-0"

NOTES:

1. FOR ADDITIONAL NOTES, ABBREVIATIONS AND SYMBOLS, SEE DRAWING GE-E-01.
2. NUMBER DESIGNATORS NEXT TO RECEPTACLES INDICATE CIRCUIT NUMBERS. CONTRACTOR IS ADVISED, THE RECEPTACLES ARE POWERED AS FOLLOWS:
   A. ALL RECEPTACLES IN THE MAIN STORAGE, OFFICE, AND ELECTRICAL CLOSET SHALL BE CIRCUITED VIA PANEL PP-TW-5.
   B. ALL REMAINING RECEPTACLES SHALL BE CIRCUITED VIA PANEL CXA-PP.
3. FOR ADDITIONAL INFORMATION OF HVAC EQUIPMENT, FANS AND UNIT HEATER SEE MECHANICAL DRAWINGS.
4. CONTRACTOR IS ADVISED THERE MAY BE ADDITIONAL CIRCUITS NEEDED FOR EQUIPMENT LOCATED IN THE BUILDING. ASSUME 3 ADDITIONAL 120 VOLT CIRCUITS WILL BE NEEDED WITH 200 FEET OF 3/4"C, 2#12 & 1 #12 GND.

KEY NOTES:

1. APPROXIMATE LOCATION OF INCOMING EXISTING ELECTRICAL SERVICE TO BE REUSED.
2. 200 AMP DISCONNECT SWITCH (FUSED AT 175 AMPS). TO BE REUSED.
3. LOCATION OF UNDERGROUND SERVICE AND TOWER 5 LIGHTING CONTROL CIRCUITS. CONDUIT LOCATED UNDER FLOOR BOARDS SHALL BE INTERCEPTED AND REROUTED TO NEW JUNCTION/SPLICE BOXES. CONTRACTOR SHALL REUSE EXISTING WIRING. SEE DRAWING CXA-E-04 FOR ADDITIONAL INFORMATION.
4. INTERCEPT SPLICE BOX FOR TOWER 5 LIGHTING CIRCUITS AND PHOTOCELL CONTROL. SPLICE NEW WIRES AND EXTEND CONDUIT TO NEW LOCATION OF RELAY PANEL TW5-RP. APPROXIMATE SIZE 16"X16", NEMA 1 ENCLOSURE (WALL MOUNTED).
5. INCOMING POWER INTERCEPT SPLICE BOX. EXISTING UNDER FLOOR LOCATED CONDUIT (4"C, 4#500 & 1#2/0 GND) AND SPARE TO BE REROUTED TO SPLICE BOX LOCATION. REUSE EXISTING CABLE TO NEW SPLICE BOX. SPLICE NEW CABLE AND EXTEND CONDUIT TO NEW LOCATION OF PANEL PP-TW-5. APPROXIMATE SIZE 32" HIGH X 18" WIDE, NEMA 1 ENCLOSURE (WALL MOUNTED).
6. RELOCATED PANEL PP-TW-5.
7. RELOCATED RELAY PANEL TW5-RP.
8. NEW 208Y/120 VOLT, 3 PHASE, 4 WIRE PANEL (CXD-PP1) WITH 225 AMP MAINS AND 175 AMP MAIN CIRCUIT BREAKER.
9. NEW LIGHTING CONTROL RELAY PANEL CXA-RP. SEE DRAWING CXA-E-09 FOR ADDITIONAL INFORMATION.
10. ROLL-UP DOOR MOTOR. PROVIDE 30 AMP, 2-POLE DISCONNECT SWITCH, NEMA 12 ENCLOSURE.
11. EXHAUST FANS EF-1 AND EF-2. PROVIDE 2-POLE DISCONNECT SWITCH EACH FAN.
12. EXISTING SPRINKLER ALARM TO BE REPOWERED.
13. EXISTING AIR COMPRESSOR TO BE REPOWERED.

CONDUIT AND WIRE LEGEND

NO.	DESCRIPTION
1	3/4"C, 2#12 & 1#12 GND
2	3/4"C, BLANK CONDUIT FOR CONTROL
3	3/4"C. 2#8 & 1#10 GND
4	1"C, 3#10 (PHOTOCELL)
5	2"C, SPARE WITH PULL ROPE
6	2"C, 2#12, 16#10 & 9#10 GNDS
7	2"C, 16#10 & 8#10 GNDS
8	4"C, SPARE WITH PULL ROPE
9	4"C, 4-500KCMIL & 1#2/0 GND
10	2"C, 4#2/0 & 1#6 GND
11	1 1/4"C, 14#10 & 7#10 GNDS
12	3/4"C, 2#10 & 1#10 GND

0 4' 8'
SCALE: 1/4" = 1'-0"

CONSULTANT INFORMATION
Savin Engineers, P.C.

CONSULTANT SEAL
STATE OF NEW YORK · STEVEN A. MARTINO · 083631 · LICENSED PROFESSIONAL ENGINEER

REVISION NUMBER	DATE	MADE BY	APP'D BY	REVISION
1	09/21/2022	RKC	SM	BID ADDENDUM #3

RECORD DRAWING CERTIFICATION
☐ AS BUILT - CHANGES AS NOTED ☐ AS BUILT - NO CHANGES
CONTRACTOR: NAME / SIGNATURE / TITLE / DATE
PROJECT COORDINATOR: NAME / SIGNATURE / TITLE / DATE

WESTCHESTER COUNTY, NEW YORK
DEPARTMENT OF PUBLIC WORKS AND TRANSPORTATION
DIVISION OF ENGINEERING

INFRASTRUCTURE REHABILITATION - PHASE 3
PLAYLAND PARK, RYE, NEW YORK
CROSS AXIS BUILDING A
GROUND FLOOR POWER PLAN

CONTRACT NUMBER: 22-523
SHEET NUMBER: CXA-E-05
DWG NO.: 168 of 664
SCALE: AS SHOWN
DATE: 8/23/2022
DPW FILE NUMBER: 1-118-E-917-1
REV. NO.: 1

Drawing Name: G:\SavinAutocad\2060\25-Playland-Mega-3\E\CXAE-1005.dwg
Proj#: Projectname: 211001F02 Comments: ----
Printed by: MGodby Date: 21 September 2022 1:36 PM Designed by: ----
Xrefs: [TB_24X36_WestchesterCo_3.dwg] [TSG-SVLOGO.dwg] [CXA-A-11.dwg] [CXA-E-1002.dwg]

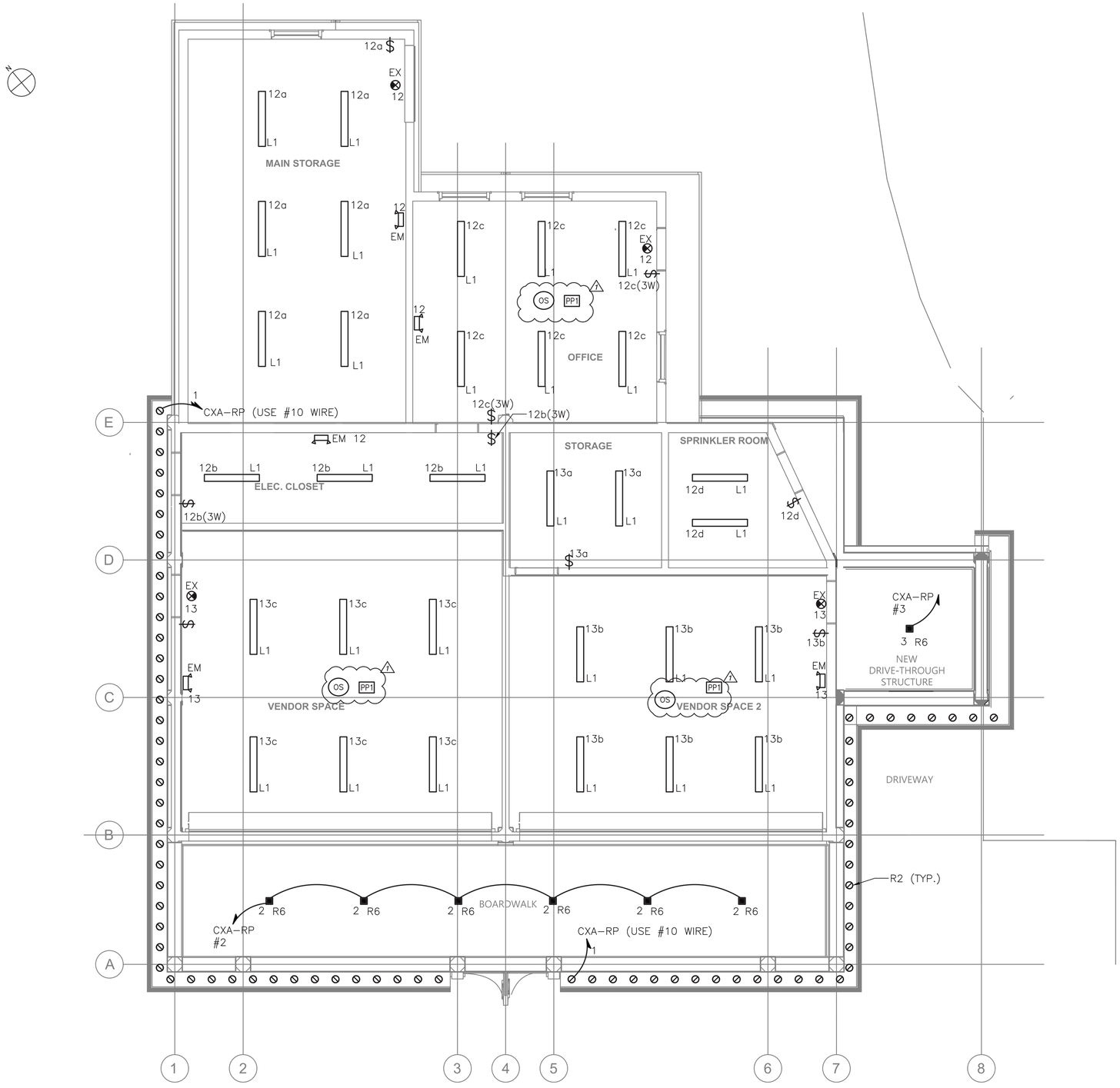

GROUND FLOOR LIGHTING PLAN
1/4"=1'-0"

NOTES:

1. FOR ADDITIONAL NOTES, ABBREVIATIONS, AND SYMBOLS, SEE DRAWING GE-E-01.
2. EXIT SIGNS SHALL BE WIRED TO THE UN-SWITCHED LEG OF THE DESIGNATED CIRCUIT.
3. EMERGENCY FIXTURES SHALL BE WIRED TO THE UN-SWITCHED LEG OF THE DESIGNATED CIRCUIT.
4. NUMBER DESIGNATORS NEXT TO FIXTURES AND/OR CONTROLS INDICATE CIRCUIT NUMBERS. CONTRACTOR IS ADVISED, THE LIGHTING IS POWERED AS FOLLOWS:
   A. ALL INTERIOR LIGHTING IN MAIN STORAGE OFFICE, ELECTRICAL CLOSET AND SPRINKLER ROOM SHALL BE CIRCUITED VIA PANEL PP-TW5
   B. ALL REMAINING INTERIOR LIGHTING SHALL BE CIRCUITED VIA PANEL CXA-PP.
   C. ALL EXTERIOR LIGHTING SHALL BE CIRCUITED FROM RELAY PANEL CXA-RP.
5. CONTRACTOR SHALL CIRCUIT ALL INTERIOR LIGHTING FIXTURES WITH 3/4" CONDUIT AND 2#12 & 1#12GND WIRE, UNLESS NOTED OTHERWISE. FIXTURES WITH SAME CIRCUIT NUMBER SHALL BE DAISY-CHAINED BACK TO ASSOCIATED POWERSOURCE. (SEE NOTE 4).
6. CONTRACTOR SHALL CIRCUIT ALL EXTERIOR LIGHTING FIXTURES WITH ¾" CONDUIT AND 2#12 & 1#12GND WIRE, UNLESS NOTED OTHERWISE. FIXTURES WITH SAME CIRCUIT NUMBER SHALL BE DAISY-CHAINED BACK TO RELAY PANEL CXA-RP.
7. LETTER DESIGNATORS NEXT TO FIXTURES AND/OR CONTROLS INDICATE CONTROL CIRCUITING.
8. POWER PACKS SHALL BE MOUNTED ABOVE FINISHED CEILING.
9. LIGHTING CONTROL ZONES ARE SEGREGATED BY AREA POWER-PACKS AS SHOWN ON THE DRAWING.
10. NEW LIGHTING CONTROLS SHALL BE FULLY COMPATIBLE WITH THE EXISTING SYSTEM AS PROVIDED ELSEWHERE4 AT THE PLAYLAND FACILITY. EQUIPMENT INCLUDES, BUT IS NOT LIMITED TO OCUPANCY SENSORS, RELAY/POWER PACKS, SWITCHES, RELAY PANELS, PHOTOSENSORS, ETC.
11. LIGHTING CONTROLS SELECTED SHALL HAVE THE CAPABILITY TO BE CONNECTED TO A MASTER HEAD-END SYSTEM (FUTURE CONTRACT).
12. REFER TO GE-E-03 FOR LIGHTING FIXTURE AND LIGHTING CONTROL SCHEDULES. REFER TO CXA-E-09 FOR PANEL SCHEDULES.
13. REFER TO DT-E-01 FOR INTERIOR LIGHTING CONTROL WIRING (INCLUDING BUT NOT LIMITED TO ETHERNET AND LOW VOLTAGE WIRING).

SCALE: 1/4" = 1'-0"

CONSULTANT INFORMATION

Savin Engineers, P.C.

REVISION NUMBER	DATE	MADE BY	APP'D BY	REVISION
1	09/21/2022	RKC	SM	BID ADDENDUM #3

RECORD DRAWING CERTIFICATION
☐ AS BUILT – CHANGES AS NOTED ☐ AS BUILT – NO CHANGES

CONTRACTOR: NAME / SIGNATURE / TITLE / DATE
PROJECT COORDINATOR: NAME / SIGNATURE / TITLE / DATE

WESTCHESTER COUNTY, NEW YORK
DEPARTMENT OF PUBLIC WORKS AND TRANSPORTATION
DIVISION OF ENGINEERING

INFRASTRUCTURE REHABILITATION - PHASE 3
PLAYLAND PARK, RYE, NEW YORK
CROSS AXIS BUILDING A
GROUND FLOOR LIGHTING PLAN

CONTRACT NUMBER	22-523
SHEET NUMBER	CXA-E-06
DWG NO.:	169 of 664
SCALE:	AS SHOWN
DATE:	8/23/2022
DPW FILE NUMBER	1-118-E-918-1
REV. NO.	1

Drawing Name: G:\SavinAutocad\2060\25-Playland-Mega-3\E\CXAE-1006.dwg
Projectname: 211001F02 Comments: ----
Printed by: MGoodby Date: 21 September 2022 1:36 PM Designed by: ----
Xrefs: [TB_24X36_WestchesterCo_3.dwg] [TSG-SVLOGO.dwg] [CXA-A-41.dwg] [CXA-E-1001.dwg]

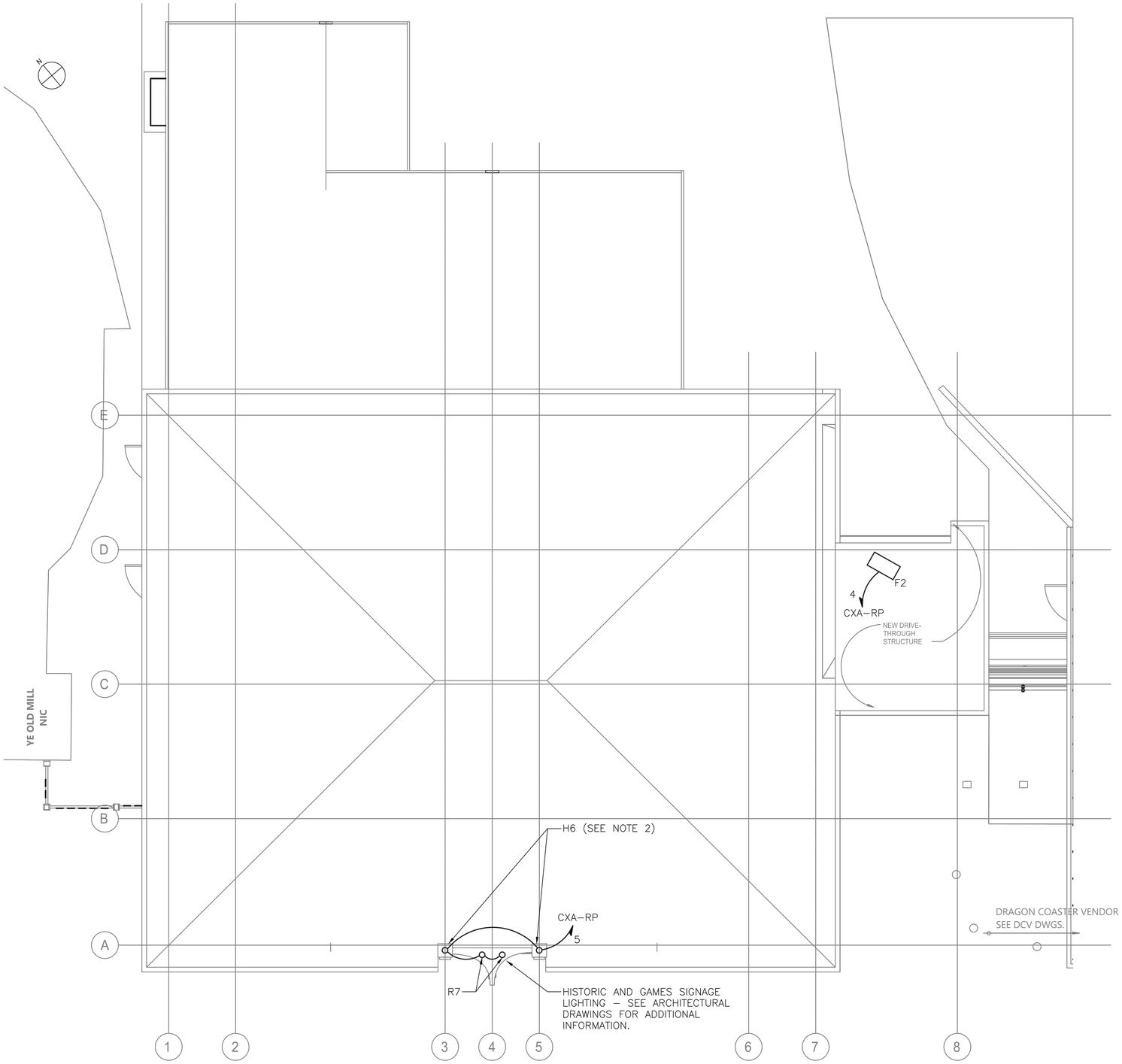

ROOF LIGHTING PLAN
1/4"=1'–0"

NOTES:

1. FOR ADDITIONAL NOTES, ABBREVIATIONS AND SYMBOLS, SEE DRAWING GE–E–01.
2. HISTORIC FINIAL LIGHTS TO BE REFURBISHED AND REINSTALLED UNDER THIS CONTRACT. CONTRACTOR SHALL REINSTALL THESE UNITS. REFER TO ARCHITECTURAL DRAWINGS FOR MORE INFORMATION.

0 4' 8'
SCALE: 1/4" = 1'–0"

Drawing Name: G:\SavinAutocad\2060\25-Playland-Mega-3\E\CXAE-1012.dwg
Reg#: Projectname: 211001F02 Comments: ----
Printed by: MGodby Date: 21 September 2022 1:36 PM Designed by: ----
Xrefs: [TB_24X36_WestchesterCo_3.dwg] [TSG-SVLOGO.dwg] [CXA-A-13.dwg] [CXA-E-1006.dwg]

CONSULTANT INFORMATION

Savin Engineers, P.C.

CONSULTANT SEAL

STATE OF NEW YORK · STEVEN A. MARTINO · 083631 · LICENSED PROFESSIONAL ENGINEER

REVISION NUMBER	DATE	MADE BY	APP'D BY	REVISION
1	09/21/2022	RKC	SM	BID ADDENDUM #3

RECORD DRAWING CERTIFICATION

☐ AS BUILT – CHANGES AS NOTED ☐ AS BUILT – NO CHANGES

CONTRACTOR
NAME
SIGNATURE
TITLE DATE

PROJECT COORDINATOR
NAME
SIGNATURE
TITLE DATE

WESTCHESTER COUNTY, NEW YORK
DEPARTMENT OF PUBLIC WORKS AND TRANSPORTATION
DIVISION OF ENGINEERING

INFRASTRUCTURE REHABILITATION - PHASE 3
PLAYLAND PARK, RYE, NEW YORK
CROSS AXIS BUILDING A
ROOF LIGHTING AND LIGHTNING PROTECTION PLAN

CONTRACT NUMBER	22-523
SHEET NUMBER	CXA-E-08
DWG NO.:	171 of 664
SCALE:	AS SHOWN
DATE:	8/23/2022
DPW FILE NUMBER	1-118-E-920-1
REV. NO.	1

PANELBOARD: EXISTING PANEL PP-TW5 — **LOCATION:** ELECTRICAL ROOM (RELOCATED)

1 **NEMA RATING** — 3 **POLES** — **MOUNTING:** SURFACE

200 **AMP BUS RATING** — 200 **AMP MAIN BREAKER** — 42 **KA SHORT CIRCUIT RATING**

208Y/120 **VOLTS** — 3 **PHASE** 4 **WIRE** — **ELECTRONIC GRADE :** NO

CIRCUIT NO.	DESCRIPTION	LOAD KVA PHASE A	PHASE B	PHASE C	BREAKER AMPS / POLES	NOTES	CIRCUIT NO.	DESCRIPTION	LOAD KVA PHASE A	PHASE B	PHASE C	BREAKER AMPS / POLES	NOTES
1	POWER TO TW5-RP (120V)	0.2			20/1		2	SPRINKLER ALARM (EXIST.)				20/1	
3	TW5-RP		0.1		20/1		4	FIRE ALARM 120V POWER				20/1	
5	TW5-RP			0.1	20/1		6	OFFICE RECEPTACLES				20/1	
7	TW5-RP	0.1			20/1		8	MAIN STORAGE RECEPTACLES				20/1	
9	TW5-RP		0.1		20/1		10	COM CONTROL CABINET				20/1	
11	TW5-RP			0.1	20/1		12	LIGHTING (NORTH HALF)				20/1	
13	TW5-RP	0.2			20/1		14	ATTIC LIGHTING				20/1	
15	TW5-RP		0.2		20/1		16	SPRINKLER RM RECEPTACLE (EXIST.)				20/1	
17	TW5-RP			0.2	20/1		18	SPARE			-	20/1	
19	CU-1	2.6			40/2		20	SPARE	-			20/1	
21			2.6				22	SPARE		-		20/1	
23	AC-1			0.2	15/2		24	SPARE			-	20/1	
25		0.2					26	SPACE					
27	AC-2		0.2		15/2		28	SPACE					
29				0.2			30	SPACE					
31	EF-1	0.1			15/1		32	SPACE					
33	EF-2		0.1		15/1		34	SPACE					
35	AIR COMPRESSOR (EXIST.)			1	25/2		36	SPACE					
37		1					38	SPACE					
39	UH-1		1.65		20/2		40	SPACE					
41				1.65			42	SPACE					
	TOTAL PHASE KVA THIS SIDE	4.4	4.95	3.45				**TOTAL PHASE KVA THIS SIDE**	0	0	0		
								TOTAL KVA PER PHASE	4.4	4.95	3.45		
								TOTAL THREE PHASE KVA	12.8				

NOTES:
1.
2.
3.
4.

NOTES CONT.:
5.
6.
7.
8.

PANELBOARD: CXA-PP1 — **LOCATION:** ELECTRICAL ROOM

1 **NEMA RATING** — 3 **POLES** — **MOUNTING:** SURFACE

225 **AMP BUS RATING** — 175 **AMP MAIN BREAKER** — 42 **KA SHORT CIRCUIT RATING**

208Y/120 **VOLTS** — 3 **PHASE** 4 **WIRE** — **ELECTRONIC GRADE :** NO

CIRCUIT NO.	DESCRIPTION	LOAD KVA PHASE A	PHASE B	PHASE C	BREAKER AMPS / POLES	NOTES	CIRCUIT NO.	DESCRIPTION	LOAD KVA PHASE A	PHASE B	PHASE C	BREAKER AMPS / POLES	NOTES
1	VENDOR SPACE 1 RECEPT.	0.5			20/1		2	VENDOR SPACE 2 RECEPT.	0.5			20/1	
3	VENDOR SPACE 1 RECEPT.		0.5		20/1		4	VENDOR SPACE 2 RECEPT.		0.5		20/1	
5	ROLL-UP DOOR			1	20/1		6	ROLL-UP DOOR			1	20/1	
7	SPARE	-			20/1		8	SPARE	-			20/1	
9	SPARE		-		20/1		10	SPARE		-		20/1	
11	SPARE			-	20/1		12	POWER TO CXA-RP (120V)			0.5	20/1	
13	VENDOR SPACE LTG	0.2			20/1		14	CXA-RP	0.5			20/1	
15	SPARE		-		20/1		16	CXA-RP		0.5		20/1	
17	SPARE			-	20/1		18	CXA-RP			0.5	20/1	
19	SPACE						20	CXA-RP	0.5			20/1	
21	SPACE						22	CXA-RP		0.5		20/1	
23	SPACE						24	CXA-RP - SPARE				20/1	
25	SPACE						26	SPARE				20/1	
27	SPACE						28	SPACE					
29	SPACE						30	SPACE					
31	SPACE						32	SPACE					
33	SPACE						34	SPACE					
35	SPACE						36	SPACE					
37	SPACE						38	SPACE					
39	SPACE						40	SPACE					
41	SPACE						42	SPACE					
	TOTAL PHASE KVA THIS SIDE	0.7	0.5	1				**TOTAL PHASE KVA THIS SIDE**	1.5	1.5	2		
								TOTAL KVA PER PHASE	2.2	2	3		
								TOTAL THREE PHASE KVA	7.2				

NOTES:
1.
2.
3.
4.

NOTES CONT.:
5.
6.
7.
8.

NOTES:

1. FOR ADDITIONAL NOTES, ABBREVIATIONS AND SYMBOLS, SEE DRAWING GE-E-01.

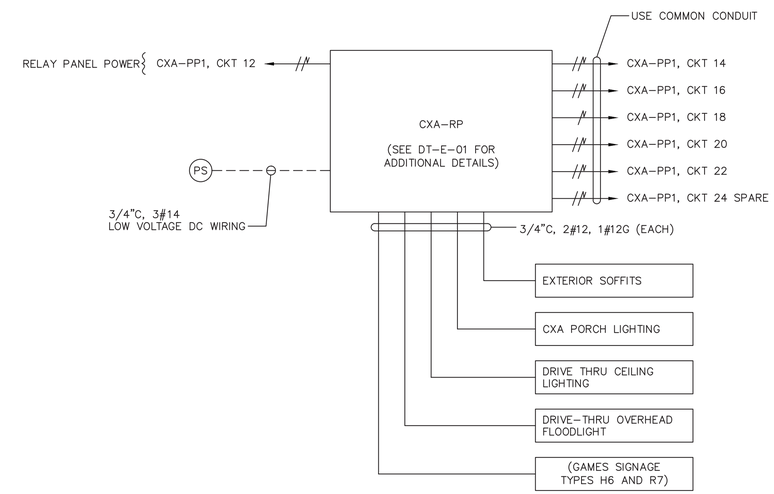

CXA – EXTERIOR LIGHTING WIRING DETAIL

CXA-RP	LOCATION: CXA ELECTRICAL CLOSET	
CKT NO	DESCRIPTION	NOTES
1	EXTERIOR SOFFITS	
2	CXA PORCH LIGHTING	
3	DRIVE THRU CEILING LIGHTING	
4	DRIVE THRU OVERHEAD FLOODLIGHT	
5	GAMES SIGNAGE	
6	SPARE	
7	SPARE	
8	SPARE	

1

LIGHTING CONTROL LEGEND	
SYMBOL	DESCRIPTION
O/V	OCCUPANCY / VACANCY SENSOR - SMALL MOTION, DUAL TECHNOLOGY, SINGLE POLE DOUGLAS LIGHTING CONTROLS, DIALOG SYSTEM CATALOG NUMBER: DIVERSA WORSDD1-R-N OR APPROVED EQUAL.
OS	OCCUPANCY SENSOR - DUAL TECHNOLOGY SENSOR, OCCUPANCY DETECTION ONLY DOUGLAS LIGHTING CONTROLS, DIALOG SYSTEM CATALOG NUMBER: WORSDG1-R-T OR APPROVED EQUAL.
PP1	POWER / RELAY PACK - 120/277 VOLT, SINGLE POLE, SELF CONTROLLED RELAY SWITCH DOUGLAS LIGHTING CONTROLS, DIALOG SYSTEM CATALOG NUMBER: WP-PP20-D OR APPROVED EQUAL.
PP2	POWER / RELAY PACK - 120/277 VOLT, SELF CONTROLLED RELAY SWITCH, TWO DIMMING CHANNELS DOUGLAS LIGHTING CONTROLS, DIALOG SYSTEM CATALOG NUMBER: WRC-4222 OR APPROVED EQUAL.
$ m	120 VOLT RATED LIGHTING SINGLE POLE SWITCH
RP	RELAY TIME CONTROL PANEL, DIGITAL CENTRAL PANEL DOUGLAS LIGHTING CONTROLS, DIALOG SYSTEM CATALOG NUMBER: WLCP-CPx/x OR APPROVED EQUAL. *x/x IS CAPACITY/QTY OF RELAYS - VARIES BY BUILDING.
PS	DIGITAL PHOTOCELL - PHOTOSENSOR SUITABLE FOR OUTDOOR APPLICATIONS DOUGLAS LIGHTING CONTROLS, DIALOG SYSTEM CATALOG NUMBER: WPS-3741B OR APPROVED EQUAL.

CONSULTANT INFORMATION

Savin Engineers, P.C.

CONSULTANT SEAL

STATE OF NEW YORK — STEVEN A. MARTINO — 089691 — LICENSED PROFESSIONAL ENGINEER

REVISION NUMBER	DATE	MADE BY	APP'D BY	REVISION
1	09/21/2022	RKC	SM	BID ADDENDUM #3

RECORD DRAWING CERTIFICATION

☐ AS BUILT – CHANGES AS NOTED ☐ AS BUILT – NO CHANGES

CONTRACTOR: NAME / SIGNATURE / TITLE / DATE

PROJECT COORDINATOR: NAME / SIGNATURE / TITLE / DATE

WESTCHESTER COUNTY, NEW YORK
DEPARTMENT OF PUBLIC WORKS AND TRANSPORTATION
DIVISION OF ENGINEERING

INFRASTRUCTURE REHABILITATION - PHASE 3
PLAYLAND PARK, RYE, NEW YORK
CROSS AXIS BUILDING A
PANEL SCHEDULES

CONTRACT NUMBER	SHEET NUMBER
22-523	CXA-E-09

DWG NO.: 172 of 664
SCALE: AS SHOWN
DATE: 8/23/2022
DPW FILE NUMBER: 1-118-E-921-1 REV. NO.: 1

Drawing Name: G:\SavinAutocad\2060\25-Playland-Mega-3\E\CXAE-1004.dwg
Projectname: 211001F02 Comments: ----
Printed by: MGodby Date: 21 September 2022 1:36 PM Designed by: ----
Xrefs: [TB_24X36_WestchesterCo_3.dwg] [TSG-SVLOGO.dwg] [BCRE-A-04.dwg] [BCRE-101.dwg]

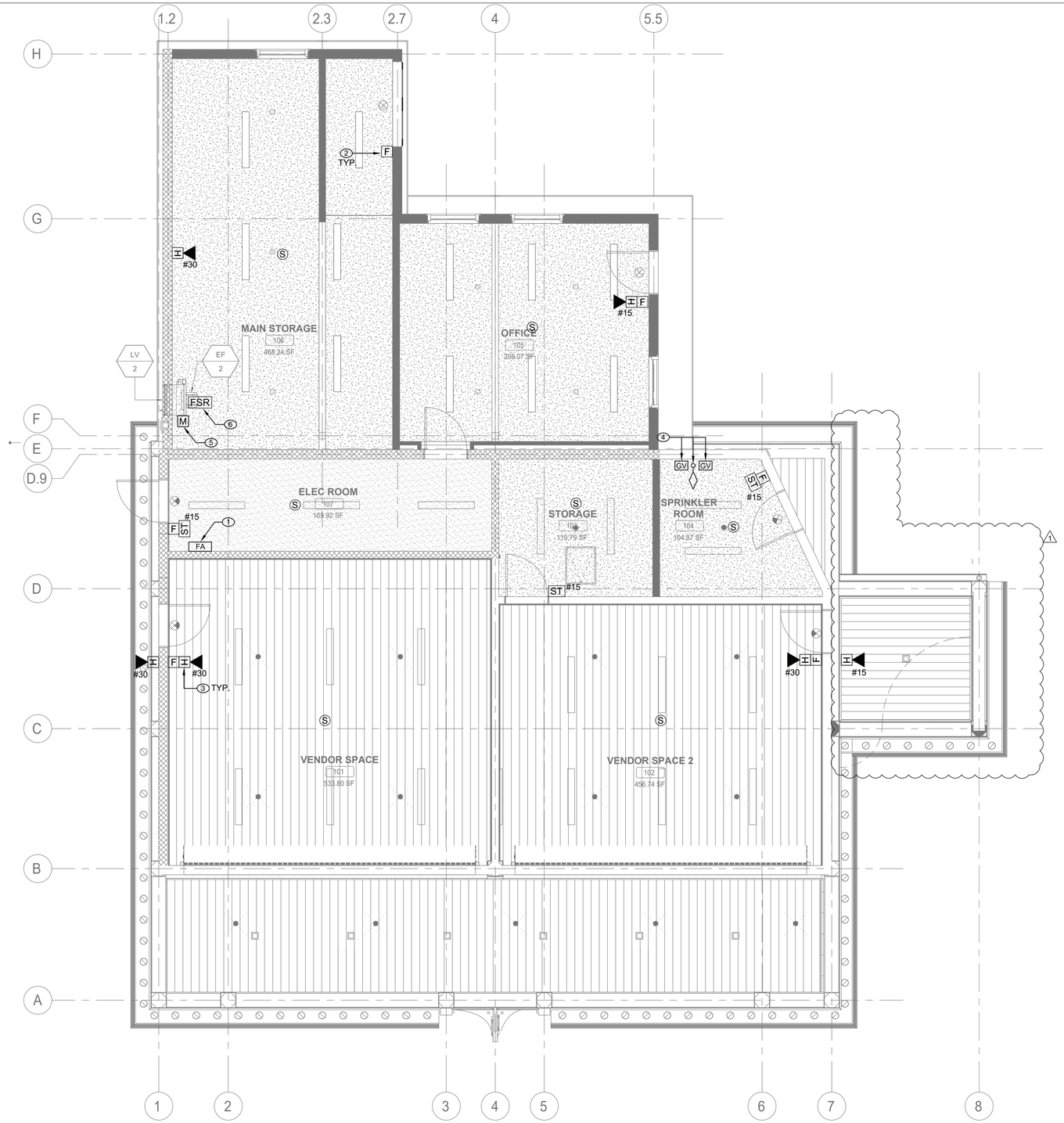

1 FIRE ALARM FIRST FLOOR CONSTRUCTION PLAN

SCALE: 1/4" = 1'-0"

FIRE ALARM CONSTRUCTION NOTES:

1. INSTALL NEW FIRE ALARM CONTROL PANEL TO SERVE CXA BUILDING AND DRAGON COASTER VENDOR SPACES. EDWARDS EST 3X-SFS1R OR APPROVED EQUAL, PER PARK STANDARDS OR AS SPECIFIED BY WITH PARKWIDE FIRE ALARM SYSTEM VENDOR (EST). NEW PANEL SHALL BE CONNECTED TO PARKWIDE SYSTEM AND TESTED IN COORDINATION WITH SYSTEM VENDOR.
2. NEW MANUAL PULL STATIONS SHALL BE INSTALLED AT 4'-0" ABOVE FINISHED FLOOR AT EACH BUILDING EXIT (MAX. DISTANCE OF 5'-0" FROM EXIT).
3. FIRE ALARM STROBES AND HORN STROBES SHALL BE FIELD ADJUSTABLE AND SET CANDELA RATING INDICATED ON PLAN. FIRE ALARM STROBES AND HORN STROBES SHALL BE INSTALLED AT 7'-4" ABOVE FINISHED FLOOR UNLESS OTHERWISE NOTED.
4. PROVIDE TAMPER AND WATERFLOW SWITCHES FOR NEW SPRINKLER VALVE ASSEMBLIES AND CONNECT TO EXISTING FIRE ALARM SYSTEM. COORDINATE LOCATION AND QUANTITY WITH FIRE PROTECTION DRAWINGS AND SPRINKLER SYSTEM INSTALLER.
5. INSTALL FIRE ALARM MONITORING RELAY MODULES AT NEW FIRE DAMPER. MONITORING MODULES SHALL TRANSMIT SIGNAL TO FIRE ALARM CONTROL PANEL IN EVENT OF FIRE DAMPER CLOSURE BY FUSIBLE LINK.
6. PROVIDE FAN SHUTDOWN RELAYS FOR EXHAUST FAN, INTERLOCK WITH ASSOCIATED FIRE DAMPER. EXHAUST FANS SHALL AUTOMATICALLY SHUT OFF IN EVENT OF FIRE DAMPER CLOSURE BY FUSIBLE LINK. PROVIDE WIRING AND PROGRAMMING FOR UNIT SHUTDOWN.

FIRE ALARM GENERAL NOTES:

1. REFER TO DRAWING FA-001.00 FOR SYMBOLS, ABBREVIATIONS, AND NOTES. LAYOUT OF FIRE ALARM DEVICES ON THIS PLAN IS DIAGRAMMATIC; EXACT LOCATIONS OF DEVICES AND CONDUIT SHALL BE COORDINATED WITH FIELD CONDITIONS, ARCHITECTURAL REQUIREMENTS, AND MANUFACTURER RECOMMENDATIONS.
2. ALL DEVICES AND EQUIPMENT SHOWN ON THIS PLAN ARE NEW, UNLESS OTHERWISE NOTED.
3. INSTALL NEW FIRE ALARM SYSTEM IN STRICT ACCORDANCE WITH NFPA-72 AND NFPA-90A REQUIREMENTS.
4. CONTRACTOR SHALL INSTALL NEW FIRE ALARM SYSTEM AS INDICATED AND PROVIDE ALL NECESSARY WIRING, CONDUIT, AND APPARATUSES.
5. ALL VISUAL NOTIFICATION DEVICES IN THE SAME SPACE SHALL BE SYNCHRONIZED IN ACCORDANCE WITH NFPA-72.
6. COORDINATE INSTALLATION WITH FIRE ALARM SYSTEM VENDOR AND MANUFACTURER REQUIREMENTS.
7. COORDINATE FIRE ALARM DEVICES WITH ARCHITECTURAL FINISHES. CONCEAL CONDUIT IN FINISHED WALLS AND FLUSH MOUNT DEVICES WHERE POSSIBLE.
8. CONTRACTOR SHALL TEST THE FIRE ALARM SYSTEM AFTER COMPLETION OF INSTALLATION. FIRE ALARM SYSTEM SHALL BE TESTED AND VERIFIED TO BE WORKING PROPERLY PRIOR TO INSPECTION BY THE AUTHORITY HAVING JURISDICTION.
9. FOLLOWING INSTALLATION, CONTRACTOR SHALL PATCH, PAINT, AND RESTORE ALL WALLS AND CEILINGS TO MATCH EXISTING OR DESIRED NEW CONDITION.
10. FIRESTOP ALL FIRE-RATED FLOOR OR WALL PENETRATIONS TO MAINTAIN ORIGINAL FIRE RATING TO FULL DEPTH OF OPENING.
11. CONTRACTOR SHALL PROVIDE SLEEVE FOR CONDUIT PENETRATIONS THROUGH WALL AND CEILING FLOORS.

CONSULTANT INFORMATION

LiRo Engineers, Inc.
A LiRo Group Company
Syosset, N.Y. 516-214-8157[T]

CONSULTANT SEAL

STATE OF NEW YORK · FRANK F. DUNNE · 090717 · LICENSED PROFESSIONAL ENGINEER

REVISION NUMBER	DATE	MADE BY	APP'D BY	REVISION
1	9/21/22			BID ADDENDUM #3

RECORD DRAWING CERTIFICATION

☐ AS BUILT – CHANGES AS NOTED ☐ AS BUILT – NO CHANGES

CONTRACTOR: NAME / SIGNATURE / TITLE / DATE

PROJECT COORDINATOR: NAME / SIGNATURE / TITLE / DATE

WESTCHESTER COUNTY, NEW YORK
DEPARTMENT OF PUBLIC WORKS AND TRANSPORTATION
DIVISION OF ENGINEERING

INFRASTRUCTURE REHABILITATION - PHASE 3
PLAYLAND PARK, RYE, NEW YORK
CROSS AXIS BUILDING A
FIRE ALARM FIRST FLOOR PLAN

CONTRACT NUMBER	22-523
SHEET NUMBER	CXA-FA-21
DWG NO.:	176 of 664
SCALE:	As indicated
DATE:	08/23/2022
DPW FILE NUMBER	1-118-FA-925-1
REV. NO.	1

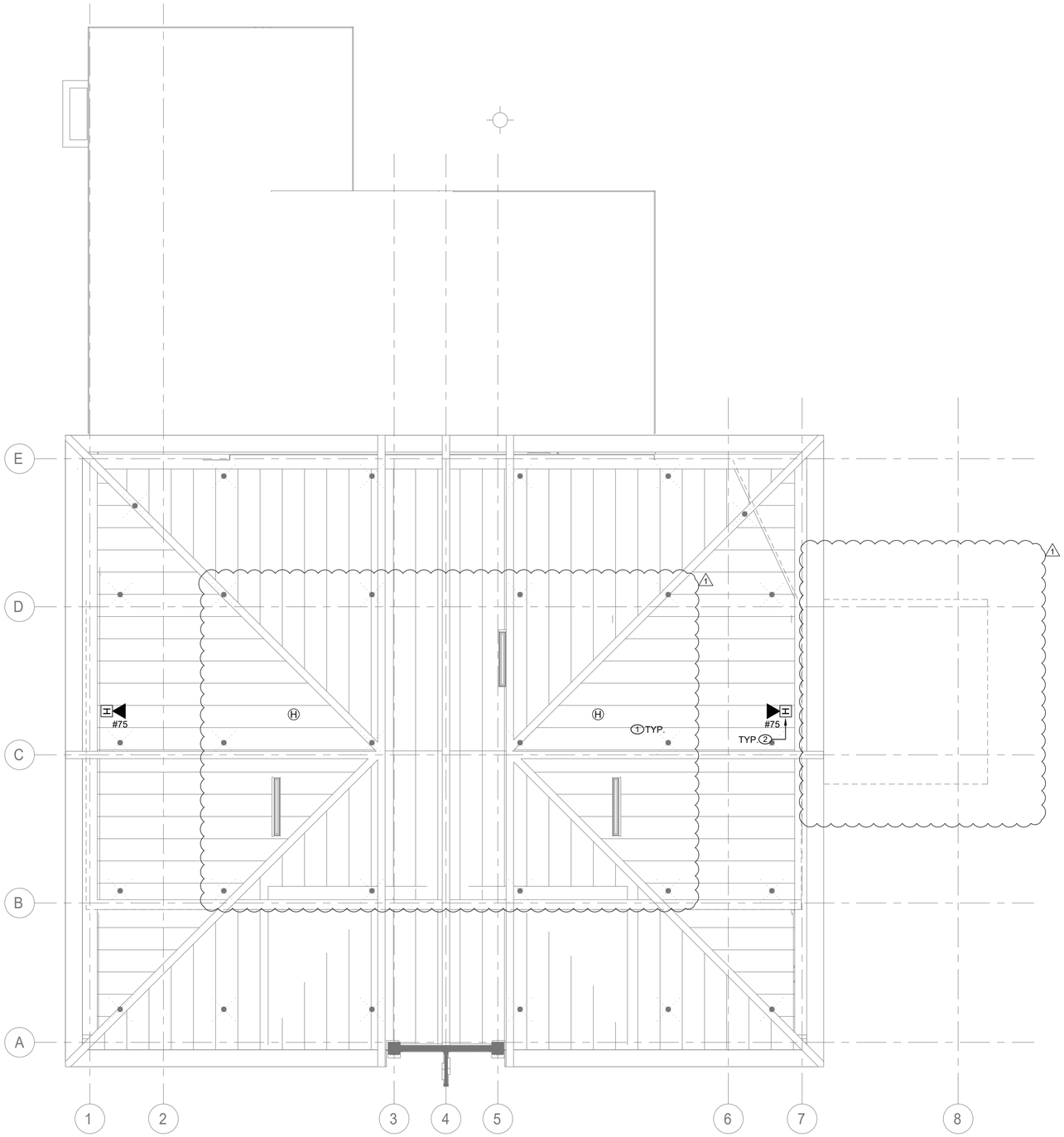

1 FIRE ALARM ATTIC CONSTRUCTION PLAN

SCALE: 1/4" = 1'-0"

FIRE ALARM CONSTRUCTION NOTES:

1. CONNECT NEW FIRE ALARM DEVICES TO PANEL IN CXA ELECTRICAL ROOM.
2. FIRE HORN STROBES SHALL BE FIELD ADJUSTABLE AND SET CANDELA RATING INDICATED ON PLAN. FIRE ALARM HORN STROBES SHALL BE INSTALLED AT 7'-4" ABOVE FINISHED FLOOR UNLESS OTHERWISE NOTED.

FIRE ALARM GENERAL NOTES:

1. REFER TO DRAWING FA-001.00 FOR SYMBOLS, ABBREVIATIONS, AND NOTES. LAYOUT OF FIRE ALARM DEVICES ON THIS PLAN IS DIAGRAMMATIC; EXACT LOCATIONS OF DEVICES AND CONDUIT SHALL BE COORDINATED WITH FIELD CONDITIONS, ARCHITECTURAL REQUIREMENTS, AND MANUFACTURER RECOMMENDATIONS.
2. ALL DEVICES AND EQUIPMENT SHOWN ON THIS PLAN ARE NEW, UNLESS OTHERWISE NOTED.
3. INSTALL NEW FIRE ALARM SYSTEM IN STRICT ACCORDANCE WITH NFPA-72 AND NFPA-90A REQUIREMENTS.
4. CONTRACTOR SHALL INSTALL NEW FIRE ALARM SYSTEM AS INDICATED AND PROVIDE ALL NECESSARY WIRING, CONDUIT, AND APPARATUSES.
5. ALL VISUAL NOTIFICATION DEVICES IN THE SAME SPACE SHALL BE SYNCHRONIZED IN ACCORDANCE WITH NFPA-72.
6. COORDINATE INSTALLATION WITH FIRE ALARM SYSTEM VENDOR AND MANUFACTURER REQUIREMENTS.
7. COORDINATE FIRE ALARM DEVICES WITH ARCHITECTURAL FINISHES. CONCEAL CONDUIT IN FINISHED WALLS AND FLUSH MOUNT DEVICES WHERE POSSIBLE.
8. CONTRACTOR SHALL TEST THE FIRE ALARM SYSTEM AFTER COMPLETION OF INSTALLATION. FIRE ALARM SYSTEM SHALL BE TESTED AND VERIFIED TO BE WORKING PROPERLY PRIOR TO INSPECTION BY THE AUTHORITY HAVING JURISDICTION.
9. FOLLOWING INSTALLATION, CONTRACTOR SHALL PATCH, PAINT, AND RESTORE ALL WALLS AND CEILINGS TO MATCH EXISTING OR DESIRED NEW CONDITION.
10. FIRESTOP ALL FIRE-RATED FLOOR OR WALL PENETRATIONS TO MAINTAIN ORIGINAL FIRE RATING TO FULL DEPTH OF OPENING.
11. CONTRACTOR SHALL PROVIDE SLEEVE FOR CONDUIT PENETRATIONS THROUGH WALL AND CEILING FLOORS.

CONSULTANT INFORMATION

LiRo Engineers, Inc.
A LiRo Group Company
Syosset, N.Y. 516-214-8157[T]

CONSULTANT SEAL

STATE OF NEW YORK · FRANK F. ULISSE · LICENSED PROFESSIONAL ENGINEER · 090117

REVISION NUMBER	DATE	MADE BY	APP'D BY	REVISION
1	9/21/22			BID ADDENDUM #3

RECORD DRAWING CERTIFICATION

☐ AS BUILT – CHANGES AS NOTED ☐ AS BUILT – NO CHANGES

CONTRACTOR
NAME
SIGNATURE
TITLE DATE

PROJECT COORDINATOR
NAME
SIGNATURE
TITLE DATE

WESTCHESTER COUNTY, NEW YORK
DEPARTMENT OF PUBLIC WORKS AND TRANSPORTATION
DIVISION OF ENGINEERING

INFRASTRUCTURE REHABILITATION - PHASE 3
PLAYLAND PARK, RYE, NEW YORK
CROSS AXIS BUILDING A
FIRE ALARM ATTIC PLAN

CONTRACT NUMBER	22-523
SHEET NUMBER	CXA-FA-22
DWG NO.:	177 of 664
SCALE:	As indicated
DATE:	08/23/2022
DPW FILE NUMBER	1-118-FA-926-1
REV. NO.	1

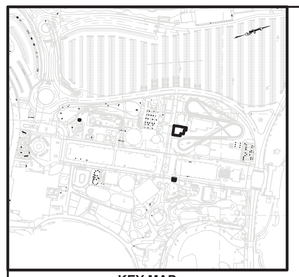

KEY MAP
NOT TO SCALE

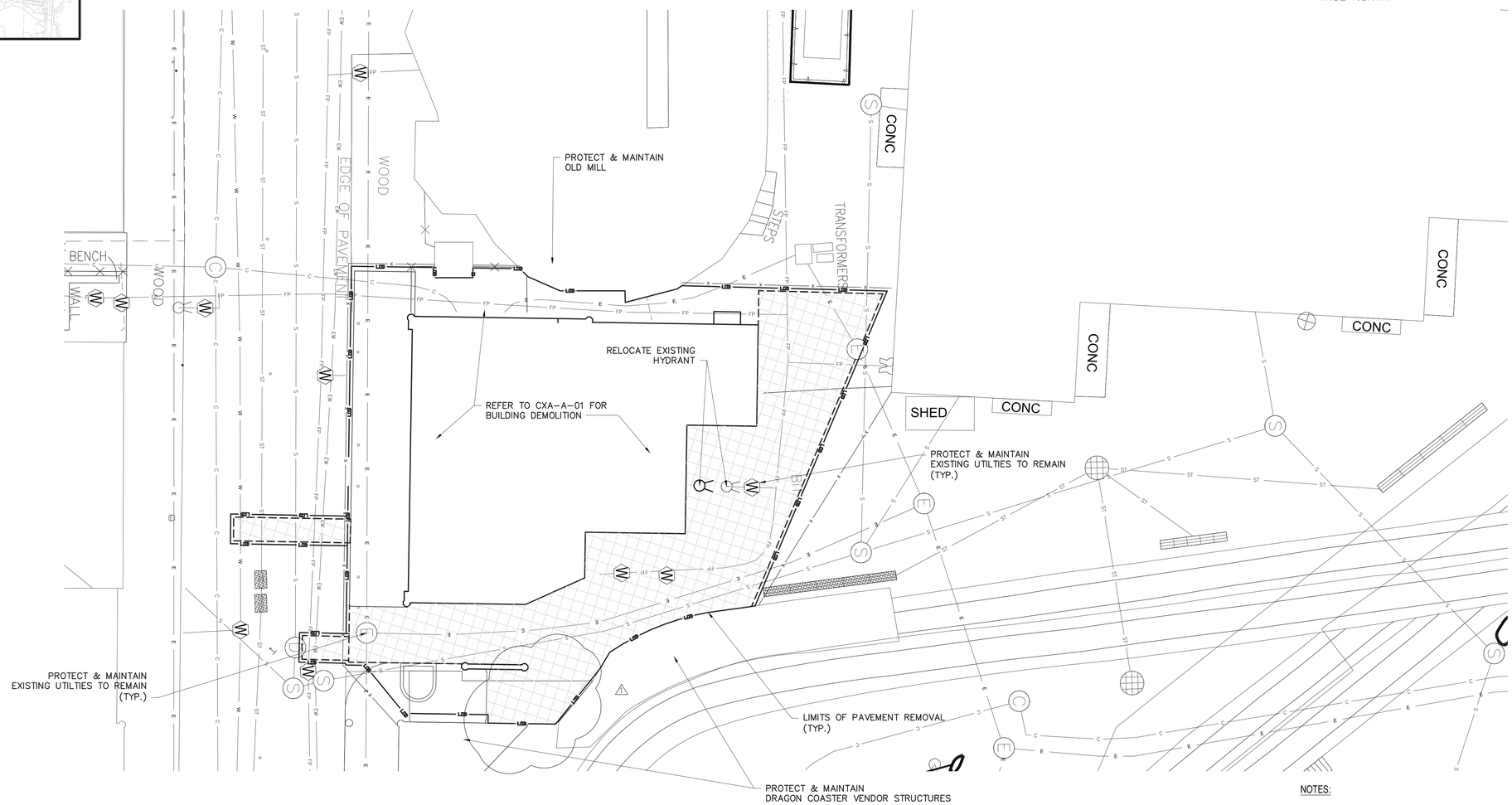

EXISTING LEGEND

- POST
- UTILITY POLE
- SIGN
- HANDICAP PARKING
- GROUND LIGHT
- LIGHT POLE
- UTILITY POLE WITH LIGHT
- LIGHT POLE (SINGLE LIGHT)
- LIGHT POLE (DOUBLE LIGHT)
- LIGHT POLE (MULTI LIGHT)
- BOAT TIE-OFF CLEAT
- CATCH BASIN
- TRENCH DRAIN
- MAILBOX
- UNKNOWN MANHOLE
- COMMUNICATIONS BOX/HAND HOLE
- ELECTRIC HAND HOLE
- ELECTRIC BOX
- GAS METER
- IRRIGATION BOX
- UNKNOWN UTILITY BOX/HAND HOLE
- COMMUNICATION MANHOLE
- DRAINAGE MANHOLE
- ELECTRIC MANHOLE
- SEWER MANHOLE
- STORM SEWER MANHOLE
- SEWER CLEANOUT
- HYDRANT
- SIAMESE CONNECTION
- UNKNOWN VALVE
- WATER VALVE
- GAS VALVE
- WATER SPIGOT OR FOUNTAIN
- MONITORING WELL
- DECIDUOUS BUSH
- EVERGREEN BUSH
- DECIDUOUS TREE
- EVERGREEN TREE
- STUMP
- HEDGE ROW
- TREELINE
- BRUSHLINE
- RETAINING WALL
- GUIDE RAIL
- STONE WALL
- WATERLINE
- FENCE
- UNDERGROUND COMMUNICATION
- UNDERGROUND PROPANE
- UNDERGROUND ELECTRICAL
- UNDERGROUND STREET LIGHTING
- UNDERGROUND ENVIRONMENTAL WASTEWATER
- UNDERGROUND SEWER
- UNDERGROUND STORM SEWER
- UNDERGROUND WATER
- UNDERGROUND FIRE PROTECTION
- EXISTING MAJOR CONTOUR
- EXISTING MINOR CONTOUR

PROPOSED LEGEND:

- SAW CUTTING ASPHALT CONCRETE
- LIMITS OF DISTURBANCE
- LIMITS OF PAVEMENT REMOVAL (MILLING & EXCAVATION)
- AREA OF ASPHALT PAVEMENT REMOVAL (FULL DEPTH & EXCAVATION)
- DRAINAGE STRUCTURE INLET PROTECTION

NOTES:

1. PAVEMENT REMOVAL, MILLING AND EXCAVATION, MATERIAL SHALL NOT BE STOCKPILED ON SITE.
2. EXISTING GRADES, PIPE LOCATIONS, SIZES, MATERIAL, INVERTS AND OTHER EXISTING CONDITIONS ARE SHOWN ON THE DRAWINGS FROM AVAILABLE AS-BUILT DRAWINGS AND FIELD SURVEY BY OTHERS. IT SHALL BE THE RESPONSIBILITY OF THE CONTRACTOR TO VERIFY ALL EXISTING CONDITIONS.
3. THE CONTRACTOR SHALL TAKE PROPER PRECAUTIONS NOT TO DAMAGE ANY EXISTING SITE CONDITIONS SPECIFICALLY EXCLUDED FROM THE CONTRACT AND WILL BE HELD SOLELY RESPONSIBLE FOR ANY DAMAGE OCCURRING DURING THE COURSE OF THE WORK DURING CONSTRUCTION. THE CONTRACTOR SHALL, AT THEIR OWN EXPENSE, MAKE ALL REPAIRS REQUIRED TO RESTORE ANY DAMAGED AREAS TO ORIGINAL CONDITIONS.

New York 811
Know what's below. Call before you dig.

0 10 20 30
1"=10' SCALE BAR

6/15/2022 4:10:27 PM

CONSULTANT INFORMATION
LiRo Engineers, Inc.
A LiRo Group Company
Mineola, N.Y. 516-746-2350[T]

CONSULTANT SEAL
STATE OF NEW YORK · KENNETH J. HOCHMAN · LICENSED PROFESSIONAL ENGINEER · No. 059134

REVISION NUMBER	DATE	MADE BY	APP'D BY	REVISION
1	9/21/22	HIK	LK	BID ADDENDUM #3

RECORD DRAWING CERTIFICATION
☐ AS BUILT – CHANGES AS NOTED ☐ AS BUILT – NO CHANGES

CONTRACTOR
NAME
SIGNATURE
TITLE DATE

PROJECT COORDINATOR
NAME
SIGNATURE
TITLE DATE

WESTCHESTER COUNTY, NEW YORK
DEPARTMENT OF PUBLIC WORKS AND TRANSPORTATION
DIVISION OF ENGINEERING

INFRASTRUCTURE REHABILITATION PHASE 3
PLAYLAND PARK, RYE, NEW YORK
CROSS AXIS BUILDING A
EXISTING CONDITIONS/DEMOLITION PLAN

CONTRACT NUMBER	22-523
SHEET NUMBER	CXA-C-02
DWG NO.	180 of 664
SCALE:	1"=10'
DATE:	08/23/2022
DPW FILE NUMBER	1-118-C-929-1
REV. NO.	1

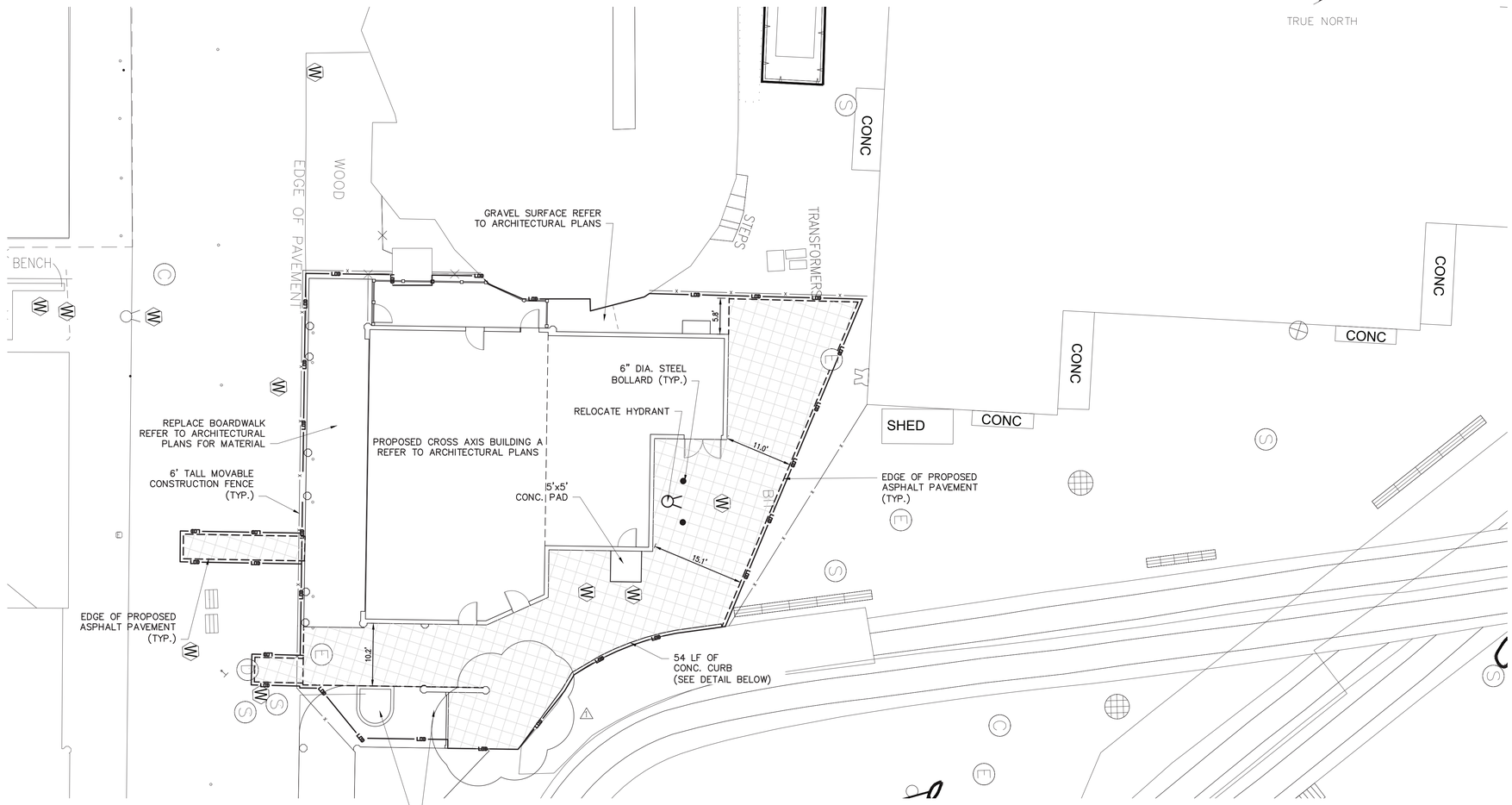

EXISTING LEGEND

- POST
- UTILITY POLE
- SIGN OR
- HANDICAP PARKING
- GROUND LIGHT
- LIGHT POLE
- UTILITY POLE WITH LIGHT
- LIGHT POLE (SINGLE LIGHT)
- LIGHT POLE (DOUBLE LIGHT)
- LIGHT POLE (MULTI LIGHT)
- BOAT TIE-OFF CLEAT
- CATCH BASIN OR OR
- TRENCH DRAIN
- MAILBOX
- UNKNOWN MANHOLE
- COMMUNICATIONS BOX/HAND HOLE C OR C
- ELECTRIC HAND HOLE
- ELECTRIC BOX
- GAS METER
- IRRIGATION BOX
- UNKNOWN UTILITY BOX/HAND HOLE
- COMMUNICATION MANHOLE
- DRAINAGE MANHOLE D OR D
- ELECTRIC MANHOLE
- SEWER MANHOLE S OR S
- STORM SEWER MANHOLE
- SEWER CLEANOUT
- HYDRANT
- SIAMESE CONNECTION
- UNKNOWN VALVE V OR V
- WATER VALVE
- GAS VALVE
- WATER SPIGOT OR FOUNTAIN
- MONITORING WELL
- DECIDUOUS BUSH
- EVERGREEN BUSH
- DECIDUOUS TREE
- EVERGREEN TREE
- STUMP
- HEDGE ROW
- TREELINE
- BRUSHLINE
- RETAINING WALL
- GUIDE RAIL
- STONE WALL
- FENCE

PROPOSED LEGEND:

- MOVABLE CONSTRUCTION FENCE
- SAW CUTTING ASPHALT CONCRETE
- LIMITS OF DISTURBANCE
- LIMITS OF PAVEMENT REMOVAL
- AREA OF FULL DEPTH ASPHALT PAVEMENT
- DRAINAGE STRUCTURE INLET PROTECTION

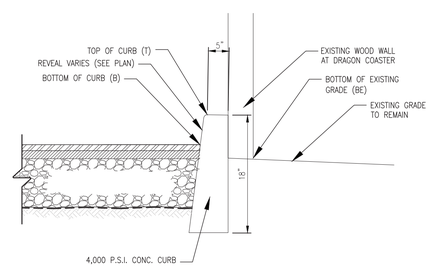

CONCRETE CURB DETAIL

N.T.S.

0 10 20 30

1"=10' SCALE BAR

6/15/2022 4:10:27 PM

CONSULTANT INFORMATION

LiRo Engineers, Inc.
A LiRo Group Company
Mineola, N.Y. 516-746-2350[T]

CONSULTANT SEAL

STATE OF NEW YORK · KENNETH J. HOLBROOK · LICENSE No. 059134 · PROFESSIONAL ENGINEER

REVISION NUMBER	DATE	MADE BY	APP'D BY	REVISION
1	9/21/22	HIK	LK	BID ADDENDUM #3

RECORD DRAWING CERTIFICATION

☐ AS BUILT – CHANGES AS NOTED ☐ AS BUILT – NO CHANGES

CONTRACTOR
NAME
SIGNATURE
TITLE DATE

PROJECT COORDINATOR
NAME
SIGNATURE
TITLE DATE

WESTCHESTER COUNTY, NEW YORK
DEPARTMENT OF PUBLIC WORKS AND TRANSPORTATION
DIVISION OF ENGINEERING

INFRASTRUCTURE REHABILITATION PHASE 3
PLAYLAND PARK, RYE, NEW YORK
CROSS AXIS BUILDING A
SITE CONSTRUCTION PLAN

CONTRACT NUMBER	22-523
SHEET NUMBER	CXA-C-03
DWG NO.	181 of 664
SCALE:	1"=10'
DATE:	08/23/2022
DPW FILE NUMBER	1-118-C-930-1
REV. NO.	1

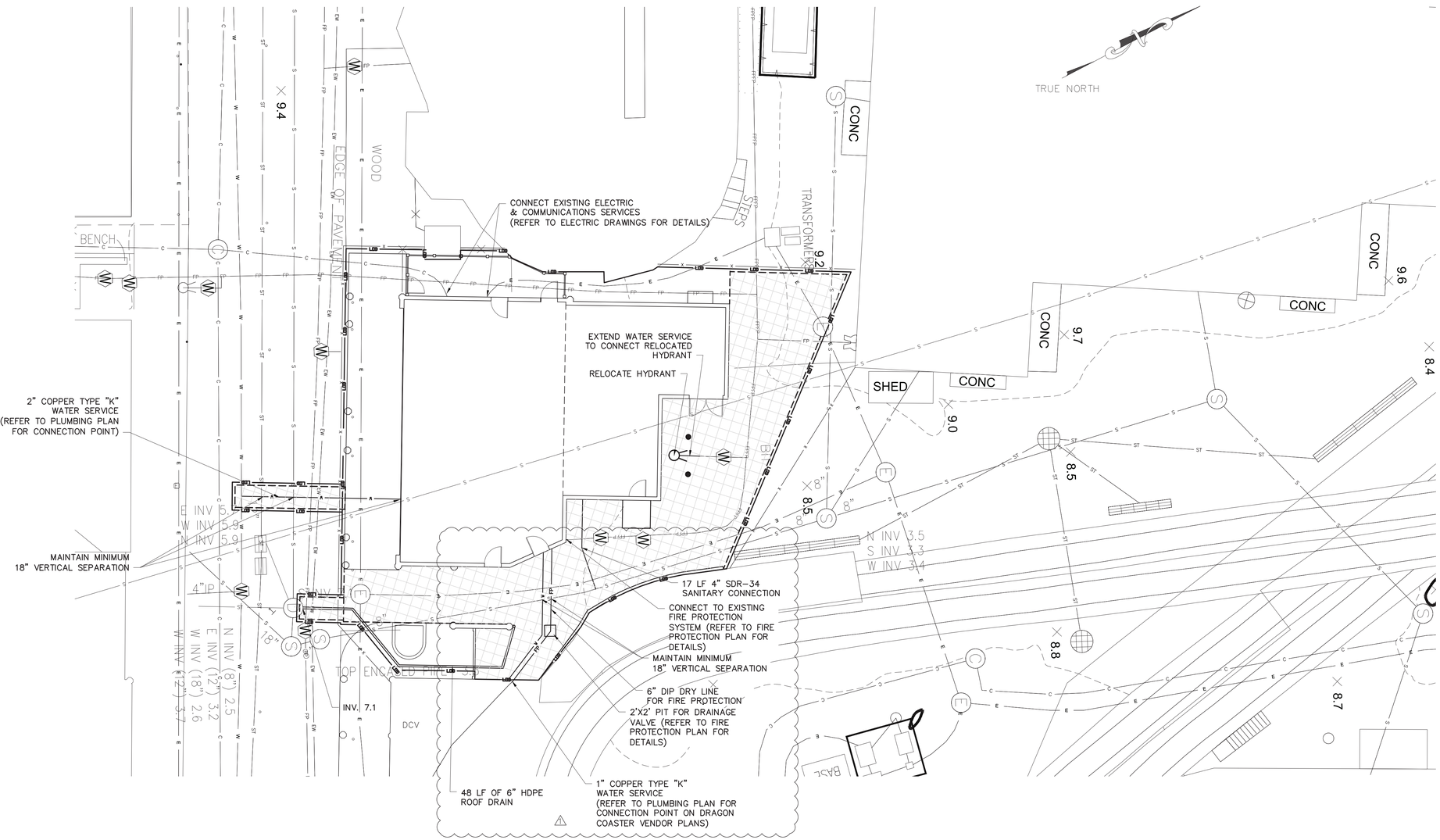

EXISTING LEGEND

- POST
- UTILITY POLE
- SIGN OR
- HANDICAP PARKING
- GROUND LIGHT
- LIGHT POLE
- UTILITY POLE WITH LIGHT
- LIGHT POLE (SINGLE LIGHT)
- LIGHT POLE (DOUBLE LIGHT)
- LIGHT POLE (MULTI LIGHT)
- BOAT TIE-OFF CLEAT
- CATCH BASIN OR OR
- TRENCH DRAIN
- MAILBOX
- UNKNOWN MANHOLE
- COMMUNICATIONS BOX/HAND HOLE OR
- ELECTRIC HAND HOLE
- ELECTRIC BOX
- GAS METER
- IRRIGATION BOX
- UNKNOWN UTILITY BOX/HAND HOLE
- COMMUNICATION MANHOLE
- DRAINAGE MANHOLE OR
- ELECTRIC MANHOLE
- SEWER MANHOLE OR
- STORM SEWER MANHOLE
- SEWER CLEANOUT
- HYDRANT
- SIAMESE CONNECTION
- UNKNOWN VALVE OR
- WATER VALVE
- GAS VALVE
- WATER SPIGOT OR FOUNTAIN
- MONITORING WELL
- DECIDUOUS BUSH
- EVERGREEN BUSH
- DECIDUOUS TREE
- EVERGREEN TREE
- STUMP
- HEDGE ROW
- TREELINE
- BRUSHLINE
- RETAINING WALL
- GUIDE RAIL
- STONE WALL
- WATERLINE
- FENCE
- UNDERGROUND COMMUNICATION
- UNDERGROUND PROPANE
- UNDERGROUND ELECTRICAL
- UNDERGROUND STREET LIGHTING
- UNDERGROUND ENVIRONMENTAL WASTEWATER
- UNDERGROUND SEWER
- UNDERGROUND STORM SEWER
- UNDERGROUND WATER
- UNDERGROUND FIRE PROTECTION

PROPOSED LEGEND:

- SAW CUTTING ASPHALT CONCRETE
- LIMITS OF DISTURBANCE
- LIMITS OF PAVEMENT REMOVAL (MILLING & EXCAVATION)
- PROPOSED WATER LINE
- PROPOSED CATCH BASIN
- PROPOSED STORM PIPE
- PROPOSED SANITARY MANHOLE
- PROPOSED SANITARY PIPE
- PROPOSED UNDERGROUND ELECTRIC

0 10 20 30
1"=10' SCALE BAR

6/15/2022 4:10:27 PM

CONSULTANT INFORMATION

LiRo Engineers, Inc.
A LiRo Group Company
Mineola, N.Y. 516-746-2350[T]

CONSULTANT SEAL

STATE OF NEW YORK · KENNETH J. HOLDSTEIN · LICENSED PROFESSIONAL ENGINEER · No. 059134

REVISION NUMBER	DATE	MADE BY	APP'D BY	REVISION
1	9/21/22	HIK	LK	BID ADDENDUM #3

RECORD DRAWING CERTIFICATION

☐ AS BUILT – CHANGES AS NOTED ☐ AS BUILT – NO CHANGES

CONTRACTOR
NAME
SIGNATURE
TITLE DATE

PROJECT COORDINATOR
NAME
SIGNATURE
TITLE DATE

WESTCHESTER COUNTY, NEW YORK
DEPARTMENT OF PUBLIC WORKS AND TRANSPORTATION
DIVISION OF ENGINEERING

INFRASTRUCTURE REHABILITATION PHASE 3
PLAYLAND PARK, RYE, NEW YORK
CROSS AXIS BUILDING A
UTILITY CONSTRUCTION PLAN

CONTRACT NUMBER	22-523
SHEET NUMBER	CXA-C-04
DWG. NO.	182 of 664
SCALE:	1"=10'
DATE:	08/23/2022
DPW FILE NUMBER	1-118-C-931-1
REV. NO.	1

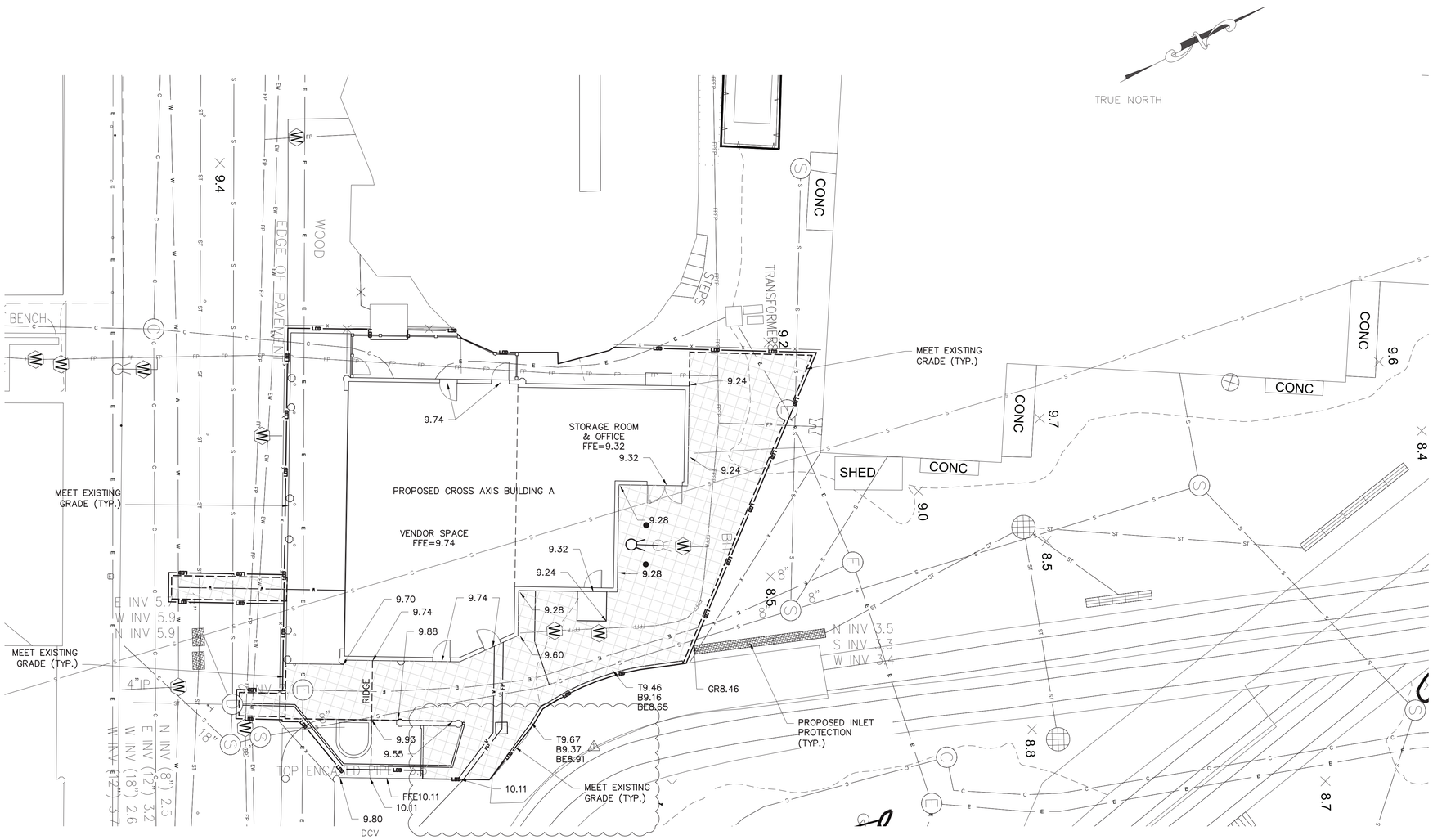

EXISTING LEGEND

- POST
- UTILITY POLE
- SIGN
- HANDICAP PARKING
- GROUND LIGHT
- LIGHT POLE
- UTILITY POLE WITH LIGHT
- LIGHT POLE (SINGLE LIGHT)
- LIGHT POLE (DOUBLE LIGHT)
- LIGHT POLE (MULTI LIGHT)
- BOAT TIE-OFF CLEAT
- CATCH BASIN
- TRENCH DRAIN
- MAILBOX
- UNKNOWN MANHOLE
- COMMUNICATIONS BOX/HAND HOLE
- ELECTRIC HAND HOLE
- ELECTRIC BOX
- GAS METER
- IRRIGATION BOX
- UNKNOWN UTILITY BOX/HAND HOLE
- COMMUNICATION MANHOLE
- DRAINAGE MANHOLE
- ELECTRIC MANHOLE
- SEWER MANHOLE
- STORM SEWER MANHOLE
- SEWER CLEANOUT
- HYDRANT
- SIAMESE CONNECTION
- UNKNOWN VALVE
- WATER VALVE
- GAS VALVE
- WATER SPIGOT OR FOUNTAIN
- MONITORING WELL
- DECIDUOUS BUSH
- EVERGREEN BUSH
- DECIDUOUS TREE
- EVERGREEN TREE
- STUMP
- HEDGE ROW
- TREELINE
- BRUSHLINE
- RETAINING WALL
- GUIDE RAIL
- STONE WALL
- WATERLINE
- FENCE
- UNDERGROUND COMMUNICATION
- UNDERGROUND PROPANE
- UNDERGROUND ELECTRICAL
- UNDERGROUND STREET LIGHTING
- UNDERGROUND ENVIRONMENTAL WASTEWATER
- UNDERGROUND SEWER
- UNDERGROUND STORM SEWER
- UNDERGROUND WATER
- UNDERGROUND FIRE PROTECTION
- 415.50 EXISTING SPOT ELEVATION
- TG=415.50 EXISTING TOP OF GRATE ELEVATION

PROPOSED LEGEND:

- LOD — LIMITS OF DISTURBANCE
- 415 — PROPOSED MAJOR CONTOUR
- 414 — PROPOSED MINOR CONTOUR
- 9.66 — PROPOSED SPOT ELEVATION
- PROPOSED INLET PROTECTION
- T9.46 — PROPOSED TOP OF CURB
- B9.16 — PROPOSED BOTTOM OF CURB
- BE8.65 — PROPOSED ELEVATION BEHIND CURB

New York 811 — Know what's below. Call before you dig.

0 10 20 30
1"=10' SCALE BAR

6/15/2022 4:10:27 PM

CONSULTANT INFORMATION
LiRo Engineers, Inc.
A LiRo Group Company
Mineola, N.Y. 516-746-2350[T]

CONSULTANT SEAL
STATE OF NEW YORK — KENNETH J. HOLMSTROM — No. 059134 — LICENSED PROFESSIONAL ENGINEER

REVISION NUMBER	DATE	MADE BY	APP'D BY	REVISION
1	9/21/22	HIK	LK	BID ADDENDUM #3

RECORD DRAWING CERTIFICATION
☐ AS BUILT – CHANGES AS NOTED ☐ AS BUILT – NO CHANGES

CONTRACTOR
NAME
SIGNATURE
TITLE DATE

PROJECT COORDINATOR
NAME
SIGNATURE
TITLE DATE

WESTCHESTER COUNTY, NEW YORK
DEPARTMENT OF PUBLIC WORKS AND TRANSPORTATION
DIVISION OF ENGINEERING

INFRASTRUCTURE REHABILITATION PHASE 3
PLAYLAND PARK, RYE, NEW YORK
CROSS AXIS BUILDING A
GRADING AND EROSION CONTROL PLAN

CONTRACT NUMBER: 22-523
SHEET NUMBER: CXA-C-05
DWG NO.: 183 of 664
SCALE: 1"=10'
DATE: 08/23/2022
DPW FILE NUMBER: 1-118-C-932-1
REV. NO.: 1

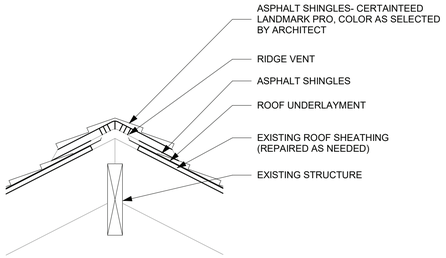

3 RIDGE VENT DETAIL
1" = 1'-0"

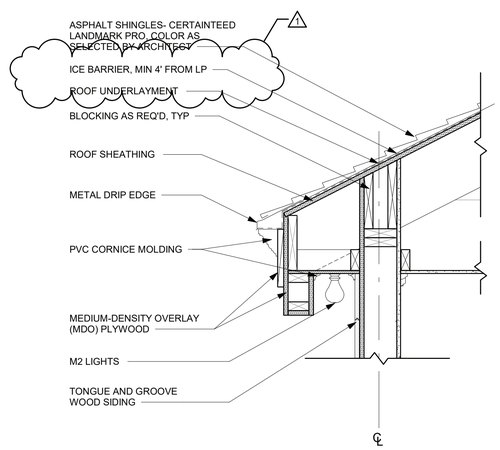

2 CXD - MARQUEE SOFFIT DETAIL
1" = 1'-0"

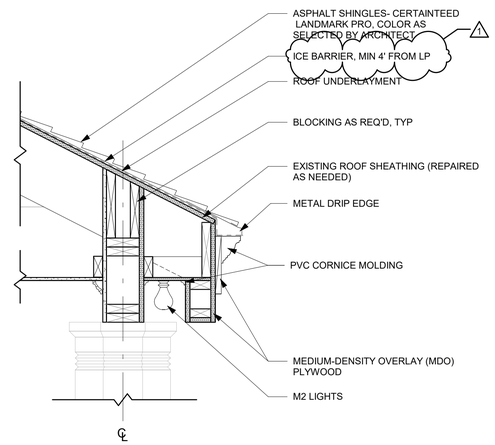

1 CXD - PORCH MARQUEE SOFFIT DETAIL
1" = 1'-0"

9/23/2022 10:01:23 AM

CONSULTANT INFORMATION

The LiRo Group
3 Aerial Way, Syosset, New York 11791
(516) 938-5476 www.liro.com

CONSULTANT SEAL

REGISTERED ARCHITECT ROBERT D. YOUNG JR. 023290 STATE OF NEW YORK

REVISION NUMBER	DATE	MADE BY	APP'D BY	REVISION
1	09/21/22	EZ		BID ADDENDUM #3

RECORD DRAWING CERTIFICATION
☐ AS BUILT – CHANGES AS NOTED ☐ AS BUILT – NO CHANGES

CONTRACTOR
NAME
SIGNATURE
TITLE DATE

PROJECT COORDINATOR
NAME
SIGNATURE
TITLE DATE

WESTCHESTER COUNTY, NEW YORK
DEPARTMENT OF PUBLIC WORKS AND TRANSPORTATION
DIVISION OF ENGINEERING

INFRASTRUCTURE REHABILITATION PHASE 3
PLAYLAND PARK, RYE, NEW YORK
CROSS AXIS BUILDING D
ROOF DETAILS

CONTRACT NUMBER 22-523
SHEET NUMBER CXD-A-81
DWG NO.: 207 of 664
SCALE: 1" = 1'-0"
DATE: 08/23/2022
DPW FILE NUMBER 1-118-A-956-1
REV. NO. 1

FENCE & GATE PAINTING SCHEDULE

COMPONENTS	COLOR
POSTS	P- 7
RAILS	P- 1
BALLUSTER, A	P- 15
BALLUSTER, B	P- 1
GATE FRAME	P- 15
GATE CROSS FRAME	P- 1
HARDWARE	BLACK

PAINTING SCHEDULE

KEY	COLOR	MANUFACTURER	REMARKS
P- 1	MYSTICAL POWERS #901	BENJAMIN MOORE	
P- 2	HERITAGE RED #HC-181	BENJAMIN MOORE	
P- 3	NEW YORK STATE OF MIND #805	BENJAMIN MOORE	
P- 4	LAZY SUNDAY #803	BENJAMIN MOORE	
P- 5	DEEP JUNGLE #595	BENJAMIN MOORE	
P- 6	LUCK OF THE IRISH #588	BENJAMIN MOORE	
P- 7	MAJOLICA GREEN #0013	SHERWIN WILLIAMS	
P- 8	ANTELOPE CANYON #125	BENJAMIN MOORE	
P- 9	FORSYTHIA #6907	SHERWIN WILLIAMS	
P- 10	CAPE BLUE #1642	BENJAMIN MOORE	
P- 11	WHITE SNOW #9541	SHERWIN WILLIAMS	
P- 12	TRICORN BLACK #6258	SHERWIN WILLIAMS	
P- 13	READY MIX WHITE	BENJAMIN MOORE	INTERIOR USE ONLY
P- 14	STUCCO PAINT TO MATCH P-1	KEIM	
P- 15	VAN DEUSEN BLUE #HC-156	BENJAMIN MOORE	
P- 16	#RAL9001	-	TYP. ROLL UP DOOR
P- 17	FLORIDA BEACHES #900	BENJAMIN MOORE	
P- 18	PIRATES COVE PEACH #903	BENJAMIN MOORE	
P- 19	JADITE #6459	SHERWIN WILLIAMS	
P- 20	DECISIVE YELLOW #6902	SHERWIN WILLIAMS	

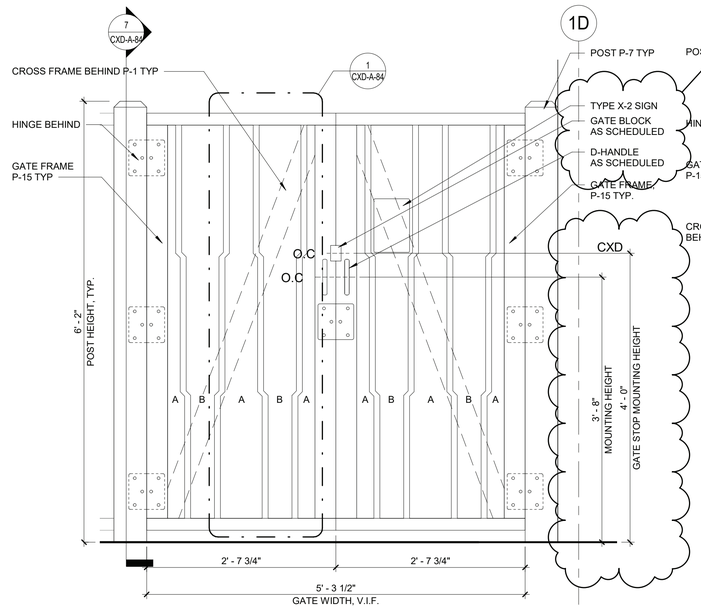

6 COURTYARD GATE ELEVATION (EX1)
1" = 1'-0"

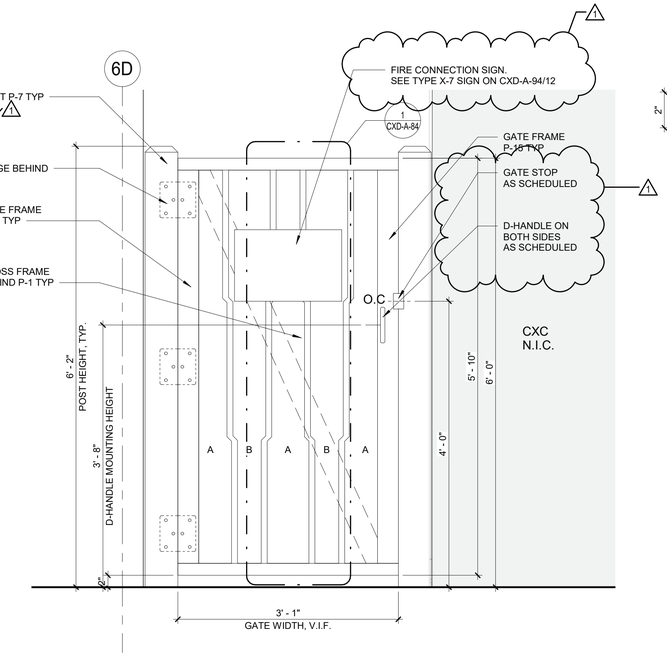

5 CXD GATE ELEVATION (EX2)
1" = 1'-0"

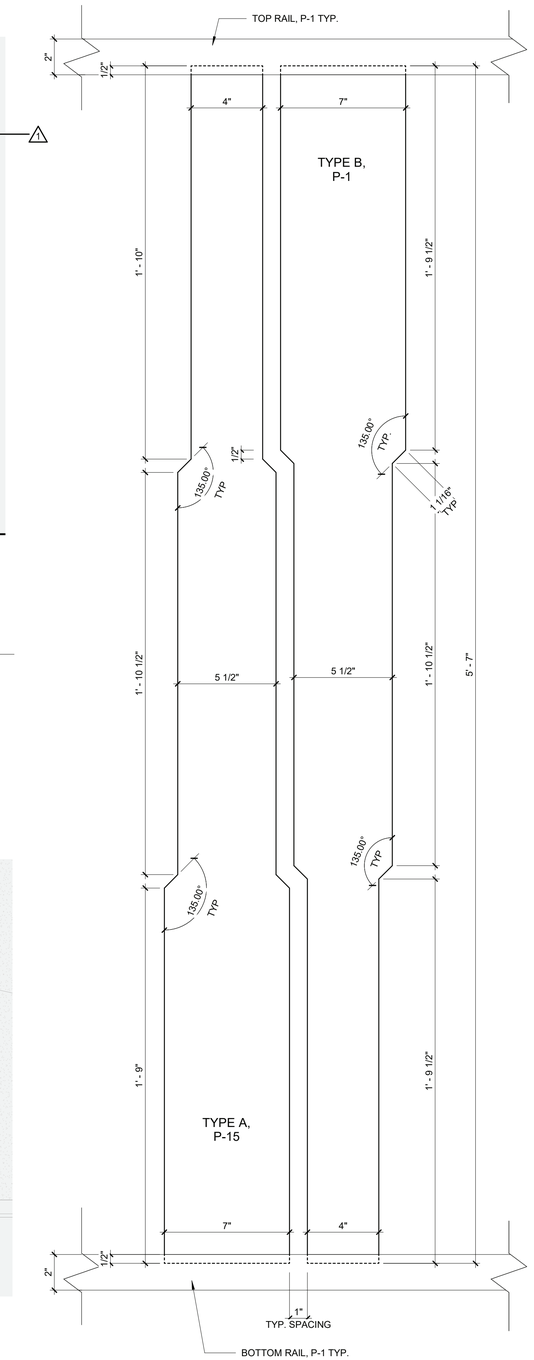

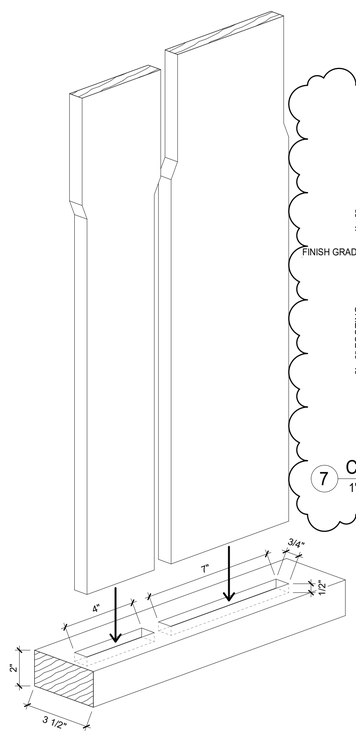

4 RAIL NOTCH DETAIL
3" = 1'-0"

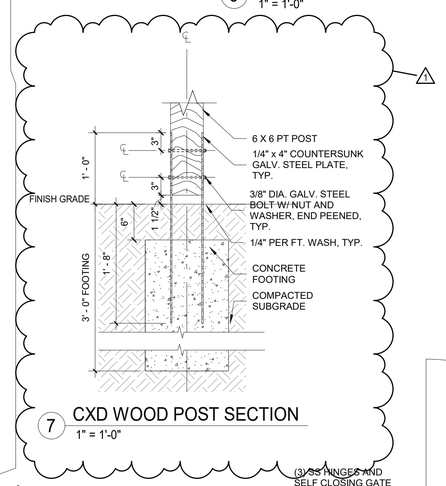

7 CXD WOOD POST SECTION
1" = 1'-0"

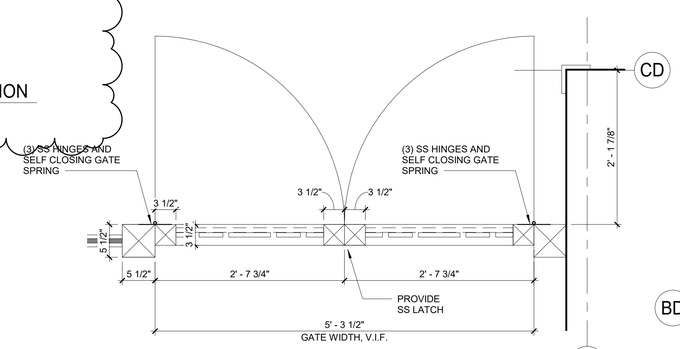

3 COURTYARD GATE PLAN (EX1)
1" = 1'-0"

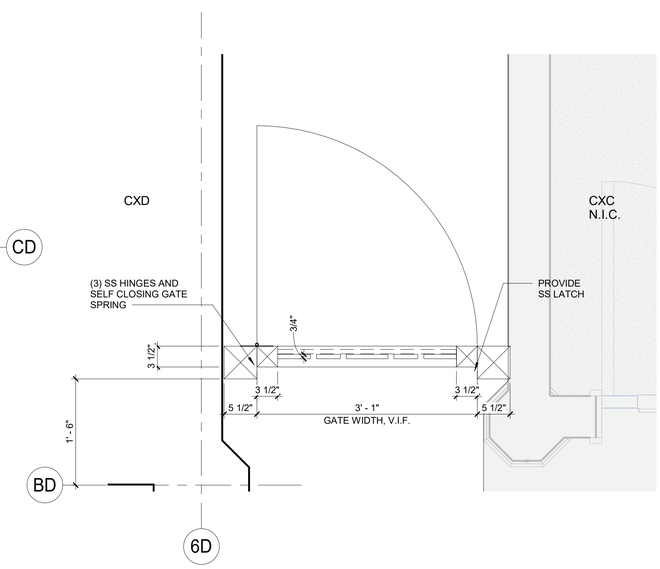

2 CXD GATE PLAN (EX2)
1" = 1'-0"

1 TYPICAL FENCE
3" = 1'-0"

9/23/2022 10:01:28 AM

CONSULTANT INFORMATION
The LiRo Group
3 Aerial Way, Syosset, New York 11791
(516) 938-5476 www.liro.com

CONSULTANT SEAL
REGISTERED ARCHITECT ROBERT D. TOMASO 023290 STATE OF NEW YORK

REVISION NUMBER	DATE	MADE BY	APP'D BY	REVISION
1	09/21/22	EZ		BID ADDENDUM #3

RECORD DRAWING CERTIFICATION
☐ AS BUILT – CHANGES AS NOTED ☐ AS BUILT – NO CHANGES

CONTRACTOR
NAME
SIGNATURE
TITLE DATE

PROJECT COORDINATOR
NAME
SIGNATURE
TITLE DATE

WESTCHESTER COUNTY, NEW YORK
DEPARTMENT OF PUBLIC WORKS AND TRANSPORTATION
DIVISION OF ENGINEERING

INFRASTRUCTURE REHABILITATION PHASE 3
PLAYLAND PARK, RYE, NEW YORK
CROSS AXIS BUILDING D
FENCE AND GATE DETAILS

CONTRACT NUMBER 22-523
SHEET NUMBER CXD-A-84
DWG NO.: 210 of 664
SCALE: As indicated
DATE: 08/23/2022
DPW FILE NUMBER 1-118-A-959-1
REV. NO. 1

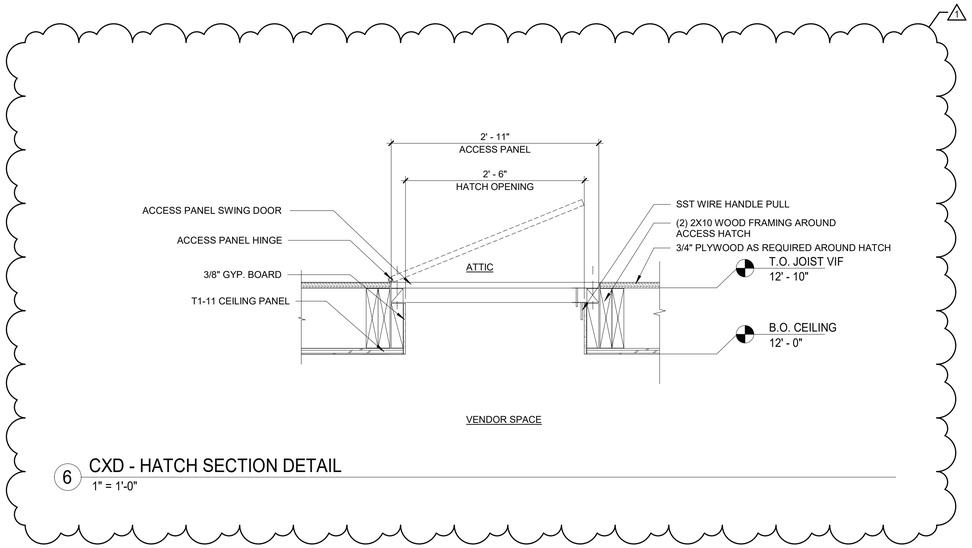

6 CXD - HATCH SECTION DETAIL
1" = 1'-0"

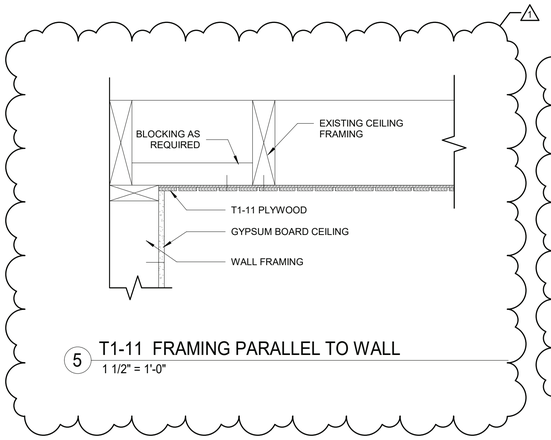

5 T1-11 FRAMING PARALLEL TO WALL
1 1/2" = 1'-0"

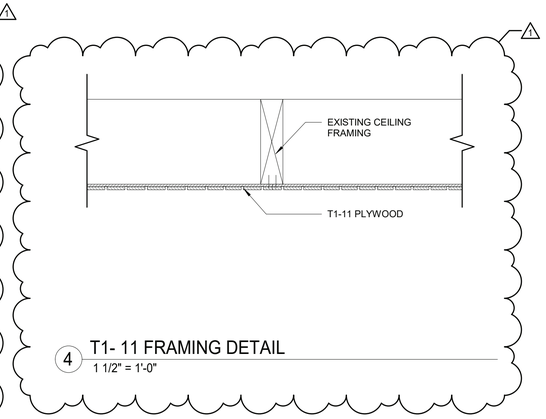

4 T1- 11 FRAMING DETAIL
1 1/2" = 1'-0"

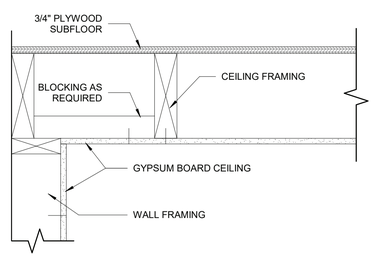

3 GYPSUM CEILING FRAMING PARALLEL TO WALL
1 1/2" = 1'-0"

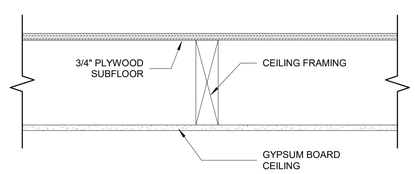

2 GYPSUM CEILING FRAMING DETAIL
1 1/2" = 1'-0"

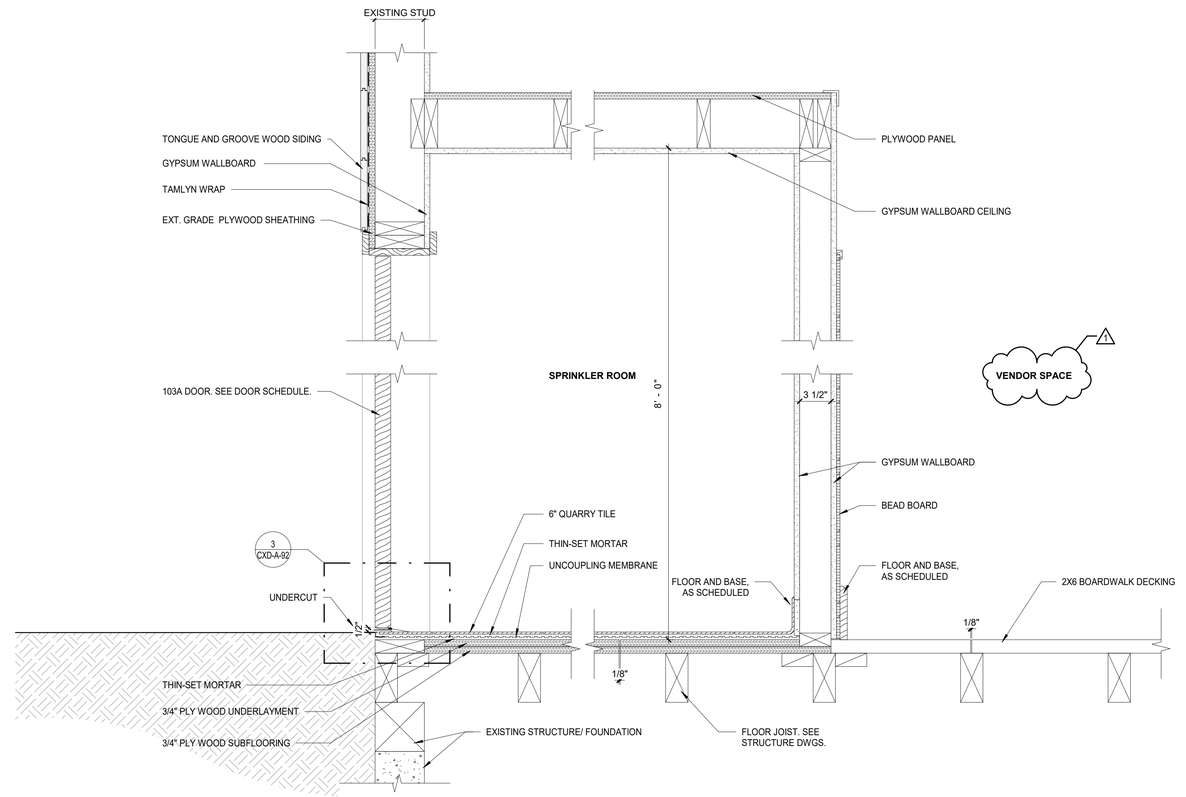

1 SPRINKLER ROOM DETAIL
1 1/2" = 1'-0"

9/23/2022 10:01:29 AM

CONSULTANT INFORMATION
The LiRo Group
3 Aerial Way, Syosset, New York 11791
(516) 938-5476 www.liro.com

CONSULTANT SEAL
REGISTERED ARCHITECT ROBERT D. YOUNG JR. 023290 STATE OF NEW YORK

REVISION NUMBER	DATE	MADE BY	APP'D BY	REVISION
1	09/21/22	EZ		BID ADDENDUM #3

RECORD DRAWING CERTIFICATION
☐ AS BUILT – CHANGES AS NOTED ☐ AS BUILT – NO CHANGES

CONTRACTOR
NAME
SIGNATURE
TITLE DATE

PROJECT COORDINATOR
NAME
SIGNATURE
TITLE DATE

WESTCHESTER COUNTY, NEW YORK
DEPARTMENT OF PUBLIC WORKS AND TRANSPORTATION
DIVISION OF ENGINEERING

INFRASTRUCTURE REHABILITATION PHASE 3
PLAYLAND PARK, RYE, NEW YORK
CROSS AXIS BUILDING D
DETAILS

CONTRACT NUMBER 22-523
SHEET NUMBER CXD-A-85
DWG NO.: 211 of 664
SCALE: As indicated
DATE: 08/23/2022
DPW FILE NUMBER 1-118-A-960-1
REV. NO. 1

DOOR SCHEDULE - CXD

Building	Door Number	DOOR TYPE	DOOR WIDTH	DOOR HEIGHT	DOOR THICKNESS	DOOR MATERIAL	DOOR GLASS	DOOR EXTERIOR FINISH	DOOR INTERIOR FINISH	FRAME TYPE	FRAME MATERIAL	FRAME EXTERIOR	FRAME INTERIOR	HDWR SET	REMARKS
CXD	101A	C	21' - 0"	9' - 6"		ALUM	NO	PAINT, P-16	PAINT, P-16	-	-	-	-	4.0	
CXD	101B	C	21' - 0"	9' - 6"		ALUM	NO	PAINT, P-16	PAINT, P-16	-	-	-	-	4.0	
CXD	101C	B	3' - 0"	7' - 0"	1 3/4"	WOOD	NO	PAINT, P-1	PAINT, P-13	2	WD.	PAINT, P-7	PAINT, P-13	9.0	EXIT DEVICE REQUIRED, LOCK REQUIRED. TYPE X-3 SIGN ON DOOR. WEATHER STRIP AT THREE SIDES FOR THE EXTERIOR DOOR.
CXD	101D	B	3' - 0"	7' - 0"	1 3/4"	WOOD	NO	PAINT, P-1	PAINT, P-13	2	WD.	PAINT, P-7	PAINT, P-13	9.0	EXIT DEVICE REQUIRED, LOCK REQUIRED. TYPE X-3 SIGN ON DOOR. WEATHER STRIP AT THREE SIDES FOR THE EXTERIOR DOOR.
CXD	102A	B	3' - 0"	7' - 0"	1 3/4"	WOOD	NO	PAINT, P-1	PAINT, P-13	2	WD.	PAINT, P-7	PAINT, P-13	11.0	STOREFRONT LOCK SET. TYPE A-3 SIGN ON DOOR
CXD	103A	B	3' - 0"	7' - 0"	1 3/4"	WOOD	NO	PAINT, P-1	PAINT, P-13	2	WD.	PAINT, P-7	PAINT, P-13	9.0	STOREFRONT LOCK SET. TYPE A-2 SIGN ON DOOR

NOTE: GC TO CONFIRM DOOR SIZES IN FIELD PRIOR TO ORDERING

GATE SCHEDULE

DOOR NUMBER	DOOR TYPE	WIDTH	HEIGHT	GATE MATERIAL	FINISH	HDWR SET	REMARKS
EX1	SEE CXD-A-84	3'-1" VIF	6'-0"	WOOD	SEE CXD-A-84	PROVIDE SELF CLOSING HINGE TO BE APPROVED BY ARCHITECT.D-HANDLE USE HEAVY DUTY 6 ½" GATE PULL ZINC-PLATED, POWDER-COATED STEEL ASTM B117 SALT-SPRAYED APPROVED BLACK FINISH TO MATCH OTHER GATE HARDWARE. GATE STOP USE ZINC-PLATED, POWDER-COATED STEEL ASTM B117 SALT-SPRAYED APPROVED 2 5/8"H X 1.75"W X 5/8"D. BLACK FINISH TO MATCH OTHER GATE HARDWARE. ARCHITECT TO APPROVE FINISH	SEE DETAILS ON CXD-A-84
EX2	SEE CXD-A-84	(2) 2'-7 3/4" VIF	6'-0"	WOOD	SEE CXD-A-84	PROVIDE SELF CLOSING HINGE TO BE APPROVED BY ARCHITECT.D-HANDLE USE HEAVY DUTY 6 ½" GATE PULL ZINC-PLATED, POWDER-COATED STEEL ASTM B117 SALT-SPRAYED APPROVED BLACK FINISH TO MATCH OTHER GATE HARDWARE. GATE STOP USE ZINC-PLATED, POWDER-COATED STEEL ASTM B117 SALT-SPRAYED APPROVED 2 5/8"H X 1.75"W X 5/8"D. BLACK FINISH TO MATCH OTHER GATE HARDWARE. ARCHITECT TO APPROVE FINISH	SEE DETAILS ON CXD-A-84

GENERAL DOOR SCHEDULE NOTES:

1. REFER TO CXD-A-92 SHEET FOR DOOR SILL & TRANSITION DETAILS. SILL TRANSITION INFORMATION IS INDICATED ON FINISH PLAN UNLESS OTHERWISE NOTED.
2. REFER TO SHEET CXD-A-91 FOR FINISH SCHEDULE AND LEGEND.
3. THE CONTRACTOR SHALL EXAMINE THE DRAWINGS, SCHEDULE AND SPECIFICATIONS AND FURNISH PROPER HARDWARE FOR ALL OPENINGS WHETHER LISTED OR NOT. COMPLETE SHOP DRAWINGS SHALL BE PROVIDED FOR APPROVAL PRIOR TO PURCHASE.
4. ALL EXIT DOORS SHALL BE OPENABLE FROM THE EGRESS SIDE WITHOUT THE USE OF A KEY OR SPECIAL KNOWLEDGE.
5. VERIFY DIMENSIONS OF EXISTING OPENINGS AND DOORS BEFORE ORDERING.
6. THE CONTRACTOR SHALL COORDINATE & VERIFY LOCATION OF RECESSED FLOOR CLOSERS, PIVOTS, ETC. WITH EXISTING FLOOR SLABS AND OTHER FIELD CONDITIONS PRIOR TO ORDERING TO ENSURE PROPER CLEARANCES & DEPTHS ARE ALLOWED.

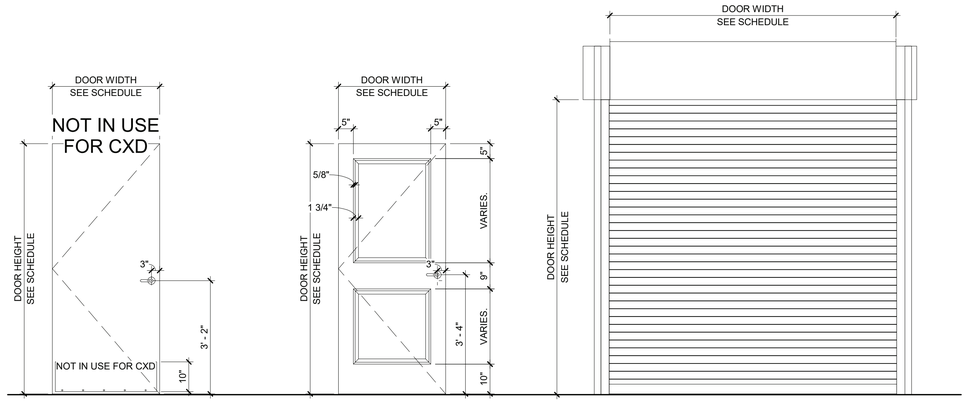

TYPE A — SINGLE H.M. DOOR

TYPE B — SINGLE WOOD DOOR

TYPE C — OVERHEAD ROLL-UP DOOR

6 DOOR TYPES
1/2" = 1'-0"

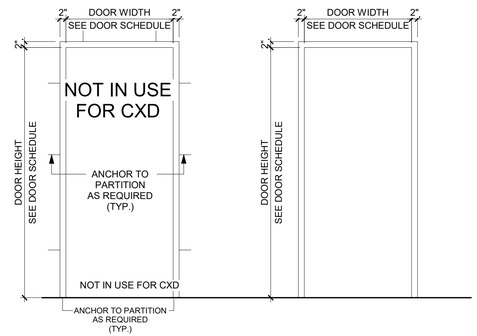

TYPE 1 — H.M. FRAME

TYPE 2 — WOOD FRAME

5 DOOR FRAME TYPES
1/2" = 1'-0"

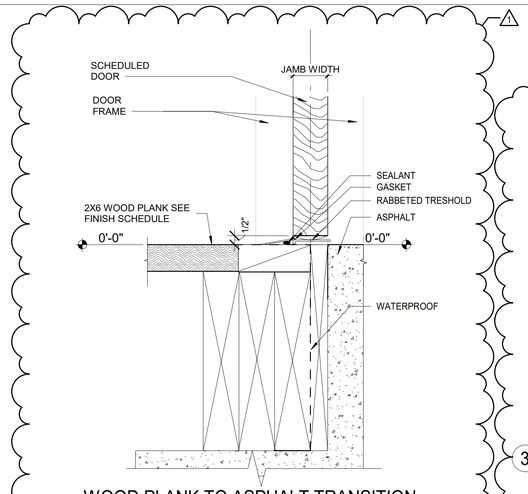

4 WOOD PLANK TO ASPHALT TRANSITION
3" = 1'-0"

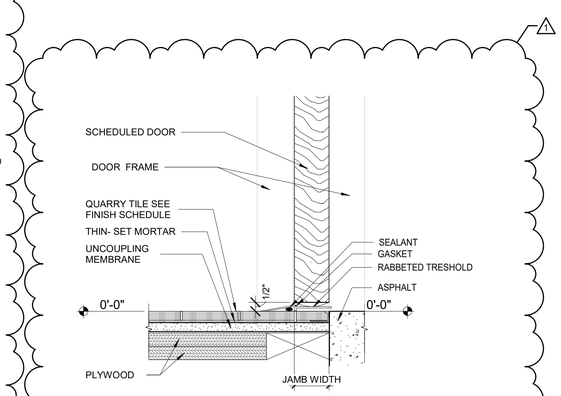

3 QUARRY TILE TO ASPHALT TRANSITION
3" = 1'-0"

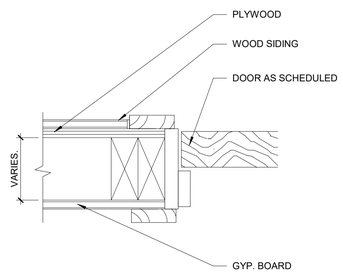

2 WOOD DOOR JAMB DETAIL
3" = 1'-0"

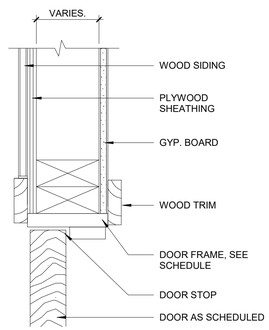

1 WOOD DOOR HEAD DETAIL
3" = 1'-0"

9/23/2022 12:33:47 PM

CONSULTANT INFORMATION

The LiRo Group
3 Aerial Way, Syosset, New York 11791
(516) 938-5476 www.liro.com

CONSULTANT SEAL

REGISTERED ARCHITECT ROBERT D. YOUNG JR. 033290 STATE OF NEW YORK

REVISION NUMBER	DATE	MADE BY	APP'D BY	REVISION
1	09/21/22	EZ		BID ADDENDUM #3

RECORD DRAWING CERTIFICATION

☐ AS BUILT – CHANGES AS NOTED ☐ AS BUILT – NO CHANGES

CONTRACTOR
NAME
SIGNATURE
TITLE DATE

PROJECT COORDINATOR
NAME
SIGNATURE
TITLE DATE

WESTCHESTER COUNTY, NEW YORK
DEPARTMENT OF PUBLIC WORKS AND TRANSPORTATION
DIVISION OF ENGINEERING

INFRASTRUCTURE REHABILITATION PHASE 3
PLAYLAND PARK, RYE, NEW YORK
CROSS AXIS BUILDING D
DOOR SCHEDULE AND DOOR DETAILS

CONTRACT NUMBER	22-523
SHEET NUMBER	CXD-A-92
DWG NO.:	213 of 664
SCALE:	As indicated
DATE:	08/23/2022
DPW FILE NUMBER	1-118-A-962-1
REV. NO.	1

SIGNAGE GENERAL NOTES

1. ALL PANEL SIGNAGE SHALL BE WALL MOUNTED AT 48" MIN AND 60" MAX ABOVE THE ADJACENT FINISHED FLOOR MEASURED FROM THE BASELINE OF THE CHARACTERS AND IN COMPLIANCE WITH THE LATEST ADOPTED VERSION OF ICC/ANSI-A117.1 REQUIREMENTS.
2. SIGNAGE SHOWN HERE MAY NOT BE INCLUSIVE OF ALL TYPES OF SIGNAGE REQUIRED FOR THIS PROJECT. REFER TO DRAWINGS AND SPECIFICATIONS FOR ALL ADDITIONAL SIGNAGE REQUIREMENTS NOT SHOWN HERE.
3. MOUNT SIGN SO THAT A PERSON CAN APPROACH WITHIN 3" AND AVOID DOOR SWING AND PROTRUDING OBJECTS
4. SIGNS SHALL BE LOCATED ON THE WALL ADJACENT TO THE LATCH SIDE OF DOOR, UON.

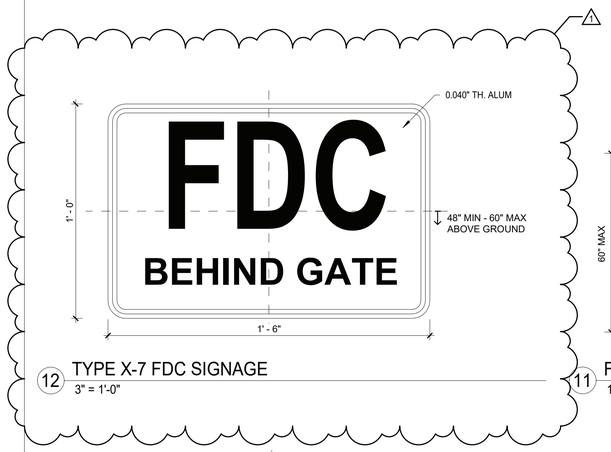

12 TYPE X-7 FDC SIGNAGE
3" = 1'-0"

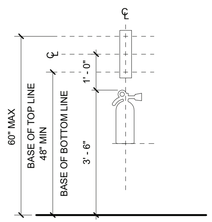

11 FIRE EXTINGUISHER SIGN LOCATION ELEVATION
1/2" = 1'-0"

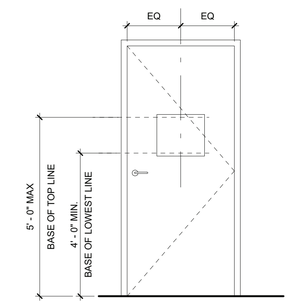

10 SIGN LOCATION ELEVATION - TYPICAL DOOR CONDITION 2
1/2" = 1'-0"

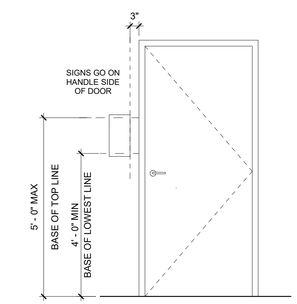

9 SIGN LOCATION ELEVATION - TYPICAL DOOR CONDITION
1/2" = 1'-0"

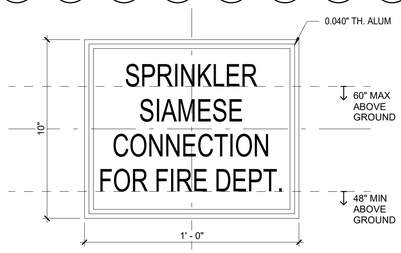

8 TYPE X-6 SIAMESE CONNECTION SIGNAGE
3" = 1'-0"

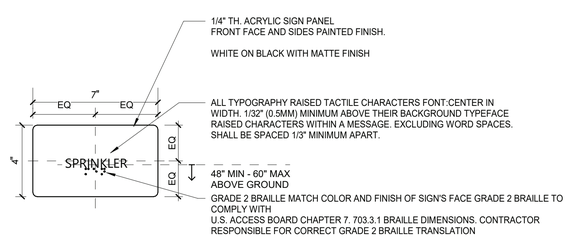

7 TYPE A-2- SPRINKLER ROOM ID. SIGN
3" = 1'-0"

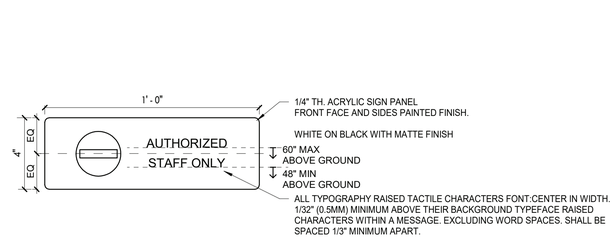

6 TYPE X-3- STAFF ONLY SIGN
3" = 1'-0"

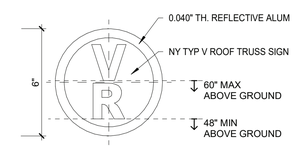

5 TYPE X-4 TRUSS SIGNAGE CLASS VR
3" = 1'-0"

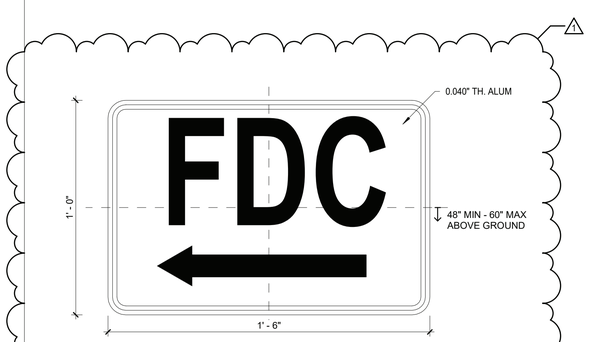

4 TYPE X-5 FDC SIGNAGE
3" = 1'-0"

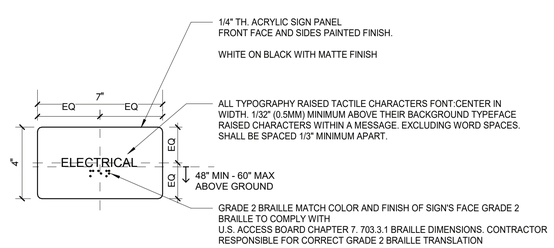

3 TYPE A-3 ELECTRICAL ROOM ID. SIGN
3" = 1'-0"

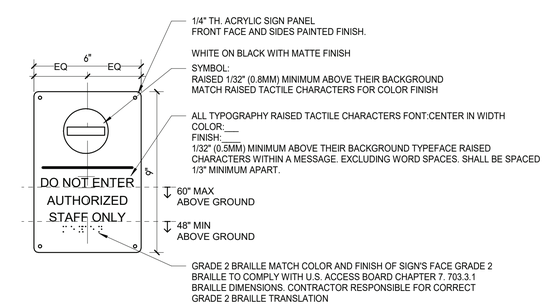

2 TYPE X-2- STAFF ONLY. SIGN
3" = 1'-0"

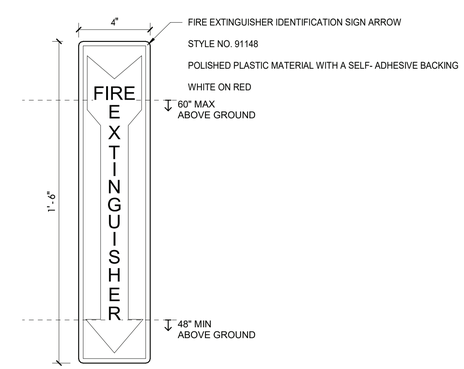

1 TYPE X-1- FIRE EXTINGUISHER. SIGN
3" = 1'-0"

9/23/2022 11:52:31 AM

CONSULTANT INFORMATION

The LiRo Group
3 Aerial Way, Syosset, New York 11791
(516) 938-5476 www.liro.com

CONSULTANT SEAL

REGISTERED ARCHITECT ROBERT D. JOANNIDES 023280 STATE OF NEW YORK

REVISION NUMBER	DATE	MADE BY	APP'D BY	REVISION
1	09/21/22	EZ		BID ADDENDUM #3

RECORD DRAWING CERTIFICATION

☐ AS BUILT – CHANGES AS NOTED ☐ AS BUILT – NO CHANGES

CONTRACTOR
NAME
SIGNATURE
TITLE DATE

PROJECT COORDINATOR
NAME
SIGNATURE
TITLE DATE

WESTCHESTER COUNTY, NEW YORK
DEPARTMENT OF PUBLIC WORKS AND TRANSPORTATION
DIVISION OF ENGINEERING

INFRASTRUCTURE REHABILITATION PHASE 3
PLAYLAND PARK, RYE, NEW YORK
CROSS AXIS BUILDING D
SIGNAGE TYPES AND DETAILS

CONTRACT NUMBER	22-523
SHEET NUMBER	CXD-A-94
DWG NO.:	215 of 664
SCALE:	As indicated
DATE:	08/23/2022
DPW FILE NUMBER	1-118-A-964-1
REV. NO.	1

FIRE PROTECTION SAFETY NOTES:

1. SPECIAL PRECAUTION SHALL BE TAKEN BY THE CONTRACTOR SO THAT EQUIPMENT OF THIS APPLICATION AND ITS INSTALLATION WILL NOT AFFECT THE FOLLOWING: EGRESS TO AND FROM THE BUILDING. FIRE SAFETY OR CREATE A FIRE HAZARD. STRUCTURAL SAFETY OF THE BUILDING. ACCUMULATION OF DUST AND DEBRIS. (THE CONTRACTOR SHALL LEAVE THE SITE BROOM CLEANED EACH DAY.)

FIRE PROTECTION GENERAL NOTES:

1. DIMENSIONS, LOCATIONS AND SIZES INDICATED ON THE PLANS AND THE ELEVATION ARE APPROXIMATE AND SHALL BE VERIFIED BY FIELD INSPECTION BY THE CONTRACTOR.

2. SOME EXISTING PIPE AND EQUIPMENT IS SHOWN FOR CLARIFICATION OF THIS CONTRACT, BUT MUST BE PROTECTED BY THE CONTRACTOR.

3. NO WORK SHALL BE INITIATED UNTIL A WORK PERMIT IS OBTAINED BY THE CONTRACTOR AND A SAFETY PLAN IS SUBMITTED AND IS APPROVED.

4. CONTRACTOR IS RESPONSIBLE FOR OBTAINING ALL PERMITS, EQUIPMENT USE PERMITS, ALL INSPECTION APPROVALS, AND LETTER OF COMPLETION FROM THE DEPARTMENT OF BUILDINGS FOR WORK UNDER THIS CONTRACT AS APPLICABLE.

5. ANY EXISTING MATERIALS, PIPING, ETC., NOT INDICATED FOR DEMOLITION WHICH ARE REMOVED BY THE CONTRACTOR IN ORDER TO INSTALL NEW WORK SHALL BE REINSTALLED BY THE CONTRACTOR. IF EXISTING WORK IS DAMAGED IT SHALL BE REPLACED AT THE CONTRACTOR'S EXPENSE. ALL SURFACES OR FINISHES THAT ARE DAMAGED OR OTHERWISE AFFECTED BY WORK OF THIS CONTRACT SHALL BE PATCHED, REPAIRED, PAINTED OR REPLACED TO MATCH THE PRE-EXISTING CONDITION AND THE NEW WORK.

6. CONTRACTOR MAY PROPOSE ALTERNATE ROUTING IN DIFFICULT AREAS WHERE REPLACEMENT IN KIND IS NOT PRACTICAL. ANY AND ALL ALTERNATE ROUTING IS SUBJECT TO PRIOR REVIEW AND APPROVAL BY THE ENGINEER.

7. A FIRE WATCH SHALL BE PROVIDED WHEN SPRINKLER COVERAGE IS IMPACTED TO MAINTAIN BUILDING OPERATIONS OR AS REQUIRED.

FIRE PROTECTION SYMBOL LIST

— — — — — FS DRY— —	NEW DRY SPRINKLER PIPING
— — — — — DRY(E) —	EXISTING TO REMAIN DRY SPRINKLER PIPING
○	NEW UPRIGHT SPRINKLER HEAD
○	EXISTING UPRIGHT SPRINKLER HEAD
●	NEW CONCEALED PENDENT SPRINKLER HEAD-ORDINARY TEMPERATURE
	SPRINKLER DRY PIPE VALVE
	FIRE HOSE CABINET
	SIAMESE CONNECTION
	CHECK VALVE
	CHECK VALVE W/ ALARM
	WATER MOTOR ALARM BELL
⊗	PIPE RISER
	PIPE DROP
	PIPE UP
	POINT OF CONNECTION
	POINT OF DISCONNECTION
	PREACTION 6" BELL
	SOLENOID VALVE
	OS & Y VALVE
#	REVISION SYMBOL
F8	REFER TO SUPPLEMENTAL FIGURE INDICATED BY NUMBER (I.E. F2 REFERS TO FIGURE 2)
XXX / X	EQUIPMENT TAG / EQUIPMENT NUMBER
X / X-XXX	DETAIL TAG/ CALL OUT TAG / FIRE PROTECTION SHEET NUMBER

SHOP DWGS/EQUIPMENT SUBMITTALS

THE CONTRACTOR MUST SUBMIT ANY EQUIPMENT ALTERNATES 2 WEEKS PRIOR TO BIDS DUE FOR REVIEW AND COMMENTS. ALTERNATES MUST BE ACCEPTED BY LIRO ENGINEERS, INC., THE ARCHITECT, AND THE OWNER PRIOR TO INCLUSION IN BID. THE CONTRACTOR IS RESPONSIBLE TO COORDINATE EQUIPMENT ALTERNATES WITH OTHER TRADES AND MAKE ADJUSTMENTS TO THE MECHANICAL SYSTEMS, AS REQUIRED, TO ACCOMMODATE THESE NEW ALTERNATES.

THE CONTRACTOR IS RESPONSIBLE TO SUBMIT ALL OF THE FOLLOWING ITEMS FOR REVIEW/APPROVAL BY NO MORE THAN 3 WEEKS AFTER THE CONTRACTOR'S CONTRACT/BID HAS BEEN AWARDED. ALL SUBMITTALS MUST BE SENT TOGETHER AS A **SINGLE PACKAGE** WITH MANUFACTURER'S SPECIFIC MODELS AND SPECIFICATIONS OUTLINED TO MATCH THE SCHEDULED REQUIREMENTS. EACH SUBMITTAL MUST BE LABELED WITH THE UNIT DESIGNATION USED WITHIN THIS DRAWING SET. IF THE SUBMITTAL PACKAGE IS FOUND TO BE INCOMPLETE UPON RECEIPT, THE PACKAGE WILL BE HELD AND WILL NOT BE REVIEWED UNTIL THE REMAINDER OF THE PACKAGE IS RECEIVED. SIX (6) HARD COPIES OF THE SUBMITTAL PACKAGE MUST BE SENT TO LIRO ENGINEERS, INC. DIGITAL SHOP DRAWING SUBMISSIONS ARE ACCEPTABLE.

SCOPE OF WORK:

1. THE INSTALLATION OF NEW DRY FS EQUIPMENT.

2. PROPOSED FIRE SPRINKLER HEAD LOCATIONS AND PIPING ARE AS NOTED ON PLANS. EXACT PIPING FROM THE FIRE SPRINKLER MAIN TO ALL HEADS IS TO BE COORDINATED AND HYDRAULICALLY CALCULATED BY THE F.S.C. & SUBMITTED TO THE ENGINEER FOR APPROVAL.

NOTE: THIS SCOPE OF WORK DESCRIPTION IS PROVIDED TO GIVE AN OVERALL "MACRO" DESCRIPTION OF THIS PROJECT. F.S.C. IS RESPONSIBLE TO REVIEW ALL ENGINEERING AND ARCHITECTURAL DRAWINGS AND VISIT THE SITE IF NEEDED, PRIOR TO SUBMISSION OF BID.

SPRINKLER HEAD SCHEDULE

	MANUFACTURER	MODEL	DESCRIPTION	K-FACTOR	QUANTITY
○	RELIABLE	F1FR	DRY ORDINARY UPRIGHT SPRINKLE HEAD	5.6	31

ABBREVIATION

ACV	ALARM CHECK VALVE
B.O.P.	BOTTOM OF PIPE
(E)	EXISTING TO REMAIN
F.S.C.	FIRE SPRINKLER CONTRACTOR
P.C	PLUMBING CONTRACTOR
TYP	TYPICAL
W/	WITH
NYS	NEW YORK STATE
U/P	UNDERGROUND PIPING
W	WATER

DRAWING NOTATIONS

*	DRAWING NOTE TAB
	RISER DESIGNATION
	POINT OF CONNECTION
	POINT OF DISCONNECTION

DESIGN CRITERIA

1. AREA OF APPLICATION = 2535 SQ. FT. (DRY SYSTEM, ROOF PITCH >/= 2 IN 12)

2. OCCUPANCY CLASSIFICATION = ORDINARY HAZARD GROUP 1

3. MAXIMUM COVERAGE PER SPRINKLER HEAD = 130 SQ. FT

4. DESIGN DENSITY = 0.15 GPM/SQ. FT

5. "K" FACTOR OF SPRINKLER HEADS = 5.6

6. DESIGN CRITERIA REQUIREMENTS BASED ON:
   - 2020 BUILDING CODE OF NEW YORK STATE
   - 2016 NFPA 13

ORDINARY HAZARD PIPE SCHEDULE

STEEL		COPPER	
1IN.	2 SPRINKLERS	1IN.	2 SPRINKLERS
1 1/4 IN.	3 SPRINKLERS	1 1/4 IN.	3 SPRINKLERS
1 1/2IN.	5 SPRINKLERS	1 1/2IN.	5 SPRINKLERS
2 IN.	10 SPRINKLERS	2 IN.	12 SPRINKLERS
2 1/2 IN.	20 SPRINKLERS	2 1/2 IN.	25 SPRINKLERS
3 IN.	40 SPRINKLERS	3 IN.	45 SPRINKLERS
3 1/2 IN.	65 SPRINKLERS	3 1/2 IN.	75 SPRINKLERS
4 IN.	100 SPRINKLERS	4 IN.	115 SPRINKLERS
5 IN.	160 SPRINKLERS	5 IN.	180 SPRINKLERS
6 IN.	275 SPRINKLERS	6 IN.	300 SPRINKLERS
8 IN.	SEE SECTION 8.2	8 IN.	SEE SECTION 8.2

FOR SI UNITS, 1 IN. = 25.4 MM.

MAX DISTANCE BETWEEN HANGERS (FT.-IN.)

	NOMINAL PIPE SIZE (IN.)											
	3/4	1	1 1/4	1 1/2	2	2 1/2	3	3 1/2	4	5	6	8
STEEL PIPE EXCEPT THREADED LIGHTWALL	N/A	12-0	12-0	15-0	15-0	15-0	15-0	15-0	15-0	15-0	15-0	15-0
THREADED LIGHTWALL STEEL PIPE	N/A	12-0	12-0	12-0	12-0	12-0	12-0	N/A	N/A	N/A	N/A	N/A
COPPER TUBE	8-0	8-0	10-0	10-0	12-0	12-0	12-0	15-0	15-0	15-0	15-0	15-0

CODE REFERENCE

2020 NEW YORK STATE BUILDING CODE
2016 NFPA 13

FIRE PROTECTION NOTES

1. THE DRAWINGS SHOW THE LAYOUT OF THE SYSTEM AND INDICATE THE APPROXIMATE LOCATIONS OF EQUIPMENT AND PIPING. CONTRACTOR IS CAUTIONED NOT TO SCALE THE DRAWINGS. THE PIPING SHALL BE RUN APPROXIMATELY IN THE AREAS AS INDICATED ON THE DRAWINGS, [HOWEVER, TO THE ARRANGEMENT OF THE PIPING SYSTEMS AS MAY BE REFERENCED WITH WORK OF OTHER TRADES]. CONTRACTOR SHALL REVIEW AND COORDINATE WITH STRUCTURAL, ELECTRICAL AND MECHANICAL DRAWINGS. PARTITIONS, STRUCTURAL MEMBERS, ETC. ARE DESIGNED TO BE FURRED OR CLOSED IN AND TO INCLUDE ROUGH-IN PIPING. CONTRACTOR SHALL FURNISH ALL OFFSETS, ADDITIONAL FITTINGS, ETC. WHETHER SHOWN ON DRAWINGS OR NOT, AS REQUIRED TO MEET INSTALLATION CONDITIONS.

2. CONTRACTOR IS TO COMPLY WITH LATEST NFPA AND N.Y.S. CODES, AND COORDINATE HIS WORK WITH OTHER TRADES AND MAKE NECESSARY ADJUSTMENTS.

3. CONTRACTOR IS TO PREPARE SHOP DRAWINGS FOR ENGINEERS REVIEW AFTER MAKING A COMPLETE FIELD SURVEY.

4. CONTRACTOR IS TO REPORT ANY CONDITION REQUIRING CHANGES FROM PLANS TO ENGINEER PRIOR TO STARTING WORK.

5. BRANCH LINES AND MAINS (1 1/2" OR LESS) - SCHEDULE 40 FM APPROVED

6. BRANCH LINES AND MAINS (2" OR LARGER) - THINWALL (THICKNESS LESS THEN SCHEDULE 40 MORE THEN SCHEDULE 10 & FM APPROVED)

7. CONTRACTOR IS TO PERFORM A HYDROSTATIC TEST FOR 2 HRS. @ 200 PSI WITH NO LEAKAGE AND PROVIDE A TEST CERTIFICATE TO ENGINEER

8. CONTRACTOR IS TO EMPLOY EXPERIENCED WORKMEN WHO ARE TO FAMILIARIZE THEMSELVES WITH THE BUILDING AND OBSERVE SAFETY REQUIREMENTS.

9. CONTRACTOR TO ADJUST HEAD LOCATION TO COORDINATE WITH LIGHTS, DUCTS, ETC.

10. PERMIT FROM LOCAL AUTHORITY, TO BE OBTAINED BY CONTRACTOR.

11. ALL WORK TO BE APPROVED BY OWNERS ENGINEER, STATE AUTHORITIES HAVING JURISDICTION AND MUNICIPAL FIRE, PLUMBING, BUILDING AND WATER DEPARTMENTS.

12. U.L. AND/OR FM APPROVED EQUIPMENT TO BE USED.

13. WORK TO BE IN ACCORDANCE WITH MUNICIPAL WATER DEPT. RULES

14. SYSTEM IS TO BE MAINTAINED AND TESTED BY THE OWNER OR HIS AGENT IN ACCORDANCE WITH APPLICABLE LOCAL AND STATE CODES AND IN CONFORMANCE WITH NFPA 13A, LATEST EDITION.

15. IF BUILDING OCCUPANCY OR CONSTRUCTION CHANGES, THE SPRINKLER SYSTEM IS TO BE UPDATED ACCORDINGLY BY THE OWNER OR HIS AGENT.

16. CONTRACTOR IS TO NEATLY CUT AND PATCH IN A FIRST CLASS WORKMANLIKE MANNER, ALL HOLES AND PENETRATIONS IN WALLS, CEILINGS, FLOORS, PARTITIONS, ETC.

17. THE ENGINEER IS NOT RETAINED FOR SUPERVISION.

18. THE INSTALLATION OF THIS SYSTEM WILL REQUIRE THE CLOSING OF ONE OR MORE FIRE PROTECTION CONTROL VALVES. THESE VALVE CLOSURES SHOULD BE CLOSELY COORDINATED WITH THE OWNERS WHO SHOULD CONTACT THE LOCAL FIRE DEPARTMENT, INSURANCE INTERESTS, ETC. PRIOR TO VALVE CLOSURES.

19. ACTUAL DESIGN DENSITY MAY EXCEED STANDARDS, HOWEVER, IT IS A MINIMUM TO BE USED BY THE CONTRACTOR.

20. ALL ALARMS RELATING TO THE SPRINKLER SYSTEM SHOULD BE ACTIVATED UPON PLACING THE SPRINKLER SYSTEM IN SERVICE.

21. THE INSTALLATION COMPONENTS, SIZING, SPACING, MATERIALS LOCATION CLEARANCES, POSITION AND TYPE OF SYSTEM SHALL CONFORM TO NFPA 13 AND NYS UNIFORM FIRE PREVENTION BUILDING CODE LATEST EDITION.

22. SPRINKLERS SHALL BE PROTECTED AGAINST FREEZING AND INJURY AS PER NFPA CODE.

23. INSPECTION AND TESTS OF SPRINKLER SYSTEM SHALL BE CONDUCTED AS SPECIFIED IN NFPA CODE.

24. WATER SUPPLY TEST PIPES AND GAUGES SHALL BE PROVIDED AS SPECIFIED IN CHAPTER 2-9 OF NPPA 13.

25. PIPING SPECIFICATIONS, PIPE SCHEDULES, SYSTEM TEST PIPES, PROTECTION AGAINST CORROSION, DAMAGE FITTINGS, VALVES, HANGERS, SPRINKLERS, GUARDS AND SHIELDS SHALL BE IN ACCORDANCE WITH CHAPTER 3 AND CHAPTER 8 OF NFPA 13, LATEST EDITION. PIPING SHALL BE PAINTED TO PREVENT CORROSION.

26. STOCK OF EXTRA SPRINKLERS WILL BE FURNISHED AS PER CHAPTER 3 OF NFPA 13 (REQUIRED FOR EACH TEMPERATURE RATING).

27. SPRINKLER ALARMS WILL BE IN ACCORDANCE WITH NFPA 13.

28. SPACING, LOCATION AND POSITION OF SPRINKLERS SHALL BE IN ACCORDANCE WITH CHAPTER 4 OF NFPA 13.

29. ALL PIPING PASSING THROUGH WALLS SHALL COMPLY WITH NFPA FOR FIRE PROOFING.

30. DISTANCE OF SPRINKLERS FROM HEAT SOURCES SHALL BE IN ACCORDANCE WITH TABLE 3-16.6.3 OF NFPA 13.

31. PROVIDE WATER SUPPLY LETTER WITH FLOW TEST DATA.

32. ALL PIPES PASSING THROUGH FOUNDATION WALLS TO BE PROTECTED.

33. ALL VALVES SHALL BE IDENTIFIED AS REQUIRED BY NFPA 13.

34. DRAINAGE TO CONFORM TO CHAPTER 3-11 OF NFPA 13.

35. A ONE PIECE REDUCING FITTING OF GOOD DESIGN SHOULD BE USED WHEREVER A CHANGE IS MADE IN THE SIZE OF PIPE AS PER SECTION 3-12.2.7 OF NFPA 13.

36. ALL VALVES ON CONNECTIONS TO WATER SUPPLIES AND IN SUPPLY TO SPRINKLERS SHALL BE APPROVED O.S. &Y. OR APPROVED INDICATOR TYPE WITH TAMPER SWITCHES.

37. DRAIN VALVES AND TEST VALVES SHALL BE APPROVED TYPE AS PER SECTION 3-14.1.2 OF NFPA 13.

38. HANGERS SHALL BE OF A TYPE APPROVED FOR USE WITH THE PIPE OR TUBE INVOLVED, SPRINKLER PIPING SHOULD BE SUPPORTED BY ADJUSTABLE HANGERS PER NFPA 13, SECTION 3-15.

39. PROVISIONS SHOULD BE MADE TO FACILITATE FLUSHING SYSTEM PIPING BY PROVIDING FLUSHING CONNECTIONS CONSISTING OF A CAPPED NIPPLE 4" LONG ON THE END OF THE CROSS MAIN, AS PER SECTION 3- 8.2 OF NFPA 13.

40. SPRINKLER SHALL BE AN APPROVED TYPE AS PER SECTION 3-16 OF NFPA 13.

41. TEMPERATURE RATING SHALL COMPLY WITH SEC. 3-16.6 OF NFPA 13.

42. CLEARANCES BETWEEN SPRINKLERS AND STORAGE OR PARTITIONS AS PER NFPA 13, SECTION 4-2.5

43. SPACING AND LOCATION OF SPRINKLER SHALL COMPLY WITH CHAPTER 4 NFPA 13.

44. CONTRACTOR TO COORDINATE HIS WORK WITH OTHER TRADES.

45. ONLY EXPERIENCED SPRINKLER MECHANICS TO WORK ON THE SYSTEM.

46. ALL PIPING TO BE A MINIMUM OF 1" UNLESS OTHERWISE NOTED.

47. PROVIDE SHOP DRAWINGS WITH HYDRAULIC CALCULATIONS FOR REVIEW TO LOCAL FIRE MARSHALL AND INSURANCE UNDERWRITER AND ENGINEER FOR APPROVAL PRIOR TO INSTALLATION.

48. ALL FIRE PROTECTION EQUIPMENT SHALL BE INSTALLED PER MANUFACTURER'S REQUIREMENTS/SPECIFICATIONS.

49. ALL FIRE PROTECTION EQUIPMENT SHALL BE MOUNTED ON MINIMUM 6" HIGH CONCRETE PAD UNLESS OTHERWISE NOTED (PAVER AND CINDER BLOCK IS NOT ACCEPTABLE).

50. PERMIT IS REQUIRED PRIOR TO INSTALLATION, TO INCLUDE SIGNED AND SEALED SHOP DRAWINGS, HYDRAULIC CALCULATION, SHOP DRAWINGS, MANUFACTURERS INFORMATION ON HEADS AND APPLIANCES, COMPLIANCE WITH NFPA 13 AND SECTION 903 2020 NYSBC/FC.

DRY SYSTEM COMPRESSOR SCHEDULE

TAG	MANUFACTURER	MODEL	SERVICE	LOCATION	AVERAGE CFM	V.P.H.HZ	HP	RECOMMENDED WIRE SIZE	DIMENSION (L"xW"xH")	WEIGHT (LBS)	NOTES
DC-1	GENERAL AIR PRODUCT	LT20033A	DRY SYSTEM	SPRINKLER ROOM	2.43	230.1.60	1/3	12	33x13x28	115	1,2,3

NOTES:

1. MOUNTING BRACKET.
2. PROVIDE AIR MAINTENANCE DEVICE (RELIABLE MODEL AMD-1)
3. PROVIDE WITH A 10 GALLON GENERAL AIR TANK
4. UL LISTED PRESSURE SWITCH. SET FOR 20 PSI ON AND 25 PSI OFF. REFER TO MANUFACTURER'S RECOMMENDATIONS FOR PROPER AIR PRESSURE.

DRY PIPE VALVE SCHEDULE

MANUFACTURER	MODEL	SERVICE	LOCATION	SIZE (INCH)
RELIABLE	D	DRY SYSTEM	SPRINKLER EQUIP. ROOM	4

NOTES:

1. FACTORY PREASSEMBLED TRIM - BASIC
2. PROVIDE WITH RELIABLE B1 ACCELERATOR. INSTALL AS PER MANUFACTURER'S RECOMMENDATIONS

FIRE PROTECTION DRAWING LIST

SHEET NO.	SHEET NAME	REVISON NO.	REVISION DATE
CXD-FP-01	FIRE PROTECTION NOTES, SYMBOLS, ABBREVIATIONS, AND DRAWING LIST	0	-
CXD-FP-11	FIRE PROTECTION GROUND FLOOR AND ATTIC DEMOLITION PLAN	0	-
CXD-FP-21	FIRE PROTECTION GROUND FLOOR AND ATTIC CONSTRUCTION RCP	0	-
CXD-FP-81	FIRE PROTECTION DETAILS	0	-

CONSULTANT INFORMATION

LiRo Engineers, Inc.
A LiRo Group Company
Syosset, N.Y. 516-214-8157[T]

CONSULTANT SEAL
STATE OF NEW YORK · FRANK F. DUSSE · LICENSED PROFESSIONAL ENGINEER · No. 090114

REVISION NUMBER	DATE	MADE BY	APP'D BY	REVISION
1	09/21/22			BID ADDENDUM # 3

RECORD DRAWING CERTIFICATION

☐ AS BUILT – CHANGES AS NOTED ☐ AS BUILT – NO CHANGES

CONTRACTOR: NAME / SIGNATURE / TITLE / DATE

PROJECT COORDINATOR: NAME / SIGNATURE / TITLE / DATE

WESTCHESTER COUNTY, NEW YORK
DEPARTMENT OF PUBLIC WORKS AND TRANSPORTATION
DIVISION OF ENGINEERING

INFRASTRUCTURE REHABILITATION - PHASE 3
PLAYLAND PARK, RYE, NEW YORK
CROSS AXIS BUILDING D
FIRE PROTECTION NOTES, SYMBOLS, ABBREVIATIONS & DWG LIST

CONTRACT NUMBER	22-523
SHEET NUMBER	CXD-FP-01
DWG NO.:	223 of 664
SCALE:	AS INDICATED
DATE:	08/23/2022
DPW FILE NUMBER	1-118-FP-972-1
REV. NO.	1

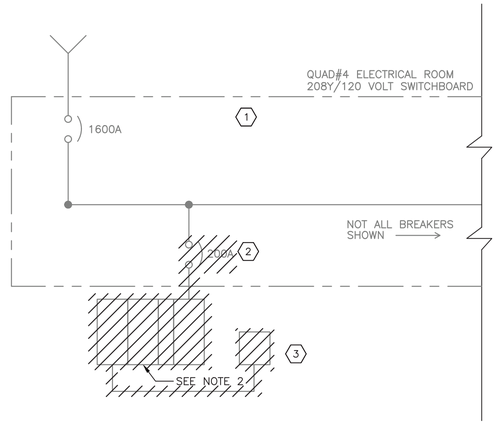

ONE LINE DIAGRAM – DEMOLITION

N.T.S.

NOTES:

1. FOR ADDITIONAL NOTES, ABBREVIATIONS, AND SYMBOLS, SEE DRAWING GE–E–01.
2. THERE IS AN ARRAY OF FOUR EXISTING POWER PANELS LOCATED IN THE REAR EXTERIOR WALL OF BUILDING CXE. THESE PANELS POWER BOTH CXD AND CXE BUILDINGS. CONTRACTOR SHALL DISCONNECT AND REMOVE THE PANEL ARRAY IN ITS ENTIRETY. SEE DWG. CXE–E–01 FOR ADDITIONAL INFORMATION.

KEY NOTES:

1. EXISTING 208Y/120 VOLT DISTRIBUTION BOARD LOCATED IN QUAD #4 ELECTRICAL ROOM.
2. CONTRACTOR SHALL DISCONNECT AND REMOVE EXISTING 200A CIRCUIT BREAKER. KEEP CIRCUIT BREAKER FOR FUTURE USE.
3. DISCONNECT AND REMOVE EXISTING BUILDING MOUNTED OFFICE PANEL NO. 1.

PANELBOARD EXISTING - OFFICE PANEL 1 — **LOCATION:** CXD - REAR OFFICE ELECTRICAL CABINET

1 **NEMA RATING** — 3 **POLES** — **MOUNTING:** SURFACE

XXX **AMP BUS RATING** — MLO **AMP MAIN BREAKER** — 42 **KA SHORT CIRCUIT RATING**

208Y/120 **VOLTS** — 3 **PHASE** — 4 **WIRE** — **LECTRONIC GRADE** NO

CIRCUIT NO.	DESCRIPTION	LOAD KVA PHASE A	LOAD KVA PHASE B	LOAD KVA PHASE C	BREAKER AMPS POLES	NOTES	CIRCUIT NO.	DESCRIPTION	LOAD KVA PHASE A	LOAD KVA PHASE B	LOAD KVA PHASE C	BREAKER AMPS POLES	NOTES
1							2	AIR CONDITIONING UNIT (220V) - LEAVE					
3	TRAILER						4	ON					
5	MWWG - WATER GAME LIGHTS &				20/1		6	FAN				20/2	
7	SPRINKLER RAIN OUTLETS - LEAVE ON						8	BB LIGHTS					
9	CLOSET				20/1		10	OFFICE LIGHTS				20/1	
11	CBR PUMP OUTSIDE FRONT				20/1		12	AIR POWER				20/1	
13	RADIO ON - LEAVE ON						14	SPRINKLER - LEAVE ON				20/1	
15	AIR PUMP						16	MWWG DOOR				20/1	
17	BLANK						18	COMPUTER					
	TOTAL PHASE KVA THIS SIDE	0	0	0				**TOTAL PHASE KVA THIS SIDE**	0	0	0		
								TOTAL KVA PER PHASE	0	0	0		
								TOTAL THREE PHASE KVA		0			

NOTES:
1
2
3
4

NOTES CONT...
5
6
7
8

Drawing Name: G:\SavinAutocad\2060\25-Playland-Mega-3\E\CXDE-1001.dwg
Rev#: Projectname: 211001F02 Comments: ---- Printed by: MGodby Date: 21 September 2022 1:31 PM Designed by: ----
Xrefs: [TB_24X36_WestchesterCo_3.dwg] [TSIC-SYLOGO.dwg] [BICRE-A-04.dwg] [BICRE-101.dwg]

CONSULTANT INFORMATION

Savin Engineers, P.C.

CONSULTANT SEAL

STATE OF NEW YORK · STEVEN A. MARTINO · 083631 · LICENSED PROFESSIONAL ENGINEER

REVISION NUMBER	DATE	MADE BY	APP'D BY	REVISION
1	09/21/2022	RKC	SM	BID ADDENDUM #3

RECORD DRAWING CERTIFICATION

☐ AS BUILT – CHANGES AS NOTED ☐ AS BUILT – NO CHANGES

CONTRACTOR: NAME ____ SIGNATURE ____ TITLE ____ DATE ____

PROJECT COORDINATOR: NAME ____ SIGNATURE ____ TITLE ____ DATE ____

WESTCHESTER COUNTY, NEW YORK
DEPARTMENT OF PUBLIC WORKS AND TRANSPORTATION
DIVISION OF ENGINEERING

INFRASTRUCTURE REHABILITATION - PHASE 3
PLAYLAND PARK, RYE, NEW YORK
CROSS AXIS BUILDING D
ONE LINE DIAGRAM - DEMOLITION

CONTRACT NUMBER	22-523
SHEET NUMBER	CXD-E-01
DWG NO.:	231 of 664
SCALE:	AS SHOWN
DATE:	8/23/2022
DPW FILE NUMBER	1-118-E-980-1
REV. NO.	1

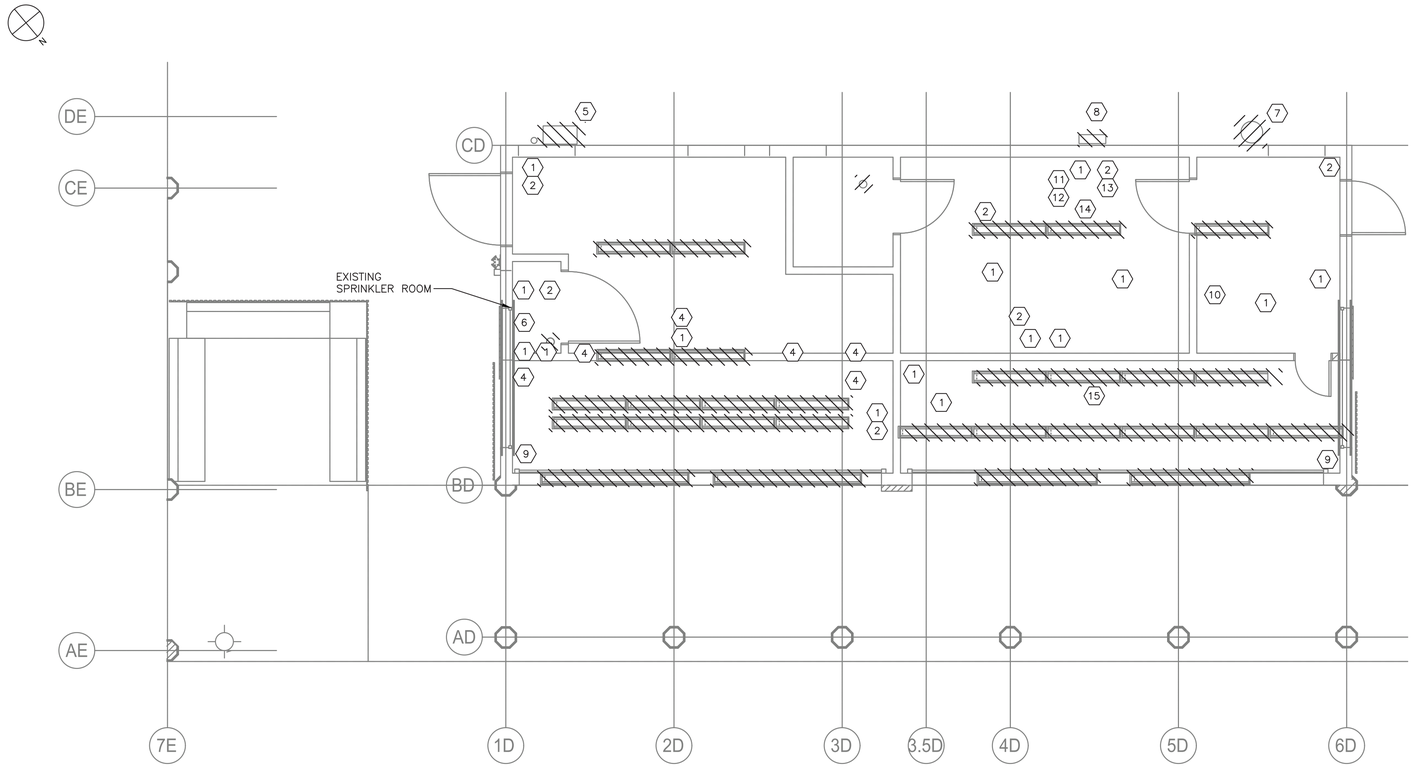

B GROUND FLOOR DEMOLITION PLAN (CXD)
1/4" = 1'-0"

NOTES:

1. FOR ADDITIONAL NOTES, ABBREVIATIONS, AND SYMBOLS, SEE DRAWING GE-E-01.
2. ALL REMOVED EQUIPMENT SHALL BE RETURNED TO OWNER UPON REQUEST. OTHERWISE ALL REMOVED MATERIAL SHALL BE LEGALLY DISPOSED OF.
3. DISCONNECT AND REMOVE ALL ELECTRICAL EQUIPMENT, LIGHTING, POWER, CONDUIT AND WIRE BACK TO SOURCE. REMOVE ALL PANELBOARDS. COMPLETE ELECTRICAL GUT UNLESS NOTED OTHERWISE.
4. ALL EXISTING CABLE AND CONDUIT SHALL BE DOCUMENTED PRIOR TO REMOVAL.
5. DISCONNECT AND REMOVE ALL EXTERIOR LIGHTING, ALL EXPOSED CONDUIT, JUNCTION BOXES, WIRE ETC.
6. CONTRACTOR SHALL DEMOLISH ALL EXISTING JUNCTION BOXES AND ALL ASSOCIATED CONDUITS, WIRES AND APPURTENANCES. FOR BIDDING PURPOSES ASSUME 500 FEET 1"C, 3#12 & 1#12 GND.
7. DISPOSITION OF EXISTING CCTV/DATA/COMMUNICATIONS CABINET SHALL BE BY OTHERS. THIS INCLUDES BOTH INCOMING AND OUTGOING CONDUIT AND CABLES. REFER TO ARCHITECTURAL DRAWINGS.
8. FOR PANEL SCHEDULE DEMOLITION, SEE DRAWING CXD-E-01.
9. EXISTING, UNUSED EMPLOYEE PUNCH TIME CLOCK. CONTRACTOR SHALL DISCONNECT AND REMOVE PUNCH BOX. RETURN PUNCH CLOCK TO OWNER.
10. GAME SIGN WITH LIGHTS. CONTRACTOR SHALL DISCONNECT AND REMOVE LIGHTING FIXTURES AND ALL ASSOCIATED CONDUIT CONDUIT AND CABLE BACK TO SOURCE.
11. EXISTING ELECTRONIC GAME CONTROLS AND ALL ASSOCIATED CONDUIT AND WIRE BACK TO SOURCE, TO BE DISCONNECTED AND REMOVED. RETURN CONTROLLER TO OWNER.
12. SWITCH IS CONNECTED TO PANELBOARD "CR-AX3" LOCATED IN THE CXE BUILDING.

DEMOLITION LEGEND ⬡	
1	RECEPTACLE
2	LIGHT SWITCH
3	EXISTING PANEL
4	GAMES – CONTROL ELECTRONICS (SEE NOTE 11)
5	FLOODLIGHT
6	SPRINKLER ROOM UNIT HEATER (REMOVED BY OTHERS) – DISCONNECT POWER
7	EXHAUST FAN (REMOVED BY OTHERS) DISCONNECT POWER
8	AIR CONDITIONING UNIT (REMOVED BY OTHERS) – DISCONNECT POWER
9	ROLL-UP DOOR MOTOR
10	EXISTING EMPLOYEE PUNCH TIME CLOCK (SEE NOTE 9)
11	18 CKT PANEL "OFFICE PANEL 1"
12	MAIN DISCONNECT SWITCH (SEE NOTE 12)
13	GENERAL DUTY DISCONNECT SWITCH
14	EXHAUST FAN DISCONNECT SWITCH
15	GAMES SIGN W/ LIGHTS (SEE NOTE 10)

0 4' 8'
SCALE: 1/4" = 1'-0"

Drawing Name: G:\SavinAutocad\2060\25-Playland-Mega-3\E\CXEE-1003.dwg
Rev#: Projectname: 211001F02 Comments: ----
Printed by: MGodby Date: 21 September 2022 1:31 PM Designed by: ----
Xrefs: [TB_24X36_WestchesterCo_3.dwg] [TSG-SVLOGO.dwg] [CXD-A-01.dwg] [CXD-E-1001.dwg

CONSULTANT INFORMATION
Savin Engineers, P.C.

CONSULTANT SEAL
STATE OF NEW YORK · STEVEN A. MARTINO · 083631 · LICENSED PROFESSIONAL ENGINEER

REVISION NUMBER	DATE	MADE BY	APP'D BY	REVISION
1	09/21/2022	RKC	SM	BID ADDENDUM #3

RECORD DRAWING CERTIFICATION
☐ AS BUILT – CHANGES AS NOTED ☐ AS BUILT – NO CHANGES

CONTRACTOR
NAME
SIGNATURE
TITLE DATE

PROJECT COORDINATOR
NAME
SIGNATURE
TITLE DATE

WESTCHESTER COUNTY, NEW YORK
DEPARTMENT OF PUBLIC WORKS AND TRANSPORTATION
DIVISION OF ENGINEERING

INFRASTRUCTURE REHABILITATION - PHASE 3
PLAYLAND PARK, RYE, NEW YORK
CROSS AXIS BUILDING D
GROUND FLOOR DEMOLITION - POWER AND LIGHTING PLAN

CONTRACT NUMBER **22-523**
SHEET NUMBER **CXD-E-02**
DWG NO.: 232 of 664
SCALE: **AS SHOWN**
DATE: **8/23/2022**
DPW FILE NUMBER **1-118-E-981-1**
REV. NO. **1**

NOTES:

1. FOR ADDITIONAL NOTES, ABBREVIATIONS AND SYMBOLS, SEE DRAWING GE–E–01.
2. ALL RECEPTACLES DESIGNATORS ARE POWERED VIA PANEL CXD–PP–1, UNLESS OTHERWISE NOTED.
3. ALL CIRCUITS SHOWN ON THE DRAWING BUT NOT SPECIFICALLY CALLED OUT ON THE CABLE AND CONDUIT SCHEDULE SHALL BE 3/4" CONDUIT, 2#12 & 1#12 GND.
4. FOR PANEL SCHEDULES SEE DRAWING CXD–E–07.

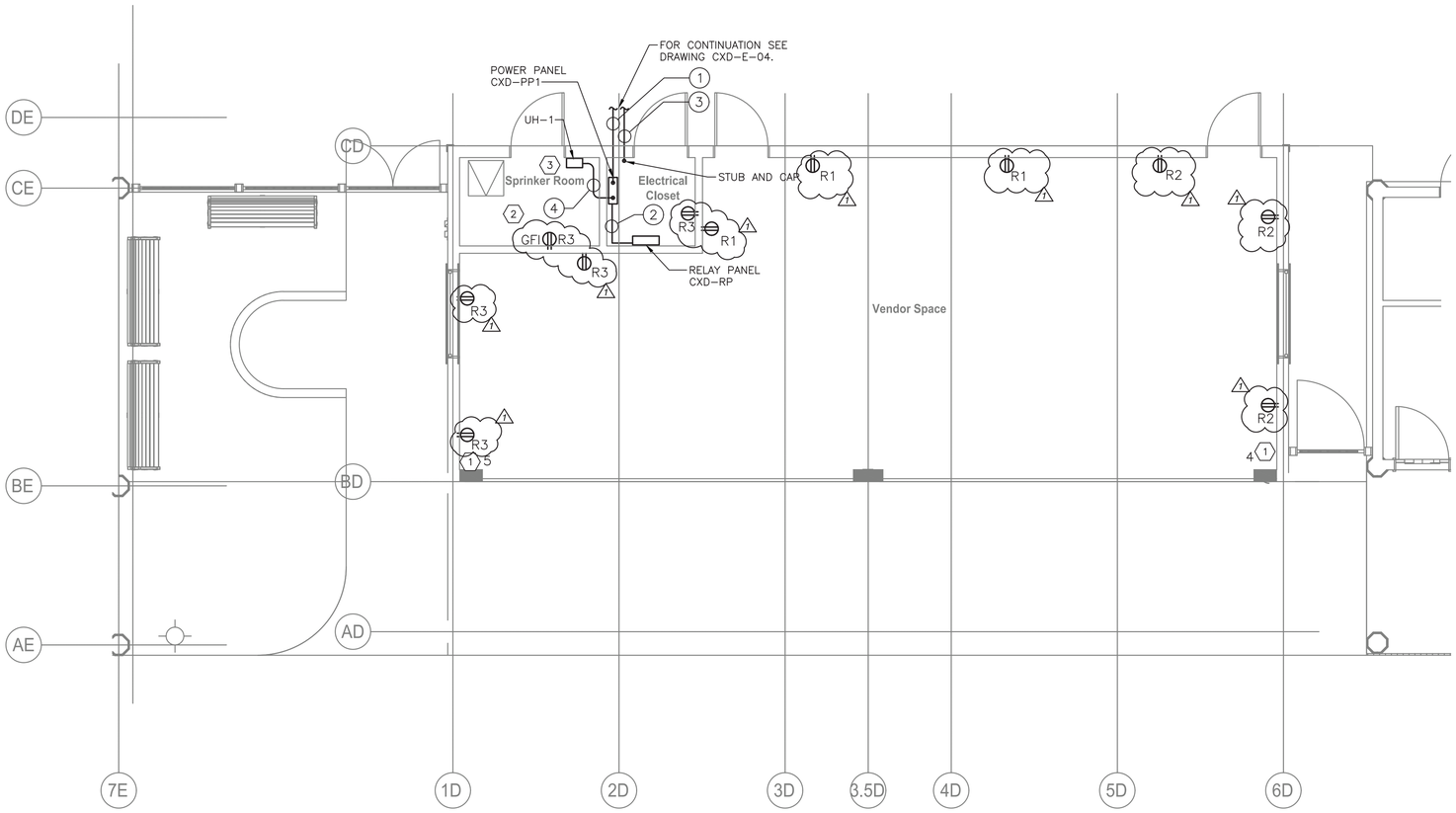

GROUND FLOOR POWER PLAN (CXD)
1/4" = 1'–0"

KEY NOTES:

1. APPROXIMATE LOCATION OF MOTOR FOR NEW GROUND ROLL–UP DOOR. CONTRACTOR SHALL CONFIRM MOTOR LOCATION IN THE FIELD PRIOR TO INSTALLATION. CONTRACTOR SHALL CIRCUIT MOTOR FROM PANEL CXD–PP–1. NUMBER DESIGNATORS INDICATE CIRCUIT NUMBERS. CONTRACTOR SHALL PROVIDE 30 AMP, 2–POLE DISCONNECT SWITCH AT ROLL–UP DOOR MOTOR LOCATION.
2. CONTRACTOR SHALL PROVIDE 2 CIRCUITS FOR EQUIPMENT POWER IN SPRINKLER ROOM. CIRCUITS 6 AND 8 ARE RESERVED FOR THIS. COORDINATE WITH PLUMBING INSTALLER FOR ELECTRICAL POWER NEEDS.
3. PROVIDE AND INSTALL A 2–POLE, 30A DISCONNECT SWITCH FOR UH–1.

CONDUIT AND WIRE LEGEND

NO.	DESCRIPTION
1	2 1/2"C, 4#2/0 & 1#6 GND
2	1"C, 8#12 & 1#12 GND
3	2"C, SPARE WITH PULL ROPE
4	3/4"C, 2#12 & 1#12 GND

0 4' 8'
SCALE: 1/4" = 1'–0"

CONSULTANT INFORMATION
Savin Engineers, P.C.

CONSULTANT SEAL
STATE OF NEW YORK · STEVEN A. MARTINO · 083631 · LICENSED PROFESSIONAL ENGINEER

REVISION NUMBER	DATE	MADE BY	APP'D BY	REVISION
1	09/21/2022	RKC	SM	BID ADDENDUM #3

RECORD DRAWING CERTIFICATION
☐ AS BUILT – CHANGES AS NOTED ☐ AS BUILT – NO CHANGES
CONTRACTOR: NAME / SIGNATURE / TITLE / DATE
PROJECT COORDINATOR: NAME / SIGNATURE / TITLE / DATE

WESTCHESTER COUNTY, NEW YORK
DEPARTMENT OF PUBLIC WORKS AND TRANSPORTATION
DIVISION OF ENGINEERING

INFRASTRUCTURE REHABILITATION - PHASE 3
PLAYLAND PARK, RYE, NEW YORK
CROSS AXIS BUILDING D
GROUND FLOOR - POWER PLAN

CONTRACT NUMBER	22-523
SHEET NUMBER	CXD-E-05
DWG NO.:	235 of 664
SCALE:	AS SHOWN
DATE:	8/23/2022
DPW FILE NUMBER	1-118-E-984-1
REV. NO.	1

Drawing Name: G:\SavinAutocad\2060\25-Playland-Mega-3\E\CXDE-1006.dwg
Projectname: 211001F02 Comments: ----
Printed by: MGoaby Date: 21 September 2022 1:31 PM Designed by: ----
Xrefs: [TB_24X36_WestchesterCo_3.dwg] [TSG-SVL000.dwg] [CXD-E-1003.dwg] [CXD-A-11.dwg]

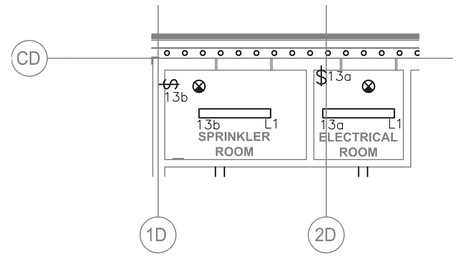

A CXD-E-06 GROUND FLOOR UTILITIES LIGHTING PLAN (CXD)
SCALE: 1/4" = 1'-0"

NOTES:

1. FOR ADDITIONAL NOTES, ABBREVIATIONS AND SYMBOLS, SEE DRAWING GE-E-01.
2. ALL INTERIOR LIGHTING IS POWERED VIA PANEL CXD-PP-1. CONTRACTOR SHALL CIRCUIT LIGHTING FIXTURES WITH 3/4" CONDUIT WITH 2#12 & 1#12 GND, UNLESS NOTED OTHERWISE.
3. EXIT SIGNS AND EMERGENCY LIGHTING UNITS SHALL BE WIRED TO AN UN-SWITCHED LEG OF THE DESIGNATED CIRCUIT.
4. ALL EXTERIOR LIGHTING SHALL BE CIRCUITED VIA RELAY PANEL CXD-RP. CONTRACTOR SHALL CIRCUIT LIGHTING WITH 3/4"C, 2#12 & 1#12 GND, UNLESS OTHERWISE NOTED.
5. RELAY PANEL CXD-RP SHALL BE EQUIPPED WITH BOTH A BUILT-IN TIME CLOCK AND A PHOTOSENSOR CONTROL. MOUNT PHOTO SENSOR IN NORTHEAST CORNER OF BUILDING.
6. FOR LIGHTING AND RELAY PANEL SCHEDULE, REFER TO DRAWING CXD-E-07.
7. NEW LIGHTING CONTROLS SHALL BE FULLY COMPATIBLE WITH THE EXISTING SYSTEM SA PROVIDED ELSEWHERE AT THE PLAYLAND FACILITY. EQUIPMENT INCLUDES, BUT IS NOT LIMITED TO OCCUPANCY SENSORS, RELAY/POWER PACKS, SWITCHES, RELAY PANELS, PHOTOSENSORS, ETC.
8. LIGHTING CONTROLS SELECTED SHALL HAVE THE CAPABILITY TO BE CONNECTED TO A MASTER HEAD-END SYSTEM (FUTURE CONTRACT).
9. FOR EXTERIOR LIGHTING CONTROL WIRING INFORMATION, SEE EXTERIOR WIRING DETAIL SHOWN ON DRAWING CXD-E-07.
10. FOR LIGHTING FIXTURE SCHEDULE, SEE DRAWING GE-E-03.

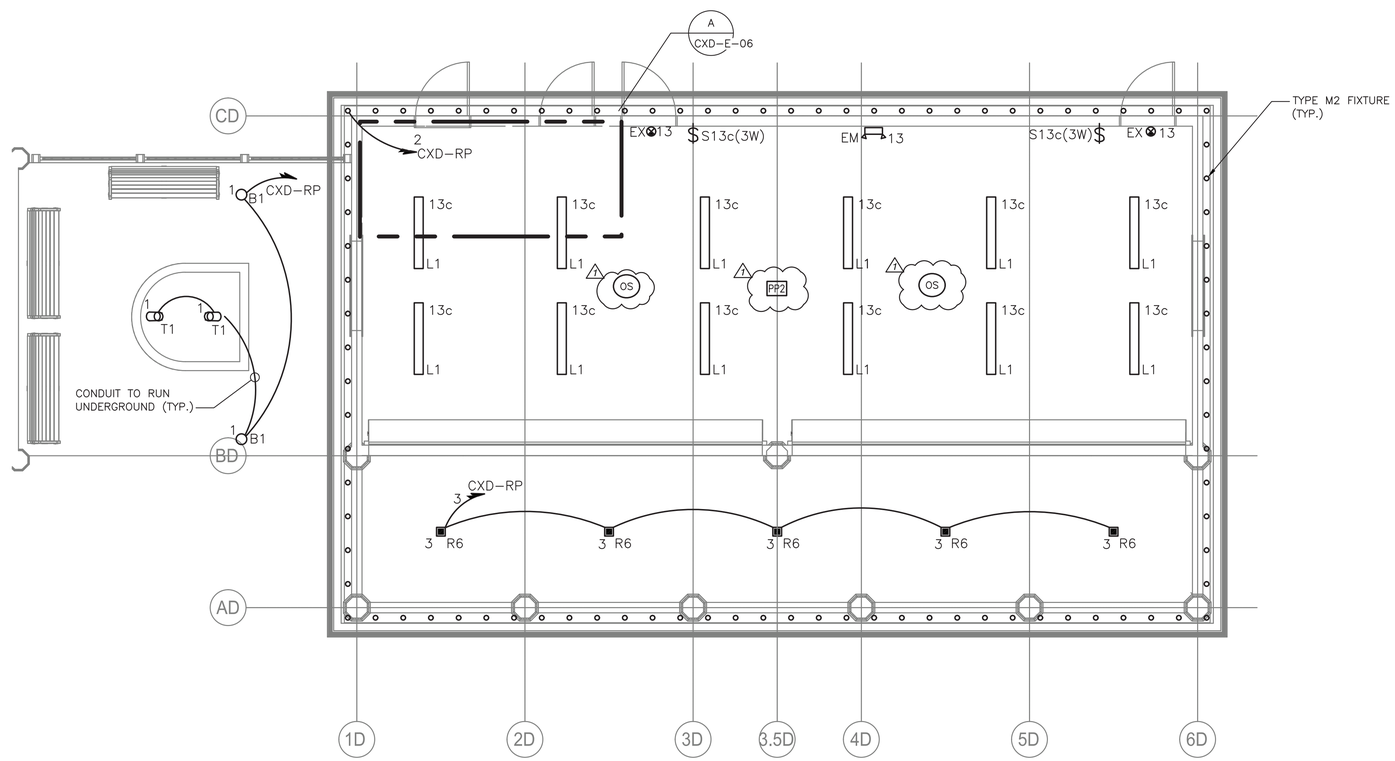

GROUND FLOOR LIGHTING PLAN (CXD)
SCALE: 1/4" = 1'-0"

LIGHTNING PROTECTION SYSTEM:

1. CONTRACTOR IS ADVISED, THE LIGHTNING PROTECTION SYSTEM SHOWN SHALL BE USED AS A GUIDE AND FOR BIDDING PURPOSES. CONTRACTOR SHALL HIRE A CERTIFIED LIGHTNING PROTECTION SPECIALIST FOR INSTALLATION OF NEW SYSTEM. INSTALL SHALL PROVIDE ALL THAT IS REQUIRED (PER NFPA 780) AND SHALL OBTAIN UL96A CERTIFICATION (MASTER LABEL) UPON COMPLETION. ADDITIONALLY, INSTALLER SHALL PROVIDE FOR ALL NECESSARY BONDING FOR COMPLETE SYSTEM.
2. CONTRACTOR SHALL COORDINATE WITH THE ARCHITECTURAL DRAWINGS FOR SPECIFIC INFORMATION ON THE NEW ROOF STRUCTURE AND MATERIALS.
3. TO MINIMIZE THE VISUAL IMPACT OF THE BUILDING, ALL NEW DOWN CONDUCTORS SHALL BE ROUTED DOWN SIDE OF BUILDING. CONTRACTOR SHALL COORDINATE WITH OTHER TRADES TO ACCOMPLISH THIS WORK. PROVIDE LPS BARE COPPER CABLE TO GROUND RODS.
4. CONTRACTOR IS ADVISED THE NEW DOWN CONDUCTOR SHALL BE BONDED TO THE LOWER METAL OVERHAND ROOF AND CONNECT TO THE EXISTING GROUND WIRE AND GROUND ROD AT GROUND LEVEL.
5. AT EACH LPS DOWN CONDUCTOR, PROVIDE TRIANGULAR GROUND GRID AS SHOWN (NOT ALL SHOWN).
6. ALL ROOF PENETRATIONS SHALL BE WATERPROOF. PENETRATION COMPONENTS FOR CONDUIT SHALL BE SUITABLE AND COMPATIBLE FOR INSTALLED ROOF. SEE ARCHITECTURAL AND PLUMBING DRAWINGS FOR ADDITIONAL INFORMATION.

0 4' 8'
SCALE: 1/4" = 1'-0"

CONSULTANT INFORMATION
Savin Engineers, P.C.

CONSULTANT SEAL
STATE OF NEW YORK · STEVEN A. MARTINO · 089931 · LICENSED PROFESSIONAL ENGINEER

REVISION NUMBER	DATE	MADE BY	APP'D BY	REVISION
1	09/21/2022	RKC	SM	BID ADDENDUM #3

RECORD DRAWING CERTIFICATION
☐ AS BUILT – CHANGES AS NOTED ☐ AS BUILT – NO CHANGES

CONTRACTOR: NAME / SIGNATURE / TITLE / DATE
PROJECT COORDINATOR: NAME / SIGNATURE / TITLE / DATE

WESTCHESTER COUNTY, NEW YORK
DEPARTMENT OF PUBLIC WORKS AND TRANSPORTATION
DIVISION OF ENGINEERING

INFRASTRUCTURE REHABILITATION - PHASE 3
PLAYLAND PARK, RYE, NEW YORK
CROSS AXIS BUILDING D
GROUND FLOOR - LIGHTING PLAN

CONTRACT NUMBER	22-523
SHEET NUMBER	CXD-E-06
DWG NO.:	236 of 664
SCALE:	AS SHOWN
DATE:	8/23/2022
DPW FILE NUMBER	1-118-E-985-1
REV. NO.	1

Drawing Name: G:\SavinAutocad\2060\25-Playland-Mega-3\E\CXDE-1004.dwg
Projectname: 211001F02 Comments: ----
Printed by: MGodby Date: 21 September 2022 1:31 PM Designed by: ----
Xrefs: [TB_24X36_WestchesterCo_3.dwg] [TSG-SVL000.dwg] [CXD-A-41.dwg] [CXD-E-1007.dwg]

PANELBOARD: CXD-PP1 **LOCATION:** CXD ELECTRICAL CLOSET

1 **NEMA RATING** 3 **POLES** **MOUNTING:** SURFACE

200 **AMP BUS RATING** 150 **AMP MAIN BREAKER** 42 **KA SHORT CIRCUIT RATING**

208Y/120 **VOLTS** 3 **PHASE** 4 **WIRE** **ELECTRONIC GRADE :** NO

CIRCUIT NO.	DESCRIPTION	LOAD KVA PHASE A	LOAD KVA PHASE B	LOAD KVA PHASE C	BREAKER AMPS / POLES	NOTES	CIRCUIT NO.	DESCRIPTION	LOAD KVA PHASE A	LOAD KVA PHASE B	LOAD KVA PHASE C	BREAKER AMPS / POLES	NOTES
1	RECEPTACLES	0.2			20/1		2	RECEPTACLES	0.2			20/1	
3	RECEPTACLES		0.2		20/1		4	ROLL-UP DOOR		1.2		20/1	
5	ROLL-UP DOOR			1.2	20/1		6	SPRINKLER ROOM POWER			0.2	20/1	1
7	SPARE	-			20/1		8	SPRINKLER ROOM POWER	0.2			20/1	1
9	SPARE		-		20/1		10	UNIT HEATER UH-1		1.65		15/2	
11	SPARE			-	20/1		12				1.65		
13	LIGHTING	0.6			20/1		14	TREE AND BOLLARD LTG.	0.2			20/1	2
15	RELAY PANEL 120V PWR.		0.2		20/1		16	SOFFIT LTG.		0.2		20/1	2
17	SPARE			-	20/1		18	PORCH LTG.			0.2	20/1	2
19	SPACE						20	SPACE					
21	SPACE						22	SPACE					
23	SPACE						24	SPACE					
25	SPACE						26	SPACE					
27	SPACE						28	SPACE					
29	SPACE						30	SPACE					
	TOTAL PHASE KVA THIS SIDE	0.8	0.4	1.2				**TOTAL PHASE KVA THIS SIDE**	0.6	3.05	2.05		
								TOTAL KVA PER PHASE	1.4	3.45	3.25		
								TOTAL THREE PHASE KVA	8.1				

NOTES:
1. SEE KEY NOTE 2 ON DRAWING CXD-E-05 FOR ADDITIONAL INFORMATION
2. CIRCUIT VIA RELAY PANEL CXD-RP
3.
4.

NOTES CONT.:
5.
6.
7.
8.

NOTES:

1. FOR ADDITIONAL NOTES, ABBREVIATIONS AND SYMBOLS, SEE DRAWING GE-E-01.

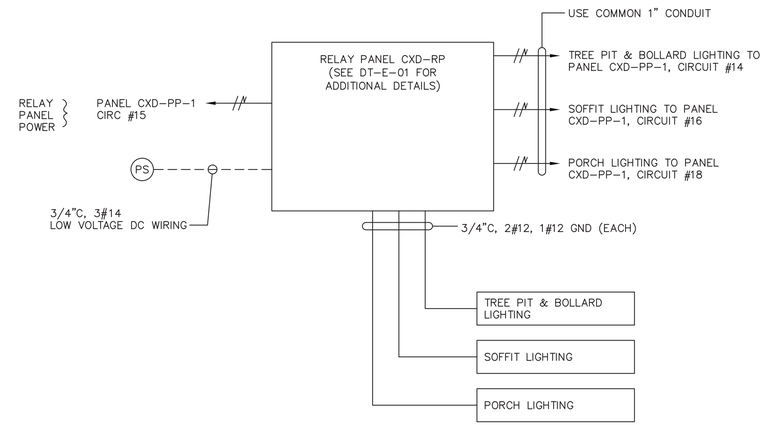

2 EXTERIOR CXD BUILDING WIRING DETAIL
CXD-E-07

CXD-RP	LOCATION: CXD ELECTRICAL ROOM	
CKT NO	DESCRIPTION	NOTES
1	TREE PIT AND BOLLARD LIGHTING	
2	SOFFIT LIGHTING	
3	PORCH LIGHTING	
4	SPARE	
5	SPARE	
6	SPARE	
7	SPARE	
8	SPARE	

1

LIGHTING CONTROL LEGEND	
SYMBOL	DESCRIPTION
o/V	OCCUPANCY / VACANCY SENSOR - SMALL MOTION, DUAL TECHNOLOGY, SINGLE POLE DOUGLAS LIGHTING CONTROLS, DIALOG SYSTEM CATALOG NUMBER: DIVERSA WORSDD1-R-N OR APPROVED EQUAL.
OS	OCCUPANCY SENSOR - DUAL TECHNOLOGY SENSOR, OCCUPANCY DETECTION ONLY DOUGLAS LIGHTING CONTROLS, DIALOG SYSTEM CATALOG NUMBER: WORSDG1-R-T OR APPROVED EQUAL.
PP1	POWER / RELAY PACK - 120/277 VOLT, SINGLE POLE, SELF CONTROLLED RELAY SWITCH DOUGLAS LIGHTING CONTROLS, DIALOG SYSTEM CATALOG NUMBER: WP-PP20-D OR APPROVED EQUAL.
PP2	POWER / RELAY PACK - 120/277 VOLT, SELF CONTROLLED RELAY SWITCH, TWO DIMMING CHANNELS DOUGLAS LIGHTING CONTROLS, DIALOG SYSTEM CATALOG NUMBER: WRC-4222 OR APPROVED EQUAL.
$ m	120 VOLT RATED LIGHTING SINGLE POLE SWITCH
RP	RELAY TIME CONTROL PANEL, DIGITAL CENTRAL PANEL DOUGLAS LIGHTING CONTROLS, DIALOG SYSTEM CATALOG NUMBER: WLCP-CPx/x OR APPROVED EQUAL. *x/x IS CAPACITY/QTY OF RELAYS - VARIES BY BUILDING.
PS	DIGITAL PHOTOCELL - PHOTOSENSOR SUITABLE FOR OUTDOOR APPLICATIONS DOUGLAS LIGHTING CONTROLS, DIALOG SYSTEM CATALOG NUMBER: WPS-3741B OR APPROVED EQUAL.

Drawing Name: G:\SavinAutocad\2060\25-Playland-Mega-3\E\CXDE-1009.dwg
Projectname: 211001F02 Comments: ----
Printed by: MGodby Date: 21 September 2022 1:32 PM Designed by: ----
Xrefs: [TB_24X36_WestchesterCo_3.dwg] [TSG-SVLOGO.dwg] [BCRE-A-04.dwg] [BCRE-101.dwg]
Rev#:

CONSULTANT INFORMATION
Savin Engineers, P.C.

STATE OF NEW YORK · STEVEN A. MARTINO · 083931 · LICENSED PROFESSIONAL ENGINEER

REVISION NUMBER	DATE	MADE BY	APP'D BY	REVISION
1	09/21/2022	RKC	SM	BID ADDENDUM #3

RECORD DRAWING CERTIFICATION
☐ AS BUILT – CHANGES AS NOTED ☐ AS BUILT – NO CHANGES

CONTRACTOR
NAME
SIGNATURE
TITLE DATE

PROJECT COORDINATOR
NAME
SIGNATURE
TITLE DATE

WESTCHESTER COUNTY, NEW YORK
DEPARTMENT OF PUBLIC WORKS AND TRANSPORTATION
DIVISION OF ENGINEERING

INFRASTRUCTURE REHABILITATION - PHASE 3
PLAYLAND PARK, RYE, NEW YORK
CROSS AXIS BUILDING D
PANEL SCHEDULES

CONTRACT NUMBER **22-523**
SHEET NUMBER **CXD-E-07**
DWG NO.: 237 of 664
SCALE: **AS SHOWN**
DATE: **8/23/2022**
DPW FILE NUMBER **1-118-E-986-1**
REV. NO. **1**

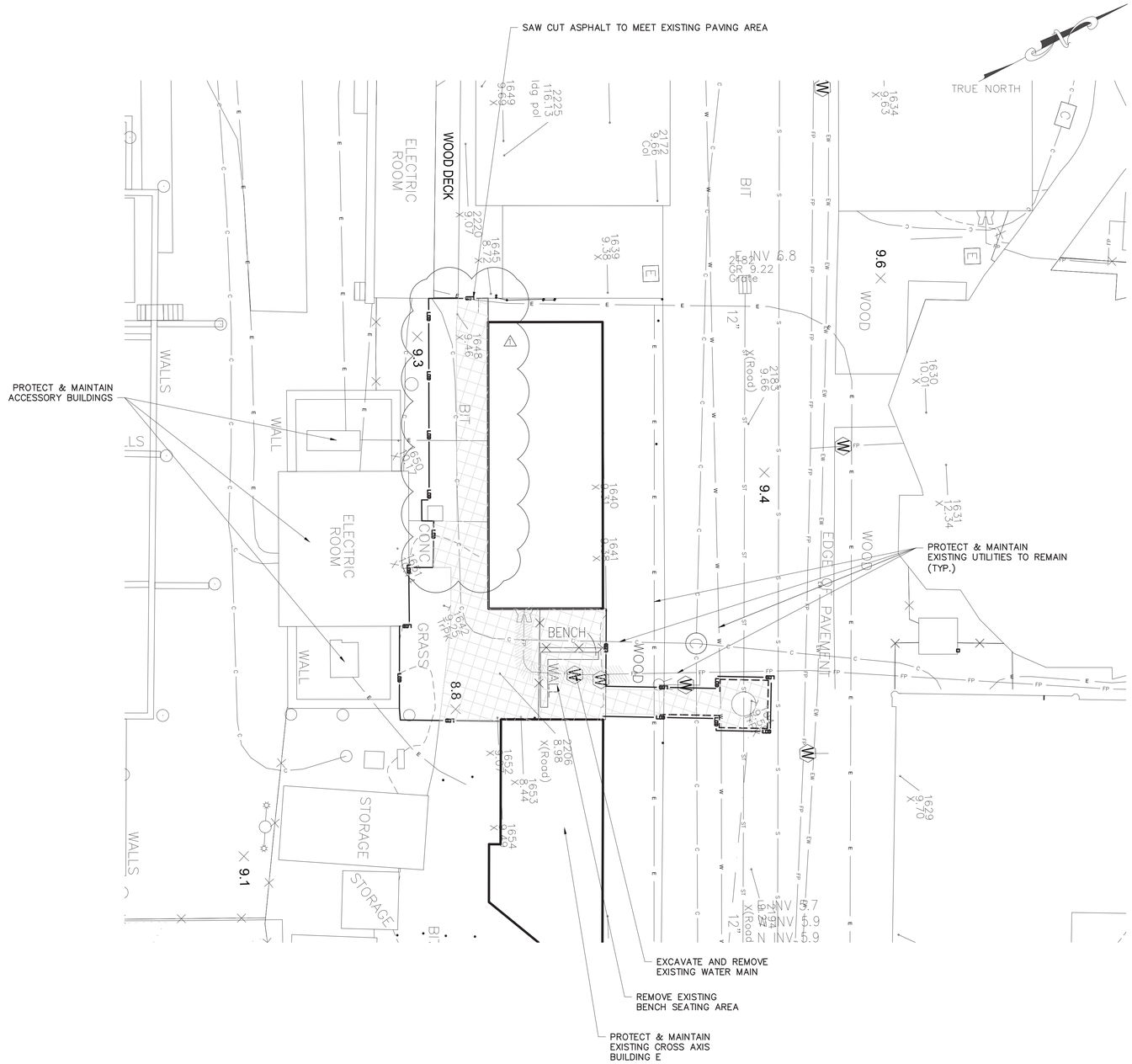

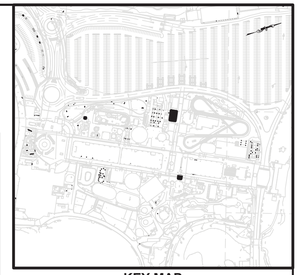

KEY MAP
NOT TO SCALE

EXISTING LEGEND

- POST
- UTILITY POLE
- SIGN
- HANDICAP PARKING
- GROUND LIGHT
- LIGHT POLE
- UTILITY POLE WITH LIGHT
- LIGHT POLE (SINGLE LIGHT)
- LIGHT POLE (DOUBLE LIGHT)
- LIGHT POLE (MULTI LIGHT)
- BOAT TIE-OFF CLEAT
- CATCH BASIN
- TRENCH DRAIN
- MAILBOX
- UNKNOWN MANHOLE
- COMMUNICATIONS BOX/HAND HOLE
- ELECTRIC HAND HOLE
- ELECTRIC BOX
- GAS METER
- IRRIGATION BOX
- UNKNOWN UTILITY BOX/HAND HOLE
- COMMUNICATION MANHOLE
- DRAINAGE MANHOLE
- ELECTRIC MANHOLE
- SEWER MANHOLE
- STORM SEWER MANHOLE
- SEWER CLEANOUT
- HYDRANT
- SIAMESE CONNECTION
- UNKNOWN VALVE
- WATER VALVE
- GAS VALVE
- WATER SPIGOT OR FOUNTAIN
- MONITORING WELL
- DECIDUOUS BUSH
- EVERGREEN BUSH
- DECIDUOUS TREE
- EVERGREEN TREE
- STUMP
- HEDGE ROW
- TREELINE
- BRUSHLINE
- RETAINING WALL
- GUIDE RAIL
- STONE WALL
- WATERLINE
- FENCE
- UNDERGROUND COMMUNICATION
- UNDERGROUND PROPANE
- UNDERGROUND ELECTRICAL
- UNDERGROUND STREET LIGHTING
- UNDERGROUND ENVIRONMENTAL WASTEWATER
- UNDERGROUND SEWER
- UNDERGROUND STORM SEWER
- UNDERGROUND WATER
- UNDERGROUND FIRE PROTECTION
- EXISTING MAJOR CONTOUR
- EXISTING MINOR CONTOUR

PROPOSED LEGEND:

- SAW CUTTING ASPHALT CONCRETE
- LIMITS OF DISTURBANCE
- LIMITS OF PAVEMENT REMOVAL
- AREA OF ASPHALT PAVEMENT REMOVAL (FULL DEPTH & EXCAVATION)
- DRAINAGE STRUCTURE INLET PROTECTION
- PIPE REMOVAL

NOTES:

1. PAVEMENT REMOVAL, MILLING AND EXCAVATION, MATERIAL SHALL NOT BE STOCKPILED ON SITE.

2. EXISTING GRADES, PIPE LOCATIONS, SIZES, MATERIAL, INVERTS AND OTHER EXISTING CONDITIONS ARE SHOWN ON THE DRAWINGS FROM AVAILABLE AS-BUILT DRAWINGS AND FIELD SURVEY BY OTHERS. IT SHALL BE THE RESPONSIBILITY OF THE CONTRACTOR TO VERIFY ALL EXISTING CONDITIONS.

3. THE CONTRACTOR SHALL TAKE PROPER PRECAUTIONS NOT TO DAMAGE ANY EXISTING SITE CONDITIONS SPECIFICALLY EXCLUDED FROM THE CONTRACT AND WILL BE HELD SOLELY RESPONSIBLE FOR ANY DAMAGE OCCURRING DURING THE COURSE OF THE WORK DURING CONSTRUCTION. THE CONTRACTOR SHALL, AT THEIR OWN EXPENSE, MAKE ALL REPAIRS REQUIRED TO RESTORE ANY DAMAGED AREAS TO ORIGINAL CONDITIONS.

New York 811 — Know what's below. Call before you dig.

0 10 20 30
1'=10' SCALE BAR

6/15/2022 4:10:27 PM

CONSULTANT INFORMATION
LiRo Engineers, Inc.
A LiRo Group Company
Mineola, N.Y. 516-746-2350[T]

CONSULTANT SEAL
STATE OF NEW YORK — KENNETH J. HOUSER — LICENSED PROFESSIONAL ENGINEER — No. 059134

REVISION NUMBER	DATE	MADE BY	APP'D BY	REVISION
1	9/21/22	HIK	LK	BID ADDENDUM #3

RECORD DRAWING CERTIFICATION
☐ AS BUILT – CHANGES AS NOTED ☐ AS BUILT – NO CHANGES

CONTRACTOR
NAME
SIGNATURE
TITLE DATE

PROJECT COORDINATOR
NAME
SIGNATURE
TITLE DATE

WESTCHESTER COUNTY, NEW YORK
DEPARTMENT OF PUBLIC WORKS AND TRANSPORTATION
DIVISION OF ENGINEERING

INFRASTRUCTURE REHABILITATION PHASE 3
PLAYLAND PARK, RYE, NEW YORK
CROSS AXIS BUILDING D
EXISTING CONDITIONS/DEMOLITION PLAN

CONTRACT NUMBER	22-523
SHEET NUMBER	CXD-C-02
DWG. NO.	245 of 664
SCALE:	1"=10'
DATE:	08/23/2022
DPW FILE NUMBER	1-118-C-994-1
REV. NO.	1

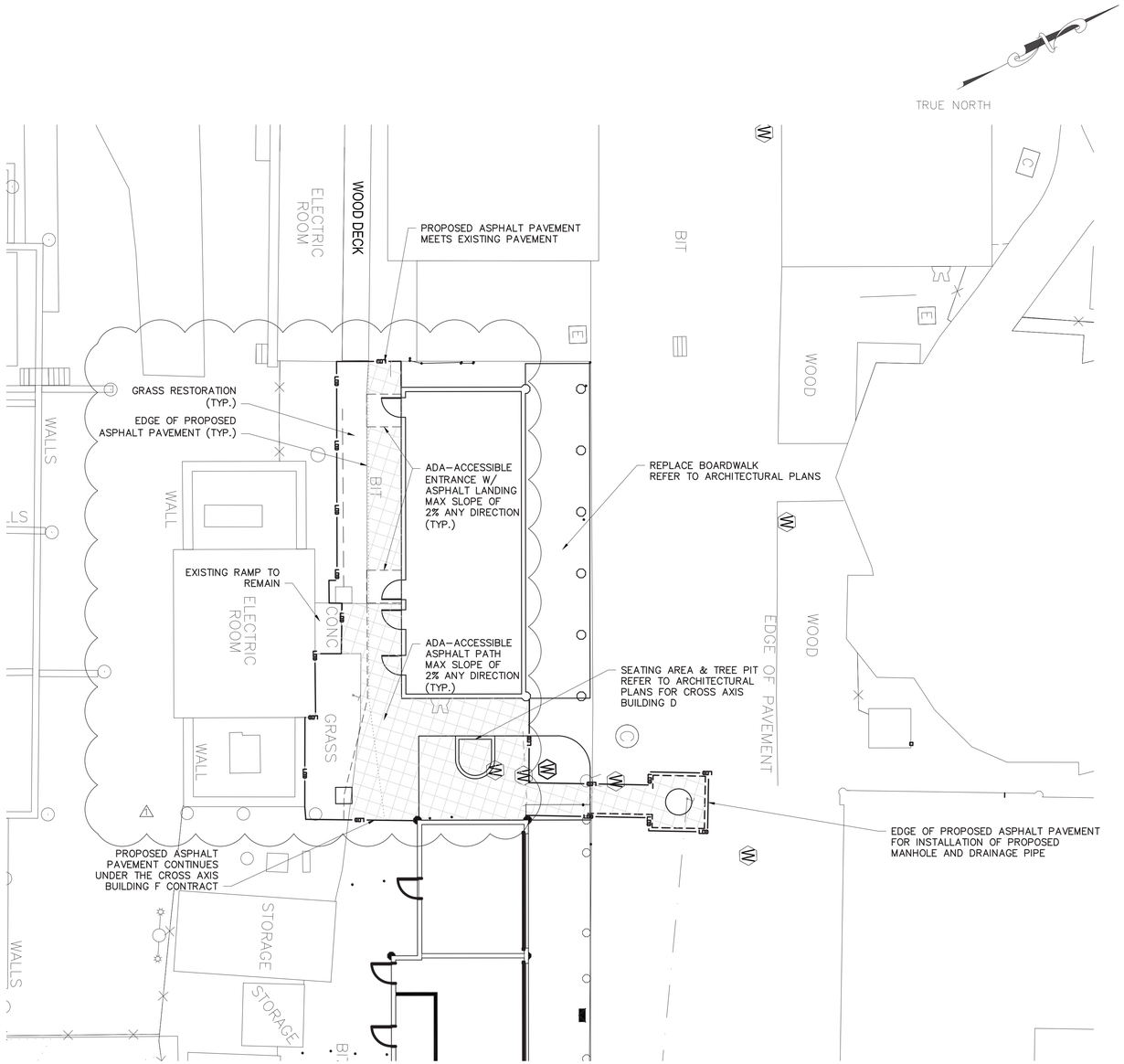

EXISTING LEGEND

- POST
- UTILITY POLE
- SIGN
- HANDICAP PARKING
- GROUND LIGHT
- LIGHT POLE
- UTILITY POLE WITH LIGHT
- LIGHT POLE (SINGLE LIGHT)
- LIGHT POLE (DOUBLE LIGHT)
- LIGHT POLE (MULTI LIGHT)
- BOAT TIE-OFF CLEAT
- CATCH BASIN
- TRENCH DRAIN
- MAILBOX
- UNKNOWN MANHOLE
- COMMUNICATIONS BOX/HAND HOLE
- ELECTRIC HAND HOLE
- ELECTRIC BOX
- GAS METER
- IRRIGATION BOX
- UNKNOWN UTILITY BOX/HAND HOLE
- COMMUNICATION MANHOLE
- DRAINAGE MANHOLE
- ELECTRIC MANHOLE
- SEWER MANHOLE
- STORM SEWER MANHOLE
- SEWER CLEANOUT
- HYDRANT
- SIAMESE CONNECTION
- UNKNOWN VALVE
- WATER VALVE
- GAS VALVE
- WATER SPIGOT OR FOUNTAIN
- MONITORING WELL
- DECIDUOUS BUSH
- EVERGREEN BUSH
- DECIDUOUS TREE
- EVERGREEN TREE
- STUMP
- HEDGE ROW
- TREELINE
- BRUSHLINE
- RETAINING WALL
- GUIDE RAIL
- STONE WALL
- FENCE

PROPOSED LEGEND:

- MOVABLE CONSTRUCTION FENCE
- SAW CUTTING ASPHALT CONCRETE
- LIMITS OF DISTURBANCE
- LIMITS OF PAVEMENT REMOVAL
- AREA OF FULL DEPTH ASPHALT PAVEMENT
- DRAINAGE STRUCTURE INLET PROTECTION

New York 811 Know what's below. Call before you dig.

0 10 20 30
1"=10' SCALE BAR

6/15/2022 4:10:27 PM

CONSULTANT INFORMATION

LiRo Engineers, Inc.
A LiRo Group Company
Mineola, N.Y. 516-746-2350[T]

CONSULTANT SEAL

STATE OF NEW YORK · KENNETH J. HOLDSTROM · No. 059134 · LICENSED PROFESSIONAL ENGINEER

REVISION NUMBER	DATE	MADE BY	APP'D BY	REVISION
1	9/21/22	HIK	LK	BID ADDENDUM #3

RECORD DRAWING CERTIFICATION

☐ AS BUILT – CHANGES AS NOTED ☐ AS BUILT – NO CHANGES

CONTRACTOR
NAME
SIGNATURE
TITLE DATE

PROJECT COORDINATOR
NAME
SIGNATURE
TITLE DATE

WESTCHESTER COUNTY, NEW YORK
DEPARTMENT OF PUBLIC WORKS AND TRANSPORTATION
DIVISION OF ENGINEERING

INFRASTRUCTURE REHABILITATION PHASE 3
PLAYLAND PARK, RYE, NEW YORK
CROSS AXIS BUILDING D
SITE CONSTRUCTION PLAN

CONTRACT NUMBER	22-523
SHEET NUMBER	CXD-C-03
DWG NO.:	246 of 664
SCALE:	1"=10'
DATE:	08/23/2022
DPW FILE NUMBER	1-118-C-995-1
REV. NO.	1

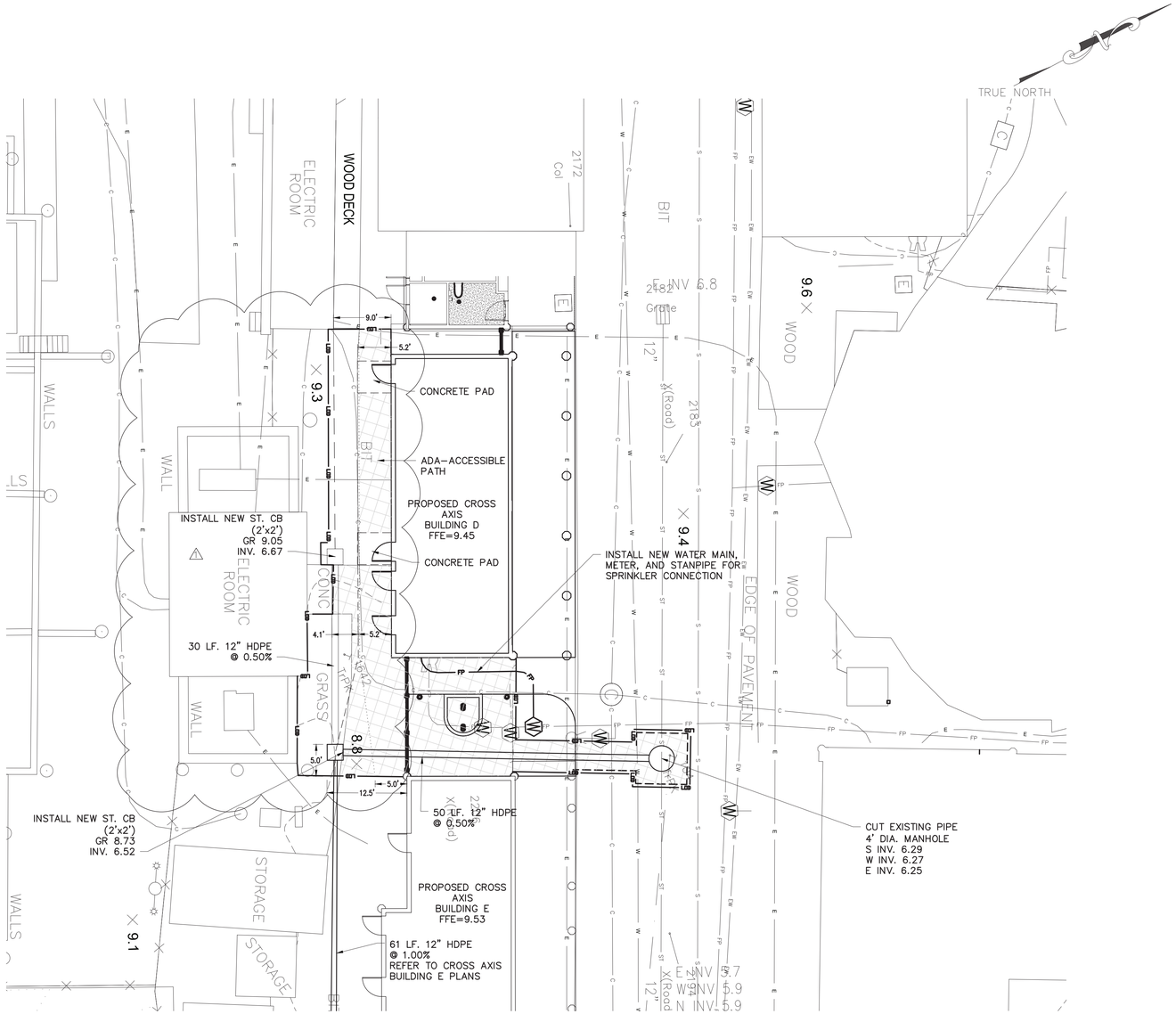

NOTE:
NO WATER AND SEWER SUPPLY NEEDED FOR THIS BUILDING. SEE FIRE PROTECTION PLAN FOR DETAILS

EXISTING LEGEND

- POST
- UTILITY POLE
- SIGN
- HANDICAP PARKING
- GROUND LIGHT
- LIGHT POLE
- UTILITY POLE WITH LIGHT
- LIGHT POLE (SINGLE LIGHT)
- LIGHT POLE (DOUBLE LIGHT)
- LIGHT POLE (MULTI LIGHT)
- BOAT TIE-OFF CLEAT
- CATCH BASIN
- TRENCH DRAIN
- MAILBOX
- UNKNOWN MANHOLE
- COMMUNICATIONS BOX/HAND HOLE
- ELECTRIC HAND HOLE
- ELECTRIC BOX
- GAS METER
- IRRIGATION BOX
- UNKNOWN UTILITY BOX/HAND HOLE
- COMMUNICATION MANHOLE
- DRAINAGE MANHOLE
- ELECTRIC MANHOLE
- SEWER MANHOLE
- STORM SEWER MANHOLE
- SEWER CLEANOUT
- HYDRANT
- SIAMESE CONNECTION
- UNKNOWN VALVE
- WATER VALVE
- GAS VALVE
- WATER SPIGOT OR FOUNTAIN
- MONITORING WELL
- DECIDUOUS BUSH
- EVERGREEN BUSH
- DECIDUOUS TREE
- EVERGREEN TREE
- STUMP
- HEDGE ROW
- TREELINE
- BRUSHLINE
- RETAINING WALL
- GUIDE RAIL
- STONE WALL
- WATERLINE
- FENCE
- UNDERGROUND COMMUNICATION
- UNDERGROUND PROPANE
- UNDERGROUND ELECTRICAL
- UNDERGROUND STREET LIGHTING
- UNDERGROUND ENVIROMENTAL WASTEWATER
- UNDERGROUND SEWER
- UNDERGROUND STORM SEWER
- UNDERGROUND WATER
- UNDERGROUND FIRE PROTECTION

PROPOSED LEGEND:

- SAW CUTTING ASPHALT CONCRETE
- LIMITS OF DISTURBANCE
- LIMITS OF PAVEMENT REMOVAL (MILLING & EXCAVATION)
- PROPOSED WATER LINE
- PROPOSED CATCH BASIN
- PROPOSED STORM PIPE
- PROPOSED SANITARY MANHOLE
- PROPOSED SANITARY PIPE
- PROPOSED UNDERGROUND ELECTRIC
- PROPOSED LANDING AREA (CONCRETE)
- PROPOSED EDGE OF ADA-ACCESSIBLE ROUTE TO BUILDING
- PROPOSED DRAINAGE SWALE

New York 811 — Know what's below. Call before you dig.

0 10 20 30
1"=10' SCALE BAR

6/15/2022 4:10:27 PM

CONSULTANT INFORMATION
LiRo Engineers, Inc.
A LiRo Group Company
Mineola, N.Y. 516-746-2350[T]

CONSULTANT SEAL
STATE OF NEW YORK — KENNETH J. KOURY — LICENSED PROFESSIONAL ENGINEER — No. 059134

REVISION NUMBER	DATE	MADE BY	APP'D BY	REVISION
1	9/21/22	HIK	LK	BID ADDENDUM #3

RECORD DRAWING CERTIFICATION
☐ AS BUILT – CHANGES AS NOTED ☐ AS BUILT – NO CHANGES

CONTRACTOR
NAME
SIGNATURE
TITLE DATE

PROJECT COORDINATOR
NAME
SIGNATURE
TITLE DATE

WESTCHESTER COUNTY, NEW YORK
DEPARTMENT OF PUBLIC WORKS AND TRANSPORTATION
DIVISION OF ENGINEERING

INFRASTRUCTURE REHABILITATION PHASE 3
PLAYLAND PARK, RYE, NEW YORK
CROSS AXIS BUILDING D
UTILITY CONSTRUCTION PLAN

CONTRACT NUMBER	22-523
SHEET NUMBER	CXD-C-04
DWG NO.	247 of 664
SCALE:	1"=10'
DATE:	08/23/2022
DPW FILE NUMBER	1-118-C-996-1
REV. NO.	1

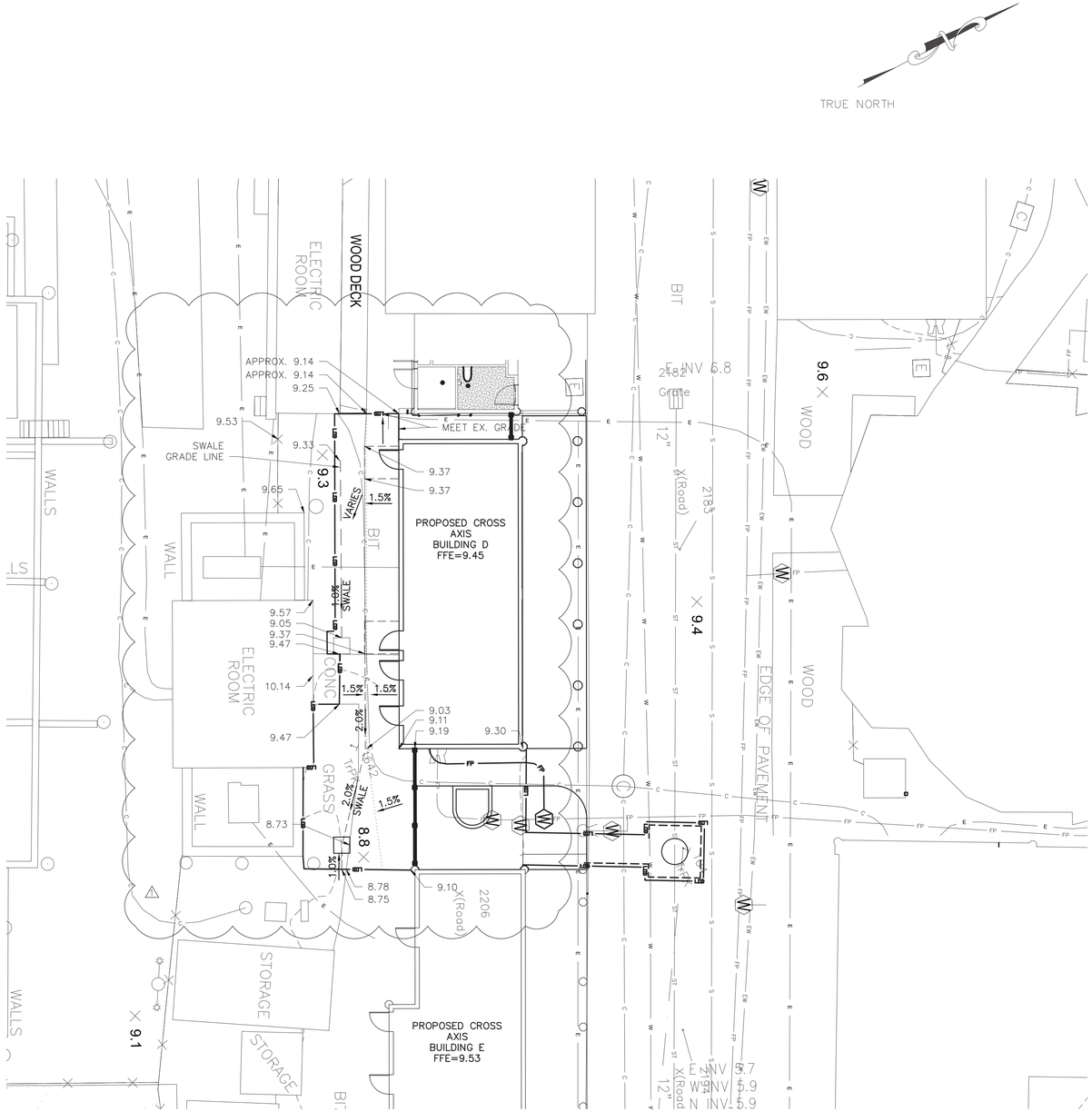

EXISTING LEGEND

- POST
- UTILITY POLE
- SIGN OR
- HANDICAP PARKING
- GROUND LIGHT
- LIGHT POLE
- UTILITY POLE WITH LIGHT
- LIGHT POLE (SINGLE LIGHT)
- LIGHT POLE (DOUBLE LIGHT)
- LIGHT POLE (MULTI LIGHT)
- BOAT TIE-OFF CLEAT
- CATCH BASIN OR OR
- TRENCH DRAIN
- MAILBOX
- UNKNOWN MANHOLE
- COMMUNICATIONS BOX/HAND HOLE
- ELECTRIC HAND HOLE
- ELECTRIC BOX
- GAS METER
- IRRIGATION BOX
- UNKNOWN UTILITY BOX/HAND HOLE
- COMMUNICATION MANHOLE
- DRAINAGE MANHOLE
- ELECTRIC MANHOLE
- SEWER MANHOLE
- STORM SEWER MANHOLE
- SEWER CLEANOUT
- HYDRANT
- SIAMESE CONNECTION
- UNKNOWN VALVE
- WATER VALVE
- GAS VALVE
- WATER SPIGOT OR FOUNTAIN
- MONITORING WELL
- DECIDUOUS BUSH
- EVERGREEN BUSH
- DECIDUOUS TREE
- EVERGREEN TREE
- STUMP
- HEDGE ROW
- TREELINE
- BRUSHLINE
- RETAINING WALL
- GUIDE RAIL
- STONE WALL
- WATERLINE
- FENCE
- UNDERGROUND COMMUNICATION
- UNDERGROUND PROPANE
- UNDERGROUND ELECTRICAL
- UNDERGROUND STREET LIGHTING
- UNDERGROUND ENVIRONMENTAL WASTEWATER
- UNDERGROUND SEWER
- UNDERGROUND STORM SEWER
- UNDERGROUND WATER
- UNDERGROUND FIRE PROTECTION
- X 415.50 — EXISTING SPOT ELEVATION
- TG=415.50 — EXISTING TOP OF GRATE ELEVATION

PROPOSED LEGEND:

- SAW CUTTING ASPHALT CONCRETE
- LOD — LIMITS OF DISTURBANCE
- 415 — PROPOSED MAJOR CONTOUR
- 414 — PROPOSED MINOR CONTOUR
- 9.30 — PROPOSED SPOT ELEVATION
- BS9.30 — PROPOSED BOTTOM SWALE
- TS9.30 — TOP OF SLAB
- PROPOSED INLET PROTECTION
- PROPOSED LANDING AREA (CONCRETE)
- PROPOSED EDGE OF ADA-ACCESSIBLE ROUTE TO BUILDING
- PROPOSED DRAINAGE SWALE

New York 811 — Know what's below. Call before you dig.

0 10 20 30

1'=10' SCALE BAR

6/15/2022 4:10:27 PM

CONSULTANT INFORMATION

LiRo Engineers, Inc.
A LiRo Group Company
Mineola, N.Y. 516-746-2350[T]

CONSULTANT SEAL

STATE OF NEW YORK — KENNETH J. HOLMES — LICENSED PROFESSIONAL ENGINEER — NO. 059134

REVISION NUMBER	DATE	MADE BY	APP'D BY	REVISION
1	9/21/22	HIK	LK	BID ADDENDUM #3

RECORD DRAWING CERTIFICATION

☐ AS BUILT – CHANGES AS NOTED ☐ AS BUILT – NO CHANGES

CONTRACTOR
NAME
SIGNATURE
TITLE DATE

PROJECT COORDINATOR
NAME
SIGNATURE
TITLE DATE

WESTCHESTER COUNTY, NEW YORK
DEPARTMENT OF PUBLIC WORKS AND TRANSPORTATION
DIVISION OF ENGINEERING

INFRASTRUCTURE REHABILITATION PHASE 3
PLAYLAND PARK, RYE, NEW YORK
CROSS AXIS BUILDING D
GRADING AND EROSION CONTROL PLAN

CONTRACT NUMBER	22-523
SHEET NUMBER	CXD-C-05
DWG NO.	248 of 664
SCALE:	1"=10'
DATE:	08/23/2022
DPW FILE NUMBER	1-118-C-997-1
REV. NO.	1

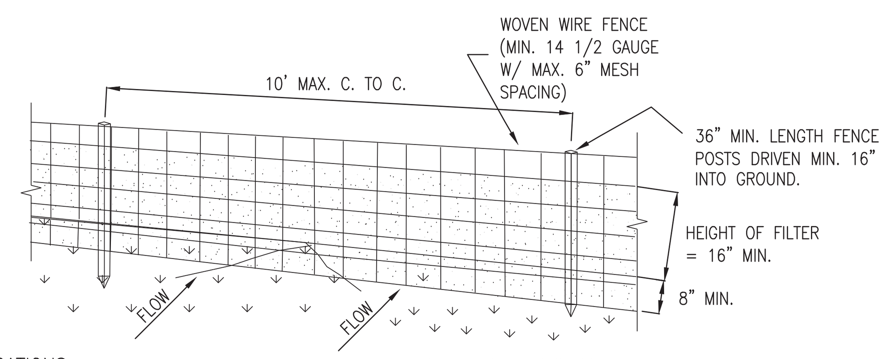

PERSPECTIVE VIEW

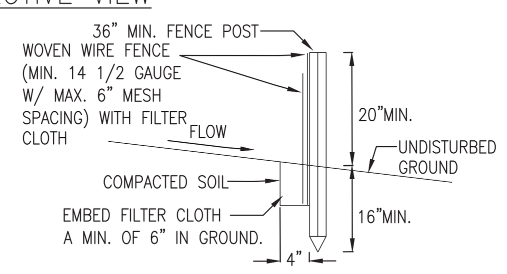

SECTION VIEW

CONSTRUCTION SPECIFICATIONS

1. WOVEN WIRE FENCE TO BE FASTENED SECURELY TO FENCE POSTS WITH WIRE TIES OR STAPLES. POSTS SHALL BE STEEL EITHER "T" OR "U" TYPE OR HARDWOOD.
2. FILTER CLOTH TO BE TO BE FASTENED SECURELY TO WOVEN WIRE FENCE WITH TIES SPACED EVERY 24" AT TOP AND MID SECTION. FENCE SHALL BE WOVEN WIRE, 12 1/2 GAUGE, 6" MAXIMUM MESH OPENING.
3. WHEN TWO SECTIONS OF FILTER CLOTH ADJOIN EACH OTHER THEY SHALL BE OVER-LAPPED BY SIX INCHES AND FOLDED. FILTER CLOTH SHALL BE EITHER FILTER X, MIRAFI 100X, STABILINKA T140N, OR APPROVED EQUIVALENT.
4. PREFABRICATED UNITS SHALL BE GEOFAB, ENVIROFENCE, OR APPROVED EQUIVALENT.
5. MAINTENANCE SHALL BE PERFORMED AS NEEDED AND MATERIAL REMOVED WHEN "BULGES" DEVELOP IN THE SILT FENCE.

SILT FENCE INSTALLATION DETAIL
ITEM NO. 209.13

N.T.S.

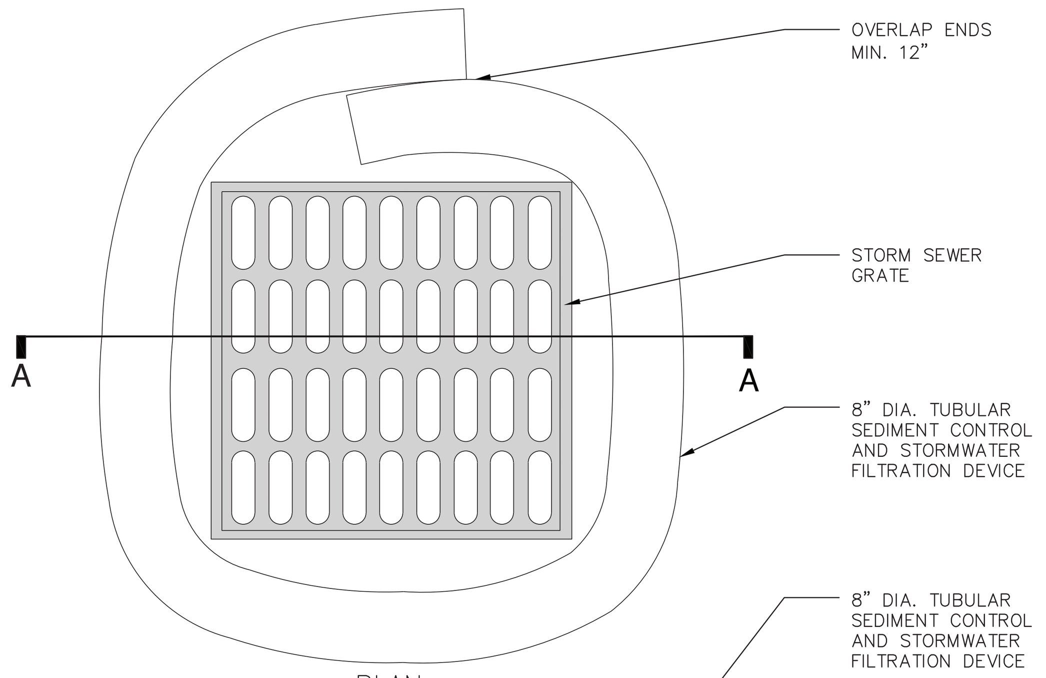

PLAN

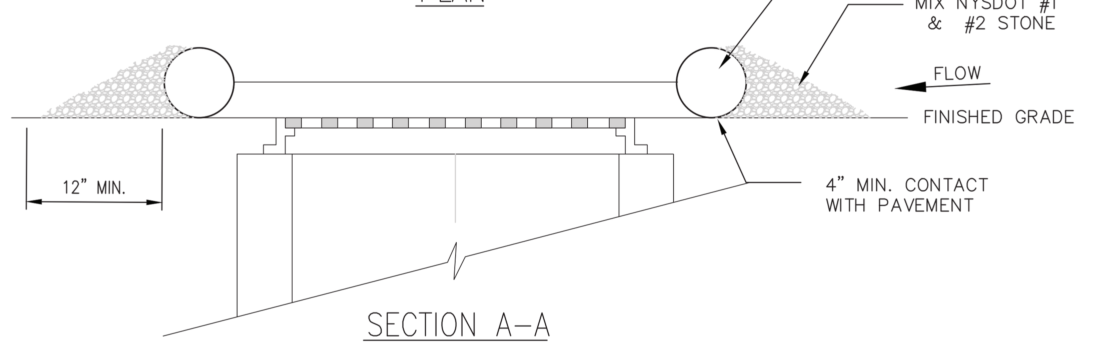

SECTION A-A

NOTES:

1. TUBULAR SEDIMENT CONTROL AND STORMWATER FILTRATION DEVICES SHALL BE FILTREXX FILTERSOXX, OR EQUIVALENT.
2. REPLACE AND DISPOSE OF PER MANUFACTURERS SPECIFICATIONS.
3. THIS PRACTICE INCLUDES SANDBAGS, COMPOST FILTER SOCKS, GEO-TUBES FILLED WITH BALLAST, AND MANUFACTURED SURFACE BARRIERS. PEA GRAVEL CAN ALSO BE USED IN CONJUNCTION WITH THESE PRACTICES TO IMPROVE PERFORMANCE. WHEN INLET IS NOT AT A LOW POINT, AND IS OFF-SET FROM THE PAVEMENT OR GUTTER LINE, PROTECTION SHOULD BE SELECTED AND INSTALLED SO THAT FLOWS ARE NOT DIVERTED AROUND INLET.
4. THE DRAINAGE AREA SHOULD BE LIMITED TO 1 ACRE AT THE DRAINAGE INLET. ALL PRACTICES WILL BE PLACED AT THE INLET PERIMETER OR BEYOND TO MAXIMIZE THE FLOW CAPACITY OF THE INLET. PRACTICES SHALL BE WEIGHTED, BRACED, TIED, OR OTHERWISE ANCHORED TO PREVENT MOVEMENT OR SHIFTING OF LOCATION ON PAVED SURFACES. TRAFFIC SAFETY SHALL BE INTEGRATED WITH THE USE OF THIS PRACTICE. ALL PRACTICES SHOULD BE MARKED WITH TRAFFIC SAFETY CONES AS APPROPRIATE. STRUCTURE HEIGHT SHALL NOT CAUSE FLOODING OR BY-PASS FLOW THAT WOULD CAUSE ADDITIONAL EROSION. THE STRUCTURE SHOULD BE INSPECTED AFTER EVERY STORM EVENT. ANY SEDIMENT SHOULD BE REMOVED AND DISPOSED OF ON THE SITE. ANY BROKEN O DAMAGED COMPONENTS SHOULD BE REPLACED. CHECK ALL MATERIALS FOR PROPER ANCHORING AND SECURE AS NECESSARY.
5. IF USING THE COMPOST FILTER SOCK, THE COMPOST INFILL SHALL BE WELL DECOMPOSED (MATURED AT LEAST 3 MONTHS), WEED-FREE, ORGANIC MATTER. IT SHALL BE AEROBICALLY COMPOSTED, POSSESS NO OBJECTIONABLE ODORS, AND CONTAIN LESS THAN 1%, BY DRY WEIGHT, OF MANMADE FOREIGN MATTER. WHEN USING COMPOST FILTER SOCKS ADJACENT TO SURFACE WATER, THE COMPOST SHOULD HAVE LOW NUTRIENT VALUE.

DRAINAGE STRUCTURE INLET PROTECTION, TEMPORARY

N.T.S.

STORM WATER POLLUTION PREVENTION PLAN NOTES:

THE CONTRACTOR SHALL BE RESPONSIBLE FOR IMPLEMENTATION AND ADHERENCE TO THE STORM WATER POLLUTION PREVENTION PLAN (SWPPP) FROM THE COMMENCEMENT OF THE PROJECT TO SITE STABILIZATION.

POLLUTION PREVENTION MEASURES:

THE CONTRACTOR SHALL TAKE THE FOLLOWING STEPS TO PREVENT LITTER, CHEMICALS AND DEBRIS FROM ENTERING STORM DRAINS AND DISCHARGES.

1. PROPERLY INSTALL AND MAINTAIN EROSION AND SEDIMENT CONTROL DEVICES AS OUTLINED IN THE PROJECT DOCUMENTS AND IN COMPLIANCE WITH THE LATEST EDITION OF THE NEW YORK STATE STANDARDS AND SPECIFICATIONS FOR EROSION AND SEDIMENT CONTROL.
2. PROPERLY CONTAIN AND DISPOSE OF ALL MATERIALS USED ON SITE.
3. CLEAN UP SPILLS IMMEDIATELY TO MINIMIZE SAFETY HAZARD AND PREVENT SPREADING.
4. ROUTINELY INSPECT AND CLEAN OUT CATCH BASINS AND STORM LINES.
5. LABEL ALL STORM INLETS AS "NO DUMPING".
6. CONTROL LITTER BY SWEEPING AND PICKING IT UP DAILY.
7. DO NOT STORE FUEL AND WASTE ON-SITE OR USE SECONDARY CONTAINMENT MEASURES.
8. IF PRACTICAL, USE ALTERNATIVE CLEANING METHODS SUCH AS WIPING DOWN OF VEHICLES AND EQUIPMENT INSTEAD OF HOSING.
9. REMOVE ALL EXCAVATED UNSUITABLE MATERIAL FROM THE SITE AS SOON AS PRACTICABLE.
10. PRACTICE GOOD HOUSEKEEPING AND EDUCATE EMPLOYEES ON POLLUTION PREVENTION MEASURES.

ON SITE MATERIAL STORAGE:

THE CONTRACTOR MAY HAVE THE FOLLOWING MATERIALS STORED ON-SITE DURING PROJECT CONSTRUCTION. THE LIST MAY NOT BE INCLUSIVE AND WILL VARY DURING THE DIFFERENT STAGES OF THE PROJECT.

1. PRE-CAST CONCRETE MANHOLES, CATCH BASINS AND OUTLET CONTROL STRUCTURE.
2. PVC PIPING AND APPURTENANCES.
3. STOCKPILED SOILS – TOP SOIL, SUB BASE MATERIAL, CUSHION MATERIAL, SELECT GRANULAR MATERIAL, GRAVEL AND CRUSHED STONE.
4. EROSION AND SEDIMENT CONTROL MATERIAL: SILT FENCE, RIP RAP AND SEED.
5. PAVING MATERIALS AND EQUIPMENT
6. SECURITY FENCE AND APPURTENANCES
7. EQUIPMENT REQUIRED TO PERFORM THE WORK.

THE CONTRACTOR SHALL UTILIZE THE POLLUTION PREVENTION MEASURES OUTLINED ABOVE TO PREVENT POLLUTANTS FROM STORED MATERIALS FROM REACHING THE STORM WATER CONVEYANCE DEVICES AND DISCHARGES.

EROSION AND SEDIMENT CONTROL PRACTICES:

TEMPORARY STORM INLET PROTECTION:
STORM INLET PROTECTION INTERCEPTS SEDIMENT LADEN RUNOFF AND TRAPS SEDIMENT TO PROTECT THE DRAINAGE SYSTEM. STORM INLET PROTECTION SHALL BE PROVIDED AT EACH NEW CATCH BASIN AS IT IS INSTALLED AND AROUND EXISTING CATCH BASINS AS SHOWN.

TEMPORARY SEDIMENT CONTROL – SILT FENCE
SILT FENCE REDUCES RUNOFF VELOCITY AND CAUSES SETTLING OF SEDIMENT. INSTALL SILT FENCE PRIOR TO BEGINNING ANY EXCAVATION OR EARTHWORK ACTIVITIES WHERE SHOWN ON THE DRAWINGS. INSTALL AROUND ANY STOCKPILED SOIL MATERIALS.

TEMPORARY STABILIZED CONSTRUCTION ENTRANCE
THE STABILIZED CONSTRUCTION ENTRANCE IS USED TO REDUCE OR ELIMINATE TRACKING OF SEDIMENT ONTO STREETS AND/OR PUBLIC RIGHT-OF-WAY.

TEMPORARY SEEDING
TEMPORARY SEEDING REDUCES EROSION AND SEDIMENT LOSS FROM THE BARE GROUND. PROVIDE TEMPORARY SEEDING TO PROVIDE TEMPORARY COVER FOR DISTURBED EARTH OR SOIL STOCKPILES HELD FOR LONGER THAN SEVEN (7) DAYS. TEMPORARY SHUT DOWN OF CONSTRUCTION OR WAITING FOR OPTIMAL PLANTING TIME. IN SPRING, SUMMER OR EARLY FALL APPLY RYE GRASS AT A RATE OF 1 LB/ 1,000 SQ. FT. IN LATE FALL APPLY CERTIFIED AROOSTOOK RYE AT 2.5 LBS / 1,000 SQ. FT. OR WOOD FIBER HYDROMULCH AT MANUFACTURE'S RECOMMENDED RATE. HAY OR STRAW SHALL BE ANCHORED.

DUST CONTROL
TEMPORARY AND PERMANENT STABILIZATION MEASURES SUCH AS SEEDING, MULCHING AND INSTALLING EROSION AND SEDIMENT CONTROL BLANKETS WILL PREVENT DUST FROM BLOWING OFF SITE. INSTALL THESE MEASURES AS SOON AS FINAL GRADES ARE REACHED AND ON SOIL STOCKPILES AND DISTURBED AREAS TO BE LEFT FOR LONGER THAN SEVEN (7) DAYS.

PHASING OF EROSION AND SEDIMENT CONTROL PRACTICES:

1. PRIOR TO COMMENCING ANY CONSTRUCTION ACTIVITIES ON THE SITE, THE CONTRACTOR SHALL MEET WITH THE OWNERS REPRESENTATIVE AND DESIGNER TO DISCUSS THE STORM WATER POLLUTION PREVENTION PLAN.
2. PRIOR TO COMMENCING ANY EXCAVATION PROCEDURES, INSTALL SILT FENCE AS SHOWN ON THE PLANS.
3. INSTALL STABILIZED CONSTRUCTION ENTRANCE.
4. AS THE NEW CATCH BASINS ARE INSTALLED, PROVIDE TEMPORARY INLET PROTECTION.
5. AS SOIL MATERIAL IS EXCAVATED OR STOCKPILED, PROVIDE A SILT FENCE ENCLOSURE AROUND THE PILE. IF THE PILE IS TO REMAIN FOR LONGER THAN SEVEN (7) DAYS, TEMPORARILY SEED THE PILE.
6. DO NOT LEAVE DISTURBED AREAS NOT TO BE COVERED BY IMPERVIOUS SURFACE BARE FOR LONGER THAN SEVEN (7) DAYS, ROUGH GRADE THE AREAS AND TEMPORARILY SEED.
7. AFTER FINAL GRADING OF VEGETATED AREAS, PROVIDE PERMANENT SEEDING.
8. UPON FINAL STABILIZATION OF THE SITE, REMOVE ALL TEMPORARY EROSION AND SEDIMENT CONTROL DEVICES. INSPECT ALL PERMANENT EROSION AND SEDIMENT CONTROL AND STORM WATER MANAGEMENT DEVICES. REPLACE ANY FAILING OR UNSATISFACTORY MEASURES. CLEAN ALL STORMWATER CATCH BASINS AND PIPING.

EROSION AND SEDIMENT CONTROL AND STORMWATER CONTROL DEVICE MAINTENANCE:

CONSTRUCTION DURATION
ALL EROSION AND SEDIMENT CONTROL DEVICES SHALL BE INSPECTED WEEKLY.

1. SILT FENCE SHALL BE REPLACED WHEN TORN, IS BULGING OR NO LONGER MEETING THE INSTALLATION DETAILS.
2. THE STABILIZED CONSTRUCTION ENTRANCE SHALL BE MAINTAINED IN A CONDITION TO PREVENT TRACKING OF SEDIMENT ON TO ROADS AND PUBLIC RIGHTS-OF-WAY. INSPECT TOP DRESSING AND PROVIDE ADDITIONAL AGGREGATE AS NECESSARY.
3. DRAINAGE STRUCTURES AND PIPING SHALL BE CHECKED FOR CLOGGING AND SEDIMENT ACCUMULATION AND CLEANED IF REQUIRED.

PROJECT COMPLETION
AT THE PROJECT COMPLETION AND PRIOR TO PROJECT CLOSE OUT, THE CONTRACTOR SHALL INSPECT ALL PERMANENT EROSION AND CONTROL AND STORMWATER MANAGEMENT PRACTICES.

1. ACCEPTABLE VEGETATION ESTABLISHMENT IN ACCORDANCE WITH SPECIFICATIONS.
2. DRAINAGE STRUCTURES AND PIPING SHALL BE CHECKED FOR CLOGGING AND SEDIMENT ACCUMULATION AND CLEANED IF REQUIRED.

MAINTENANCE OF PERMANENT STORMWATER MANAGEMENT PRACTICES

1. DRAINAGE STRUCTURES AND PIPING SHALL BE CHECKED FOR CLOGGING AND SEDIMENT ACCUMULATION AND CLEANED IF REQUIRED.

SITE ASSESSMENT AND INSPECTIONS

COMPLY WILL ALL CONDITIONS INCLUDED IN THE SPDES PERMIT, PART III.D.3 THROUGH PART III.D.5. THE REQUIREMENTS IN THESE SUBSECTIONS OF THE SPDES PERMIT TAKE PRECEDENCE OVER NOTES ON THIS DRAWING AND ON THE EROSION AND SEDIMENT CONTROL PLAN WHERE CONTRADICTIONS BETWEEN THESE DRAWINGS AND THE SPDES PERMIT MAY ARISE.

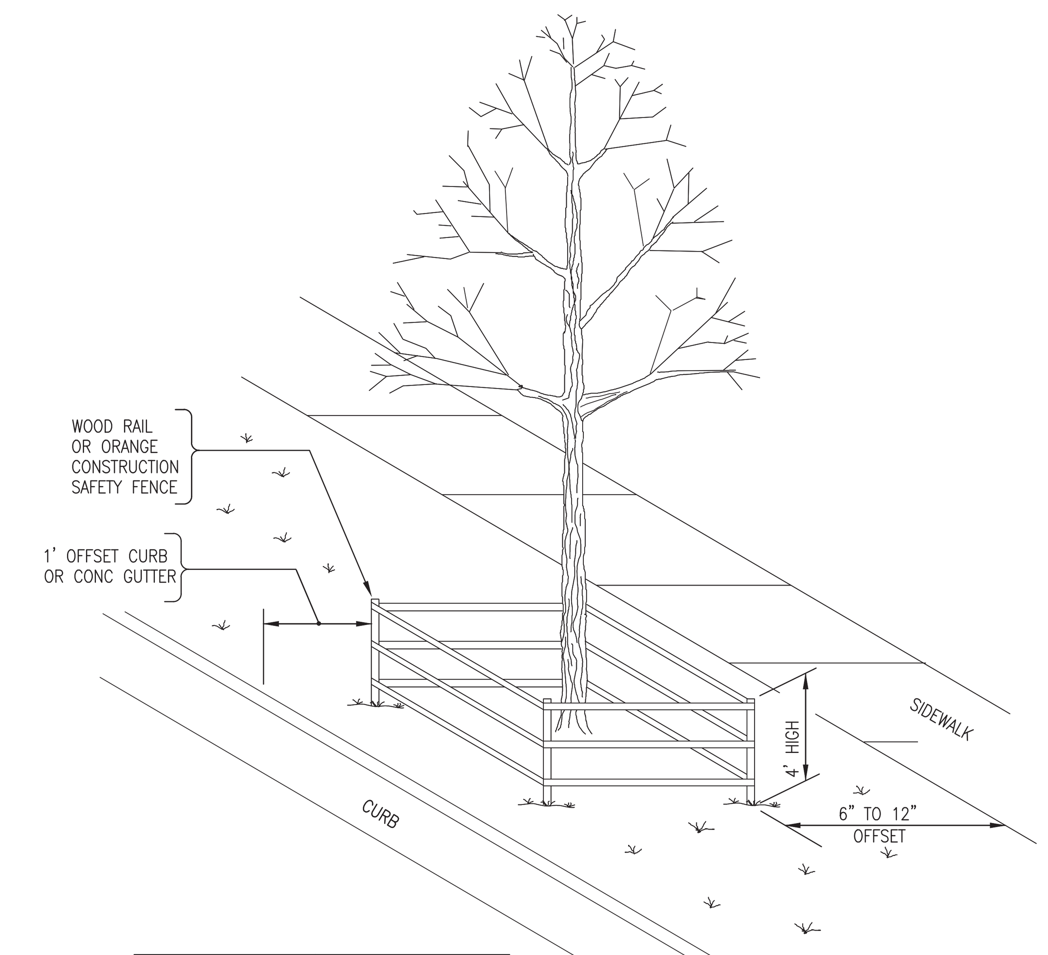

TREE DIAMETER (DBH)	DISTANCE OF FENCING FROM FACE OF TREE TRUNK
LESS THAN 10"	6'
10" – 14"	10'
15" – 19"	12'
20" OR MORE	15'

NOTES:

1. ALL TREES WITHIN THE PROJECT LIMITS THAT ARE TO REMAIN, ARE TO RECEIVE THIS TREATMENT.
2. DO NOT LEAVE CONSTRUCTION EQUIPMENT RUNNING (IDLING) UNDER TREE CANOPY.

TREE PROTECTION SYSTEM 5'-0"
ITEM NO. 611.21050009

N.T.S.

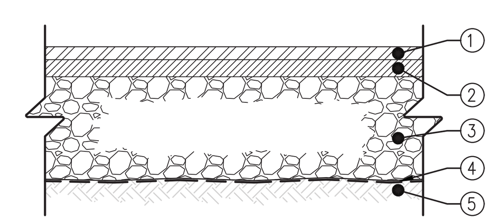

(1) 2" TOP COURSE, 12.5 F2 TOP COURSE HMA, 80 SERIES COMPACTION NYSDOT ITEM 402.128204
(2) 2" BINDER COURSE, 25 F9 BINDER COURSE HMA, 80 SERIES COMPACTION NYSDOT ITEM 402.258904
(3) 4" SUBBASE COURSE, SUBBASE COURSE, TYPE 2 NYSDOT ITEM 304.12
(4) GEOTEXTILE SEPARATION NYSDOT ITEM 207.21
(5) COMPACTED SUBGRADE

NOTES:

1. COMPACT SUBGRADE TO A MODIFIED PROCTOR DENSITY OF 95%
2. SUBBASE COURSE SHALL HAVE NO MORE THAN (7%) SEVEN PERCENT BY WEIGHT FINER THAN NO. 200 SIEVE.
3. IMPRINTED PATTERN SHOWN IS FOR GRAPHICAL REPRESENTATIONS ONLY. ALL IMPRINTING/PATTERNING LAYOUTS AND POSITIONING SHALL BE APPROVED BY THE PROJECT ENGINEER PRIOR TO ACTUAL CONSTRUCTION.

ASPHALT PAVEMENT SECTION

N.T.S.

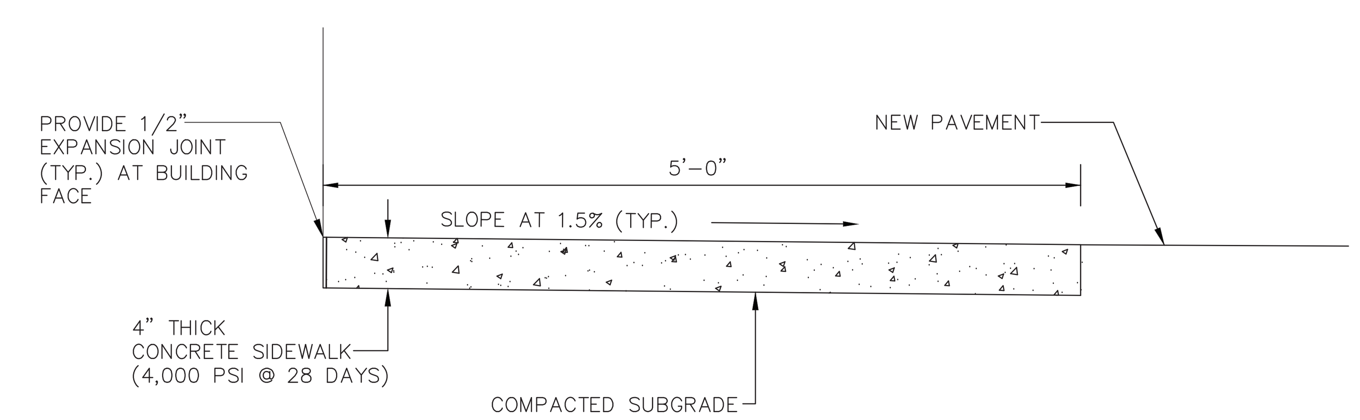

CONCRETE PAD DETAIL

N.T.S.

1

CONSULTANT INFORMATION
LiRo Engineers, Inc.
A LiRo Group Company
Mineola, N.Y. 516-746-2350[T]

CONSULTANT SEAL
STATE OF NEW YORK · KENNETH J. HOLMSTROM · LICENSED PROFESSIONAL ENGINEER · No. 059134

REVISION NUMBER	DATE	MADE BY	APP'D BY	REVISION
1	9/21/22	HIK	LK	BID ADDENDUM #3

RECORD DRAWING CERTIFICATION
☐ AS BUILT – CHANGES AS NOTED ☐ AS BUILT – NO CHANGES

CONTRACTOR
NAME ______ SIGNATURE ______ TITLE ______ DATE ______

PROJECT COORDINATOR
NAME ______ SIGNATURE ______ TITLE ______ DATE ______

WESTCHESTER COUNTY, NEW YORK
DEPARTMENT OF PUBLIC WORKS AND TRANSPORTATION
DIVISION OF ENGINEERING

INFRASTRUCTURE REHABILITATION PHASE 3
PLAYLAND PARK, RYE, NEW YORK
CROSS AXIS BUILDING D
CIVIL DETAILS 1

CONTRACT NUMBER: **22-523**
SHEET NUMBER: **CXD-C-06**
DWG NO.: **249** of 664
SCALE: **AS NOTED**
DATE: **08/23/2022**
DPW FILE NUMBER: **1-118-C-998-1**
REV. NO. **1**

6/15/2022 4:10:27 PM

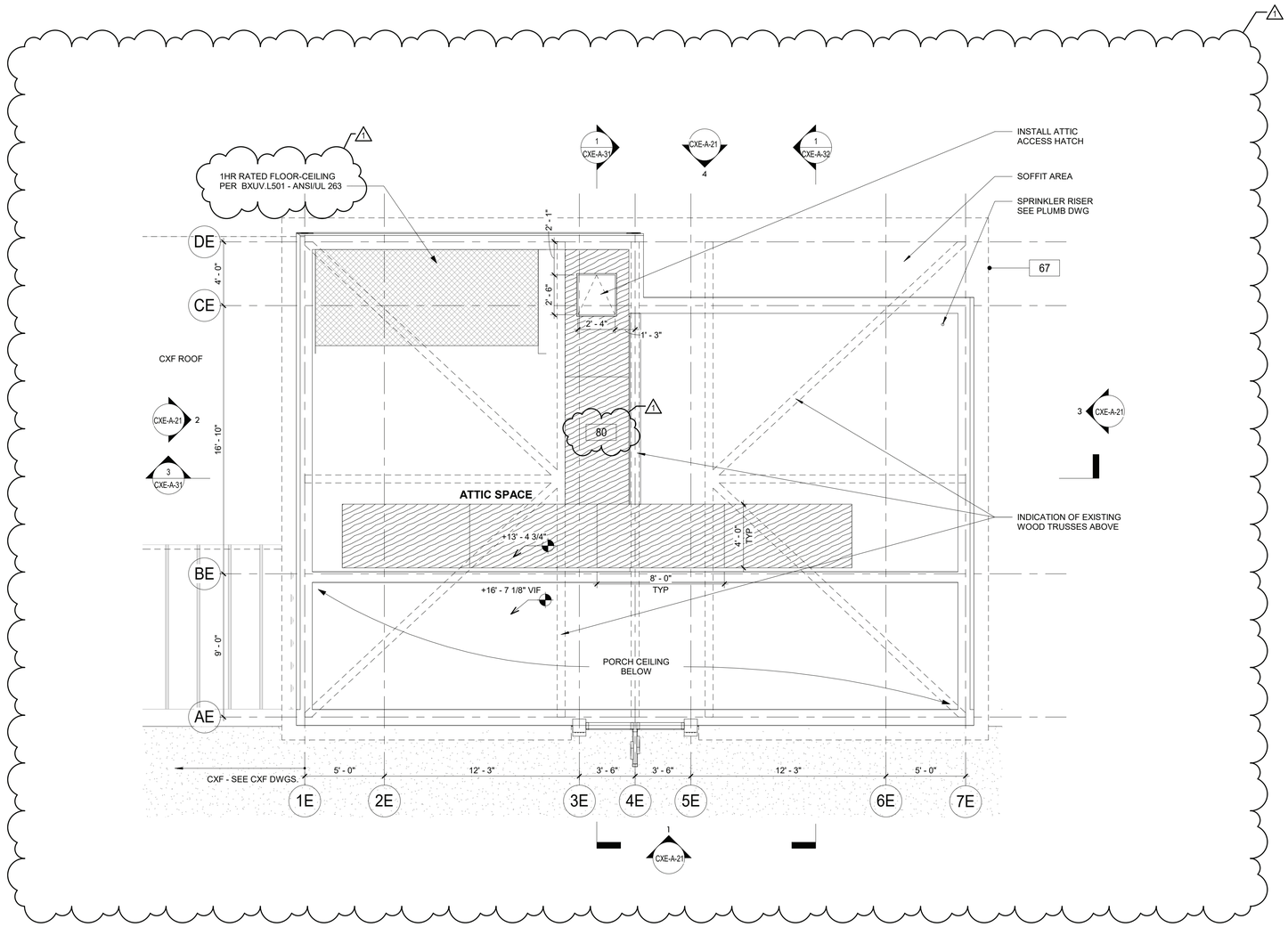

1 CXE - ATTIC PLAN
1/4" = 1'-0"

FLOOR PLAN NOTES:

1. DIMENSIONS ARE TO FACE OF GYPSUM WALL BOARD, GRID LINES, OR CENTERLINE OF COLUMN. ALL ELEVATIONS ARE NOTED FROM FINISH FLOOR ELEVATIONS.
2. PROVIDE DRYWALL TRIM AT ALL EXPOSED EDGES AND CORNERS.
3. MINIMUM DIMENSION FROM ANY CORNER OR WALL TO FRAMING STUD AT DOOR JAMB OPENING SHALL BE 4" U.N.O.
4. PROVIDE FIRE RETARDANT WOOD BLOCKING FOR ANY WALL MOUNTED EQUIPMENT OR ACCESSORIES. COORDINATE ALL BLOCKING REQUIREMENTS NECESSARY WITH OTHER TRADES.
5. THE CONTRACTOR SHALL VERIFY DIMENSIONS OF THE EXISTING SPACE AND OF ANY EXISTING CONSTRUCTION TO REMAIN BY ACTUAL MEASUREMENT BEFORE ANY WORK IS PERFORMED. IF ANY MEASUREMENTS DIFFER FROM DIMENSIONS SHOWN ON PLAN, GC IS TO NOTIFY THE ARCHITECT IMMEDIATELY. THE CONTRACTOR SHALL BE RESPONSIBLE FOR CORRECTING ANY AND ALL DISCREPANCIES FOUND AFTER THE WORK IS PERFORMED, AT NO ADDITIONAL EXPENSE TO THE OWNER.
6. THE GC SHALL PROVIDE CAULK JOINTS WHERE GYP BD MEETS THE FLOOR OR ROOF DECK.
7. THE GC SHALL BE RESPONSIBLE FOR COORDINATING WITH OWNER ON ALL WORK TO BE PERFORMED BY THE OWNER. ANY POTENTIAL CONFLICTS OR DELAYS CAUSED BY THE OWNER'S SUBCONTRACTORS MUST BE DOCUMENTED IN WRITING TO THE OWNER BEFORE THE DELAY IS ACTUALLY INCURRED FOR IT TO BE CONSIDERED. OTHERWISE THE GC WILL BE RESPONSIBLE FOR MEETING THE SCHEDULE AS OUTLINED IN THE CONTRACT.
8. THE CONTRACTOR TO VERIFY ALL FINISHED DIMENSIONS. FIELD CONDITIONS ALTERING ANY DIMENSIONS SHOULD BE BROUGHT TO THE ATTENTION OF THE OWNER AND ARCHITECT.
9. THE CONTRACTOR SHALL SUPPLY ALL MATERIAL, LABOR, AND COORDINATION REQUIRED FOR THEINSTALLATION OF ALL OWNER-SUPPLIED ITEMS AS DESCRIBED IN THE DOCUMENTS, U.N.O.
10. THE CONTRACTOR IS RESPONSIBLE FOR ALL FLOOR AND WALL PENETRATIONS FOR ELECTRICAL AND MECHANICAL WORK. ALL SUCH OPENING SHALL BE FRAMED AND REINFORCED.
11. FLOOR SURFACES SHALL BE LEVELED TO ASSURE SMOOTH SURFACE FOR FINISH FLOOR INSTALLATION.
12. THE CONTRACTOR. TO COORDINATE ALL UTILITY STUB-UPS AND LOCATION OF ALL EQUIPMENT PRIOR TO INSTALLING ANY ONE ITEM.
13. PROVIDE PAINTED ACCESS PANELS IN WALLS & CEILING AT CONCEALED ITEMS SUCH AS VALVES, ONTROLS, SWITCHES OR ANY OTHER ITEMS THAT REQUIRES ACCESS. GC O DETERMINE ACCESS ANEL LOCATION W/ ARCHITECT PRIOR TO INSTALLATION.

PLAN LEGEND:

	NEW IPE WOOD DECK	101	DOOR TAG
	NEW CONSTRUCTION	1i	WINDOW TAG
NIC	NOT IN CONTRACT	FE	FIRE EXTINGUISHER
#	KEY NOTES	FD	FLOOR DRAIN
1i	WALL TAG		

CONSTRUCTION KEYNOTES

67	NEW FASCIA BOARD AND SOFFIT.
80	NEW 3/4" PLYWOOD FLOOR

9/23/2022 10:18:00 AM

CONSULTANT INFORMATION

The LiRo Group

3 Aerial Way, Syosset, New York 11791
(516) 938-5476 www.liro.com

CONSULTANT SEAL

REGISTERED ARCHITECT ROBERT D. TOMASULO 023280 STATE OF NEW YORK

REVISION NUMBER	DATE	MADE BY	APP'D BY	REVISION
1	09/21/22	EZ		BID ADDENDUM #3

RECORD DRAWING CERTIFICATION

☐ AS BUILT – CHANGES AS NOTED ☐ AS BUILT – NO CHANGES

CONTRACTOR
NAME
SIGNATURE
TITLE DATE

PROJECT COORDINATOR
NAME
SIGNATURE
TITLE DATE

WESTCHESTER COUNTY, NEW YORK
DEPARTMENT OF PUBLIC WORKS AND TRANSPORTATION
DIVISION OF ENGINEERING

INFRASTRUCTURE REHABILITATION PHASE 3
PLAYLAND PARK, RYE, NEW YORK
CROSS AXIS BUILDING E
CXE - ATTIC PLAN

CONTRACT NUMBER 22-523	SHEET NUMBER CXE-A-12
DWG NO.: 265 of 664	
SCALE: As indicated	
DATE: 08/23/2022	
DPW FILE NUMBER 1-118-A-1014-1	REV. NO. 1

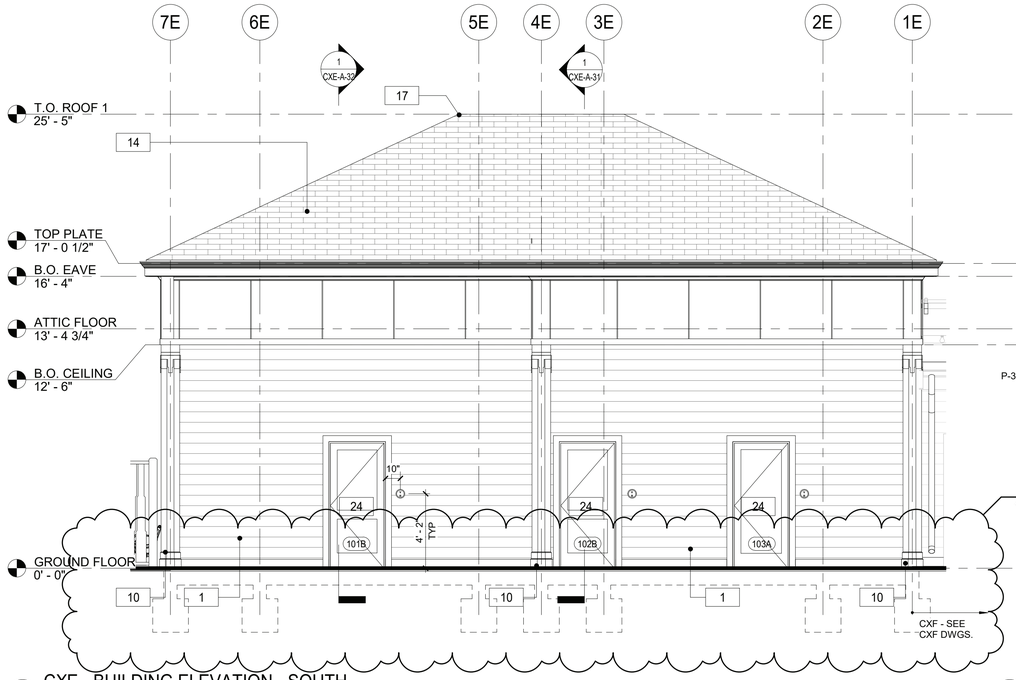

4 CXE - BUILDING ELEVATION - SOUTH
1/4" = 1'-0"

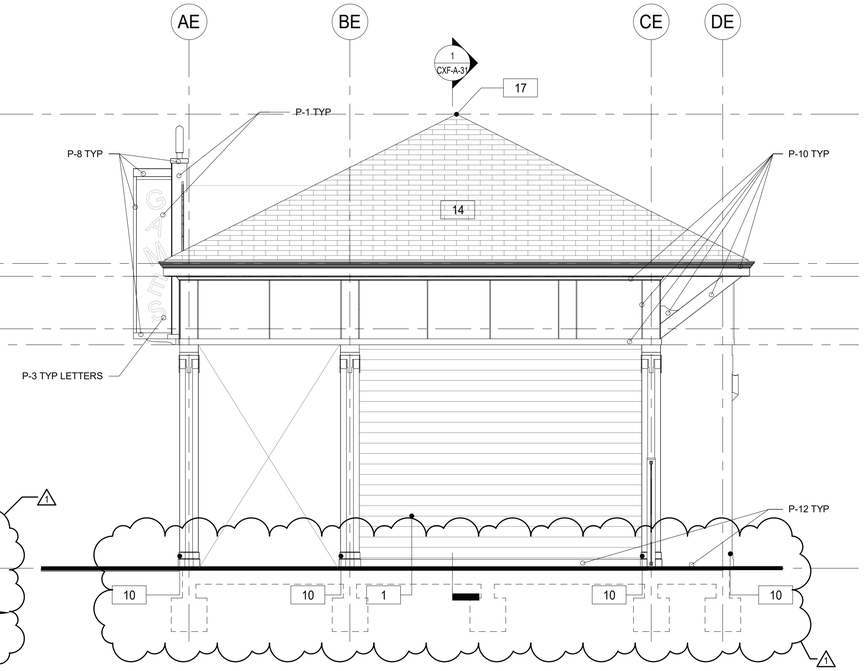

3 CXE - BUILDING ELEVATION - WEST
1/4" = 1'-0"

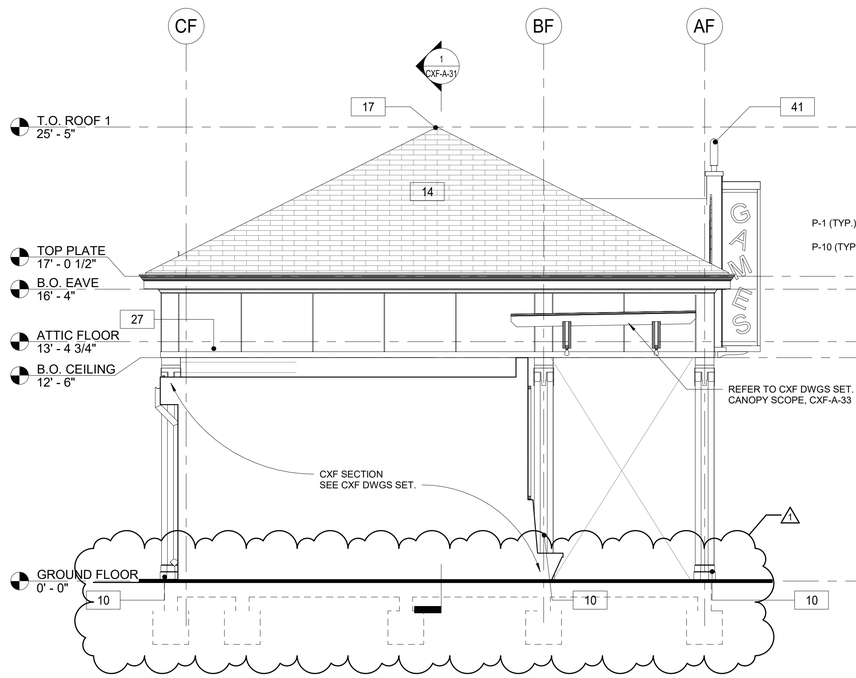

2 CXE - BUILDING ELEVATION - EAST
1/4" = 1'-0"

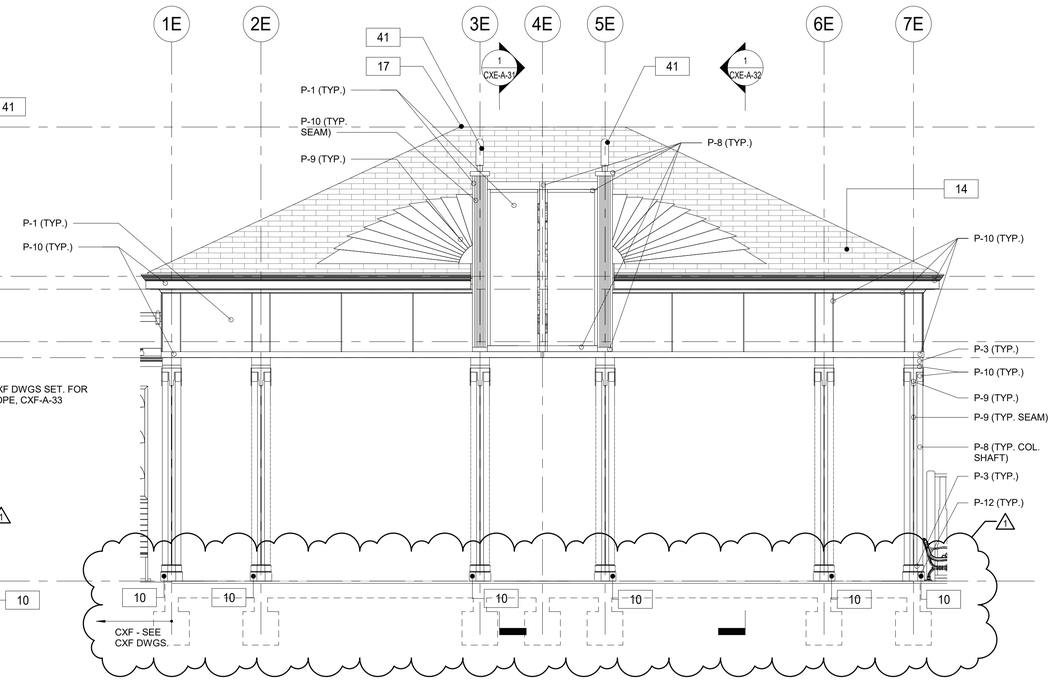

1 CXE - BUILDING ELEVATION - NORTH
1/4" = 1'-0"

FLOOR PLAN GENERAL NOTES

1. DIMENSIONS ARE TO FACE OF GYPSUM WALL BOARD, GRID LINES, OR CENTERLINE OF COLUMN. ALL ELEVATIONS ARE NOTED FROM FINISH FLOOR ELEVATIONS.
2. PROVIDE DRYWALL TRIM AT ALL EXPOSED EDGES AND CORNERS.
3. MINIMUM DIMENSION FROM ANY CORNER OR WALL TO FRAMING STUD AT DOOR JAMB OPENING SHALL BE 4" (U.N.O.).
4. PROVIDE METAL BLOCKING FOR ANY WALL MOUNTED EQUIPMENT OR ACCESSORIES. COORDINATE ALL BLOCKING REQUIREMENTS NECESSARY WITH OTHER TRADES.
5. THE GC SHALL VERIFY DIMENSIONS OF THE EXISTING SPACE AND OF ANY EXISTING CONSTRUCTION TO REMAIN BY ACTUAL MEASUREMENT BEFORE ANY WORK IS PERFORMED. IF ANY MEASUREMENTS DIFFER FROM DIMENSIONS SHOWN ON PLAN, GC IS TO NOTIFY THE ARCHITECT IMMEDIATELY. THE GC SHALL BE RESPONSIBLE FOR CORRECTING ANY AND ALL DISCREPANCIES FOUND AFTER THE WORK IS PERFORMED, AT NO ADDITIONAL EXPENSE TO THE OWNER.
6. GC TO VERIFY ALL FINISHED DIMENSIONS. FIELD CONDITIONS ALTERING ANY DIMENSIONS SHOULD BE BROUGHT TO THE ATTENTION OF THE OWNER AND ARCHITECT.
7. THE GC SHALL PROVIDE CAULK JOINTS WHERE GYP. BD. MEETS THE FLOOR OR ROOF DECK.
8. THE GC SHALL BE RESPONSIBLE FOR COORDINATING WITH OWNER ON ALL WORK TO BE PERFORMED BY THE OWNER. ANY POTENTIAL CONFLICTS OR DELAYS CAUSED BY THE OWNER'S SUBCONTRACTORS MUST BE DOCUMENTED IN WRITING TO THE OWNER BEFORE THE DELAY IS ACTUALLY INCURRED FOR IT TO BE CONSIDERED. OTHERWISE THE GC WILL BE RESPONSIBLE FOR MEETING THE SCHEDULE AS OUTLINED IN THE CONTRACT.
9. THE GC SHALL SUPPLY ALL MATERIAL, LABOR, AND COORDINATION REQUIRED FOR THE INSTALLATION OF ALL OWNER-SUPPLIED ITEMS AS DESCRIBED IN THE DOCUMENTS, U.N.O.
10. THE GC IS RESPONSIBLE FOR ALL FLOOR AND WALL PENETRATIONS FOR ELECTRICAL AND MECHANICAL WORK. ALL SUCH OPENING SHALL BE FRAMED AND REINFORCED.
11. FLOOR SURFACES SHALL BE LEVELED TO ASSURE SMOOTH SURFACE FOR FINISH FLOOR INSTALLATION. GC SHALL ALSO PAY SPECIAL ATTENTION THAT ALL WALL SURFACES ARE SMOOTH WHERE MURALS WILL BE DIRECTLY APPLIED TO WALL.
12. GC TO COORDINATE ALL UTILITY STUB-UPS AND LOCATION OF ALL EQUIPMENT PRIOR TO INSTALLING ANY ONE ITEM.
13. REFER TO SHEET CXE-A-80 FOR PARTITION TYPE INFORMATION.
14. PROVIDE PAINTED ACCESS PANELS IN WALLS & CEILING AT CONCEALED ITEMS SUCH AS VALVES, CONTROLS, SWITCHES OR ANY OTHER ITEMS THAT REQUIRES ACCESS. GC TO DETERMINE ACCESS PANEL LOCATION W/ ARCHITECT PRIOR TO INSTALLATION.

PAINTING SCHEDULE

KEY	COLOR	MANUFACTURER	REMARKS
P- 1	MYSTICAL POWERS #901	BENJAMIN MOORE	
P- 2	HERITAGE RED #HC-181	BENJAMIN MOORE	
P- 3	NEW YORK STATE OF MIND #805	BENJAMIN MOORE	
P- 4	LAZY SUNDAY #803	BENJAMIN MOORE	
P- 5	DEEP JUNGLE #595	BENJAMIN MOORE	
P- 6	LUCK OF THE IRISH #588	BENJAMIN MOORE	
P- 7	MAJOLICA GREEN #0013	SHERWIN WILLIAMS	
P- 8	ANTELOPE CANYON #125	BENJAMIN MOORE	
P- 9	FORSYTHIA #6907	SHERWIN WILLIAMS	
P- 10	CAPE BLUE #1642	BENJAMIN MOORE	
P- 11	WHITE SNOW #9541	SHERWIN WILLIAMS	
P- 12	TRICORN BLACK #6258	SHERWIN WILLIAMS	
P- 13	READY MIX WHITE	BENJAMIN MOORE	INTERIOR USE ONLY
P- 14	STUCCO PAINT TO MATCH P-1	KEIM	
P- 15	VAN DEUSEN BLUE #HC-156	BENJAMIN MOORE	
P- 16	#RAL9001	-	TYP. ROLL UP DOOR
P- 17	FLORIDA BEACHES #900	BENJAMIN MOORE	
P- 18	PIRATES COVE PEACH #903	BENJAMIN MOORE	
P- 19	JADITE #6459	SHERWIN WILLIAMS	
P- 20	DECISIVE YELLOW #6902	SHERWIN WILLIAMS	

CONSTRUCTION KEYNOTES

1	PROVIDE AND INSTALL NEW 1x8 MILLED YELLOW PINE - TONGUE AND GROOVE - NO BEVEL
10	PROVIDE AND INSTALL COLUMN ENCLOSURES. SEE DETAILS.
14	PROVIDE NEW ASPHALT SHINGLE ROOFING,UNDERLAYMENT, AND REPLACE IN KIND EXISTING DECKING AS REQUIRED (COORDINATE WITH STRUCTURAL).
17	PROVIDE AND INSTALL RIDGE VENT AT ROOF HIPS.
24	PROVIDE AND INSTALL NEW DOOR AND FRAME, IN EXISTING OPENING. CONTRACTOR TO V.I.F. ALL DIMENSIONS PRIOR TO ORDERING NEW DOORS.
27	PROVIDE AND INSTALL STEP FLASHING WHERE SLOPE ROOFS MEET VERTICAL WALLS.
41	INSTALL REFURBISHED FINIAL LIGHTS (H6). ARCHITECT TO APPROVE FINISH AND ANY NEEDED MODIFICATIONS TO H6 LIGHTS DURING REFURBISHMENT.

9/23/2022 10:18:05 AM

CONSULTANT INFORMATION
The LiRo Group
3 Aerial Way, Syosset, New York 11791
(516) 938-5476 www.liro.com

CONSULTANT SEAL
REGISTERED ARCHITECT ROBERT D. TOMASULO 023280 STATE OF NEW YORK

REVISION NUMBER	DATE	MADE BY	APP'D BY	REVISION
1	09/21/22	EZ		BID ADDENDUM #3

RECORD DRAWING CERTIFICATION
☐ AS BUILT – CHANGES AS NOTED ☐ AS BUILT – NO CHANGES

CONTRACTOR
NAME
SIGNATURE
TITLE DATE

PROJECT COORDINATOR
NAME
SIGNATURE
TITLE DATE

WESTCHESTER COUNTY, NEW YORK
DEPARTMENT OF PUBLIC WORKS AND TRANSPORTATION
DIVISION OF ENGINEERING

INFRASTRUCTURE REHABILITATION PHASE 3
PLAYLAND PARK, RYE, NEW YORK
CROSS AXIS BUILDING E
CXE - EXTERIOR BUILDING ELEVATIONS

CONTRACT NUMBER 22-523
SHEET NUMBER **CXE-A-21**
DWG NO.: 267 of 664
SCALE: **As indicated**
DATE: **08/23/2022**
DPW FILE NUMBER **1-118-A-1016-1**
REV. NO. **1**

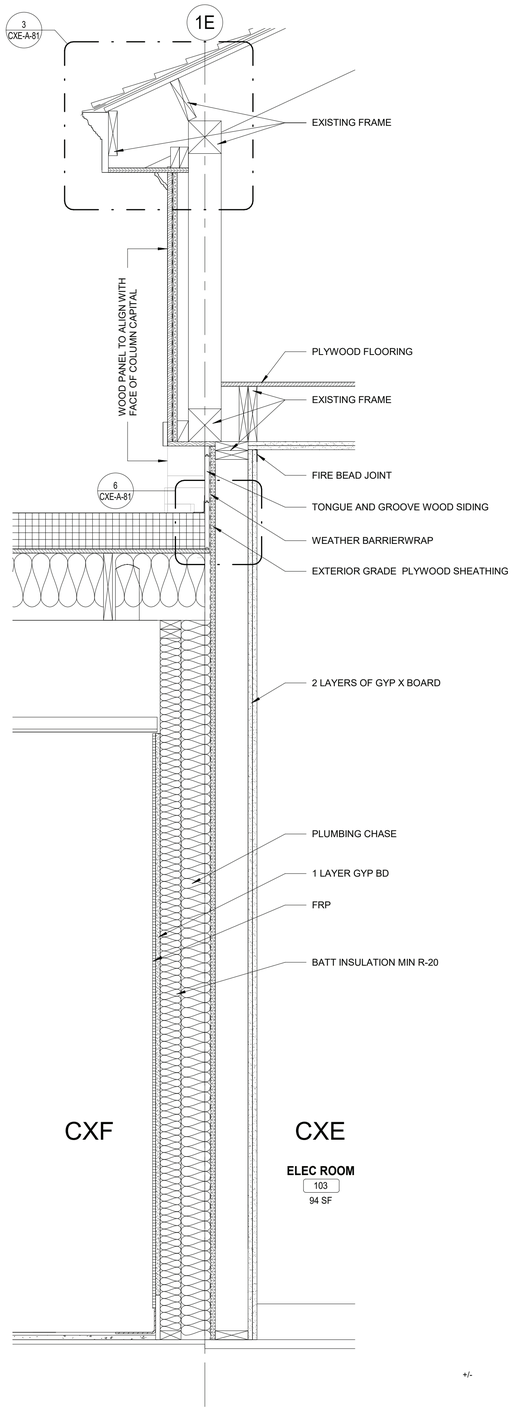

2 CXE - WALL SECTION
1" = 1'-0"

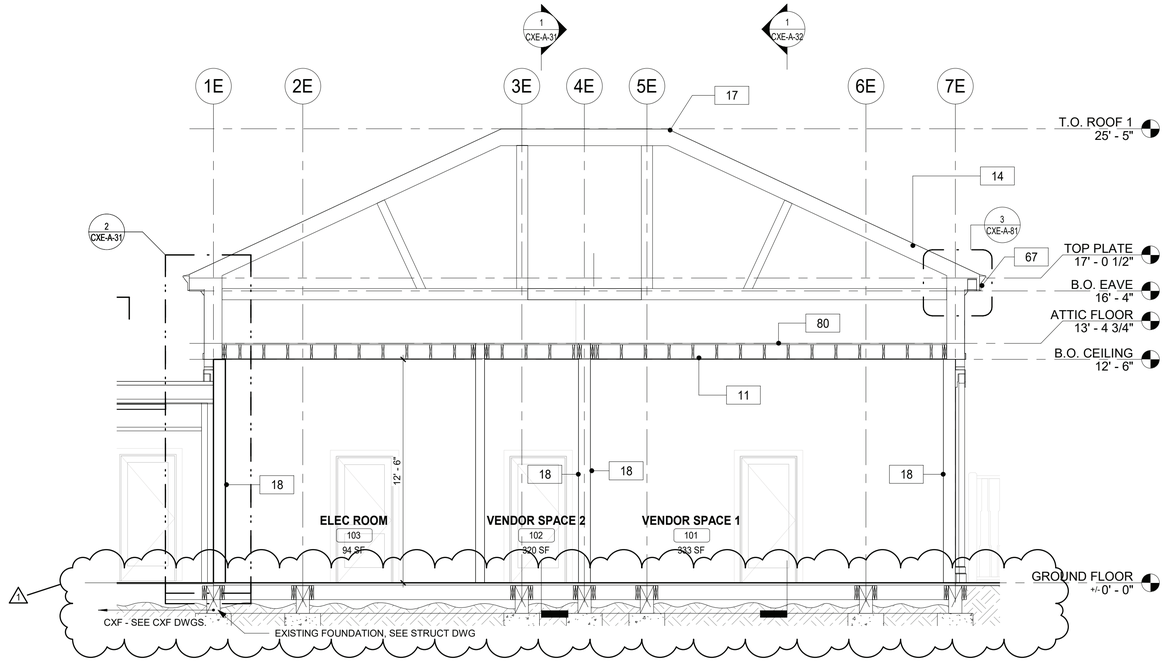

3 CXE - SECTION
1/4" = 1'-0"

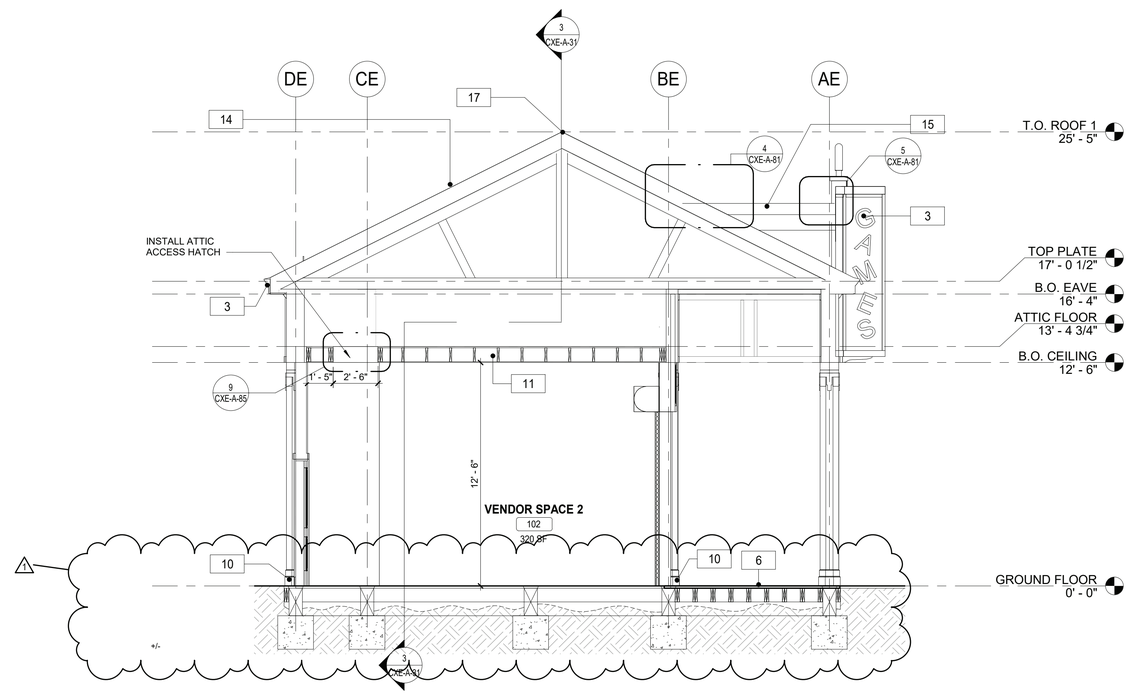

1 CXE - CROSS SECTION
1/4" = 1'-0"

FLOOR PLAN GENERAL NOTES

1. DIMENSIONS ARE TO FACE OF GYPSUM WALL BOARD, GRID LINES, OR CENTERLINE OF COLUMN. ALL ELEVATIONS ARE NOTED FROM FINISH FLOOR ELEVATIONS.
2. PROVIDE DRYWALL TRIM AT ALL EXPOSED EDGES AND CORNERS.
3. MINIMUM DIMENSION FROM ANY CORNER OR WALL TO FRAMING STUD AT DOOR JAMB OPENING SHALL BE 4" (U.N.O.).
4. PROVIDE METAL BLOCKING FOR ANY WALL MOUNTED EQUIPMENT OR ACCESSORIES. COORDINATE ALL BLOCKING REQUIREMENTS NECESSARY WITH OTHER TRADES.
5. THE GC SHALL VERIFY DIMENSIONS OF THE EXISTING SPACE AND OF ANY EXISTING CONSTRUCTION TO REMAIN BY ACTUAL MEASUREMENT BEFORE ANY WORK IS PERFORMED. IF ANY MEASUREMENTS DIFFER FROM DIMENSIONS SHOWN ON PLAN, GC IS TO NOTIFY THE ARCHITECT IMMEDIATELY. THE GC SHALL BE RESPONSIBLE FOR CORRECTING ANY AND ALL DISCREPANCIES FOUND AFTER THE WORK IS PERFORMED, AT NO ADDITIONAL EXPENSE TO THE OWNER.
6. GC TO VERIFY ALL FINISHED DIMENSIONS. FIELD CONDITIONS ALTERING ANY DIMENSIONS SHOULD BE BROUGHT TO THE ATTENTION OF THE OWNER AND ARCHITECT.
7. THE GC SHALL PROVIDE CAULK JOINTS WHERE GYP. BD. MEETS THE FLOOR OR ROOF DECK.
8. THE GC SHALL BE RESPONSIBLE FOR COORDINATING WITH OWNER ON ALL WORK TO BE PERFORMED BY THE OWNER. ANY POTENTIAL CONFLICTS OR DELAYS CAUSED BY THE OWNER'S SUBCONTRACTORS MUST BE DOCUMENTED IN WRITING TO THE OWNER BEFORE THE DELAY IS ACTUALLY INCURRED FOR IT TO BE CONSIDERED. OTHERWISE THE GC WILL BE RESPONSIBLE FOR MEETING THE SCHEDULE AS OUTLINED IN THE CONTRACT.
9. THE GC SHALL SUPPLY ALL MATERIAL, LABOR, AND COORDINATION REQUIRED FOR THE INSTALLATION OF ALL OWNER-SUPPLIED ITEMS AS DESCRIBED IN THE DOCUMENTS, U.N.O.
10. THE GC IS RESPONSIBLE FOR ALL FLOOR AND WALL PENETRATIONS FOR ELECTRICAL AND MECHANICAL WORK. ALL SUCH OPENING SHALL BE FRAMED AND REINFORCED.
11. FLOOR SURFACES SHALL BE LEVELED TO ASSURE SMOOTH SURFACE FOR FINISH FLOOR INSTALLATION. GC SHALL ALSO PAY SPECIAL ATTENTION THAT ALL WALL SURFACES ARE SMOOTH WHERE MURALS WILL BE DIRECTLY APPLIED TO WALL.
12. GC TO COORDINATE ALL UTILITY STUB-UPS AND LOCATION OF ALL EQUIPMENT PRIOR TO INSTALLING ANY ONE ITEM.
13. REFER TO SHEET CXE-A-80 FOR PARTITION TYPE INFORMATION.
14. PROVIDE PAINTED ACCESS PANELS IN WALLS & CEILING AT CONCEALED ITEMS SUCH AS VALVES, CONTROLS, SWITCHES OR ANY OTHER ITEMS THAT REQUIRES ACCESS. GC TO DETERMINE ACCESS PANEL LOCATION W/ ARCHITECT PRIOR TO INSTALLATION.

CONSTRUCTION KEYNOTES

3	REPLICATE TRIMS TO MATCH DOCUMENTED TRIM, LOCATIONS, SIZE AND SHAPE. FINISH PAINT COLORS AS SCHEDULED.
6	INSTALL NEW IPE DECKING. SEE STRUCTURAL FOR DETAILS.
10	PROVIDE AND INSTALL COLUMN ENCLOSURES. SEE DETAILS.
11	PROVIDE AND INSTALL T1-11 CEILING.
12	PROVIDE DROP CEILING AND ALL HANGERS/ ACCESSORIES.
14	PROVIDE NEW ASPHALT SHINGLE ROOFING,UNDERLAYMENT, AND REPLACE IN KIND EXISTING DECKING AS REQUIRED (COORDINATE WITH STRUCTURAL).
15	PROVIDE AND INSTALL SBS MODIFIED BITUMEN ROOFING AND UNDERLAYMENT.
17	PROVIDE AND INSTALL RIDGE VENT AT ROOF HIPS.
18	PROVIDE NEW WALL FINISHES. SEE FINISH PLANS.
67	NEW FASCIA BOARD AND SOFFIT.
80	NEW 3/4" PLYWOOD FLOOR

9/23/2022 10:18:11 AM

CONSULTANT INFORMATION
The LiRo Group
3 Aerial Way, Syosset, New York 11791
(516) 938-5476 www.liro.com

CONSULTANT SEAL
REGISTERED ARCHITECT ROBERT D. CONNORS 023280 STATE OF NEW YORK

REVISION NUMBER	DATE	MADE BY	APP'D BY	REVISION
1	09/21/22	EZ		BID ADDENDUM #3

RECORD DRAWING CERTIFICATION
☐ AS BUILT – CHANGES AS NOTED ☐ AS BUILT – NO CHANGES

CONTRACTOR
NAME
SIGNATURE
TITLE DATE

PROJECT COORDINATOR
NAME
SIGNATURE
TITLE DATE

WESTCHESTER COUNTY, NEW YORK
DEPARTMENT OF PUBLIC WORKS AND TRANSPORTATION
DIVISION OF ENGINEERING

INFRASTRUCTURE REHABILITATION PHASE 3
PLAYLAND PARK, RYE, NEW YORK
CROSS AXIS BUILDING E
CXE - BUILDING SECTIONS

CONTRACT NUMBER	22-523
SHEET NUMBER	CXE-A-31
DWG NO.:	269 of 664
SCALE:	As indicated
DATE:	08/23/2022
DPW FILE NUMBER	1-118-A-1018-1
REV. NO.	1

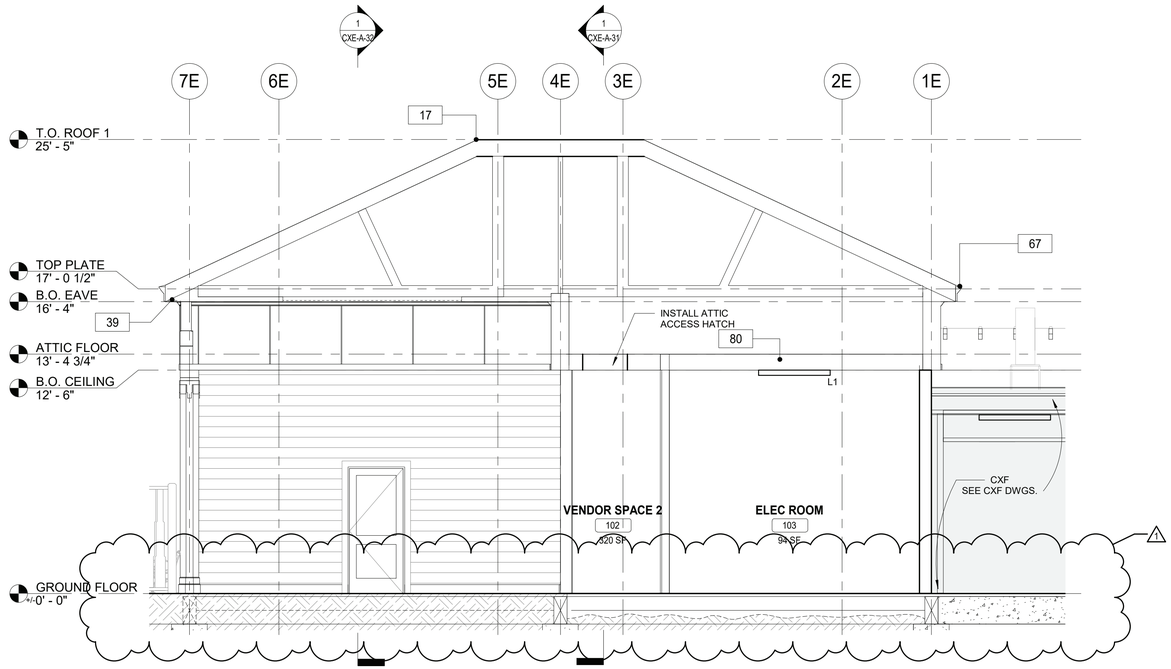

2 CXE - SECTION 2
1/4" = 1'-0"

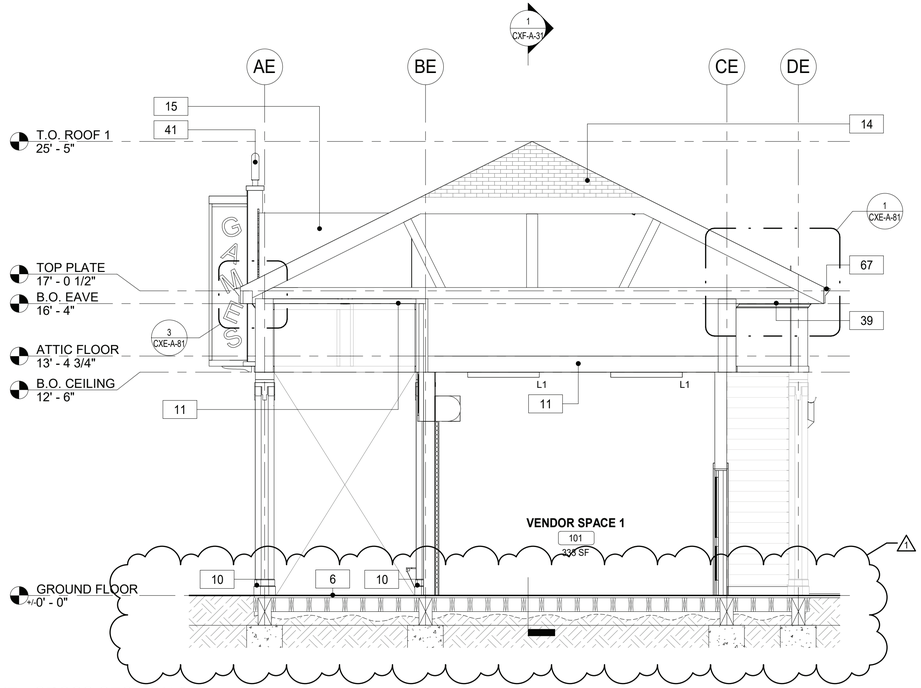

1 CXE - CROSS SECTION 3
1/4" = 1'-0"

FLOOR PLAN GENERAL NOTES

1. DIMENSIONS ARE TO FACE OF GYPSUM WALL BOARD, GRID LINES, OR CENTERLINE OF COLUMN. ALL ELEVATIONS ARE NOTED FROM FINISH FLOOR ELEVATIONS.
2. PROVIDE DRYWALL TRIM AT ALL EXPOSED EDGES AND CORNERS.
3. MINIMUM DIMENSION FROM ANY CORNER OR WALL TO FRAMING STUD AT DOOR JAMB OPENING SHALL BE 4" (U.N.O.).
4. PROVIDE METAL BLOCKING FOR ANY WALL MOUNTED EQUIPMENT OR ACCESSORIES. COORDINATE ALL BLOCKING REQUIREMENTS NECESSARY WITH OTHER TRADES.
5. THE GC SHALL VERIFY DIMENSIONS OF THE EXISTING SPACE AND OF ANY EXISTING CONSTRUCTION TO REMAIN BY ACTUAL MEASUREMENT BEFORE ANY WORK IS PERFORMED. IF ANY MEASUREMENTS DIFFER FROM DIMENSIONS SHOWN ON PLAN, GC IS TO NOTIFY THE ARCHITECT IMMEDIATELY. THE GC SHALL BE RESPONSIBLE FOR CORRECTING ANY AND ALL DISCREPANCIES FOUND AFTER THE WORK IS PERFORMED, AT NO ADDITIONAL EXPENSE TO THE OWNER.
6. GC TO VERIFY ALL FINISHED DIMENSIONS. FIELD CONDITIONS ALTERING ANY DIMENSIONS SHOULD BE BROUGHT TO THE ATTENTION OF THE OWNER AND ARCHITECT.
7. THE GC SHALL PROVIDE CAULK JOINTS WHERE GYP. BD. MEETS THE FLOOR OR ROOF DECK.
8. THE GC SHALL BE RESPONSIBLE FOR COORDINATING WITH OWNER ON ALL WORK TO BE PERFORMED BY THE OWNER. ANY POTENTIAL CONFLICTS OR DELAYS CAUSED BY THE OWNER'S SUBCONTRACTORS MUST BE DOCUMENTED IN WRITING TO THE OWNER BEFORE THE DELAY IS ACTUALLY INCURRED FOR IT TO BE CONSIDERED. OTHERWISE THE GC WILL BE RESPONSIBLE FOR MEETING THE SCHEDULE AS OUTLINED IN THE CONTRACT.
9. THE GC SHALL SUPPLY ALL MATERIAL, LABOR, AND COORDINATION REQUIRED FOR THE INSTALLATION OF ALL OWNER-SUPPLIED ITEMS AS DESCRIBED IN THE DOCUMENTS, U.N.O.
10. THE GC IS RESPONSIBLE FOR ALL FLOOR AND WALL PENETRATIONS FOR ELECTRICAL AND MECHANICAL WORK. ALL SUCH OPENING SHALL BE FRAMED AND REINFORCED.
11. FLOOR SURFACES SHALL BE LEVELED TO ASSURE SMOOTH SURFACE FOR FINISH FLOOR INSTALLATION. GC SHALL ALSO PAY SPECIAL ATTENTION THAT ALL WALL SURFACES ARE SMOOTH WHERE MURALS WILL BE DIRECTLY APPLIED TO WALL.
12. GC TO COORDINATE ALL UTILITY STUB-UPS AND LOCATION OF ALL EQUIPMENT PRIOR TO INSTALLING ANY ONE ITEM.
13. REFER TO SHEET CXE-A-80 FOR PARTITION TYPE INFORMATION.
14. PROVIDE PAINTED ACCESS PANELS IN WALLS & CEILING AT CONCEALED ITEMS SUCH AS VALVES, CONTROLS, SWITCHES OR ANY OTHER ITEMS THAT REQUIRES ACCESS. GC TO DETERMINE ACCESS PANEL LOCATION W/ ARCHITECT PRIOR TO INSTALLATION.

CONSTRUCTION KEYNOTES

6	INSTALL NEW IPE DECKING. SEE STRUCTURAL FOR DETAILS.
10	PROVIDE AND INSTALL COLUMN ENCLOSURES. SEE DETAILS.
11	PROVIDE AND INSTALL T1-11 CEILING.
14	PROVIDE NEW ASPHALT SHINGLE ROOFING,UNDERLAYMENT, AND REPLACE IN KIND EXISTING DECKING AS REQUIRED (COORDINATE WITH STRUCTURAL).
15	PROVIDE AND INSTALL SBS MODIFIED BITUMEN ROOFING AND UNDERLAYMENT.
17	PROVIDE AND INSTALL RIDGE VENT AT ROOF HIPS.
39	NEW SOFFIT WITH RECESSED LIGHTS AS INDICATED ON RCP
41	INSTALL REFURBISHED FINIAL LIGHTS (H6). ARCHITECT TO APPROVE FINISH AND ANY NEEDED MODIFICATIONS TO H6 LIGHTS DURING REFURBISHMENT.
67	NEW FASCIA BOARD AND SOFFIT.
80	NEW 3/4" PLYWOOD FLOOR

9/23/2022 10:18:14 AM

CONSULTANT INFORMATION
The LiRo Group
3 Aerial Way, Syosset, New York 11791
(516) 938-5476 www.liro.com

CONSULTANT SEAL
REGISTERED ARCHITECT ROBERT D. YOUNG JR. 023280 STATE OF NEW YORK

REVISION NUMBER	DATE	MADE BY	APP'D BY	REVISION
1	09/21/22	EZ		BID ADDENDUM #3

RECORD DRAWING CERTIFICATION
☐ AS BUILT – CHANGES AS NOTED ☐ AS BUILT – NO CHANGES

CONTRACTOR
NAME
SIGNATURE
TITLE DATE

PROJECT COORDINATOR
NAME
SIGNATURE
TITLE DATE

WESTCHESTER COUNTY, NEW YORK
DEPARTMENT OF PUBLIC WORKS AND TRANSPORTATION
DIVISION OF ENGINEERING

INFRASTRUCTURE REHABILITATION PHASE 3
PLAYLAND PARK, RYE, NEW YORK
CROSS AXIS BUILDING E
CXE - BUILDING SECTIONS

CONTRACT NUMBER 22-523
SHEET NUMBER **CXE-A-32**
DWG NO.: 270 of 664
SCALE: **1/4" = 1'-0"**
DATE: **08/23/2022**
DPW FILE NUMBER **1-118-A-1019-1**
REV. NO. **1**

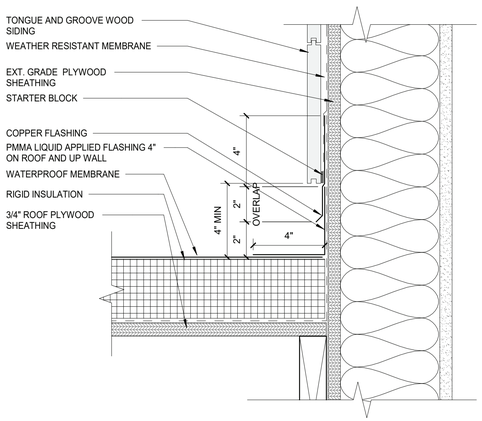

6 ROOF FLASHING DETAIL
3" = 1'-0"

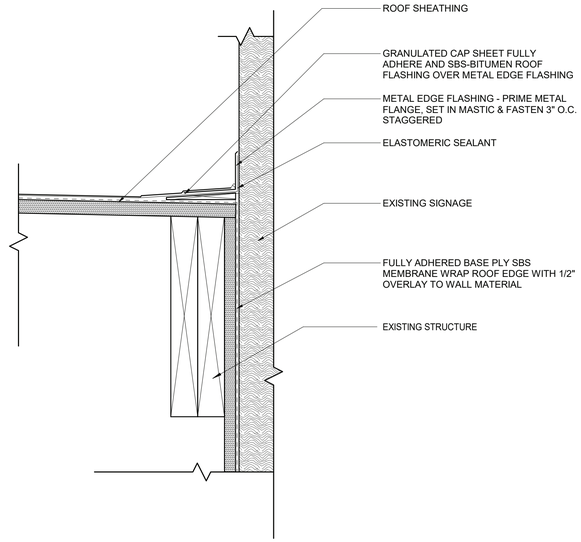

5 SBS ROOF EDGE AT SIGNAGE
3" = 1'-0"

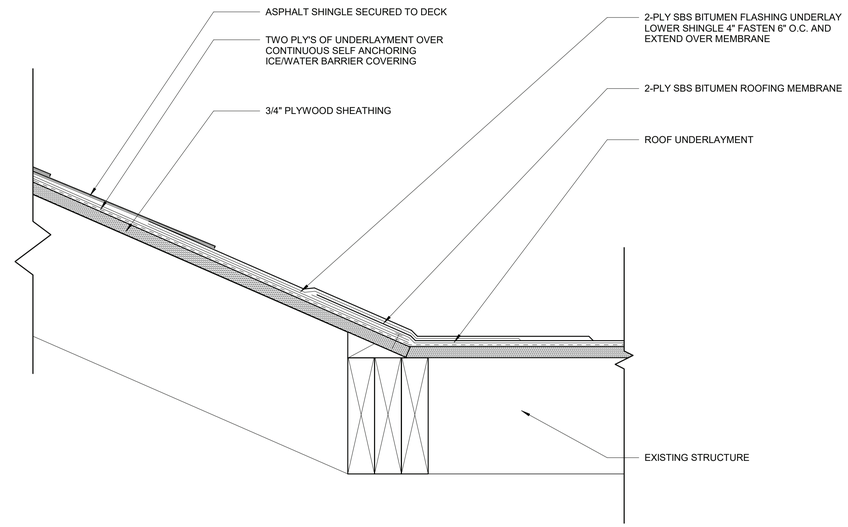

4 TYP. ASPHALT TO SBS ROOF CONNECTION
3" = 1'-0"

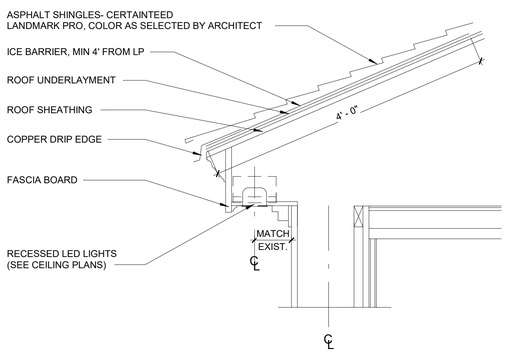

3 TYPICAL ROOF EAVE DETAIL
1" = 1'-0"

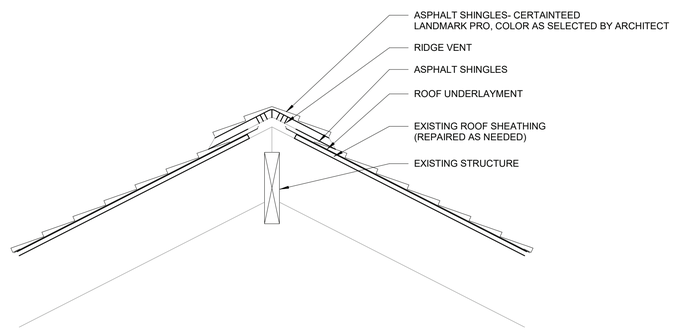

2 RIDGE VENT DETAIL
1" = 1'-0"

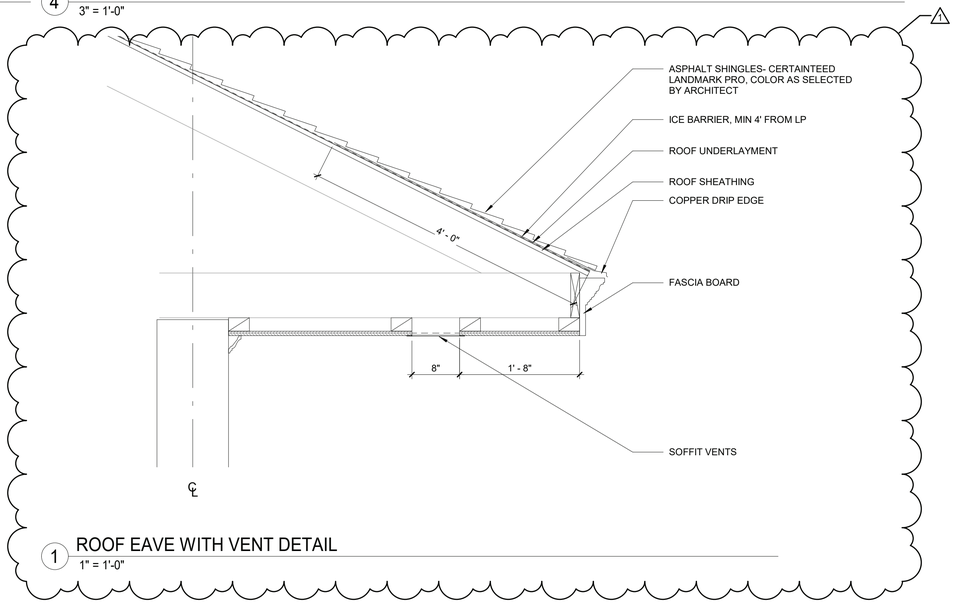

1 ROOF EAVE WITH VENT DETAIL
1" = 1'-0"

9/23/2022 10:18:19 AM

CONSULTANT INFORMATION

The LiRo Group
3 Aerial Way, Syosset, New York 11791
(516) 938-5476 www.liro.com

CONSULTANT SEAL

REGISTERED ARCHITECT ROBERT D. YOUNG JR. 023220 STATE OF NEW YORK

REVISION NUMBER	DATE	MADE BY	APP'D BY	REVISION
1	09/21/22	EZ		BID ADDENDUM #3

RECORD DRAWING CERTIFICATION

☐ AS BUILT – CHANGES AS NOTED ☐ AS BUILT – NO CHANGES

CONTRACTOR
NAME
SIGNATURE
TITLE DATE

PROJECT COORDINATOR
NAME
SIGNATURE
TITLE DATE

WESTCHESTER COUNTY, NEW YORK
DEPARTMENT OF PUBLIC WORKS AND TRANSPORTATION
DIVISION OF ENGINEERING

INFRASTRUCTURE REHABILITATION PHASE 3
PLAYLAND PARK, RYE, NEW YORK
CROSS AXIS BUILDING E
ROOF DETAILS

CONTRACT NUMBER 22-523
SHEET NUMBER **CXE-A-81**
DWG NO.: 274 of 664
SCALE: **As indicated**
DATE: **08/23/2022**
DPW FILE NUMBER **1-118-A-1023-1**
REV. NO. **1**

2020 NYS BC
711.2.6 UNUSABLE SPACE

IN 1-HOUR FIRE-RESISTANCE-RATED FLOOR/CEILING ASSEMBLIES, THE CEILING MEMBRANE IS NOT REQUIRED TO BE INSTALLED OVER UNUSABLE CRAWL SPACES. IN 1-HOUR FIRE-RESISTANCE-RATED ROOF ASSEMBLIES, THE FLOOR MEMBRANE IS NOT REQUIRED TO BE INSTALLED WHERE UNUSABLE ATTIC SPACE OCCURS ABOVE.

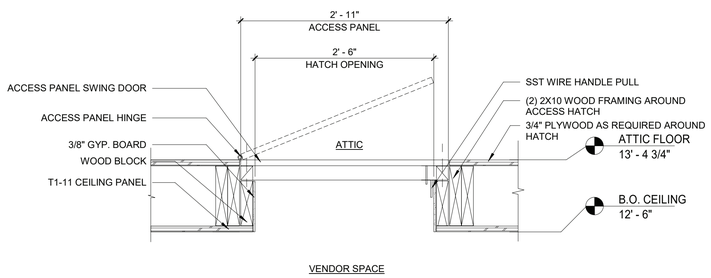

9 CXE - HATCH SECTION DETAIL
1" = 1'-0"

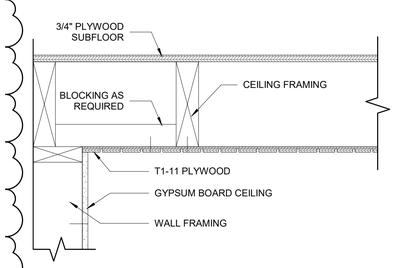

8 T1-11 FRAMING PARALLEL TO WALL
1 1/2" = 1'-0"

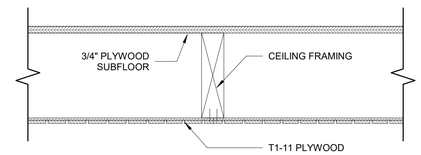

7 T1-11 FRAMING DETAIL
1 1/2" = 1'-0"

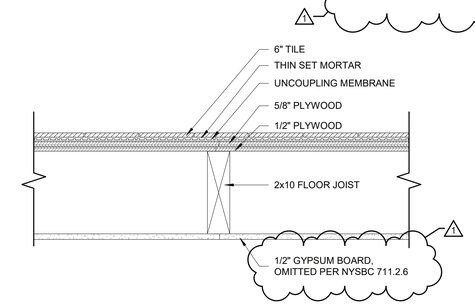

6 1 HOUR NON-COMBUSTILE FLOOR ASSEMBLY - BXUV.L501 - ANSI/UL 263
1 1/2" = 1'-0"

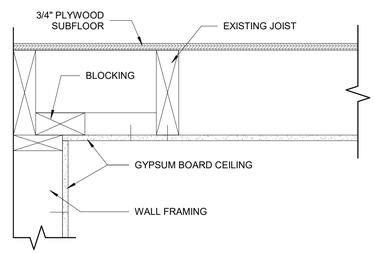

5 GYPSUM CEILING FRAMING PARALLEL TO WALL
1 1/2" = 1'-0"

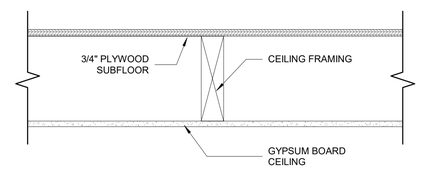

4 GYPSUM CEILING FRAMING DETAIL
1 1/2" = 1'-0"

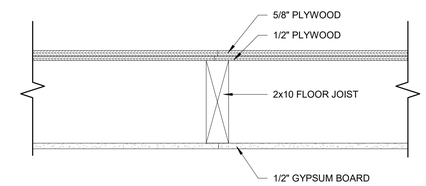

3 1 HOUR NON-COMBUSTILE FLOOR CEILING ASSEMBLY - BXUV.L501 - ANSI/UL 263
1 1/2" = 1'-0"

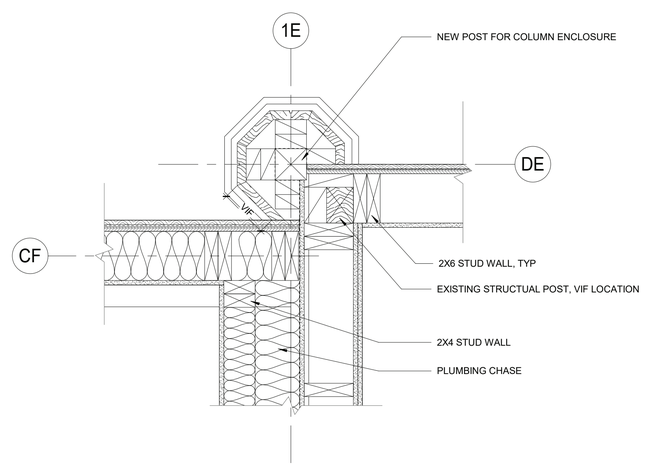

2 CXE PLAN DETAIL 2
1 1/2" = 1'-0"

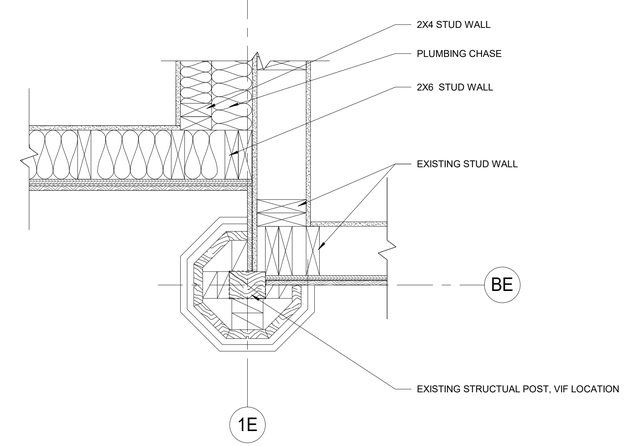

1 CXE PLAN DETAIL 1
1 1/2" = 1'-0"

9/23/2022 10:18:23 AM

CONSULTANT INFORMATION
The LiRo Group
3 Aerial Way, Syosset, New York 11791
(516) 938-5476 www.liro.com

CONSULTANT SEAL
REGISTERED ARCHITECT ROBERT D. TOMASULO 023283 STATE OF NEW YORK

REVISION NUMBER	DATE	MADE BY	APP'D BY	REVISION
1	09/21/22	EZ		BID ADDENDUM #3

RECORD DRAWING CERTIFICATION
☐ AS BUILT – CHANGES AS NOTED ☐ AS BUILT – NO CHANGES

CONTRACTOR
NAME
SIGNATURE
TITLE DATE

PROJECT COORDINATOR
NAME
SIGNATURE
TITLE DATE

WESTCHESTER COUNTY, NEW YORK
DEPARTMENT OF PUBLIC WORKS AND TRANSPORTATION
DIVISION OF ENGINEERING

INFRASTRUCTURE REHABILITATION PHASE 3
PLAYLAND PARK, RYE, NEW YORK
CROSS AXIS BUILDING E
DETAILS

CONTRACT NUMBER 22-523
SHEET NUMBER **CXE-A-85**
DWG NO.: 278 of 664
SCALE: **As indicated**
DATE: **08/23/2022**
DPW FILE NUMBER **1-118-A-1027-1**
REV. NO. **1**

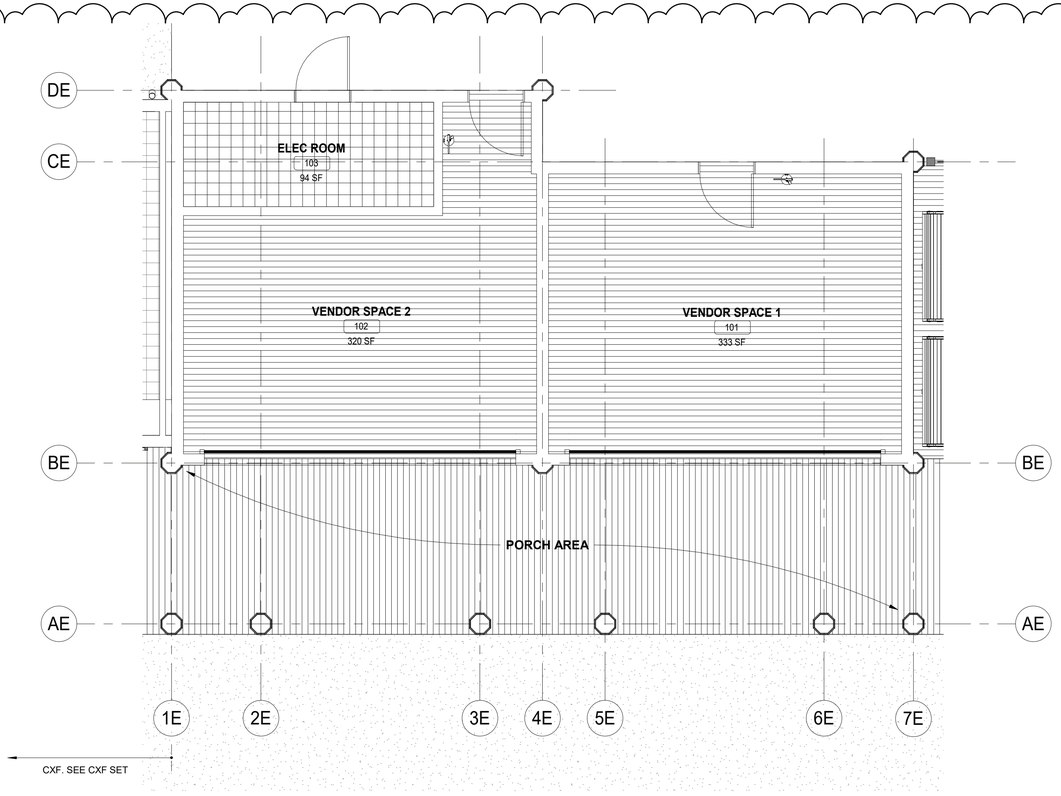

1 CXE FINISH PLAN
1/4" = 1'-0"

FINISH LEGEND:

NIC	ITEMS NOT IN CONTRACT
	TILE FLOORING
	TIMBER WOOD DECKING
	QUARRY TILE FLOORING

FINISH PLAN NOTES:

1. INDICATES TYPICAL FINISHES WITHIN ROOM, U.N.O. SEE SHEET CXE-A-91 FOR MATERIAL AND COLOR SCHEDULE.
2. ALL FLOORING COVERING MATERIALS TO BE INSTALLED PER MANUFACTURER'S STANDARD DETAILS AND SPECIFICATIONS. VERIFY WITH MANUFACTURER PRIOR INSTALLATION.
3. THE G.C. IS RESPONSIBLE FOR PROVIDING A SMOOTH LEVEL FLOOR SURFACE THAT MEETS MANUFACTURERS INSTALLATION SPECIFICATIONS PRIOR TO THE INSTALLATION OF ALL FLOORING MATERIALS.
4. THE FLOORING SUB-CONTRACTOR IS RESPONSIBLE FOR VERIFYING THAT THE CONDITION OF THE BASE FLOOR MEETS THE INSTALLATION SPECIFICATIONS PRIOR TO THE INSTALLATION OF THE NEW FLOORING MATERIAL.
5. ALL MATERIAL TRANSITIONS AN DOOR THRESHOLDS TO TAKE PLACE AT DOOR CENTERLINE U.N.O.
6. ALL DIMENSIONS ARE TO CENTERLINE OF TRANSITION BETWEEN FLOORING MATERIALS OR FINISH COLOR OF SAME MATERIAL. PLANS DO NOT SHOW ALL TILES OF SAME MATERIALS. CONTRACTOR TO START TILES AT POINT AS INDICATED ON PLANS.
7. THE GENERAL CONTRACTOR SHALL BE RESPONSIBLE FOR PROPER PREPARATION OF ALL NEW AND EXISTING SURFACES IN A SATISFACTORY MANNER TO RECEIVE NEW FINISHES. THIS INCLUDES THE DEMOLITION AND REMOVAL OF NECESSARY ITEMS. TOUCH- UP AND/ OR REFINISH OF SURFACES DAMAGED BY SUBSEQUENT WORK SHALL BE PERFORMED IN CONFORMANCE WITH THE MANUFACTURER'S RECOMMENDED INSTALLATION METHODS.
8. ALL SURFACES WHICH ARE TO RECEIVE A PAINT FINISH SHALL BE PRIMED AND FINISHED IN ACCORDANCE WITH THE WRITTEN SPECIFICATIONS.
9. ALL JOINTS IN GYPSUM BOARD WALLS SHALL BE FINISHED WITH PAPER TAPE 2" WIDE AND THREE COATS OF VINYL, DRY OR PREMIXED JOINT COMPOUND. ALL OUTSIDE CORNERS SHALL BE FINISHED WITH METAL CORNER BEADS, TAPED AND SPACKLED. ALL AREAS TO BE PAINTED SHALL BE SANDED SMOOTH. JUST PRIOR TO THE APPLICATION OF THE FIRST COAT OF PAINT, WIPE SANDED SURFACES WITH A DAMP CLOTH IN ORDER TO LAY FLAT ANY NAP WHICH MAY HAVE FORMED IN SANDING.
10. THE PAINT CONTRACTOR SHALL REMOVE ALL HARDWARE, SWITCH COVERS, ETC. PRIOR TO PAINTING AND BE RESPONSIBLE FOR THE REINSTALLATION AFTER PAINTING IS COMPLETED.
11. FINISH FLOORING INSTALLATION SHALL BE IN CONFORMANCE WITH THE MANUFACTURER'S RECOMMENDED INSTALLATION GUIDELINES. COORDINATE THE INSTALLATION WITH OTHER TRADES, SUCH AS ELECTRICAL.
12. ALL JOINTS BETWEEN MATERIALS TO BE TIGHT AND CONSTRUCTED IN A NEAT WORKMANLIKE MANNER.
13. ALL FINISHES SHALL BE TOUCHED UP TO CORRECT ANY IMPERFECTIONS AFTER INSTALLATION. FIXTURE CONTRACTOR SHALL PROVIDE TO THE GENERAL CONTRACTOR ALL MATERIALS FOR TOUCH UP WORK.
14. THE INTENT OF THE FINISH SPECIFICATIONS IS TO PROVIDE A SATISFACTORY FINISH TO ALL PARTS OF THE WORK. COVER ALL SURFACES THOROUGHLY. IF THE SPECIFIED NUMBER OF COATS DOES NOT ACCOMPLISH THE INTENT, THE GENERAL CONTRACTOR SHALL BE RESPONSIBLE FOR THE APPLICATION OF ADDITIONAL COATS OF THE SPECIFIED MATERIAL TO GIVE SATISFACTORY COVERAGE, AT NO ADDITIONAL COST TO OWNER.
15. CLEAN ALL GLASS SURFACES WITH LIQUID GLASS CLEANER AT PROJECT COMPLETION.
16. REFERENCE SPECIFICATIONS FOR COMPLETE FINISH DOCUMENTATION AND MANUFACTURER INSTALLATION AND MAINTENANCE DOCUMENTATION.

FINISH SCHEDULE

ROOM #	ROOM NAME	FLOORS	WALLS	CEILING	DOORS AND TRIM	WALL BASE
101	VENDOR SPACE 1	WD-1	P-13	P-13	SEE DOOR SCHEDULE (CXE-A-92)	WB-1
102	VENDOR SPACE 2	WD-1	P-13	P-13	SEE DOOR SCHEDULE (CXE-A-92)	WB-1
104	ELECTRICAL ROOM	T-1	P-13	P-13	SEE DOOR SCHEDULE (CXE-A-92)	WB-1
-	PORCH AREA	WD-2	-	P-10	-	-

PAINT	(FOR PAINT TYPE AND SYSTEMS, SEE SPECIFICATIONS)
P-13	**MFR:** BENJAMIN MOORE - **COLOR:** READY MIX WHITE
CEILING	
P-13	**MFR:** BENJAMIN MOORE - **COLOR:** READY MIX WHITE
P-10	**MFR:** BENJAMIN MOORE - **COLOR:** CAPE BLUE
FLOORING	
WD-1	2X6 WOOD BOARD TO MATCH IN KIND WITH EXISTING FLOOR
WD-2	IPE WOOD DECK
T-1	6X6 QUARRY TILE
WALL BASE	
WB-1	1 x 6 WOOD BASE
WB-2	QUARRY TILE BASE TO MATCH IN KIND WITH ADJACENT (N.I.C. SPACE)
THRESHOLD	(FOR THRESHOLD DETAILS, SEE CXE-A-92)
TR-1	EXTERIOR DOOR SILL

PAINTING SCHEDULE

KEY	COLOR	MANUFACTURER	REMARKS
P- 1	MYSTICAL POWERS #901	BENJAMIN MOORE	
P- 2	HERITAGE RED #HC-181	BENJAMIN MOORE	
P- 3	NEW YORK STATE OF MIND #805	BENJAMIN MOORE	
P- 4	LAZY SUNDAY #803	BENJAMIN MOORE	
P- 5	DEEP JUNGLE #595	BENJAMIN MOORE	
P- 6	LUCK OF THE IRISH #588	BENJAMIN MOORE	
P- 7	MAJOLICA GREEN #0013	SHERWIN WILLIAMS	
P- 8	ANTELOPE CANYON #125	BENJAMIN MOORE	
P- 9	FORSYTHIA #6907	SHERWIN WILLIAMS	
P- 10	CAPE BLUE #1642	BENJAMIN MOORE	
P- 11	WHITE SNOW #9541	SHERWIN WILLIAMS	
P- 12	TRICORN BLACK #6258	SHERWIN WILLIAMS	
P- 13	READY MIX WHITE	BENJAMIN MOORE	INTERIOR USE ONLY
P- 14	STUCCO PAINT TO MATCH P-1	KEIM	
P- 15	VAN DEUSEN BLUE #HC-156	BENJAMIN MOORE	
P- 16	#RAL9001	-	TYP. ROLL UP DOOR
P- 17	FLORIDA BEACHES #900	BENJAMIN MOORE	
P- 18	PIRATES COVE PEACH #903	BENJAMIN MOORE	
P- 19	JADITE #6459	SHERWIN WILLIAMS	
P- 20	DECISIVE YELLOW #6902	SHERWIN WILLIAMS	

9/23/2022 12:32:24 PM

CONSULTANT INFORMATION
The LiRo Group
3 Aerial Way, Syosset, New York 11791
(516) 938-5476 www.liro.com

CONSULTANT SEAL
REGISTERED ARCHITECT ROBERT D. CORNIGLIA 023299 STATE OF NEW YORK

REVISION NUMBER	DATE	MADE BY	APP'D BY	REVISION
1	09/21/22	EZ		BID ADDENDUM #3

RECORD DRAWING CERTIFICATION
☐ AS BUILT – CHANGES AS NOTED ☐ AS BUILT – NO CHANGES

CONTRACTOR
NAME
SIGNATURE
TITLE DATE

PROJECT COORDINATOR
NAME
SIGNATURE
TITLE DATE

WESTCHESTER COUNTY, NEW YORK
DEPARTMENT OF PUBLIC WORKS AND TRANSPORTATION
DIVISION OF ENGINEERING

INFRASTRUCTURE REHABILITATION PHASE 3
PLAYLAND PARK, RYE, NEW YORK
CROSS AXIS BUILDING E
FINISH PLAN AND FINISH SCHEDULE

CONTRACT NUMBER 22-523
SHEET NUMBER **CXE-A-91**
DWG NO.: 279 of 664
SCALE: **As indicated**
DATE: **08/23/2022**
DPW FILE NUMBER **1-118-A-1028-1**
REV. NO. **1**

DOOR SCHEDULE - CXE

BUILDING	DOOR NUMBER	DOOR						DOOR		FRAME				HDWR SET	REMARKS
		DOOR TYPE	WIDTH	HEIGHT	DOOR THICKNESS	DOOR MATERIAL	GLASS	EXTERIOR FINISH	INTERIOR FINISH	FRAME TYPE	MATERIAL	EXTERIOR	INTERIOR		
CXE	101A	C	17' - 5"	11' - 2"		ALUM	NO	PAINT, P-16	PAINT, P-16	-	-	-	-	4.0	
CXE	101B	B	3' - 0"	7' - 0"	1 3/4"	WOOD	NO	PAINT, P-1	PAINT, P-13	2	WD.	PAINT, P-10	PAINT, P-13	9.0	STOREFRONT LOCK SET, X-2 SIGN. WEATHER STRIP AT THREE SIDES OF EXTERIOR DOOR.
CXE	102A	C	17' - 5"	11' - 2"		ALUM	NO	PAINT, P-16	PAINT, P-16	-	-	-	-	4.0	
CXE	102B	B	3' - 0"	7' - 0"	1 3/4"	WOOD	NO	PAINT, P-1	PAINT, P-13	2	WD.	PAINT, P-10	PAINT, P-13	9.0	STOREFRONT LOCK SET, X-2 SIGN. WEATHER STRIP AT THREE SIDES OF EXTERIOR DOOR.
CXE	103A	B	3' - 0"	7' - 0"	1 3/4"	WOOD	NO	PAINT, P-1	PAINT, P-13	2	WD.	PAINT, P-10	PAINT, P-13	11.0	STOREFRONT LOCK SET, A-3 SIGN. WEATHER STRIP AT THREE SIDES OF EXTERIOR DOOR.

1

NOTE: GC TO CONFIRM DOOR SIZES IN FIELD PRIOR TO ORDERING

GENERAL DOOR SCHEDULE NOTES:

1. REFER TO CXE-A-92 SHEET FOR DOOR SILL & TRANSITION DETAILS. SILL TRANSITION INFORMATION IS INDICATED ON FINISH PLAN UNLESS OTHERWISE NOTED.
2. REFER TO SHEET CXE-A-91 FOR FINISH SCHEDULE AND LEGEND.
3. THE CONTRACTOR SHALL EXAMINE THE DRAWINGS, SCHEDULE AND SPECIFICATIONS AND FURNISH PROPER HARDWARE FOR ALL OPENINGS WHETHER LISTED OR NOT. COMPLETE SHOP DRAWINGS SHALL BE PROVIDED FOR APPROVAL PRIOR TO PURCHASE.
4. ALL EXIT DOORS SHALL BE OPENABLE FROM THE EGRESS SIDE WITHOUT THE USE OF A KEY OR SPECIAL KNOWLEDGE.
5. VERIFY DIMENSIONS OF EXISTING OPENINGS AND DOORS BEFORE ORDERING.
6. THE CONTRACTOR SHALL COORDINATE & VERIFY LOCATION OF RECESSED FLOOR CLOSERS, PIVOTS, ETC. WITH EXISTING FLOOR SLABS AND OTHER FIELD CONDITIONS PRIOR TO ORDERING TO ENSURE PROPER CLEARANCES & DEPTHS ARE ALLOWED.

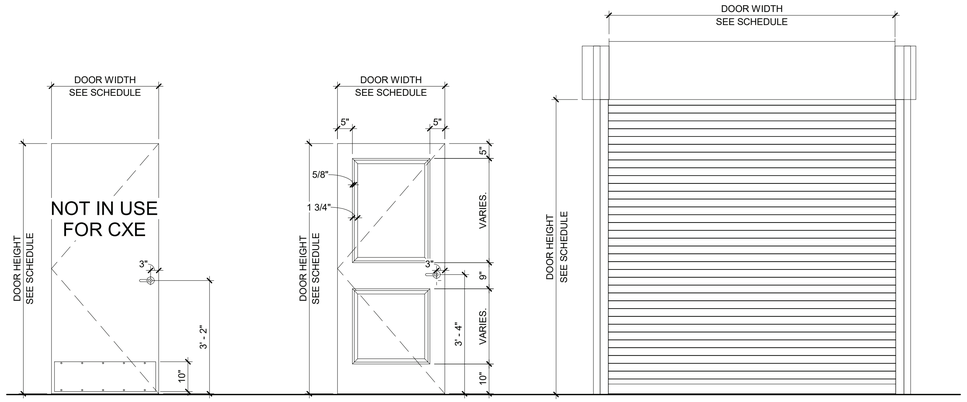

5 DOOR TYPES
1/2" = 1'-0"

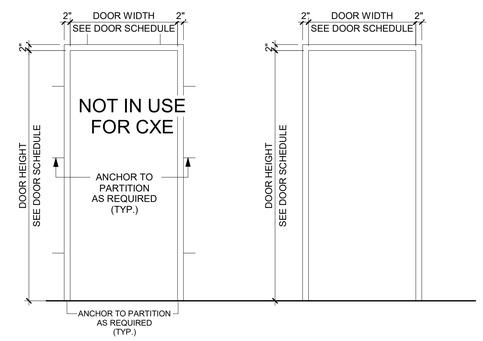

4 DOOR FRAME TYPES
1/2" = 1'-0"

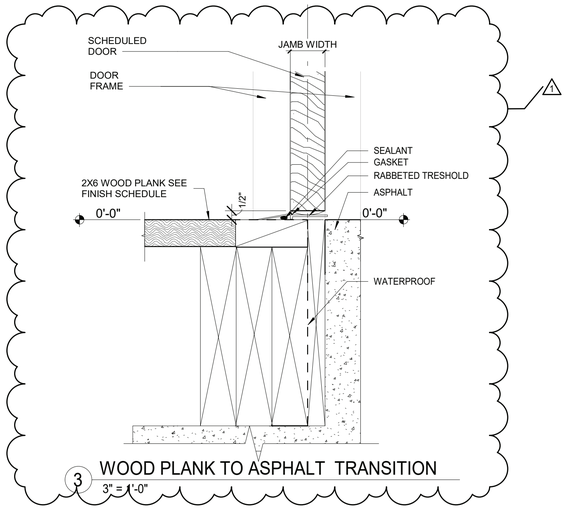

3 WOOD PLANK TO ASPHALT TRANSITION
3" = 1'-0"

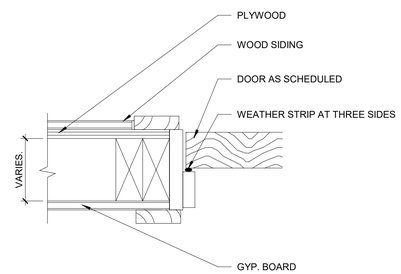

2 WOOD DOOR JAMB DETAIL.
3" = 1'-0"

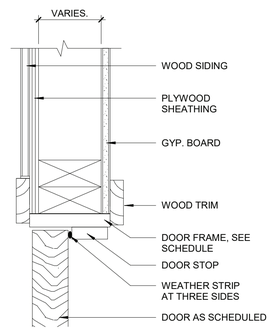

1 WOOD DOOR HEAD DETAIL.
3" = 1'-0"

9/23/2022 12:27:59 PM

CONSULTANT INFORMATION

The LiRo Group
3 Aerial Way, Syosset, New York 11791
(516) 938-5476 www.liro.com

CONSULTANT SEAL

REGISTERED ARCHITECT ROBERT D. YOUNG JR. 023220 STATE OF NEW YORK

REVISION NUMBER	DATE	MADE BY	APP'D BY	REVISION
1	09/21/22	EZ		BID ADDENDUM #3

RECORD DRAWING CERTIFICATION

☐ AS BUILT – CHANGES AS NOTED ☐ AS BUILT – NO CHANGES

CONTRACTOR
NAME
SIGNATURE
TITLE DATE

PROJECT COORDINATOR
NAME
SIGNATURE
TITLE DATE

WESTCHESTER COUNTY, NEW YORK
DEPARTMENT OF PUBLIC WORKS AND TRANSPORTATION
DIVISION OF ENGINEERING

INFRASTRUCTURE REHABILITATION PHASE 3
PLAYLAND PARK, RYE, NEW YORK
CROSS AXIS BUILDING E
DOOR SCHEDULE AND DOOR DETAILS

CONTRACT NUMBER	22-523
SHEET NUMBER	CXE-A-92
DWG NO.:	280 of 664
SCALE:	As indicated
DATE:	08/23/2022
DPW FILE NUMBER	1-118-A-1029-1
REV. NO.	1

FIRE PROTECTION SAFETY NOTES:

1. SPECIAL PRECAUTION SHALL BE TAKEN BY THE CONTRACTOR SO THAT EQUIPMENT OF THIS APPLICATION AND ITS INSTALLATION WILL NOT AFFECT THE FOLLOWING: EGRESS TO AND FROM THE BUILDING. FIRE SAFETY OR CREATE A FIRE HAZARD. STRUCTURAL SAFETY OF THE BUILDING. ACCUMULATION OF DUST AND DEBRIS. (THE CONTRACTOR SHALL LEAVE THE SITE BROOM CLEANED EACH DAY.)

FIRE PROTECTION GENERAL NOTES:

1. DIMENSIONS, LOCATIONS AND SIZES INDICATED ON THE PLANS AND THE ELEVATION ARE APPROXIMATE AND SHALL BE VERIFIED BY FIELD INSPECTION BY THE CONTRACTOR.

2. SOME EXISTING PIPE AND EQUIPMENT IS SHOWN FOR CLARIFICATION OF THIS CONTRACT, BUT MUST BE PROTECTED BY THE CONTRACTOR.

3. NO WORK SHALL BE INITIATED UNTIL A WORK PERMIT IS OBTAINED BY THE CONTRACTOR AND A SAFETY PLAN IS SUBMITTED AND IS APPROVED.

4. CONTRACTOR IS RESPONSIBLE FOR OBTAINING ALL PERMITS, EQUIPMENT USE PERMITS, ALL INSPECTION APPROVALS, AND LETTER OF COMPLETION FROM THE DEPARTMENT OF BUILDINGS FOR WORK UNDER THIS CONTRACT AS APPLICABLE.

5. ANY EXISTING MATERIALS, PIPING, ETC., NOT INDICATED FOR DEMOLITION WHICH ARE REMOVED BY THE CONTRACTOR IN ORDER TO INSTALL NEW WORK SHALL BE REINSTALLED BY THE CONTRACTOR. IF EXISTING WORK IS DAMAGED IT SHALL BE REPLACED AT THE CONTRACTOR'S EXPENSE. ALL SURFACES OR FINISHES THAT ARE DAMAGED OR OTHERWISE AFFECTED BY WORK OF THIS CONTRACT SHALL BE PATCHED, REPAIRED, PAINTED OR REPLACED TO MATCH THE PRE-EXISTING CONDITION AND THE NEW WORK.

6. CONTRACTOR MAY PROPOSE ALTERNATE ROUTING IN DIFFICULT AREAS WHERE REPLACEMENT IN KIND IS NOT PRACTICAL. ANY AND ALL ALTERNATE ROUTING IS SUBJECT TO PRIOR REVIEW AND APPROVAL BY THE ENGINEER.

7. A FIRE WATCH SHALL BE PROVIDED WHEN SPRINKLER COVERAGE IS IMPACTED TO MAINTAIN BUILDING OPERATIONS OR AS REQUIRED.

FIRE PROTECTION SYMBOL LIST

— — — — — FS DRY— —	NEW DRY SPRINKLER PIPING
— — — — — DRY(E) —	EXISTING TO REMAIN DRY SPRINKLER PIPING
○	NEW UPRIGHT SPRINKLER HEAD
○	EXISTING UPRIGHT SPRINKLER HEAD
●	NEW CONCEALED PENDENT SPRINKLER HEAD-ORDINARY TEMPERATURE
	SPRINKLER DRY PIPE VALVE
	FIRE HOSE CABINET
	SIAMESE CONNECTION
	CHECK VALVE
	CHECK VALVE W/ ALARM
	WATER MOTOR ALARM BELL
⊗	PIPE RISER
	PIPE DROP
	PIPE UP
	POINT OF CONNECTION
	POINT OF DISCONNECTION
	PREACTION 6" BELL
	SOLENOID VALVE
	OS & Y VALVE
#	REVISION SYMBOL
F8	REFER TO SUPPLEMENTAL FIGURE INDICATED BY NUMBER (I.E. F2 REFERS TO FIGURE 2)
XXX / X	EQUIPMENT TAG / EQUIPMENT NUMBER
X / X-XXX	DETAIL TAG/ CALL OUT TAG / FIRE PROTECTION SHEET NUMBER

SHOP DWGS/EQUIPMENT SUBMITTALS

THE CONTRACTOR MUST SUBMIT ANY EQUIPMENT ALTERNATES 2 WEEKS PRIOR TO BIDS DUE FOR REVIEW AND COMMENTS. ALTERNATES MUST BE ACCEPTED BY LIRO ENGINEERS, INC., THE ARCHITECT, AND THE OWNER PRIOR TO INCLUSION IN BID. THE CONTRACTOR IS RESPONSIBLE TO COORDINATE EQUIPMENT ALTERNATES WITH OTHER TRADES AND MAKE ADJUSTMENTS TO THE MECHANICAL SYSTEMS, AS REQUIRED, TO ACCOMMODATE THESE NEW ALTERNATES.

THE CONTRACTOR IS RESPONSIBLE TO SUBMIT ALL OF THE FOLLOWING ITEMS FOR REVIEW/APPROVAL BY NO MORE THAN 3 WEEKS AFTER THE CONTRACTOR'S CONTRACT/BID HAS BEEN AWARDED. ALL SUBMITTALS MUST BE SENT TOGETHER AS A **SINGLE PACKAGE** WITH MANUFACTURER'S SPECIFIC MODELS AND SPECIFICATIONS OUTLINED TO MATCH THE SCHEDULED REQUIREMENTS. EACH SUBMITTAL MUST BE LABELED WITH THE UNIT DESIGNATION USED WITHIN THIS DRAWING SET. IF THE SUBMITTAL PACKAGE IS FOUND TO BE INCOMPLETE UPON RECEIPT, THE PACKAGE WILL BE HELD AND WILL NOT BE REVIEWED UNTIL THE REMAINDER OF THE PACKAGE IS RECEIVED. SIX (6) HARD COPIES OF THE SUBMITTAL PACKAGE MUST BE SENT TO LIRO ENGINEERS, INC. DIGITAL SHOP DRAWING SUBMISSIONS ARE ACCEPTABLE.

SCOPE OF WORK:

1. THE INSTALLATION OF NEW DRY FS EQUIPMENT.

2. PROPOSED FIRE SPRINKLER HEAD LOCATIONS AND PIPING ARE AS NOTED ON PLANS. EXACT PIPING FROM THE FIRE SPRINKLER MAIN TO ALL HEADS IS TO BE COORDINATED AND HYDRAULICALLY CALCULATED BY THE F.S.C. & SUBMITTED TO THE ENGINEER FOR APPROVAL.

NOTE: THIS SCOPE OF WORK DESCRIPTION IS PROVIDED TO GIVE AN OVERALL "MACRO" DESCRIPTION OF THIS PROJECT. F.S.C. IS RESPONSIBLE TO REVIEW ALL ENGINEERING AND ARCHITECTURAL DRAWINGS AND VISIT THE SITE IF NEEDED, PRIOR TO SUBMISSION OF BID.

SPRINKLER HEAD SCHEDULE

	MANUFACTURER	MODEL	DESCRIPTION	K-FACTOR	QUANTITY
○	RELIABLE	F1FR	DRY ORDINARY UPRIGHT SPRINKLER HEAD	5.6	31

ABBREVIATION

ACV	ALARM CHECK VALVE
B.O.P.	BOTTOM OF PIPE
(E)	EXISTING TO REMAIN
F.S.C.	FIRE SPRINKLER CONTRACTOR
P.C	PLUMBING CONTRACTOR
TYP	TYPICAL
W/	WITH
NYS	NEW YORK STATE
U/P	UNDERGROUND PIPING
W	WATER

DRAWING NOTATIONS

	DRAWING NOTE TAB
	RISER DESIGNATION
	POINT OF CONNECTION
	POINT OF DISCONNECTION

DESIGN CRITERIA

1. AREA OF APPLICATION = 2535 SQ. FT. (DRY SYSTEM, ROOF PITCH >/= 2 IN 12)

2. OCCUPANCY CLASSIFICATION = ORDINARY HAZARD GROUP 1

3. MAXIMUM COVERAGE PER SPRINKLER HEAD = 130 SQ. FT

4. DESIGN DENSITY = 0.15 GPM/SQ. FT

5. "K" FACTOR OF SPRINKLER HEADS = 5.6

6. DESIGN CRITERIA REQUIREMENTS BASED ON:
   - 2020 BUILDING CODE OF NEW YORK STATE
   - 2016 NFPA 13

ORDINARY HAZARD PIPE SCHEDULE

STEEL		COPPER	
1IN.	2 SPRINKLERS	1IN.	2 SPRINKLERS
1 1/4 IN.	3 SPRINKLERS	1 1/4 IN.	3 SPRINKLERS
1 1/2IN.	5 SPRINKLERS	1 1/2IN.	5 SPRINKLERS
2 IN.	10 SPRINKLERS	2 IN.	12 SPRINKLERS
2 1/2 IN.	20 SPRINKLERS	2 1/2 IN.	25 SPRINKLERS
3 IN.	40 SPRINKLERS	3 IN.	45 SPRINKLERS
3 1/2 IN.	65 SPRINKLERS	3 1/2 IN.	75 SPRINKLERS
4 IN.	100 SPRINKLERS	4 IN.	115 SPRINKLERS
5 IN.	160 SPRINKLERS	5 IN.	180 SPRINKLERS
6 IN.	275 SPRINKLERS	6 IN.	300 SPRINKLERS
8 IN.	SEE SECTION 8.2	8 IN.	SEE SECTION 8.2

FOR SI UNITS, 1 IN. = 25.4 MM.

MAX DISTANCE BETWEEN HANGERS (FT.-IN.)

	NOMINAL PIPE SIZE (IN.)											
	3/4	1	1 1/4	1 1/2	2	2 1/2	3	3 1/2	4	5	6	8
STEEL PIPE EXCEPT THREADED LIGHTWALL	N/A	12-0	12-0	15-0	15-0	15-0	15-0	15-0	15-0	15-0	15-0	15-0
THREADED LIGHTWALL STEEL PIPE	N/A	12-0	12-0	12-0	12-0	12-0	12-0	N/A	N/A	N/A	N/A	N/A
COPPER TUBE	8-0	8-0	10-0	10-0	12-0	12-0	12-0	15-0	15-0	15-0	15-0	15-0

CODE REFERENCE

2020 NEW YORK STATE BUILDING CODE
2016 NFPA 13

FIRE PROTECTION NOTES

1. THE DRAWINGS SHOW THE LAYOUT OF THE SYSTEM AND INDICATE THE APPROXIMATE LOCATIONS OF EQUIPMENT AND PIPING. CONTRACTOR IS CAUTIONED NOT TO SCALE THE DRAWINGS. THE PIPING SHALL BE RUN APPROXIMATELY IN THE AREAS AS INDICATED ON THE DRAWINGS, [HOWEVER, TO THE ARRANGEMENT OF THE PIPING SYSTEMS AS MAY BE REFERENCED WITH WORK OF OTHER TRADES]. CONTRACTOR SHALL REVIEW AND COORDINATE WITH STRUCTURAL, ELECTRICAL AND MECHANICAL DRAWINGS. PARTITIONS, STRUCTURAL MEMBERS, ETC. ARE DESIGNED TO BE FURRED OR CLOSED IN AND TO INCLUDE ROUGH-IN PIPING. CONTRACTOR SHALL FURNISH ALL OFFSETS, ADDITIONAL FITTINGS, ETC. WHETHER SHOWN ON DRAWINGS OR NOT, AS REQUIRED TO MEET INSTALLATION CONDITIONS.

2. CONTRACTOR IS TO COMPLY WITH LATEST NFPA AND N.Y.S. CODES, AND COORDINATE HIS WORK WITH OTHER TRADES AND MAKE NECESSARY ADJUSTMENTS.

3. CONTRACTOR IS TO PREPARE SHOP DRAWINGS FOR ENGINEERS REVIEW AFTER MAKING A COMPLETE FIELD SURVEY.

4. CONTRACTOR IS TO REPORT ANY CONDITION REQUIRING CHANGES FROM PLANS TO ENGINEER PRIOR TO STARTING WORK.

5. BRANCH LINES AND MAINS (1 1/2" OR LESS) - SCHEDULE 40 FM APPROVED

6. BRANCH LINES AND MAINS (2" OR LARGER) - THINWALL (THICKNESS LESS THEN SCHEDULE 40 MORE THEN SCHEDULE 10 & FM APPROVED)

7. CONTRACTOR IS TO PERFORM A HYDROSTATIC TEST FOR 2 HRS. @ 200 PSI WITH NO LEAKAGE AND PROVIDE A TEST CERTIFICATE TO ENGINEER

8. CONTRACTOR IS TO EMPLOY EXPERIENCED WORKMEN WHO ARE TO FAMILIARIZE THEMSELVES WITH THE BUILDING AND OBSERVE SAFETY REQUIREMENTS.

9. CONTRACTOR TO ADJUST HEAD LOCATION TO COORDINATE WITH LIGHTS, DUCTS, ETC.

10. PERMIT FROM LOCAL AUTHORITY, TO BE OBTAINED BY CONTRACTOR.

11. ALL WORK TO BE APPROVED BY OWNERS ENGINEER, STATE AUTHORITIES HAVING JURISDICTION AND MUNICIPAL FIRE, PLUMBING, BUILDING AND WATER DEPARTMENTS.

12. U.L. AND/OR FM APPROVED EQUIPMENT TO BE USED.

13. WORK TO BE IN ACCORDANCE WITH MUNICIPAL WATER DEPT. RULES
.
14. SYSTEM IS TO BE MAINTAINED AND TESTED BY THE OWNER OR HIS AGENT IN ACCORDANCE WITH APPLICABLE LOCAL AND STATE CODES AND IN CONFORMANCE WITH NFPA 13A, LATEST EDITION.

15. IF BUILDING OCCUPANCY OR CONSTRUCTION CHANGES, THE SPRINKLER SYSTEM IS TO BE UPDATED ACCORDINGLY BY THE OWNER OR HIS AGENT.

16. CONTRACTOR IS TO NEATLY CUT AND PATCH IN A FIRST CLASS WORKMANLIKE MANNER, ALL HOLES AND PENETRATIONS IN WALLS, CEILINGS, FLOORS, PARTITIONS, ETC.

17. THE ENGINEER IS NOT RETAINED FOR SUPERVISION.

18. THE INSTALLATION OF THIS SYSTEM WILL REQUIRE THE CLOSING OF ONE OR MORE FIRE PROTECTION CONTROL VALVES. THESE VALVE CLOSURES SHOULD BE CLOSELY COORDINATED WITH THE OWNERS WHO SHOULD CONTACT THE LOCAL FIRE DEPARTMENT, INSURANCE INTERESTS, ETC. PRIOR TO VALVE CLOSURES.

19. ACTUAL DESIGN DENSITY MAY EXCEED STANDARDS, HOWEVER, IT IS A MINIMUM TO BE USED BY THE CONTRACTOR.

20. ALL ALARMS RELATING TO THE SPRINKLER SYSTEM SHOULD BE ACTIVATED UPON PLACING THE SPRINKLER SYSTEM IN SERVICE.

21. THE INSTALLATION COMPONENTS, SIZING, SPACING, MATERIALS LOCATION CLEARANCES, POSITION AND TYPE OF SYSTEM SHALL CONFORM TO NFPA 13 AND NYS UNIFORM FIRE PREVENTION BUILDING CODE LATEST EDITION.

22. SPRINKLERS SHALL BE PROTECTED AGAINST FREEZING AND INJURY AS PER NFPA CODE.

23. INSPECTION AND TESTS OF SPRINKLER SYSTEM SHALL BE CONDUCTED AS SPECIFIED IN NFPA CODE.

24. WATER SUPPLY TEST PIPES AND GAUGES SHALL BE PROVIDED AS SPECIFIED IN CHAPTER 2-9 OF NPPA 13.

25. PIPING SPECIFICATIONS, PIPE SCHEDULES, SYSTEM TEST PIPES, PROTECTION AGAINST CORROSION, DAMAGE FITTINGS, VALVES, HANGERS, SPRINKLERS, GUARDS AND SHIELDS SHALL BE IN ACCORDANCE WITH CHAPTER 3 AND CHAPTER 8 OF NFPA 13, LATEST EDITION. PIPING SHALL BE PAINTED TO PREVENT CORROSION.

26. STOCK OF EXTRA SPRINKLERS WILL BE FURNISHED AS PER CHAPTER 3 OF NFPA 13 (REQUIRED FOR EACH TEMPERATURE RATING).

27. SPRINKLER ALARMS WILL BE IN ACCORDANCE WITH NFPA 13.

28. SPACING, LOCATION AND POSITION OF SPRINKLERS SHALL BE IN ACCORDANCE WITH CHAPTER 4 OF NFPA 13.

29. ALL PIPING PASSING THROUGH WALLS SHALL COMPLY WITH NFPA FOR FIRE PROOFING.

30. DISTANCE OF SPRINKLERS FROM HEAT SOURCES SHALL BE IN ACCORDANCE WITH TABLE 3-16.6.3 OF NFPA 13.

31. PROVIDE WATER SUPPLY LETTER WITH FLOW TEST DATA.

32. ALL PIPES PASSING THROUGH FOUNDATION WALLS TO BE PROTECTED.

33. ALL VALVES SHALL BE IDENTIFIED AS REQUIRED BY NFPA 13.

34. DRAINAGE TO CONFORM TO CHAPTER 3-11 OF NFPA 13.

35. A ONE PIECE REDUCING FITTING OF GOOD DESIGN SHOULD BE USED WHEREVER A CHANGE IS MADE IN THE SIZE OF PIPE AS PER SECTION 3-12.2.7 OF NFPA 13.

36. ALL VALVES ON CONNECTIONS TO WATER SUPPLIES AND IN SUPPLY TO SPRINKLERS SHALL BE APPROVED O.S. &Y. OR APPROVED INDICATOR TYPE WITH TAMPER SWITCHES.

37. DRAIN VALVES AND TEST VALVES SHALL BE APPROVED TYPE AS PER SECTION 3-14.1.2 OF NFPA 13.

38. HANGERS SHALL BE OF A TYPE APPROVED FOR USE WITH THE PIPE OR TUBE INVOLVED, SPRINKLER PIPING SHOULD BE SUPPORTED BY ADJUSTABLE HANGERS PER NFPA 13, SECTION 3-15.

39. PROVISIONS SHOULD BE MADE TO FACILITATE FLUSHING SYSTEM PIPING BY PROVIDING FLUSHING CONNECTIONS CONSISTING OF A CAPPED NIPPLE 4" LONG ON THE END OF THE CROSS MAIN, AS PER SECTION 3- 8.2 OF NFPA 13.

40. SPRINKLER SHALL BE AN APPROVED TYPE AS PER SECTION 3-16 OF NFPA 13.

41. TEMPERATURE RATING SHALL COMPLY WITH SEC. 3-16.6 OF NFPA 13.

42. CLEARANCES BETWEEN SPRINKLERS AND STORAGE OR PARTITIONS AS PER NFPA 13, SECTION 4-2.5

43. SPACING AND LOCATION OF SPRINKLER SHALL COMPLY WITH CHAPTER 4 NFPA 13.

44. CONTRACTOR TO COORDINATE HIS WORK WITH OTHER TRADES.

45. ONLY EXPERIENCED SPRINKLER MECHANICS TO WORK ON THE SYSTEM.

46. ALL PIPING TO BE A MINIMUM OF 1" UNLESS OTHERWISE NOTED.

47. PROVIDE SHOP DRAWINGS WITH HYDRAULIC CALCULATIONS FOR REVIEW TO LOCAL FIRE MARSHALL AND INSURANCE UNDERWRITER AND ENGINEER FOR APPROVAL PRIOR TO INSTALLATION.

48. ALL FIRE PROTECTION EQUIPMENT SHALL BE INSTALLED PER MANUFACTURER'S REQUIREMENTS/SPECIFICATIONS.

49. ALL FIRE PROTECTION EQUIPMENT SHALL BE MOUNTED ON MINIMUM 6" HIGH CONCRETE PAD UNLESS OTHERWISE NOTED (PAVER AND CINDER BLOCK IS NOT ACCEPTABLE).

50. PERMIT IS REQUIRED PRIOR TO INSTALLATION, TO INCLUDE SIGNED AND SEALED SHOP DRAWINGS, HYDRAULIC CALCULATION, SHOP DRAWINGS, MANUFACTURERS INFORMATION ON HEADS AND APPLIANCES, COMPLIANCE WITH NFPA 13 AND SECTION 903 2020 NYSBC/FC.

FIRE PROTECTION DRAWING LIST

SHEET NO.	SHEET NAME	REVISON NO.	REVISION DATE
CXE-FP-01	FIRE PROTECTION NOTES, SYMBOLS, ABBREVIATIONS, AND DRAWING LIST	0	-
CXE-FP-11	FIRE PROTECTION GROUND FLOOR AND ATTIC DEMOLITION PLAN	0	-
CXE-FP-21	FIRE PROTECTION GROUND FLOOR AND ATTIC CONSTRUCTION RCP	0	-
CXE-FP-81	FIRE PROTECTION DETAILS	0	-

CONSULTANT INFORMATION
LiRo Engineers, Inc.
A LiRo Group Company
Syosset, N.Y. 516-214-8157[T]

CONSULTANT SEAL
STATE OF NEW YORK · FRANK F. DUSSE · LICENSED PROFESSIONAL ENGINEER · No. 090114

REVISION NUMBER	DATE	MADE BY	APP'D BY	REVISION
1	09/21/22			BID ADDENDUM # 3

RECORD DRAWING CERTIFICATION
☐ AS BUILT – CHANGES AS NOTED ☐ AS BUILT – NO CHANGES
CONTRACTOR: NAME / SIGNATURE / TITLE / DATE
PROJECT COORDINATOR: NAME / SIGNATURE / TITLE / DATE

WESTCHESTER COUNTY, NEW YORK
DEPARTMENT OF PUBLIC WORKS AND TRANSPORTATION
DIVISION OF ENGINEERING

INFRASTRUCTURE REHABILITATION - PHASE 3
PLAYLAND PARK, RYE, NEW YORK
CROSS AXIS BUILDING E
FIRE PROTECTION NOTES, SYMBOLS, ABBREVIATIONS & DWG LIST

CONTRACT NUMBER: 22-523
SHEET NUMBER: CXE-FP-01
DWG NO.: 289 of 664
SCALE: AS INDICATED
DATE: 08/23/2022
DPW FILE NUMBER: 1-118-FP-1038-1
REV. NO.: 1

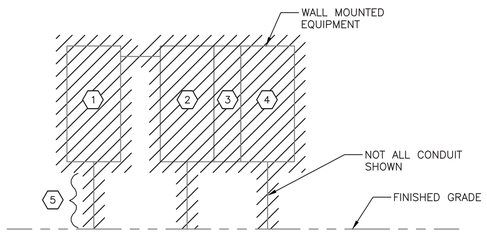

FRONT ELEVATION
N.T.S.

NOTES:

1. FOR ADDITIONAL NOTES, ABBREVIATIONS AND SYMBOLS, SEE DRAWING GE–E–01.
2. CONTRACTOR SHALL DISCONNECT AND REMOVE FOUR EXISTING PANELBOARDS LOCATED ALONG THE SOUTHERN EXTERIOR WALL.
3. ACTUAL FEEDER CIRCUITS ARE UNKNOWN AT THIS TIME. CONTRACTOR SHALL TRACE OUT ALL FEEDER CIRCUITS (UNDERGROUND), VERIFY POWER SOURCE (EITHER FROM LOCAL TRANSFORMER OR FROM QUAD #4 ELECTRICAL BUILDING. BE ADVISED PANELS ARE 20 FEET FROM TRANSFORMER AND 35 FEET FROM BUILDING. ONCE VERIFIED, ALL FEEDER CIRCUITS SHALL BE DISCONNECTED AND REMOVED. UNLESS NOTED OTHERWISE, ABANDON UNDERGROUND CONDUIT IN PLACE.
4. THERE ARE APPROXIMATELY 25 DISTRIBUTION CIRCUITS ASSOCIATED WITH EXISTING EXTERIOR PANELBOARDS. 90% ARE NO LONGER USED. HOWEVER, THERE COULD BE "LIVE" CIRCUITS THAT WILL NEED TO BE REPOWERED VIA NEW ELECTRICAL PANELS LOCATED IN THE NEW ELECTRICAL CLOSET. SEE DRAWING CXE–E–05 FOR ADDITIONAL INFORMATION.
5. CONTRACTOR SHALL DISCONNECT AND REMOVE ALL EXPOSED CONDUIT, JUNCTION BOXES, LIGHTS, ETC., MOUNTED TO BUILDING. ASSUME 100' OF CONDUIT.
6. CONTRACTOR IS ADVISED THAT THIS BUILDING DEMOLITION SHALL BE COORDINATED WITH BUILDING CXF.

KEY NOTES:

1. DISCONNECT AND REMOVE 250A–208Y/120 VOLT PANELBOARD
2. DISCONNECT AND REMOVE 200A–240 VOLT (DELTA) PANELBOARD.
3. DISCONNECT AND REMOVE SMALL PANEL AND ASSOCIATED RECEPTACLE. RATINGS UNKNOWN.
4. DISCONNECT AND REMOVE 400A–208Y/120 VOLT PANELBOARD.
5. ± 18 DISTRIBUTION CIRCUITS AND WIRE TO BE DISCONNECTED AND REMOVED. REMOVE CONDUITS TO 18" BELOW GROUND.

Drawing Name: G:\SavinAutocad\2060\25-Playland-Mega-3\E\CXEE-1001.dwg
Projectname: 211001F02 Comments: ----
Printed by: MGodby Date: 21 September 2022 1:32 PM Designed by: ----
Rev#:
Xrefs: [TB_24X36_WestchesterCo_3.dwg] [TSG-SVLOGO.dwg] [BCRE-A-04.dwg] [BCRE-101.dwg]

CONSULTANT INFORMATION

Savin Engineers, P.C.

STATE OF NEW YORK · STEVEN A. MARTINO · 083931 · LICENSED PROFESSIONAL ENGINEER

REVISION NUMBER	DATE	MADE BY	APP'D BY	REVISION
1	09/21/2022	RKC	SM	BID ADDENDUM #3

RECORD DRAWING CERTIFICATION

☐ AS BUILT – CHANGES AS NOTED ☐ AS BUILT – NO CHANGES

CONTRACTOR
NAME
SIGNATURE
TITLE DATE

PROJECT COORDINATOR
NAME
SIGNATURE
TITLE DATE

WESTCHESTER COUNTY, NEW YORK
DEPARTMENT OF PUBLIC WORKS AND TRANSPORTATION
DIVISION OF ENGINEERING

INFRASTRUCTURE REHABILITATION - PHASE 3
PLAYLAND PARK, RYE, NEW YORK
CROSS AXIS BUILDING E
ONE LINE DIAGRAM - DEMOLITION

CONTRACT NUMBER	22-523
SHEET NUMBER	CXE-E-01
DWG NO.:	295 of 664
SCALE:	AS SHOWN
DATE:	8/23/2022
DPW FILE NUMBER	1-118-E-1044-1
REV. NO.	1

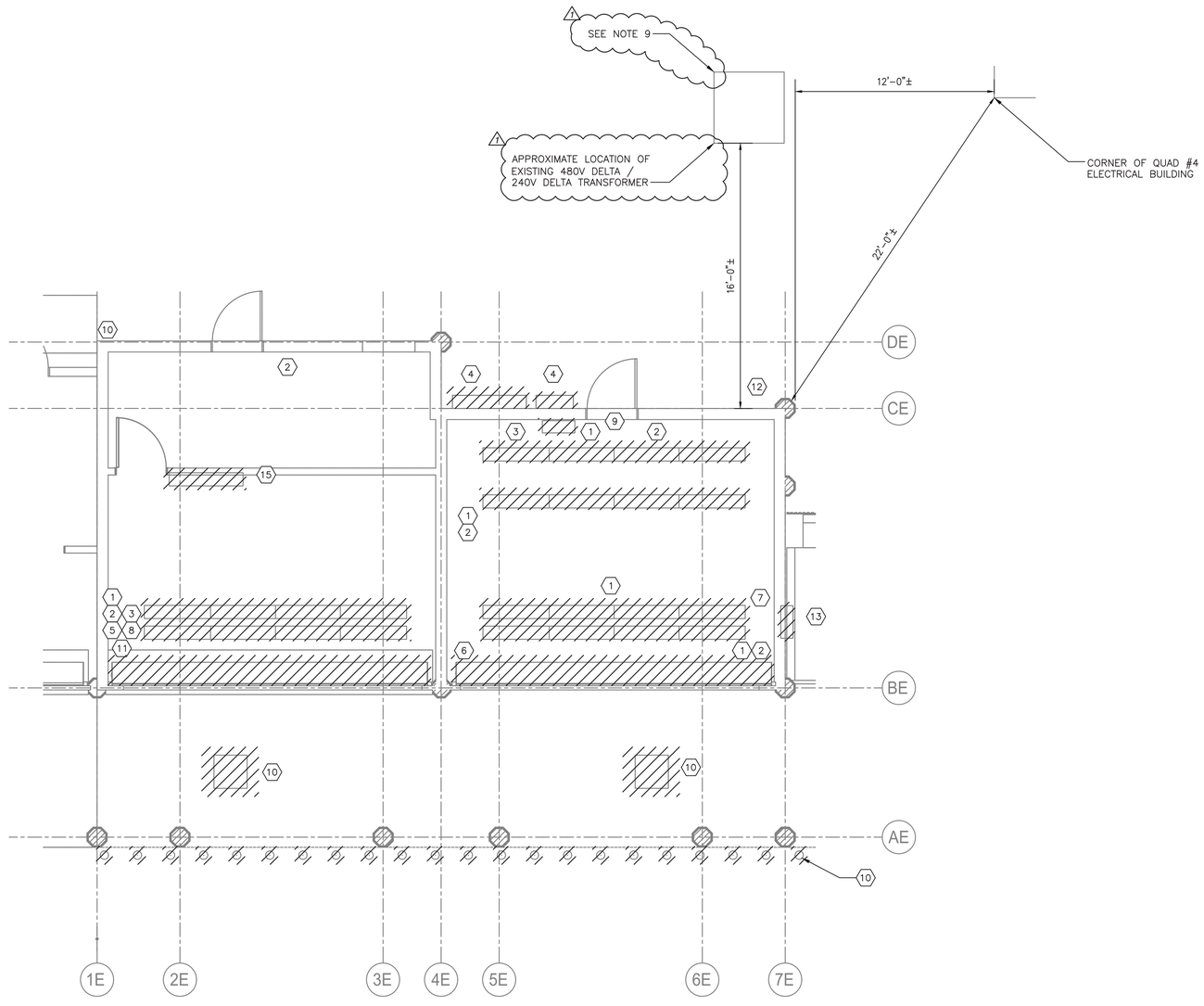

B GROUND FLOOR DEMOLITION POWER AND LIGHTING PLAN

SCALE: 1/4" = 1'-0"

NOTES:

1. FOR ADDITIONAL NOTES, ABBREVIATIONS AND SYMBOLS, SEE DRAWING GE-E-01.
2. ALL REMOVED EQUIPMENT SHALL BE RETURNED TO OWNER UPON REQUEST. OTHERWISE ALL REMOVED MATERIAL SHALL BE LEGALLY DISPOSED OF.
3. DISCONNECT AND REMOVE ALL ELECTRICAL EQUIPMENT, LIGHTING, POWER CONDUIT AND WIRE BACK TO SOURCE. REMOVE ALL PANELBOARDS.
4. ALL ASSOCIATED CIRCUITING TO BE DEMOLISHED FOR RECEPTACLES AND LIGHTING FIXTURES SHALL ASSUME TO BE 3/4" CONDUIT WITH 2#12 & 1#12G, UNLESS OTHERWISE NOTED.
5. CONTRACTOR SHALL DEMOLISH ALL EXISTING JUNCTION BOXES AND ALL ASSOCIATED CONDUITS, WIRES AND APPURTENANCES. FOR BIDDING PURPOSES ASSUME 600 FEET 1"C, 3#12 & 1#12G.
6. ARRAY OF FOUR EXISTING, POOR CONDITION POWER PANELS TO BE DISCONNECTED AND REMOVED. SEE DRAWING CXE-E-01 FOR MORE INFORMATION.
7. MOTOR FOR ROLL-UP DOOR. CONTRACTOR SHALL DISCONNECT AND REMOVE THE MOTOR AND ALL ASSOCIATED CONDUIT AND WIRE BACK TO SOURCE.
8. DISPOSITION OF EXISTING CCTV/DATA/COMMUNICATIONS SHALL BE BY OTHERS. THIS INCLUDES BOTH INCOMING AND OUTGOING CONDUIT AND CABLES. REFER TO ARCHITECTURAL DRAWINGS.
9. EXISTING TRANSFORMER IS NOT INCLUDED IN THIS PROJECT. LOCATION AND DIMENSIONS SHOWN FOR COORDINATION WITH NEW ELECTRICAL EQUIPMENT. SEE DRAWING CXE-E-03 FOR MORE INFORMATION.

DEMOLITION LEGEND ⬡	
1	RECEPTACLE
2	LIGHT SWITCH
3	24 CKT PANEL "CR-AX3"
4	EXISITNG PANEL ARRAY (SEE NOTE 6)
5	4 CKT PUSHMATIC PANEL
6	ROLLING DOOR MOTOR (SEE NOTE 7)
7	4 CKT PUSHMATIC PANEL (RECESSED IN WALL)
8	GENERAL DUTY SAFETY SWITCH (30A)
9	EXHAUST FAN
10	EXTERIOR LIGHT
11	12 CIRCUIT PANEL (BASKETBALL GAME)
12	COMMUNICATIONS BOX (SEE NOTE 8)
13	FLOODLIGHT

0 4' 8'
SCALE: 1/4" = 1'-0"

CONSULTANT INFORMATION

Savin Engineers, P.C.

CONSULTANT SEAL

STATE OF NEW YORK · STEVEN A. MARTINO · 089691 · LICENSED PROFESSIONAL ENGINEER

REVISION NUMBER	DATE	MADE BY	APP'D BY	REVISION
1	09/21/2022	RKC	SM	BID ADDENDUM #3

RECORD DRAWING CERTIFICATION

☐ AS BUILT – CHANGES AS NOTED ☐ AS BUILT – NO CHANGES

CONTRACTOR: NAME / SIGNATURE / TITLE / DATE

PROJECT COORDINATOR: NAME / SIGNATURE / TITLE / DATE

WESTCHESTER COUNTY, NEW YORK
DEPARTMENT OF PUBLIC WORKS AND TRANSPORTATION
DIVISION OF ENGINEERING

INFRASTRUCTURE REHABILITATION - PHASE 3
PLAYLAND PARK, RYE, NEW YORK
CROSS AXIS BUILDING E
GROUND FLOOR DEMOLITION - POWER AND LIGHTING PLAN

CONTRACT NUMBER	22-523
SHEET NUMBER	CXE-E-02
DWG NO.:	296 of 664
SCALE:	AS SHOWN
DATE:	8/23/2022
DPW FILE NUMBER	1-118-E-1045-1
REV. NO.	1

Drawing Name: G:\SavinAutocad\2060\25-Playland-Mega-3\E\CXEE-1002.dwg
Rev#: Projectname: 211001F02 Comments: ----
Printed by: MGodby Date: 21 September 2022 1:32 PM Designed by: ----
Xrefs: [TB_24X36_WestchesterCo_3.dwg] [TSG-SVLOGO.dwg] [CXE-A-01.dwg] [CXE-E-1005.dwg]

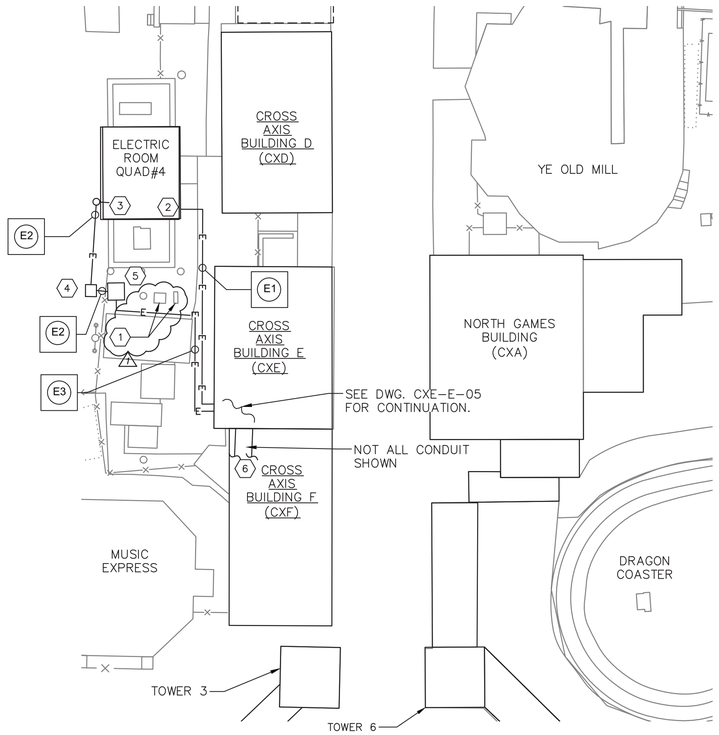

A CXE-E-03 PARTIAL SITE PLAN
SCALE: 1" = 20"

NOTES:

1. FOR ADDITIONAL NOTES, ABBREVIATIONS AND SYMBOLS, SEE DRAWING GE-E-01.
2. FOR PANEL SCHEDULES, SEE DRAWING CXE-E-09.
3. CONTRACTOR SHALL COORDINATE WITH THE CONSTRUCTION MANAGER AND STANDARD AMUSEMENTS FOR EXACT LOCATION OF NEW CXF TRANSFORMER AND ASSOCIATED DISCONNECT SWITCH.

KEY NOTES:

1 LOCATION OF EXISTING EXTERIOR, PAD-MOUNTED ELECTRICAL EQUIPMENT PREVIOUSLY USED FOR "SPIDER" RIDE AND X-AXIS POWER.

2 INTERNAL TO QUAD #4 ELECTRICAL ROOM, EXTEND WITH NEW 2" CONDUIT WITH 4#2 & 1#8 GND TO 208Y/120 VOLT SWITCHBOARD. MODIFY EXISTING SWITCHBOARD TO ACCEPT A 100 AMP, 3 POLE CIRCUIT BREAKER FOR NEW PANEL CXE-PP1.

3 INTERNAL TO QUAD #4 ELECTRICAL ROOM, EXTEND WITH NEW 3 1/2" CONDUIT WITH 3-350 KCMIL & 1#4 GND TO NEW 480Y/277 VOLT SWITCHBOARD. MODIFY EXISTING SWITCHBOARD TO ACCEPT A 300 AMP, 3 POLE CIRCUIT BREAKER FOR NEW PANEL CXF-PP1.

4 400 AMP FUSED DISCONNECT SWITCH (FUSED AT 300 AMPS) IN NEMA 3R ENCLOSURE. PROVIDE CONCRETE PAD FOUNDATION AND CHANNEL FRAME SUPPORT. CHANNEL SHALL BE STAINLESS STEEL (304).

5 225 KVA CXF TRANSFORMER WITH 480 VOLT DELTA PRIMARY AND 208Y/120 VOLT, 3 PHASE, 4-WIRE SECONDARY. TRANSFORMER SHALL BE SUITABLE FOR OUTDOOR USE. MOUNT TRANSFORMER ON PROPERLY SIZED CONCRETE HOUSEKEEPING PAD. PAD SHALL BE MINIMUM 8" THICK AND 4000 PSI CONCRETE.

6 CONTRACTOR IS ADVISED THAT EXISTING PANELS PP-TW2 & 3, TW2-RP AND TW3-RP SHALL BE RELOCATED FROM THE CXF BUILDING. EXTENDING CONDUITS SHALL RUN UNDER THE NEW CXF STRUCTURE AND STUB UP INTO THE NEW ELECTRICAL ROOM LOCATED IN THE CXE BUILDING. SEE CROSS AXIS BUILDING F ELECTRICAL DRAWINGS.

DUCTBANK SCHEDULE

NAME	FROM	TO	CONDUIT SIZE	CABLE	REMARKS
E1	208Y/120V SWITCHBOARD	PANEL CXE-PP1	2"C	4#2 & 1#8 GND	
E2	480Y/277V SWITCHBOARD	CXF TRANSFORMER	3 1/2"C	3-350 KCMIL & 1#4 GND	
E3	CXF TRANSFORMER	PANEL CXF-PP1	2 SETS OF 3 1/2"C	4-350KCMIL & 1#2 GND (EACH)	VIA DISCONNECT SWITCH

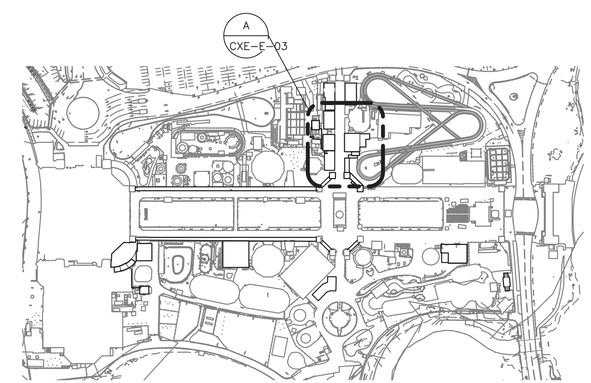

1 KEY PLAN
SCALE: 1" = 200'

0 20' 40'
SCALE: 1" = 20'-0"

0 200' 400'
SCALE: 1" = 200'-0"

CONSULTANT INFORMATION

Savin Engineers, P.C.

CONSULTANT SEAL

STATE OF NEW YORK · STEVEN A. MARTINO · 083631 · LICENSED PROFESSIONAL ENGINEER

REVISION NUMBER	DATE	MADE BY	APP'D BY	REVISION
1	09/21/2022	RKC	SM	BID ADDENDUM #3

RECORD DRAWING CERTIFICATION

☐ AS BUILT - CHANGES AS NOTED ☐ AS BUILT - NO CHANGES

CONTRACTOR
NAME
SIGNATURE
TITLE DATE

PROJECT COORDINATOR
NAME
SIGNATURE
TITLE DATE

WESTCHESTER COUNTY, NEW YORK
DEPARTMENT OF PUBLIC WORKS AND TRANSPORTATION
DIVISION OF ENGINEERING

INFRASTRUCTURE REHABILITATION - PHASE 3
PLAYLAND PARK, RYE, NEW YORK

CROSS AXIS BUILDING E
SITE DUCTBANK PLAN

CONTRACT NUMBER	SHEET NUMBER
22-523	CXE-E-03

DWG NO.: 297 of 664
SCALE: AS SHOWN
DATE: 8/23/2022
DPW FILE NUMBER 1-118-E-1046-1 REV. NO. 1

Drawing Name: G:\SavinAutocad\2060\25-Playland-Mega-3\E\CXE-1005.dwg
Rev#: Projectname: ---- Comments: ----
Printed by: MGodby Date: 21 September 2022 1:33 PM Designed by: ----
Xrefs: [TB_24X36_WestchesterCo_3.dwg] [TSG-SVLOGO.dwg] [TWS-SP0001.dwg] [TWC-SP0001.dwg] [CCL-A-01.dwg] [CXE-E-1001.dwg

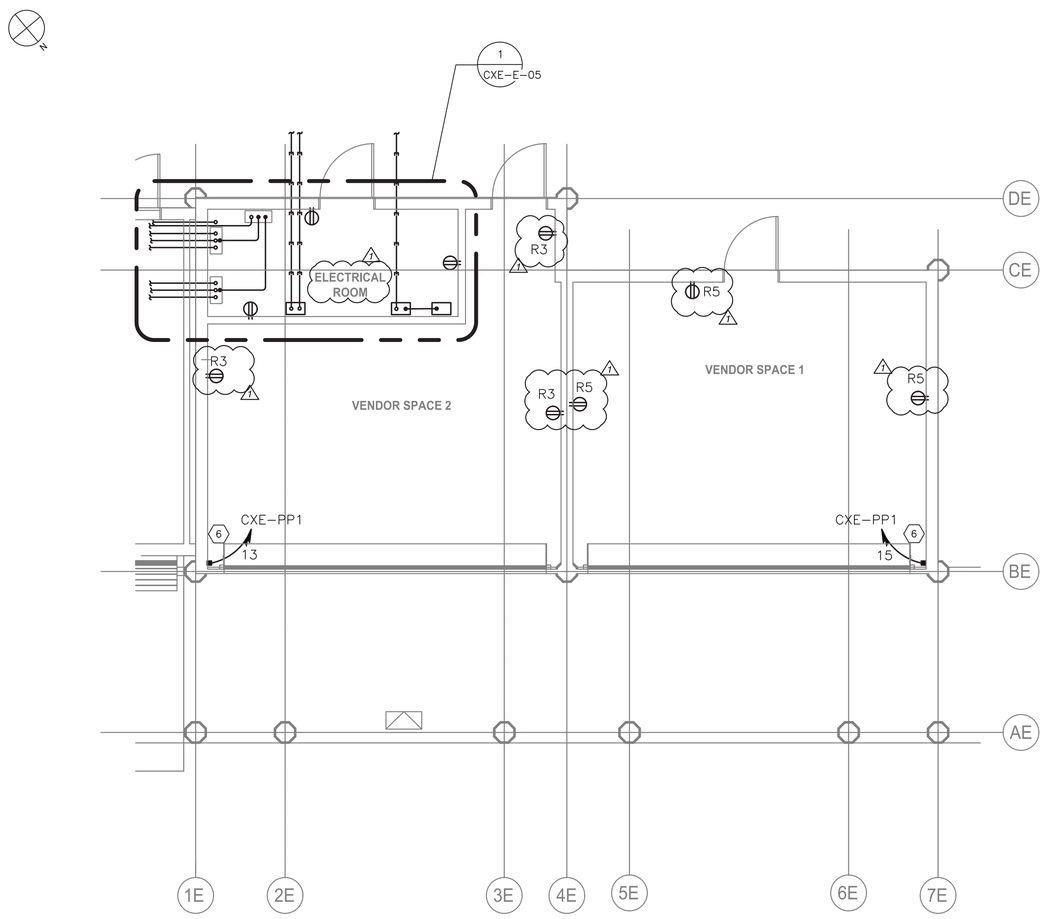

GROUND FLOOR POWER PLAN
1/4"=1'-0"

KEY NOTES:

1. RELOCATED 200 AMP PANEL PP-TW2 & 3. CONTRACTOR SHALL EXTEND ALL DISTRIBUTION CIRCUITS PRESENTLY CONNECTED TO THIS PANEL. CONTRACTOR SHALL TRACE OUT EACH CIRCUIT AND PLAN FOR ALL REQUIRED RECONNECTIONS. SEE DRAWING CXE-E-08 FOR PANEL SCHEDULE.
2. RELOCATED RELAY PANELS TW2-RP AND TW3-RP. SEE CXF DRAWINGS FOR ADDITIONAL INFORMATION.
3. NEW 208Y/120 VOLT, 3 PHASE, 4-WIRE PANEL CXF-PP1 WITH 600 AMP MAINS AND 600 AMP MAIN BREAKER. THIS PANEL WILL BE USED TO SUPPLY NEW KITCHEN LOADS FOR THE CXF BUILDING. KITCHEN LOADS WILL BE DETERMINED BY STANDARD AMUSEMENTS. DISTRIBUTION CIRCUITS ARE NOT REQUIRED AT THIS TIME.
4. NEW 208Y/120 VOLT, 3 PHASE 4-WIRE PANEL CXE-PP1 WITH 125 AMP MAINS AND 100 AMP MAIN CIRCUIT BREAKER. THIS PANEL WILL BE USED FOR ALL ELECTRICAL LOADS IN THE CXE BUILDING.
5. NEW RELAY PANEL CXE-RP. THIS RELAY PANEL SHALL BE USED FOR ALL NEW EXTERIOR LIGHTING FOR BOTH CXE AND CXF BUILDINGS.
6. APPROXIMATE LOCATION OF MOTOR FOR NEW ROLL-UP DOOR. CONTRACTOR SHALL CONFIRM MOTOR LOCATION IN THE FIELD PRIOR TO INSTALLATION. CONTRACTOR SHALL CIRCUIT MOTOR FROM PANEL CXE-PP-1. NUMBER DESIGNATORS INDICATE CIRCUIT NUMBERS. CONTRACTOR SHALL PROVIDE 30 AMP, 2-POLE DISCONNECT SWITCH AT ROLL-UP DOOR MOTOR LOCATION.

NOTES:

1. FOR ADDITIONAL NOTES, ABBREVIATIONS AND SYMBOLS, SEE DRAWING GE-E-01.
2. CONTRACTOR IS ADVISED THAT THERE ARE 3 EXITING PANELS (ONE POWER AND TWO RELAY) THAT NEED TO BE RELOCATED TO THE CXE ELECTRICAL ROOM. THIS INCLUDES ALL ASSOCIATED CONDUIT AND WIRE BOTH FOR POWER AND DISTRIBUTION CIRCUITS. THE INTENT IS TO RELOCATE SAID EQUIPMENT AN PROVIDE NEW CONDUIT AND WIRE FOR CONNECTION TO EXISTING CIRCUITS. FOR ADDITIONAL INFORMATION, SEE CROSS AXIS BUILDING F DRAWINGS. CONTRACTOR SHALL COORDINATE THE REQUIREMENT OF RELOCATING THESE PANELS WITH THE CONSTRUCTION PHASING OF BOTH CXE AND CXF BUILDINGS.
3. ALL RECEPTACLE DESIGNATORS ARE POWERED VIA PANEL CXE-PP-1, UNLESS OTHERWISE NOTED.
4. ALL CIRCUITS SHOWN ON THE DRAWING BUT NOT SPECIFICALLY CALLED OUT ON THE CONDUIT AND WIRE LEGEND SHALL BE 3/4" CONDUIT, 2#12 & 1#12 GND.
5. FOR PANEL SCHEDULES, SEE DRAWING CXE-E-09.
6. CONTRACTOR SHALL ASSUME THAT TWO ADDITIONAL CIRCUITS WILL BE NEEDED FOR EQUIPMENT NOT AS YET SHOWN. ASSUME A TOTAL OF 100 FEET OF 3/4" CONDUIT WITH 3 #12 AWG.

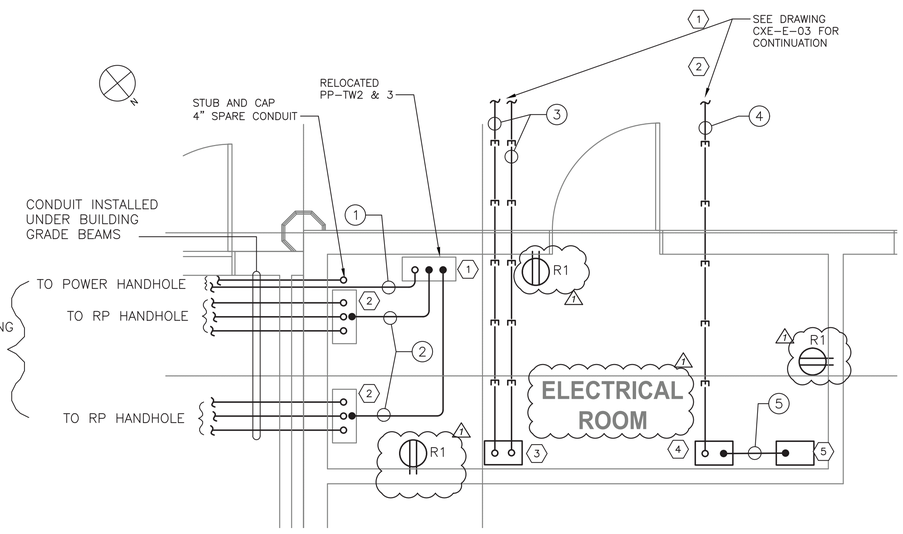

1 CXE-E-05 ELECTRICAL ROOM POWER PLAN
SCALE: 1/2" = 1'-0"

CONDUIT AND WIRE LEGEND	
NO.	DESCRIPTION
1	4"C, 4-250 KCMIL & 1#2 GND (OR MATCH EXISTING)
2	2"C, 18#10 & 9#10 GNDS (OR MATCH EXISTING)
3	2 SETS OF 3 1/2"C, 4-350 KCMIL & 1#2 GND
4	2"C, 4#2 & 1#8 GND
5	2"C, 18#12 & 7#12 GNDS

SCALE: 1/2" = 1'-0"
SCALE: 1/4" = 1'-0"

CONSULTANT INFORMATION
Savin Engineers, P.C.

CONSULTANT SEAL
STATE OF NEW YORK · STEVEN A. MARTINO · 093631 · LICENSED PROFESSIONAL ENGINEER

REVISION NUMBER	DATE	MADE BY	APP'D BY	REVISION
1	09/21/2022	RKC	SM	BID ADDENDUM #3

RECORD DRAWING CERTIFICATION
☐ AS BUILT – CHANGES AS NOTED ☐ AS BUILT – NO CHANGES

CONTRACTOR
NAME
SIGNATURE
TITLE DATE

PROJECT COORDINATOR
NAME
SIGNATURE
TITLE DATE

WESTCHESTER COUNTY, NEW YORK
DEPARTMENT OF PUBLIC WORKS AND TRANSPORTATION
DIVISION OF ENGINEERING

INFRASTRUCTURE REHABILITATION - PHASE 3
PLAYLAND PARK, RYE, NEW YORK
CROSS AXIS BUILDING E
GROUND FLOOR - POWER PLAN

CONTRACT NUMBER	22-523
SHEET NUMBER	CXE-E-05
DWG NO.:	299 of 664
SCALE:	AS SHOWN
DATE:	8/23/2022
DPW FILE NUMBER	1-118-E-1048-1
REV. NO.	1

Drawing Name: G:\Savinautocad\2060\25-Playland-Mega-3\E\CXEE-1007.dwg
Projectname: 211001F02 Comments: ----
Printed by: MGodby Date: 21 September 2022 1:33 PM Designed by: ----
Rev#:
Xrefs: [TB_24X36_WestchesterCo_3.dwg] [TSG-SVLOGO.dwg] [CXE-E-1002.dwg] [CXE-A-11.dwg]

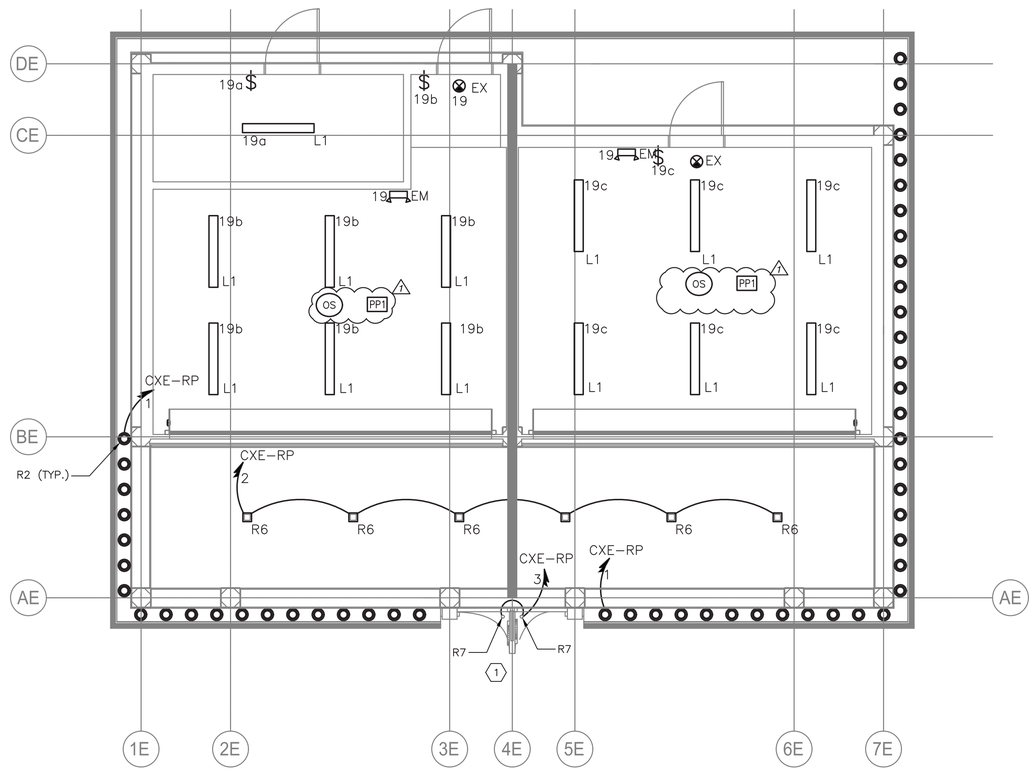

GROUND FLOOR LIGHTING PLAN (CXE)
1/4" = 1'-0"

NOTES:

1. FOR ADDITIONAL NOTES, ABBREVIATIONS AND SYMBOLS, SEE DRAWING GE-E-01.
2. ALL INTERIOR LIGHTING IS POWERED VIA PANEL CXE-PP1, UNLESS NOTED OTHERWISE. CONTRACTOR SHALL CIRCUIT LIGHTING FIXTURES WITH 3/4" CONDUIT WITH 2#12 & 1#12GND.
3. EXIT SIGNS SHALL BE WIRED TO THE UN-SWITCHED LEG OF THE DESIGNATED CIRCUIT.
4. EMERGENCY FIXTURES SHALL BE WIRED TO THE UN-SWITCHED LEG OF THE DESIGNATED CIRCUIT.
5. ALL EXTERIOR LIGHTING SHALL BE CIRCUITED TO RELAY PANEL CXE-RP. CONTRACTOR SHALL CIRCUIT LIGHTING FIXTURES WITH 3/4" CONDUIT WITH 2#10 & 1#10GND, UNLESS NOTED OTHERWISE. CONTRACTOR SHALL DAISY-CHAIN ALL EXTERIOR LIGHT FIXTURES WITH SAME CIRCUIT NUMBER BACK TO RELAY PANEL CXE-RP.
6. FOR LIGHTING PANEL SCHEDULE, REFER TO DRAWING CXE-E-09.
7. NUMBER DESIGNATORS NEXT TO FIXTURES AND/OR CONTROLS INDICATE CIRCUIT NUMBERS.
8. NEW LIGHTING CONTROLS SHALL BE FULLY COMPATIBLE WITH THE EXISTING SYSTEM AS PROVIDED ELSEWHERE AT THE PLAYLAND FACILITY. EQUIPMENT INCLUDES, BUT NOT LIMITED TO OCCUPANCY SENSORS, RELAY/POWER PACKS, SWITCHES, RELAY PANELS, PHOTO SENSORS, ETC.
9. LIGHTING CONTROLS SELECTED SHALL HAVE THE CAPABILITY TO BE CONNECTED TO A MASTER HEAD-END SYSTEM (FUTURE CONTRACT).
10. ALL OUTDOOR LIGHTING SHALL BE POWERED VIA RELAY PANEL CXE-RP. RELAY PANEL SHALL BE EQUIPPED WITH BOTH A BUILT-IN TIME CLOCK AND A PHOTOSENSOR CONTROL.

KEY NOTES:

1. R7 LIGHT FIXTURES SHALL BE CONNECTED INTO THE SAME CIRCUIT USED FOR POWERING THE REFURBISHED FINIAL LIGHTS. SEE ARCHITECTURAL DRAWINGS FOR ADDITIONAL INFORMATION.

0 4' 8'
SCALE: 1/4" = 1'-0"

CONSULTANT INFORMATION

Savin Engineers, P.C.

STATE OF NEW YORK · STEVEN A. MARTINO · 083931 · LICENSED PROFESSIONAL ENGINEER

REVISION NUMBER	DATE	MADE BY	APP'D BY	REVISION
1	09/21/2022	RKC	SM	BID ADDENDUM #3

RECORD DRAWING CERTIFICATION

☐ AS BUILT – CHANGES AS NOTED ☐ AS BUILT – NO CHANGES

CONTRACTOR: NAME / SIGNATURE / TITLE / DATE

PROJECT COORDINATOR: NAME / SIGNATURE / TITLE / DATE

WESTCHESTER COUNTY, NEW YORK
DEPARTMENT OF PUBLIC WORKS AND TRANSPORTATION
DIVISION OF ENGINEERING

INFRASTRUCTURE REHABILITATION - PHASE 3
PLAYLAND PARK, RYE, NEW YORK
CROSS AXIS BUILDING E
GROUND FLOOR - LIGHTING PLAN

CONTRACT NUMBER	22-523
SHEET NUMBER	CXE-E-06
DWG NO.:	300 of 664
SCALE:	AS SHOWN
DATE:	8/23/2022
DPW FILE NUMBER	1-118-E-1049-1
REV. NO.	1

Drawing Name: G:\SavinAutocad\2060\25-Playland-Mega-3\E\CXEE-1010.dwg
Projectname: 211001F02 Comments: ----
Printed by: MGodby Date: 21 September 2022 1:34 PM Designed by: ----
Rev#:
Xrefs: [TB_24X36_WestchesterCo_3.dwg] [TSG-SVLOGO.dwg] [CXE-E-1003.dwg] [CXE-A-41.dwg]

NOTES:

1. FOR ADDITIONAL NOTES, ABBREVIATIONS AND SYMBOLS, SEE DRAWING GE-E-01.
2. MOUNT ATTIC LIGHT SWITCH AT TOP OF ATTIC ACCESS HATCH.

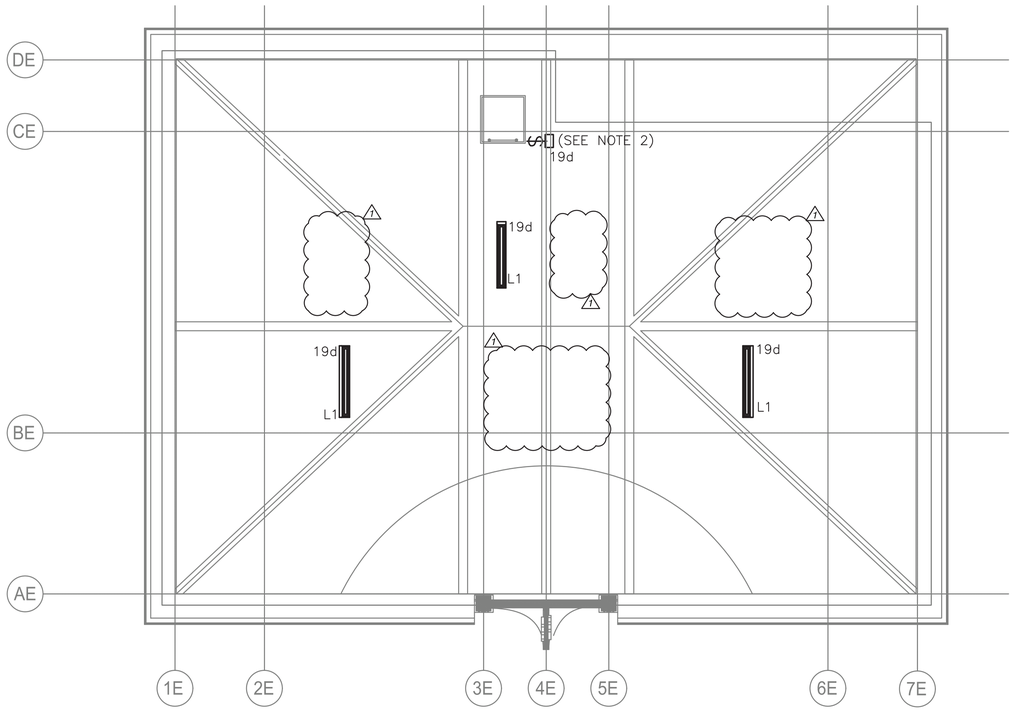

ATTIC LEVEL LIGHTING PLAN
1/4" = 1'-0"

SCALE: 1/4" = 1'-0"

CONSULTANT INFORMATION

Savin Engineers, P.C.

CONSULTANT SEAL

STATE OF NEW YORK · STEVEN A. MARTINO · 089691 · LICENSED PROFESSIONAL ENGINEER

REVISION NUMBER	DATE	MADE BY	APP'D BY	REVISION
1	09/21/2022	RKC	SM	BID ADDENDUM #3

RECORD DRAWING CERTIFICATION

☐ AS BUILT - CHANGES AS NOTED ☐ AS BUILT - NO CHANGES

CONTRACTOR
NAME
SIGNATURE
TITLE DATE

PROJECT COORDINATOR
NAME
SIGNATURE
TITLE DATE

WESTCHESTER COUNTY, NEW YORK
DEPARTMENT OF PUBLIC WORKS AND TRANSPORTATION
DIVISION OF ENGINEERING

INFRASTRUCTURE REHABILITATION - PHASE 3
PLAYLAND PARK, RYE, NEW YORK
CROSS AXIS BUILDING E
ATTIC LEVEL - LIGHTING PLAN

CONTRACT NUMBER	22-523
SHEET NUMBER	CXE-E-07
DWG NO.:	301 of 664
SCALE:	AS SHOWN
DATE:	8/23/2022
DPW FILE NUMBER	1-118-E-1050-1
REV. NO.	1

Drawing Name: G:\SavinAutocad\2060\25-Playland-Mega-3\E\CXEE-1011.dwg
Rev#: Projectname: 211001F02 Comments: ----
Printed by: MGodby Date: 21 September 2022 1:34 PM Designed by: ----
Xrefs: [TB_24X36_WestchesterCo_3.dwg] [TSG-SVLOGO.dwg] [CXE-E-1007.dwg] [CXE-A-42.dwg]

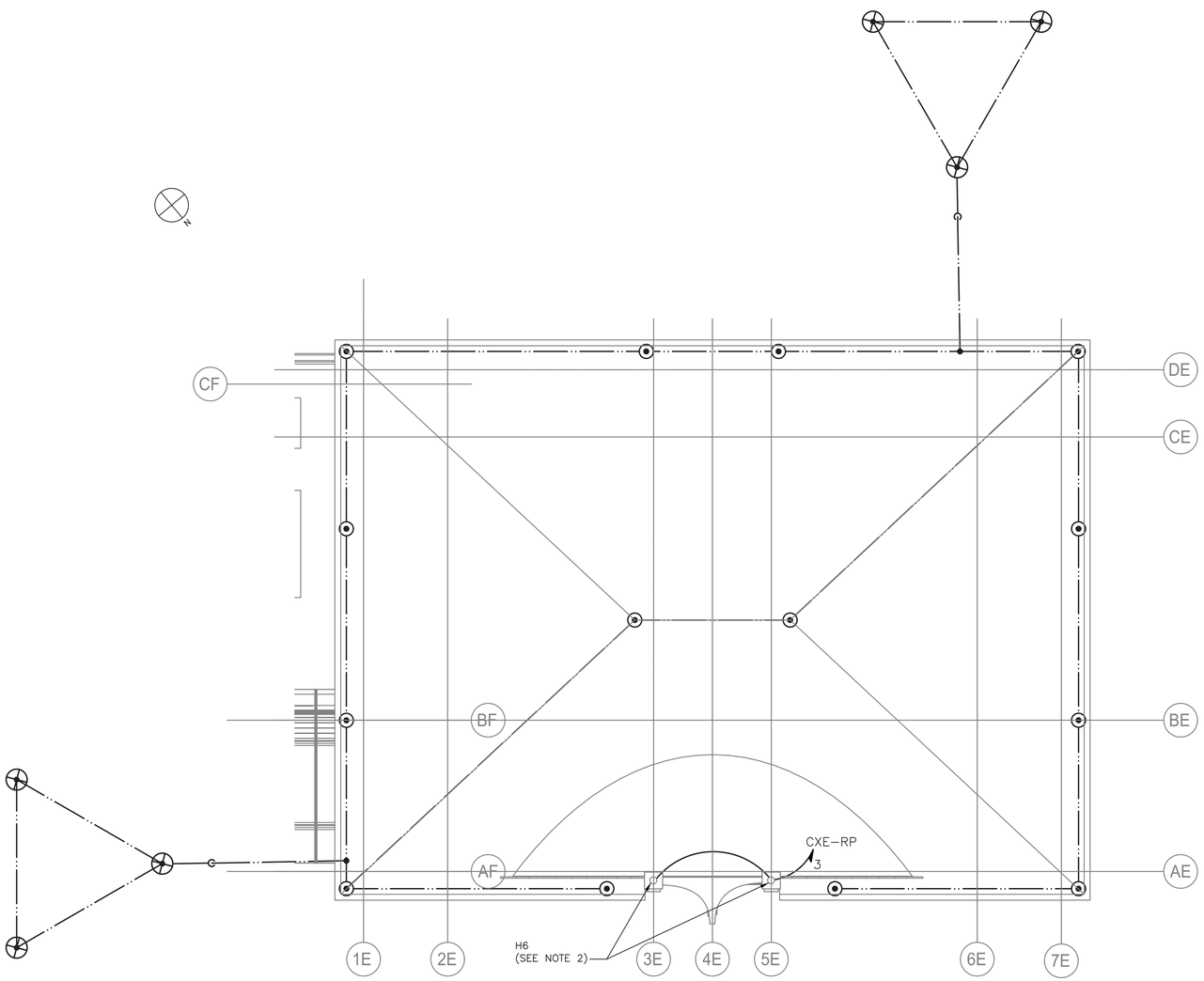

ROOF PLAN – LIGHTING AND LIGHTNING PROTECTION
1/4" = 1'-0"

NOTES:

1. FOR ADDITIONAL NOTES, ABBREVIATIONS AND SYMBOLS, SEE DRAWING GE-E-01.
2. HISTORIC FINIAL LIGHTS TO BE REFURBISHED AND REINSTALLED UNDER THIS CONTRACT. CONTRACTOR SHALL RE-INSTALL THESE UNITS. REFER TO ARCHITECTURAL DRAWINGS FOR MORE INFORMATION.
3. CONTRACTOR IS ADVISED, THE LIGHTNING PROTECTION SYSTEM SHOWN SHALL BE USED AS A GUIDE AND FOR BIDDING PURPOSES. CONTRACTOR SHALL HIRE A CERTIFIED LIGHTNING PROTECTION SPECIALIST FOR INSTALLATION OF NEW SYSTEM. INSTALLER SHALL PROVIDE ALL THAT IS REQUIRED (PER NFPA 780) AND SHALL OBTAIN UL96A CERTIFICATION (MASTER LABEL) UPON COMPLETION. ADDITIONALLY, INSTALLER SHALL PROVIDE FOR ALL NECESSARY BONDING FOR COMPLETE SYSTEM.
4. CONTRACTOR SHALL COORDINATE WITH THE ARCHITECTURAL DRAWINGS FOR SPECIFIC INFORMATION ON THE NEW ROOF STRUCTURE AND MATERIALS.
5. TO MINIMIZE THE VISUAL IMPACT OF THE BUILDING ALL NEW DOWN CONDUCTORS SHALL BE ROUTED DOWN SIDE OF BUILDING. COORDINATE WITH ARCHITECTURAL FEATURES TO CONCEAL DOWN CONDUCTORS. CONTRACTOR SHALL COORDINATE WITH OTHER TRADES TO ACCOMPLISH THIS WORK. PROVIDE LPS BARE COPPER CABLE TO GROUND RODS.
6. CONTRACTOR IS ADVISED THE NEW DOWN CONDUCTOR SHALL BE BONDED TO THE LOWER METAL OVERHANG ROOF AND CONNECT TO THE EXISTING GROUND WIRE AND GROUND ROD AT GROUND LEVEL.
7. AT EACH LPS DOWN CONDUCTOR, PROVIDE TRIANGULAR GROUND GRID AS SHOWN (NOT ALL SHOWN).
8. EXHAUST FAN STARTERS SHALL BE FURNISHED BY THE EXHAUST FAN MANUFACTURER. FOR EXHAUST FAN STARTER REQUIREMENTS, SEE HVAC CONTRACT DRAWINGS AND SPECIFICATIONS.
9. ALL ROOF PENETRATIONS SHALL BE WATERPROOF. PENETRATION COMPONENTS FOR CONDUIT SHALL BE SUITABLE AND COMPATIBLE FOR INSTALLED ROOF. SEE ARCHITECTURAL AND PLUMBING DRAWINGS FOR ADDITIONAL INFORMATION.

0 4' 8'
SCALE: 1/4" = 1'-0"

CONSULTANT INFORMATION
Savin Engineers, P.C.

CONSULTANT SEAL
STATE OF NEW YORK · STEVEN A. MARTINO · 083631 · LICENSED PROFESSIONAL ENGINEER

REVISION NUMBER	DATE	MADE BY	APP'D BY	REVISION
1	09/21/2022	RKC	SM	BID ADDENDUM #3

RECORD DRAWING CERTIFICATION
☐ AS BUILT – CHANGES AS NOTED ☐ AS BUILT – NO CHANGES

CONTRACTOR
NAME
SIGNATURE
TITLE DATE

PROJECT COORDINATOR
NAME
SIGNATURE
TITLE DATE

WESTCHESTER COUNTY, NEW YORK
DEPARTMENT OF PUBLIC WORKS AND TRANSPORTATION
DIVISION OF ENGINEERING

INFRASTRUCTURE REHABILITATION - PHASE 3
PLAYLAND PARK, RYE, NEW YORK
CROSS AXIS BUILDING E
ROOF PLAN - LIGHTING AND LIGHTNING PROTECTION PLAN

CONTRACT NUMBER: 22-523
SHEET NUMBER: CXE-E-08
DWG NO.: 302 of 664
SCALE: AS SHOWN
DATE: 8/23/2022
DPW FILE NUMBER: 1-118-E-1051-1
REV. NO.: 1

Drawing Name: G:\SavinAutocad\2060\25-Playland-Mega-3\E\CXEE-1013.dwg
Ref#: Projectname: 211001F02 Comments: ----
Printed by: MGodby Date: 21 September 2022 1:34 PM Designed by: ----
Xrefs: [TB_24X36_WestchesterCo_3.dwg] [TSG-SVLOGO.dwg] [CXE-E-1008.dwg] [CXE-A-13.dwg]

PANELBOARD: CXE-PP1 **LOCATION:** ELECTRICAL ROOM

1 **NEMA RATING** 3 **POLES** **MOUNTING:** SURFACE

125 **AMP BUS RATING** 100 **AMP MAIN BREAKER** 42 **KA SHORT CIRCUIT RATING**

208Y/120 **VOLTS** 3 **PHASE** 4 **WIRE** **ELECTRONIC GRADE :** NO

CIRCUIT NO.	DESCRIPTION	LOAD KVA PHASE A	LOAD KVA PHASE B	LOAD KVA PHASE C	BREAKER AMPS / POLES	NOTES	CIRCUIT NO.	DESCRIPTION	LOAD KVA PHASE A	LOAD KVA PHASE B	LOAD KVA PHASE C	BREAKER AMPS / POLES	NOTES
1	RECEPTACLES	0.2			20/1		2	CXE - EXTERIOR SOFFITS	0.2			20/1	
3	RECEPTACLES		0.2		20/1		4	CXE - PORCH LIGHTING		0.2		20/1	
5	RECEPTACLES			0.2	20/1		6	CXE - GAMES SIGNAGE LIGHTING			0.2	20/1	
7	FIRE ALARM	0.1			20/1		8	CXF - EXTERIOR SOFFITS	0.2			20/1	
9	COM CABINET		0.1		20/1		10	CXF - CANOPY LIGHTING		0.2		20/1	
11	SPARE			-	20/1		12	CXF - COLONNADE LIGHTING			0.5	20/1	
13	ROLL-UP DOOR	1.2			20/1		14	SPARE	-			20/1	
15	ROLL-UP DOOR		1.2		20/1		16	SPARE		-		20/1	
17	SPARE			-	20/1		18	SPARE			-	20/1	
19	BUILDING LIGHTING	0.5			20/1		20	RELAY PANEL CXE-RP POWER (120V)	0.6			20/1	
21	SPARE		-		20/1		22	SPARE		-		20/1	
23	SPARE			-	20/1		24	SPARE			-	20/1	
25	SPACE						26	SPACE					
27	SPACE						28	SPACE					
29	SPACE						30	SPACE					
31	SPACE						32	SPACE					
33	SPACE						34	SPACE					
35	SPACE						36	SPACE					
37	SPACE						38	SPACE					
39	SPACE						40	SPACE					
41	SPACE						42	SPACE					
	TOTAL PHASE KVA THIS SIDE	2	1.5	0.2				**TOTAL PHASE KVA THIS SIDE**	1	0.4	0.7		
								TOTAL KVA PER PHASE	3	1.9	0.9		
								TOTAL THREE PHASE KVA	5.8				

NOTES:
1.
2.
3.
4.

NOTES CONT.:
5.
6.
7.
8.

NOTES:

1. FOR ADDITIONAL NOTES, ABBREVIATIONS AND SYMBOLS, SEE DRAWING GE-E-01.
2. FOR PANEL SCHEDULE PP-TW2 & 3 SEE CXF BUILDING-DRAWING CXF-E-08.

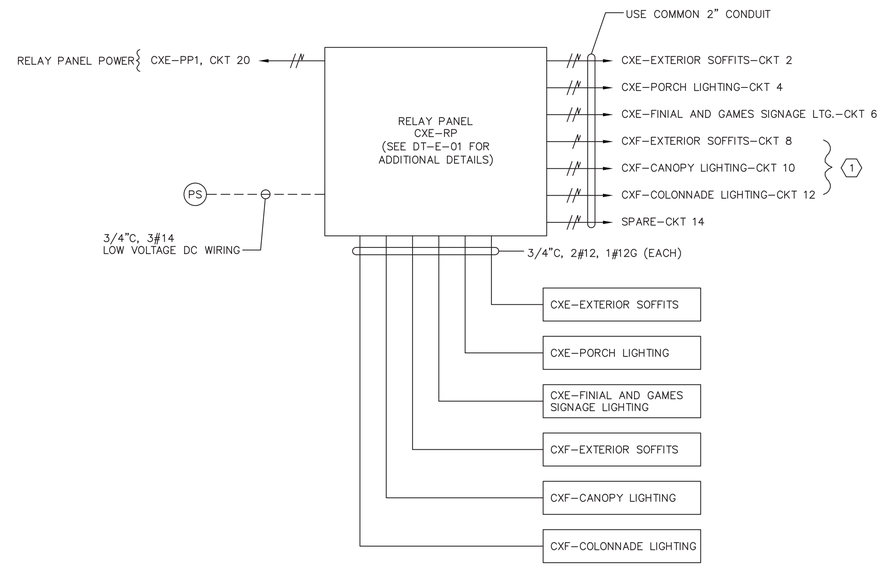

1 CXE-E-07 EXTERIOR CXE & CXF EXTERIOR BUILDING WIRING DETAIL

KEY NOTE:

1 REFER TO CXF BUILDING LIGHTING DRAWINGS FOR FIXTURE LOCATIONS.

1

LIGHTING CONTROL LEGEND	
SYMBOL	DESCRIPTION
O/V	OCCUPANCY / VACANCY SENSOR - SMALL MOTION, DUAL TECHNOLOGY, SINGLE POLE DOUGLAS LIGHTING CONTROLS, DIALOG SYSTEM CATALOG NUMBER: DIVERSA WORSDD1-R-N OR APPROVED EQUAL.
OS	OCCUPANCY SENSOR - DUAL TECHNOLOGY SENSOR, OCCUPANCY DETECTION ONLY DOUGLAS LIGHTING CONTROLS, DIALOG SYSTEM CATALOG NUMBER: WORSDG1-R-T OR APPROVED EQUAL.
PP1	POWER / RELAY PACK - 120/277 VOLT, SINGLE POLE, SELF CONTROLLED RELAY SWITCH DOUGLAS LIGHTING CONTROLS, DIALOG SYSTEM CATALOG NUMBER: WP-PP20-D OR APPROVED EQUAL.
PP2	POWER / RELAY PACK - 120/277 VOLT, SELF CONTROLLED RELAY SWITCH, TWO DIMMING CHANNELS DOUGLAS LIGHTING CONTROLS, DIALOG SYSTEM CATALOG NUMBER: WRC-4222 OR APPROVED EQUAL.
$ M	120 VOLT RATED LIGHTING SINGLE POLE SWITCH
RP	RELAY TIME CONTROL PANEL, DIGITAL CENTRAL PANEL DOUGLAS LIGHTING CONTROLS, DIALOG SYSTEM CATALOG NUMBER: WLCP-CPx/x OR APPROVED EQUAL. *x/x IS CAPACITY/QTY OF RELAYS - VARIES BY BUILDING.
PS	DIGITAL PHOTOCELL - PHOTOSENSOR SUITABLE FOR OUTDOOR APPLICATIONS DOUGLAS LIGHTING CONTROLS, DIALOG SYSTEM CATALOG NUMBER: WPS-3741B OR APPROVED EQUAL.

CXE-RP	LOCATION: CXE ELECTRICAL CLOSET	
CKT NO	DESCRIPTION	NOTES
1	CXE-EXTERIOR SOFFITS	
2	CXE-PORCH LIGHTING	
3	CXE-FINIAL AND GAMES SIGNAGE LIGHTING	
4	CXF-EXTERIOR SOFFITS	
5	CXF-CANOPY LIGHTING	
6	CXF-COLONNADE LIGHTING	
7	SPARE	
8	SPARE	

Drawing Name: G:\Savin\Autocad\2060\25-Playland-Mega-3\E\CXEE-1012.dwg
Proj#: Projectname: 211001F02 Comments: ----
Printed by: MGodby Date: 21 September 2022 1:34 PM Designed by: ----
Xrefs: [TB_24X36_WestchesterCo_3.dwg] [TSG-SVLOGO.dwg] [BCRE-A-04.dwg] [BCRE-101.dwg]

CONSULTANT INFORMATION

Savin Engineers, P.C.

CONSULTANT SEAL

STATE OF NEW YORK · STEVEN A. MARTINO · 093631 · LICENSED PROFESSIONAL ENGINEER

REVISION NUMBER	DATE	MADE BY	APP'D BY	REVISION
1	09/21/2022	RKC	SM	BID ADDENDUM #3

RECORD DRAWING CERTIFICATION

☐ AS BUILT – CHANGES AS NOTED ☐ AS BUILT – NO CHANGES

CONTRACTOR
NAME
SIGNATURE
TITLE DATE

PROJECT COORDINATOR
NAME
SIGNATURE
TITLE DATE

WESTCHESTER COUNTY, NEW YORK
DEPARTMENT OF PUBLIC WORKS AND TRANSPORTATION
DIVISION OF ENGINEERING

INFRASTRUCTURE REHABILITATION - PHASE 3
PLAYLAND PARK, RYE, NEW YORK
CROSS AXIS BUILDING E
PANEL SCHEDULES

CONTRACT NUMBER	22-523
SHEET NUMBER	CXE-E-09
DWG NO.:	303 of 664
SCALE:	AS SHOWN
DATE:	8/23/2022
DPW FILE NUMBER	1-118-E-1052-1
REV. NO.	1

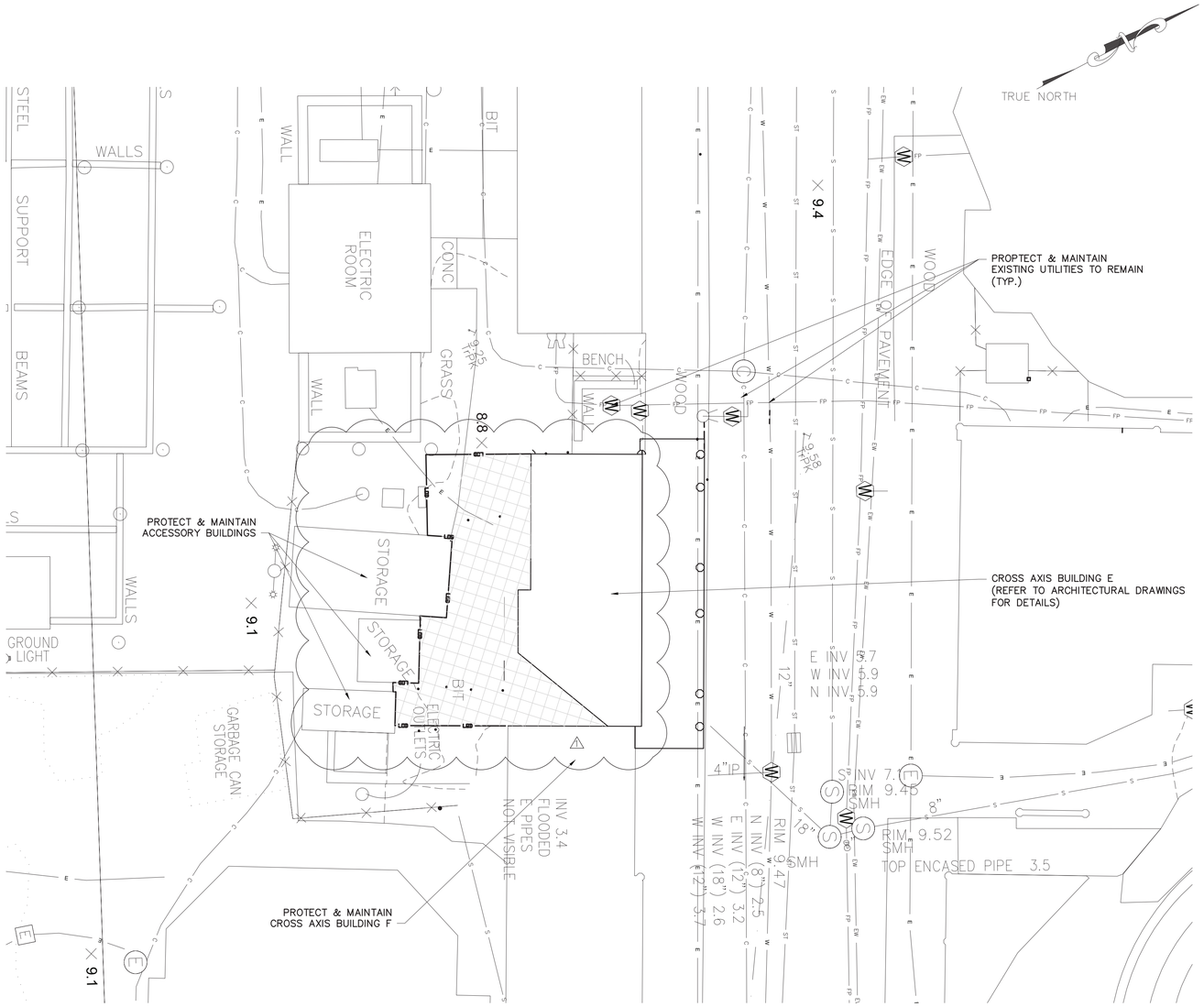

KEY MAP
NOT TO SCALE

EXISTING LEGEND

	POST
	UTILITY POLE
OR	SIGN
	HANDICAP PARKING
	GROUND LIGHT
	LIGHT POLE
	UTILITY POLE WITH LIGHT
	LIGHT POLE (SINGLE LIGHT)
	LIGHT POLE (DOUBLE LIGHT)
	LIGHT POLE (MULTI LIGHT)
	BOAT TIE-OFF CLEAT
OR OR	CATCH BASIN
	TRENCH DRAIN
M	MAILBOX
	UNKNOWN MANHOLE
C OR C	COMMUNICATIONS BOX/HAND HOLE
E	ELECTRIC HAND HOLE
EB	ELECTRIC BOX
GM	GAS METER
IB	IRRIGATION BOX
U	UNKNOWN UTILITY BOX/HAND HOLE
C	COMMUNICATION MANHOLE
D OR D	DRAINAGE MANHOLE
E	ELECTRIC MANHOLE
S OR S	SEWER MANHOLE
ST	STORM SEWER MANHOLE
	SEWER CLEANOUT
	HYDRANT
	SIAMESE CONNECTION
V OR V	UNKNOWN VALVE
W	WATER VALVE
G	GAS VALVE
WS	WATER SPIGOT OR FOUNTAIN
	MONITORING WELL
	DECIDUOUS BUSH
	EVERGREEN BUSH
	DECIDUOUS TREE
	EVERGREEN TREE
	STUMP
	HEDGE ROW
	TREELINE
	BRUSHLINE
	RETAINING WALL
	GUIDE RAIL
	STONE WALL
	WATERLINE
X	FENCE
C	UNDERGROUND COMMUNICATION
P	UNDERGROUND PROPANE
E	UNDERGROUND ELECTRICAL
SL	UNDERGROUND STREET LIGHTING
EW	UNDERGROUND ENVIRONMENTAL WASTEWATER
S	UNDERGROUND SEWER
ST	UNDERGROUND STORM SEWER
W	UNDERGROUND WATER
FP	UNDERGROUND FIRE PROTECTION
10	EXISTING MAJOR CONTOUR
9	EXISTING MINOR CONTOUR

PROPOSED LEGEND:

	SAW CUTTING ASPHALT CONCRETE
LOD	LIMITS OF DISTURBANCE
	LIMITS OF PAVEMENT REMOVAL (MILLING & EXCAVATION)
	AREA OF ASPHALT PAVEMENT REMOVAL (FULL DEPTH & EXCAVATION)
	DRAINAGE STRUCTURE INLET PROTECTION

NOTES:

1. PAVEMENT REMOVAL, MILLING AND EXCAVATION, MATERIAL SHALL NOT BE STOCKPILED ON SITE.
2. EXISTING GRADES, PIPE LOCATIONS, SIZES, MATERIAL, INVERTS AND OTHER EXISTING CONDITIONS ARE SHOWN ON THE DRAWINGS FROM AVAILABLE AS-BUILT DRAWINGS AND FIELD SURVEY BY OTHERS. IT SHALL BE THE RESPONSIBILITY OF THE CONTRACTOR TO VERIFY ALL EXISTING CONDITIONS.
3. THE CONTRACTOR SHALL TAKE PROPER PRECAUTIONS NOT TO DAMAGE ANY EXISTING SITE CONDITIONS SPECIFICALLY EXCLUDED FROM THE CONTRACT AND WILL BE HELD SOLELY RESPONSIBLE FOR ANY DAMAGE OCCURRING DURING THE COURSE OF THE WORK DURING CONSTRUCTION. THE CONTRACTOR SHALL, AT THEIR OWN EXPENSE, MAKE ALL REPAIRS REQUIRED TO RESTORE ANY DAMAGED AREAS TO ORIGINAL CONDITIONS.

New York 811 — Know what's below. Call before you dig.

0 10 20 30
1"=10' SCALE BAR

6/15/2022 4:10:27 PM

CONSULTANT INFORMATION

LiRo Engineers, Inc.
A LiRo Group Company
Mineola, N.Y. 516-746-2350[T]

CONSULTANT SEAL

STATE OF NEW YORK — KENNETH J. HOOD — LICENSED PROFESSIONAL ENGINEER — 059134

REVISION NUMBER	DATE	MADE BY	APP'D BY	REVISION
1	9/21/22	HIK	LK	BID ADDENDUM #3

RECORD DRAWING CERTIFICATION

☐ AS BUILT – CHANGES AS NOTED ☐ AS BUILT – NO CHANGES

CONTRACTOR
NAME
SIGNATURE
TITLE DATE

PROJECT COORDINATOR
NAME
SIGNATURE
TITLE DATE

WESTCHESTER COUNTY, NEW YORK
DEPARTMENT OF PUBLIC WORKS AND TRANSPORTATION
DIVISION OF ENGINEERING

INFRASTRUCTURE REHABILITATION PHASE 3
PLAYLAND PARK, RYE, NEW YORK
CROSS AXIS BUILDING E
EXISTING CONDITIONS/DEMOLITION PLAN

CONTRACT NUMBER	22-523
SHEET NUMBER	CXE-C-02
DWG NO.	311 of 664
SCALE:	1"=10'
DATE:	08/23/2022
DPW FILE NUMBER	1-118-C-1060-1
REV. NO.	1

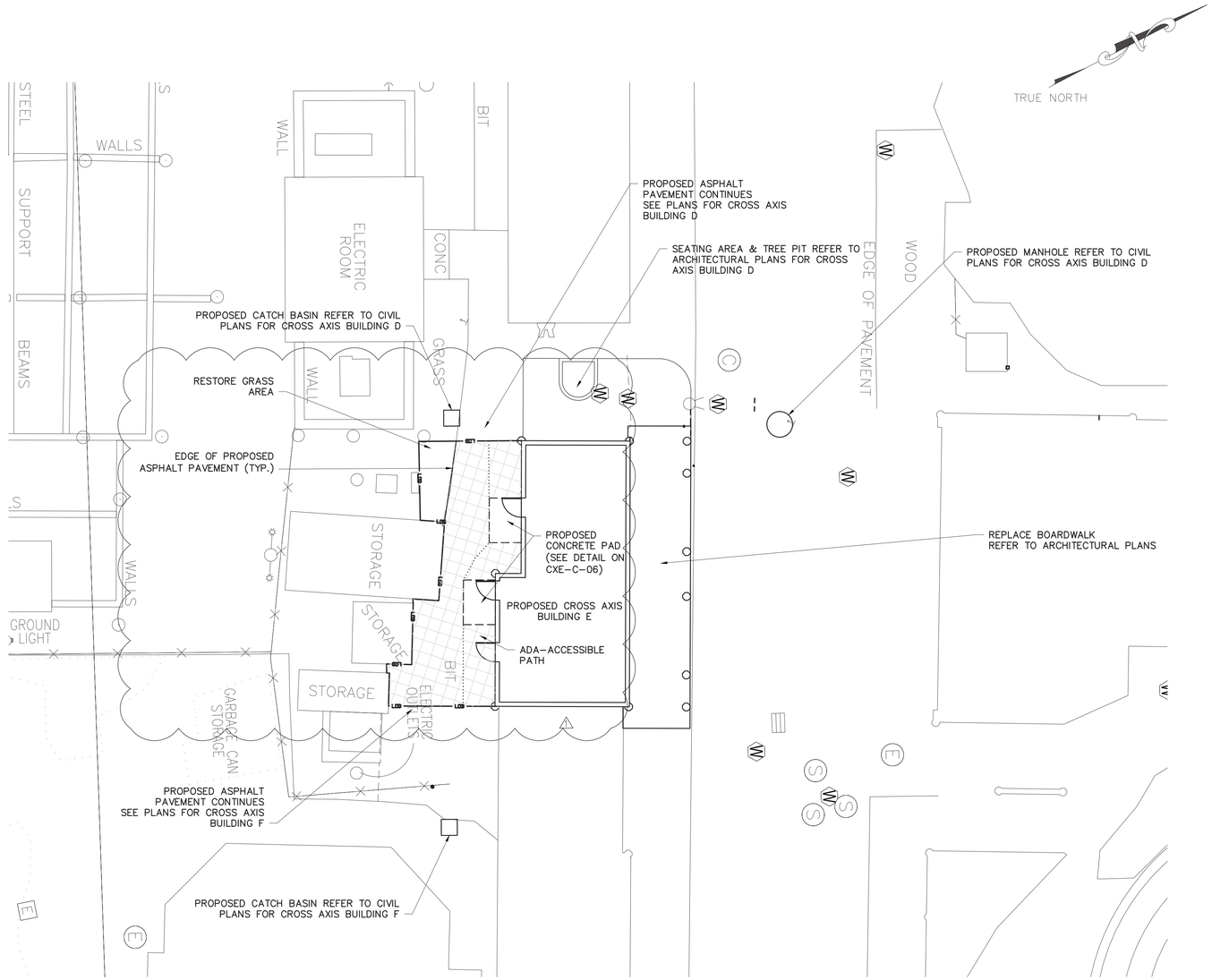

EXISTING LEGEND

- POST
- UTILITY POLE
- SIGN
- HANDICAP PARKING
- GROUND LIGHT
- LIGHT POLE
- UTILITY POLE WITH LIGHT
- LIGHT POLE (SINGLE LIGHT)
- LIGHT POLE (DOUBLE LIGHT)
- LIGHT POLE (MULTI LIGHT)
- BOAT TIE-OFF CLEAT
- CATCH BASIN
- TRENCH DRAIN
- MAILBOX
- UNKNOWN MANHOLE
- COMMUNICATIONS BOX/HAND HOLE
- ELECTRIC HAND HOLE
- ELECTRIC BOX
- GAS METER
- IRRIGATION BOX
- UNKNOWN UTILITY BOX/HAND HOLE
- COMMUNICATION MANHOLE
- DRAINAGE MANHOLE
- ELECTRIC MANHOLE
- SEWER MANHOLE
- STORM SEWER MANHOLE
- SEWER CLEANOUT
- HYDRANT
- SIAMESE CONNECTION
- UNKNOWN VALVE
- WATER VALVE
- GAS VALVE
- WATER SPIGOT OR FOUNTAIN
- MONITORING WELL
- DECIDUOUS BUSH
- EVERGREEN BUSH
- DECIDUOUS TREE
- EVERGREEN TREE
- STUMP
- HEDGE ROW
- TREELINE
- BRUSHLINE
- RETAINING WALL
- GUIDE RAIL
- STONE WALL
- WATERLINE
- FENCE
- UNDERGROUND COMMUNICATION
- UNDERGROUND PROPANE
- UNDERGROUND ELECTRICAL
- UNDERGROUND STREET LIGHTING
- UNDERGROUND ENVIRONMENTAL WASTEWATER
- UNDERGROUND SEWER
- UNDERGROUND STORM SEWER
- UNDERGROUND WATER
- UNDERGROUND FIRE PROTECTION

PROPOSED LEGEND:

- MOVABLE CONSTRUCTION FENCE
- SAW CUTTING ASPHALT CONCRETE
- LIMITS OF DISTURBANCE
- LIMITS OF PAVEMENT REMOVAL
- AREA OF FULL DEPTH ASPHALT PAVEMENT
- DRAINAGE STRUCTURE INLET PROTECTION
- PROPOSED LANDING AREA (CONCRETE)
- PROPOSED EDGE OF ADA-ACCESSIBLE ROUTE TO BUILDING

New York 811 Know what's below. Call before you dig.

0 10 20 30
1"=10' SCALE BAR

6/15/2022 4:10:27 PM

CONSULTANT INFORMATION
LiRo Engineers, Inc.
A LiRo Group Company
Mineola, N.Y. 516-746-2350[T]

CONSULTANT SEAL
STATE OF NEW YORK · KENNETH J. HOLMSTROM · No. 059134 · LICENSED PROFESSIONAL ENGINEER

REVISION NUMBER	DATE	MADE BY	APP'D BY	REVISION
1	9/21/22	HIK	LK	BID ADDENDUM #3

RECORD DRAWING CERTIFICATION
AS BUILT – CHANGES AS NOTED
AS BUILT – NO CHANGES

CONTRACTOR
NAME
SIGNATURE
TITLE DATE

PROJECT COORDINATOR
NAME
SIGNATURE
TITLE DATE

WESTCHESTER COUNTY, NEW YORK
DEPARTMENT OF PUBLIC WORKS AND TRANSPORTATION
DIVISION OF ENGINEERING

INFRASTRUCTURE REHABILITATION PHASE 3
PLAYLAND PARK, RYE, NEW YORK
CROSS AXIS BUILDING E
SITE CONSTRUCTION PLAN

CONTRACT NUMBER: 22-523
SHEET NUMBER: CXE-C-03
DWG NO.: 312 of 664
SCALE: 1"=10'
DATE: 08/23/2022
DPW FILE NUMBER: 1-118-C-1061-1
REV. NO.: 1

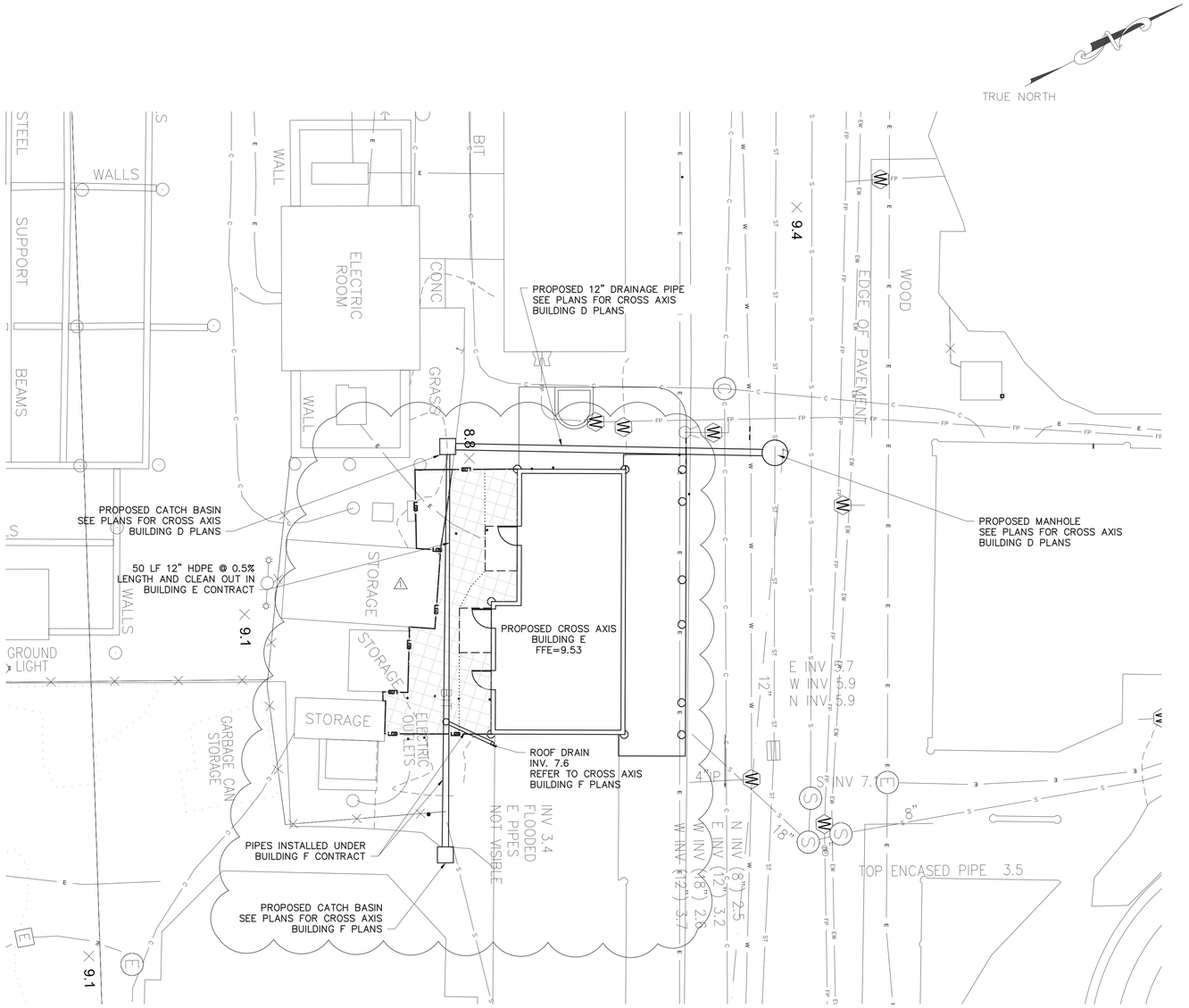

NOTE:
NO WATER AND SEWER SUPPLY NEEDED FOR THIS BUILDING. SEE FIRE PROTECTION PLAN FOR DETAILS

EXISTING LEGEND

- POST
- UTILITY POLE
- SIGN
- HANDICAP PARKING
- GROUND LIGHT
- LIGHT POLE
- UTILITY POLE WITH LIGHT
- LIGHT POLE (SINGLE LIGHT)
- LIGHT POLE (DOUBLE LIGHT)
- LIGHT POLE (MULTI LIGHT)
- BOAT TIE-OFF CLEAT
- CATCH BASIN
- TRENCH DRAIN
- MAILBOX
- UNKNOWN MANHOLE
- COMMUNICATIONS BOX/HAND HOLE
- ELECTRIC HAND HOLE
- ELECTRIC BOX
- GAS METER
- IRRIGATION BOX
- UNKNOWN UTILITY BOX/HAND HOLE
- COMMUNICATION MANHOLE
- DRAINAGE MANHOLE
- ELECTRIC MANHOLE
- SEWER MANHOLE
- STORM SEWER MANHOLE
- SEWER CLEANOUT
- HYDRANT
- SIAMESE CONNECTION
- UNKNOWN VALVE
- WATER VALVE
- GAS VALVE
- WATER SPIGOT OR FOUNTAIN
- MONITORING WELL
- DECIDUOUS BUSH
- EVERGREEN BUSH
- DECIDUOUS TREE
- EVERGREEN TREE
- STUMP
- HEDGE ROW
- TREELINE
- BRUSHLINE
- RETAINING WALL
- GUIDE RAIL
- STONE WALL
- WATERLINE
- FENCE
- UNDERGROUND COMMUNICATION
- UNDERGROUND PROPANE
- UNDERGROUND ELECTRICAL
- UNDERGROUND STREET LIGHTING
- UNDERGROUND ENVIRONMENTAL WASTEWATER
- UNDERGROUND SEWER
- UNDERGROUND STORM SEWER
- UNDERGROUND WATER
- UNDERGROUND FIRE PROTECTION

PROPOSED LEGEND:

- SAW CUTTING ASPHALT CONCRETE
- LIMITS OF DISTURBANCE
- LIMITS OF PAVEMENT REMOVAL (MILLING & EXCAVATION)
- PROPOSED WATER LINE
- PROPOSED CATCH BASIN
- PROPOSED STORM PIPE
- PROPOSED SANITARY MANHOLE
- PROPOSED SANITARY PIPE
- PROPOSED UNDERGROUND ELECTRIC
- PROPOSED LANDING AREA (CONCRETE)
- PROPOSED EDGE OF ADA-ACCESSIBLE ROUTE TO BUILDING

New York 811 Know what's below. Call before you dig.

0 10 20 30
1"=10' SCALE BAR

6/15/2022 4:10:27 PM

CONSULTANT INFORMATION
LiRo Engineers, Inc.
A LiRo Group Company
Mineola, N.Y. 516-746-2350[T]

CONSULTANT SEAL
STATE OF NEW YORK · KENNETH J. HOLMSTROM · No. 059134 · LICENSED PROFESSIONAL ENGINEER

REVISION NUMBER	DATE	MADE BY	APP'D BY	REVISION
1	9/21/22	HIK	LK	BID ADDENDUM #3

RECORD DRAWING CERTIFICATION
AS BUILT – CHANGES AS NOTED
AS BUILT – NO CHANGES

CONTRACTOR
NAME
SIGNATURE
TITLE DATE

PROJECT COORDINATOR
NAME
SIGNATURE
TITLE DATE

WESTCHESTER COUNTY, NEW YORK
DEPARTMENT OF PUBLIC WORKS AND TRANSPORTATION
DIVISION OF ENGINEERING

INFRASTRUCTURE REHABILITATION PHASE 3
PLAYLAND PARK, RYE, NEW YORK
CROSS AXIS BUILDING E
UTILITY CONSTRUCTION PLAN

CONTRACT NUMBER: 22-523
SHEET NUMBER: CXE-C-04
DWG NO.: 313 of 664
SCALE: 1"=10'
DATE: 08/23/2022
DPW FILE NUMBER: 1-118-C-1062-1
REV. NO.: 1

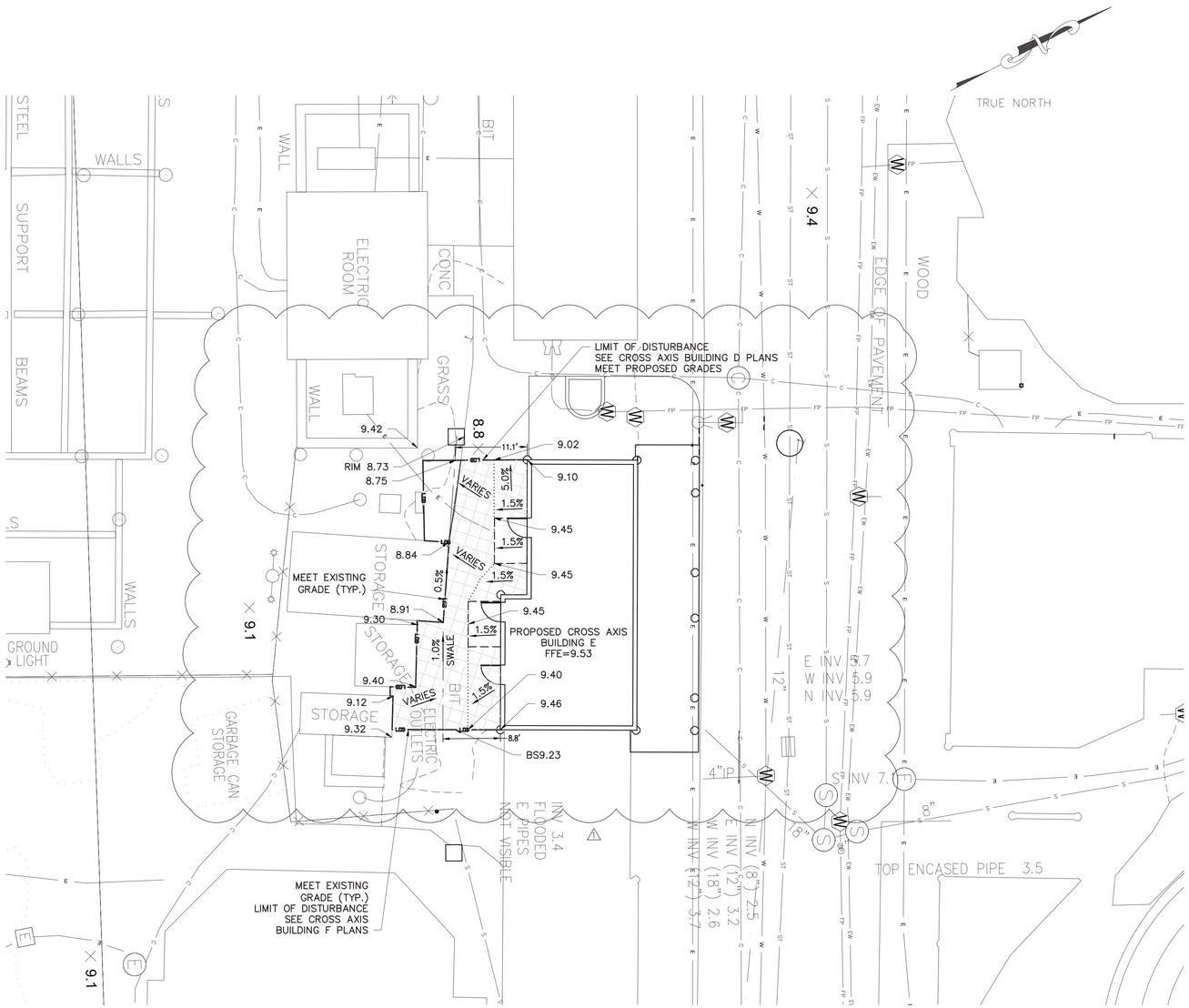

EXISTING LEGEND

- POST
- UTILITY POLE
- OR SIGN
- HANDICAP PARKING
- GROUND LIGHT
- LIGHT POLE
- UTILITY POLE WITH LIGHT
- LIGHT POLE (SINGLE LIGHT)
- LIGHT POLE (DOUBLE LIGHT)
- LIGHT POLE (MULTI LIGHT)
- BOAT TIE-OFF CLEAT
- OR OR CATCH BASIN
- TRENCH DRAIN
- MAILBOX
- UNKNOWN MANHOLE
- C OR C COMMUNICATIONS BOX/HAND HOLE
- E ELECTRIC HAND HOLE
- EB ELECTRIC BOX
- GM GAS METER
- IB IRRIGATION BOX
- U UNKNOWN UTILITY BOX/HAND HOLE
- C COMMUNICATION MANHOLE
- D OR D DRAINAGE MANHOLE
- E ELECTRIC MANHOLE
- S OR S SEWER MANHOLE
- ST STORM SEWER MANHOLE
- SEWER CLEANOUT
- HYDRANT
- SIAMESE CONNECTION
- V OR V UNKNOWN VALVE
- W WATER VALVE
- G GAS VALVE
- WS WATER SPIGOT OR FOUNTAIN
- MONITORING WELL
- DECIDUOUS BUSH
- EVERGREEN BUSH
- DECIDUOUS TREE
- EVERGREEN TREE
- STUMP
- HEDGE ROW
- TREELINE
- BRUSHLINE
- RETAINING WALL
- GUIDE RAIL
- STONE WALL
- WATERLINE
- FENCE
- C UNDERGROUND COMMUNICATION
- P UNDERGROUND PROPANE
- E UNDERGROUND ELECTRICAL
- SL UNDERGROUND STREET LIGHTING
- EW UNDERGROUND ENVIRONMENTAL WASTEWATER
- S UNDERGROUND SEWER
- ST UNDERGROUND STORM SEWER
- W UNDERGROUND WATER
- FP UNDERGROUND FIRE PROTECTION
- X 415.50 EXISTING SPOT ELEVATION
- TG=415.50 EXISTING TOP OF GRATE ELEVATION

PROPOSED LEGEND:

- SAW CUTTING ASPHALT CONCRETE
- LOD LIMITS OF DISTURBANCE
- 415 PROPOSED MAJOR CONTOUR
- 414 PROPOSED MINOR CONTOUR
- 9.30 PROPOSED SPOT ELEVATION
- BS9.30 PROPOSED BOTTOM SWALE
- TS9.30 TOP OF SLAB
- PROPOSED INLET PROTECTION
- PROPOSED LANDING AREA (CONCRETE)
- PROPOSED EDGE OF ADA-ACCESSIBLE ROUTE TO BUILDING

New York 811 — Know what's below. Call before you dig.

0 10 20 30
1'=10' SCALE BAR

6/15/2022 4:10:27 PM

CONSULTANT INFORMATION
LiRo Engineers, Inc.
A LiRo Group Company
Mineola, N.Y. 516-746-2350[T]

CONSULTANT SEAL
STATE OF NEW YORK — KENNETH J. HOLMSTROM — LICENSED PROFESSIONAL ENGINEER — No. 059134

REVISION NUMBER	DATE	MADE BY	APP'D BY	REVISION
1	9/21/22	HIK	LK	BID ADDENDUM #3

RECORD DRAWING CERTIFICATION
AS BUILT – CHANGES AS NOTED
AS BUILT – NO CHANGES

CONTRACTOR
NAME
SIGNATURE
TITLE DATE

PROJECT COORDINATOR
NAME
SIGNATURE
TITLE DATE

WESTCHESTER COUNTY, NEW YORK
DEPARTMENT OF PUBLIC WORKS AND TRANSPORTATION
DIVISION OF ENGINEERING

INFRASTRUCTURE REHABILITATION PHASE 3
PLAYLAND PARK, RYE, NEW YORK
CROSS AXIS BUILDING E
GRADING AND EROSION CONTROL PLAN

CONTRACT NUMBER: 22-523
SHEET NUMBER: CXE-C-05
DWG NO.: 314 of 664
SCALE: 1"=10'
DATE: 08/23/2022
DPW FILE NUMBER: 1-118-C-1063-1
REV. NO.: 1

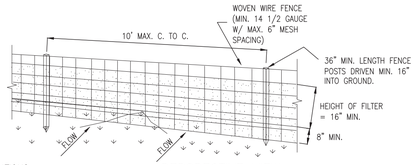

PERSPECTIVE VIEW

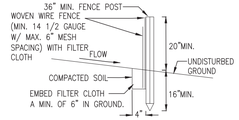

SECTION VIEW

CONSTRUCTION SPECIFICATIONS

1. WOVEN WIRE FENCE TO BE FASTENED SECURELY TO FENCE POSTS WITH WIRE TIES OR STAPLES. POSTS SHALL BE STEEL EITHER "T" OR "U" TYPE OR HARDWOOD.
2. FILTER CLOTH TO BE TO BE FASTENED SECURELY TO WOVEN WIRE FENCE WITH TIES SPACED EVERY 24" AT TOP AND MID SECTION. FENCE SHALL BE WOVEN WIRE, 12 1/2 GAUGE, 6" MAXIMUM MESH OPENING.
3. WHEN TWO SECTIONS OF FILTER CLOTH ADJOIN EACH OTHER THEY SHALL BE OVER-LAPPED BY SIX INCHES AND FOLDED. FILTER CLOTH SHALL BE EITHER FILTER X, MIRAFI 100X, STABILINKA T140N, OR APPROVED EQUIVALENT.
4. PREFABRICATED UNITS SHALL BE GEOFAB, ENVIROFENCE, OR APPROVED EQUIVALENT.
5. MAINTENANCE SHALL BE PERFORMED AS NEEDED AND MATERIAL REMOVED WHEN "BULGES" DEVELOP IN THE SILT FENCE.

SILT FENCE INSTALLATION DETAIL
ITEM NO. 209.13

N.T.S.

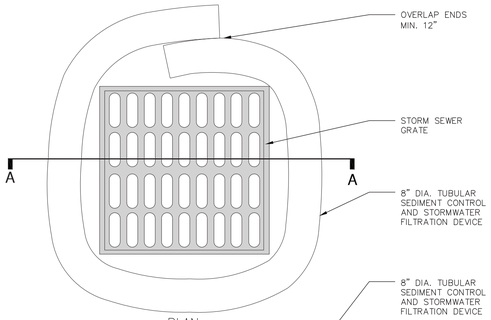

PLAN

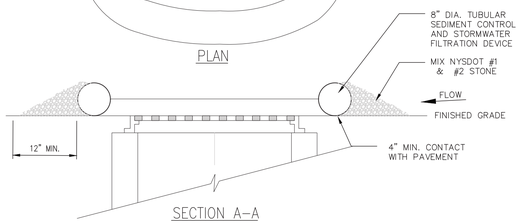

SECTION A–A

NOTES:

1. TUBULAR SEDIMENT CONTROL AND STORMWATER FILTRATION DEVICES SHALL BE FILTREXX FILTERSOXX, OR EQUIVALENT.
2. REPLACE AND DISPOSE OF PER MANUFACTURERS SPECIFICATIONS.
3. THIS PRACTICE INCLUDES SANDBAGS, COMPOST FILTER SOCKS, GEO-TUBES FILLED WITH BALLAST, AND MANUFACTURED SURFACE BARRIERS. PEA GRAVEL CAN ALSO BE USED IN CONJUNCTION WITH THESE PRACTICES TO IMPROVE PERFORMANCE. WHEN INLET IS NOT AT A LOW POINT, AND IS OFF-SET FROM THE PAVEMENT OR GUTTER LINE, PROTECTION SHOULD BE SELECTED AND INSTALLED SO THAT FLOWS ARE NOT DIVERTED AROUND INLET.
4. THE DRAINAGE AREA SHOULD BE LIMITED TO 1 ACRE AT THE DRAINAGE INLET. ALL PRACTICES WILL BE PLACED AT THE INLET PERIMETER OR BEYOND TO MAXIMIZE THE FLOW CAPACITY OF THE INLET. PRACTICES SHALL BE WEIGHTED, BRACED, TIED, OR OTHERWISE ANCHORED TO PREVENT MOVEMENT OR SHIFTING OF LOCATION ON PAVED SURFACES. TRAFFIC SAFETY SHALL BE INTEGRATED WITH THE USE OF THIS PRACTICE. ALL PRACTICES SHOULD BE MARKED WITH TRAFFIC SAFETY CONES AS APPROPRIATE. STRUCTURE HEIGHT SHALL NOT CAUSE FLOODING OR BY-PASS FLOW THAT WOULD CAUSE ADDITIONAL EROSION. THE STRUCTURE SHOULD BE INSPECTED AFTER EVERY STORM EVENT. ANY SEDIMENT SHOULD BE REMOVED AND DISPOSED OF ON THE SITE. ANY BROKEN O DAMAGED COMPONENTS SHOULD BE REPLACED. CHECK ALL MATERIALS FOR PROPER ANCHORING AND SECURE AS NECESSARY.
5. IF USING THE COMPOST FILTER SOCK, THE COMPOST INFILL SHALL BE WELL DECOMPOSED (MATURED AT LEAST 3 MONTHS), WEED-FREE, ORGANIC MATTER. IT SHALL BE AEROBICALLY COMPOSTED, POSSESS NO OBJECTIONABLE ODORS, AND CONTAIN LESS THAN 1%, BY DRY WEIGHT, OF MANMADE FOREIGN MATTER. WHEN USING COMPOST FILTER SOCKS ADJACENT TO SURFACE WATER, THE COMPOST SHOULD HAVE LOW NUTRIENT VALUE.

DRAINAGE STRUCTURE INLET PROTECTION, TEMPORARY

N.T.S.

STORM WATER POLLUTION PREVENTION PLAN NOTES:

THE CONTRACTOR SHALL BE RESPONSIBLE FOR IMPLEMENTATION AND ADHERENCE TO THE STORM WATER POLLUTION PREVENTION PLAN (SWPPP) FROM THE COMMENCEMENT OF THE PROJECT TO SITE STABILIZATION.

POLLUTION PREVENTION MEASURES:

THE CONTRACTOR SHALL TAKE THE FOLLOWING STEPS TO PREVENT LITTER, CHEMICALS AND DEBRIS FROM ENTERING STORM DRAINS AND DISCHARGES.

1. PROPERLY INSTALL AND MAINTAIN EROSION AND SEDIMENT CONTROL DEVICES AS OUTLINED IN THE PROJECT DOCUMENTS AND IN COMPLIANCE WITH THE LATEST EDITION OF THE NEW YORK STATE STANDARDS AND SPECIFICATIONS FOR EROSION AND SEDIMENT CONTROL.
2. PROPERLY CONTAIN AND DISPOSE OF ALL MATERIALS USED ON SITE.
3. CLEAN UP SPILLS IMMEDIATELY TO MINIMIZE SAFETY HAZARD AND PREVENT SPREADING.
4. ROUTINELY INSPECT AND CLEAN OUT CATCH BASINS AND STORM LINES.
5. LABEL ALL STORM INLETS AS "NO DUMPING".
6. CONTROL LITTER BY SWEEPING AND PICKING IT UP DAILY.
7. DO NOT STORE FUEL AND WASTE ON-SITE OR USE SECONDARY CONTAINMENT MEASURES.
8. IF PRACTICAL, USE ALTERNATIVE CLEANING METHODS SUCH AS WIPING DOWN OF VEHICLES AND EQUIPMENT INSTEAD OF HOSING.
9. REMOVE ALL EXCAVATED UNSUITABLE MATERIAL FROM THE SITE AS SOON AS PRACTICABLE.
10. PRACTICE GOOD HOUSEKEEPING AND EDUCATE EMPLOYEES ON POLLUTION PREVENTION MEASURES.

ON SITE MATERIAL STORAGE:

THE CONTRACTOR MAY HAVE THE FOLLOWING MATERIALS STORED ON-SITE DURING PROJECT CONSTRUCTION. THE LIST MAY NOT BE INCLUSIVE AND WILL VARY DURING THE DIFFERENT STAGES OF THE PROJECT.

1. PRE-CAST CONCRETE MANHOLES, CATCH BASINS AND OUTLET CONTROL STRUCTURE.
2. PVC PIPING AND APPURTENANCES.
3. STOCKPILED SOILS – TOP SOIL, SUB BASE MATERIAL, CUSHION MATERIAL, SELECT GRANULAR MATERIAL, GRAVEL AND CRUSHED STONE.
4. EROSION AND SEDIMENT CONTROL MATERIAL: SILT FENCE, RIP RAP AND SEED.
5. PAVING MATERIALS AND EQUIPMENT
6. SECURITY FENCE AND APPURTENANCES
7. EQUIPMENT REQUIRED TO PERFORM THE WORK.

THE CONTRACTOR SHALL UTILIZE THE POLLUTION PREVENTION MEASURES OUTLINED ABOVE TO PREVENT POLLUTANTS FROM STORED MATERIALS FROM REACHING THE STORM WATER CONVEYANCE DEVICES AND DISCHARGES.

EROSION AND SEDIMENT CONTROL PRACTICES:

TEMPORARY STORM INLET PROTECTION:
STORM INLET PROTECTION INTERCEPTS SEDIMENT LADEN RUNOFF AND TRAPS SEDIMENT TO PROTECT THE DRAINAGE SYSTEM. STORM INLET PROTECTION SHALL BE PROVIDED AT EACH NEW CATCH BASIN AS IT IS INSTALLED AND AROUND EXISTING CATCH BASINS AS SHOWN.

TEMPORARY SEDIMENT CONTROL – SILT FENCE
SILT FENCE REDUCES RUNOFF VELOCITY AND CAUSES SETTLING OF SEDIMENT. INSTALL SILT FENCE PRIOR TO BEGINNING ANY EXCAVATION OR EARTHWORK ACTIVITIES WHERE SHOWN ON THE DRAWINGS. INSTALL AROUND ANY STOCKPILED SOIL MATERIALS.

TEMPORARY STABILIZED CONSTRUCTION ENTRANCE
THE STABILIZED CONSTRUCTION ENTRANCE IS USED TO REDUCE OR ELIMINATE TRACKING OF SEDIMENT ONTO STREETS AND/OR PUBLIC RIGHT-OF-WAY.

TEMPORARY SEEDING
TEMPORARY SEEDING REDUCES EROSION AND SEDIMENT LOSS FROM THE BARE GROUND. PROVIDE TEMPORARY SEEDING TO PROVIDE TEMPORARY COVER FOR DISTURBED EARTH OR SOIL STOCKPILES HELD FOR LONGER THAN SEVEN (7) DAYS. TEMPORARY SHUT DOWN OF CONSTRUCTION OR WAITING FOR OPTIMAL PLANTING TIME. IN SPRING, SUMMER OR EARLY FALL APPLY RYE GRASS AT A RATE OF 1 LB/ 1,000 SQ. FT. IN LATE FALL APPLY CERTIFIED AROOSTOOK RYE AT 2.5 LBS / 1,000 SQ. FT. OR WOOD FIBER HYDROMULCH AT MANUFACTURE'S RECOMMENDED RATE. HAY OR STRAW SHALL BE ANCHORED.

DUST CONTROL
TEMPORARY AND PERMANENT STABILIZATION MEASURES SUCH AS SEEDING, MULCHING AND INSTALLING EROSION AND SEDIMENT CONTROL BLANKETS WILL PREVENT DUST FROM BLOWING OFF SITE. INSTALL THESE MEASURES AS SOON AS FINAL GRADES ARE REACHED AND ON SOIL STOCKPILES AND DISTURBED AREAS TO BE LEFT FOR LONGER THAN SEVEN (7) DAYS.

PHASING OF EROSION AND SEDIMENT CONTROL PRACTICES:

1. PRIOR TO COMMENCING ANY CONSTRUCTION ACTIVITIES ON THE SITE, THE CONTRACTOR SHALL MEET WITH THE OWNERS REPRESENTATIVE AND DESIGNER TO DISCUSS THE STORM WATER POLLUTION PREVENTION PLAN.
2. PRIOR TO COMMENCING ANY EXCAVATION PROCEDURES, INSTALL SILT FENCE AS SHOWN ON THE PLANS.
3. INSTALL STABILIZED CONSTRUCTION ENTRANCE.
4. AS THE NEW CATCH BASINS ARE INSTALLED, PROVIDE TEMPORARY INLET PROTECTION.
5. AS SOIL MATERIAL IS EXCAVATED OR STOCKPILED, PROVIDE A SILT FENCE ENCLOSURE AROUND THE PILE. IF THE PILE IS TO REMAIN FOR LONGER THAN SEVEN (7) DAYS, TEMPORARILY SEED THE PILE.
6. DO NOT LEAVE DISTURBED AREAS NOT TO BE COVERED BY IMPERVIOUS SURFACE BARE FOR LONGER THAN SEVEN (7) DAYS, ROUGH GRADE THE AREAS AND TEMPORARILY SEED.
7. AFTER FINAL GRADING OF VEGETATED AREAS, PROVIDE PERMANENT SEEDING.
8. UPON FINAL STABILIZATION OF THE SITE, REMOVE ALL TEMPORARY EROSION AND SEDIMENT CONTROL DEVICES. INSPECT ALL PERMANENT EROSION AND SEDIMENT CONTROL AND STORM WATER MANAGEMENT DEVICES. REPLACE ANY FAILING OR UNSATISFACTORY MEASURES. CLEAN ALL STORMWATER CATCH BASINS AND PIPING.

EROSION AND SEDIMENT CONTROL AND STORMWATER CONTROL DEVICE MAINTENANCE:

CONSTRUCTION DURATION
ALL EROSION AND SEDIMENT CONTROL DEVICES SHALL BE INSPECTED WEEKLY.

1. SILT FENCE SHALL BE REPLACED WHEN TORN, IS BULGING OR NO LONGER MEETING THE INSTALLATION DETAILS.
2. THE STABILIZED CONSTRUCTION ENTRANCE SHALL BE MAINTAINED IN A CONDITION TO PREVENT TRACKING OF SEDIMENT ON TO ROADS AND PUBLIC RIGHTS-OF-WAY. INSPECT TOP DRESSING AND PROVIDE ADDITIONAL AGGREGATE AS NECESSARY.
3. DRAINAGE STRUCTURES AND PIPING SHALL BE CHECKED FOR CLOGGING AND SEDIMENT ACCUMULATION AND CLEANED IF REQUIRED.

PROJECT COMPLETION
AT THE PROJECT COMPLETION AND PRIOR TO PROJECT CLOSE OUT, THE CONTRACTOR SHALL INSPECT ALL PERMANENT EROSION AND CONTROL AND STORMWATER MANAGEMENT PRACTICES.

1. ACCEPTABLE VEGETATION ESTABLISHMENT IN ACCORDANCE WITH SPECIFICATIONS.
2. DRAINAGE STRUCTURES AND PIPING SHALL BE CHECKED FOR CLOGGING AND SEDIMENT ACCUMULATION AND CLEANED IF REQUIRED.

MAINTENANCE OF PERMANENT STORMWATER MANAGEMENT PRACTICES

1. DRAINAGE STRUCTURES AND PIPING SHALL BE CHECKED FOR CLOGGING AND SEDIMENT ACCUMULATION AND CLEANED IF REQUIRED.

SITE ASSESSMENT AND INSPECTIONS

COMPLY WILL ALL CONDITIONS INCLUDED IN THE SPDES PERMIT, PART III.D.3 THROUGH PART III.D.5. THE REQUIREMENTS IN THESE SUBSECTIONS OF THE SPDES PERMIT TAKE PRECEDENCE OVER NOTES ON THIS DRAWING AND ON THE EROSION AND SEDIMENT CONTROL PLAN WHERE CONTRADICTIONS BETWEEN THESE DRAWINGS AND THE SPDES PERMIT MAY ARISE.

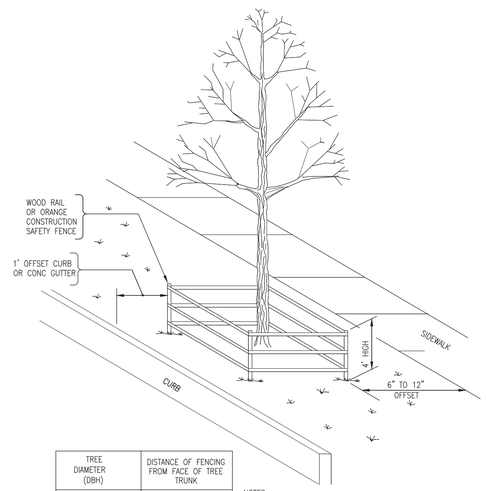

TREE DIAMETER (DBH)	DISTANCE OF FENCING FROM FACE OF TREE TRUNK
LESS THAN 10"	6'
10" – 14"	10'
15" – 19"	12'
20" OR MORE	15'

NOTES:

1. ALL TREES WITHIN THE PROJECT LIMITS THAT ARE TO REMAIN, ARE TO RECEIVE THIS TREATMENT.
2. DO NOT LEAVE CONSTRUCTION EQUIPMENT RUNNING (IDLING) UNDER TREE CANOPY.

TREE PROTECTION SYSTEM 5'–0"
ITEM NO. 611.21050009

N.T.S.

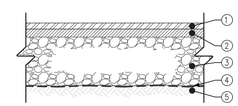

1. 2" TOP COURSE, 12.5 F2 TOP COURSE HMA, 80 SERIES COMPACTION NYSDOT ITEM 402.128204
2. 2" BINDER COURSE, 25 F9 BINDER COURSE HMA, 80 SERIES COMPACTION NYSDOT ITEM 402.258904
3. 4" SUBBASE COURSE, SUBBASE COURSE, TYPE 2 NYSDOT ITEM 304.12
4. GEOTEXTILE SEPARATION NYSDOT ITEM 207.21
5. COMPACTED SUBGRADE

NOTES:

1. COMPACT SUBGRADE TO A MODIFIED PROCTOR DENSITY OF 95%
2. SUBBASE COURSE SHALL HAVE NO MORE THAN (7%) SEVEN PERCENT BY WEIGHT FINER THAN NO. 200 SIEVE.
3. IMPRINTED PATTERN SHOWN IS FOR GRAPHICAL REPRESENTATIONS ONLY. ALL IMPRINTING/PATTERNING LAYOUTS AND POSITIONING SHALL BE APPROVED BY THE PROJECT ENGINEER PRIOR TO ACTUAL CONSTRUCTION.

ASPHALT PAVEMENT SECTION

N.T.S.

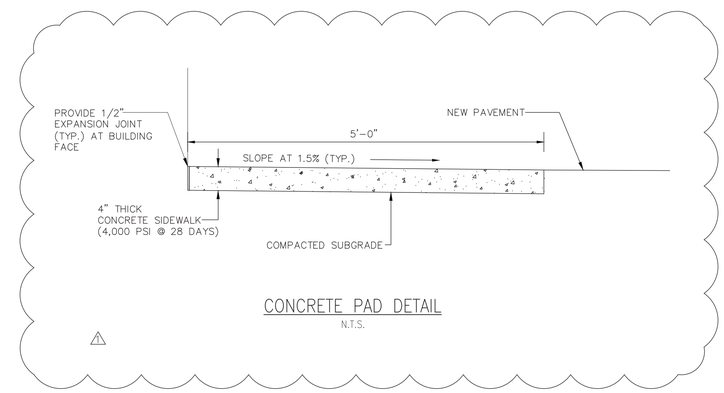

CONCRETE PAD DETAIL

N.T.S.

6/15/2022 4:10:27 PM

CONSULTANT INFORMATION

LiRo Engineers, Inc.
A LiRo Group Company
Mineola, N.Y. 516-746-2350[T]

CONSULTANT SEAL

STATE OF NEW YORK · KENNETH J. HOLOHAN · LICENSED PROFESSIONAL ENGINEER · NO. 059134

REVISION NUMBER	DATE	MADE BY	APP'D BY	REVISION
1	9/21/22	HIK	LK	BID ADDENDUM #3

RECORD DRAWING CERTIFICATION

☐ AS BUILT – CHANGES AS NOTED ☐ AS BUILT – NO CHANGES

CONTRACTOR
NAME
SIGNATURE
TITLE DATE

PROJECT COORDINATOR
NAME
SIGNATURE
TITLE DATE

WESTCHESTER COUNTY, NEW YORK
DEPARTMENT OF PUBLIC WORKS AND TRANSPORTATION
DIVISION OF ENGINEERING

INFRASTRUCTURE REHABILITATION PHASE 3
PLAYLAND PARK, RYE, NEW YORK
CROSS AXIS BUILDING E
CIVIL DETAILS 1

CONTRACT NUMBER	22-523
SHEET NUMBER	CXE-C-06
DWG NO.	315 of 664
SCALE:	AS NOTED
DATE:	08/23/2022
DPW FILE NUMBER	1-118-C-1064-1
REV. NO.	1

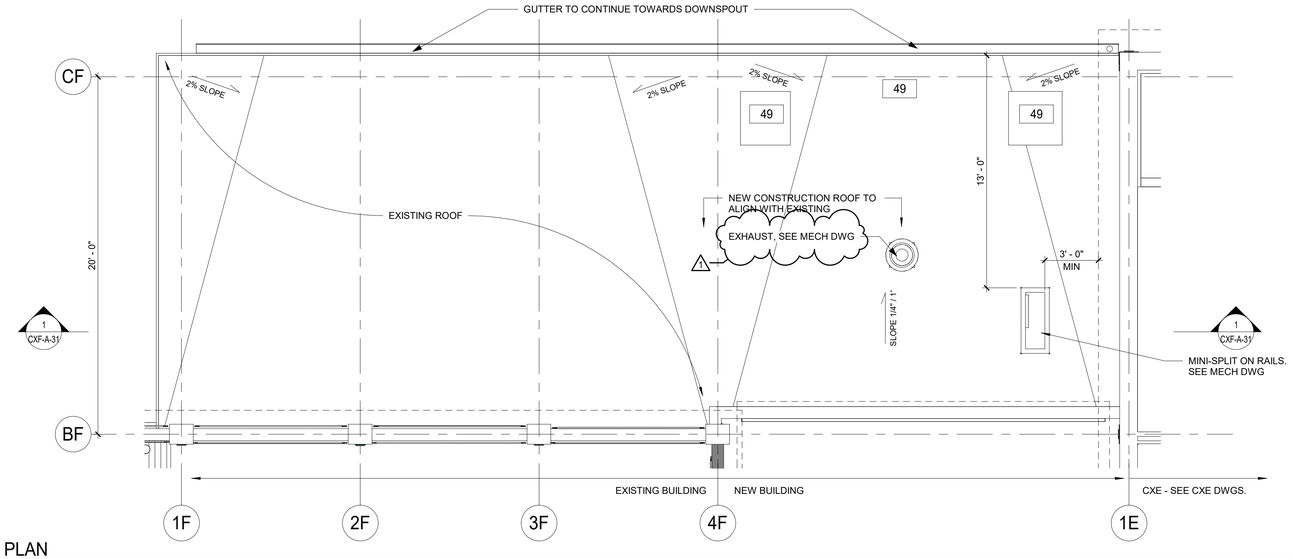

2 CXF - ROOF PLAN
1/4" = 1'-0"

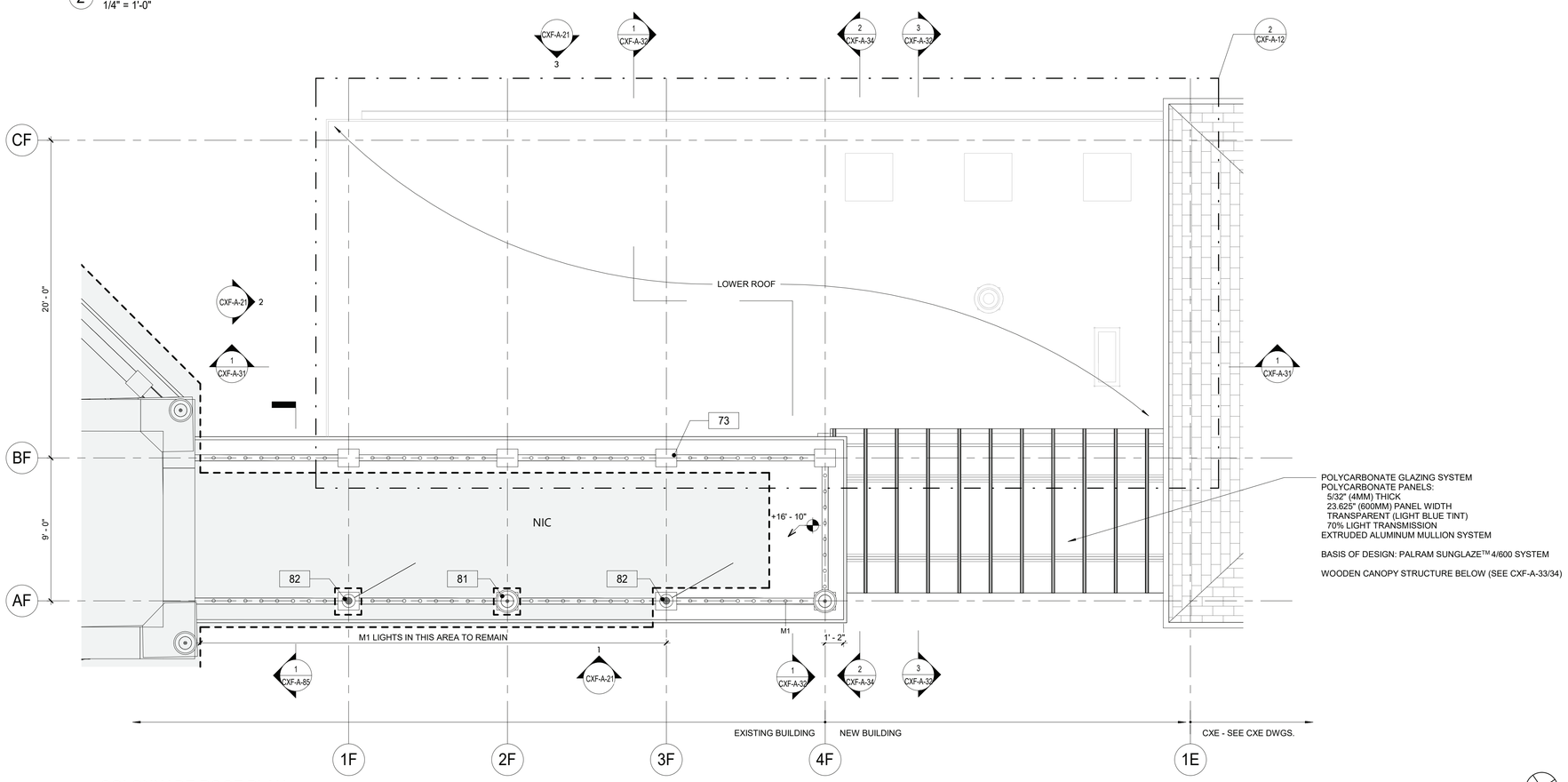

1 COLONNADE ROOF PLAN
1/4" = 1'-0"

FLOOR PLAN NOTES:

1. DIMENSIONS ARE TO FACE OF GYPSUM WALL BOARD, GRID LINES, OR CENTERLINE OF COLUMN. ALL ELEVATIONS ARE NOTED FROM FINISH FLOOR ELEVATIONS.
2. PROVIDE DRYWALL TRIM AT ALL EXPOSED EDGES AND CORNERS.
3. MINIMUM DIMENSION FROM ANY CORNER OR WALL TO FRAMING STUD AT DOOR JAMB OPENING SHALL BE 4" U.N.O.
4. PROVIDE FIRE RETARDANT WOOD BLOCKING FOR ANY WALL MOUNTED EQUIPMENT OR ACCESSORIES. COORDINATE ALL BLOCKING REQUIREMENTS NECESSARY WITH OTHER TRADES.
5. THE CONTRACTOR SHALL VERIFY DIMENSIONS OF THE EXISTING SPACE AND OF ANY EXISTING CONSTRUCTION TO REMAIN BY ACTUAL MEASUREMENT BEFORE ANY WORK IS PERFORMED. IF ANY MEASUREMENTS DIFFER FROM DIMENSIONS SHOWN ON PLAN, GC IS TO NOTIFY THE ARCHITECT IMMEDIATELY. THE CONTRACTOR SHALL BE RESPONSIBLE FOR CORRECTING ANY AND ALL DISCREPANCIES FOUND AFTER THE WORK IS PERFORMED, AT NO ADDITIONAL EXPENSE TO THE OWNER.
6. THE GC SHALL PROVIDE CAULK JOINTS WHERE GYP BD MEETS THE FLOOR OR ROOF DECK.
7. THE GC SHALL BE RESPONSIBLE FOR COORDINATING WITH OWNER ON ALL WORK TO BE PERFORMED BY THE OWNER. ANY POTENTIAL CONFLICTS OR DELAYS CAUSED BY THE OWNER'S SUBCONTRACTORS MUST BE DOCUMENTED IN WRITING TO THE OWNER BEFORE THE DELAY IS ACTUALLY INCURRED FOR IT TO BE CONSIDERED. OTHERWISE THE GC WILL BE RESPONSIBLE FOR MEETING THE SCHEDULE AS OUTLINED IN THE CONTRACT.
8. THE CONTRACTOR TO VERIFY ALL FINISHED DIMENSIONS. FIELD CONDITIONS ALTERING ANY DIMENSIONS SHOULD BE BROUGHT TO THE ATTENTION OF THE OWNER AND ARCHITECT.
9. THE CONTRACTOR SHALL SUPPLY ALL MATERIAL, LABOR, AND COORDINATION REQUIRED FOR THEINSTALLATION OF ALL OWNER-SUPPLIED ITEMS AS DESCRIBED IN THE DOCUMENTS, U.N.O.
10. THE CONTRACTOR IS RESPONSIBLE FOR ALL FLOOR AND WALL PENETRATIONS FOR ELECTRICAL AND MECHANICAL WORK. ALL SUCH OPENING SHALL BE FRAMED AND REINFORCED.
11. FLOOR SURFACES SHALL BE LEVELED TO ASSURE SMOOTH SURFACE FOR FINISH FLOOR INSTALLATION.
12. THE CONTRACTOR. TO COORDINATE ALL UTILITY STUB-UPS AND LOCATION OF ALL EQUIPMENT PRIOR TO INSTALLING ANY ONE ITEM.
13. PROVIDE PAINTED ACCESS PANELS IN WALLS & CEILING AT CONCEALED ITEMS SUCH AS VALVES, ONTROLS, SWITCHES OR ANY OTHER ITEMS THAT REQUIRES ACCESS. GC O DETERMINE ACCESS ANEL LOCATION W/ ARCHITECT PRIOR TO INSTALLATION.

PLAN LEGEND:

	NEW IPE WOOD DECK	101	DOOR TAG
	NEW CONSTRUCTION	1i	WINDOW TAG
NIC	NOT IN CONTRACT	FE	FIRE EXTINGUISHER
#	KEY NOTES	FD	FLOOR DRAIN
1i	WALL TAG		

CONSTRUCTION KEYNOTES

49	NEW CURBS FOR KITCHEN EXHAUST.
73	CONSTRUCT NEW ROOF BALUSTRADE. SEE DETAILS.
81	REINSTALL ACORN LIGHTS AND REPAIR BALUSTRADE AS NEEDED.
82	INSTALL FLAG POLES. COORDINATE WITH STRUCT DWG

9/26/2022 1:43:37 PM

CONSULTANT INFORMATION
The LiRo Group
3 Aerial Way, Syosset, New York 11791
(516) 938-5476 www.liro.com

CONSULTANT SEAL
REGISTERED ARCHITECT ROBERT D. CONNORS 023280 STATE OF NEW YORK

REVISION NUMBER	DATE	MADE BY	APP'D BY	REVISION
1	09/21/22	EZ		BID ADDENDUM #3

RECORD DRAWING CERTIFICATION
☐ AS BUILT – CHANGES AS NOTED ☐ AS BUILT – NO CHANGES

CONTRACTOR
NAME
SIGNATURE
TITLE DATE

PROJECT COORDINATOR
NAME
SIGNATURE
TITLE DATE

WESTCHESTER COUNTY, NEW YORK
DEPARTMENT OF PUBLIC WORKS AND TRANSPORTATION
DIVISION OF ENGINEERING

INFRASTRUCTURE REHABILITATION PHASE 3
PLAYLAND PARK, RYE, NEW YORK
CROSS AXIS BUILDING F
CXF- ROOF PLAN

CONTRACT NUMBER 22-523	SHEET NUMBER **CXF-A-12**
DWG NO.: 329 of 664	
SCALE: **As indicated**	
DATE: **08/23/2022**	
DPW FILE NUMBER **1-118-A-1078-1**	REV. NO. **1**

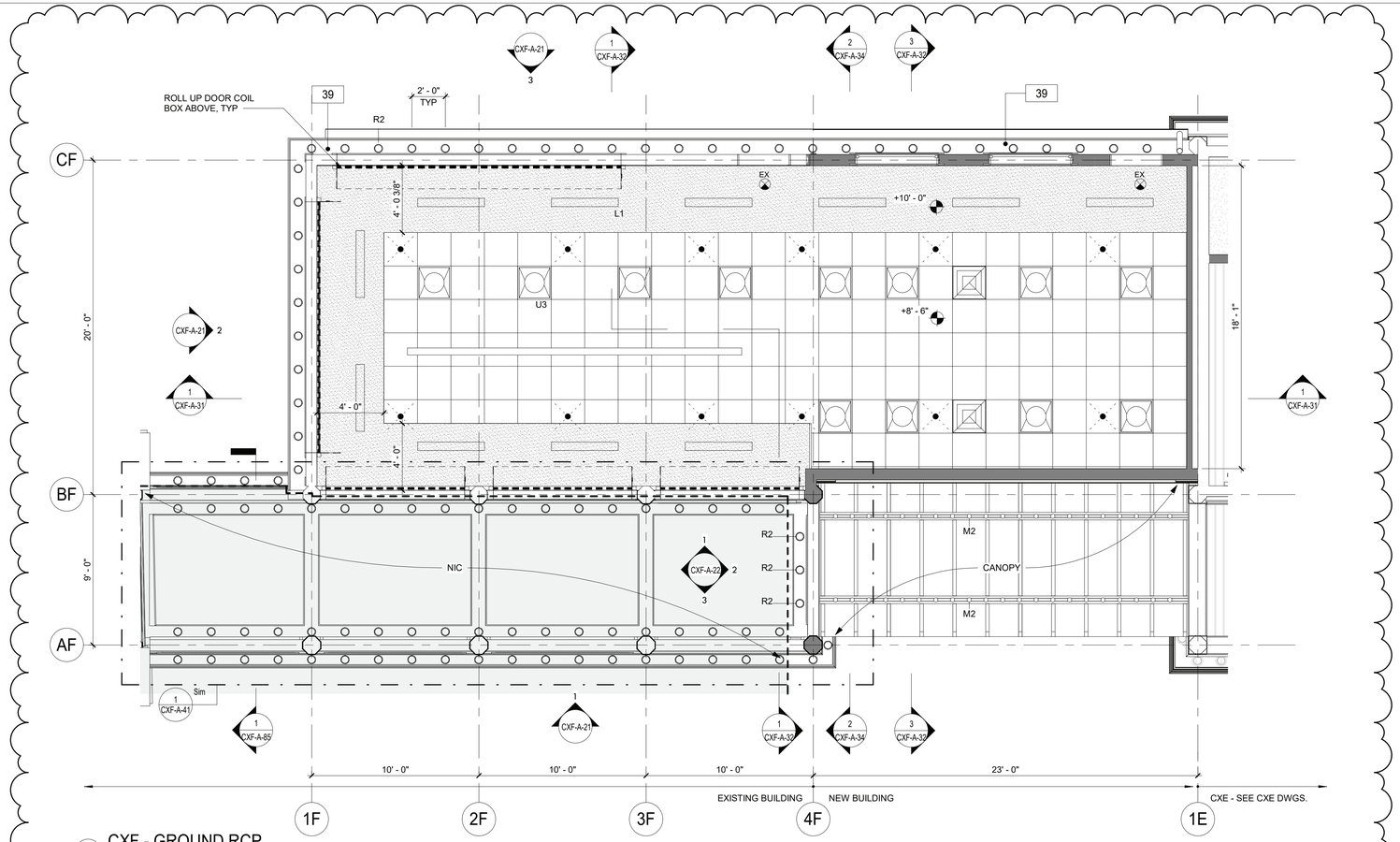

2 CXF - GROUND RCP
1/4" = 1'-0"

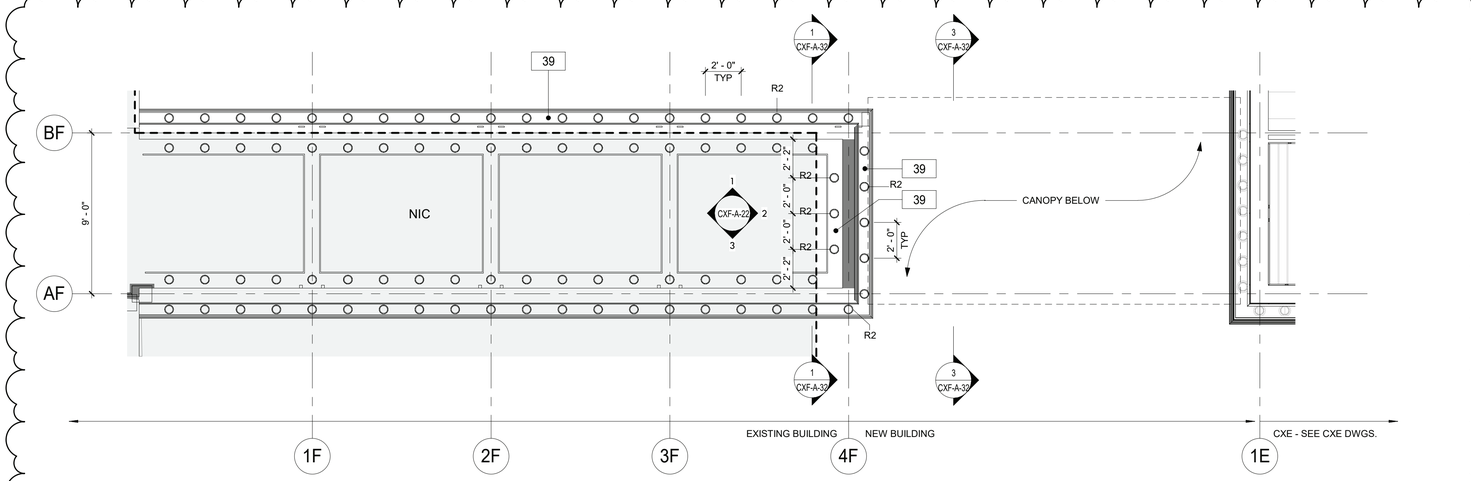

1 CXF - COLONNADE RCP
1/4" = 1'-0"

GENERAL REFLECTED CEILING PLAN NOTES

1. CONTRACTOR SHALL PROVIDE THE NECESSARY FRAMING OR BRIDGING FOR ALL LIGHT FIXTURES, DIFFUSERS, RETURNS, ETC., AS WELL AS REQUIRED CUTOUTS.
2. CONTRACTOR SHALL NOTIFY THE ARCHITECT OF ANY POSSIBLE INTERFERENCES BEFORE PROCEEDING WITH CEILING INSTALLATION.
3. CEILING CONSTRUCTION SHALL NOT BE CLOSED IN UNTIL THE CONSTRUCTION MANAGER AND AUTHORITIES HAVING JURISDICTION HAVE HAD AN OPPORTUNITY TO INSPECT THE AREA AND ASCERTAIN THAT ALL DUCTWORK, PLUMBING, ELECTRICAL CONDUITS AND LINES HAVE BEEN INSTALLED PROPERLY.
4. FASCIAS OR ANY BREAK IN THE CEILING HEIGHTS CREATED BY THE INSTALLATION AND/OR ALTERATION OF HEATING, VENTILATING, A/C OR MECHANICAL DUCTS, PIPING OR OTHER EQUIPMENT SHALL BE FORMED OF GYPSUM WALLBOARD ON FURRING CHANNELS.
5. THE CEILING PANEL JOINTS SHALL BE ALIGNED PERFECTLY WITH LIGHTING FIXTURES.
6. ALL JOINTS IN THE PANEL SHALL BE SQUARE, LEVEL AND PERFECTLY ALIGNED WITH EACH OTHER AND WITH BUILDING FIXTURES.
7. CONTRACTOR SHALL PROVIDE CUTOUTS AND OTHER SPECIAL PROVISIONS IN ACOUSTICAL WORK AS REQUIRED FOR LIGHTING FIXTURES, REGISTERS, DIFFUSERS AND OTHER INSERTED ITEMS. GENERAL CONSTRUCTION CONTRACTOR SHALL INSTALL ACCESS PANELS IN GYPSUM DRYWALL CEILINGS FOR ACCESS TO AIR CONDITIONING, PLUMBING, TELEPHONE & ELECTRICAL CONTROL EQUIPMENT REQUIRING ACCESS.
8. IN GENERAL, WITHIN EACH AREA, CEILING WORK REQUIREMENTS SHALL BE EXECUTED IN SUCH A MANNER AS TO PROVIDE CONTINUOUS MATCHED AND ALIGNED CEILINGS. THE FINAL CEILING INSTALLATION SHALL BE FREE OF ALL VISUAL DEFECTS.

RCP LEGEND

- R2 — R-2 EXTERIOR RECESSED CAN IN SOFFIT (SEE ELEC. DWGS)
- R6 — R-6: 4" SQUARE RECESSED LIGHT FIXTURE (SEE ELEC. DWGS)
- L1 — L-1 LINEAR LIGHT (SEE ELEC. DWGS)
- M2 — M-2 MARQUEE LIGHTING AT BALUSTRADE
- SPRINKLER (SEE FIRE PROTECTION DWGS)
- SUPPLY DIFFUSER. SEE MECHANICAL DRAWINGS
- EXHAUST GRILL. SEE MECHANICAL DRAWINGS
- EX — EX- EXIT SIGN
- NEW CONSTRUCTION
- T1-11 CEILING BOARD
- GYP. BOARD CEILING
- INDICATES SCOPE NOT IN CONTRACT

CONSTRUCTION KEYNOTES

39	NEW SOFFIT WITH RECESSED LIGHTS AS INDICATED ON RCP

9/23/2022 10:30:15 AM

CONSULTANT INFORMATION

The LiRo Group
3 Aerial Way, Syosset, New York 11791
(516) 938-5476 www.liro.com

CONSULTANT SEAL
REGISTERED ARCHITECT ROBERT D. TONNO JR. 023280 STATE OF NEW YORK

REVISION NUMBER	DATE	MADE BY	APP'D BY	REVISION
1	09/21/22	EZ		BID ADDENDUM #3

RECORD DRAWING CERTIFICATION
☐ AS BUILT – CHANGES AS NOTED ☐ AS BUILT – NO CHANGES

CONTRACTOR
NAME
SIGNATURE
TITLE DATE

PROJECT COORDINATOR
NAME
SIGNATURE
TITLE DATE

WESTCHESTER COUNTY, NEW YORK
DEPARTMENT OF PUBLIC WORKS AND TRANSPORTATION
DIVISION OF ENGINEERING

INFRASTRUCTURE REHABILITATION PHASE 3
PLAYLAND PARK, RYE, NEW YORK
CROSS AXIS BUILDING F
CXF - GROUND FLOOR REFLECTED CEILING PLAN

CONTRACT NUMBER	22-523
SHEET NUMBER	CXF-A-41
DWG NO.:	336 of 664
SCALE:	As indicated
DATE:	08/23/2022
DPW FILE NUMBER	1-118-A-1085-1
REV. NO.	1

FENCE & GATE PAINTING SCHEDULE	
COMPONENTS	COLOR
POSTS	P- 7
RAILS	P- 1
BALLUSTER, A	P- 15
BALLUSTER, B	P- 1
HARDWARE	BLACK

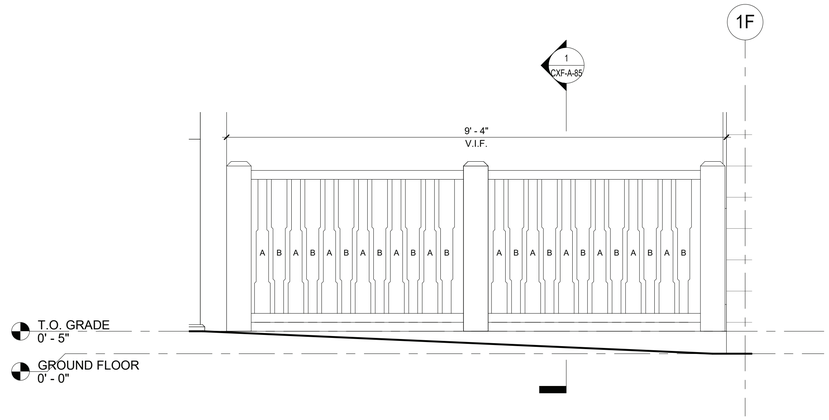

4 CXF -FENCE ELEVATION
3/4" = 1'-0"

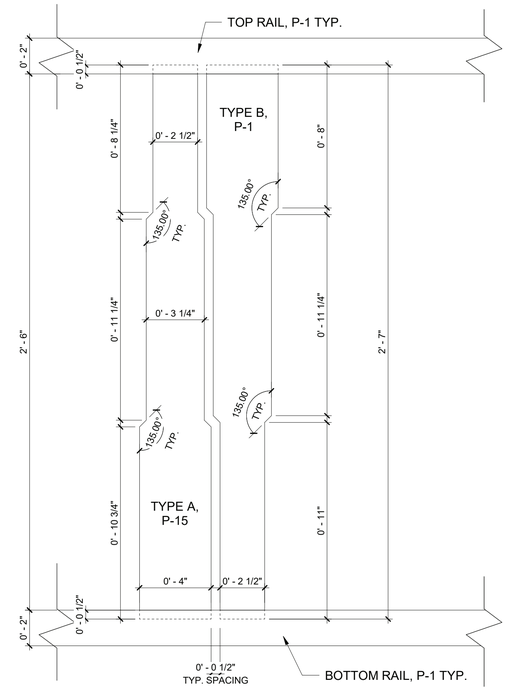

3 TYPICAL RAIL - CXF
3" = 1'-0"

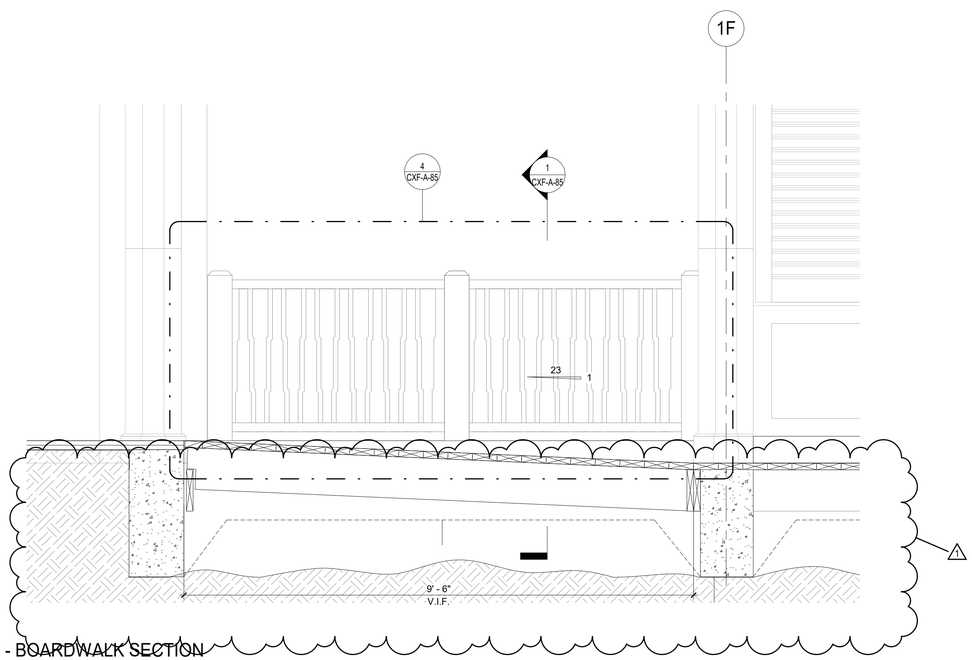

2 CXF - BOARDWALK SECTION
3/4" = 1'-0"

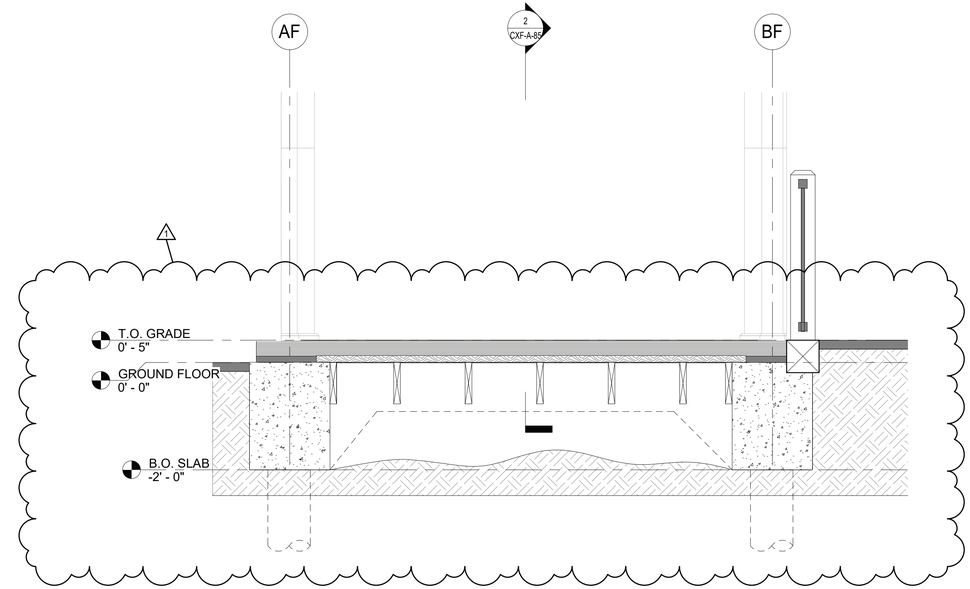

1 CXF - BOARDWALK CROSS SECTION
3/4" = 1'-0"

9/23/2022 10:30:21 AM

CONSULTANT INFORMATION

The LiRo Group

3 Aerial Way, Syosset, New York 11791
(516) 938-5476 www.liro.com

CONSULTANT SEAL

REGISTERED ARCHITECT ROBERT D. YOUNG JR. 023280 STATE OF NEW YORK

REVISION NUMBER	DATE	MADE BY	APP'D BY	REVISION
1	09/21/22	EZ		BID ADDENDUM #3

RECORD DRAWING CERTIFICATION

☐ AS BUILT – CHANGES AS NOTED ☐ AS BUILT – NO CHANGES

CONTRACTOR
NAME
SIGNATURE
TITLE DATE

PROJECT COORDINATOR
NAME
SIGNATURE
TITLE DATE

WESTCHESTER COUNTY, NEW YORK
DEPARTMENT OF PUBLIC WORKS AND TRANSPORTATION
DIVISION OF ENGINEERING

INFRASTRUCTURE REHABILITATION PHASE 3
PLAYLAND PARK, RYE, NEW YORK
CROSS AXIS BUILDING F
FENCE AND RAMP DETAIL

CONTRACT NUMBER	22-523
SHEET NUMBER	CXF-A-85
DWG NO.:	342 of 664
SCALE:	As indicated
DATE:	08/23/2022
DPW FILE NUMBER	1-118-A-1091-1
REV. NO.	1

GENERAL NOTES:

1. ALL CONCRETE USED IN NOW STRIP SHALL HAVE A MINIMUM COMPRESSIVE STRENGTH OF 3600 PSI @ 28 DAYS
2. 1" DEPTH CONTROL JOINTS SHALL BE INSTALLED PERPENDICULARLY BETWEEN POSTS UNLESS NOTED OTHERWISE ALONG ENTIRE LENGTH OF MOW STRIP
3. ALL TUBULAR STEEL POSTS, RAILS, AND PICKETS SHALL BE FLUSH AND FREE OF ALL DENTS, SPURS, AND SHARP EDGES AND SHALL BE INSTALLED LEVEL, PLUMB, AND SQUARE
4. PROVIDE CONTINUOUS LEVEL #2 WELDS ALONG ALL EDGES OF FENCE MEMBERS. GRIND SMOOTH ALL WELDS
5. ALL METAL SURFACES SHALL BE PRIMED AND PAINTED WITH TWO COATS OF RUST-PROOF PAINT, COLOR TO MATCH EXISTING ADJACENT FENCE. GC TO SUBMIT SAMPLES AS REQUIRED
6. GC IS RESPONSIBLE FOR VERIFYING ALL DIMENSIONS BEFORE MANUFACTURING GATES AND FENCE
7. ALL TUBULAR STEEL FENCE MEMBERS ARE TO BE IN ACCORDANCE WITH ASTM 513 HOT ROLLED STRUCTURAL STEEL 50,000 PSI TENSILTE STRENGTH, 60,000 PSI YIELD STRENGTH
8. GC TO PROVIDE SHOP DRAWINGS FOR ALL FENCE COMPONENTS AND GATES. SHOP DRAWINGS SHALL INCLUDE ALL PRODUCT CUT SHEETS AS WELL AS INSTALLATION AND MANUFACTURING DETAILS. GC RESPONSIBLE FOR STRUCTURAL DESIGN OF GATES

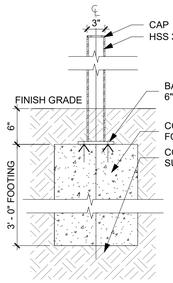

5 CXF - GATE HSS POST SECTION
1" = 1'-0"

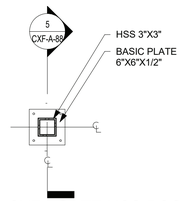

4 CXF - GATE HSS POST PLAN
1" = 1'-0"

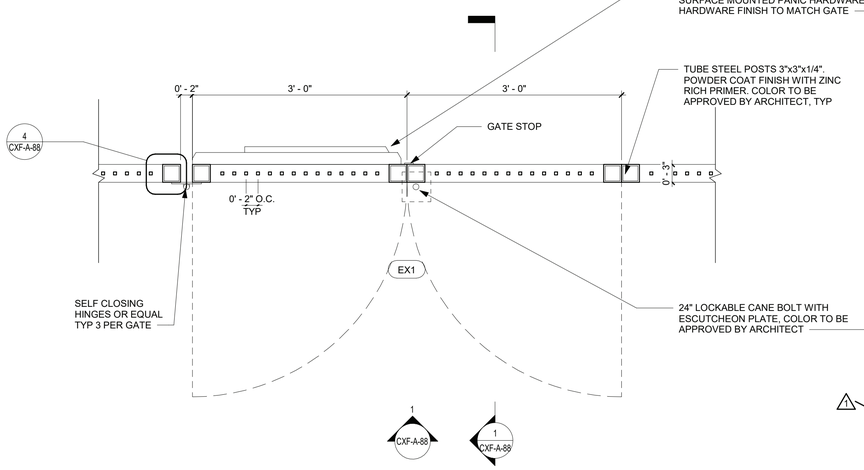

3 GATE DETAIL - PLAN
1" = 1'-0"

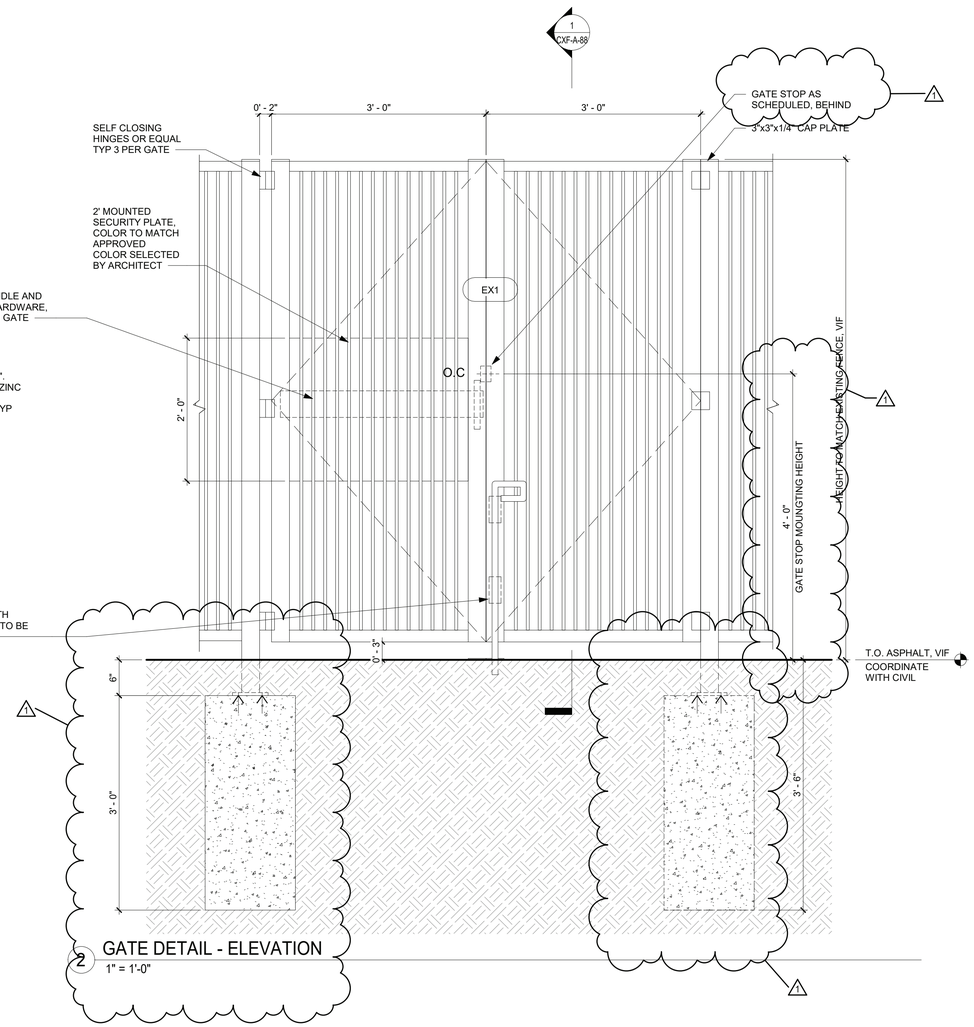

2 GATE DETAIL - ELEVATION
1" = 1'-0"

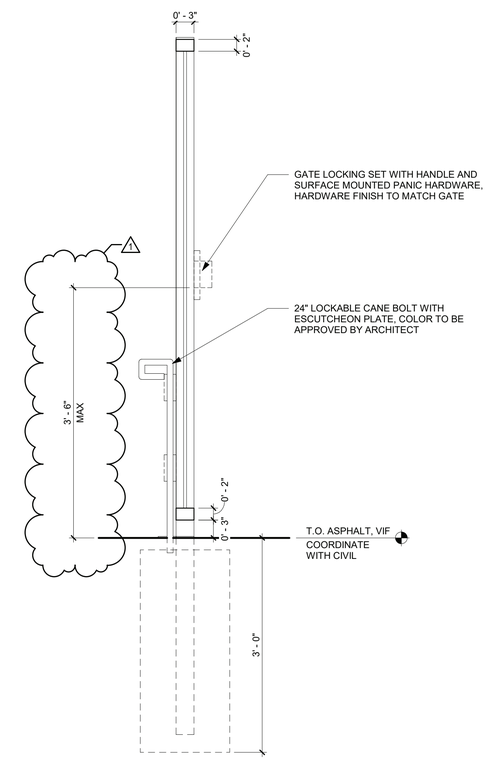

1 GATE DETAIL - SECTION
1" = 1'-0"

9/23/2022 10:30:23 AM

CONSULTANT INFORMATION

The LiRo Group
3 Aerial Way, Syosset, New York 11791
(516) 938-5476 www.liro.com

CONSULTANT SEAL

REGISTERED ARCHITECT ROBERT D. JOHNSON 023280 STATE OF NEW YORK

REVISION NUMBER	DATE	MADE BY	APP'D BY	REVISION
1	09/21/22	EZ		BID ADDENDUM #3

RECORD DRAWING CERTIFICATION

☐ AS BUILT – CHANGES AS NOTED ☐ AS BUILT – NO CHANGES

CONTRACTOR
NAME
SIGNATURE
TITLE DATE

PROJECT COORDINATOR
NAME
SIGNATURE
TITLE DATE

WESTCHESTER COUNTY, NEW YORK
DEPARTMENT OF PUBLIC WORKS AND TRANSPORTATION
DIVISION OF ENGINEERING

INFRASTRUCTURE REHABILITATION PHASE 3
PLAYLAND PARK, RYE, NEW YORK
CROSS AXIS BUILDING F
STEEL FENCE AND GATE DETAIL

CONTRACT NUMBER 22-523
SHEET NUMBER CXF-A-88
DWG NO.: 345 of 664
SCALE: 1" = 1'-0"
DATE: 08/23/2022
DPW FILE NUMBER 1-118-A-1094-1
REV. NO. 1

DOOR SCHEDULE - CXF

BUILDING	DOOR NUMBER	DOOR TYPE	WIDTH	HEIGHT	DOOR THICKNESS	DOOR MATERIAL	GLASS	DOOR EXTERIOR FINISH	DOOR INTERIOR FINISH	FRAME TYPE	FRAME MATERIAL	FRAME EXTERIOR	FRAME INTERIOR	HDWR SET	REMARKS
CXF	101A	B	3' - 0"	7' - 0"	1 3/4"	WOOD	NO	PAINT, TBD	PAINT, P-13	2	WD.	PAINT, P-10	PAINT, P-13	11.0	TYPE X-2 SIGN. WEATHER STRIP AT THREE SIDES AT EXTERIOR DOORS.
CXF	101B	B	3' - 0"	7' - 0"	1 3/4"	WOOD	NO	PAINT, P-16	PAINT, P-13	2	WD.	PAINT, P-10	PAINT, P-13	9.0	REINSTALL EXISTING DOOR AND HARDWARE, TYPE X-2 SIGN. WEATHER STRIP AT THREE SIDES AT EXTERIOR DOORS.
CXF	101C	C	17' - 0"	7' - 5 1/2"		ALUM	NO	-	-	-	-	-	-	6.0	
CXF	101D	C	15' - 0"	7' - 5 1/2"		ALUM	NO	-	-	-	-	-	-	4.0	
CXF	101E	C	8' - 3 1/2"	7' - 5 1/2"		ALUM	NO	-	-	-	-	-	-	4.0	REINSTALL EXISTING ROLL UP DOOR

NOTE: GC TO CONFIRM DOOR SIZES IN FIELD PRIOR TO ORDERING

GATE SCHEDULE - CXF

DOOR NUMBER	DOOR TYPE	WIDTH	HEIGHT	GATE MATERIAL	FINISH	HDWR SET	REMARKS
EX1	SEE CXF-A-88	(2) 3'-0"	6'-0" VIF	STEEL	SEE CXF-A-88	PROVIDE LATCHES, SELF CLOSING HINGES, & LOCKS. TO BE APPROVED BY ARCHITECT.GATE STOP USE ZINC-PLATED, POWDER-COATED STEEL ASTM B117 SALT-SPRAYED APPROVED 2 5/8"H X 1.75"W X 5/8"D. BLACK FINISH TO MATCH OTHER GATE HARDWARE. ARCHITECT TO APPROVE FINISH.	SEE DETAILS ON CXF-A-88

GENERAL DOOR SCHEDULE NOTES:

1. REFER TO CXF-A-92 SHEET FOR DOOR SILL & TRANSITION DETAILS. SILL TRANSITION INFORMATION IS INDICATED ON FINISH PLAN UNLESS OTHERWISE NOTED.
2. REFER TO SHEET CXF-A-91 FOR FINISH SCHEDULE AND LEGEND.
3. THE CONTRACTOR SHALL EXAMINE THE DRAWINGS, SCHEDULE AND SPECIFICATIONS AND FURNISH PROPER HARDWARE FOR ALL OPENINGS WHETHER LISTED OR NOT. COMPLETE SHOP DRAWINGS SHALL BE PROVIDED FOR APPROVAL PRIOR TO PURCHASE.
4. ALL EXIT DOORS SHALL BE OPENABLE FROM THE EGRESS SIDE WITHOUT THE USE OF A KEY OR SPECIAL KNOWLEDGE.
5. VERIFY DIMENSIONS OF EXISTING OPENINGS AND DOORS BEFORE ORDERING.
6. THE CONTRACTOR SHALL COORDINATE & VERIFY LOCATION OF RECESSED FLOOR CLOSERS, PIVOTS, ETC. WITH EXISTING FLOOR SLABS AND OTHER FIELD CONDITIONS PRIOR TO ORDERING TO ENSURE PROPER CLEARANCES & DEPTHS ARE ALLOWED.
7. MIN DIMENSION FROM ANY CORNER OR WALL TO FRAME STUD AT DOOR JAMB OPENING SHALL BE 4" U.NO.
8. LATCH SIDE CLEARANCE BETWEEN THE EDGE OF DOOR AND ADJACENT WALL OR OBSTRUCTIONS ON PULL SIDE SHALL BE 18" MIN
9. LATCH SIDE CLEARANCE BETWEEN EDGE OF THE DOOR AND ADJACENT WALL OR OBSTRUCTIONS ON PUSH SIDE SHALL BE 12" MIN
10. FINISHES FOR DOORS TO BE SELECTED BY ARCHITECT

HM - HOLLOW METAL
WD - WOOD
AL - ALUMINUM

PAINTING SCHEDULE

KEY	COLOR	MANUFACTURER	REMARKS
P- 1	MYSTICAL POWERS #901	BENJAMIN MOORE	
P- 2	HERITAGE RED #HC-181	BENJAMIN MOORE	
P- 3	NEW YORK STATE OF MIND #805	BENJAMIN MOORE	
P- 4	LAZY SUNDAY #803	BENJAMIN MOORE	
P- 5	DEEP JUNGLE #595	BENJAMIN MOORE	
P- 6	LUCK OF THE IRISH #588	BENJAMIN MOORE	
P- 7	MAJOLICA GREEN #0013	SHERWIN WILLIAMS	
P- 8	ANTELOPE CANYON #125	BENJAMIN MOORE	
P- 9	FORSYTHIA #6907	SHERWIN WILLIAMS	
P- 10	CAPE BLUE #1642	BENJAMIN MOORE	
P- 11	WHITE SNOW #9541	SHERWIN WILLIAMS	
P- 12	TRICORN BLACK #6258	SHERWIN WILLIAMS	
P- 13	READY MIX WHITE	BENJAMIN MOORE	INTERIOR USE ONLY
P- 14	STUCCO PAINT TO MATCH P-1	KEIM	
P- 15	VAN DEUSEN BLUE #HC-156	BENJAMIN MOORE	
P- 16	#RAL9001	-	TYP. ROLL UP DOOR
P- 17	FLORIDA BEACHES #900	BENJAMIN MOORE	
P- 18	PIRATES COVE PEACH #903	BENJAMIN MOORE	
P- 19	JADITE #6459	SHERWIN WILLIAMS	
P- 20	DECISIVE YELLOW #6902	SHERWIN WILLIAMS	

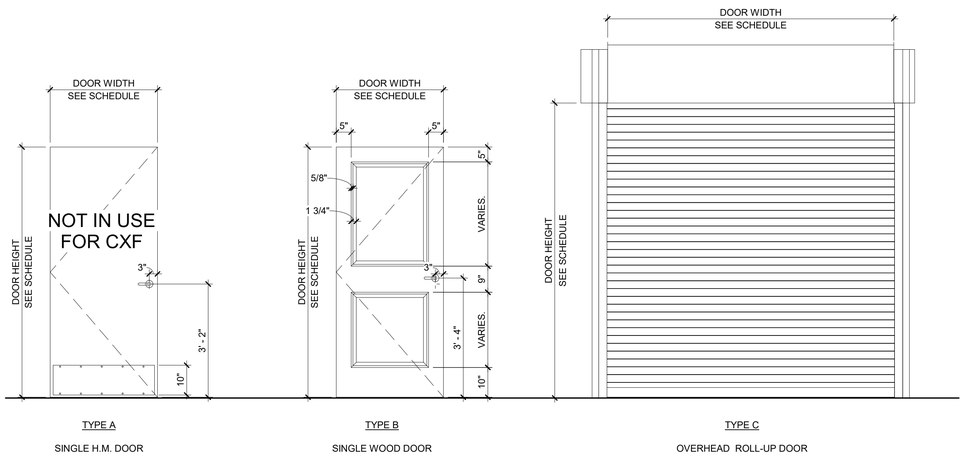

DOOR TYPES

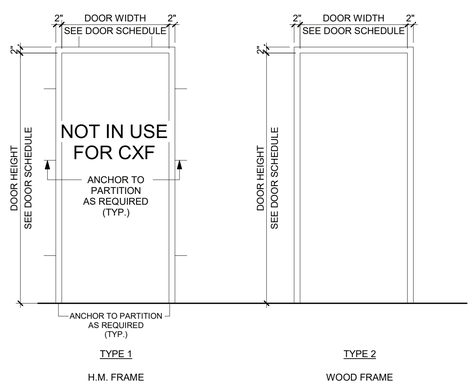

DOOR FRAME TYPES

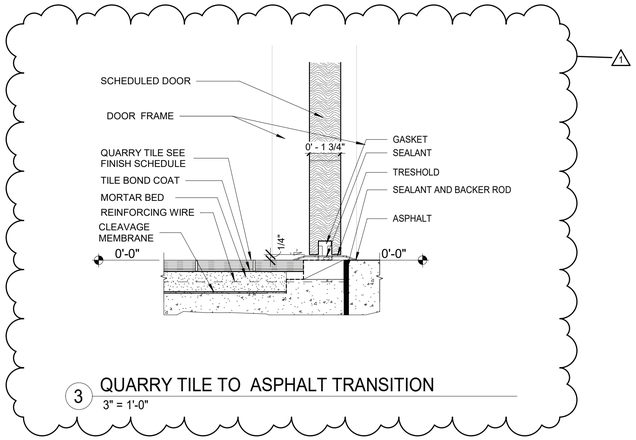

3 QUARRY TILE TO ASPHALT TRANSITION
3" = 1'-0"

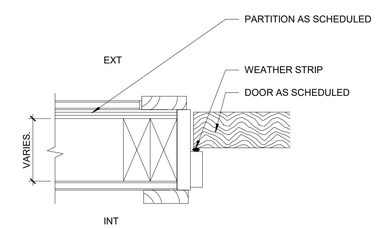

2 WOOD DOOR JAMB DETAIL
3" = 1'-0"

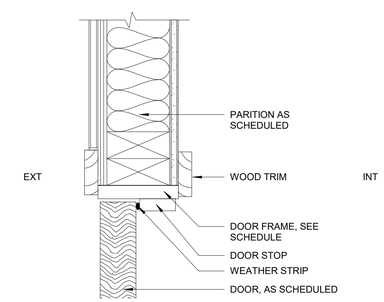

1 WOOD DOOR HEAD DETAIL
3" = 1'-0"

9/23/2022 10:30:25 AM

CONSULTANT INFORMATION
The LiRo Group
3 Aerial Way, Syosset, New York 11791
(516) 938-5476 www.liro.com

CONSULTANT SEAL
REGISTERED ARCHITECT ROBERT D. YOUNG JR. 023280 STATE OF NEW YORK

REVISION NUMBER	DATE	MADE BY	APP'D BY	REVISION
1	09/21/22	EZ		BID ADDENDUM #3

RECORD DRAWING CERTIFICATION
☐ AS BUILT – CHANGES AS NOTED ☐ AS BUILT – NO CHANGES

CONTRACTOR
NAME
SIGNATURE
TITLE DATE

PROJECT COORDINATOR
NAME
SIGNATURE
TITLE DATE

WESTCHESTER COUNTY, NEW YORK
DEPARTMENT OF PUBLIC WORKS AND TRANSPORTATION
DIVISION OF ENGINEERING

INFRASTRUCTURE REHABILITATION PHASE 3
PLAYLAND PARK, RYE, NEW YORK
CROSS AXIS BUILDING F
DOOR SCHEDULE AND DOOR DETAILS

CONTRACT NUMBER 22-523
SHEET NUMBER **CXF-A-92**
DWG NO.: 347 of 664
SCALE: **As indicated**
DATE: **08/23/2022**
DPW FILE NUMBER **1-118-A-1096-1**
REV. NO. **1**

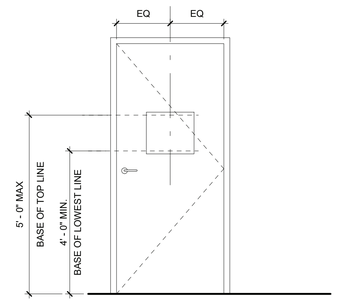

4 SIGN LOCATION ELEVATION - TYPICAL DOOR CONDITION
1/2" = 1'-0"

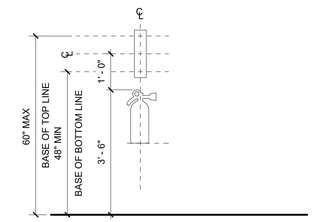

3 FIRE EXTINGUISHER SIGN LOCATION ELEVATION
1/2" = 1'-0"

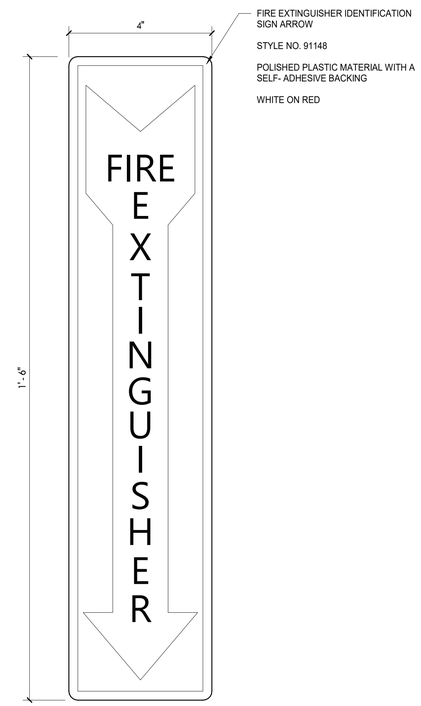

1 TYPE X-1 - FIRE EXTINGUISHER SIGN
6" = 1'-0"

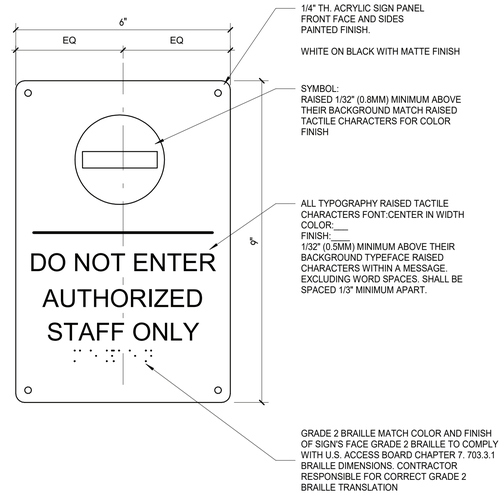

2 TYPE X-2 - STAFF ONLY SIGN
6" = 1'-0"

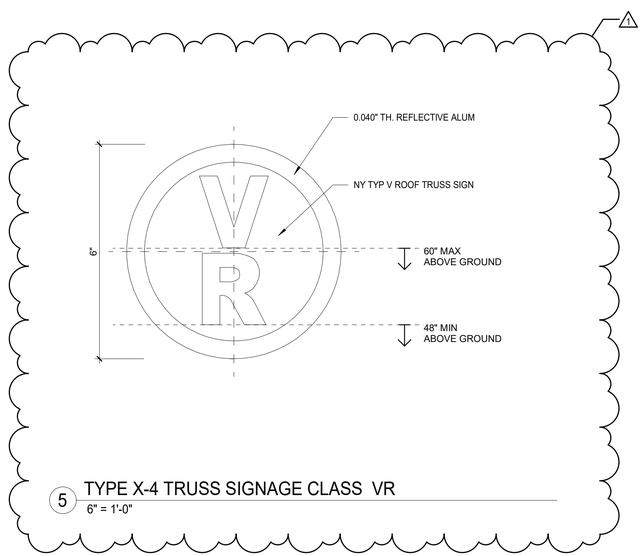

5 TYPE X-4 TRUSS SIGNAGE CLASS VR
6" = 1'-0"

9/23/2022 10:30:27 AM

CONSULTANT INFORMATION
The LiRo Group
3 Aerial Way, Syosset, New York 11791
(516) 938-5476 www.liro.com

CONSULTANT SEAL
REGISTERED ARCHITECT ROBERT D. YOUNG VR 023280 STATE OF NEW YORK

REVISION NUMBER	DATE	MADE BY	APP'D BY	REVISION
1	09/21/22	EZ		BID ADDENDUM #3

RECORD DRAWING CERTIFICATION
☐ AS BUILT – CHANGES AS NOTED ☐ AS BUILT – NO CHANGES

CONTRACTOR
NAME
SIGNATURE
TITLE DATE

PROJECT COORDINATOR
NAME
SIGNATURE
TITLE DATE

WESTCHESTER COUNTY, NEW YORK
DEPARTMENT OF PUBLIC WORKS AND TRANSPORTATION
DIVISION OF ENGINEERING

INFRASTRUCTURE REHABILITATION PHASE 3
PLAYLAND PARK, RYE, NEW YORK
CROSS AXIS BUILDING F
SIGNAGE TYPES, SCHEDULES AND DETAILS

CONTRACT NUMBER 22-523
SHEET NUMBER CXF-A-94
DWG NO.: 349 of 664
SCALE: As indicated
DATE: 08/23/2022
DPW FILE NUMBER 1-118-A-1098-1
REV. NO. 1

FIRE PROTECTION SAFETY NOTES:

1. SPECIAL PRECAUTION SHALL BE TAKEN BY THE CONTRACTOR SO THAT EQUIPMENT OF THIS APPLICATION AND ITS INSTALLATION WILL NOT AFFECT THE FOLLOWING: EGRESS TO AND FROM THE BUILDING. FIRE SAFETY OR CREATE A FIRE HAZARD. STRUCTURAL SAFETY OF THE BUILDING. ACCUMULATION OF DUST AND DEBRIS. (THE CONTRACTOR SHALL LEAVE THE SITE BROOM CLEANED EACH DAY.)

FIRE PROTECTION GENERAL NOTES:

1. DIMENSIONS, LOCATIONS AND SIZES INDICATED ON THE PLANS AND THE ELEVATION ARE APPROXIMATE AND SHALL BE VERIFIED BY FIELD INSPECTION BY THE CONTRACTOR.

2. SOME EXISTING PIPE AND EQUIPMENT IS SHOWN FOR CLARIFICATION OF THIS CONTRACT, BUT MUST BE PROTECTED BY THE CONTRACTOR.

3. NO WORK SHALL BE INITIATED UNTIL A WORK PERMIT IS OBTAINED BY THE CONTRACTOR AND A SAFETY PLAN IS SUBMITTED AND IS APPROVED.

4. CONTRACTOR IS RESPONSIBLE FOR OBTAINING ALL PERMITS, EQUIPMENT USE PERMITS, ALL INSPECTION APPROVALS, AND LETTER OF COMPLETION FROM THE DEPARTMENT OF BUILDINGS FOR WORK UNDER THIS CONTRACT AS APPLICABLE.

5. ANY EXISTING MATERIALS, PIPING, ETC., NOT INDICATED FOR DEMOLITION WHICH ARE REMOVED BY THE CONTRACTOR IN ORDER TO INSTALL NEW WORK SHALL BE REINSTALLED BY THE CONTRACTOR. IF EXISTING WORK IS DAMAGED IT SHALL BE REPLACED AT THE CONTRACTOR'S EXPENSE. ALL SURFACES OR FINISHES THAT ARE DAMAGED OR OTHERWISE AFFECTED BY WORK OF THIS CONTRACT SHALL BE PATCHED, REPAIRED, PAINTED OR REPLACED TO MATCH THE PRE-EXISTING CONDITION AND THE NEW WORK.

6. CONTRACTOR MAY PROPOSE ALTERNATE ROUTING IN DIFFICULT AREAS WHERE REPLACEMENT IN KIND IS NOT PRACTICAL. ANY AND ALL ALTERNATE ROUTING IS SUBJECT TO PRIOR REVIEW AND APPROVAL BY THE ENGINEER.

7. A FIRE WATCH SHALL BE PROVIDED WHEN SPRINKLER COVERAGE IS IMPACTED TO MAINTAIN BUILDING OPERATIONS OR AS REQUIRED.

FIRE PROTECTION SYMBOL LIST

— — — — — FS DRY— —	NEW DRY SPRINKLER PIPING
— — — — — DRY(E) —	EXISTING TO REMAIN DRY SPRINKLER PIPING
○	NEW UPRIGHT SPRINKLER HEAD
○	EXISTING UPRIGHT SPRINKLER HEAD
●	NEW CONCEALED PENDENT SPRINKLER HEAD-ORDINARY TEMPERATURE
	SPRINKLER DRY PIPE VALVE
	FIRE HOSE CABINET
	SIAMESE CONNECTION
	CHECK VALVE
	CHECK VALVE W/ ALARM
	WATER MOTOR ALARM BELL
⊗	PIPE RISER
	PIPE DROP
	PIPE UP
	POINT OF CONNECTION
	POINT OF DISCONNECTION
	PREACTION 6" BELL
	SOLENOID VALVE
	OS & Y VALVE
#	REVISION SYMBOL
F8	REFER TO SUPPLEMENTAL FIGURE INDICATED BY NUMBER (I.E. F2 REFERS TO FIGURE 2)
XXX / X	EQUIPMENT TAG / EQUIPMENT NUMBER
X / X-XXX	DETAIL TAG/ CALL OUT TAG / FIRE PROTECTION SHEET NUMBER

SHOP DWGS/EQUIPMENT SUBMITTALS

THE CONTRACTOR MUST SUBMIT ANY EQUIPMENT ALTERNATES 2 WEEKS PRIOR TO BIDS DUE FOR REVIEW AND COMMENTS. ALTERNATES MUST BE ACCEPTED BY LIRO ENGINEERS, INC., THE ARCHITECT, AND THE OWNER PRIOR TO INCLUSION IN BID. THE CONTRACTOR IS RESPONSIBLE TO COORDINATE EQUIPMENT ALTERNATES WITH OTHER TRADES AND MAKE ADJUSTMENTS TO THE MECHANICAL SYSTEMS, AS REQUIRED, TO ACCOMMODATE THESE NEW ALTERNATES.

THE CONTRACTOR IS RESPONSIBLE TO SUBMIT ALL OF THE FOLLOWING ITEMS FOR REVIEW/APPROVAL BY NO MORE THAN 3 WEEKS AFTER THE CONTRACTOR'S CONTRACT/BID HAS BEEN AWARDED. ALL SUBMITTALS MUST BE SENT TOGETHER AS A **SINGLE PACKAGE** WITH MANUFACTURER'S SPECIFIC MODELS AND SPECIFICATIONS OUTLINED TO MATCH THE SCHEDULED REQUIREMENTS. EACH SUBMITTAL MUST BE LABELED WITH THE UNIT DESIGNATION USED WITHIN THIS DRAWING SET. IF THE SUBMITTAL PACKAGE IS FOUND TO BE INCOMPLETE UPON RECEIPT, THE PACKAGE WILL BE HELD AND WILL NOT BE REVIEWED UNTIL THE REMAINDER OF THE PACKAGE IS RECEIVED. SIX (6) HARD COPIES OF THE SUBMITTAL PACKAGE MUST BE SENT TO LIRO ENGINEERS, INC. DIGITAL SHOP DRAWING SUBMISSIONS ARE ACCEPTABLE.

SCOPE OF WORK:

1. THE INSTALLATION OF NEW DRY FS EQUIPMENT.

2. PROPOSED FIRE SPRINKLER HEAD LOCATIONS AND PIPING ARE AS NOTED ON PLANS. EXACT PIPING FROM THE FIRE SPRINKLER MAIN TO ALL HEADS IS TO BE COORDINATED AND HYDRAULICALLY CALCULATED BY THE F.S.C. & SUBMITTED TO THE ENGINEER FOR APPROVAL.

NOTE: THIS SCOPE OF WORK DESCRIPTION IS PROVIDED TO GIVE AN OVERALL "MACRO" DESCRIPTION OF THIS PROJECT. F.S.C. IS RESPONSIBLE TO REVIEW ALL ENGINEERING AND ARCHITECTURAL DRAWINGS AND VISIT THE SITE IF NEEDED, PRIOR TO SUBMISSION OF BID.

SPRINKLER HEAD SCHEDULE

	MANUFACTURER	MODEL	DESCRIPTION	K-FACTOR	QUANTITY
●	RELIABLE	F1FR	DRY ORDINARY CONCEALED SPRINKLE HEAD	5.6	12

ABBREVIATION

ACV	ALARM CHECK VALVE
B.O.P.	BOTTOM OF PIPE
(E)	EXISTING TO REMAIN
F.S.C.	FIRE SPRINKLER CONTRACTOR
P.C	PLUMBING CONTRACTOR
TYP	TYPICAL
W/	WITH
NYS	NEW YORK STATE
U/P	UNDERGROUND PIPING
W	WATER

DRAWING NOTATIONS

	DRAWING NOTE TAB
	RISER DESIGNATION
	POINT OF CONNECTION
	POINT OF DISCONNECTION

DESIGN CRITERIA

1. AREA OF APPLICATION = 1950 SQ. FT

2. OCCUPANCY CLASSIFICATION = ORDINARY HAZARD GROUP 1

3. MAXIMUM COVERAGE PER SPRINKLER HEAD = 130 SQ. FT

4. DESIGN DENSITY = 0.15 GPM/SQ. FT

5. "K" FACTOR OF SPRINKLER HEADS = 5.6

6. DESIGN CRITERIA REQUIREMENTS BASED ON:
   - 2020 BUILDING CODE OF NEW YORK STATE
   - 2016 NFPA 13

ORDINARY HAZARD PIPE SCHEDULE

STEEL		COPPER	
1IN.	2 SPRINKLERS	1IN.	2 SPRINKLERS
1 1/4 IN.	3 SPRINKLERS	1 1/4 IN.	3 SPRINKLERS
1 1/2IN.	5 SPRINKLERS	1 1/2IN.	5 SPRINKLERS
2 IN.	10 SPRINKLERS	2 IN.	12 SPRINKLERS
2 1/2 IN.	20 SPRINKLERS	2 1/2 IN.	25 SPRINKLERS
3 IN.	40 SPRINKLERS	3 IN.	45 SPRINKLERS
3 1/2 IN.	65 SPRINKLERS	3 1/2 IN.	75 SPRINKLERS
4 IN.	100 SPRINKLERS	4 IN.	115 SPRINKLERS
5 IN.	160 SPRINKLERS	5 IN.	180 SPRINKLERS
6 IN.	275 SPRINKLERS	6 IN.	300 SPRINKLERS
8 IN.	SEE SECTION 8.2	8 IN.	SEE SECTION 8.2

FOR SI UNITS, 1 IN. = 25.4 MM.

MAX DISTANCE BETWEEN HANGERS (FT.-IN.)

	NOMINAL PIPE SIZE (IN.)											
	3/4	1	1 1/4	1 1/2	2	2 1/2	3	3 1/2	4	5	6	8
STEEL PIPE EXCEPT THREADED LIGHTWALL	N/A	12-0	12-0	15-0	15-0	15-0	15-0	15-0	15-0	15-0	15-0	15-0
THREADED LIGHTWALL STEEL PIPE	N/A	12-0	12-0	12-0	12-0	12-0	12-0	N/A	N/A	N/A	N/A	N/A
COPPER TUBE	8-0	8-0	10-0	10-0	12-0	12-0	12-0	15-0	15-0	15-0	15-0	15-0

CODE REFERENCE

2020 NEW YORK STATE BUILDING CODE
2016 NFPA 13

FIRE PROTECTION NOTES

1. THE DRAWINGS SHOW THE LAYOUT OF THE SYSTEM AND INDICATE THE APPROXIMATE LOCATIONS OF EQUIPMENT AND PIPING. CONTRACTOR IS CAUTIONED NOT TO SCALE THE DRAWINGS. THE PIPING SHALL BE RUN APPROXIMATELY IN THE AREAS AS INDICATED ON THE DRAWINGS, [HOWEVER, TO THE ARRANGEMENT OF THE PIPING SYSTEMS AS MAY BE REFERENCED WITH WORK OF OTHER TRADES]. CONTRACTOR SHALL REVIEW AND COORDINATE WITH STRUCTURAL, ELECTRICAL AND MECHANICAL DRAWINGS. PARTITIONS, STRUCTURAL MEMBERS, ETC. ARE DESIGNED TO BE FURRED OR CLOSED IN AND TO INCLUDE ROUGH-IN PIPING. CONTRACTOR SHALL FURNISH ALL OFFSETS, ADDITIONAL FITTINGS, ETC. WHETHER SHOWN ON DRAWINGS OR NOT, AS REQUIRED TO MEET INSTALLATION CONDITIONS.

2. CONTRACTOR IS TO COMPLY WITH LATEST NFPA AND N.Y.S. CODES, AND COORDINATE HIS WORK WITH OTHER TRADES AND MAKE NECESSARY ADJUSTMENTS.

3. CONTRACTOR IS TO PREPARE SHOP DRAWINGS FOR ENGINEERS REVIEW AFTER MAKING A COMPLETE FIELD SURVEY.

4. CONTRACTOR IS TO REPORT ANY CONDITION REQUIRING CHANGES FROM PLANS TO ENGINEER PRIOR TO STARTING WORK.

5. BRANCH LINES AND MAINS (1 1/2" OR LESS) - SCHEDULE 40 FM APPROVED

6. BRANCH LINES AND MAINS (2" OR LARGER) - THINWALL (THICKNESS LESS THEN SCHEDULE 40 MORE THEN SCHEDULE 10 & FM APPROVED)

7. CONTRACTOR IS TO PERFORM A HYDROSTATIC TEST FOR 2 HRS. @ 200 PSI WITH NO LEAKAGE AND PROVIDE A TEST CERTIFICATE TO ENGINEER

8. CONTRACTOR IS TO EMPLOY EXPERIENCED WORKMEN WHO ARE TO FAMILIARIZE THEMSELVES WITH THE BUILDING AND OBSERVE SAFETY REQUIREMENTS.

9. CONTRACTOR TO ADJUST HEAD LOCATION TO COORDINATE WITH LIGHTS, DUCTS, ETC.

10. PERMIT FROM LOCAL AUTHORITY, TO BE OBTAINED BY CONTRACTOR.

11. ALL WORK TO BE APPROVED BY OWNERS ENGINEER, STATE AUTHORITIES HAVING JURISDICTION AND MUNICIPAL FIRE, PLUMBING, BUILDING AND WATER DEPARTMENTS.

12. U.L. AND/OR FM APPROVED EQUIPMENT TO BE USED.

13. WORK TO BE IN ACCORDANCE WITH MUNICIPAL WATER DEPT. RULES
.
14. SYSTEM IS TO BE MAINTAINED AND TESTED BY THE OWNER OR HIS AGENT IN ACCORDANCE WITH APPLICABLE LOCAL AND STATE CODES AND IN CONFORMANCE WITH NFPA 13A, LATEST EDITION.

15. IF BUILDING OCCUPANCY OR CONSTRUCTION CHANGES, THE SPRINKLER SYSTEM IS TO BE UPDATED ACCORDINGLY BY THE OWNER OR HIS AGENT.

16. CONTRACTOR IS TO NEATLY CUT AND PATCH IN A FIRST CLASS WORKMANLIKE MANNER, ALL HOLES AND PENETRATIONS IN WALLS, CEILINGS, FLOORS, PARTITIONS, ETC.

17. THE ENGINEER IS NOT RETAINED FOR SUPERVISION.

18. THE INSTALLATION OF THIS SYSTEM WILL REQUIRE THE CLOSING OF ONE OR MORE FIRE PROTECTION CONTROL VALVES. THESE VALVE CLOSURES SHOULD BE CLOSELY COORDINATED WITH THE OWNERS WHO SHOULD CONTACT THE LOCAL FIRE DEPARTMENT, INSURANCE INTERESTS, ETC. PRIOR TO VALVE CLOSURES.

19. ACTUAL DESIGN DENSITY MAY EXCEED STANDARDS, HOWEVER, IT IS A MINIMUM TO BE USED BY THE CONTRACTOR.

20. ALL ALARMS RELATING TO THE SPRINKLER SYSTEM SHOULD BE ACTIVATED UPON PLACING THE SPRINKLER SYSTEM IN SERVICE.

21. THE INSTALLATION COMPONENTS, SIZING, SPACING, MATERIALS LOCATION CLEARANCES, POSITION AND TYPE OF SYSTEM SHALL CONFORM TO NFPA 13 AND NYS UNIFORM FIRE PREVENTION BUILDING CODE LATEST EDITION.

22. SPRINKLERS SHALL BE PROTECTED AGAINST FREEZING AND INJURY AS PER NFPA CODE.

23. INSPECTION AND TESTS OF SPRINKLER SYSTEM SHALL BE CONDUCTED AS SPECIFIED IN NFPA CODE.

24. WATER SUPPLY TEST PIPES AND GAUGES SHALL BE PROVIDED AS SPECIFIED IN CHAPTER 2-9 OF NPPA 13.

25. PIPING SPECIFICATIONS, PIPE SCHEDULES, SYSTEM TEST PIPES, PROTECTION AGAINST CORROSION, DAMAGE FITTINGS, VALVES, HANGERS, SPRINKLERS, GUARDS AND SHIELDS SHALL BE IN ACCORDANCE WITH CHAPTER 3 AND CHAPTER 8 OF NFPA 13, LATEST EDITION. PIPING SHALL BE PAINTED TO PREVENT CORROSION.

26. STOCK OF EXTRA SPRINKLERS WILL BE FURNISHED AS PER CHAPTER 3 OF NFPA 13 (REQUIRED FOR EACH TEMPERATURE RATING).

27. SPRINKLER ALARMS WILL BE IN ACCORDANCE WITH NFPA 13.

28. SPACING, LOCATION AND POSITION OF SPRINKLERS SHALL BE IN ACCORDANCE WITH CHAPTER 4 OF NFPA 13.

29. ALL PIPING PASSING THROUGH WALLS SHALL COMPLY WITH NFPA FOR FIRE PROOFING.

30. DISTANCE OF SPRINKLERS FROM HEAT SOURCES SHALL BE IN ACCORDANCE WITH TABLE 3-16.6.3 OF NFPA 13.

31. PROVIDE WATER SUPPLY LETTER WITH FLOW TEST DATA.

32. ALL PIPES PASSING THROUGH FOUNDATION WALLS TO BE PROTECTED.

33. ALL VALVES SHALL BE IDENTIFIED AS REQUIRED BY NFPA 13.

34. DRAINAGE TO CONFORM TO CHAPTER 3-11 OF NFPA 13.

35. A ONE PIECE REDUCING FITTING OF GOOD DESIGN SHOULD BE USED WHEREVER A CHANGE IS MADE IN THE SIZE OF PIPE AS PER SECTION 3-12.2.7 OF NFPA 13.

36. ALL VALVES ON CONNECTIONS TO WATER SUPPLIES AND IN SUPPLY TO SPRINKLERS SHALL BE APPROVED O.S. &Y. OR APPROVED INDICATOR TYPE WITH TAMPER SWITCHES.

37. DRAIN VALVES AND TEST VALVES SHALL BE APPROVED TYPE AS PER SECTION 3-14.1.2 OF NFPA 13.

38. HANGERS SHALL BE OF A TYPE APPROVED FOR USE WITH THE PIPE OR TUBE INVOLVED, SPRINKLER PIPING SHOULD BE SUPPORTED BY ADJUSTABLE HANGERS PER NFPA 13, SECTION 3-15.

39. PROVISIONS SHOULD BE MADE TO FACILITATE FLUSHING SYSTEM PIPING BY PROVIDING FLUSHING CONNECTIONS CONSISTING OF A CAPPED NIPPLE 4" LONG ON THE END OF THE CROSS MAIN, AS PER SECTION 3- 8.2 OF NFPA 13.

40. SPRINKLER SHALL BE AN APPROVED TYPE AS PER SECTION 3-16 OF NFPA 13.

41. TEMPERATURE RATING SHALL COMPLY WITH SEC. 3-16.6 OF NFPA 13.

42. CLEARANCES BETWEEN SPRINKLERS AND STORAGE OR PARTITIONS AS PER NFPA 13, SECTION 4-2.5

43. SPACING AND LOCATION OF SPRINKLER SHALL COMPLY WITH CHAPTER 4 NFPA 13.

44. CONTRACTOR TO COORDINATE HIS WORK WITH OTHER TRADES.

45. ONLY EXPERIENCED SPRINKLER MECHANICS TO WORK ON THE SYSTEM.

46. ALL PIPING TO BE A MINIMUM OF 1" UNLESS OTHERWISE NOTED.

47. PROVIDE SHOP DRAWINGS WITH HYDRAULIC CALCULATIONS FOR REVIEW TO LOCAL FIRE MARSHALL AND INSURANCE UNDERWRITER AND ENGINEER FOR APPROVAL PRIOR TO INSTALLATION.

48. ALL FIRE PROTECTION EQUIPMENT SHALL BE INSTALLED PER MANUFACTURER'S REQUIREMENTS/SPECIFICATIONS.

49. ALL FIRE PROTECTION EQUIPMENT SHALL BE MOUNTED ON MINIMUM 6" HIGH CONCRETE PAD UNLESS OTHERWISE NOTED (PAVER AND CINDER BLOCK IS NOT ACCEPTABLE).

50. PERMIT IS REQUIRED PRIOR TO INSTALLATION, TO INCLUDE SIGNED AND SEALED SHOP DRAWINGS, HYDRAULIC CALCULATION, SHOP DRAWINGS, MANUFACTURERS INFORMATION ON HEADS AND APPLIANCES, COMPLIANCE WITH NFPA 13 AND SECTION 903 2020 NYSBC/FC.

FIRE PROTECTION DRAWING LIST

SHEET NO.	SHEET NAME	REVISON NO.	REVISION DATE
CXF-FP-01	FIRE PROTECTION NOTES, SYMBOLS, ABBREVIATIONS, AND DRAWING LIST	0	-
CXF-FP-11	FIRE PROTECTION GROUND FLOOR DEMOLITION RCP	0	-
CXF-FP-21	FIRE PROTECTION GROUND FLOOR CONSTRUCTION RCP	0	-
CXF-FP-81	FIRE PROTECTION DETAILS	0	-

CONSULTANT INFORMATION
LiRo Engineers, Inc.
A LiRo Group Company
Syosset, N.Y. 516-214-8157[T]

CONSULTANT SEAL
STATE OF NEW YORK · FRANK F. DUSSE · LICENSED PROFESSIONAL ENGINEER · No. 090114

REVISION NUMBER	DATE	MADE BY	APP'D BY	REVISION
1	09/21/22			BID ADDENDUM # 3

RECORD DRAWING CERTIFICATION
☐ AS BUILT – CHANGES AS NOTED ☐ AS BUILT – NO CHANGES
CONTRACTOR: NAME / SIGNATURE / TITLE / DATE
PROJECT COORDINATOR: NAME / SIGNATURE / TITLE / DATE

WESTCHESTER COUNTY, NEW YORK
DEPARTMENT OF PUBLIC WORKS AND TRANSPORTATION
DIVISION OF ENGINEERING

INFRASTRUCTURE REHABILITATION - PHASE 3
PLAYLAND PARK, RYE, NEW YORK
CROSS AXIS BUILDING F
FIRE PROTECTION NOTES, SYMBOLS, ABBREVIATIONS & DWG LIST

CONTRACT NUMBER	22-523
SHEET NUMBER	CXF-FP-01
DWG NO.:	360 of 664
SCALE:	AS INDICATED
DATE:	08/23/2022
DPW FILE NUMBER	1-118-FP-1109-1
REV. NO.	1

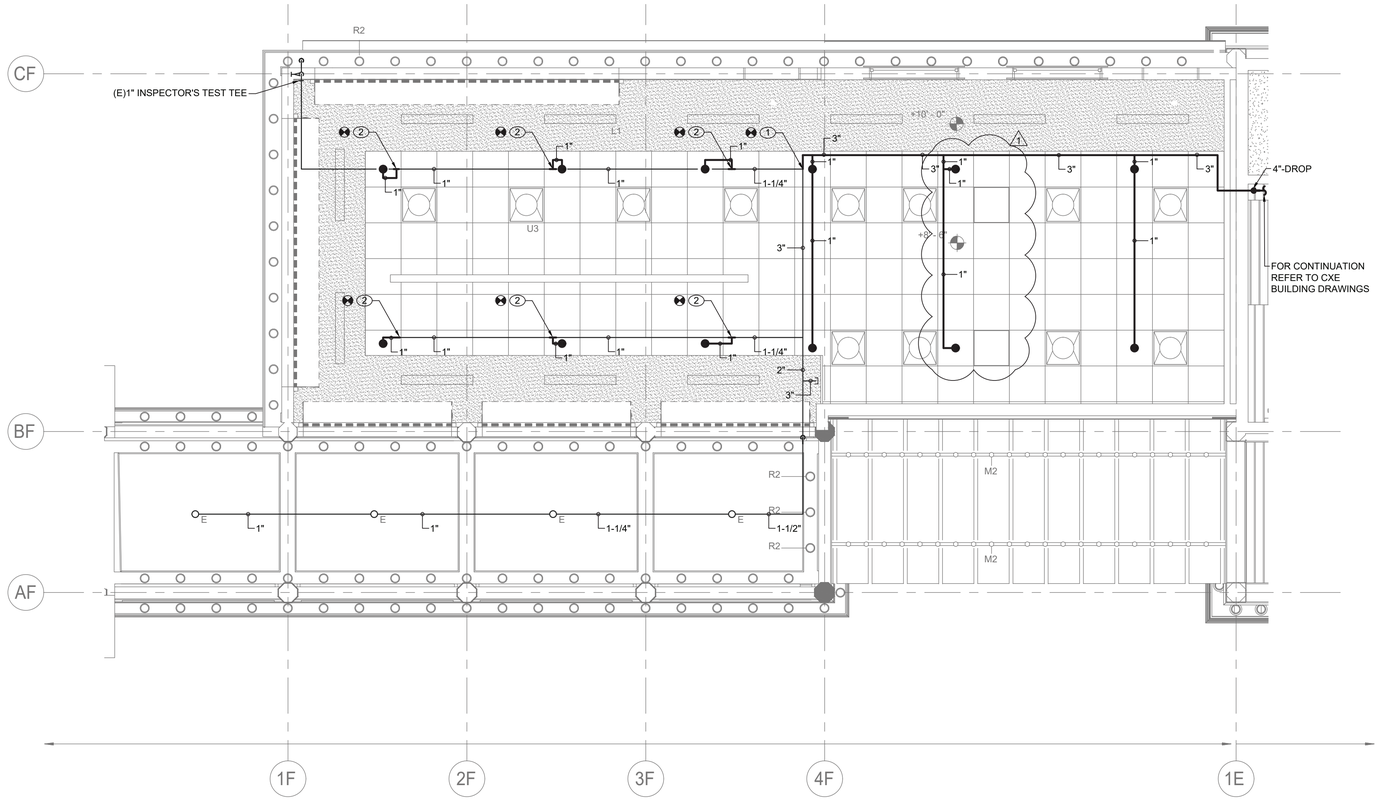

FIRE PROTECTION GROUND FLOOR CONSTRUCTION RCP

SCALE: 1/4" = 1'-0

SPRINKLER CONSTRUCTION NOTES:

1. CONNECT NEW 3" SPRINKLER PIPE TO EXISTING.
2. CONNECT AND EXTEND NEW SPRINKLER PIPING TO NEW CONCEALED SPRINKLERS FROM EXISTING PIPING.

GENERAL NOTES:

1. ALL DISTRIBUTION PIPING, SHALL BE PAINTED. REFER TO SPECIFICATION FOR PAINT TYPE AND APPLICATION PROCEDURE.
2. COORDINATE WITH FACILITY PRIOR TO SHUTDOWN OF FIRE PROTECTION SYSTEM FOR ANY DEMOLITION AND CONSTRUCTION WORK.
3. CONTRACTOR SHALL PROVIDE FIRE WATCH AS NEEDED FOR ALL AFFECTED BUILDINGS WHILE SPRINKLER COVERAGE IS IMPACTED.
4. CONTRACTOR TO COORDINATE WITH FACILITY WHEN WORKING AROUND OR ABOVE THE RIDE COMPONENTS, AND PROVIDE ALL NECESSARY MEASURES TO PROTECT THESE COMPONENTS PER THE REQUIREMENTS OF THE FACILITY.
5. UPON COMPLETION, SYSTEM SHALL BE TESTED FOR PROPER OPERATION.
6. PROVIDE REQUIRED PITCH AND DRAINS FOR DRY SPRINKLER PIPING FOR FULL WATER REMOVAL FROM THE SYSTEM.
7. ADJUST HEIGHT OF THE EXISTING SPRINKLER PIPING AS NECESSARY TO ACCOMMODATE NEW DROPPED CEILING.

CONSULTANT INFORMATION

LiRo Engineers, Inc.
A LiRo Group Company
Syosset, N.Y. 516-214-8157[T]

CONSULTANT SEAL

STATE OF NEW YORK · FRANK F. ULISSE · LICENSED PROFESSIONAL ENGINEER · 090117

REVISION NUMBER	DATE	MADE BY	APP'D BY	REVISION
1	09/21/22			BID ADDENDUM # 3

RECORD DRAWING CERTIFICATION

☐ AS BUILT – CHANGES AS NOTED ☐ AS BUILT – NO CHANGES

CONTRACTOR: NAME / SIGNATURE / TITLE / DATE

PROJECT COORDINATOR: NAME / SIGNATURE / TITLE / DATE

WESTCHESTER COUNTY, NEW YORK
DEPARTMENT OF PUBLIC WORKS AND TRANSPORTATION
DIVISION OF ENGINEERING

INFRASTRUCTURE REHABILITATION - PHASE 3
PLAYLAND PARK, RYE, NEW YORK
CROSS AXIS BUILDING F
FIRE PROTECTION GROUND FLOOR CONSTRUCTION RCP

CONTRACT NUMBER	22-523
SHEET NUMBER	CXF-FP-21
DWG NO.:	362 of 664
SCALE:	AS INDICATED
DATE:	08/23/2022
DPW FILE NUMBER	1-118-FP-1111-1
REV. NO.	1

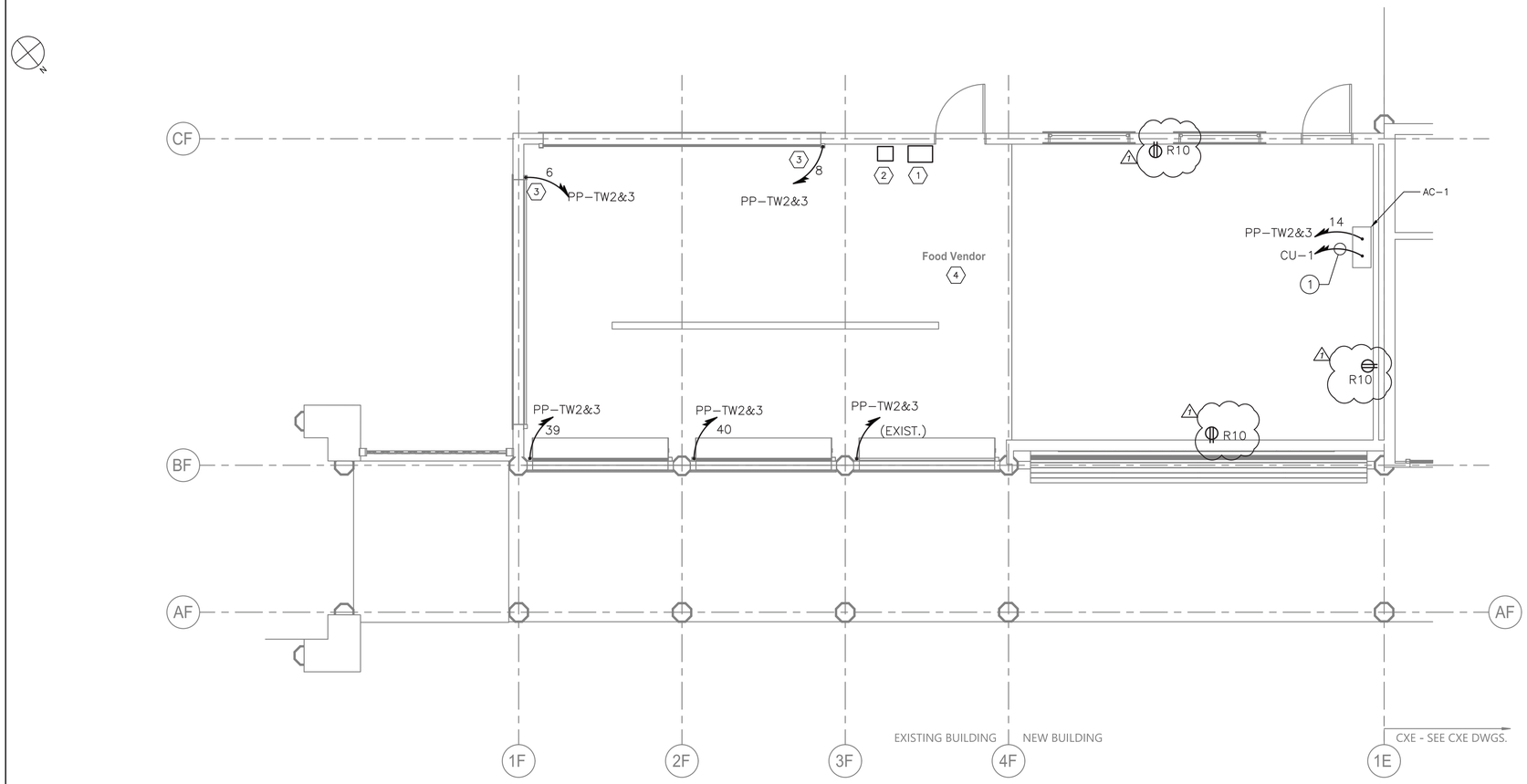

GROUND FLOOR POWER PLAN (CXF)

SCALE = 1/4" = 1'-0"

NOTES:

1. FOR ADDITIONAL NOTES, ABBREVIATIONS AND SYMBOLS, SEE DRAWING GE-E-01.
2. ALL RECEPTACLE DESIGNATORS ARE POWERED VIA PANEL PP-TWR2&3.
3. ALL CIRCUITS SHOWN ON THE DRAWING, BUT NOT SPECIFICALLY CALLED OUT ON THE CONDUIT AND WIRE LEGEND SHALL BE 3/4" CONDUIT WITH 2#12 & 1#12 GND.
4. FOR PANEL SCHEDULE, SEE DRAWING CXF-E-08

KEY NOTES:

(1) RECESSED POWER HANDHOLE. LOCATION OF FEEDER CIRCUIT AND SPARE CONDUIT. SEE DRAWING CXF-E-04 FOR ADDITIOONAL INFORMATION.

(2) RECESSED RP HANDHOLE. LOCATION OF TW2 & TW3 BRANCH CIRCUIT WIRING. SEE DRAWING CXF-E-04 FOR ADDITIONAL INFORMATION

(3) APPROXIMATE LOCATION OF MOTOR FOR NEW ROLL-DOWN DOOR. CONTRACTOR SHALL CONFIRM MOTOR LOCATION IN THE FIELD. CONTRACTOR SHALL PROVIDE 30 AMP, 2 POLE DISCONNECT SWITCH AT ROLL-UP DOOR MOTOR.

(4) EXISTING RECEPTACLES IN FOOD VENDOR AREA TO REMAIN AND BE RECIRCUITED VIA EXISTING CIRCUITS.

CONDUIT AND WIRE LEGEND

NO.	DESCRIPTION
(1)	3/4"C, FOR CONTROL WIRING

0 4' 8'

SCALE: 1/4" = 1'-0"

Drawing Name: G:\SavinAutocad\2060\25-Playland-Mega-3\E\CXFE-1005.dwg
Projectname: 211001F02 Comments: ----
Printed by: MGodby Date: 21 September 2022 1:34 PM Designed by: ----
Xrefs: [TB_24X36_WestchesterCo_3.dwg] [TSG-SVLOGO.dwg] [CXF-A-11.dwg] [CXF-E-1010.dwg]
Rev#:

CONSULTANT INFORMATION

Savin Engineers, P.C.

STATE OF NEW YORK · STEVEN A. MARTINO · 083931 · LICENSED PROFESSIONAL ENGINEER

REVISION NUMBER	DATE	MADE BY	APP'D BY	REVISION
1	09/21/2022	RKC	SM	BID ADDENDUM #3

RECORD DRAWING CERTIFICATION

☐ AS BUILT - CHANGES AS NOTED ☐ AS BUILT - NO CHANGES

CONTRACTOR: NAME / SIGNATURE / TITLE / DATE

PROJECT COORDINATOR: NAME / SIGNATURE / TITLE / DATE

WESTCHESTER COUNTY, NEW YORK
DEPARTMENT OF PUBLIC WORKS AND TRANSPORTATION
DIVISION OF ENGINEERING

INFRASTRUCTURE REHABILITATION - PHASE 3
PLAYLAND PARK, RYE, NEW YORK
CROSS AXIS BUILDING F
GROUND FLOOR POWER PLAN

CONTRACT NUMBER	22-523
SHEET NUMBER	CXF-E-05
DWG NO.:	378 of 664
SCALE:	AS SHOWN
DATE:	8/23/2022
DPW FILE NUMBER	1-118-E-1127-1
REV. NO.	1

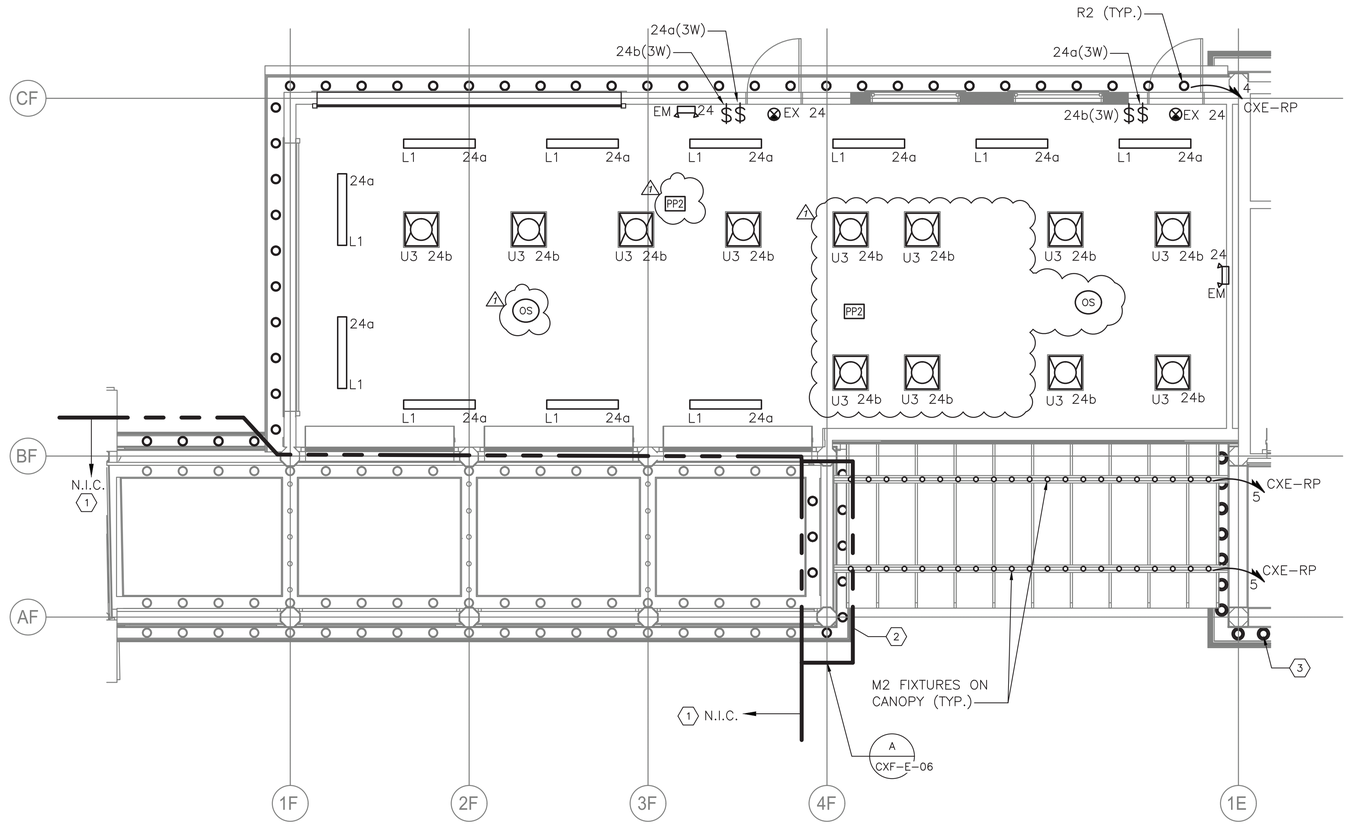

GROUND FLOOR LIGHTING PLAN
SCALE = 1/4" = 1'-0"

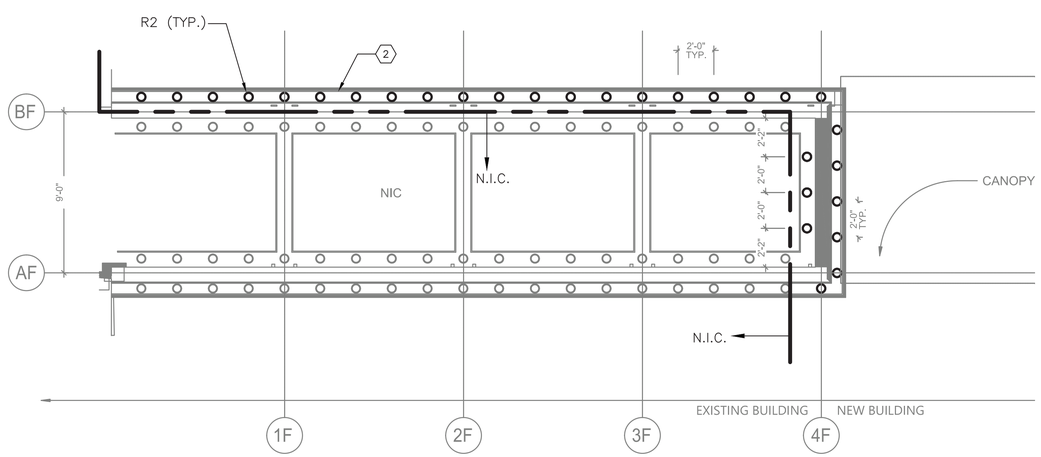

A CXF-E-06 CXF – COLONNADE RCP
SCALE = 1/4" = 1'-0"

NOTES:

1. FOR ADDITIONAL NOTES, ABBREVIATIONS AND SYMBOLS, SEE DRAWING GE-E-01.
2. ALL INTERIOR LIGHTING IS POWERED VIA PANEL PP-TW2&3, UNLESS NOTED OTHERWISE. CONTRACTOR SHALL CIRCUIT LIGHTING FIXTURES WITH 3/4" CONDUIT WITH 2#12 & 1#12GND.
3. EXIT SIGNS SHALL BE WIRED TO THE UN-SWITCHED LEG OF THE DESIGNATED CIRCUIT.
4. EMERGENCY FIXTURES SHALL BE WIRED TO THE UN-SWITCHED LEG OF THE DESIGNATED CIRCUIT.
5. ALL IN-CONTRACT EXTERIOR LIGHTING SHALL BE CIRCUITED TO RELAY PANEL CXE-RP. CONTRACTOR SHALL CIRCUIT LIGHTING FIXTURES WITH 3/4" CONDUIT WITH 2#10 & 1#10GND, UNLESS NOTED OTHERWISE. CONTRACTOR SHALL DAISY-CHAIN ALL EXTERIOR LIGHT FIXTURES WITH SAME CIRCUIT NUMBER BACK TO RELAY PANEL CXE-RP.
6. FOR LIGHTING PANEL SCHEDULE, REFER TO DRAWING CXF-E-08.
7. NUMBER DESIGNATORS NEXT TO FIXTURES AND/OR CONTROLS INDICATE CIRCUIT NUMBERS.
8. NEW LIGHTING CONTROLS SHALL BE FULLY COMPATIBLE WITH THE EXISTING SYSTEM AS PROVIDED ELSEWHERE AT THE PLAYLAND FACILITY. EQUIPMENT INCLUDES, BUT NOT LIMITED TO OCCUPANCY SENSORS, RELAY/POWER PACKS, SWITCHES, RELAY PANELS, PHOTO SENSORS, ETC.
9. SEE DRAWING CXE-E-09 FOR EXTERIOR LIGHTING CONTROL.

KEY NOTES:

1. LIGHTING IS PRESENTLY INSTALLED AND CIRCUITED. HOWEVER, DUE TO THE RELOCATION OF THE EXISTING RELAY PANELS, CONTRACTOR SHALL EXTEND CIRCUITS AS NECESSARY FOR RECONNECTION.
2. EXISTING COLONNADE IS BEING EXTENDED UNDER THIS CONTRACT. THIS REQUIRES NEW FIXTURES TO BE INSTALLED AS SHOWN ON THE COLONNADE REFLECTED CEILING PLAN. INTERCEPT EXISTING COLONNADE LIGHTING CIRCUITING AND ADD NEW FIXTURES TO SAID CIRCUIT. REFER TO ARCHITECTURAL DRAWINGS.
3. THIS LIGHTING CIRCUITING IS SHOWN ON THE CXE BUILDING DRAWINGS FOR MORE INFORMATION.

LIGHTING CONTROL LEGEND

SYMBOL	DESCRIPTION
O/V	OCCUPANCY / VACANCY SENSOR - SMALL MOTION, DUAL TECHNOLOGY, SINGLE POLE DOUGLAS LIGHTING CONTROLS, DIALOG SYSTEM CATALOG NUMBER: DIVERSA WORSDD1-R-N OR APPROVED EQUAL.
OS	OCCUPANCY SENSOR - DUAL TECHNOLOGY SENSOR, OCCUPANCY DETECTION ONLY DOUGLAS LIGHTING CONTROLS, DIALOG SYSTEM CATALOG NUMBER: WORSDG1-R-T OR APPROVED EQUAL.
PP1	POWER / RELAY PACK - 120/277 VOLT, SINGLE POLE, SELF CONTROLLED RELAY SWITCH DOUGLAS LIGHTING CONTROLS, DIALOG SYSTEM CATALOG NUMBER: WP-PP20-D OR APPROVED EQUAL.
PP2	POWER / RELAY PACK - 120/277 VOLT, SELF CONTROLLED RELAY SWITCH, TWO DIMMING CHANNELS DOUGLAS LIGHTING CONTROLS, DIALOG SYSTEM CATALOG NUMBER: WRC-4222 OR APPROVED EQUAL.
$ m	120 VOLT RATED LIGHTING SINGLE POLE SWITCH
RP	RELAY TIME CONTROL PANEL, DIGITAL CENTRAL PANEL DOUGLAS LIGHTING CONTROLS, DIALOG SYSTEM CATALOG NUMBER: WLCP-CPx/x OR APPROVED EQUAL. *x/x IS CAPACITY/QTY OF RELAYS - VARIES BY BUILDING.
PS	DIGITAL PHOTOCELL - PHOTOSENSOR SUITABLE FOR OUTDOOR APPLICATIONS DOUGLAS LIGHTING CONTROLS, DIALOG SYSTEM CATALOG NUMBER: WPS-3741B OR APPROVED EQUAL.

0 4' 8'
SCALE: 1/4" = 1'-0"

CONSULTANT INFORMATION
Savin Engineers, P.C.

CONSULTANT SEAL
STATE OF NEW YORK · STEVEN A. MARTINO · 083631 · LICENSED PROFESSIONAL ENGINEER

REVISION NUMBER	DATE	MADE BY	APP'D BY	REVISION
1	09/21/2022	RKC	SM	BID ADDENDUM #3

RECORD DRAWING CERTIFICATION
☐ AS BUILT – CHANGES AS NOTED ☐ AS BUILT – NO CHANGES

CONTRACTOR
NAME
SIGNATURE
TITLE DATE

PROJECT COORDINATOR
NAME
SIGNATURE
TITLE DATE

WESTCHESTER COUNTY, NEW YORK
DEPARTMENT OF PUBLIC WORKS AND TRANSPORTATION
DIVISION OF ENGINEERING

INFRASTRUCTURE REHABILITATION - PHASE 3
PLAYLAND PARK, RYE, NEW YORK
CROSS AXIS BUILDING F
GROUND FLOOR - LIGHTING PLAN

CONTRACT NUMBER	22-523
SHEET NUMBER	CXF-E-06
DWG NO.:	379 of 664
SCALE:	AS SHOWN
DATE:	8/23/2022
DPW FILE NUMBER	1-118-E-1128-1
REV. NO.	1

Drawing Name: G:\SavinAutocad\2060\25-Playland-Mega-3\E\CXFE-1006.dwg
Projectname: 211001F02 Comments: ----
Printed by: MGodby Date: 21 September 2022 1:35 PM Designed by: ----
Xrefs: [TB_24X36_WestchesterCo_3.dwg] [TSG-SVLOGO.dwg] [CXF-A-41.dwg] [CXF-E-1003.dwg]

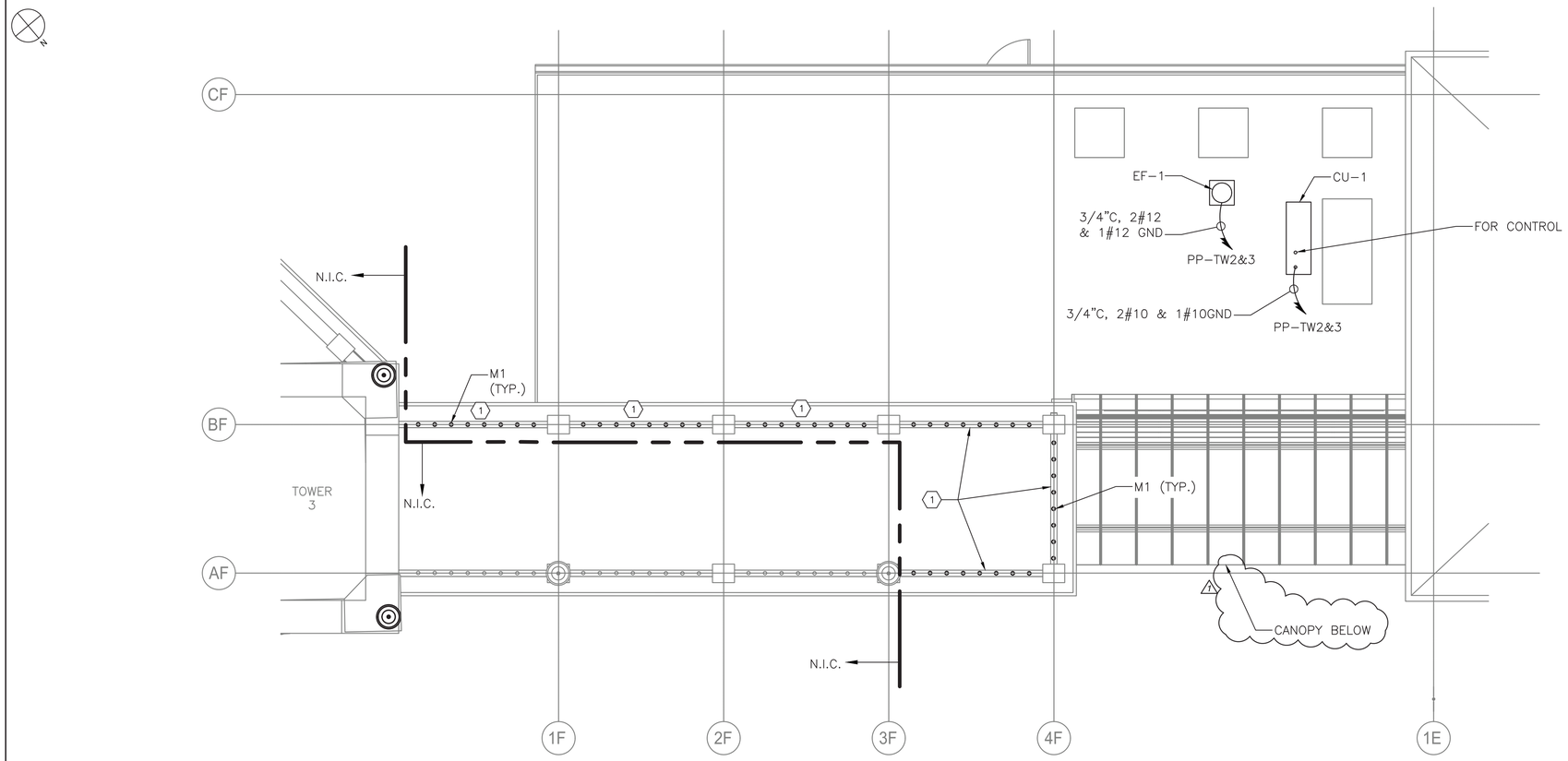

B ROOF LEVEL – POWER AND LIGHTING PLAN
SCALE = 1/4" = 1'-0"

NOTES:

1. FOR ADDITIONAL NOTES, ABBREVIATIONS AND SYMBOLS, SEE DRAWING GE-E-01.
2. ALL ROOF PENETRATIONS SHALL BE WATERPROOF. PENETRATION COMPONENTS FOR CONDUIT SHALL BE SUITABLE AND COMPATIBLE FOR INSTALLED ROOF. SEE ARCHITECTURAL AND PLUMBING DRAWINGS FOR ADDITIONAL INFORMATION.
3. CONTRACTOR SHALL COORDINATE ALL REQUIRED DISCONNECTING MEANS WITH HVAC CONTRACTOR.
4. EXHAUST FAN STARTERS SHALL BE FURNISHED BY THE EXHAUST FAN MANUFACTURER. FOR EXHAUST FAN STARTER REQUIREMENTS, SEE HVAC CONTRACT DRAWINGS AND SPECIFICATIONS.

KEY NOTES:

(1) CONNECT NEW REQUIRED M1 FIXTURES INTO EXISTING SOUTH COLONNADE LIGHTING CIRCUIT.

0 4' 8'
SCALE: 1/4" = 1'-0"

CONSULTANT INFORMATION
Savin Engineers, P.C.

CONSULTANT SEAL
STATE OF NEW YORK · STEVEN A. MARTINO · 083631 · LICENSED PROFESSIONAL ENGINEER

REVISION NUMBER	DATE	MADE BY	APP'D BY	REVISION
1	09/21/2022	RKC	SM	BID ADDENDUM #3

RECORD DRAWING CERTIFICATION
☐ AS BUILT – CHANGES AS NOTED ☐ AS BUILT – NO CHANGES

CONTRACTOR
NAME
SIGNATURE
TITLE DATE

PROJECT COORDINATOR
NAME
SIGNATURE
TITLE DATE

WESTCHESTER COUNTY, NEW YORK
DEPARTMENT OF PUBLIC WORKS AND TRANSPORTATION
DIVISION OF ENGINEERING

INFRASTRUCTURE REHABILITATION - PHASE 3
PLAYLAND PARK, RYE, NEW YORK
CROSS AXIS BUILDING F
ROOF LEVEL - POWER & LIGHTING PLAN

CONTRACT NUMBER	22-523
SHEET NUMBER	CXF-E-07
DWG NO.:	380 of 664
SCALE:	AS SHOWN
DATE:	8/23/2022
DPW FILE NUMBER	1-118-E-1129-1
REV. NO.	1

Drawing Name: G:\SavinAutocad\2060\25-Playland-Mega-3\E\CXFE-1007.dwg
Rev#: Projectname: 211001F02 Comments: ----
Printed by: MGodby Date: 21 September 2022 1:35 PM Designed by: ----
Xrefs: [TB_24X36_WestchesterCo_3.dwg] [TSG-SVLOGO.dwg] [CXF-A-12.dwg] [CXF-E-1009.dwg]

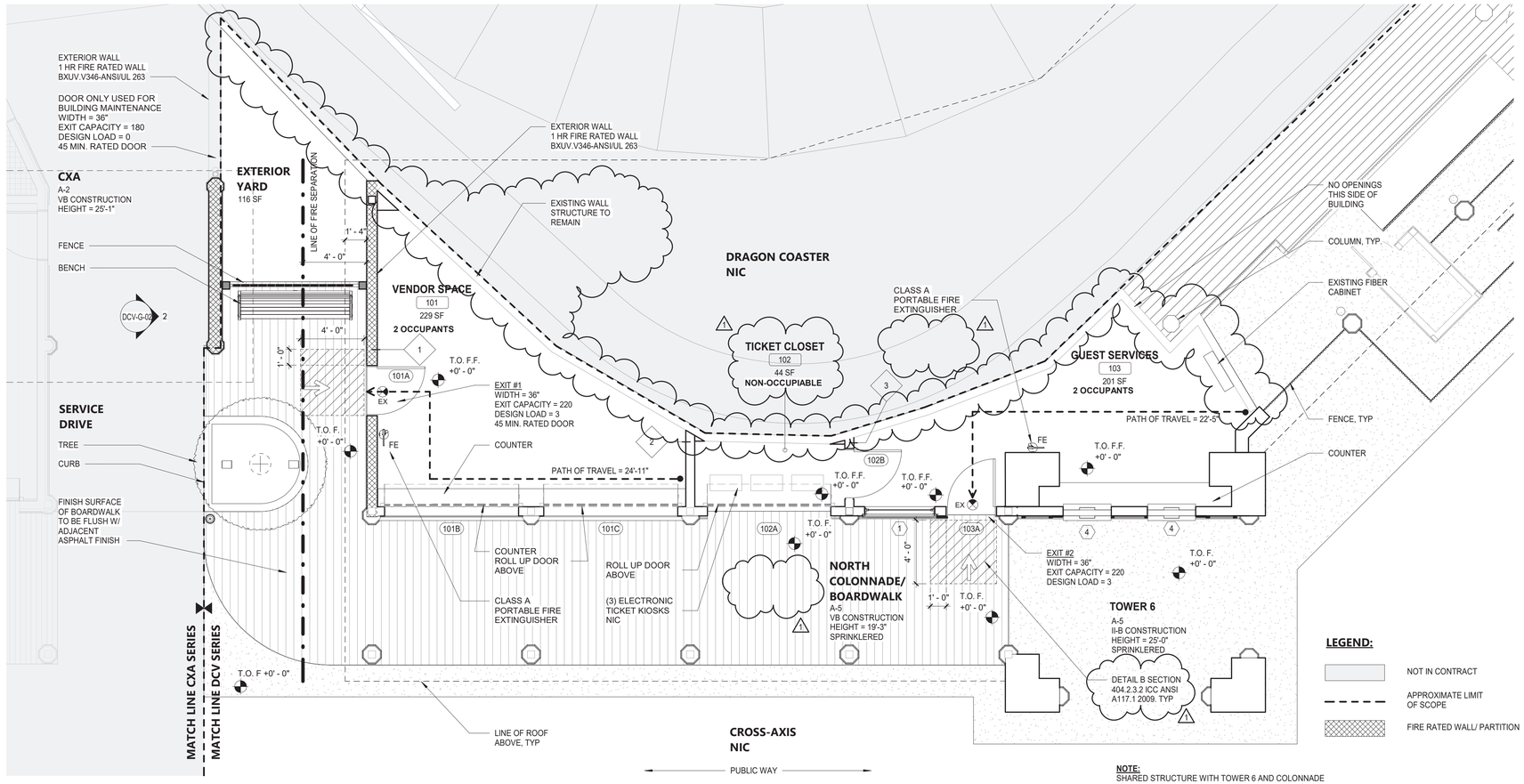

1 LIFE SAFETY PLAN - GROUND FLOOR
1/4" = 1'-0"

LEGEND:

- NOT IN CONTRACT
- APPROXIMATE LIMIT OF SCOPE
- FIRE RATED WALL/ PARTITION

NOTE:
SHARED STRUCTURE WITH TOWER 6 AND COLONNADE

CODE ANALYSIS

NEW YORK STATE BUILDING CODE 2020 (BC)
NEW YORK STATE EXISTING BUILDING CODE 2020 (EBC)
ENERGY CONSERVATION CONSTRUCTION CODE OF NEW YORK STATE (ECCC)
NFPA 13 2016 (NFPA13)

CONSTRUCTION TYPE (TBL 601)	VB	(FULLY SPRINKLERED)
OCCUPANCY CLASSIFICATION	B	BUSINESS
NUMBER OF STORIES (TBL 504.4)	1	3 (MAX. ALLOWABLE)
HEIGHT (FT) (TBL 504.3)	25.75'	60 FT
BUILDING AREA (SF) (TBL 506.2)	470 SF	36,000 SF
REQUIRED SEPARATION OF OCCUPANCIES (TBL 508.4) (AS PER EBC 1011.6.2)	**REQUIRED**	**PROVIDED**
A - B (AUTOMATIC SPRINKLER SYSTEM)	0	0
B - B (AUTOMATIC SPRINKLER SYSTEM)	0	0
FIRE-RESISTANCE RATING REQUIREMENTS (TBL 601)	**REQUIRED**	**PROVIDED**
PRIMARY STRUCTURE FRAME	0	0
BEARING WALLS		
EXTERIOR (TBL 602)		
FIRE SEPARATION DISTANCE X < 5 FT	1 BOTH SIDES	1 BOTH SIDES
INTERIOR	0	0
NON BEARING WALLS AND PARTITIONS		
EXTERIOR (TBL 602)		
FIRE SEPARATION DISTANCE X < 5 FT	1 BOTH SIDES	1 BOTH SIDES
INTERIOR	0	0
FLOOR CONSTRUCTION	0	0
ROOF CONSTRUCTION	0	0
MINIMUM DISTANCE OF PROJECTION (TBL 705.2)	**REQUIRED**	**PROVIDED**
3 TO LESS THAN 5	32"	16"
ALLOWABLE AREA OF OPENINGS (BC 705.8) FIRE SEPARATION DISTANCE (UNPROTECTED, SPRINKLER) 5 ≤ X < 10 FT	15%	9.3%
INTERIOR FINISHES CLASS (BC 803)	**REQUIRED**	**PROVIDED**
WALL AND CEILING	CLASS C	CLASS A
FLOORS - RADIANT FLUX	CLASS II	CLASS II
PORTABLE FIRE EXTINGUISHERS (BC 906)	**REQUIRED**	**PROVIDED**
FIRE HAZARD HAZARD OCCUPANCY	CLASS A ORDINARY	CLASS A ORDINARY
MINIMUM RATED SINGLE EXTINGUISHER	2-A	CLASS A
MAXIMUM FLOOR AREA PER UNIT OF A	1,500 SF	245 SF
MAXIMUM FLOOR AREA FOR EXTINGUISHER	11,250 SF	245 SF
MAXIMUM DISTANCE OF TRAVEL TO EXTINGUISHER	75'	19'
NUMBER OF TYPE 2-A EXTINGUISHERS FIRST FLOOR	1	2
MEANS OF EGRESS		
MAX. FLOOR AREA ALLOWANCES PER OCCUPANT (TBL 1004.5) (SF) BUSINESS	150 GROSS	
DESIGN OCCUPANT LOAD		
GUEST SERVICES (201 SF)	2	
VENDOR SPACE (229 SF)	2	
EGRESS WIDTH PER OCCUPANT (BC 1005.3.2) OTHER EGRESS COMPONENTS	0.20 INCHES	
EGRESS WIDTH REQUIRED		
GUEST SERVICES	0.40 INCHES	36 INCHES
VENDOR SPACE	0.40 INCHES	36 INCHES
MINIMUM NUMBER OF EXITS (TBL 1006.3.2)	**REQUIRED**	**PROVIDED**
OCCUPANT LOAD: 1 - 500	2	2
SINGLE EXITS (TBL 1006.3.3) *ROOMS, AREAS AND SPACES COMPLY WITH SECTION 1006.2.1 WITH EXITS THAT DISCHARGE DIRECTLY TO THE EXTERIOR AT THE LEVEL OF DISCHARGE, ARE PERMITTED TO HAVE ONE EXIT OR ACCESS TO A SINGLE EXIT.*		
MAXIMUM COMMON PATH OF EGRESS TRAVEL (TBL1006.2.1)	**PERMITTED**	**PROPOSED**
B OCCUPANCY WITH SPRINKLER SYSTEM	100'	SEE PLANS
MAXIMUM TRAVEL DISTANCE (BC 1017) B OCCUPANCY WITH SPRINKLER SYSTEM	250'	SEE PLANS
STRUCTURAL DESIGN	**PERMITTED**	**PROPOSED**
RISK CATEGORY (TBL 1604.5)	II	
DETERMINATION OF SEISMIC DESIGN (BC 1613.2.5) (SEE DCV-S-01 FOR ADDITIONAL INFO)	B	

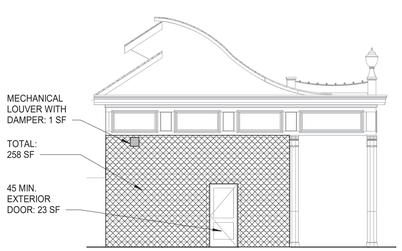

ALLOWABLE AREA OF OPENING CALCULATION
(23 SF + 1 SF) / 258 SF = 0.090 X 100 = 9.3%

2 ELEVATION A
1/8" = 1'-0"

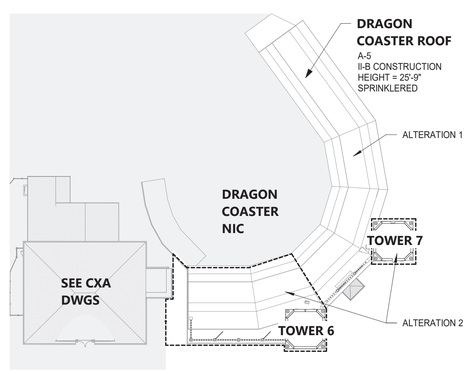

3 DRAGON COASTER VENDORS KEY PLAN
1" = 30'-0"

HISTORICAL BUILDING REGISTRY

PLAYLAND AMUSEMENT PARK IS A DESIGNATED NATIONAL HISTORIC LANDMARK AND IS LISTED ON THE NATIONAL REGISTER OF HISTORIC PLACES.

THE NATIONAL HISTORIC PLACES REGISTER REFERENCE NUMBER: 80004529_NHL NATIONAL ARCHIVE IDENTIFIER: 75316138

DRAGON COASTER VENDORS IS A CONTRIBUTING STRUCTURE OF THE LANDMARK AND THEREFORE AN HISTORIC BUILDING UNDER THE 2020 BUILDING CODE AND 2020 EXISTING BUILDING CODE OF NEW YORK STATE.

2020 NYS ENERGY CONSERVATION CODE

[NY] C501.6 HISTORIC BUILDINGS
PROVISIONS OF THIS CODE RELATING TO THE CONSTRUCTION, REPAIR, ALTERATION, RESTORATION AND MOVEMENT OF STRUCTURES, AND CHANGE OF OCCUPANCY SHALL NOT BE MANDATORY FOR HISTORIC BUILDINGS.

2020 NYS EXISTING BUILDING CODE

[NY] EBC 602.1 LEVEL 1 ALTERATIONS INCLUDE THE REMOVAL AND REPLACEMENT OR THE COVERING OF EXISTING MATERIALS, ELEMENTS, EQUIPMENT, OR FIXTURES USING NEW MATERIALS, ELEMENTS, EQUIPMENT, OR FIXTURES THAT SERVE THE SAME PURPOSE.

[NY] EBC 603.1 LEVEL 2 ALTERATIONS INCLUDE THE RECONFIGURATION OF SPACE, THE ADDITION OR ELIMINATION OF ANY DOOR OR WINDOW, THE RECONFIGURATION OR EXTENSION OF ANY SYSTEM, OR THE INSTALLATION OF ANY ADDITIONAL EQUIPMENT.

[NY] EBC 810.1 LEVEL 2 ALTERATIONS TO EXISTING BUILDINGS OR STRUCTURES ARE PERMITTED WITHOUT REQUIRING THE ENTIRE BUILDING OR STRUCTURE TO COMPLY WITH THE ENERGY REQUIREMENTS OF THE ECCC.

9/21/2022 3:19:28 PM

CONSULTANT INFORMATION
The LiRo Group
3 Aerial Way, Syosset, New York 11791
(516) 938-5476 www.liro.com

CONSULTANT SEAL
REGISTERED ARCHITECT ROBERT D. DOMINSKI 023295 STATE OF NEW YORK

REVISION NUMBER	DATE	MADE BY	APP'D BY	REVISION
1	09/21/22			BID ADDENDUM #3

RECORD DRAWING CERTIFICATION
☐ AS BUILT – CHANGES AS NOTED ☐ AS BUILT – NO CHANGES
CONTRACTOR: NAME / SIGNATURE / TITLE / DATE
PROJECT COORDINATOR: NAME / SIGNATURE / TITLE / DATE

WESTCHESTER COUNTY, NEW YORK
DEPARTMENT OF PUBLIC WORKS AND TRANSPORTATION
DIVISION OF ENGINEERING

INFRASTRUCTURE REHABILITATION - PHASE 3
PLAYLAND PARK, RYE, NEW YORK
DRAGON COASTER VENDORS
LIFE SAFETY PLAN

CONTRACT NUMBER 22-523
SHEET NUMBER DCV-G-02
DWG NO.: 394 of 664
SCALE: As indicated
DATE: 08/23/2022
DPW FILE NUMBER 1-118-G-1143-1
REV. NO. 1

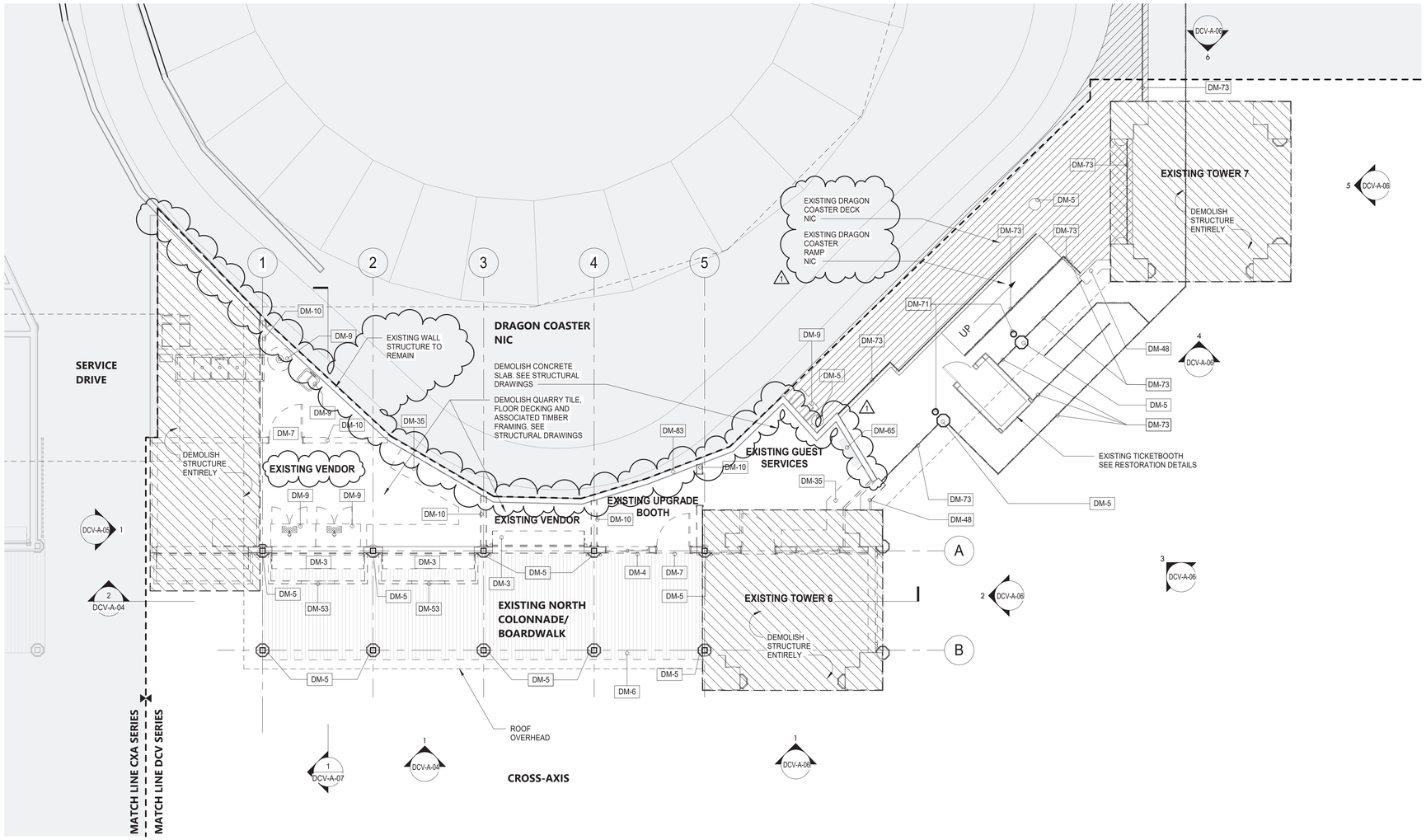

1 GROUND FLOOR - DEMOLITION PLAN
3/16" = 1'-0"

SHEET NOTES:

1. THE GC SHALL VISIT THE SITE AND FAMILIARIZE HIM/HERSELF WITH EXISTING CONDITIONS AND REQUIREMENTS OF THE WORK. THE GC SHALL FIELD VERIFY EXACT QUANTITIES OF ALL ITEMS TO BE REMOVED.
2. THE GC SHALL PHOTOGRAPH AND DOCUMENT EXISTING HISTORIC DECORATIVE TRIMS INCLUDING SIZES AND PROFILES PRIOR TO ENVIRONMENTAL REMEDIATION WORK START.
3. ITEMS TO BE REMOVED / DEMOLISHED AS INDICATED ON THE DRAWINGS ARE INTENDED TO SHOW THE GENERAL SCOPE OF THE DEMOLITION WORK. THE DRAWINGS DO NOT REPRESENT IN DETAIL ALL ITEMS OR SITUATIONS THAT MAY BE ENCOUNTERED DURING THE DEMOLITION. IT IS THE GC'S RESPONSIBILITY TO REMOVE, PROTECT, AND MAKE CORRECTIONS AS REQ'D TO ACHIEVE DRAWING INTENT. THE GC SHALL NOTIFY THE A/E OF ANY STRUCTURAL NONCONFORMITY TO PLANS AND SPECIFICATIONS.
4. PLAYLAND RESERVES THE RIGHT TO REVIEW ALL MATERIALS DESIGNATED FOR REMOVAL AND TO RETAIN OWNERSHIP OF SUCH MATERIALS. IF PLAYLAND RETAINS ANY MATERIAL THE GC SHALL MAKE ARRANGEMENTS WITH THE PLAYLAND'S SUPERINTENDENT TO HAVE THOSE MATERIALS REMOVED AND STORED OFF SITE AT NO ADDITIONAL COST.
5. DEMOLITION OF THE EXISTING BUILDING SHALL INCLUDE REMOVAL OF THE EXISTING FOUNDATIONS FOR THEIR ENTIRE DEPTH TO ACCOMMODATE INSTALLATION OF NEW FOUNDATIONS.
6. THE GC SHALL USE EXTREME CAUTION IN AREAS OF DEMOLITION WHICH MAY DISTURB EXISTING STRUCTURES. TEMPORARY SHORING, BARRICADES, DUST PARTITIONS, ETC. SHALL BE PROVIDED AS REQ'D TO PROTECT ALL EXISTING STRUCTURES AND PROPERTY.
7. SEE STRUCTURAL, ELECTRICAL, SPRINKLER, AND PLUMBING DRAWINGS FOR RELATED DEMOLITION WORK.
8. VERIFY LOCATION OF EXISTING STRUCTURES AND SHORE UP ROOF/FLOOR ABOVE AS REQ'D BEFORE REMOVING WALL
9. REMOVAL OF ALL CEILINGS AND MOUNTED ITEMS THROUGHOUT THE CONTRACT AREA INCLUDE ANCHORING HARDWARE, AND MISCELLANEOUS FASTENINGS, MECHANICAL, ELECTRICAL, PLUMBING AND FIRE PREVENTION WORKS.
10. WALLS SHALL BE REMOVED AS INDICATED ON DEMOLITION PLANS. ALL UTILITIES IN WALL SHALL BE CUT TO BELOW SLAB OR ABOVE THE CEILING.
11. REMOVE ALL EXISTING ELECTRICAL AND PLUMBING LINES NOT TO BE RE-USED. CAP PLUMBING LINES AS REQ'D. ELECTRICAL WIRING SHALL BE DISCONNECTED BACK TO THE NEAREST ACTIVE LOCATION. ALL ABANDONED COMMUNICATION CABLES (DATA, TELEPHONE, FIRE ALARM, AND AUDIO/VIDEO CABLES) SHALL BE REMOVED TO SOURCE IF NOT TAGGED FOR FUTURE USE.
12. DEMOLITION PROCEDURES ARE THE SILL RESPONSIBILITY OF THE GENERAL GC OF THIS CONTRACT. GC TO "CUT OFF" ALL NECESSARY UTILITIES REQ'D TO OBTAIN DESIRED RESULTS. GC TO OBTAIN "SHUT OFF" APPROVALS FROM PLAYLAND PRIOR TO SCHEDULED DEMOLITION.
13. THE GC SHALL PATCH AND REPAIR ALL EXISTING CONSTRUCTION DISTURBED BY THE WORK AND PREPARE FOR NEW FINISH AS SHOWN ON THE INTERIOR ELEVATIONS.
14. THE GC SHALL BE RESPONSIBLE FOR THE CLEANING UP AND HAULING AWAY OF ALL TRASH AND DEBRIS ON A REGULAR BASIS DURING THE CONSTRUCTION PERIOD.
15. ALL DEBRIS REMOVED FROM THE SITE SHALL BE DISPOSED OF IN A LEGAL MANNER.
16. EXISTING EXITS SHALL REMAIN FULLY ACCESSIBLE AND UNOBSTRUCTED DURING THE PROGRESS OF THE WORK.

DEMOLITION LEGEND

- INDICATES DEMOLITION
- DM - # — DEMOLITION KEY NOTES
- INDICATES NIC
- INDICATES DEMOLITION OF SHINGLE ROOF
- INDICATES DEMOLITION OF EXISTING SBS ROOF
- INDICATES APPROXIMATE LIMIT OF SCOPE

DEMOLITION KEYNOTES

DM-3	REMOVE ROLL DOWN DOOR AND ASSOCIATED HARDWARE.
DM-4	REMOVE EXISTING WINDOW & FRAME.
DM-5	REMOVE COLUMN ENCLOSURES. CAREFULLY REMOVE AT LEAST ONE COLUMN ENCLOSURE TO USE AS REFERENCE IN ORDER TO REPLICATE TRIMS TO MATCH LOCATION, SIZE AND SHAPE AS INDICATED. COORDINATE WITH STRUCTURAL DRAWINGS.
DM-6	REMOVE EXISTING WOOD DECKING. (COORDINATE EXTENT OF REMOVAL REQUIRED TO REPAIR FLOOR JOISTS TO REMAIN AS NEEDED - SEE STRUCTURAL DRAWINGS).
DM-7	REMOVE EXISTING DOOR & FRAME.
DM-9	CONTRACTOR TO REMOVE ANY REMAINING EQUIPMENT AND BUILDING CONTENT. CONTENT MAY INCLUDE BUT NOT LIMITED TO REFRIGERATOR, STORAGE, RACKS, AC UNITS, GAMES ETC.
DM-10	REMOVE INTERIOR PARTITION.
DM-35	REMOVE COUNTER AND ALL RELATED COMPONENTS.
DM-48	DEMOLISH WING PIER.
DM-53	REMOVE EXISTING AWNING. PROVIDE FOR DELIVERY TO THE OWNER AS DIRECTED BY THE A/E.
DM-65	EXISTING FIBER CABINET TO REMAIN AND TO BE PROTECTED.
DM-71	EXISTING STRUCTURAL COLUMNS TO REMAIN. SEE STRUCTURAL.
DM-73	CAREFULLY REMOVE AND STORE EXISTING FENCE. SAND AND PRIME FOR NEW COAT OF PAINT FOR REINSTALLATION.
DM-83	REMOVE EXISTING INTERIOR FINISHES ON WALL. RETAIN STRUCTURE.

9/23/2022 4:42:12 PM

CONSULTANT INFORMATION
The LiRo Group
3 Aerial Way, Syosset, New York 11791
(516) 938-5476 www.liro.com

CONSULTANT SEAL
REGISTERED ARCHITECT ROBERT D. TOWNSEND 023280 STATE OF NEW YORK

REVISION NUMBER	DATE	MADE BY	APP'D BY	REVISION
1	09/21/22			BID ADDENDUM #3

RECORD DRAWING CERTIFICATION
☐ AS BUILT – CHANGES AS NOTED ☐ AS BUILT – NO CHANGES

CONTRACTOR
NAME
SIGNATURE
TITLE DATE

PROJECT COORDINATOR
NAME
SIGNATURE
TITLE DATE

WESTCHESTER COUNTY, NEW YORK
DEPARTMENT OF PUBLIC WORKS AND TRANSPORTATION
DIVISION OF ENGINEERING

INFRASTRUCTURE REHABILITATION - PHASE 3
PLAYLAND PARK, RYE, NEW YORK
DRAGON COASTER VENDORS
DEMOLITION PLAN

CONTRACT NUMBER 22-523
SHEET NUMBER **DCV-A-01**
DWG NO.: 400 of 664
SCALE: **As indicated**
DATE: **08/23/2022**
DPW FILE NUMBER **1-118-A-1149-1**
REV. NO. **1**

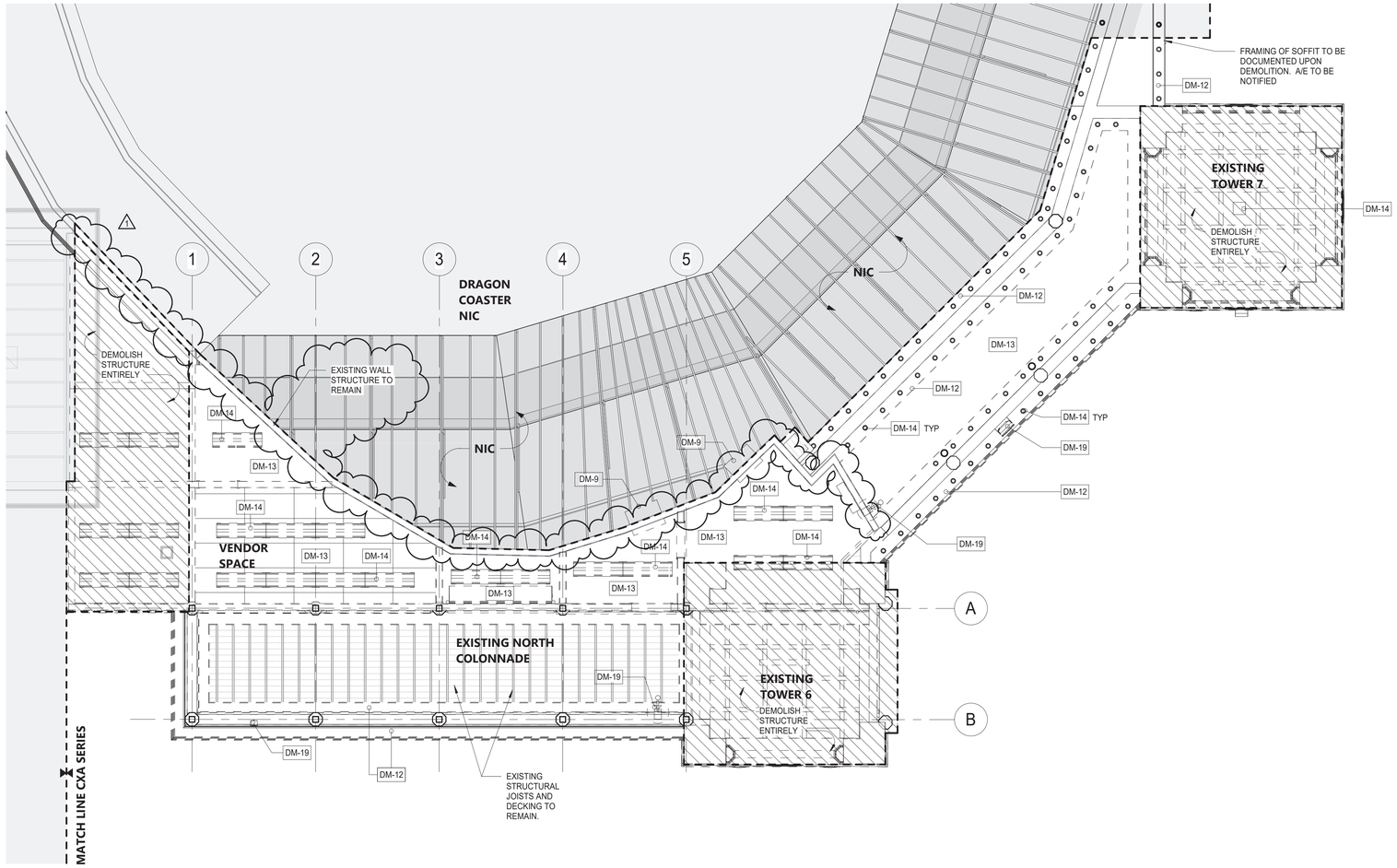

1 GROUND FLOOR - REFLECTED CEILING DEMOLITION PLAN
3/16" = 1'-0"

SHEET NOTES:

1. THE GC SHALL VISIT THE SITE AND FAMILIARIZE HIM/HERSELF WITH EXISTING CONDITIONS AND REQUIREMENTS OF THE WORK. THE GC SHALL FIELD VERIFY EXACT QUANTITIES OF ALL ITEMS TO BE REMOVED.
2. THE GC SHALL PHOTOGRAPH AND DOCUMENT EXISTING HISTORIC DECORATIVE TRIMS INCLUDING SIZES AND PROFILES PRIOR TO ENVIRONMENTAL REMEDIATION WORK START.
3. ITEMS TO BE REMOVED / DEMOLISHED AS INDICATED ON THE DRAWINGS ARE INTENDED TO SHOW THE GENERAL SCOPE OF THE DEMOLITION WORK. THE DRAWINGS DO NOT REPRESENT IN DETAIL ALL ITEMS OR SITUATIONS THAT MAY BE ENCOUNTERED DURING THE DEMOLITION. IT IS THE GC'S RESPONSIBILITY TO REMOVE, PROTECT, AND MAKE CORRECTIONS AS REQ'D TO ACHIEVE DRAWING INTENT. THE GC SHALL NOTIFY THE A/E OF ANY STRUCTURAL NONCONFORMITY TO PLANS AND SPECIFICATIONS.
4. PLAYLAND RESERVES THE RIGHT TO REVIEW ALL MATERIALS DESIGNATED FOR REMOVAL AND TO RETAIN OWNERSHIP OF SUCH MATERIALS. IF PLAYLAND RETAINS ANY MATERIAL THE GC SHALL MAKE ARRANGEMENTS WITH THE PLAYLAND'S SUPERINTENDENT TO HAVE THOSE MATERIALS REMOVED AND STORED OFF SITE AT NO ADDITIONAL COST.
5. DEMOLITION OF THE EXISTING BUILDING SHALL INCLUDE REMOVAL OF THE EXISTING FOUNDATIONS FOR THEIR ENTIRE DEPTH TO ACCOMMODATE INSTALLATION OF NEW FOUNDATIONS.
6. THE GC SHALL USE EXTREME CAUTION IN AREAS OF DEMOLITION WHICH MAY DISTURB EXISTING STRUCTURES. TEMPORARY SHORING, BARRICADES, DUST PARTITIONS, ETC. SHALL BE PROVIDED AS REQ'D TO PROTECT ALL EXISTING STRUCTURES AND PROPERTY.
7. SEE STRUCTURAL, ELECTRICAL, SPRINKLER, AND PLUMBING DRAWINGS FOR RELATED DEMOLITION WORK.
8. VERIFY LOCATION OF EXISTING STRUCTURES AND SHORE UP ROOF/FLOOR ABOVE AS REQ'D BEFORE REMOVING WALL
9. REMOVAL OF ALL CEILINGS AND MOUNTED ITEMS THROUGHOUT THE CONTRACT AREA INCLUDE ANCHORING HARDWARE, AND MISCELLANEOUS FASTENINGS, MECHANICAL, ELECTRICAL, PLUMBING AND FIRE PREVENTION WORKS.
10. WALLS SHALL BE REMOVED AS INDICATED ON DEMOLITION PLANS. ALL UTILITIES IN WALL SHALL BE CUT TO BELOW SLAB OR ABOVE THE CEILING.
11. REMOVE ALL EXISTING ELECTRICAL AND PLUMBING LINES NOT TO BE RE-USED. CAP PLUMBING LINES AS REQ'D. ELECTRICAL WIRING SHALL BE DISCONNECTED BACK TO THE NEAREST ACTIVE LOCATION. ALL ABANDONED COMMUNICATION CABLES (DATA, TELEPHONE, FIRE ALARM, AND AUDIO/VIDEO CABLES) SHALL BE REMOVED TO SOURCE IF NOT TAGGED FOR FUTURE USE.
12. DEMOLITION PROCEDURES ARE THE SILL RESPONSIBILITY OF THE GENERAL GC OF THIS CONTRACT. GC TO "CUT OFF" ALL NECESSARY UTILITIES REQ'D TO OBTAIN DESIRED RESULTS. GC TO OBTAIN "SHUT OFF" APPROVALS FROM PLAYLAND PRIOR TO SCHEDULED DEMOLITION.
13. THE GC SHALL PATCH AND REPAIR ALL EXISTING CONSTRUCTION DISTURBED BY THE WORK AND PREPARE FOR NEW FINISH AS SHOWN ON THE INTERIOR ELEVATIONS.
14. THE GC SHALL BE RESPONSIBLE FOR THE CLEANING UP AND HAULING AWAY OF ALL TRASH AND DEBRIS ON A REGULAR BASIS DURING THE CONSTRUCTION PERIOD.
15. ALL DEBRIS REMOVED FROM THE SITE SHALL BE DISPOSED OF IN A LEGAL MANNER.
16. EXISTING EXITS SHALL REMAIN FULLY ACCESSIBLE AND UNOBSTRUCTED DURING THE PROGRESS OF THE WORK.

DEMOLITION LEGEND

- INDICATES DEMOLITION
- DM - # — DEMOLITION KEY NOTES
- INDICATES NIC
- INDICATES DEMOLITION OF SHINGLE ROOF
- INDICATES DEMOLITION OF EXISTING SBS ROOF
- INDICATES APPROXIMATE LIMIT OF SCOPE

DEMOLITION KEYNOTES

DM-9	CONTRACTOR TO REMOVE ANY REMAINING EQUIPMENT AND BUILDING CONTENT. CONTENT MAY INCLUDE BUT NOT LIMITED TO REFRIGERATOR, STORAGE, RACKS, AC UNITS, GAMES ETC.
DM-12	REMOVE EXTERIOR SOFFIT AS NECESSARY WHERE PERIMETER LIGHTING IS TO BE REMOVED. COORDINATE WITH ELECTRICAL DRAWINGS.
DM-13	REMOVE EXISTING CEILING AND ALL ACCESSORIES AND EQUIPMENT.
DM-14	REMOVE EXISTING LIGHTING FIXTURES AND ELECTRICAL WIRING CONNECTED TO THESE FIXTURES. SEE ELECTRICAL FOR DETAILS.
DM-19	DISCONNECT AND REMOVE EXISTING SUSPENDED EQUIPMENT SUCH AS CAMERAS, SPEAKERS, ETC. SEE ELECTRICAL DRAWINGS FOR DETAILS.

9/23/2022 4:42:16 PM

CONSULTANT INFORMATION
The LiRo Group
3 Aerial Way, Syosset, New York 11791
(516) 938-5476 www.liro.com

CONSULTANT SEAL
REGISTERED ARCHITECT ROBERT D. COMINSKI 023220 STATE OF NEW YORK

REVISION NUMBER	DATE	MADE BY	APP'D BY	REVISION
1	09/21/22			BID ADDENDUM #3

RECORD DRAWING CERTIFICATION
☐ AS BUILT – CHANGES AS NOTED ☐ AS BUILT – NO CHANGES

CONTRACTOR
NAME
SIGNATURE
TITLE DATE

PROJECT COORDINATOR
NAME
SIGNATURE
TITLE DATE

WESTCHESTER COUNTY, NEW YORK
DEPARTMENT OF PUBLIC WORKS AND TRANSPORTATION
DIVISION OF ENGINEERING

INFRASTRUCTURE REHABILITATION - PHASE 3
PLAYLAND PARK, RYE, NEW YORK
DRAGON COASTER VENDORS
DEMOLITION REFLECTED CEILING PLAN

CONTRACT NUMBER 22-523
SHEET NUMBER DCV-A-02
DWG NO.: 401 of 664
SCALE: As indicated
DATE: 08/23/2022
DPW FILE NUMBER 1-118-A-1150-1
REV. NO. 1

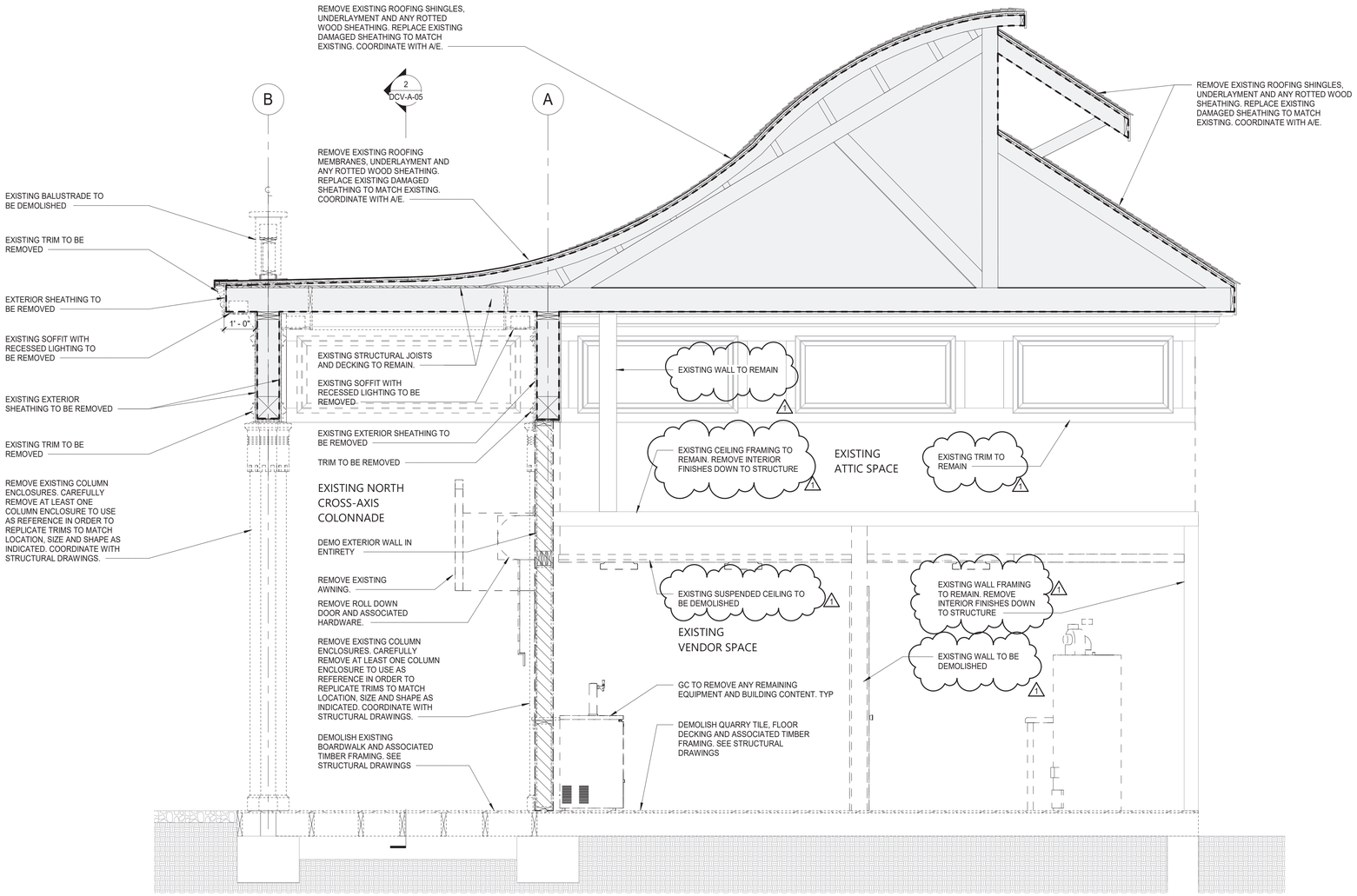

1 SECTION AT END WALL - DEMOLITION

1/2" = 1'-0"

SHEET NOTES:

1. THE GC SHALL VISIT THE SITE AND FAMILIARIZE HIM/HERSELF WITH EXISTING CONDITIONS AND REQUIREMENTS OF THE WORK. THE GC SHALL FIELD VERIFY EXACT QUANTITIES OF ALL ITEMS TO BE REMOVED.

2. THE GC SHALL PHOTOGRAPH AND DOCUMENT EXISTING HISTORIC DECORATIVE TRIMS INCLUDING SIZES AND PROFILES PRIOR TO ENVIRONMENTAL REMEDIATION WORK START.

3. ITEMS TO BE REMOVED / DEMOLISHED AS INDICATED ON THE DRAWINGS ARE INTENDED TO SHOW THE GENERAL SCOPE OF THE DEMOLITION WORK. THE DRAWINGS DO NOT REPRESENT IN DETAIL ALL ITEMS OR SITUATIONS THAT MAY BE ENCOUNTERED DURING THE DEMOLITION. IT IS THE GC'S RESPONSIBILITY TO REMOVE, PROTECT, AND MAKE CORRECTIONS AS REQ'D TO ACHIEVE DRAWING INTENT. THE GC SHALL NOTIFY THE A/E OF ANY STRUCTURAL NONCONFORMITY TO PLANS AND SPECIFICATIONS.

4. PLAYLAND RESERVES THE RIGHT TO REVIEW ALL MATERIALS DESIGNATED FOR REMOVAL AND TO RETAIN OWNERSHIP OF SUCH MATERIALS. IF PLAYLAND RETAINS ANY MATERIAL THE GC SHALL MAKE ARRANGEMENTS WITH THE PLAYLAND'S SUPERINTENDENT TO HAVE THOSE MATERIALS REMOVED AND STORED OFF SITE AT NO ADDITIONAL COST.

5. DEMOLITION OF THE EXISTING BUILDING SHALL INCLUDE REMOVAL OF THE EXISTING FOUNDATIONS FOR THEIR ENTIRE DEPTH TO ACCOMMODATE INSTALLATION OF NEW FOUNDATIONS.

6. THE GC SHALL USE EXTREME CAUTION IN AREAS OF DEMOLITION WHICH MAY DISTURB EXISTING STRUCTURES. TEMPORARY SHORING, BARRICADES, DUST PARTITIONS, ETC. SHALL BE PROVIDED AS REQ'D TO PROTECT ALL EXISTING STRUCTURES AND PROPERTY.

7. SEE STRUCTURAL, ELECTRICAL, SPRINKLER, AND PLUMBING DRAWINGS FOR RELATED DEMOLITION WORK.

8. VERIFY LOCATION OF EXISTING STRUCTURES AND SHORE UP ROOF/FLOOR ABOVE AS REQ'D BEFORE REMOVING WALL

9. REMOVAL OF ALL CEILINGS AND MOUNTED ITEMS THROUGHOUT THE CONTRACT AREA INCLUDE ANCHORING HARDWARE, AND MISCELLANEOUS FASTENINGS, MECHANICAL, ELECTRICAL, PLUMBING AND FIRE PREVENTION WORKS.

10. WALLS SHALL BE REMOVED AS INDICATED ON DEMOLITION PLANS. ALL UTILITIES IN WALL SHALL BE CUT TO BELOW SLAB OR ABOVE THE CEILING.

11. REMOVE ALL EXISTING ELECTRICAL AND PLUMBING LINES NOT TO BE RE-USED. CAP PLUMBING LINES AS REQ'D. ELECTRICAL WIRING SHALL BE DISCONNECTED BACK TO THE NEAREST ACTIVE LOCATION. ALL ABANDONED COMMUNICATION CABLES (DATA, TELEPHONE, FIRE ALARM, AND AUDIO/VIDEO CABLES) SHALL BE REMOVED TO SOURCE IF NOT TAGGED FOR FUTURE USE.

12. DEMOLITION PROCEDURES ARE THE SILL RESPONSIBILITY OF THE GENERAL GC OF THIS CONTRACT. GC TO "CUT OFF" ALL NECESSARY UTILITIES REQ'D TO OBTAIN DESIRED RESULTS. GC TO OBTAIN "SHUT OFF" APPROVALS FROM PLAYLAND PRIOR TO SCHEDULED DEMOLITION.

13. THE GC SHALL PATCH AND REPAIR ALL EXISTING CONSTRUCTION DISTURBED BY THE WORK AND PREPARE FOR NEW FINISH AS SHOWN ON THE INTERIOR ELEVATIONS.

14. THE GC SHALL BE RESPONSIBLE FOR THE CLEANING UP AND HAULING AWAY OF ALL TRASH AND DEBRIS ON A REGULAR BASIS DURING THE CONSTRUCTION PERIOD.

15. ALL DEBRIS REMOVED FROM THE SITE SHALL BE DISPOSED OF IN A LEGAL MANNER.

16. EXISTING EXITS SHALL REMAIN FULLY ACCESSIBLE AND UNOBSTRUCTED DURING THE PROGRESS OF THE WORK.

DEMOLITION LEGEND

	INDICATES DEMOLITION
DM - #	DEMOLITION KEY NOTES
	INDICATES NIC
	INDICATES DEMOLITION OF SHINGLE ROOF
	INDICATES DEMOLITION OF EXISTING SBS ROOF
- - - -	INDICATES APPROXIMATE LIMIT OF SCOPE

9/23/2022 4:42:17 PM

CONSULTANT INFORMATION

The LiRo Group

3 Aerial Way, Syosset, New York 11791
(516) 938-5476 www.liro.com

CONSULTANT SEAL

REGISTERED ARCHITECT ROBERT D. JOHNSON 023220 STATE OF NEW YORK

REVISION NUMBER	DATE	MADE BY	APP'D BY	REVISION
1	09/21/22			BID ADDENDUM #3

RECORD DRAWING CERTIFICATION

☐ AS BUILT – CHANGES AS NOTED ☐ AS BUILT – NO CHANGES

CONTRACTOR
NAME
SIGNATURE
TITLE DATE

PROJECT COORDINATOR
NAME
SIGNATURE
TITLE DATE

WESTCHESTER COUNTY, NEW YORK
DEPARTMENT OF PUBLIC WORKS AND TRANSPORTATION
DIVISION OF ENGINEERING

INFRASTRUCTURE REHABILITATION - PHASE 3
PLAYLAND PARK, RYE, NEW YORK
DRAGON COASTER VENDORS
DEMOLITION SECTION

CONTRACT NUMBER	22-523
SHEET NUMBER	DCV-A-07
DWG NO.:	406 of 664
SCALE:	As indicated
DATE:	08/23/2022
DPW FILE NUMBER	1-118-A-1155-1
REV. NO.	1

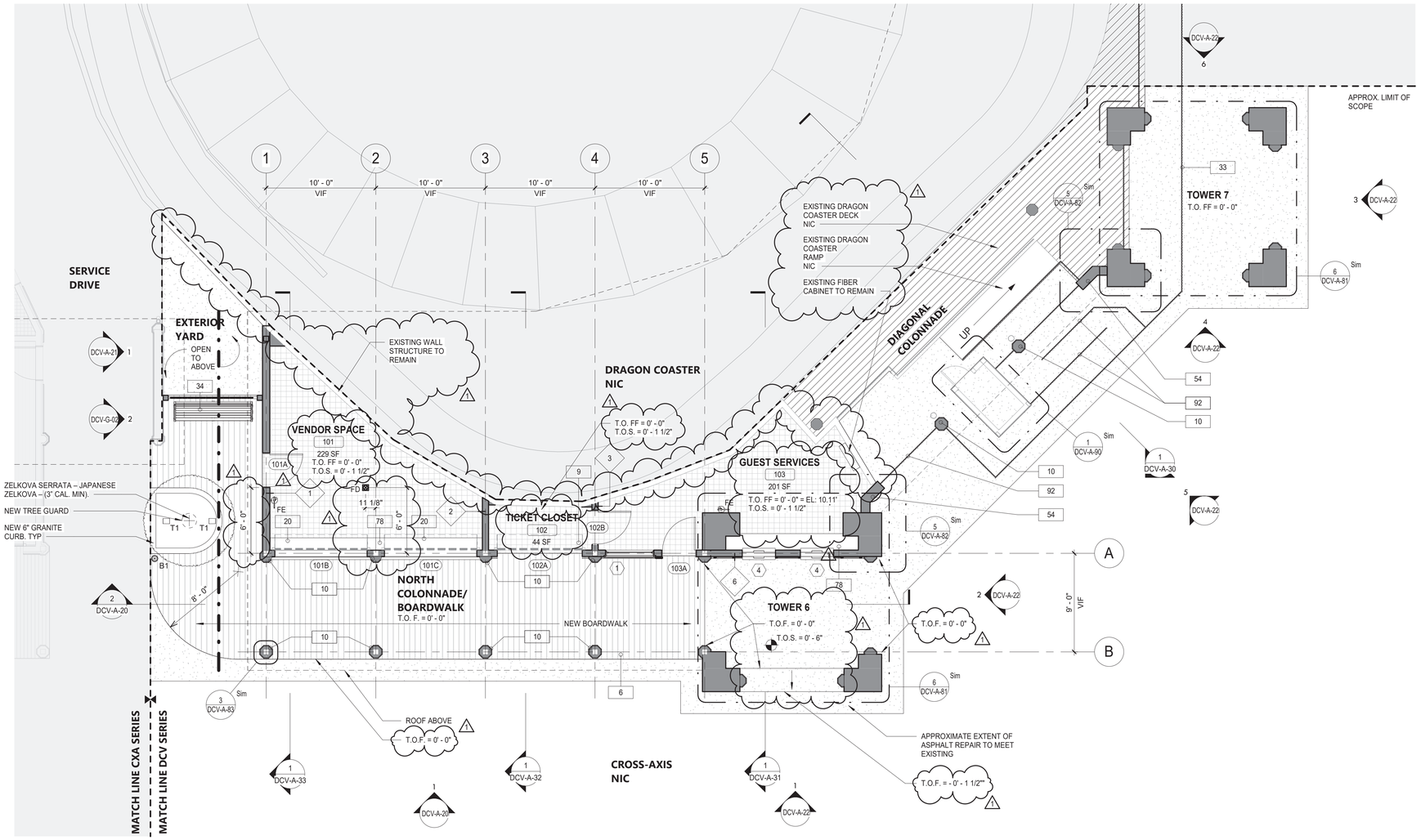

1 GROUND FLOOR - CONSTRUCTION PLAN
3/16" = 1'-0"

SHEET NOTES:

1. DIMENSIONS ARE TO FACE OF WALL FINISH, GRID LINES, OR CENTERLINE OF COLUMN. ALL ELEVATIONS ARE NOTED FROM FINISH FLOOR ELEVATIONS.

2. PROVIDE DRYWALL TRIM AT ALL EXPOSED EDGES AND CORNERS.

3. MINIMUM DIMENSION FROM ANY CORNER OR WALL TO FRAMING STUD AT DOOR JAMB OPENING SHALL BE 4" UNO.

4. PROVIDE FIRE RETARDANT WOOD BLOCKING FOR ANY WALL MOUNTED EQUIPMENT OR ACCESSORIES. COORDINATE ALL BLOCKING REQUIREMENTS NECESSARY WITH OTHER TRADES.

5. THE GC SHALL VERIFY DIMENSIONS OF THE EXISTING SPACE AND OF ANY EXISTING CONSTRUCTION TO REMAIN BY ACTUAL MEASUREMENT BEFORE ANY WORK IS PERFORMED. IF ANY MEASUREMENTS DIFFER FROM DIMENSIONS SHOWN ON PLAN, GC IS TO NOTIFY THE A/E IMMEDIATELY. THE GC SHALL BE RESPONSIBLE FOR CORRECTING ANY AND ALL DISCREPANCIES FOUND AFTER THE WORK IS PERFORMED, AT NO ADDITIONAL EXPENSE TO THE OWNER.

6. THE GC SHALL BE RESPONSIBLE FOR COORDINATING WITH OWNER ON ALL WORK TO BE PERFORMED BY THE OWNER. ANY POTENTIAL CONFLICTS OR DELAYS CAUSED BY THE OWNER'S SUBCONTRACTORS MUST BE DOCUMENTED IN WRITING TO THE OWNER BEFORE THE DELAY IS ACTUALLY INCURRED FOR IT TO BE CONSIDERED. OTHERWISE THE GC WILL BE RESPONSIBLE FOR MEETING THE SCHEDULE AS OUTLINED IN THE CONTRACT.

7. THE GC TO VERIFY ALL FINISHED DIMENSIONS. FIELD CONDITIONS ALTERING ANY DIMENSIONS SHOULD BE BROUGHT TO THE ATTENTION OF THE A/E.

8. THE GC SHALL SUPPLY ALL MATERIAL, LABOR, AND COORDINATION REQ'D FOR THE INSTALLATION OF ALL OWNER-SUPPLIED ITEMS AS DESCRIBED IN THE DOCUMENTS, UNO.

9. THE GC IS RESPONSIBLE FOR ALL FLOOR AND WALL PENETRATIONS FOR ELECTRICAL AND MECHANICAL WORK. ALL SUCH OPENING SHALL BE FRAMED AND REINFORCED.

10. FLOOR SURFACES SHALL BE LEVELED TO ASSURE SMOOTH SURFACE FOR FINISH FLOOR INSTALLATION.

11. THE GC TO COORDINATE ALL UTILITY STUB-UPS AND LOCATION OF ALL EQUIPMENT PRIOR TO INSTALLING ANY ONE ITEM.

12.PROVIDE PAINTED ACCESS PANELS IN WALLS & CEILING AT CONCEALED ITEMS SUCH AS VALVES, CONTROLS, SWITCHES OR ANY OTHER ITEMS THAT REQUIRES ACCESS. GC TO DETERMINE ACCESS PANEL LOCATION W/ A/E PRIOR TO INSTALLATION.

13. FOR DOOR SCHEDULE AND FINISH TRANSITION DETAILS REFER TO SHEET DCV-A-95.

14. FOR WINDOW SCHEDULE REFER TO SHEET DCV-A-96.

15. FOR PARTITION TYPES REFER TO SHEET DCV-A-97.

16. PROVIDE WATER AND ICE SHIELD ON PERIMETER OF ROOF EAVES.

LEGEND:

	NEW IPE WOOD DECK	#	DOOR TAG
	QUARRY TILE FLOOR	#	WINDOW TAG
	ASPHALT REPAIR	FE	FIRE EXTINGUISHER
	GRAVEL SURFACE	FD	FLOOR DRAIN
	NOT IN CONTRACT	#	WALL TAG
	APPROXIMATE LIMIT OF SCOPE	B1	BOLLARD LIGHT
	LINE OF FIRE SEPARATION	T1	TREE KNUCKLE LIGHT
		?	KEY NOTES

CONSTRUCTION KEYNOTES

6	INSTALL NEW IPE DECKING. SEE STRUCTURAL FOR DETAILS.
9	PROVIDE AND INSTALL ROLL DOWN DOOR. SEE DETAILS AND SCHEDULE.
10	PROVIDE AND INSTALL COLUMN ENCLOSURES. SEE DETAILS.
20	NEW COUNTER ROLL DOWN DOOR LOCATED AT INTERIOR AND ASSOCIATED HARDWARE. REFER TO SCHEDULE FOR MORE DETAILS. CONTRACTOR TO V.I.F. ALL DIMENSIONS BEFORE ORDERING (TYPICAL THROUGHOUT.)
33	NEW WOOD FENCE. SEE DETAILS.
34	PROVIDE NEW BENCH.
54	RECONSTRUCT WING PIER. SEE STRUCTURAL DRAWINGS.
78	CONSTRUCT NEW MILLWORK. SEE DCV-A-86 FOR DETAILS.
92	REINSTALL EXISTING FENCE.

9/26/2022 11:19:30 AM

CONSULTANT INFORMATION
The LiRo Group
3 Aerial Way, Syosset, New York 11791
(516) 938-5476 www.liro.com

CONSULTANT SEAL
REGISTERED ARCHITECT ROBERT D. CONNIGLIO 023280 STATE OF NEW YORK

REVISION NUMBER	DATE	MADE BY	APP'D BY	REVISION
1	09/21/22			BID ADDENDUM #3

RECORD DRAWING CERTIFICATION
☐ AS BUILT – CHANGES AS NOTED ☐ AS BUILT – NO CHANGES

CONTRACTOR
NAME
SIGNATURE
TITLE DATE

PROJECT COORDINATOR
NAME
SIGNATURE
TITLE DATE

WESTCHESTER COUNTY, NEW YORK
DEPARTMENT OF PUBLIC WORKS AND TRANSPORTATION
DIVISION OF ENGINEERING

INFRASTRUCTURE REHABILITATION - PHASE 3
PLAYLAND PARK, RYE, NEW YORK
DRAGON COASTER VENDORS
GROUND FLOOR - CONSTRUCTION PLAN

CONTRACT NUMBER	22-523
SHEET NUMBER	DCV-A-10
DWG NO.:	407 of 664
SCALE:	As indicated
DATE:	08/23/2022
DPW FILE NUMBER	1-118-A-1156-1
REV. NO.	1

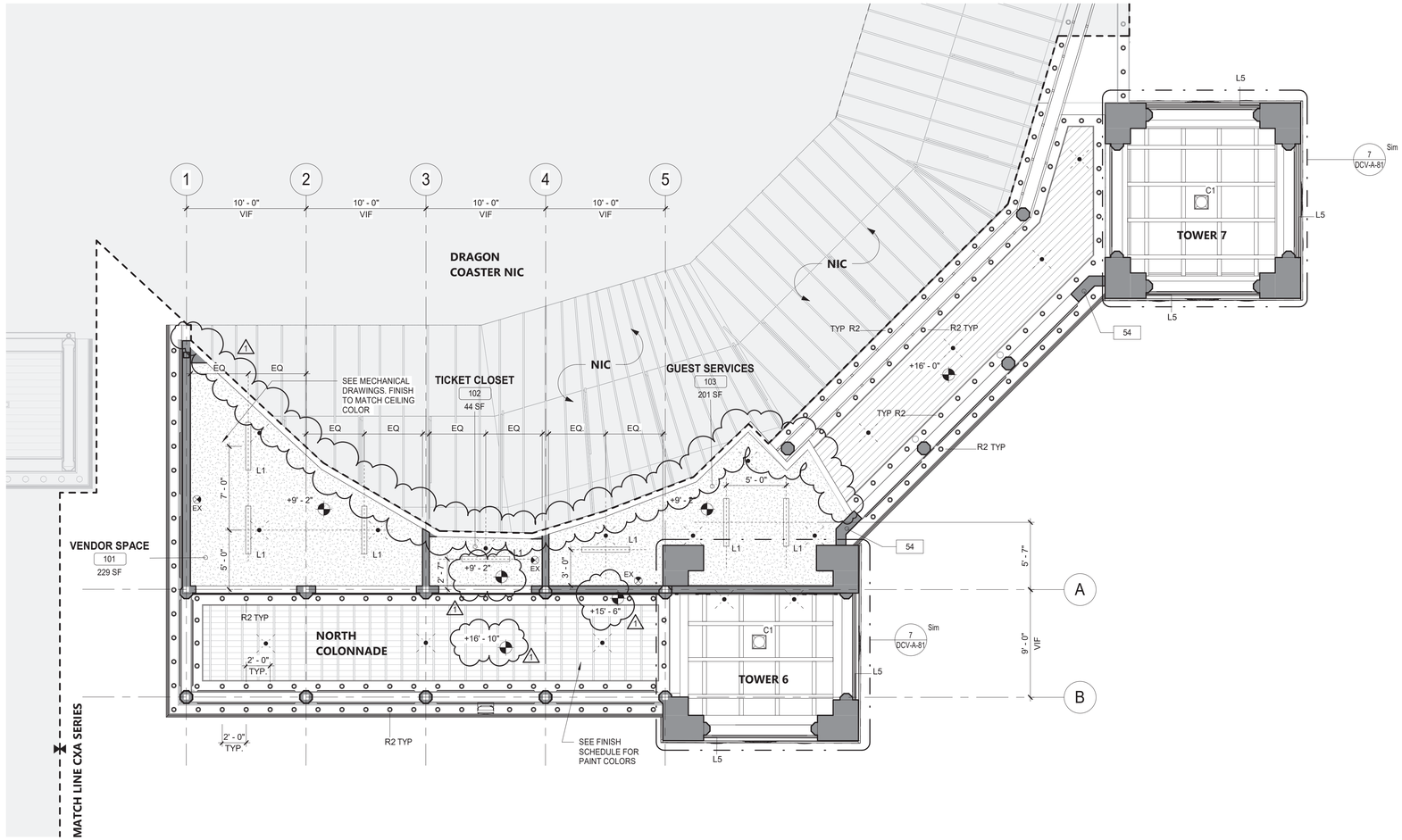

1 GROUND FLOOR - REFLECTED CEILING PLAN
3/16" = 1'-0"

SHEET NOTES

1. GC SHALL PROVIDE THE NECESSARY FRAMING OR BRIDGING FOR ALL LIGHT FIXTURES, DIFFUSERS, RETURNS, ETC., AS WELL AS REQ'D CUTOUTS.
2. GC SHALL NOTIFY THE A/E OF ANY POSSIBLE INTERFERENCES BEFORE PROCEEDING WITH CEILING INSTALLATION.
3. CEILING CONSTRUCTION SHALL NOT BE CLOSED IN UNTIL THE CONSTRUCTION MANAGER AND AUTHORITIES HAVING JURISDICTION HAVE HAD AN OPPORTUNITY TO INSPECT THE AREA AND ASCERTAIN THAT ALL DUCTWORK, PLUMBING, ELECTRICAL CONDUITS AND LINES HAVE BEEN INSTALLED PROPERLY.
4. FASCIAS OR ANY BREAK IN THE CEILING HEIGHTS CREATED BY THE INSTALLATION AND/OR ALTERATION OF HEATING, VENTILATING, A/C OR MECHANICAL DUCTS, PIPING OR OTHER EQUIPMENT SHALL BE FORMED OF GYPSUM WALLBOARD ON FURRING CHANNELS.
5. THE CEILING PANEL JOINTS SHALL BE ALIGNED PERFECTLY WITH LIGHTING FIXTURES.
6. ALL JOINTS IN THE PANEL SHALL BE SQUARE, LEVEL AND PERFECTLY ALIGNED WITH EACH OTHER AND WITH BUILDING FIXTURES.
7. GC SHALL PROVIDE CUTOUTS AND OTHER SPECIAL PROVISIONS IN ACOUSTICAL WORK AS REQ'D FOR LIGHTING FIXTURES, REGISTERS, DIFFUSERS AND OTHER INSERTED ITEMS. GENERAL CONSTRUCTION GC SHALL INSTALL ACCESS PANELS IN GYPSUM DRYWALL CEILINGS FOR ACCESS TO AIR CONDITIONING, PLUMBING, TELEPHONE & ELECTRICAL CONTROL EQUIPMENT REQUIRING ACCESS.
8. IN GENERAL, WITHIN EACH AREA, CEILING WORK REQUIREMENTS SHALL BE EXECUTED IN SUCH A MANNER AS TO PROVIDE CONT. MATCHED AND ALIGNED CEILINGS. THE FINAL CEILING INSTALLATION SHALL BE FREE OF ALL VISUAL DEFECTS.
9. CEILING HEIGHT SHOWN AFF.

LEGEND

- INDICATES SCOPE NOT IN CONTRACT
- INDICATES T1-11 CEILING
- INDICATES GYPSUM CEILING
- INDICATES WOOD DECK CEILING
- R2 — R2 RECESSED CAN LIGHT IN SOFFIT. SEE ELEC. DWGS
- L5 — L5 LINEAR LIGHT (SEE ELEC. DWGS)
- L1 — L1 LINEAR LIGHT (SEE ELEC. DWGS)
- M2 — M2 MARQUEE LIGHTING AT BALUSTRADE (1'-0" SPACING)
- M2A — M2A MARQUEE LIGHTING AT BALUSTRADE (6" SPACING)
- C1 — C1 SURFACE MOUNTED LIGHT
- SPRINKLER (SEE FIRE PROTECTION DWGS)
- SUPPLY DIFFUSER. SEE MECHANICAL DRAWINGS
- EXHAUST GRILL. SEE MECHANICAL DRAWINGS
- EX — EX- EXIT SIGN

9/23/2022 4:42:23 PM

CONSULTANT INFORMATION

The LiRo Group
3 Aerial Way, Syosset, New York 11791
(516) 938-5476 www.liro.com

CONSULTANT SEAL
REGISTERED ARCHITECT ROBERT D. YOUNG JR. 023280 STATE OF NEW YORK

REVISION NUMBER	DATE	MADE BY	APP'D BY	REVISION
1	09/21/22			BID ADDENDUM #3

RECORD DRAWING CERTIFICATION
☐ AS BUILT – CHANGES AS NOTED ☐ AS BUILT – NO CHANGES

CONTRACTOR
NAME
SIGNATURE
TITLE DATE

PROJECT COORDINATOR
NAME
SIGNATURE
TITLE DATE

WESTCHESTER COUNTY, NEW YORK
DEPARTMENT OF PUBLIC WORKS AND TRANSPORTATION
DIVISION OF ENGINEERING

INFRASTRUCTURE REHABILITATION - PHASE 3
PLAYLAND PARK, RYE, NEW YORK
DRAGON COASTER VENDORS
GROUND FLOOR - REFLECTED CEILING PLAN

CONTRACT NUMBER 22-523
SHEET NUMBER DCV-A-11
DWG NO.: 408 of 664
SCALE: As indicated
DATE: 08/23/2022
DPW FILE NUMBER 1-118-A-1157-1
REV. NO. 1

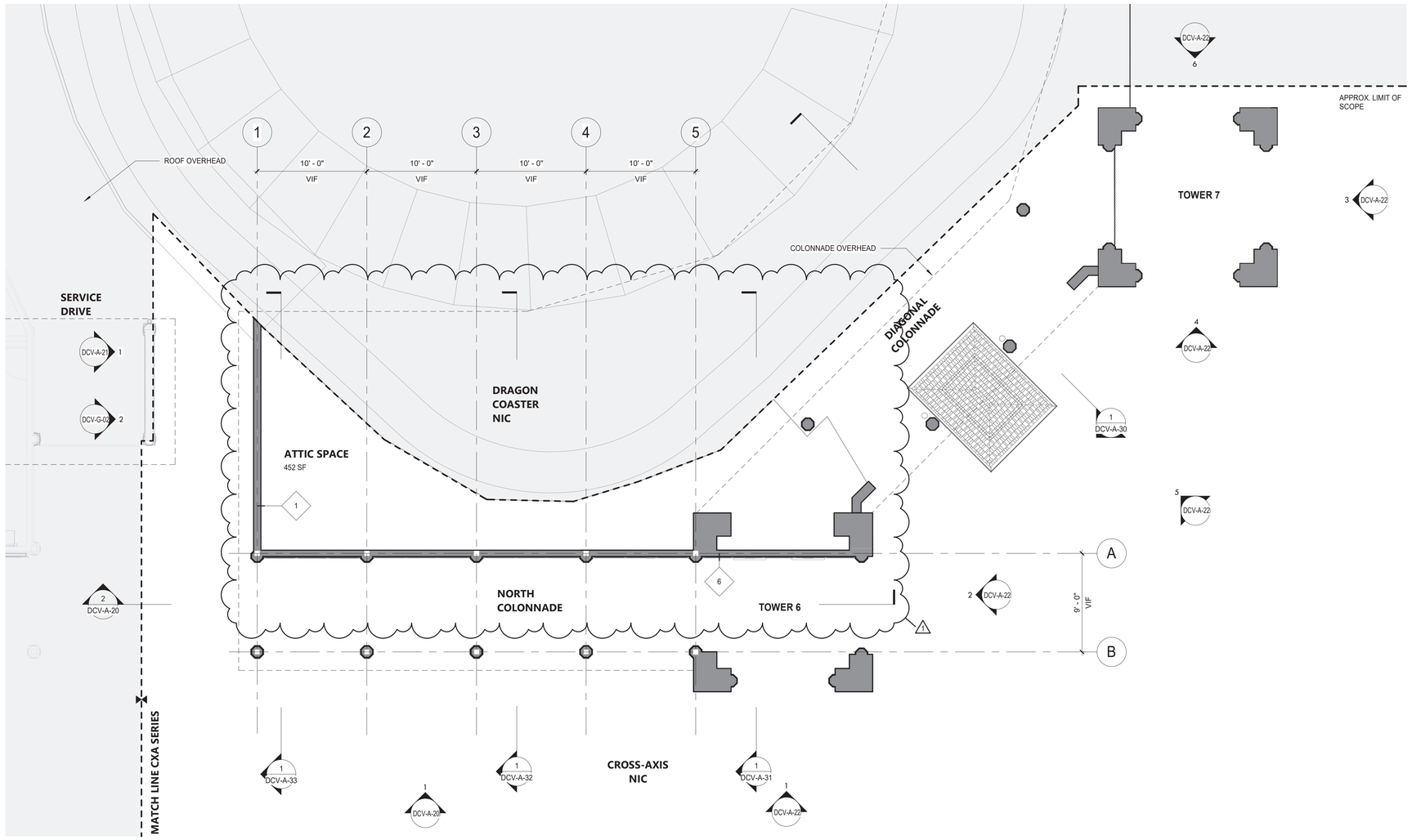

1 ATTIC PLAN
3/16" = 1'-0"

SHEET NOTES:

1. DIMENSIONS ARE TO FACE OF WALL FINISH, GRID LINES, OR CENTERLINE OF COLUMN. ALL ELEVATIONS ARE NOTED FROM FINISH FLOOR ELEVATIONS.

2. PROVIDE DRYWALL TRIM AT ALL EXPOSED EDGES AND CORNERS.

3. MINIMUM DIMENSION FROM ANY CORNER OR WALL TO FRAMING STUD AT DOOR JAMB OPENING SHALL BE 4" UNO.

4. PROVIDE FIRE RETARDANT WOOD BLOCKING FOR ANY WALL MOUNTED EQUIPMENT OR ACCESSORIES. COORDINATE ALL BLOCKING REQUIREMENTS NECESSARY WITH OTHER TRADES.

5. THE GC SHALL VERIFY DIMENSIONS OF THE EXISTING SPACE AND OF ANY EXISTING CONSTRUCTION TO REMAIN BY ACTUAL MEASUREMENT BEFORE ANY WORK IS PERFORMED. IF ANY MEASUREMENTS DIFFER FROM DIMENSIONS SHOWN ON PLAN, GC IS TO NOTIFY THE A/E IMMEDIATELY. THE GC SHALL BE RESPONSIBLE FOR CORRECTING ANY AND ALL DISCREPANCIES FOUND AFTER THE WORK IS PERFORMED, AT NO ADDITIONAL EXPENSE TO THE OWNER.

6. THE GC SHALL BE RESPONSIBLE FOR COORDINATING WITH OWNER ON ALL WORK TO BE PERFORMED BY THE OWNER. ANY POTENTIAL CONFLICTS OR DELAYS CAUSED BY THE OWNER'S SUBCONTRACTORS MUST BE DOCUMENTED IN WRITING TO THE OWNER BEFORE THE DELAY IS ACTUALLY INCURRED FOR IT TO BE CONSIDERED. OTHERWISE THE GC WILL BE RESPONSIBLE FOR MEETING THE SCHEDULE AS OUTLINED IN THE CONTRACT.

7. THE GC TO VERIFY ALL FINISHED DIMENSIONS. FIELD CONDITIONS ALTERING ANY DIMENSIONS SHOULD BE BROUGHT TO THE ATTENTION OF THE A/E.

8. THE GC SHALL SUPPLY ALL MATERIAL, LABOR, AND COORDINATION REQ'D FOR THE INSTALLATION OF ALL OWNER-SUPPLIED ITEMS AS DESCRIBED IN THE DOCUMENTS, UNO.

9. THE GC IS RESPONSIBLE FOR ALL FLOOR AND WALL PENETRATIONS FOR ELECTRICAL AND MECHANICAL WORK. ALL SUCH OPENING SHALL BE FRAMED AND REINFORCED.

10. FLOOR SURFACES SHALL BE LEVELED TO ASSURE SMOOTH SURFACE FOR FINISH FLOOR INSTALLATION.

11. THE GC TO COORDINATE ALL UTILITY STUB-UPS AND LOCATION OF ALL EQUIPMENT PRIOR TO INSTALLING ANY ONE ITEM.

12.PROVIDE PAINTED ACCESS PANELS IN WALLS & CEILING AT CONCEALED ITEMS SUCH AS VALVES, CONTROLS, SWITCHES OR ANY OTHER ITEMS THAT REQUIRES ACCESS. GC TO DETERMINE ACCESS PANEL LOCATION W/ A/E PRIOR TO INSTALLATION.

13. FOR DOOR SCHEDULE AND FINISH TRANSITION DETAILS REFER TO SHEET DCV-A-95.

14. FOR WINDOW SCHEDULE REFER TO SHEET DCV-A-96.

15. FOR PARTITION TYPES REFER TO SHEET DCV-A-97.

16. PROVIDE WATER AND ICE SHIELD ON PERIMETER OF ROOF EAVES.

LEGEND:

	NEW IPE WOOD DECK	#	DOOR TAG
	QUARRY TILE FLOOR	#	WINDOW TAG
	ASPHALT REPAIR	FE	FIRE EXTINGUISHER
	GRAVEL SURFACE	FD	FLOOR DRAIN
	NOT IN CONTRACT	#	WALL TAG
	APPROXIMATE LIMIT OF SCOPE	B1	BOLLARD LIGHT
	LINE OF FIRE SEPARATION	T1	TREE KNUCKLE LIGHT
		?	KEY NOTES

9/23/2022 4:42:24 PM

CONSULTANT INFORMATION
The LiRo Group
3 Aerial Way, Syosset, New York 11791
(516) 938-5476 www.liro.com

CONSULTANT SEAL
REGISTERED ARCHITECT ROBERT D. LIRO JR. 023225 STATE OF NEW YORK

REVISION NUMBER	DATE	MADE BY	APP'D BY	REVISION
1	09/21/22			BID ADDENDUM #3

RECORD DRAWING CERTIFICATION
☐ AS BUILT – CHANGES AS NOTED ☐ AS BUILT – NO CHANGES

CONTRACTOR
NAME
SIGNATURE
TITLE DATE

PROJECT COORDINATOR
NAME
SIGNATURE
TITLE DATE

WESTCHESTER COUNTY, NEW YORK
DEPARTMENT OF PUBLIC WORKS AND TRANSPORTATION
DIVISION OF ENGINEERING

INFRASTRUCTURE REHABILITATION - PHASE 3
PLAYLAND PARK, RYE, NEW YORK
DRAGON COASTER VENDORS
ATTIC PLAN

CONTRACT NUMBER 22-523
SHEET NUMBER DCV-A-12
DWG NO.: 409 of 664
SCALE: As indicated
DATE: 08/23/2022
DPW FILE NUMBER 1-118-A-1158-1
REV. NO. 1

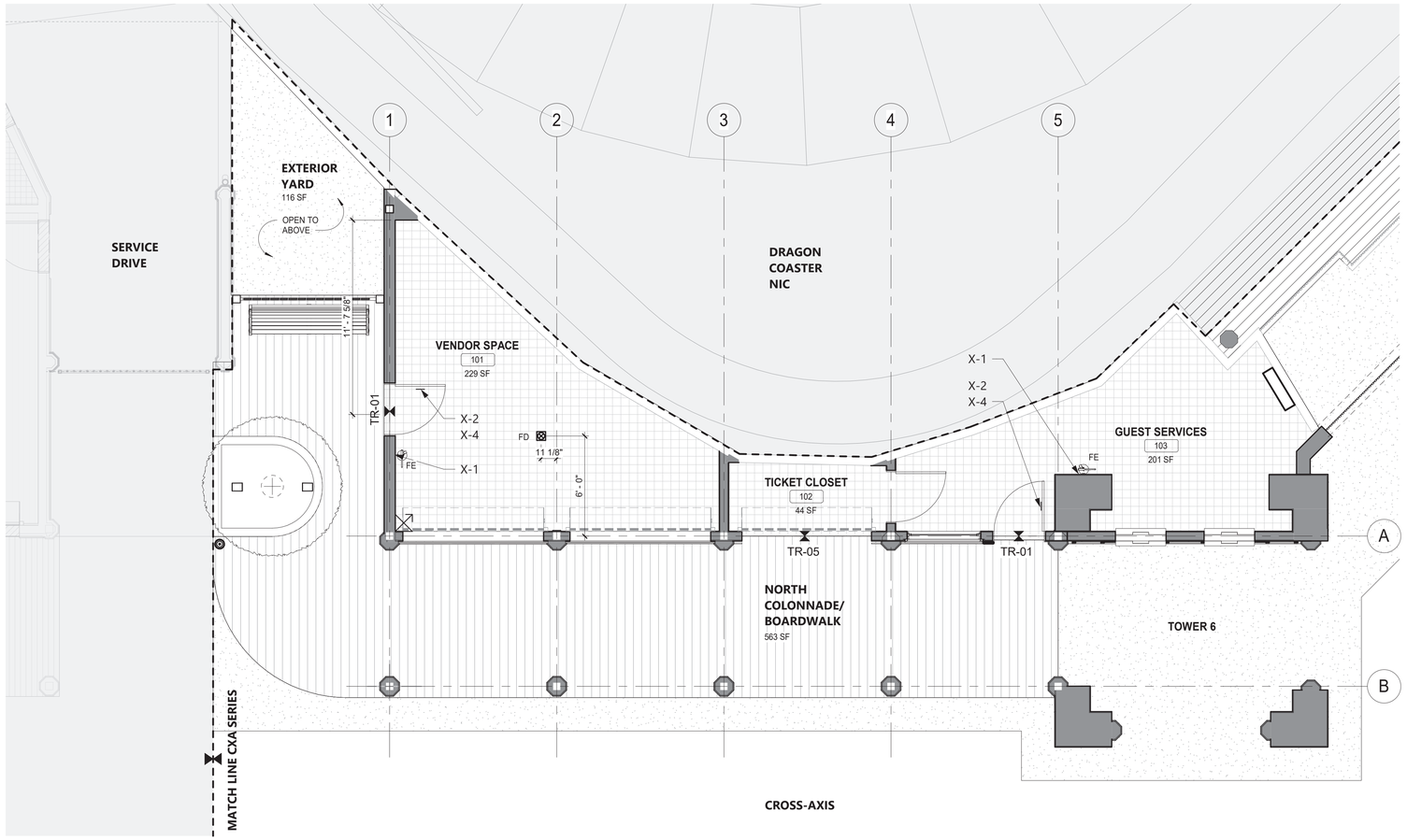

1 GROUND FLOOR - FINISH PLAN
1/4" = 1'-0"

SHEET NOTES

1. ALL FLOORING COVERING MATERIALS TO BE INSTALLED PER MANUFACTURER'S STANDARD DETAILS AND SPECIFICATIONS. VERIFY WITH MANUFACTURER PRIOR INSTALLATION.
2. THE GC IS RESPONSIBLE FOR PROVIDING A SMOOTH LEVEL FLOOR SURFACE THAT MEETS MANUFACTURERS INSTALLATION SPECIFICATIONS PRIOR TO THE INSTALLATION OF ALL FLOORING MATERIALS.
3. THE GC IS RESPONSIBLE FOR VERIFYING THAT THE CONDITION OF THE BASE FLOOR MEETS THE INSTALLATION SPECIFICATIONS PRIOR TO THE INSTALLATION OF THE NEW FLOORING MATERIAL.
4. ALL MATERIAL TRANSITIONS AND DOOR THRESHOLDS TO TAKE PLACE AT DOOR CENTERLINE UNO.
5. ALL DIMENSIONS ARE TO CENTERLINE OF TRANSITION BETWEEN FLOORING MATERIALS OR FINISH COLOR OF SAME MATERIAL. PLANS DO NOT SHOW ALL TILES OF SAME MATERIALS. GC TO START TILES AT POINT AS INDICATED ON PLANS.
6. THE GC SHALL BE RESPONSIBLE FOR PROPER PREPARATION OF ALL NEW AND EXISTING SURFACES IN A SATISFACTORY MANNER TO RECEIVE NEW FINISHES. THIS INCLUDES THE DEMOLITION AND REMOVAL OF NECESSARY ITEMS. TOUCH-UP AND/ OR REFINISH OF SURFACES DAMAGED BY SUBSEQUENT WORK SHALL BE PERFORMED IN CONFORMANCE WITH THE MANUFACTURER'S RECOMMENDED INSTALLATION METHODS.
7. ALL SURFACES WHICH ARE TO RECEIVE A PAINT FINISH SHALL BE PRIMED AND FINISHED IN ACCORDANCE WITH THE WRITTEN SPECIFICATIONS.
8. ALL JOINTS IN WALLS SHALL BE FINISHED WITH PAPER TAPE 2" WIDE AND THREE COATS OF VINYL, DRY OR PREMIXED JOINT COMPOUND. ALL OUTSIDE CORNERS SHALL BE FINISHED WITH METAL CORNER BEADS, TAPED AND SPACKLED. ALL AREAS TO BE PAINTED SHALL BE SANDED SMOOTH. JUST PRIOR TO THE APPLICATION OF THE FIRST COAT OF PAINT, WIPE SANDED SURFACES WITH A DAMP CLOTH IN ORDER TO LAY FLAT ANY NAP WHICH MAY HAVE FORMED IN SANDING.
9. THE GC SHALL REMOVE ALL HARDWARE, SWITCH COVERS, ETC. PRIOR TO PAINTING AND BE RESPONSIBLE FOR THE REINSTALLATION AFTER PAINTING IS COMPLETED.
10. FINISH FLOORING INSTALLATION SHALL BE IN CONFORMANCE WITH THE MANUFACTURER'S RECOMMENDED INSTALLATION GUIDELINES. COORDINATE THE INSTALLATION WITH OTHER TRADES, SUCH AS ELECTRICAL.
11. ALL JOINTS BETWEEN MATERIALS TO BE TIGHT AND CONSTRUCTED IN A NEAT WORKMANLIKE MANNER.
12. ALL FINISHES SHALL BE TOUCHED UP TO CORRECT ANY IMPERFECTIONS AFTER INSTALLATION. GC SHALL PROVIDE ALL MATERIALS FOR TOUCH UP WORK.
13. THE INTENT OF THE FINISH SPECIFICATIONS IS TO PROVIDE A SATISFACTORY FINISH TO ALL PARTS OF THE WORK. COVER ALL SURFACES THOROUGHLY. IF THE SPECIFIED NUMBER OF COATS DOES NOT ACCOMPLISH THE INTENT, THE GC SHALL BE RESPONSIBLE FOR THE APPLICATION OF ADDITIONAL COATS OF THE SPECIFIED MATERIAL TO GIVE SATISFACTORY COVERAGE, AT NO ADDITIONAL COST TO OWNER.
14. CLEAN ALL GLASS SURFACES WITH LIQUID GLASS CLEANER AT PROJECT COMPLETION.
15. REFERENCE SPECIFICATIONS FOR COMPLETE FINISH DOCUMENTATION AND MANUFACTURER INSTALLATION AND MAINTENANCE DOCUMENTATION.
16. REFER TO DCV-A-20 AND 21 FOR SIGNAGE ELEVATIONS. REFER TO DCV-A-94 FOR DETAILS.
17. FOR FLOOR FINISH TRANSITION DETAILS REFER TO SHEET DCV-A-95.

LEGEND

	NOT IN CONTRACT	FE	FIRE EXTINGUISHER
	QUARRY TILE	FD	FLOOR DRAIN
	NEW IPE WOOD DECK		FLOORING STARTING POINT
TR-??	THRESHOLD	X-?	SIGNAGE IDENTIFICATION SYMBOL SEE SIGNAGE DETAILS ON SHEET DCV-A-94

PAINTING KEY

KEY	COLOR	MANUFACTURER	REMARKS
P- 1	MYSTICAL POWERS #901	BENJAMIN MOORE	
P- 2	HERITAGE RED #HC-181	BENJAMIN MOORE	
P- 3	NEW YORK STATE OF MIND #805	BENJAMIN MOORE	
P- 4	LAZY SUNDAY #803	BENJAMIN MOORE	
P- 5	DEEP JUNGLE #595	BENJAMIN MOORE	
P- 6	LUCK OF THE IRISH #588	BENJAMIN MOORE	
P- 7	MAJOLICA GREEN #0013	SHERWIN WILLIAMS	
P- 8	ANTELOPE CANYON #125	BENJAMIN MOORE	
P- 9	FORSYTHIA #6907	SHERWIN WILLIAMS	
P- 10	CAPE BLUE #1642	BENJAMIN MOORE	
P- 11	WHITE SNOW #9541	SHERWIN WILLIAMS	
P- 12	TRICORN BLACK #6258	SHERWIN WILLIAMS	
P- 13	READY MIX WHITE	BENJAMIN MOORE	INTERIOR USE ONLY
P- 14	STUCCO PAINT TO MATCH P-1	-	
P- 15	VAN DEUSEN BLUE #HC-156	BENJAMIN MOORE	
P- 16	#RAL9001	-	
P- 17	FLORIDA BEACHES #900	BENJAMIN MOORE	
P- 18	PIRATES COVE PEACH #903	BENJAMIN MOORE	
P- 19	JADITE #6459	SHERWIN WILLIAMS	
P- 20	DECISIVE YELLOW #6902	SHERWIN WILLIAMS	
P- 21	#RAL9010	-	

FINISH SCHEDULE

ROOM #	ROOM NAME	FLOORS	WALLS	CEILING	DOORS AND TRIM	WALL BASE
101	VENDOR SPACE	QT-1	FRP	GYP, P-13	SEE DOOR SCHEDULE	WB-2
102	TICKET ROOM	QT-1	GYP, P-13	GYP, P-13	SEE DOOR SCHEDULE	WB-2
103	GUEST SERVICES	QT-1	GYP, P-13	GYP, P-13	SEE DOOR SCHEDULE	WB-2
-	ATTIC	WD-3	-	-	-	-
-	NORTH COLONNADE	WD-1	-	EXISTING, P-10	-	WB-3
-	EXTERIOR YARD	ASPHALT	-	-	-	

WALL	(FOR PAINT TYPE AND SYSTEMS, SEE PAINTING KEY)
GYP	GYPSUM BOARD - **SIZE:** 5/8"
FRP	**FINISH/ COLOR:** EMBOSSED TEXTURE, 0.090" ; WHITE
CEILING	
GYP	GYPSUM BOARD - **SIZE:** 5/8"
T1-11	PREMIUM GRADE PLYWOOD SIDING - **SIZE:** 4' X 8' X 11/32" - **COMMENTS:** GROOVED 2" O.C.
FLOORING	
QT-1	**MFR:** DATILE, QUARRY TEXTURES - **COLOR:** SAHARA SAND 0T08 (2) - **SIZE:** 6" X 6" X 1/2" - **COMMENTS:** COVE BASE TO MATCH WALL BASE (WB-2)
WD-1	IPE DECKING 2X6
WD-3	PLYWOOD FLOORING - **FINISH:** EXTERIOR GRADE PLYWOOD SHEATHING 3/4" THICK - **COMMENTS:** MOISTURE/MOLD RESISTANT
WALL BASE	(FOR WALL BASE DETAILS, SEE DCV-A-97)
WB-2	QUARRY TILE BASE 6"
WB-3	PVC - **SIZE:** 1X6
THRESHOLD	(FOR THRESHOLD DETAILS, SEE DCV-A-95)
TR-01	EXTERIOR DOOR SILL
TR-05	IPE TO QUARRY

9/23/2022 4:42:25 PM

CONSULTANT INFORMATION
The LiRo Group
3 Aerial Way, Syosset, New York 11791
(516) 938-5476 www.liro.com

CONSULTANT SEAL
REGISTERED ARCHITECT ROBERT D. YOUNG 023280 STATE OF NEW YORK

REVISION NUMBER	DATE	MADE BY	APP'D BY	REVISION
1	09/21/22			BID ADDENDUM #3

RECORD DRAWING CERTIFICATION
☐ AS BUILT – CHANGES AS NOTED ☐ AS BUILT – NO CHANGES

CONTRACTOR
NAME
SIGNATURE
TITLE DATE

PROJECT COORDINATOR
NAME
SIGNATURE
TITLE DATE

WESTCHESTER COUNTY, NEW YORK
DEPARTMENT OF PUBLIC WORKS AND TRANSPORTATION
DIVISION OF ENGINEERING

INFRASTRUCTURE REHABILITATION - PHASE 3
PLAYLAND PARK, RYE, NEW YORK
DRAGON COASTER VENDORS
FINISH PLAN

CONTRACT NUMBER 22-523
SHEET NUMBER **DCV-A-14**
DWG NO.: 411 of 664
SCALE: **As indicated**
DATE: **08/23/2022**
DPW FILE NUMBER **1-118-A-1160-1**
REV. NO. **1**

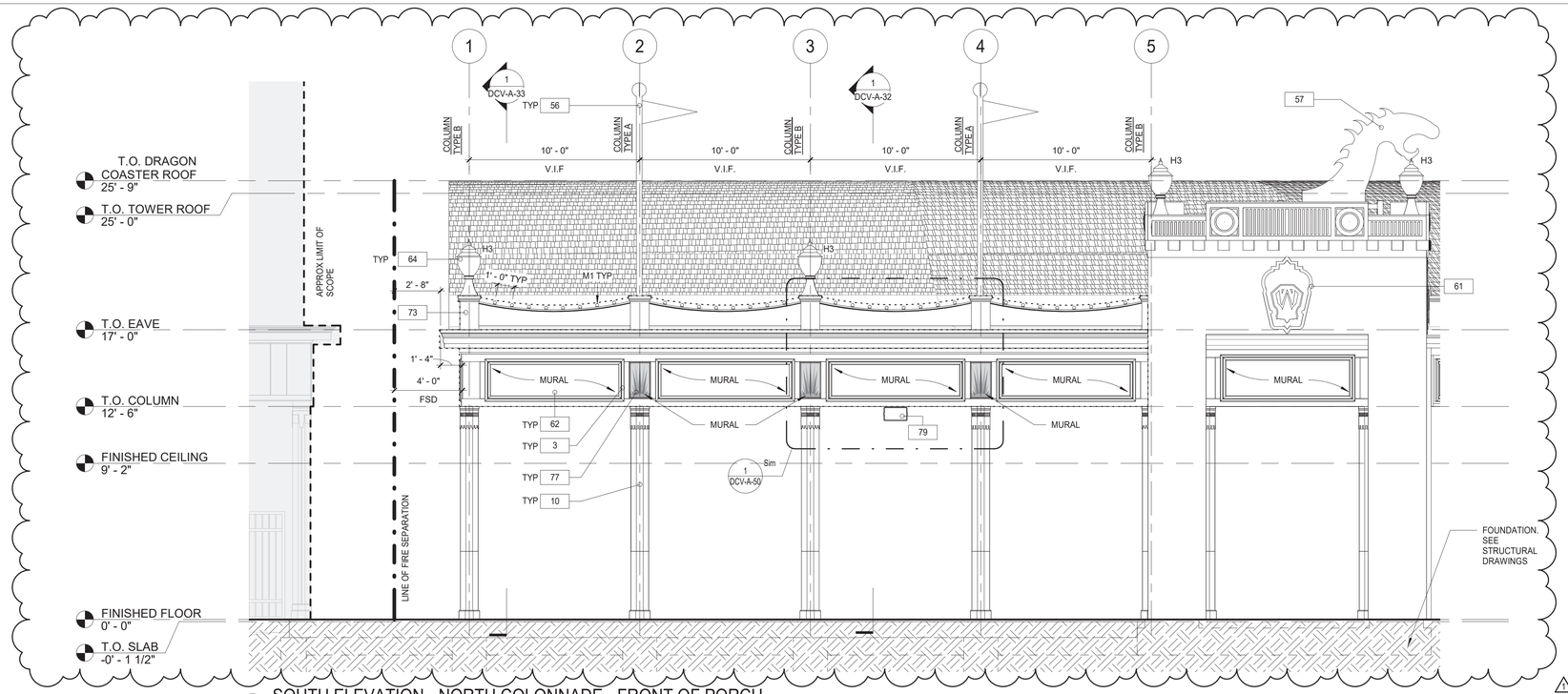

1 SOUTH ELEVATION - NORTH COLONNADE - FRONT OF PORCH
1/4" = 1'-0"

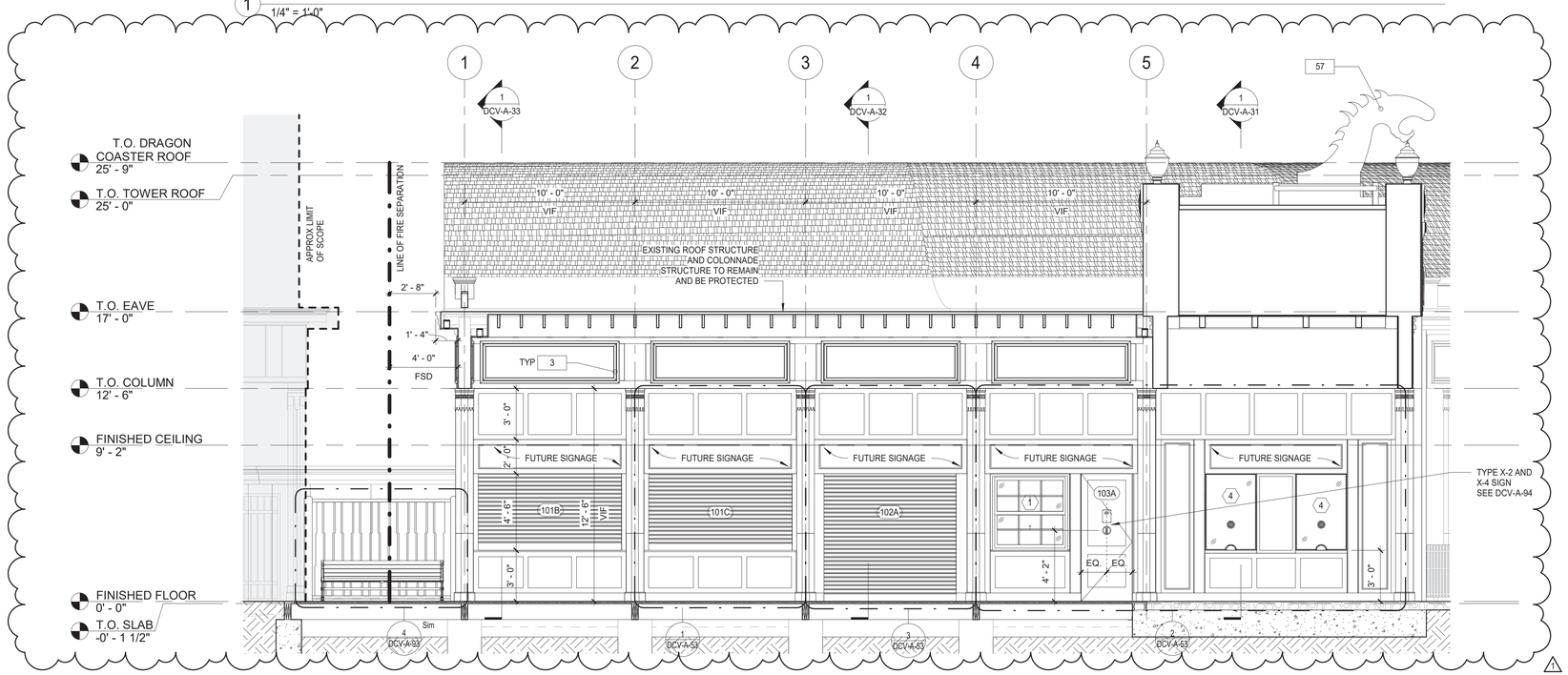

2 NORTH COLONNADE VENDOR ELEVATION - INSIDE PORCH
1/4" = 1'-0"

SHEET NOTES:

1. DIMENSIONS ARE TO FACE OF WALL FINISH, GRID LINES, OR CENTERLINE OF COLUMN. ALL ELEVATIONS ARE NOTED FROM FINISH FLOOR ELEVATIONS.

2. PROVIDE DRYWALL TRIM AT ALL EXPOSED EDGES AND CORNERS.

3. MINIMUM DIMENSION FROM ANY CORNER OR WALL TO FRAMING STUD AT DOOR JAMB OPENING SHALL BE 4" UNO.

4. PROVIDE FIRE RETARDANT WOOD BLOCKING FOR ANY WALL MOUNTED EQUIPMENT OR ACCESSORIES. COORDINATE ALL BLOCKING REQUIREMENTS NECESSARY WITH OTHER TRADES.

5. THE GC SHALL VERIFY DIMENSIONS OF THE EXISTING SPACE AND OF ANY EXISTING CONSTRUCTION TO REMAIN BY ACTUAL MEASUREMENT BEFORE ANY WORK IS PERFORMED. IF ANY MEASUREMENTS DIFFER FROM DIMENSIONS SHOWN ON PLAN, GC IS TO NOTIFY THE A/E IMMEDIATELY. THE GC SHALL BE RESPONSIBLE FOR CORRECTING ANY AND ALL DISCREPANCIES FOUND AFTER THE WORK IS PERFORMED, AT NO ADDITIONAL EXPENSE TO THE OWNER.

6. THE GC SHALL BE RESPONSIBLE FOR COORDINATING WITH OWNER ON ALL WORK TO BE PERFORMED BY THE OWNER. ANY POTENTIAL CONFLICTS OR DELAYS CAUSED BY THE OWNER'S SUBCONTRACTORS MUST BE DOCUMENTED IN WRITING TO THE OWNER BEFORE THE DELAY IS ACTUALLY INCURRED FOR IT TO BE CONSIDERED. OTHERWISE THE GC WILL BE RESPONSIBLE FOR MEETING THE SCHEDULE AS OUTLINED IN THE CONTRACT.

7. THE GC TO VERIFY ALL FINISHED DIMENSIONS. FIELD CONDITIONS ALTERING ANY DIMENSIONS SHOULD BE BROUGHT TO THE ATTENTION OF THE A/E.

8. THE GC SHALL SUPPLY ALL MATERIAL, LABOR, AND COORDINATION REQ'D FOR THE INSTALLATION OF ALL OWNER-SUPPLIED ITEMS AS DESCRIBED IN THE DOCUMENTS, UNO.

9. THE GC IS RESPONSIBLE FOR ALL FLOOR AND WALL PENETRATIONS FOR ELECTRICAL AND MECHANICAL WORK. ALL SUCH OPENING SHALL BE FRAMED AND REINFORCED.

10. FLOOR SURFACES SHALL BE LEVELED TO ASSURE SMOOTH SURFACE FOR FINISH FLOOR INSTALLATION.

11. THE GC TO COORDINATE ALL UTILITY STUB-UPS AND LOCATION OF ALL EQUIPMENT PRIOR TO INSTALLING ANY ONE ITEM.

12.PROVIDE PAINTED ACCESS PANELS IN WALLS & CEILING AT CONCEALED ITEMS SUCH AS VALVES, CONTROLS, SWITCHES OR ANY OTHER ITEMS THAT REQUIRES ACCESS. GC TO DETERMINE ACCESS PANEL LOCATION W/ A/E PRIOR TO INSTALLATION.

13. FOR DOOR SCHEDULE AND FINISH TRANSITION DETAILS REFER TO SHEET DCV-A-95.

14. FOR WINDOW SCHEDULE REFER TO SHEET DCV-A-96.

15. FOR PARTITION TYPES REFER TO SHEET DCV-A-97.

16. PROVIDE WATER AND ICE SHIELD ON PERIMETER OF ROOF EAVES.

LEGEND:

	NOT IN CONTRACT	#	DOOR TAG
	NEW CONSTRUCTION WALLS	#	WINDOW TAG
	NEW IPE WOOD DECK	FE	FIRE EXTINGUISHER
	QUARRY TILE FLOOR	FD	FLOOR DRAIN
	ASPHALT REPAIR	#	WALL TAG
	GRAVEL SURFACE	B1	BOLLARD LIGHT
	APPROXIMATE LIMIT OF SCOPE	T1	TREE KNUCKLE LIGHT
		?	KEY NOTES
		X-?	SIGNAGE IDENTIFICATION SYMBOL SEE SIGNAGE DETAILS ON SHEET DCV-A-94
		H3	H3 HISTORIC ACORN LIGHT

CONSTRUCTION KEYNOTES

3	REPLICATE TRIMS TO MATCH DOCUMENTED TRIM, LOCATIONS, SIZE AND SHAPE. FINISH PAINT COLORS AS SCHEDULED.
10	PROVIDE AND INSTALL COLUMN ENCLOSURES. SEE DETAILS.
56	INSTALL FLAG POLE AND ALL REQUIRED MOUNTING HARDWARE AS SPECIFIED.
57	INSTALL EXISTING DRAGON HEADS UPON CONSTRUCTION COMPLETION. COORDINATE WITH PLUMBNG.
61	CONSTRUCT FACADE COMPONENTS WITH FIBERGLASS REINFORCED PLASTIC. SEE DCV-A-80 FOR DETAILS AND COORDINATION.
62	CONSTRUCT MURAL PANELS. CONTRACTOR TO PRINT AND INSTALL MURAL ARTWORK AS SPECIFIED.
64	INSTALL "ACORN" HISTORICAL LIGHTS. SEE ELECTRICAL DRAWINGS.
73	CONSTRUCT NEW ROOF BALUSTRADE. SEE DETAILS.
77	CONSTRUCT SUNBURST MURAL PANELS. CONTRACTOR TO PRINT AND INSTALL MURAL ARTWORK AS SPECIFIED.
79	INSTALL NEW SPEAKER. SEE ELECTRICAL DRAWINGS.

9/23/2022 4:42:28 PM

CONSULTANT INFORMATION
The LiRo Group
3 Aerial Way, Syosset, New York 11791
(516) 938-5476 www.liro.com

CONSULTANT SEAL
REGISTERED ARCHITECT ROBERT D. TOWNLEY 023280 STATE OF NEW YORK

REVISION NUMBER	DATE	MADE BY	APP'D BY	REVISION
1	09/21/22			BID ADDENDUM #3

RECORD DRAWING CERTIFICATION
☐ AS BUILT – CHANGES AS NOTED ☐ AS BUILT – NO CHANGES

CONTRACTOR
NAME
SIGNATURE
TITLE DATE

PROJECT COORDINATOR
NAME
SIGNATURE
TITLE DATE

WESTCHESTER COUNTY, NEW YORK
DEPARTMENT OF PUBLIC WORKS AND TRANSPORTATION
DIVISION OF ENGINEERING

INFRASTRUCTURE REHABILITATION - PHASE 3
PLAYLAND PARK, RYE, NEW YORK
DRAGON COASTER VENDORS
EXTERIOR ELEVATIONS 1 OF 3

CONTRACT NUMBER	22-523
SHEET NUMBER	DCV-A-20
DWG NO.:	412 of 664
SCALE:	1/4" = 1'-0"
DATE:	08/23/2022
DPW FILE NUMBER	1-118-A-1161-1
REV. NO.	1

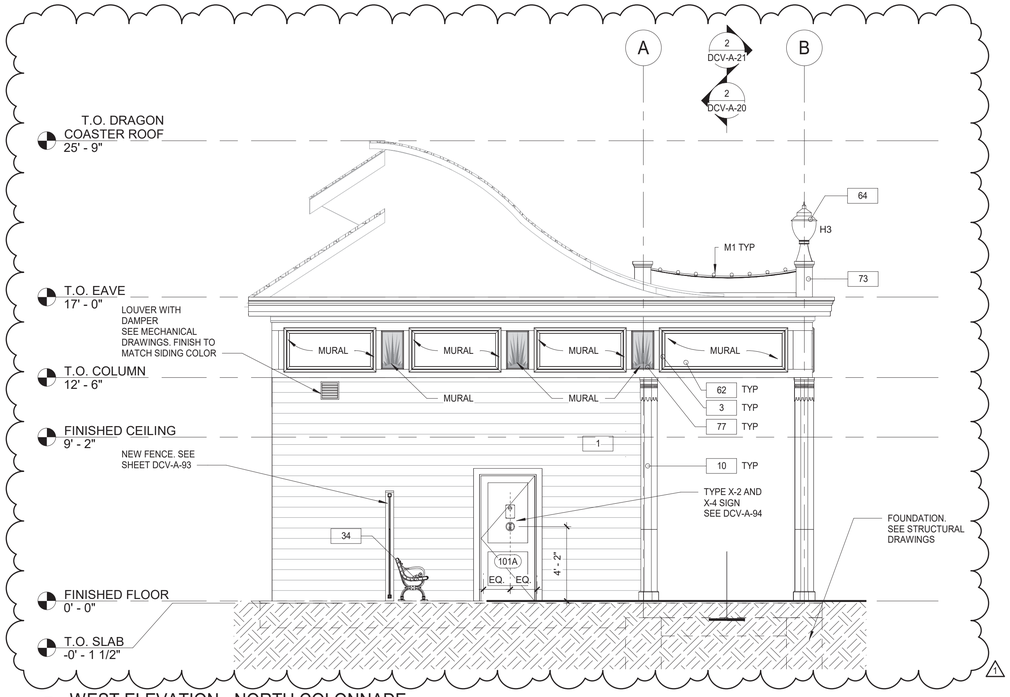

1 WEST ELEVATION - NORTH COLONNADE
1/4" = 1'-0"

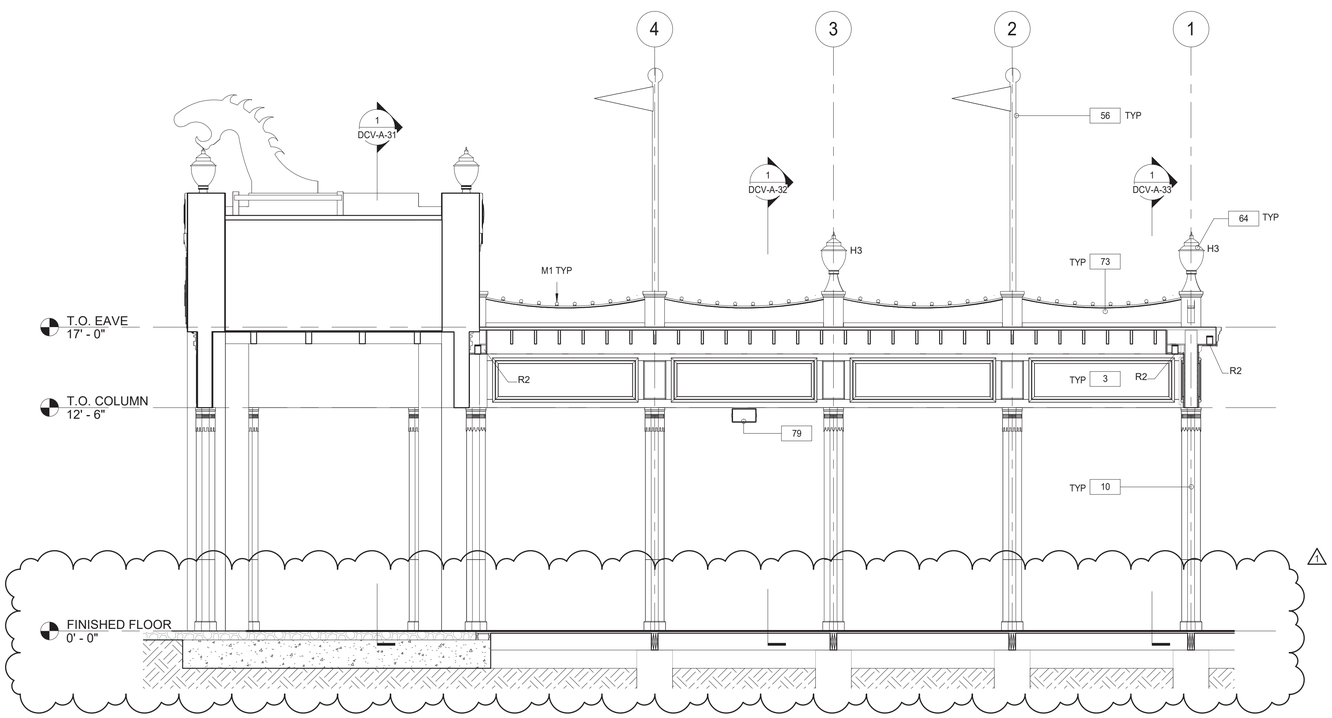

2 INTERIOR SECTION - NORTH COLONNADE
1/4" = 1'-0"

SHEET NOTES:

1. DIMENSIONS ARE TO FACE OF WALL FINISH, GRID LINES, OR CENTERLINE OF COLUMN. ALL ELEVATIONS ARE NOTED FROM FINISH FLOOR ELEVATIONS.

2. PROVIDE DRYWALL TRIM AT ALL EXPOSED EDGES AND CORNERS.

3. MINIMUM DIMENSION FROM ANY CORNER OR WALL TO FRAMING STUD AT DOOR JAMB OPENING SHALL BE 4" UNO.

4. PROVIDE FIRE RETARDANT WOOD BLOCKING FOR ANY WALL MOUNTED EQUIPMENT OR ACCESSORIES. COORDINATE ALL BLOCKING REQUIREMENTS NECESSARY WITH OTHER TRADES.

5. THE GC SHALL VERIFY DIMENSIONS OF THE EXISTING SPACE AND OF ANY EXISTING CONSTRUCTION TO REMAIN BY ACTUAL MEASUREMENT BEFORE ANY WORK IS PERFORMED. IF ANY MEASUREMENTS DIFFER FROM DIMENSIONS SHOWN ON PLAN, GC IS TO NOTIFY THE A/E IMMEDIATELY. THE GC SHALL BE RESPONSIBLE FOR CORRECTING ANY AND ALL DISCREPANCIES FOUND AFTER THE WORK IS PERFORMED, AT NO ADDITIONAL EXPENSE TO THE OWNER.

6. THE GC SHALL BE RESPONSIBLE FOR COORDINATING WITH OWNER ON ALL WORK TO BE PERFORMED BY THE OWNER. ANY POTENTIAL CONFLICTS OR DELAYS CAUSED BY THE OWNER'S SUBCONTRACTORS MUST BE DOCUMENTED IN WRITING TO THE OWNER BEFORE THE DELAY IS ACTUALLY INCURRED FOR IT TO BE CONSIDERED. OTHERWISE THE GC WILL BE RESPONSIBLE FOR MEETING THE SCHEDULE AS OUTLINED IN THE CONTRACT.

7. THE GC TO VERIFY ALL FINISHED DIMENSIONS. FIELD CONDITIONS ALTERING ANY DIMENSIONS SHOULD BE BROUGHT TO THE ATTENTION OF THE A/E.

8. THE GC SHALL SUPPLY ALL MATERIAL, LABOR, AND COORDINATION REQ'D FOR THE INSTALLATION OF ALL OWNER-SUPPLIED ITEMS AS DESCRIBED IN THE DOCUMENTS, UNO.

9. THE GC IS RESPONSIBLE FOR ALL FLOOR AND WALL PENETRATIONS FOR ELECTRICAL AND MECHANICAL WORK. ALL SUCH OPENING SHALL BE FRAMED AND REINFORCED.

10. FLOOR SURFACES SHALL BE LEVELED TO ASSURE SMOOTH SURFACE FOR FINISH FLOOR INSTALLATION.

11. THE GC TO COORDINATE ALL UTILITY STUB-UPS AND LOCATION OF ALL EQUIPMENT PRIOR TO INSTALLING ANY ONE ITEM.

12.PROVIDE PAINTED ACCESS PANELS IN WALLS & CEILING AT CONCEALED ITEMS SUCH AS VALVES, CONTROLS, SWITCHES OR ANY OTHER ITEMS THAT REQUIRES ACCESS. GC TO DETERMINE ACCESS PANEL LOCATION W/ A/E PRIOR TO INSTALLATION.

13. FOR DOOR SCHEDULE AND FINISH TRANSITION DETAILS REFER TO SHEET DCV-A-95.

14. FOR WINDOW SCHEDULE REFER TO SHEET DCV-A-96.

15. FOR PARTITION TYPES REFER TO SHEET DCV-A-97.

16. PROVIDE WATER AND ICE SHIELD ON PERIMETER OF ROOF EAVES.

LEGEND:

	NOT IN CONTRACT	#	DOOR TAG
	NEW CONSTRUCTION WALLS	#	WINDOW TAG
	NEW IPE WOOD DECK	FE	FIRE EXTINGUISHER
	QUARRY TILE FLOOR	FD	FLOOR DRAIN
	ASPHALT REPAIR	#	WALL TAG
	GRAVEL SURFACE	B1	BOLLARD LIGHT
	APPROXIMATE LIMIT OF SCOPE	T1	TREE KNUCKLE LIGHT
		?	KEY NOTES

X-? SIGNAGE IDENTIFICATION SYMBOL SEE SIGNAGE DETAILS ON SHEET DCV-A-94

H3 H3 HISTORIC ACORN LIGHT

CONSTRUCTION KEYNOTES

1	PROVIDE AND INSTALL NEW 1x8 MILLED YELLOW PINE - TONGUE AND GROOVE - NO BEVEL
3	REPLICATE TRIMS TO MATCH DOCUMENTED TRIM, LOCATIONS, SIZE AND SHAPE. FINISH PAINT COLORS AS SCHEDULED.
10	PROVIDE AND INSTALL COLUMN ENCLOSURES. SEE DETAILS.
34	PROVIDE NEW BENCH.
56	INSTALL FLAG POLE AND ALL REQUIRED MOUNTING HARDWARE AS SPECIFIED.
62	CONSTRUCT MURAL PANELS. CONTRACTOR TO PRINT AND INSTALL MURAL ARTWORK AS SPECIFIED.
64	INSTALL "ACORN" HISTORICAL LIGHTS. SEE ELECTRICAL DRAWINGS.
73	CONSTRUCT NEW ROOF BALUSTRADE. SEE DETAILS.
77	CONSTRUCT SUNBURST MURAL PANELS. CONTRACTOR TO PRINT AND INSTALL MURAL ARTWORK AS SPECIFIED.
79	INSTALL NEW SPEAKER. SEE ELECTRICAL DRAWINGS.

9/23/2022 4:42:29 PM

CONSULTANT INFORMATION
The LiRo Group
3 Aerial Way, Syosset, New York 11791
(516) 938-5476 www.liro.com

CONSULTANT SEAL
REGISTERED ARCHITECT ROBERT D. TOMASULO 023280 STATE OF NEW YORK

REVISION NUMBER	DATE	MADE BY	APP'D BY	REVISION
1	09/21/22			BID ADDENDUM #3

RECORD DRAWING CERTIFICATION
☐ AS BUILT – CHANGES AS NOTED ☐ AS BUILT – NO CHANGES

CONTRACTOR
NAME
SIGNATURE
TITLE DATE

PROJECT COORDINATOR
NAME
SIGNATURE
TITLE DATE

WESTCHESTER COUNTY, NEW YORK
DEPARTMENT OF PUBLIC WORKS AND TRANSPORTATION
DIVISION OF ENGINEERING

INFRASTRUCTURE REHABILITATION - PHASE 3
PLAYLAND PARK, RYE, NEW YORK
DRAGON COASTER VENDORS
EXTERIOR ELEVATIONS 2 OF 3

CONTRACT NUMBER	22-523
SHEET NUMBER	DCV-A-21
DWG NO.:	413 of 664
SCALE:	1/4" = 1'-0"
DATE:	08/23/2022
DPW FILE NUMBER	1-118-A-1162-1
REV. NO.	1

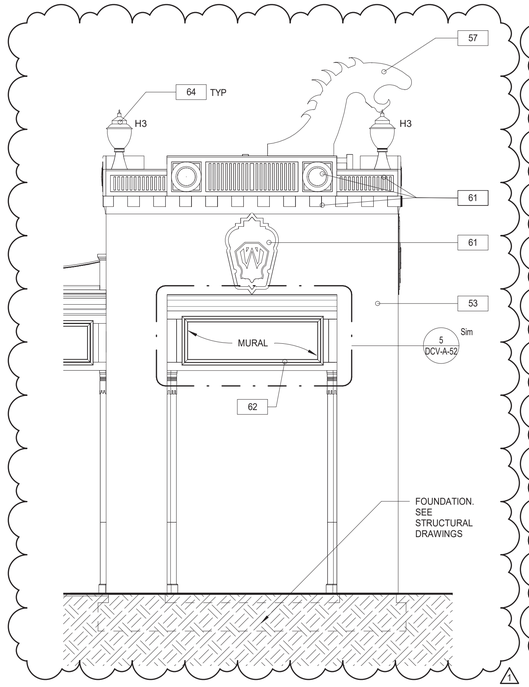

1 TOWER 6 - SOUTH ELEVATION
1/4" = 1'-0"

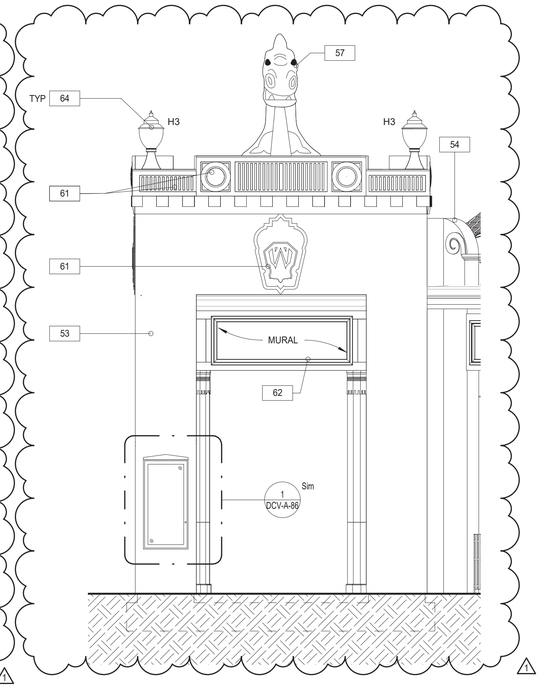

2 TOWER 6 - EAST ELEVATION
1/4" = 1'-0"

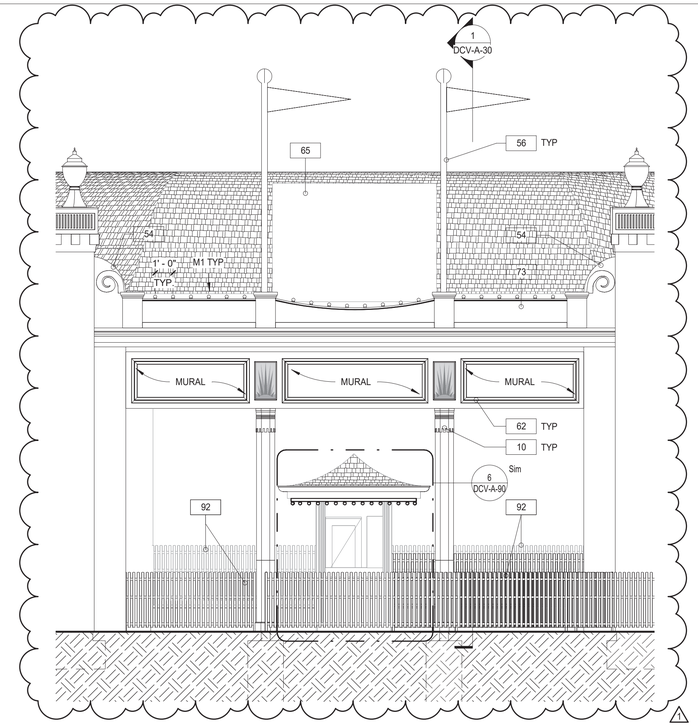

5 TOWER 6 & 7 COLONADE ELEVATIONS
1/4" = 1'-0"

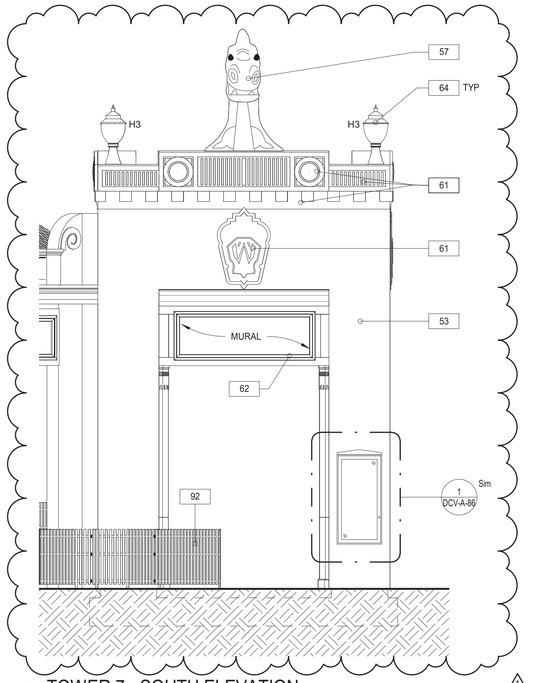

4 TOWER 7 - SOUTH ELEVATION
1/4" = 1'-0"

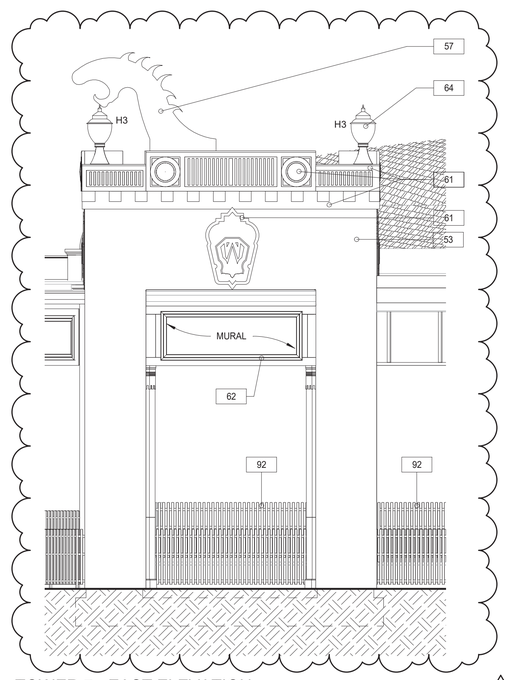

3 TOWER 7 - EAST ELEVATION
1/4" = 1'-0"

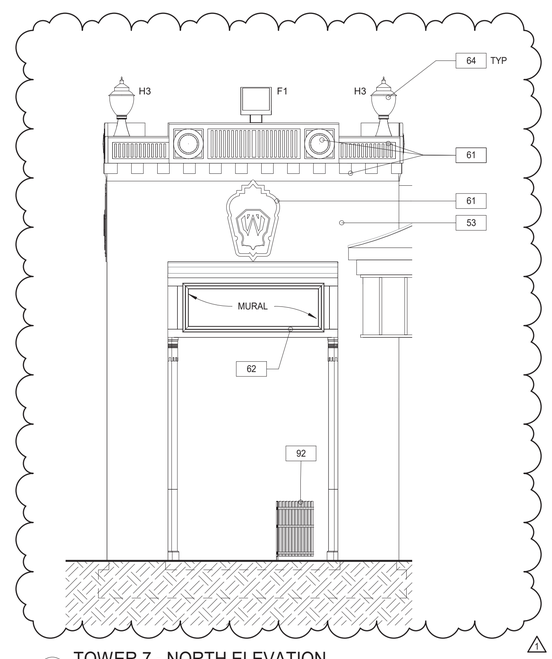

6 TOWER 7 - NORTH ELEVATION
1/4" = 1'-0"

SHEET NOTES:

1. DIMENSIONS ARE TO FACE OF WALL FINISH, GRID LINES, OR CENTERLINE OF COLUMN. ALL ELEVATIONS ARE NOTED FROM FINISH FLOOR ELEVATIONS.

2. PROVIDE DRYWALL TRIM AT ALL EXPOSED EDGES AND CORNERS.

3. MINIMUM DIMENSION FROM ANY CORNER OR WALL TO FRAMING STUD AT DOOR JAMB OPENING SHALL BE 4" UNO.

4. PROVIDE FIRE RETARDANT WOOD BLOCKING FOR ANY WALL MOUNTED EQUIPMENT OR ACCESSORIES. COORDINATE ALL BLOCKING REQUIREMENTS NECESSARY WITH OTHER TRADES.

5. THE GC SHALL VERIFY DIMENSIONS OF THE EXISTING SPACE AND OF ANY EXISTING CONSTRUCTION TO REMAIN BY ACTUAL MEASUREMENT BEFORE ANY WORK IS PERFORMED. IF ANY MEASUREMENTS DIFFER FROM DIMENSIONS SHOWN ON PLAN, GC IS TO NOTIFY THE A/E IMMEDIATELY. THE GC SHALL BE RESPONSIBLE FOR CORRECTING ANY AND ALL DISCREPANCIES FOUND AFTER THE WORK IS PERFORMED, AT NO ADDITIONAL EXPENSE TO THE OWNER.

6. THE GC SHALL BE RESPONSIBLE FOR COORDINATING WITH OWNER ON ALL WORK TO BE PERFORMED BY THE OWNER. ANY POTENTIAL CONFLICTS OR DELAYS CAUSED BY THE OWNER'S SUBCONTRACTORS MUST BE DOCUMENTED IN WRITING TO THE OWNER BEFORE THE DELAY IS ACTUALLY INCURRED FOR IT TO BE CONSIDERED. OTHERWISE THE GC WILL BE RESPONSIBLE FOR MEETING THE SCHEDULE AS OUTLINED IN THE CONTRACT.

7. THE GC TO VERIFY ALL FINISHED DIMENSIONS. FIELD CONDITIONS ALTERING ANY DIMENSIONS SHOULD BE BROUGHT TO THE ATTENTION OF THE A/E.

8. THE GC SHALL SUPPLY ALL MATERIAL, LABOR, AND COORDINATION REQ'D FOR THE INSTALLATION OF ALL OWNER-SUPPLIED ITEMS AS DESCRIBED IN THE DOCUMENTS, UNO.

9. THE GC IS RESPONSIBLE FOR ALL FLOOR AND WALL PENETRATIONS FOR ELECTRICAL AND MECHANICAL WORK. ALL SUCH OPENING SHALL BE FRAMED AND REINFORCED.

10. FLOOR SURFACES SHALL BE LEVELED TO ASSURE SMOOTH SURFACE FOR FINISH FLOOR INSTALLATION.

11. THE GC TO COORDINATE ALL UTILITY STUB-UPS AND LOCATION OF ALL EQUIPMENT PRIOR TO INSTALLING ANY ONE ITEM.

12.PROVIDE PAINTED ACCESS PANELS IN WALLS & CEILING AT CONCEALED ITEMS SUCH AS VALVES, CONTROLS, SWITCHES OR ANY OTHER ITEMS THAT REQUIRES ACCESS. GC TO DETERMINE ACCESS PANEL LOCATION W/ A/E PRIOR TO INSTALLATION.

13. FOR DOOR SCHEDULE AND FINISH TRANSITION DETAILS REFER TO SHEET DCV-A-95.

14. FOR WINDOW SCHEDULE REFER TO SHEET DCV-A-96.

15. FOR PARTITION TYPES REFER TO SHEET DCV-A-97.

16. PROVIDE WATER AND ICE SHIELD ON PERIMETER OF ROOF EAVES.

LEGEND:

	NOT IN CONTRACT	#	DOOR TAG
	NEW CONSTRUCTION WALLS	#	WINDOW TAG
	NEW IPE WOOD DECK	FE	FIRE EXTINGUISHER
	QUARRY TILE FLOOR	FD	FLOOR DRAIN
	ASPHALT REPAIR	#	WALL TAG
	GRAVEL SURFACE	B1	BOLLARD LIGHT
	APPROXIMATE LIMIT OF SCOPE	T1	TREE KNUCKLE LIGHT
		?	KEY NOTES
		X-?	SIGNAGE IDENTIFICATION SYMBOL SEE SIGNAGE DETAILS ON SHEET DCV-A-94
		H3	H3 HISTORIC ACORN LIGHT

CONSTRUCTION KEYNOTES

10	PROVIDE AND INSTALL COLUMN ENCLOSURES. SEE DETAILS.
25	NEW ROOF WITH ASPHALT SHINGLE ROOFING WITH TWO LAYERS OF UNDERLAYMENT, AND SHEATHING.
53	RECONSTRUCT TOWER AS SPECIFIED. SEE STRUCTURAL DRAWINGS.
54	RECONSTRUCT WING PIER. SEE STRUCTURAL DRAWINGS.
56	INSTALL FLAG POLE AND ALL REQUIRED MOUNTING HARDWARE AS SPECIFIED.
57	INSTALL EXISTING DRAGON HEADS UPON CONSTRUCTION COMPLETION. COORDINATE WITH PLUMBNG.
61	CONSTRUCT FACADE COMPONENTS WITH FIBERGLASS REINFORCED PLASTIC. SEE DCV-A-80 FOR DETAILS AND COORDINATION.
62	CONSTRUCT MURAL PANELS. CONTRACTOR TO PRINT AND INSTALL MURAL ARTWORK AS SPECIFIED.
64	INSTALL "ACORN" HISTORICAL LIGHTS. SEE ELECTRICAL DRAWINGS.
65	REINSTALL EXISTING ROOF MOUNTED DIGITAL SCREEN. SEE ELECTRICAL DRAWINGS.
73	CONSTRUCT NEW ROOF BALUSTRADE. SEE DETAILS.
92	REINSTALL EXISTING FENCE.

9/23/2022 4:42:30 PM

CONSULTANT INFORMATION
The LiRo Group
3 Aerial Way, Syosset, New York 11791
(516) 938-5476 www.liro.com

CONSULTANT SEAL
REGISTERED ARCHITECT ROBERT D. YOUNG JR. 023280 STATE OF NEW YORK

REVISION NUMBER	DATE	MADE BY	APP'D BY	REVISION
1	09/21/22			BID ADDENDUM #3

RECORD DRAWING CERTIFICATION
☐ AS BUILT – CHANGES AS NOTED ☐ AS BUILT – NO CHANGES

CONTRACTOR
NAME
SIGNATURE
TITLE DATE

PROJECT COORDINATOR
NAME
SIGNATURE
TITLE DATE

WESTCHESTER COUNTY, NEW YORK
DEPARTMENT OF PUBLIC WORKS AND TRANSPORTATION
DIVISION OF ENGINEERING

INFRASTRUCTURE REHABILITATION - PHASE 3
PLAYLAND PARK, RYE, NEW YORK
DRAGON COASTER VENDORS
EXTERIOR ELEVATIONS 3 OF 3

CONTRACT NUMBER	22-523
SHEET NUMBER	DCV-A-22
DWG NO.:	414 of 664
SCALE:	1/4" = 1'-0"
DATE:	08/23/2022
DPW FILE NUMBER	1-118-A-1163-1
REV. NO.	1

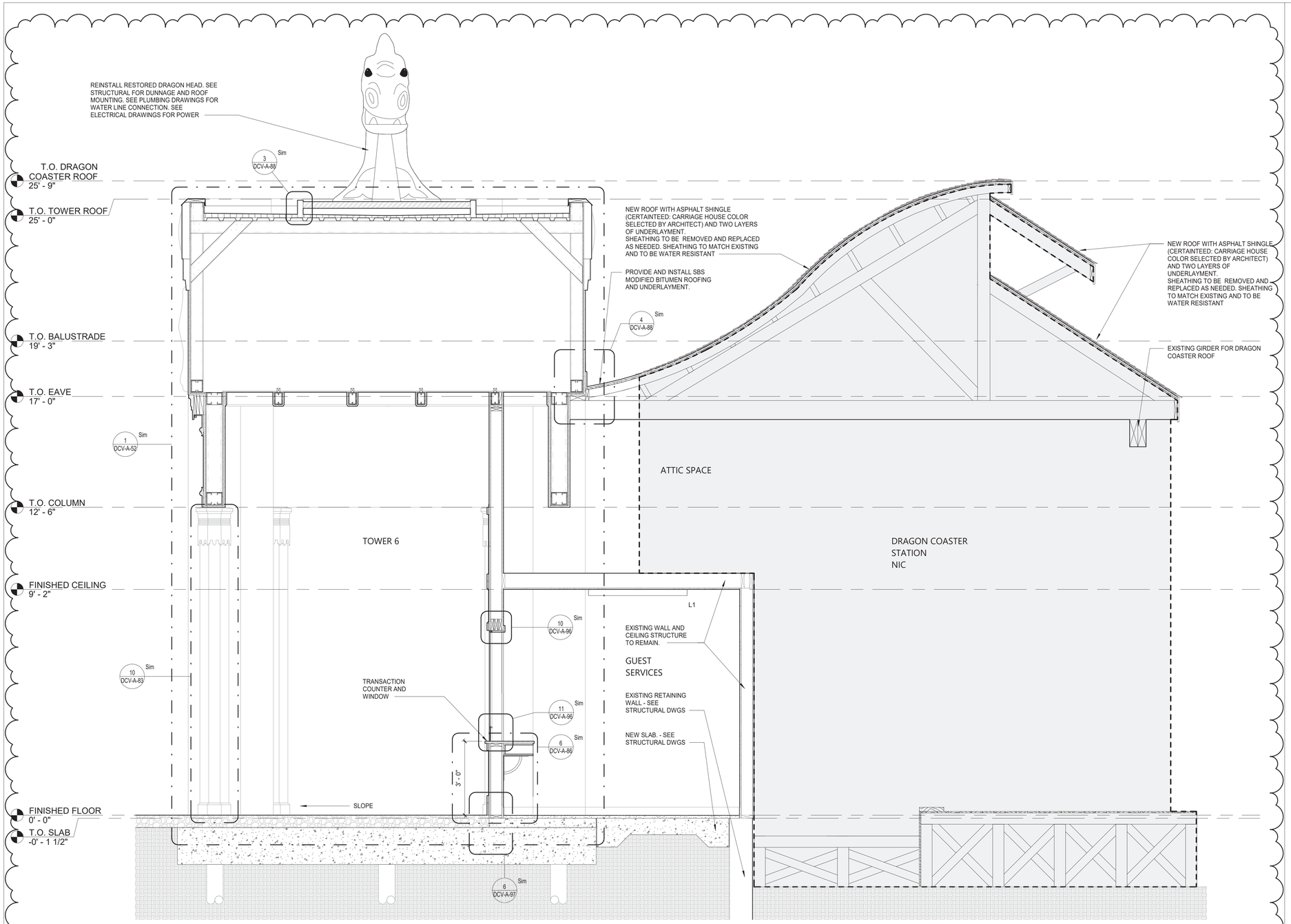

1 SECTION AT NORTH COLONNADE AND TOWER 6
1/2" = 1'-0"

SHEET NOTES:

1. DIMENSIONS ARE TO FACE OF WALL FINISH, GRID LINES, OR CENTERLINE OF COLUMN. ALL ELEVATIONS ARE NOTED FROM FINISH FLOOR ELEVATIONS.

2. PROVIDE DRYWALL TRIM AT ALL EXPOSED EDGES AND CORNERS.

3. MINIMUM DIMENSION FROM ANY CORNER OR WALL TO FRAMING STUD AT DOOR JAMB OPENING SHALL BE 4" UNO.

4. PROVIDE FIRE RETARDANT WOOD BLOCKING FOR ANY WALL MOUNTED EQUIPMENT OR ACCESSORIES. COORDINATE ALL BLOCKING REQUIREMENTS NECESSARY WITH OTHER TRADES.

5. THE GC SHALL VERIFY DIMENSIONS OF THE EXISTING SPACE AND OF ANY EXISTING CONSTRUCTION TO REMAIN BY ACTUAL MEASUREMENT BEFORE ANY WORK IS PERFORMED. IF ANY MEASUREMENTS DIFFER FROM DIMENSIONS SHOWN ON PLAN, GC IS TO NOTIFY THE A/E IMMEDIATELY. THE GC SHALL BE RESPONSIBLE FOR CORRECTING ANY AND ALL DISCREPANCIES FOUND AFTER THE WORK IS PERFORMED, AT NO ADDITIONAL EXPENSE TO THE OWNER.

6. THE GC SHALL BE RESPONSIBLE FOR COORDINATING WITH OWNER ON ALL WORK TO BE PERFORMED BY THE OWNER. ANY POTENTIAL CONFLICTS OR DELAYS CAUSED BY THE OWNER'S SUBCONTRACTORS MUST BE DOCUMENTED IN WRITING TO THE OWNER BEFORE THE DELAY IS ACTUALLY INCURRED FOR IT TO BE CONSIDERED. OTHERWISE THE GC WILL BE RESPONSIBLE FOR MEETING THE SCHEDULE AS OUTLINED IN THE CONTRACT.

7. THE GC TO VERIFY ALL FINISHED DIMENSIONS. FIELD CONDITIONS ALTERING ANY DIMENSIONS SHOULD BE BROUGHT TO THE ATTENTION OF THE A/E.

8. THE GC SHALL SUPPLY ALL MATERIAL, LABOR, AND COORDINATION REQ'D FOR THE INSTALLATION OF ALL OWNER-SUPPLIED ITEMS AS DESCRIBED IN THE DOCUMENTS, UNO.

9. THE GC IS RESPONSIBLE FOR ALL FLOOR AND WALL PENETRATIONS FOR ELECTRICAL AND MECHANICAL WORK. ALL SUCH OPENING SHALL BE FRAMED AND REINFORCED.

10. FLOOR SURFACES SHALL BE LEVELED TO ASSURE SMOOTH SURFACE FOR FINISH FLOOR INSTALLATION.

11. THE GC TO COORDINATE ALL UTILITY STUB-UPS AND LOCATION OF ALL EQUIPMENT PRIOR TO INSTALLING ANY ONE ITEM.

12. PROVIDE PAINTED ACCESS PANELS IN WALLS & CEILING AT CONCEALED ITEMS SUCH AS VALVES, CONTROLS, SWITCHES OR ANY OTHER ITEMS THAT REQUIRES ACCESS. GC TO DETERMINE ACCESS PANEL LOCATION W/ A/E PRIOR TO INSTALLATION.

13. FOR DOOR SCHEDULE AND FINISH TRANSITION DETAILS REFER TO SHEET DCV-A-95.

14. FOR WINDOW SCHEDULE REFER TO SHEET DCV-A-96.

15. FOR PARTITION TYPES REFER TO SHEET DCV-A-97.

16. PROVIDE WATER AND ICE SHIELD ON PERIMETER OF ROOF EAVES.

LEGEND:

	NOT IN CONTRACT	#	DOOR TAG
	NEW CONSTRUCTION WALLS	#	WINDOW TAG
	NEW IPE WOOD DECK	FE	FIRE EXTINGUISHER
	QUARRY TILE FLOOR	FD	FLOOR DRAIN
	ASPHALT REPAIR	#	WALL TAG
	GRAVEL SURFACE	B1	BOLLARD LIGHT
	APPROXIMATE LIMIT OF SCOPE	T1	TREE KNUCKLE LIGHT
		?	KEY NOTES
		X-?	SIGNAGE IDENTIFICATION SYMBOL SEE SIGNAGE DETAILS ON SHEET DCV-A-94
		H3	H3 HISTORIC ACORN LIGHT

9/23/2022 4:42:31 PM

CONSULTANT INFORMATION
The LiRo Group
3 Aerial Way, Syosset, New York 11791
(516) 938-5476 www.liro.com

CONSULTANT SEAL
REGISTERED ARCHITECT ROBERT D. YOUNG JR. 023290 STATE OF NEW YORK

REVISION NUMBER	DATE	MADE BY	APP'D BY	REVISION
1	09/21/22			BID ADDENDUM #3

RECORD DRAWING CERTIFICATION
☐ AS BUILT – CHANGES AS NOTED ☐ AS BUILT – NO CHANGES

CONTRACTOR
NAME
SIGNATURE
TITLE DATE

PROJECT COORDINATOR
NAME
SIGNATURE
TITLE DATE

WESTCHESTER COUNTY, NEW YORK
DEPARTMENT OF PUBLIC WORKS AND TRANSPORTATION
DIVISION OF ENGINEERING

INFRASTRUCTURE REHABILITATION - PHASE 3
PLAYLAND PARK, RYE, NEW YORK
DRAGON COASTER VENDORS
SECTION AT TOWER 6 AND GUEST SERVICES

CONTRACT NUMBER 22-523
SHEET NUMBER **DCV-A-31**
DWG NO.: 416 of 664
SCALE: **As indicated**
DATE: **08/23/2022**
DPW FILE NUMBER **1-118-A-1165-1**
REV. NO. **1**

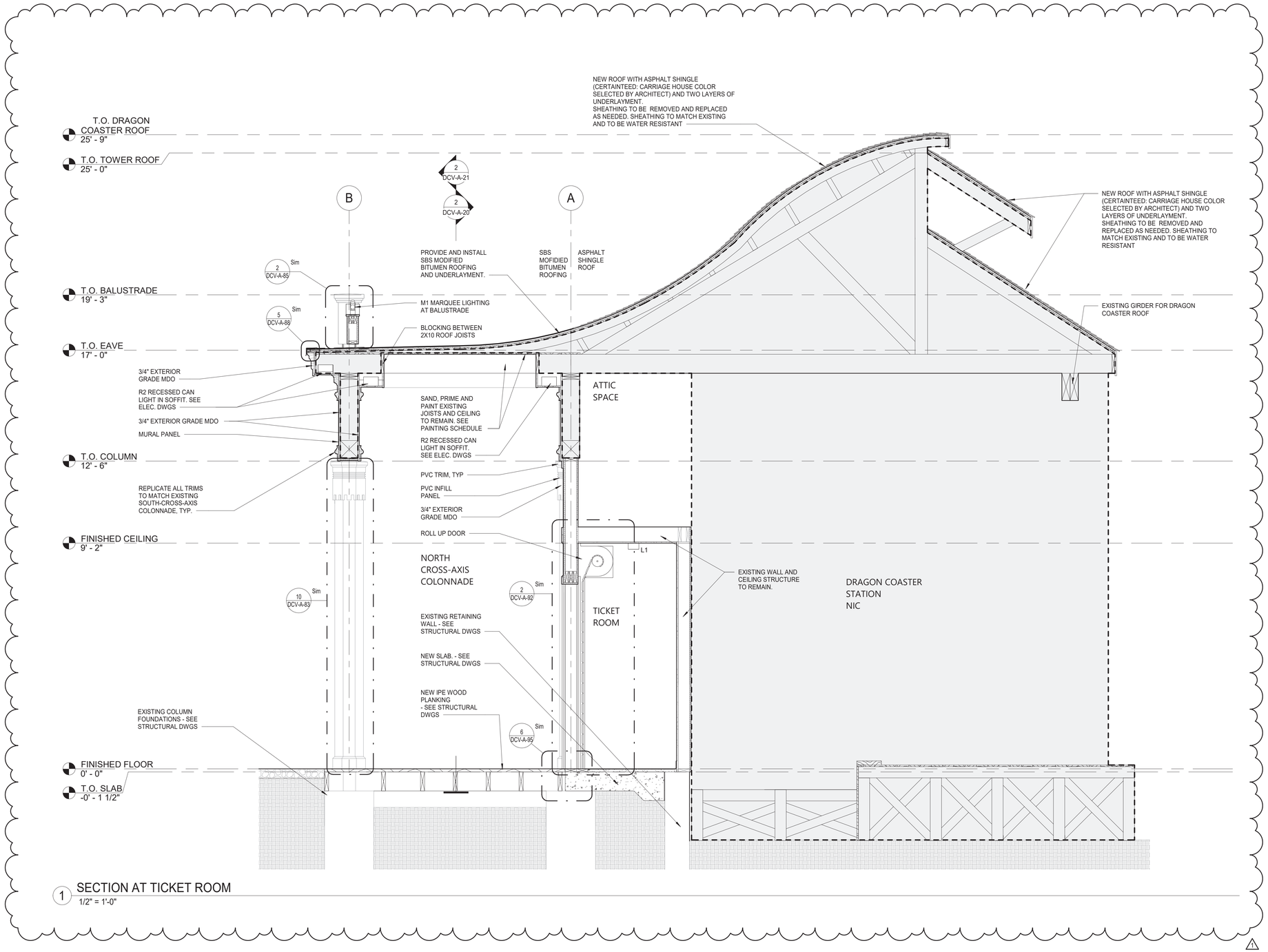

1 SECTION AT TICKET ROOM
1/2" = 1'-0"

SHEET NOTES:

1. DIMENSIONS ARE TO FACE OF WALL FINISH, GRID LINES, OR CENTERLINE OF COLUMN. ALL ELEVATIONS ARE NOTED FROM FINISH FLOOR ELEVATIONS.

2. PROVIDE DRYWALL TRIM AT ALL EXPOSED EDGES AND CORNERS.

3. MINIMUM DIMENSION FROM ANY CORNER OR WALL TO FRAMING STUD AT DOOR JAMB OPENING SHALL BE 4" UNO.

4. PROVIDE FIRE RETARDANT WOOD BLOCKING FOR ANY WALL MOUNTED EQUIPMENT OR ACCESSORIES. COORDINATE ALL BLOCKING REQUIREMENTS NECESSARY WITH OTHER TRADES.

5. THE GC SHALL VERIFY DIMENSIONS OF THE EXISTING SPACE AND OF ANY EXISTING CONSTRUCTION TO REMAIN BY ACTUAL MEASUREMENT BEFORE ANY WORK IS PERFORMED. IF ANY MEASUREMENTS DIFFER FROM DIMENSIONS SHOWN ON PLAN, GC IS TO NOTIFY THE A/E IMMEDIATELY. THE GC SHALL BE RESPONSIBLE FOR CORRECTING ANY AND ALL DISCREPANCIES FOUND AFTER THE WORK IS PERFORMED, AT NO ADDITIONAL EXPENSE TO THE OWNER.

6. THE GC SHALL BE RESPONSIBLE FOR COORDINATING WITH OWNER ON ALL WORK TO BE PERFORMED BY THE OWNER. ANY POTENTIAL CONFLICTS OR DELAYS CAUSED BY THE OWNER'S SUBCONTRACTORS MUST BE DOCUMENTED IN WRITING TO THE OWNER BEFORE THE DELAY IS ACTUALLY INCURRED FOR IT TO BE CONSIDERED. OTHERWISE THE GC WILL BE RESPONSIBLE FOR MEETING THE SCHEDULE AS OUTLINED IN THE CONTRACT.

7. THE GC TO VERIFY ALL FINISHED DIMENSIONS. FIELD CONDITIONS ALTERING ANY DIMENSIONS SHOULD BE BROUGHT TO THE ATTENTION OF THE A/E.

8. THE GC SHALL SUPPLY ALL MATERIAL, LABOR, AND COORDINATION REQ'D FOR THE INSTALLATION OF ALL OWNER-SUPPLIED ITEMS AS DESCRIBED IN THE DOCUMENTS, UNO.

9. THE GC IS RESPONSIBLE FOR ALL FLOOR AND WALL PENETRATIONS FOR ELECTRICAL AND MECHANICAL WORK. ALL SUCH OPENING SHALL BE FRAMED AND REINFORCED.

10. FLOOR SURFACES SHALL BE LEVELED TO ASSURE SMOOTH SURFACE FOR FINISH FLOOR INSTALLATION.

11. THE GC TO COORDINATE ALL UTILITY STUB-UPS AND LOCATION OF ALL EQUIPMENT PRIOR TO INSTALLING ANY ONE ITEM.

12.PROVIDE PAINTED ACCESS PANELS IN WALLS & CEILING AT CONCEALED ITEMS SUCH AS VALVES, CONTROLS, SWITCHES OR ANY OTHER ITEMS THAT REQUIRES ACCESS. GC TO DETERMINE ACCESS PANEL LOCATION W/ A/E PRIOR TO INSTALLATION.

13. FOR DOOR SCHEDULE AND FINISH TRANSITION DETAILS REFER TO SHEET DCV-A-95.

14. FOR WINDOW SCHEDULE REFER TO SHEET DCV-A-96.

15. FOR PARTITION TYPES REFER TO SHEET DCV-A-97.

16. PROVIDE WATER AND ICE SHIELD ON PERIMETER OF ROOF EAVES.

LEGEND:

	NOT IN CONTRACT	#	DOOR TAG
	NEW CONSTRUCTION WALLS	#	WINDOW TAG
	NEW IPE WOOD DECK	FE	FIRE EXTINGUISHER
	QUARRY TILE FLOOR	FD	FLOOR DRAIN
	ASPHALT REPAIR	#	WALL TAG
	GRAVEL SURFACE	B1	BOLLARD LIGHT
	APPROXIMATE LIMIT OF SCOPE	T1	TREE KNUCKLE LIGHT
		?	KEY NOTES
		X-?	SIGNAGE IDENTIFICATION SYMBOL SEE SIGNAGE DETAILS ON SHEET DCV-A-94
		H3	H3 HISTORIC ACORN LIGHT

9/23/2022 4:42:32 PM

CONSULTANT INFORMATION

The LiRo Group
3 Aerial Way, Syosset, New York 11791
(516) 938-5476 www.liro.com

CONSULTANT SEAL

REGISTERED ARCHITECT ROBERT D. YOUNG JR. 023280 STATE OF NEW YORK

REVISION NUMBER	DATE	MADE BY	APP'D BY	REVISION
1	09/21/22			BID ADDENDUM #3

RECORD DRAWING CERTIFICATION

☐ AS BUILT – CHANGES AS NOTED ☐ AS BUILT – NO CHANGES

CONTRACTOR
NAME
SIGNATURE
TITLE DATE

PROJECT COORDINATOR
NAME
SIGNATURE
TITLE DATE

WESTCHESTER COUNTY, NEW YORK
DEPARTMENT OF PUBLIC WORKS AND TRANSPORTATION
DIVISION OF ENGINEERING

INFRASTRUCTURE REHABILITATION - PHASE 3
PLAYLAND PARK, RYE, NEW YORK
DRAGON COASTER VENDORS
SECTION AT TICKET ROOM

CONTRACT NUMBER	22-523
SHEET NUMBER	DCV-A-32
DWG NO.:	417 of 664
SCALE:	As indicated
DATE:	08/23/2022
DPW FILE NUMBER	1-118-A-1166-1
REV. NO.	1

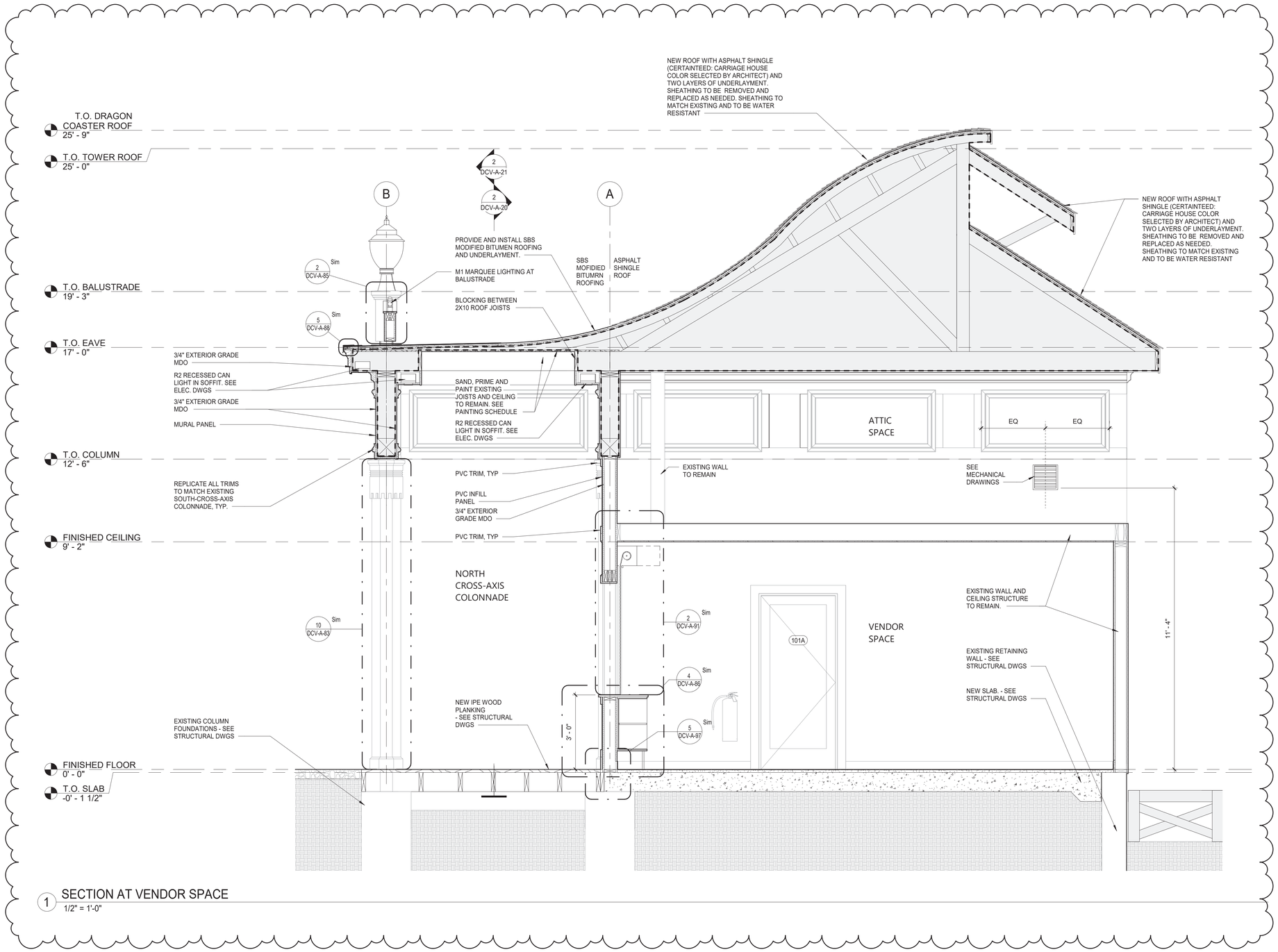

1 SECTION AT VENDOR SPACE
1/2" = 1'-0"

SHEET NOTES:

1. DIMENSIONS ARE TO FACE OF WALL FINISH, GRID LINES, OR CENTERLINE OF COLUMN. ALL ELEVATIONS ARE NOTED FROM FINISH FLOOR ELEVATIONS.

2. PROVIDE DRYWALL TRIM AT ALL EXPOSED EDGES AND CORNERS.

3. MINIMUM DIMENSION FROM ANY CORNER OR WALL TO FRAMING STUD AT DOOR JAMB OPENING SHALL BE 4" UNO.

4. PROVIDE FIRE RETARDANT WOOD BLOCKING FOR ANY WALL MOUNTED EQUIPMENT OR ACCESSORIES. COORDINATE ALL BLOCKING REQUIREMENTS NECESSARY WITH OTHER TRADES.

5. THE GC SHALL VERIFY DIMENSIONS OF THE EXISTING SPACE AND OF ANY EXISTING CONSTRUCTION TO REMAIN BY ACTUAL MEASUREMENT BEFORE ANY WORK IS PERFORMED. IF ANY MEASUREMENTS DIFFER FROM DIMENSIONS SHOWN ON PLAN, GC IS TO NOTIFY THE A/E IMMEDIATELY. THE GC SHALL BE RESPONSIBLE FOR CORRECTING ANY AND ALL DISCREPANCIES FOUND AFTER THE WORK IS PERFORMED, AT NO ADDITIONAL EXPENSE TO THE OWNER.

6. THE GC SHALL BE RESPONSIBLE FOR COORDINATING WITH OWNER ON ALL WORK TO BE PERFORMED BY THE OWNER. ANY POTENTIAL CONFLICTS OR DELAYS CAUSED BY THE OWNER'S SUBCONTRACTORS MUST BE DOCUMENTED IN WRITING TO THE OWNER BEFORE THE DELAY IS ACTUALLY INCURRED FOR IT TO BE CONSIDERED. OTHERWISE THE GC WILL BE RESPONSIBLE FOR MEETING THE SCHEDULE AS OUTLINED IN THE CONTRACT.

7. THE GC TO VERIFY ALL FINISHED DIMENSIONS. FIELD CONDITIONS ALTERING ANY DIMENSIONS SHOULD BE BROUGHT TO THE ATTENTION OF THE A/E.

8. THE GC SHALL SUPPLY ALL MATERIAL, LABOR, AND COORDINATION REQ'D FOR THE INSTALLATION OF ALL OWNER-SUPPLIED ITEMS AS DESCRIBED IN THE DOCUMENTS, UNO.

9. THE GC IS RESPONSIBLE FOR ALL FLOOR AND WALL PENETRATIONS FOR ELECTRICAL AND MECHANICAL WORK. ALL SUCH OPENING SHALL BE FRAMED AND REINFORCED.

10. FLOOR SURFACES SHALL BE LEVELED TO ASSURE SMOOTH SURFACE FOR FINISH FLOOR INSTALLATION.

11. THE GC TO COORDINATE ALL UTILITY STUB-UPS AND LOCATION OF ALL EQUIPMENT PRIOR TO INSTALLING ANY ONE ITEM.

12.PROVIDE PAINTED ACCESS PANELS IN WALLS & CEILING AT CONCEALED ITEMS SUCH AS VALVES, CONTROLS, SWITCHES OR ANY OTHER ITEMS THAT REQUIRES ACCESS. GC TO DETERMINE ACCESS PANEL LOCATION W/ A/E PRIOR TO INSTALLATION.

13. FOR DOOR SCHEDULE AND FINISH TRANSITION DETAILS REFER TO SHEET DCV-A-95.

14. FOR WINDOW SCHEDULE REFER TO SHEET DCV-A-96.

15. FOR PARTITION TYPES REFER TO SHEET DCV-A-97.

16. PROVIDE WATER AND ICE SHIELD ON PERIMETER OF ROOF EAVES.

LEGEND:

	NOT IN CONTRACT	#	DOOR TAG
	NEW CONSTRUCTION WALLS	#	WINDOW TAG
	NEW IPE WOOD DECK	FE	FIRE EXTINGUISHER
	QUARRY TILE FLOOR	FD	FLOOR DRAIN
	ASPHALT REPAIR	#	WALL TAG
	GRAVEL SURFACE	B1	BOLLARD LIGHT
	APPROXIMATE LIMIT OF SCOPE	T1	TREE KNUCKLE LIGHT
		?	KEY NOTES
		X-?	SIGNAGE IDENTIFICATION SYMBOL SEE SIGNAGE DETAILS ON SHEET DCV-A-94
		H3	H3 HISTORIC ACORN LIGHT

9/23/2022 4:42:33 PM

CONSULTANT INFORMATION

The LiRo Group
3 Aerial Way, Syosset, New York 11791
(516) 938-5476 www.liro.com

CONSULTANT SEAL

REGISTERED ARCHITECT ROBERT D. YOUNG JR. 023280 STATE OF NEW YORK

REVISION NUMBER	DATE	MADE BY	APP'D BY	REVISION
1	09/21/22			BID ADDENDUM #3

RECORD DRAWING CERTIFICATION

☐ AS BUILT – CHANGES AS NOTED ☐ AS BUILT – NO CHANGES

CONTRACTOR
NAME
SIGNATURE
TITLE DATE

PROJECT COORDINATOR
NAME
SIGNATURE
TITLE DATE

WESTCHESTER COUNTY, NEW YORK
DEPARTMENT OF PUBLIC WORKS AND TRANSPORTATION
DIVISION OF ENGINEERING

INFRASTRUCTURE REHABILITATION - PHASE 3
PLAYLAND PARK, RYE, NEW YORK
DRAGON COASTER VENDORS
SECTION AT VENDOR SPACE

CONTRACT NUMBER	22-523
SHEET NUMBER	DCV-A-33
DWG NO.:	418 of 664
SCALE:	As indicated
DATE:	08/23/2022
DPW FILE NUMBER	1-118-A-1167-1
REV. NO.	1

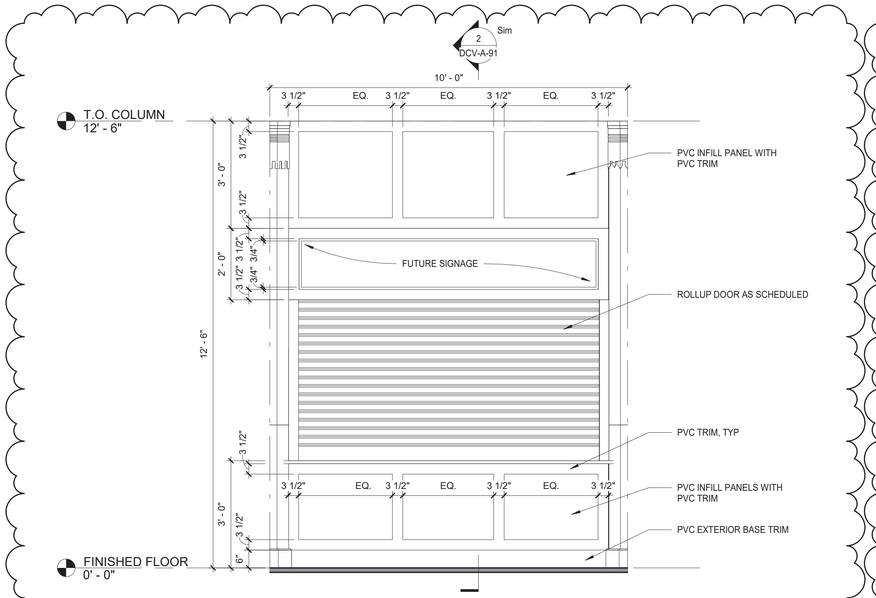

1 NORTH ELEVATION - VENDOR SPACE WITH COUNTER TYP
1/2" = 1'-0"

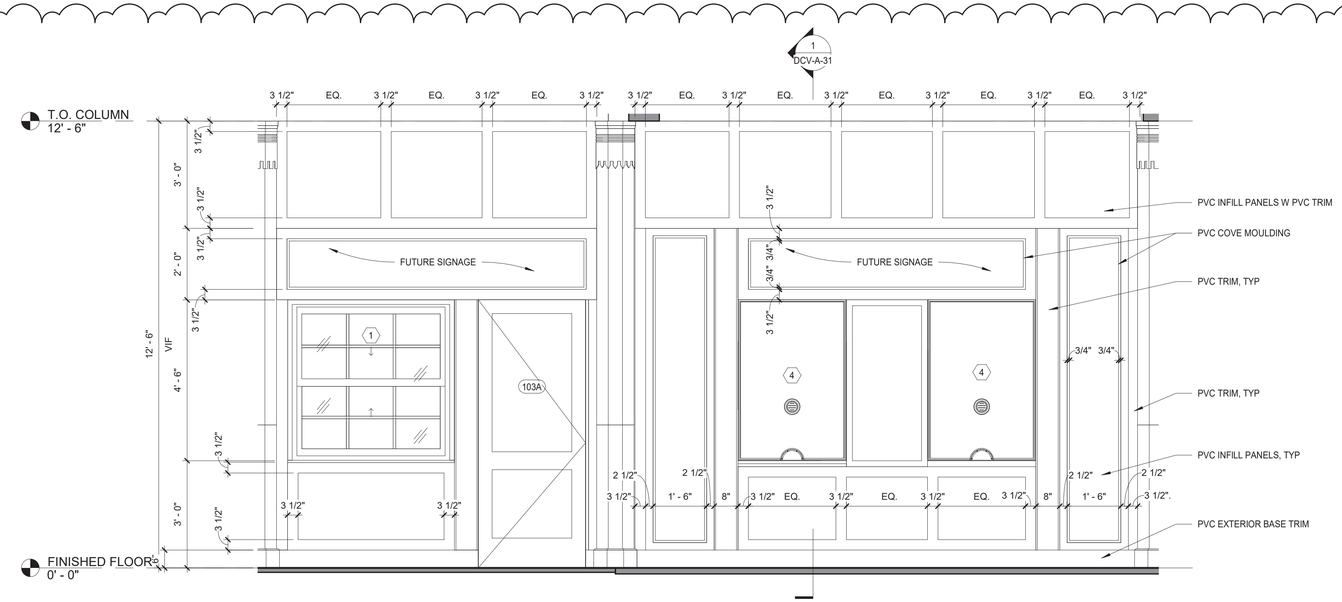

2 NORTH ELEVATION - STOREFRONT
1/2" = 1'-0"

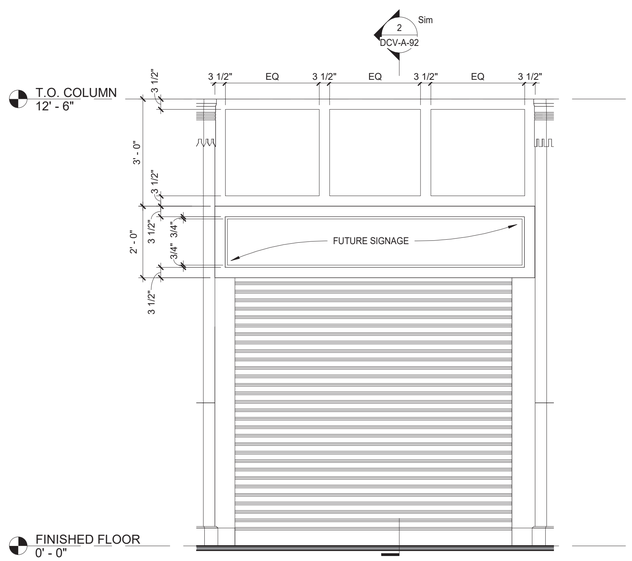

3 NORTH ELEVATION - VENDOR SPACE WITH ROLL UP DOOR
1/2" = 1'-0"

LEGEND:

	NOT IN CONTRACT	#	DOOR TAG
	NEW CONSTRUCTION WALLS	#	WINDOW TAG
	NEW IPE WOOD DECK	FE	FIRE EXTINGUISHER
	QUARRY TILE FLOOR	FD	FLOOR DRAIN
	ASPHALT REPAIR	#	WALL TAG
	GRAVEL SURFACE	B1	BOLLARD LIGHT
	APPROXIMATE LIMIT OF SCOPE	T1	TREE KNUCKLE LIGHT
		?	KEY NOTES
		X-?	SIGNAGE IDENTIFICATION SYMBOL SEE SIGNAGE DETAILS ON SHEET DCV-A-94
		H3	H3 HISTORIC ACORN LIGHT

9/23/2022 4:42:34 PM

CONSULTANT INFORMATION

The LiRo Group
3 Aerial Way, Syosset, New York 11791
(516) 938-5476 www.liro.com

CONSULTANT SEAL

REGISTERED ARCHITECT ROBERT D. YOUNG JR. 023290 STATE OF NEW YORK

REVISION NUMBER	DATE	MADE BY	APP'D BY	REVISION
1	09/21/22			BID ADDENDUM #3

RECORD DRAWING CERTIFICATION
AS BUILT – CHANGES AS NOTED
AS BUILT – NO CHANGES

CONTRACTOR
NAME
SIGNATURE
TITLE DATE

PROJECT COORDINATOR
NAME
SIGNATURE
TITLE DATE

WESTCHESTER COUNTY, NEW YORK
DEPARTMENT OF PUBLIC WORKS AND TRANSPORTATION
DIVISION OF ENGINEERING

INFRASTRUCTURE REHABILITATION - PHASE 3
PLAYLAND PARK, RYE, NEW YORK
DRAGON COASTER VENDORS
ENLARGED EXTERIOR ELEVATIONS

CONTRACT NUMBER 22-523
SHEET NUMBER DCV-A-53
DWG NO.: 422 of 664
SCALE: As indicated
DATE: 08/23/2022
DPW FILE NUMBER 1-118-A-1171-1
REV. NO. 1

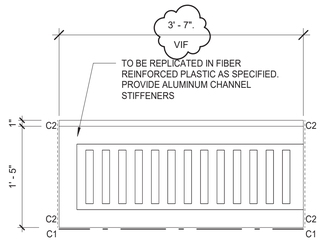

1 LEFT FASCIA
1" = 1'-0"

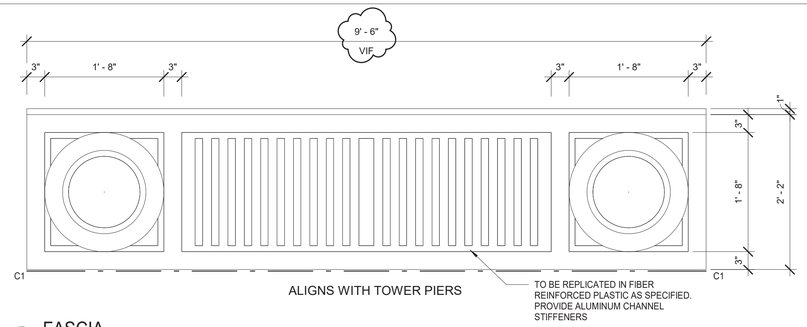

2 FASCIA
1" = 1'-0"

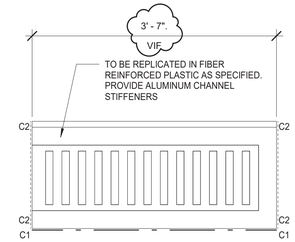

3 RIGHT FASCIA
1" = 1'-0"

NOTE:
1. PROVIDE ALUMINUM CHANNEL STIFFENERS
2. GRANITIC FINISH COATING ALL SURFACES EXCEPT BACK SURFACES
3. SEALANT AROUND PERIMETER

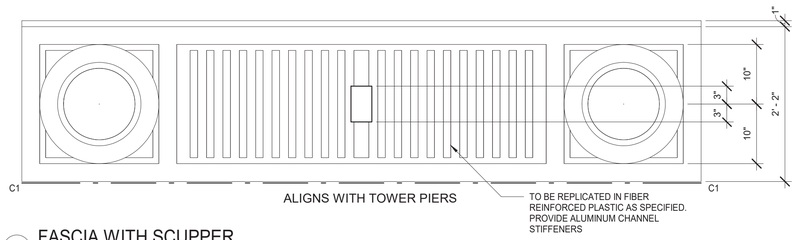

4 FASCIA WITH SCUPPER
1" = 1'-0"

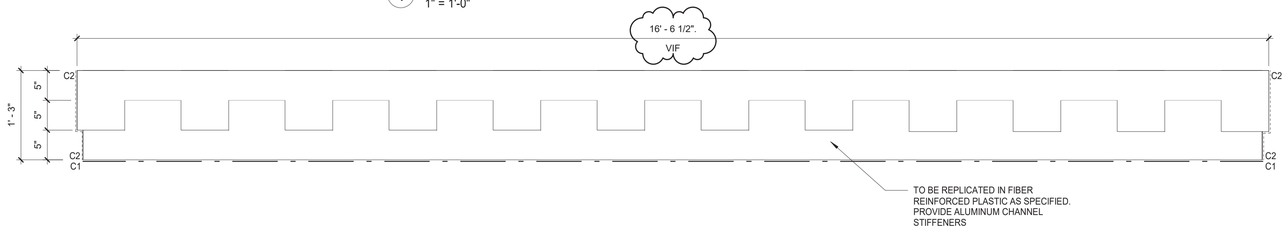

5 DENTIL COURSE
1" = 1'-0"

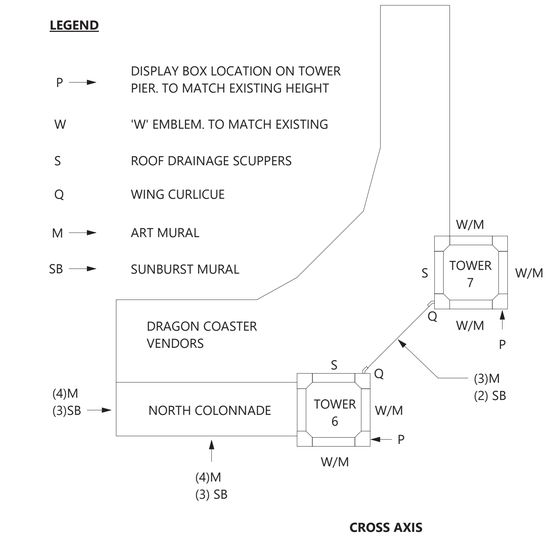

12 TOWER KEY & COMPONENT PLAN
1/16" = 1'-0"

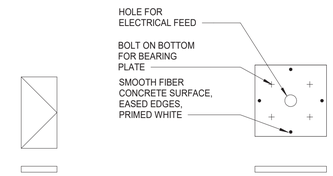

6 HALF PEDESTAL CAP
1" = 1'-0"

7 LAMP PEDESTAL
1" = 1'-0"

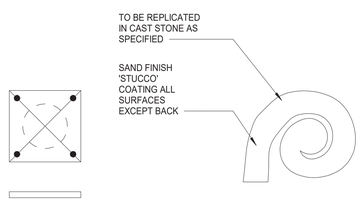

8 FLAG PEDESTAL
1" = 1'-0"

9 WING CURLICUE
1" = 1'-0"

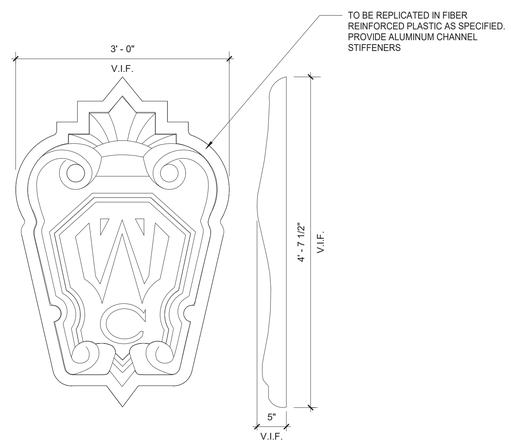

10 WESTCHESTER EMBLEM
1" = 1'-0"

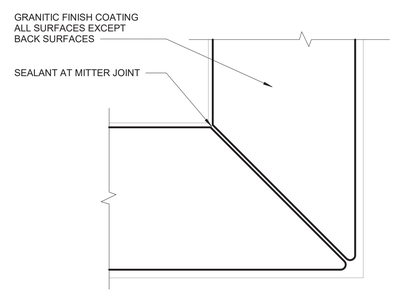

11 JOINT DETAIL
1" = 1'-0"

PRE MANUFACTURED COMPONENT SCHEDULE			
COMPONENT	COLOR	MANUFACTURER	REMARKS
LEFT HALF FASCIA	WHITE	TBD	
CENTER FASCIA	WHITE	TBD	
RIGHT HALF FASCIA	WHITE	TBD	
DENTIL COURSE	WHITE	TBD	
(Q) WING CURLICUE	TBD	TBD	
(W) EMBLEM	TBD	TBD	
(P) DISPLAY BOX	WHITE	TBD	
(M) ART MURAL	TBD	TBD	
(SB) SUNBURST MURAL	TBD	TBD	

SEALANT (C1)	URETHANE SEALANT, CUSTOM COLOR "OFF WHITE" TO MATCH PAINT.
SEALANT (C2)	URETHANE SEALANT, CUSTOM COLOR "PRECAST STONE" TO MATCH CAST STONE GRANITIC FINISHES.

DIMENSION NOTES:
1. VERIFY THESE COMPONENTS ON THE BASIS OF ACTUAL FIELD MEASUREMENTS AND APPROVED SUBMISSIONS, DIMENSIONS MAY VARY FROM PIECE TO PIECE.

2. ORIGINAL CAST STONE AND STUCCO COMPONENTS ARE AVAILABLE AT THE SITE FOR MEASUREMENT FOR REPLICATION. DESIGNS SHOWN ARE APPROXIMATE AND FINAL DESIGN MUST MATCH EXISTING.

9/23/2022 4:42:34 PM

CONSULTANT INFORMATION
The LiRo Group
3 Aerial Way, Syosset, New York 11791
(516) 938-5476 www.liro.com

CONSULTANT SEAL
REGISTERED ARCHITECT ROBERT D. DONNINO 023229 STATE OF NEW YORK

REVISION NUMBER	DATE	MADE BY	APP'D BY	REVISION
1	09/21/22			BID ADDENDUM #3

RECORD DRAWING CERTIFICATION
☐ AS BUILT – CHANGES AS NOTED ☐ AS BUILT – NO CHANGES

CONTRACTOR
NAME
SIGNATURE
TITLE DATE

PROJECT COORDINATOR
NAME
SIGNATURE
TITLE DATE

WESTCHESTER COUNTY, NEW YORK
DEPARTMENT OF PUBLIC WORKS AND TRANSPORTATION
DIVISION OF ENGINEERING

INFRASTRUCTURE REHABILITATION - PHASE 3
PLAYLAND PARK, RYE, NEW YORK
DRAGON COASTER VENDORS
CUSTOM FABRICATIONS

CONTRACT NUMBER 22-523
SHEET NUMBER **DCV-A-80**
DWG NO.: 424 of 664
SCALE: **As indicated**
DATE: **08/23/2022**
DPW FILE NUMBER **1-118-A-1173-1**
REV. NO. **1**

DOOR SCHEDULE - DCV

BUILDING	DOOR NUMBER	DOOR: DOOR TYPE	DOOR: WIDTH	DOOR: HEIGHT	DOOR: DOOR THICKNESS	DOOR: DOOR MATERIAL	DOOR: GLASS	DOOR: EXTERIOR FINISH	DOOR: INTERIOR FINISH	FRAME: FRAME TYPE	FRAME: MATERIAL	FRAME: EXTERIOR	FRAME: INTERIOR	FIRE RATING	HDWR SET	REMARKS
DCV	101A	E	3' - 0"	7'-0"	1 3/4"	HM	NO	PAINT 1	PAINT 1	1	HM	PAINT 1	PAINT 1	45 MIN.	9.0	STOREFRONT LOCKSET. WEATHER STRIP AT 3 SIDES
DCV	101B	C	8' - 5"	9'-6"		ALUM.	NO	PAINT 16	PAINT 16	-	-	-	PAINT 16	-	4.0	MOTOR OPERATED
DCV	101C	C	8' - 5"	9'-6"		ALUM.	NO	PAINT 16	PAINT 16	-	-	-	PAINT 16	-	4.0	MOTOR OPERATED
DCV	102A	C	7' - 9"	9'-6"		ALUM.	NO	PAINT 16	PAINT 16	-	-	-	PAINT 16	-	4.0	MOTOR OPERATED
DCV	102B	A	3' - 0"	7'-0"	1 3/4"	HM	NO	PAINT 1	PAINT 1	1	HM	PAINT 1	PAINT 1	-	9.0	STOREFRONT LOCKSET
DCV	103A	B	3' - 0"	7'-0"	1 3/4"	WOOD	NO	PAINT 1	PAINT 1	2	WOOD	PAINT 1	PAINT 1	-	14.0	STOREFRONT LOCKSET. SAPELE WOOD CONSTRUCTION. WEATHER STRIP AT 3 SIDES

GENERAL DOOR SCHEDULE NOTES:

1. REFER TO THIS SHEET FOR DOOR & FRAME TYPES.
2. REFER TO THIS SHEET FOR DOOR JAMB, HEAD, & FRAME DETAILS.
3. REFER TO THIS SHEET FOR DOOR SILL & TRANSITION DETAILS. SILL TRANSITION INFORMATION IS INDICATED ON FINISH PLAN UNLESS OTHERWISE NOTED.
4. THE GC SHALL EXAMINE THE DRAWINGS, SCHEDULE AND SPECIFICATIONS AND FURNISH PROPER HARDWARE FOR ALL OPENINGS. COMPLETE SHOP DRAWINGS SHALL BE PROVIDED FOR APPROVAL PRIOR TO PURCHASE.
5. VERIFY DIMENSIONS OF EXISTING OPENING AND DOORS BEFORE ORDERING.

PAINTING KEY

KEY	COLOR	MANUFACTURER	REMARKS
P- 1	MYSTICAL POWERS #901	BENJAMIN MOORE	
P- 2	HERITAGE RED #HC-181	BENJAMIN MOORE	
P- 3	NEW YORK STATE OF MIND #805	BENJAMIN MOORE	
P- 4	LAZY SUNDAY #803	BENJAMIN MOORE	
P- 5	DEEP JUNGLE #595	BENJAMIN MOORE	
P- 6	LUCK OF THE IRISH #588	BENJAMIN MOORE	
P- 7	MAJOLICA GREEN #0013	SHERWIN WILLIAMS	
P- 8	ANTELOPE CANYON #125	BENJAMIN MOORE	
P- 9	FORSYTHIA #6907	SHERWIN WILLIAMS	
P- 10	CAPE BLUE #1642	BENJAMIN MOORE	
P- 11	WHITE SNOW #9541	SHERWIN WILLIAMS	
P- 12	TRICORN BLACK #6258	SHERWIN WILLIAMS	
P- 13	READY MIX WHITE	BENJAMIN MOORE	INTERIOR USE ONLY
P- 14	STUCCO PAINT TO MATCH P-1	-	
P- 15	VAN DEUSEN BLUE #HC-156	BENJAMIN MOORE	
P- 16	#RAL9001	-	
P- 17	FLORIDA BEACHES #900	BENJAMIN MOORE	
P- 18	PIRATES COVE PEACH #903	BENJAMIN MOORE	
P- 19	JADITE #6459	SHERWIN WILLIAMS	
P- 20	DECISIVE YELLOW #6902	SHERWIN WILLIAMS	
P- 21	#RAL9010	-	

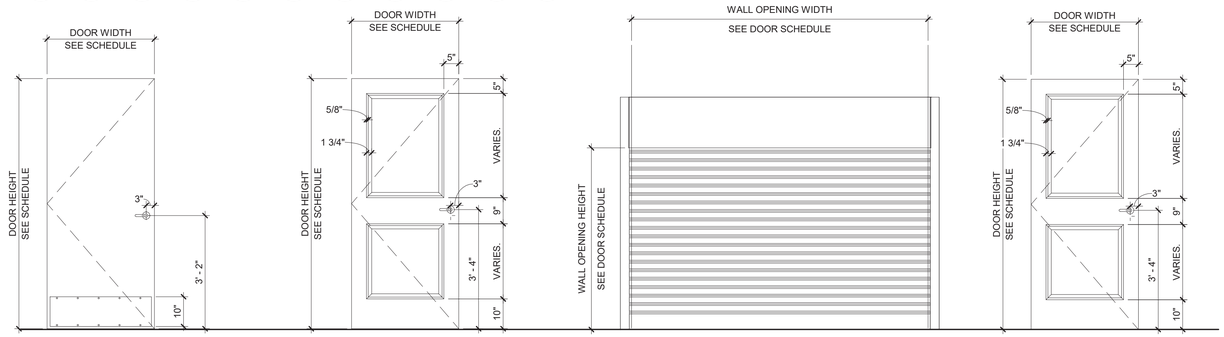

TYPE A — SINGLE H.M. DOOR

TYPE B — SINGLE WOOD DOOR

TYPE C — OVERHEAD ROLL-UP DOOR

TYPE E — SINGLE HM DOOR

DOOR AND FRAME TYPES

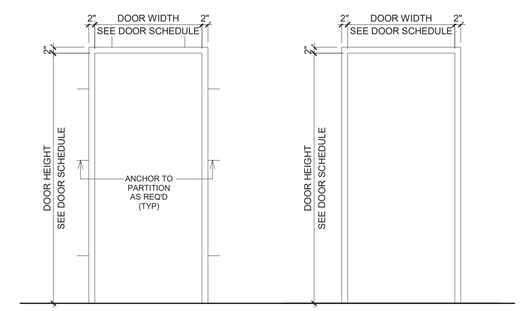

TYPE 1 — H.M. FRAME

TYPE 2 — WOOD FRAME

FRAME TYPES

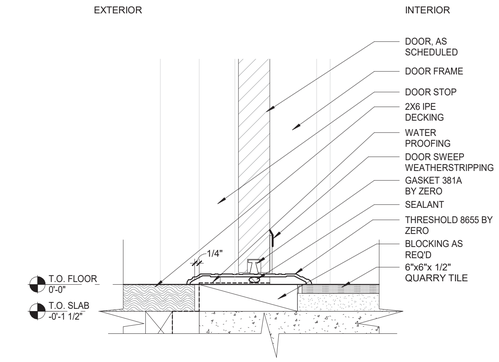

1 EXTERIOR DOOR SILL DETAIL - TR-01
3" = 1'-0"

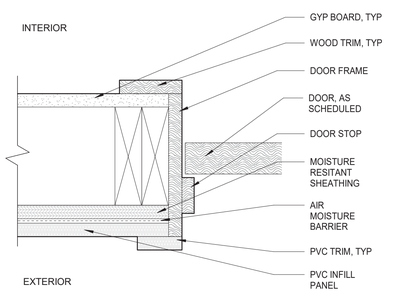

2 WOOD DOOR JAMB DETAIL - EXTERIOR
3" = 1'-0"

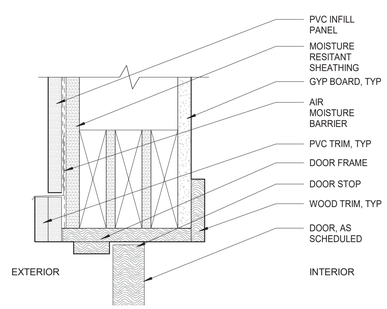

3 WOOD DOOR HEAD DETAIL - EXTERIOR
3" = 1'-0"

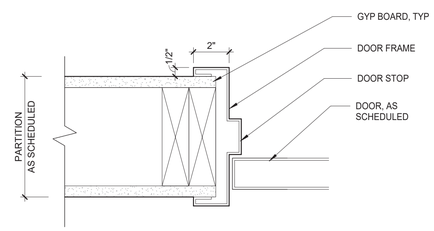

4 HM DOOR JAMB DETAIL - INTERIOR
3" = 1'-0"

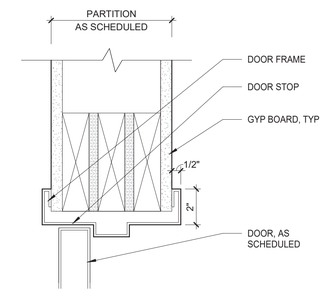

5 HM DOOR HEAD DETAIL - INTERIOR
3" = 1'-0"

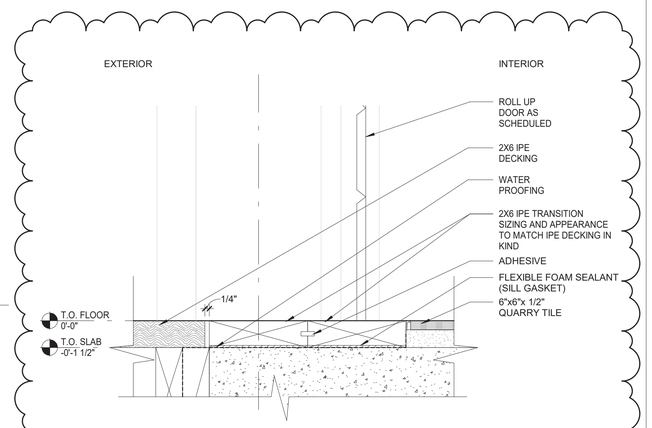

6 IPE TO QUARRY TRANSTION - TR-05
3" = 1'-0"

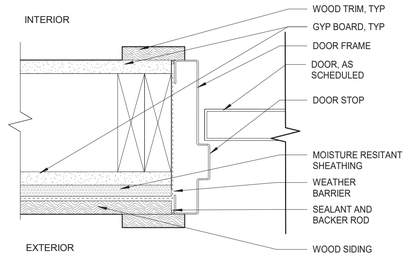

7 HM DOOR JAMB DETAIL - EXTERIOR
3" = 1'-0"

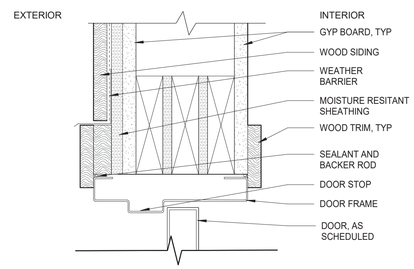

8 HM DOOR HEAD DETAIL - EXTERIOR
3" = 1'-0"

9/23/2022 4:42:34 PM

CONSULTANT INFORMATION

The LiRo Group
3 Aerial Way, Syosset, New York 11791
(516) 938-5476 www.liro.com

CONSULTANT SEAL

REGISTERED ARCHITECT ROBERT D. DOMINA 023255 STATE OF NEW YORK

REVISION NUMBER	DATE	MADE BY	APP'D BY	REVISION
1	09/21/22			BID ADDENDUM #3

RECORD DRAWING CERTIFICATION

☐ AS BUILT – CHANGES AS NOTED ☐ AS BUILT – NO CHANGES

CONTRACTOR
NAME
SIGNATURE
TITLE DATE

PROJECT COORDINATOR
NAME
SIGNATURE
TITLE DATE

WESTCHESTER COUNTY, NEW YORK
DEPARTMENT OF PUBLIC WORKS AND TRANSPORTATION
DIVISION OF ENGINEERING

INFRASTRUCTURE REHABILITATION - PHASE 3
PLAYLAND PARK, RYE, NEW YORK
DRAGON COASTER VENDORS
DOOR AND HARDWARE SCHEDULE

CONTRACT NUMBER	22-523
SHEET NUMBER	DCV-A-95
DWG NO.:	438 of 664
SCALE:	As indicated
DATE:	08/23/2022
DPW FILE NUMBER	1-118-A-1187-1
REV. NO.	1

WINDOW SCHEDULE - DCV									
BUILDING	MARK	WINDOW TYPE	ROUGH WIDTH	ROUGH HEIGHT	SILL HEIGHT	WINDOW MATERIAL	EXTERIOR TRIM	INTERIOR TRIM	REMARKS
DCV	W1	1	4' - 6"	4' - 5 1/2"	3' - 0"	ALUM. BLACK	WOOD, P-1	WOOD, P-13	1/4" TEMPERED GLASS
DCV	W9	4	3' - 0 1/2"	3' - 6"	2' - 10"	ALUM. BLACK	WOOD, P-1	WOOD, P-13	1/4" TEMPERED GLASS
DCV	W10	4	3' - 0 1/2"	3' - 6"	2' - 10"	ALUM. BLACK	WOOD, P-1	WOOD, P-13	1/4" TEMPERED GLASS

PAINTING KEY

KEY	COLOR	MANUFACTURER	REMARKS
P- 1	MYSTICAL POWERS #901	BENJAMIN MOORE	
P- 2	HERITAGE RED #HC-181	BENJAMIN MOORE	
P- 3	NEW YORK STATE OF MIND #805	BENJAMIN MOORE	
P- 4	LAZY SUNDAY #803	BENJAMIN MOORE	
P- 5	DEEP JUNGLE #595	BENJAMIN MOORE	
P- 6	LUCK OF THE IRISH #588	BENJAMIN MOORE	
P- 7	MAJOLICA GREEN #0013	SHERWIN WILLIAMS	
P- 8	ANTELOPE CANYON #125	BENJAMIN MOORE	
P- 9	FORSYTHIA #6907	SHERWIN WILLIAMS	
P- 10	CAPE BLUE #1642	BENJAMIN MOORE	
P- 11	WHITE SNOW #9541	SHERWIN WILLIAMS	
P- 12	TRICORN BLACK #6258	SHERWIN WILLIAMS	
P- 13	READY MIX WHITE	BENJAMIN MOORE	INTERIOR USE ONLY
P- 14	STUCCO PAINT TO MATCH P-1	-	
P- 15	VAN DEUSEN BLUE #HC-156	BENJAMIN MOORE	
P- 16	#RAL9001	-	
P- 17	FLORIDA BEACHES #900	BENJAMIN MOORE	
P- 18	PIRATES COVE PEACH #903	BENJAMIN MOORE	
P- 19	JADITE #6459	SHERWIN WILLIAMS	
P- 20	DECISIVE YELLOW #6902	SHERWIN WILLIAMS	
P- 21	#RAL9010	-	

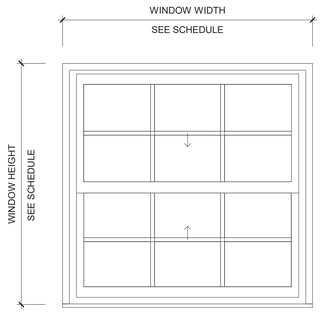

1 TYPE 1 - ELEVATION
3/4" = 1'-0"

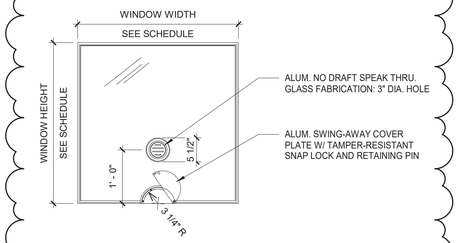

4 TYPE 4 - ELEVATION
3/4" = 1'-0"

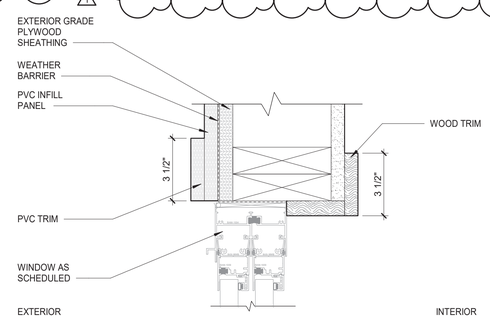

7 DOUBLE HUNG WINDOW JAMB DETAIL
3" = 1'-0"

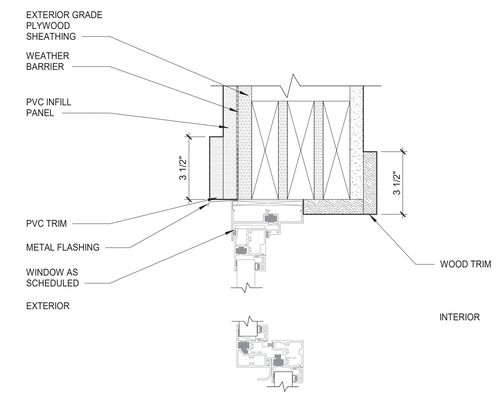

8 DOUBLE HUNG WINDOW HEAD DETAIL
3" = 1'-0"

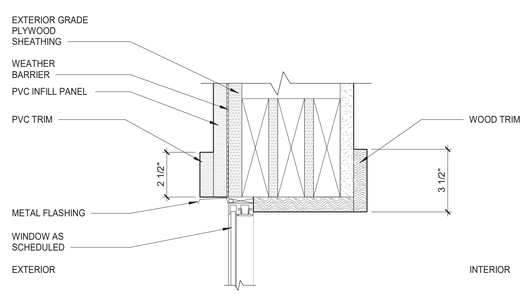

10 FIXED WINDOW HEAD DETAIL - TICKETING
3" = 1'-0"

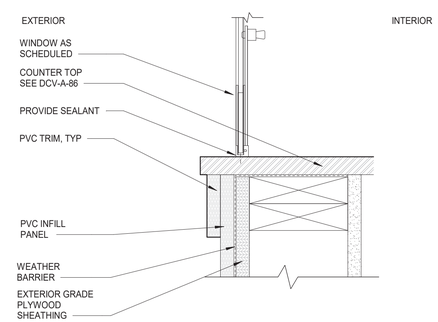

11 FIXED WINDOW SILL DETAIL - TICKETING
3" = 1'-0"

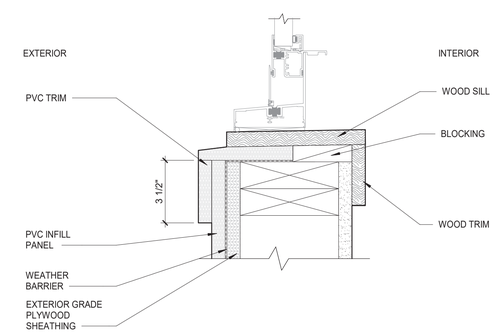

12 DOUBLE HUNG WINDOW SILL DETAIL
3" = 1'-0"

9/23/2022 4:42:35 PM

CONSULTANT INFORMATION
The LiRo Group
3 Aerial Way, Syosset, New York 11791
(516) 938-5476 www.liro.com

CONSULTANT SEAL
REGISTERED ARCHITECT ROBERT D. JOHNSON 023288 STATE OF NEW YORK

REVISION NUMBER	DATE	MADE BY	APP'D BY	REVISION
1	09/21/22			BID ADDENDUM #3

RECORD DRAWING CERTIFICATION
☐ AS BUILT – CHANGES AS NOTED ☐ AS BUILT – NO CHANGES

CONTRACTOR
NAME
SIGNATURE
TITLE DATE

PROJECT COORDINATOR
NAME
SIGNATURE
TITLE DATE

WESTCHESTER COUNTY, NEW YORK
DEPARTMENT OF PUBLIC WORKS AND TRANSPORTATION
DIVISION OF ENGINEERING

INFRASTRUCTURE REHABILITATION - PHASE 3
PLAYLAND PARK, RYE, NEW YORK
DRAGON COASTER VENDORS
WINDOW SCHEDULE AND WINDOW DETAILS

CONTRACT NUMBER 22-523
SHEET NUMBER **DCV-A-96**
DWG NO.: 439 of 664
SCALE: **As indicated**
DATE: **08/23/2022**
DPW FILE NUMBER **1-118-A-1188-1**
REV. NO. **1**

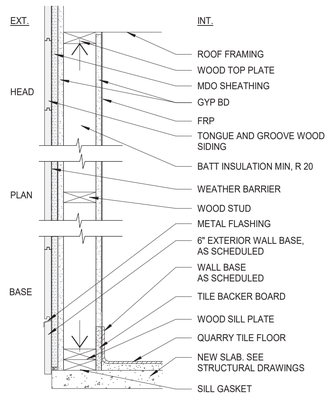

1 **EXTERIOR WALL - 1 HR RATED - BXUV.V346-ANSI/UL 263**

FRP FINISH. 5/8" GWB-X , M-BLOC – MOISTURE RESISTANT, 2X6 WOOD STUD, 5/8" GWB-X, M-BLOC , ¾" FIRE-RETARDANT SHEATHING, 1/8" DRAINAGE TYPE WEATHER BARRIER ,WOOD SIDING

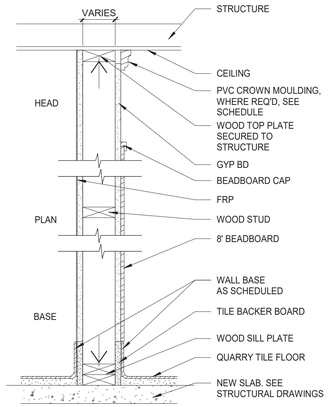

2 **NO RATING**

1 LAYER 5/8" IMPACT & MOLD-RESISTANT GYP BD UP TO 8' A.F.F. AND 5/8" MOLD-RESISTANT GYP BD TO CEILING, BEADBOARD FINISH. 1 LAYER 5/8" IMPACT & MOLD-RESISTANT GYP BD TO CEILING. FRP FINISH

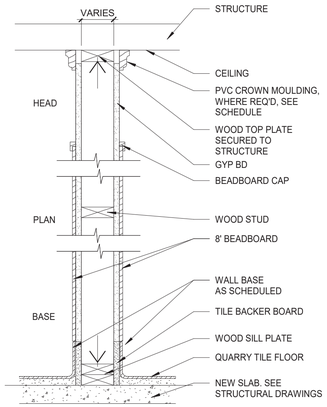

3 **NO RATING**

1 LAYER 5/8" IMPACT & MOLD-RESISTANT GYP BD UP TO 8' A.F.F. AND 5/8" MOLD-RESISTANT GYP BD TO CEILING, ON BOTH SIDES. BEADBOARD FINISH

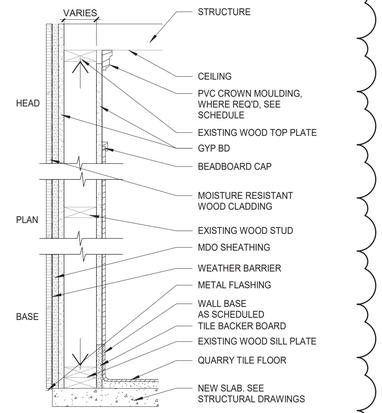

4 **EXISTING - NO RATING**

BEADBOARD FINISH. 5/8" GWB-X , M-BLOC – MOISTURE RESISTANT, EXISTING 2X6 WOOD STUD, 5/8" GWB-X, M-BLOC , ¾" FIRE-RETARDANT SHEATHING, 1/8" DRAINAGE TYPE WEATHER BARRIER ,1 LAYER MOLD/ MOISTURE RESISTANT WOOD CLADDING

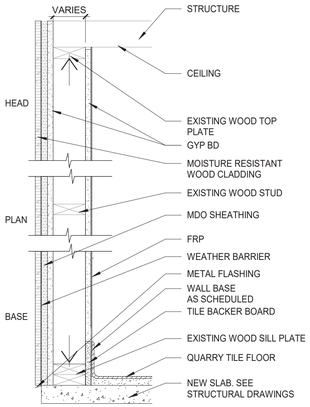

5 **EXISTING - NO RATING**

FRP FINISH. 5/8" GWB-X , M-BLOC – MOISTURE RESISTANT, EXISTING 2X6 WOOD STUD, 5/8" GWB-X, M-BLOC , ¾" FIRE-RETARDANT SHEATHING, 1/8" DRAINAGE TYPE WEATHER BARRIER ,1 LAYER MOLD/ MOISTURE RESISTANT WOOD CLADDING

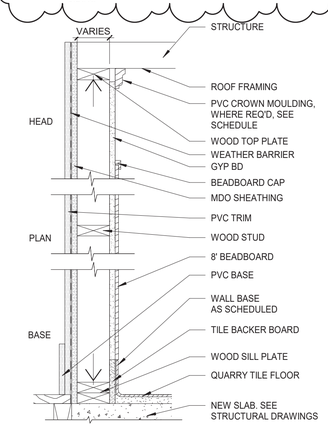

6 **NO RATING**

1 LAYER 5/8" IMPACT & MOLD-RESISTANT GYP BD UP TO 8' A.F.F. AND 5/8" MOLD-RESISTANT GYP BD TO CEILING. FRP FINISH

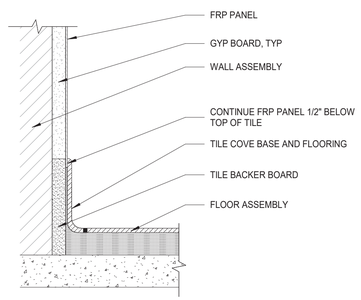

1 TILE BASE
3" = 1'-0"

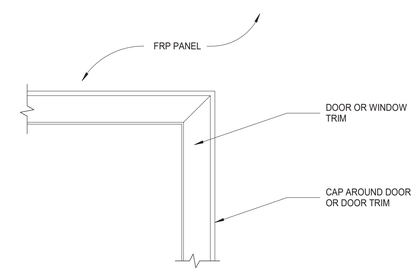

2 DOOR/ WINDOW TRIM DETAIL
3" = 1'-0"

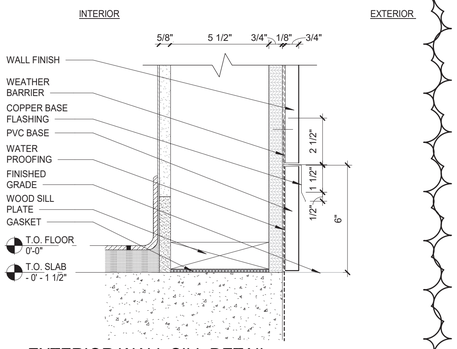

4 EXTERIOR WALL SILL DETAIL
3" = 1'-0"

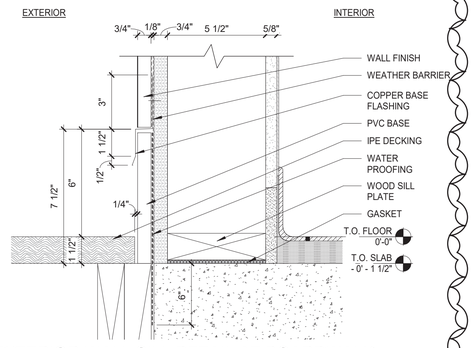

5 EXTERIOR WALL SILL DETAIL AT BOARDWALK
3" = 1'-0"

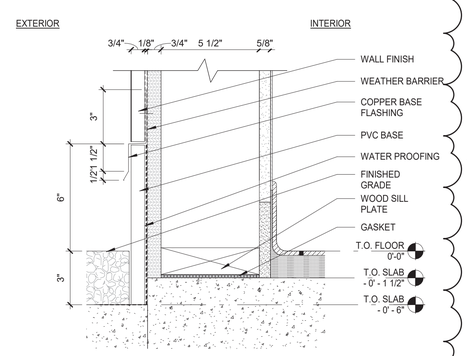

6 EXTERIOR WALL SILL DETAIL AT ASPHALT
3" = 1'-0"

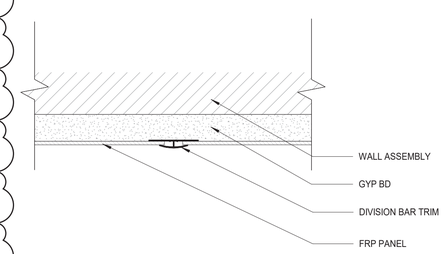

7 VERTICAL SEAM TRIM DETAIL
6" = 1'-0"

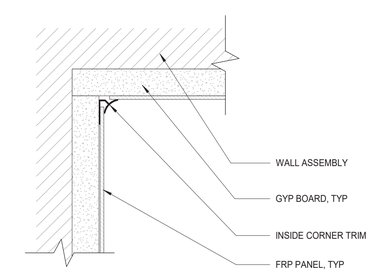

8 FRP PANEL INSIDE CORNER TRIM
6" = 1'-0"

9/23/2022 4:42:35 PM

CONSULTANT INFORMATION

The LiRo Group
3 Aerial Way, Syosset, New York 11791
(516) 938-5476 www.liro.com

CONSULTANT SEAL

REGISTERED ARCHITECT ROBERT D. YOUNG JR. 023280 STATE OF NEW YORK

REVISION NUMBER	DATE	MADE BY	APP'D BY	REVISION
1	09/21/22			BID ADDENDUM #3

RECORD DRAWING CERTIFICATION

☐ AS BUILT – CHANGES AS NOTED ☐ AS BUILT – NO CHANGES

CONTRACTOR
NAME
SIGNATURE
TITLE DATE

PROJECT COORDINATOR
NAME
SIGNATURE
TITLE DATE

WESTCHESTER COUNTY, NEW YORK
DEPARTMENT OF PUBLIC WORKS AND TRANSPORTATION
DIVISION OF ENGINEERING

INFRASTRUCTURE REHABILITATION - PHASE 3
PLAYLAND PARK, RYE, NEW YORK
DRAGON COASTER VENDORS
WALL PARTITION SCHEDULE

CONTRACT NUMBER	22-523
SHEET NUMBER	DCV-A-97
DWG NO.:	440 of 664
SCALE:	As indicated
DATE:	08/23/2022
DPW FILE NUMBER	1-118-A-1189-1
REV. NO.	1

FIRE PROTECTION SAFETY NOTES:

1. SPECIAL PRECAUTION SHALL BE TAKEN BY THE CONTRACTOR SO THAT EQUIPMENT OF THIS APPLICATION AND ITS INSTALLATION WILL NOT AFFECT THE FOLLOWING: EGRESS TO AND FROM THE BUILDING. FIRE SAFETY OR CREATE A FIRE HAZARD. STRUCTURAL SAFETY OF THE BUILDING. ACCUMULATION OF DUST AND DEBRIS. (THE CONTRACTOR SHALL LEAVE THE SITE BROOM CLEANED EACH DAY.)

FIRE PROTECTION GENERAL NOTES:

1. DIMENSIONS, LOCATIONS AND SIZES INDICATED ON THE PLANS AND THE ELEVATION ARE APPROXIMATE AND SHALL BE VERIFIED BY FIELD INSPECTION BY THE CONTRACTOR.

2. SOME EXISTING PIPE AND EQUIPMENT IS SHOWN FOR CLARIFICATION OF THIS CONTRACT, BUT MUST BE PROTECTED BY THE CONTRACTOR.

3. NO WORK SHALL BE INITIATED UNTIL A WORK PERMIT IS OBTAINED BY THE CONTRACTOR AND A SAFETY PLAN IS SUBMITTED AND IS APPROVED.

4. CONTRACTOR IS RESPONSIBLE FOR OBTAINING ALL PERMITS, EQUIPMENT USE PERMITS, ALL INSPECTION APPROVALS, AND LETTER OF COMPLETION FROM THE DEPARTMENT OF BUILDINGS FOR WORK UNDER THIS CONTRACT AS APPLICABLE.

5. ANY EXISTING MATERIALS, PIPING, ETC., NOT INDICATED FOR DEMOLITION WHICH ARE REMOVED BY THE CONTRACTOR IN ORDER TO INSTALL NEW WORK SHALL BE REINSTALLED BY THE CONTRACTOR. IF EXISTING WORK IS DAMAGED IT SHALL BE REPLACED AT THE CONTRACTOR'S EXPENSE. ALL SURFACES OR FINISHES THAT ARE DAMAGED OR OTHERWISE AFFECTED BY WORK OF THIS CONTRACT SHALL BE PATCHED, REPAIRED, PAINTED OR REPLACED TO MATCH THE PRE-EXISTING CONDITION AND THE NEW WORK.

6. CONTRACTOR MAY PROPOSE ALTERNATE ROUTING IN DIFFICULT AREAS WHERE REPLACEMENT IN KIND IS NOT PRACTICAL. ANY AND ALL ALTERNATE ROUTING IS SUBJECT TO PRIOR REVIEW AND APPROVAL BY THE ENGINEER.

7. A FIRE WATCH SHALL BE PROVIDED WHEN SPRINKLER COVERAGE IS IMPACTED TO MAINTAIN BUILDING OPERATIONS OR AS REQUIRED.

FIRE PROTECTION SYMBOL LIST

— — — — — FS DRY— —	NEW DRY SPRINKLER PIPING
— — — — — DRY(E) —	EXISTING TO REMAIN DRY SPRINKLER PIPING
	NEW UPRIGHT SPRINKLER HEAD
E	EXISTING UPRIGHT SPRINKLER HEAD
	NEW CONCEALED PENDENT SPRINKLER HEAD-ORDINARY TEMPERATURE
	NEW SIDEWALL SPRINKLER HEAD-ORDINARY TEMPERATURE
	SPRINKLER DRY PIPE VALVE
	FIRE HOSE CABINET
	SIAMESE CONNECTION
	CHECK VALVE
	CHECK VALVE W/ ALARM
	WATER MOTOR ALARM BELL
	PIPE RISER
	PIPE DROP
	PIPE UP
	POINT OF CONNECTION
	POINT OF DISCONNECTION
	PREACTION 6" BELL
	SOLENOID VALVE
	OS & Y VALVE
#	REVISION SYMBOL
F#	REFER TO SUPPLEMENTAL FIGURE INDICATED BY NUMBER (I.E. F2 REFERS TO FIGURE 2)
XXX / X	EQUIPMENT TAG / EQUIPMENT NUMBER
X / X-XXX	DETAIL TAG/ CALL OUT TAG / FIRE PROTECTION SHEET NUMBER

SHOP DWGS/EQUIPMENT SUBMITTALS

THE CONTRACTOR MUST SUBMIT ANY EQUIPMENT ALTERNATES 2 WEEKS PRIOR TO BIDS DUE FOR REVIEW AND COMMENTS. ALTERNATES MUST BE ACCEPTED BY LIRO ENGINEERS, INC., THE ARCHITECT, AND THE OWNER PRIOR TO INCLUSION IN BID. THE CONTRACTOR IS RESPONSIBLE TO COORDINATE EQUIPMENT ALTERNATES WITH OTHER TRADES AND MAKE ADJUSTMENTS TO THE MECHANICAL SYSTEMS, AS REQUIRED, TO ACCOMMODATE THESE NEW ALTERNATES.

THE CONTRACTOR IS RESPONSIBLE TO SUBMIT ALL OF THE FOLLOWING ITEMS FOR REVIEW/APPROVAL BY NO MORE THAN 3 WEEKS AFTER THE CONTRACTOR'S CONTRACT/BID HAS BEEN AWARDED. ALL SUBMITTALS MUST BE SENT TOGETHER AS A **SINGLE PACKAGE** WITH MANUFACTURER'S SPECIFIC MODELS AND SPECIFICATIONS OUTLINED TO MATCH THE SCHEDULED REQUIREMENTS. EACH SUBMITTAL MUST BE LABELED WITH THE UNIT DESIGNATION USED WITHIN THIS DRAWING SET. IF THE SUBMITTAL PACKAGE IS FOUND TO BE INCOMPLETE UPON RECEIPT, THE PACKAGE WILL BE HELD AND WILL NOT BE REVIEWED UNTIL THE REMAINDER OF THE PACKAGE IS RECEIVED. SIX (6) HARD COPIES OF THE SUBMITTAL PACKAGE MUST BE SENT TO LIRO ENGINEERS, INC. DIGITAL SHOP DRAWING SUBMISSIONS ARE ACCEPTABLE.

SCOPE OF WORK:

1. THE INSTALLATION OF NEW DRY FS EQUIPMENT.

2. PROPOSED FIRE SPRINKLER HEAD LOCATIONS AND PIPING ARE AS NOTED ON PLANS. EXACT PIPING FROM THE FIRE SPRINKLER MAIN TO ALL HEADS IS TO BE COORDINATED AND HYDRAULICALLY CALCULATED BY THE F.S.C. & SUBMITTED TO THE ENGINEER FOR APPROVAL.

NOTE: THIS SCOPE OF WORK DESCRIPTION IS PROVIDED TO GIVE AN OVERALL "MACRO" DESCRIPTION OF THIS PROJECT. F.S.C. IS RESPONSIBLE TO REVIEW ALL ENGINEERING AND ARCHITECTURAL DRAWINGS AND VISIT THE SITE IF NEEDED, PRIOR TO SUBMISSION OF BID.

SPRINKLER HEAD SCHEDULE

	MANUFACTURER	MODEL	DESCRIPTION	K-FACTOR	QUANTITY
●	RELIABLE	F1FR	DRY ORDINARY CONCEALED SPRINKLE HEAD	5.6	8
▶	TYCO	SW-20	DRY ORDINARY SIDEWALL SPRINKLER HEAD	11.2	2

ABBREVIATION

ACV	ALARM CHECK VALVE
B.O.P	BOTTOM OF PIPE
(E)	EXISTING TO REMAIN
F.S.C.	FIRE SPRINKLER CONTRACTOR
P.C	PLUMBING CONTRACTOR
TYP	TYPICAL
W/	WITH
NYS	NEW YORK STATE
U/P	UNDERGROUND PIPING
W	WATER

DRAWING NOTATIONS

	DRAWING NOTE TAB
	RISER DESIGNATION
	POINT OF CONNECTION
	POINT OF DISCONNECTION

DESIGN CRITERIA

1. AREA OF APPLICATION = 1950 SQ. FT

2. OCCUPANCY CLASSIFICATION = ORDINARY HAZARD GROUP 1

3. MAXIMUM COVERAGE PER SPRINKLER HEAD = 130 SQ. FT

4. DESIGN DENSITY = 0.15 GPM/SQ. FT

5. "K" FACTOR OF SPRINKLER HEADS = 5.6

6. DESIGN CRITERIA REQUIREMENTS BASED ON:
   - 2020 BUILDING CODE OF NEW YORK STATE
   - 2016 NFPA 13

ORDINARY HAZARD PIPE SCHEDULE

STEEL		COPPER	
1IN.	2 SPRINKLERS	1IN.	2 SPRINKLERS
1 1/4 IN.	3 SPRINKLERS	1 1/4 IN.	3 SPRINKLERS
1 1/2IN.	5 SPRINKLERS	1 1/2IN.	5 SPRINKLERS
2 IN.	10 SPRINKLERS	2 IN.	12 SPRINKLERS
2 1/2 IN.	20 SPRINKLERS	2 1/2 IN.	25 SPRINKLERS
3 IN.	40 SPRINKLERS	3 IN.	45 SPRINKLERS
3 1/2 IN.	65 SPRINKLERS	3 1/2 IN.	75 SPRINKLERS
4 IN.	100 SPRINKLERS	4 IN.	115 SPRINKLERS
5 IN.	160 SPRINKLERS	5 IN.	180 SPRINKLERS
6 IN.	275 SPRINKLERS	6 IN.	300 SPRINKLERS
8 IN.	SEE SECTION 8.2	8 IN.	SEE SECTION 8.2

FOR SI UNITS, 1 IN. = 25.4 MM.

MAX DISTANCE BETWEEN HANGERS (FT.-IN.)

	NOMINAL PIPE SIZE (IN.)											
	3/4	1	1 1/4	1 1/2	2	2 1/2	3	3 1/2	4	5	6	8
STEEL PIPE EXCEPT THREADED LIGHTWALL	N/A	12-0	12-0	15-0	15-0	15-0	15-0	15-0	15-0	15-0	15-0	15-0
THREADED LIGHTWALL STEEL PIPE	N/A	12-0	12-0	12-0	12-0	12-0	12-0	N/A	N/A	N/A	N/A	N/A
COPPER TUBE	8-0	8-0	10-0	10-0	12-0	12-0	12-0	15-0	15-0	15-0	15-0	15-0

CODE REFERENCE

2020 NEW YORK STATE BUILDING CODE
2016 NFPA 13

FIRE PROTECTION NOTES

1. THE DRAWINGS SHOW THE LAYOUT OF THE SYSTEM AND INDICATE THE APPROXIMATE LOCATIONS OF EQUIPMENT AND PIPING. CONTRACTOR IS CAUTIONED NOT TO SCALE THE DRAWINGS. THE PIPING SHALL BE RUN APPROXIMATELY IN THE AREAS AS INDICATED ON THE DRAWINGS, [HOWEVER, TO THE ARRANGEMENT OF THE PIPING SYSTEMS AS MAY BE REFERENCED WITH WORK OF OTHER TRADES]. CONTRACTOR SHALL REVIEW AND COORDINATE WITH STRUCTURAL, ELECTRICAL AND MECHANICAL DRAWINGS, PARTITIONS, STRUCTURAL MEMBERS, ETC. ARE DESIGNED TO BE FURRED OR CLOSED IN AND TO INCLUDE ROUGH-IN PIPING. CONTRACTOR SHALL FURNISH ALL OFFSETS, ADDITIONAL FITTINGS, ETC. WHETHER SHOWN ON DRAWINGS OR NOT, AS REQUIRED TO MEET INSTALLATION CONDITIONS.

2. CONTRACTOR IS TO COMPLY WITH LATEST NFPA AND N.Y.S. CODES, AND COORDINATE HIS WORK WITH OTHER TRADES AND MAKE NECESSARY ADJUSTMENTS.

3. CONTRACTOR IS TO PREPARE SHOP DRAWINGS FOR ENGINEERS REVIEW AFTER MAKING A COMPLETE FIELD SURVEY.

4. CONTRACTOR IS TO REPORT ANY CONDITION REQUIRING CHANGES FROM PLANS TO ENGINEER PRIOR TO STARTING WORK.

5. BRANCH LINES AND MAINS (1 1/2" OR LESS) - SCHEDULE 40 FM APPROVED

6. BRANCH LINES AND MAINS (2" OR LARGER) - THINWALL (THICKNESS LESS THEN SCHEDULE 40 MORE THEN SCHEDULE 10 & FM APPROVED)

7. CONTRACTOR IS TO PERFORM A HYDROSTATIC TEST FOR 2 HRS. @ 200 PSI WITH NO LEAKAGE AND PROVIDE A TEST CERTIFICATE TO ENGINEER

8. CONTRACTOR IS TO EMPLOY EXPERIENCED WORKMEN WHO ARE TO FAMILIARIZE THEMSELVES WITH THE BUILDING AND OBSERVE SAFETY REQUIREMENTS.

9. CONTRACTOR TO ADJUST HEAD LOCATION TO COORDINATE WITH LIGHTS, DUCTS, ETC.

10. PERMIT FROM LOCAL AUTHORITY, TO BE OBTAINED BY CONTRACTOR.

11. ALL WORK TO BE APPROVED BY OWNERS ENGINEER, STATE AUTHORITIES HAVING JURISDICTION AND MUNICIPAL FIRE, PLUMBING, BUILDING AND WATER DEPARTMENTS.

12. U.L. AND/OR FM APPROVED EQUIPMENT TO BE USED.

13. WORK TO BE IN ACCORDANCE WITH MUNICIPAL WATER DEPT. RULES

14. SYSTEM IS TO BE MAINTAINED AND TESTED BY THE OWNER OR HIS AGENT IN ACCORDANCE WITH APPLICABLE LOCAL AND STATE CODES AND IN CONFORMANCE WITH NFPA 13A, LATEST EDITION.

15. IF BUILDING OCCUPANCY OR CONSTRUCTION CHANGES, THE SPRINKLER SYSTEM IS TO BE UPDATED ACCORDINGLY BY THE OWNER OR HIS AGENT.

16. CONTRACTOR IS TO NEATLY CUT AND PATCH IN A FIRST CLASS WORKMANLIKE MANNER, ALL HOLES AND PENETRATIONS IN WALLS, CEILINGS, FLOORS, PARTITIONS, ETC.

17. THE ENGINEER IS NOT RETAINED FOR SUPERVISION.

18. THE INSTALLATION OF THIS SYSTEM WILL REQUIRE THE CLOSING OF ONE OR MORE FIRE PROTECTION CONTROL VALVES. THESE VALVE CLOSURES SHOULD BE CLOSELY COORDINATED WITH THE OWNERS WHO SHOULD CONTACT THE LOCAL FIRE DEPARTMENT, INSURANCE INTERESTS, ETC. PRIOR TO VALVE CLOSURES.

19. ACTUAL DESIGN DENSITY MAY EXCEED STANDARDS, HOWEVER, IT IS A MINIMUM TO BE USED BY THE CONTRACTOR.

20. ALL ALARMS RELATING TO THE SPRINKLER SYSTEM SHOULD BE ACTIVATED UPON PLACING THE SPRINKLER SYSTEM IN SERVICE.

21. THE INSTALLATION COMPONENTS, SIZING, SPACING, MATERIALS LOCATION CLEARANCES, POSITION AND TYPE OF SYSTEM SHALL CONFORM TO NFPA 13 AND NYS UNIFORM FIRE PREVENTION BUILDING CODE LATEST EDITION.

22. SPRINKLERS SHALL BE PROTECTED AGAINST FREEZING AND INJURY AS PER NFPA CODE.

23. INSPECTION AND TESTS OF SPRINKLER SYSTEM SHALL BE CONDUCTED AS SPECIFIED IN NFPA CODE.

24. WATER SUPPLY TEST PIPES AND GAUGES SHALL BE PROVIDED AS SPECIFIED IN CHAPTER 2-9 OF NPPA 13.

25. PIPING SPECIFICATIONS, PIPE SCHEDULES, SYSTEM TEST PIPES, PROTECTION AGAINST CORROSION, DAMAGE FITTINGS, VALVES, HANGERS, SPRINKLERS, GUARDS AND SHIELDS SHALL BE IN ACCORDANCE WITH CHAPTER 3 AND CHAPTER 8 OF NFPA 13, LATEST EDITION. PIPING SHALL BE PAINTED TO PREVENT CORROSION.

26. STOCK OF EXTRA SPRINKLERS WILL BE FURNISHED AS PER CHAPTER 3 OF NFPA 13 (REQUIRED FOR EACH TEMPERATURE RATING).

27. SPRINKLER ALARMS WILL BE IN ACCORDANCE WITH NFPA 13.

28. SPACING, LOCATION AND POSITION OF SPRINKLERS SHALL BE IN ACCORDANCE WITH CHAPTER 4 OF NFPA 13.

29. ALL PIPING PASSING THROUGH WALLS SHALL COMPLY WITH NFPA FOR FIRE PROOFING.

30. DISTANCE OF SPRINKLERS FROM HEAT SOURCES SHALL BE IN ACCORDANCE WITH TABLE 3-16.6.3 OF NFPA 13.

31. PROVIDE WATER SUPPLY LETTER WITH FLOW TEST DATA.

32. ALL PIPES PASSING THROUGH FOUNDATION WALLS TO BE PROTECTED.

33. ALL VALVES SHALL BE IDENTIFIED AS REQUIRED BY NFPA 13.

34. DRAINAGE TO CONFORM TO CHAPTER 3-11 OF NFPA 13.

35. A ONE PIECE REDUCING FITTING OF GOOD DESIGN SHOULD BE USED WHEREVER A CHANGE IS MADE IN THE SIZE OF PIPE AS PER SECTION 3-12.2.7 OF NFPA 13.

36. ALL VALVES ON CONNECTIONS TO WATER SUPPLIES AND IN SUPPLY TO SPRINKLERS SHALL BE APPROVED O.S. &Y. OR APPROVED INDICATOR TYPE WITH TAMPER SWITCHES.

37. DRAIN VALVES AND TEST VALVES SHALL BE APPROVED TYPE AS PER SECTION 3-14.1.2 OF NFPA 13.

38. HANGERS SHALL BE OF A TYPE APPROVED FOR USE WITH THE PIPE OR TUBE INVOLVED, SPRINKLER PIPING SHOULD BE SUPPORTED BY ADJUSTABLE HANGERS PER NFPA 13, SECTION 3-15.

39. PROVISIONS SHOULD BE MADE TO FACILITATE FLUSHING SYSTEM PIPING BY PROVIDING FLUSHING CONNECTIONS CONSISTING OF A CAPPED NIPPLE 4" LONG ON THE END OF THE CROSS MAIN, AS PER SECTION 3- 8.2 OF NFPA 13.

40. SPRINKLER SHALL BE AN APPROVED TYPE AS PER SECTION 3-16 OF NFPA 13.

41. TEMPERATURE RATING SHALL COMPLY WITH SEC. 3-16.6 OF NFPA 13.

42. CLEARANCES BETWEEN SPRINKLERS AND STORAGE OR PARTITIONS AS PER NFPA 13, SECTION 4-2.5

43. SPACING AND LOCATION OF SPRINKLER SHALL COMPLY WITH CHAPTER 4 NFPA 13.

44. CONTRACTOR TO COORDINATE HIS WORK WITH OTHER TRADES.

45. ONLY EXPERIENCED SPRINKLER MECHANICS TO WORK ON THE SYSTEM.

46. ALL PIPING TO BE A MINIMUM OF 1" UNLESS OTHERWISE NOTED.

47. PROVIDE SHOP DRAWINGS WITH HYDRAULIC CALCULATIONS FOR REVIEW TO LOCAL FIRE MARSHALL AND INSURANCE UNDERWRITER AND ENGINEER FOR APPROVAL PRIOR TO INSTALLATION.

48. ALL FIRE PROTECTION EQUIPMENT SHALL BE INSTALLED PER MANUFACTURER'S REQUIREMENTS/SPECIFICATIONS.

49. ALL FIRE PROTECTION EQUIPMENT SHALL BE MOUNTED ON MINIMUM 6" HIGH CONCRETE PAD UNLESS OTHERWISE NOTED (PAVER AND CINDER BLOCK IS NOT ACCEPTABLE).

50. PERMIT IS REQUIRED PRIOR TO INSTALLATION, TO INCLUDE SIGNED AND SEALED SHOP DRAWINGS, HYDRAULIC CALCULATION, SHOP DRAWINGS, MANUFACTURERS INFORMATION ON HEADS AND APPLIANCES, COMPLIANCE WITH NFPA 13 AND SECTION 903 2020 NYSBC/FC.

FIRE PROTECTION DRAWING LIST

SHEET NO.	SHEET NAME	REVISON NO.	REVISION DATE
DCV-FP-01	FIRE PROTECTION NOTES, SYMBOLS, ABBREVIATIONS, AND DRAWING LIST	0	-
DCV-FP-11	FIRE PROTECTION GROUND FLOOR DEMOLITION RCP	0	-
DCV-FP-21	FIRE PROTECTION GROUND FLOOR CONSTRUCTION RCP	0	-
DCV-FP-81	FIRE PROTECTION DETAILS	0	-

CONSULTANT INFORMATION

LiRo Engineers, Inc.
A LiRo Group Company
Syosset, N.Y. 516-214-8157[T]

CONSULTANT SEAL

STATE OF NEW YORK · FRANK F. ULISSE · LICENSED PROFESSIONAL ENGINEER · No. 090117

REVISION NUMBER	DATE	MADE BY	APP'D BY	REVISION
1	09/21/22			BID ADDENDUM # 3

RECORD DRAWING CERTIFICATION

☐ AS BUILT – CHANGES AS NOTED ☐ AS BUILT – NO CHANGES

CONTRACTOR
NAME
SIGNATURE
TITLE DATE

PROJECT COORDINATOR
NAME
SIGNATURE
TITLE DATE

WESTCHESTER COUNTY, NEW YORK
DEPARTMENT OF PUBLIC WORKS AND TRANSPORTATION
DIVISION OF ENGINEERING

INFRASTRUCTURE REHABILITATION - PHASE 3
PLAYLAND PARK, RYE, NEW YORK
DRAGON COASTER VENDORS
FIRE PROTECTION NOTES, SYMBOLS, ABBREVIATIONS & DWG LIST

CONTRACT NUMBER 22-523
SHEET NUMBER **DCV-FP-01**
DWG NO.: 460 of 664
SCALE: **AS INDICATED**
DATE: 08/23/2022
DPW FILE NUMBER **1-118-FP-1209-1**
REV. NO. **1**

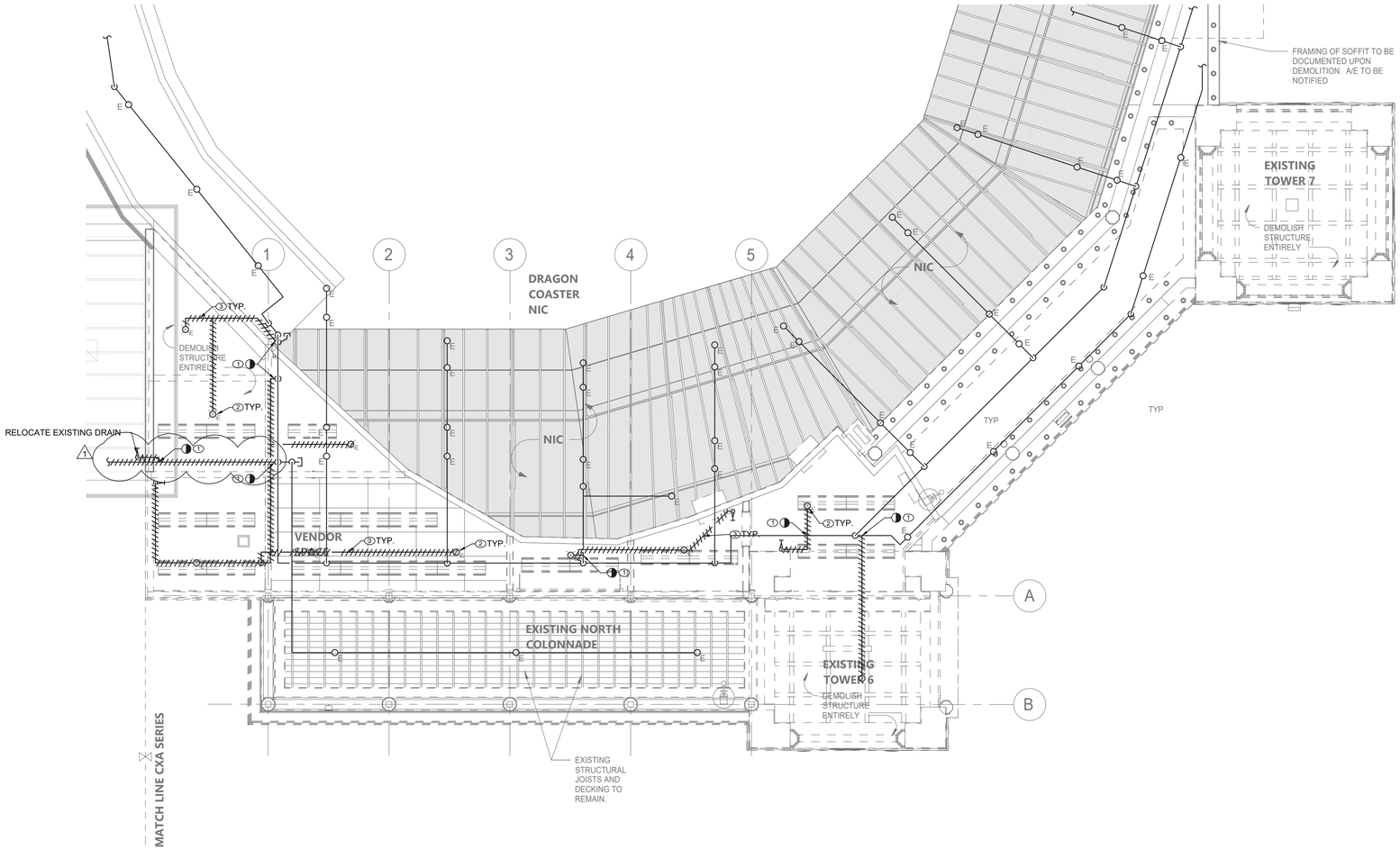

FIRE PROTECTION GROUND FLOOR DEMOLITION RCP

SCALE: 3/16" = 1'-0

SPRINKLER DEMOLITION NOTES:

1. CUT AND TEMPORARY CAP EXISTING DRY SPRINKLER PIPE FOR FUTURE CONNECTION.
2. DEMOLISH EXISTING SPRINKLER HEADS WITHIN THE DCV BUILDING AS INDICATED.
3. DEMOLISH EXISTING DRY SPRINKLER PIPING WITHIN THE DCV BUILDING AND DRAIN VALVES AS INDICATED. FIRE SERVICE PIPING, DISTRIBUTION PIPING TO DRAGON COASTER AND ACCESSORIES TO REMAIN

GENERAL NOTES:

1. COORDINATE WITH FACILITY PRIOR TO SHUTDOWN OF FIRE PROTECTION SYSTEM FOR ANY DEMOLITION AND CONSTRUCTION WORK.

2. CONTRACTOR SHALL PROVIDE FIRE WATCH AS NEEDED FOR BUILDINGS WHERE SPRINKLER COVERAGE IS IMPACTED.

3. CONTRACTOR TO COORDINATE WITH FACILITY WHEN WORKING AROUND OR ABOVE THE RIDE COMPONENTS, AND PROVIDE ALL NECESSARY MEASURES TO PROTECT THESE COMPONENTS PER THE REQUIREMENTS OF THE FACILITY.

4. CONTRACTOR SHALL PROVIDE PROTECTION OF EXISTING PIPING AND SPRINKLERS DURING RENOVATION WORK FOR DCV BUILDING. PROVIDE TEMPORARY SUPPORT AS NECESSARY TO ACCOMMODATE WORK PERFORMED BY OTHER TRADES.

CONSULTANT INFORMATION

LiRo Engineers, Inc.
A LiRo Group Company
Syosset, N.Y. 516-214-8157[T]

CONSULTANT SEAL

STATE OF NEW YORK · FRANK F. DUSSE · 090111 · LICENSED PROFESSIONAL ENGINEER

REVISION NUMBER	DATE	MADE BY	APP'D BY	REVISION
1	09/21/22			BID ADDENDUM # 3

RECORD DRAWING CERTIFICATION

☐ AS BUILT – CHANGES AS NOTED ☐ AS BUILT – NO CHANGES

CONTRACTOR: NAME / SIGNATURE / TITLE / DATE

PROJECT COORDINATOR: NAME / SIGNATURE / TITLE / DATE

WESTCHESTER COUNTY, NEW YORK
DEPARTMENT OF PUBLIC WORKS AND TRANSPORTATION
DIVISION OF ENGINEERING

INFRASTRUCTURE REHABILITATION - PHASE 3
PLAYLAND PARK, RYE, NEW YORK
DRAGON COASTER VENDORS
FIRE PROTECTION FIRST FLOOR DEMOLITION RCP

CONTRACT NUMBER	22-523
SHEET NUMBER	DCV-FP-11
DWG NO.:	461 of 664
SCALE:	AS INDICATED
DATE:	08/23/2022
DPW FILE NUMBER	1-118-FP-1210-1
REV. NO.	1

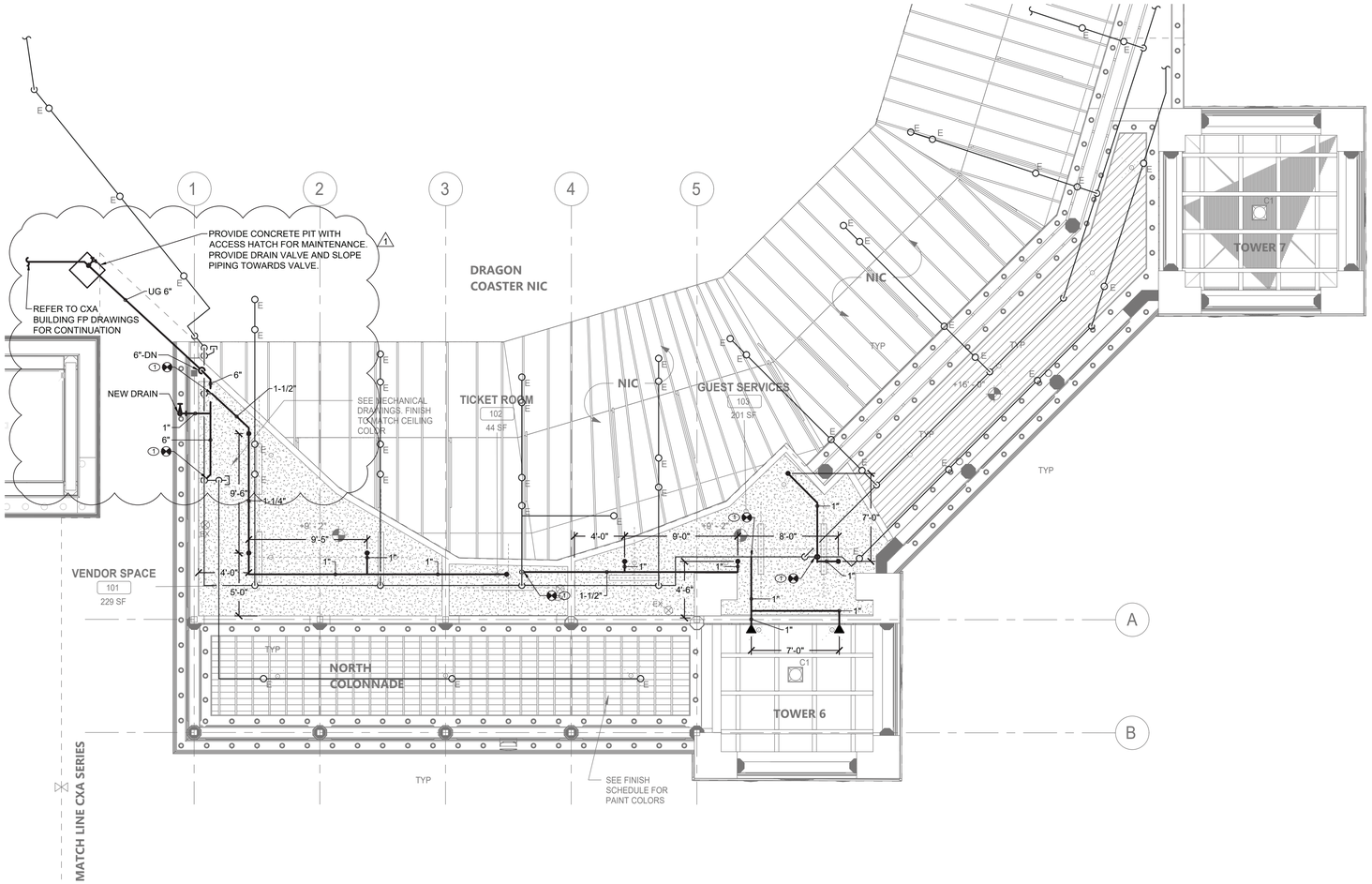

FIRE PROTECTION GROUND FLOOR CONSTRUCTION RCP

SCALE: 3/16" = 1'-0

FIRE PROTECTION CONSTRUCTION NOTES:

1. RECONNECT EXISTING DRY SPRINKLER PIPE WITH NEW.

GENERAL NOTES:

1. ALL DISTRIBUTION PIPING, SHALL BE PAINTED AS DIRECTED BY ARCHITECT. REFER TO SPECIFICATION FOR PAINT TYPE AND APPLICATION PROCEDURE.
2. COORDINATE WITH FACILITY PRIOR TO SHUTDOWN OF FIRE PROTECTION SYSTEM FOR ANY DEMOLITION AND CONSTRUCTION WORK.
3. CONTRACTOR SHALL PROVIDE FIRE WATCH AS NEEDED FOR ALL AFFECTED BUILDINGS WHILE SPRINKLER COVERAGE IS IMPACTED.
4. CONTRACTOR TO COORDINATE WITH FACILITY WHEN WORKING AROUND OR ABOVE THE RIDE COMPONENTS, AND PROVIDE ALL NECESSARY MEASURES TO PROTECT THESE COMPONENTS PER THE REQUIREMENTS OF THE FACILITY.
5. UPON COMPLETION, SYSTEM SHALL BE TESTED FOR PROPER OPERATION.
6. CONTRACTOR SHALL PROVIDE PROTECTION OF EXISTING PIPING AND SPRINKLERS DURING RENOVATION WORK FOR DCV BUILDING. PROVIDE TEMPORARY SUPPORT AS NECESSARY TO ACCOMMODATE WORK PERFORMED BY OTHER TRADES.

CONSULTANT INFORMATION

LiRo Engineers, Inc.
A LiRo Group Company
Syosset, N.Y. 516-214-8157[T]

CONSULTANT SEAL

STATE OF NEW YORK · FRANK F. ULISSE · LICENSED PROFESSIONAL ENGINEER · 090111

REVISION NUMBER	DATE	MADE BY	APP'D BY	REVISION
1	09/21/22			BID ADDENDUM # 3

RECORD DRAWING CERTIFICATION

☐ AS BUILT – CHANGES AS NOTED ☐ AS BUILT – NO CHANGES

CONTRACTOR
NAME
SIGNATURE
TITLE DATE

PROJECT COORDINATOR
NAME
SIGNATURE
TITLE DATE

WESTCHESTER COUNTY, NEW YORK
DEPARTMENT OF PUBLIC WORKS AND TRANSPORTATION
DIVISION OF ENGINEERING

INFRASTRUCTURE REHABILITATION - PHASE 3
PLAYLAND PARK, RYE, NEW YORK
DRAGON COASTER VENDORS
FIRE PROTECTION FIRST FLOOR CONSTRUCTION RCP

CONTRACT NUMBER 22-523
SHEET NUMBER DCV-FP-21
DWG NO.: 462 of 664
SCALE: AS INDICATED
DATE: 08/23/2022
DPW FILE NUMBER 1-118-FP-1211-1
REV. NO. 1

PLUMBING SYMBOL LIST

IDENTIFIER	DESCRIPTION
——— — ——CW	DOMESTIC COLD WATER
——— W ———	WASTE PIPING (ABOVE SLAB)
— — — - W - — — — —	WASTE PIPING (UNDER SLAB)
——— S ———	SANITARY PIPING (ABOVE SLAB)
— — — - S - — — — —	SANITARY PIPING (UNDER SLAB)
--------- V -----------	SANITARY VENT PIPING
◕	FIELD CONNECT
◐	FIELD DISCONNECT
(F#)	REFER TO SUPPLEMENTAL FIGURE INDICATED BY NUMBER (I.E. F2 REFERS TO FIGURE 2)
XXX / XX	EQUIPMENT TAG EQUIPMENT NUMBER
XXX / X-XXX	DETAIL TAG/CALL OUT TAG PLUMBING SHEET NUMBER

PIPING ELEMENTS/VALVING

- BACKFLOW PREVENTER (DOUBLE CHECK VALVE ASSEMBLY)
- BALL VALVE
- CAP ON END OF PIPE
- CO — CLEANOUT
- FD — FLOOR DRAIN
- GATE VALVE
- HB — HOSE BIBB
- VALVE IN VALVE BOX
- PIPE DROPPING DOWN
- PIPE RISING UP
- TEE OUTLET DOWN
- TEE OUTLET UP
- VALVE IN RISE OR DROP
- NFHB — NON FREEZE HOSE BIBB IN BOX W/VACUUM BREAKER

SCOPE OF WORK

PLUMBING SCOPE OF WORK INCLUDES, BUT IS NOT LIMITED TO:

1. REMOVAL OF EXISTING WATER PIPING AND KITCHEN EQUIPMENT.

2. THE INSTALLATION OF NEW PLUMBING FIXTURES AND ALL ASSOCIATED PIPING AND ACCESSORIES.

3. THE INSTALLATION OF NEW SANITARY AND DOMESTIC WATER FUTURE CONNECTIONS.

NOTE: THIS SCOPE OF WORK DESCRIPTION IS PROVIDED TO GIVE AN OVERALL "MACRO" DESCRIPTION OF THIS PROJECT .P.C. IS RESPONSIBLE TO REVIEW ALL ENGINEERING & ARCHITECTURAL DRAWINGS & VISIT THE SITE IF NEEDED, PRIOR TO SUBMISSION OF BID.

CODE REFERENCE

2020 NEW YORK STATE BUILDING CODE
2020 NEW YORK STATE MECHANICAL CODE
2020 NEW YORK STATE PLUMBING CODE
2020 NEW YORK STATE ENERGY CONSERVATION CODE

SECTION 704
DRAINAGE PIPING INSTALLATION

704.1 SLOPE OF HORIZONTAL DRAINAGE PIPING.

HORIZONTAL DRAINAGE PIPING SHALL BE INSTALLED IN UNIFORM ALIGNMENT AT UNIFORM SLOPES. THE MINIMUM SLOPE OF HORIZONTAL DRAINAGE PIPE SHALL BE IN ACCORDANCE WITH TABLE 704.1.

TABLE 704.1
SLOPE OF HORIZONTAL DRAINAGE PIPE

SIZE (INCHES)	MINIMUM SLOPE (INCH PER FOOT)
2 1/2 OR LESS	1/4
3 TO 6	1/8
8 OR LARGER	1/16

LEED NOTES

1. ALL ADHESIVES, SEALANTS, PAINTS & COATINGS APPLIED TO THE INTERIOR OF THE BUILDING (WITHIN THE WEATHER PROOFING SYSTEM, INCLUDING WALL CAVITIES) MUST NOT EXCEED THE LEED VOC LIMITS. PROVIDE A VOC SUBMITTAL AND MSDS FOR ALL ADHESIVES, SEALANTS, PAINTS AND COATINGS TO BE APPLIED.

PLUMBING GENERAL NOTES:

1. ALL PLUMBING WORK UNDER THIS CONTRACT SHALL CONFORM TO THE LATEST EDITION OF THE PLUMBING CODE OF NEW YORK STATE (PC-NYS), THE NEW YORK STATE ENERGY CODE, AND THE REQUIREMENTS OF THE UTILITY AND THE LOCAL WATER COMPANY.
2. ALL MATERIALS SHALL BE NEW UNLESS NOTED OTHERWISE.
3. THE PLUMBING CONTRACTOR SHALL ASSUME RESPONSIBILITY FOR ALL LABOR AND MATERIALS SUPPLIED AND INSTALLED UNDER THIS CONTRACT AND SHALL GUARANTEE THE WORK PERFORMED UNDER THIS CONTRACT FOR A PERIOD OF ONE (1) YEAR FROM THE DATE OF ACCEPTANCE OF THIS WORK.
4. PLUMBING CONTRACTOR SHALL CONSULT WITH, COOPERATE AND COORDINATE WITH THE GENERAL CONTRACTOR, MECHANICAL CONTRACTOR, SPRINKLER CONTRACTOR, ELECTRICAL CONTRACTOR, ETC. IN ORDER TO MINIMIZE INTERFERENCES BETWEEN TRADES DURING PERFORMANCE OF THIS WORK.
5. THE PLUMBING CONTRACTOR SHALL PREPARE AND FILE ALL REQUIRED PLANS AND PERMITS WITH THE LOCAL AUTHORITIES. PC SHALL PAY THE FILING FEES AS REQUIRED. PC SHALL OBTAIN ALL APPROVALS AND SHALL PAY FOR ALL WORK PERMITS, INSPECTIONS AND SIGN-OFFS AS REQUIRED TO EXECUTE THIS WORK IN A MANNER IN CONFORMANCE WITH THE CODES AND AUTHORITIES HAVING JURISDICTION.
6. THE PLUMBING CONTRACTOR SHALL PERFORM ALL TESTS AND ARRANGE FOR ALL INSPECTIONS FOR WORK UNDER HIS CONTRACT AS REQUIRED BY LAW AND SHALL SUPPLY ALL CERTIFICATES OF INSURANCE AS REQUIRED BY THE LAW AND THE OWNER. REFER TO SECTION 107 (INSPECTIONS) OF THE PC-NYS.
7. THE PLUMBING CONTRACTOR SHALL MAKE ALL FINAL CONNECTIONS TO ALL PLUMBING EQUIPMENT REGARDLESS WHETHER ILLUSTRATED HEREIN WITHOUT ANY ADDITIONAL COSTS TO THE OWNER.
8. PLUMBING CONTRACTOR SHALL VISIT THE SITE & BECOME FAMILIAR WITH THE EXISTING CONDITIONS, INCLUDING THE SIZE OF CONNECTIONS, ROUGHING DIMENSIONS, ETC. BEFORE SUBMITTING A QUOTATION FOR THE WORK.
9. PLUMBING CONTRACTOR SHALL PERFORM ALL CUTTING, EXCAVATION, BACKFILLING, ROUGH & FINISH PATCHING AS PER THE SPECIFICATIONS AS REQUIRED FOR THE INSTALLATION OF THE WORK, UNLESS NOTED OTHERWISE.
10. ALL CONNECTIONS TO NEW AND/OR EXISTING EQUIPMENT SHALL BE SIZED AND INSTALLED IN ACCORDANCE WITH THE MANUFACTURER'S INSTRUCTIONS.
11. IT IS THE INTENT OF THIS CONTRACT THAT THE COMPLETED WORK BE FULLY OPERATIONAL.
12. ALL PIPE HANGERS AND SUPPORTS SHALL BE INSTALLED AT INTERVALS AND BE FABRICATED OF MATERIALS AS REQUIRED BY THE PC-NYS.
13. ALL NEW PLUMBING FIXTURES SHALL BE INSTALLED WITH ANGLE STOP VALVES IN THE SUPPLY LINES SERVING THE FIXTURE.
14. ALL NEW EXPOSED WATER AND WASTE PIPING SERVING THE FIXTURES SHALL BE CHROME PLATED AND SHALL HAVE CHROME PLATED ESCUTCHEONS RIGIDLY ATTACHED TO THE PIPING AT THE POINT OF WALL OR FLOOR PENETRATIONS.
15. PLUMBING CONTRACTOR SHALL SUBMIT SHOP DRAWINGS FOR ALL NEW PLUMBING FIXTURES AND EQUIPMENT TO BE SUPPLIED AND INSTALLED UNDER THIS CONTRACT FOR APPROVAL BEFORE INSTALLATION OF SAME.
16. WATERPROOF PIPE SLEEVES SHALL BE INSTALLED AT ALL PENETRATIONS THROUGH EXTERIOR WALLS. PIPE SLEEVES SHALL BE INSTALLED AT ALL WALL PENETRATIONS THROUGH INTERIOR WALLS AND FLOORS.
17. WATER HAMMER ELIMINATORS (APPROVED - FIELD FABRICATED OR MANUFACTURED) SHALL BE INSTALLED AT ALL RUN OUTS IN HOT AND/OR COLD WATER LINES SERVING TOILET ROOMS AND OTHER AREAS WHICH INCORPORATE "RAPID - ACTION" VALVES SUCH AS FLUSHOMETERS, SOLENOID VALVES, ETC.
18. ALL PIPING SHALL BE TESTED AT A MINIMUM PRESSURE OF 1-1/2 TIMES THE MAXIMUM OPERATING PRESSURE UNLESS OTHERWISE NOTED ON THE DOCUMENTS OR THE PLUMBING CODE AND IN ACCORDANCE WITH THE UTILITY REQUIREMENTS.
19. ALL REMOVALS PERFORMED UNDER THIS CONTRACT SHALL INCLUDE REMOVAL OF ALL DEBRIS AND DISPOSAL AT AN APPROPRIATE SITE.
20. ALL LAVATORIES DESIGNED FOR USE BY PERSONS CONFINED TO WHEELCHAIRS SHALL HAVE THE HOT & COLD WATER SERVICES, AS WELL AS THE TRAP, RECESSED & INSULATED IN ACCORDANCE WITH ADA REQUIREMENTS.
21. REFER TO THE ARCHITECTURAL PLANS FOR ALL STRUCTURAL DIMENSIONS.
22. ALL WORK TO BE COORDINATED WITH OTHER TRADES.
23. ALL PIPING PENETRATIONS TO BE SEALED AROUND WITH "NELSON" FIRE SEAL.
24. ALL WATER SERVICE PIPING WITHIN THE BUILDING IS TO BE INSULATED IN ACCORDANCE WITH ALL NEW YORK STATE PLUMBING CODE (NYS-PC) AND NYS ENERGY CODES.
25. ALL PLUMBING FIXTURES TO BE INSTALLED AS PER FACTORY RECOMMENDATIONS.
26. ALL PLUMBING FIXTURES TO BE TRAPPED, VENTED AND PROVIDED WITH AIR SHOCKS WHEN REQUIRED.
27. PLUMBING FIXTURES SHALL COMPLY WITH "WATER CONSERVATION" REQUIREMENT AS DETAILED IN THE NYS-PC.
28. GC IS RESPONSIBLE TO SUBMIT APPLICATION AND TAP FEES TO LOCAL WATER AUTHORITY AND HAVE OWNER FILL OUT APPLICATION UPON COMPLETION OF PLUMBING ROUGH-IN INSPECTION.
29. ALL WATER AND HORIZONTAL STORM DRAIN PIPING INCLUDING ROOF DRAIN BODY SHALL BE INSULATED.
30. FLOOR DRAINS AND FLOOR CLEAN-OUTS SHALL BE SET LEVEL WITH FINISHED FLOORS.
31. ALL PIPE DIMENSIONS ARE INSIDE CLEAR.
32. ALL PLUMBING FIXTURES TO HAVE ISOLATION VALVES.
33. P.C. IS RESPONSIBLE TO ADJUST HOT WATER HEATER (WH) TEMPERATURE TO ENSURE A TEMPERATURE RANGE OF 110°F TO 120°F AT THE INDIVIDUAL FIXTURE OUTPUT. P.C. MUST ENSURE A TEMPERATURE OF 120° F MAXIMUM AT THE FIXTURES TO PREVENT SCALDING.
34. BUILDING DOMESTIC WATER DEMAND & SIZING IS CALCULATED FROM NYS-PC SECTION 603, 604 & APPENDIX E.
35. BUILDING SANITARY DEMAND & SIZING IS CALCULATED FROM NYS-PC SECTIONS 709 AND 710.
36. ALL DFU CALCULATIONS ARE BASED OFF OF TABLE 709.1 OF THE NYS-PC.
37. ALL SANITARY WATER PIPING SHALL BE PITCHED IN ACCORDANCE WITH NYS-PC SECTION 704 BASED ON TABLE 704.1 SLOPE OF HORIZONTAL DRAINAGE PIPE.
38. ALL VENT SIZING IS BASED OFF OF SECTION 916 OF THE NYS PLUMBING CODE.
39. ALL PLUMBING EQUIPMENT SHALL BE INSTALLED PER MANUFACTURER'S REQUIREMENTS/SPECIFICATIONS.

ABBREVIATIONS:

AD	ACCESS DOOR
BFP	BACKFLOW PREVENTER
CO	CLEAN OUT
CW	COLD WATER
DCV	DOUBLE CHECK VALVE
DFU	DRAINAGE FIXTURE UNIT
DPCO	DECK PLATE CLEAN OUT
FC	FIELD CONNECT
FD	FLOOR DRAIN
FFD	FUNNEL FLOOR DRAIN
FU	FIXTURE UNIT
HW	HOT WATER
HWR	HOT WATER RETURN
IAW	IN ACCORDANCE WITH
IWFD	INDIRECT WASTE FUNNEL DRAIN
LAV	LAVATORY
JS	JANITOR'S SINK
NC	NORMALLY CLOSED
NO	NORMALLY OPEN
NYS-PC	NEW YORK STATE PLUMBING CODE
RD	ROOF DRAIN
S	SANITARY
SD	STORM DRAIN
TMV	THERMOSTATIC MIXING VALVE
U.O.N.	UNLESS OTHERWISE NOTED
UR	URINAL
V	VENT
WC	WATER CLOSET
PC	PLUMBING CONTRACTOR
MC	MECHANICAL CONTRACTOR
TYP.	TYPICAL
VIF	VERIFY IN FIELD
WCO	WALL CLEAN OUT
WFU	WATER FIXTURE UNITS
(N)	NEW
(E)	EXISTING
(D)	DEMO

THE ABBREVIATIONS ARE SHOWN FOR GENERAL REFERENCE ONLY. THE PRESENCE OF AN ABBREVIATION ON THIS LIST DOES NOT IMPLY ITS USE ON THIS PROJECT. REFER TO DRAWINGS FOR SPECIFIC ABBREVIATIONS USED.

FLOOR DRAIN SCHEDULE

TAG	TYPE	MANUFACTURER	MODEL	SERVICE
FD-1	ADJUSTABLE	ZURN	FD-2320-R5	ALL SPACES

NOTES:
1. PROVIDE THE FOLLOWING FOR FD-1; CHORME PLATED STRAINER ASSEMBLY, 6" NICKEL HEAD ASSEMBLY, AND VANDAL PROOF.
2. PROVIDE BARRIER-TYPE TRAP SEAL PROTECTION DEVICE ZURN Z1072 OR APPROVED EQUAL.

CLEANOUT SCHEDULE

TAG	TYPE	MANUFACTURER	MODEL
CO	ADJUSTABLE DECK PLATE CLEAN OUT	WATTS	CO-1200-R

REDUCED PRESSURE ZONE VALVE SCHEDULE

TAG	MANUFACTURER	MODEL	LOCATION	SIZE (IN)	PRESSURE DROP (PSI)
RPZ-1	WATTS	LF009	EXTERIOR YARD	3/4"	13

NOTES: LEAD FREE
1. PROVIDE ENCLOSURE WATTS BOX MODEL WB-75.

1

PLUMBING DRAWING LIST

SHEET NO.	SHEET NAME	REVISON NO.	REVISION DATE
DCV-P-01	PLUMBING NOTES, SYMBOLS, ABBREVIATIONS AND DRAWING LIST	0	-
DCV-P-11	PLUMBING FIRST FLOOR AND ROOF DEMOLITION PLANS	0	-
DCV-P-21	PLUMBING FIRST FLOOR AND ROOF CONSTRUCTION PLAN	0	-
DCV-P-81	PLUMBING DETAILS	0	-

CONSULTANT INFORMATION

LiRo Engineers, Inc.
A LiRo Group Company
Syosset, N.Y. 516-214-8157[T]

CONSULTANT SEAL

STATE OF NEW YORK · FRANK F. ULISSE · LICENSED PROFESSIONAL ENGINEER · No. 090111

REVISION NUMBER	DATE	MADE BY	APP'D BY	REVISION
1	09/21/22			BID ADDENDUM # 3

RECORD DRAWING CERTIFICATION

☐ AS BUILT – CHANGES AS NOTED ☐ AS BUILT – NO CHANGES

CONTRACTOR
NAME ______
SIGNATURE ______
TITLE ______ DATE ______

PROJECT COORDINATOR
NAME ______
SIGNATURE ______
TITLE ______ DATE ______

WESTCHESTER COUNTY, NEW YORK
DEPARTMENT OF PUBLIC WORKS AND TRANSPORTATION
DIVISION OF ENGINEERING

INFRASTRUCTURE REHABILITATION - PHASE 3
PLAYLAND PARK, RYE, NEW YORK
DRAGON COASTER VENDORS
PLUMBING NOTES, SYMBOLS, ABBREVIATIONS AND DRAWING LIST

CONTRACT NUMBER: 22-523
SHEET NUMBER: **DCV-P-01**
DWG NO.: 464 of 664
SCALE: **AS INDICATED**
DATE: 08/23/2022
DPW FILE NUMBER: **1-118-P-1213-1**
REV. NO. 1

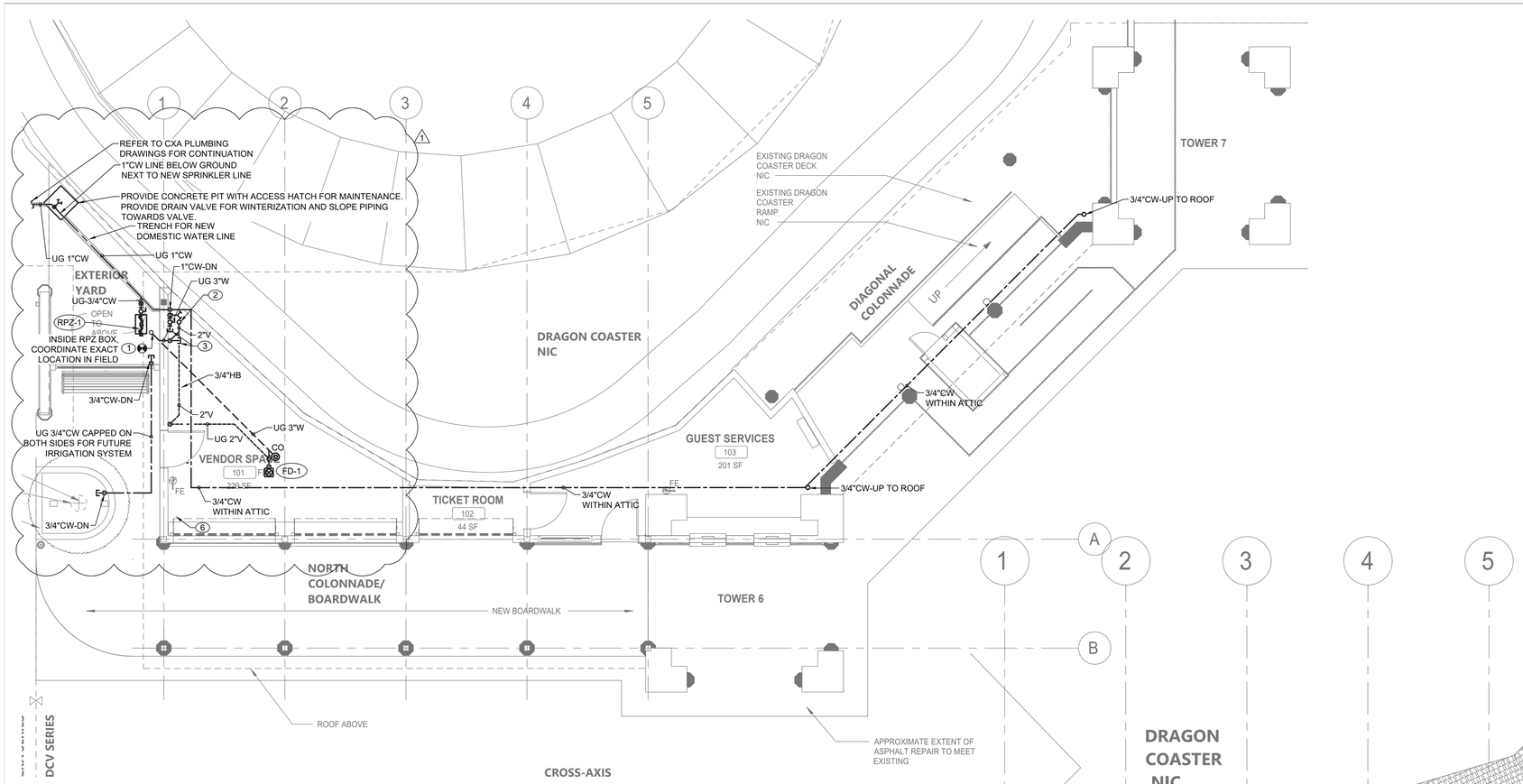

PLUMBING FIRST FLOOR CONSTRUCTION PLAN

SCALE: 3/16" = 1'-0

PLUMBING CONSTRUCTION NOTES:

1. RECONNECT NEW 3" WASTE LINE TO EXISTING SHOWN ON THE DRAWINGS. EXACT LOCATION VERIFY IN FIELD.
2. PROVIDE NEW 3" VENT THRU ROOF TO OPEN TO OUTDOOR ATTIC SPACE.
3. CONTRACTOR TO PROVIDE 3/4" COLD WATER ABOVE CEILING WITHIN ATTIC SPACE AND 3" VENTED SANITARY STUB-OUT FOR FUTURE CONNECTION OF PLUMBING FIXTURES BY FUTURE TENANT.
4. CONNECT NEW 3/4"CW LINE TO EXISTING REINSTALLED DRAGON HEADS. PROVIDE ISOLATION VALVE AND UNION. PROVIDE ALL REQUIRED SUPPORTS AND INSULATION OF COLD WATER PIPING.
5. PROVIDE SEAL AND WATERTIGHT NEW PENETRATIONS THRU ROOF AS PER ROOF MANUFACTURER REQUIREMENTS.
6. CONTRACTOR TO INSTALL 3/4" RPZ INSIDE RPZ BOX FOR IRRIGATION SYSTEM PROVIDED AND INSTALLED FOR PLANTER AREA AND TREE (REFER TO ARCHITECTURAL DCV DRAWINGS FOR LOCATION). CONTRACTOR TO SUBMIT IRRIGATION SYSTEM DESIGN AND COMPONENTS FOR AOR AND EOR REVIEW. PROVIDE UNDERGROUND PIPING FOR FUTURE IRRIGATION SYSTEM.

GENERAL NOTES:

1. COORDINATE WITH FACILITY PRIOR TO SHUTDOWN OF WATER DISTRIBUTION SYSTEM FOR ANY DEMOLITION AND CONSTRUCTION WORK.
2. PROVIDE DRAIN VALVES AT BOTTOM FOR EACH BRANCH. PROVIDE ACCESS PANELS TO ALL VALVES ABOVE CEILING AND BEHIND WALLS.
3. INSTALL NEW WATER PIPING WITH PROPER SLOPES TO AVOID WATER TRAPS DURING WINTER SEASON.
4. CONTRACTOR TO COORDINATE WITH FACILITY WHEN WORKING AROUND OR ABOVE THE RIDE COMPONENTS , AND PROVIDE ALL NECESSARY MEASURES TO PROTECT THESE COMPONENTS PER THE REQUIREMENTS OF THE FACILITY.
5. UPON COMPLETION, SYSTEM SHALL BE TESTED FOR PROPER OPERATION.
6. SEWER CROSSING WATER MAINS, CONDUITS, OR OTHER UTILITY SHALL BE MINIMUM 18" CLEARANCE BETWEEN THE OUTSIDE OF THE UTILITY AND OUTSIDE OF THE SEWER. THE CROSSINGS SHALL BE ARRANGED SO THAT THE SEWER JOINTS WILL BE EQUIDISTANT AND AS FAR AS POSSIBLE FROM THE WATER MAIN JOINTS.

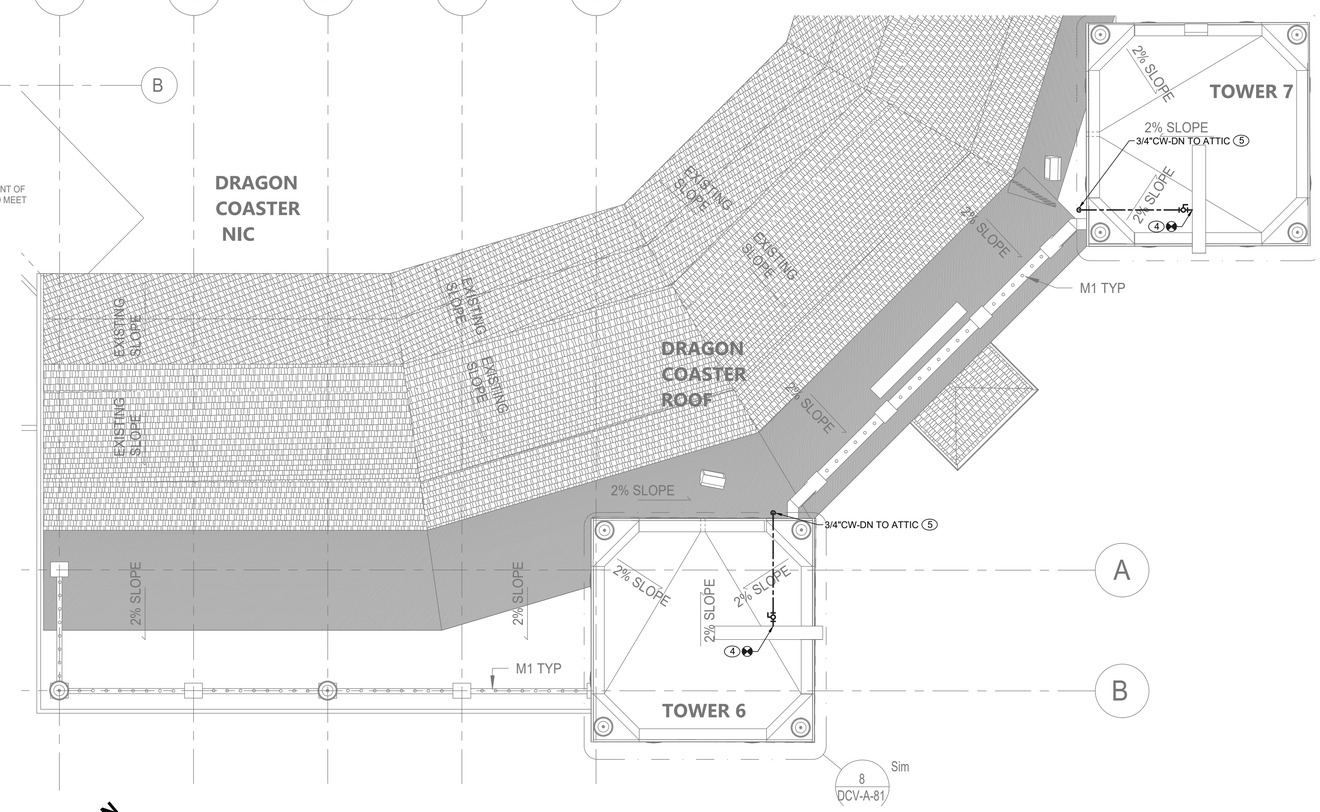

PLUMBING ROOF CONSTRUCTION PLAN

SCALE: 3/16" = 1'-0

CONSULTANT INFORMATION

LiRo Engineers, Inc.
A LiRo Group Company
Syosset, N.Y. 516-214-8157[T]

CONSULTANT SEAL

STATE OF NEW YORK · FRANK F. OLIVIERI · 090711 · LICENSED PROFESSIONAL ENGINEER

REVISION NUMBER	DATE	MADE BY	APP'D BY	REVISION
1	09/21/22			BID ADDENDUM # 3

RECORD DRAWING CERTIFICATION

☐ AS BUILT – CHANGES AS NOTED ☐ AS BUILT – NO CHANGES

CONTRACTOR: NAME / SIGNATURE / TITLE / DATE

PROJECT COORDINATOR: NAME / SIGNATURE / TITLE / DATE

WESTCHESTER COUNTY, NEW YORK
DEPARTMENT OF PUBLIC WORKS AND TRANSPORTATION
DIVISION OF ENGINEERING

INFRASTRUCTURE REHABILITATION - PHASE 3
PLAYLAND PARK, RYE, NEW YORK
DRAGON COASTER VENDORS
PLUMBING FIRST FLOOR AND ROOF CONSTRUCTION PLAN

CONTRACT NUMBER	22-523
SHEET NUMBER	DCV-P-21
DWG NO.:	466 of 664
SCALE:	AS INDICATED
DATE:	08/23/2022
DPW FILE NUMBER	1-118-P-1215-1
REV. NO.	1

GENERAL NOTES:

1. CONTRACTOR TO COORDINATE WITH FACILITY WHEN WORKING AROUND OR ABOVE THE RIDE COMPONENTS, AND PROVIDE ALL NECESSARY MEASURES TO PROTECT THESE COMPONENTS PER THE REQUIREMENTS OF THE FACILITY.
2. UPON COMPLETION, SYSTEM SHALL BE TESTED FOR PROPER OPERATION.

MECHANICAL CONSTRUCTION NOTES:

1. PROVIDE NEW EXHAUST FAN AND ASSOCIATED DUCTWORK AS SCHEDULED. INSTALL EF-1 ABOVE CEILING AT 11' 9-1/2" AFF. COORDINATE ELECTRICAL POWER AND WIRING WITH ELECTRICAL DRAWINGS.
2. PROVIDE NEW RAIN RESISTANT LOUVER AS SCHEDULED. INSTALL LV-1 AT 11' 9-1/2" AFF. REFER TO INSTALLATION DETAIL ON DVC-M-61.

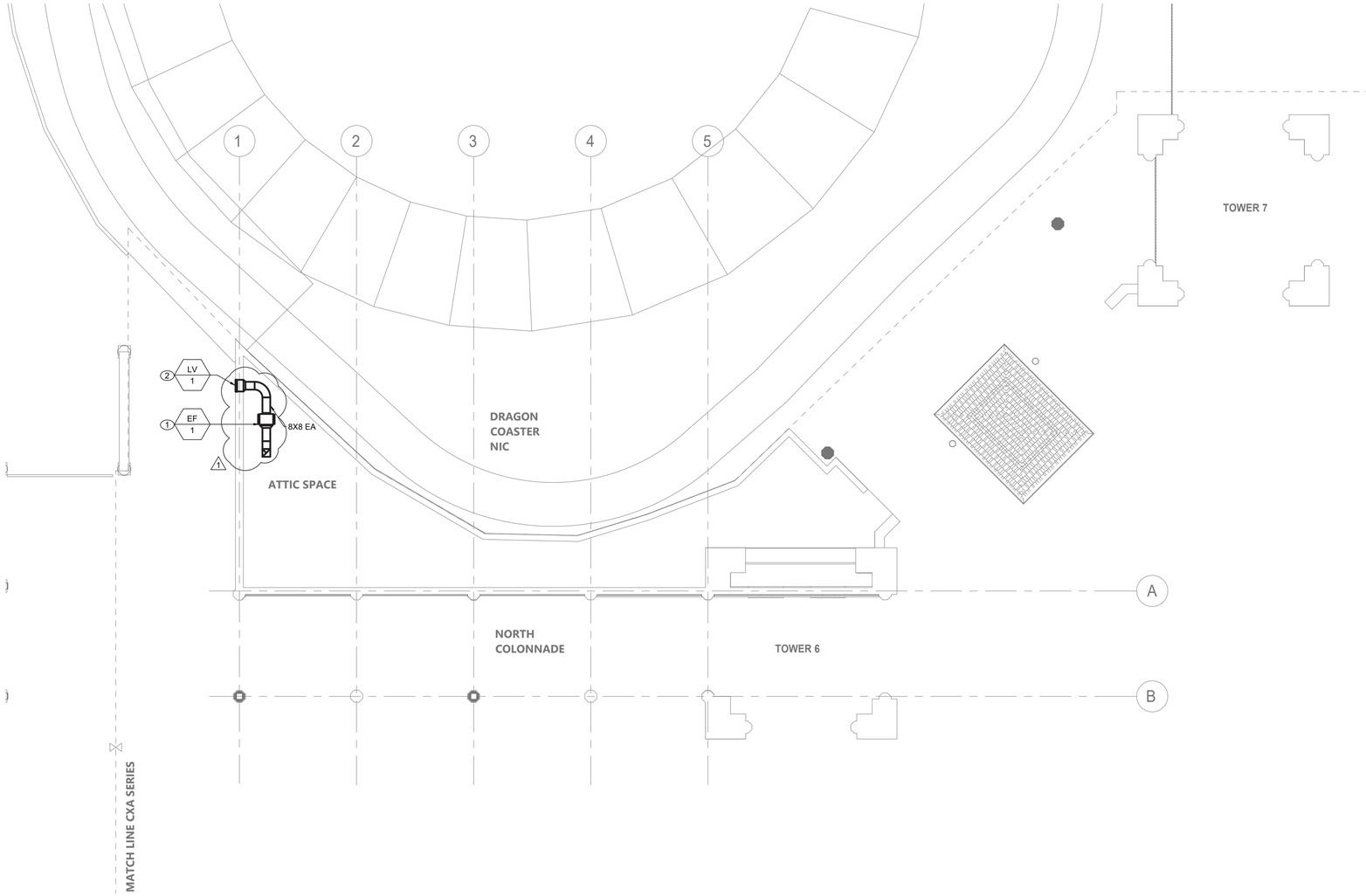

MECHANICAL ATTIC CONSTRUCTION PLAN

SCALE: 3/16" = 1'-0

CONSULTANT INFORMATION

LiRo Engineers, Inc.
A LiRo Group Company
Syosset, N.Y. 516-214-8157[T]

CONSULTANT SEAL

STATE OF NEW YORK · FRANK F. ULISSE · LICENSED PROFESSIONAL ENGINEER · 090111

REVISION NUMBER	DATE	MADE BY	APP'D BY	REVISION
1	09/21/22			BID ADDENDUM #3

RECORD DRAWING CERTIFICATION

☐ AS BUILT – CHANGES AS NOTED ☐ AS BUILT – NO CHANGES

CONTRACTOR
NAME
SIGNATURE
TITLE DATE

PROJECT COORDINATOR
NAME
SIGNATURE
TITLE DATE

WESTCHESTER COUNTY, NEW YORK
DEPARTMENT OF PUBLIC WORKS AND TRANSPORTATION
DIVISION OF ENGINEERING

INFRASTRUCTURE REHABILITATION - PHASE 3
PLAYLAND PARK, RYE, NEW YORK
DRAGON COASTER VENDORS
MECHANICAL ATTIC CONSTRUCTION PLAN

CONTRACT NUMBER: 22-523
SHEET NUMBER: DCV-M-22
DWG NO.: 472 of 664
SCALE: AS INDICATED
DATE: 08/23/2022
DPW FILE NUMBER: 1-118-M-1221-1
REV. NO.: 1

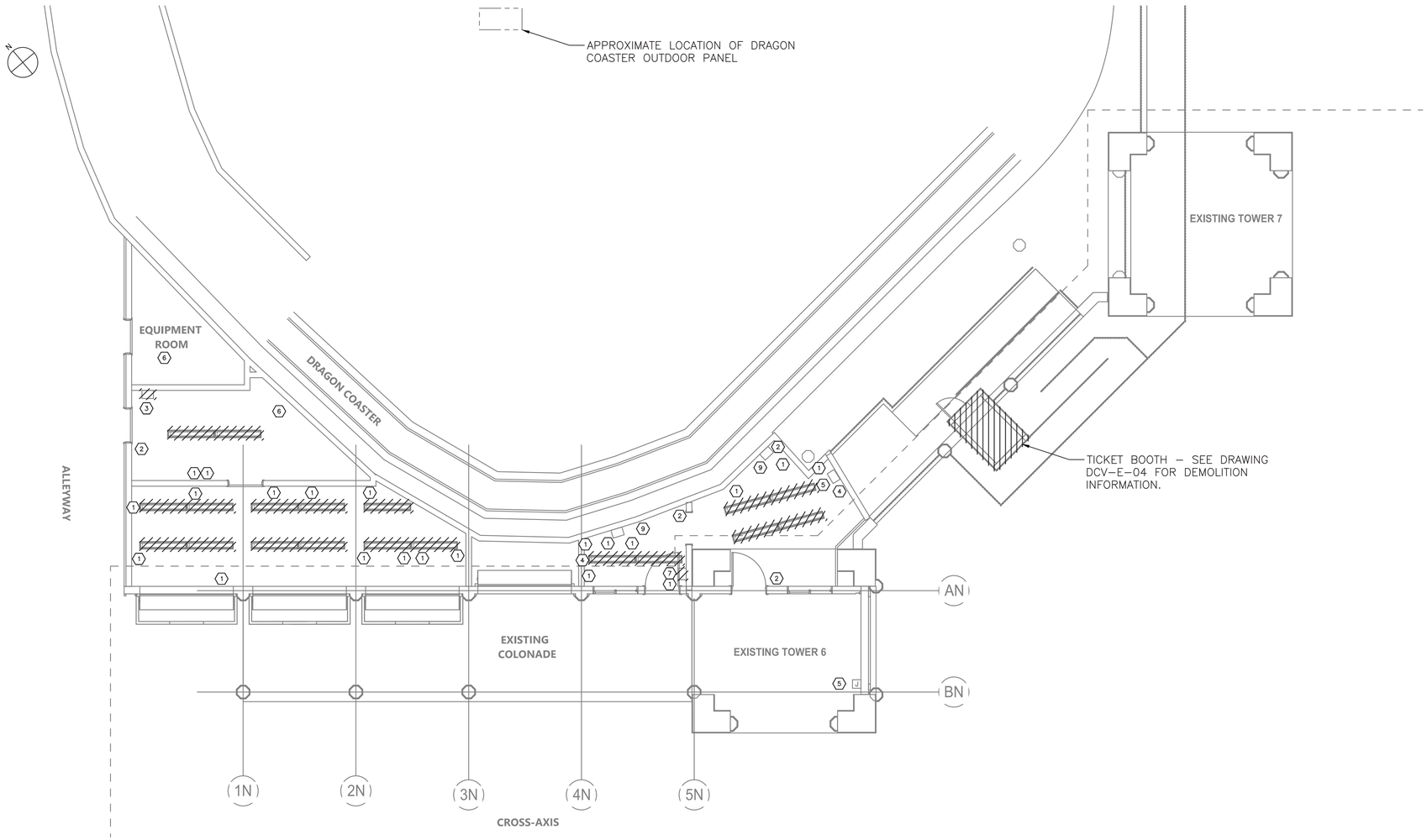

DRAGON COASTER VENDORS GROUND FLOOR – DEMOLITION PLAN

SCALE: 3/16" = 1'–0"

NOTES:

1. FOR ADDITIONAL NOTES, ABBREVIATIONS AND SYMBOLS, SEE DRAWING GE–E–01.
2. ALL EXISTING CABLE AND CONDUIT SHALL BE DOCUMENTED PRIOR TO REMOVAL.
3. DATA PORTS TO BE REMOVED BY OTHERS. REFER TO ARCHITECTURAL DRAWINGS FOR MORE INFORMATION
4. DISPOSITION OF EXISTING CCTV/DATA/COMMUNICATIONS SHALL BE BY OTHERS. THIS INCLUDES BOTH INCOMING AND OUTGOING CONDUIT AND CABLES. REFER TO ARCHITECTURAL DRAWINGS FOR MORE INFORMATION.
5. WIRE ASSOCIATED WITH THESE PANELBOARDS SHALL BE DISCONNECTED AND REMOVED BACK TO DRAGON COASTER OUTDOOR PANEL VIA EXISTING UNDERGROUND CONDUIT. REMOVE CONDUIT TO 18" BELOW GROUND. ABANDON REMAINDER IN PLACE.
6. DISCONNECT AND REMOVE ALL CONDUIT AND WIRE IN EXISTING GUEST SERVICES AND VENDOR SPACES. ASSUME 200' OF 3/4" CONDUIT WITH 4#10 WIRE.
7. DISCONNECT AND REMOVE ALL LIGHTING FIXTURES AND ASSOCIATED SWITCHING. DISCONNECT AND REMOVE ALL WIRING DEVICES.

DEMOLITION LEGEND ⬡	
1	RECEPTACLE
2	LIGHT SWITCH
3	30 CKT PANEL (SEE NOTE 6)(VENDOR SPACE)
4	DATA PORTS (SEE NOTE 4)
5	COMMUNICATIONS HUB (SEE NOTE 5)
6	MECHANICAL EQUIPMENT (REMOVED BY OTHERS)
7	12 CKT PANEL (SEE NOTE 6)(UPGRADE BOOTH)
8	GENERAL DUTY SAFETY SWITCH
9	AIR CONDITIONING UNIT
10	UNIT HEATER
11	
12	
13	
14	
15	
16	
17	
18	
19	

0 4' 8'

SCALE: 3/16" = 1'–0"

CONSULTANT INFORMATION

Savin Engineers, P.C.

CONSULTANT SEAL

STATE OF NEW YORK · STEVEN A. MARTINO · 083631 · LICENSED PROFESSIONAL ENGINEER

REVISION NUMBER	DATE	MADE BY	APP'D BY	REVISION
1	09/21/2022	RKC	SM	BID ADDENDUM #3

RECORD DRAWING CERTIFICATION

☐ AS BUILT – CHANGES AS NOTED ☐ AS BUILT – NO CHANGES

CONTRACTOR: NAME ____ SIGNATURE ____ TITLE ____ DATE ____

PROJECT COORDINATOR: NAME ____ SIGNATURE ____ TITLE ____ DATE ____

WESTCHESTER COUNTY, NEW YORK
DEPARTMENT OF PUBLIC WORKS AND TRANSPORTATION
DIVISION OF ENGINEERING

INFRASTRUCTURE REHABILITATION - PHASE 3
PLAYLAND PARK, RYE, NEW YORK
DRAGON COASTER VENDORS
VENDORS GROUND FLOOR - DEMOLITION

CONTRACT NUMBER	22-523
SHEET NUMBER	DCV-E-02
DWG NO.:	476 of 664
SCALE:	AS SHOWN
DATE:	8/23/2022
DPW FILE NUMBER	1-118-E-1225-1
REV. NO.	1

Drawing Name: G:\SavinAutocad\2060\25-Playland-Mega-3\E\DCVE-1002.dwg
Ref#: Projectname: ---- Comments: ----
Printed by: MGoodby Date: 21 September 2022 1:40 PM Designed by: ----
Xrefs: [TSG-SVLOGO.dwg] [TB_24X36_WestchesterCo_3.dwg] [TW-DM-08.dwg] [DCV-E-1006.dwg]

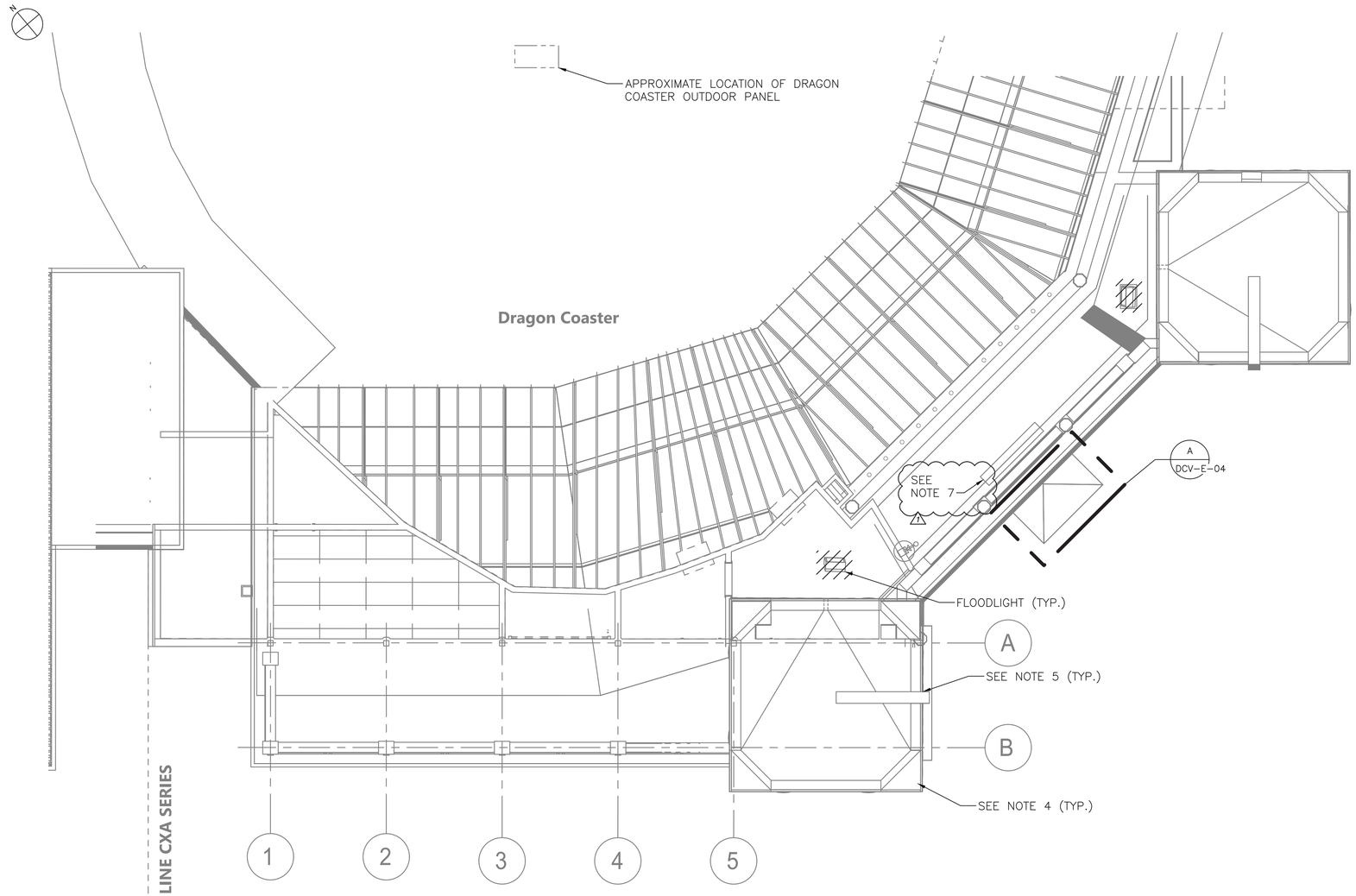

2 DCV-E-04 ROOF PLAN DEMOLITION
SCALE: 3/16" = 1'-0"

NOTES:

1. FOR ADDITIONAL NOTES, ABBREVIATIONS AND SYMBOLS, SEE DRAWING GE-E-01.
2. ALL EXISTING CABLE AND CONDUIT SHALL BE DOCUMENTED PRIOR TO REMOVAL.
3. DISCONNECT AND REMOVE TWO FLOODLIGHTS. REMOVE WIRE BACK TO POWER SOURCE.
4. CONTRACTOR IS ADVISED, ALL HISTORIC ACORN AND TORCHIERE FIXTURES HAVE BEEN REMOVED BY OTHERS. FIXTURES HAVE BEEN SENT OUT FOR REFURBISHMENT AND WILL BE RETURNED AT A LATER DATE. CONTRACTOR, UNDER THIS CONTRACT, WILL REINSTALL AND POWER HISTORIC FIXTURES. ASSUME TEN UNITS TO BE INSTALLED.
5. CONTRACTOR IS ADVISED THAT THERE ARE TWO DRAGON HEADS THAT SPRAY WATER. THE POWER TO THE SPRAY PUMPS HAVE BEEN REMOVED BY OTHERS. CONTRACTOR SHALL RE-ESTABLISH POWER TO BOTH PUMPS. ASSUME 20 AMP CIRCUIT AND 3#10 & 1#10 GND. REUSE EXISTING CONDUIT. REUSE EXISTING POWER SOURCE AND ASSOCIATED CONTROLS.
6. DISCONNECT AND REMOVE FLUORESCENT FIXTURES ASSOCIATED WITH THE TICKET BOOTH. EXISTING POWER TO BOOTH TO REMAIN AND BE REUSED.
7. CONTRACTOR SHALL TEMPORARILY REMOVE THE TV MONITOR AND STORE AS DIRECTED BY THE OWNER. ASSOCIATED EXISTING DATA AND POWER CONNECTIONS SHALL REMAIN AND BE PROTECTED FOR FUTURE REINSTALLATION.

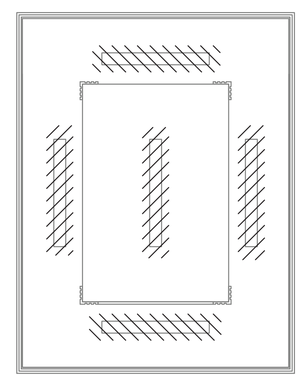

A DCV-E-04 TICKET BOOTH DEMOLITION PLAN
SCALE: 1/2" = 1'-0"

(SEE NOTE 6)

0 4' 8'
SCALE: 3/16" = 1'-0"

CONSULTANT INFORMATION

Savin Engineers, P.C.

CONSULTANT SEAL

STATE OF NEW YORK · STEVEN A. MARTINO · 083631 · LICENSED PROFESSIONAL ENGINEER

REVISION NUMBER	DATE	MADE BY	APP'D BY	REVISION
1	09/21/2022	RKC	SM	BID ADDENDUM #3

RECORD DRAWING CERTIFICATION

☐ AS BUILT – CHANGES AS NOTED ☐ AS BUILT – NO CHANGES

CONTRACTOR
NAME
SIGNATURE
TITLE DATE

PROJECT COORDINATOR
NAME
SIGNATURE
TITLE DATE

WESTCHESTER COUNTY, NEW YORK
DEPARTMENT OF PUBLIC WORKS AND TRANSPORTATION
DIVISION OF ENGINEERING

INFRASTRUCTURE REHABILITATION - PHASE 3
PLAYLAND PARK, RYE, NEW YORK
DRAGON COASTER VENDORS
ROOF PLAN DEMOLITION

CONTRACT NUMBER	SHEET NUMBER
22-523	DCV-E-04

DWG NO.: 478 of 664
SCALE: AS SHOWN
DATE: 8/23/2022
DPW FILE NUMBER: 1-118-E-1227-1
REV. NO.

Drawing Name: G:\SavinAutocad\2060\25-Playland-Mega-3\E\DCVE-1009.dwg
Projectname: ---- Comments: ----
Printed by: MGodby Date: 21 September 2022 1:40 PM Designed by: ----
Xrefs: [TSG-SVL000.dwg] [TB_24X36_WestchesterCo_3.dwg] [DCV-E-1008.dwg] [DCV-A-03.dwg]

PANELBOARD: PP-V — **LOCATION:** EXTERIOR - VENDOR SPACE

3R **NEMA RATING** — 3 **POLES** — **MOUNTING:** SURFACE

225 **AMP BUS RATING** — 200 **AMP MAIN BREAKER** — 42 **KA SHORT CIRCUIT RATING**

208Y/120 **VOLTS** — 3 **PHASE** 4 **WIRE** — **ELECTRONIC GRADE :** NO

CIRCUIT NO.	DESCRIPTION	LOAD KVA PHASE A	PHASE B	PHASE C	BREAKER AMPS / POLES	NOTES	CIRCUIT NO.	DESCRIPTION	LOAD KVA PHASE A	PHASE B	PHASE C	BREAKER AMPS / POLES	NOTES
1	RECEPTACLES	0.5			20/1		2	ROLL UP DOOR #1	1			20/1	
3	RECEPTACLES		0.2		20/1		4	ROLL UP DOOR #2		1		20/1	
5	EF-1			0.2	15/1		6	POWER TO RELAY PANEL VS-RP (120V)			0.1	20/1	
7	NORTH COLONNADE SOFFITS	0.8			20/1		8	LIGHTING	0.5			20/1	
9	NORTH COLONNADE ROOF LTG		0.8		20/1		10	SPARE		-		20/1	
11	COURTYARD LTG			0.5	20/1		12	SPARE			-	20/1	
13	VS-RP SPARE	-			20/1		14	SPACE					
15	SPARE		-		20/1		16	SPACE					
17	SPARE			-	20/1		18	OUTDOOR RECEPTACLE (GFI)			0.5	20/1	
19	SPACE						20	SPACE					
21	SPACE						22	SPACE					
23	SPACE						24	SPACE					
25	SPACE						26	SPACE					
27	SPACE						28	SPACE					
29	SPACE						30	SPACE					
31	SPACE						32	SPACE					
33	SPACE						34	SPACE					
35	SPACE						36	SPACE					
37	SPACE						38	SPACE					
39	SPACE						40	SPACE					
41	SPACE						42	SPACE					
	TOTAL PHASE KVA THIS SIDE	1.3	1	0.7				**TOTAL PHASE KVA THIS SIDE**	1.5	1	0.6		
								TOTAL KVA PER PHASE	2.8	2	1.3		
								TOTAL THREE PHASE KVA	6.1				

NOTES:
1. PANEL FOR VENDOR SPACE FIT-OUT.
2.
3.
4.

NOTES CONT.:
5.
6.
7.
8.

PANELBOARD: PP-GS — **LOCATION:** GUEST SERVICES

1 **NEMA RATING** — 3 **POLES** — **MOUNTING:** SURFACE

125 **AMP BUS RATING** — 100 **AMP MAIN BREAKER** — 42 **KA SHORT CIRCUIT RATING**

208Y/120 **VOLTS** — 3 **PHASE** 4 **WIRE** — **ELECTRONIC GRADE :** NO

CIRCUIT NO.	DESCRIPTION	LOAD KVA PHASE A	PHASE B	PHASE C	BREAKER AMPS / POLES	NOTES	CIRCUIT NO.	DESCRIPTION	LOAD KVA PHASE A	PHASE B	PHASE C	BREAKER AMPS / POLES	NOTES
1	RECEPTACLES	0.7			20/1		2	DRAGON COASTER SOFFITS	0.8			20/1	
3	RECEPTACLES		0.7		20/1		4	DRAGON COASTER ROOF LTG.		0.6		20/1	
5	POWER TO RELAY PANEL DCV-RP (120V)			0.2	20/1		6	DRAGON COASTER FLOODLIGHTS			1.2	20/1	
7	SPARE	-			20/1		8	TWR 6 - CEILING, MURAL, ROOF LTG	0.4			20/1	
9	SPARE		-		20/1		10	TWR 7 - CEILING, MURAL, ROOF LTG		0.4		20/1	
11	SPARE			-	20/1		12	DCV-RP SPARE			-	20/1	
13	RECEPTACLE - TICKET	0.5			20/1		14	LIGHTING	0.2			20/1	
15	RECEPTACLE - TICKET		0.5		20/1		16	SPARE		-		20/1	
17	RECEPTACLE - TICKET			0.5	20/1		18	SPARE			-	20/1	
19	DRAGON PUMP MOTOR #1	1.5			30/1		20	ROLL UP DOOR	1.2			20/1	
21	DRAGON PUMP MOTOR #2		1.5		30/1		22	DATA CABINET		0.2		20/1	
23	VIDEO SCREEN RECEPTACLE (GFI)			0.5	20/1		24	SPARE			-	20/1	
25	SPARE	-			20/1		26	SPACE					
27	SPARE		-		20/1		28	SPACE					
29	SPARE			-	20/1		30	SPACE					
31	SPACE						32	SPACE					
33	SPACE						34	SPACE					
35	SPACE						36	SPACE					
37	SPACE						38	SPACE					
39	SPACE						40	SPACE					
41	SPACE						42	SPACE					
	TOTAL PHASE KVA THIS SIDE	2.7	2.7	1.2				**TOTAL PHASE KVA THIS SIDE**	2.6	1.2	1.2		
								TOTAL KVA PER PHASE	5.3	3.9	2.4		
								TOTAL THREE PHASE KVA	11.6				

NOTES:
1. PANEL FOR GUESET SERVICES FIT-OUT.
2.
3.
4.

NOTES CONT.:
5.
6.
7.
8.

NOTES:

1. FOR ADDITIONAL NOTES, ABBREVIATIONS AND SYMBOLS, SEE DRAWING GE-E-01.

KEY NOTES:

1. REUSE EXISTING 100 AMP & 200 AMP CIRCUIT BREAKERS. PROVIDE NEW UNDERGROUND CONDUIT RUNS TO NEW PANELS.
2. NEW PANEL PP-V, 208Y/120 VOLTS, WITH 225 AMP MAINS AND 200 AMP MAIN CIRCUIT BREAKER. PROVIDE NEMA 3R ENCLOSURE.
3. NEW PANEL PP-GS, 208Y/120 VOLTS WITH 125 AMP MAINS AND 100 AMP CIRCUIT BREAKER.
4. NEW 10 CIRCUIT RELAY PANEL. RELAY PANEL TO MATCH EXISTING INSTALLED IN BUILDING CXA. PANEL SHALL BE MOUNTED TO OUTSIDE WALL IN A NEMA 3R ENCLOSURE.

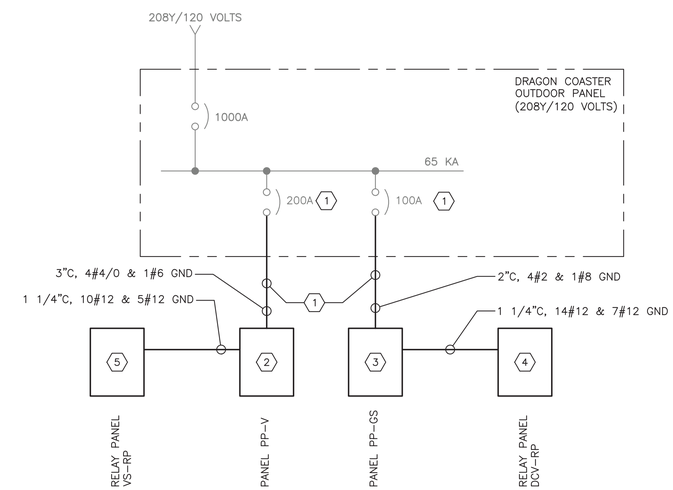

Drawing Name: G:\SavinAutocad\2060\25-Playland-Mega-3\E\DCVE-1004.dwg
Rev#: Projectname: 211001F02 Comments: ---- Printed by: MGodby Date: 21 September 2022 1:40 PM Designed by: ----
Xrefs: [TB_24X36_WestchesterCo_3.dwg] [TSG-SVL060.dwg] [BCR-A-04.dwg] [BCRE-101.dwg]

CONSULTANT INFORMATION

Savin Engineers, P.C.

CONSULTANT SEAL

STATE OF NEW YORK — STEVEN A. MARTINO — 083631 — LICENSED PROFESSIONAL ENGINEER

REVISION NUMBER	DATE	MADE BY	APP'D BY	REVISION
1	09/21/2022	RKC	SM	BID ADDENDUM #3

RECORD DRAWING CERTIFICATION

☐ AS BUILT - CHANGES AS NOTED ☐ AS BUILT - NO CHANGES

CONTRACTOR: NAME / SIGNATURE / TITLE / DATE

PROJECT COORDINATOR: NAME / SIGNATURE / TITLE / DATE

WESTCHESTER COUNTY, NEW YORK
DEPARTMENT OF PUBLIC WORKS AND TRANSPORTATION
DIVISION OF ENGINEERING

INFRASTRUCTURE REHABILITATION - PHASE 3
PLAYLAND PARK, RYE, NEW YORK
DRAGON COASTER VENDORS
ONE LINE DIAGRAM AND PANEL SCHEDULES

CONTRACT NUMBER	22-523
SHEET NUMBER	DCV-E-05
DWG NO.:	479 of 664
SCALE:	AS SHOWN
DATE:	8/23/2022
DPW FILE NUMBER	1-118-E-1228-1
REV. NO.	1

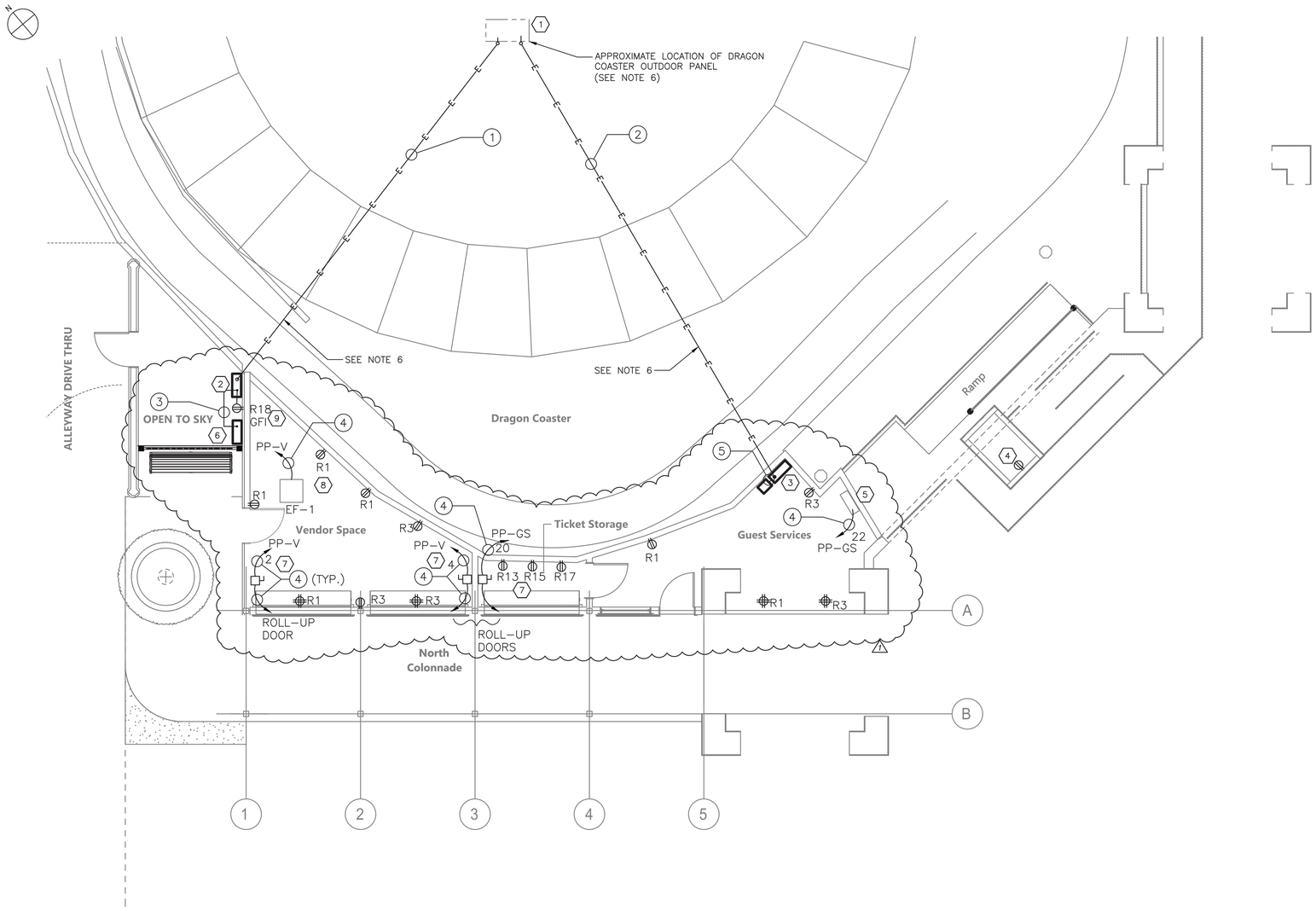

NOTES:

1. FOR ADDITIONAL NOTES, ABBREVIATIONS AND SYMBOLS, SEE DRAWING GE-E-01.
2. NEW CABLE AND CONDUIT SHALL BE INSTALLED CONCEALED AS MUCH AS PRACTICAL.
3. REFER TO DRAWING DCV-E-05 FOR ONE LINE DIAGRAM.
4. ALL UNDERGROUND RUN CONDUIT SHALL BE PVC. ANY EXTERIOR MOUNTED CONDUIT SHALL BE RMC. BURY NEW CONDUIT 18" BELOW FINISHED GRADE.
5. CONTRACTOR IS ADVISED, NEW CONDUIT SHALL BE "JACKED" UNDER EXISTING ROLLER COASTER TRACKS. EXTREME CARE SHALL BE TAKEN SO AS NOT TO UNDERMINE AND/OR DAMAGE EXISTING TRACKS. COORDINATE WITH THE OWNER AND ENGINEER DURING CONSTRUCTION.
6. ACTUAL PHYSICAL LOCATION(S) OF NEW UNDERGROUND RUNS SHALL BE DETERMINED BY THE CONTRACTOR IN THE FIELD AND COORDINATED WITH THE OWNER AND ENGINEER.
7. RECEPTACLE LOCATED IN THE VENDOR SPACE SHALL BE POWERED VIA PP-V. ALL RECEPTACLES IN GUEST SERVICES SHALL BE VIA PP-GS. POWER RECEPTACLES VIA 3/4"C, 2#12 & 1#12 GND.

KEY NOTES:

1. MODIFY EXISTING PANEL TO INSTALL NEW CONDUIT AND WIRE. ALL NEW CONDUIT CONNECTOINS SHALL BE WITH WATERTIGHT HUBS.
2. NEW 208Y/120 VOLT PANEL PP-V WITH 225 AMP MAINS AND 200 AMP MAIN CIRCUIT BREAKER MOUNTED TO OUTSIDE WALL IN NEMA 3R ENCLOSURE.
3. NEW 208Y/120 VOLT PANEL PP-GS WITH 125 AMP MAINS AND 100 AMP MAIN CIRCUIT BREAKER AND ASSOCIATED LIGHTING RELAY PANEL DCV-RP.
4. REPOWER NEW TICKET BOOTH VIA EXISTING 120 VOLT CIRCUIT(S).
5. DISPOSITION OF EXISTING COMMUNICATIONS HUB BY OTHERS. CONTRACTOR SHALL SUPPLY 120 VOLT POWER TO CABINET VIA PANEL PP-GS.
6. NEW VENDOR SPACE RELAY PANEL VS-RP. PANEL SHALL BE MOUNTED TO OUTSIDE WALL IN NEMA 3R ENCLOSURE. (1)
7. ROLL-UP DOOR MOTOR. PROVIDE 30 AMP, 2-POLE DISCONNECT SWITCH, NEMA 12 ENCLOSURE.
8. EXHAUST FANS EF-1 AND EF-2. PROVIDE 2-POLE DISCONNECT SWITCH EACH FAN.
9. PROVIDE GFI RECEPTACLE WITH WEATHERPROOF COVER. REFER TO ARCHITECTURAL DRAWINGS FOR EXACT LOCATION. PROVIDE 3/4"C, 2#12 & 1#12 GND. (1)

CONDUIT AND WIRE LEGEND

NO.	DESCRIPTION
1	3"C, 4#4/0 & 1#6 GND (UNDERGROUND)
2	2"C, 4#2 & 1#8 GND (UNDERGROUND)
3	1 1/4"C, 10#12 & 5#12 GNDS
4	3/4"C, 2#12 & 1#12 GND
5	1 1/4"C, 14#12 & 7#12 GNDS

DRAGON COASTER VENDORS GROUND FLOOR – POWER PLAN

SCALE: 3/16" = 1'-0"

0 4' 8'

SCALE: 3/16" = 1'-0"

CONSULTANT INFORMATION

Savin Engineers, P.C.

CONSULTANT SEAL

STATE OF NEW YORK · STEVEN A. MARTINO · 083631 · LICENSED PROFESSIONAL ENGINEER

REVISION NUMBER	DATE	MADE BY	APP'D BY	REVISION
1	09/21/2022	RKC	SM	BID ADDENDUM #3

RECORD DRAWING CERTIFICATION

☐ AS BUILT – CHANGES AS NOTED ☐ AS BUILT – NO CHANGES

CONTRACTOR: NAME ____ SIGNATURE ____ TITLE ____ DATE ____

PROJECT COORDINATOR: NAME ____ SIGNATURE ____ TITLE ____ DATE ____

WESTCHESTER COUNTY, NEW YORK
DEPARTMENT OF PUBLIC WORKS AND TRANSPORTATION
DIVISION OF ENGINEERING

INFRASTRUCTURE REHABILITATION - PHASE 3
PLAYLAND PARK, RYE, NEW YORK
DRAGON COASTER VENDORS
GROUND FLOOR POWER PLAN

CONTRACT NUMBER	22-523
SHEET NUMBER	DCV-E-06
DWG NO.:	480 of 664
SCALE:	AS SHOWN
DATE:	8/23/2022
DPW FILE NUMBER	1-118-E-1229-1
REV. NO.	1

Drawing Name: G:\SavinAutocad\2060\25-Playland-Mega-3\E\DCVE-1005.dwg
Projectname: ---- Comments: ----
Printed by: MGoodby Date: 21 September 2022 1:41 PM Designed by: ----
Xrefs: [TBG-SVLOGO.dwg] [TB_24X36_WestchesterCo_3.dwg] [DCV-A-10.dwg] [DCV-E-1001.dwg]

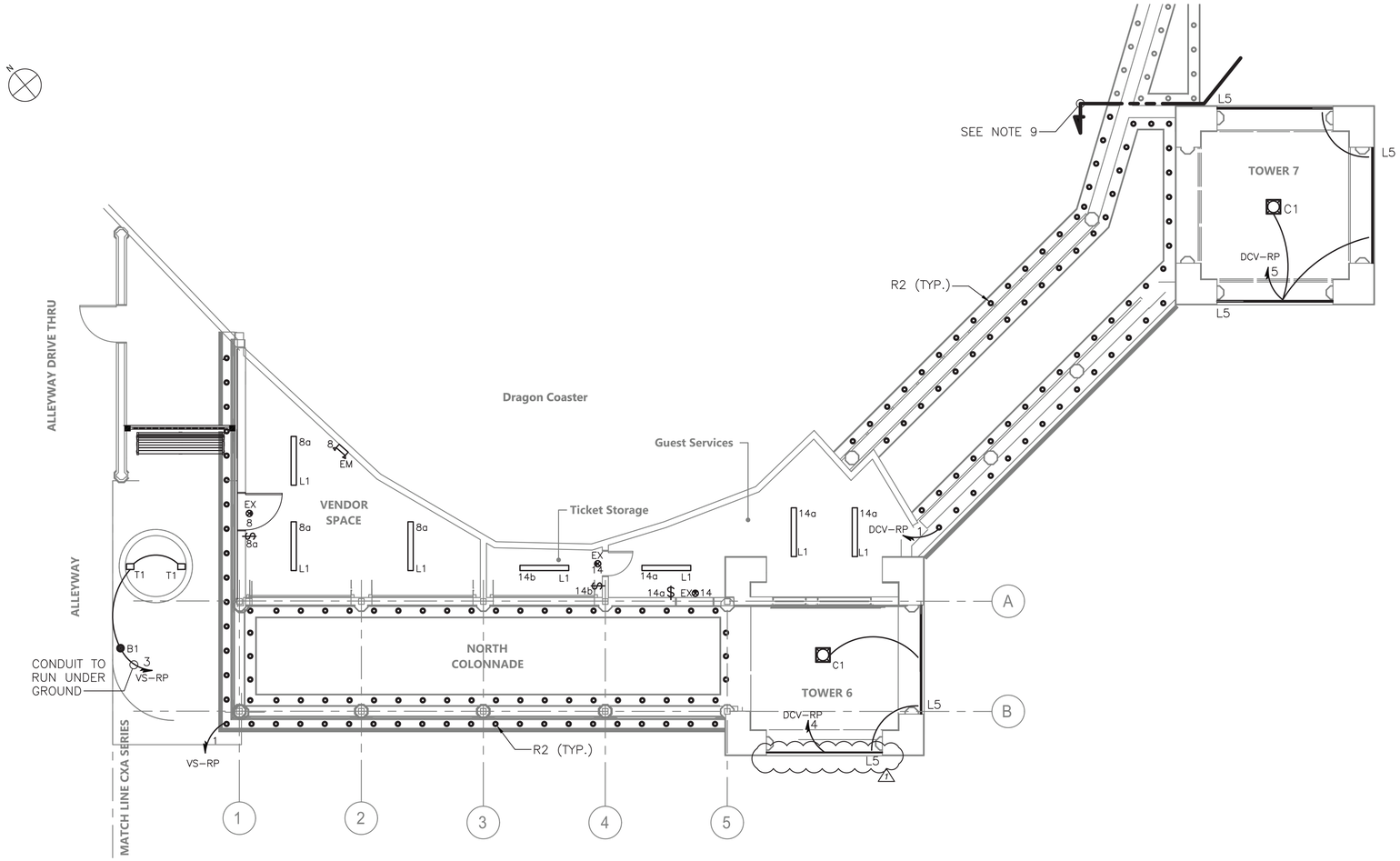

DRAGON COASTER VENDORS – GROUND FLOOR LIGHTING PLAN

SCALE: 3/16" = 1'-0"

NOTES:

1. FOR ADDITIONAL NOTES, ABBREVIATIONS AND SYMBOLS, SEE DRAWING GE-E-01.
2. FOR ADDITIONAL INFORMATION, SEE LIGHTING FIXTURE SCHEDULE ON DRAWING GE-E-03 AND PANEL SCHEDULE ON DRAWING DCV-E-05.
3. NEW CABLE AND CONDUIT SHALL BE INSTALLED CONCEALED AS MUCH AS PRACTICAL.
4. NUMBER DESIGNATORS NEXT TO FIXTURES AND/OR CONTROLS INDICATE CIRCUIT NUMBERS. CONTRACTOR IS ADVISED, THE LIGHTING IS POWERED AS FOLLOWS:
   A. ALL INTERIOR AND EXTERIOR LIGHTING AND ASSOCIATED CONTROLS LOCATED IN THE VENDOR SPACE SHALL BE CIRCUITED FROM NEW PANEL PP-V (OR VIA VS-RP).
   B. ALL INTERIOR AND EXTERIOR LIGHTING AND ASSOCIATED CONTROLS LOCATED IN TICKET STORAGE GUEST SERVICES AND TOWERS SHALL BE CIRCUITED FROM NEW PANEL PP-GS (OR VIA DCV-RP).
5. NEW LIGHTING CONTROLS SHALL BE FULLY COMPATIBLE WITH THE EXISTING SYSTEM AS PROVIDED ELSEWHERE AT THE PLAYLAND FACILITY. EQUIPMENT INCLUDES, BUT IS NOT LIMITED TO OCCUPANCY SENSORS, RELAY/POWER PACKS, SWITCHES, RELAY PANELS, PHOTOSENSORS, ETC.
6. LIGHTING CONTROLS SELECTED SHALL HAVE THE CAPABILITY TO BE CONNECTED TO A MASTER HEAD-END SYSTEM (FUTURE CONTRACT)
7. ALL OUTDOOR LIGHTING SHALL BE POWERED VIA RELAY PANELS DCV-RP AND VS-RP AS INDICATED ON THE DRAWINGS. RELAY PANELS SHALL BE EQUIPPED WITH BOTH A BUILT-IN TIME CLOCK AND A PHTOSENSOR CONTROLLED. FOR EXTERIOR LIGHTING CONTROL WIRING INFORMATION SEE EXTERIOR TOWER 6 & 7 WIRING DETAILS ON DRAWING DCV-E-05.
8. ALL HOMERUNS SHOWN ON DRAWINGS SHALL BE CIRCUITED VIA 3/4" CONDUIT WITH 2#12, 1#12G, UNLESS NOTED OTHERWISE.
9. ALL TYPE R2 FIXTURES SOUTH OF THIS LINE SHALL BE CIRCUITED FROM RELAY PANEL DCV-RP. ALL NEW TYPE R2 FIXTURES AND REMAINING COVE LIGHTING NORTH OF THIS LINE SHALL REUSE EXISTING CIRCUIT AND ASSOCIATED CONTROLS. CONTRACTOR SHALL TRACE EXISTING CIRCUIT AND PROVIDE NEW CONDUIT AND WIRE AS NEEDED. ASSUME 50' OF 3/4" CONDUIT WITH 2#10 AND 1#10 GND.

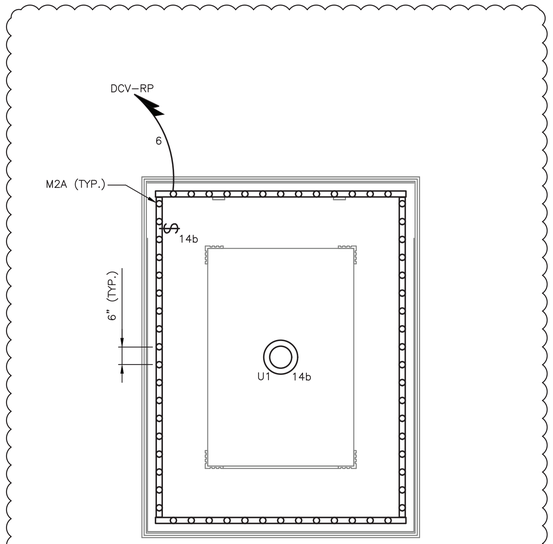

TICKET BOOTH LIGHTING PLAN

SCALE: 1/2" = 1'-0"

0 2' 4'
SCALE: 1/2" = 1'-0"

0 4' 8'
SCALE: 3/16" = 1'-0"

CONSULTANT INFORMATION

Savin Engineers, P.C.

CONSULTANT SEAL

STATE OF NEW YORK · STEVEN A. MARTINO · 083631 · LICENSED PROFESSIONAL ENGINEER

REVISION NUMBER	DATE	MADE BY	APP'D BY	REVISION
1	09/21/2022	RKC	SM	BID ADDENDUM #3

RECORD DRAWING CERTIFICATION

☐ AS BUILT – CHANGES AS NOTED ☐ AS BUILT – NO CHANGES

CONTRACTOR: NAME / SIGNATURE / TITLE / DATE

PROJECT COORDINATOR: NAME / SIGNATURE / TITLE / DATE

WESTCHESTER COUNTY, NEW YORK
DEPARTMENT OF PUBLIC WORKS AND TRANSPORTATION
DIVISION OF ENGINEERING

INFRASTRUCTURE REHABILITATION - PHASE 3
PLAYLAND PARK, RYE, NEW YORK
DRAGON COASTER VENDORS
GROUND FLOOR LIGHTING PLAN

CONTRACT NUMBER	22-523
SHEET NUMBER	DCV-E-07
DWG NO.:	481 of 664
SCALE:	AS SHOWN
DATE:	8/23/2022
DPW FILE NUMBER	1-118-E-1230-1
REV. NO.	1

Drawing Name: G:\SavinAutocad\2060\25-Playland-Mega-3\E\DCVE-1006.dwg
Projectname: ---- Comments: ----
Printed by: MGodby Date: 21 September 2022 1:41 PM Designed by: ----
Rev#:
Xrefs: [TSG-SVLOGO.dwg] [TB_24X36_WestchesterCo_3.dwg] [DCV-A-11.dwg] [DCV-E-1005.dwg]

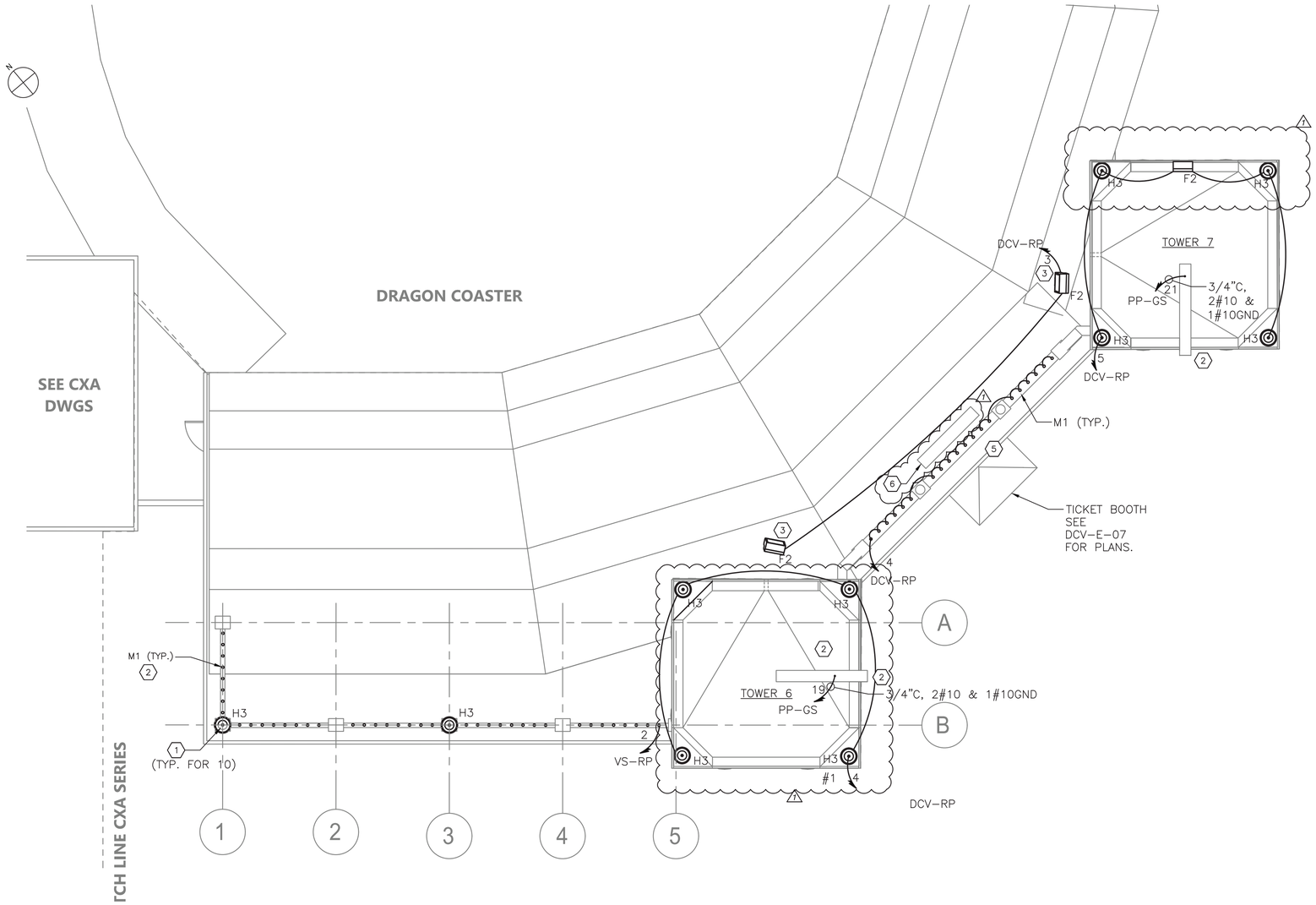

ROOF PLAN – POWER, LIGHTING AND LIGHTNING PROTECTION

SCALE: 3/16" = 1'-0"

NOTES:

1. FOR ADDITIONAL NOTES, ABBREVIATIONS AND SYMBOLS, SEE DRAWING GE-E-01.
2. FOR ADDITIONAL INFORMATION, SEE LIGHTING FIXTURE SCHEDULE ON DRAWING GE-E-03 AND PANEL SCHEDULE ON DRAWINGS DCV-E-05.
3. NEW CABLE AND CONDUIT SHALL BE INSTALLED CONCEALED AS MUCH AS PRACTICAL.
4. NUMBER DESIGNATORS NEXT TO FIXTURES AND/OR CONTROLS INDICATE CIRCUIT NUMBERS ASSOCIATED WITH TOWER RELAY PANEL.
5. FOR EXTERIOR LIGHTING CONTROL WIRING INFORMATION SEE EXTERIOR TOWER 6 & 7 WIRING DETAILS ON DRAWING DCV-E-05.
6. PHOTOCELL SHALL BE SUITABLE FOR OUTDOOR APPLICATIONS AND SHALL BE DOUGLAS LIGHTING CONTROLS: WPS-3741B OR APPROVED EQUAL. FINAL LOCATION OF PHOTOCELL SHALL BE DETERMINED DURING CONSTRUCTION BY THE LIGHTING MANUFACTURER. 1
7. ALL HOMERUNS SHOWN ON DRAWINGS SHALL BE CIRCUITED VIA 3/4" CONDUIT WITH 2#10, 1#10G, UNLESS NOTED OTHERWISE

KEY NOTES:

1. EXISTING FIXTURES WERE REFURBISHED UNDER A SEPARATE CONTRACT. UNDER THIS CONTRACT, CONTRACTOR SHALL OBTAIN REFURBISHED FIXTURE AND INSTALL IN LOCATIONS AS SHOWN. SEE ARCHITECTURAL DRAWINGS FOR ADDITIONAL INFORMATION.
2. DRAGON HEAD PUMP. EXISTING EQUIPMENT / PUMP SHALL BE MADE OPERATIONAL. PROVIDE NEW CONDUIT AND WIRE. CONTRACTOR SHALL PROVIDE FOR NEW PUMP CONTROLS TO MATCH EXISTING.
3. PROVIDE FLOOD LIGHT LED FIXTURE. COORDINATE WITH STANDARD AMUSEMENTS FOR REQUIRED AIMING ANGLE.
4. PROVIDE MARQUEE SKYWARD FACING LED LIGHT FIXTURE ON BALUSTRADE COPING 1' APART.
5. PROVIDE GFI RECEPTACLE IN NEMA 4X ENCLOSURE FOR TV MONITOR. REFER TO ARCHITECTURAL DRAWINGS FOR LOCATION. PROVIDE 3/4"C, 2#12 AND 1#12GND TO PP-GS FOR POWER.
6. CONTRACTOR SHALL REINSTALL TV MONITOR AND RECONNECT EXISTING DATA AND POWER CONDUIT AND WIRE. 1

0 4' 8'
SCALE: 3/16" = 1'-0"

CONSULTANT INFORMATION

Savin Engineers, P.C.

CONSULTANT SEAL

STATE OF NEW YORK · STEVEN A. MARTINO · 083631 · LICENSED PROFESSIONAL ENGINEER

REVISION NUMBER	DATE	MADE BY	APP'D BY	REVISION
1	09/21/2022	RKC	SM	BID ADDENDUM #3

RECORD DRAWING CERTIFICATION

☐ AS BUILT – CHANGES AS NOTED ☐ AS BUILT – NO CHANGES

CONTRACTOR: NAME / SIGNATURE / TITLE / DATE

PROJECT COORDINATOR: NAME / SIGNATURE / TITLE / DATE

WESTCHESTER COUNTY, NEW YORK
DEPARTMENT OF PUBLIC WORKS AND TRANSPORTATION
DIVISION OF ENGINEERING

INFRASTRUCTURE REHABILITATION - PHASE 3
PLAYLAND PARK, RYE, NEW YORK
DRAGON COASTER VENDORS
ROOF PLAN - POWER, LIGHTING & LIGHTNING PROTECTION

CONTRACT NUMBER	22-523
SHEET NUMBER	DCV-E-08
DWG NO.:	482 of 664
SCALE:	AS SHOWN
DATE:	8/23/2022
DPW FILE NUMBER	1-118-E-1231-1
REV. NO.	1

Drawing Name: G:\SavinAutocad\2060\25-Playland-Mega-3\E\DCVE-1007.dwg
Projectname: ---- Comments: ----
Printed by: MGodby Date: 21 September 2022 1:41 PM Designed by: ----
Xrefs: [TSG-SVLOGO.dwg] [TB_24X36_WestchesterCo_3.dwg] [DCV-A-12.dwg] [DCV-E-1004.dwg]

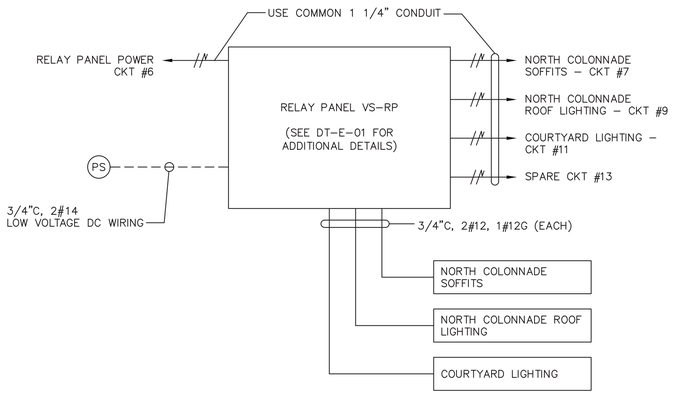

1 VENDOR SPACE – EXTERIOR LIGHTING WIRING DETAIL
DCV-E-09

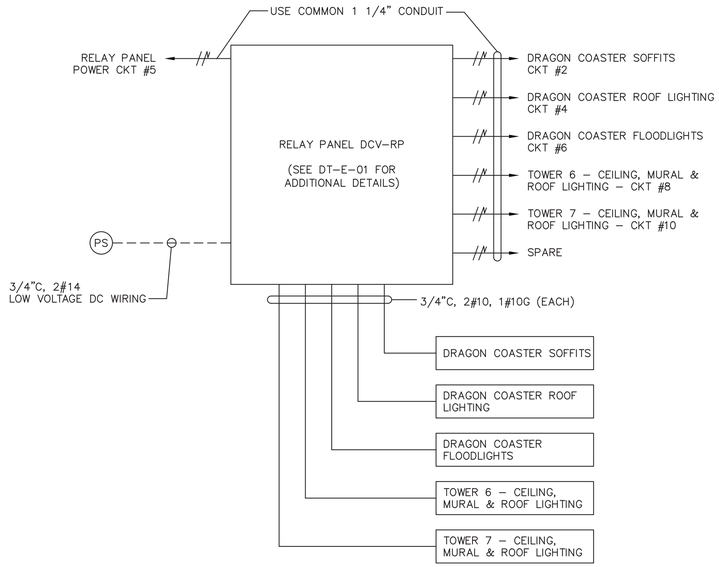

2 TOWERS #6 & #7 – EXTERIOR LIGHTING WIRING DETAIL
DCV-E-09

VS-RP	LOCATION: VENDOR SPACES ELECTRICAL CLOSET	
CKT NO	DESCRIPTION	NOTES
1	NORTH COLONNADE SOFFITS	
2	NORTH COLONNADE ROOF LIGHTING	
3	COURTYARD LIGHTING	

DCV-RP	LOCATION:	
CKT NO	DESCRIPTION	NOTES
1	DRAGON COASTER SOFFITS	
2	DRAGON COASTER ROOF LIGHTING	
3	DRAGON COASTER FLOODLIGHTS	
4	TOWER 6 - CEILING, MURAL & ROOF LIGHTING	
5	TOWER 7 - CEILING, MURAL & ROOF LIGHTING	
6	TICKET BOOTH LIGHTING	

LIGHTING CONTROL LEGEND	
SYMBOL	DESCRIPTION
$	120V RATED LIGHTING SINGLE POLE SWITCH – (3W) – 3 WAY
RP	RELAY TIME CONTROL PANEL, DIGITAL CENTRAL PANEL DOUGLAS LIGHTING CONTROLS, DIALOG SYSTEM CATALOG NUMBER: WLCPx/x OR APPROVED EQUAL *x/x IS CAPACITY/QTY OF RELAYS – VARIES BY BUILDING
PS	DIGITAL PHOTOCELL – PHOTOSENSOR SUITABLE FOR OUTDOOR APPLICATIONS. DOUGLAS LIGHTING CONTROLS, DIALOG SYSTEM CATALOG NUMBER: WPS-3741B OR APPROVED EQUAL

1

CONSULTANT INFORMATION
Savin Engineers, P.C.

CONSULTANT SEAL
STATE OF NEW YORK · STEVEN A. MARTINO · 083631 · LICENSED PROFESSIONAL ENGINEER

REVISION NUMBER	DATE	MADE BY	APP'D BY	REVISION
1	09/21/2022	RKC	SM	BID ADDENDUM #3

RECORD DRAWING CERTIFICATION
☐ AS BUILT – CHANGES AS NOTED ☐ AS BUILT – NO CHANGES

CONTRACTOR
NAME
SIGNATURE
TITLE DATE

PROJECT COORDINATOR
NAME
SIGNATURE
TITLE DATE

WESTCHESTER COUNTY, NEW YORK
DEPARTMENT OF PUBLIC WORKS AND TRANSPORTATION
DIVISION OF ENGINEERING

INFRASTRUCTURE REHABILITATION - PHASE 3
PLAYLAND PARK, RYE, NEW YORK
DRAGON COASTER VENDORS
EXTERIOR LIGHTING CONTROLS

CONTRACT NUMBER	SHEET NUMBER
22-523	DCV-E-09

DWG NO.: 483 of 664
SCALE: AS SHOWN
DATE: 8/23/2022
DPW FILE NUMBER 1-118-E-1232-1 REV. NO. 1

Drawing Name: G:\Savin\Autocad\2060\25-Playland-Mega-3\E\DCVE-1010.dwg
Projectname: 211001F02 Comments: ----
Printed by: MGodby Date: 21 September 2022 1:41 PM Designed by: ----
Rev#:
Xrefs: [TB_24X36_WestchesterCo_3.dwg] [TSG-SVLOGO.dwg] [BCR-A-04.dwg] [BCRE-101.dwg]

FIRE ALARM DEMOLITION NOTES:

1. NO EXISTING FIRE ALARM DEVICES WERE NOTED DURING BUILDING SURVEY. ANY ABANDONED DEVICES OR WIRING DISCOVERED DURING THE COURSE OF DEMOLITION SHALL BE REMOVED.

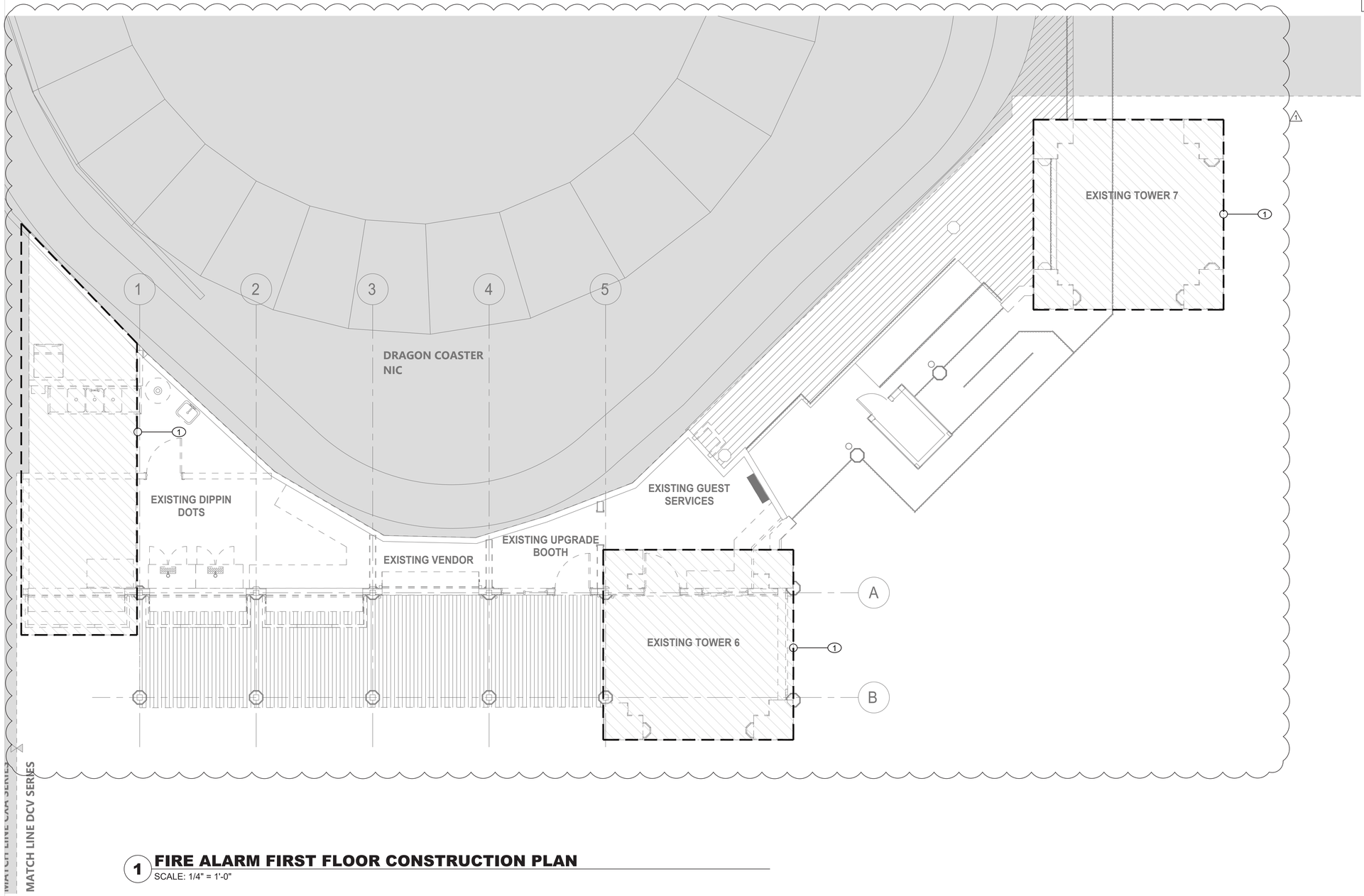

1 FIRE ALARM FIRST FLOOR CONSTRUCTION PLAN

SCALE: 1/4" = 1'-0"

CONSULTANT INFORMATION

LiRo Engineers, Inc.
A LiRo Group Company
Syosset, N.Y. 516-214-8157[T]

CONSULTANT SEAL

STATE OF NEW YORK · FRANK F. DUSSE · LICENSED PROFESSIONAL ENGINEER · No. 091114

REVISION NUMBER	DATE	MADE BY	APP'D BY	REVISION
1	9/21/22			BID ADDENDUM #3

RECORD DRAWING CERTIFICATION

☐ AS BUILT – CHANGES AS NOTED ☐ AS BUILT – NO CHANGES

CONTRACTOR: NAME / SIGNATURE / TITLE / DATE

PROJECT COORDINATOR: NAME / SIGNATURE / TITLE / DATE

WESTCHESTER COUNTY, NEW YORK
DEPARTMENT OF PUBLIC WORKS AND TRANSPORTATION
DIVISION OF ENGINEERING

INFRASTRUCTURE REHABILITATION - PHASE 3
PLAYLAND PARK, RYE, NEW YORK
DRAGON COASTER VENDORS
FIRE ALARM FIRST FLOOR DEMOLITION PLAN

CONTRACT NUMBER	22-523
SHEET NUMBER	DCV-FA-11
DWG NO.:	485 of 664
SCALE:	As indicated
DATE:	08/23/2022
DPW FILE NUMBER	1-118-FA-1234-1
REV. NO.	1

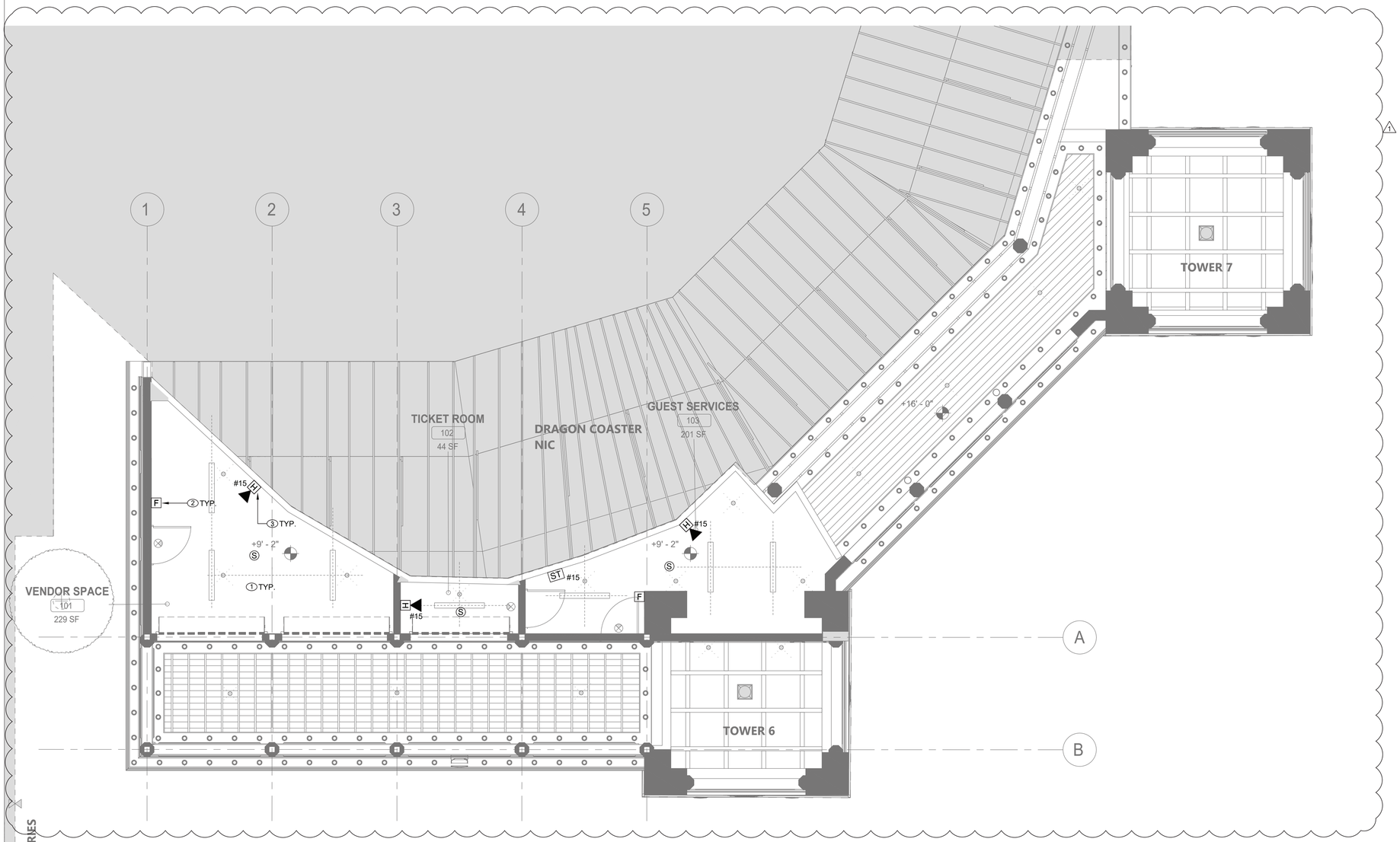

1 FIRE ALARM FIRST FLOOR CONSTRUCTION PLAN

SCALE: 1/4" = 1'-0"

FIRE ALARM CONSTRUCTION NOTES:

1. CONNECT NEW FIRE ALARM DEVICES TO NEW FIRE ALARM CONTROL PANEL IN CXA BUILDING. REFER TO CXA DRAWINGS FOR MORE INFORMATION.
2. NEW MANUAL PULL STATIONS SHALL BE INSTALLED AT 4'-0" ABOVE FINISHED FLOOR AT EACH BUILDING EXIT (MAX. DISTANCE OF 5'-0" FROM EXIT).
3. FIRE ALARM STROBES AND HORN STROBES SHALL BE FIELD ADJUSTABLE AND SET CANDELA RATING INDICATED ON PLAN. FIRE ALARM STROBES AND HORN STROBES SHALL BE INSTALLED AT 7'-4" ABOVE FINISHED FLOOR UNLESS OTHERWISE NOTED.

FIRE ALARM GENERAL NOTES:

1. REFER TO DRAWING FA-001.00 FOR SYMBOLS, ABBREVIATIONS, AND NOTES. LAYOUT OF FIRE ALARM DEVICES ON THIS PLAN IS DIAGRAMMATIC; EXACT LOCATIONS OF DEVICES AND CONDUIT SHALL BE COORDINATED WITH FIELD CONDITIONS, ARCHITECTURAL REQUIREMENTS, AND MANUFACTURER RECOMMENDATIONS.
2. ALL DEVICES AND EQUIPMENT SHOWN ON THIS PLAN ARE NEW, UNLESS OTHERWISE NOTED.
3. INSTALL NEW FIRE ALARM SYSTEM IN STRICT ACCORDANCE WITH NFPA-72 AND NFPA-90A REQUIREMENTS.
4. CONTRACTOR SHALL INSTALL NEW FIRE ALARM SYSTEM AS INDICATED AND PROVIDE ALL NECESSARY WIRING, CONDUIT, AND APPARATUSES.
5. ALL VISUAL NOTIFICATION DEVICES IN THE SAME SPACE SHALL BE SYNCHRONIZED IN ACCORDANCE WITH NFPA-72.
6. COORDINATE INSTALLATION WITH FIRE ALARM SYSTEM VENDOR AND MANUFACTURER REQUIREMENTS.
7. COORDINATE FIRE ALARM DEVICES WITH ARCHITECTURAL FINISHES. CONCEAL CONDUIT IN FINISHED WALLS AND FLUSH MOUNT DEVICES WHERE POSSIBLE.
8. CONTRACTOR SHALL TEST THE FIRE ALARM SYSTEM AFTER COMPLETION OF INSTALLATION. FIRE ALARM SYSTEM SHALL BE TESTED AND VERIFIED TO BE WORKING PROPERLY PRIOR TO INSPECTION BY THE AUTHORITY HAVING JURISDICTION.
9. FOLLOWING INSTALLATION, CONTRACTOR SHALL PATCH, PAINT, AND RESTORE ALL WALLS AND CEILINGS TO MATCH EXISTING OR DESIRED NEW CONDITION.
10. FIRESTOP ALL FIRE-RATED FLOOR OR WALL PENETRATIONS TO MAINTAIN ORIGINAL FIRE RATING TO FULL DEPTH OF OPENING.
11. CONTRACTOR SHALL PROVIDE SLEEVE FOR CONDUIT PENETRATIONS THROUGH WALL AND CEILING FLOORS.

CONSULTANT INFORMATION

LiRo Engineers, Inc.
A LiRo Group Company
Syosset, N.Y. 516-214-8157[T]

CONSULTANT SEAL

STATE OF NEW YORK · FRANK F. ULISSE · LICENSED PROFESSIONAL ENGINEER · 090111

REVISION NUMBER	DATE	MADE BY	APP'D BY	REVISION
1	9/21/22			BID ADDENDUM #3

RECORD DRAWING CERTIFICATION

☐ AS BUILT – CHANGES AS NOTED ☐ AS BUILT – NO CHANGES

CONTRACTOR
NAME
SIGNATURE
TITLE DATE

PROJECT COORDINATOR
NAME
SIGNATURE
TITLE DATE

WESTCHESTER COUNTY, NEW YORK
DEPARTMENT OF PUBLIC WORKS AND TRANSPORTATION
DIVISION OF ENGINEERING

INFRASTRUCTURE REHABILITATION - PHASE 3
PLAYLAND PARK, RYE, NEW YORK
DRAGON COASTER VENDORS
FIRE ALARM GROUND FLOOR PLAN

CONTRACT NUMBER	22-523
SHEET NUMBER	DCV-FA-21
DWG NO.:	486 of 664
SCALE:	As indicated
DATE:	08/23/2022
DPW FILE NUMBER	1-118-FA-1235-1
REV. NO.	1

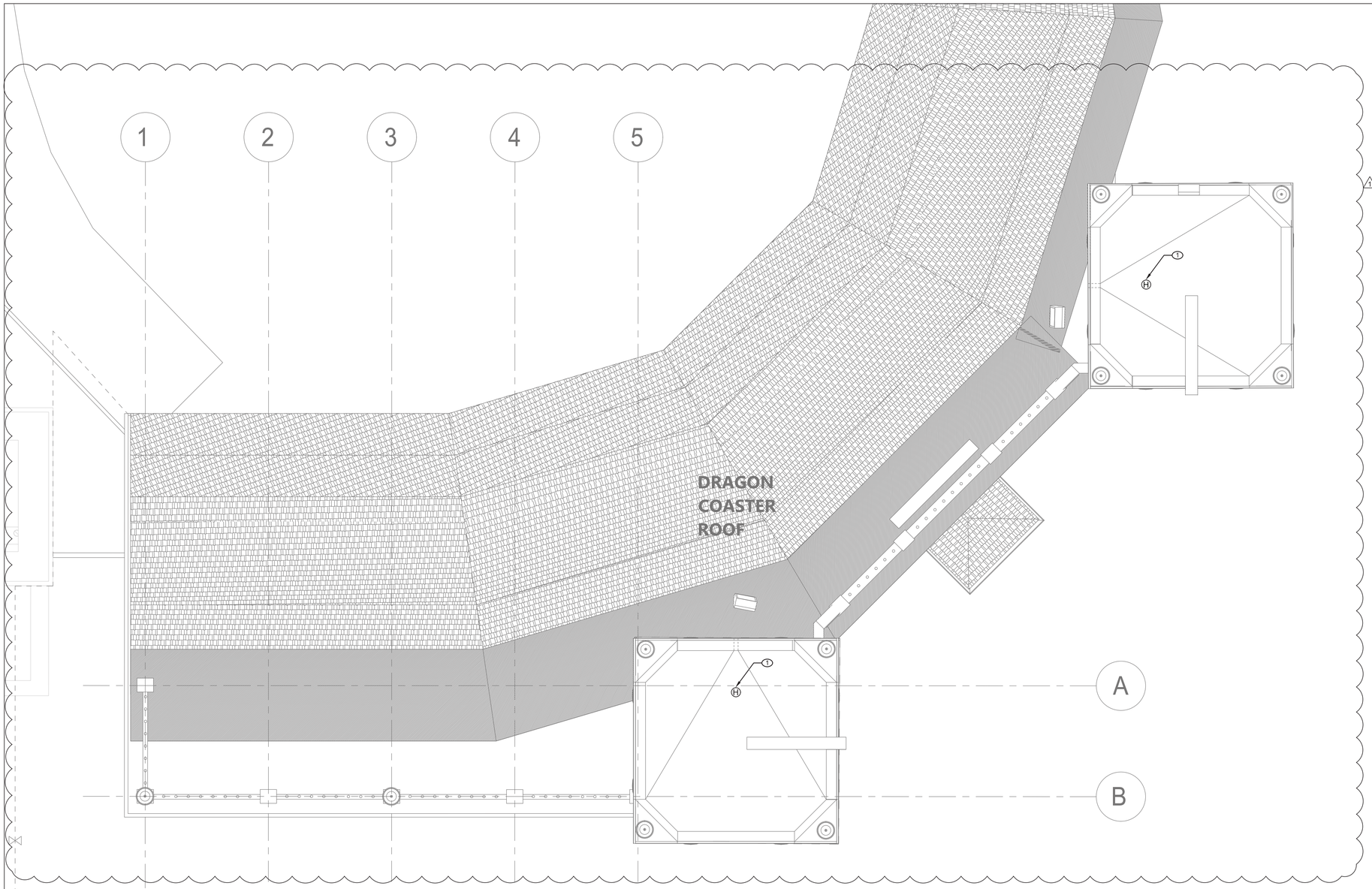

1 FIRE ALARM ROOF CONSTRUCTION PLAN

SCALE: 1/4" = 1'-0"

FIRE ALARM CONSTRUCTION NOTES:

1. INSTALL CEILING MOUNTED HEAT DETECTORS IN THE ATTIC/CRAWL SPACE OF TOWERS 6 AND 7. COORDINATE MOUNTING AND DETECTOR LOCATION WITH CEILING CONDITIONS. MOUNT DETECTORS AS CLOSE AS PRACTICAL TO HIGH POINT OF CEILING. CONNECT TO NEW FIRE ALARM CONTROL PANEL IN CXA BUILDING.

FIRE ALARM GENERAL NOTES:

1. REFER TO DRAWING FA-001.00 FOR SYMBOLS, ABBREVIATIONS, AND NOTES. LAYOUT OF FIRE ALARM DEVICES ON THIS PLAN IS DIAGRAMMATIC; EXACT LOCATIONS OF DEVICES AND CONDUIT SHALL BE COORDINATED WITH FIELD CONDITIONS, ARCHITECTURAL REQUIREMENTS, AND MANUFACTURER RECOMMENDATIONS.
2. ALL DEVICES AND EQUIPMENT SHOWN ON THIS PLAN ARE NEW, UNLESS OTHERWISE NOTED.
3. INSTALL NEW FIRE ALARM SYSTEM IN STRICT ACCORDANCE WITH NFPA-72 AND NFPA-90A REQUIREMENTS.
4. CONTRACTOR SHALL INSTALL NEW FIRE ALARM SYSTEM AS INDICATED AND PROVIDE ALL NECESSARY WIRING, CONDUIT, AND APPARATUSES.
5. ALL VISUAL NOTIFICATION DEVICES IN THE SAME SPACE SHALL BE SYNCHRONIZED IN ACCORDANCE WITH NFPA-72.
6. COORDINATE INSTALLATION WITH FIRE ALARM SYSTEM VENDOR AND MANUFACTURER REQUIREMENTS.
7. COORDINATE FIRE ALARM DEVICES WITH ARCHITECTURAL FINISHES. CONCEAL CONDUIT IN FINISHED WALLS AND FLUSH MOUNT DEVICES WHERE POSSIBLE.
8. CONTRACTOR SHALL TEST THE FIRE ALARM SYSTEM AFTER COMPLETION OF INSTALLATION. FIRE ALARM SYSTEM SHALL BE TESTED AND VERIFIED TO BE WORKING PROPERLY PRIOR TO INSPECTION BY THE AUTHORITY HAVING JURISDICTION.
9. FOLLOWING INSTALLATION, CONTRACTOR SHALL PATCH, PAINT, AND RESTORE ALL WALLS AND CEILINGS TO MATCH EXISTING OR DESIRED NEW CONDITION.
10. FIRESTOP ALL FIRE-RATED FLOOR OR WALL PENETRATIONS TO MAINTAIN ORIGINAL FIRE RATING TO FULL DEPTH OF OPENING.
11. CONTRACTOR SHALL PROVIDE SLEEVE FOR CONDUIT PENETRATIONS THROUGH WALL AND CEILING FLOORS.

CONSULTANT INFORMATION

LiRo Engineers, Inc.
A LiRo Group Company
Syosset, N.Y. 516-214-8157[T]

CONSULTANT SEAL

STATE OF NEW YORK · FRANK F. ULISSE · LICENSED PROFESSIONAL ENGINEER · 090111

REVISION NUMBER	DATE	MADE BY	APP'D BY	REVISION
1	9/21/22			BID ADDENDUM #3

RECORD DRAWING CERTIFICATION

☐ AS BUILT – CHANGES AS NOTED ☐ AS BUILT – NO CHANGES

CONTRACTOR
NAME
SIGNATURE
TITLE DATE

PROJECT COORDINATOR
NAME
SIGNATURE
TITLE DATE

WESTCHESTER COUNTY, NEW YORK
DEPARTMENT OF PUBLIC WORKS AND TRANSPORTATION
DIVISION OF ENGINEERING

INFRASTRUCTURE REHABILITATION - PHASE 3
PLAYLAND PARK, RYE, NEW YORK
DRAGON COASTER VENDORS
FIRE ALARM ROOF PLAN

CONTRACT NUMBER 22-523
SHEET NUMBER DCV-FA-22
DWG NO.: 487 of 664
SCALE: As indicated
DATE: 08/23/2022
DPW FILE NUMBER 1-118-FA-1236-1
REV. NO. 1

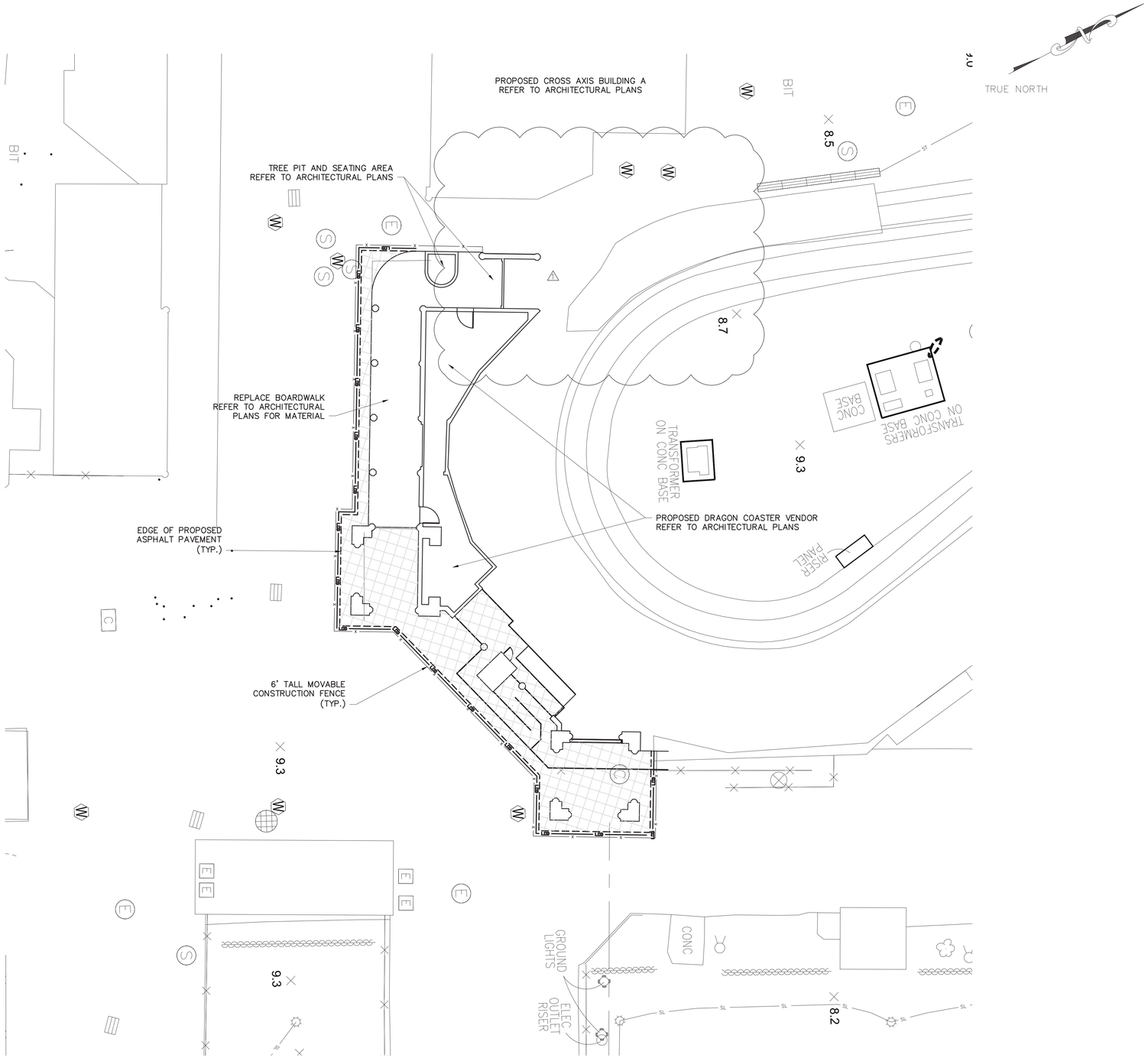

EXISTING LEGEND

- POST
- UTILITY POLE
- SIGN OR
- HANDICAP PARKING
- GROUND LIGHT
- LIGHT POLE
- UTILITY POLE WITH LIGHT
- LIGHT POLE (SINGLE LIGHT)
- LIGHT POLE (DOUBLE LIGHT)
- LIGHT POLE (MULTI LIGHT)
- BOAT TIE-OFF CLEAT
- CATCH BASIN OR OR
- TRENCH DRAIN
- MAILBOX
- UNKNOWN MANHOLE
- COMMUNICATIONS BOX/HAND HOLE OR
- ELECTRIC HAND HOLE
- ELECTRIC BOX
- GAS METER
- IRRIGATION BOX
- UNKNOWN UTILITY BOX/HAND HOLE
- COMMUNICATION MANHOLE
- DRAINAGE MANHOLE OR
- ELECTRIC MANHOLE
- SEWER MANHOLE OR
- STORM SEWER MANHOLE
- SEWER CLEANOUT
- HYDRANT
- SIAMESE CONNECTION
- UNKNOWN VALVE OR
- WATER VALVE
- GAS VALVE
- WATER SPIGOT OR FOUNTAIN
- MONITORING WELL
- DECIDUOUS BUSH
- EVERGREEN BUSH
- DECIDUOUS TREE
- EVERGREEN TREE
- STUMP
- HEDGE ROW
- TREELINE
- BRUSHLINE
- RETAINING WALL
- GUIDE RAIL
- STONE WALL
- FENCE

PROPOSED LEGEND:

- **MOVABLE CONSTRUCTION FENCE**
- **SAW CUTTING ASPHALT CONCRETE**
- LIMITS OF DISTURBANCE
- LIMITS OF PAVEMENT REMOVAL
- **AREA OF FULL DEPTH ASPHALT PAVEMENT**
- **DRAINAGE STRUCTURE INLET PROTECTION**

0 10 20 30
1"=10' SCALE BAR

6/15/2022 4:10:27 PM

CONSULTANT INFORMATION

LiRo Engineers, Inc.
A LiRo Group Company
Mineola, N.Y. 516-746-2350[T]

CONSULTANT SEAL

STATE OF NEW YORK · KENNETH J. HOOD · LICENSED PROFESSIONAL ENGINEER · NO. 059134

REVISION NUMBER	DATE	MADE BY	APP'D BY	REVISION
1	9/21/22	HIK	LK	BID ADDENDUM #3

RECORD DRAWING CERTIFICATION
☐ AS BUILT – CHANGES AS NOTED ☐ AS BUILT – NO CHANGES

CONTRACTOR
NAME
SIGNATURE
TITLE DATE

PROJECT COORDINATOR
NAME
SIGNATURE
TITLE DATE

WESTCHESTER COUNTY, NEW YORK
DEPARTMENT OF PUBLIC WORKS AND TRANSPORTATION
DIVISION OF ENGINEERING

INFRASTRUCTURE REHABILITATION PHASE 3
PLAYLAND PARK, RYE, NEW YORK
DRAGON COASTER VENDOR
SITE CONSTRUCTION PLAN

CONTRACT NUMBER	22-523
SHEET NUMBER	DCV-C-03
DWG NO.	491 of 664
SCALE:	1"=10'
DATE:	08/23/2022
DPW FILE NUMBER	1-118-C-1240-1
REV. NO.	1

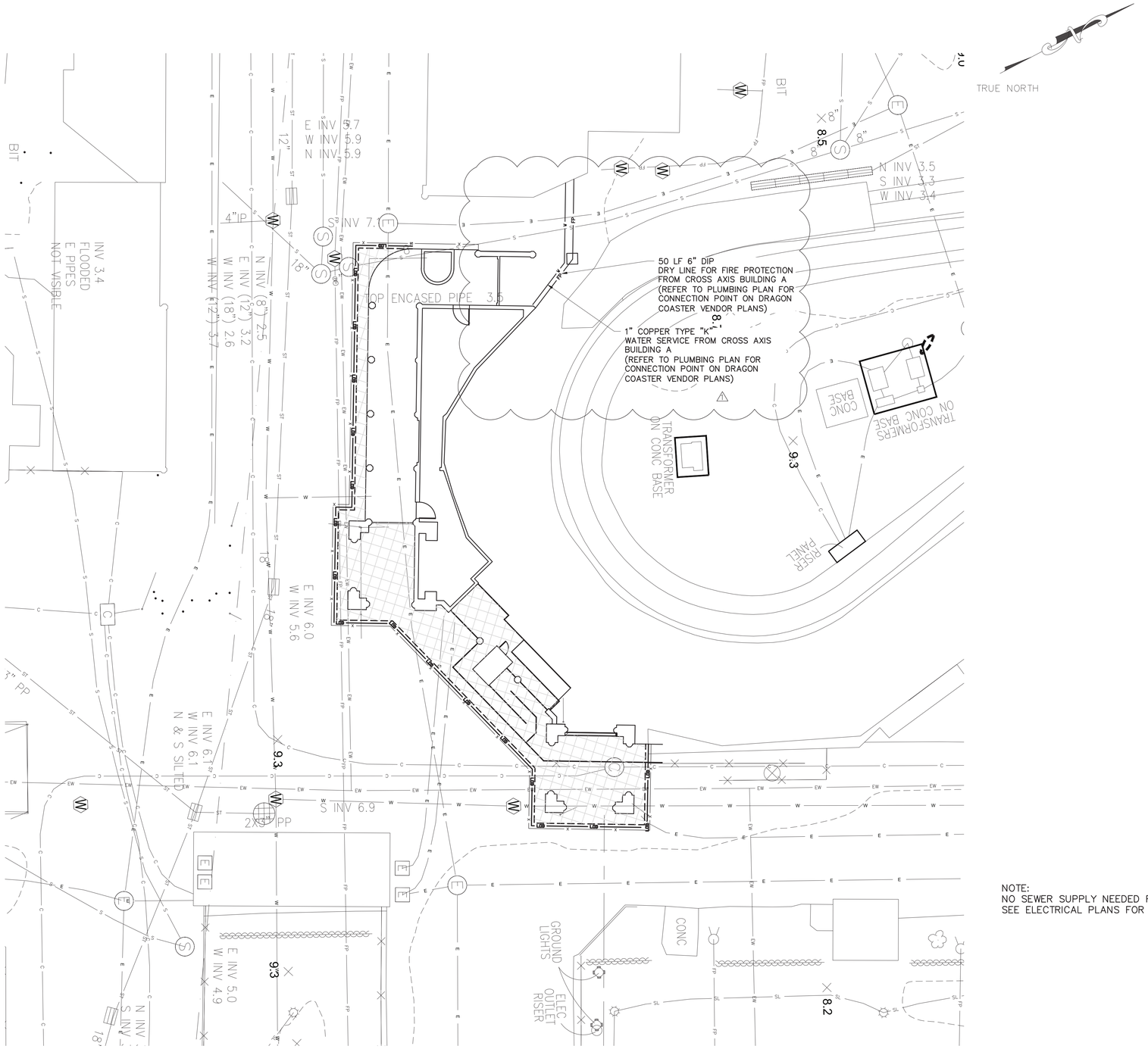

NOTE:
NO SEWER SUPPLY NEEDED FOR THIS BUILDING
SEE ELECTRICAL PLANS FOR DETAILS

EXISTING LEGEND

- POST
- UTILITY POLE
- SIGN
- HANDICAP PARKING
- GROUND LIGHT
- LIGHT POLE
- UTILITY POLE WITH LIGHT
- LIGHT POLE (SINGLE LIGHT)
- LIGHT POLE (DOUBLE LIGHT)
- LIGHT POLE (MULTI LIGHT)
- BOAT TIE-OFF CLEAT
- CATCH BASIN
- TRENCH DRAIN
- MAILBOX
- UNKNOWN MANHOLE
- COMMUNICATIONS BOX/HAND HOLE
- ELECTRIC HAND HOLE
- ELECTRIC BOX
- GAS METER
- IRRIGATION BOX
- UNKNOWN UTILITY BOX/HAND HOLE
- COMMUNICATION MANHOLE
- DRAINAGE MANHOLE
- ELECTRIC MANHOLE
- SEWER MANHOLE
- STORM SEWER MANHOLE
- SEWER CLEANOUT
- HYDRANT
- SIAMESE CONNECTION
- UNKNOWN VALVE
- WATER VALVE
- GAS VALVE
- WATER SPIGOT OR FOUNTAIN
- MONITORING WELL
- DECIDUOUS BUSH
- EVERGREEN BUSH
- DECIDUOUS TREE
- EVERGREEN TREE
- STUMP
- HEDGE ROW
- TREELINE
- BRUSHLINE
- RETAINING WALL
- GUIDE RAIL
- STONE WALL
- WATERLINE
- FENCE
- UNDERGROUND COMMUNICATION
- UNDERGROUND PROPANE
- UNDERGROUND ELECTRICAL
- UNDERGROUND STREET LIGHTING
- UNDERGROUND ENVIRONMENTAL WASTEWATER
- UNDERGROUND SEWER
- UNDERGROUND STORM SEWER
- UNDERGROUND WATER
- UNDERGROUND FIRE PROTECTION

PROPOSED LEGEND:

- SAW CUTTING ASPHALT CONCRETE
- LIMITS OF DISTURBANCE
- LIMITS OF PAVEMENT REMOVAL (MILLING & EXCAVATION)
- PROPOSED WATER LINE
- PROPOSED CATCH BASIN
- PROPOSED STORM PIPE
- PROPOSED SANITARY MANHOLE
- PROPOSED SANITARY PIPE
- PROPOSED UNDERGROUND ELECTRIC

0 10 20 30
1"=10' SCALE BAR

6/15/2022 4:10:27 PM

CONSULTANT INFORMATION
LiRo Engineers, Inc.
A LiRo Group Company
Mineola, N.Y. 516-746-2350[T]

CONSULTANT SEAL
STATE OF NEW YORK · KENNETH J. HOLOHAN · LICENSED PROFESSIONAL ENGINEER · 059134

REVISION NUMBER	DATE	MADE BY	APP'D BY	REVISION
1	9/21/22	HIK	LK	BID ADDENDUM #3

RECORD DRAWING CERTIFICATION
AS BUILT – CHANGES AS NOTED
AS BUILT – NO CHANGES

CONTRACTOR
NAME
SIGNATURE
TITLE DATE

PROJECT COORDINATOR
NAME
SIGNATURE
TITLE DATE

WESTCHESTER COUNTY, NEW YORK
DEPARTMENT OF PUBLIC WORKS AND TRANSPORTATION
DIVISION OF ENGINEERING

INFRASTRUCTURE REHABILITATION PHASE 3
PLAYLAND PARK, RYE, NEW YORK
DRAGON COASTER VENDOR
UTILITY CONSTRUCTION PLAN

CONTRACT NUMBER	22-523
SHEET NUMBER	DCV-C-04
DWG NO.	492 of 664
SCALE:	1"=10'
DATE:	08/23/2022
DPW FILE NUMBER	1-118-C-1241-1
REV. NO.	1

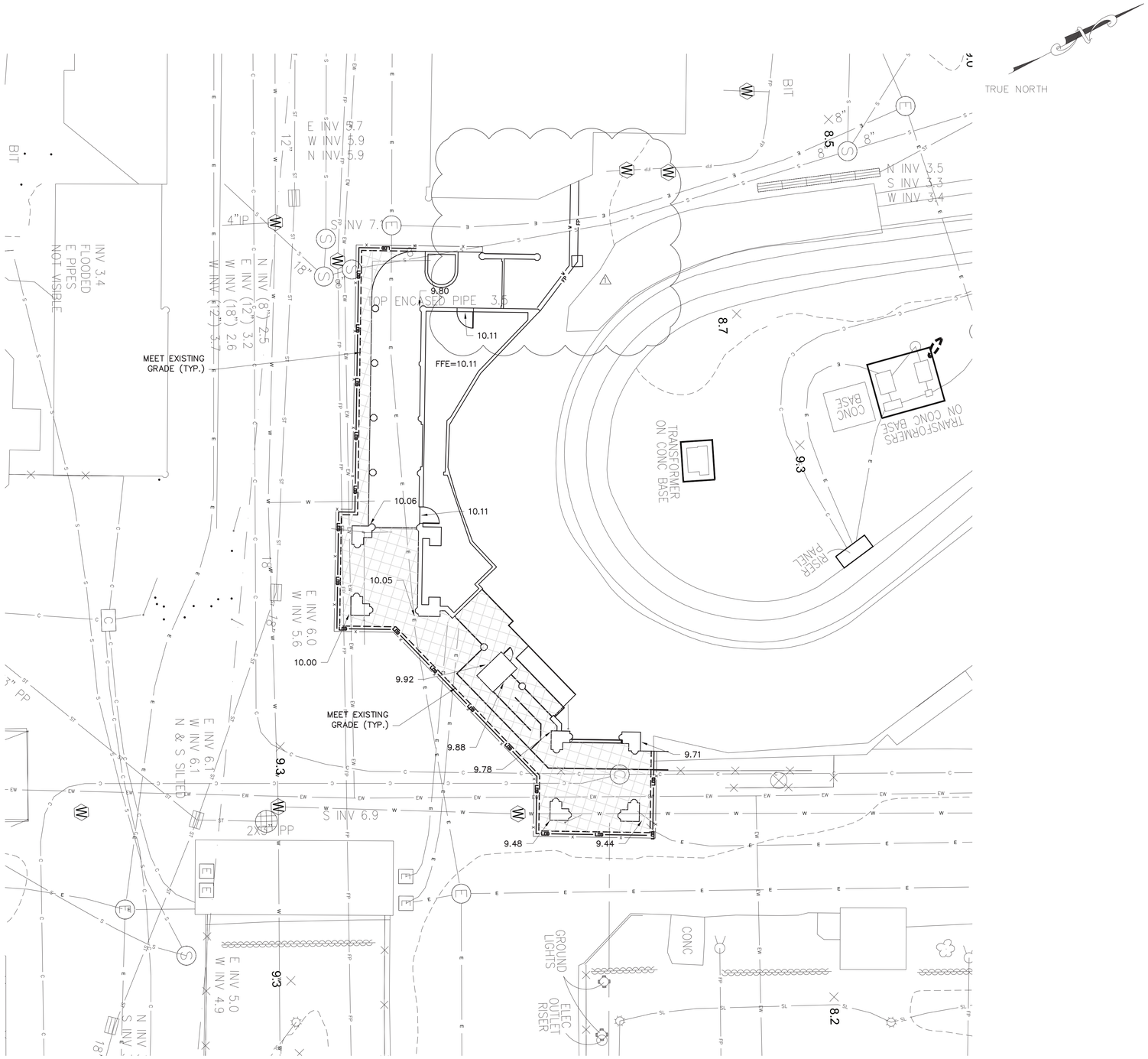

EXISTING LEGEND

- POST
- UTILITY POLE
- SIGN
- HANDICAP PARKING
- GROUND LIGHT
- LIGHT POLE
- UTILITY POLE WITH LIGHT
- LIGHT POLE (SINGLE LIGHT)
- LIGHT POLE (DOUBLE LIGHT)
- LIGHT POLE (MULTI LIGHT)
- BOAT TIE-OFF CLEAT
- CATCH BASIN
- TRENCH DRAIN
- MAILBOX
- UNKNOWN MANHOLE
- COMMUNICATIONS BOX/HAND HOLE
- ELECTRIC HAND HOLE
- ELECTRIC BOX
- GAS METER
- IRRIGATION BOX
- UNKNOWN UTILITY BOX/HAND HOLE
- COMMUNICATION MANHOLE
- DRAINAGE MANHOLE
- ELECTRIC MANHOLE
- SEWER MANHOLE
- STORM SEWER MANHOLE
- SEWER CLEANOUT
- HYDRANT
- SIAMESE CONNECTION
- UNKNOWN VALVE
- WATER VALVE
- GAS VALVE
- WATER SPIGOT OR FOUNTAIN
- MONITORING WELL
- DECIDUOUS BUSH
- EVERGREEN BUSH
- DECIDUOUS TREE
- EVERGREEN TREE
- STUMP
- HEDGE ROW
- TREELINE
- BRUSHLINE
- RETAINING WALL
- GUIDE RAIL
- STONE WALL
- WATERLINE
- FENCE
- UNDERGROUND COMMUNICATION
- UNDERGROUND PROPANE
- UNDERGROUND ELECTRICAL
- UNDERGROUND STREET LIGHTING
- UNDERGROUND ENVIRONMENTAL WASTEWATER
- UNDERGROUND SEWER
- UNDERGROUND STORM SEWER
- UNDERGROUND WATER
- UNDERGROUND FIRE PROTECTION
- 415.50 EXISTING SPOT ELEVATION
- TG=415.50 EXISTING TOP OF GRATE ELEVATION

PROPOSED LEGEND:

- LOD LIMITS OF DISTURBANCE
- 415 PROPOSED MAJOR CONTOUR
- 414 PROPOSED MINOR CONTOUR
- 9.66 PROPOSED SPOT ELEVATION
- PROPOSED INLET PROTECTION

New York 811 Know what's below. Call before you dig.

0 10 20 30
1"=10' SCALE BAR

6/15/2022 4:10:27 PM

CONSULTANT INFORMATION

LiRo Engineers, Inc.
A LiRo Group Company
Mineola, N.Y. 516-746-2350[T]

CONSULTANT SEAL

STATE OF NEW YORK · KENNETH J. HOLMSTROM · No. 059134 · LICENSED PROFESSIONAL ENGINEER

REVISION NUMBER	DATE	MADE BY	APP'D BY	REVISION
1	9/21/22	HIK	LK	BID ADDENDUM #3

RECORD DRAWING CERTIFICATION

AS BUILT – CHANGES AS NOTED

AS BUILT – NO CHANGES

CONTRACTOR
NAME
SIGNATURE
TITLE DATE

PROJECT COORDINATOR
NAME
SIGNATURE
TITLE DATE

WESTCHESTER COUNTY, NEW YORK
DEPARTMENT OF PUBLIC WORKS AND TRANSPORTATION
DIVISION OF ENGINEERING

INFRASTRUCTURE REHABILITATION PHASE 3
PLAYLAND PARK, RYE, NEW YORK
DRAGON COASTER VENDOR
GRADING AND EROSION CONTROL PLAN

CONTRACT NUMBER: 22-523
SHEET NUMBER: DCV-C-05
DWG NO.: 493 of 664
SCALE: 1"=10'
DATE: 08/23/2022
DPW FILE NUMBER: 1-118-C-1242-1
REV. NO.: 1

9/20/2022 10:57:18 AM

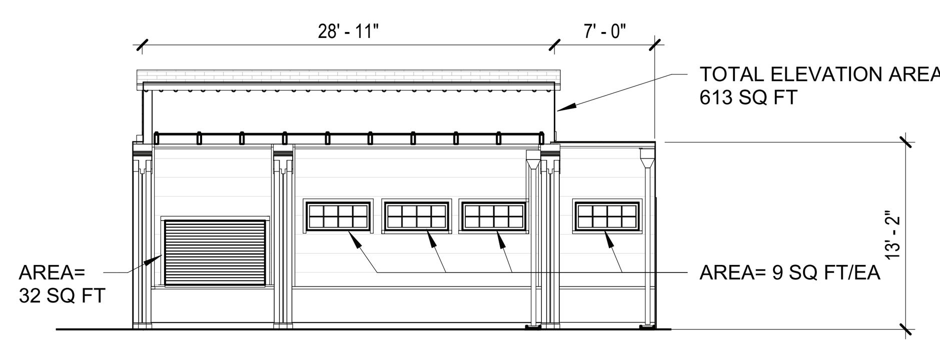

2 WEST CODE ELEVATION
3/32" = 1'-0"

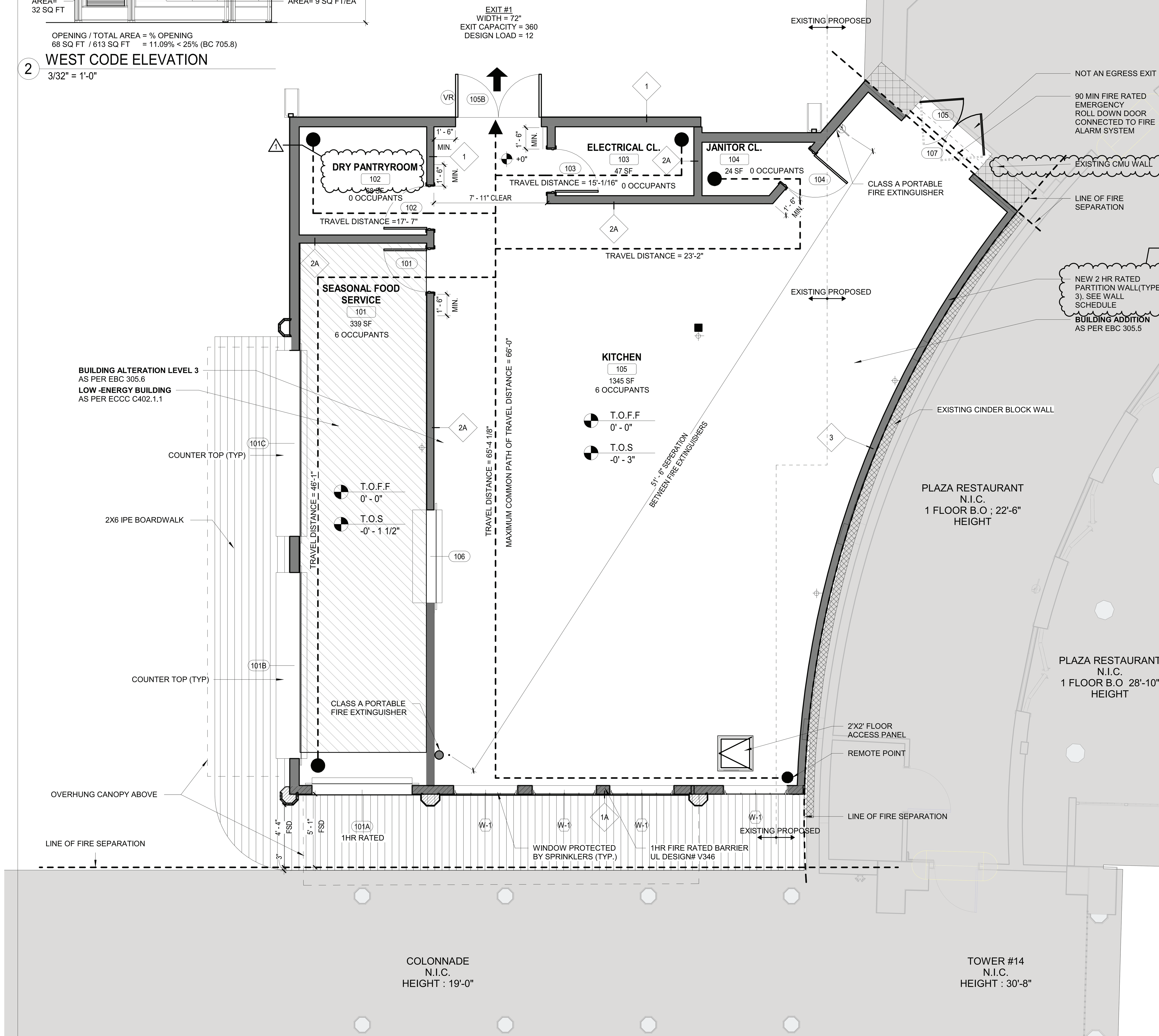

1 GROUND FLOOR EGREES PLAN
1/4" = 1'-0"

LIFE SAFETY DIAGRAM LEGEND

1 HR RATED FIRE SEPERATION BARRIER	
2 HR RATED FIRE WALL	
MAXIMUM PATH OF EGRESS	
NOT IN CONTRACT (NIC)	NIC
LOW ENERGY BUILDING	
STUB UP	
TRUSS SIGNAGE	VR

LIFE SAFETY NOTES :

1. BUILDING IS FULLY SPRINKLERED
2. SEE SHEET K-A-84 FOR RATED COLUMN DETAILS.

HISTORICAL BUILDING REGISTRY

PLAYLAND AMUSEMENT PARK IS A DESIGNATED NATIONAL HISTORIC LANDMARK AND IS LISTED ON THE NATIONAL REGISTER OF HISTORIC PLACES.

THE NATIONAL HISTORIC PLACES REGISTER
REFERENCE NUMBER: 80004529_NHL
NATIONAL ARCHIVE IDENTIFIER: 75323175

RESTAURANT KITCHEN BUILDING A IS A CONTRIBUTING STRUCTURE OF THE LANDMARK AND THEREFORE AN HISTORIC BUILDING UNDER THE 2020 BUILDING CODE AND 2020 EXISTING BUILDING CODE OF NEW YORK STATE

TABLE 1604.5
RISK CATEGORY OF BUILDINGS AND OTHER STRUCTURES

RISK CATEGORY	NATURE OF OCCUPANCY
I	Buildings and other structures that represent a low hazard to human life in the event of failure, including but not limited to: • Agricultural facilities. • Certain temporary facilities. • Minor storage facilities.
II	Buildings and other structures except those listed in Risk Categories I, III and IV.

SEISMIC DESIGN CATEGORY BASED ON SHORT-PERIOD (0.2 second) RESPONSE ACCELERATION

VALUE OF S_{DS}	RISK CATEGORY I or II	III	IV
$S_{DS} < 0.167g$	A	A	A
$0.167g \le S_{DS} < 0.33g$	B	B	C
$0.33g \le S_{DS} < 0.50g$	C	C	D
$0.50g \le S_{DS}$	D	D	D

ADDITION TO MEET PRESCRIPTIVE METHOD C502.2 IN 2020 ENERGY CONSERVATION CONSTRUCTION CODE OF NEW YORK STATE

NEW CONSTRUCTION MIN R-VALUE

[NY] TABLE C402.1.3/4
CLIMATE ZONE - MARINE 4

WOOD FRAME WALLS, ABOVE GROUND	MIN R-20
ATTIC AND OTHER ROOFS	MIN R-38
UNHEATED SLABS	MIN R-10 FOR 24" BELOW
OPAQUE SWINGING DOOR	MAX U-0.37
OPERABLE FENESTRATION	MAX U-0.45

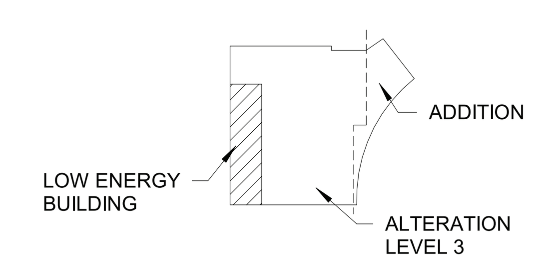

3 BUILDING KEYPLAN

CODE ANALYSIS

APPLICABLE CODES:

NEW YORK STATE BUILDING CODE 2020	(BC)
NEW YORK STATE EXISTING BUILDING CODE 2020	(EBC)
ENERGY CONSERVATION CONSTRUCTION CODE OF NEW YORK STATE	(ECCC)
NFPA 13 2013	(NFPA 13)

CONSTRUCTION TYPE (TBL 601)	VB	FULLY SPRINKLERED
OCCUPANCY CLASSIFICATION	A-2	COMMERCIAL KITCHENS

	ALLOWABLE / REQUIRED	PROPOSED
NUMBER OF STORIES (TBL 504.4)	< 2	1
HEIGHT (FT) (TBL 504.3)	< 60'	25'-4"
BUILDING AREA (SF) (TBL 506.2)	< 24,000	1,882
ALLOWABLE AREA, SINGLE-OCC. ONE STORY	<24,579	1,882
FIRE-RESISTANCE RATING REQUIREMENTS (TBL 601)		
PRIMARY STRUCTURE FRAME	0	0
BEARING WALLS		
EXTERIOR		
0 < 10 FT	1 BOTH SIDES	1
≥ 10 FT	0	0
INTERIOR	0	0
NONBEARING WALLS		
EXTERIOR (TBL 601)		
0 < 10 FT	1 BOTH SIDES	1
≥ 10 FT	0	0
INTERIOR	0	0
FLOOR CONSTRUCTION	0	0
ROOF CONSTRUCTION	0	0

PROJECTIONS (BC 705.2.3.1 EXCEPTIONS)
3. PROJECTIONS ON BUILDINGS OF TYPE V CONSTRUCTION SHALL BE PERMITTED TO BE OF TYPE V CONSTRUCTION AND SHALL NOT BE REQUIRED TO HAVE A FIRE RESISTANCE RATING WHERE SPRINKLER PROTECTION IS EXTENDED TO THESE AREAS.

EXTERIOR PROJECTIONS NFPA 13; SECTION 8.15.7.3
SPRINKLERS SHALL BE PERMITTED TO BE OMITTED FROM BELOW THE EXTERIOR PROJECTS OF COMBUSTIBLE CONSTRUCTION, PROVIDED THE EXPOSED FINISH MATERIAL ON THE EXTERIOR PROJECTS ARE NON COMBUSTIBLE, LIMITED-COMBUSTIBLE, OR FIRE RETARDANT-TREATED WOOD AS DEFINED IN NFPA 703.

ALLOWABLE AREA OF OPENINGS (BC 705.8)		
FSD 5 FT < 10 FT; UNPROTECTED; SPRINKLERED	25%	11.09%
FSD > 20 FT; UNPROTECTED; SPRINKLERED	NO LIMIT	
FIRE WALL FIRE RESISTANCE RATINGS (TBL 706.4)		
GROUP A (²TYPE V CONSTRUCTION)	2 HR²	
INTERIOR FINISHES CLASS (BC 803)		
WALL AND CEILING; SPRINKLERED (TBL 803.13)	CLASS C	
FLOORS; GROUP A (BC 804.4.2)	CLASS II	
PORTABLE FIRE EXTINGUISHERS (BC 906)		
FIRE HAZARD OCCUPANCY	CLASS K	
MIN-RATING SINGLE EXTINGUISHER	ORDINARY	
MAX FLOOR AREA	2-A	
MAX DISTANCE OF TRAVEL TO EXTINGUISHER	1,500 SF	2,399 SF
MAX DISTANCE OF TRAVEL TO EXTINGUISHER	11,250 SF	X
	30 FT	
NUMBER OF EXTINGUISHERS REQUIRED	COMMERCIAL KITCHENS	
FIRST FLOOR	1.6	2
MEANS OF EGRESS (BC 10)		
MAX FLOOR AREA ALLOWANCE PER OCCUPANT (TBL 1004.1.2)(SF)		SEE PLANS
ACCESSORY STORAGE AREAS	300 GROSS	
KITCHENS, COMMERCIAL	200 GROSS	
EGRESS WIDTH COMPONENT VALUE FOR SPACE	50 GROSS	
DESIGN OCCUPANT LOAD	0.2	12 OCCUPANTS
EGRESS WIDTH PER OCCUPANT (IN)(BC 1005)		
KITCHENS	12 OCCUPANTS	
MAX COMMON PATH OF EGRESS OF TRAVEL DISTANCE (TBL 1006.2.1)	0.15 / OCCUPANT 1.8"	72"
OCCUPANCY A; X<30; SPRINKLER SYSTEM		SEE PLANS
MINIMUM NUMBER OF EXITS (TBL 1006.3.2)		
OCCUPANT LOAD: 1-500	75 FT	1*
SINGLE EXITS (TBL 1006.3.3)*	2	SINGLE EXITS (BELOW)

ROOMS, AREAS AND SPACES COMPLY WITH SECTION 1006.2.1 WITH EXITS THAT DISCHARGE DIRECTLY TO THE EXTERIOR AT THE LEVEL OF DISCHARGE, ARE PERMITTED TO HAVE ONE EXIT OR ACCESS TO A SINGLE EXIT.

MAX TRAVEL DISTANCE (BC 1017)		
A-2 OCCUPANCY; SPRINKLER SYSTEM	250'	SEE PLANS

EXISTING MATERIALS (EBC 302.4)
MATERIALS ALREADY IN USE IN A BUILDING IN COMPLIANCE WITH REQUIREMENTS OR APPROVALS IN EFFECT AT THE TIME OF THEIR ERECTION OR INSTALLATION SHALL BE PERMITTED TO REMAIN IN USE UNLESS DETERMINED BY BUILDING OFFICIAL TO BE UNSAFE.

NEW AND REPLACEMENT MATERIALS (EBC 302.5)
MATERIALS PERMITTED BY THE APPLICABLE CODE FOR NEW CONSTRUCTION SHALL BE USED. LIKE MATERIALS SHALL BE PERMITTED FOR REPAIRS AND ALTERATIONS, PROVIDED THAT UNSAFE CONDITIONS ARE NOT CREATED.

ADDITIONS AND ALTERATIONS
(EBC 305.5, 305.6, AND 305.7)
WHERE AN ALTERATION (AND ADDITIONS) AFFECTS THE ACCESSIBILITY TO, OR CONTAINS AN AREA OF PRIMARY FUNCTION, THE ROUTE TO THE PRIMARY FUNCTION AREA SHALL BE ACCESSIBLE.

ALTERATION 3
(EBC 604.1)
WHERE THE WORK AREA EXCEEDS 50% OF THE BUILDING AREA

EBC 907.1 LEVEL 3 ALTERATIONS TO EXISTING BUILDINGS ARE PERMITTED WITHOUT REQUIRING THE ENTIRE BUILDING TO COMPLY WITH THE ENERGY REQUIREMENTS OF ECCC.

CLIMATE ZONE (ECCC TBL C301.1) 4A (MARINE)

OPENING THERMAL ENVELOPE MIN REQ'S (C303.1.3)	**ALLOWABLE / REQUIRED**	**PROPOSED**
GLAZING - NON-METAL FRAME (U-FACTOR)	0.95	0.95
OPAQUE DOOR - UNINSULATED METAL (U-FACTOR)	1.20	1.20
GLAZED FENESTRATION SGHC	0.8 CLEAR	0.8
GLAZED FENESTRATION VT	0.6 CLEAR	0.6

LOW ENERGY BUILDINGS (ECCC C402.1.1)
PORTIONS THEREOF SEPARATED FROM THE REMAINDER OF THE BUILDING THERMAL ENVELOPE ASSEMBLIES COMPLY WITH THIS SECTION SHALL BE EXEMPT FROM BUILDING THERMAL ENVELOPE PROVISIONS.
2. THOSE THAT DO NOT CONTAIN CONDITIONED SPACE.

OPAQUE THERMAL ENVELOPE MIN REQ'S (ECCC TBL C402.1.3 AND 4)		
ABOVE ROOF DECK	R-30ci / U-0.032	MEAN R-43.35ci
ATTIC AND OTHER ROOF ELEMENT	R-38 / U-0.027	R-38
WOOD FRAMED AND OTHER WALLS ABOVE GRADE	R-13+R-3.8ci OR R-20 / U-0.064	R-13+R-3.8ci
JOIST/FRAMING FLOOR	R-30 / U-0.033	R-30
UNHEATED SLAB-ON-GRADE	R-10 FOR BELOW 24" / F-0.54	R-10
OPAQUE DOORS - NONSWINGING	R-4.75	R-4.75
OPAQUE SWINGING DOOR	U-0.37	U-0.37
GARAGE DOOR	U-0.31	U-0.31

BUILDING ENVELOPE FENESTRATION MAX U-FACTOR REQ'S (ECCC C402.4)
OPERABLE FENESTRATION (U-FACTOR) 0.45

CONSULTANT INFORMATION
The LiRo Group
1 State Street Plaza, New York, NY, 10004
(516) 938-5476 www.liro.com

CONSULTANT SEAL
REGISTERED ARCHITECT ROBERT D YOUNG JR 023200 STATE OF NEW YORK

REVISION NUMBER	DATE	MADE BY	APP'D BY	REVISION
1	9-21-22			BID ADDENDUM #3

RECORD DRAWING CERTIFICATION
☐ AS BUILT – CHANGES AS NOTED ☐ AS BUILT – NO CHANGES

CONTRACTOR	PROJECT COORDINATOR
NAME	NAME
SIGNATURE	SIGNATURE
TITLE DATE	TITLE DATE

WESTCHESTER COUNTY, NEW YORK
DEPARTMENT OF PUBLIC WORKS AND TRANSPORTATION
DIVISION OF ENGINEERING

INFRASTRUCTURE REHABILITATION
PLAYLAND PARK, RYE, NEW YORK
RESTAURANT KITCHEN WITH FOOD VENDING
CODE PLAN

CONTRACT NUMBER: **22-523**
SHEET NUMBER: **K-G-02**
DWG NO.: **497 of 664**
SCALE: **As indicated**
DATE: **8/23/20223**
DPW FILE NUMBER: **1-118-G-1248-1**
REV. NO.: **1**

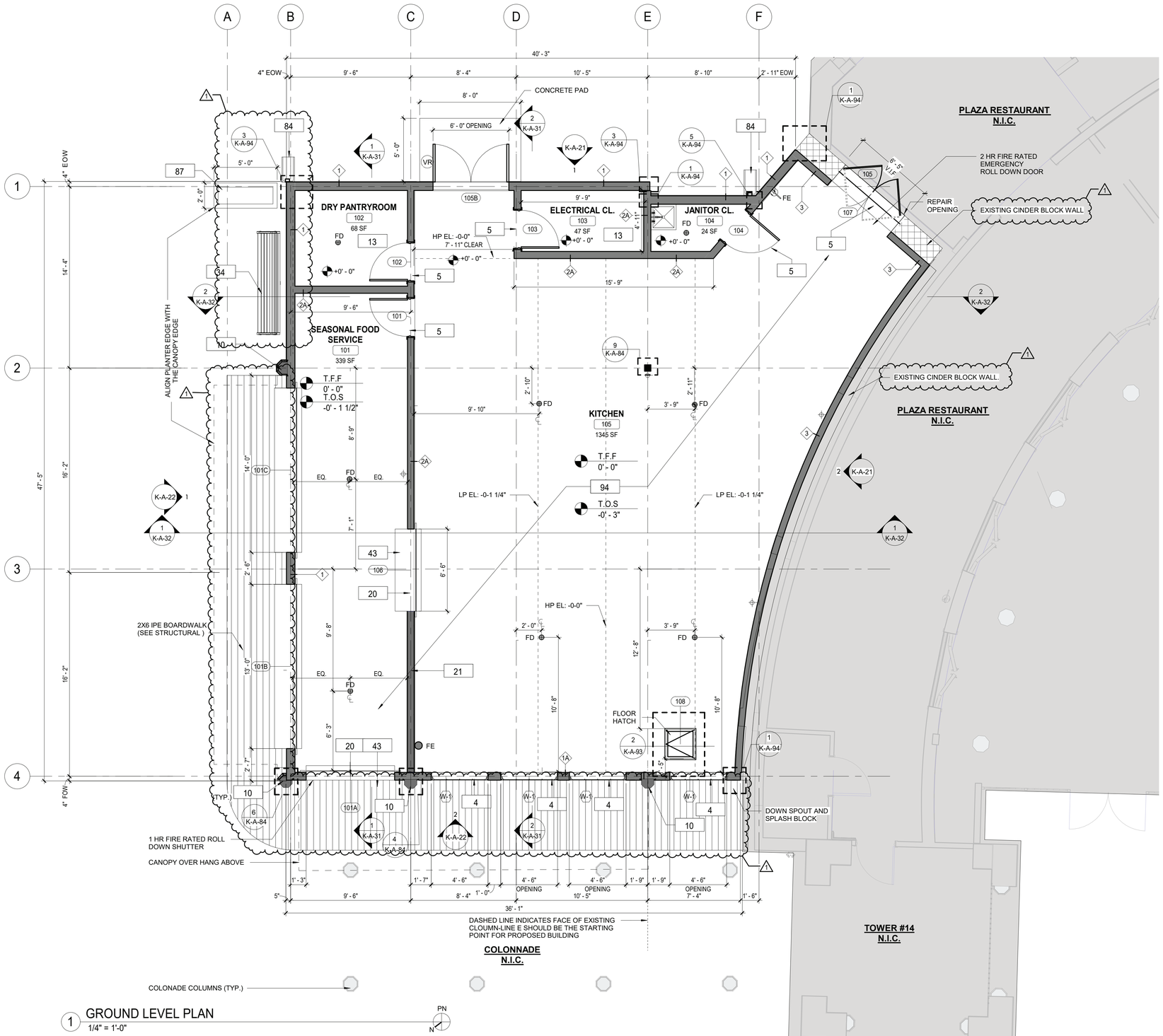

1 GROUND LEVEL PLAN
1/4" = 1'-0"

FLOOR PLAN GENERAL NOTES

1. DIMENSIONS ARE TO FACE OF GYPSUM WALL BOARD, FACE OF EXISTING WALL, GRID LINES, OR CENTERLINE OF COLUMN. ALL ELEVATIONS ARE NOTED FROM FINISH FLOOR ELEVATIONS.
2. PROVIDE DRYWALL TRIM AT ALL EXPOSED EDGES AND CORNERS.
3. PROVIDE METAL BLOCKING FOR ANY WALL MOUNTED EQUIPMENT OR ACCESSORIES. COORDINATE ALL BLOCKING REQUIREMENTS NECESSARY WITH OTHER TRADES.
4. THE G.C. SHALL VERIFY DIMENSIONS OF THE EXISTING SPACE AND OF ANY EXISTING CONSTRUCTION TO REMAIN BY ACTUAL MEASUREMENT BEFORE ANY WORK IS PERFORMED. IF ANY MEASUREMENTS DIFFER FROM DIMENSIONS SHOWN ON PLAN, G.C. IS TO NOTIFY THE ARCHITECT IMMEDIATELY. THE G.C. SHALL BE RESPONSIBLE FOR CORRECTING ANY AND ALL DISCREPANCIES FOUND AFTER THE WORK IS PERFORMED, AT NO ADDITIONAL EXPENSE TO THE OWNER.
5. G.C. TO VERIFY ALL FINISHED DIMENSIONS. FIELD CONDITIONS ALTERING ANY DIMENSIONS SHOULD BE BROUGHT TO THE ATTENTION OF THE OWNER AND ARCHITECT.
6. THE G.C. SHALL PROVIDE CAULK JOINTS WHERE GYP. BD. MEETS THE FLOOR OR ROOF DECK.
7. THE G.C. SHALL BE RESPONSIBLE FOR COORDINATING WITH OWNER ON ALL WORK TO BE PERFORMED BY THE OWNER. ANY POTENTIAL CONFLICTS OR DELAYS CAUSED BY THE OWNER'S SUBCONTRACTORS MUST BE DOCUMENTED IN WRITING TO THE OWNER BEFORE THE DELAY IS ACTUALLY INCURRED FOR IT TO BE CONSIDERED. OTHERWISE THE G.C. WILL BE RESPONSIBLE FOR MEETING THE SCHEDULE AS OUTLINED IN THE CONTRACT.
8. THE G.C. SHALL SUPPLY ALL MATERIAL, LABOR, AND COORDINATION REQUIRED FOR THE INSTALLATION OF ALL OWNER-SUPPLIED ITEMS AS DESCRIBED IN THE DOCUMENTS, U.N.O.
9. THE G.C. IS RESPONSIBLE FOR ALL FLOOR AND WALL PENETRATIONS FOR ELECTRICAL AND MECHANICAL WORK. ALL SUCH OPENING SHALL BE FRAMED AND REINFORCED.
10. FLOOR SURFACES SHALL BE LEVELED TO ASSURE SMOOTH SURFACE FOR FINISH FLOOR INSTALLATION. G.C. SHALL ALSO PAY SPECIAL ATTENTION THAT ALL WALL SURFACES ARE SMOOTH WHERE MURALS WILL BE DIRECTLY APPLIED TO WALL.
11. G.C. TO COORDINATE ALL UTILITY STUB-UPS AND LOCATION OF ALL EQUIPMENT PRIOR TO INSTALLING ANY ONE ITEM.
12. REFER TO SHEET K-A-94 FOR PARTITION TYPE INFORMATION.
13. PROVIDE PAINTED ACCESS PANELS IN WALLS & CEILING AT CONCEALED ITEMS. SUCH AS VALVES, CONTROLS, SWITCHES OR ANY OTHER ITEMS THAT REQUIRES ACCESS. G.C. TO DETERMINE ACCESS PANEL LOCATION W/ ARCHITECT PRIOR TO INSTALLATION.
14. FOR DOOR SCHEDULE AND FLOOR FINISH TRANSITION DETAILS REFER TO SHEET K-A-93
15. FOR WINDOW SCHEDULE , REFER TO SHEET K-A-88
16. FOR PARTITION WALL TYPES , REFER TO SHEET K-A-94
17. FOR FINISH SCHEDULE REFER TO SHEET K-A-91
18. FOR ROOF DETAILS REFER TO K-A-83
19. REFER TO STRUCTURAL DRAWINGS FOR NEW FOOTING INFORMATION.
20. CONTRACTOR SHALL PROVIDE SEPARATE PERMIT FOR TENANT LAYOUT OF SPACE.

CONSTRUCTION LEGEND

	NOT IN CONTRACT		NEW CONSTRUCTION	101	DOOR TAG
?	KEY NOTES	?	PLUMBING FIXTURE	FE	FIRE EXTINGUISHER
1t	WINDOW TAG	FD	FLOOR DRAIN		STUB UP
1t	WALL TAG		ROOF GUARD RAIL		SBS 1/4" / 12"
TR-1	MATERIAL / TRIM TAG		ROOF CRICKET, 1/2" / 12"		ASPHALT SHINGLE

KEYNOTE LEGEND CONST.

Key Value	Keynote Text
4	NEW WINDOWS. SEE WINDOW SCHEDULE.
5	PROVIDE AND INSTALL DOOR INCLUDING FRAME, SILL, LINTEL AND ANY ASSOCIATE HARDWARE. SEE DOOR SCHEDULE.
10	PROVIDE AND INSTALL COLUMN ENCLOSURES. SEE DETAILS.
13	PROVIDE CONCRETE SLAB. REFER TO STRUCTURAL DRAWINGS.
20	NEW COUNTER ROLL DOWN DOOR LOCATED AT INTERIOR AND ASSOCIATED HARDWARE. REFER TO SCHEDULE FOR MORE DETAILS. CONTRACTOR TO V.I.F. ALL DIMENSIONS BEFORE ORDERING (TYPICAL THROUGHOUT.)
21	NEW INTERIOR WALL. SEE WALL SCHEDULE.
34	PROVIDE NEW BENCH.
43	NEW COUNTERS & SERVING WINDOWS.
84	HALF ROUND ALUMINUM GUTTER AND DOWNSPOUT.
87	NEW PRECAST CONCRETE PLANTER BOX.
94	NEW QUARRY TILE. SUPRESS CONCRETE SLAB AS SHOWN IN 9/K-A-81. SLOPE TOWARDS DRAIN.

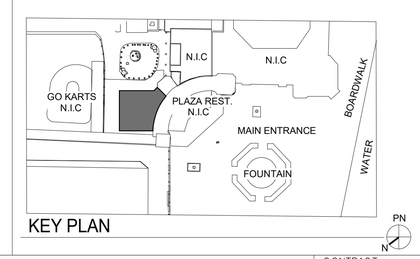

KEY PLAN

9/20/2022 10:56:23 AM

CONSULTANT INFORMATION

The LiRo Group
1 State Street Plaza, New York, NY, 10004
(516) 938-5476 www.liro.com

CONSULTANT SEAL

REGISTERED ARCHITECT ROBERT D. LIANO 023280 STATE OF NEW YORK

REVISION NUMBER	DATE	MADE BY	APP'D BY	REVISION
1	9-21-22			BID ADDENDUM #3

RECORD DRAWING CERTIFICATION

☐ AS BUILT – CHANGES AS NOTED ☐ AS BUILT – NO CHANGES

CONTRACTOR
NAME
SIGNATURE
TITLE DATE

PROJECT COORDINATOR
NAME
SIGNATURE
TITLE DATE

WESTCHESTER COUNTY, NEW YORK
DEPARTMENT OF PUBLIC WORKS AND TRANSPORTATION
DIVISION OF ENGINEERING

INFRASTRUCTURE REHABILITATION
PLAYLAND PARK, RYE, NEW YORK
RESTAURANT KITCHEN WITH FOOD VENDING
GROUND FLOOR CONSTRUCTION PLAN

CONTRACT NUMBER **22-523**
SHEET NUMBER **K-A-11**
DWG NO.: **507 of 664**
SCALE: **As indicated**
DATE: **8/23/20223**
DPW FILE NUMBER **1-118-A-1256- 1**
REV. NO. **1**

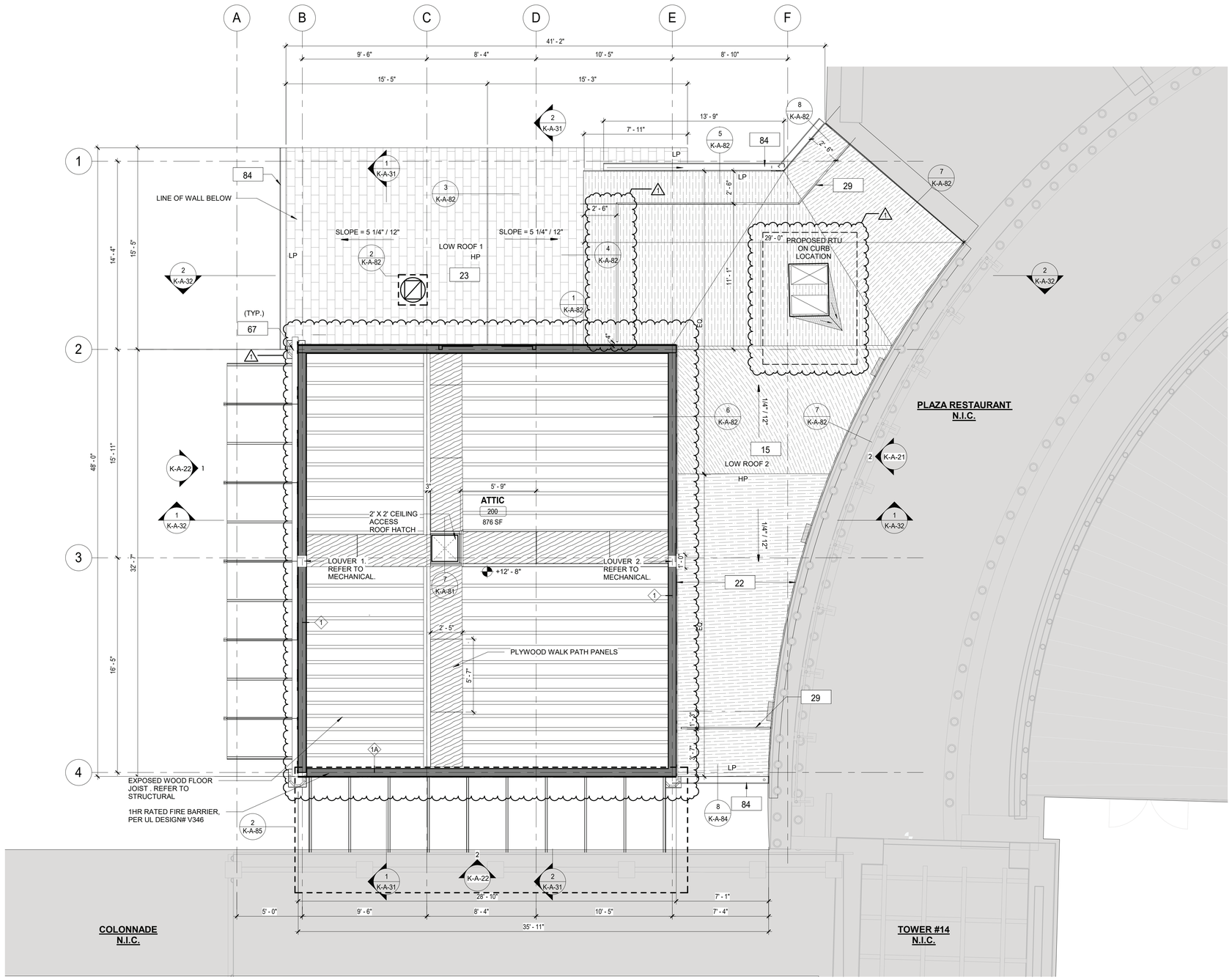

1 ATTIC AND LOW ROOF PLAN
1/4" = 1'-0"

FLOOR PLAN GENERAL NOTES

1. ALL METAL STUDS 20 GA- TYPICAL NON-LOAD BEARING PARTITIONS. SEE USG STEEL- FRAMED DRYWALL SYSTEMS " LIMITING HEIGHT"- STEEL STUD ASSEMBLIES CHART. USE THE L/240 ALLOWABLE DEFLECTION FIGURES ONLY.
2. DIMENSIONS ARE TO FACE OF GYPSUM WALL BOARD, EXISTING WALL, GRID LINES, OR CENTERLINE OF COLUMN. ALL ELEVATIONS ARE NOTED FROM FINISH FLOOR ELEVATIONS.
3. PROVIDE DRYWALL TRIM AT ALL EXPOSED EDGES AND CORNERS.
4. MINIMUM DIMENSION FROM ANY CORNER OR WALL TO FRAMING STUD AT DOOR JAMB OPENING SHALL BE 4" (U.O.N.).
5. PROVIDE METAL BLOCKING FOR ANY WALL MOUNTED EQUIPMENT OR ACCESSORIES. COORDINATE ALL BLOCKING REQUIREMENTS NECESSARY WITH OTHER TRADES.
6. THE G.C. SHALL VERIFY DIMENSIONS OF THE EXISTING SPACE AND OF ANY EXISTING CONSTRUCTION TO REMAIN BY ACTUAL MEASUREMENT BEFORE ANY WORK IS PERFORMED. IF ANY MEASUREMENTS DIFFER FROM DIMENSIONS SHOWN ON PLAN, G.C. IS TO NOTIFY THE ARCHITECT IMMEDIATELY. THE G.C. SHALL BE RESPONSIBLE FOR CORRECTING ANY AND ALL DISCREPANCIES FOUND AFTER THE WORK IS PERFORMED, AT NO ADDITIONAL EXPENSE TO THE OWNER.
7. G.C. TO VERIFY ALL FINISHED DIMENSIONS. FIELD CONDITIONS ALTERING ANY DIMENSIONS SHOULD BE BROUGHT TO THE ATTENTION OF THE OWNER AND ARCHITECT.
8. THE G.C. SHALL PROVIDE CAULK JOINTS WHERE GYP. BD. MEETS THE FLOOR OR ROOF DECK.
9. THE G.C. SHALL BE RESPONSIBLE FOR COORDINATING WITH OWNER ON ALL WORK TO BE PERFORMED BY THE OWNER. ANY POTENTIAL CONFLICTS OR DELAYS CAUSED BY THE OWNER'S SUBCONTRACTORS MUST BE DOCUMENTED IN WRITING TO THE OWNER BEFORE THE DELAY IS ACTUALLY INCURRED FOR IT TO BE CONSIDERED. OTHERWISE THE G.C. WILL BE RESPONSIBLE FOR MEETING THE SCHEDULE AS OUTLINED IN THE CONTRACT.
10. THE G.C. SHALL SUPPLY ALL MATERIAL, LABOR, AND COORDINATION REQUIRED FOR THE INSTALLATION OF ALL OWNER-SUPPLIED ITEMS AS DESCRIBED IN THE DOCUMENTS, U.N.O.
11. THE G.C. IS RESPONSIBLE FOR ALL FLOOR AND WALL PENETRATIONS FOR ELECTRICAL AND MECHANICAL WORK. ALL SUCH OPENING SHALL BE FRAMED AND REINFORCED.
12. FLOOR SURFACES SHALL BE LEVELED TO ASSURE SMOOTH SURFACE FOR FINISH FLOOR INSTALLATION. G.C. SHALL ALSO PAY SPECIAL ATTENTION THAT ALL WALL SURFACES ARE SMOOTH WHERE MURALS WILL BE DIRECTLY APPLIED TO WALL.
13. G.C. TO COORDINATE ALL UTILITY STUB-UPS AND LOCATION OF ALL EQUIPMENT PRIOR TO INSTALLING ANY ONE ITEM.
14. REFER TO SHEET K-A-94 FOR PARTITION TYPE INFORMATION.
15. PROVIDE PAINTED ACCESS PANELS IN WALLS & CEILING AT CONCEALED ITEMS. SUCH AS VALVES, CONTROLS, SWITCHES OR ANY OTHER ITEMS THAT REQUIRES ACCESS. G.C. TO DETERMINE ACCESS PANEL LOCATION W/ ARCHITECT PRIOR TO INSTALLATION.

CONSTRUCTION LEGEND

	NOT IN CONTRACT		NEW CONSTRUCTION	101	DOOR TAG
?	KEY NOTES	?	PLUMBING FIXTURE	FE	FIRE EXTINGUISHER
1t	WINDOW TAG	FD	FLOOR DRAIN		STUB UP
1t	WALL TAG		ROOF GUARD RAIL		SBS 1/4" / 12"
TR-1	MATERIAL / TRIM TAG		ROOF CRICKET, 1/2" / 12"		ASPHALT SHINGLE

KEYNOTE LEGEND CONST.

Key Value	Keynote Text
15	PROVIDE AND INSTALL SBS MODIFIED BITUMEN ROOFING AND UNDERLAYMENT.
22	PROVIDE NEW FLASHING ALONG EXISTING WALL AND ROOF CONNECTION.
23	NEW ROOF WITH BATT INSULATION (R-38 MIN) PACKED BETWEEN JOISTS. PROVIDE AND INSTALL SHINGLES, UNDERLAYMENT SHEATHING AND FLASHING SYSTEM.
29	PROVIDE AND INSTALL NEW OSHA COMPLIANT GUARD RAIL.
84	HALF ROUND ALUMINUM GUTTER AND DOWNSPOUT.

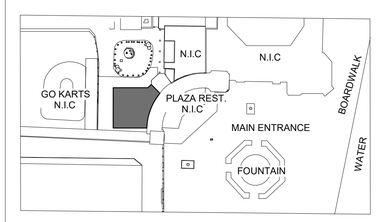

KEY PLAN

9/20/2022 10:56:28 AM

CONSULTANT INFORMATION

The LiRo Group

1 State Street Plaza, New York, NY, 10004
(516) 938-5476 www.liro.com

CONSULTANT SEAL

REGISTERED ARCHITECT ROBERT D. TOMASULO 023223 STATE OF NEW YORK

REVISION NUMBER	DATE	MADE BY	APP'D BY	REVISION
1	9-21-22			BID ADDENDUM #3

RECORD DRAWING CERTIFICATION

☐ AS BUILT – CHANGES AS NOTED ☐ AS BUILT – NO CHANGES

CONTRACTOR
NAME
SIGNATURE
TITLE DATE

PROJECT COORDINATOR
NAME
SIGNATURE
TITLE DATE

WESTCHESTER COUNTY, NEW YORK
DEPARTMENT OF PUBLIC WORKS AND TRANSPORTATION
DIVISION OF ENGINEERING

INFRASTRUCTURE REHABILITATION
PLAYLAND PARK, RYE, NEW YORK
RESTAURANT KITCHEN WITH FOOD VENDING
ATTIC AND LOW ROOF CONSTRUCTION PLAN

CONTRACT NUMBER	22-523
SHEET NUMBER	K-A-12
DWG NO.:	508 of 664
SCALE:	As indicated
DATE:	8/23/20223
DPW FILE NUMBER	1-118-A-1257- 1
REV. NO.	1

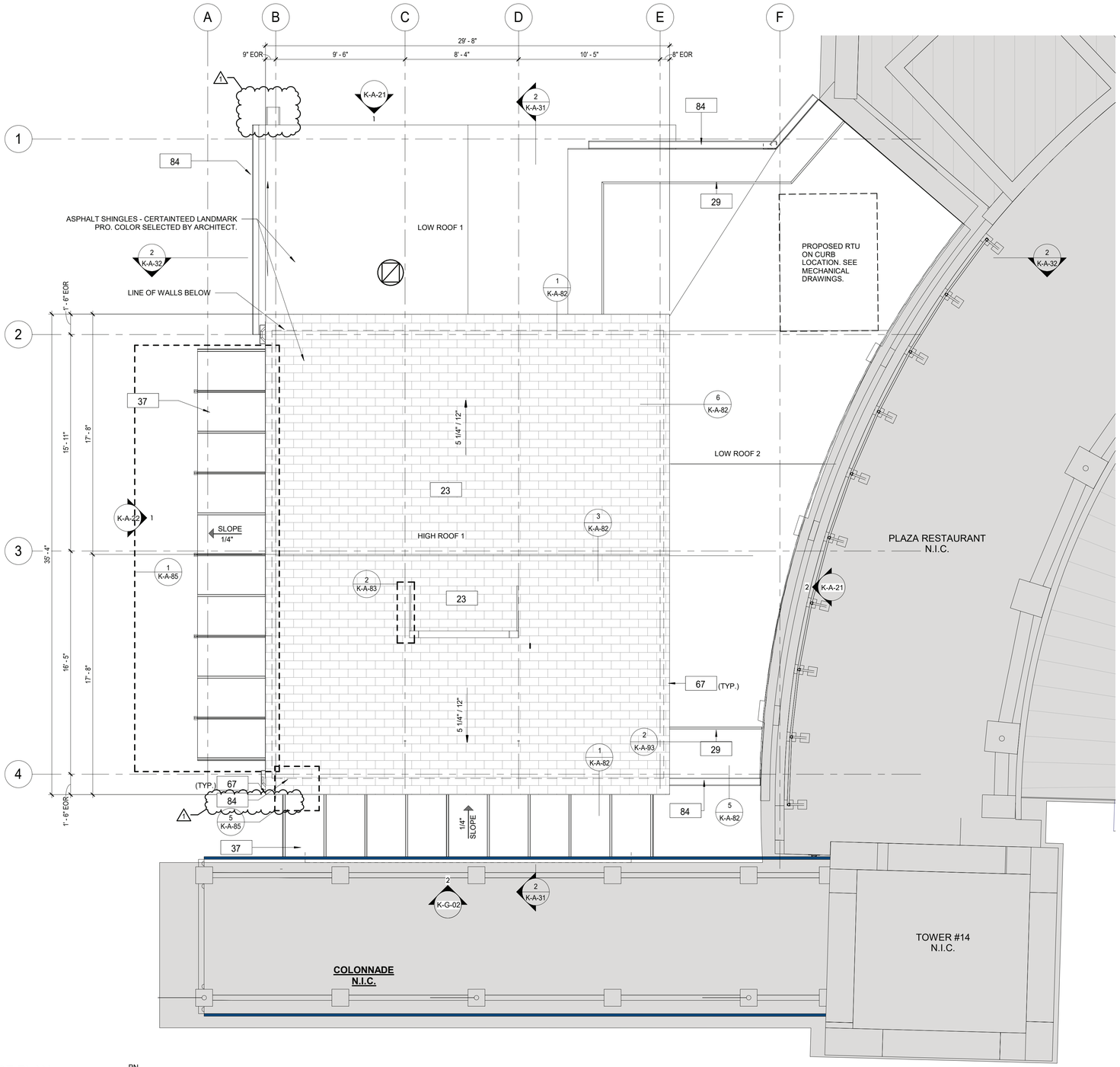

1 ROOF PLAN
1/4" = 1'-0"

PN
N

CONSTRUCTION GENERAL NOTES

1. PROVIDE LEVEL ROOF CURB FOR ALL MECHANICAL EQUIPMENT 8 INCHES ABOVE HIGHEST FINISHED ROOF SURFACE.
3. REFER TO MECHANICAL DRAWINGS FOR ALL ROOF TOP MOUNTED EQUIPMENT LOCATIONS, SIZE & SPECIFICATIONS.
4. REFER TO PLUMBING, MECHANICAL, & ELECTRICAL DRAWINGS FOR ANY ADDITIONAL ROOF PENERATIONS AND DETAILS.
5. ROOFING SYSTEM AND ACCESSORIES INSTALLATION AND DETAILS ARE FOR DESIGN INTENT. ROOF INSTALLATION SHALL BE IN CONFORMANCE WITH MANUFACTURERS.
6. REFER TO SHEET K-A-82FOR TYPICAL ROOF DETAILS.
7. SEE STRUCTURAL DRAWINGS FOR RTU OPENING FRAMING & REINFORCING.
9. LOW ROOF 1 AND LOW ROOF 2 REFER TO SHEET K-A-12.

CONSTRUCTION LEGEND

	NOT IN CONTRACT		NEW CONSTRUCTION	101	DOOR TAG
?	KEY NOTES	?	PLUMBING FIXTURE	FE	FIRE EXTINGUISHER
1t	WINDOW TAG	FD	FLOOR DRAIN		STUB UP
1i	WALL TAG		ROOF GUARD RAIL		SBS 1/4" / 12"
TR-1	MATERIAL / TRIM TAG		ROOF CRICKET, 1/2" / 12"		ASPHALT SHINGLE

KEYNOTE LEGEND CONST.

Key Value	Keynote Text
23	NEW ROOF WITH BATT INSULATION (R-38 MIN) PACKED BETWEEN JOISTS. PROVIDE AND INSTALL SHINGLES, UNDERLAYMENT SHEATHING AND FLASHING SYSTEM.
29	PROVIDE AND INSTALL NEW OSHA COMPLIANT GUARD RAIL.
37	NEW CANOPY, SEE DETAILS.
67	NEW FASCIA BOARD AND SOFFIT.
84	HALF ROUND ALUMINUM GUTTER AND DOWNSPOUT.

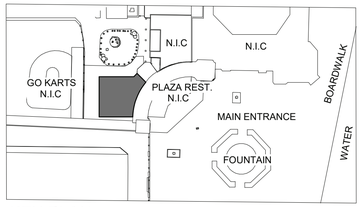

KEY PLAN

PN
N

9/20/2022 10:56:50 AM

CONSULTANT INFORMATION

The LiRo Group
1 State Street Plaza, New York, NY, 10004
(516) 938-5476 www.liro.com

CONSULTANT SEAL

REGISTERED ARCHITECT ROBERT D. YOUNG JR. 023290 STATE OF NEW YORK

REVISION NUMBER	DATE	MADE BY	APP'D BY	REVISION
1	9-21-22			BID ADDENDUM #3

RECORD DRAWING CERTIFICATION

☐ AS BUILT – CHANGES AS NOTED ☐ AS BUILT – NO CHANGES

CONTRACTOR
NAME
SIGNATURE
TITLE DATE

PROJECT COORDINATOR
NAME
SIGNATURE
TITLE DATE

WESTCHESTER COUNTY, NEW YORK
DEPARTMENT OF PUBLIC WORKS AND TRANSPORTATION
DIVISION OF ENGINEERING

INFRASTRUCTURE REHABILITATION
PLAYLAND PARK, RYE, NEW YORK
RESTAURANT KITCHEN WITH FOOD VENDING
ROOF CONSTRUCTION PLAN

CONTRACT NUMBER **22-523**
SHEET NUMBER **K-A-15**
DWG NO.: **511 of 664**
SCALE: **As indicated**
DATE: **8/23/20223**
DPW FILE NUMBER **1-118-A-1260- 1**
REV. NO. **1**

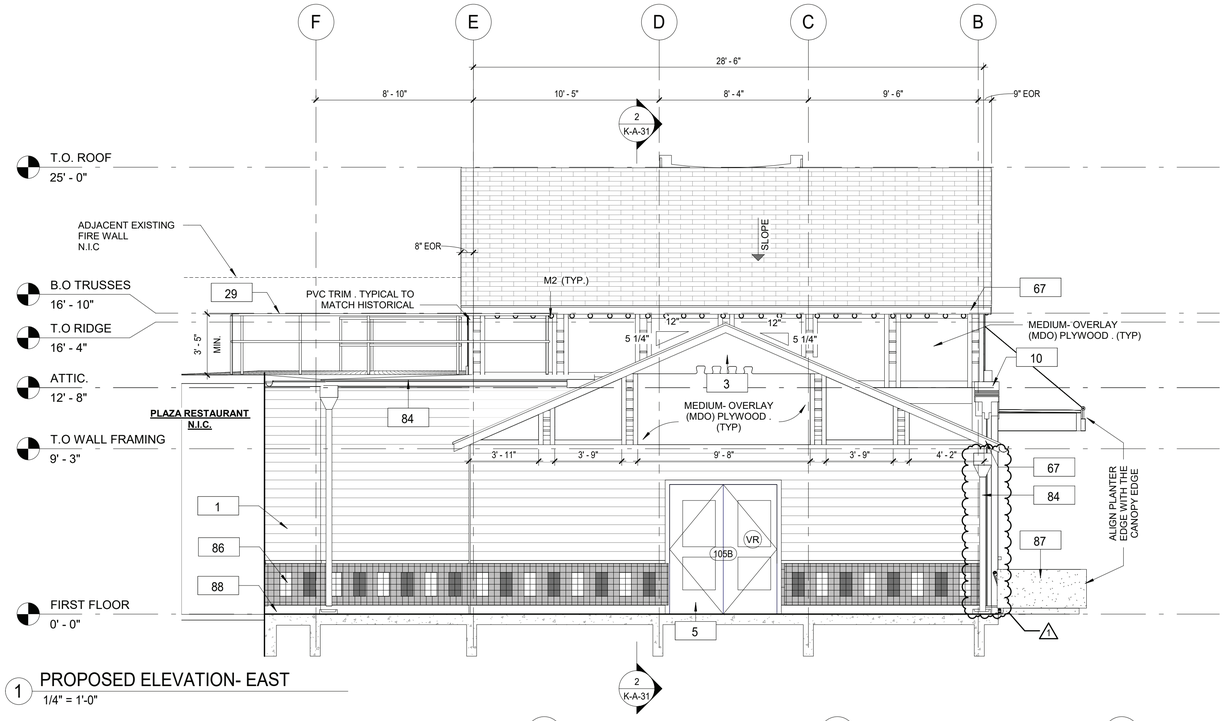

1 PROPOSED ELEVATION- EAST
1/4" = 1'-0"

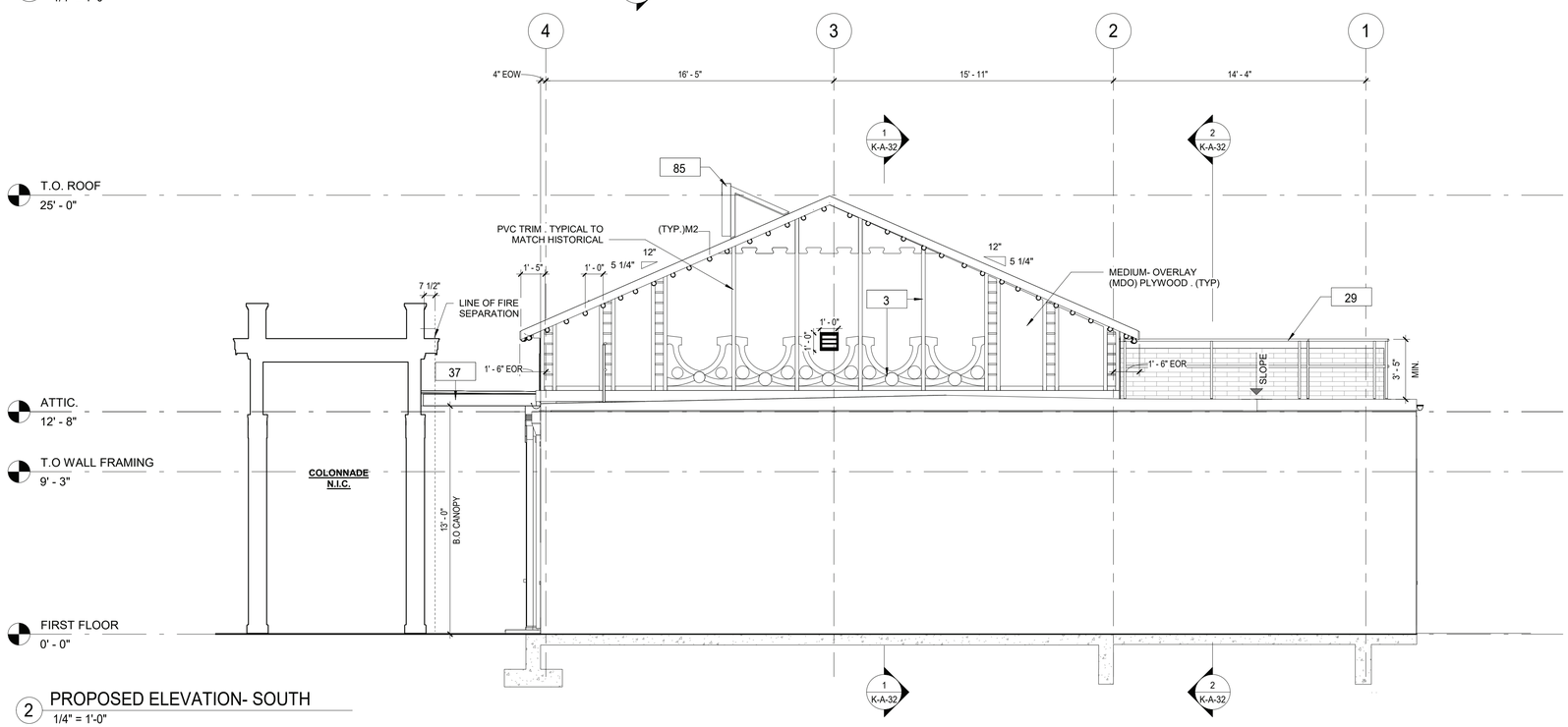

2 PROPOSED ELEVATION- SOUTH
1/4" = 1'-0"

CONSTRUCTION GENERAL NOTES

1. THE ARCHITECT DOES NOT CERTIFY DIMENSIONS OR CONDITIONS OF EXISTING CONSTRUCTION. GENERAL CONTRACTOR SHALL NOTIFY ARCHITECT IMMEDIATELY OF ANY DISCREPANCY BETWEEN DRAWINGS AND EXISTING CONDITIONS. IN ADDITION, CONTRACTOR SHALL NOTIFY THE ARCHITECT OF ANY DEFECTIVE CONSTRUCTION UNCOVERED DURING CONSTRUCTION.
2. CONTRACTOR SHALL KEEP WORK SITE FREE FROM DEBRIS AND ACCUMULATED REFUSE, AND SHALL HAVE SOLE RESPONSIBILITY FOR PROTECTING ALL DANGEROUS AREAS FROM ENTRY BY UNAUTHORIZED PARTIES. ALL CONSTRUCTION SCRAPS, DIRT, AND DEBRIS SHALL BE REMOVED FROM THE PREMISES DAILY. SITE SHALL BE LEFT BROOM CLEAN AT THE END OF EACH WORKING DAY. AT THE COMPLETION OF THE WORK, HE PREMISES SHALL BE LEFT IN A BROOM CLEAN CONDITION.
3. MATERIALS UTILIZED SHALL BE AS SPECIFIED ON THE DRAWINGS OR IN THE JOB SPECIFICATIONS, OR, IF GENERIC, IN COMPLIANCE WITH ASTM, NEW YORK CODE, OR OTHER GENERALLY ACCEPTED STANDARDS.
4. ALL EXITS SHALL BE KEPT READILY ACCESSIBLE AND UNOBSTRUCTED AT ALL TIMES.
5. THE G.C. SHALL VERIFY DIMENSIONS OF THE EXISTING SPACE AND OF ANY EXISTING CONSTRUCTION TO REMAIN BY ACTUAL MEASUREMENT BEFORE ANY WORK IS PERFORMED. IF ANY MEASUREMENTS DIFFER FROM DIMENSIONS SHOWN ON PLAN, G.C. IS TO NOTIFY THE ARCHITECT IMMEDIATELY. THE G.C. SHALL BE RESPONSIBLE FOR CORRECTING ANY AND ALL DISCREPANCIES FOUND AFTER THE WORK IS PERFORMED, AT NO ADDITIONAL EXPENSE TO THE OWNER.
6. G.C. TO VERIFY ALL FINISHED DIMENSIONS. FIELD CONDITIONS ALTERING ANY DIMENSIONS SHOULD BE BROUGHT TO THE ATTENTION OF THE OWNER AND ARCHITECT.
7. THE G.C. SHALL BE RESPONSIBLE FOR COORDINATING WITH OWNER ON ALL WORK TO BE PERFORMED BY THE OWNER. ANY POTENTIAL CONFLICTS OR DELAYS CAUSED BY THE OWNER'S SUBCONTRACTORS MUST BE DOCUMENTED IN WRITING TO THE OWNER BEFORE THE DELAY IS ACTUALLY INCURRED FOR IT TO BE CONSIDERED. OTHERWISE THE G.C. WILL BE RESPONSIBLE FOR MEETING THE SCHEDULE AS OUTLINED IN THE CONTRACT.

CONSTRUCTION LEGEND

	NOT IN CONTRACT		NEW CONSTRUCTION	101	DOOR TAG
?	KEY NOTES	?	PLUMBING FIXTURE	FE	FIRE EXTINGUISHER
1t	WINDOW TAG	FD	FLOOR DRAIN		STUB UP
1i	WALL TAG		ROOF GUARD RAIL		SBS 1/4" / 12"
TR-1	MATERIAL / TRIM TAG		ROOF CRICKET, 1/2" / 12"		ASPHALT SHINGLE

KEYNOTE LEGEND CONST.

Key Value	Keynote Text
1	PROVIDE AND INSTALL NEW 1x8 MILLED YELLOW PINE - TONGUE AND GROOVE - NO BEVEL
3	REPLICATE TRIMS TO MATCH DOCUMENTED TRIM, LOCATIONS, SIZE AND SHAPE. FINISH PAINT COLORS AS SCHEDULED.
5	PROVIDE AND INSTALL DOOR INCLUDING FRAME, SILL, LINTEL AND ANY ASSOCIATE HARDWARE. SEE DOOR SCHEDULE.
10	PROVIDE AND INSTALL COLUMN ENCLOSURES. SEE DETAILS.
29	PROVIDE AND INSTALL NEW OSHA COMPLIANT GUARD RAIL.
37	NEW CANOPY, SEE DETAILS.
67	NEW FASCIA BOARD AND SOFFIT.
84	HALF ROUND ALUMINUM GUTTER AND DOWNSPOUT.
85	NEW ROOF MOUNTED SIGN. SEE DETAILS
86	NEW CERAMIC TILES.
87	NEW PRECAST CONCRETE PLANTER BOX.
88	NEW PVC BASEBOARD.

9/20/2022 10:56:52 AM

CONSULTANT INFORMATION

The LiRo Group
1 State Street Plaza, New York, NY, 10004
(516) 938-5476 www.liro.com

CONSULTANT SEAL

REGISTERED ARCHITECT ROBERT D. LIRO JR. 023220 STATE OF NEW YORK

REVISION NUMBER	DATE	MADE BY	APP'D BY	REVISION
1	9-21-22			BID ADDENDUM #3

RECORD DRAWING CERTIFICATION

☐ AS BUILT – CHANGES AS NOTED ☐ AS BUILT – NO CHANGES

CONTRACTOR
NAME
SIGNATURE
TITLE DATE

PROJECT COORDINATOR
NAME
SIGNATURE
TITLE DATE

WESTCHESTER COUNTY, NEW YORK
DEPARTMENT OF PUBLIC WORKS AND TRANSPORTATION
DIVISION OF ENGINEERING

INFRASTRUCTURE REHABILITATION
PLAYLAND PARK, RYE, NEW YORK
RESTAURANT KITCHEN WITH FOOD VENDING
EXTERIOR BUILDING ELEVATIONS - EAST AND SOUTH

CONTRACT NUMBER	22-523
SHEET NUMBER	K-A-21
DWG NO.:	512 of 664
SCALE:	1/4" = 1'-0"
DATE:	8/23/20223
DPW FILE NUMBER	1-118-A-1261- 1
REV. NO.	1

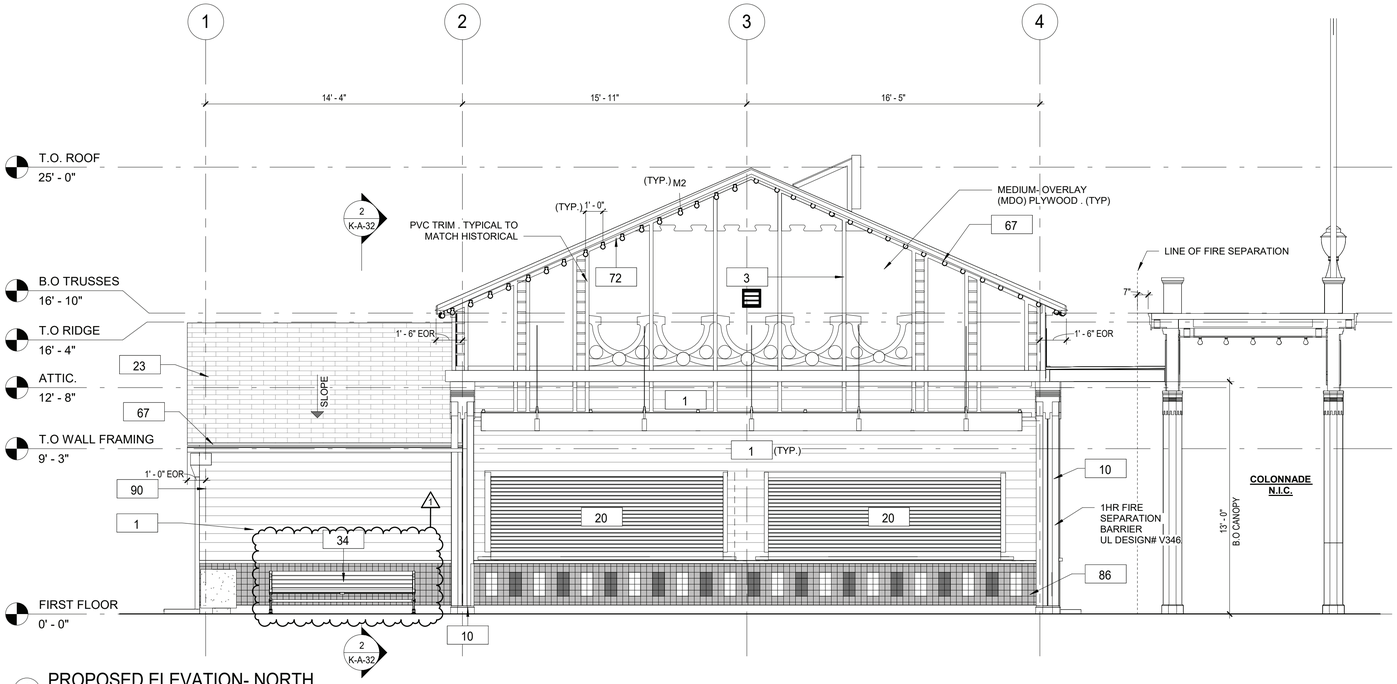

1 PROPOSED ELEVATION- NORTH
1/4" = 1'-0"

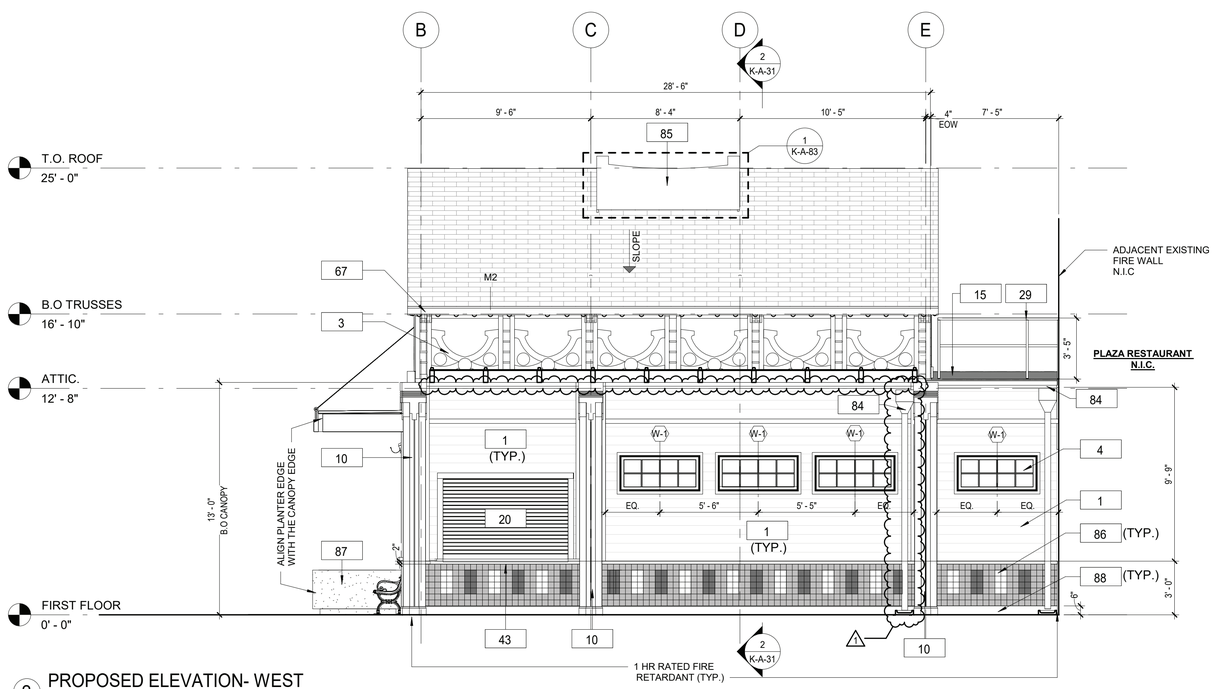

2 PROPOSED ELEVATION- WEST
1/4" = 1'-0"

CONSTRUCTION GENERAL NOTES

1. THE ARCHITECT DOES NOT CERTIFY DIMENSIONS OR CONDITIONS OF EXISTING CONSTRUCTION. CONTRACTOR SHALL NOTIFY ARCHITECT IMMEDIATELY OF ANY DISCREPANCY BETWEEN DRAWINGS AND EXISTING CONDITIONS. IN ADDITION, CONTRACTOR SHALL NOTIFY THE ARCHITECT OF ANY DEFECTIVE CONSTRUCTION UNCOVERED DURING CONSTRUCTION.
2. CONTRACTOR SHALL KEEP WORK SITE FREE FROM DEBRIS AND ACCUMULATED REFUSE, AND SHALL HAVE SOLE RESPONSIBILITY FOR PROTECTING ALL DANGEROUS AREAS FROM ENTRY BY UNAUTHORIZED PARTIES. ALL CONSTRUCTION SCRAPS, DIRT, AND DEBRIS SHALL BE REMOVED FROM THE PREMISES DAILY. SITE SHALL BE LEFT BROOM CLEAN AT THE END OF EACH WORKING DAY. AT THE COMPLETION OF THE WORK, HE PREMISES SHALL BE LEFT IN A BROOM CLEAN CONDITION.
3. ALL WORK TO BE PERFORMED IN A WORKMANLIKE FASHION. MATERIALS UTILIZED SHALL BE AS SPECIFIED ON THE DRAWINGS OR IN THE JOB SPECIFICATIONS, OR, IF GENERIC, IN COMPLIANCE WITH ASTM, NEW YORK CODE, OR OTHER GENERALLY ACCEPTED STANDARDS.
4. WHERE EXISTING EQUIPMENT OR CONSTRUCTION IS REMOVED OR ALTERED, ALL REMAINING SURFACES AND FINISHES AFFECTED SHALL BE PATCHED AND FINISHED TO MATCH ADJACENT CONSTRUCTION/PRE- EXISTING CONDITION.
5. ALL EXITS SHALL BE KEPT READILY ACCESSIBLE AND UNOBSTRUCTED AT ALL TIMES. ALL EXITS SHALL BE KEPT READILY ACCESSIBLE AND UNOBSTRUCTED AT ALL TIMES.
6. ALL INFILLED OPENINGS TO BE FLUSH WITH EXISTING MASONRY WALL SURFACES, EXTERIOR OF NEW AND OLD TO BE FLUSH AND MATCH WITH EXISTING ADJACENT WALL SYSTEM.
7. THE G.C. SHALL VERIFY DIMENSIONS OF THE EXISTING SPACE AND OF ANY EXISTING CONSTRUCTION TO REMAIN BY ACTUAL MEASUREMENT BEFORE ANY WORK IS PERFORMED. IF ANY MEASUREMENTS DIFFER FROM DIMENSIONS SHOWN ON PLAN, G.C. IS TO NOTIFY THE ARCHITECT IMMEDIATELY. THE G.C. SHALL BE RESPONSIBLE FOR CORRECTING ANY AND ALL DISCREPANCIES FOUND AFTER THE WORK IS PERFORMED, AT NO ADDITIONAL EXPENSE TO THE OWNER.
8. G.C. TO VERIFY ALL FINISHED DIMENSIONS. FIELD CONDITIONS ALTERING ANY DIMENSIONS SHOULD BE BROUGHT TO THE ATTENTION OF THE OWNER AND ARCHITECT.
9. THE G.C. SHALL BE RESPONSIBLE FOR COORDINATING WITH OWNER ON ALL WORK TO BE PERFORMED BY THE OWNER. ANY POTENTIAL CONFLICTS OR DELAYS CAUSED BY THE OWNER'S SUBCONTRACTORS MUST BE DOCUMENTED IN WRITING TO THE OWNER BEFORE THE DELAY IS ACTUALLY INCURRED FOR IT TO BE CONSIDERED. OTHERWISE THE G.C. WILL BE RESPONSIBLE FOR MEETING THE SCHEDULE AS OUTLINED IN THE CONTRACT.

CONSTRUCTION LEGEND

	NOT IN CONTRACT		NEW CONSTRUCTION	101	DOOR TAG
?	KEY NOTES	?	PLUMBING FIXTURE	FE	FIRE EXTINGUISHER
1t	WINDOW TAG	FD	FLOOR DRAIN		STUB UP
1i	WALL TAG		ROOF GUARD RAIL		SBS 1/4" / 12"
TR-1	MATERIAL / TRIM TAG		ROOF CRICKET, 1/2" / 12"		ASPHALT SHINGLE

KEYNOTE LEGEND CONST.

Key Value	Keynote Text
1	PROVIDE AND INSTALL NEW 1x8 MILLED YELLOW PINE - TONGUE AND GROOVE - NO BEVEL
3	REPLICATE TRIMS TO MATCH DOCUMENTED TRIM, LOCATIONS, SIZE AND SHAPE. FINISH PAINT COLORS AS SCHEDULED.
4	NEW WINDOWS. SEE WINDOW SCHEDULE.
10	PROVIDE AND INSTALL COLUMN ENCLOSURES. SEE DETAILS.
15	PROVIDE AND INSTALL SBS MODIFIED BITUMEN ROOFING AND UNDERLAYMENT.
20	NEW COUNTER ROLL DOWN DOOR LOCATED AT INTERIOR AND ASSOCIATED HARDWARE. REFER TO SCHEDULE FOR MORE DETAILS. CONTRACTOR TO V.I.F. ALL DIMENSIONS BEFORE ORDERING (TYPICAL THROUGHOUT.)
23	NEW ROOF WITH BATT INSULATION (R-38 MIN) PACKED BETWEEN JOISTS. PROVIDE AND INSTALL SHINGLES, UNDERLAYMENT SHEATHING AND FLASHING SYSTEM.
29	PROVIDE AND INSTALL NEW OSHA COMPLIANT GUARD RAIL.
34	PROVIDE NEW BENCH.
43	NEW COUNTERS & SERVING WINDOWS.
67	NEW FASCIA BOARD AND SOFFIT.
72	NEW LIGHT FIXTURES TO BE INSTALLED (SEE ELECTRICAL DRAWINGS).
84	HALF ROUND ALUMINUM GUTTER AND DOWNSPOUT.
85	NEW ROOF MOUNTED SIGN. SEE DETAILS
86	NEW CERAMIC TILES.
87	NEW PRECAST CONCRETE PLANTER BOX.
88	NEW PVC BASEBOARD.
90	NEW OUTSIDE CORNER MOULDING.

9/26/2022 2:32:59 PM

CONSULTANT INFORMATION

The LiRo Group

1 State Street Plaza, New York, NY, 10004
(516) 938-5476 www.liro.com

CONSULTANT SEAL

REGISTERED ARCHITECT ROBERT D. YOUNG JR. 023280 STATE OF NEW YORK

REVISION NUMBER	DATE	MADE BY	APP'D BY	REVISION
1	9-21-22			BID ADDENDUM #3

RECORD DRAWING CERTIFICATION

☐ AS BUILT – CHANGES AS NOTED ☐ AS BUILT – NO CHANGES

CONTRACTOR
NAME
SIGNATURE
TITLE DATE

PROJECT COORDINATOR
NAME
SIGNATURE
TITLE DATE

WESTCHESTER COUNTY, NEW YORK
DEPARTMENT OF PUBLIC WORKS AND TRANSPORTATION
DIVISION OF ENGINEERING

INFRASTRUCTURE REHABILITATION
PLAYLAND PARK, RYE, NEW YORK
RESTAURANT KITCHEN WITH FOOD VENDING
EXTERIOR BUILDING ELEVATIONS - NORTH AND WEST

CONTRACT NUMBER	22-523
SHEET NUMBER	K-A-22
DWG NO.:	513 of 664
SCALE:	1/4" = 1'-0"
DATE:	8/23/20223
DPW FILE NUMBER	1-118-A-1262- 1
REV. NO.	1

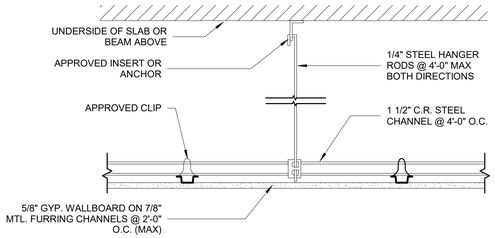

1 TYP. GYPSUM BD CEILING DETAIL
1 1/2" = 1'-0"

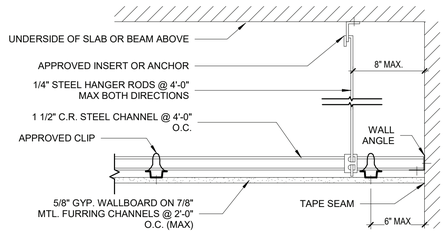

2 TYP. GYPSUM BD MAIN RUNNER AT PERIMETER DETAIL
1 1/2" = 1'-0"

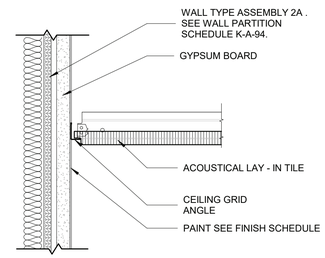

3 ACOUSTICAL CEILING DETAIL
3" = 1'-0"

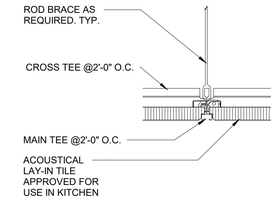

4 ACOUSTICAL TILE CONNECTION DETAIL
3" = 1'-0"

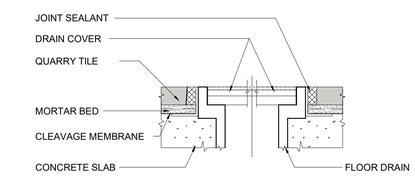

5 TILE FLOORING - FLOOR DRAIN DETAIL
6" = 1'-0"

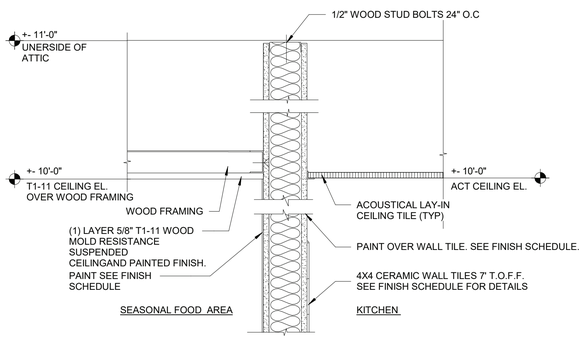

6 CEILING SECTION DETAIL THROUGH SEASONAL FOOD AREA AND KITCHEN
1 1/2" = 1'-0"

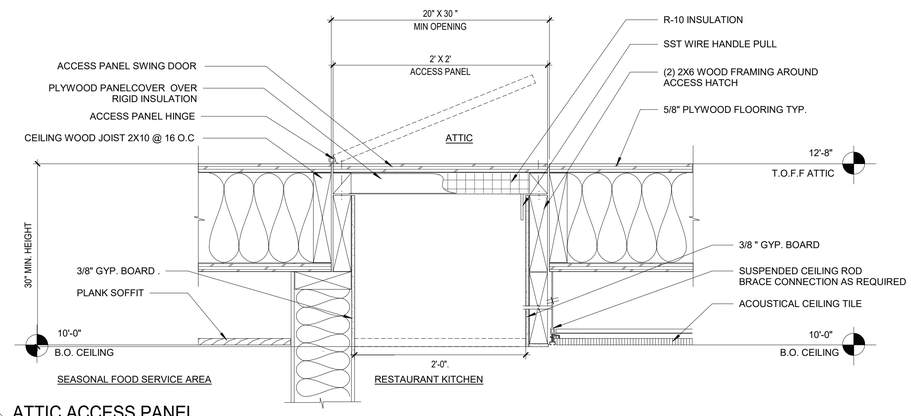

7 ATTIC ACCESS PANEL
1 1/2" = 1'-0"

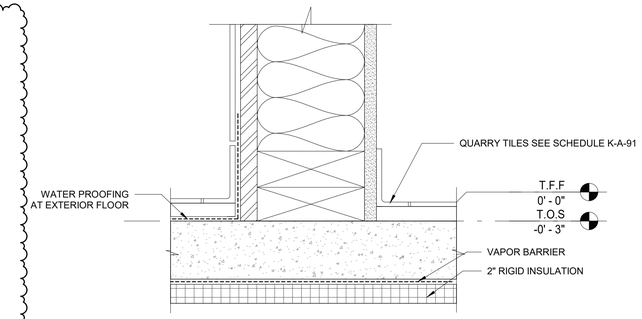

8 TYPICAL QUARRY TILE ON CONCRETE DETAIL
3" = 1'-0"

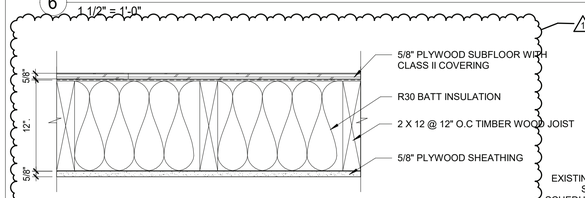

9 TYPICAL WOOD FLOOR DETAIL - WD-3
1 1/2" = 1'-0"

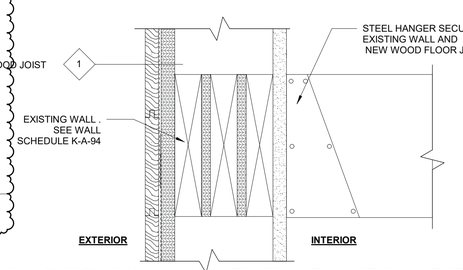

10 TYPICAL EXISTING WALL AND NEW FLOOR JOIST CONNECTION DETAIL
3" = 1'-0"

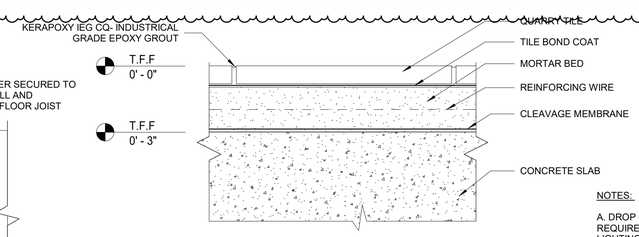

NOTES:

A. DROP CLIPS SHALL BE OF LENGTH REQUIRED TO PROVIDE CLEARANCE FOR LIGHTING FIXTURES AND OTHER ITEMS ABOVE CEILING. WHERE CLEARANCE IS LIMITED PROVIDE CLIPS THAT CONNECT RUNNER TIGHT TO THE BOTTOM OF CARRYING CHANNELS.

11 TILE FLOOR TYPICAL DETAIL AT INTERIOR FLOOR
6" = 1'-0"

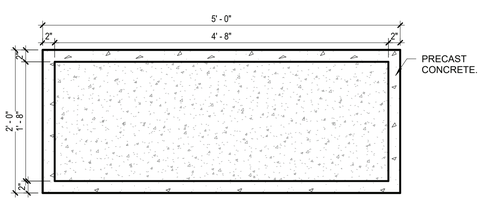

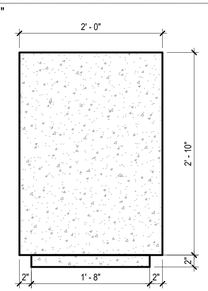

12 PLANTER PLAN AND ELEVATION
1" = 1'-0"

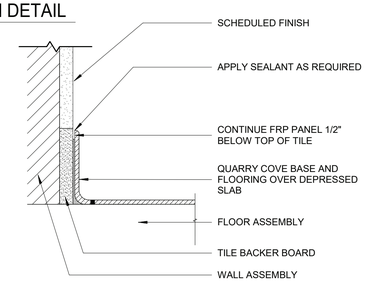

13 QUARRY TILE BASE DETAIL
3" = 1'-0"

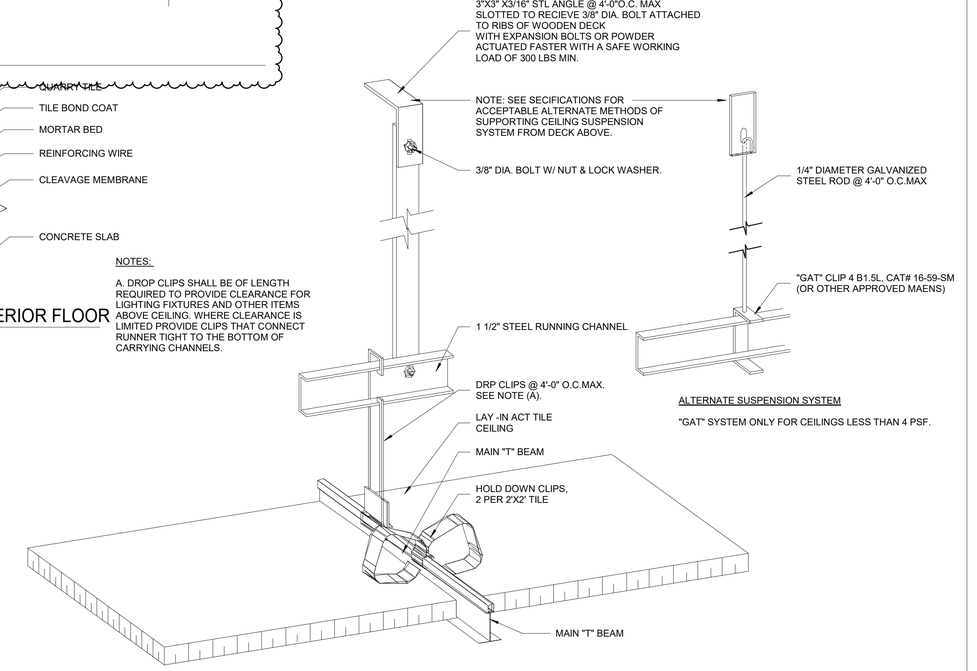

14 TYPICAL ACT CEILING DETAIL
3" = 1'-0"

9/26/2022 11:56:05 AM

CONSULTANT INFORMATION

The LiRo Group
1 State Street Plaza, New York, NY, 10004
(516) 938-5476 www.liro.com

CONSULTANT SEAL

REGISTERED ARCHITECT ROBERT D. LIROLA 023220 STATE OF NEW YORK

REVISION NUMBER	DATE	MADE BY	APP'D BY	REVISION
1	9-21-22			BID ADDENDUM #3

RECORD DRAWING CERTIFICATION

☐ AS BUILT – CHANGES AS NOTED ☐ AS BUILT – NO CHANGES

CONTRACTOR
NAME
SIGNATURE
TITLE DATE

PROJECT COORDINATOR
NAME
SIGNATURE
TITLE DATE

WESTCHESTER COUNTY, NEW YORK
DEPARTMENT OF PUBLIC WORKS AND TRANSPORTATION
DIVISION OF ENGINEERING

INFRASTRUCTURE REHABILITATION
PLAYLAND PARK, RYE, NEW YORK
RESTAURANT KITCHEN WITH FOOD VENDING
CEILING, FLOOR, AND PLANTER DETAILS

CONTRACT NUMBER **22-523**
SHEET NUMBER **K-A-81**
DWG NO.: **516 of 664**
SCALE: **As indicated**
DATE: **8/23/20223**
DPW FILE NUMBER **1-118-A-1265- 1**
REV. NO. **1**

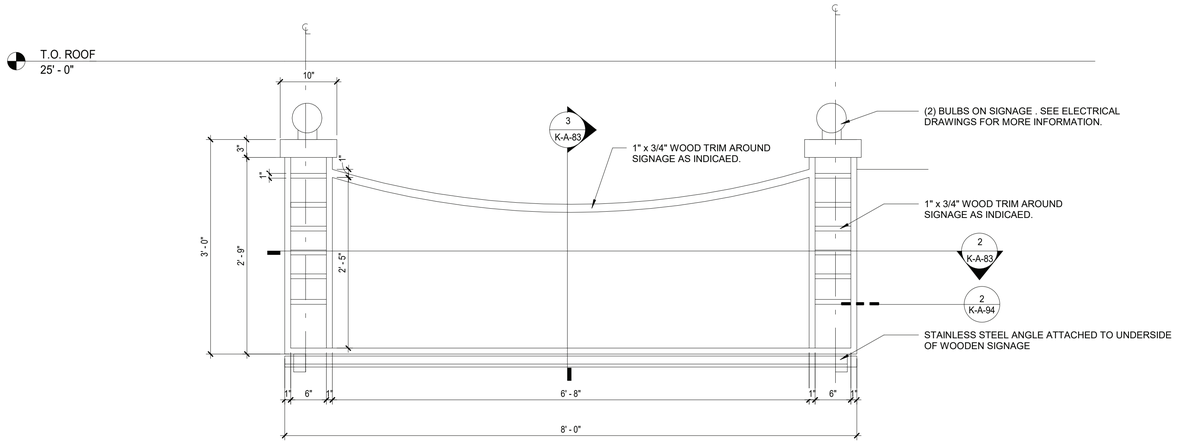

1 ROOF SIGNAGE ELEVATION
1" = 1'-0"

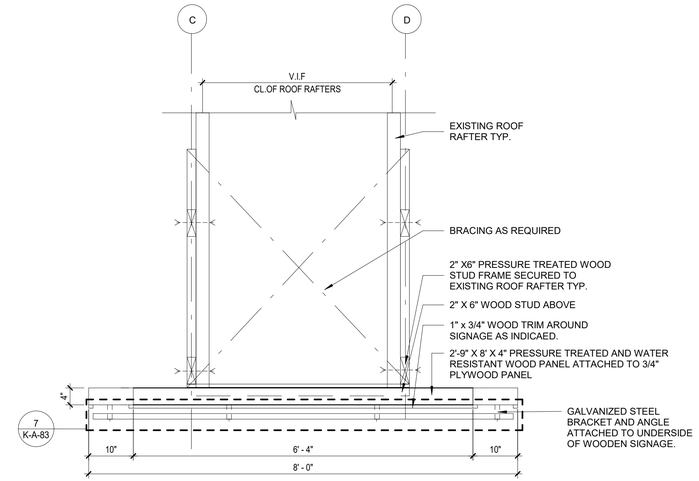

2 SIGNAGE PLAN
3/4" = 1'-0"

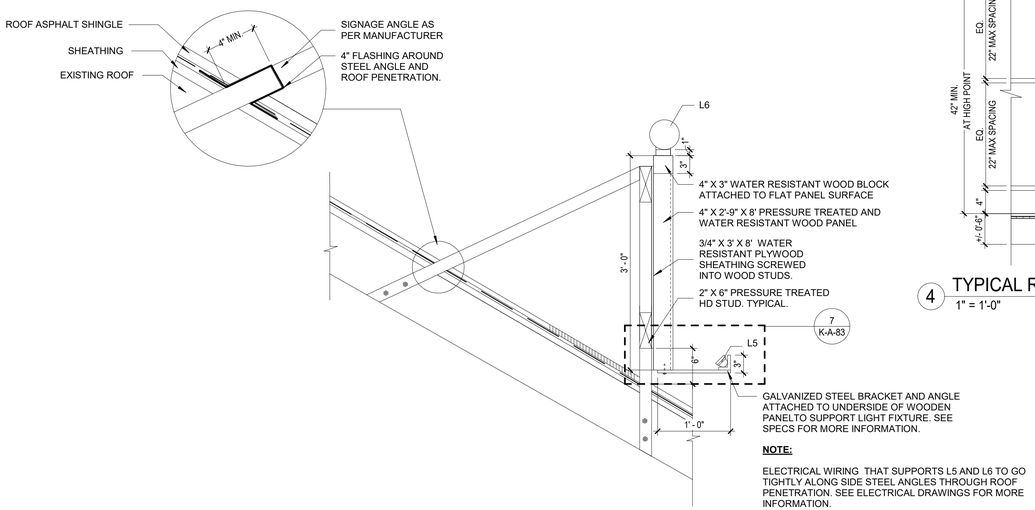

3 ROOF SIGNAGE SECTION DETAIL
1" = 1'-0"

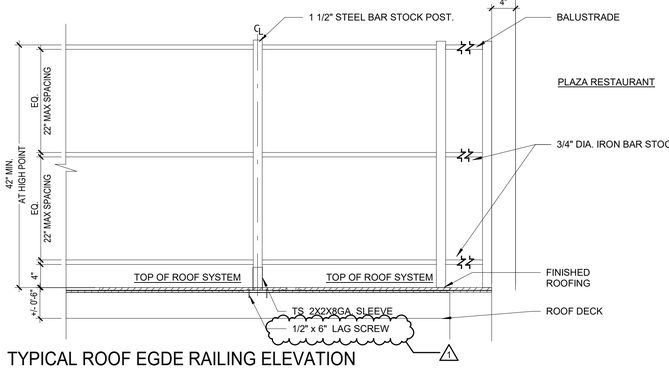

4 TYPICAL ROOF EGDE RAILING ELEVATION
1" = 1'-0"

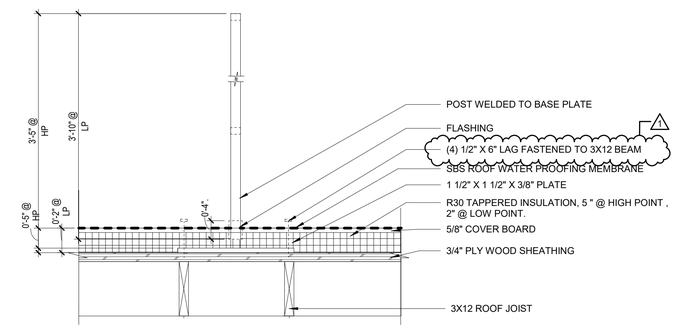

5 RAILING POST SECTION DETAIL
1 1/2" = 1'-0"

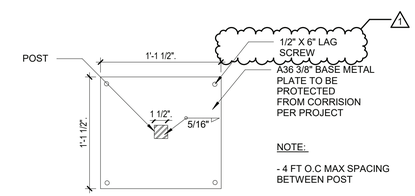

6 RAILING PLATE PLAN DETAIL
1 1/2" = 1'-0"

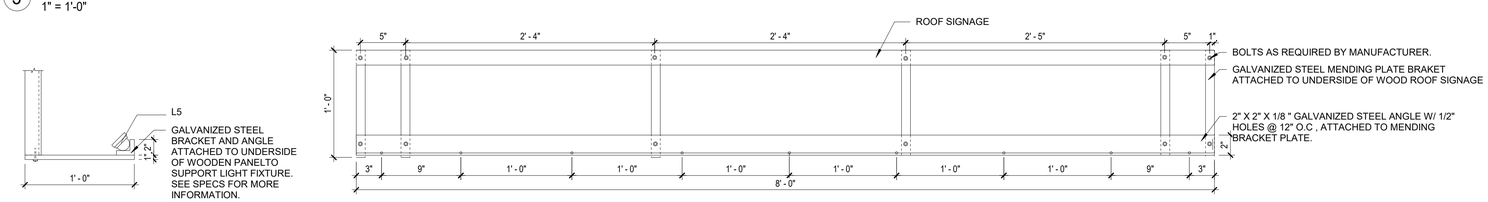

7 GALVANIZED STEEL BRACKET AND ANGLE DETAILS
1 1/2" = 1'-0"

9/26/2022 11:56:06 AM

CONSULTANT INFORMATION

The LiRo Group
1 State Street Plaza, New York, NY, 10004
(516) 938-5476 www.liro.com

CONSULTANT SEAL

REGISTERED ARCHITECT ROBERT D. YOUNG JR. 023290 STATE OF NEW YORK

REVISION NUMBER	DATE	MADE BY	APP'D BY	REVISION
1	9-21-22			BID ADDENDUM #3

RECORD DRAWING CERTIFICATION

☐ AS BUILT – CHANGES AS NOTED ☐ AS BUILT – NO CHANGES

CONTRACTOR
NAME
SIGNATURE
TITLE DATE

PROJECT COORDINATOR
NAME
SIGNATURE
TITLE DATE

WESTCHESTER COUNTY, NEW YORK
DEPARTMENT OF PUBLIC WORKS AND TRANSPORTATION
DIVISION OF ENGINEERING

INFRASTRUCTURE REHABILITATION
PLAYLAND PARK, RYE, NEW YORK
RESTAURANT KITCHEN WITH FOOD VENDING
ROOF SIGNAGE DETAILS

CONTRACT NUMBER **22-523**
SHEET NUMBER **K-A-83**
DWG NO.: **518 of 664**
SCALE: **As indicated**
DATE: **8/23/20223**
DPW FILE NUMBER **1-118-A-1267- 1**
REV. NO. **1**

POLYCARBONATE GLAZING SYSTEM
POLYCARBONATE PANELS:
5/32" (4MM) THICK
23.625" (600MM) PANEL WIDTH
TRANSPARENT (LIGHT BLUE TINT)
70% LIGHT TRANSMISSION

EXTRUDED ALUMINUM MULLION SYSTEM

BASIS OF DESIGN: PALRAM SUNGLAZE™ 4/600 SYSTEM

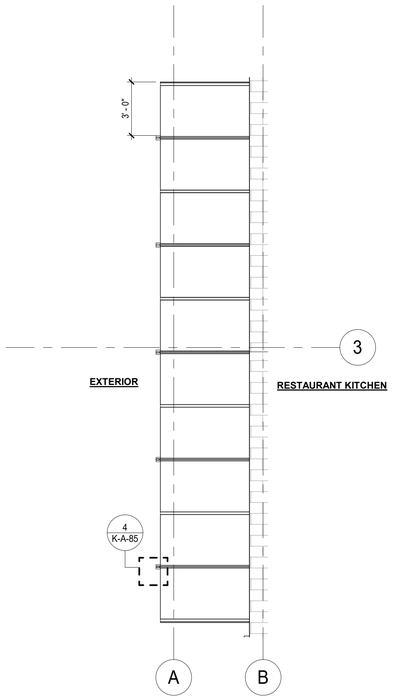

1 OVER HUNG CANOPY PARTIAL PLAN
1/4" = 1'-0"

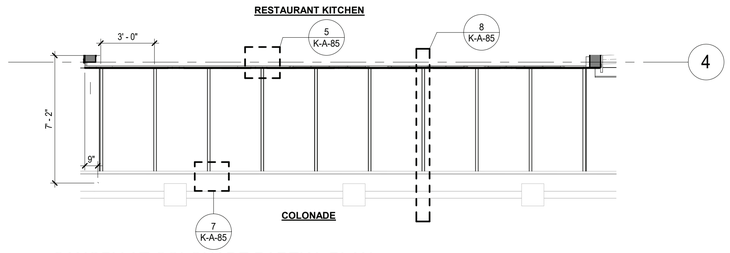

2 CANOPY AT COLONADE PARTIAL PLAN
1/4" = 1'-0"

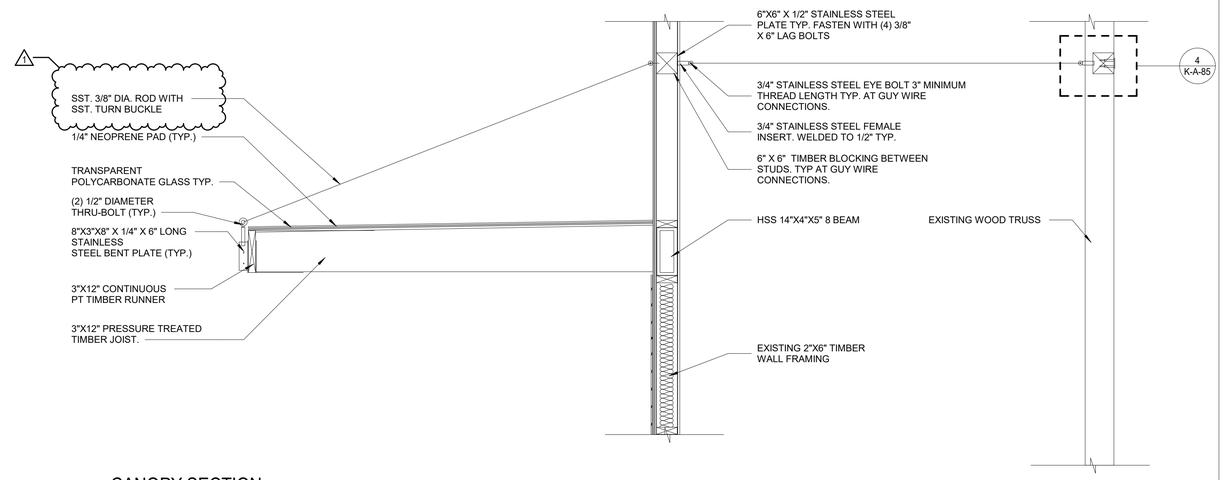

3 CANOPY SECTION
3/8" = 1'-0"

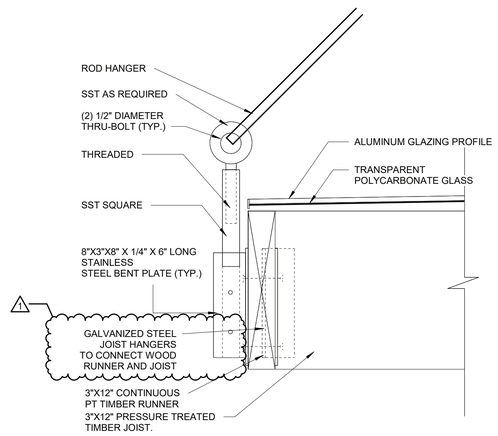

4 GUY WIRE EYE BOLT CONNECTION AT TIMBER RUNNER
3/8" = 1'-0"

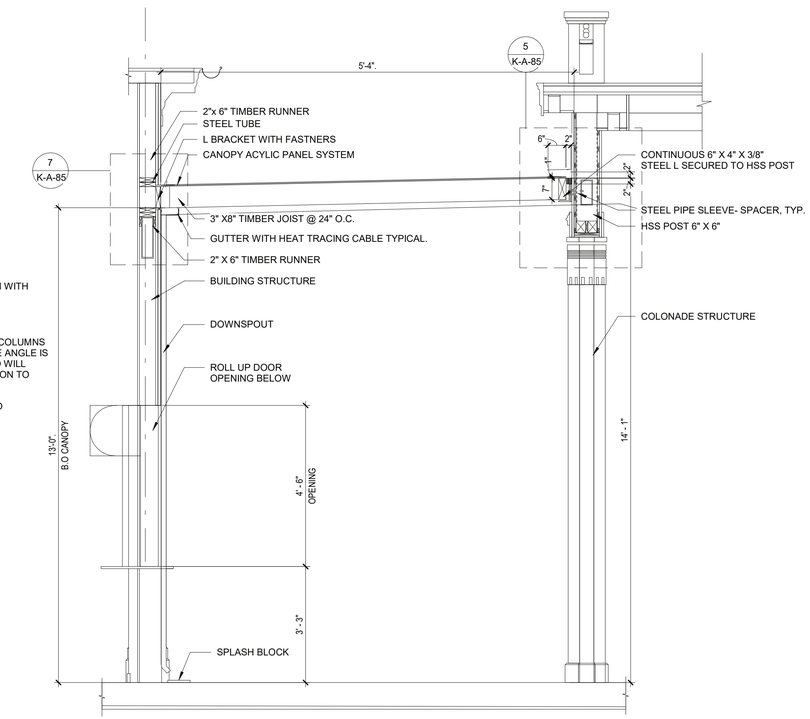

8 CANOPY TO COLONADE SECTION
1/2" = 1'-0"

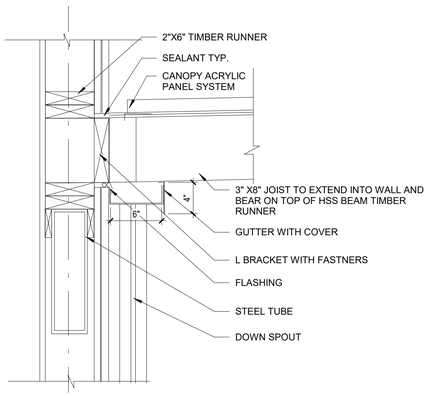

5 BUILDING TO CANOPY CONNECTION DETAIL
1 1/2" = 1'-0"

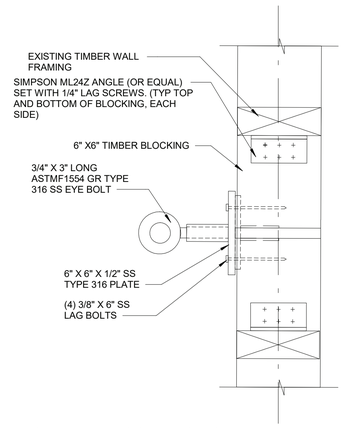

6 GUY WIRE CONNECTION AT TIMBER WALL
3/8" = 1'-0"

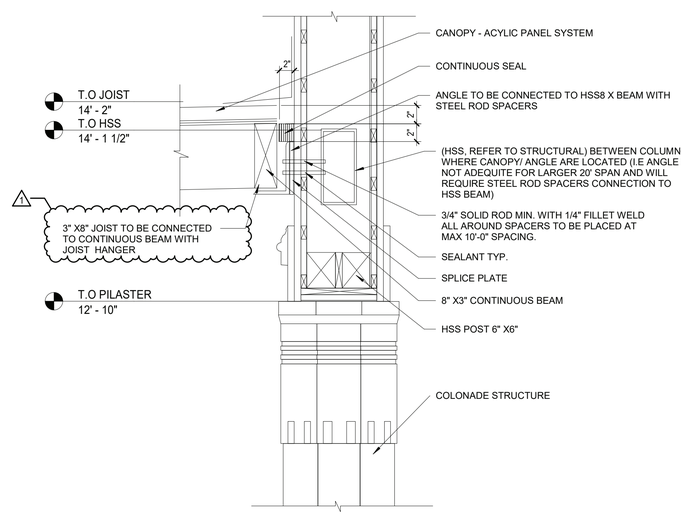

7 CANOPY TO COLONADE CONNECTION DETAIL
1 1/2" = 1'-0"

9/20/2022 10:57:03 AM

CONSULTANT INFORMATION
The LiRo Group
1 State Street Plaza, New York, NY, 10004
(516) 938-5476 www.liro.com

CONSULTANT SEAL
REGISTERED ARCHITECT ROBERT D. YOUNG JR. 023290 STATE OF NEW YORK

REVISION NUMBER	DATE	MADE BY	APP'D BY	REVISION
1	9-21-22			BID ADDENDUM #3

RECORD DRAWING CERTIFICATION
☐ AS BUILT – CHANGES AS NOTED ☐ AS BUILT – NO CHANGES

CONTRACTOR
NAME
SIGNATURE
TITLE DATE

PROJECT COORDINATOR
NAME
SIGNATURE
TITLE DATE

WESTCHESTER COUNTY, NEW YORK
DEPARTMENT OF PUBLIC WORKS AND TRANSPORTATION
DIVISION OF ENGINEERING

INFRASTRUCTURE REHABILITATION
PLAYLAND PARK, RYE, NEW YORK
RESTAURANT KITCHEN WITH FOOD VENDING
CANOPY DETAILS

CONTRACT NUMBER **22-523**
SHEET NUMBER **K-A-85**
DWG NO.: **520 of 664**
SCALE: **As indicated**
DATE: **8/23/20223**
DPW FILE NUMBER **1-118-A-1269- 1**
REV. NO. **1**

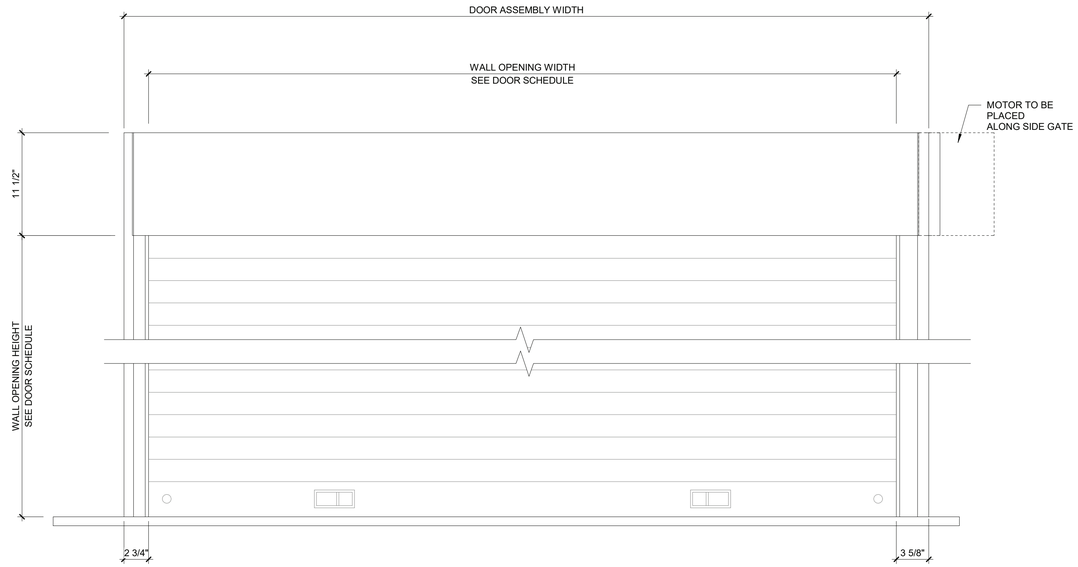

1 COUNTER ROLL UP DOOR ELEVATION
1 1/2" = 1'-0"

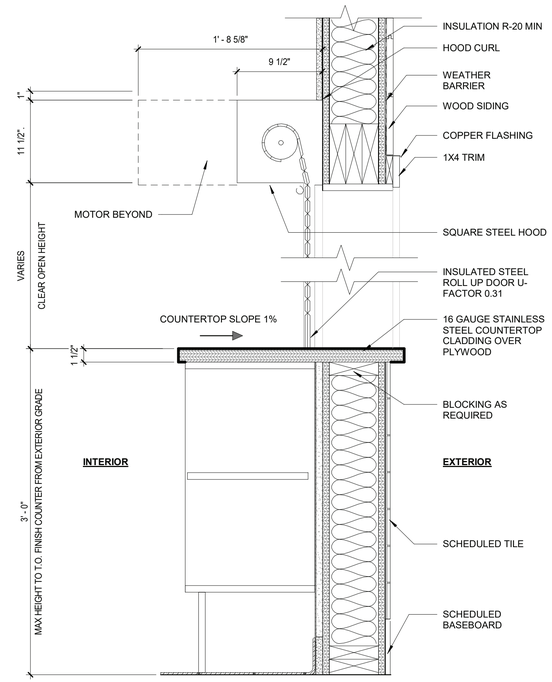

2 COUNTER ROLL UP DOOR SECTION
1 1/2" = 1'-0"

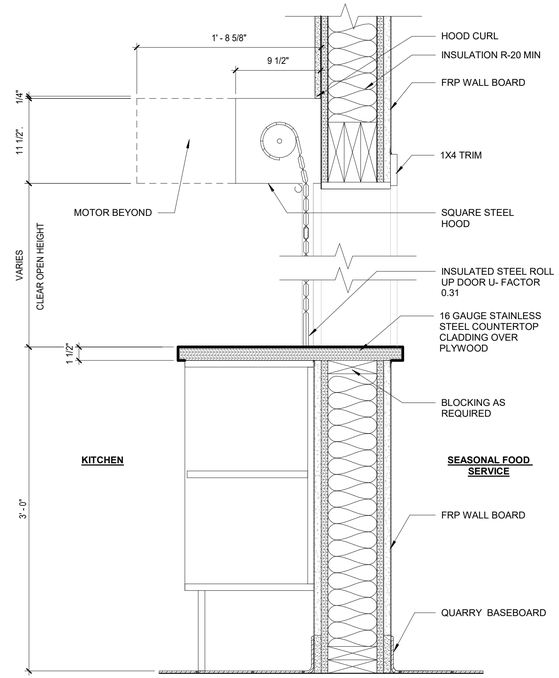

5 COUNTER ROLL UP DOOR SECTION B
1 1/2" = 1'-0"

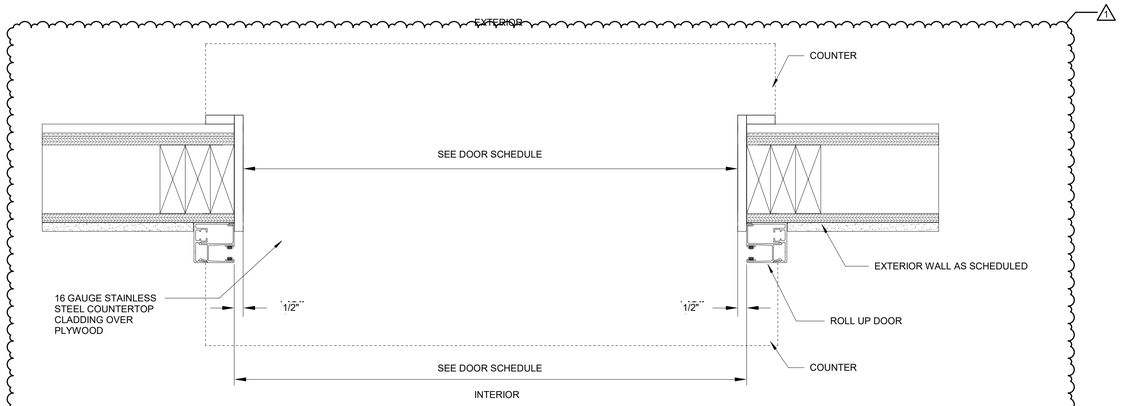

3 ROLL UP DOOR ATTACHMENT DETAIL
N.T.S.

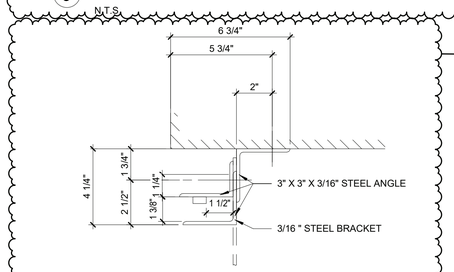

4 ROLL UP DOOR FASTNER DETAIL
3" = 1'-0"

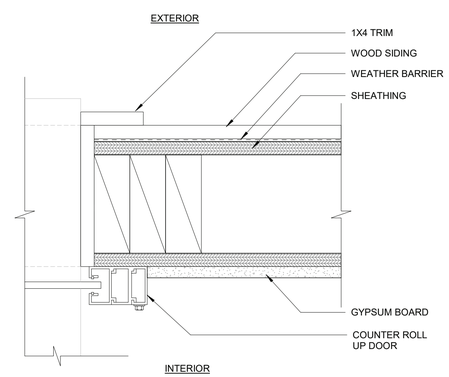

6 ROLL UP JAMB DETAIL
3" = 1'-0"

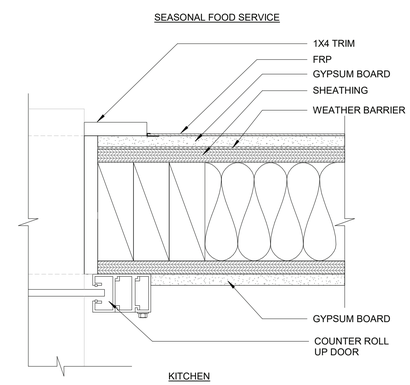

7 ROLL UP JAMB DETAIL B
3" = 1'-0"

9/20/2022 10:57:04 AM

CONSULTANT INFORMATION

The LiRo Group
1 State Street Plaza, New York, NY, 10004
(516) 938-5476 www.liro.com

CONSULTANT SEAL

REGISTERED ARCHITECT ROBERT D. JOHNSON 023290 STATE OF NEW YORK

REVISION NUMBER	DATE	MADE BY	APP'D BY	REVISION
1	9-21-22			BID ADDENDUM #3

RECORD DRAWING CERTIFICATION

☐ AS BUILT – CHANGES AS NOTED ☐ AS BUILT – NO CHANGES

CONTRACTOR
NAME
SIGNATURE
TITLE DATE

PROJECT COORDINATOR
NAME
SIGNATURE
TITLE DATE

WESTCHESTER COUNTY, NEW YORK
DEPARTMENT OF PUBLIC WORKS AND TRANSPORTATION
DIVISION OF ENGINEERING

INFRASTRUCTURE REHABILITATION
PLAYLAND PARK, RYE, NEW YORK
RESTAURANT KITCHEN WITH FOOD VENDING
COUNTER ROLL UP DOOR DETAILS

CONTRACT NUMBER	22-523
SHEET NUMBER	K-A-86
DWG NO.:	521 of 664
SCALE:	As indicated
DATE:	8/23/20223
DPW FILE NUMBER	1-118-A-1270- 1
REV. NO.	1

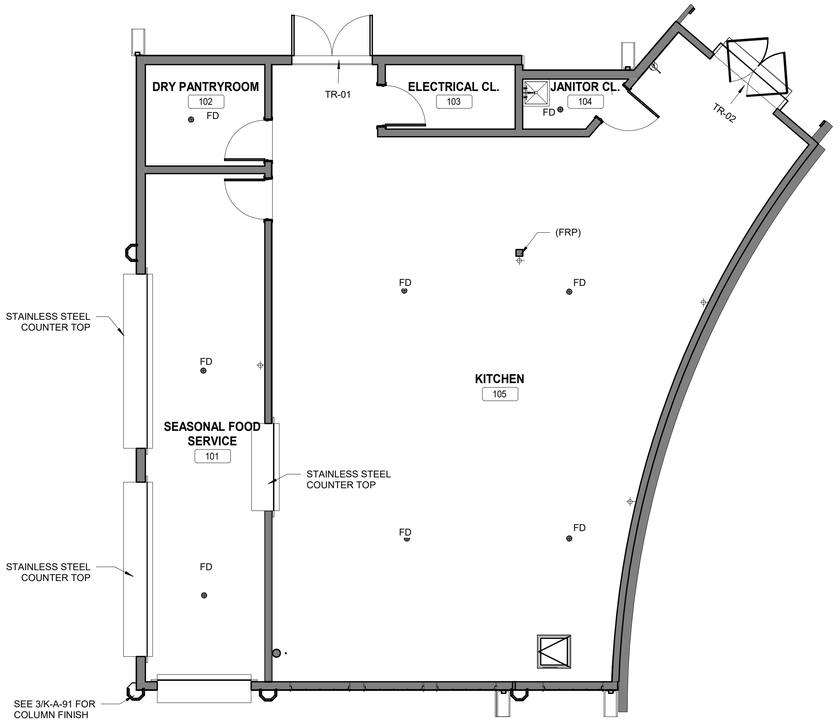

1 GROUND LEVEL FINISH FLOOR PLAN
3/16" = 1'-0"

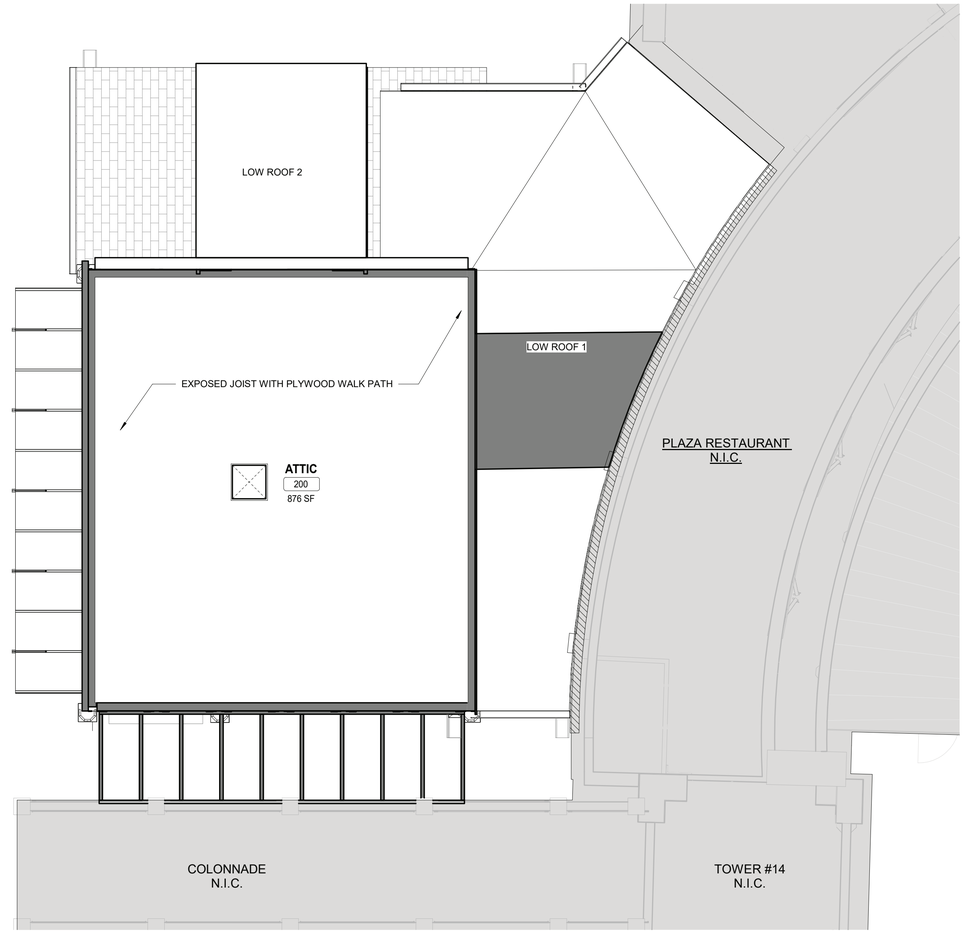

2 ATTIC FINISH PLAN
3/16" = 1'-0"

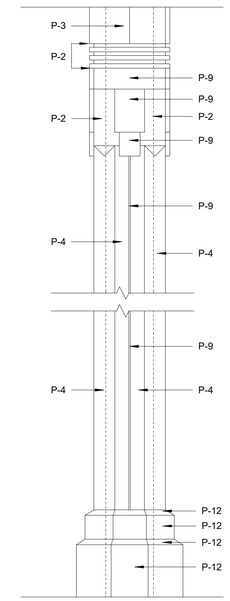

3 COLUMN FINISH
1" = 1'-0"

PAINTING SCHEDULE

KEY	COLOR	MANUFACTURER	REMARKS
P- 1	MYSTICAL POWERS #901	BENJAMIN MOORE	
P- 2	HERITAGE RED #HC-181	BENJAMIN MOORE	
P- 3	NEW YORK STATE OF MIND #805	BENJAMIN MOORE	
P- 4	LAZY SUNDAY #803	BENJAMIN MOORE	
P- 5	DEEP JUNGLE #595	BENJAMIN MOORE	
P- 6	LUCK OF THE IRISH #588	BENJAMIN MOORE	
P- 7	MAJOLICA GREEN #0013	SHERWIN WILLIAMS	
P- 8	ANTELOPE CANYON #125	BENJAMIN MOORE	
P- 9	FORSYTHIA #6907	SHERWIN WILLIAMS	
P- 10	CAPE BLUE #1642	BENJAMIN MOORE	
P- 11	WHITE SNOW #9541	SHERWIN WILLIAMS	
P- 12	TRICORN BLACK #6258	SHERWIN WILLIAMS	
P- 13	READY MIX WHITE	BENJAMIN MOORE	INTERIOR USE ONLY
P- 14	STUCCO PAINT TO MATCH P-1	KEIM	
P- 15	VAN DEUSEN BLUE #HC-156	BENJAMIN MOORE	
P- 16	#RAL9001	-	TYP. ROLL UP DOOR
P- 17	FLORIDA BEACHES #900	BENJAMIN MOORE	
P- 18	PIRATES COVE PEACH #903	BENJAMIN MOORE	
P- 19	JADITE #6459	SHERWIN WILLIAMS	
P- 20	DECISIVE YELLOW #6902	SHERWIN WILLIAMS	

(FOR PAINT TYPE AND SYSTEMS, SEE SPECIFICATIONS)

FINISH SCHEDULE

ROOM #	ROOM NAME	FLOORS	WALLS	CEILING	DOORS AND TRIM	WALL BASE
101	SEASONAL SERVICE AREA	QT-1	FRP	T1-11	SEE DOOR SCHEDULE (K-A-93)	WB-2
102	DRY ROOM	QT-1	FRP	GYP	SEE DOOR SCHEDULE (K-A-93)	WB-2
103	ELECTRICAL CLOSET	QT-1	GYP/P-13	GYP	SEE DOOR SCHEDULE (K-A-93)	WB-2
104	JANITORS CLOSET	QT-1	GYP-P-13/ CT-4	GYP	SEE DOOR SCHEDULE (K-A-93)	WB-2
105	KITCHEN	QT-1	FRP	ACT	SEE DOOR SCHEDULE (K-A-93)	WB-2
201	ATTIC	-	-	-	SEE DOOR SCHEDULE (K-A-93)	-

MATERIAL SCHEDULE

	KEY	MATERIAL	MANUFACTURER	FINISH COLOR	SIZE	REMARKS
WALLS	CT-1	CERAMIC TILE	DATILE; LINEAR COLOR WHEEL	AZURE -QH44	4" X 4"	
	CT-2	CERAMIC TILE	DATILE; LINEAR COLOR WHEEL	ATLANTIS -QH43	4" X 4"	
	CT-3	CERAMIC TILE	DATILE; LINEAR COLOR WHEEL	ALMOND - QH02	4" X 4"	
	CT-4	CERAMIC TILE	DATILE; LINEAR COLOR WHEEL	ARCTIC WHITE -GLOSSY	6" X 18"	PROVIDE EDGE PROTECTION ON ALL OUTSIDE WALL CORNERS
	FRP	FIBERGLASS REINFORCED PANEL	-	WHITE		
FLOORING	QT-1	QUARRY TILE	DATILE; QUARRY TEXTURES	SAHARA SAND-0T08(2)	6"X6"X1/2"	COVE BASE TO MATCH ON WALL BASE (WB-2)
	WD-3	PLYWOOD PANEL	-	EXTERIOR GRADE		
CEILING	ACT	ACOUSTICAL CEILING TILE	-	-	24"X24"X3/4"	FDA AND USDA COMPLIANT SQUARE LAY IN TILES.
	GYP	GYPSUM BOARD	-	-	5/8"	
	T1-11	T1-11 PLYWOOD SIDING	-	PREMIUM GRADE SIDING	4'X8'X11/32"	1ct. MULTI PURPOSE INTERIOR -EXTERIOR LATEX PRIMER; 2ct.PRO INDUSTRIAL ACYLIC - MATTE (SHERMAN WILLIAM)
WALLBASE	WB-2	QUARRY TILE COVE BASE	DATILE; QUARRY TEXTURES	SAHARA SAND-0T08(2)	6"X6"X1/2"	
THRESHOLD	TR-01	EXTERIOR DOOR SILL	-	-		
	TR-02	QUARRY TO CONCRETE	-	-		
GROUT	GR-01	GROUT	MAPEI; TRADITIONAL	27- SILVER		
RAILING	R-01	PAINT	IVPPAINTS; RAL 7004	SIGNAL GREY		

1

FINISH LEGEND:

ITEMS NOT IN CONTRACT

QUARRY TILE FLOORING

FINISH PLAN NOTES:

1. INDICATES TYPICAL FINISHES WITHIN ROOM, U.O.N. SEE FINISH SCHEDULE FOR MORE INFORMATION.
2. ALL FLOORING COVERING MATERIALS TO BE INSTALLED PER MANUFACTURER'S STANDARD DETAILS AND SPECIFICATIONS. VERIFY WITH MANUFACTURER PRIOR INSTALLATION.
3. THE G.C. IS RESPONSIBLE FOR PROVIDING A SMOOTH LEVEL FLOOR SURFACE THAT MEETS MANUFACTURERS INSTALLATION SPECIFICATIONS PRIOR TO THE INSTALLATION OF ALL FLOORING MATERIALS.
4. THE FLOORING SUB-CONTRACTOR IS RESPONSIBLE FOR VERIFYING THAT THE CONDITION OF THE BASE FLOOR MEETS THE INSTALLATION SPECIFICATIONS PRIOR TO THE INSTALLATION OF THE NEW FLOORING MATERIAL.
5. ALL MATERIAL TRANSITIONS AN DOOR THRESHOLDS TO TAKE PLACE AT DOOR CENTERLINE U.N.O.
6. ALL DIMENSIONS ARE TO CENTERLINE OF TRANSITION BETWEEN FLOORING MATERIALS OR FINISH COLOR OF SAME MATERIAL. PLANS DO NOT SHOW ALL TILES OF SAME MATERIALS. CONTRACTOR TO START TILES AT POINT AS INDICATED ON PLANS.
7. THE GENERAL CONTRACTOR SHALL BE RESPONSIBLE FOR PROPER PREPARATION OF ALL NEW AND EXISTING SURFACES IN A SATISFACTORY MANNER TO RECEIVE NEW FINISHES. THIS INCLUDES THE DEMOLITION AND REMOVAL OF NECESSARY ITEMS. TOUCH- UP AND/ OR REFINISH OF SURFACES DAMAGED BY SUBSEQUENT WORK SHALL BE PERFORMED IN CONFORMANCE WITH THE MANUFACTURER'S RECOMMENDED INSTALLATION METHODS.
8. ALL SURFACES WHICH ARE TO RECEIVE A PAINT FINISH SHALL BE PRIMED AND FINISHED IN ACCORDANCE WITH THE WRITTEN SPECIFICATIONS.
9. ALL JOINTS IN GYPSUM BOARD WALLS SHALL BE FINISHED WITH PAPER TAPE 2" WIDE AND THREE COATS OF VINYL DRY OR PREMIXED JOINT COMPOUND. ALL OUTSIDE CORNERS SHALL BE FINISHED WITH METAL CORNER BEADS, TAPED AND SPACKLED. ALL AREAS TO BE PAINTED SHALL BE SANDED SMOOTH. JUST PRIOR TO THE APPLICATION OF THE FIRST COAT OF PAINT, WIPE SANDED SURFACES WITH A DAMP CLOTH IN ORDER TO LAY FLAT ANY NAP WHICH MAY HAVE FORMED IN SANDING.
10. THE PAINT CONTRACTOR SHALL REMOVE ALL HARDWARE, SWITCH COVERS, ETC. PRIOR TO PAINTING AND BE RESPONSIBLE FOR THE REINSTALLATION AFTER PAINTING IS COMPLETED.
11. FINISH FLOORING INSTALLATION SHALL BE IN CONFORMANCE WITH THE MANUFACTURER'S RECOMMENDED INSTALLATION GUIDELINES. COORDINATE THE INSTALLATION WITH OTHER TRADES, SUCH AS ELECTRICAL.
12. ALL JOINTS BETWEEN MATERIALS TO BE TIGHT AND CONSTRUCTED IN A NEAT WORKMANLIKE MANNER.
13. ALL FINISHES SHALL BE TOUCHED UP TO CORRECT ANY IMPERFECTIONS AFTER INSTALLATION. FIXTURE CONTRACTOR SHALL PROVIDE TO THE GENERAL CONTRACTOR ALL MATERIALS FOR TOUCH UP WORK.
14. THE INTENT OF THE FINISH SPECIFICATIONS IS TO PROVIDE A SATISFACTORY FINISH TO ALL PARTS OF THE WORK. COVER ALL SURFACES THOROUGHLY. IF THE SPECIFIED NUMBER OF COATS DOES NOT ACCOMPLISH THE INTENT, THE GENERAL CONTRACTOR SHALL BE RESPONSIBLE FOR THE APPLICATION OF ADDITIONAL COATS OF THE SPECIFIED MATERIAL TO GIVE SATISFACTORY COVERAGE, AT NO ADDITIONAL COST TO OWNER.
15. CLEAN ALL GLASS SURFACES WITH LIQUID GLASS CLEANER AT PROJECT COMPLETION.
16. REFERENCE SPECIFICATIONS FOR COMPLETE FINISH DOCUMENTATION AND MANUFACTURER INSTALLATION AND MAINTENANCE DOCUMENTATION.

9/20/2022 10:57:07 AM

CONSULTANT INFORMATION
The LiRo Group
1 State Street Plaza, New York, NY, 10004
(516) 938-5476 www.liro.com

CONSULTANT SEAL
REGISTERED ARCHITECT ROBERT D. TOWNSEND 023280 STATE OF NEW YORK

REVISION NUMBER	DATE	MADE BY	APP'D BY	REVISION
1	9-21-22			BID ADDENDUM #3

RECORD DRAWING CERTIFICATION
☐ AS BUILT – CHANGES AS NOTED ☐ AS BUILT – NO CHANGES

CONTRACTOR
NAME
SIGNATURE
TITLE DATE

PROJECT COORDINATOR
NAME
SIGNATURE
TITLE DATE

WESTCHESTER COUNTY, NEW YORK
DEPARTMENT OF PUBLIC WORKS AND TRANSPORTATION
DIVISION OF ENGINEERING

INFRASTRUCTURE REHABILITATION
PLAYLAND PARK, RYE, NEW YORK
RESTAURANT KITCHEN WITH FOOD VENDING
FINISHES & MATERIAL SCHEDULE

CONTRACT NUMBER **22-523**
SHEET NUMBER **K-A-91**
DWG NO.: **524 of 664**
SCALE: **As indicated**
DATE: **8/23/20223**
DPW FILE NUMBER **1-118-A-1273- 1**
REV. NO. **1**

DOOR SCHEDULE

DOOR NUMBER	LOCATION FROM	LOCATION TO	PANEL DOOR TYPE	PANEL WIDTH	PANEL HEIGHT	PANEL THICK NESS	PANEL MATL	PANEL FINISH EXTERIOR	PANEL FINISH INTERIOR	FRAME Frame Type	FRAME MATL	FRAME FINISH EXTERIOR	FRAME FINISH INTERIOR	HW SET	R-VALUE	U-VALUE	FIRE RATING	Comments
101	SEASONAL FOOD SERVICE	KITCHEN	A	3' - 0"	7' - 0"	1 3/4"	HM	Paint - P-11	Paint - P-11	2	HM	Paint - P-11	Paint - P-11	7	-	-		
101A	EXTERIOR	SEASONAL FOOD	B	7' - 0"	7'-9 3/4"	3/8 "	STEEL	Paint -P-16	Paint -P-16	3	STEEL	Paint -P-16	Paint -P-16	4	-	0.31	45 MIN	MOTORIZED ROLL DOWN COUNTER DOOR
101B	EXTERIOR	SEASONAL FOOD	B	13' - 0"	7'-9 3/4"	3/8 "	STEEL	Paint -P-16	Paint -P-16	3	STEEL	Paint -P-16	Paint -P-16	4	-	0.31		MOTORIZED ROLL DOWN COUNTER TOP
101C	EXTERIOR	SEASONAL FOOD	B	13' - 0"	7'-9 3/4"	3/8 "	STEEL	Paint -P-16	Paint -P-16	3	STEEL	Paint -P-16	Paint -P-16	4	-	0.31		MOTORIZED ROLL DOWN COUNTER TOP
102	DRY PANTRYROOM	KITCHEN	A	3' - 0"	7' - 0"	1 3/4"	HM	Paint - P-11	Paint - P-11	2	HM	Paint - P-11	Paint - P-11	9	-	-		
103	ELECTRICAL CL.	KITCHEN	A	3' - 0"	7' - 0"	1 3/4"	HM	Paint - P-11	Paint - P-11	2	HM	Paint - P-11	Paint - P-11	12	-	-		
104	JANITOR CL.	KITCHEN	A	3' - 0"	7' - 0"	1 3/4"	HM	Paint - P-11	Paint - P-11	2	HM	Paint - P-11	Paint - P-11	9	-	-		
105	PLAZA REST.	KITCHEN	D	6' - 5"	7' - 3"	1 3/4"	STEEL	Paint - P-11	Paint - P-11	4	HM	Paint - P-11	Paint - P-11	2	-	-		
105B	EXTERIOR SEASONAL FOOD	KITCHEN KITCHEN	C	6' - 0"	7' - 3" 3' - 6"	1 3/4"	WD	Paint - P-11	Paint - P-11	1	WD	Paint - P-11	Paint - P-11	6	-	-		PROVIDE REQUIRED EXIT DEVICE HARDWARE
106	KITCHEN	KITCHEN	B	6' - 6"	6' - 8 1/2"	3/8 "	STEEL	Paint -P-16	Paint -P-16	2	STEEL	Paint -P-16	Paint -P-16	4	-	-		MOTORIZED ROLL DOWN COUNTER TOP
107	KITCHEN	KITCHEN	E	6' - 2"	7' - 9 3/4"	3/8 "	STEEL	Paint -P-16	Paint -P-16	3	STEEL	Paint -P-16	Paint -P-16	4	R-4.75	-	1.5 HR	MOTORIZED INSULATED ROLL DOWN COUNTER TOP
108	KITCHEN	KITCHEN	HATCH	2' - 0"	1' - 0"	2"	STEEL	QT-1	-	-	STEEL	STEEL	-	-	-	-	as Specified	FLOOR HATCH SEE MANUFACTURER SPECS

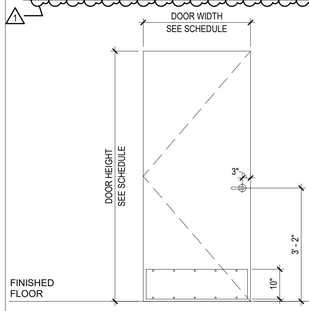

TYPE A

SINGLE H.M. DOOR

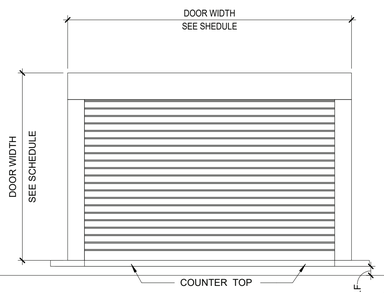

TYPE B

COUNTER OVER HEAD ROLL UP DOOR
U- FACTOR MIN U-0.31 (ECCC TBL C402.1.4) UON

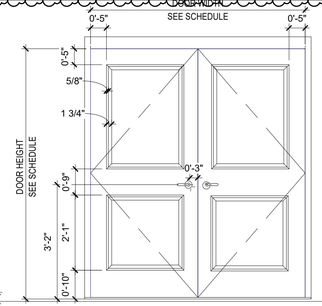

TYPE C

DOUBLE SOLID WOOD DOOR
U-FACTOR MIN U-0.37 (ECCC TBL C402.1.4) UON
EXIT HARDWARE DEVICE AT INTERIOR

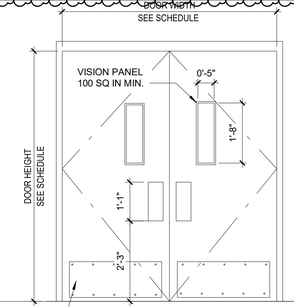

TYPE D

DOUBLE H.M. ACTING DOOR

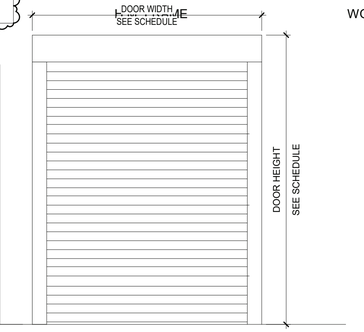

TYPE E

FULL HEIGHT FIRE BARRIER ROLL UP DOOR
R-4.75 , FIRE RATING 90 MIN

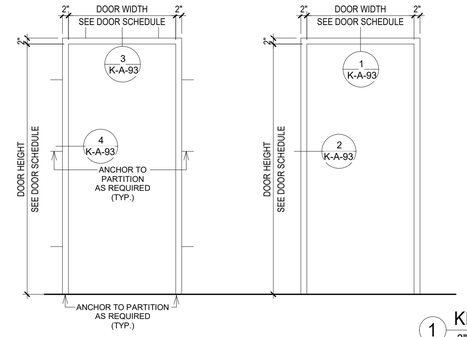

TYPE 1

TYPE 2

WOOD FRAME

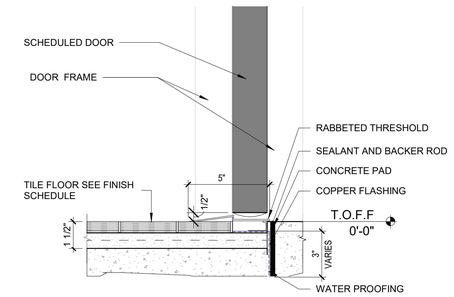

1 KITCHEN QUARRY TILE TO EXTERIOR CONCRETE THRESHOLD DETAIL
3" = 1'-0"

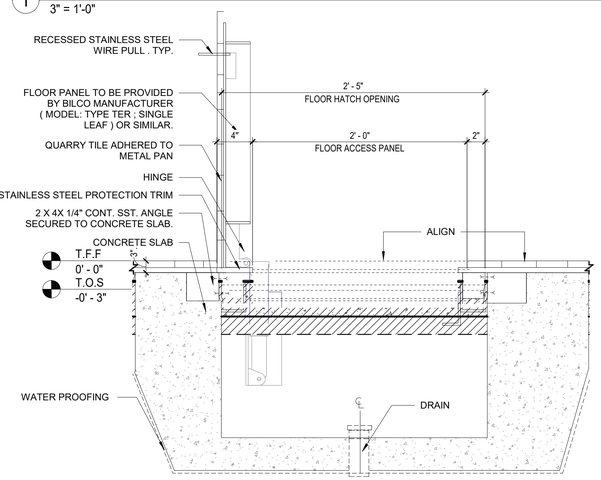

2 FLOOR ACCESS PANEL SECTION DETAIL
1 1/2" = 1'-0"

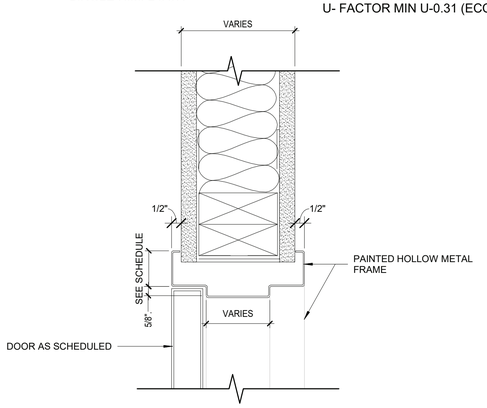

3 H.M. FRAME HEAD DETAIL
3" = 1'-0"

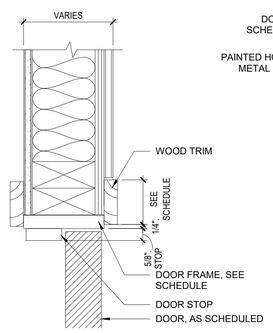

4 WOOD DOOR HEAD DETAIL
3" = 1'-0"

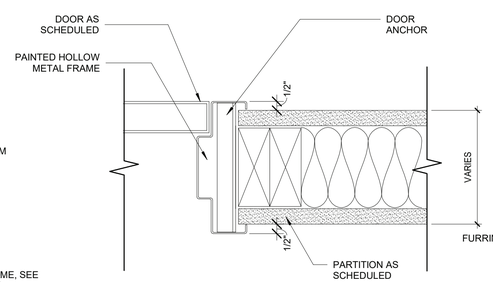

5 H.M. FRAME JAMB DETAIL
3" = 1'-0"

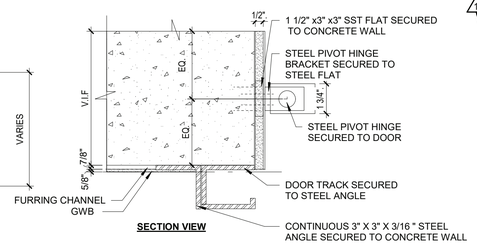

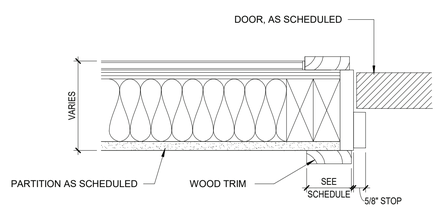

8 WOOD DOOR JAMB DETAIL
3" = 1'-0"

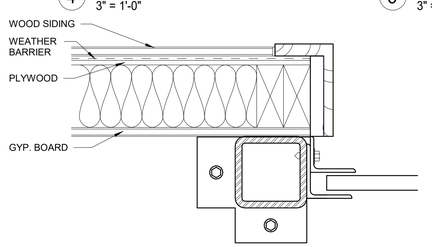

9 ROLL-UP DOOR JAMB DETAIL
3" = 1'-0"

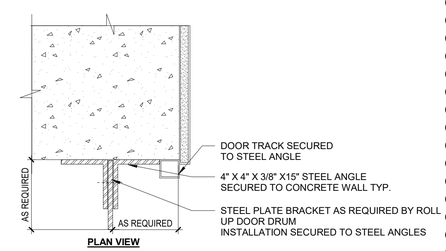

6 DOUBLE ACTING DOOR HINGE DETAILS
3/4" = 1'-0"

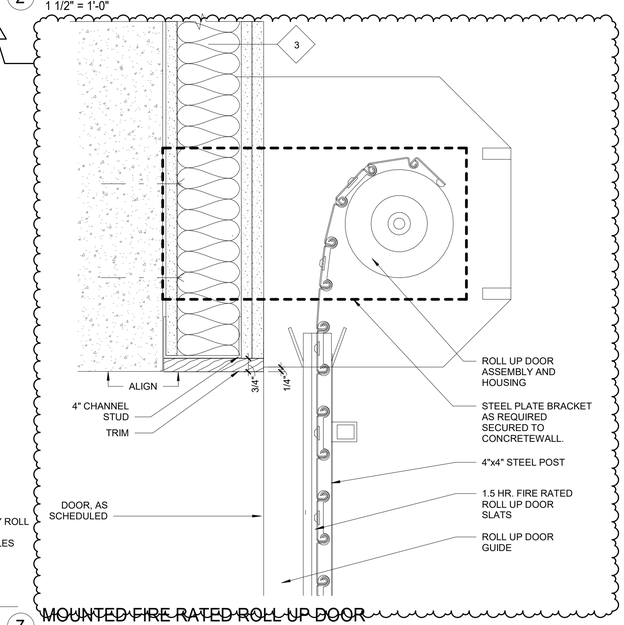

7 MOUNTED FIRE RATED ROLL UP DOOR
3" = 1'-0"

9/26/2022 11:56:14 AM

CONSULTANT INFORMATION

The LiRo Group

1 State Street Plaza, New York, NY, 10004
(516) 938-5476 www.liro.com

CONSULTANT SEAL

REGISTERED ARCHITECT ROBERT D. YOUNG JR. 023280 STATE OF NEW YORK

REVISION NUMBER	DATE	MADE BY	APP'D BY	REVISION
1	9-21-22			BID ADDENDUM #3

RECORD DRAWING CERTIFICATION

☐ AS BUILT – CHANGES AS NOTED ☐ AS BUILT – NO CHANGES

CONTRACTOR
NAME
SIGNATURE
TITLE DATE

PROJECT COORDINATOR
NAME
SIGNATURE
TITLE DATE

WESTCHESTER COUNTY, NEW YORK
DEPARTMENT OF PUBLIC WORKS AND TRANSPORTATION
DIVISION OF ENGINEERING

INFRASTRUCTURE REHABILITATION
PLAYLAND PARK, RYE, NEW YORK
RESTAURANT KITCHEN WITH FOOD VENDING
DOOR & FRAME DETAILS

CONTRACT NUMBER	22-523
SHEET NUMBER	K-A-93
DWG NO.:	526 of 664
SCALE:	As indicated
DATE:	8/23/20223
DPW FILE NUMBER	1-118-A-1275- 1
REV. NO.	1

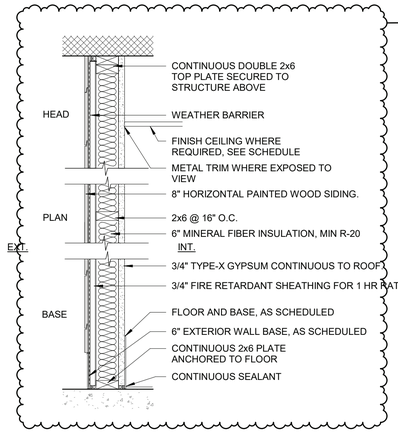

1 **EXTERIOR WALL TYPE**

1 LAYER. 5/8" GWB MOISTURE RESISTANT, 2x6 WOOD STUD, 3/4" MOISTURE RESISTANT SHEATHING, 1/8" DRAINAGE TYPE OF AIR /MOISTURE BARRIER, WOOD SIDING UPTO 8' A.F.F

1A **EXTERIOR WALL TYPE 1 HR FIRE RESISTANCE RATED**

1 LAYER 5/8" 5/8" GWB-X , M-Bloc – MOISTURE RESISTANT, 2x6 WOOD STUD, 5/8" GBW-X, M-Bloc , 1 HOUR ¾" FIRE RETARDANT SHEATHING, 1/8" DRAINAGE TYPE AIR/MOISTURE BARRIER ,WOOD SIDING WITH TEST NUMBER: BXUV.V346-ANSI/UL 263

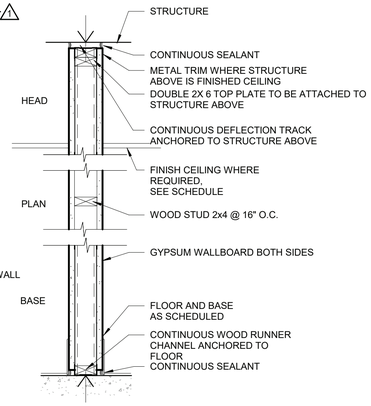

2 **1 HR. RATING**

1 LAYER 5/8" IMPACT & MOLD-RESISTANT GYP. BD. UPTO 8' A.F.F. AND 5/8" MOLD-RESISTANT GYP. BD. TO CEILING, ON EACH SIDE

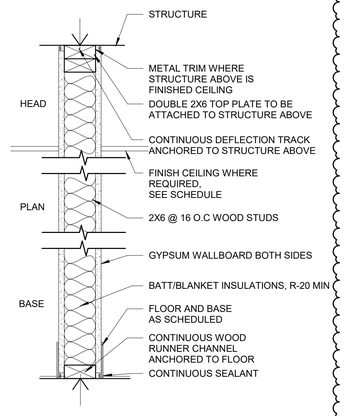

2A **INTERIOR PARTITION WALL TYPE - NO RATING**

5-1/2" WOOD STUDS
1 LAYER 5/8" GYP. BD. EACH SIDE. INSULATION R-20 MIN

2B **1 HR. RATING**

5-1/2" WOOD STUDS
1 LAYER 5/8" GYP. BD. EACH SIDE WITH R-20 BATT INSULATION

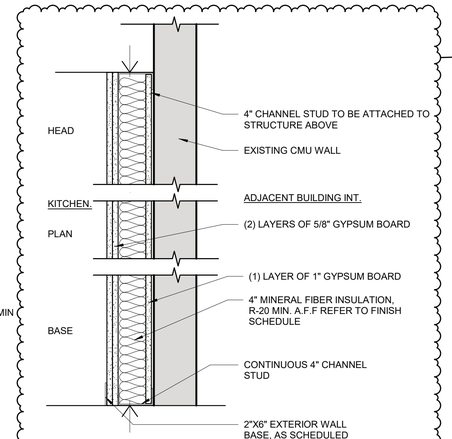

3 **2 HR FIRE RATED PARTITION ALONG EXISTING CMU WALL**

4" CHANNEL STUDS
2 LAYERS OF 5/8" GYP. BD.
1 LAYER OF 1" GWB LINEAR WITH R-20 BATT INSULATION

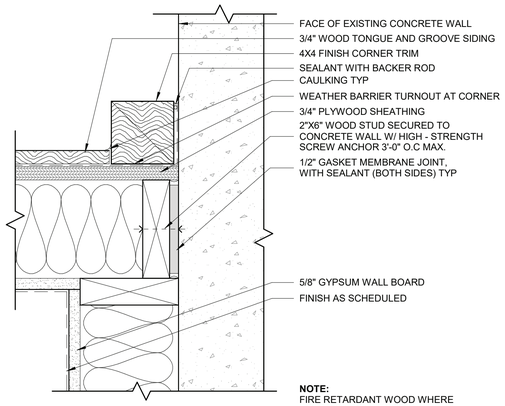

NOTE:
FIRE RETARDANT WOOD WHERE NOTED ON DRAWINGS

1 TYP WOOD FRAMING TO EXISTING CONC. WALL DETAIL
3" = 1'-0"

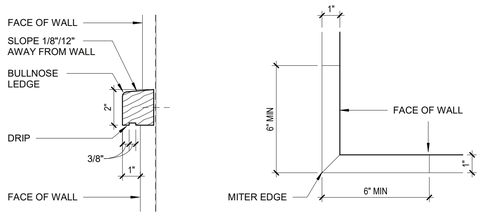

SECTION PROFILE **PLAN - CORNER**

2 TYPICAL WOOD TRIM DETAIL
3" = 1'-0"

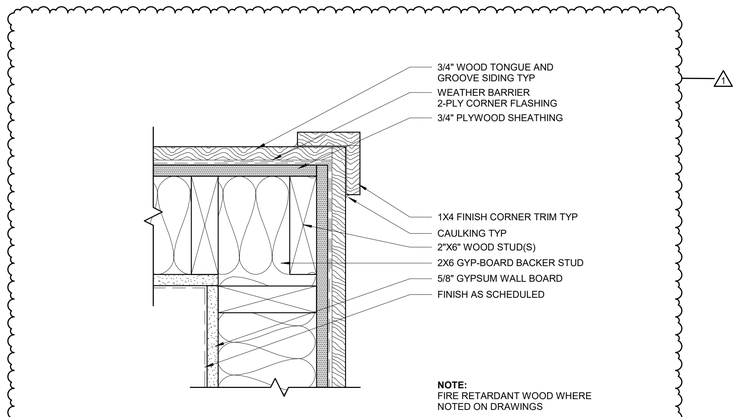

NOTE:
FIRE RETARDANT WOOD WHERE NOTED ON DRAWINGS

3 TYP WOOD FRAMING CORNER DETAIL
3" = 1'-0"

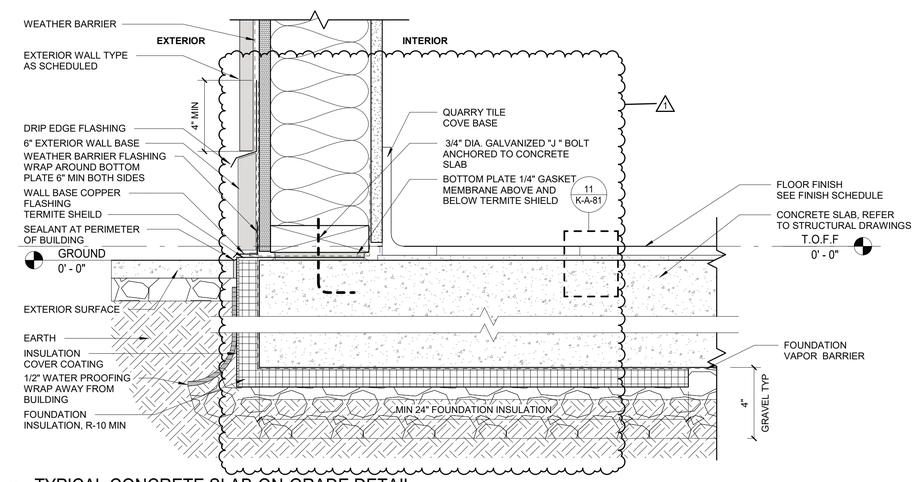

4 TYPICAL CONCRETE SLAB-ON-GRADE DETAIL
3" = 1'-0"

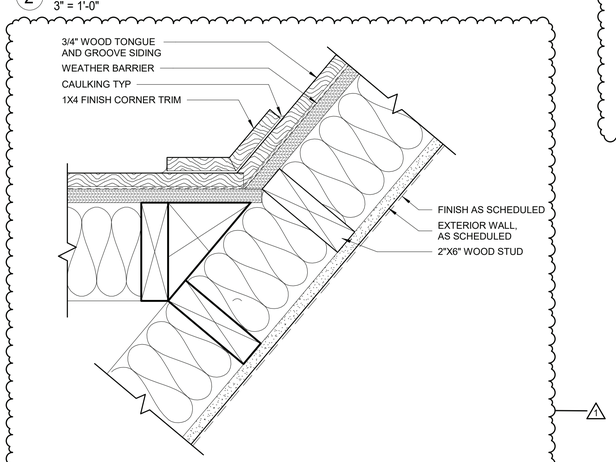

5 TYP WOOD FRAMING ANGLED WALL DETAIL
3" = 1'-0"

9/20/2022 10:57:14 AM

CONSULTANT INFORMATION

The LiRo Group
1 State Street Plaza, New York, NY, 10004
(516) 938-5476 www.liro.com

CONSULTANT SEAL

REGISTERED ARCHITECT ROBERT D. CORNIGA 023280 STATE OF NEW YORK

REVISION NUMBER	DATE	MADE BY	APP'D BY	REVISION
1	9-21-22			BID ADDENDUM #3

RECORD DRAWING CERTIFICATION
☐ AS BUILT – CHANGES AS NOTED ☐ AS BUILT – NO CHANGES

CONTRACTOR
NAME
SIGNATURE
TITLE DATE

PROJECT COORDINATOR
NAME
SIGNATURE
TITLE DATE

WESTCHESTER COUNTY, NEW YORK
DEPARTMENT OF PUBLIC WORKS AND TRANSPORTATION
DIVISION OF ENGINEERING

INFRASTRUCTURE REHABILITATION
PLAYLAND PARK, RYE, NEW YORK
RESTAURANT KITCHEN WITH FOOD VENDING
WALL PARTITION SCHEDULE

CONTRACT NUMBER **22-523**
SHEET NUMBER **K-A-94**
DWG NO.: **527 of 664**
SCALE: **As indicated**
DATE: **8/23/20223**
DPW FILE NUMBER **1-118-A-1276- 1**
REV. NO. **1**

FIRE PROTECTION SAFETY NOTES:

1. SPECIAL PRECAUTION SHALL BE TAKEN BY THE CONTRACTOR SO THAT EQUIPMENT OF THIS APPLICATION AND ITS INSTALLATION WILL NOT AFFECT THE FOLLOWING: EGRESS TO AND FROM THE BUILDING. FIRE SAFETY OR CREATE A FIRE HAZARD. STRUCTURAL SAFETY OF THE BUILDING. ACCUMULATION OF DUST AND DEBRIS. (THE CONTRACTOR SHALL LEAVE THE SITE BROOM CLEANED EACH DAY.)

FIRE PROTECTION GENERAL NOTES:

1. DIMENSIONS, LOCATIONS AND SIZES INDICATED ON THE PLANS AND THE ELEVATION ARE APPROXIMATE AND SHALL BE VERIFIED BY FIELD INSPECTION BY THE CONTRACTOR.

2. SOME EXISTING PIPE AND EQUIPMENT IS SHOWN FOR CLARIFICATION OF THIS CONTRACT, BUT MUST BE PROTECTED BY THE CONTRACTOR.

3. NO WORK SHALL BE INITIATED UNTIL A WORK PERMIT IS OBTAINED BY THE CONTRACTOR AND A SAFETY PLAN IS SUBMITTED AND IS APPROVED.

4. CONTRACTOR IS RESPONSIBLE FOR OBTAINING ALL PERMITS, EQUIPMENT USE PERMITS, ALL INSPECTION APPROVALS, AND LETTER OF COMPLETION FROM THE DEPARTMENT OF BUILDINGS FOR WORK UNDER THIS CONTRACT AS APPLICABLE.

5. ANY EXISTING MATERIALS, PIPING, ETC., NOT INDICATED FOR DEMOLITION WHICH ARE REMOVED BY THE CONTRACTOR IN ORDER TO INSTALL NEW WORK SHALL BE REINSTALLED BY THE CONTRACTOR. IF EXISTING WORK IS DAMAGED IT SHALL BE REPLACED AT THE CONTRACTOR'S EXPENSE. ALL SURFACES OR FINISHES THAT ARE DAMAGED OR OTHERWISE AFFECTED BY WORK OF THIS CONTRACT SHALL BE PATCHED, REPAIRED, PAINTED OR REPLACED TO MATCH THE PRE-EXISTING CONDITION AND THE NEW WORK.

6. CONTRACTOR MAY PROPOSE ALTERNATE ROUTING IN DIFFICULT AREAS WHERE REPLACEMENT IN KIND IS NOT PRACTICAL. ANY AND ALL ALTERNATE ROUTING IS SUBJECT TO PRIOR REVIEW AND APPROVAL BY THE ENGINEER.

7. A FIRE WATCH SHALL BE PROVIDED WHEN SPRINKLER COVERAGE IS IMPACTED TO MAINTAIN BUILDING OPERATIONS OR AS REQUIRED.

FIRE PROTECTION SYMBOL LIST

— — — — — FS DRY— —	NEW DRY SPRINKLER PIPING
— — — — — DRY(E) —	EXISTING TO REMAIN DRY SPRINKLER PIPING
○	NEW UPRIGHT SPRINKLER HEAD
	EXISTING UPRIGHT SPRINKLER HEAD
●	NEW CONCEALED PENDENT SPRINKLER HEAD-ORDINARY TEMPERATURE
	SPRINKLER DRY PIPE VALVE
	FIRE HOSE CABINET
	SIAMESE CONNECTION
	CHECK VALVE
	CHECK VALVE W/ ALARM
	WATER MOTOR ALARM BELL
	PIPE RISER
	PIPE DROP
	PIPE UP
	POINT OF CONNECTION
	POINT OF DISCONNECTION
	PREACTION 6" BELL
	SOLENOID VALVE
	OS & Y VALVE
#	REVISION SYMBOL
FB	REFER TO SUPPLEMENTAL FIGURE INDICATED BY NUMBER (I.E. F2 REFERS TO FIGURE 2)
XXX / X	EQUIPMENT TAG / EQUIPMENT NUMBER
X / X-XXX	DETAIL TAG/ CALL OUT TAG / FIRE PROTECTION SHEET NUMBER

SHOP DWGS/EQUIPMENT SUBMITTALS

THE CONTRACTOR MUST SUBMIT ANY EQUIPMENT ALTERNATES 2 WEEKS PRIOR TO BIDS DUE FOR REVIEW AND COMMENTS. ALTERNATES MUST BE ACCEPTED BY LIRO ENGINEERS, INC., THE ARCHITECT, AND THE OWNER PRIOR TO INCLUSION IN BID. THE CONTRACTOR IS RESPONSIBLE TO COORDINATE EQUIPMENT ALTERNATES WITH OTHER TRADES AND MAKE ADJUSTMENTS TO THE MECHANICAL SYSTEMS, AS REQUIRED, TO ACCOMMODATE THESE NEW ALTERNATES.

THE CONTRACTOR IS RESPONSIBLE TO SUBMIT ALL OF THE FOLLOWING ITEMS FOR REVIEW/APPROVAL BY NO MORE THAN 3 WEEKS AFTER THE CONTRACTOR'S CONTRACT/BID HAS BEEN AWARDED. ALL SUBMITTALS MUST BE SENT TOGETHER AS A **SINGLE PACKAGE** WITH MANUFACTURER'S SPECIFIC MODELS AND SPECIFICATIONS OUTLINED TO MATCH THE SCHEDULED REQUIREMENTS. EACH SUBMITTAL MUST BE LABELED WITH THE UNIT DESIGNATION USED WITHIN THIS DRAWING SET. IF THE SUBMITTAL PACKAGE IS FOUND TO BE INCOMPLETE UPON RECEIPT, THE PACKAGE WILL BE HELD AND WILL NOT BE REVIEWED UNTIL THE REMAINDER OF THE PACKAGE IS RECEIVED. SIX (6) HARD COPIES OF THE SUBMITTAL PACKAGE MUST BE SENT TO LIRO ENGINEERS, INC. DIGITAL SHOP DRAWING SUBMISSIONS ARE ACCEPTABLE.

CODE REFERENCE

2020 NEW YORK STATE BUILDING CODE
2016 NFPA 13

SCOPE OF WORK:

1. THE INSTALLATION OF NEW DRY FS EQUIPMENT.

2. PROPOSED FIRE SPRINKLER HEAD LOCATIONS AND PIPING ARE AS NOTED ON PLANS. EXACT PIPING FROM THE FIRE SPRINKLER MAIN TO ALL HEADS IS TO BE COORDINATED AND HYDRAULICALLY CALCULATED BY THE F.S.C. & SUBMITTED TO THE ENGINEER FOR APPROVAL.

NOTE: THIS SCOPE OF WORK DESCRIPTION IS PROVIDED TO GIVE AN OVERALL "MACRO" DESCRIPTION OF THIS PROJECT. F.S.C. IS RESPONSIBLE TO REVIEW ALL ENGINEERING AND ARCHITECTURAL DRAWINGS AND VISIT THE SITE IF NEEDED, PRIOR TO SUBMISSION OF BID.

SPRINKLER HEAD SCHEDULE

	MANUFACTURER	MODEL	DESCRIPTION	K-FACTOR	QUANTITY
○	RELIABLE	F1FR	DRY ORDINARY UPRIGHT SPRINKLE HEAD	5.6	15
●	RELIABLE	F1FR	WET ORDINARY CONCEALED SPRINKLE HEAD	5.6	21
◀ D	TYCO	DS1	DRY ORDINARY SIDEWALL SPRINKLE HEAD	5.6	4
◀	TYCO	TY3331	WET ORDINARY SIDEWALL SPRINKLE HEAD	5.6	4

1

ABBREVIATION

ACV	ALARM CHECK VALVE
B.O.P	BOTTOM OF PIPE
(E)	EXISTING TO REMAIN
F.S.C.	FIRE SPRINKLER CONTRACTOR
P.C	PLUMBING CONTRACTOR
TYP	TYPICAL
W/	WITH
NYS	NEW YORK STATE
U/P	UNDERGROUND PIPING
W	WATER

DRAWING NOTATIONS

#	DRAWING NOTE TAB
	RISER DESIGNATION
	POINT OF CONNECTION
	POINT OF DISCONNECTION

DESIGN CRITERIA - DRY

1

1. AREA OF APPLICATION = 2535 SQ. FT. (DRY SYSTEM, ROOF PITCH >/= 2 IN 12)
2. OCCUPANCY CLASSIFICATION = ORDINARY HAZARD GROUP 1
3. MAXIMUM COVERAGE PER SPRINKLER HEAD = 130 SQ. FT
4. DESIGN DENSITY = 0.15 GPM/SQ. FT
5. "K" FACTOR OF SPRINKLER HEADS = 5.6
6. DESIGN CRITERIA REQUIREMENTS BASED ON:
   - 2020 BUILDING CODE OF NEW YORK STATE
   - 2016 NFPA 13

DESIGN CRITERIA - WET

1. AREA OF APPLICATION = 1500 SQ. FT (WET SYSTEM)
2. OCCUPANCY CLASSIFICATION = ORDINARY HAZARD GROUP 1
3. MAXIMUM COVERAGE PER SPRINKLER HEAD = 130 SQ. FT
4. DESIGN DENSITY = 0.15 GPM/SQ. FT
5. "K" FACTOR OF SPRINKLER HEADS = 5.6
6. DESIGN CRITERIA REQUIREMENTS BASED ON:
   - 2020 BUILDING CODE OF NEW YORK STATE
   - 2016 NFPA 13

ORDINARY HAZARD PIPE SCHEDULE

STEEL		COPPER	
1IN.	2 SPRINKLERS	1IN.	2 SPRINKLERS
1 1/4 IN.	3 SPRINKLERS	1 1/4 IN.	3 SPRINKLERS
1 1/2IN.	5 SPRINKLERS	1 1/2IN.	5 SPRINKLERS
2 IN.	10 SPRINKLERS	2 IN.	12 SPRINKLERS
2 1/2 IN.	20 SPRINKLERS	2 1/2 IN.	25 SPRINKLERS
3 IN.	40 SPRINKLERS	3 IN.	45 SPRINKLERS
3 1/2 IN.	65 SPRINKLERS	3 1/2 IN.	75 SPRINKLERS
4 IN.	100 SPRINKLERS	4 IN.	115 SPRINKLERS
5 IN.	160 SPRINKLERS	5 IN.	180 SPRINKLERS
6 IN.	275 SPRINKLERS	6 IN.	300 SPRINKLERS
8 IN.	SEE SECTION 8.2	8 IN.	SEE SECTION 8.2

FOR SI UNITS, 1 IN. = 25.4 MM.

MAX DISTANCE BETWEEN HANGERS (FT.-IN.)

	NOMINAL PIPE SIZE (IN.)											
	3/4	1	1 1/4	1 1/2	2	2 1/2	3	3 1/2	4	5	6	8
STEEL PIPE EXCEPT THREADED LIGHTWALL	N/A	12-0	12-0	15-0	15-0	15-0	15-0	15-0	15-0	15-0	15-0	15-0
THREADED LIGHTWALL STEEL PIPE	N/A	12-0	12-0	12-0	12-0	12-0	12-0	N/A	N/A	N/A	N/A	N/A
COPPER TUBE	8-0	8-0	10-0	10-0	12-0	12-0	12-0	15-0	15-0	15-0	15-0	15-0

FIRE PROTECTION NOTES

1. THE DRAWINGS SHOW THE LAYOUT OF THE SYSTEM AND INDICATE THE APPROXIMATE LOCATIONS OF EQUIPMENT AND PIPING. CONTRACTOR IS CAUTIONED NOT TO SCALE THE DRAWINGS. THE PIPING SHALL BE RUN APPROXIMATELY IN THE AREAS AS INDICATED ON THE DRAWINGS, [HOWEVER, TO THE ARRANGEMENT OF THE PIPING SYSTEMS AS MAY BE REFERENCED WITH WORK OF OTHER TRADES]. CONTRACTOR SHALL REVIEW AND COORDINATE WITH STRUCTURAL, ELECTRICAL AND MECHANICAL DRAWINGS. PARTITIONS, STRUCTURAL MEMBERS, ETC. ARE DESIGNED TO BE FURRED OR CLOSED IN AND TO INCLUDE ROUGH-IN PIPING. CONTRACTOR SHALL FURNISH ALL OFFSETS, ADDITIONAL FITTINGS, ETC. WHETHER SHOWN ON DRAWINGS OR NOT, AS REQUIRED TO MEET INSTALLATION CONDITIONS.

2. CONTRACTOR IS TO COMPLY WITH LATEST NFPA AND N.Y.S. CODES, AND COORDINATE HIS WORK WITH OTHER TRADES AND MAKE NECESSARY ADJUSTMENTS.

3. CONTRACTOR IS TO PREPARE SHOP DRAWINGS FOR ENGINEERS REVIEW AFTER MAKING A COMPLETE FIELD SURVEY.

4. CONTRACTOR IS TO REPORT ANY CONDITION REQUIRING CHANGES FROM PLANS TO ENGINEER PRIOR TO STARTING WORK.

5. BRANCH LINES AND MAINS (1 1/2" OR LESS) - SCHEDULE 40 FM APPROVED

6. BRANCH LINES AND MAINS (2" OR LARGER) - THINWALL (THICKNESS LESS THEN SCHEDULE 40 MORE THEN SCHEDULE 10 & FM APPROVED)

7. CONTRACTOR IS TO PERFORM A HYDROSTATIC TEST FOR 2 HRS. @ 200 PSI WITH NO LEAKAGE AND PROVIDE A TEST CERTIFICATE TO ENGINEER

8. CONTRACTOR IS TO EMPLOY EXPERIENCED WORKMEN WHO ARE TO FAMILIARIZE THEMSELVES WITH THE BUILDING AND OBSERVE SAFETY REQUIREMENTS.

9. CONTRACTOR TO ADJUST HEAD LOCATION TO COORDINATE WITH LIGHTS, DUCTS, ETC.

10. PERMIT FROM LOCAL AUTHORITY, TO BE OBTAINED BY CONTRACTOR.

11. ALL WORK TO BE APPROVED BY OWNERS ENGINEER, STATE AUTHORITIES HAVING JURISDICTION AND MUNICIPAL FIRE, PLUMBING, BUILDING AND WATER DEPARTMENTS.

12. U.L. AND/OR FM APPROVED EQUIPMENT TO BE USED.

13. WORK TO BE IN ACCORDANCE WITH MUNICIPAL WATER DEPT. RULES

14. SYSTEM IS TO BE MAINTAINED AND TESTED BY THE OWNER OR HIS AGENT IN ACCORDANCE WITH APPLICABLE LOCAL AND STATE CODES AND IN CONFORMANCE WITH NFPA 13A, LATEST EDITION.

15. IF BUILDING OCCUPANCY OR CONSTRUCTION CHANGES, THE SPRINKLER SYSTEM IS TO BE UPDATED ACCORDINGLY BY THE OWNER OR HIS AGENT.

16. CONTRACTOR IS TO NEATLY CUT AND PATCH IN A FIRST CLASS WORKMANLIKE MANNER, ALL HOLES AND PENETRATIONS IN WALLS, CEILINGS, FLOORS, PARTITIONS, ETC.

17. THE ENGINEER IS NOT RETAINED FOR SUPERVISION.

18. THE INSTALLATION OF THIS SYSTEM WILL REQUIRE THE CLOSING OF ONE OR MORE FIRE PROTECTION CONTROL VALVES. THESE VALVE CLOSURES SHOULD BE CLOSELY COORDINATED WITH THE OWNERS WHO SHOULD CONTACT THE LOCAL FIRE DEPARTMENT, INSURANCE INTERESTS, ETC. PRIOR TO VALVE CLOSURES.

19. ACTUAL DESIGN DENSITY MAY EXCEED STANDARDS, HOWEVER, IT IS A MINIMUM TO BE USED BY THE CONTRACTOR.

20. ALL ALARMS RELATING TO THE SPRINKLER SYSTEM SHOULD BE ACTIVATED UPON PLACING THE SPRINKLER SYSTEM IN SERVICE.

21. THE INSTALLATION COMPONENTS, SIZING, SPACING, MATERIALS LOCATION CLEARANCES, POSITION AND TYPE OF SYSTEM SHALL CONFORM TO NFPA 13 AND NYS UNIFORM FIRE PREVENTION BUILDING CODE LATEST EDITION.

22. SPRINKLERS SHALL BE PROTECTED AGAINST FREEZING AND INJURY AS PER NFPA CODE.

23. INSPECTION AND TESTS OF SPRINKLER SYSTEM SHALL BE CONDUCTED AS SPECIFIED IN NFPA CODE.

24. WATER SUPPLY TEST PIPES AND GAUGES SHALL BE PROVIDED AS SPECIFIED IN CHAPTER 2-9 OF NPPA 13.

25. PIPING SPECIFICATIONS, PIPE SCHEDULES, SYSTEM TEST PIPES, PROTECTION AGAINST CORROSION, DAMAGE FITTINGS, VALVES, HANGERS, SPRINKLERS, GUARDS AND SHIELDS SHALL BE IN ACCORDANCE WITH CHAPTER 3 AND CHAPTER 8 OF NFPA 13, LATEST EDITION. PIPING SHALL BE PAINTED TO PREVENT CORROSION.

26. STOCK OF EXTRA SPRINKLERS WILL BE FURNISHED AS PER CHAPTER 3 OF NFPA 13 (REQUIRED FOR EACH TEMPERATURE RATING).

27. SPRINKLER ALARMS WILL BE IN ACCORDANCE WITH NFPA 13.

28. SPACING, LOCATION AND POSITION OF SPRINKLERS SHALL BE IN ACCORDANCE WITH CHAPTER 4 OF NFPA 13.

29. ALL PIPING PASSING THROUGH WALLS SHALL COMPLY WITH NFPA FOR FIRE PROOFING.

30. DISTANCE OF SPRINKLERS FROM HEAT SOURCES SHALL BE IN ACCORDANCE WITH TABLE 3-16.6.3 OF NFPA 13.

31. PROVIDE WATER SUPPLY LETTER WITH FLOW TEST DATA.

32. ALL PIPES PASSING THROUGH FOUNDATION WALLS TO BE PROTECTED.

33. ALL VALVES SHALL BE IDENTIFIED AS REQUIRED BY NFPA 13.

34. DRAINAGE TO CONFORM TO CHAPTER 3-11 OF NFPA 13.

35. A ONE PIECE REDUCING FITTING OF GOOD DESIGN SHOULD BE USED WHEREVER A CHANGE IS MADE IN THE SIZE OF PIPE AS PER SECTION 3-12.2.7 OF NFPA 13.

36. ALL VALVES ON CONNECTIONS TO WATER SUPPLIES AND IN SUPPLY TO SPRINKLERS SHALL BE APPROVED O.S. &Y. OR APPROVED INDICATOR TYPE WITH TAMPER SWITCHES.

37. DRAIN VALVES AND TEST VALVES SHALL BE APPROVED TYPE AS PER SECTION 3-14.1.2 OF NFPA 13.

38. HANGERS SHALL BE OF A TYPE APPROVED FOR USE WITH THE PIPE OR TUBE INVOLVED, SPRINKLER PIPING SHOULD BE SUPPORTED BY ADJUSTABLE HANGERS PER NFPA 13, SECTION 3-15.

39. PROVISIONS SHOULD BE MADE TO FACILITATE FLUSHING SYSTEM PIPING BY PROVIDING FLUSHING CONNECTIONS CONSISTING OF A CAPPED NIPPLE 4" LONG ON THE END OF THE CROSS MAIN, AS PER SECTION 3- 8.2 OF NFPA 13.

40. SPRINKLER SHALL BE AN APPROVED TYPE AS PER SECTION 3-16 OF NFPA 13.

41. TEMPERATURE RATING SHALL COMPLY WITH SEC. 3-16.6 OF NFPA 13.

42. CLEARANCES BETWEEN SPRINKLERS AND STORAGE OR PARTITIONS AS PER NFPA 13, SECTION 4-2.5

43. SPACING AND LOCATION OF SPRINKLER SHALL COMPLY WITH CHAPTER 4 NFPA 13.

44. CONTRACTOR TO COORDINATE HIS WORK WITH OTHER TRADES.

45. ONLY EXPERIENCED SPRINKLER MECHANICS TO WORK ON THE SYSTEM.

46. ALL PIPING TO BE A MINIMUM OF 1" UNLESS OTHERWISE NOTED.

47. PROVIDE SHOP DRAWINGS WITH HYDRAULIC CALCULATIONS FOR REVIEW TO LOCAL FIRE MARSHALL AND INSURANCE UNDERWRITER AND ENGINEER FOR APPROVAL PRIOR TO INSTALLATION.

48. ALL FIRE PROTECTION EQUIPMENT SHALL BE INSTALLED PER MANUFACTURER'S REQUIREMENTS/SPECIFICATIONS.

49. ALL FIRE PROTECTION EQUIPMENT SHALL BE MOUNTED ON MINIMUM 6" HIGH CONCRETE PAD UNLESS OTHERWISE NOTED (PAVER AND CINDER BLOCK IS NOT ACCEPTABLE).

50. PERMIT IS REQUIRED PRIOR TO INSTALLATION, TO INCLUDE SIGNED AND SEALED SHOP DRAWINGS, HYDRAULIC CALCULATION, SHOP DRAWINGS, MANUFACTURERS INFORMATION ON HEADS AND APPLIANCES, COMPLIANCE WITH NFPA 13 AND SECTION 903 2020 NYSBC/FC.

FIRE PROTECTION DRAWING LIST

SHEET NO.	SHEET NAME	REVISON NO.	REVISION DATE
K-FP-01	FIRE PROTECTION NOTES, SYMBOLS, ABBREVIATIONS, AND DRAWING LIST	0	-
K-FP-11	FIRE PROTECTION GROUND FLOOR DEMOLITION PLAN	0	-
K-FP-21	FIRE PROTECTION GROUND FLOOR AND ATTIC CONSTRUCTION RCP	0	-
K-FP-81	FIRE PROTECTION DETAILS	0	-

CONSULTANT INFORMATION
LiRo Engineers, Inc.
A LiRo Group Company
Syosset, N.Y. 516-214-8157[T]

CONSULTANT SEAL
STATE OF NEW YORK · FRANK F. ULISSE · LICENSED PROFESSIONAL ENGINEER

REVISION NUMBER	DATE	MADE BY	APP'D BY	REVISION
1	09/21/22			BID ADDENDUM # 3

RECORD DRAWING CERTIFICATION
☐ AS BUILT – CHANGES AS NOTED ☐ AS BUILT – NO CHANGES
CONTRACTOR: NAME / SIGNATURE / TITLE / DATE
PROJECT COORDINATOR: NAME / SIGNATURE / TITLE / DATE

WESTCHESTER COUNTY, NEW YORK
DEPARTMENT OF PUBLIC WORKS AND TRANSPORTATION
DIVISION OF ENGINEERING

INFRASTRUCTURE REHABILITATION - PHASE 3
PLAYLAND PARK, RYE, NEW YORK
RESTAURANT KITCHEN WITH FOOD VENDING
FIRE PROTECTION NOTES, SYMBOLS, ABBREVIATIONS & DWG LIST

CONTRACT NUMBER 22-523
SHEET NUMBER K-FP-01
DWG NO. 541 of 664
SCALE: AS INDICATED
DATE: 08/23/2022
DPW FILE NUMBER 1-118-FP-1290-1
REV. NO. 1

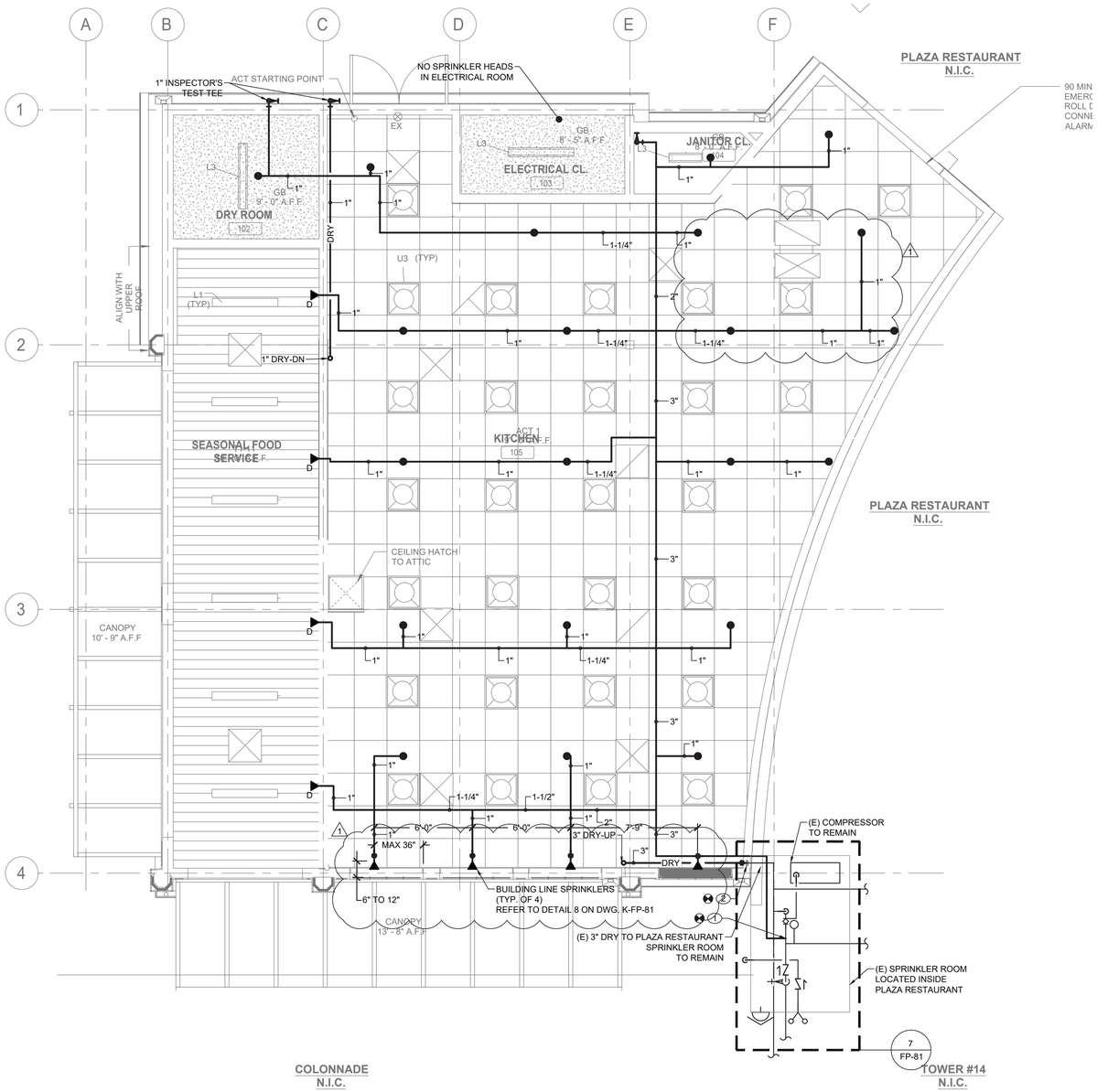

FIRE PROTECTION GROUND FLOOR CONSTRUCTION RCP

SCALE: 1/4" = 1'-0

FIRE PROTECTION CONSTRUCTION NOTES:

1. RECONNECT NEW 3" WET SPRINKLER LINE TO EXISTING 6" LINE WITHIN SPRINKLER ROOM OF PLAZA RESTAURANT.
2. RECONNECT NEW 3" DRY SPRINKLER LINE WITH EXISTING.

GENERAL NOTES:

1. ALL DISTRIBUTION PIPING, SHALL BE PAINTED AS DIRECTED BY ARCHITECT. REFER TO SPECIFICATION FOR PAINT TYPE AND APPLICATION PROCEDURE.
2. COORDINATE WITH FACILITY PRIOR TO SHUTDOWN OF FIRE PROTECTION SYSTEM FOR ANY DEMOLITION AND CONSTRUCTION WORK.
3. CONTRACTOR SHALL PROVIDE FIRE WATCH AS NEEDED FOR ALL AFFECTED BUILDINGS WHILE SPRINKLER COVERAGE IS IMPACTED.
4. CONTRACTOR TO COORDINATE WITH FACILITY WHEN WORKING AROUND OR ABOVE THE RIDE COMPONENTS, AND PROVIDE ALL NECESSARY MEASURES TO PROTECT THESE COMPONENTS PER THE REQUIREMENTS OF THE FACILITY.
5. UPON COMPLETION, SYSTEM SHALL BE TESTED FOR PROPER OPERATION.

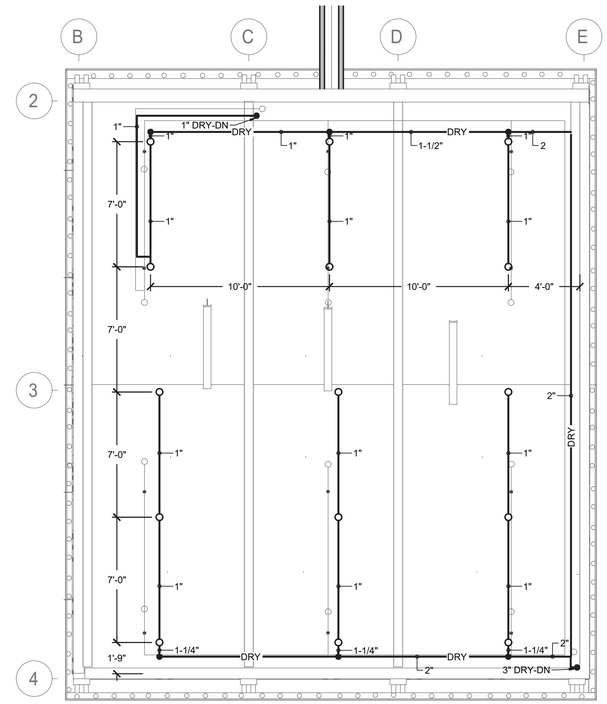

FIRE PROTECTION ATTIC CONSTRUCTION PLAN

SCALE: 1/4" = 1'-0

CONSULTANT INFORMATION

LiRo Engineers, Inc.
A LiRo Group Company
Syosset, N.Y. 516-214-8157[T]

CONSULTANT SEAL

STATE OF NEW YORK · FRANK F. DUSSE · LICENSED PROFESSIONAL ENGINEER · No. 090114

REVISION NUMBER	DATE	MADE BY	APP'D BY	REVISION
1	09/21/22			BID ADDENDUM # 3

RECORD DRAWING CERTIFICATION

☐ AS BUILT – CHANGES AS NOTED ☐ AS BUILT – NO CHANGES

CONTRACTOR: NAME / SIGNATURE / TITLE / DATE

PROJECT COORDINATOR: NAME / SIGNATURE / TITLE / DATE

WESTCHESTER COUNTY, NEW YORK
DEPARTMENT OF PUBLIC WORKS AND TRANSPORTATION
DIVISION OF ENGINEERING

INFRASTRUCTURE REHABILITATION - PHASE 3
PLAYLAND PARK, RYE, NEW YORK
RESTAURANT KITCHEN WITH FOOD VENDING
FIRE PROTECTION GROUND FLOOR AND ATTIC CONSTRUCTION RCP

CONTRACT NUMBER	22-523
SHEET NUMBER	K-FP-21
DWG NO.	543 of 664
SCALE:	AS INDICATED
DATE:	08/23/2022
DPW FILE NUMBER	1-118-FP-1292-1
REV. NO.	1

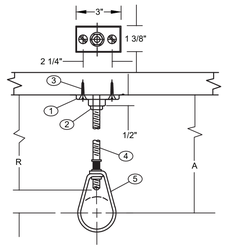

COMPONENTS

1. CLIP (CEILING FLANGE)
2. HEX NUT
3. WOOD SCREW
4. HANGER ROD
5. ADJUSTABLE HANGER RING

NFPA REQUIREMENTS / LIMITATIONS

1. NFPA 13 PERMITS THE USE OF 2 SCREW CEILING FLANGES ONLY
2. HAVING DIMENSIONS NOT LESS THAN THOSE OF NO. 18 X 1 1/2" WOOD SCREWS. DRIVE SCREWS AND NAILS ARE NOT ACCEPTABLE FASTENERS AND WOOD SCREWS ARE NOT TO BE DRIVEN.
3. FOR PIPE SIZES UP TO 2" AND IT CALLS FOR THE USE OF SCREWS

DESIGN DATA FOR CLIP HANGERS

NOMINAL PIPE SIZE	MINIMUM A DIMENSION	HANGER TAKEOUT	ROD DIAMETER	FASTENERS	
	INCHES	INCHES	INCHES	QTY	ITEMS
1/2	3 3/4	-1 1/4	3/8	1 2 1	3/8" CEILING FLANGE (CLIP) NO. 18 X 1 1/2" FLAT HEAD WOOD SCREWS 3/8" HEX NUT
3/4	3 3/4	-1 1/4	"		SEE ABOVE
1	3 3/4	-1 1/4	"		" "
1 1/4	4	-1 1/2	"		" "
1 1/2	4	-1 1/2	"		" "
2	4 1/4	-1 3/4	"		" "

1 FP-81 PIPE HANGER DETAIL

SCALE: NOT TO SCALE

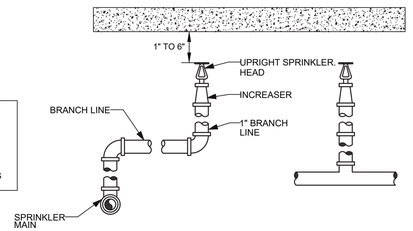

2 FP-81 UPRIGHT SPRINKLER DETAIL

SCALE: NOT TO SCALE

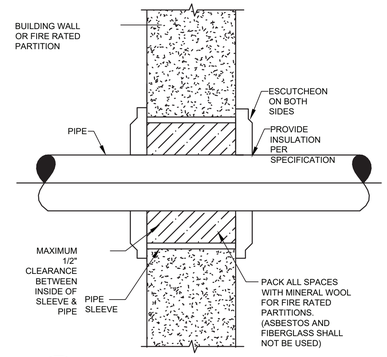

3 FP-81 PIPE PENETRATION

SCALE: NOT TO SCALE

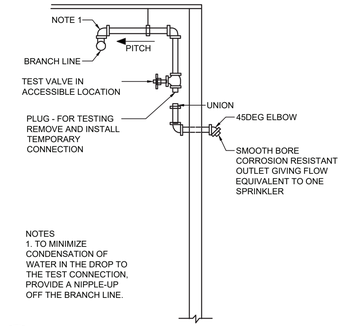

NOTES
1. TO MINIMIZE CONDENSATION OF WATER IN THE DROP TO THE TEST CONNECTION, PROVIDE A NIPPLE-UP OFF THE BRANCH LINE.

4 FP-81 DRY PIPE TEST CONNECTION

SCALE: NOT TO SCALE

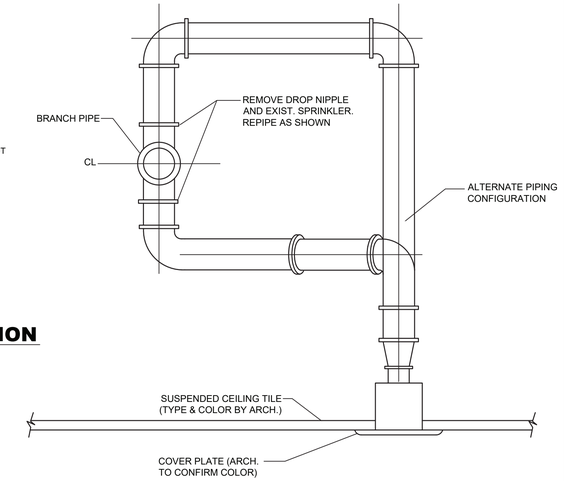

5 FP-81 TYPICAL SPRINKLER HEAD RELOCATION

SCALE: NOT TO SCALE

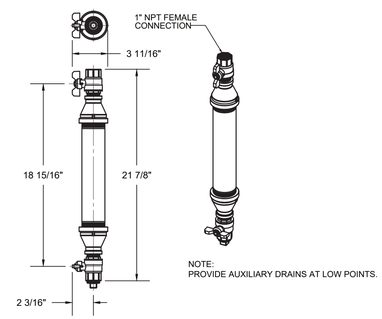

NOTE:
PROVIDE AUXILIARY DRAINS AT LOW POINTS.

6 FP-81 DRY SYSTEM AUXILIARY DRAIN

SCALE: NOT TO SCALE

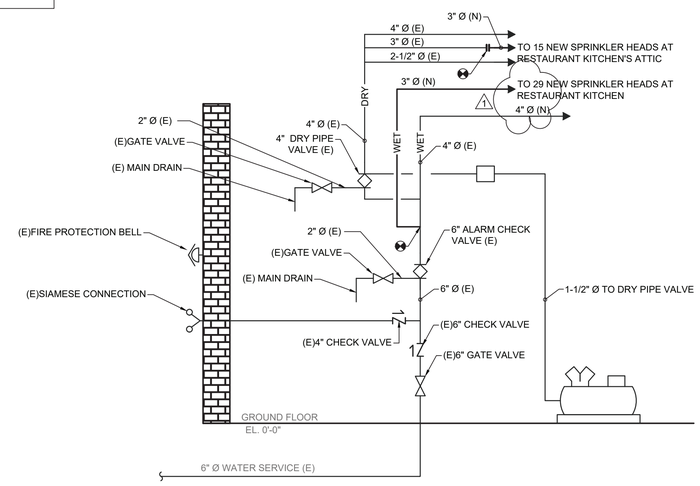

7 FP-81 PLAZA RESTAURANT SPRINKLER ROOM RISER - CONSTRUCTION

SCALE: NOT TO SCALE

GENERAL NOTES:

1. ALL DISTRIBUTION PIPING, INCLUDING PIPING NOT BEING REPLACED, SHALL BE (RE)PAINTED. REFER TO SPECIFICATION FOR PAINT TYPE AND APPLICATION PROCEDURE.
2. COORDINATE WITH FACILITY PRIOR TO SHUTDOWN OF FIRE PROTECTION SYSTEM FOR ANY DEMOLITION AND CONSTRUCTION WORK.
3. CONTRACTOR SHALL PROVIDE FIRE WATCH AS NEEDED FOR THE BUILDING WHILE SPRINKLER COVERAGE IS IMPACTED.
4. UPON COMPLETION OF NEW EQUIPMENT, SYSTEM SHALL BE TESTED FOR PROPER OPERATION.
5. CONTRACTOR TO COORDINATE WITH FACILITY WHEN WORKING AROUND OR ABOVE THE RIDE COMPONENTS, AND PROVIDE ALL NECESSARY MEASURES TO PROTECT THESE COMPONENTS PER THE REQUIREMENTS OF THE FACILITY.

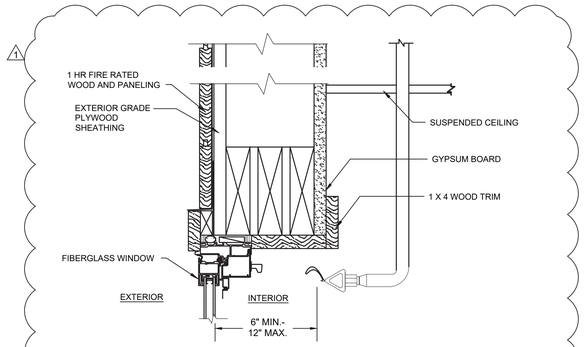

8 FP-81 TYPICAL WINDOW SPRINKLER DETAIL

SCALE: NOT TO SCALE

CONSULTANT INFORMATION

LiRo Engineers, Inc.
A LiRo Group Company
Syosset, N.Y. 516-214-8157[T]

CONSULTANT SEAL

STATE OF NEW YORK · FRANK F. IUDICE · LIC. NO. 090117 · LICENSED PROFESSIONAL ENGINEER

REVISION NUMBER	DATE	MADE BY	APP'D BY	REVISION
1	09/21/22			BID ADDENDUM # 3

RECORD DRAWING CERTIFICATION

☐ AS BUILT – CHANGES AS NOTED ☐ AS BUILT – NO CHANGES

CONTRACTOR
NAME
SIGNATURE
TITLE DATE

PROJECT COORDINATOR
NAME
SIGNATURE
TITLE DATE

WESTCHESTER COUNTY, NEW YORK
DEPARTMENT OF PUBLIC WORKS AND TRANSPORTATION
DIVISION OF ENGINEERING

INFRASTRUCTURE REHABILITATION - PHASE 3
PLAYLAND PARK, RYE, NEW YORK
RESTAURANT KITCHEN WITH FOOD VENDING
FIRE PROTECTION DETAILS

CONTRACT NUMBER	22-523
SHEET NUMBER	K-FP-81
DWG. NO.	544 of 664
SCALE:	AS INDICATED
DATE:	08/23/2022
DPW FILE NUMBER	1-118-FP-1293-1
REV. NO.	1

MECHANICAL GENERAL NOTES

1. ALL WORK AND MATERIALS SHALL BE PURCHASED AND INSTALLED IN ACCORDANCE WITH ALL NATIONAL & NEW YORK STATE CODES AND REGULATIONS (AS WELL AS ALL APPLICABLE LOCAL CODES & REGULATIONS). THE CONTRACTOR SHALL BE RESPONSIBLE TO ENSURE THAT ALL HVAC WORK IS PROVIDED AND INSTALLED IN STRICT ACCORDANCE WITH SEISMIC REQUIREMENTS.
2. DO NOT SCALE FROM THESE DRAWINGS.
3. THE EXACT MOUNTING HEIGHTS AND LOCATIONS OF ALL HVAC EQUIPMENT SHALL BE FIELD VERIFIED AND COORDINATED WITH ALL OTHER MECHANICAL, ELECTRICAL, PLUMBING, FIRE SPRINKLER, ARCHITECTURAL AND STRUCTURAL SYSTEMS. DURING SHOP DRAWINGS SUBMISSIONS, SHOW ALL MOUNTING HEIGHTS OF DUCTWORK, UNITS, ETC.
4. VERIFY ALL EQUIPMENT VOLTAGES WITH THE ELECTRICAL DESIGN PRIOR TO ORDERING EQUIPMENT.
5. PROVIDE PHASE LOSS PROTECTION FOR ALL POLY-PHASE MOTOR DEVICES.
6. DUCTWORK SHALL BE CONSTRUCTED OF GALVANIZED SHEET STEEL IN STRICT COMPLIANCE WITH THE LATEST EDITION OF THE ASHRAE, NFPA, AND SMACNA GUIDE RECOMMENDATIONS. ALL DUCTS TO HAVE PITTSBURGH TYPE LOCK FOR LONGITUDINAL SEAMS AND DRIVE SLIP / "S" SLIP FOR TRANSVERSE JOINTS. "DUCT-MATE" JOINT SYSTEM IS ACCEPTABLE IN LIEU OF PRIOR SEAM SYSTEMS. SIZES AS SHOWN INDICATE INSIDE CLEAR DIMENSIONS OF THE AIR PASSAGE. DUCTWORK SHALL BE FULLY INSULATED AS PER APPLICABLE CODES AND WRITTEN SPECIFICATIONS.
7. DUCT SIZES MUST BE VERIFIED FOR CLEARANCES AT THE JOB SITE PRIOR TO FABRICATION. DIMENSIONS MAY BE CHANGED TO ACCOMMODATE CONSTRUCTION AS LONG AS EFFECTIVE CROSS-SECTIONAL AREA IS MAINTAINED. DUCT TRANSITIONS SHALL BE CONSTRUCTED WITH A SLOPE OF 1" TO 4". ALL DEVIATIONS FROM ORIGINAL CONTRACT DRAWINGS SHALL BE REVIEWED BY ENGINEER DURING THE SHOP DRAWING PROCESS.
8. PROVIDE MANUAL BALANCING DAMPERS AS REQUIRED TO PROPERLY BALANCE EACH INDIVIDUAL AIR DISTRIBUTION SYSTEM. IF THE LOCATION OF THE BALANCING DAMPER IS NOT DEFINED ON THE DRAWINGS, THE FOLLOWING MINIMUMS STANDARDS SHALL GOVERN. ALL SUPPLY, RETURN, AND EXHAUST MAIN BRANCHES FROM TRUNKS, EACH SPLIT AND ALL SUB- BRANCHES FROM MAIN SHALL INCORPORATE BALANCING DAMPERS.
9. PROVIDE FLEXIBLE CONNECTORS AT ALL DUCT CONNECTIONS TO VIBRATING EQUIPMENT. THESE CONNECTORS SHALL BE INSTALLED IN CLOSE PROXIMITY TO SUCH EQUIPMENT.
10. PROVIDE FIRE DAMPERS WITH RATED ACCESS DOORS AT ALL DUCT PENETRATIONS THROUGH FIRE RATED WALLS, SMOKE AND FIRE STOPPING, SHAFT, FLOORS, RATED CEILINGS AND PARTITIONS AS REQUIRED TO MAINTAIN ARCHITECTURAL FIRE RATINGS. REFER TO THE ARCHITECTURAL PLANS AND SPECIFICATIONS FOR LOCATIONS AND FIRE RATING REQUIREMENTS. CONTRACTOR MUST FULLY REVIEW ALL ARCHITECTURAL AND ENGINEERING DRAWINGS AND VISIT THE SITE PRIOR TO SUBMITTING THE BID. NO EXTRAS WILL BE ALLOWED.
11. ALL ACCESS DOORS REQUIRED IN GENERAL CONSTRUCTION ARE TO BE PROVIDED AND INSTALLED BY THE CONTRACTOR. IT IS THE RESPONSIBILITY OF THE CONTRACTOR TO IDENTIFY SIZE, TYPE AND LOCATION OF SUCH DOORS FOR PROPER ACCESS TO ALL CONCEALED HVAC EQUIPMENT, VALVES AND OTHER RELATED EQUIPMENT. THE CONTRACTOR SHALL IDENTIFY THESE REQUIREMENTS ON A COORDINATED SHOP DRAWING PRIOR TO SYSTEM FABRICATION AND INSTALLATION.
12. ALL CEILING MOUNTED EQUIPMENT MUST BE SUPPORTED DIRECTLY FROM BUILDING STRUCTURE WITH COMBINATION SPRING AND NEOPRENE-IN-SHEAR HANGERS AND ROD. PROVIDE SUPPLEMENTARY STEEL AS REQUIRED TO ADEQUATELY SUPPORT THE LOAD.
13. THE CONTRACTOR MUST CONTRACT AN INDEPENDENT NEBB CERTIFIED AIR BALANCING & TESTING COMPANY TO PERFORM THE AIR BALANCING WORK AND ASSOCIATED SYSTEM AIR BALANCING REPORT. ALL WORK SHALL BE PERFORMED IN STRICT COMPLIANCE WITH ALL APPLICABLE CODES, REGULATIONS, PLANS AND WRITTEN SPECIFICATIONS. SUBMIT THE FINAL AIR BALANCE REPORT TO THE ENGINEER FOR REVIEW AND APPROVAL PRIOR TO SUBSTANTIAL COMPLETION OF THE PROJECT, AS DETERMINED BY THE AND OWNER/CLIENT. THE AIR BALANCE REPORT MUST INCLUDE ALL SUPPLY, RETURN, & EXHAUST AIR TERMINALS, FRESH AIR (OUTSIDE AIR) INTAKE AND VENTILATION EXHAUST CFM RATES FOR ALL UNITS. ALSO INCLUDE ACTUAL SUPPLY & RETURN AIR VELOCITY & STATIC PRESSURE READINGS ALONG WITH ALL MOTOR AMPERAGES FOR ALL UNITS.
14. THE CONTRACTOR IS TO INCLUDE IN THEIR BID ALL LOW VOLTAGE CONTROL WIRING, THERMOSTATS, RELAYS, TRANSFORMERS, STARTERS ETC FOR A COMPLETE OPERATING CONTROL SYSTEM AS DESCRIBED IN THE SEQUENCE OF OPERATIONS, THE CONTRACTOR IS ALSO RESPONSIBLE FOR LINE VOLTAGE CONTROL FOR EXHAUST FANS CONTROLLED FROM LIGHT SWITCH AND THERMOSTATS. ALL CONTROL WIRING IN THE AREAS THAT DO NOT HAVE DROPPED CEILINGS THE CONTRACTOR MUST PROVIDE ALL CONTROL WIRING CONDUIT. IN AREAS OF DROPPED CEILING PLENUM RATED CONTROL WIRING CAN BE RUN EXPOSED ABOVE CEILING.
15. ALL MECHANICAL EQUIPMENT SHALL BE INSTALLED PER MANUFACTURER'S REQUIREMENTS/SPECIFICATIONS.

CODE REFERENCE

2020 NEW YORK STATE BUILDING CODE
2020 NEW YORK STATE MECHANICAL CODE
2020 NEW YORK STATE ENERGY CONSERVATION CODE

MECHANICAL DEMOLITION NOTES

1. CONTRACTOR SHALL BE RESPONSIBLE FOR DEMOLITION OF MECHANICAL EQUIPMENT AND MATERIAL RELATING TO THEIR RESPECTIVE TRADE.

2. THE CONTRACTOR SHALL REMOVE, RELOCATE, REPLACE, ADJUST, ADAPT AND MODIFY EXISTING EQUIPMENT AND/OR SYSTEMS AS REQUIRED WHEN SUCH WORK IS UNCOVERED AND FOUND TO INTERFERE WITH COMPLETION OF WORK IN THIS CONTRACT OR OTHER CONTRACT WORK.

3. EXECUTE THE DEMOLITION IN CAREFUL AND ORDERLY MANNER WITH THE LEAST POSSIBLE DISTURBANCE TO THE PUBLIC, EGRESS OR THE FUNCTIONING OF THE EXISTING BUILDING.

4. TAKE NECESSARY PRECAUTIONS TO PREVENT DUST AND DIRT FROM RISING BY WETTING DEMOLISHED DEBRIS. EXCESSIVE USE OF WATER WILL NOT BE PERMITTED.

5. PRIOR TO DEMOLITION, CONTRACTOR SHALL REVIEW WITH OWNER ALL MATERIALS TO BE REMOVED. SHOULD THE OWNER WANT TO KEEP ANY MATERIALS THE CONTRACTOR SHALL REMOVE AND DELIVER THE PARTS TO THE OWNER ON THE SITE WHERE SO DIRECTED. OTHERWISE ALL DEMOLISHED OR REMOVED MATERIALS SHALL BECOME THE PROPERTY OF THE CONTRACTOR AND SHALL BE REMOVED FROM THE SITE AND BE DISPOSED OF IN A LEGAL MANNER.

6. DEMOLITION SHALL INCLUDE REMOVAL OF ALL PARTS AND PIECES IN THEIR ENTIRETY BACK TO POINTS INDICATED OR IF NOT INDICATED BACK TO THEIR POINT OF SOURCE.

7. WHERE CONDITIONS PROHIBIT TOTAL REMOVAL OF THE WORK, THE REMAINING PORTION SHALL BE CUT FLUSH WITH THE SURROUNDING SURFACE AND BE CAPPED, PLUGGED OR SEALED AND THE SURROUNDING SURFACE SHALL BE REFINISHED IN AN APPROVED MANNER.

9. DO NOT REMOVE EXISTING STRUCTURAL WORK. DO NOT REMOVE OPERATIONAL ELEMENTS AND SAFETY-RELATED COMPONENTS IN A MANNER RESULTING IN A REDUCTION OF CAPACITIES TO PERFORM IN THE MANNER INTENDED OR RESULTING IN DECREASED OPERATIONAL LIFE, INCREASED MAINTENANCE, OR DECREASED SAFETY.

10. REMOVALS, DISCONNECTIONS, AND RELOCATIONS SHALL BE PERFORMED BY WORKMEN SKILLED IN THE TRADE INVOLVED AND SHALL BE EMPLOYED BY A CONTRACTOR LICENSED IN THE TRADE INVOLVED. ALL WORK SHALL BE DONE IN ACCORDANCE WITH ACCEPTED TRADE PRACTICES.

11. PROVIDE ADEQUATE TEMPORARY SUPPORT FOR WORK TO REMAIN, TO PREVENT FAILURE. DO NOT ENDANGER OTHER WORK.

12. PROTECTION: PROVIDE ADEQUATE PROTECTION WHERE REQUIRED FOR THE PRESENT BUILDING AND ITS CONTENTS. TEMPORARY DUSTPROOF BARRIERS AND BARRICADES SHALL BE ERECTED WHERE REQUIRED FOR PROTECTION OF PERSONNEL, PROTECTION FROM DUST AND DIRT, FOR SECURITY, FIRE AND WEATHER PROTECTIVE REASONS.

13. CONTRACTOR SHALL TAKE EVERY PRECAUTION AGAINST FIRE BY EMPLOYING FIRE DEPARTMENT TYPE HOSES AND PORTABLE FIRE EXTINGUISHERS AS REQUIRED BY OSHA AND/OR THE OWNER'S INSURANCE UNDERWRITER.

14. BEFORE STARTING DEMOLITION OPERATIONS, PROVIDE THE NECESSARY PROTECTIVE DEVICES, WHERE REQUIRED, AND IN STRICT ACCORDANCE WITH OSHA RULES AND REGULATIONS.

14. USE TEMPORARY ENCLOSURES, OR OTHER SUITABLE METHODS TO LIMIT DUST AND DIRT RISING AND SCATTERING TO LOWEST PRACTICAL LEVEL. COMPLY WITH GOVERNING REGULATIONS PERTAINING TO ENVIRONMENTAL PROTECTION.

15. FIELD VERIFY DEMOLITION REQUIREMENTS AND EXISTING CONDITIONS. DEMOLITION NOTES ARE INDICATED IN NOTE FORM.

16. CONTRACTOR SHALL ESTABLISH A PATH OF TRAVEL AND TIME SCHEDULE FOR THE REMOVAL OF ALL DEBRIS AND WASTE, AND HAVE THIS APPROVED BY OWNER. CONTRACTOR IS TO ENSURE THAT ALL CORRIDORS AND PUBLIC AREAS BE KEPT FREE OF OBSTRUCTIONS, DEBRIS, AND ARE TO BE BROOM SWEPT CLEAN AT ALL TIMES.

17. CONTRACTOR SHALL VISIT THE SITE AND BECOME INFORMED AS TO THE CONDITION OF THE PREMISES AND THE EXTENT AND CHARACTER OF WORK REQUIRED. NO ADDITIONAL COMPENSATION WILL BE APPROVED DUE TO FIELD CONDITIONS.

NYSECC ENERGY COMPLIANCE STATEMENT:

PER SECTION C101.7 OF THE 2020 NYSECC HISTORIC BUILDINGS ARE EXEMPT FROM THE REQUIREMENTS OF THE ENERGY CODE.

HVAC SYMBOL LIST

IDENTIFIER	DESCRIPTION
	NEW DUCTWORK OR PIPING
	EXISTING DUCTWORK OR PIPING TO BE REMOVED
	EXISTING DUCTWORK OR PIPING TO REMAIN
24X12 / 24X12	DOUBLE-LINE AND SINGLE-LINE RECTANGULAR DUCT, FIRST NUMBER INDICATES SIDE IN VIEW IN INCHES, SECOND NUMBER INDICATES SIDE IN DEPTH IN INCHES
	FLEXIBLE DUCTWORK
	REGULAR SUPPLY AIR DUCT (UP AND DOWN)
	REGULAR RETURN AIR DUCT (UP AND DOWN)
	REGULAR EXHAUST AIR DUCT (UP AND DOWN)
	REGULAR OUTSIDE AIR DUCT (UP AND DOWN)
VD	VOLUME DAMPER
BD	BACKDRAFT DAMPER
	MOTOR OPERATED DAMPER
XXX / XX	EQUIPMENT TAG EQUIPMENT NUMBER
XXX / X-XXX	DETAIL TAG/CALL OUT TAG MECHANICAL SHEET NUMBER
T	THERMOSTAT
	EXHAUST GRILLE
F#	REFER TO SUPPLEMENTAL FIGURE INDICATED BY NUMBER (I.E. F2 REFERS TO FIGURE 2)

HVAC ABBREVIATIONS

IDENTIFIER	DESCRIPTION
AC	DIRECT EXPANSION AIR CONDITION UNIT
CFM	CUBIC FEET PER MINUTE
COND	CONDENSATE
CU	CONDENSING UNIT
CUH	CABINET UNIT HEATER
DB	DRY BULB
DN	DOWN
EA	EXHAUST AIR
EF	EXHAUST FAN
EG	EXHAUST GRILLE
EUH	ELECTRIC UNIT HEATER
EER	ENERGY EFFICIENCY RATIO
EG	EXHAUST GRILLE
FAI	FRESH AIR INTAKE
GC	GENERAL CONTRACTOR
MBH	THOUSAND BTU PER HOUR
PC	PLUMBING CONTRACTOR
RG	RETURN GRILLE
RGL	REFRIGERANT GAS LINE
RLL	REFRIGERANT LIQUID LINE
RTU	ROOFTOP UNIT
SA	SUPPLY AIR
SD	SUPPLY DIFFUSER
TYP.	TYPICAL
VIF	VERIFY IN FIELD

SCOPE OF WORK

DEMOLITION

1. REMOVE TWO (2) EXISTING RANGE HOODS AS INDICATED.
2. REMOVE TWO (2) EXISTING FLUES AS INDICATED.
3. REMOVE TWO (2) EXISTING CEILING VENTILATION GRILLES AS INDICATED.
4. REMOVE ONE (1) EXISTING RELIEF VENT AS INDICATED.
5. REMOVE TWO (2) EXISTING ROOFTOP FANS AND ASSOCIATED DUCTWORK, CONTROLS AND ACCESSORIES.

CONSTRUCTION

1. PROVIDE ONE (1) NEW ROOFTOP AIR HANDLING UNIT RTU-1. PROVIDE DUCTWORK TO NEW SPACES AS INDICATED.
2. PROVIDE ONE (1) NEW OUTDOOR SPLIT CONDENSER AIR CONDITIONER UNIT AS INDICATED.
3. PROVIDE TWO (2) NEW CEILING RECESSED INDOOR AIR CONDITIONER UNITS AS INDICTED.
4. PROVIDE ONE (1) NEW PACKAGED TERMINAL AIR CONDITIONER UNIT AS INDICATED
5. PROVIDE ONE (1) NEW GENERAL KITCHEN/TRASH ROOM EXHAUST FAN ON ROOF AND ASSOCIATED DUCTWORK AS INDICATED.
6. PROVIDE ONE (1) NEW ATTIC EXHAUST FAN AS INDICATED.
7. PROVIDE ONE (1) NEW WALL MOUNTED ELECTRIC UNIT HEATER AS INDICATED.
8. PROVIDE TWO (2) NEW RAIN RESISTANT LOUVERS AS INDICATED.

MECHANICAL DRAWING LIST

SHEET NO.	SHEET NAME	REVISON NO.	REVISION DATE
K-M-01	MECHANICAL NOTES, SYMBOLS & LEGENDS	1	9/21/2022
K-M-11	MECHANICAL 1ST FLOOR DEMOLITION PLAN	0	-
K-M-12	MECHANICAL ROOF DEMOLITION PLAN	0	-
K-M-21	MECHANICAL 1ST FLOOR CONSTRUCTION PLAN	1	9/21/2022
K-M-22	MECHANICAL ATTIC FLOOR CONSTRUCTION PLAN	1	9/21/2022
K-M-23	MECHANICAL ROOF CONSTRUCTION PLAN	1	9/21/2022
K-M-61	MECHANICAL SCHEDULES	1	9/21/2022
K-M-81	MECHANICAL DETAILS 1 OF 2	0	-
K-M-82	MECHANICAL DETAILS 2 OF 2	0	-
K-M-91	MECHANICAL CONTROLS	0	-

MECHANICAL VENTILATION SCHEDULE

SPACE DETAILS		MECH CODE REQUIREMENTS							DESIGN				
ROOM	AREA (FT²)	# PEOPLE	OA / SQ FT	OA PER PERSON	# OF FIXT (TOILET/URINALS/SLOP SINK)	EXH CFM/SQFT	EXH CFM/FIXTURE	NET OA	MIN DESIGN OA FLOW (CFM) 1	ACTUAL SA FLOW (CFM)	ACTUAL RA FLOW (CFM)	ACTUAL EA FLOW (CFM) 1	NOTES
105 KITCHEN	1347	27	0.12	7.5	-	0.7	-	943	1100	2400	1300	1100	1
102 DRY ROOM	67	-	0.12	-	-	-	-	8	100	100	-	100	1
104 JANITOR CLOSET	23	-	-	-	-	1.0	-	-	-	-	-	50	2

NOTES:
1. NEW YORK STATE MECHANICAL CODE.
2. ASHRAE STANDARD 62.1 1

NATURAL VENTILATION SCHEDULE

SPACE DETAILS			DESIGN			
ROOM	AREA (SF)	4% FLOOR AREA (SF)	WINDOW FREE AREA (SF)	DOOR AREA (SF)	TOTAL OPENABLE AREA (SF)	NOTES
101 SEASONAL FOOD SERVICE	343	14	-	156	156	1,2

NOTES:
1. NEW YORK STATE MECHANICAL CODE.
2. NATURAL VENTILATION OF AN OCCUPIED SPACE SHALL BE THROUGH WINDOWS, DOORS, LOUVERS, AND OTHER OPENINGS TO THE OUTDOORS. THE MINIMUM OPENABLE AREA TO THE OUTDOORS SHALL BE 4 PERCENT OF THE FLOOR AREA BEING VENTILATED.

TABLE 1: ENERGY CODE ANALYSIS TABLE FOR MECHANICAL SYSTEMS

(PER 2020 NYS ENERGY CODE)

ITEM DESCRIPTION			PROPOSED VALUE	MINIMUM EFFECIENCY	CODE PRECRIBED VALUE AND CITATION	CITATION	SUPPORTING DOCUMENTATION
	UNIT TAG	EQUIPMENT TYPE					
HVAC EQUIPMENT PERFORMANCE	RTU-1	SINGLE PACKAGED UNIT	SEER= 12.6	SEER=11.2	MINIMUM EFFICIENCY REQUIREMENTS: ELECTRICALLY OPERATED UNITARY AIR CONDITIONERS AND CONDENSING UNITS > 65,000 Btu/H < 135,000 Btu/h	C403.2.3(1)	MECHANICAL SCHEDULES
HVAC EQUIPMENT PERFORMANCE	AC-1,AC-2, CU-1	SPLIT SYSTEM HEAT PUMP	HSPF = 11.2 SEER= 15.0	HSPF = 8.2 SEER= 14.0	MINIMUM EFFICIENCY REQUIREMENTS: ELECTRICALLY OPERATED UNITARY AIR CONDITIONERS AND CONDENSING UNITS < 65,000 Btu/h	C403.2.3(1)	MECHANICAL SCHEDULES
HVAC SYSTEM CONTROLS	ALL HEATING COOLING EQUIPMENT	THERMOSTATIC CONTROLS	DIGITAL THERMOSTATS	-	THERMOSTATIC CONTROLS FOR HVAC SYSTEM	C403.2.6	MECHANICAL SCHEDULES AND PLANS
SHUTOFF DAMPERS			GRAVITY/BACKDRAFT DAMPERS PROVIDED IN LIEU OF MOTORIZED DAMPER MOTORIZED DAMPERS PER EXCEPTIONS 1	-	BACKDRAFT DAMPER INSTALLED AT EXHAUST OPENINGS	C403.7.7	MECHANICAL SCHEDULES AND PLANS
DUCT LEAKAGE			SMACNA HVAC DUCT LEAKAGE TEST	-	SMACNA HVAC DUCT LEAKAGE TEST	PER C403	MECHANICAL DWGS. & SPECS

TABLE 2: ENERGY CODE COMPLIANCE INSPECTIONS FOR MECHANICAL SYSTEMS

(IIB - MECHANICAL AND SERVICE WATER HEATING INSPECTIONS)

	INSPECTION TEST	FREQUENCY	REFERENCE STANDARDS	INSPECTION DESCRIPTION	ECC CITATION
IIB2	SHUT-OFF DAMPERS	AS REQUIRED DURING INSTALLATION	APPROVED CONSTRUCTION DOCUMENTS	DAMPERS FOR STAIR AND ELEVATOR SHAFT VENTS AND OTHER OUTDOOR AIR INTAKES AND EXHAUST OPENINGS INTEGRAL TO THE BUILDING ENVELOPE SHALL BE VISUALLY INSPECTED TO VERIFY THAT SUCH DAMPERS, EXCEPT WHERE PERMITTED TO BE GRAVITY DAMPERS, COMPLY WITH APPROVED CONSTRUCTION DRAWINGS. MANUFACTURER'S LITERATURE SHALL BE REVIEWED TO VERIFY THAT THE PRODUCT HAS BEEN TESTED AND FOUND TO MEET THE STANDARD.	NYSECC C403.2.4.4, C403.7.7, OR ASHRAE 90.1-6.4.3.4
IIB3	HVAC AND SERVICE WATER HEATING EQUIPMENT	PRIOR TO FINAL MECHANICAL AND CONSTRUCTION INSPECTION	APPROVED CONSTRUCTION DOCUMENTS	EQUIPMENT SIZING, EFFICIENCIES AND OTHER PERFORMANCE FACTORS OF ALL MAJOR EQUIPMENT UNITS, AS DETERMINED BY THE APPLICANT OF RECORD, AND NO LESS THAN 15% OF MINOR EQUIPMENT UNITS, SHALL BE VERIFIED BY VISUAL INSPECTION AND, WHERE NECESSARY, REVIEW OF MANUFACTURER'S DATA. POOL HEATERS AND COVERS SHALL BE VERIFIED BY VISUAL INSPECTION	NYSECC C403.2, C404.2, C404.7, C406.2
IIB4	HVAC AND SERVICE WATER HEATING SYSTEM CONTROLS	AFTER INSTALLATION AND PRIOR TO FINAL ELECTRICAL AND CONSTRUCTION INSPECTION, EXCEPT THAT FOR CONTROLS WITH SEASONALLY DEPENDENT FUNCTIONALITY, SUCH TESTING SHALL BE PERFORMED BEFORE SIGN-OFF FOR ISSUANCE OF A FINAL CERTIFICATE OF OCCUPANCY	APPROVED CONSTRUCTION DOCUMENTS INCLUDING CONTROL SYSTEM NARRATIVES	NO LESS THAN 20% OF EACH TYPE OF REQUIRED CONTROLS AND ECONOMIZERS SHALL BE VERIFIED BY VISUAL INSPECTION AND TESTED FOR FUNCTIONALITY AND PROPER OPERATION. SUCH CONTROLS SHALL INCLUDE, BUT ARE NOT LIMITED TO, THERMOSTATIC AND ECONOMIZER CONTROLS	NYSECC C403.2.4, C403.2.5.1, C403.2.11, C403.3, C403.4, C404.3, C404.6, C404.7
IIB6	HVAC DUCT LEAKAGE TESTING	PRIOR TO CLOSING CEILINGS AND WALLS AND PRIOR TO FINAL CONSTRUCTION INSPECTION	APPROVED CONSTRUCTION DOCUMENTS; NYC MECHANICAL CODE	WHERE THE AIR HANDLER AND/OR SOME DUCTWORK IS IN UNCONDITIONED SPACE, DUCT-LEAKAGE TESTING SHALL BE PERFORMED EITHER AFTER ROUGH-IN OR POST-CONSTRUCTION TO ENSURE COMPLIANCE WITH ECC R403.3.3 AND R403.3.4. NOT LESS THAN 20% OF SUCH DUCTWORK SHALL BE TESTED	NYSECC C403

CONSULTANT INFORMATION

LiRo Engineers, Inc.
A LiRo Group Company
Syosset, N.Y. 516-214-8157[T]

CONSULTANT SEAL

STATE OF NEW YORK · FRANK F. DUSSE · LICENSED PROFESSIONAL ENGINEER · No. 090114

REVISION NUMBER	DATE	MADE BY	APP'D BY	REVISION
1	09/21/22			BID ADDENDUM #3

RECORD DRAWING CERTIFICATION

☐ AS BUILT – CHANGES AS NOTED ☐ AS BUILT – NO CHANGES

CONTRACTOR
NAME
SIGNATURE
TITLE DATE

PROJECT COORDINATOR
NAME
SIGNATURE
TITLE DATE

WESTCHESTER COUNTY, NEW YORK
DEPARTMENT OF PUBLIC WORKS AND TRANSPORTATION
DIVISION OF ENGINEERING

INFRASTRUCTURE REHABILITATION - PHASE 3
PLAYLAND PARK, RYE, NEW YORK
RESTAURANT KITCHEN WITH FOOD VENDING
MECHANICAL NOTES, SYMBOLS AND LEGENDS

CONTRACT NUMBER 22-523
SHEET NUMBER K-M-01
DWG NO. 549 of 664
SCALE: AS INDICATED
DATE: 08/23/2022
DPW FILE NUMBER 1-118-M-1298-1
REV. NO. 1

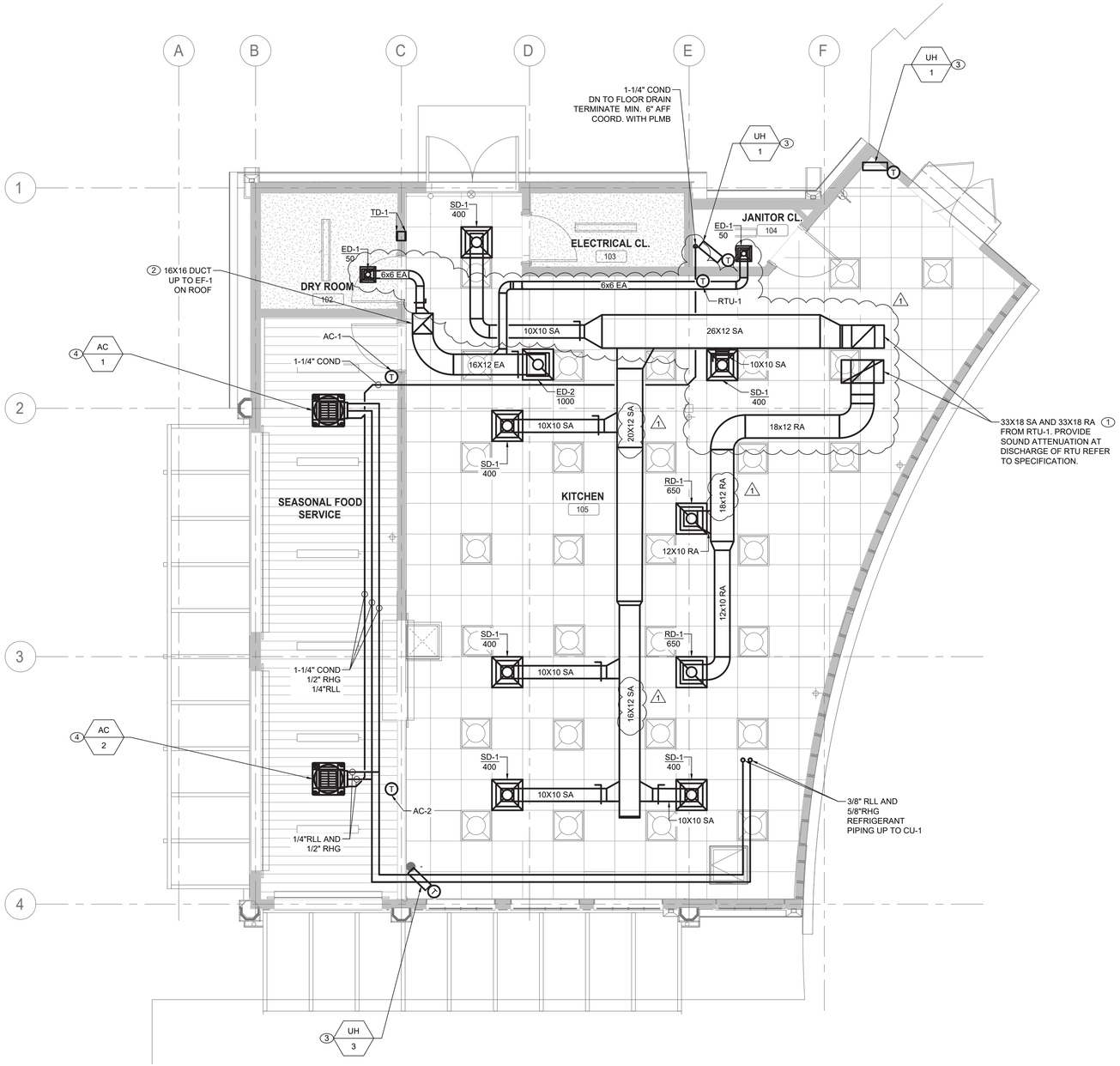

1 MECHANICAL FIRST FLOOR CONSTRUCTION PLAN

SCALE: 1/4" = 1'-0"

GENERAL NOTES:

1. CONTRACTOR TO COORDINATE WITH FACILITY WHEN WORKING AROUND OR ABOVE THE RIDE COMPONENTS, AND PROVIDE ALL NECESSARY MEASURES TO PROTECT THESE COMPONENTS PER THE REQUIREMENTS OF THE FACILITY.
2. UPON COMPLETION, SYSTEM SHALL BE TESTED FOR PROPER OPERATION.

MECHANICAL CONSTRUCTION NOTES:

1. PROVIDE SUPPLY AND RETURN DUCTWORK FROM ROOFTOP UNIT RTU-1 AND ROUTE ALONG INDICATED PATH. PROVIDE INSULATION TO ALL SUPPLY DUCTWORK. PROVIDE VOLUME DAMPERS AND SUPPLY DIFFUSERS/GRILLES AND BALANCE TO INDICATED VALUES.
2. PROVIDE EXHAUST DUCTWORK FROM KITCHEN UP TO ROOFTOP EXHAUST FAN AS INDICATED.
3. PROVIDE NEW WALL MOUNTED ELECTRIC UNIT HEATER. COORDINATE INSTALL HEIGHT IN FIELD.
4. PROVIDE NEW CEILING MOUNTED INDOOR UNITS AC-1 AND AC-2 AS SHOWN. COORDINATE ELECTRICAL POWER AND WIRING WITH ELECTRICAL DRAWINGS.

CONSULTANT INFORMATION

LiRo Engineers, Inc.
A LiRo Group Company
Syosset, N.Y. 516-214-8157[T]

CONSULTANT SEAL

STATE OF NEW YORK · FRANK F. ULISSE · LICENSED PROFESSIONAL ENGINEER · LIC. NO. 090117

REVISION NUMBER	DATE	MADE BY	APP'D BY	REVISION
1	09/21/22			BID ADDENDUM #3

RECORD DRAWING CERTIFICATION

☐ AS BUILT – CHANGES AS NOTED ☐ AS BUILT – NO CHANGES

CONTRACTOR: NAME / SIGNATURE / TITLE / DATE

PROJECT COORDINATOR: NAME / SIGNATURE / TITLE / DATE

WESTCHESTER COUNTY, NEW YORK
DEPARTMENT OF PUBLIC WORKS AND TRANSPORTATION
DIVISION OF ENGINEERING

INFRASTRUCTURE REHABILITATION - PHASE 3
PLAYLAND PARK, RYE, NEW YORK
RESTAURANT KITCHEN WITH FOOD VENDING
MECHANICAL FIRST FLOOR CONSTRUCTION PLAN

CONTRACT NUMBER	22-523
SHEET NUMBER	K-M-21
DWG NO.	552 of 664
SCALE:	AS INDICATED
DATE:	08/23/2022
DPW FILE NUMBER	1-118-M-1301-1
REV. NO.	1

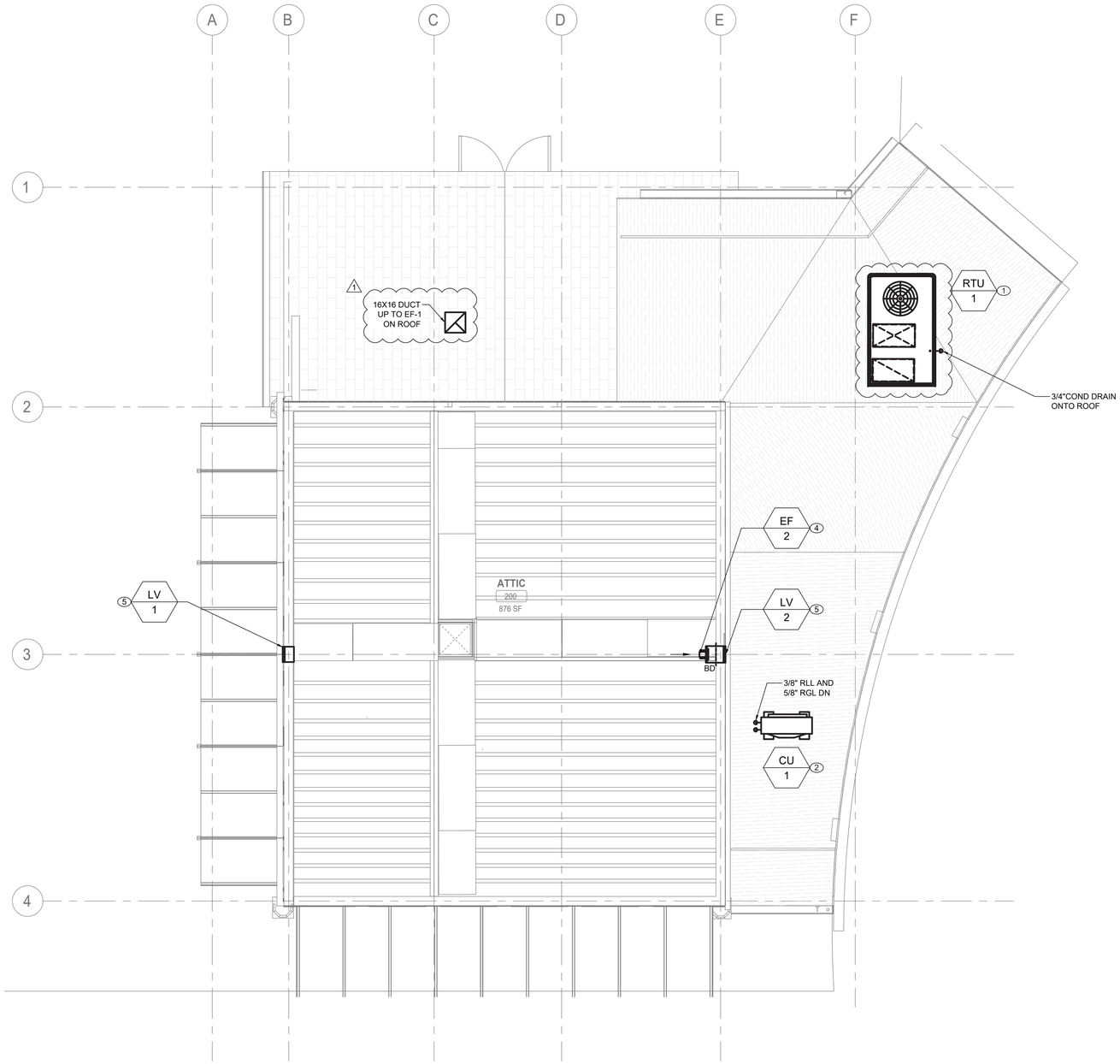

1 MECHANICAL ATTIC FLOOR CONSTRUCTION PLAN

SCALE: 1/4" = 1'-0"

GENERAL NOTES:

1. CONTRACTOR TO COORDINATE WITH FACILITY WHEN WORKING AROUND OR ABOVE THE RIDE COMPONENTS, AND PROVIDE ALL NECESSARY MEASURES TO PROTECT THESE COMPONENTS PER THE REQUIREMENTS OF THE FACILITY.
2. UPON COMPLETION, SYSTEM SHALL BE TESTED FOR PROPER OPERATION.

MECHANICAL CONSTRUCTION NOTES:

1. PROVIDE SUPPLY AND RETURN DUCTWORK FROM ROOFTOP UNIT RTU-1 AND ROUTE ALONG INDICATED PATH. PROVIDE INSULATION TO ALL SUPPLY DUCTWORK. PROVIDE VOLUME DAMPERS AND SUPPLY DIFFUSERS/GRILLES AND BALANCE TO INDICATED VALUES. PLACE UNIT ON NEW ROOF CURB AS SHOWN ON K-M-82.
2. PROVIDE NEW OUTDOOR SPLIT CONDENSER AIR CONDITIONER UNIT ON ROOF AS SHOWN. COORDINATE ELECTRICAL POWER AND WIRING WITH ELECTRICAL DRAWINGS. PLACE UNIT ON EQUIPMENT RAILS AS SHOWN ON K-M-81
3. PROVIDE NEW PACKAGED TERMINAL AIR CONDITIONER UNIT. COORDINATE ELECTRICAL POWER AND WIRING WITH ELECTRICAL DRAWINGS.
4. PROVIDE NEW EXHAUST FAN AS SCHEDULED. COORDINATE ELECTRICAL POWER AND WIRING WITH ELECTRICAL CONTRACTOR. INSTALL EF-2 AT 6'0" ABOVE ATTIC FLOOR TO CENTER.
5. PROVIDE NEW RAIN RESISTANT LOUVERS AS SCHEDULED. INSTALL LV-1 AND LV-2 AT 6'0" ABOVE ATTIC FLOOR TO CENTER.

CONSULTANT INFORMATION

LiRo Engineers, Inc.
A LiRo Group Company
Syosset, N.Y. 516-214-8157[T]

CONSULTANT SEAL

STATE OF NEW YORK · FRANK F. ULISSE · LICENSED PROFESSIONAL ENGINEER · 090117

REVISION NUMBER	DATE	MADE BY	APP'D BY	REVISION
1	09/21/22			BID ADDENDUM #3

RECORD DRAWING CERTIFICATION

☐ AS BUILT – CHANGES AS NOTED ☐ AS BUILT – NO CHANGES

CONTRACTOR
NAME
SIGNATURE
TITLE DATE

PROJECT COORDINATOR
NAME
SIGNATURE
TITLE DATE

WESTCHESTER COUNTY, NEW YORK
DEPARTMENT OF PUBLIC WORKS AND TRANSPORTATION
DIVISION OF ENGINEERING

INFRASTRUCTURE REHABILITATION - PHASE 3
PLAYLAND PARK, RYE, NEW YORK
RESTAURANT KITCHEN WITH FOOD VENDING
MECHANICAL ATTIC FLOOR CONSTRUCTION PLAN

CONTRACT NUMBER: 22-523
SHEET NUMBER: K-M-22
DWG NO.: 553 of 664
SCALE: AS INDICATED
DATE: 08/23/2022
DPW FILE NUMBER: 1-118-M-1302-1
REV. NO.: 1

GENERAL NOTES:

1. CONTRACTOR TO COORDINATE WITH FACILITY WHEN WORKING AROUND OR ABOVE THE RIDE COMPONENTS, AND PROVIDE ALL NECESSARY MEASURES TO PROTECT THESE COMPONENTS PER THE REQUIREMENTS OF THE FACILITY.
2. UPON COMPLETION, SYSTEM SHALL BE TESTED FOR PROPER OPERATION.

MECHANICAL CONSTRUCTION NOTES:

(1) PROVIDE NEW EXHAUST FAN AS SCHEDULED. COORDINATE ELECTRICAL POWER AND WIRING WITH ELECTRICAL DRAWINGS. ENSURE ALL WORK IMPACTING ROOF IS DONE IN ACCORDANCE WITH ROOFING MANUFACTURER WARRANTY.

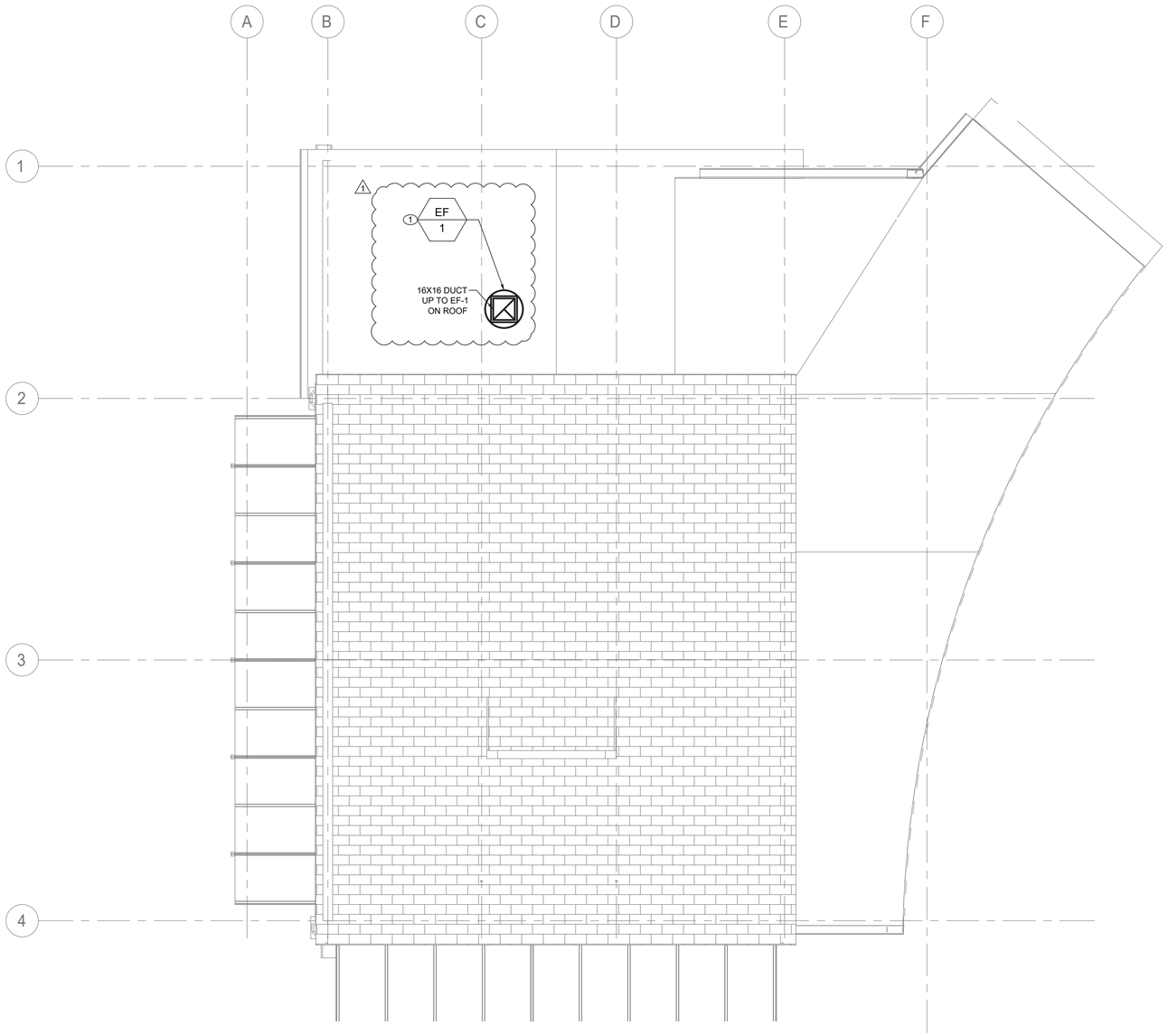

1 MECHANICAL ROOF CONSTRUCTION PLAN

SCALE: 1/4" = 1'-0"

CONSULTANT INFORMATION

LiRo Engineers, Inc.
A LiRo Group Company
Syosset, N.Y. 516-214-8157[T]

CONSULTANT SEAL

STATE OF NEW YORK · FRANK F. ULISSE · LICENSED PROFESSIONAL ENGINEER · 090111-1

REVISION NUMBER	DATE	MADE BY	APP'D BY	REVISION
1	09/21/22			BID ADDENDUM #3

RECORD DRAWING CERTIFICATION

☐ AS BUILT – CHANGES AS NOTED ☐ AS BUILT – NO CHANGES

CONTRACTOR: NAME ____ SIGNATURE ____ TITLE ____ DATE ____

PROJECT COORDINATOR: NAME ____ SIGNATURE ____ TITLE ____ DATE ____

WESTCHESTER COUNTY, NEW YORK
DEPARTMENT OF PUBLIC WORKS AND TRANSPORTATION
DIVISION OF ENGINEERING

INFRASTRUCTURE REHABILITATION - PHASE 3
PLAYLAND PARK, RYE, NEW YORK
RESTAURANT KITCHEN WITH FOOD VENDING
MECHANICAL ROOF CONSTRUCTION PLAN

CONTRACT NUMBER: 22-523
SHEET NUMBER: **K-M-23**
DWG NO.: **554 of 664**
SCALE: **AS INDICATED**
DATE: 08/23/2022
DPW FILE NUMBER: 1-118-M-1303-1
REV. NO.: 1

ROOFTOP AIR CONDITIONING UNIT SCHEDULE

TAG	MANUFACTURER	MODEL	LOCATION	NOM. CAP. (TONS)	MIN. OA (CFM)	MAX. OA (CFM)	SUPPLY FAN			FILTER		DX COOLING							HEATING		COMPRESSOR	CONDENSER			EER	ELECTRICAL			OPERATING WEIGHT (±LBS)	DIMENSIONS LxWxH (FT)	NOTES
							AIR FLOW (CFM)	ESP (IN)	MOTOR BHP	TYPE	MERV	REFRIG TYPE	TOTAL CAP. (MBH)	SENSIBLE CAP. (MBH)	EAT DB (°F)	EAT WB (°F)	LAT DB (°F)	LAT WB (°F)	ELEC. KW	TOTAL CAP. (MBH)	TYPE/QTY	AMB. TEMP (°F)	FAN QTY	Kw		MCA	MOCP	V-PH-HZ			
RTU-1	TRANE	THC092F3RNA	ROOF	7.5	1100	-	2400	0.50	0.55	2" PLEATED	13	R-410A	87.5	70.4	80.2	64.3	54.4	52.1	36.0	122.9	SCROLL/2	89	1	0.72	12.60	104	110	208-3-60	1228	7.4X4.4X3.9	1,2,3,4

NOTES:
1. PROVIDE DOWNFLOW SUPPLY AND RETURN UNIT CONFIGURATION, OVERSIZE SUPPLY FAN MOTOR, MOTORIZED OUTSIDE AIR DAMPER, NON-FUSED DISCONNECT, ECONOMIZER, ECONOMIZER HOOD, BAROMETRIC RELIEF HOOD AND 24" ROOF CURB. 1
2. FACTORY CONTROLS TO BE PROVIDED BY MANUFACTURER.
3. PROVIDE WITH MERV 13 FILTERS AND OPTION FOR UV LIGHT FILTRATION KIT.
4. PROVIDE DIGITAL CONTROLLER WITH DISPLAY CAPABLE OF DEMAND CONTROL VENTILATION AND ECONOMIZER MODE. CONTRACTOR TO PROVIDE TRANSFORMER AND POWER AS REQUIRED.

DUCTLESS SPLIT SYSTEM HEAT PUMP SCHEDULE

UNIT TAG (INDOOR)	ASSOCIATED OUTDOOR UNIT	MANUFACTURER	MODEL	LOCATION/SERVICE	REFRIGERANT	SUPPLY FAN	COOLING		HEATING		ELECTRICAL			WEIGHT	NOTES
						CFM	TOTAL/SENS. (MBH)	EAT DB/WB	MBH	EAT/LAT DB	V.-PH.-CY.	MCA	MOCP		
AC-1	CU-1	MITSUBISHI	PLFY-P18NFMU-E	SEASONAL FOOD SERVICE	R410A	460	18.0/18.0	81/66	20.0	68/90	208-1-60	0.50	15	31.3	1,2,3,4
AC-2	CU-1	MITSUBISHI	PLFY-P18NFMU-E	SEASONAL FOOD SERVICE	R410A	460	18.0/18.0	81/66	20.0	68/90	208-1-60	0.50	15	31.3	1,2,3,4

NOTES:
1. UNIT CAPACITY INDICATED AS SIZING CRITERIA.
2. PROVIDE UNIT WITH WIRED WALL MOUNTED THERMOSTAT.
3. PROVIDE ALL INDOOR UNIT WITH INTREGATED CONDENSATE PUMP
4. INSTALL AND SIZE REFRIGERANT PIPING PER MANUFACTURER'S SPECIFICATION.

DUCTLESS SPLIT SYSTEM HEAT PUMP CONDENSING UNIT SCHEDULE

UNIT TAG (OUTDOOR)	MANUFACTURER	MODEL	NOMINAL COOLING (BTU/HR)	NOMINAL HEATING (BTU/HR)	SERVICE	SEER	COP	V.-PH.-CY.	MCA	MOCP	WEIGHT	NOTES
CU-1	MITSUBISHI	PUMY-P36NKMU3-BS	36000	42000	SEASONAL FOOD SERVICE	22.3	4	208-1-60	29.0	44.0	271.0	1,2

NOTES:
1. UNIT CAPACITY INDICATED AS SIZING CRITERIA.
2. PROVIDE UNIT WITH 16" ROOF STAND.

ELECTRIC UNIT HEATER SCHEDULE

TAG	MANUFACTURER	MODEL	SERVICE	TYPE	KW	AMPS	V-PH-HZ	NOTES
UH-1	TRANE	UHEC-031A0C0	WATER SERVICES RM	WALL HUNG	3.3	15.9	208-1-60	1
UH-2	TRANE	UHEC051AACA	KITCHEN	WALL HUNG	5	24.1	208-1-60	1
UH-3	TRANE	UHEC051AACA	KITCHEN	WALL HUNG	5	24.1	208-1-60	1

NOTES:
1. PROVIDE UNIT MOUNTED 2 STAGE THERMOSTAT.

FAN SCHEDULE

TAG	MANUFACTURER	MODEL	LOCATION	SERVICE	TYPE	DRIVE	AIR FLOW (CFM)	TSP (IN. WG)	ELECTRICAL				OPERATING WEIGHT (±LBS)	DIMENSIONS DxH (IN)	NOTES
									HP	BHP	RPM	V-PH-HZ			
EF-1	GREENHECK	G-130-VG	ROOF	KITCHEN / TRASH RM	CENTRIFUGAL	DIRECT	1100	0.25	0.25	0.09	906	115-1-60	24	19x19	1,2,3,4,5
EF-2	GREENHECK	SE1-8-440-VG	ATTIC	ATTIC	AXIAL	DIRECT	50	0.05	0.07	0.00	638	115-1-60	16	13X13	1,2,3,4,6

NOTES:
1. PROVIDE ALL CONTACTS, RELAYS, AND DEVICES NECESSARY FOR BMS CONTROL OF FANS PER SEQUENCE OF OPERATIONS.
2. PROVIDE THERMAL OVERLOAD FOR ALL SINGLE PHASE MOTORS.
3. PROVIDE SALT WATER RESISTANT HI-PRO POLYESTER COATING FOR ALL FANS.
4. FAN SHALL BE FURNISHED WITH NON FUSED DISCONNECT.
5. PROVIDE 12" ROOF CURBS FOR ALL ROOF MOUNTED FANS. INCLUDE 1.5" INSULATION ON CURB.
6. PROVIDE WALL HOUSING.

LOUVER SCHEDULE

TAG	MANUFACTURER	MODEL	SERVICE	LOCATION	MATERIAL	FINISH TYPE	WIDTH (INCH)	HEIGHT (INCH)	FREE AIR VELOCITY (FPM)	PRESSURE DROP (IN. WG)	MINIMUM FREE AREA (SQUARE FEET)	NOTES
LV-1	GREENHECK	ESD-635	EXHAUST	ATTIC	ALUMINUM	BAKED ENAMEL	12	12	-	-	0.19	2
LV-2	GREENHECK	ESD-635	EXHAUST	ATTIC	ALUMINUM	BAKED ENAMEL	12	12	263	0.05	0.19	1

NOTES:
1. PROVIDE WITH ALUMINUM BIRD SCREEN AND BACKDRAFT DAMPERS.
2. PROVIDE WITH ALUMINUM BIRD SCREEN ONLY.

AIR INLET / OUTLET SCHEDULE

TAG	MANUFACTURER	MODEL	SERVICE	NECK SIZE (IN)	FACE SIZE (IN)	MOUNTING	CFM	MAX PD (wg)	MAX VELOCITY	MAX NC	NOTES
SD-1	TITUS	TMS	GENERAL SUPPLY	12	24X24	LAY-IN / GYP	321-425	0.10	600	30	1, 2, 3
RD-1	TITUS	50F	GENERAL RETURN	14X14	24X24 1	LAY-IN / GYP	528-732 1	0.05	600	30	1, 3
ED-1	TITUS	50F	GENERAL EXHAUST	6X6	12X12	LAY-IN / GYP	57-133	0.05	600	30	1, 3
ED-2	TITUS	50F	GENERAL EXHAUST	16X16	24X24	LAY-IN / GYP	732-972	0.50	600	30	1, 3
TG-1	TITUS	SG-LFF	TRANSFER	-	6X6	WALL MOUNTED	70	0.03	400	-	1

NOTES:
1. COORDINATE AND CONFIRM CEILING AND/OR WALL MOUNT (T-BAR, SURFACE, REINFORCEMENT, ETC) WITH ARCHITECTURAL RCP AND WALL CONSTRUCTION BEFORE ORDERING.
2. PROVIDE WITH MOLDED INSULATION BLANKET.
3. INTEGRAL VOLUME DAMPERS NOT ACCEPTABLE. VOLUME DAMPERS PROVIDED BY MECHANICAL CONTRACTOR ON ALL RUN-OUTS. EXCEPTIONS REQUIRE APPROVAL WHEN REQUIRED.

CONSULTANT INFORMATION
LiRo Engineers, Inc.
A LiRo Group Company
Syosset, N.Y. 516-214-8157[T]

CONSULTANT SEAL
STATE OF NEW YORK · FRANK F. ULISSE · LICENSED PROFESSIONAL ENGINEER

REVISION NUMBER	DATE	MADE BY	APP'D BY	REVISION
1	09/21/22			BID ADDENDUM #3

RECORD DRAWING CERTIFICATION
☐ AS BUILT – CHANGES AS NOTED ☐ AS BUILT – NO CHANGES
CONTRACTOR: NAME / SIGNATURE / TITLE / DATE
PROJECT COORDINATOR: NAME / SIGNATURE / TITLE / DATE

WESTCHESTER COUNTY, NEW YORK
DEPARTMENT OF PUBLIC WORKS AND TRANSPORTATION
DIVISION OF ENGINEERING

INFRASTRUCTURE REHABILITATION - PHASE 3
PLAYLAND PARK, RYE, NEW YORK
RESTAURANT KITCHEN WITH FOOD VENDING
MECHANICAL SCHEDULES

CONTRACT NUMBER 22-523
SHEET NUMBER K-M-61
DWG NO. 555 of 665
SCALE: AS INDICATED
DATE: 08/23/2022
DPW FILE NUMBER 1-118-M-1304-1
REV. NO. 1

NOTES:

1. FOR ADDITIONAL NOTES, ABBREVIATIONS AND SYMBOLS, SEE DRAWING GE-E-01.

PANELBOARD: K-LP-1 **LOCATION:** ELECTRICAL CLOSET

1 **NEMA RATING** 3 **POLES** **MOUNTING:** SURFACE

225 **AMP BUS RATING** 200 **AMP MAIN BREAKER** 42 **KA SHORT CIRCUIT RATING**

208Y/120 **VOLTS** 3 **PHASE** 4 **WIRE** **ELECTRONIC GRADE :** NO

CIRCUIT NO.	DESCRIPTION	LOAD KVA PHASE A	LOAD KVA PHASE B	LOAD KVA PHASE C	BREAKER AMPS / POLES	NOTES	CIRCUIT NO.	DESCRIPTION	LOAD KVA PHASE A	LOAD KVA PHASE B	LOAD KVA PHASE C	BREAKER AMPS / POLES	NOTES
1	KITCHEN LTG.	0.6			20/1		2	UTILITY, SERVICE & UPSTAIRS LTG.	0.37			20/1	
3	KITCHEN LTG.		0.6		20/1		4	SPARE		-		20/1	
5	SPARE			-	20/1		6	SPARE			-	20/1	
7	K-RP EXTERIOR SOFFITS (NORTH & EAST)	0.5			20/1		8	SPARE	-			20/1	
9	K-RP REAR FLOODLIGHT		0.2		20/1		10	POWER TO K-RP (120V)		0.2		20/1	
11	K-RP SPARE			-	20/1		12	K-RP EXTERIOR SOFFITS (SOUTH &			0.5	20/1	
13	SPARE	-			20/1		14	ROOF TOP SIGNAGE	0.2			20/1	
15	SPARE		-		20/1		16	K-RP SPARE		-		20/1	
17	SPARE			-	20/1		18	SPARE			-	20/1	
19	SPACE						20	SPACE					
21	SPACE						22	SPACE					
23	SPACE						24	SPACE					
25	SPACE						26	SPACE					
27	SPACE						28	SPACE					
29	SPACE						30	SPACE					
31	SPACE						32	SPACE					
33	SPACE						34	SPACE					
35	SPACE						36	SPACE					
37	SPACE						38	SPACE					
39	SPACE						40	SPACE					
41	SPACE						42	SPACE					
	TOTAL PHASE KVA THIS SIDE	1.10	0.80	0.00				**TOTAL PHASE KVA THIS SIDE**	0.57	0.2	0.5		
								TOTAL KVA PER PHASE	1.67	1.00	0.50		
								TOTAL THREE PHASE KVA	3.17				

NOTES:
1.
2.
3.
4.

NOTES CONT.:
5.
6.
7.
8.

PANELBOARD: K-PP-2 **LOCATION:** ELECTRICAL CLOSET

1 **NEMA RATING** 3 **POLES** **MOUNTING:** SURFACE

200 **AMP BUS RATING** 200 **AMP MAIN BREAKER** 42 **KA SHORT CIRCUIT RATING**

208Y/120 **VOLTS** 3 **PHASE** 4 **WIRE** **ELECTRONIC GRADE :** NO

CIRCUIT NO.	DESCRIPTION	LOAD KVA PHASE A	LOAD KVA PHASE B	LOAD KVA PHASE C	BREAKER AMPS / POLES	NOTES	CIRCUIT NO.	DESCRIPTION	LOAD KVA PHASE A	LOAD KVA PHASE B	LOAD KVA PHASE C	BREAKER AMPS / POLES	NOTES
1	UPSTAIRS RECEPTACLES	0.5			20/1		2	SPARE	-			20/1	
3	ROLL-UP DOOR		1		20/1		4	KITCHEN RECEPTACLES (GFI)		0.5		20/1	
5	ROLL-UP DOOR			1	20/1		6	KITCHEN RECEPTACLES (GFI)			0.5	20/1	
7	UH-1	1.65			20/2		8	AC-1	1.6			15/2	
9			1.65				10			1.6			
11	UH-2			2.5	30/2		12	AC-2			1.6	15/2	
13		2.5					14		1.6				
15	UH-3		2.5		30/2		16	RECEPTACLES		0.5		20/1	
17				2.5			18	SPARE			-	20/1	
19	EF-1	0.2			15/1		20	SPARE	-			20/1	
21	EF-2		0.20		15/1		22	SPARE		-		20/1	
23	RECEPTACLES			0.5	20/1		24	CU-1			3.1	35/2	
25	PTAC-1	0.5			15/2		26		3.1				
27			0.5				28	SPACE					
29	ROLL-UP DOOR			1	20/1		30	SPACE					
31	RECEPTACLES	0.5			20/1		32	SPACE					
33	SPACE						34	SPACE					
35	SPACE						36	SPACE					
37	SPACE						38	RTU-1	12			110/3	
39	SPACE						40			12			
41	SPACE						42				12		
	TOTAL PHASE KVA THIS SIDE	5.85	5.85	5.00				**TOTAL PHASE KVA THIS SIDE**	18.3	14.6	17.2		
								TOTAL KVA PER PHASE	24.15	20.45	22.20		
								TOTAL THREE PHASE KVA	66.80				

NOTES:
1.
2.
3.
4.

NOTES CONT.:
5.
6.
7.
8.

CONSULTANT INFORMATION

Savin Engineers, P.C.

CONSULTANT SEAL

STATE OF NEW YORK · STEVEN A. MARTINO · 083631 · LICENSED PROFESSIONAL ENGINEER

REVISION NUMBER	DATE	MADE BY	APP'D BY	REVISION
1	09/21/2022	RKC	SM	BID ADDENDUM #3

RECORD DRAWING CERTIFICATION

☐ AS BUILT – CHANGES AS NOTED ☐ AS BUILT – NO CHANGES

CONTRACTOR: NAME / SIGNATURE / TITLE / DATE

PROJECT COORDINATOR: NAME / SIGNATURE / TITLE / DATE

WESTCHESTER COUNTY, NEW YORK
DEPARTMENT OF PUBLIC WORKS AND TRANSPORTATION
DIVISION OF ENGINEERING

INFRASTRUCTURE REHABILITATION - PHASE 3
PLAYLAND PARK, RYE, NEW YORK
RESTAURANT KITCHEN WITH FOOD VENDING
PANEL SCHEDULES

CONTRACT NUMBER	22-523
SHEET NUMBER	K-E-06
DWG NO.:	564 of 664
SCALE:	AS SHOWN
DATE:	8/23/2022
DPW FILE NUMBER	1-118-E-1313-1
REV. NO.	1

Drawing Name: G:\SavinAutocad\2060\25-Playland-Mega-3\E\KE-1011.dwg
Projectname: 211001F02 Comments: ----
Printed by: MGodby Date: 23 September 2022 4:41 PM Designed by: ----
Reqf: Xrefs: [TB_24X36_WestchesterCo_3.dwg] [TSG-SVLOGO.dwg] [BCR-A-04.dwg] [BCRE-101.dwg]

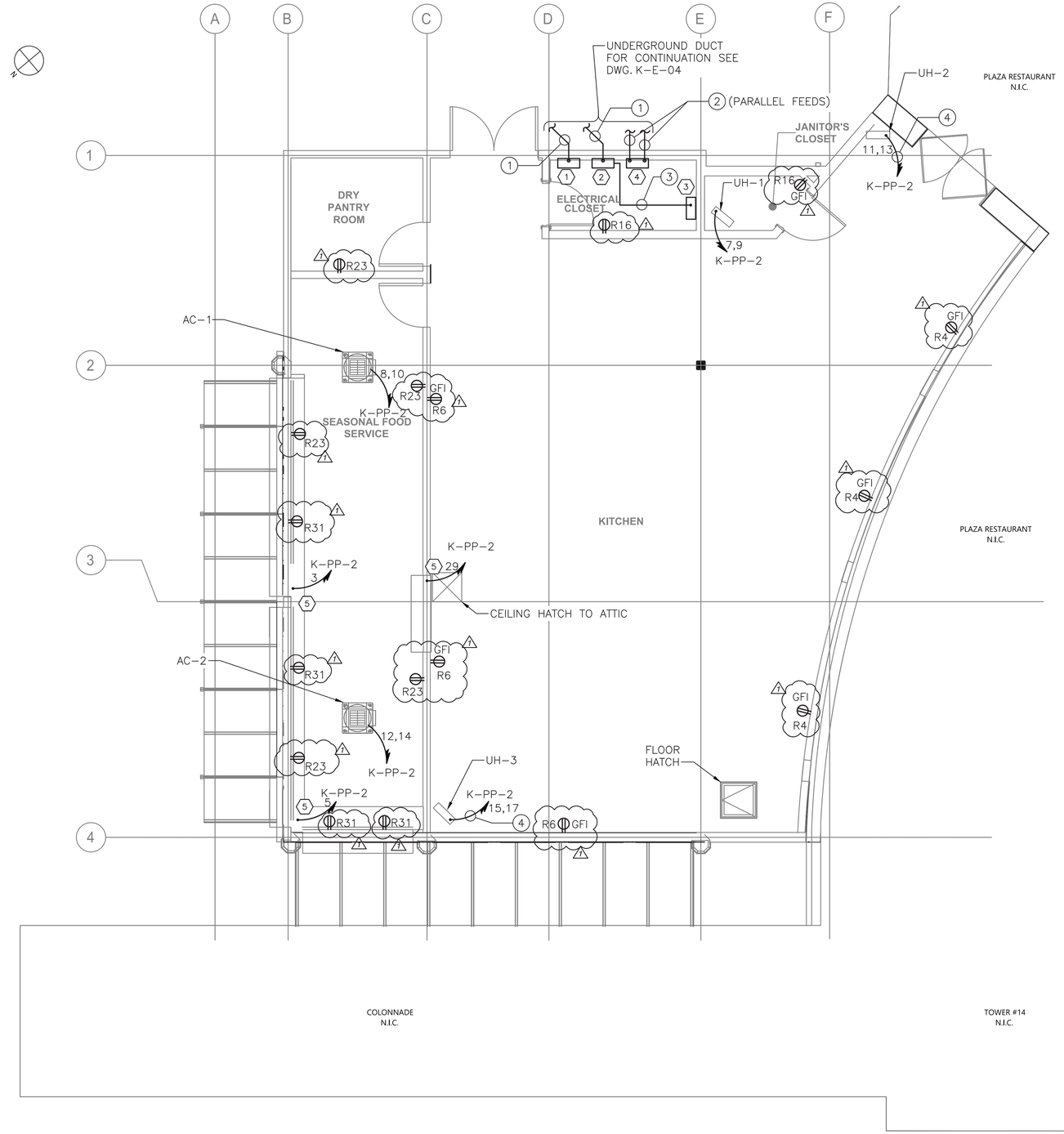

RESTARUANT KITCHEN GROUND FLOOR POWER PLAN

1/4"=1'-0"

NOTES:

1. FOR ADDITIONAL NOTES, ABBREVIATIONS AND SYMBOLS, SEE DRAWING GE-E-01.
2. ALL RECEPTACLES DESIGNATORS ARE POWERED VIA PANEL K-PP-2, UNLESS OTHERWISE NOTED.
3. ALL CIRCUITS SHOWN ON THE DRAWING BUT NOT SPECIFICALLY CALLED OUT ON THE CABLE AND CONDUIT SCHEDULE SHALL BE 3/4" CONDUIT 2#12, 1#12G AWG.
4. ALL HVAC LOW VOLTAGE WIRING SHALL BE PERFORMED BY THE HVAC CONTRACTOR, INCLUDING BUT NOT LIMITED TO LOW VOLTAGE THERMOSTAT WIRING.
5. EXHAUST FAN STARTERS SHALL BE FURNISHED BY THE EXHAUST FAN MANUFACTURER. FOR EXHAUST FAN STARTER REQUIREMENTS, SEE HVAC CONTRACT DRAWINGS AND SPECIFICATIONS.
6. FOR PANEL SCHEDULES, SEE DRAWING K-E-05.

KEY NOTES:

1. NEW 208Y/120 VOLT POWER PANEL K-PP-2, 3 PHASE, 4 WIRE. 225 AMP MAINS WITH 200 AMP MAIN BREAKER.
2. NEW 208Y/120 VOLT LIGHTING PANEL K-LP-1, 3 PHASE, 4 WIRE. 225 AMP MAINS WITH 200 AMP MAIN BREAKER.
3. NEW EXTERIOR LIGHTING RELAY PANEL K-RP.
4. NEW 208Y/120 VOLT POWER PANEL K-PP-1, 3 PHASE, 4 WIRE, 800 AMP MAINS WITH 800 AMP MAIN BREAKER.
5. APPROXIMATE LOCATION OF MOTOR FOR NEW ROLL-UP DOOR. CONTRACTOR SHALL CONFIRM MOTOR LOCATION IN THE FIELD PRIOR TO INSTALLATION. CONTRACTOR SHALL CIRCUIT MOTOR FROM PANEL K-PP-2. NUMBER DESIGNATORS INDICATE CIRCUIT NUMBERS. CONTRACTOR SHALL PROVIDE 30 AMP, 2-POLE DISCONNECT SWITCH AT ROLL-UP DOOR MOTOR LOCATION.

CONDUIT AND WIRE LEGEND

NO.	DESCRIPTION
1	2 1/2"C, 4#4/0 & 1#6 GND
2	2 SETS OF 4"C, 4-500KCMIL & 1#1/0 GND
3	2"C, 12#12 & 5#12 GNDS
4	3/4"C, 2#10 & 1#10 GND

0 4' 8'

SCALE: 1/4" = 1'-0"

CONSULTANT INFORMATION

Savin Engineers, P.C.

CONSULTANT SEAL

STATE OF NEW YORK · STEVEN A. MARTINO · 083631 · LICENSED PROFESSIONAL ENGINEER

REVISION NUMBER	DATE	MADE BY	APP'D BY	REVISION
1	09/21/2022	RKC	SM	BID ADDENDUM #3

RECORD DRAWING CERTIFICATION

☐ AS BUILT - CHANGES AS NOTED ☐ AS BUILT - NO CHANGES

CONTRACTOR: NAME / SIGNATURE / TITLE / DATE

PROJECT COORDINATOR: NAME / SIGNATURE / TITLE / DATE

WESTCHESTER COUNTY, NEW YORK
DEPARTMENT OF PUBLIC WORKS AND TRANSPORTATION
DIVISION OF ENGINEERING

INFRASTRUCTURE REHABILITATION - PHASE 3
PLAYLAND PARK, RYE, NEW YORK
RESTAURANT KITCHEN WITH FOOD VENDING
GROUND FLOOR POWER PLAN

CONTRACT NUMBER	22-523
SHEET NUMBER	K-E-07
DWG NO.:	565 of 664
SCALE:	AS SHOWN
DATE:	8/23/2022
DPW FILE NUMBER	1-118-E-1314-1
REV. NO.	1

Drawing Name: G:\SavinAutocad\2060\25-Playland-Mega-3\E\KE-1006.dwg
Rev#: Projectname: 211001F02 Comments: ----
Printed by: MGodby Date: 23 September 2022 4:42 PM Designed by: ----
Xrefs: [TB_24X36_WestchesterCo_3.dwg] [TSG-SVLOGO.dwg] [K-A-11.dwg] [K-E-1005.dwg]

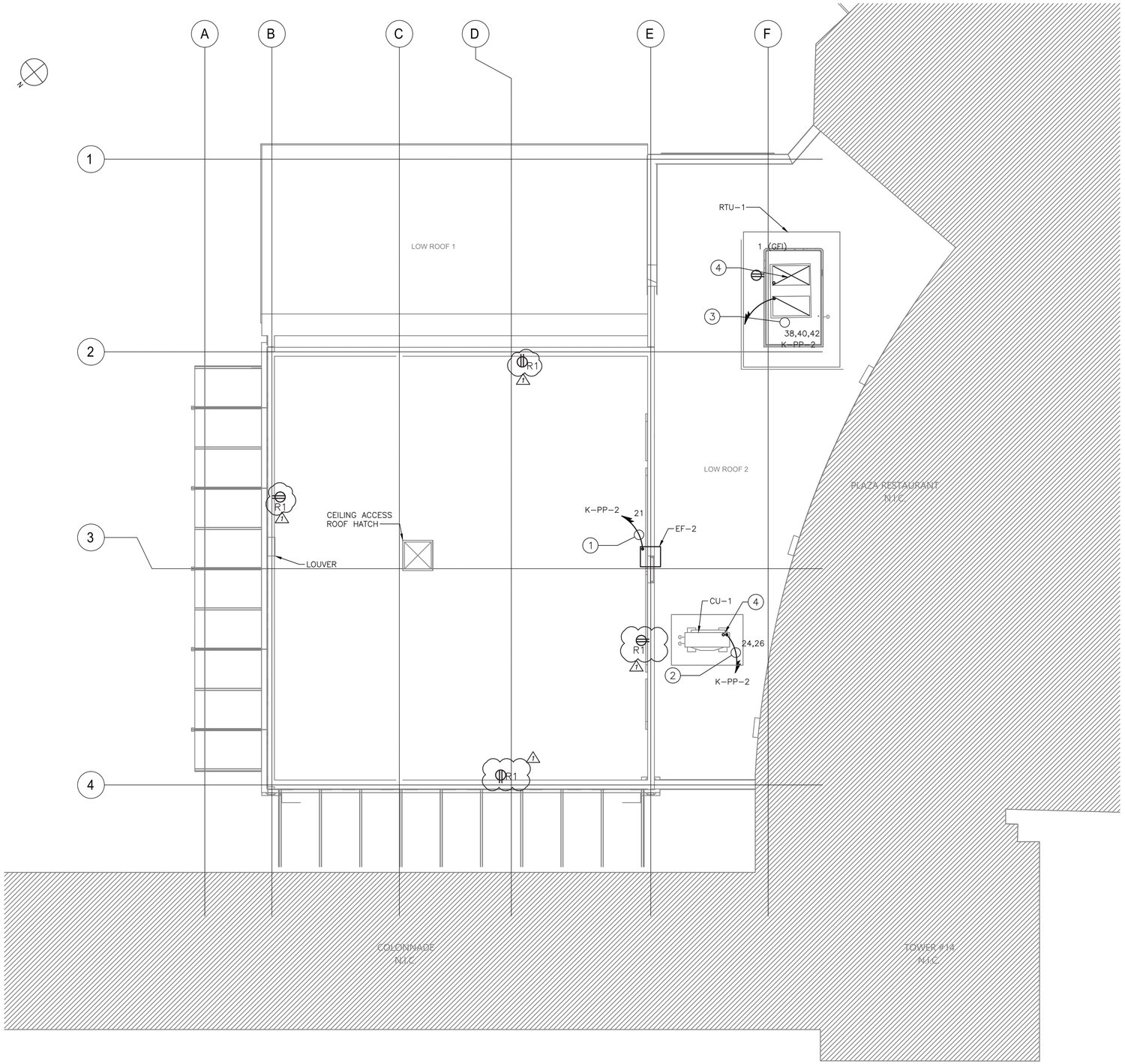

RESTAURANT KITCHEN SECOND FLOOR POWER PLAN

1/4"=1'-0"

NOTES:

1. FOR ADDITIONAL NOTES, ABBREVIATIONS AND SYMBOLS, SEE DRAWING GE-E-01.
2. ALL RECEPTACLES DESIGNATORS ARE POWERED K-PP-2, UNLESS OTHERWISE NOTED.
3. ALL CIRCUITS SHOWN ON THE DRAWING BUT NOT SPECIFICALLY CALLED OUT ON THE CABLE AND CONDUIT SCHEDULE SHALL BE 3/4" CONDUIT 2#12, 1#12G AWG.
4. ALL HVAC LOW VOLTAGE WIRING SHALL BE PERFORMED BY THE HVAC CONTRACTOR, INCLUDING BUT NOT LIMITED TO LOW VOLTAGE THERMOSTAT WIRING.
5. EXHAUST FAN STARTERS SHALL BE FURNISHED BY THE EXHAUST FAN MANUFACTURER. FOR EXHAUST FAN STARTER REQUIREMENTS, SEE HVAC CONTRACT DRAWINGS AND SPECIFICATIONS.
6. FOR PANEL SCHEDULES, SEE DRAWING K-E-05.
7. CONTRACTOR SHALL COORDINATE ALL REQUIRED DISCONNECTING MEANS WITH HVAC CONTRACTOR.
8. ALL ROOF PENETRATIONS SHALL BE WATERPROOF. PENETRATION COMPONENTS FOR CONDUIT SHALL BE SUITABLE AND COMPATIBLE FOR INSTALLED ROOF. SEE ARCHITECTURAL AND PLUMBING DRAWINGS FOR ADDITIONAL INFORMATION.

CONDUIT AND WIRE LEGEND

NO.	DESCRIPTION
1	3/4"C 2#10 & 1#10 GND
2	3/4"C, 2#8 & 1#10 GND
3	1 1/4"C, 3#2 & 1#8 GND
4	1"C, FOR CONTROL

0 4' 8'

SCALE: 1/4" = 1'-0"

CONSULTANT INFORMATION

Savin Engineers, P.C.

STATE OF NEW YORK · STEVEN A. MARTINO · 083931 · LICENSED PROFESSIONAL ENGINEER

REVISION NUMBER	DATE	MADE BY	APP'D BY	REVISION
1	09/21/2022	RKC	SM	BID ADDENDUM #3

RECORD DRAWING CERTIFICATION

☐ AS BUILT – CHANGES AS NOTED ☐ AS BUILT – NO CHANGES

CONTRACTOR: NAME / SIGNATURE / TITLE / DATE

PROJECT COORDINATOR: NAME / SIGNATURE / TITLE / DATE

WESTCHESTER COUNTY, NEW YORK
DEPARTMENT OF PUBLIC WORKS AND TRANSPORTATION
DIVISION OF ENGINEERING

INFRASTRUCTURE REHABILITATION - PHASE 3
PLAYLAND PARK, RYE, NEW YORK
RESTAURANT KITCHEN WITH FOOD VENDING
SECOND LEVEL POWER PLAN

CONTRACT NUMBER	22-523
SHEET NUMBER	K-E-08
DWG NO.	566 of 664
SCALE:	AS SHOWN
DATE:	8/23/2022
DPW FILE NUMBER	1-118-E-1315-1
REV. NO.	1

Drawing Name: G:\SavinAutocad\2060\25-Playland-Mega-3\E\KE-1007.dwg
Projectname: 211001F02 Comments: ----
Printed by: MGodby Date: 23 September 2022 4:42 PM Designed by: ----
Rev#:
Xrefs: [TB_24X36_WestchesterCo_3.dwg] [TSG-SVLOGO.dwg] [K-A-12.dwg] [K-E-1006.dwg

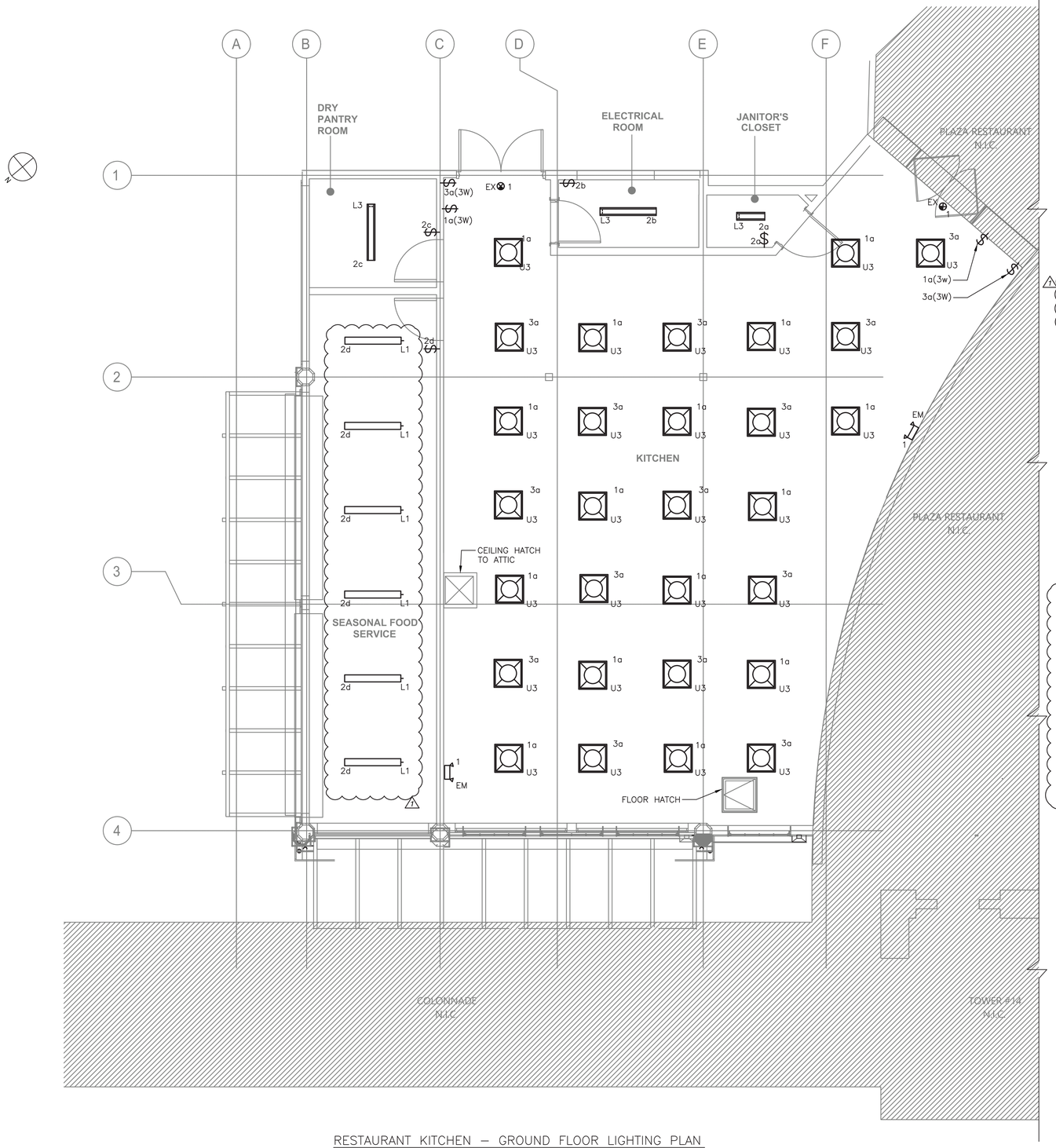

NOTES:

1. FOR ADDITIONAL NOTES, ABBREVIATIONS AND SYMBOLS, SEE DRAWING GE–E–01.
2. ALL LIGHTING SYSTEMS SHOWN ON PLAN ARE POWERED VIA LIGHTING PANEL K–LP–1, UNLESS NOTED OTHERWISE. CONTRACTOR SHALL CIRCUIT LIGHTING FIXTURES WITH 3/4" CONDUIT WITH 2#12 & 1#12GND, UNLESS NOTED OTHERWISE.
3. EXIT SIGNS SHALL BE WIRED TO THE UN–SWITCHED LEG OF THE DESIGNATED CIRCUIT.
4. EMERGENCY FIXTURES SHALL BE WIRED TO THE UN–SWITCHED LEG OF THE DESIGNATED CIRCUIT.
5. ALL EXTERIOR LIGHTING SHALL BE CIRCUITED TO RELAY PANEL K–RP. CONTRACTOR SHALL CIRCUIT LIGHTING FIXTURES WITH 3/4" CONDUIT WITH 2#12 & 1#12GND, UNLESS NOTED OTHERWISE.
6. FOR LIGHTING PANEL SCHEDULE, REFER TO DRAWING K–E–06.
7. NUMBER DESIGNATORS NEXT TO FIXTURES AND/OR CONTROLS INDICATE CIRCUIT NUMBERS.
8. NEW LIGHTING CONTROLS SHALL BE FULLY COMPATIBLE WITH THE EXISTING SYSTEM AS PROVIDED ELSEWHERE AT THE PLAYLAND FACILITY. EQUIPMENT INCLUDES, BUT NOT LIMITED TO OCCUPANCY SENSORS, RELAY/POWER PACKS, SWITCHES, RELAY PANELS, PHOTO SENSORS, ETC.
9. LIGHTING CONTROLS SELECTED SHALL HAVE THE CAPABILITY TO BE CONNECTED TO A MASTER HEAD–END SYSTEM (FUTURE CONTRACT).
10. RELAY PANEL SHALL BE EQUIPPED WITH BOTH A BUILT–IN TIME CLOCK AND A PHOTOSENSOR CONTROL.
11. FOR EXTERIOR LIGHTING CONTROL WIRING INFORMATION, SEE EXTERIOR WIRING DETAIL SHOWN ON K–E–06.
12. FOR LIGHTING FIXTURE SCHEDULE SEE DRAWING GE–E–03.
13. ALL U3 FIXTURES SHALL BE PLACED 10 FT ABOVE THE FINISHED FLOOR.

LIGHTING CONTROL LEGEND

SYMBOL	DESCRIPTION
$ m	120 VOLT RATED LIGHTING SINGLE POLE SWITCH - (3W) - 3 WAY
RP	RELAY TIME CONTROL PANEL, DIGITAL CENTRAL PANEL DOUGLAS LIGHTING CONTROLS, DIALOG SYSTEM CATALOG NUMBER: WLCP-CPx/x OR APPROVED EQUAL. *x/x IS CAPACITY/QTY OF RELAYS - VARIES BY BUILDING.
PS	DIGITAL PHOTOCELL - PHOTOSENSOR SUITABLE FOR OUTDOOR APPLICATIONS DOUGLAS LIGHTING CONTROLS, DIALOG SYSTEM CATALOG NUMBER: WPS-3741B OR APPROVED EQUAL.

RESTAURANT KITCHEN – GROUND FLOOR LIGHTING PLAN
1/4"=1'–0"

0 4' 8'
SCALE: 1/4" = 1'–0"

CONSULTANT INFORMATION
Savin Engineers, P.C.

CONSULTANT SEAL
STATE OF NEW YORK · STEVEN A. MARTINO · 083631 · LICENSED PROFESSIONAL ENGINEER

REVISION NUMBER	DATE	MADE BY	APP'D BY	REVISION
1	09/21/2022	RKC	SM	BID ADDENDUM #3

RECORD DRAWING CERTIFICATION
☐ AS BUILT – CHANGES AS NOTED ☐ AS BUILT – NO CHANGES

CONTRACTOR
NAME
SIGNATURE
TITLE DATE

PROJECT COORDINATOR
NAME
SIGNATURE
TITLE DATE

WESTCHESTER COUNTY, NEW YORK
DEPARTMENT OF PUBLIC WORKS AND TRANSPORTATION
DIVISION OF ENGINEERING

INFRASTRUCTURE REHABILITATION - PHASE 3
PLAYLAND PARK, RYE, NEW YORK
RESTAURANT KITCHEN WITH FOOD VENDING
GROUND FLOOR LIGHTING PLAN

CONTRACT NUMBER	SHEET NUMBER
22-523	K-E-09

DWG NO.: 567 of 664
SCALE: AS SHOWN
DATE: 8/23/2022
DPW FILE NUMBER 1-118-E-1316-1 REV. NO. 1

Drawing Name: G:\Savin\Autocad\2060\25-Playland-Mega-3\E\KE-1008.dwg
Projectname: 211001F02 Comments: ----
Printed by: MGodby Date: 23 September 2022 4:42 PM Designed by: ----
Xrefs: [TB_24X36_WestchesterCo_3.dwg] [TSG-SVLOGO.dwg] [K-A-13.dwg] [K-E-1007.dwg]

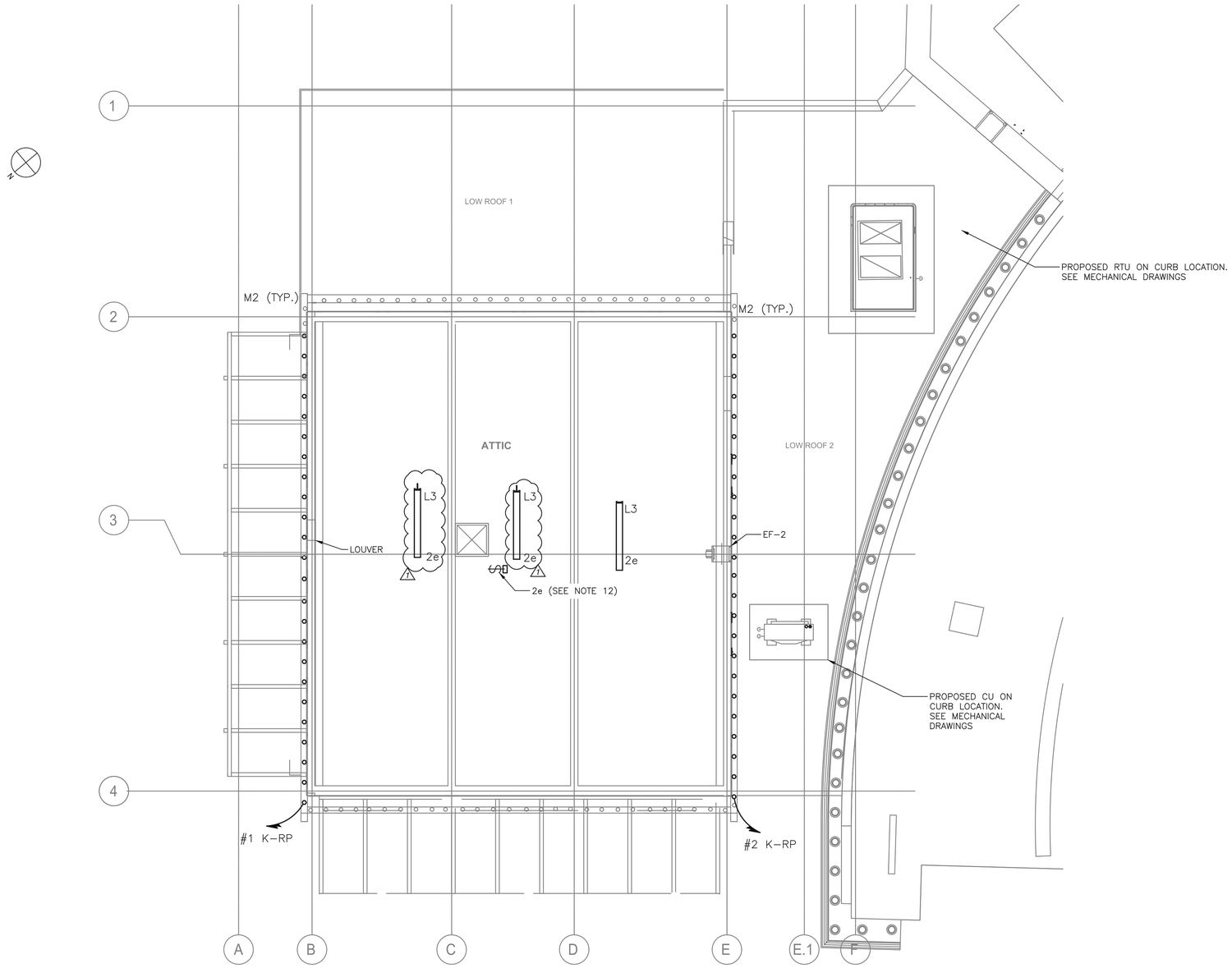

RESTAURANT KITCHEN SECOND FLOOR LIGHTING PLAN

1/4"=1'-0"

NOTES:

1. FOR ADDITIONAL NOTES, ABBREVIATIONS AND SYMBOLS, SEE DRAWING GE-E-01.
2. ALL LIGHTING SYSTEMS SHOWN ON PLAN ARE POWERED VIA LIGHTING PANEL K-LP-1, UNLESS NOTED OTHERWISE. CONTRACTOR SHALL CIRCUIT LIGHTING FIXTURES WITH 3/4" CONDUIT WITH 2#12 & 1#12GND, UNLESS NOTED OTHERWISE.
3. EXIT SIGNS SHALL BE WIRED TO THE UN-SWITCHED LEG OF THE DESIGNATED CIRCUIT.
4. EMERGENCY FIXTURES SHALL BE WIRED TO THE UN-SWITCHED LEG OF THE DESIGNATED CIRCUIT.
5. ALL EXTERIOR LIGHTING SHALL BE CIRCUITED TO RELAY PANEL K-RP. CONTRACTOR SHALL CIRCUIT LIGHTING FIXTURES WITH 3/4" CONDUIT WITH 2#10 & 1#10GND, UNLESS NOTED OTHERWISE.
6. FOR LIGHTING PANEL SCHEDULE, REFER TO DRAWING K-E-05, K-E-06.
7. NUMBER DESIGNATORS NEXT TO FIXTURES AND/OR CONTROLS INDICATE CIRCUIT NUMBERS.
8. RELAY PANEL SHALL BE EQUIPPED WITH BOTH A BUILT-IN TIME CLOCK AND A PHOTOSENSOR CONTROL.
9. FOR EXTERIOR LIGHTING CONTROL WIRING INFORMATION, SEE EXTERIOR WIRING DETAIL SHOWN ON K-E-06.
10. FOR LIGHTING FIXTURE SCHEDULE SEE DRAWING GE-E-03.
11. ALL L3 FIXTURES SHALL BE PLACED 12 FT ABOVE FINISHED FLOOR.
12. MOUNT ATTIC LIGHT SWITCH AT TOP OF ATTIC ACCESS HATCH.

0 4' 8'

SCALE: 1/4" = 1'-0"

Drawing Name: G:\SavinAutocad\2060\25-Playland-Mega-3\E\KE-1009.dwg
Rev#: Projectname: 211001F02 Comments: ---- Printed by: MGodby Date: 23 September 2022 4:42 PM Designed by: ----
Xrefs: [TB_24X36_WestchesterCo_3.dwg] [TSIS-SYLOGO.dwg] [K-A-14.dwg] [K-E-1008.dwg]

CONSULTANT INFORMATION

Savin Engineers, P.C.

CONSULTANT SEAL

STATE OF NEW YORK · STEVEN A. MARTINO · 083631 · LICENSED PROFESSIONAL ENGINEER

REVISION NUMBER	DATE	MADE BY	APP'D BY	REVISION
1	09/21/2022	RKC	SM	BID ADDENDUM #3

RECORD DRAWING CERTIFICATION

☐ AS BUILT – CHANGES AS NOTED ☐ AS BUILT – NO CHANGES

CONTRACTOR
NAME
SIGNATURE
TITLE DATE

PROJECT COORDINATOR
NAME
SIGNATURE
TITLE DATE

WESTCHESTER COUNTY, NEW YORK
DEPARTMENT OF PUBLIC WORKS AND TRANSPORTATION
DIVISION OF ENGINEERING

INFRASTRUCTURE REHABILITATION - PHASE 3
PLAYLAND PARK, RYE, NEW YORK
RESTAURANT KITCHEN WITH FOOD VENDING
SECOND FLOOR LIGHTING PLAN

CONTRACT NUMBER	22-523
SHEET NUMBER	K-E-10
DWG NO.	568 of 664
SCALE:	AS SHOWN
DATE:	8/23/2022
DPW FILE NUMBER	1-118-E-1317-1
REV. NO.	1

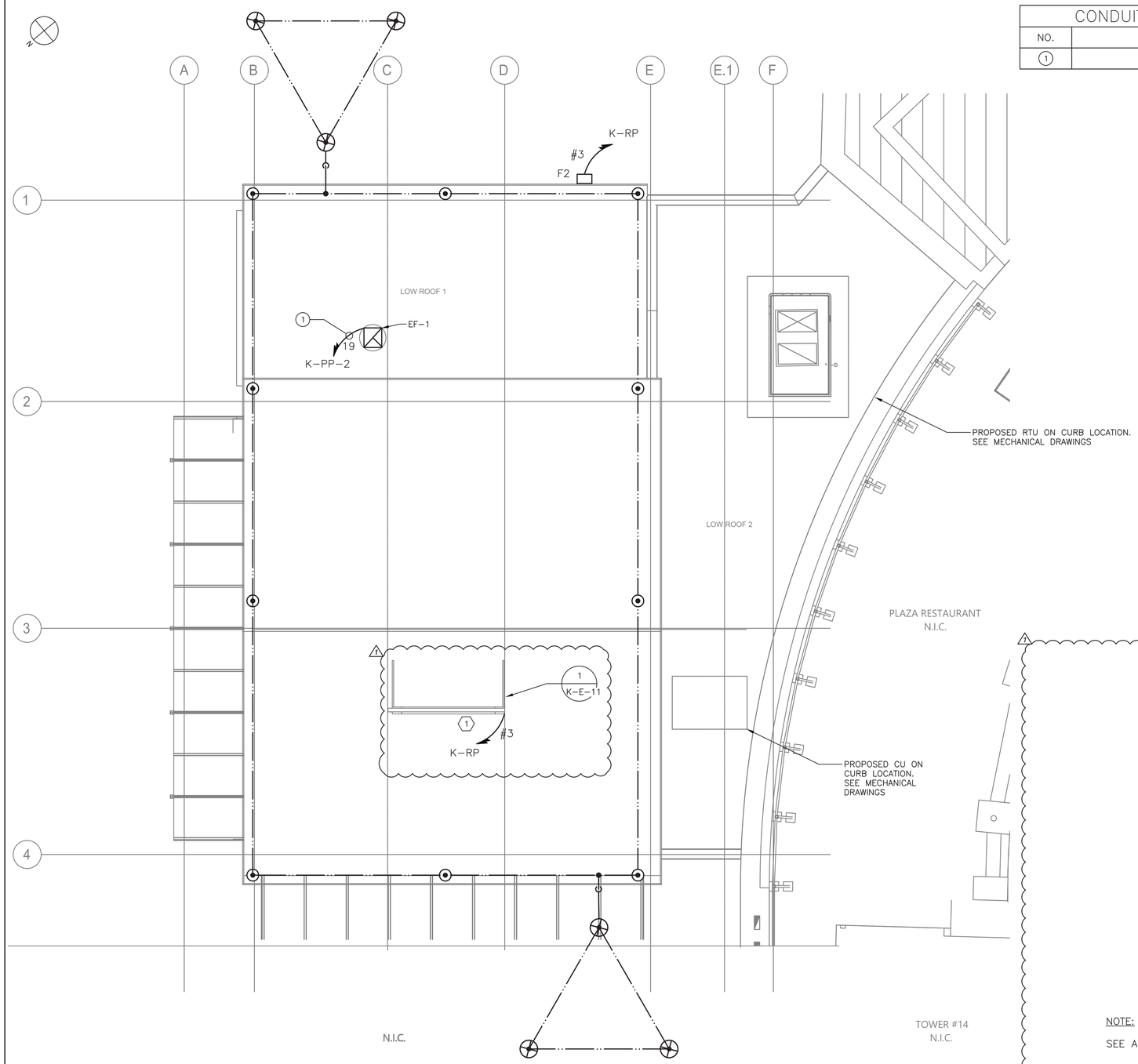

RESTAURANT KITCHEN ROOF PLAN – POWER, LIGHTING AND LIGHTNING PROTECTION
1/4"=1'-0"

CONDUIT AND WIRE LEGEND	
NO.	DESCRIPTION
1	3/4"C, 2#8 & 1#8 GND

NOTES:

1. FOR ADDITIONAL NOTES, ABBREVIATIONS AND SYMBOLS, SEE DRAWING GE-E-01.
2. CONTRACTOR IS ADVISED, THE LIGHTNING PROTECTION SYSTEM SHOWN SHALL BE USED AS A GUIDE AND FOR BIDDING PURPOSES. CONTRACTOR SHALL HIRE A CERTIFIED LIGHTNING PROTECTION SPECIALIST FOR INSTALLATION OF NEW SYSTEM. INSTALLER SHALL PROVIDE ALL THAT IS REQUIRED (PER NFPA 780) AND SHALL OBTAIN UL96A CERTIFICATION (MASTER LABEL) UPON COMPLETION. ADDITIONALLY, INSTALLER SHALL PROVIDE FOR ALL NECESSARY BONDING FOR COMPLETE SYSTEM.
3. CONTRACTOR SHALL COORDINATE WITH THE ARCHITECTURAL DRAWINGS FOR SPECIFIC INFORMATION ON THE NEW ROOF STRUCTURE AND MATERIALS.
4. ALL EXTERIOR LIGHTING SHALL BE CIRCUITED TO RELAY PANEL K-RP. CONTRACTOR SHALL CIRCUIT LIGHTING FIXTURES WITH 3/4" CONDUIT WITH 2#10 & 1#10 GND, UNLESS NOTED OTHERWISE.
5. TO MINIMIZE THE VISUAL IMPACT OF THE BUILDING ALL NEW DOWN CONDUCTORS SHALL BE ROUTED DOWN SIDE OF BUILDING. COORDINATE WITH ARCHITECTURAL FEATURES TO CONCEAL DOWN CONDUCTORS. CONTRACTOR SHALL COORDINATE WITH OTHER TRADES TO ACCOMPLISH THIS WORK. PROVIDE LPS BARE COPPER CABLE TO GROUND RODS.
6. CONTRACTOR IS ADVISED THE NEW DOWN CONDUCTOR SHALL BE BONDED TO THE LOWER METAL OVERHANG ROOF AND CONNECT TO THE EXISTING GROUND WIRE AND GROUND ROD AT GROUND LEVEL.
7. AT EACH LPS DOWN CONDUCTOR, PROVIDE TRIANGULAR GROUND GRID AS SHOWN (NOT ALL SHOWN),
8. EXHAUST FAN STARTERS SHALL BE FURNISHED BY THE EXHAUST FAN MANUFACTURER. FOR EXHAUST FAN STARTER REQUIREMENTS, SEE HVAC CONTRACT DRAWINGS AND SPECIFICATIONS.
9. ALL ROOF PENETRATIONS SHALL BE WATERPROOF. PENETRATION COMPONENTS FOR CONDUIT SHALL BE SUITABLE AND COMPATIBLE FOR INSTALLED ROOF. SEE ARCHITECTURAL AND PLUMBING DRAWINGS FOR ADDITIONAL INFORMATION.

KEY NOTES:

1. PROVIDE POWER CONDUIT AND WIRE FOR RESTAURANT ROOFTOP SIGNAGE AND LETTERING. ALL LIGHTING ASSOCIATED WITH SIGNAGE SHALL BE POWERED VIA RELAY PANEL K-RP.
2. PROVIDE NEW FLOODLIGHT FIXTURE TYPE F2, CONTRACTOR SHALL PROVIDE ALL NECESSARY CONDUIT AND WIRE. FLOODLIGHT SHALL BE POWERED VIA RELAY PANEL K-RP.

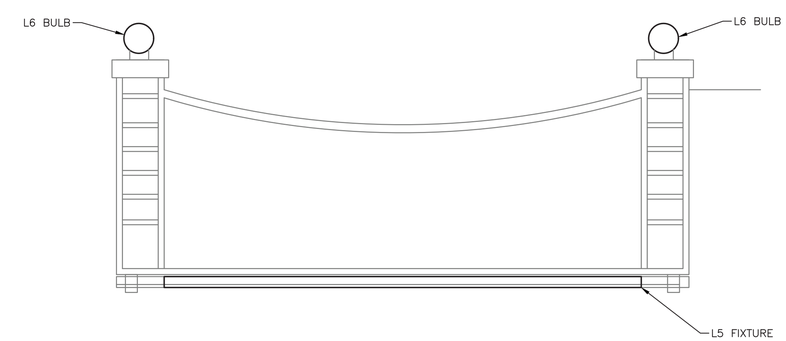

ROOFTOP SIGNAGE DETAIL
1"=1'-0"

NOTE:

SEE ARCHITECTURAL DRAWINGS FOR MORE INFORMATION.

0 1' 2'
SCALE: 1" = 1'-0"
0 4' 8'
SCALE: 1/4" = 1'-0"

CONSULTANT INFORMATION
Savin Engineers, P.C.

CONSULTANT SEAL
STATE OF NEW YORK · STEVEN A. MARTINO · 083631 · LICENSED PROFESSIONAL ENGINEER

REVISION NUMBER	DATE	MADE BY	APP'D BY	REVISION
1	09/21/2022	RKC	SM	BID ADDENDUM #3

RECORD DRAWING CERTIFICATION
☐ AS BUILT – CHANGES AS NOTED ☐ AS BUILT – NO CHANGES

CONTRACTOR
NAME
SIGNATURE
TITLE DATE

PROJECT COORDINATOR
NAME
SIGNATURE
TITLE DATE

WESTCHESTER COUNTY, NEW YORK
DEPARTMENT OF PUBLIC WORKS AND TRANSPORTATION
DIVISION OF ENGINEERING

INFRASTRUCTURE REHABILITATION - PHASE 3
PLAYLAND PARK, RYE, NEW YORK
RESTAURANT KITCHEN WITH FOOD VENDING
ROOF PLAN - POWER AND LIGHTNING PROTECTION

CONTRACT NUMBER	22-523
SHEET NUMBER	K-E-11
DWG NO.	569 of 664
SCALE:	AS SHOWN
DATE:	8/23/2022
DPW FILE NUMBER	1-118-E-1318-1
REV. NO.	1

Drawing Name: G:\SavinAutocad\2060\25-Playland-Mega-3\E\KE-1010.dwg
Ref#: Projectname: 211001F02 Comments: ----
Printed by: MGodby Date: 23 September 2022 4:43 PM Designed by: ----
Xrefs: [TB_24X36_WestchesterCo_3.dwg] [TSG-SVLOGO.dwg] [K-A-15.dwg] [K-E-1004.dwg]

FIRE ALARM DEMOLITION NOTES:

1. NO EXISTING FIRE ALARM DEVICES WERE NOTED DURING BUILDING SURVEY. ANY ABANDONED DEVICES OR WIRING DISCOVERED DURING THE COURSE OF DEMOLITION SHALL BE REMOVED.

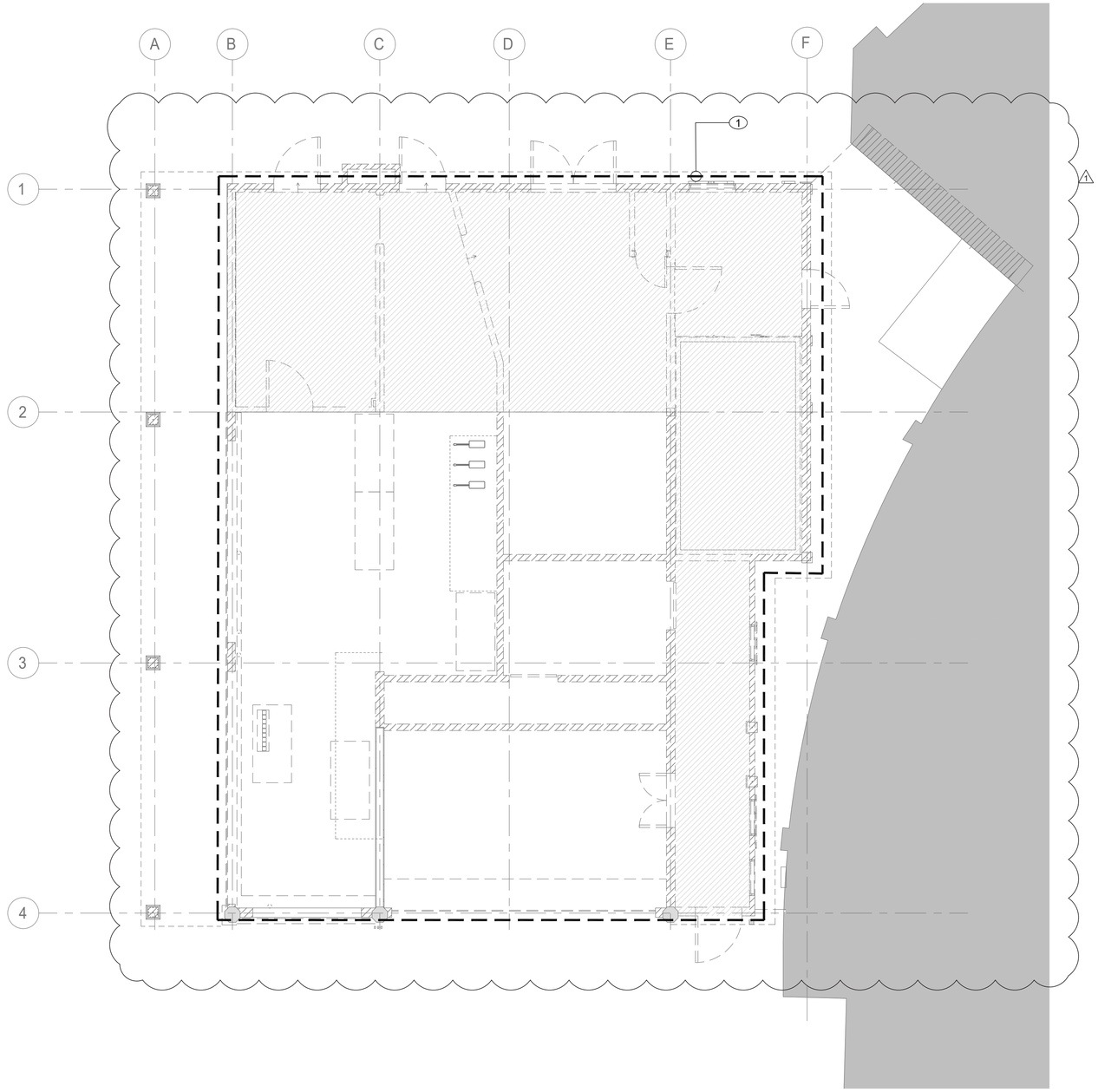

1 FIRE ALARM FIRST FLOOR DEMOLITION PLAN

SCALE: 1/4" = 1'-0"

CONSULTANT INFORMATION

LiRo Engineers, Inc.
A LiRo Group Company
Syosset, N.Y. 516-214-8157[T]

CONSULTANT SEAL

STATE OF NEW YORK · FRANK F. ULISSE · LICENSED PROFESSIONAL ENGINEER · 090111

REVISION NUMBER	DATE	MADE BY	APP'D BY	REVISION
1	9/21/22			BID ADDENDUM #3

RECORD DRAWING CERTIFICATION

☐ AS BUILT – CHANGES AS NOTED ☐ AS BUILT – NO CHANGES

CONTRACTOR
NAME
SIGNATURE
TITLE DATE

PROJECT COORDINATOR
NAME
SIGNATURE
TITLE DATE

WESTCHESTER COUNTY, NEW YORK
DEPARTMENT OF PUBLIC WORKS AND TRANSPORTATION
DIVISION OF ENGINEERING

INFRASTRUCTURE REHABILITATION - PHASE 3
PLAYLAND PARK, RYE, NEW YORK
RESTAURANT KITCHEN WITH FOOD VENDING
FIRE ALARM FIRST FLOOR DEMOLITION PLAN

CONTRACT NUMBER: 22-523
SHEET NUMBER: K-FA-11
DWG NO.: 571 of 664
SCALE: As indicated
DATE: 08/23/2022
DPW FILE NUMBER: 1-118-FA-1320-1
REV. NO.: 1

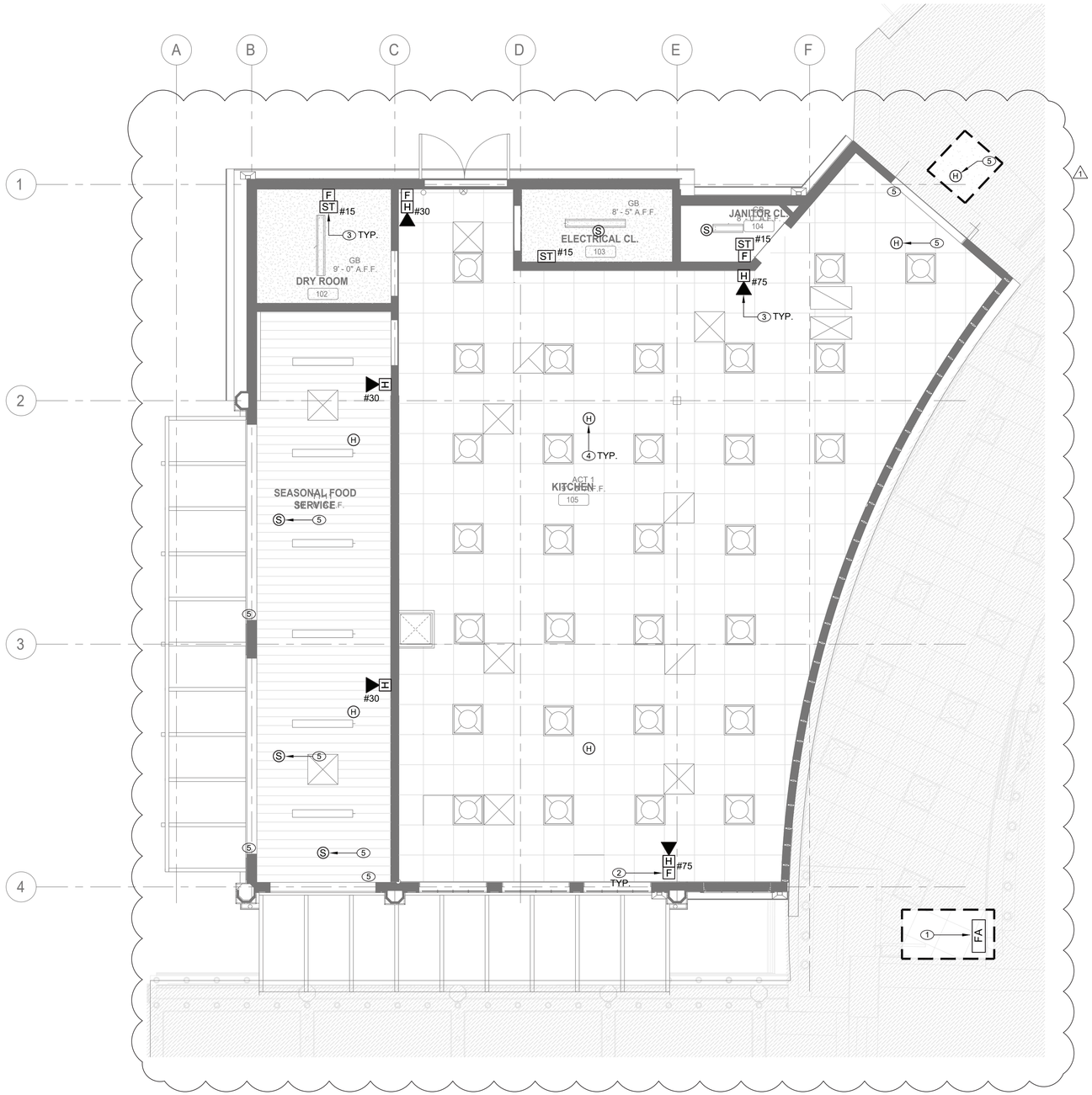

1 FIRE ALARM FIRST FLOOR CONSTRUCTION PLAN

SCALE: 1/4" = 1'-0"

FIRE ALARM CONSTRUCTION NOTES:

1. CONNECT NEW DEVICES TO EXISTING FIRE ALARM PANEL IN PLAZA RESTAURANT. PANEL SHALL REMAIN INSTALLED AND ACTIVE THROUGHOUT CONSTRUCTION. SYSTEM SHALL BE TESTED IN COORDINATION WITH FIRE ALARM SYSTEM VENDOR (EST). AS PART OF SYSTEM TESTING, ENSURE PANEL IS CONNECTED TO PARKWIDE SYSTEM.
2. NEW MANUAL PULL STATIONS SHALL BE INSTALLED AT 4'-0" ABOVE FINISHED FLOOR AT EACH BUILDING EXIT (MAX. DISTANCE OF 5'-0" FROM EXIT).
3. FIRE ALARM STROBES AND HORN STROBES SHALL BE FIELD ADJUSTABLE AND SET CANDELA RATING INDICATED ON PLAN. FIRE ALARM STROBES AND HORN STROBES SHALL BE INSTALLED AT 7'-4" ABOVE FINISHED FLOOR UNLESS OTHERWISE NOTED.
4. HEAT DETECTION SHALL BE PROVIDED FOR FUTURE KITCHEN EQUIPMENT. LOCATIONS SHOWN ARE APPROXIMATE. COORDINATE WITH TENANT KITCHEN LAYOUT (IF AVAILABLE) TO ENSURE COVERAGE OF COOKING EQUIPMENT.
5. AUTOMATIC CLOSURE OF ROLLING FIRE-RATED SERVICE AND COUNTER DOORS SHALL BE INITIATED BY FUSIBLE LINK AND NEARBY SMOKE OR HEAT DETECTORS. INSTALLATION OF FIRE-RATED DOORS AND INITIATING SMOKE DETECTORS SHALL COMPLY WITH NFPA 72 AND NFPA 80. INSTALL SMOKE/HEAT DETECTORS ON CENTER LINE OF CORRESPONDING DOOR. COORDINATE INSTALLATION, SEQUENCING, AND TESTING WITH DOOR MANUFACTURER. REFER TO ARCHITECTURAL DRAWINGS AND ARCHITECTURAL FIRE-RATED DOOR SPECIFICATION FOR ADDITIONAL INFORMATION.

FIRE ALARM GENERAL NOTES:

1. REFER TO DRAWING FA-001.00 FOR SYMBOLS, ABBREVIATIONS, AND NOTES. LAYOUT OF FIRE ALARM DEVICES ON THIS PLAN IS DIAGRAMMATIC; EXACT LOCATIONS OF DEVICES AND CONDUIT SHALL BE COORDINATED WITH FIELD CONDITIONS, ARCHITECTURAL REQUIREMENTS, AND MANUFACTURER RECOMMENDATIONS.
2. ALL DEVICES AND EQUIPMENT SHOWN ON THIS PLAN ARE NEW, UNLESS OTHERWISE NOTED.
3. INSTALL NEW FIRE ALARM SYSTEM IN STRICT ACCORDANCE WITH NFPA-72 AND NFPA-90A REQUIREMENTS.
4. CONTRACTOR SHALL INSTALL NEW FIRE ALARM SYSTEM AS INDICATED AND PROVIDE ALL NECESSARY WIRING, CONDUIT, AND APPARATUSES.
5. ALL VISUAL NOTIFICATION DEVICES IN THE SAME SPACE SHALL BE SYNCHRONIZED IN ACCORDANCE WITH NFPA-72.
6. COORDINATE INSTALLATION WITH FIRE ALARM SYSTEM VENDOR AND MANUFACTURER REQUIREMENTS.
7. COORDINATE FIRE ALARM DEVICES WITH ARCHITECTURAL FINISHES. CONCEAL CONDUIT IN FINISHED WALLS AND FLUSH MOUNT DEVICES WHERE POSSIBLE.
8. CONTRACTOR SHALL TEST THE FIRE ALARM SYSTEM AFTER COMPLETION OF INSTALLATION. FIRE ALARM SYSTEM SHALL BE TESTED AND VERIFIED TO BE WORKING PROPERLY PRIOR TO INSPECTION BY THE AUTHORITY HAVING JURISDICTION.
9. FOLLOWING INSTALLATION, CONTRACTOR SHALL PATCH, PAINT, AND RESTORE ALL WALLS AND CEILINGS TO MATCH EXISTING OR DESIRED NEW CONDITION.
10. FIRESTOP ALL FIRE-RATED FLOOR OR WALL PENETRATIONS TO MAINTAIN ORIGINAL FIRE RATING TO FULL DEPTH OF OPENING.
11. CONTRACTOR SHALL PROVIDE SLEEVE FOR CONDUIT PENETRATIONS THROUGH WALL AND CEILING FLOORS.

CONSULTANT INFORMATION

LiRo Engineers, Inc.
A LiRo Group Company
Syosset, N.Y. 516-214-8157[T]

CONSULTANT SEAL

STATE OF NEW YORK · FRANK F. GUNDER · 090777 · LICENSED PROFESSIONAL ENGINEER

REVISION NUMBER	DATE	MADE BY	APP'D BY	REVISION
1	9/21/22			BID ADDENDUM #3

RECORD DRAWING CERTIFICATION

☐ AS BUILT – CHANGES AS NOTED ☐ AS BUILT – NO CHANGES

CONTRACTOR: NAME / SIGNATURE / TITLE / DATE

PROJECT COORDINATOR: NAME / SIGNATURE / TITLE / DATE

WESTCHESTER COUNTY, NEW YORK
DEPARTMENT OF PUBLIC WORKS AND TRANSPORTATION
DIVISION OF ENGINEERING

INFRASTRUCTURE REHABILITATION - PHASE 3
PLAYLAND PARK, RYE, NEW YORK
RESTAURANT KITCHEN WITH FOOD VENDING
FIRE ALARM FIRST FLOOR PLAN

CONTRACT NUMBER	22-523
SHEET NUMBER	K-FA-21
DWG NO.	572 of 664
SCALE:	As indicated
DATE:	08/23/2022
DPW FILE NUMBER	1-118-FA-1321-1
REV. NO.	1

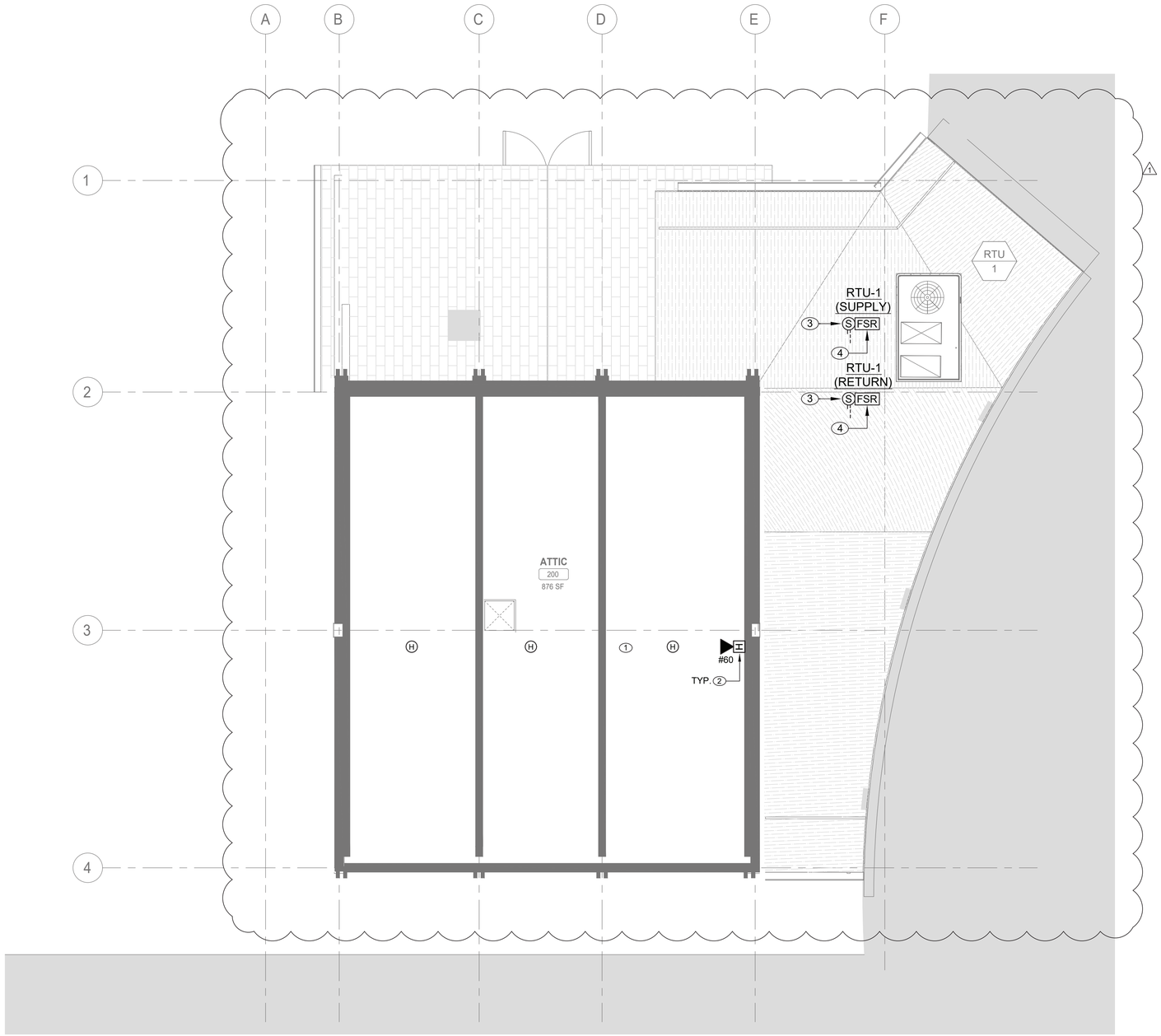

1 FIRE ALARM ATTIC FLOOR CONSTRUCTION PLAN

SCALE: 1/4" = 1'-0"

FIRE ALARM CONSTRUCTION NOTES:

1. CONNECT NEW DEVICES TO EXISTING FIRE ALARM PANEL IN PLAZA RESTAURANT. PANEL SHALL REMAIN INSTALLED AND ACTIVE THROUGHOUT CONSTRUCTION. SYSTEM SHALL BE TESTED IN COORDINATION WITH FIRE ALARM SYSTEM VENDOR (EST). AS PART OF SYSTEM TESTING, ENSURE PANEL IS CONNECTED TO PARKWIDE SYSTEM.
2. FIRE ALARM STROBES AND HORN STROBES SHALL BE FIELD ADJUSTABLE AND SET CANDELA RATING INDICATED ON PLAN. FIRE ALARM STROBES AND HORN STROBES SHALL BE INSTALLED AT 7'-4" ABOVE FINISHED FLOOR UNLESS OTHERWISE NOTED.
3. INSTALL DUCT MOUNTED SMOKE DETECTORS AT SUPPLY AND RETURN OF NEW ROOFTOP UNIT. COORDINATE INSTALLATION WITH MECHANICAL DRAWINGS AND MECHANICAL CONTRACTOR. CONNECT TO FIRE ALARM SYSTEM.
4. PROVIDE FAN SHUTDOWN RELAYS AND CONNECT TO SUPPLY AND RETURN DUCT DETECTORS. COORDINATE INSTALLATION WITH MECHANICAL DRAWINGS AND MECHANICAL CONTRACTOR. PROVIDE WIRING AND PROGRAMMING FOR UNIT SHUTDOWN IN ACCORDANCE WITH FIRE ALARM SEQUENCE OF OPERATIONS.

FIRE ALARM GENERAL NOTES:

1. REFER TO DRAWING FA-001.00 FOR SYMBOLS, ABBREVIATIONS, AND NOTES. LAYOUT OF FIRE ALARM DEVICES ON THIS PLAN IS DIAGRAMMATIC; EXACT LOCATIONS OF DEVICES AND CONDUIT SHALL BE COORDINATED WITH FIELD CONDITIONS, ARCHITECTURAL REQUIREMENTS, AND MANUFACTURER RECOMMENDATIONS.
2. ALL DEVICES AND EQUIPMENT SHOWN ON THIS PLAN ARE NEW, UNLESS OTHERWISE NOTED.
3. INSTALL NEW FIRE ALARM SYSTEM IN STRICT ACCORDANCE WITH NFPA-72 AND NFPA-90A REQUIREMENTS.
4. CONTRACTOR SHALL INSTALL NEW FIRE ALARM SYSTEM AS INDICATED AND PROVIDE ALL NECESSARY WIRING, CONDUIT, AND APPARATUSES.
5. ALL VISUAL NOTIFICATION DEVICES IN THE SAME SPACE SHALL BE SYNCHRONIZED IN ACCORDANCE WITH NFPA-72.
6. COORDINATE INSTALLATION WITH FIRE ALARM SYSTEM VENDOR AND MANUFACTURER REQUIREMENTS.
7. COORDINATE FIRE ALARM DEVICES WITH ARCHITECTURAL FINISHES. CONCEAL CONDUIT IN FINISHED WALLS AND FLUSH MOUNT DEVICES WHERE POSSIBLE.
8. CONTRACTOR SHALL TEST THE FIRE ALARM SYSTEM AFTER COMPLETION OF INSTALLATION. FIRE ALARM SYSTEM SHALL BE TESTED AND VERIFIED TO BE WORKING PROPERLY PRIOR TO INSPECTION BY THE AUTHORITY HAVING JURISDICTION.
9. FOLLOWING INSTALLATION, CONTRACTOR SHALL PATCH, PAINT, AND RESTORE ALL WALLS AND CEILINGS TO MATCH EXISTING OR DESIRED NEW CONDITION.
10. FIRESTOP ALL FIRE-RATED FLOOR OR WALL PENETRATIONS TO MAINTAIN ORIGINAL FIRE RATING TO FULL DEPTH OF OPENING.
11. CONTRACTOR SHALL PROVIDE SLEEVE FOR CONDUIT PENETRATIONS THROUGH WALL AND CEILING FLOORS.

CONSULTANT INFORMATION

LiRo Engineers, Inc.
A LiRo Group Company
Syosset, N.Y. 516-214-8157[T]

CONSULTANT SEAL

STATE OF NEW YORK · FRANK F. ULISSE · LICENSED PROFESSIONAL ENGINEER · 090111

REVISION NUMBER	DATE	MADE BY	APP'D BY	REVISION
1	9/21/22			BID ADDENDUM #3

RECORD DRAWING CERTIFICATION

☐ AS BUILT – CHANGES AS NOTED ☐ AS BUILT – NO CHANGES

CONTRACTOR: NAME / SIGNATURE / TITLE / DATE

PROJECT COORDINATOR: NAME / SIGNATURE / TITLE / DATE

WESTCHESTER COUNTY, NEW YORK
DEPARTMENT OF PUBLIC WORKS AND TRANSPORTATION
DIVISION OF ENGINEERING

INFRASTRUCTURE REHABILITATION - PHASE 3
PLAYLAND PARK, RYE, NEW YORK
RESTAURANT KITCHEN WITH FOOD VENDING
FIRE ALARM ATTIC FLOOR PLAN

CONTRACT NUMBER	22-523
SHEET NUMBER	K-FA-22
DWG NO.	573 of 664
SCALE:	As indicated
DATE:	08/23/2022
DPW FILE NUMBER	1-118-FA-1322-1
REV. NO.	1

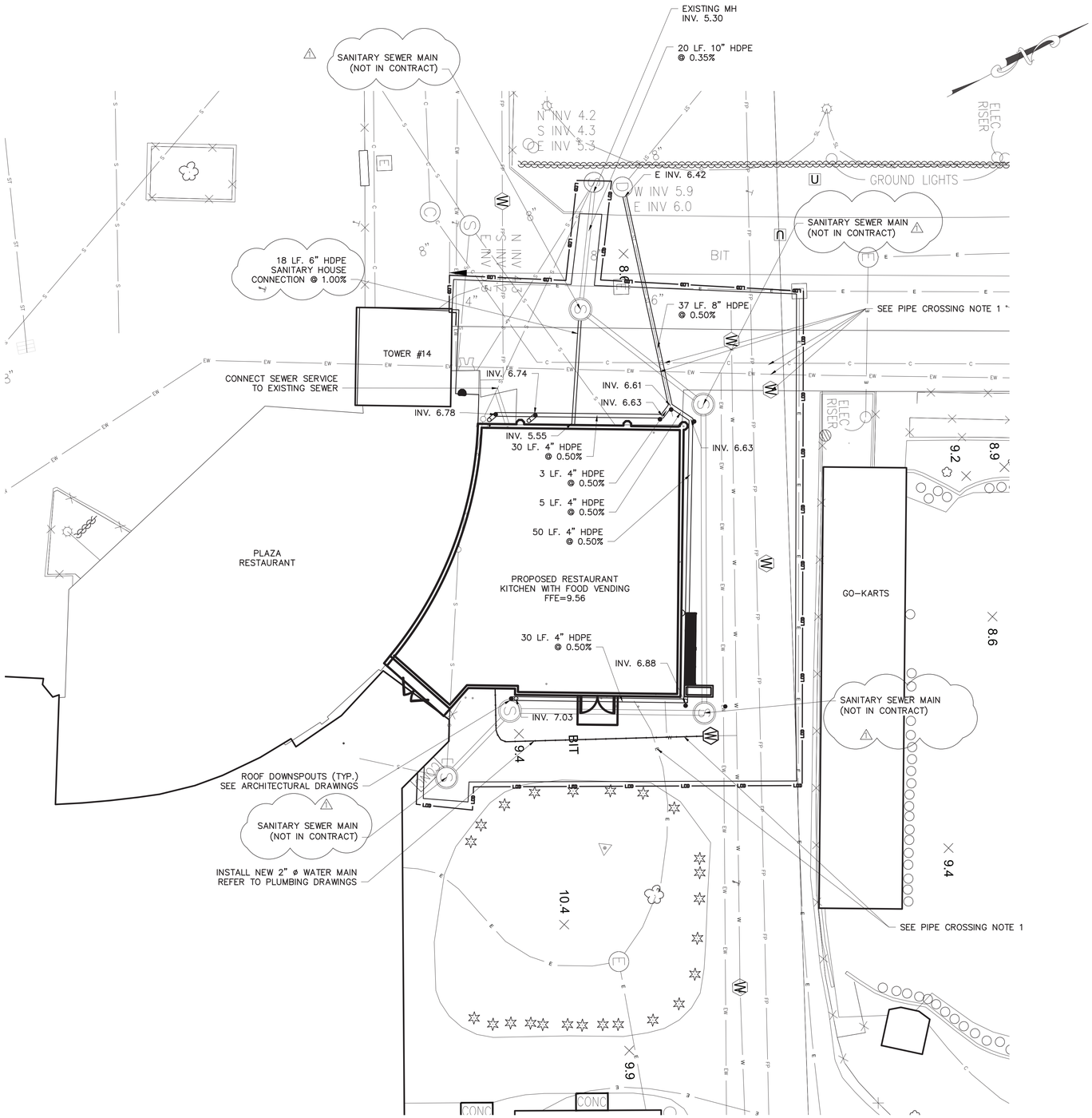

NOTE:
SEE FIRE PROTECTION PLAN FOR DETAILS ON
CONNECTION TO BUILDING EXPANSION

NOTES:
1. CONTRACTOR TO VERIFY DEPTH OF EXISTING UTILITIES PRIOR TO START OF PIPE LAYOUT TO CONFIRM CLEAR AND RECONCILE CROSSINGS.

EXISTING LEGEND

- POST
- UTILITY POLE
- SIGN
- HANDICAP PARKING
- GROUND LIGHT
- LIGHT POLE
- UTILITY POLE WITH LIGHT
- LIGHT POLE (SINGLE LIGHT)
- LIGHT POLE (DOUBLE LIGHT)
- LIGHT POLE (MULTI LIGHT)
- BOAT TIE-OFF CLEAT
- CATCH BASIN
- TRENCH DRAIN
- MAILBOX
- UNKNOWN MANHOLE
- COMMUNICATIONS BOX/HAND HOLE
- ELECTRIC HAND HOLE
- ELECTRIC BOX
- GAS METER
- IRRIGATION BOX
- UNKNOWN UTILITY BOX/HAND HOLE
- COMMUNICATION MANHOLE
- DRAINAGE MANHOLE
- ELECTRIC MANHOLE
- SEWER MANHOLE
- STORM SEWER MANHOLE
- SEWER CLEANOUT
- HYDRANT
- SIAMESE CONNECTION
- UNKNOWN VALVE
- WATER VALVE
- GAS VALVE
- WATER SPIGOT OR FOUNTAIN
- MONITORING WELL
- DECIDUOUS BUSH
- EVERGREEN BUSH
- DECIDUOUS TREE
- EVERGREEN TREE
- STUMP
- HEDGE ROW
- TREELINE
- BRUSHLINE
- RETAINING WALL
- GUIDE RAIL
- STONE WALL
- WATERLINE
- FENCE
- UNDERGROUND COMMUNICATION
- UNDERGROUND PROPANE
- UNDERGROUND ELECTRICAL
- UNDERGROUND STREET LIGHTING
- UNDERGROUND ENVIRONMENTAL WASTEWATER
- UNDERGROUND SEWER
- UNDERGROUND STORM SEWER
- UNDERGROUND WATER
- UNDERGROUND FIRE PROTECTION

PROPOSED LEGEND:

- **SAW CUTTING ASPHALT CONCRETE**
- LIMITS OF DISTURBANCE
- LIMITS OF PAVEMENT REMOVAL (MILLING & EXCAVATION)
- PROPOSED WATER LINE
- PROPOSED CATCH BASIN
- PROPOSED STORM PIPE
- PROPOSED SANITARY MANHOLE
- PROPOSED SANITARY PIPE
- PROPOSED UNDERGROUND ELECTRIC

0 10 20 30
1"=10' SCALE BAR

6/15/2022 4:10:27 PM

CONSULTANT INFORMATION
LiRo Engineers, Inc.
A LiRo Group Company
Mineola, N.Y. 516-746-2350[T]

CONSULTANT SEAL
STATE OF NEW YORK · KENNETH J. HOUSTON · LICENSED PROFESSIONAL ENGINEER · 089134

REVISION NUMBER	DATE	MADE BY	APP'D BY	REVISION
1	9/21/22	HIK	LK	BID ADDENDUM #3

RECORD DRAWING CERTIFICATION
☐ AS BUILT – CHANGES AS NOTED ☐ AS BUILT – NO CHANGES

CONTRACTOR
NAME
SIGNATURE
TITLE DATE

PROJECT COORDINATOR
NAME
SIGNATURE
TITLE DATE

WESTCHESTER COUNTY, NEW YORK
DEPARTMENT OF PUBLIC WORKS AND TRANSPORTATION
DIVISION OF ENGINEERING

INFRASTRUCTURE REHABILITATION PHASE 3
PLAYLAND PARK, RYE, NEW YORK
RESTAURANT KITCHEN WITH FOOD VENDING
UTILITY CONSTRUCTION PLAN

CONTRACT NUMBER	22-523
SHEET NUMBER	K-C-04
DWG NO.	578 of 664
SCALE:	1"=10'
DATE:	08/23/2022
DPW FILE NUMBER	1-118-C-1327-1
REV. NO.	1

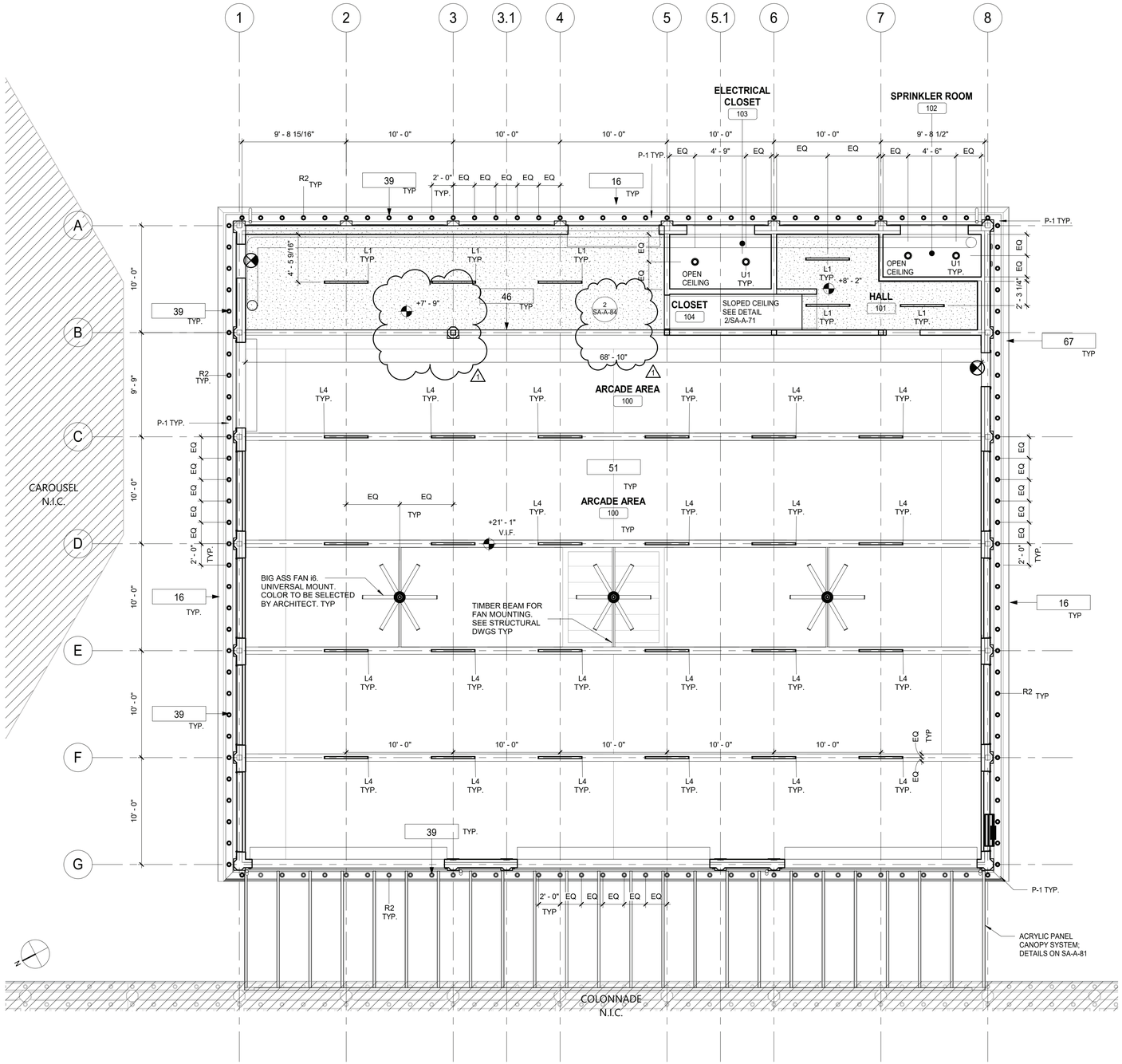

1 GROUND LEVEL REFLECTED CEILING PLAN
3/16" = 1'-0"

RCP GENERAL NOTES

1. CEILING TILES TO BE CENTERED BOTH WAYS IN EACH OR UNLESS DIMENSIONED OTHERWISE.
2. ALL DIMENSIONS ARE TO THE CENTER OF LIGHT FIXTURE, U.N.O.
3. FIXTURES LOCATED WITHIN THE CEILING GRID, ARE NOT NECESSARILY CENTERED IN EACH CEILING TILE. FOLLOW DIMENSIONS ON PLAN. IF NO DIMENSION IS PRESENT CONTACT ARCHITECT TO VERIFY LOCATION.
4. LIGHT FIXTURES TO BE LOCATED AS INDICATED ON THIS PLAN. REFER TO ELECTRICAL DRAWINGS FOR EXACT NUMBER AND TYPE OF LIGHT FIXTURE. CONTACT ARCHITECT/ ENGINEER IMMEDIATELY IF THERE ARE ANY DISCREPANCIES.
5. REFER TO MECHANICAL DRAWINGS FOR MECHANICAL DUCT DISTRIBUTION SYSTEM.
6. THE G.C. SHALL SET ALL CEILING AND SOFFITS USING A LASER LEVEL TO ACHIEVE A CEILING THAT IS PLUMBING, LEVEL, AND SQUARE TO ALL WALLS AND SOFFITS.
7. ALL NOTED CEILING DIMENSIONS ARE INDICATED AS CLEAR ABOVE FINISHED FLOOR DIMENSIONS. VERIFY THICKNESS OF FLOOR CONSTRUCTION WITH FLOOR SUBCONTRACTOR PRIOR TO THE INSTALLATION OF ANY NEW CEILING CONSTRUCTION IN ORDER TO ACHIEVE NOTED REQUIRED DIMENSIONS.
8. ALL SOFFIT DIMENSIONS ARE TO FINISH FACE, U.N.O.
9. ALL EXTERIOR DIMENSIONS ARE TO THE FACE OF EXTERIOR FINISH, U.N.O.
10. G.C. TO PROVIDE ADEQUATE CLEARANCES FOR FIXTURES, DUCTS, CEILINGS, AND PERTINENT ITEMS NECESSARY TO MAINTAIN THE SPECIFIC HEIGHTS ABOVE FINISH FLOOR. COORDINATE MECHANICAL, ELECTRICAL AND PLUMBING AS REQUIRED.
11. ADDITIONAL HANGER AND SAFETY WIRES FOR LIGHT FIXTURES AND AIR SUPPLY/ RETURN DIFFUSERS AS REQUIRED BY LOCAL CODES TO BE THE RESPONSIBILITY OF THE SUB-CONTRACTOR. ALL WIRING SUPPORT TO BE "CEILING GRADE" AS CONCURRENT WITH ELECTRICAL CODE ADOPTED FOR JURISDICTION OF PROJECT.
12. ALL CEILING ELEVATIONS DIMENSIONED FROM FINISH FLOOR BELOW.

RCP PLAN NOTES

1. REFER TO FINISH SCHEDULE FOR CEILING TYPES AND HEIGHTS.
2. LOCATIONS OF LIGHT FIXTURES SHALL BE COORDINATED WITH MECHANICAL, ELECTRICAL, SPRINKLER, FIRE DETECTION, SURVEILLANCE, ETC. EQUIPMENT.
3. CONTRACTOR SHALL PROVIDE THE NECESSARY FRAMING OR BRIDGING FOR ALL LIGHT FIXTURES, DIFFUSERS, RETURNS, ETC., AS WELL AS REQUIRED CUTOUTS.
4. CONTRACTOR SHALL NOTIFY THE ARCHITECT OF ANY POSSIBLE INTERFERENCES BEFORE PROCEEDING WITH CEILING INSTALLATION.
5. COORDINATE ALL TRADES INVOLVED IN ABOVE CEILING WORK TO ENSURE CLEARANCE OF FIXTURE, DUCTS, CEILING, ETC., NECESSARY TO MAINTAIN THE SPECIFIED CEILING HEIGHT ABOVE THE FINISHED FLOOR. NOTIFY ARCHITECT OF ANY CONFLICTS.
6. CEILING CONSTRUCTION SHALL NOT BE CLOSED IN UNTIL ALL DUCTWORK, PLUMBING, ELECTRICAL CONDUITS AND LINES HAVE BEEN INSPECTED FOR PROPER INSTALLATION.
7. THE CEILING PANEL JOINTS SHALL BE ALIGNED PERFECTLY WITH LIGHTING FIXTURES.
8. ALL JOINTS IN THE PANEL SHALL BE SQUARE, LEVEL AND PERFECTLY ALIGNED WITH EACH OTHER AND WITH BUILDING FIXTURES.
9. UNLESS NOTED ON THE REFLECTED CEILING PLAN, ALL LIGHT FIXTURES SHALL BE EQUALLY SPACED AND CENTERED IN THE SPACE.
10. ALL DIMENSIONS ARE TO FINISHED FACE OF WALL OR CENTERLINE OF LIGHT FIXTURES. CENTERLINES ARE IMPLIED ON DRAWINGS.
11. CONTRACTOR SHALL INSTALL ACCESS PANELS IN T1-11 CEILINGS FOR ACCESS TO MECHANICAL, PLUMBING, TELEPHONE & ELECTRICAL CONTROL EQUIPMENT REQUIRING ACCESS.
12. IN GENERAL, WITHIN EACH AREA, CEILING WORK REQUIREMENTS SHALL BE EXECUTED IN SUCH A MANNER AS TO PROVIDE CONTINUOUS MATCHED AND ALIGNED CEILINGS. THE FINAL CEILING INSTALLATION SHALL BE FREE OF ALL VISUAL DEFECTS.
13. CONTRACTOR TO PROVIDE PAINTED FINISH AS SPECIFY FOR ALL EXPOSED PLUMBING, MECHANICAL, FIRE PROTECTION, & OTHER BUILDING SYSTEM COMPONENTS. COORDINATE COLOR SELECTION WITH ARCHITECT.
14. PREP/PAINT ALL EXPOSED TRUSSED, BEAMS, & OTHER EXISTING SURFACES AS FINISH SURFACES.
15. LOCATION OF SUSPENDED LIGHT FIXTURES SHALL BE COORDINATED WITH THE FIXTURES BELOW.
16. REFER TO THE ELECTRICAL DRAWINGS FOR ALL CIRCUITING AND TYPE OF LIGHTING FIXTURE IN THE LEGEND.
17. ALL SUSPENDED FIXTURES SHALL BE SUPPORTED BY AIRPLANE CABLE OF SUFFICIENT SIZE TO SUPPORT FIXTURES.
18. REFER TO ARCHITECTURAL PLANS, SECTIONS, AND FINISH SCHEDULE FOR ADDITIONAL INFORMATION.
19. EXISTING HORIZONTAL STORM DRAINAGE PIPING AND CONNECTIONS LOCATED ABOVE THE CEILING SHALL BE INSULATED.
20. LIGHT FIXTURES SHALL BE COORDINATED WITH MECHANICAL EQUIPMENT IN AREAS OF EXPOSED STRUCTURES.

RCP LEGEND

- R-2 EXTERIOR RECESSED CAN LIGHT IN SOFFIT
- L-1 SURFACE MOUNTED LINEAR LIGHT
- L-4 INTERIOR PENDANT LIGHT; MOUNTED TO BOTTOM OF TRUSS
- U-3 INTERIOR RECESSED CAN LIGHT
- GYPSUM WALL BOARD CEILING GYP-1
- N.I.C. — INDICATES SCOPE NOT IN CONTRACT
- ? — KEY NOTES
- EX — EX- EXIT SIGN
- SUPPLY DIFFUSER. SEE MECHANICAL DRAWINGS
- EXHAUST GRILL. SEE MECHANICAL DRAWINGS
- OS — OS - OCCUPANCY SENSOR
- CEILING FAN; TYPE: BIG ASS FAN i6 COLOR: TO BE SELECTED BY ARCHITECT MOUNTING: UNIVERSAL MOUNT SEE DETAILS ON SHEET 10/SA-A-84

KEYNOTE LEGEND CONST.

Key Value	Keynote Text
16	PROVIDE AND INSTALL ALUMINUM METAL DRIP EDGE, DOWNSPOUT AND GUTTER AT PERIMETER OF ROOF.
39	NEW SOFFIT WITH RECESSED LIGHTS AS INDICATED ON RCP
46	EXISTING ROOF BEAMS AND TRUSSES TO NOT BE PAINTED.
51	NEW BIRD NETTING INSTALLED TIGHT UNDER ALL INTERIOR WOOD TRUSSES. ENSURE NO DAMAGE OCCURS TO EXISTING STRUCTURE SO AS TO ALTER ITS STRUCTURAL INTEGRITY. ZIPPERS TO BE COORDINATED WITH LOCATION OF SPRINKLER HEADS.
67	NEW FASCIA BOARD AND SOFFIT.

9/26/2022 6:10:15 PM

CONSULTANT INFORMATION

The LiRo Group
3 Aerial Way, Syosset, New York 11791
(516) 938-5476 www.liro.com

CONSULTANT SEAL

REGISTERED ARCHITECT ROBERT D. JOHNSON 023280 STATE OF NEW YORK

REVISION NUMBER	DATE	MADE BY	APP'D BY	REVISION
1	09/21/22			BID ADDENDUM # 3

RECORD DRAWING CERTIFICATION

☐ AS BUILT – CHANGES AS NOTED ☐ AS BUILT – NO CHANGES

CONTRACTOR: NAME ____ SIGNATURE ____ TITLE ____ DATE ____

PROJECT COORDINATOR: NAME ____ SIGNATURE ____ TITLE ____ DATE ____

WESTCHESTER COUNTY, NEW YORK
DEPARTMENT OF PUBLIC WORKS AND TRANSPORTATION
DIVISION OF ENGINEERING

INFRASTRUCTURE REHABILITATION - PHASE 3
PLAYLAND PARK, RYE, NEW YORK
SOUTHEAST ARCADE BUILDING
SE ARCADE REFLECTED CEILING PLANS

CONTRACT NUMBER	22-523
SHEET NUMBER	SA-A-12
DWG NO.:	595 of 664
SCALE:	As indicated
DATE:	08/23/2022
DPW FILE NUMBER	1-118-A-1344-1
REV. NO.	1

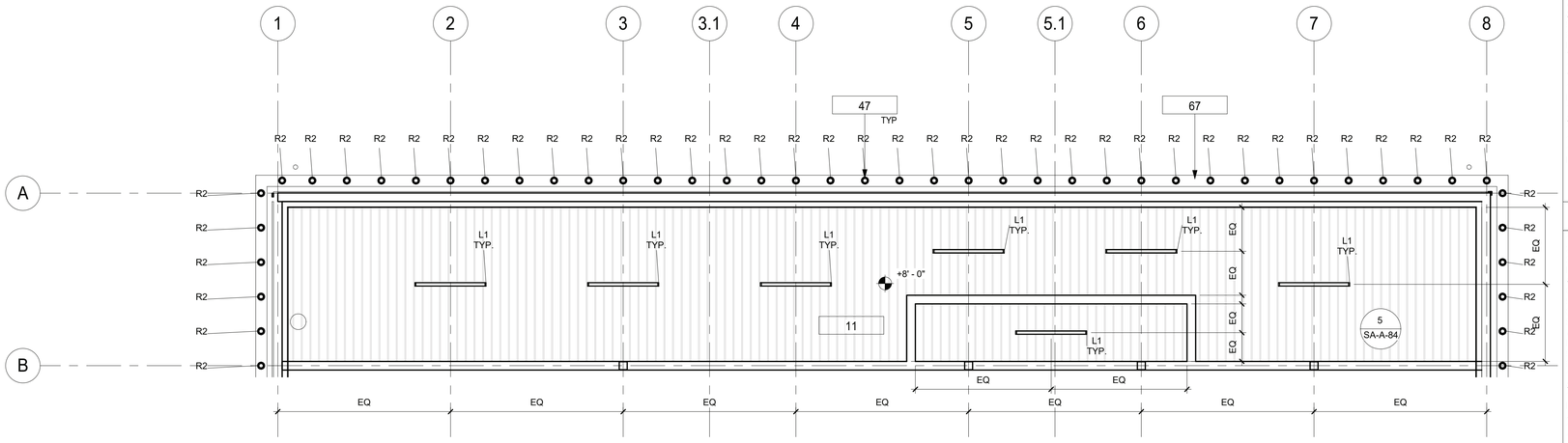

2 SECOND FLOOR REFLECTED CEILING PLAN

1/4" = 1'-0"

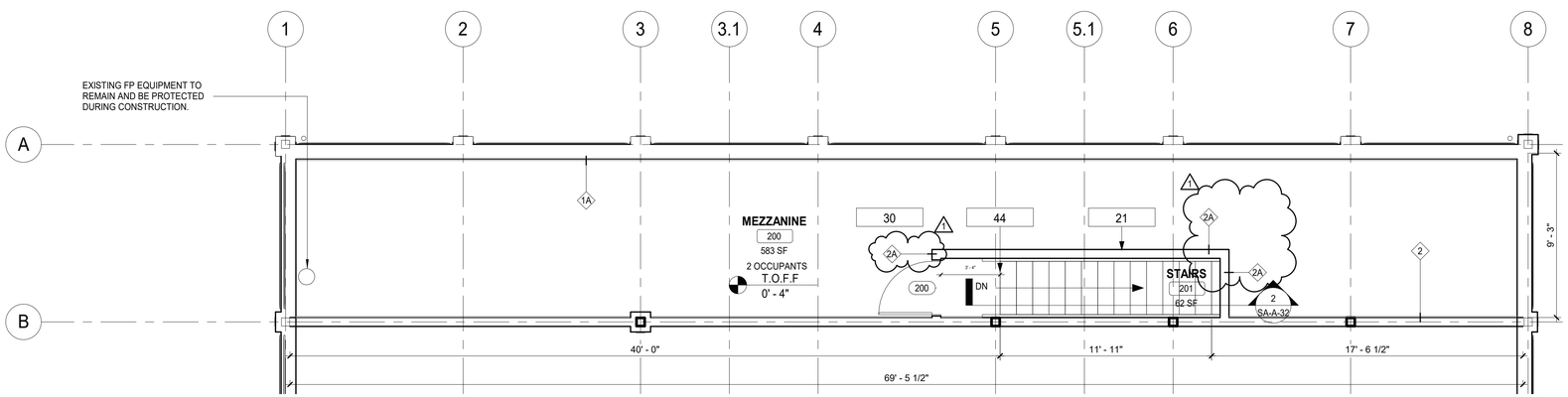

1 MEZZANINE CONSTRUCTION PLAN

1/4" = 1'-0"

FLOOR PLAN GENERAL NOTES

1. ALL METAL STUDS 20 GA- TYPICAL NON-LOAD BEARING PARTITIONS. SEE USG STEEL- FRAMED DRYWALL SYSTEMS " LIMITING HEIGHT"- STEEL STUD ASSEMBLIES CHART. USE THE L/240 ALLOWABLE DEFLECTION FIGURES ONLY.
2. DIMENSIONS ARE TO FACE OF GYPSUM WALL BOARD, EXISTING WALL, GRID LINES, OR CENTERLINE OF COLUMN. ALL ELEVATIONS ARE NOTED FROM FINISH FLOOR ELEVATIONS.
3. PROVIDE DRYWALL TRIM AT ALL EXPOSED EDGES AND CORNERS.
4. MINIMUM DIMENSION FROM ANY CORNER OR WALL TO FRAMING STUD AT DOOR JAMB OPENING SHALL BE 4" (U.O.N.).
5. PROVIDE METAL BLOCKING FOR ANY WALL MOUNTED EQUIPMENT OR ACCESSORIES. COORDINATE ALL BLOCKING REQUIREMENTS NECESSARY WITH OTHER TRADES.
6. THE G.C. SHALL VERIFY DIMENSIONS OF THE EXISTING SPACE AND OF ANY EXISTING CONSTRUCTION TO REMAIN BY ACTUAL MEASUREMENT BEFORE ANY WORK IS PERFORMED. IF ANY MEASUREMENTS DIFFER FROM DIMENSIONS SHOWN ON PLAN, G.C. IS TO NOTIFY THE ARCHITECT IMMEDIATELY. THE G.C. SHALL BE RESPONSIBLE FOR CORRECTING ANY AND ALL DISCREPANCIES FOUND AFTER THE WORK IS PERFORMED, AT NO ADDITIONAL EXPENSE TO THE OWNER.
7. G.C. TO VERIFY ALL FINISHED DIMENSIONS. FIELD CONDITIONS ALTERING ANY DIMENSIONS SHOULD BE BROUGHT TO THE ATTENTION OF THE OWNER AND ARCHITECT.
8. THE G.C. SHALL PROVIDE CAULK JOINTS WHERE GYP. BD. MEETS THE FLOOR OR ROOF DECK.
9. THE G.C. SHALL BE RESPONSIBLE FOR COORDINATING WITH OWNER ON ALL WORK TO BE PERFORMED BY THE OWNER. ANY POTENTIAL CONFLICTS OR DELAYS CAUSED BY THE OWNER'S SUBCONTRACTORS MUST BE DOCUMENTED IN WRITING TO THE OWNER BEFORE THE DELAY IS ACTUALLY INCURRED FOR IT TO BE CONSIDERED. OTHERWISE THE G.C. WILL BE RESPONSIBLE FOR MEETING THE SCHEDULE AS OUTLINED IN THE CONTRACT.
10. THE G.C. SHALL SUPPLY ALL MATERIAL, LABOR, AND COORDINATION REQUIRED FOR THE INSTALLATION OF ALL OWNER- SUPPLIED ITEMS AS DESCRIBED IN THE DOCUMENTS, U.N.O.
11. THE G.C. IS RESPONSIBLE FOR ALL FLOOR AND WALL PENETRATIONS FOR ELECTRICAL AND MECHANICAL WORK. ALL SUCH OPENING SHALL BE FRAMED AND REINFORCED.
12. FLOOR SURFACES SHALL BE LEVELED TO ASSURE SMOOTH SURFACE FOR FINISH FLOOR INSTALLATION. G.C. SHALL ALSO PAY SPECIAL ATTENTION THAT ALL WALL SURFACES ARE SMOOTH WHERE MURALS WILL BE DIRECTLY APPLIED TO WALL.
13. G.C. TO COORDINATE ALL UTILITY STUB-UPS AND LOCATION OF ALL EQUIPMENT PRIOR TO INSTALLING ANY ONE ITEM.
14. REFER TO SHEET PR-A-63 FOR PARTITION TYPE INFORMATION.
15. PROVIDE PAINTED ACCESS PANELS IN WALLS & CEILING AT CONCEALED ITEMS. SUCH AS VALVES, CONTROLS, SWITCHES OR ANY OTHER ITEMS THAT REQUIRES ACCESS. G.C. TO DETERMINE ACCESS PANEL LOCATION W/ ARCHITECT PRIOR TO INSTALLATION.

RCP GENERAL NOTES

1. CEILING TILES TO BE CENTERED BOTH WAYS IN EACH OR UNLESS DIMENSIONED OTHERWISE.
2. ALL DIMENSIONS ARE TO THE CENTER OF LIGHT FIXTURE, U.N.O.
3. FIXTURES LOCATED WITHIN THE CEILING GRID, ARE NOT NECESSARILY CENTERED IN EACH CEILING TILE. FOLLOW DIMENSIONS ON PLAN. IF NO DIMENSION IS PRESENT CONTACT ARCHITECT TO VERIFY LOCATION.
4. LIGHT FIXTURES TO BE LOCATED AS INDICATED ON THIS PLAN. REFER TO ELECTRICAL DRAWINGS FOR EXACT NUMBER AND TYPE OF LIGHT FIXTURE. CONTACT ARCHITECT/ ENGINEER IMMEDIATELY IF THERE ARE ANY DISCREPANCIES.
5. REFER TO MECHANICAL DRAWINGS FOR MECHANICAL DUCT DISTRIBUTION SYSTEM.
6. THE G.C. SHALL SET ALL CEILING AND SOFFITS USING A LASER LEVEL TO ACHIEVE A CEILING THAT IS PLUMBING, LEVEL, AND SQUARE TO ALL WALLS AND SOFFITS.
7. ALL NOTED CEILING DIMENSIONS ARE INDICATED AS CLEAR ABOVE FINISHED FLOOR DIMENSIONS. VERIFY THICKNESS OF FLOOR CONSTRUCTION WITH FLOOR SUBCONTRACTOR PRIOR TO THE INSTALLATION OF ANY NEW CEILING CONSTRUCTION IN ORDER TO ACHIEVE NOTED REQUIRED DIMENSIONS.
8. ALL SOFFIT DIMENSIONS ARE TO FINISH FACE, U.N.O.
9. ALL EXTERIOR DIMENSIONS ARE TO THE FACE OF EXTERIOR FINISH, U.N.O.
10. G.C. TO PROVIDE ADEQUATE CLEARANCES FOR FIXTURES, DUCTS, CEILINGS, AND PERTINENT ITEMS NECESSARY TO MAINTAIN THE SPECIFIC HEIGHTS ABOVE FINISH FLOOR. COORDINATE MECHANICAL, ELECTRICAL AND PLUMBING AS REQUIRED.
11. ADDITIONAL HANGER AND SAFETY WIRES FOR LIGHT FIXTURES AND AIR SUPPLY/ RETURN DIFFUSERS AS REQUIRED BY LOCAL CODES TO BE THE RESPONSIBILITY OF THE SUB-CONTRACTOR. ALL WIRING SUPPORT TO BE "CEILING GRADE" AS CONCURRENT WITH ELECTRICAL CODE ADOPTED FOR JURISDICTION OF PROJECT.
12. ALL CEILING ELEVATIONS DIMENSIONED FROM FINISH FLOOR BELOW.
13. PAINT ALL EXPOSED STRUCTURE AND STRUCTURE OVER KITCHEN ACT CEILING. REFER TO PR-A-67.
14. INSTALL BIRD NETTING AT BOTTOM OF TRUSSES TO KEEP BIRDS OUT.

CONSTRUCTION LEGEND

- INDICATES PATCH/REPAIR
- N.I.C. — NOT IN CONTRACT
- ? — KEY NOTES
- 1i — WALL TAG
- ? — PLUMBING FIXTURE
- 1i — WINDOW TAG
- 101 — DOOR TAG
- FE — FIRE EXTINGUISHER
- SPLASH BLOCK
- FD — FLOOR DRAIN
- Room name / 101 / 150 SF — ROOM TAG
- A101 (1 Ref) — ELEVATION MARKER
- DETAIL MARKER

RCP LEGEND

- R-2 EXTERIOR RECESSED CAN LIGHT IN SOFFIT
- L-1 SURFACE MOUNTED LINEAR LIGHT
- L-4 INTERIOR PENDANT LIGHT; MOUNTED TO BOTTOM OF TRUSS
- U-3 INTERIOR RECESSED CAN LIGHT
- GYPSUM WALL BOARD CEILING GYP-1
- N.I.C. — INDICATES SCOPE NOT IN CONTRACT
- ? — KEY NOTES
- EX — EX- EXIT SIGN
- SUPPLY DIFFUSER. SEE MECHANICAL DRAWINGS
- EXHAUST GRILL. SEE MECHANICAL DRAWINGS
- OS — OS - OCCUPANCY SENSOR
- CEILING FAN:
  TYPE: BIG ASS FAN i6
  COLOR: TO BE SELECTED BY ARCHITECT
  MOUNTING: UNIVERSAL MOUNT
  SEE DETAILS ON SHEET 10/SA-A-84

KEYNOTE LEGEND CONST.

Key Value	Keynote Text
11	PROVIDE AND INSTALL T1-11 CEILING.
21	NEW INTERIOR WALL. SEE WALL SCHEDULE.
30	NEW 2x6 WOOD FLOOR.
44	NEW STAIRCASE. SEE DETAILS.
47	NEW SIGNAGE AND LETTERING TO BE INSTALLED. SEE DETAILS
67	NEW FASCIA BOARD AND SOFFIT.

9/26/2022 6:10:17 PM

CONSULTANT INFORMATION

The LiRo Group

3 Aerial Way, Syosset, New York 11791
(516) 938-5476 www.liro.com

CONSULTANT SEAL

REGISTERED ARCHITECT ROBERT D. IOANNONI 023280 STATE OF NEW YORK

REVISION NUMBER	DATE	MADE BY	APP'D BY	REVISION
1	09/21/22			BID ADDENDUM # 3

RECORD DRAWING CERTIFICATION

☐ AS BUILT – CHANGES AS NOTED ☐ AS BUILT – NO CHANGES

CONTRACTOR
NAME
SIGNATURE
TITLE DATE

PROJECT COORDINATOR
NAME
SIGNATURE
TITLE DATE

WESTCHESTER COUNTY, NEW YORK
DEPARTMENT OF PUBLIC WORKS AND TRANSPORTATION
DIVISION OF ENGINEERING

INFRASTRUCTURE REHABILITATION - PHASE 3
PLAYLAND PARK, RYE, NEW YORK
SOUTHEAST ARCADE BUILDING
SE ARCADE MEZZANINE- PLANS & RCP

CONTRACT NUMBER	22-523
SHEET NUMBER	SA-A-13
DWG NO.:	596 of 664
SCALE:	As indicated
DATE:	08/23/2022
DPW FILE NUMBER	1-118-A-1345-1
REV. NO.	1

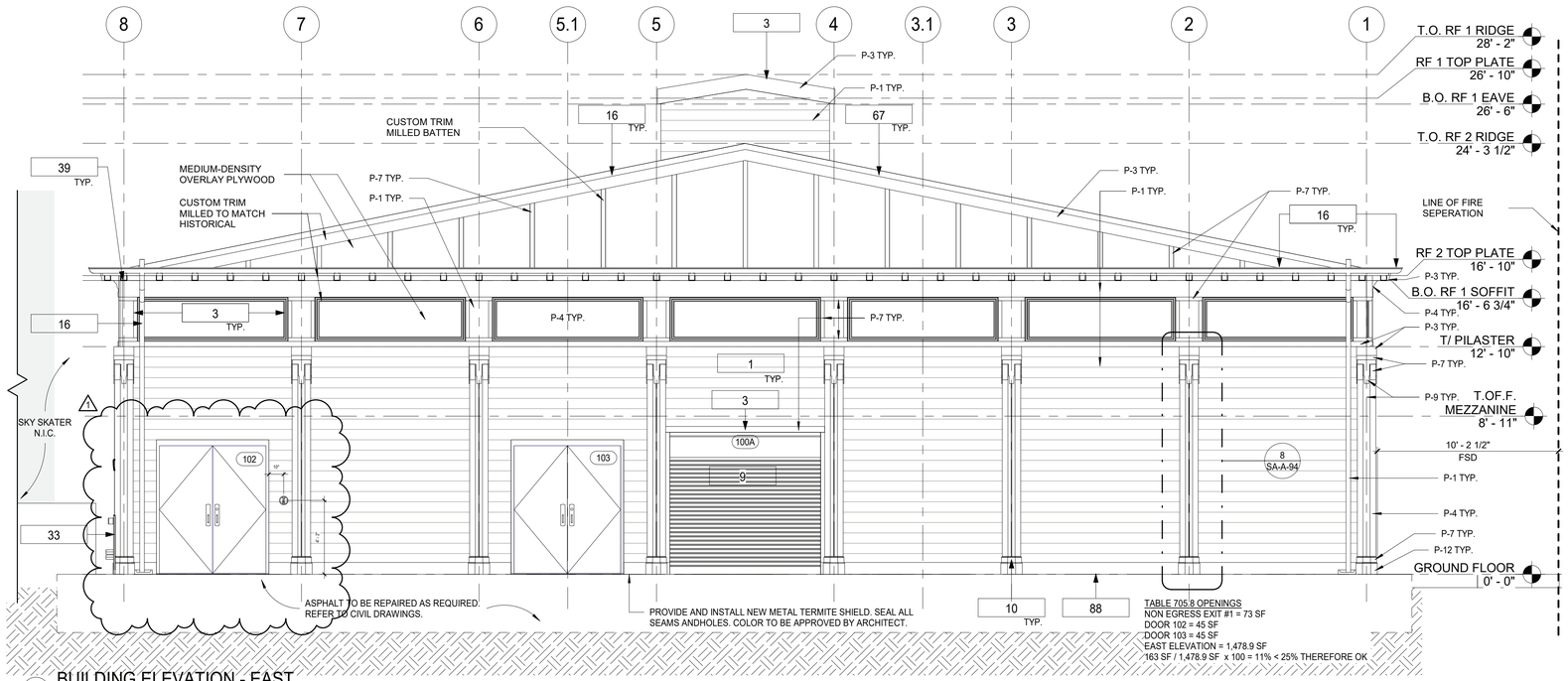

2 BUILDING ELEVATION - EAST
1/4" = 1'-0"

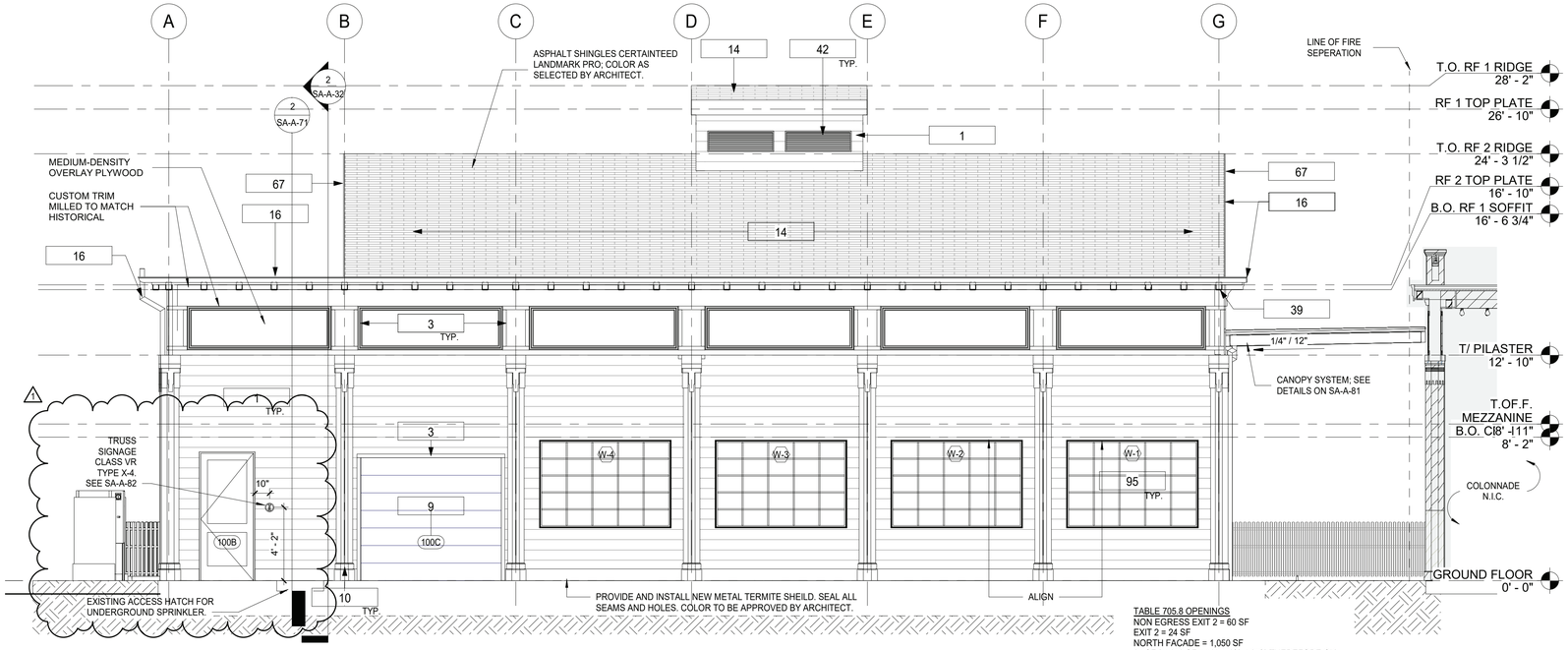

1 BUILDING ELEVATION - NORTH
1/4" = 1'-0"

CONSTRUCTION GENERAL NOTES

1. THE ARCHITECT DOES NOT CERTIFY DIMENSIONS OR CONDITIONS OF EXISTING CONSTRUCTION. CONTRACTOR SHALL NOTIFY ARCHITECT IMMEDIATELY OF ANY DISCREPANCY BETWEEN DRAWINGS AND EXISTING CONDITIONS. IN ADDITION, CONTRACTOR SHALL NOTIFY THE ARCHITECT OF ANY DEFECTIVE CONSTRUCTION UNCOVERED DURING CONSTRUCTION.
2. CONTRACTOR SHALL KEEP WORK SITE FREE FROM DEBRIS AND ACCUMULATED REFUSE, AND SHALL HAVE SOLE RESPONSIBILITY FOR PROTECTING ALL DANGEROUS AREAS FROM ENTRY BY UNAUTHORIZED PARTIES. ALL CONSTRUCTION SCRAPS, DIRT, AND DEBRIS SHALL BE REMOVED FROM THE PREMISES DAILY. SITE SHALL BE LEFT BROOM CLEAN AT THE END OF EACH WORKING DAY. AT THE COMPLETION OF THE WORK, HE PREMISES SHALL BE LEFT IN A BROOM CLEAN CONDITION.
3. ALL WORK TO BE PERFORMED IN A WORKMANLIKE FASHION. MATERIALS UTILIZED SHALL BE AS SPECIFIED ON THE DRAWINGS OR IN THE JOB SPECIFICATIONS, OR, IF GENERIC, IN COMPLIANCE WITH ASTM, NEW YORK CODE, OR OTHER GENERALLY ACCEPTED STANDARDS.
4. WHERE EXISTING EQUIPMENT OR CONSTRUCTION IS REMOVED OR ALTERED, ALL REMAINING SURFACES AND FINISHES AFFECTED SHALL BE PATCHED AND FINISHED TO MATCH ADJACENT CONSTRUCTION/PRE-EXISTING CONDITION.
5. ALL EXITS SHALL BE KEPT READILY ACCESSIBLE AND UNOBSTRUCTED AT ALL TIMES. ALL EXITS SHALL BE KEPT READILY ACCESSIBLE AND UNOBSTRUCTED AT ALL TIMES.
6. ALL INFILLED OPENINGS TO BE FLUSH WITH EXISTING MASONRY WALL SURFACES, EXTERIOR OF NEW AND OLD TO BE FLUSH AND MATCH WITH EXISTING ADJACENT WALL SYSTEM.
7. THE G.C. SHALL VERIFY DIMENSIONS OF THE EXISTING SPACE AND OF ANY EXISTING CONSTRUCTION TO REMAIN BY ACTUAL MEASUREMENT BEFORE ANY WORK IS PERFORMED. IF ANY MEASUREMENTS DIFFER FROM DIMENSIONS SHOWN ON PLAN, G.C. IS TO NOTIFY THE ARCHITECT IMMEDIATELY. THE G.C. SHALL BE RESPONSIBLE FOR CORRECTING ANY AND ALL DISCREPANCIES FOUND AFTER THE WORK IS PERFORMED, AT NO ADDITIONAL EXPENSE TO THE OWNER.
8. G.C. TO VERIFY ALL FINISHED DIMENSIONS. FIELD CONDITIONS ALTERING ANY DIMENSIONS SHOULD BE BROUGHT TO THE ATTENTION OF THE OWNER AND ARCHITECT.
9. THE G.C. SHALL BE RESPONSIBLE FOR COORDINATING WITH OWNER ON ALL WORK TO BE PERFORMED BY THE OWNER. ANY POTENTIAL CONFLICTS OR DELAYS CAUSED BY THE OWNER'S SUBCONTRACTORS MUST BE DOCUMENTED IN WRITING TO THE OWNER BEFORE THE DELAY IS ACTUALLY INCURRED FOR IT TO BE CONSIDERED. OTHERWISE THE G.C. WILL BE RESPONSIBLE FOR MEETING THE SCHEDULE AS OUTLINED IN THE CONTRACT.

CONSTRUCTION LEGEND

NIC	NOT IN CONTRACT	1i	WINDOW TAG
?	KEY NOTES	101	DOOR TAG

KEYNOTE LEGEND CONST.

Key Value	Keynote Text
1	PROVIDE AND INSTALL NEW 1x8 MILLED YELLOW PINE - TONGUE AND GROOVE - NO BEVEL
3	REPLICATE TRIMS TO MATCH DOCUMENTED TRIM, LOCATIONS, SIZE AND SHAPE. FINISH PAINT COLORS AS SCHEDULED.
9	PROVIDE AND INSTALL ROLL DOWN DOOR. SEE DETAILS AND SCHEDULE.
10	PROVIDE AND INSTALL COLUMN ENCLOSURES. SEE DETAILS.
14	PROVIDE NEW ASPHALT SHINGLE ROOFING,UNDERLAYMENT, AND REPLACE IN KIND EXISTING DECKING AS REQUIRED (COORDINATE WITH STRUCTURAL).
16	PROVIDE AND INSTALL ALUMINUM METAL DRIP EDGE, DOWNSPOUT AND GUTTER AT PERIMETER OF ROOF.
23	NEW ROOF WITH BATT INSULATION (R-38 MIN) PACKED BETWEEN JOISTS. PROVIDE AND INSTALL SHINGLES, UNDERLAYMENT SHEATHING AND FLASHING SYSTEM.
33	NEW WOOD FENCE. SEE DETAILS.
39	NEW SOFFIT WITH RECESSED LIGHTS AS INDICATED ON RCP
42	NEW MECHANICAL EQUIPMENT. SEE MECHANICAL DRAWINGS.
67	NEW FASCIA BOARD AND SOFFIT.
88	NEW PVC BASEBOARD.
95	RESTORE AND REINSTALL EXISTING HISTORIC WINDOW AND FRAME, TYP.

PLAYLAND MASTER PAINT SCHEDULE

KEY	COLOR	MANUFACTURER	REMARKS
P-1	MYSTICAL POWERS #901	BENJAMIN MOORE	
P-2	HERITAGE RED #HC-181	BENJAMIN MOORE	
P-3	NEW YORK STATE OF MIND #805	BENJAMIN MOORE	
P-4	LAZY SUNDAY #803	BENJAMIN MOORE	
P-5	DEEP JUNGLE #595	BENJAMIN MOORE	
P-6	LUCK OF THE IRISH #588	BENJAMIN MOORE	
P-7	MAJOLICA GREEN #0013	SHERWIN WILLIAMS	
P-8	ANTELOPE CANYON #125	BENJAMIN MOORE	
P-9	FORSYTHIA #6907	SHERWIN WILLIAMS	
P-10	CAPE BLUE #1642	BENJAMIN MOORE	
P-11	WHITE SNOW #9541	SHERWIN WILLIAMS	
P-12	TRICORN BLACK #6258	SHERWIN WILLIAMS	
P-13	READY WHITE MIX		INTERIOR USE ONLY
P-14	STUCCO TO MATCH P-1		FOR ALL NEW STUCCO SURFACES
P-15	VAN DEUSEN BLUE #HC-156	BENJAMIN MOORE	
P-16	#RAL9001		TYPICAL ROLL UP DOOR COLOR
P-17	FLORIDA BEACHES #900	BENJAMIN MOORE	
P-18	PIRATES COVE PEACH #903	BENJAMIN MOORE	
P-19	JADITE #6459	SHERWIN WILLIAMS	
P-20	DECISIVE YELLOW #6902	SHERWIN WILLIAMS	

9/26/2022 6:10:21 PM

CONSULTANT INFORMATION
The LiRo Group
3 Aerial Way, Syosset, New York 11791
(516) 938-5476 www.liro.com

CONSULTANT SEAL
REGISTERED ARCHITECT ROBERT D. TOMASZEWSKI 023280 STATE OF NEW YORK

REVISION NUMBER	DATE	MADE BY	APP'D BY	REVISION
1	09/21/22			BID ADDENDUM # 3

RECORD DRAWING CERTIFICATION
☐ AS BUILT – CHANGES AS NOTED ☐ AS BUILT – NO CHANGES

CONTRACTOR
NAME
SIGNATURE
TITLE DATE

PROJECT COORDINATOR
NAME
SIGNATURE
TITLE DATE

WESTCHESTER COUNTY, NEW YORK
DEPARTMENT OF PUBLIC WORKS AND TRANSPORTATION
DIVISION OF ENGINEERING

INFRASTRUCTURE REHABILITATION - PHASE 3
PLAYLAND PARK, RYE, NEW YORK
SOUTHEAST ARCADE BUILDING
EXTERIOR BUILDING ELEVATIONS 1

CONTRACT NUMBER **22-523**
SHEET NUMBER **SA-A-21**
DWG NO.: 599 of 664
SCALE: **1/4" = 1'-0"**
DATE: **08/23/2022**
DPW FILE NUMBER **1-118-A-1348-1**
REV. NO. **1**

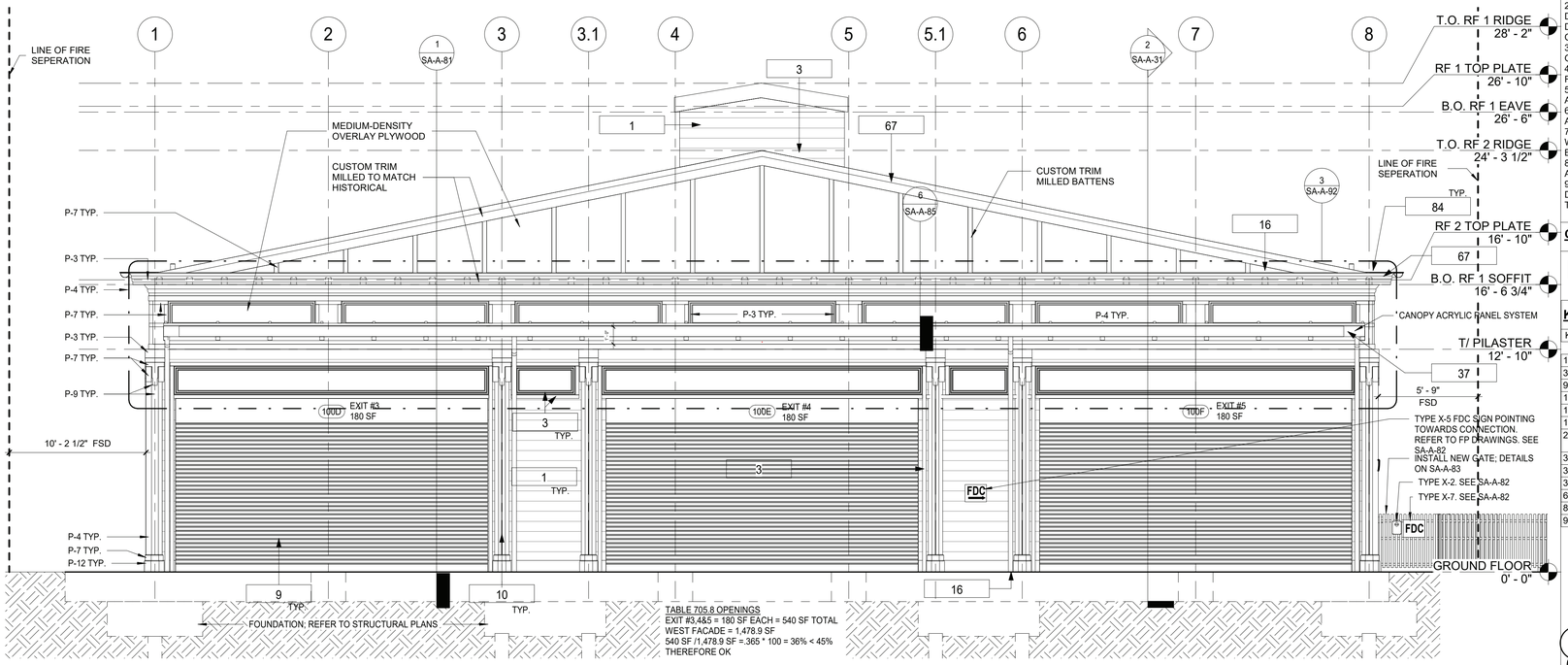

TABLE 705.8 OPENINGS
EXIT #3,4&5 = 180 SF EACH = 540 SF TOTAL
WEST FACADE = 1,478.9 SF
540 SF /1,478.9 SF =.365 * 100 = 36% < 45%
THEREFORE OK

2 BUILDING ELEVATION - WEST
1/4" = 1'-0"

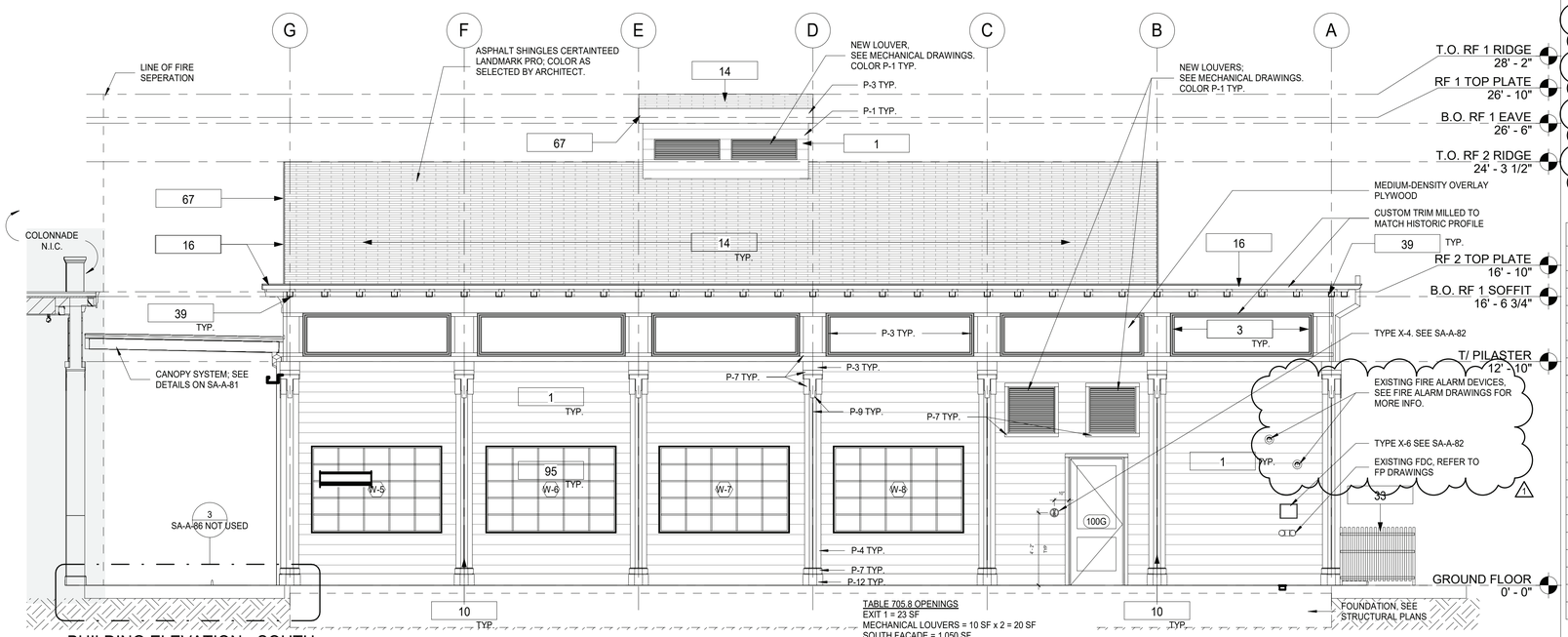

TABLE 705.8 OPENINGS
EXIT 1 = 23 SF
MECHANICAL LOUVERS = 10 SF x 2 = 20 SF
SOUTH FACADE = 1,050 SF
43 SF / 1,050 SF x 100 = 4% < 15% THEREFORE OK

1 BUILDING ELEVATION - SOUTH
1/4" = 1'-0"

CONSTRUCTION GENERAL NOTES

1. THE ARCHITECT DOES NOT CERTIFY DIMENSIONS OR CONDITIONS OF EXISTING CONSTRUCTION. CONTRACTOR SHALL NOTIFY ARCHITECT IMMEDIATELY OF ANY DISCREPANCY BETWEEN DRAWINGS AND EXISTING CONDITIONS. IN ADDITION, CONTRACTOR SHALL NOTIFY THE ARCHITECT OF ANY DEFECTIVE CONSTRUCTION UNCOVERED DURING CONSTRUCTION.
2. CONTRACTOR SHALL KEEP WORK SITE FREE FROM DEBRIS AND ACCUMULATED REFUSE, AND SHALL HAVE SOLE RESPONSIBILITY FOR PROTECTING ALL DANGEROUS AREAS FROM ENTRY BY UNAUTHORIZED PARTIES. ALL CONSTRUCTION SCRAPS, DIRT, AND DEBRIS SHALL BE REMOVED FROM THE PREMISES DAILY. SITE SHALL BE LEFT BROOM CLEAN AT THE END OF EACH WORKING DAY. AT THE COMPLETION OF THE WORK, HE PREMISES SHALL BE LEFT IN A BROOM CLEAN CONDITION.
3. ALL WORK TO BE PERFORMED IN A WORKMANLIKE FASHION. MATERIALS UTILIZED SHALL BE AS SPECIFIED ON THE DRAWINGS OR IN THE JOB SPECIFICATIONS, OR, IF GENERIC, IN COMPLIANCE WITH ASTM, NEW YORK CODE, OR OTHER GENERALLY ACCEPTED STANDARDS.
4. WHERE EXISTING EQUIPMENT OR CONSTRUCTION IS REMOVED OR ALTERED, ALL REMAINING SURFACES AND FINISHES AFFECTED SHALL BE PATCHED AND FINISHED TO MATCH ADJACENT CONSTRUCTION/PRE- EXISTING CONDITION.
5. ALL EXITS SHALL BE KEPT READILY ACCESSIBLE AND UNOBSTRUCTED AT ALL TIMES. ALL EXITS SHALL BE KEPT READILY ACCESSIBLE AND UNOBSTRUCTED AT ALL TIMES.
6. ALL INFILLED OPENINGS TO BE FLUSH WITH EXISTING MASONRY WALL SURFACES, EXTERIOR OF NEW AND OLD TO BE FLUSH AND MATCH WITH EXISTING ADJACENT WALL SYSTEM.
7. THE G.C. SHALL VERIFY DIMENSIONS OF THE EXISTING SPACE AND OF ANY EXISTING CONSTRUCTION TO REMAIN BY ACTUAL MEASUREMENT BEFORE ANY WORK IS PERFORMED. IF ANY MEASUREMENTS DIFFER FROM DIMENSIONS SHOWN ON PLAN, G.C. IS TO NOTIFY THE ARCHITECT IMMEDIATELY. THE G.C. SHALL BE RESPONSIBLE FOR CORRECTING ANY AND ALL DISCREPANCIES FOUND AFTER THE WORK IS PERFORMED, AT NO ADDITIONAL EXPENSE TO THE OWNER.
8. G.C. TO VERIFY ALL FINISHED DIMENSIONS. FIELD CONDITIONS ALTERING ANY DIMENSIONS SHOULD BE BROUGHT TO THE ATTENTION OF THE OWNER AND ARCHITECT.
9. THE G.C. SHALL BE RESPONSIBLE FOR COORDINATING WITH OWNER ON ALL WORK TO BE PERFORMED BY THE OWNER. ANY POTENTIAL CONFLICTS OR DELAYS CAUSED BY THE OWNER'S SUBCONTRACTORS MUST BE DOCUMENTED IN WRITING TO THE OWNER BEFORE THE DELAY IS ACTUALLY INCURRED FOR IT TO BE CONSIDERED. OTHERWISE THE G.C. WILL BE RESPONSIBLE FOR MEETING THE SCHEDULE AS OUTLINED IN THE CONTRACT.

CONSTRUCTION LEGEND

NIC	NOT IN CONTRACT	1i	WINDOW TAG
?	KEY NOTES	101	DOOR TAG

KEYNOTE LEGEND CONST.

Key Value	Keynote Text
1	PROVIDE AND INSTALL NEW 1x8 MILLED YELLOW PINE - TONGUE AND GROOVE - NO BEVEL
3	REPLICATE TRIMS TO MATCH DOCUMENTED TRIM, LOCATIONS, SIZE AND SHAPE. FINISH PAINT COLORS AS SCHEDULED.
9	PROVIDE AND INSTALL ROLL DOWN DOOR. SEE DETAILS AND SCHEDULE.
10	PROVIDE AND INSTALL COLUMN ENCLOSURES. SEE DETAILS.
14	PROVIDE NEW ASPHALT SHINGLE ROOFING,UNDERLAYMENT, AND REPLACE IN KIND EXISTING DECKING AS REQUIRED (COORDINATE WITH STRUCTURAL).
16	PROVIDE AND INSTALL ALUMINUM METAL DRIP EDGE, DOWNSPOUT AND GUTTER AT PERIMETER OF ROOF.
23	NEW ROOF WITH BATT INSULATION (R-38 MIN) PACKED BETWEEN JOISTS. PROVIDE AND INSTALL SHINGLES, UNDERLAYMENT SHEATHING AND FLASHING SYSTEM.
33	NEW WOOD FENCE. SEE DETAILS.
37	NEW CANOPY, SEE DETAILS.
39	NEW SOFFIT WITH RECESSED LIGHTS AS INDICATED ON RCP
67	NEW FASCIA BOARD AND SOFFIT.
84	HALF ROUND ALUMINUM GUTTER AND DOWNSPOUT.
95	RESTORE AND REINSTALL EXISTING HISTORIC WINDOW AND FRAME, TYP.

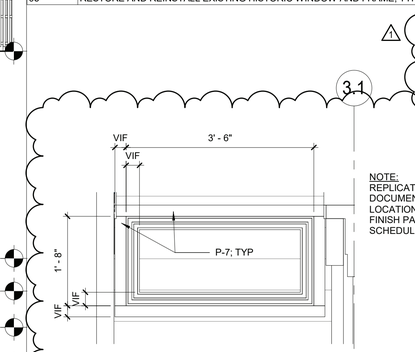

NOTE:
REPLICATE TRIM TO MATCH DOCUMENTED HISTORIC TRIM. LOCATIONS, SIZE AND SHAPE. FINISH PAINT COLORS AS SCHEDULED.

4 ENTABULATURE TYPE 2
3/4" = 1'-0"

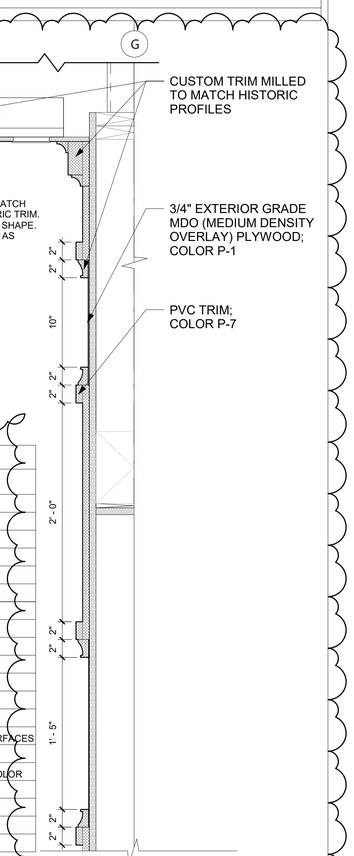

3 FACADE PANEL SECTION
1 1/2" = 1'-0"

PLAYLAND MASTER PAINT SCHEDULE

KEY	COLOR	MANUFACTURER	REMARKS
P-1	MYSTICAL POWERS #901	BENJAMIN MOORE	
P-2	HERITAGE RED #HC-181	BENJAMIN MOORE	
P-3	NEW YORK STATE OF MIND #805	BENJAMIN MOORE	
P-4	LAZY SUNDAY #803	BENJAMIN MOORE	
P-5	DEEP JUNGLE #595	BENJAMIN MOORE	
P-6	LUCK OF THE IRISH #588	BENJAMIN MOORE	
P-7	MAJOLICA GREEN #0013	SHERWIN WILLIAMS	
P-8	ANTELOPE CANYON #125	BENJAMIN MOORE	
P-9	FORSYTHIA #6907	SHERWIN WILLIAMS	
P-10	CAPE BLUE #1642	BENJAMIN MOORE	
P-11	WHITE SNOW #9541	SHERWIN WILLIAMS	
P-12	TRICORN BLACK #6258	SHERWIN WILLIAMS	
P-13	READY WHITE MIX		INTERIOR USE ONLY
P-14	STUCCO TO MATCH P-1		FOR ALL NEW STUCCO SURFACES
P-15	VAN DEUSEN BLUE #HC-156	BENJAMIN MOORE	
P-16	#RAL9001		TYPICAL ROLL UP DOOR COLOR
P-17	FLORIDA BEACHES #900	BENJAMIN MOORE	
P-18	PIRATES COVE PEACH #903	BENJAMIN MOORE	
P-19	JADITE #6459	SHERWIN WILLIAMS	
P-20	DECISIVE YELLOW #6902	SHERWIN WILLIAMS	

9/26/2022 6:10:24 PM

CONSULTANT INFORMATION
The LiRo Group
3 Aerial Way, Syosset, New York 11791
(516) 938-5476 www.liro.com

CONSULTANT SEAL
REGISTERED ARCHITECT ROBERT D. TOMASZEWSKI 023280 STATE OF NEW YORK

REVISION NUMBER	DATE	MADE BY	APP'D BY	REVISION
1	09/21/22			BID ADDENDUM # 3

RECORD DRAWING CERTIFICATION
☐ AS BUILT – CHANGES AS NOTED ☐ AS BUILT – NO CHANGES

CONTRACTOR
NAME
SIGNATURE
TITLE DATE

PROJECT COORDINATOR
NAME
SIGNATURE
TITLE DATE

WESTCHESTER COUNTY, NEW YORK
DEPARTMENT OF PUBLIC WORKS AND TRANSPORTATION
DIVISION OF ENGINEERING

INFRASTRUCTURE REHABILITATION - PHASE 3
PLAYLAND PARK, RYE, NEW YORK
SOUTHEAST ARCADE BUILDING
EXTERIOR BUILDING ELEVATIONS 2

CONTRACT NUMBER **22-523**
SHEET NUMBER **SA-A-22**
DWG NO.: 600 of 664
SCALE: **As indicated**
DATE: **08/23/2022**
DPW FILE NUMBER **1-118-A-1349-1**
REV. NO. **1**

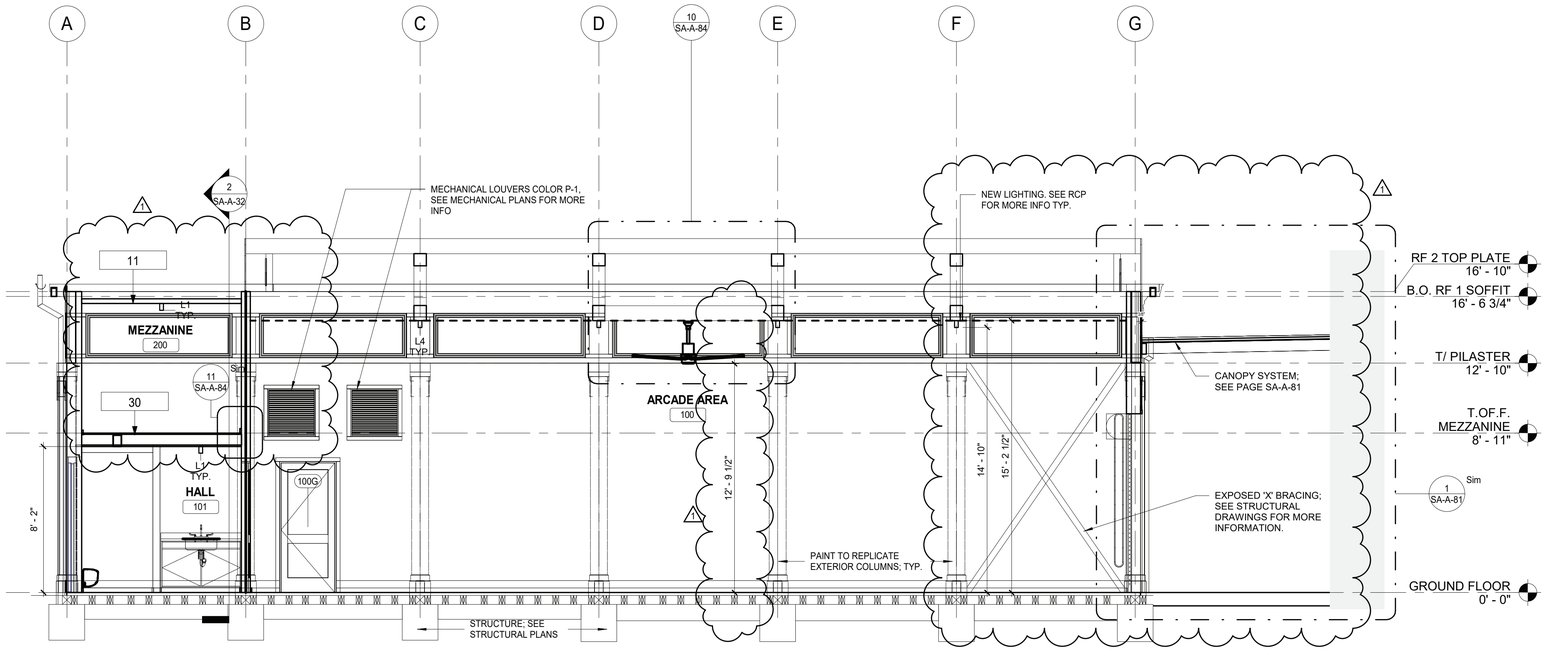

2 NORTH SECTION
1/4" = 1'-0"

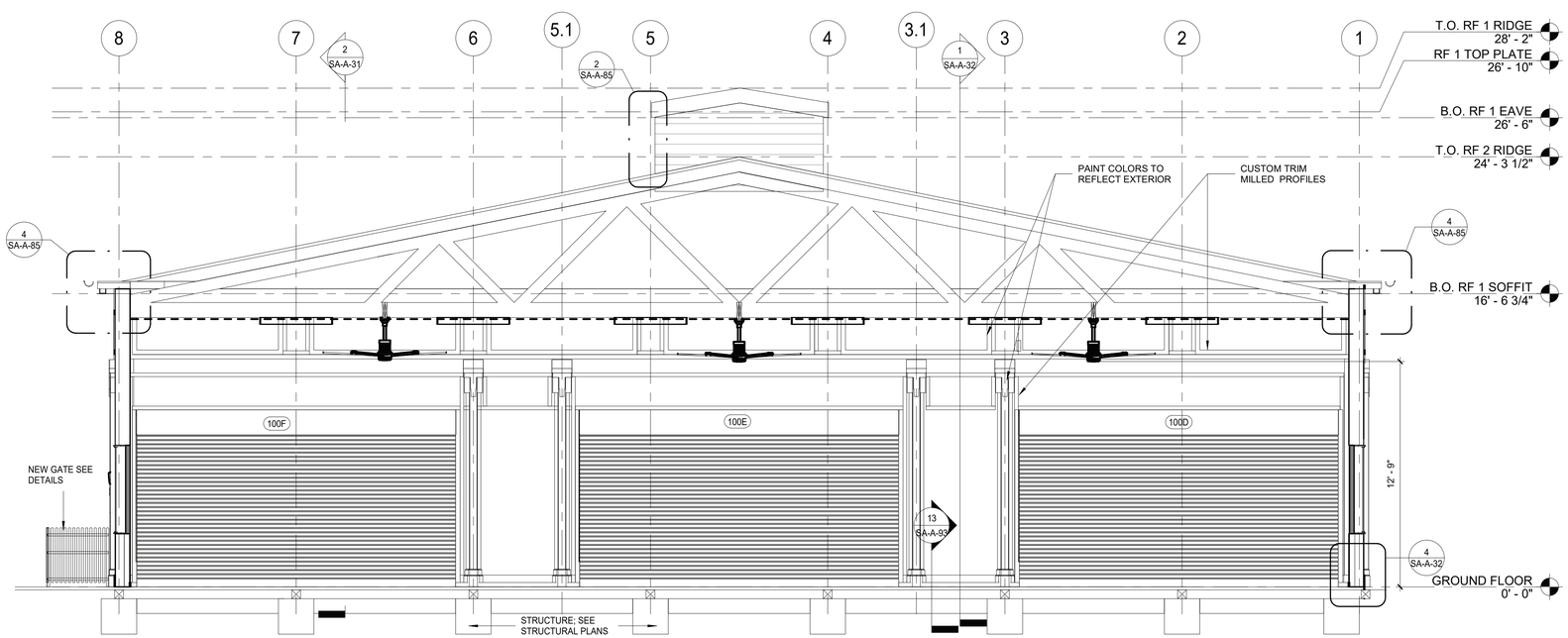

1 EAST SECTION
1/4" = 1'-0"

CONSTRUCTION LEGEND

NIC	NOT IN CONTRACT	1i	WINDOW TAG
?	KEY NOTES	101	DOOR TAG

KEYNOTE LEGEND CONST.

Key Value	Keynote Text
11	PROVIDE AND INSTALL T1-11 CEILING.
30	NEW 2x6 WOOD FLOOR.

9/26/2022 6:10:26 PM

CONSULTANT INFORMATION

The LiRo Group
3 Aerial Way, Syosset, New York 11791
(516) 938-5476 www.liro.com

CONSULTANT SEAL

REGISTERED ARCHITECT ROBERT D. YOUNG JR. 023280 STATE OF NEW YORK

REVISION NUMBER	DATE	MADE BY	APP'D BY	REVISION
1	09/21/22			BID ADDENDUM # 3

RECORD DRAWING CERTIFICATION

☐ AS BUILT – CHANGES AS NOTED ☐ AS BUILT – NO CHANGES

CONTRACTOR
NAME
SIGNATURE
TITLE DATE

PROJECT COORDINATOR
NAME
SIGNATURE
TITLE DATE

WESTCHESTER COUNTY, NEW YORK
DEPARTMENT OF PUBLIC WORKS AND TRANSPORTATION
DIVISION OF ENGINEERING

INFRASTRUCTURE REHABILITATION - PHASE 3
PLAYLAND PARK, RYE, NEW YORK
SOUTHEAST ARCADE BUILDING
INTERIOR BUILDING SECTIONS 1 OF 2

CONTRACT NUMBER 22-523
SHEET NUMBER SA-A-31
DWG NO.: 601 of 664
SCALE: 1/4" = 1'-0"
DATE: 08/23/2022
DPW FILE NUMBER 1-118-A-1350-1
REV. NO. 1

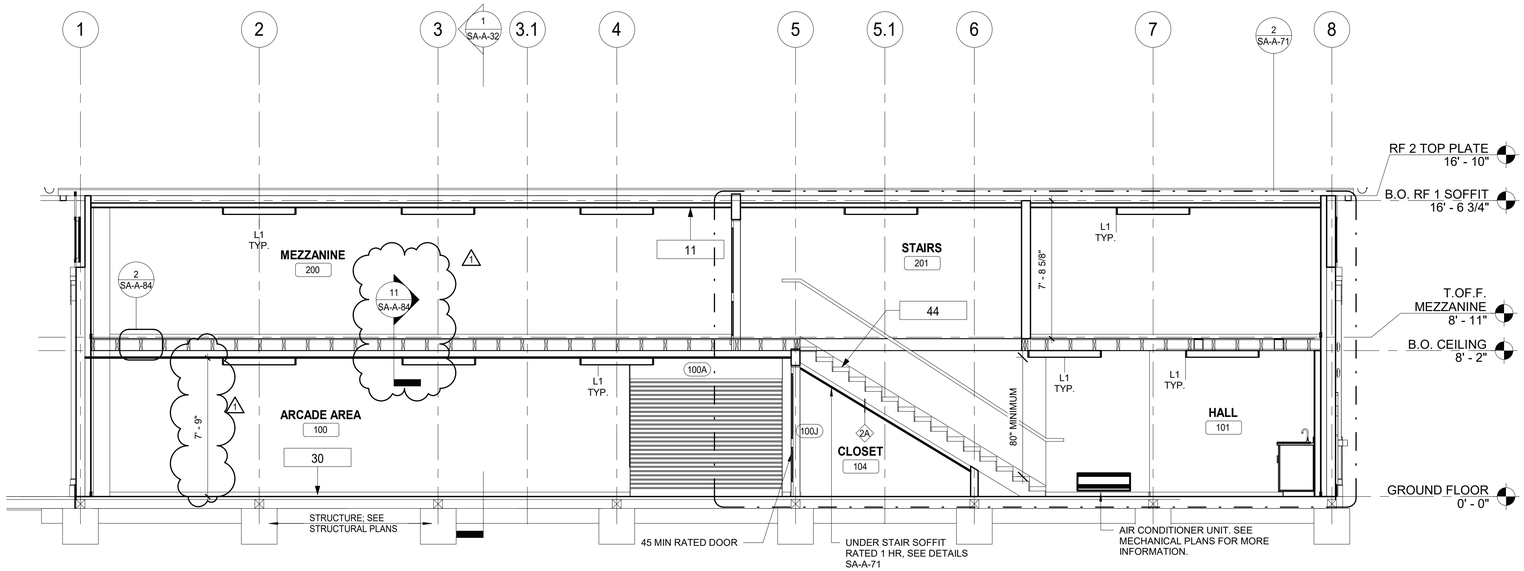

2 WEST INTERIOR SECTION
1/4" = 1'-0"

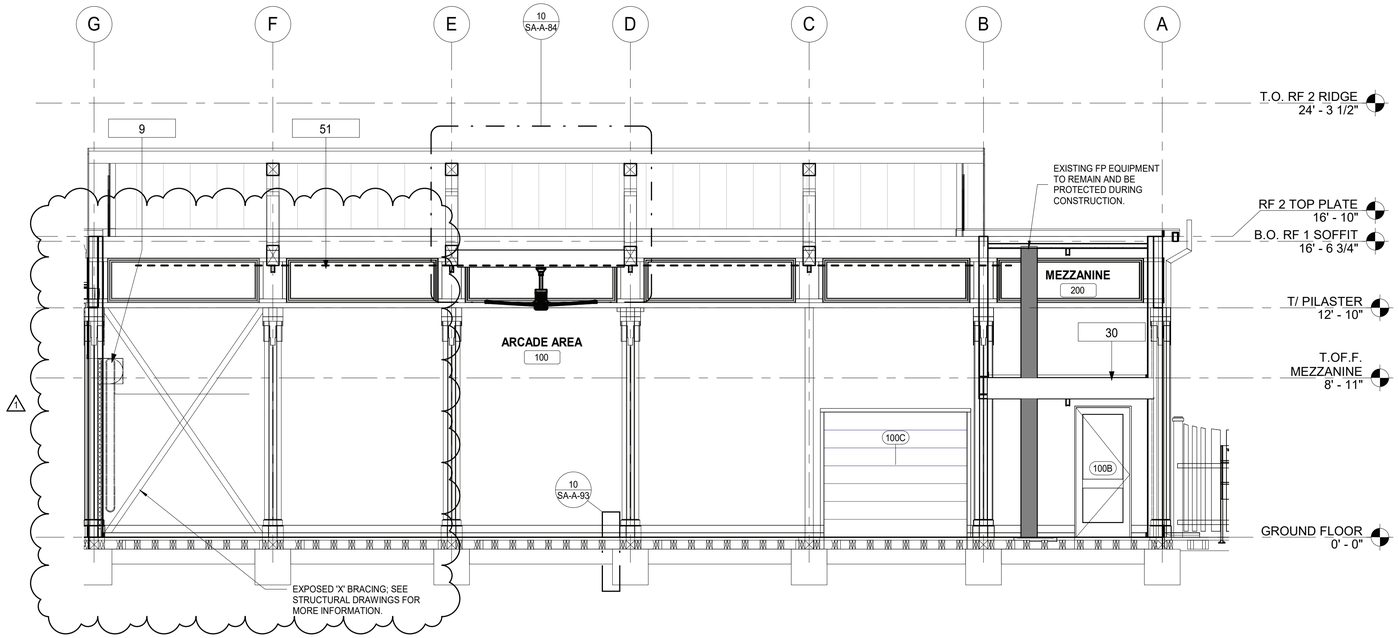

1 SOUTH INTERIOR ELEVATION
1/4" = 1'-0"

CONSTRUCTION LEGEND

NIC	NOT IN CONTRACT	1i	WINDOW TAG
?	KEY NOTES	101	DOOR TAG

KEYNOTE LEGEND CONST.

Key Value	Keynote Text
9	PROVIDE AND INSTALL ROLL DOWN DOOR. SEE DETAILS AND SCHEDULE.
11	PROVIDE AND INSTALL T1-11 CEILING.
30	NEW 2x6 WOOD FLOOR.
44	NEW STAIRCASE. SEE DETAILS.
51	NEW BIRD NETTING INSTALLED TIGHT UNDER ALL INTERIOR WOOD TRUSSES. ENSURE NO DAMAGE OCCURS TO EXISTING STRUCTURE SO AS TO ALTER ITS STRUCTURAL INTEGRITY. ZIPPERS TO BE COORDINATED WITH LOCATION OF SPRINKLER HEADS.

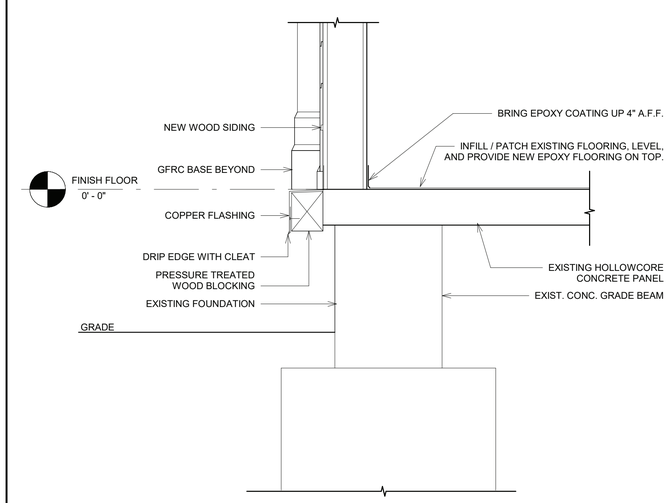

4 BUILDING SECTION CONDITION AT GRADE
1" = 1'-0"

9/26/2022 6:10:27 PM

CONSULTANT INFORMATION
The LiRo Group
3 Aerial Way, Syosset, New York 11791
(516) 938-5476 www.liro.com

CONSULTANT SEAL
REGISTERED ARCHITECT ROBERT D. JOHNSON 023280 STATE OF NEW YORK

REVISION NUMBER	DATE	MADE BY	APP'D BY	REVISION
1	09/21/22			BID ADDENDUM # 3

RECORD DRAWING CERTIFICATION
☐ AS BUILT – CHANGES AS NOTED ☐ AS BUILT – NO CHANGES

CONTRACTOR
NAME
SIGNATURE
TITLE DATE

PROJECT COORDINATOR
NAME
SIGNATURE
TITLE DATE

WESTCHESTER COUNTY, NEW YORK
DEPARTMENT OF PUBLIC WORKS AND TRANSPORTATION
DIVISION OF ENGINEERING

INFRASTRUCTURE REHABILITATION - PHASE 3
PLAYLAND PARK, RYE, NEW YORK
SOUTHEAST ARCADE BUILDING
INTERIOR BUILDING SECTIONS 2 OF 2

CONTRACT NUMBER	22-523
SHEET NUMBER	SA-A-32
DWG NO.:	602 of 664
SCALE:	As indicated
DATE:	08/23/2022
DPW FILE NUMBER	1-118-A-1351-1
REV. NO.	1

KEYNOTE LEGEND CONST.

Key Value	Keynote Text
5	PROVIDE AND INSTALL DOOR INCLUDING FRAME, SILL, LINTEL AND ANY ASSOCIATE HARDWARE. SEE DOOR SCHEDULE.
30	NEW 2x6 WOOD FLOOR.
44	NEW STAIRCASE. SEE DETAILS.

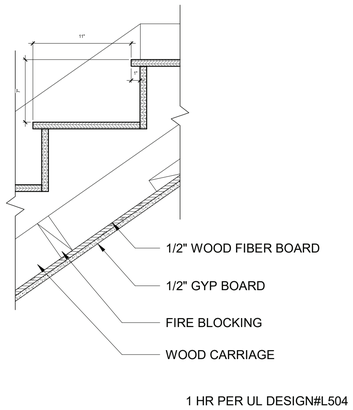

6 RATED CEILING DETAIL AT STAIR
1 1/2" = 1'-0"

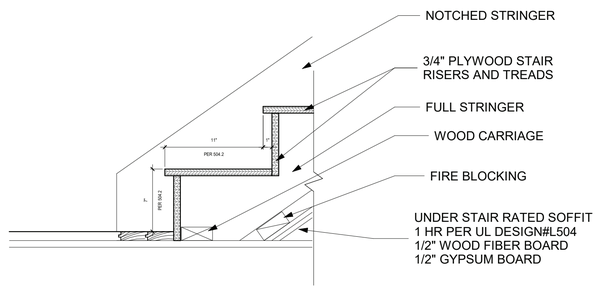

5 STAIR DETAIL WOOD FINISH AT BASE
1 1/2" = 1'-0"

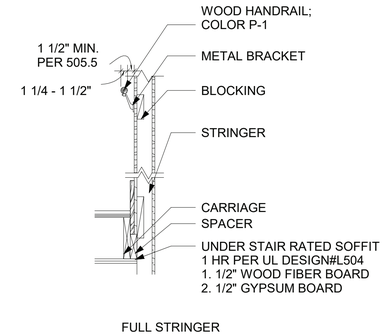

4 RAILING DETAILS
3/4" = 1'-0"

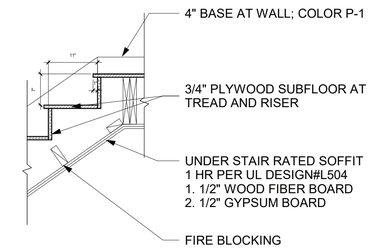

3 STAIR DETAIL WOOD FINISH AT MEZZANINE
3/4" = 1'-0"

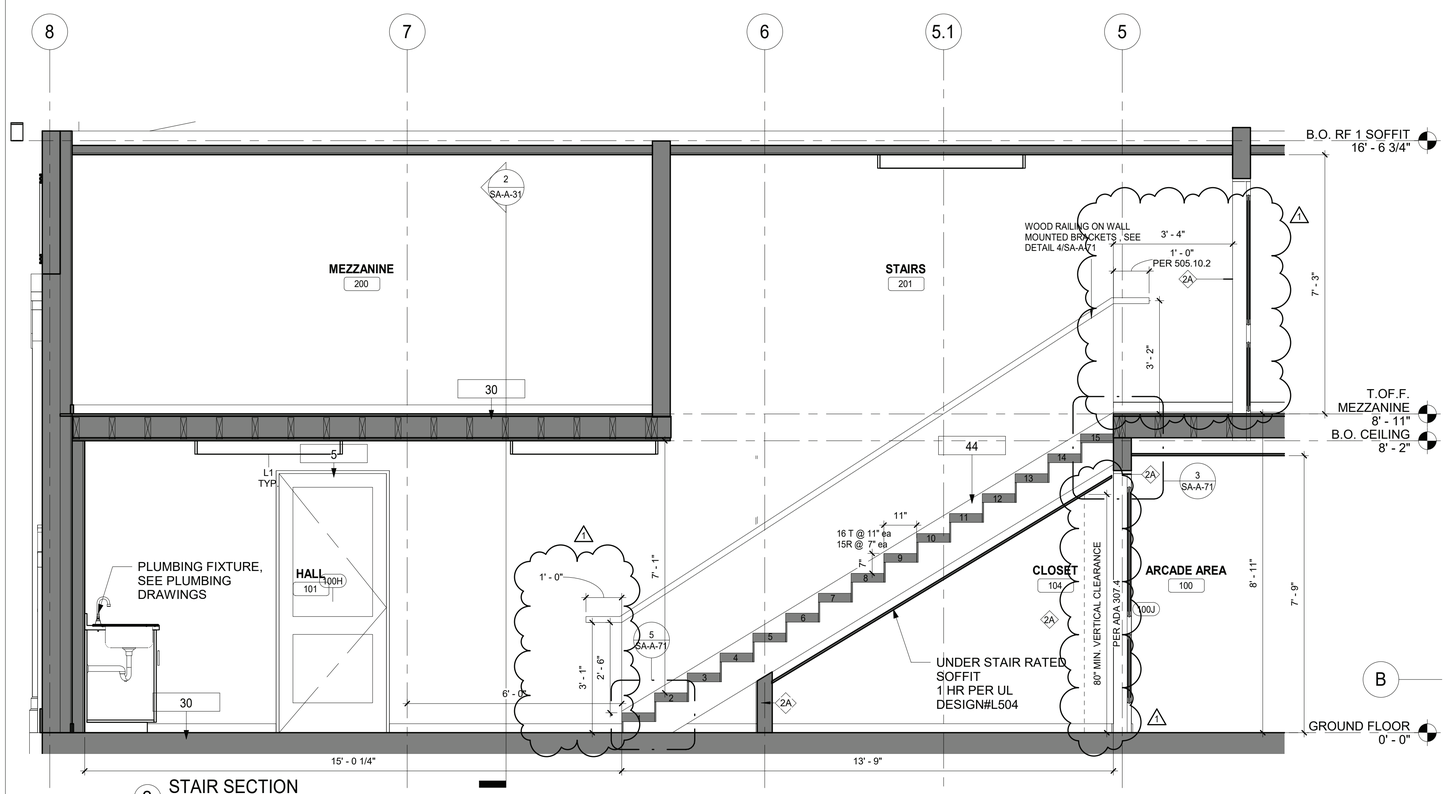

2 STAIR SECTION
1/2" = 1'-0"

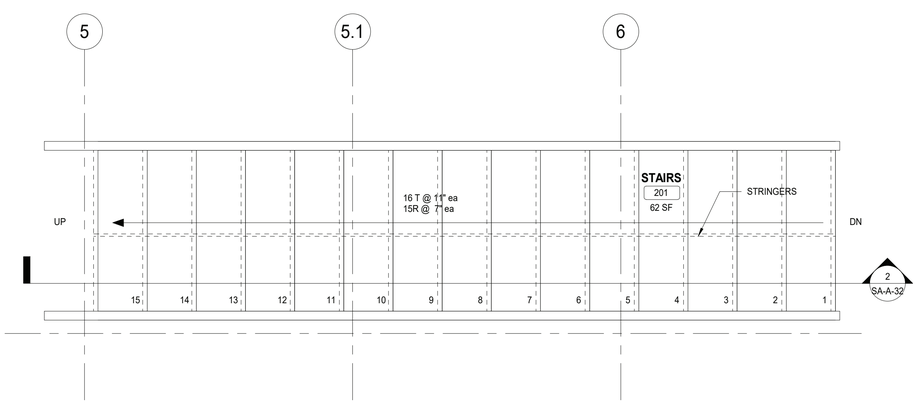

1 STAIR PLAN
3/4" = 1'-0"

9/26/2022 6:10:29 PM

CONSULTANT INFORMATION

The LiRo Group
3 Aerial Way, Syosset, New York 11791
(516) 938-5476 www.liro.com

CONSULTANT SEAL

REGISTERED ARCHITECT ROBERT D. JOHNSON 023280 STATE OF NEW YORK

REVISION NUMBER	DATE	MADE BY	APP'D BY	REVISION
1	09/21/22			BID ADDENDUM # 3

RECORD DRAWING CERTIFICATION

☐ AS BUILT – CHANGES AS NOTED ☐ AS BUILT – NO CHANGES

CONTRACTOR
NAME
SIGNATURE
TITLE DATE

PROJECT COORDINATOR
NAME
SIGNATURE
TITLE DATE

WESTCHESTER COUNTY, NEW YORK
DEPARTMENT OF PUBLIC WORKS AND TRANSPORTATION
DIVISION OF ENGINEERING

INFRASTRUCTURE REHABILITATION - PHASE 3
PLAYLAND PARK, RYE, NEW YORK
SOUTHEAST ARCADE BUILDING
STAIR DETAILS

CONTRACT NUMBER	22-523
SHEET NUMBER	SA-A-71
DWG NO.:	603 of 664
SCALE:	As indicated
DATE:	08/23/2022
DPW FILE NUMBER	1-118-A-1352-1
REV. NO.	1

POLYCARBONATE GLAZING SYSTEM
POLYCARBONATE PANELS:
5/32" (4MM) THICK
23.625" (600MM) PANEL WIDTH
TRANSPARENT (LIGHT BLUE TINT)
70% LIGHT TRANSMISSION

EXTRUDED ALUMINUM MULLION SYSTEM

BASIS OF DESIGN: PALRAM SUNGLAZE™ 4/600 SYSTEM

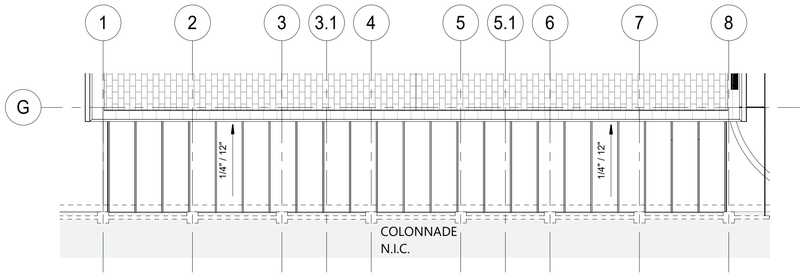

6 CANOPY REFLECTED CEILING PLAN
1/8" = 1'-0"

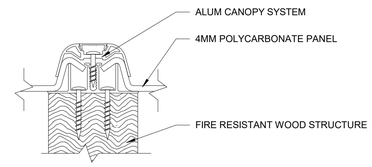

7 CANOPY SYSTEM DETAIL
6" = 1'-0"

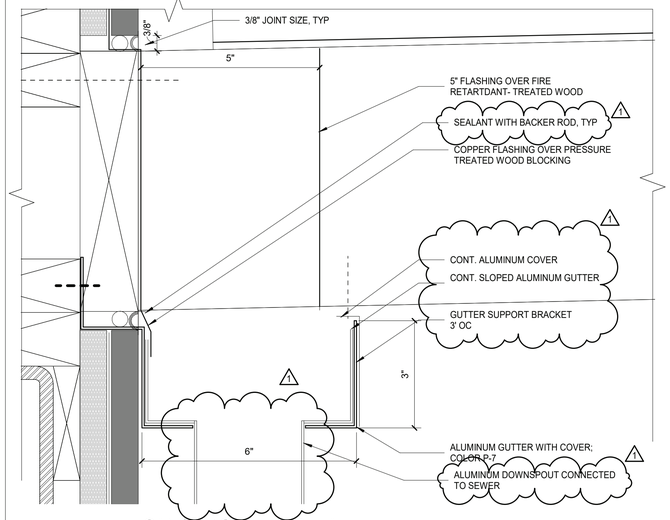

5 CANOPY GUTTER DETAIL
6" = 1'-0"

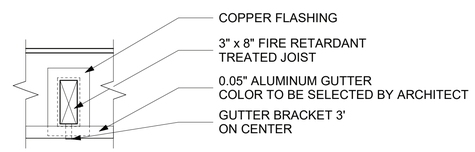

4 JOIST BEAM FLASHING DETAIL
1" = 1'-0"

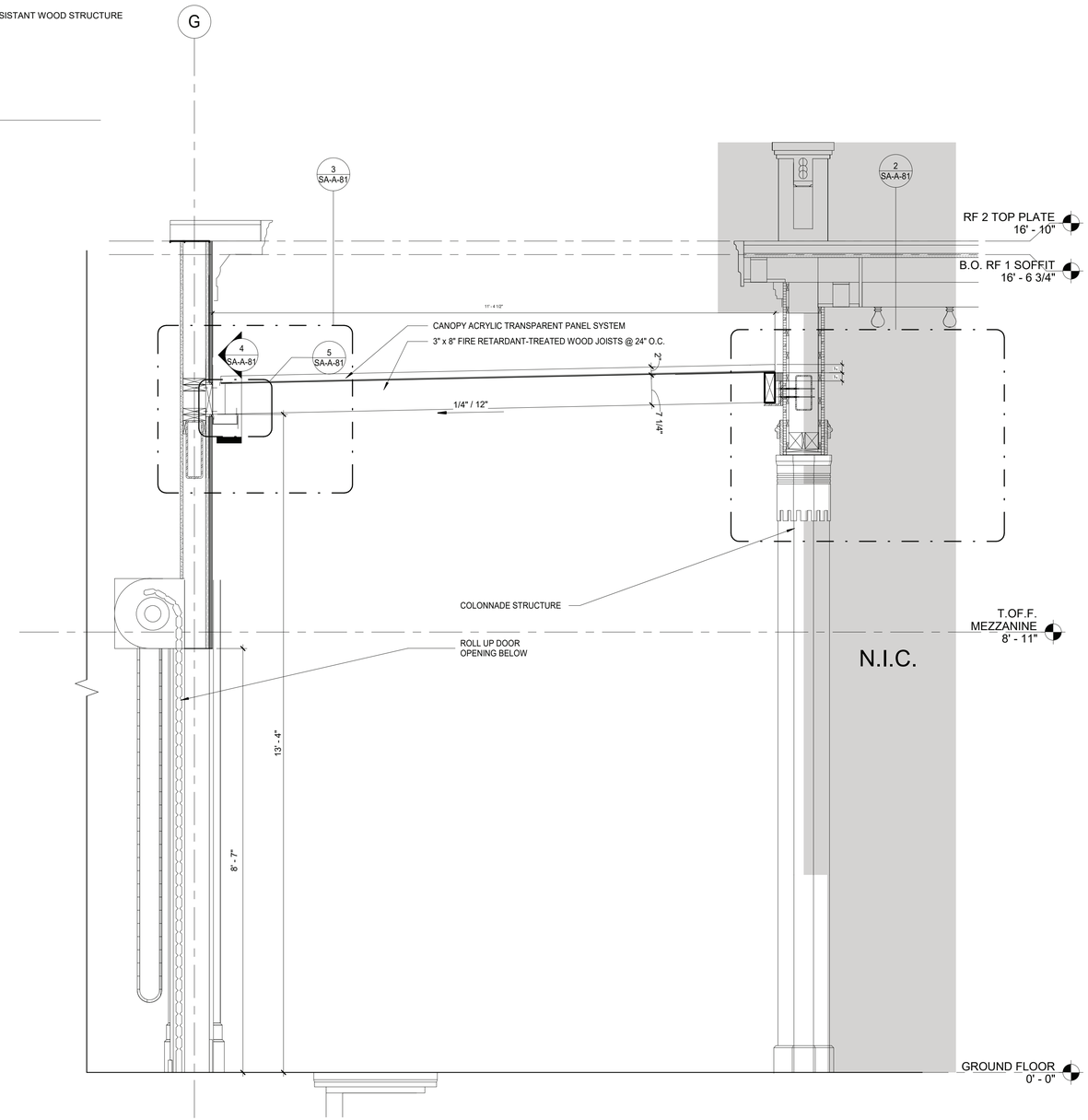

1 CANOPY SECTION DETAIL
3/4" = 1'-0"

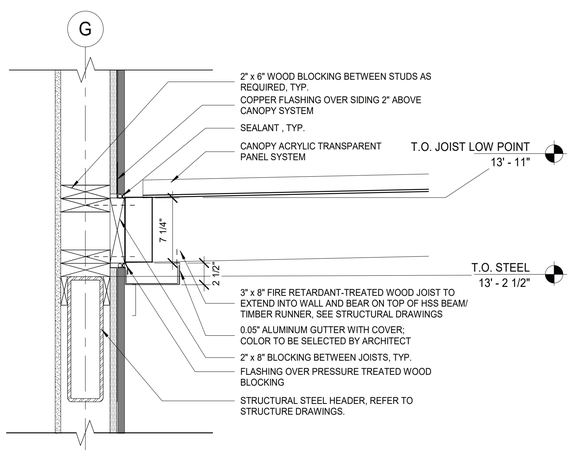

3 BUILDING TO CANOPY CONNECTION DETAIL
1 1/2" = 1'-0"

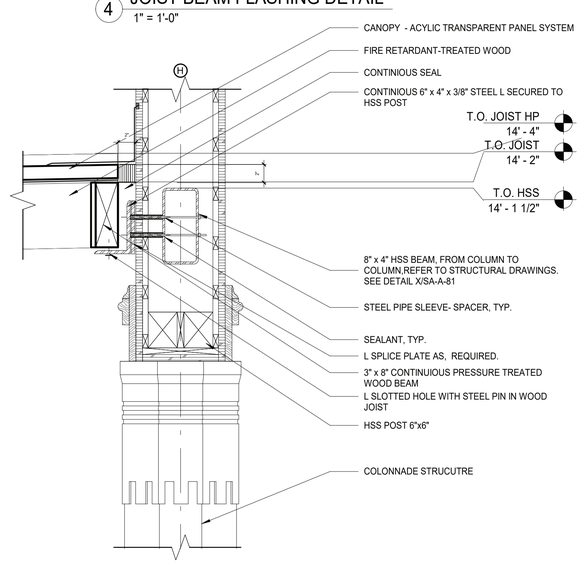

2 CANOPY TO COLONNADE CONNECTION DETAIL
1 1/2" = 1'-0"

9/26/2022 6:10:31 PM

CONSULTANT INFORMATION
The LiRo Group
3 Aerial Way, Syosset, New York 11791
(516) 938-5476 www.liro.com

CONSULTANT SEAL
REGISTERED ARCHITECT ROBERT D. CORNING 023285 STATE OF NEW YORK

REVISION NUMBER	DATE	MADE BY	APP'D BY	REVISION
1	09/21/22			BID ADDENDUM # 3

RECORD DRAWING CERTIFICATION
☐ AS BUILT – CHANGES AS NOTED ☐ AS BUILT – NO CHANGES

CONTRACTOR
NAME
SIGNATURE
TITLE DATE

PROJECT COORDINATOR
NAME
SIGNATURE
TITLE DATE

WESTCHESTER COUNTY, NEW YORK
DEPARTMENT OF PUBLIC WORKS AND TRANSPORTATION
DIVISION OF ENGINEERING

INFRASTRUCTURE REHABILITATION - PHASE 3
PLAYLAND PARK, RYE, NEW YORK
SOUTHEAST ARCADE BUILDING
CANOPY DETAILS

CONTRACT NUMBER **22-523**
SHEET NUMBER **SA-A-81**
DWG NO.: 604 of 664
SCALE: **As indicated**
DATE: **08/23/2022**
DPW FILE NUMBER **1-118-A-1353-1**
REV. NO. **1**

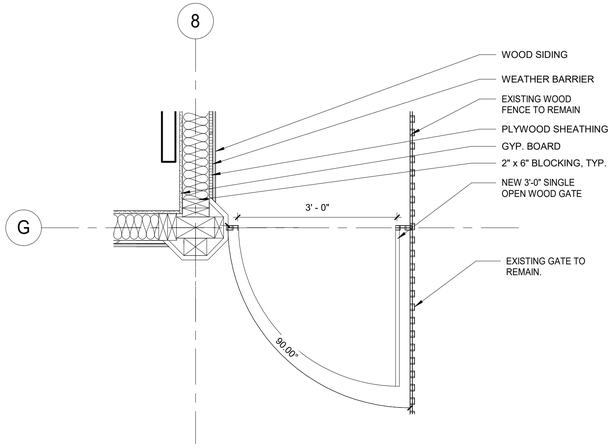

1 EX1 GATE PLAN VIEW
3/4" = 1'-0"

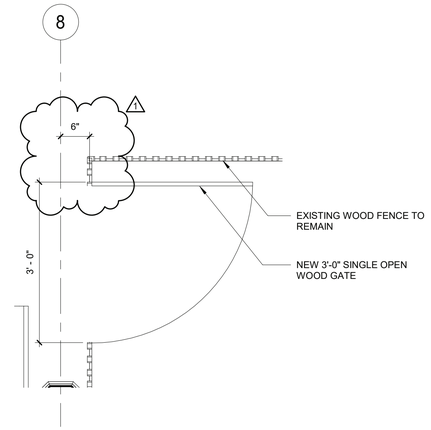

2 EX2 GATE PLAN VIEW
3/4" = 1'-0"

GATE SCHEDULE

DOOR NUMBER	DOOR TYPE	WIDTH	HEIGHT	GATE MATERIAL	FINISH	HDWR SET	REMARKS
EX1	GATE	3'-0"	3'-1"	WOOD	PAINT	SEE DETAIL 3/ SA-A-83	
EX2	GATE	3'-0"	3'-1"	WOOD	PAINT	SEE EX1.	

PLAYLAND MASTER PAINT SCHEDULE

KEY	COLOR	MANUFACTURER	REMARKS
P-1	MYSTICAL POWERS #901	BENJAMIN MOORE	
P-2	HERITAGE RED #HC-181	BENJAMIN MOORE	
P-3	NEW YORK STATE OF MIND #805	BENJAMIN MOORE	
P-4	LAZY SUNDAY #803	BENJAMIN MOORE	
P-5	DEEP JUNGLE #595	BENJAMIN MOORE	
P-6	LUCK OF THE IRISH #588	BENJAMIN MOORE	
P-7	MAJOLICA GREEN #0013	SHERWIN WILLIAMS	
P-8	ANTELOPE CANYON #125	BENJAMIN MOORE	
P-9	FORSYTHIA #6907	SHERWIN WILLIAMS	
P-10	CAPE BLUE #1642	BENJAMIN MOORE	
P-11	WHITE SNOW #9541	SHERWIN WILLIAMS	
P-12	TRICORN BLACK #6258	SHERWIN WILLIAMS	
P-13	READY WHITE MIX		INTERIOR USE ONLY
P-14	STUCCO TO MATCH P-1		FOR ALL NEW STUCCO SURFACES
P-15	VAN DEUSEN BLUE #HC-156	BENJAMIN MOORE	
P-16	#RAL9001		TYPICAL ROLL UP DOOR COLOR
P-17	FLORIDA BEACHES #900	BENJAMIN MOORE	
P-18	PIRATES COVE PEACH #903	BENJAMIN MOORE	
P-19	JADITE #6459	SHERWIN WILLIAMS	
P-20	DECISIVE YELLOW #6902	SHERWIN WILLIAMS	

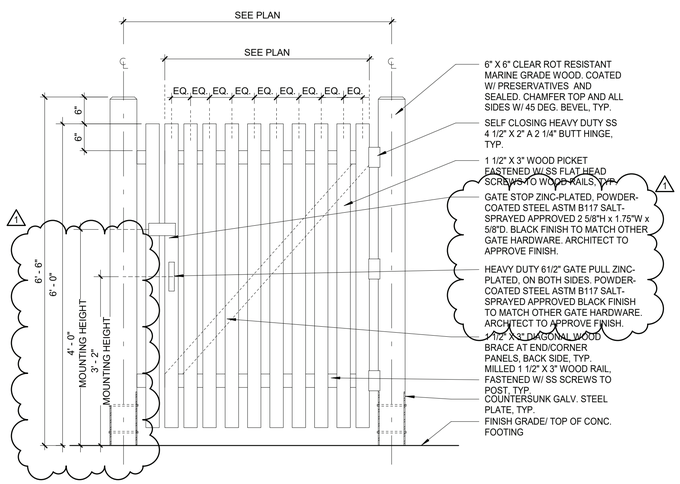

3 TYPICAL WOOD PICKET SINGLE GATE ELEVATION
3/4" = 1'-0"

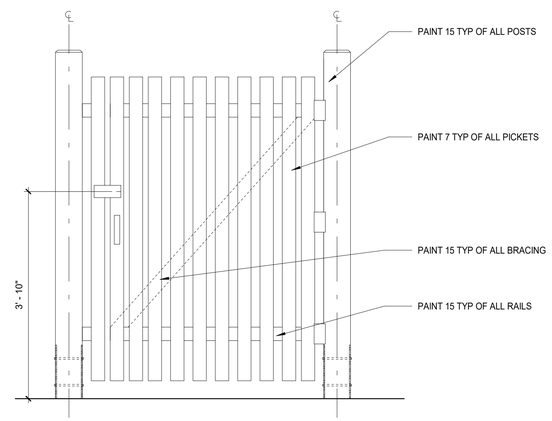

4 TYPICAL WOOD PICKET SINGLE GATE PAINT ELEVATION
3/4" = 1'-0"

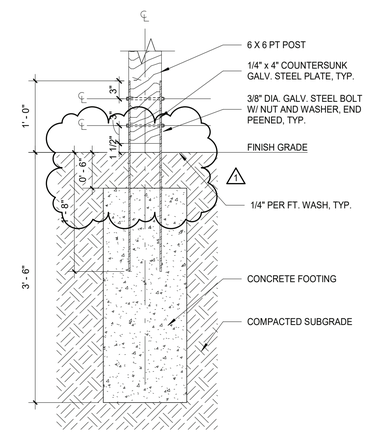

5 WOOD FENCE PIER DETAIL
1" = 1'-0"

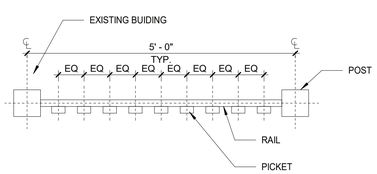

6 TYPICAL WOOD PICKET PLAN - GATE
3/4" = 1'-0"

9/26/2022 6:10:32 PM

CONSULTANT INFORMATION
The LiRo Group
3 Aerial Way, Syosset, New York 11791
(516) 938-5476 www.liro.com

CONSULTANT SEAL
REGISTERED ARCHITECT ROBERT D. YOUNG JR. 023280 STATE OF NEW YORK

REVISION NUMBER	DATE	MADE BY	APP'D BY	REVISION
1	09/21/22			BID ADDENDUM # 3

RECORD DRAWING CERTIFICATION
☐ AS BUILT – CHANGES AS NOTED ☐ AS BUILT – NO CHANGES

CONTRACTOR
NAME
SIGNATURE
TITLE DATE

PROJECT COORDINATOR
NAME
SIGNATURE
TITLE DATE

WESTCHESTER COUNTY, NEW YORK
DEPARTMENT OF PUBLIC WORKS AND TRANSPORTATION
DIVISION OF ENGINEERING

INFRASTRUCTURE REHABILITATION - PHASE 3
PLAYLAND PARK, RYE, NEW YORK
SOUTHEAST ARCADE BUILDING
FENCE DETAILS

CONTRACT NUMBER 22-523
SHEET NUMBER SA-A-83
DWG NO.: 606 of 664
SCALE: As indicated
DATE: 08/23/2022
DPW FILE NUMBER 1-118-A-1355-1
REV. NO. 1

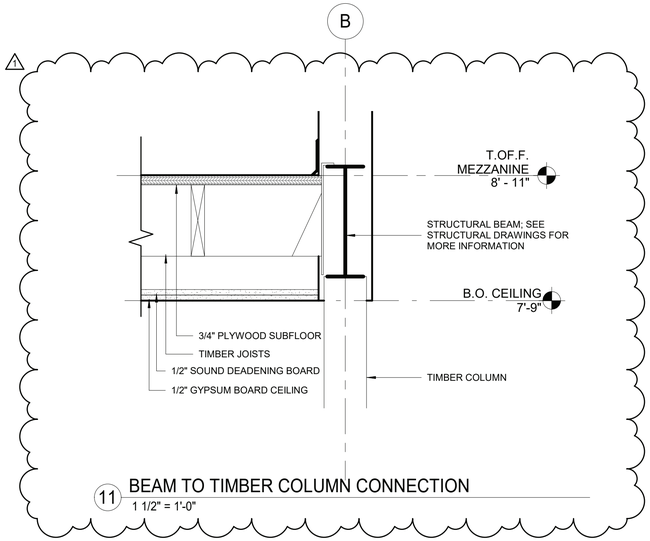

11 BEAM TO TIMBER COLUMN CONNECTION
1 1/2" = 1'-0"

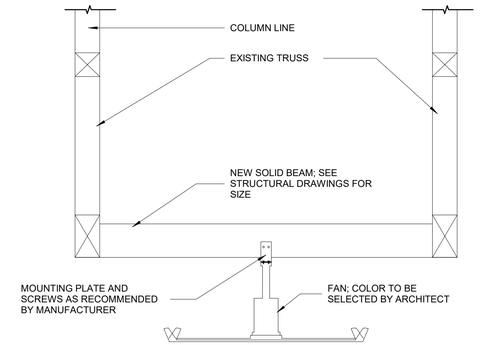

10 FAN MOUNTING DETAIL
1/2" = 1'-0"

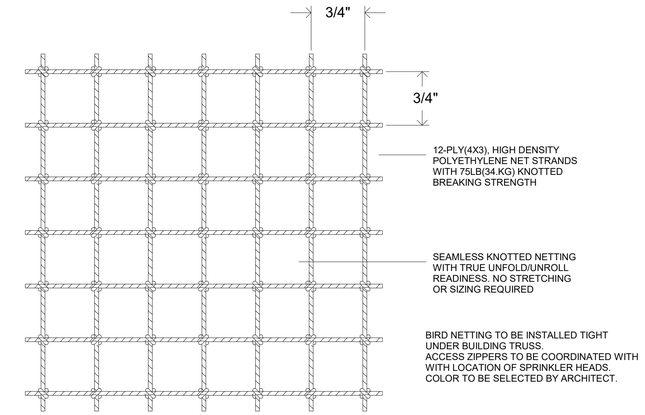

9 NET DETAILS - BIRD NETTING PARTIAL VIEW

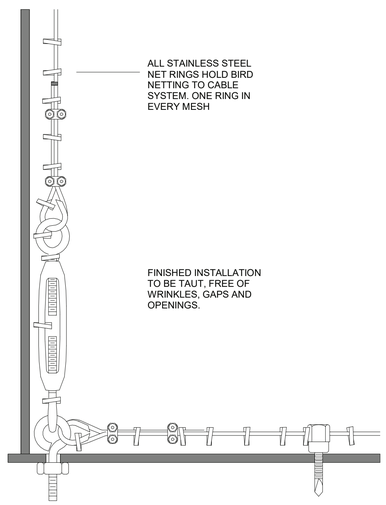

8 NET DETAILS - NET CABLE CONNECTION

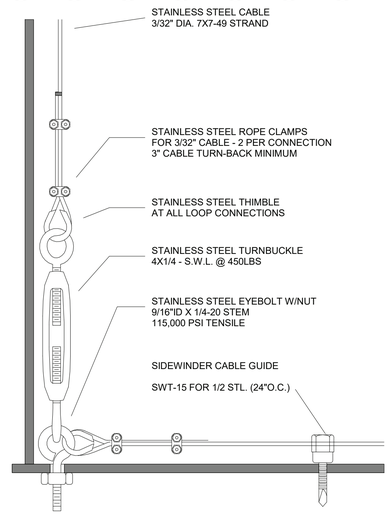

7 NET DETAILS - SUPPORT CABLE CONNECTIONS

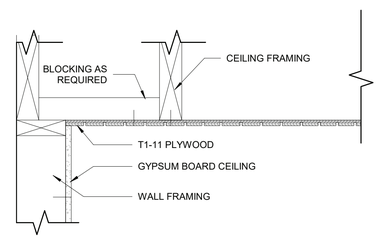

6 T1-11 FRAMING PARALLEL TO WALL
1 1/2" = 1'-0"

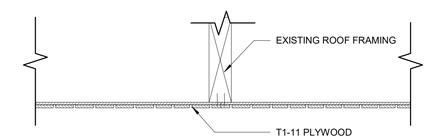

5 T1-11 FRAMING DETAIL
1 1/2" = 1'-0"

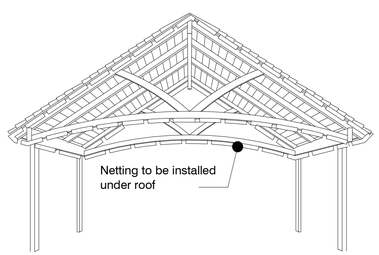

4 NET DETAILS - TRUSS NET LOCATION

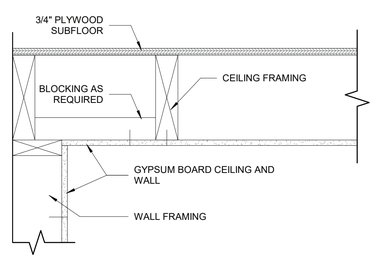

3 GYPSUM CEILING FRAMING PARALLEL TO WALL
1 1/2" = 1'-0"

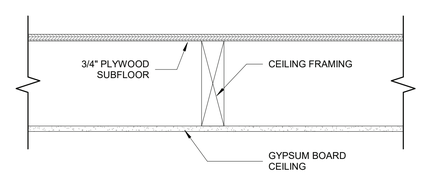

2 GYPSUM CEILING FRAMING DETAIL
1 1/2" = 1'-0"

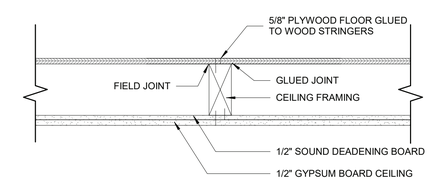

1 1 HOUR NON-COMBUSTILE FLOOR CEILING- LUMBER JOISTS- UL L504
1 1/2" = 1'-0"

9/26/2022 6:10:34 PM

CONSULTANT INFORMATION
The LiRo Group
3 Aerial Way, Syosset, New York 11791
(516) 938-5476 www.liro.com

CONSULTANT SEAL
REGISTERED ARCHITECT ROBERT D. YOUNG 023290 STATE OF NEW YORK

REVISION NUMBER	DATE	MADE BY	APP'D BY	REVISION
1	09/21/22			BID ADDENDUM # 3

RECORD DRAWING CERTIFICATION
☐ AS BUILT – CHANGES AS NOTED ☐ AS BUILT – NO CHANGES

CONTRACTOR
NAME
SIGNATURE
TITLE DATE

PROJECT COORDINATOR
NAME
SIGNATURE
TITLE DATE

WESTCHESTER COUNTY, NEW YORK
DEPARTMENT OF PUBLIC WORKS AND TRANSPORTATION
DIVISION OF ENGINEERING

INFRASTRUCTURE REHABILITATION - PHASE 3
PLAYLAND PARK, RYE, NEW YORK
SOUTHEAST ARCADE BUILDING
CEILING DETAILS

CONTRACT NUMBER	22-523
SHEET NUMBER	SA-A-84
DWG NO.:	607 of 664
SCALE:	As indicated
DATE:	08/23/2022
DPW FILE NUMBER	1-118-A-1356-1
REV. NO.	1

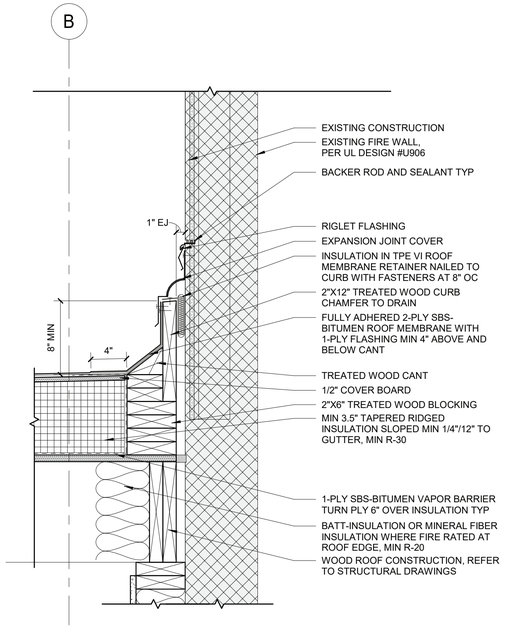

6 TYPICAL SBS ROOF TO EXISTING EXTERIOR WALL FLASHING DETAIL
1 1/2" = 1'-0"

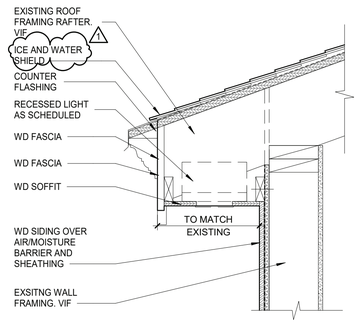

5 TYPICAL EXTERIOR SOFFIT DETAIL
1 1/2" = 1'-0"

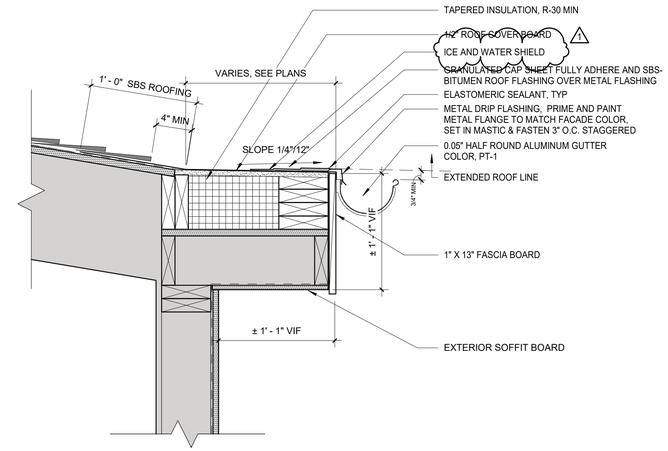

4 EXISTING ROOF EAVE WTIH SBS
1 1/2" = 1'-0"

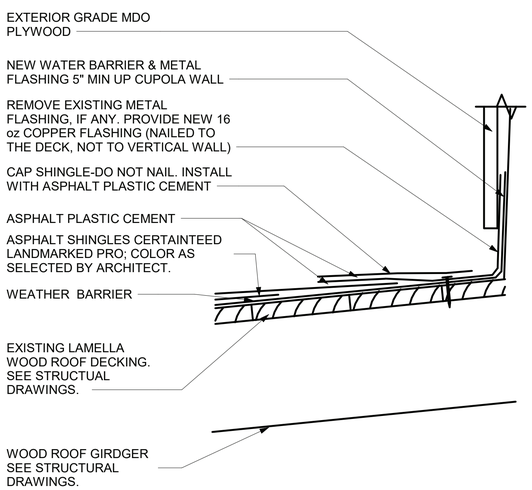

3 ROOF DETAILS - MONITOR /ROOF CONNECTION DETAIL
3" = 1'-0"

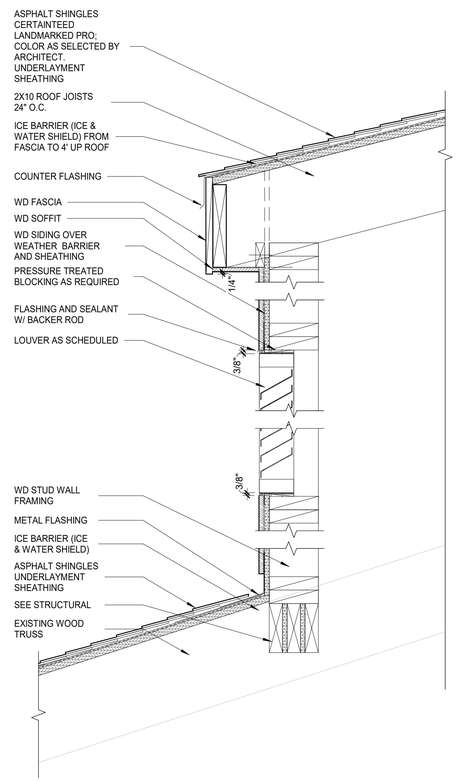

2 ROOF MONITOR SECTION
1 1/2" = 1'-0"

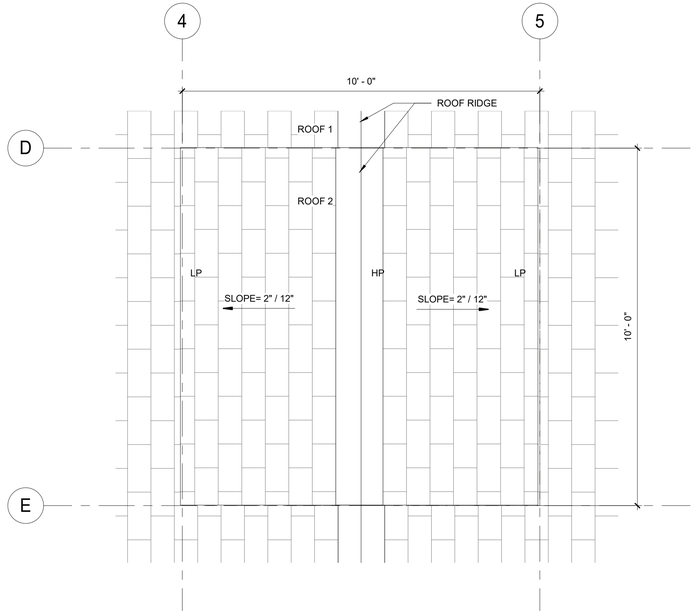

1 ENLARGED ROOF MONITOR PLAN
1/2" = 1'-0"

9/26/2022 6:10:35 PM

CONSULTANT INFORMATION
The LiRo Group
3 Aerial Way, Syosset, New York 11791
(516) 938-5476 www.liro.com

CONSULTANT SEAL
REGISTERED ARCHITECT ROBERT D. CONNOR 023280 STATE OF NEW YORK

REVISION NUMBER	DATE	MADE BY	APP'D BY	REVISION
1	09/21/22			BID ADDENDUM # 3

RECORD DRAWING CERTIFICATION
☐ AS BUILT – CHANGES AS NOTED ☐ AS BUILT – NO CHANGES

CONTRACTOR
NAME
SIGNATURE
TITLE DATE

PROJECT COORDINATOR
NAME
SIGNATURE
TITLE DATE

WESTCHESTER COUNTY, NEW YORK
DEPARTMENT OF PUBLIC WORKS AND TRANSPORTATION
DIVISION OF ENGINEERING

INFRASTRUCTURE REHABILITATION - PHASE 3
PLAYLAND PARK, RYE, NEW YORK
SOUTHEAST ARCADE BUILDING
ROOF MONITOR DETAILS

CONTRACT NUMBER **22-523**
SHEET NUMBER **SA-A-85**
DWG NO.: 608 of 664
SCALE: **As indicated**
DATE: **08/23/2022**
DPW FILE NUMBER **1-118-A-1357-1**
REV. NO. **1**

SOUTH EAST ARCADE DOOR SCHEDULE

DOOR NUMBER	FROM ROOM	TO ROOM	TYPE	DOOR: NEW OPENING	DOOR: EX. OPENING	DOOR: PANEL TYPE	DOOR: WIDTH	DOOR: HEIGHT	DOOR: DOOR THICKNESS	DOOR: MATERIAL	DOOR: GLASS	DOOR: FINISH/COLOR INSIDE	DOOR: FINISH/COLOR OUTSIDE	FRAME: FRAME TYPE	FRAME: MATL	FRAME: FINISH	DETAIL: HEAD	DETAIL: JAMB	DETAIL: THRESHOLD	FIRE RATING	R-VALUE	U-VALUE	HARDWARE SET	REMARKS
100A	ARCADE AREA	EXTERIOR	OVERHEAD DOOR	-	X	C	8' - 6"	8' - 0"		steel	NO	P-16	P-16	INTERIOR FACE OF WALL MOUNTING	steel	P-16	1	2	8	-	-	0.31	4	MOTORIZED;WEATHER STRIP AT 3 SIDES OF DOOR
100B	ARCADE AREA	EXTERIOR	SINGLE PANEL	X	-	A-1	3' - 0"	7' - 3"	0' - 1 3/4"	H.M.	NO	TBD	TBD	1	H.M.	TBD	3	4	8		-	-	11	WEATHER STRIP AT 3 SIDES OF DOOR
100C	ARCADE AREA	EXTERIOR	OVERHEAD DOOR	-	X	C	8' - 0"	7' - 0"		steel	NO	P-16	P-16	INTERIOR FACE OF WALL MOUNTING	steel	P-16	1	2	7		-	0.31	4	MOTORIZED;WEATHER STRIP AT 3 SIDES OF DOOR
100D	ARCADE AREA	EXTERIOR	OVERHEAD DOOR	X	-	C	18' - 0"	10' - 0"		steel	NO	P-16	P-16	INTERIOR FACE OF WALL MOUNTING	steel	P-16	1	2	7	45 MIN.	-	0.31	4	FIRE RATED CONNECTED TO FIRE ALARM SYSTEM, TYP. / MOTORIZED;WEATHER STRIP AT 3 SIDES OF DOOR
100E	ARCADE AREA	EXTERIOR	OVERHEAD DOOR	X	-	C	18' - 0"	10' - 0"		steel	NO	P-16	P-16	INTERIOR FACE OF WALL MOUNTING	steel	P-16	1	2	7	45 MIN.	-	0.31	4	FIRE RATED CONNECTED TO FIRE ALARM SYSTEM, TYP. / MOTORIZED;WEATHER STRIP AT 3 SIDES OF DOOR
100F	ARCADE AREA	EXTERIOR	OVERHEAD DOOR	X	-	C	18' - 0"	10' - 0"		steel	NO	P-16	P-16	INTERIOR FACE OF WALL MOUNTING	steel	P-16	1	2	7	45 MIN.	-	0.31	4	FIRE RATED CONNECTED TO FIRE ALARM SYSTEM, TYP. / MOTORIZED;WEATHER STRIP AT 3 SIDES OF DOOR
100G	ARCADE AREA	EXTERIOR	SINGLE PANEL	-	-	A-1	3' - 0"	7' - 3"		H.M.	NO	TBD	TBD	1	H.M.	TBD	3	4	8	45 MIN.	-	-	9	RATED DOOR AND FRAME. 180 DEGREE SWING DOOR;WEATHER STRIP AT 3 SIDES OF DOOR
100H	HALL	ARCADE AREA	SINGLE PANEL	X	-	A-2	3' - 0"	7' - 3"	0' - 1 3/4"	H.M.	NO	TBD	TBD	1	H.M.	TBD	5	6	-	-	-	-	3	
100J	CLOSET	ARCADE AREA	SINGLE PANEL	X	-	A-2	3' - 0"	7' - 3"	0' - 1 3/4"	H.M.	NO	TBD	TBD	1	H.M.	TBD	5	6	-	45 MIN.	-	-	8	
102	SPRINKLER ROOM	EXTERIOR	DOUBLE PANEL	X	-	D	6' - 0"	7' - 3"	0' - 1 3/4"	H.M.	NO	TBD	TBD	1	H.M.	TBD	3	4	8	-	-	-	10	WEATHER STRIP AT 3 SIDES OF DOOR
103	ELECTRICAL ROOM	EXTERIOR	DOUBLE PANEL	X	-	D	6' - 0"	7' - 3"	0' - 1 3/4"	H.M.	NO	TBD	TBD	1	H.M.	TBD	3	4	8	-	-	-	10	WEATHER STRIP AT 3 SIDES OF DOOR
200	HALL	MEZZANINE	SINGLE PANEL	X	-	A-2	3' - 0"	7' - 3"	0' - 1 3/4"	H.M.	NO	TBD	TBD	1	H.M.	TBD	5	6	-	45 MIN.	-	-	3	

GENERAL DOOR SCHEDULE NOTES

1. CONTRACTOR TO CONFIRM ALL DOOR SIZES IN FIELD PRIOR TO ORDERING.
2. THE CONTRACTOR SHALL EXAMINE THE DRAWINGS, SCHEDULE AND SPECIFICATIONS AND FURNISH PROPER HARDWARE FOR ALL OPENINGS WHETHER LISTED OR NOT. COMPLETE SHOP DRAWINGS SHALL BE PROVIDED FOR APPROVAL PRIOR TO PURCHASE.
3. ALL EXIT DOORS SHALL BE OPENABLE FROM THE EGRESS SIDE WITHOUT THE USE OF A KEY OR SPECIAL KNOWLEDGE.
4. VERIFY DIMENSIONS OF EXISTING OPENING AND DOORS BEFORE ORDERING.
5. CONTRACTOR SHALL COORDINATE AND VERIFY LOCATION OF RECESSED FLOOR CLOSERS, PIVOTS, ETC. WITH EXISTING FLOOR SLABS AND OTHER FIELD CONDITIONS PRIOR TO ORDERING TO ENSURE PROPER CLEARANCES AND DEPTHS ARE ALLOWED.

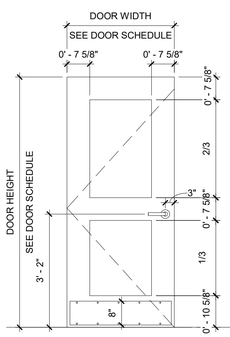

TYPE A-1
DOUBLE PANEL
H.M. DOOR

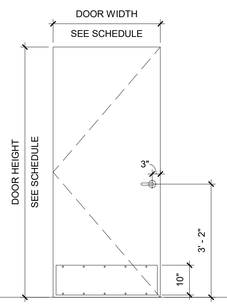

TYPE A-2
FLUSH
H.M. DOOR

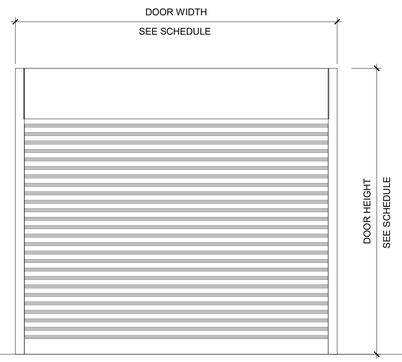

TYPE C
OVERHEAD ROLL-UP DOOR

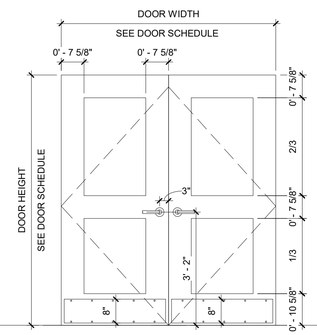

TYPE D
DOUBLE PANEL
DOUBLE H.M. DOOR

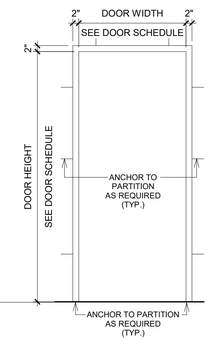

TYPE 1
H.M. FRAME

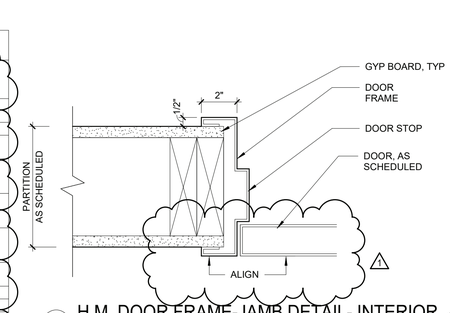

6 H.M. DOOR FRAME-JAMB DETAIL- INTERIOR
3" = 1'-0"

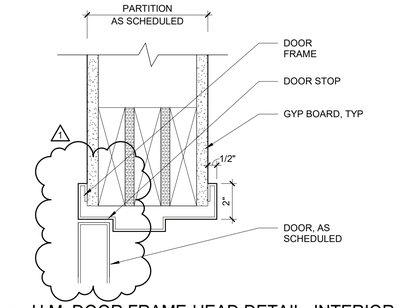

5 H.M. DOOR FRAME-HEAD DETAIL- INTERIOR
3" = 1'-0"

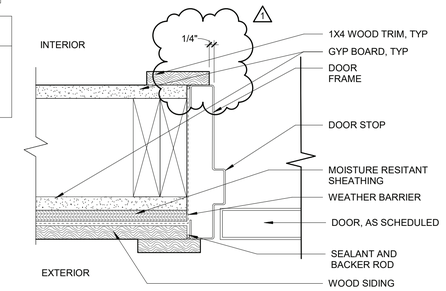

4 HM DOOR JAMB DETAIL - EXTERIOR
3" = 1'-0"

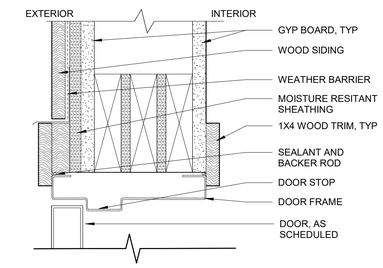

3 HM DOOR HEAD DETAIL - EXTERIOR
3" = 1'-0"

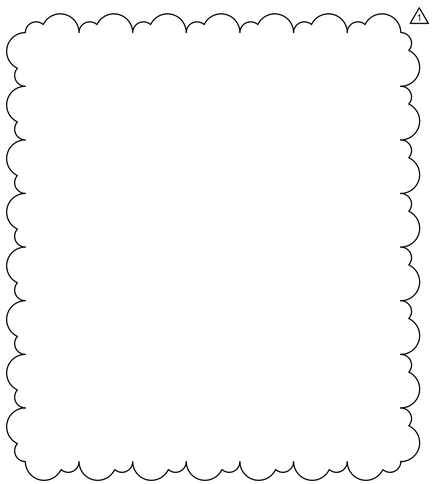

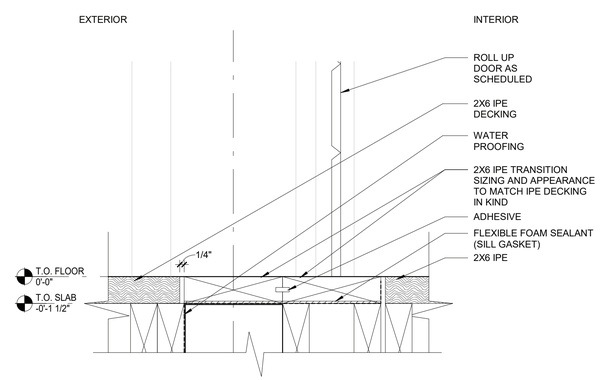

7 IPE TO WOOD PLANK TRANSITION- TR-04
3" = 1'-0"

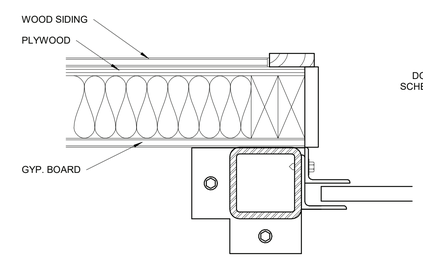

2 ROLL-UP DOOR JAMB DETAIL
3" = 1'-0"

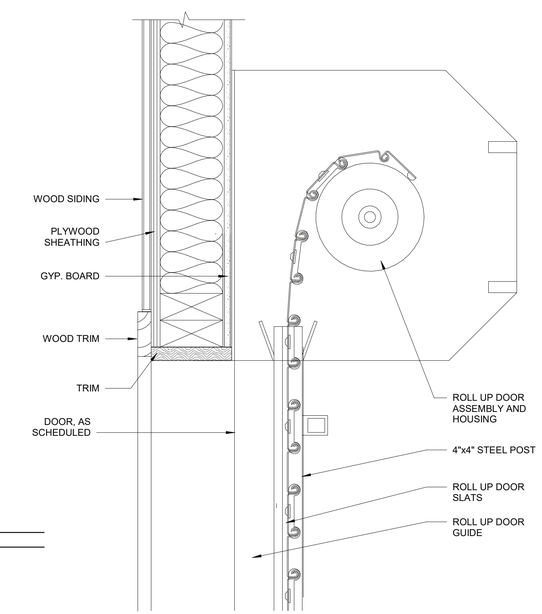

1 ROLL-UP DOOR HEAD DETAIL
3" = 1'-0"

9/26/2022 6:10:36 PM

CONSULTANT INFORMATION
The LiRo Group
3 Aerial Way, Syosset, New York 11791
(516) 938-5476 www.liro.com

CONSULTANT SEAL
REGISTERED ARCHITECT ROBERT D. TOWNSEND 023280 STATE OF NEW YORK

REVISION NUMBER	DATE	MADE BY	APP'D BY	REVISION
1	09/21/22			BID ADDENDUM # 3

RECORD DRAWING CERTIFICATION
☐ AS BUILT – CHANGES AS NOTED ☐ AS BUILT – NO CHANGES

CONTRACTOR
NAME
SIGNATURE
TITLE DATE

PROJECT COORDINATOR
NAME
SIGNATURE
TITLE DATE

WESTCHESTER COUNTY, NEW YORK
DEPARTMENT OF PUBLIC WORKS AND TRANSPORTATION
DIVISION OF ENGINEERING

INFRASTRUCTURE REHABILITATION - PHASE 3
PLAYLAND PARK, RYE, NEW YORK
SOUTHEAST ARCADE BUILDING
DOOR & HARDWARE SCHEDULE

CONTRACT NUMBER	22-523
SHEET NUMBER	SA-A-91
DWG NO.:	609 of 664
SCALE:	As indicated
DATE:	08/23/2022
DPW FILE NUMBER	1-118-A-1358-1
REV. NO.	1

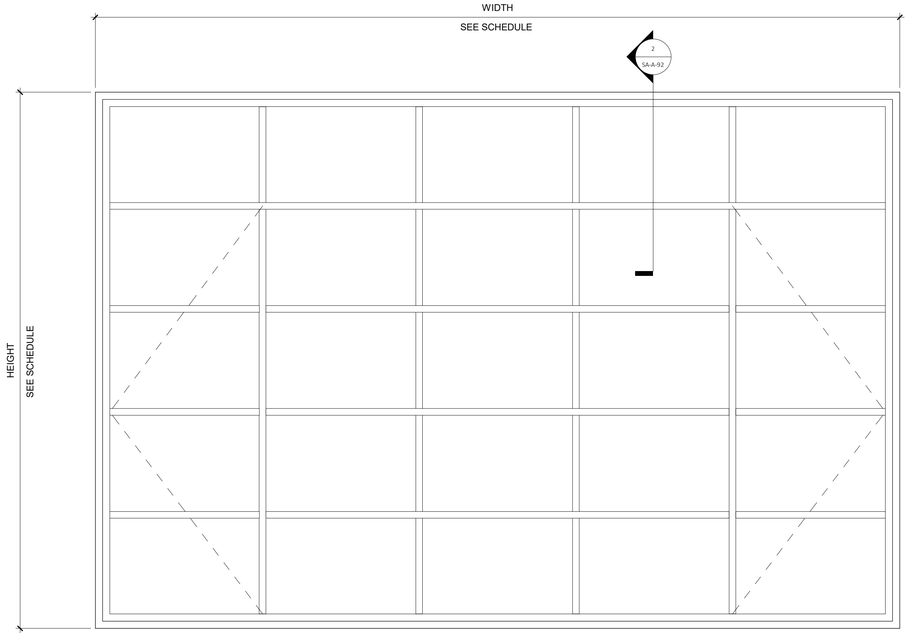

EXISTING WINDOW ELEVATION TYPE 1
1 1/2" = 1'-0"

FRAME MUST BE REMOVED FOR CLEANING AND EXTENSIVE RUST REMOVAL, STRAIGHTENING OF BENT SECTIONS, WELDING OR SPLICING IN OF NEW SECTIONS AS NEEDED, AND REGLAZING. PROVIDE CAULKING AND WEATHERSTRIPPING.

SOUTH EAST ARCADE WINDOW SCHEDULE

WINDOW NUMBER	LEVEL	WINDOW TYPE	OPERATION	ROUGH WIDTH	ROUGH HEIGHT	SILL HEIGHT	WINDOW MATERIAL	FINISH	EXTERIOR TRIM	REMARK
W-1	GROUND FLOOR	1	FIXED AND CASEMENT	7' - 6 3/4" VIF	5' - 0 3/4" VIF	3' - 0" VIF	STEEL	Black	P-7	REFER TO DETAILS A, B, & C ON THIS SHEET
W-2	GROUND FLOOR	1	FIXED AND CASEMENT	7' - 6 3/4" VIF	5' - 0 3/4" VIF	3' - 0" VIF	STEEL	Black	P-7	REFER TO DETAILS A, B, & C ON THIS SHEET
W-3	GROUND FLOOR	1	FIXED AND CASEMENT	7' - 6 3/4" VIF	5' - 0 3/4" VIF	3' - 0" VIF	STEEL	Black	P-7	REFER TO DETAILS A, B, & C ON THIS SHEET
W-4	GROUND FLOOR	1	FIXED AND CASEMENT	7' - 6 3/4" VIF	5' - 0 3/4" VIF	3' - 0" VIF	STEEL	Black	P-7	REFER TO DETAILS A, B, & C ON THIS SHEET
W-5	GROUND FLOOR	1	FIXED AND CASEMENT	7' - 6 3/4" VIF	5' - 0 3/4" VIF	3' - 0" VIF	STEEL	Black	P-7	REFER TO DETAILS A, B, & C ON THIS SHEET
W-6	GROUND FLOOR	1	FIXED AND CASEMENT	7' - 6 3/4" VIF	5' - 0 3/4" VIF	3' - 0" VIF	STEEL	Black	P-7	REFER TO DETAILS A, B, & C ON THIS SHEET
W-7	GROUND FLOOR	1	FIXED AND CASEMENT	7' - 6 3/4" VIF	5' - 0 3/4" VIF	3' - 0" VIF	STEEL	Black	P-7	REFER TO DETAILS A, B, & C ON THIS SHEET
W-8	GROUND FLOOR	1	FIXED AND CASEMENT	7' - 6 3/4" VIF	5' - 0 3/4" VIF	3' - 0" VIF	STEEL	Black	P-7	REFER TO DETAILS A, B, & C ON THIS SHEET

NOTE: GC TO VERIFY ALL DIMENSIONS

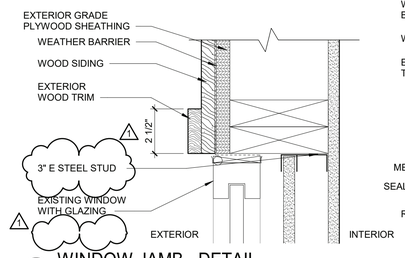

C WINDOW JAMB - DETAIL
3" = 1'-0"

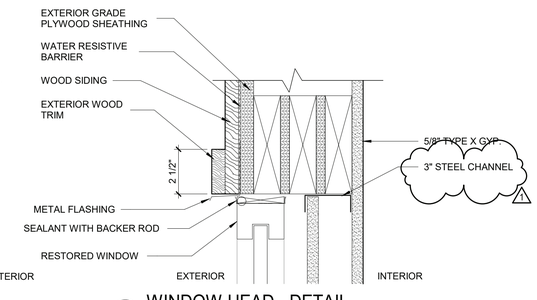

A WINDOW HEAD - DETAIL
3" = 1'-0"

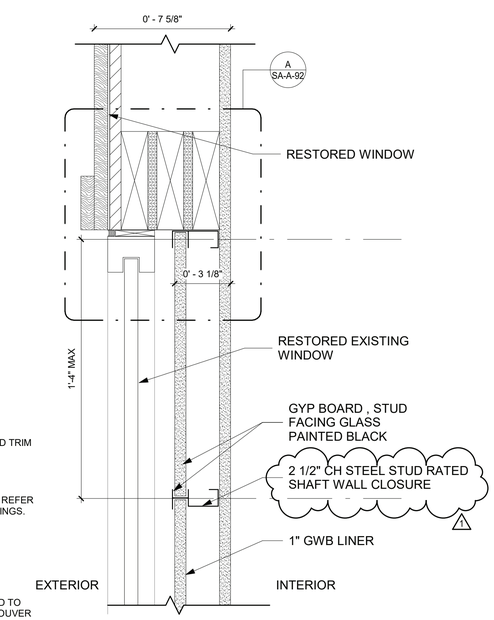

1 HOUR SHAFT WALL ENCLOSED AT WINDOW UL DESIGN # U415

1 ENCLOSED SHAFT WINDOW
3" = 1'-0"

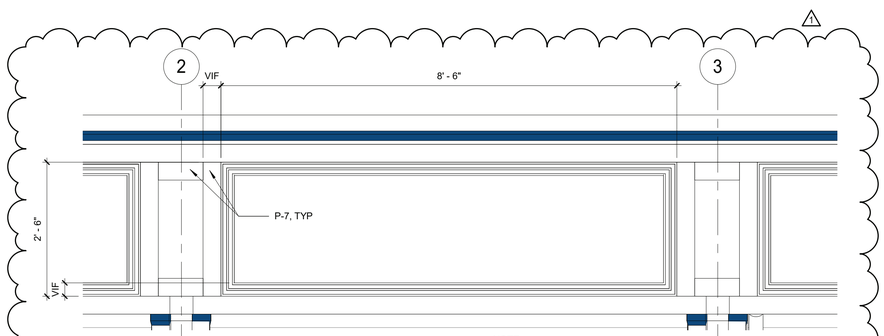

NOTE:
REPLICATE TRIM TO MATCH DOCUMENTED HISTORIC TRIM, LOCATIONS, SIZE AND SHAPE. FINISH PAINT COLORS AS SCHEDULED.

4 ENTABULATURE TYPE 1
3/4" = 1'-0"

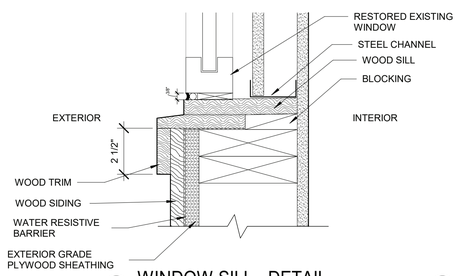

B WINDOW SILL - DETAIL
3" = 1'-0"

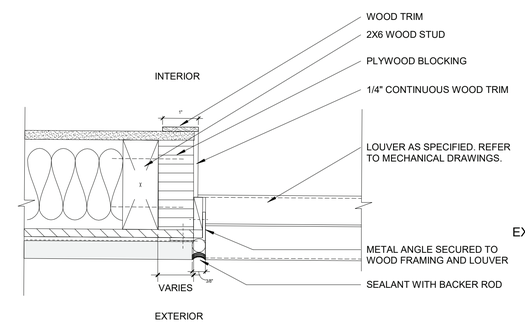

2 TYPICAL LOUVER JAMB DETAIL
6" = 1'-0"

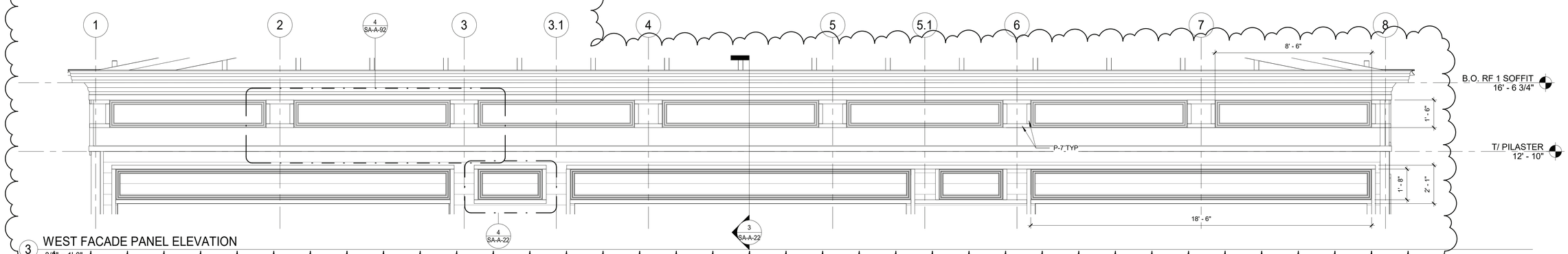

3 WEST FACADE PANEL ELEVATION
3/4" = 1'-0"

9/26/2022 6:10:38 PM

CONSULTANT INFORMATION
The LiRo Group
3 Aerial Way, Syosset, New York 11791
(516) 938-5476 www.liro.com

CONSULTANT SEAL
REGISTERED ARCHITECT ROBERT D. CONNIZZA 023280 STATE OF NEW YORK

REVISION NUMBER	DATE	MADE BY	APP'D BY	REVISION
1	09/21/22			BID ADDENDUM # 3

RECORD DRAWING CERTIFICATION
☐ AS BUILT – CHANGES AS NOTED ☐ AS BUILT – NO CHANGES

CONTRACTOR
NAME
SIGNATURE
TITLE DATE

PROJECT COORDINATOR
NAME
SIGNATURE
TITLE DATE

WESTCHESTER COUNTY, NEW YORK
DEPARTMENT OF PUBLIC WORKS AND TRANSPORTATION
DIVISION OF ENGINEERING

INFRASTRUCTURE REHABILITATION - PHASE 3
PLAYLAND PARK, RYE, NEW YORK
SOUTHEAST ARCADE BUILDING
WINDOW, LOUVERS SCHEDULES & DETAILS

CONTRACT NUMBER	22-523
SHEET NUMBER	SA-A-92
DWG NO.:	610 of 664
SCALE:	As indicated
DATE:	08/23/2022
DPW FILE NUMBER	1-118-A-1359-1
REV. NO.	1

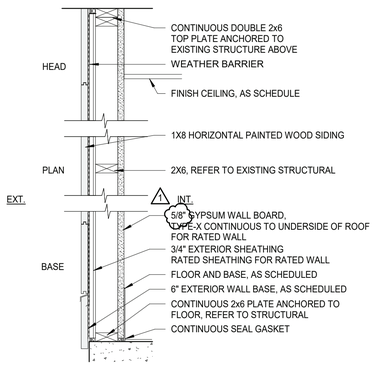

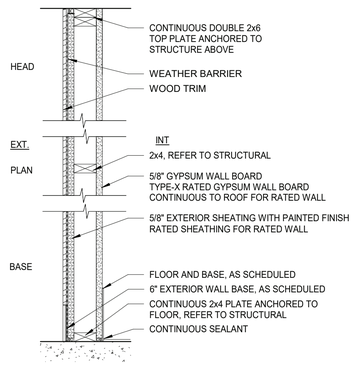

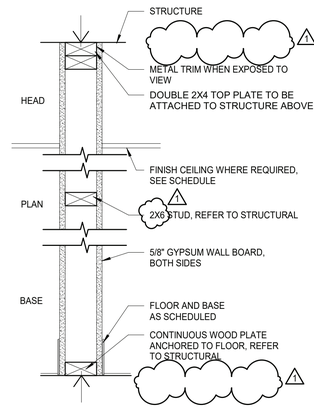

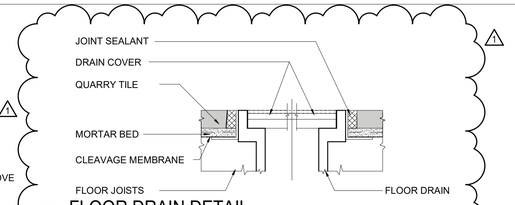

14 FLOOR DRAIN DETAIL
6" = 1'-0"

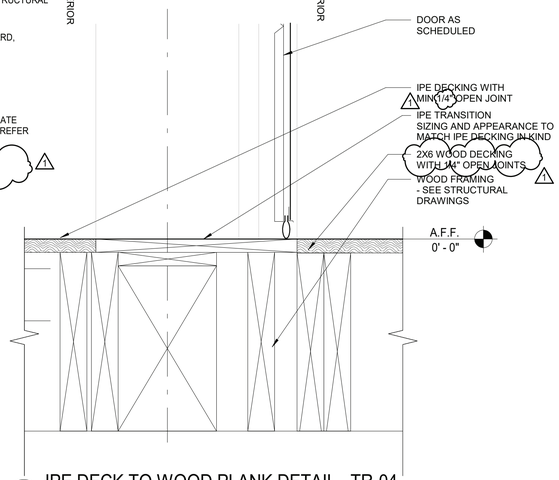

12 IPE DECK TO WOOD PLANK DETAIL_ TR-04
3" = 1'-0"

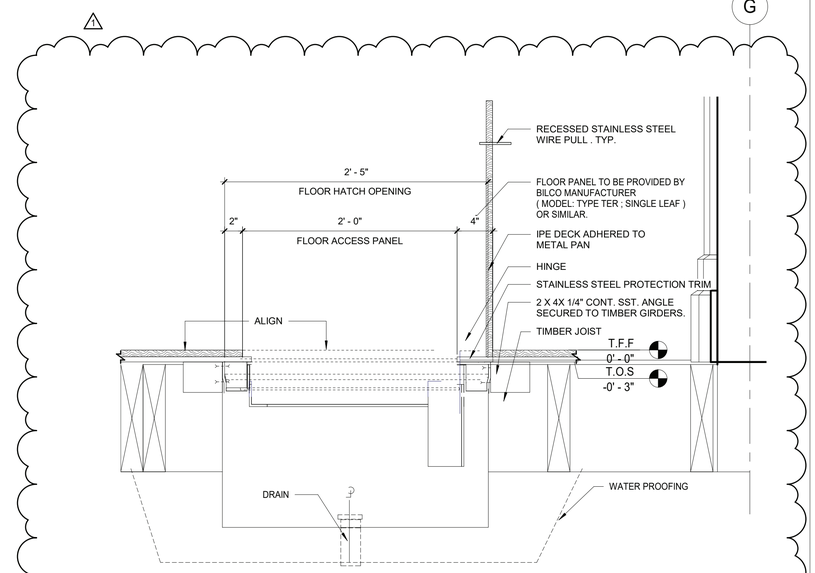

13 FLOOR ACCESS PANEL SECTION
1 1/2" = 1'-0"

1 **EXTERIOR WALL - NOT RATED**
1 LAYER 5/8" IMPACT & MOLD-RESISTANT GYP. BD. UP TO 8' A.F.F. AND 5/8" MOLD-RESISTANT GYP. BD. TO CEILING ON THE INTERIOR SIDE

1A **EXTERIOR WALL - 1 HR RATED - BXUV.V346-ANSI/UL 263**
5/8" GWB-X , M-BLOC – MOISTURE RESISTANT, 2X6 WOOD STUD, 5/8" GWB-X, M-BLOC , ½" FIRE-RETARDANT SHEATHING, 1/8" DRAINAGE TYPE WEATHER BARRIER ,WOOD SIDING

1B **EXTERIOR WALL - NOT RATED**
1 LAYER 5/8" EXTERIOR PAINTED FINISH PLYWOOD
1 LAYER 5/8" GYPSUM BOARD FLOOR TO CEILING

1C **EXTERIOR WALL - 1 HR RATED - BXUV.V346-ANSI/UL 263**
5/8" GWB-X , M-BLOC – MOISTURE RESISTANT, 2X6 WOOD STUD, 5/8" GWB-X, M-BLOC , ½" FIRE-RETARDANT SHEATHING, 1/8" DRAINAGE TYPE WEATHER BARRIER ,WOOD TRIM

2 **INTERIOR PARTITION - NO RATING**
5-1/2" WOOD STUDS
1 LAYER 5/8" GYP. BD. EACH SIDE.

2A **INTERIOR PARTITION - 1 HR RATING (ONE-SIDE)**
5-1/2" WOOD STUDS
1 LAYER 5/8" GYP. BD.
1 LAYER 5/8" RATED GYP. BD.

GENERAL WALL/PARTITION NOTES:

1. SEE SPECIFICATIONS FOR GYPSUM BOARD AND OTHER WALL BOARD TYPES, APPLICATIONS AND THICKNESSES UNLESS NOTED OTHERWISE ON THE DRAWINGS.
2. REFER TO THE LATEST EDITION OF UNDERWRITERS LABORATORIES INC. FIRE RESISTANCE DIRECTORY FOR ADDITIONAL REQUIREMENTS ON UL RATED ASSEMBLIES AS NOTED IN THE PARTITION DESCRIPTIONS. WHERE UL# IS NOTED USE UL IN LIEU OF CHART ABOVE

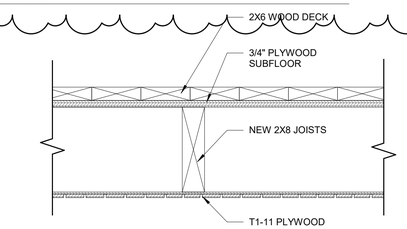

11 MEZZANINE FLOOR ASSEMBLY
1 1/2" = 1'-0"

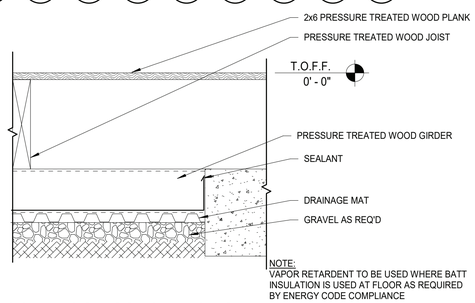

10 WOOD FLOOR CONSTRUCTION DETAIL
1 1/2" = 1'-0"

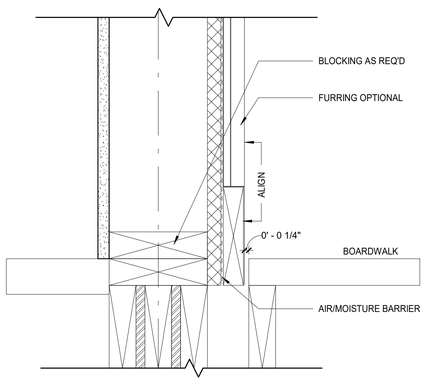

9 EXTERIOR WALL SILL DETAIL
3" = 1'-0"

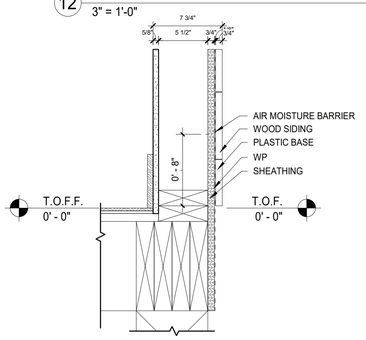

8 EXTERIOR WALL SILL DETAIL WITH PLASTIC BASE
1 1/2" = 1'-0"

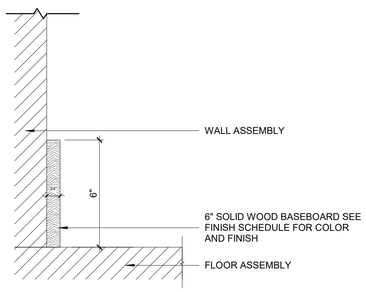

7 WOOD BASE
3" = 1'-0"

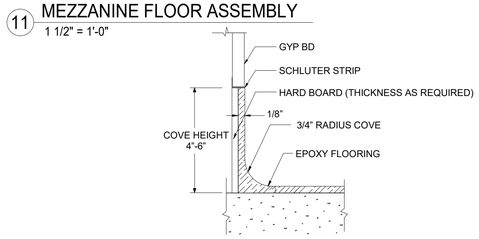

6 EPOXY FLOORING- COVE BASE DETAIL (BUILT OUT WALL)
6" = 1'-0"

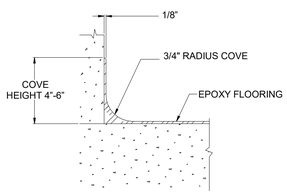

5 EPOXY FLOORING- CAPLESS COVE BASE DETAIL
6" = 1'-0"

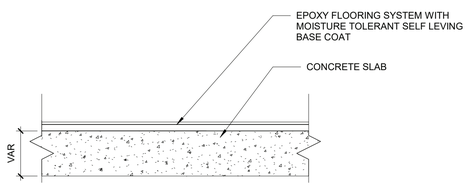

4 EPOXY FLOOR TYPICAL DETAIL
6" = 1'-0"

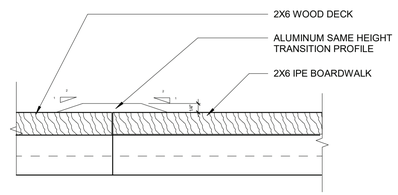

3 WOOD TO WOOD DETAIL
6" = 1'-0"

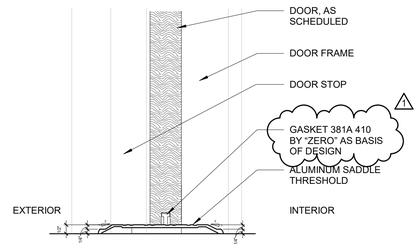

2 EXTERIOR DOOR SILL DETAIL - TR-02
3" = 1'-0"

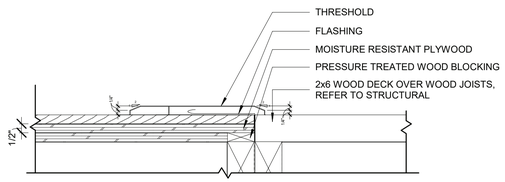

1 WOOD TO WOOD DECK TRANSITION DETAIL_TR-01
3" = 1'-0"

9/26/2022 6:10:40 PM

CONSULTANT INFORMATION
The LiRo Group
3 Aerial Way, Syosset, New York 11791
(516) 938-5476 www.liro.com

CONSULTANT SEAL
REGISTERED ARCHITECT ROBERT D. CORNINO 023229 STATE OF NEW YORK

REVISION NUMBER	DATE	MADE BY	APP'D BY	REVISION
1	09/21/22			BID ADDENDUM # 3

RECORD DRAWING CERTIFICATION
☐ AS BUILT – CHANGES AS NOTED ☐ AS BUILT – NO CHANGES

CONTRACTOR
NAME
SIGNATURE
TITLE DATE

PROJECT COORDINATOR
NAME
SIGNATURE
TITLE DATE

WESTCHESTER COUNTY, NEW YORK
DEPARTMENT OF PUBLIC WORKS AND TRANSPORTATION
DIVISION OF ENGINEERING

INFRASTRUCTURE REHABILITATION - PHASE 3
PLAYLAND PARK, RYE, NEW YORK
SOUTHEAST ARCADE BUILDING
PARTITION TYPES AND FLOORING DETAILS

CONTRACT NUMBER **22-523**
SHEET NUMBER **SA-A-93**
DWG NO.: 611 of 664
SCALE: **As indicated**
DATE: **08/23/2022**
DPW FILE NUMBER **1-118-A-1360-1**
REV. NO. **1**

FIRE PROTECTION SAFETY NOTES:

1. SPECIAL PRECAUTION SHALL BE TAKEN BY THE CONTRACTOR SO THAT EQUIPMENT OF THIS APPLICATION AND ITS INSTALLATION WILL NOT AFFECT THE FOLLOWING: EGRESS TO AND FROM THE BUILDING. FIRE SAFETY OR CREATE A FIRE HAZARD. STRUCTURAL SAFETY OF THE BUILDING. ACCUMULATION OF DUST AND DEBRIS. (THE CONTRACTOR SHALL LEAVE THE SITE BROOM CLEANED EACH DAY.)

FIRE PROTECTION GENERAL NOTES:

1. DIMENSIONS, LOCATIONS AND SIZES INDICATED ON THE PLANS AND THE ELEVATION ARE APPROXIMATE AND SHALL BE VERIFIED BY FIELD INSPECTION BY THE CONTRACTOR.

2. SOME EXISTING PIPE AND EQUIPMENT IS SHOWN FOR CLARIFICATION OF THIS CONTRACT, BUT MUST BE PROTECTED BY THE CONTRACTOR.

3. NO WORK SHALL BE INITIATED UNTIL A WORK PERMIT IS OBTAINED BY THE CONTRACTOR AND A SAFETY PLAN IS SUBMITTED AND IS APPROVED.

4. CONTRACTOR IS RESPONSIBLE FOR OBTAINING ALL PERMITS, EQUIPMENT USE PERMITS, ALL INSPECTION APPROVALS, AND LETTER OF COMPLETION FROM THE DEPARTMENT OF BUILDINGS FOR WORK UNDER THIS CONTRACT AS APPLICABLE.

5. ANY EXISTING MATERIALS, PIPING, ETC., NOT INDICATED FOR DEMOLITION WHICH ARE REMOVED BY THE CONTRACTOR IN ORDER TO INSTALL NEW WORK SHALL BE REINSTALLED BY THE CONTRACTOR. IF EXISTING WORK IS DAMAGED IT SHALL BE REPLACED AT THE CONTRACTOR'S EXPENSE. ALL SURFACES OR FINISHES THAT ARE DAMAGED OR OTHERWISE AFFECTED BY WORK OF THIS CONTRACT SHALL BE PATCHED, REPAIRED, PAINTED OR REPLACED TO MATCH THE PRE-EXISTING CONDITION AND THE NEW WORK.

6. CONTRACTOR MAY PROPOSE ALTERNATE ROUTING IN DIFFICULT AREAS WHERE REPLACEMENT IN KIND IS NOT PRACTICAL. ANY AND ALL ALTERNATE ROUTING IS SUBJECT TO PRIOR REVIEW AND APPROVAL BY THE ENGINEER.

7. A FIRE WATCH SHALL BE PROVIDED WHEN SPRINKLER COVERAGE IS IMPACTED TO MAINTAIN BUILDING OPERATIONS OR AS REQUIRED.

FIRE PROTECTION SYMBOL LIST

— — — — — FS DRY— —	NEW DRY SPRINKLER PIPING
— — — — — DRY(E) —	EXISTING TO REMAIN DRY SPRINKLER PIPING
○	NEW UPRIGHT SPRINKLER HEAD
○	EXISTING UPRIGHT SPRINKLER HEAD
●	NEW CONCEALED PENDENT SPRINKLER HEAD-ORDINARY TEMPERATURE
	SPRINKLER DRY PIPE VALVE
	FIRE HOSE CABINET
	SIAMESE CONNECTION
	CHECK VALVE
	CHECK VALVE W/ ALARM
	WATER MOTOR ALARM BELL
⊗	PIPE RISER
	PIPE DROP
	PIPE UP
	POINT OF CONNECTION
	POINT OF DISCONNECTION
	PREACTION 6" BELL
	SOLENOID VALVE
	OS & Y VALVE
#	REVISION SYMBOL
F8	REFER TO SUPPLEMENTAL FIGURE INDICATED BY NUMBER (I.E. F2 REFERS TO FIGURE 2)
XXX / X	EQUIPMENT TAG / EQUIPMENT NUMBER
X / X-XXX	DETAIL TAG/ CALL OUT TAG / FIRE PROTECTION SHEET NUMBER

SHOP DWGS/EQUIPMENT SUBMITTALS

THE CONTRACTOR MUST SUBMIT ANY EQUIPMENT ALTERNATES 2 WEEKS PRIOR TO BIDS DUE FOR REVIEW AND COMMENTS. ALTERNATES MUST BE ACCEPTED BY LIRO ENGINEERS, INC., THE ARCHITECT, AND THE OWNER PRIOR TO INCLUSION IN BID. THE CONTRACTOR IS RESPONSIBLE TO COORDINATE EQUIPMENT ALTERNATES WITH OTHER TRADES AND MAKE ADJUSTMENTS TO THE MECHANICAL SYSTEMS, AS REQUIRED, TO ACCOMMODATE THESE NEW ALTERNATES.

THE CONTRACTOR IS RESPONSIBLE TO SUBMIT ALL OF THE FOLLOWING ITEMS FOR REVIEW/APPROVAL BY NO MORE THAN 3 WEEKS AFTER THE CONTRACTOR'S CONTRACT/BID HAS BEEN AWARDED. ALL SUBMITTALS MUST BE SENT TOGETHER AS A **SINGLE PACKAGE** WITH MANUFACTURER'S SPECIFIC MODELS AND SPECIFICATIONS OUTLINED TO MATCH THE SCHEDULED REQUIREMENTS. EACH SUBMITTAL MUST BE LABELED WITH THE UNIT DESIGNATION USED WITHIN THIS DRAWING SET. IF THE SUBMITTAL PACKAGE IS FOUND TO BE INCOMPLETE UPON RECEIPT, THE PACKAGE WILL BE HELD AND WILL NOT BE REVIEWED UNTIL THE REMAINDER OF THE PACKAGE IS RECEIVED. SIX (6) HARD COPIES OF THE SUBMITTAL PACKAGE MUST BE SENT TO LIRO ENGINEERS, INC. DIGITAL SHOP DRAWING SUBMISSIONS ARE ACCEPTABLE.

SCOPE OF WORK:

1. THE INSTALLATION OF NEW DRY FS EQUIPMENT.

2. PROPOSED FIRE SPRINKLER HEAD LOCATIONS AND PIPING ARE AS NOTED ON PLANS. EXACT PIPING FROM THE FIRE SPRINKLER MAIN TO ALL HEADS IS TO BE COORDINATED AND HYDRAULICALLY CALCULATED BY THE F.S.C. & SUBMITTED TO THE ENGINEER FOR APPROVAL.

NOTE: THIS SCOPE OF WORK DESCRIPTION IS PROVIDED TO GIVE AN OVERALL "MACRO" DESCRIPTION OF THIS PROJECT. F.S.C. IS RESPONSIBLE TO REVIEW ALL ENGINEERING AND ARCHITECTURAL DRAWINGS AND VISIT THE SITE IF NEEDED, PRIOR TO SUBMISSION OF BID.

SPRINKLER HEAD SCHEDULE

	MANUFACTURER	MODEL	DESCRIPTION	K-FACTOR	QUANTITY
○	RELIABLE	F1FR	DRY ORDINARY UPRIGHT SPRINKLE HEAD	5.6	51

ABBREVIATION

ACV	ALARM CHECK VALVE
B.O.P.	BOTTOM OF PIPE
(E)	EXISTING TO REMAIN
F.S.C.	FIRE SPRINKLER CONTRACTOR
P.C	PLUMBING CONTRACTOR
TYP	TYPICAL
W/	WITH
NYS	NEW YORK STATE
U/P	UNDERGROUND PIPING
W	WATER

DRAWING NOTATIONS

	DRAWING NOTE TAB
	RISER DESIGNATION
	POINT OF CONNECTION
	POINT OF DISCONNECTION

DESIGN CRITERIA

1. AREA OF APPLICATION = 2535 SQ. FT. (DRY SYSTEM, ROOF PITCH >/= 2 IN 12)

2. OCCUPANCY CLASSIFICATION = ORDINARY HAZARD GROUP 1

3. MAXIMUM COVERAGE PER SPRINKLER HEAD = 130 SQ. FT

4. DESIGN DENSITY = 0.15 GPM/SQ. FT

5. "K" FACTOR OF SPRINKLER HEADS = 5.6

6. DESIGN CRITERIA REQUIREMENTS BASED ON:
   - 2020 BUILDING CODE OF NEW YORK STATE
   - 2016 NFPA 13

ORDINARY HAZARD PIPE SCHEDULE

STEEL		COPPER	
1IN.	2 SPRINKLERS	1IN.	2 SPRINKLERS
1 1/4 IN.	3 SPRINKLERS	1 1/4 IN.	3 SPRINKLERS
1 1/2IN.	5 SPRINKLERS	1 1/2IN.	5 SPRINKLERS
2 IN.	10 SPRINKLERS	2 IN.	12 SPRINKLERS
2 1/2 IN.	20 SPRINKLERS	2 1/2 IN.	25 SPRINKLERS
3 IN.	40 SPRINKLERS	3 IN.	45 SPRINKLERS
3 1/2 IN.	65 SPRINKLERS	3 1/2 IN.	75 SPRINKLERS
4 IN.	100 SPRINKLERS	4 IN.	115 SPRINKLERS
5 IN.	160 SPRINKLERS	5 IN.	180 SPRINKLERS
6 IN.	275 SPRINKLERS	6 IN.	300 SPRINKLERS
8 IN.	SEE SECTION 8.2	8 IN.	SEE SECTION 8.2

FOR SI UNITS, 1 IN. = 25.4 MM.

MAX DISTANCE BETWEEN HANGERS (FT.-IN.)

	NOMINAL PIPE SIZE (IN.)											
	3/4	1	1 1/4	1 1/2	2	2 1/2	3	3 1/2	4	5	6	8
STEEL PIPE EXCEPT THREADED LIGHTWALL	N/A	12-0	12-0	15-0	15-0	15-0	15-0	15-0	15-0	15-0	15-0	15-0
THREADED LIGHTWALL STEEL PIPE	N/A	12-0	12-0	12-0	12-0	12-0	12-0	N/A	N/A	N/A	N/A	N/A
COPPER TUBE	8-0	8-0	10-0	10-0	12-0	12-0	12-0	15-0	15-0	15-0	15-0	15-0

CODE REFERENCE

2020 NEW YORK STATE BUILDING CODE
2016 NFPA 13

FIRE PROTECTION NOTES

1. THE DRAWINGS SHOW THE LAYOUT OF THE SYSTEM AND INDICATE THE APPROXIMATE LOCATIONS OF EQUIPMENT AND PIPING. CONTRACTOR IS CAUTIONED NOT TO SCALE THE DRAWINGS. THE PIPING SHALL BE RUN APPROXIMATELY IN THE AREAS AS INDICATED ON THE DRAWINGS, [HOWEVER, TO THE ARRANGEMENT OF THE PIPING SYSTEMS AS MAY BE REFERENCED WITH WORK OF OTHER TRADES]. CONTRACTOR SHALL REVIEW AND COORDINATE WITH STRUCTURAL, ELECTRICAL AND MECHANICAL DRAWINGS. PARTITIONS, STRUCTURAL MEMBERS, ETC. ARE DESIGNED TO BE FURRED OR CLOSED IN AND TO INCLUDE ROUGH-IN PIPING. CONTRACTOR SHALL FURNISH ALL OFFSETS, ADDITIONAL FITTINGS, ETC. WHETHER SHOWN ON DRAWINGS OR NOT, AS REQUIRED TO MEET INSTALLATION CONDITIONS.

2. CONTRACTOR IS TO COMPLY WITH LATEST NFPA AND N.Y.S. CODES, AND COORDINATE HIS WORK WITH OTHER TRADES AND MAKE NECESSARY ADJUSTMENTS.

3. CONTRACTOR IS TO PREPARE SHOP DRAWINGS FOR ENGINEERS REVIEW AFTER MAKING A COMPLETE FIELD SURVEY.

4. CONTRACTOR IS TO REPORT ANY CONDITION REQUIRING CHANGES FROM PLANS TO ENGINEER PRIOR TO STARTING WORK.

5. BRANCH LINES AND MAINS (1 1/2" OR LESS) - SCHEDULE 40 FM APPROVED

6. BRANCH LINES AND MAINS (2" OR LARGER) - THINWALL (THICKNESS LESS THEN SCHEDULE 40 MORE THEN SCHEDULE 10 & FM APPROVED)

7. CONTRACTOR IS TO PERFORM A HYDROSTATIC TEST FOR 2 HRS. @ 200 PSI WITH NO LEAKAGE AND PROVIDE A TEST CERTIFICATE TO ENGINEER

8. CONTRACTOR IS TO EMPLOY EXPERIENCED WORKMEN WHO ARE TO FAMILIARIZE THEMSELVES WITH THE BUILDING AND OBSERVE SAFETY REQUIREMENTS.

9. CONTRACTOR TO ADJUST HEAD LOCATION TO COORDINATE WITH LIGHTS, DUCTS, ETC.

10. PERMIT FROM LOCAL AUTHORITY, TO BE OBTAINED BY CONTRACTOR.

11. ALL WORK TO BE APPROVED BY OWNERS ENGINEER, STATE AUTHORITIES HAVING JURISDICTION AND MUNICIPAL FIRE, PLUMBING, BUILDING AND WATER DEPARTMENTS.

12. U.L. AND/OR FM APPROVED EQUIPMENT TO BE USED.

13. WORK TO BE IN ACCORDANCE WITH MUNICIPAL WATER DEPT. RULES

14. SYSTEM IS TO BE MAINTAINED AND TESTED BY THE OWNER OR HIS AGENT IN ACCORDANCE WITH APPLICABLE LOCAL AND STATE CODES AND IN CONFORMANCE WITH NFPA 13A, LATEST EDITION.

15. IF BUILDING OCCUPANCY OR CONSTRUCTION CHANGES, THE SPRINKLER SYSTEM IS TO BE UPDATED ACCORDINGLY BY THE OWNER OR HIS AGENT.

16. CONTRACTOR IS TO NEATLY CUT AND PATCH IN A FIRST CLASS WORKMANLIKE MANNER, ALL HOLES AND PENETRATIONS IN WALLS, CEILINGS, FLOORS, PARTITIONS, ETC.

17. THE ENGINEER IS NOT RETAINED FOR SUPERVISION.

18. THE INSTALLATION OF THIS SYSTEM WILL REQUIRE THE CLOSING OF ONE OR MORE FIRE PROTECTION CONTROL VALVES. THESE VALVE CLOSURES SHOULD BE CLOSELY COORDINATED WITH THE OWNERS WHO SHOULD CONTACT THE LOCAL FIRE DEPARTMENT, INSURANCE INTERESTS, ETC. PRIOR TO VALVE CLOSURES.

19. ACTUAL DESIGN DENSITY MAY EXCEED STANDARDS, HOWEVER, IT IS A MINIMUM TO BE USED BY THE CONTRACTOR.

20. ALL ALARMS RELATING TO THE SPRINKLER SYSTEM SHOULD BE ACTIVATED UPON PLACING THE SPRINKLER SYSTEM IN SERVICE.

21. THE INSTALLATION COMPONENTS, SIZING, SPACING, MATERIALS LOCATION CLEARANCES, POSITION AND TYPE OF SYSTEM SHALL CONFORM TO NFPA 13 AND NYS UNIFORM FIRE PREVENTION BUILDING CODE LATEST EDITION.

22. SPRINKLERS SHALL BE PROTECTED AGAINST FREEZING AND INJURY AS PER NFPA CODE.

23. INSPECTION AND TESTS OF SPRINKLER SYSTEM SHALL BE CONDUCTED AS SPECIFIED IN NFPA CODE.

24. WATER SUPPLY TEST PIPES AND GAUGES SHALL BE PROVIDED AS SPECIFIED IN CHAPTER 2-9 OF NPPA 13.

25. PIPING SPECIFICATIONS, PIPE SCHEDULES, SYSTEM TEST PIPES, PROTECTION AGAINST CORROSION, DAMAGE FITTINGS, VALVES, HANGERS, SPRINKLERS, GUARDS AND SHIELDS SHALL BE IN ACCORDANCE WITH CHAPTER 3 AND CHAPTER 8 OF NFPA 13, LATEST EDITION. PIPING SHALL BE PAINTED TO PREVENT CORROSION.

26. STOCK OF EXTRA SPRINKLERS WILL BE FURNISHED AS PER CHAPTER 3 OF NFPA 13 (REQUIRED FOR EACH TEMPERATURE RATING).

27. SPRINKLER ALARMS WILL BE IN ACCORDANCE WITH NFPA 13.

28. SPACING, LOCATION AND POSITION OF SPRINKLERS SHALL BE IN ACCORDANCE WITH CHAPTER 4 OF NFPA 13.

29. ALL PIPING PASSING THROUGH WALLS SHALL COMPLY WITH NFPA FOR FIRE PROOFING.

30. DISTANCE OF SPRINKLERS FROM HEAT SOURCES SHALL BE IN ACCORDANCE WITH TABLE 3-16.6.3 OF NFPA 13.

31. PROVIDE WATER SUPPLY LETTER WITH FLOW TEST DATA.

32. ALL PIPES PASSING THROUGH FOUNDATION WALLS TO BE PROTECTED.

33. ALL VALVES SHALL BE IDENTIFIED AS REQUIRED BY NFPA 13.

34. DRAINAGE TO CONFORM TO CHAPTER 3-11 OF NFPA 13.

35. A ONE PIECE REDUCING FITTING OF GOOD DESIGN SHOULD BE USED WHEREVER A CHANGE IS MADE IN THE SIZE OF PIPE AS PER SECTION 3-12.2.7 OF NFPA 13.

36. ALL VALVES ON CONNECTIONS TO WATER SUPPLIES AND IN SUPPLY TO SPRINKLERS SHALL BE APPROVED O.S. &Y. OR APPROVED INDICATOR TYPE WITH TAMPER SWITCHES.

37. DRAIN VALVES AND TEST VALVES SHALL BE APPROVED TYPE AS PER SECTION 3-14.1.2 OF NFPA 13.

38. HANGERS SHALL BE OF A TYPE APPROVED FOR USE WITH THE PIPE OR TUBE INVOLVED, SPRINKLER PIPING SHOULD BE SUPPORTED BY ADJUSTABLE HANGERS PER NFPA 13, SECTION 3-15.

39. PROVISIONS SHOULD BE MADE TO FACILITATE FLUSHING SYSTEM PIPING BY PROVIDING FLUSHING CONNECTIONS CONSISTING OF A CAPPED NIPPLE 4" LONG ON THE END OF THE CROSS MAIN, AS PER SECTION 3- 8.2 OF NFPA 13.

40. SPRINKLER SHALL BE AN APPROVED TYPE AS PER SECTION 3-16 OF NFPA 13.

41. TEMPERATURE RATING SHALL COMPLY WITH SEC. 3-16.6 OF NFPA 13.

42. CLEARANCES BETWEEN SPRINKLERS AND STORAGE OR PARTITIONS AS PER NFPA 13, SECTION 4-2.5

43. SPACING AND LOCATION OF SPRINKLER SHALL COMPLY WITH CHAPTER 4 NFPA 13.

44. CONTRACTOR TO COORDINATE HIS WORK WITH OTHER TRADES.

45. ONLY EXPERIENCED SPRINKLER MECHANICS TO WORK ON THE SYSTEM.

46. ALL PIPING TO BE A MINIMUM OF 1" UNLESS OTHERWISE NOTED.

47. PROVIDE SHOP DRAWINGS WITH HYDRAULIC CALCULATIONS FOR REVIEW TO LOCAL FIRE MARSHALL AND INSURANCE UNDERWRITER AND ENGINEER FOR APPROVAL PRIOR TO INSTALLATION.

48. ALL FIRE PROTECTION EQUIPMENT SHALL BE INSTALLED PER MANUFACTURER'S REQUIREMENTS/SPECIFICATIONS.

49. ALL FIRE PROTECTION EQUIPMENT SHALL BE MOUNTED ON MINIMUM 6" HIGH CONCRETE PAD UNLESS OTHERWISE NOTED (PAVER AND CINDER BLOCK IS NOT ACCEPTABLE).

50. PERMIT IS REQUIRED PRIOR TO INSTALLATION, TO INCLUDE SIGNED AND SEALED SHOP DRAWINGS, HYDRAULIC CALCULATION, SHOP DRAWINGS, MANUFACTURERS INFORMATION ON HEADS AND APPLIANCES, COMPLIANCE WITH NFPA 13 AND SECTION 903 2020 NYSBC/FC.

FIRE PROTECTION DRAWING LIST

SHEET NO.	SHEET NAME	REVISON NO.	REVISION DATE
SA-FP-01	FIRE PROTECTION NOTES, SYMBOLS, ABBREVIATIONS, AND DRAWING LIST	0	-
SA-FP-11	FIRE PROTECTION GROUND AND SECOND FLOOR DEMOLITION RCP	0	-
SA-FP-21	FIRE PROTECTION GROUND AND SECOND FLOOR CONSTRUCTION RCP	0	-
SA-FP-81	FIRE PROTECTION DETAILS	0	-

CONSULTANT INFORMATION
LiRo Engineers, Inc.
A LiRo Group Company
Syosset, N.Y. 516-214-8157[T]

CONSULTANT SEAL
STATE OF NEW YORK · FRANK F. DUSSE · LICENSED PROFESSIONAL ENGINEER · No. 090114

REVISION NUMBER	DATE	MADE BY	APP'D BY	REVISION
1	09/21/22			BID ADDENDUM # 3

RECORD DRAWING CERTIFICATION
☐ AS BUILT – CHANGES AS NOTED ☐ AS BUILT – NO CHANGES
CONTRACTOR: NAME / SIGNATURE / TITLE / DATE
PROJECT COORDINATOR: NAME / SIGNATURE / TITLE / DATE

WESTCHESTER COUNTY, NEW YORK
DEPARTMENT OF PUBLIC WORKS AND TRANSPORTATION
DIVISION OF ENGINEERING

INFRASTRUCTURE REHABILITATION - PHASE 3
PLAYLAND PARK, RYE, NEW YORK
SOUTHEAST ARCADE
FIRE PROTECTION NOTES, SYMBOLS, ABBREVIATIONS & DWG LIST

CONTRACT NUMBER: 22-523
SHEET NUMBER: SA-FP-01
DWG NO.: 625 of 664
SCALE: AS INDICATED
DATE: 08/23/2022
DPW FILE NUMBER: 1-118-FP-1374-1
REV. NO.: 1

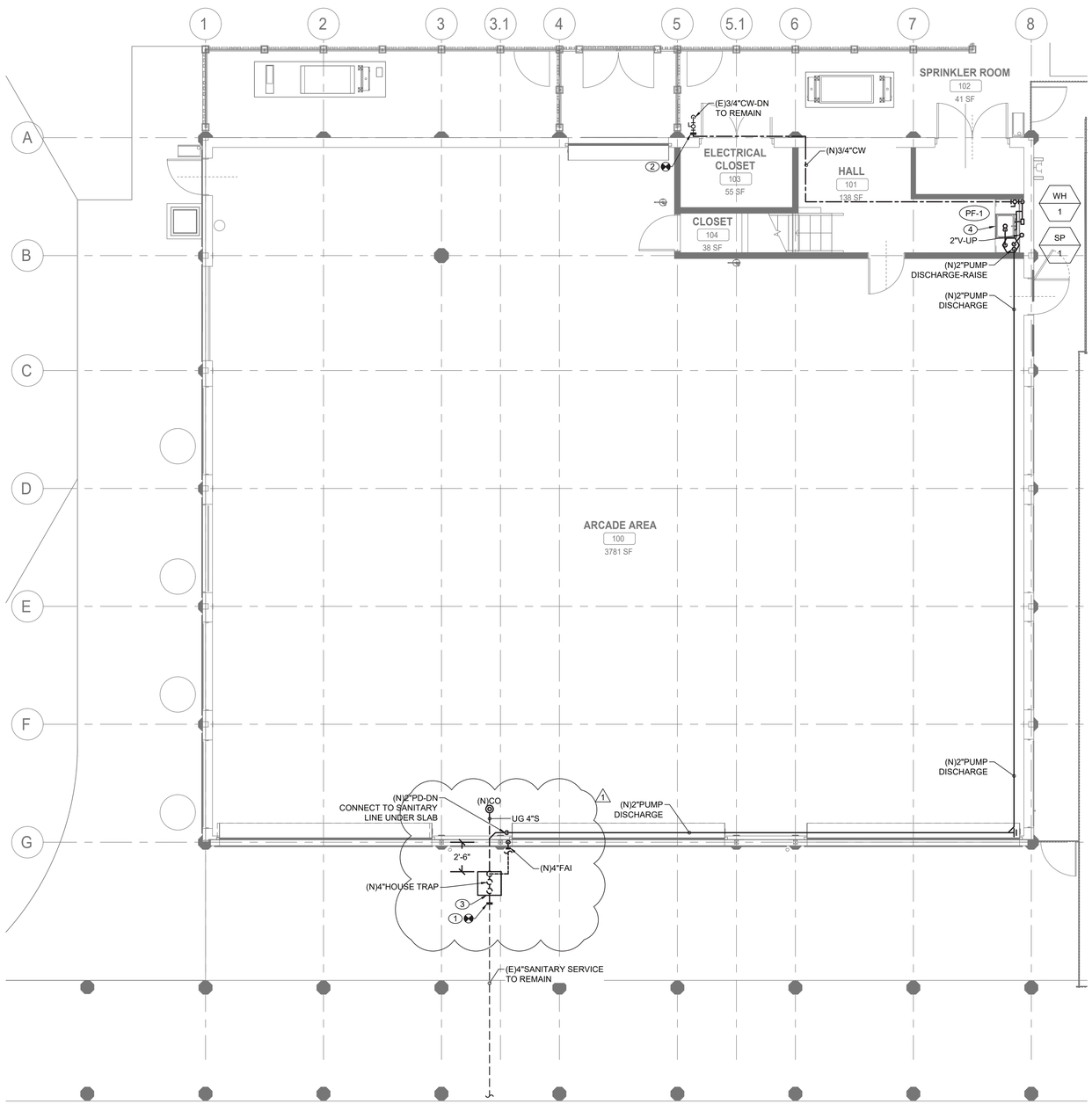

PLUMBING GROUND FLOOR CONSTRUCTION PLAN

SCALE: 3/16" = 1'-0

PLUMBING CONSTRUCTION NOTES:

1. CONNECT NEW 4" SANITARY SERVICE TO EXISTING SEWER MAIN. CONTRACTOR TO VERIFY THE INVERT, SIZE, AND MATERIAL OF THE EXISTING SEWER PIPING TO FACILITATE NEW SANITARY SERVICE CONNECTION.
2. CONTRACTOR TO RECONNECT EXISTING 3/4" COLD WATER WITH NEW OUTSIDE BUILDING FOOTPRINT.
3. PROVIDE NEW 4"HOUSE TRAP IN PIT REFER TO STRUCTURAL DRAWINGS FOR DETAILS. PROVIDE ACCESS DOOR FOR MAINTENANCE. PROVIDE 4" FRESH AIR INTAKE THRU EXTERIOR WALL. TERMINATE VENT WITH INSECT SCREEN. HOUSE TRAP SHALL BE PROTECTED FROM FREEZING. PIT SHALL BE 24"X24" AND HEIGHT VERIFIED IN FIELD.
4. PROVIDE NEW PANTRY SINK COUNTERTOP MOUNTED WITH P-TRAP AND FAUCET. PROVIDE NEW INSTANTANEOUS WATER HEATER AND SINK SUMP PUMP UNDER THE SINK. PROVIDE ALL REQUIRED VALVES, SUPPORTS AND TRIMS.
5. PROVIDE NEW 4" VENT THRU ROOF.

GENERAL NOTES:

1. COORDINATE WITH FACILITY PRIOR TO SHUTDOWN OF WATER DISTRIBUTION SYSTEM FOR ANY DEMOLITION AND CONSTRUCTION WORK.
2. PROVIDE DRAIN VALVES AT BOTTOM FOR EACH BRANCH. PROVIDE ACCESS PANELS TO ALL VALVES ABOVE CEILING AND BEHIND WALLS.
3. INSTALL NEW WATER PIPING WITH PROPER SLOPES TO AVOID WATER TRAPS DURING WINTER SEASON.
4. CONTRACTOR TO COORDINATE WITH FACILITY WHEN WORKING AROUND OR ABOVE THE RIDE COMPONENTS, AND PROVIDE ALL NECESSARY MEASURES TO PROTECT THESE COMPONENTS PER THE REQUIREMENTS OF THE FACILITY.
5. UPON COMPLETION, SYSTEM SHALL BE TESTED FOR PROPER OPERATION.
6. SEWER CROSSING WATER MAINS, CONDUITS, OR OTHER UTILITY SHALL BE MINIMUM 18" CLEARANCE BETWEEN THE OUTSIDE OF THE UTILITY AND OUTSIDE OF THE SEWER. THE CROSSINGS SHALL BE ARRANGED SO THAT THE SEWER JOINTS WILL BE EQUIDISTANT AND AS FAR AS POSSIBLE FROM THE WATER MAIN JOINTS.

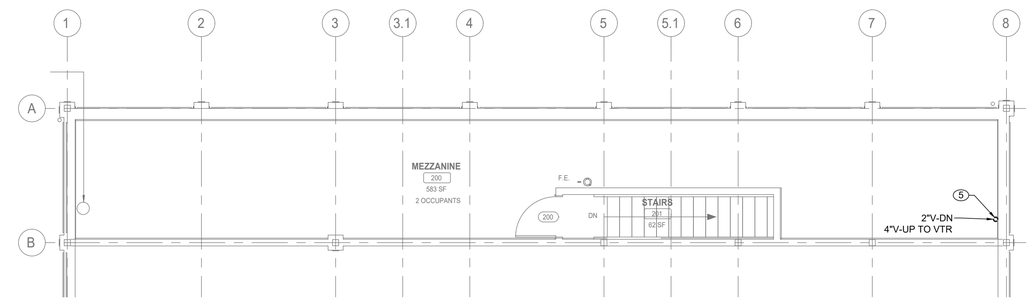

PLUMBING SECOND LEVEL CONSTRUCTION PLAN

SCALE: 3/16" = 1'-0

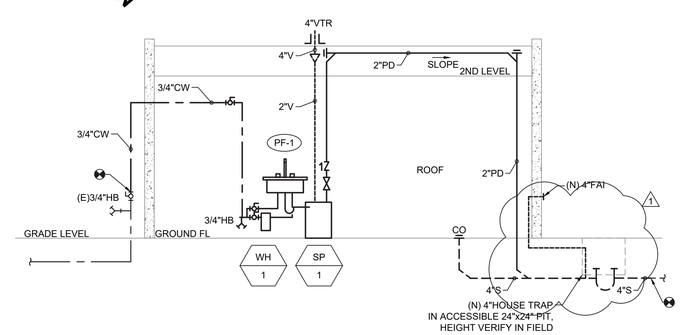

1 / P-21

SANITARY AND DOMESTIC WATER RISER DIAGRAM

SCALE: NOT TO SCALE

CONSULTANT INFORMATION

LiRo Engineers, Inc.
A LiRo Group Company
Syosset, N.Y. 516-214-8157[T]

CONSULTANT SEAL

STATE OF NEW YORK · FRANK F. DUTRE · 090711 · LICENSED PROFESSIONAL ENGINEER

REVISION NUMBER	DATE	MADE BY	APP'D BY	REVISION
1	09/21/22			BID ADDENDUM # 3

RECORD DRAWING CERTIFICATION

☐ AS BUILT – CHANGES AS NOTED ☐ AS BUILT – NO CHANGES

CONTRACTOR: NAME / SIGNATURE / TITLE / DATE

PROJECT COORDINATOR: NAME / SIGNATURE / TITLE / DATE

WESTCHESTER COUNTY, NEW YORK
DEPARTMENT OF PUBLIC WORKS AND TRANSPORTATION
DIVISION OF ENGINEERING

INFRASTRUCTURE REHABILITATION - PHASE 3
PLAYLAND PARK, RYE, NEW YORK
SOUTHEAST ARCADE
PLUMBING GROUND FLOOR AND 2ND LEVEL CONSTRUCTION PLANS

CONTRACT NUMBER	22-523
SHEET NUMBER	SA-P-21
DWG NO.	631 of 664
SCALE:	AS INDICATED
DATE:	08/23/2022
DPW FILE NUMBER	1-118-P-1380-1
REV. NO.	1

PANELBOARD: SA-PP-1 **LOCATION:** ELECTRICAL CLOSET

1 **NEMA RATING** 3 **POLES** **MOUNTING:** SURFACE

125 **AMP BUS RATING** 100 **AMP MAIN BREAKER** 42 **KA SHORT CIRCUIT RATING**

208Y/120 **VOLTS** 3 **PHASE** 4 **WIRE** **ELECTRONIC GRADE :** NO

CIRCUIT NO.	DESCRIPTION	LOAD KVA PHASE A	LOAD KVA PHASE B	LOAD KVA PHASE C	BREAKER AMPS / POLES	NOTES	CIRCUIT NO.	DESCRIPTION	LOAD KVA PHASE A	LOAD KVA PHASE B	LOAD KVA PHASE C	BREAKER AMPS / POLES	NOTES
1	EF-1	0.5			20/1		2	EF-3	0.5			20/1	
3	EF-2		0.5		20/1		4	ARCADE RECEPTACLES		0.5		20/1	
5	ARCADE CEILING FANS			0.1	20/1		6	ARCADE RECEPTACLES			0.5	20/1	
7	HALL RECEPTACLES	0.5			20/1		8	ARCADE RECEPTACLES	0.5			20/1	
9	UPSTAIRS RECEPTACLES		0.5		20/1		10	UH-1		1.65		20/2	
11	SPARE			-	20/1		12				1.65		
13	ROLL-UP DOOR	1.9			30/1		14	ARCADE RECEPTACLES	0.5			20/1	
15	ROLL-UP DOOR		1.9		30/1		16	SPARE		-		20/1	
17	ROLL-UP DOOR			1.9	30/1		18	SPARE			-	20/1	
19	SPARE	-			20/1		20	FUTURE SPRINKLER LOADS	0.5			20/1	
21	SPARE		-		20/1		22	FUTURE SPRINKLER LOADS		0.5		20/1	
23	SPARE			-	20/1		24	SPARE			-	20/1	
25	ARCADE RECEPTACLES	0.5			20/1		26	UTILITY ROOM RECEPTACLES	0.5			20/1	
27	UPSTAIRS RECEPTACLES		0.5		20/1		28	SPACE					
29	SPACE						30	SPACE					
31	ARCADE RECEPTACLES	0.7			20/1		32	ARCADE RECEPTACLES	0.7			20/1	
33	PTAC-1		1.8		15/2		34	ARCADE RECEPTACLES		0.7		20/1	
35				1.8			36	ARCADE RECEPTACLES			0.7	20/1	
37	SPACE						38	SPACE					
39	SPACE						40	SPACE					
41	SPACE						42	SPACE					
	TOTAL PHASE KVA THIS SIDE	4.10	5.20	3.80				**TOTAL PHASE KVA THIS SIDE**	3.2	3.35	2.85		
								TOTAL KVA PER PHASE	7.30	8.55	6.65		
								TOTAL THREE PHASE KVA		22.50			

NOTES:
1.
2.
3.
4.

NOTES CONT.:
5.
6.
7.
8.

PANELBOARD: SA-LP-1 **LOCATION:** ELECTRICAL CLOSET

1 **NEMA RATING** 3 **POLES** **MOUNTING:** SURFACE

125 **AMP BUS RATING** 60 **AMP MAIN BREAKER** 42 **KA SHORT CIRCUIT RATING**

208Y/120 **VOLTS** 3 **PHASE** 4 **WIRE** **ELECTRONIC GRADE :** NO

CIRCUIT NO.	DESCRIPTION	LOAD KVA PHASE A	LOAD KVA PHASE B	LOAD KVA PHASE C	BREAKER AMPS / POLES	NOTES	CIRCUIT NO.	DESCRIPTION	LOAD KVA PHASE A	LOAD KVA PHASE B	LOAD KVA PHASE C	BREAKER AMPS / POLES	NOTES
1	ARCADE LIGHTING	0.34			20/1		2	SPARE	-			20/1	
3	ARCADE LIGHTING		0.34		20/1		4	SPARE		-		20/1	
5	POWER TO SA-RP (120V)			0.1	20/1		6	UTILITY & UPSTAIRS LIGHTING			0.4	20/1	
7	SA-RP - EXTERIOR SOFFIT (NORTH)	0.6			20/1		8	SPACE					
9	SA-RP SPARE		-		20/1		10	SPACE					
11	SA-RP SPARE			-	20/1		12	SA-RP - EXTERIOR SOFFIT (SOUTH)			0.6	20/1	
13	SPARE	-			20/1		14	SA-RP - EXTERIOR SOFFIT (EAST)	0.6			20/1	
15	SPARE		-		20/1		16	SA-RP - EXTERIOR SOFFIT (WEST)		0.6		20/1	
17	SPARE			-	20/1		18	SPARE			-	20/1	
19	SPACE						20	SPARE	-			20/1	
21	SPACE						22	SPACE					
23	SPACE						24	SPACE					
25	SPACE						26	SPACE					
27	SPACE						28	SPACE					
29	SPACE						30	SPACE					
31	SPACE						32	SPACE					
33	SPACE						34	SPACE					
35	SPACE						36	SPACE					
37	SPACE						38	SPACE					
39	SPACE						40	SPACE					
41	SPACE						42	SPACE					
	TOTAL PHASE KVA THIS SIDE	0.94	0.34	0.10				**TOTAL PHASE KVA THIS SIDE**	0.6	0.6	0.98		
								TOTAL KVA PER PHASE	1.54	0.94	1.08		
								TOTAL THREE PHASE KVA		3.56			

NOTES:
1.
2.
3.
4.

NOTES CONT.:
5.
6.
7.
8.

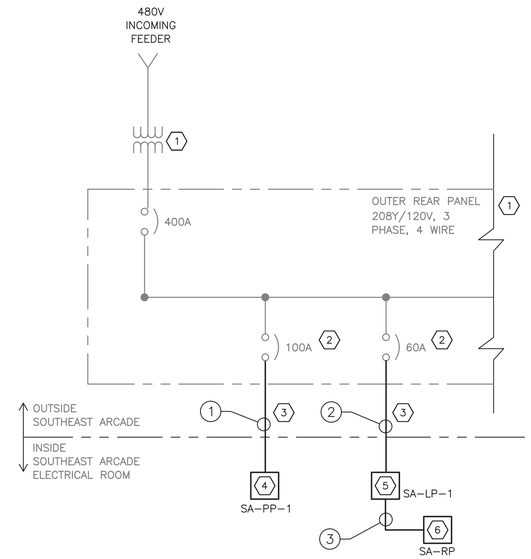

ONE LINE DIAGRAM
N.T.S.

NOTES:

1. FOR ADDITIONAL NOTES, ABBREVIATIONS AND SYMBOLS, SEE DRAWING GE-E-01.

KEY NOTES:

1. EXISTING 480 DELTA 208Y/120V, STEP-DOWN TRANSFORMER AND 208Y/120 VOLT, 400A POWER PANEL. LOCATED OUTSIDE THE REAR, NORTHEAST CORNER OF THE BUILDING.
2. REUSE EXISTING CIRCUIT BREAKER.
3. CONTRACTOR SHALL PROVIDE NEW CONDUIT AND WIRE.
4. NEW 208Y/120 VOLT, 3 PHASE, 4-WIRE POWER PANEL SA-PP-1 WITH 125 AMP MAINS AND 100 AMP MAIN CIRCUIT BREAKER.
5. NEW 60 AMP, 208Y/120 VOLT, 3 PHASE, 4-WIRE LIGHTING PANEL SA-LP-1 WITH 125 AMP MAINS AND 60 AMP MAIN CIRCUIT BREAKER.
6. NEW RELAY PANEL SA-RP FOR EXTERIOR LIGHTING CONTROL.

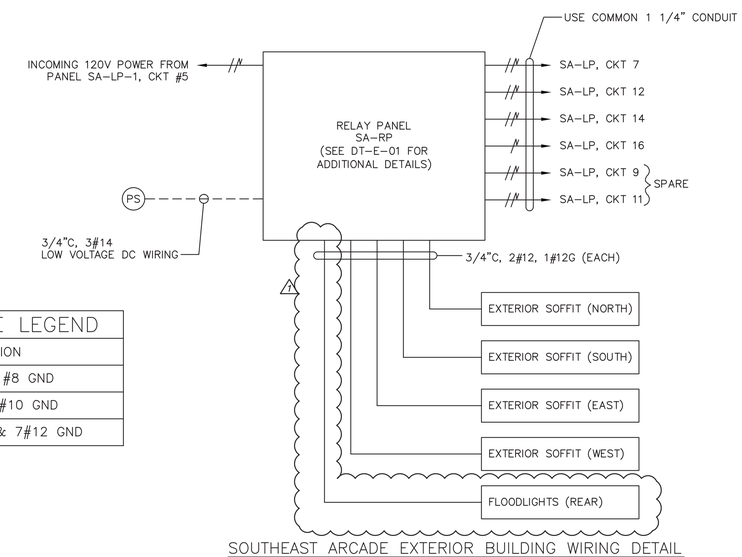

SOUTHEAST ARCADE EXTERIOR BUILDING WIRING DETAIL

CONDUIT AND WIRE LEGEND

NO.	DESCRIPTION
1	2"C, 4#2 & 1#8 GND
2	2"C, 4#6 & 1#10 GND
3	1 1/4"C, 14#12 & 7#12 GND

SA-RP	LOCATION: ELECTRICAL CLOSET	
CKT NO	DESCRIPTION	NOTES
1	EXTERIOR SOFFITS (NORTH)	
2	EXTERIOR SOFFITS (SOUTH)	
3	EXTERIOR SOFFITS (EAST)	
4	EXTERIOR SOFFITS (WEST)	
5	FLOODLIGHTS (REAR)	
6	SPARE	

CONSULTANT INFORMATION

Savin Engineers, P.C.

CONSULTANT SEAL

STATE OF NEW YORK · STEVEN A. MARTINO · 083631 · LICENSED PROFESSIONAL ENGINEER

REVISION NUMBER	DATE	MADE BY	APP'D BY	REVISION
1	09/21/2022	RKC	SM	BID ADDENDUM #3

RECORD DRAWING CERTIFICATION

☐ AS BUILT – CHANGES AS NOTED ☐ AS BUILT – NO CHANGES

CONTRACTOR: NAME / SIGNATURE / TITLE / DATE

PROJECT COORDINATOR: NAME / SIGNATURE / TITLE / DATE

WESTCHESTER COUNTY, NEW YORK
DEPARTMENT OF PUBLIC WORKS AND TRANSPORTATION
DIVISION OF ENGINEERING

INFRASTRUCTURE REHABILITATION - PHASE 3
PLAYLAND PARK, RYE, NEW YORK
SOUTHEAST ARCADE
ONE LINE DIAGRAM AND PANEL SCHEDULES

CONTRACT NUMBER	SHEET NUMBER
22-523	SA-E-04

DWG NO.: 645 of 664

SCALE: AS SHOWN

DATE: 8/23/2022

DPW FILE NUMBER 1-118-E-1394-1 REV. NO. 1

Drawing Name: G:\SavinAutocad\2060\25-Playland-Mega-3\E\SAE-1005.dwg
Projectname: 211001F02 Comments: ----
Printed by: MGoodby Date: 21 September 2022 1:37 PM Designed by: ----
Xrefs: [TB_24X36_WestchesterCo_3.dwg] [TSG-SVLOGO.dwg] [BCRE-A-04.dwg] [BCRE-101.dwg]

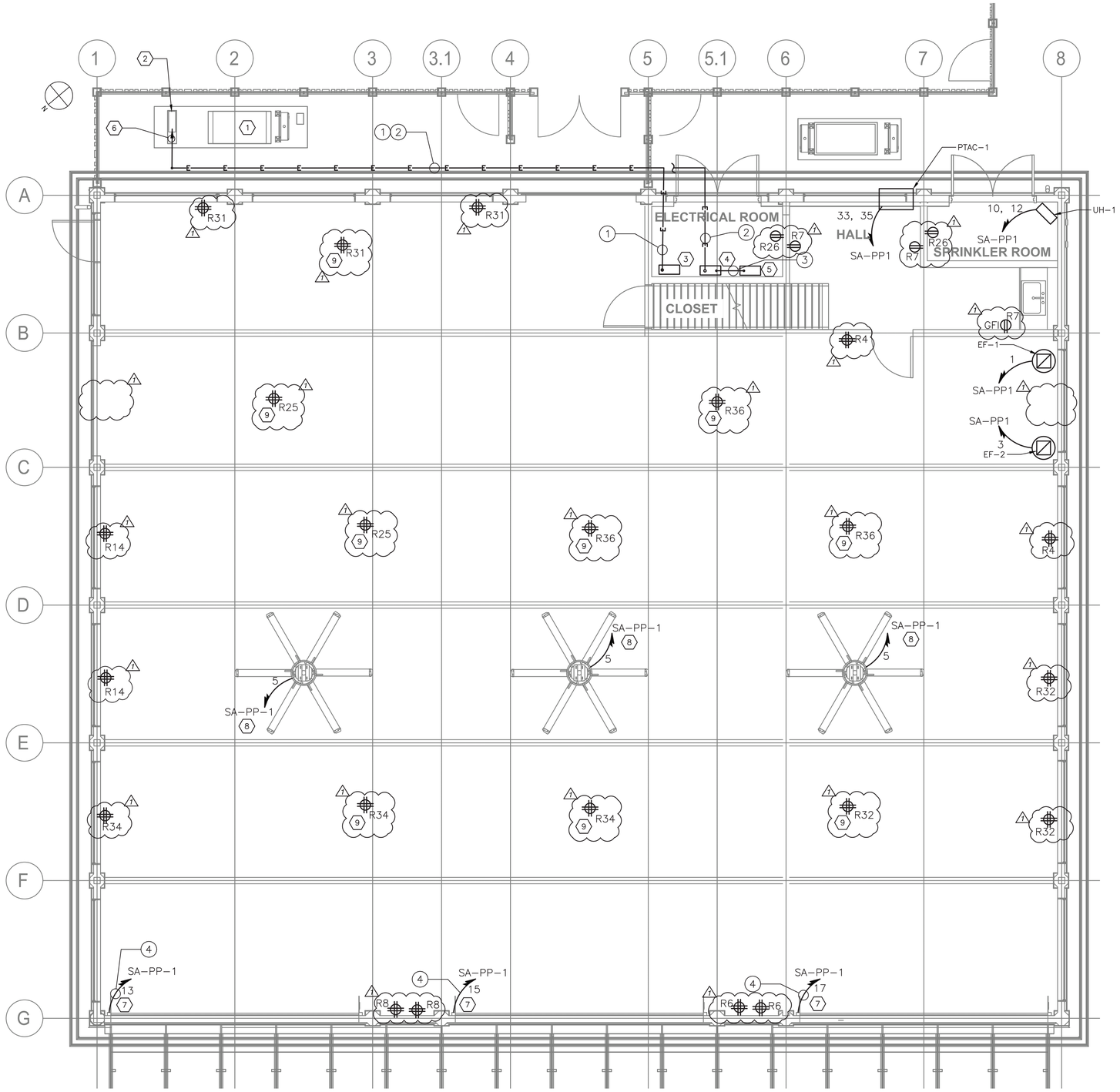

SOUTHEAST ARCADE GROUND FLOOR POWER PLAN

1/4"=1'-0"

NOTES:

1. FOR ADDITIONAL NOTES, ABBREVIATIONS AND SYMBOLS, SEE DRAWING GE-E-01.
2. SEE DRAWING SA-E-04 FOR PANEL SCHEDULES.
3. ALL RECEPTACLE DESIGNATORS ARE POWERED VIA PANEL SA-PP-1, UNLESS OTHERWISE NOTED.
4. ALL CIRCUITS SHOWN ON THE DRAWING, BUT NOT SPECIFICALLY CALLED OUT ON CONDUIT AND WIRE LEGEND, SHALL BE 3/4" CONDUIT WITH 2#12 & 1#12 GND.
5. FOR PANEL SCHEDULES, SEE DRAWING SA-E-04.
6. CONTRACTOR SHALL ASSUME THAT TWO ADDITIONAL CIRCUITS WILL BE NEEDED FOR EQUIPMENT IN THE SPRINKLER ROOM AND NOT AS YET SHOWN. FOR BIDDING PURPOSES, ASSUME A TOTAL OF 100 FEET OF 3/4" CONDUIT WITH 3#12 AWG WIRES.
7. EXHAUST FAN STARTERS SHALL BE FURNISHED BY THE EXHAUST FAN MANUFACTURER. FOR EXHAUST FAN STARTER REQUIREMENTS, SEE HVAC CONTRACT DRAWINGS AND SPECIFICATIONS.
8. DISCONNECT SWITCHES OUTDOORS, IN RESTROOMS AND/OR IN JANITORS CLOSETS SHALL BE IN A NEMA 3R ELCLOSURE.

KEY NOTES:

1. EXISTING TRANSFORMER TO REMAIN AND BE PROTECTED DURING CONSTRUCTION.
2. EXISTING 400 AMP PANEL TO REMAIN AND BE PROTECTED DURING CONSTRUCTION. THIS PANEL SUPPLIES POWER TO OTHER RIDES AND MUST REMAIN IN OPERATION.
3. NEW 208Y/120V, 3 PHASE, 4 WIRE PANEL SA-PP-01 WITH 125 AMP MAINS AND 100 AMP MAIN CIRCUIT BREAKER.
4. NEW 208Y/120V, 3 PHASE, 4 WIRE PANEL SA-LP-1 WITH 125 AMP MAINS AND 60 AMP MAIN CIRCUIT BREAKER.
5. NEW EXTERIOR LIGHTING RELAY PANEL SA-RP.
6. CONNECT NEW CONDUIT AND WIRE INTO EXISTING PANEL. NEW CONDUIT PENETRATIONS SHALL BE WITH WATERTIGHT HUBS.
7. APPROXIMATE LOCATION OF MOTOR FOR NEW ROLL-UP DOOR. CONTRACTOR SHALL CONFIRM MOTOR LOCATION IN THE FIELD. PROVIDE 30 AMP, 2 POLE DISCONNECT SWITCH AT ROLL-UP DOOR MOTOR.
8. CONTRACTOR SHALL COORDINATE BOTH THE POWER AND CONTROL OF FANS. CONTRACTOR SHALL PROVIDE FOR SWITCH CONTROL IN LOCATION AS REQUIRED BY STANDARD AMUSEMENTS. ADDITIONALLY ASSUME A TOTAL OF 100 FEET OF 3/4" CONDUIT WITH CAT 6 WIRE TO AGAIN A DESTINATION AS REQUIRED BY STANDARD AMUSEMENTS.
9. PROVIDE RECESSED QUAD OUTLET WITH COVER PLATE FOR FUTURE GAMES – FIT OUT USE. RECEPTACLES SHALL BE INSTALLED FLUSH WITH GROUND FLOOR LEVEL AND IN EXACT LOCATIONS AS DIRECTED BY THE ARCHITECT. COORDINATE COLOR AND FINISH OF COVER PLATE WITH THE ARCHITECT.

CONDUIT AND WIRE LEGEND

NO.	DESCRIPTION
1	2"C, 4#2 & 1#8 GND
2	2"C, 4#6 & 1 #10 GND
3	1 1/4"C, 12#12 & 6#12 GNDS
4	3/4"C, 2#10 & 1#10 GND

0 4' 8'

SCALE: 1/4" = 1'-0"

CONSULTANT INFORMATION

Savin Engineers, P.C.

STATE OF NEW YORK · STEVEN A. MARTINO · 083931 · LICENSED PROFESSIONAL ENGINEER

REVISION NUMBER	DATE	MADE BY	APP'D BY	REVISION
1	09/21/2022	RKC	SM	BID ADDENDUM #3

RECORD DRAWING CERTIFICATION

☐ AS BUILT – CHANGES AS NOTED ☐ AS BUILT – NO CHANGES

CONTRACTOR: NAME ____ SIGNATURE ____ TITLE ____ DATE ____

PROJECT COORDINATOR: NAME ____ SIGNATURE ____ TITLE ____ DATE ____

WESTCHESTER COUNTY, NEW YORK
DEPARTMENT OF PUBLIC WORKS AND TRANSPORTATION
DIVISION OF ENGINEERING

INFRASTRUCTURE REHABILITATION - PHASE 3
PLAYLAND PARK, RYE, NEW YORK
SOUTHEAST ARCADE
GROUND FLOOR POWER PLAN

CONTRACT NUMBER	22-523
SHEET NUMBER	SA-E-05
DWG NO.:	646 of 664
SCALE:	AS SHOWN
DATE:	8/23/2022
DPW FILE NUMBER	1-118-E-1395-1
REV. NO.	1

Drawing Name: G:\SavinAutocad\2060\25-Playland-Mega-3\E\SAE-1006.dwg
Projectname: 211001F02 Comments: ----
Printed by: MGodby Date: 21 September 2022 1:37 PM Designed by: ----
Rev#:
Xrefs: [TB_24X36_WestchesterCo_3.dwg] [TSG-SVL000.dwg] [SA-A-12.dwg] [SA-E-1002.dwg]

NOTES:

1. FOR ADDITIONAL NOTES, ABBREVIATIONS AND SYMBOLS, SEE DRAWING GE-E-01.
2. SEE DRAWING SA-E-04 FOR PANEL SCHEDULES.
3. EXHAUST FAN STARTERS SHALL BE FURNISHED BY THE EXHAUST FAN MANUFACTURER. FOR EXHAUST FAN STARTER REQUIREMENTS, SEE HVAC CONTRACT DRAWINGS AND SPECIFICATIONS.
4. ALL RECEPTACLE DESIGNATORS ARE POWERED VIA PANEL SA-PP-1, UNLESS OTHERWISE NOTED.

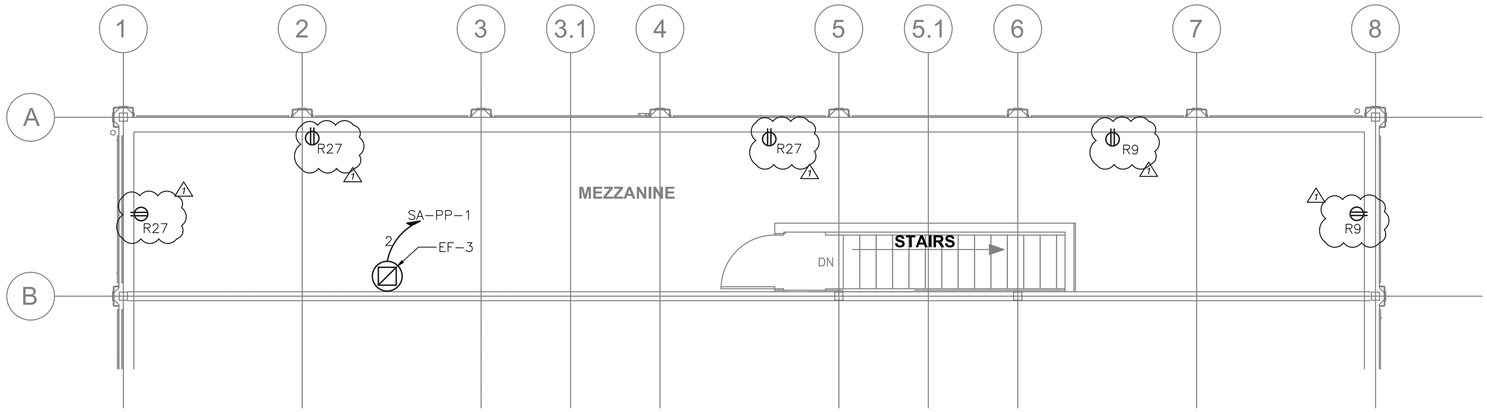

SOUTHEAST ARCADE SECOND LEVEL POWER PLAN
1/4"=1'-0"

0 4' 8'
SCALE: 1/4" = 1'-0"

Drawing Name: G:\SavinAutocad\2060\25-Playland-Mega-3\E\SAE-1007.dwg
Projectname: 211001F02 Comments: ----
Printed by: MGodby Date: 21 September 2022 1:37 PM Designed by: ----
Rev#:
Xrefs: [TB_24X36_WestchesterCo_3.dwg] [TSG-SVLOGO.dwg] [SA-A-13.dwg] [SA-E-1001.dwg]

CONSULTANT INFORMATION

Savin Engineers, P.C.

STATE OF NEW YORK · STEVEN A. MARTINO · 083931 · LICENSED PROFESSIONAL ENGINEER

REVISION NUMBER	DATE	MADE BY	APP'D BY	REVISION
1	09/21/2022	RKC	SM	BID ADDENDUM #3

RECORD DRAWING CERTIFICATION

☐ AS BUILT – CHANGES AS NOTED ☐ AS BUILT – NO CHANGES

CONTRACTOR
NAME
SIGNATURE
TITLE DATE

PROJECT COORDINATOR
NAME
SIGNATURE
TITLE DATE

WESTCHESTER COUNTY, NEW YORK
DEPARTMENT OF PUBLIC WORKS AND TRANSPORTATION
DIVISION OF ENGINEERING

INFRASTRUCTURE REHABILITATION - PHASE 3
PLAYLAND PARK, RYE, NEW YORK
SOUTHEAST ARCADE
SECOND LEVEL POWER PLAN

CONTRACT NUMBER	22-523
SHEET NUMBER	SA-E-06
DWG NO.:	647 of 664
SCALE:	AS SHOWN
DATE:	8/23/2022
DPW FILE NUMBER	1-118-E-1396-1
REV. NO.	1

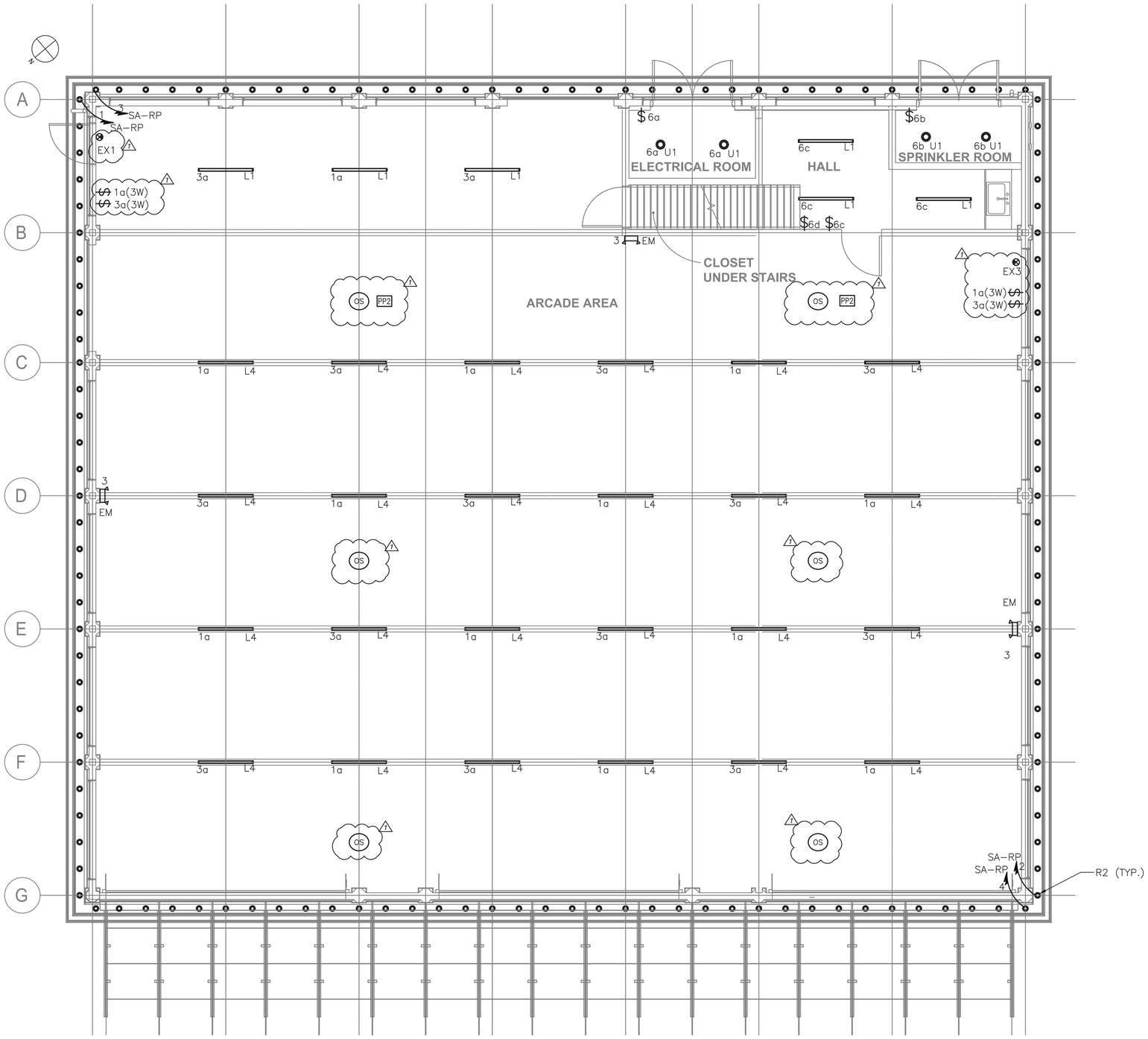

SOUTHEAST ARCADE GROUND FLOOR LIGHTING PLAN

1/4"=1'-0"

NOTES:

1. FOR ADDITIONAL NOTES, ABBREVIATIONS AND SYMBOLS, SEE DRAWING GE-E-01.
2. ALL INTERIOR LIGHTING IS POWERED VIA LIGHTING PANEL SA-LP-1, UNLESS NOTED OTHERWISE. CONTRACTOR SHALL CIRCUIT LIGHTING FIXTURES WITH 3/4" CONDUIT WITH 2#12 & 1#12GND.
3. EXIT SIGNS SHALL BE WIRED TO THE UN-SWITCHED LEG OF THE DESIGNATED CIRCUIT.
4. EMERGENCY FIXTURES SHALL BE WIRED TO THE UN-SWITCHED LEG OF THE DESIGNATED CIRCUIT.
5. ALL EXTERIOR LIGHTING SHALL BE CIRCUITED TO RELAY PANEL SA-RP. CONTRACTOR SHALL CIRCUIT LIGHTING FIXTURES WITH 3/4" CONDUIT WITH 2#12 & 2#12GND, UNLESS NOTED OTHERWISE. CONTRACTOR SHALL DAISY-CHAIN ALL EXTERIOR LIGHT FIXTURES WITH SAME CIRCUIT NUMBER BACK TO RELAY PANEL SA-RP.
6. FOR LIGHTING PANEL SCHEDULE, REFER TO DRAWINGS SA-E-04.
7. ALL POWER PACKS SHOWN ON DRAWINGS SHALL BE CIRCUITED FROM LIGHTING PANEL SA-LP-1.
8. NUMBER DESIGNATORS NEXT TO FIXTURES AND/OR CONTROLS INDICATE CIRCUIT NUMBERS.
9. POWER PACKS SHALL BE MOUNTED ABOVE FINISHED CEILING IF POSSIBLE.
10. NEW LIGHTING CONTROLS SHALL BE FULLY COMPATIBLE WITH THE EXISTING SYSTEM AS PROVIDED ELSEWHERE AT THE PLAYLAND FACILITY. EQUIPMENT INCLUDES, BUT NOT LIMITED TO OCCUPANCY SENSORS, RELAY/POWER PACKS, SWITCHES, RELAY PANELS, PHOTO SENSORS, ETC.
11. LIGHTING CONTROLS SELECTED SHALL HAVE THE CAPABILITY TO BE CONNECTED TO A MASTER HEAD-END SYSTEM (FUTURE CONTRACT).
12. RELAY PANEL SHALL BE EQUIPPED WITH BOTH A BUILT-IN TIME CLOCK AND A PHOTOSENSOR CONTROL.
13. FOR EXTERIOR LIGHTING CONTROL WIRING INFORMATION, SEE DRAWING SA-E-04.
14. FOR LIGHTING FIXTURE SCHEDULE SEE DRAWING GE-E-03.

LIGHTING CONTROL LEGEND

SYMBOL	DESCRIPTION
O/V	OCCUPANCY / VACANCY SENSOR - SMALL MOTION, DUAL TECHNOLOGY, SINGLE POLE DOUGLAS LIGHTING CONTROLS, DIALOG SYSTEM CATALOG NUMBER: DIVERSA WORSDD1-R-N OR APPROVED EQUAL.
OS	OCCUPANCY SENSOR - DUAL TECHNOLOGY SENSOR, OCCUPANCY DETECTION ONLY DOUGLAS LIGHTING CONTROLS, DIALOG SYSTEM CATALOG NUMBER: WORSDG1-R-T OR APPROVED EQUAL.
PP1	POWER / RELAY PACK - 120/277 VOLT, SINGLE POLE, SELF CONTROLLED RELAY SWITCH DOUGLAS LIGHTING CONTROLS, DIALOG SYSTEM CATALOG NUMBER: WP-PP20-D OR APPROVED EQUAL.
PP2	POWER / RELAY PACK - 120/277 VOLT, SELF CONTROLLED RELAY SWITCH, TWO DIMMING CHANNELS DOUGLAS LIGHTING CONTROLS, DIALOG SYSTEM CATALOG NUMBER: WRC-4222 OR APPROVED EQUAL.
$ m	120 VOLT RATED LIGHTING SINGLE POLE SWITCH
RP	RELAY TIME CONTROL PANEL, DIGITAL CENTRAL PANEL DOUGLAS LIGHTING CONTROLS, DIALOG SYSTEM CATALOG NUMBER: WLCP-CPx/x OR APPROVED EQUAL. *x/x IS CAPACITY/QTY OF RELAYS - VARIES BY BUILDING.
PS	DIGITAL PHOTOCELL - PHOTOSENSOR SUITABLE FOR OUTDOOR APPLICATIONS DOUGLAS LIGHTING CONTROLS, DIALOG SYSTEM CATALOG NUMBER: WPS-3741B OR APPROVED EQUAL.

0 4' 8'

SCALE: 1/4" = 1'-0"

Drawing Name: G:\SavinAutocad\2060\25-Playland-Mega-3\E\SAE-1008.dwg
Projectname: 211001F02 Comments: ----
Printed by: MGadby Date: 21 September 2022 1:38 PM Designed by: ----
Rev#:
Xrefs: [TB_24X36_WestchesterCo_3.dwg] [TSG-SVL000.dwg] [SA-A-12.dwg] [SA-E-1006.dwg]

CONSULTANT INFORMATION

Savin Engineers, P.C.

STATE OF NEW YORK · STEVEN A. MARTINO · 083931 · LICENSED PROFESSIONAL ENGINEER

REVISION NUMBER	DATE	MADE BY	APP'D BY	REVISION
1	09/21/2022	RKC	SM	BID ADDENDUM #3

RECORD DRAWING CERTIFICATION

☐ AS BUILT - CHANGES AS NOTED ☐ AS BUILT - NO CHANGES

CONTRACTOR: NAME ____ SIGNATURE ____ TITLE ____ DATE ____

PROJECT COORDINATOR: NAME ____ SIGNATURE ____ TITLE ____ DATE ____

WESTCHESTER COUNTY, NEW YORK
DEPARTMENT OF PUBLIC WORKS AND TRANSPORTATION
DIVISION OF ENGINEERING

INFRASTRUCTURE REHABILITATION - PHASE 3
PLAYLAND PARK, RYE, NEW YORK
SOUTHEAST ARCADE
GROUND FLOOR LIGHTING PLAN

CONTRACT NUMBER	22-523
SHEET NUMBER	SA-E-07
DWG NO.:	648 of 664
SCALE:	AS SHOWN
DATE:	8/23/2022
DPW FILE NUMBER	1-118-E-1397-1
REV. NO.	1

NOTES:

1. FOR ADDITIONAL NOTES, ABBREVIATIONS AND SYMBOLS, SEE DRAWING GE-E-01.
2. ALL INTERIOR LIGHTING SHOWN IS POWERED VIA LIGHTING PANEL SA-LP-1, UNLESS NOTED OTHERWISE. CONTRACTOR SHALL CIRCUIT LIGHTING FIXTURES WITH 3/4" CONDUIT WITH 2#12 & 1#12GND.
3. EXIT SIGNS SHALL BE WIRED TO THE UN-SWITCHED LEG OF THE DESIGNATED CIRCUIT.
4. EMERGENCY FIXTURES SHALL BE WIRED TO THE UN-SWITCHED LEG OF THE DESIGNATED CIRCUIT.
5. FOR LIGHTING PANEL SCHEDULE, REFER TO DRAWING SA-E-04.
6. FIXTURE SHALL BE SURFACE MOUNTED. COORDINATE WITH ARCHITECTURAL DRAWINGS FOR MORE INFORMATION.

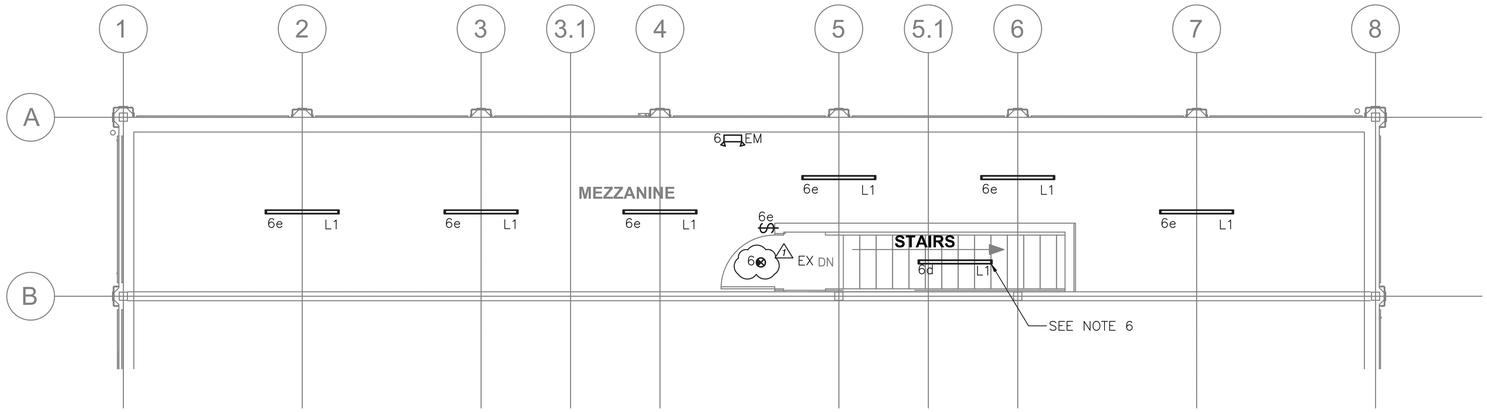

SOUTHEAST ARCADE SECOND LEVEL LIGHTING PLAN
1/4"=1'-0"

SCALE: 1/4" = 1'-0"

Drawing Name: G:\SavinAutocad\2060\25-Playland-Mega-3\E\SAE-1009.dwg
Projectname: 211001F02 Comments: ----
Printed by: MGodby Date: 21 September 2022 1:38 PM Designed by: ----
Rev#:
Xrefs: [TB_24X36_WestchesterCo_3.dwg] [TSG-SVL000.dwg] [SA-A-13.dwg] [SA-E-1007.dwg]

CONSULTANT INFORMATION

Savin Engineers, P.C.

STATE OF NEW YORK · STEVEN A. MARTINO · 083931 · LICENSED PROFESSIONAL ENGINEER

REVISION NUMBER	DATE	MADE BY	APP'D BY	REVISION
1	09/21/2022	RKC	SM	BID ADDENDUM #3

RECORD DRAWING CERTIFICATION

☐ AS BUILT – CHANGES AS NOTED ☐ AS BUILT – NO CHANGES

CONTRACTOR
NAME
SIGNATURE
TITLE DATE

PROJECT COORDINATOR
NAME
SIGNATURE
TITLE DATE

WESTCHESTER COUNTY, NEW YORK
DEPARTMENT OF PUBLIC WORKS AND TRANSPORTATION
DIVISION OF ENGINEERING

INFRASTRUCTURE REHABILITATION - PHASE 3
PLAYLAND PARK, RYE, NEW YORK
SOUTHEAST ARCADE
SECOND LEVEL LIGHTING PLAN

CONTRACT NUMBER	22-523
SHEET NUMBER	SA-E-08
DWG NO.:	649 of 664
SCALE:	AS SHOWN
DATE:	8/23/2022
DPW FILE NUMBER	1-118-E-1398-1
REV. NO.	1

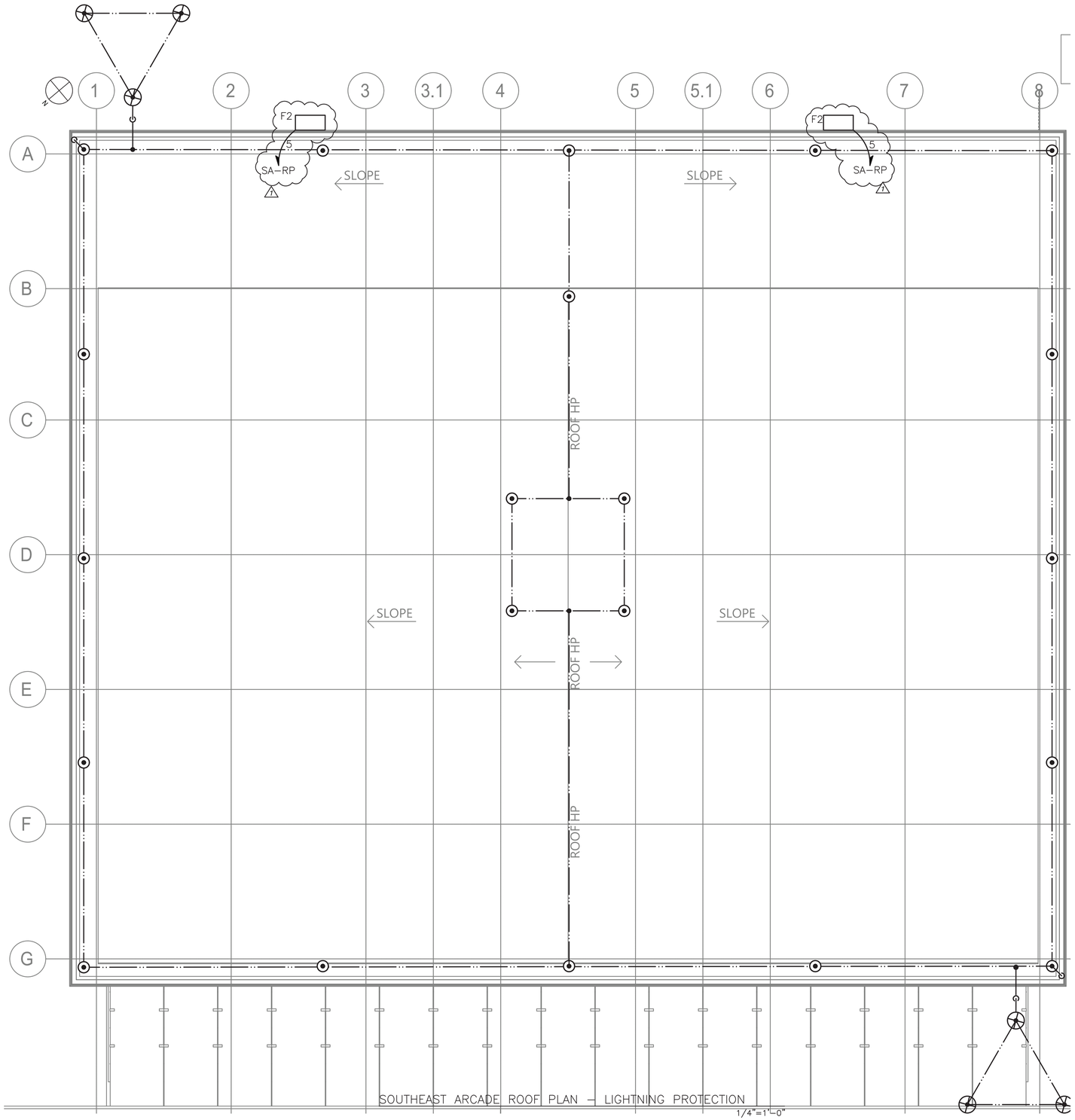

SOUTHEAST ARCADE ROOF PLAN – LIGHTNING PROTECTION

1/4"=1'-0"

NOTES:

1. FOR ADDITIONAL NOTES, ABBREVIATIONS AND SYMBOLS, SEE DRAWING GE-E-01.
2. CONTRACTOR IS ADVISED, THE LIGHTNING PROTECTION SYSTEM SHOWN SHALL BE USED AS A GUIDE AND FOR BIDDING PURPOSES. CONTRACTOR SHALL HIRE A CERTIFIED LIGHTNING PROTECTION SPECIALIST FOR INSTALLATION OF NEW SYSTEM. INSTALLER SHALL PROVIDE ALL THAT IS REQUIRED (PER NFPA 780) AND SHALL OBTAIN UL96A CERTIFICATION (MASTER LABEL) UPON COMPLETION. ADDITIONALLY, INSTALLER SHALL PROVIDE FOR ALL NECESSARY BONDING FOR COMPLETE SYSTEM.
3. CONTRACTOR SHALL COORDINATE WITH THE ARCHITECTURAL DRAWINGS FOR SPECIFIC INFORMATION ON THE NEW ROOF STRUCTURE AND MATERIALS.
4. TO MINIMIZE THE VISUAL IMPACT OF THE BUILDING ALL NEW DOWN CONDUCTORS SHALL BE ROUTED DOWN SIDE OF BUILDING. COORDINATE WITH ARCHITECTURAL FEATURES TO CONCEAL DOWN CONDUCTORS. CONTRACTOR SHALL COORDINATE WITH OTHER TRADES TO ACCOMPLISH THIS WORK. PROVIDE LPS BARE COPPER CABLE TO GROUND RODS.
5. CONTRACTOR IS ADVISED THE NEW DOWN CONDUCTOR SHALL BE BONDED TO THE LOWER METAL OVERHANG ROOF AND CONNECT TO THE EXISTING GROUND WIRE AND GROUND ROD AT GROUND LEVEL.
6. AT EACH LPS DOWN CONDUCTOR, PROVIDE TRIANGULAR GROUND GRID AS SHOWN (NOT ALL SHOWN).
7. PROVIDE NEW FLOODLIGHT FIXTURE TYPE F2. CONTRACTOR SHALL PROVIDE ALL NECESSARY CONDUIT AND WIRE. FIXTURES SHALL BE CIRCUITED VIA RELAY PANEL SA-RP.

0 4' 8'

SCALE: 1/4" = 1'-0"

CONSULTANT INFORMATION

Savin Engineers, P.C.

STATE OF NEW YORK · STEVEN A. MARTINO · 089631 · LICENSED PROFESSIONAL ENGINEER

REVISION NUMBER	DATE	MADE BY	APP'D BY	REVISION
1	09/21/2022	RKC	SM	BID ADDENDUM #3

RECORD DRAWING CERTIFICATION

☐ AS BUILT – CHANGES AS NOTED ☐ AS BUILT – NO CHANGES

CONTRACTOR: NAME / SIGNATURE / TITLE / DATE

PROJECT COORDINATOR: NAME / SIGNATURE / TITLE / DATE

WESTCHESTER COUNTY, NEW YORK
DEPARTMENT OF PUBLIC WORKS AND TRANSPORTATION
DIVISION OF ENGINEERING

INFRASTRUCTURE REHABILITATION - PHASE 3
PLAYLAND PARK, RYE, NEW YORK
SOUTHEAST ARCADE
ROOF PLAN - LIGHTNING PROTECTION

CONTRACT NUMBER	22-523
SHEET NUMBER	SA-E-09
DWG NO.:	650 of 664
SCALE:	AS SHOWN
DATE:	8/23/2022
DPW FILE NUMBER	1-118-E-1399-1
REV. NO.	1

Drawing Name: G:\SavinAutocad\2060\25-Playland-Mega-3\E\SAE-1010.dwg
Projectname: 211001F02 Comments: ----
Printed by: MGodby Date: 21 September 2022 1:38 PM Designed by: ----
Reef: Xrefs: [TB_24X36_WestchesterCo_3.dwg] [TSG-SVL000.dwg] [SA-A-14.dwg] [SA-E-1004.dwg]

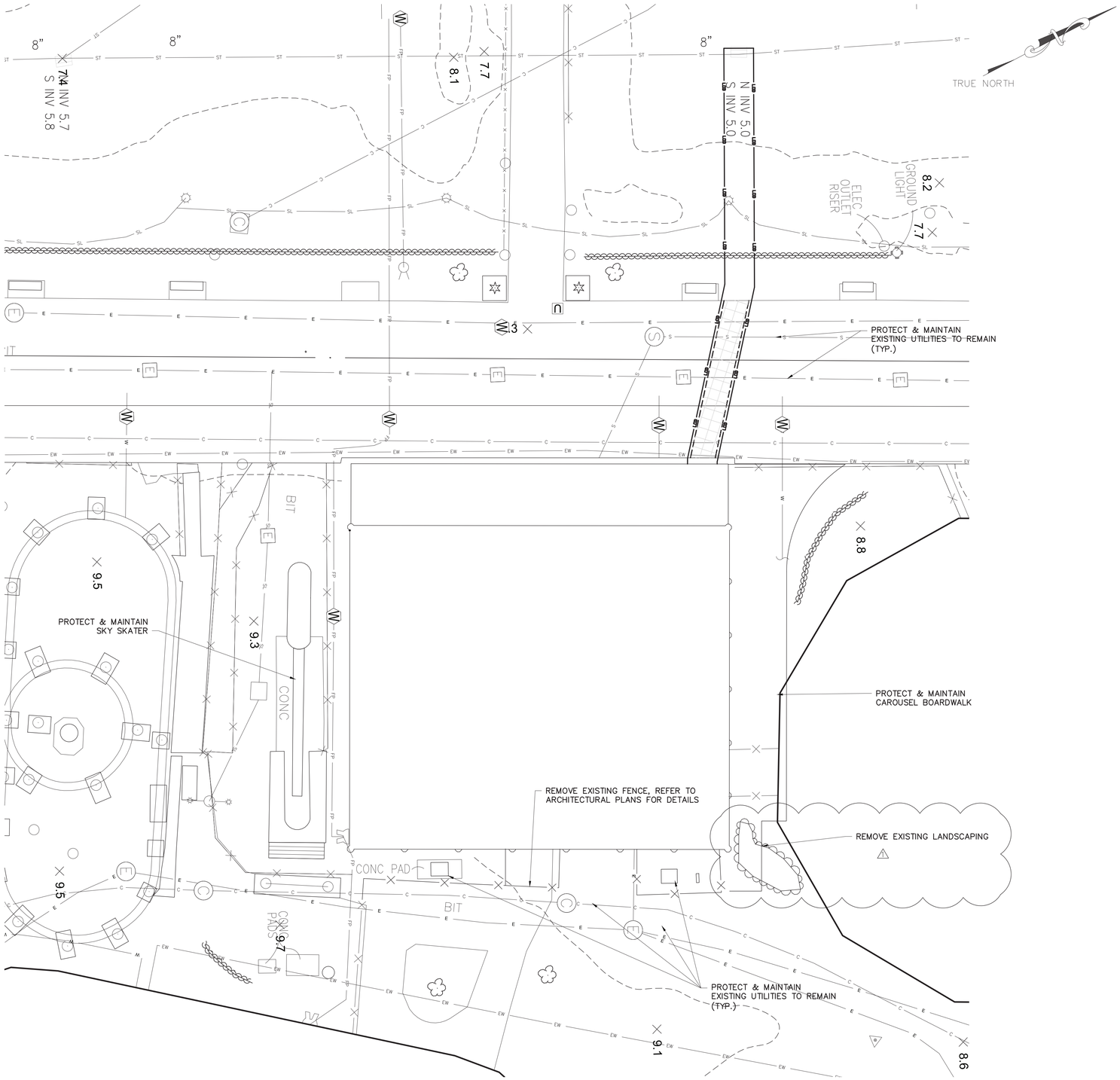

KEY MAP
NOT TO SCALE

EXISTING LEGEND

- POST
- UTILITY POLE
- SIGN
- HANDICAP PARKING
- GROUND LIGHT
- LIGHT POLE
- UTILITY POLE WITH LIGHT
- LIGHT POLE (SINGLE LIGHT)
- LIGHT POLE (DOUBLE LIGHT)
- LIGHT POLE (MULTI LIGHT)
- BOAT TIE-OFF CLEAT
- CATCH BASIN
- TRENCH DRAIN
- MAILBOX
- UNKNOWN MANHOLE
- COMMUNICATIONS BOX/HAND HOLE
- ELECTRIC HAND HOLE
- ELECTRIC BOX
- GAS METER
- IRRIGATION BOX
- UNKNOWN UTILITY BOX/HAND HOLE
- COMMUNICATION MANHOLE
- DRAINAGE MANHOLE
- ELECTRIC MANHOLE
- SEWER MANHOLE
- STORM SEWER MANHOLE
- SEWER CLEANOUT
- HYDRANT
- SIAMESE CONNECTION
- UNKNOWN VALVE
- WATER VALVE
- GAS VALVE
- WATER SPIGOT OR FOUNTAIN
- MONITORING WELL
- DECIDUOUS BUSH
- EVERGREEN BUSH
- DECIDUOUS TREE
- EVERGREEN TREE
- STUMP
- HEDGE ROW
- TREELINE
- BRUSHLINE
- RETAINING WALL
- GUIDE RAIL
- STONE WALL
- WATERLINE
- FENCE
- UNDERGROUND COMMUNICATION
- UNDERGROUND PROPANE
- UNDERGROUND ELECTRICAL
- UNDERGROUND STREET LIGHTING
- UNDERGROUND ENVIRONMENTAL WASTEWATER
- UNDERGROUND SEWER
- UNDERGROUND STORM SEWER
- UNDERGROUND WATER
- UNDERGROUND FIRE PROTECTION
- EXISTING MAJOR CONTOUR
- EXISTING MINOR CONTOUR

PROPOSED LEGEND:

- SAW CUTTING ASPHALT CONCRETE
- LIMITS OF DISTURBANCE
- LIMITS OF PAVEMENT REMOVAL
- AREA OF ASPHALT PAVEMENT REMOVAL (FULL DEPTH & EXCAVATION)
- DRAINAGE STRUCTURE INLET PROTECTION
- PIPE REMOVAL

NOTES:

1. PAVEMENT REMOVAL, MILLING AND EXCAVATION, MATERIAL SHALL NOT BE STOCKPILED ON SITE.

2. EXISTING GRADES, PIPE LOCATIONS, SIZES, MATERIAL, INVERTS AND OTHER EXISTING CONDITIONS ARE SHOWN ON THE DRAWINGS FROM AVAILABLE AS-BUILT DRAWINGS AND FIELD SURVEY BY OTHERS. IT SHALL BE THE RESPONSIBILITY OF THE CONTRACTOR TO VERIFY ALL EXISTING CONDITIONS.

3. THE CONTRACTOR SHALL TAKE PROPER PRECAUTIONS NOT TO DAMAGE ANY EXISTING SITE CONDITIONS SPECIFICALLY EXCLUDED FROM THE CONTRACT AND WILL BE HELD SOLELY RESPONSIBLE FOR ANY DAMAGE OCCURRING DURING THE COURSE OF THE WORK DURING CONSTRUCTION. THE CONTRACTOR SHALL, AT THEIR OWN EXPENSE, MAKE ALL REPAIRS REQUIRED TO RESTORE ANY DAMAGED AREAS TO ORIGINAL CONDITIONS.

New York 811 — Know what's below. Call before you dig.

0 10 20 30
1"=10' SCALE BAR

6/15/2022 4:10:27 PM

CONSULTANT INFORMATION
LiRo Engineers, Inc.
A LiRo Group Company
Mineola, N.Y. 516-746-2350[T]

CONSULTANT SEAL
STATE OF NEW YORK — KENNETH J. HOLDEN JR. — LICENSED PROFESSIONAL ENGINEER — NO. 059134

REVISION NUMBER	DATE	MADE BY	APP'D BY	REVISION
1	9/21/22	HIK	LK	BID ADDENDUM #3

RECORD DRAWING CERTIFICATION
☐ AS BUILT – CHANGES AS NOTED ☐ AS BUILT – NO CHANGES

CONTRACTOR
NAME
SIGNATURE
TITLE DATE

PROJECT COORDINATOR
NAME
SIGNATURE
TITLE DATE

WESTCHESTER COUNTY, NEW YORK
DEPARTMENT OF PUBLIC WORKS AND TRANSPORTATION
DIVISION OF ENGINEERING

INFRASTRUCTURE REHABILITATION PHASE 3
PLAYLAND PARK, RYE, NEW YORK
SOUTHEAST ARCADE BUILDING
EXISTING CONDITIONS/DEMOLITION PLAN

CONTRACT NUMBER	22-523
SHEET NUMBER	SA-C-02
DWG. NO.	657 of 664
SCALE:	1"=10'
DATE:	08/23/2022
DPW FILE NUMBER	1-118-C-1406-1
REV. NO.	1

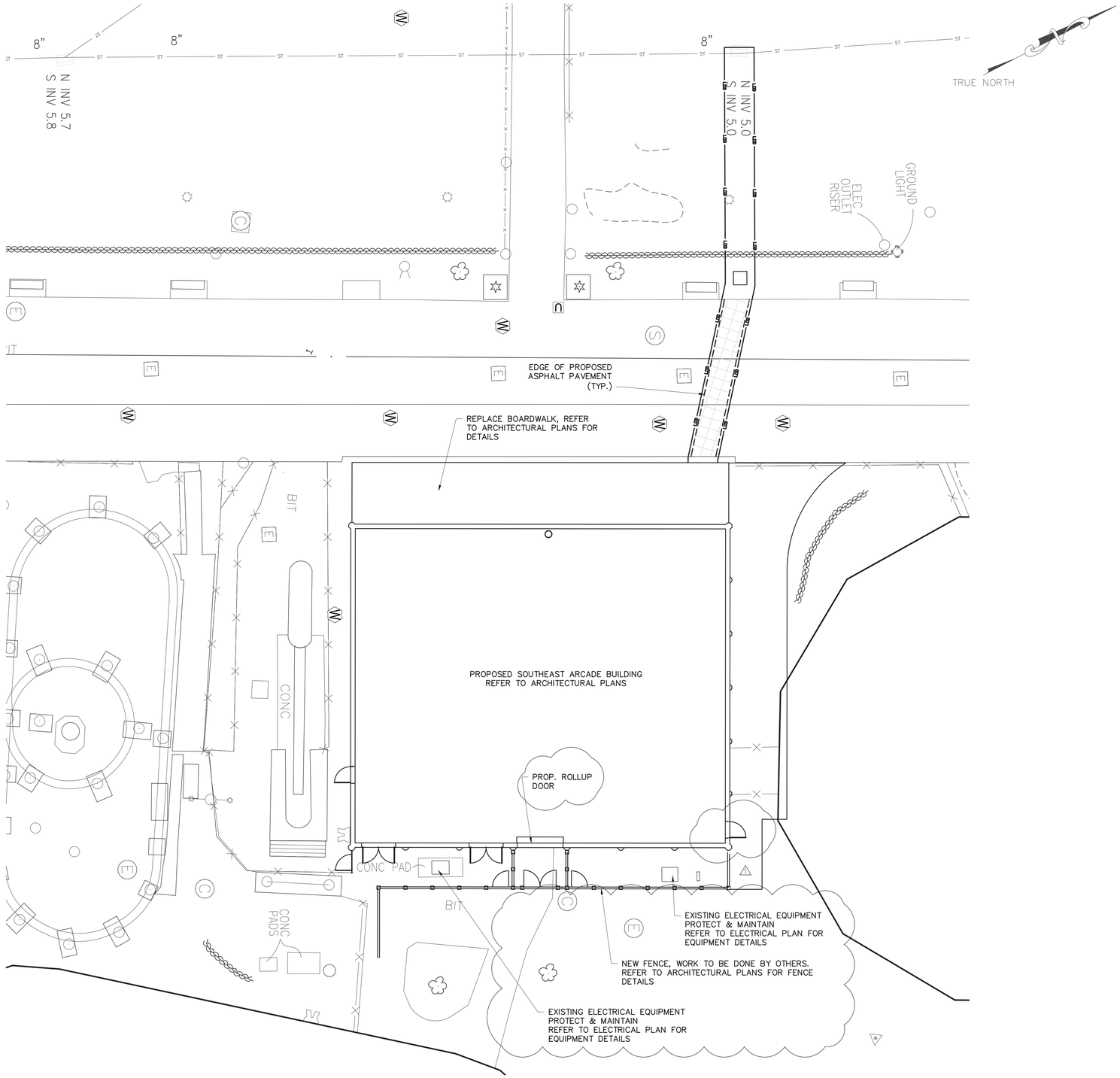

EXISTING LEGEND

- POST
- UTILITY POLE
- SIGN OR
- HANDICAP PARKING
- GROUND LIGHT
- LIGHT POLE
- UTILITY POLE WITH LIGHT
- LIGHT POLE (SINGLE LIGHT)
- LIGHT POLE (DOUBLE LIGHT)
- LIGHT POLE (MULTI LIGHT)
- BOAT TIE-OFF CLEAT
- CATCH BASIN OR OR
- TRENCH DRAIN
- MAILBOX
- UNKNOWN MANHOLE
- COMMUNICATIONS BOX/HAND HOLE OR
- ELECTRIC HAND HOLE
- ELECTRIC BOX
- GAS METER
- IRRIGATION BOX
- UNKNOWN UTILITY BOX/HAND HOLE
- COMMUNICATION MANHOLE
- DRAINAGE MANHOLE OR
- ELECTRIC MANHOLE
- SEWER MANHOLE OR
- STORM SEWER MANHOLE
- SEWER CLEANOUT
- HYDRANT
- SIAMESE CONNECTION
- UNKNOWN VALVE OR
- WATER VALVE
- GAS VALVE
- WATER SPIGOT OR FOUNTAIN
- MONITORING WELL
- DECIDUOUS BUSH
- EVERGREEN BUSH
- DECIDUOUS TREE
- EVERGREEN TREE
- STUMP
- HEDGE ROW
- TREELINE
- BRUSHLINE
- RETAINING WALL
- GUIDE RAIL
- STONE WALL
- FENCE

PROPOSED LEGEND:

- MOVABLE CONSTRUCTION FENCE
- SAW CUTTING ASPHALT CONCRETE
- LIMITS OF DISTURBANCE
- LIMITS OF PAVEMENT REMOVAL
- AREA OF FULL DEPTH ASPHALT PAVEMENT
- DRAINAGE STRUCTURE INLET PROTECTION

0 10 20 30
1"=10' SCALE BAR

6/15/2022 4:10:27 PM

CONSULTANT INFORMATION
LiRo Engineers, Inc.
A LiRo Group Company
Mineola, N.Y. 516-746-2350[T]

CONSULTANT SEAL
STATE OF NEW YORK · KENNETH J. HOLDEN · LICENSED PROFESSIONAL ENGINEER · No. 059134

REVISION NUMBER	DATE	MADE BY	APP'D BY	REVISION
1	9/21/22	HIK	LK	BID ADDENDUM #3

RECORD DRAWING CERTIFICATION
AS BUILT – CHANGES AS NOTED
AS BUILT – NO CHANGES

CONTRACTOR
NAME
SIGNATURE
TITLE DATE

PROJECT COORDINATOR
NAME
SIGNATURE
TITLE DATE

WESTCHESTER COUNTY, NEW YORK
DEPARTMENT OF PUBLIC WORKS AND TRANSPORTATION
DIVISION OF ENGINEERING

INFRASTRUCTURE REHABILITATION PHASE 3
PLAYLAND PARK, RYE, NEW YORK
SOUTHEAST ARCADE BUILDING
SITE CONSTRUCTION PLAN

CONTRACT NUMBER	22-523
SHEET NUMBER	SA-C-03
DWG NO.	658 of 664
SCALE:	1"=10'
DATE:	08/23/2022
DPW FILE NUMBER	1-118-C-1407-1
REV. NO.	1