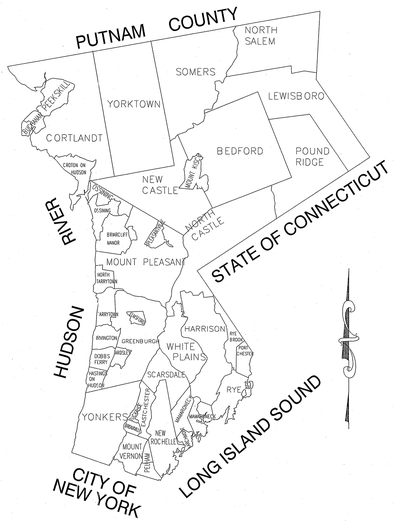


WESTCHESTER COUNTY

Westchestergov.com

WESTCHESTER COUNTY, NEW YORK
DEPARTMENT OF PUBLIC WORKS AND TRANSPORTATION
DIVISION OF ENGINEERING

# CONTRACT No. 22-523

# INFRASTRUCTURE REHABILITATION - PHASE 3
# PLAYLAND PARK
# RYE, NEW YORK

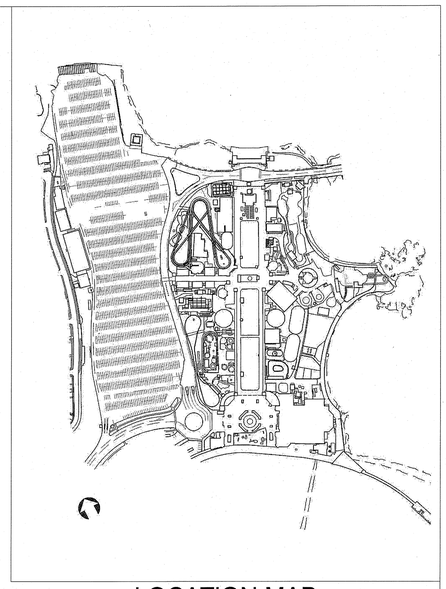

LOCATION MAP
SCALE: N.T.S.

CONSULTANT INFORMATION

The LiRo Group
3 Aerial Way, Syosset, New York 11791
(516) 938-5476 www.liro.com

Savin Engineers, P.C.
3 Campus Drive #1, Pleasantville, New York 10570
(917) 769-3200 www.savinengineers.com

| REVISION NUMBER | DATE | MADE BY | APP'D BY | REVISION |
|---|---|---|---|---|
| | | | | |
| | | | | |
| | | | | |
| | | | | |
| | | | | |

RECORD DRAWING CERTIFICATION

☐ AS BUILT – CHANGES AS NOTED
☐ AS BUILT – NO CHANGES

| CONTRACTOR | PROJECT COORDINATOR |
|---|---|
| NAME | NAME |
| SIGNATURE | SIGNATURE |
| TITLE DATE | TITLE DATE |

PROFESSIONAL SEAL
REGISTERED ARCHITECT ROBERT D. YOUNG 023280 STATE OF NEW YORK

| RECOMMENDED FOR CONSTRUCTION DATE 8/23/22 | RECOMMENDED FOR CONSTRUCTION DATE 8-30-2022 | APPROVED FOR CONSTRUCTION DATE 8/23/22 | APPROVED FOR CONSTRUCTION DATE 8/29/22 |
|---|---|---|---|
| JAMES ANTONACCIO, R.A.<br>PRINCIPAL ARCHITECT<br>DEPARTMENT OF PUBLIC WORKS AND TRANSPORTATION | GAYLE M. KATZMAN, P.E.<br>FIRST DEPUTY COMMISSIONER<br>DEPARTMENT OF PUBLIC WORKS AND TRANSPORTATION | KATHLEEN O'CONNOR<br>COMMISSIONER<br>DEPARTMENT OF PARKS, RECREATION AND CONSERVATION | HUGH J. GREECHAN, JR., P.E.<br>COMMISSIONER<br>DEPARTMENT OF PUBLIC WORKS AND TRANSPORTATION |

WESTCHESTER COUNTY, NEW YORK
DEPARTMENT OF PUBLIC WORKS AND TRANSPORTATION
DIVISION OF ENGINEERING

CONTRACT NUMBER 22-523
SHEET NUMBER T-01
SHEET NO.

INFRASTRUCTURE REHABILITATION - PHASE 3
PLAYLAND PARK, RYE, NEW YORK
COVER SHEET

SCALE:
DATE: 08/23/2022
DPW FILE NO. 1-118-T-751-0
REV. NO.

8/19/2022 2:49:24 PM

## DRAWING LIST- VOLUME 1

| DRAWING No. | SHEET # | SHEET NAME | DPW File # |
|---|---|---|---|
| 1 | T-01 | COVER SHEET | 1-118-T-751-0 |
| 2 | T-02 | DRAWING LIST | 1-118-G-752-0 |
| 3 | T-02A | DRAWING LIST | 1-118-G-752A-0 |
| 4 | T-03 | ACCESSIBILITY DETAILS, GENERAL SYMBOLS AND ABBREVIATIONS | 1-118-G-753-0 |
| 5 | T-04 | SITE PLAN & SCOPE OF WORK | 1-118-G-754-0 |
| 6 | T-05 | FEMA MAPS | 1-118-G-755-0 |
| 7 | T-06 | CONTRACTOR INFORMATION- CAPITAL CONTRACTS, SITE ACTIVITIES, | 1-118-G-756-0 |
| 8 | T-07 | CONTRACTOR INFORMATION- SITE PLAN DETAIL | 1-118-G-757-0 |
| 9 | T-08 | FIRESTOPPING DETAILS 1 OF 2 | 1-118-G-758-0 |
| 10 | T-09 | FIRESTOPPING DETAILS 2 OF 2 | 1-118-G-759-0 |
| *GENERAL (ELECTRICAL)* | | | |
| 11 | GE-E-01 | ELECTRICAL SYMBOLS, ABBREVIATIONS AND NOTES | 1-118-G-760-0 |
| 12 | GE-E-02 | SITE PLAN | 1-118-G-761-0 |
| 13 | GE-E-03 | LIGHTING FIXTURE SCHEDULE | 1-118-G-762-0 |

### BURGER BARN

| DRAWING No. | SHEET # | SHEET NAME | DPW File # |
|---|---|---|---|
| *GENERAL* | | | |
| 14 | BB-G-01 | BUILDING INTRO | 1-118-G-763-0 |
| 15 | BB-G-02 | EGRESS PLANS AND CODE ANALYSIS | 1-118-G-764-0 |
| 16 | BB-G-03 | SITE RESTORATION PLAN | 1-118-G-765-0 |
| *ENVIRONMENTAL* | | | |
| 17 | BB-H-10 | GENERAL ASBESTOS ABATEMENT NOTES | 1-118-G-766-0 |
| 18 | BB-H-11 | ROOF- ASBESTOS ABATEMENT PLAN | 1-118-G-767-0 |
| 19 | BB-H-20 | GENERAL LEAD REMEDIATION NOTES | 1-118-G-768-0 |
| 20 | BB-H-21 | NW, SW & SE ELEVATIONS- LEAD REMEDIATION PLAN | 1-118-G-769-0 |
| 21 | BB-H-22 | NE & SE ELEVATIONS- LEAD REMEDIATION PLAN | 1-118-G-770-0 |
| *ARCHITECTURAL* | | | |
| 22 | BB-A-01 | GROUND FLOOR DEMOLITION PLAN | 1-118-A-771-0 |
| 23 | BB-A-02 | GROUND FLOOR DEMOLITION- REFLECTED CEILING PLANS | 1-118-A-772-0 |
| 24 | BB-A-03 | ROOF DEMOLITION PLAN | 1-118-A-773-0 |
| 25 | BB-A-04 | EXTERIOR DEMOLITION ELEVATIONS 1 | 1-118-A-774-0 |
| 26 | BB-A-05 | EXTERIOR DEMOLITION ELEVATIONS 2 | 1-118-A-775-0 |
| 27 | BB-A-11 | CONSTRUCTION PLANS | 1-118-A-776-0 |
| 28 | BB-A-12 | REFLECTED CEILING PLAN | 1-118-A-777-0 |
| 29 | BB-A-13 | ROOF CONSTRUCTION PLAN | 1-118-A-778-0 |
| 30 | BB-A-14 | FINISH PLAN | 1-118-A-779-0 |
| 31 | BB-A-21 | EXTERIOR ELEVATION 1 | 1-118-A-780-0 |
| 32 | BB-A-22 | EXTERIOR ELEVATION 2 | 1-118-A-781-0 |
| 33 | BB-A-31 | BUILDING SECTIONS 1 | 1-118-A-782-0 |
| 34 | BB-A-51 | INTERIOR ELEVATIONS | 1-118-A-783-0 |
| 35 | BB-A-52 | KITCHEN INTERIOR ELEVATIONS | 1-118-A-784-0 |
| 36 | BB-A-81 | BUILDING TOWER DETAILS | 1-118-A-785-0 |
| 37 | BB-A-82 | CEILING DETAILS | 1-118-A-786-0 |
| 38 | BB-A-83 | ROOF DETAILS | 1-118-A-787-0 |
| 39 | BB-A-84 | BIFOLD DOOR DETAILS | 1-118-A-788-0 |
| 40 | BB-A-85 | COLUMN DETAILS | 1-118-A-789-0 |
| 41 | BB-A-86 | ENLARGED BATHROOM PLANS | 1-118-A-790-0 |
| 42 | BB-A-87 | FLOORING DETAILS | 1-118-A-791-0 |
| 43 | BB-A-88 | SIGNAGE DETAILS | 1-118-A-792-0 |
| 44 | BB-A-89 | FENCE DETAILS | 1-118-A-793-0 |
| 45 | BB-A-91 | DOOR & HARDWARE SCHEDULE | 1-118-A-794-0 |
| 46 | BB-A-92 | WINDOW SCHEDULE AND DETAILS | 1-118-A-795-0 |
| 47 | BB-A-93 | PARTITION TYPES & WALL DETAILS | 1-118-A-796-0 |
| *STRUCTURAL* | | | |
| 48 | BB-S-01 | STRUCTURAL NOTES | 1-118-S-797-0 |
| 49 | BB-S-02 | STRUCTURAL ABBREVIATIONS & SYMBOLS | 1-118-S-798-0 |
| 50 | BB-S-03 | DEMOLITION - GROUND FLOOR PLAN | 1-118-S-799-0 |
| 51 | BB-S-04 | DEMOLITION - ROOF PLAN | 1-118-S-800-0 |
| 52 | BB-S-05 | FOUNDATION PLAN | 1-118-S-801-0 |
| 53 | BB-S-06 | GROUND FLOOR PLAN | 1-118-S-802-0 |
| 54 | BB-S-07 | ROOF PLAN | 1-118-S-803-0 |
| 55 | BB-S-08 | SECTIONS AND DETAILS | 1-118-S-804-0 |
| 56 | BB-S-09 | SECTIONS | 1-118-S-805-0 |
| 57 | BB-S-10 | SECTIONS AND DETAILS | 1-118-S-806-0 |
| 58 | BB-S-11 | SECTIONS AND DETAILS | 1-118-S-807-0 |
| 59 | BB-S-12 | SECTIONS AND DETAILS | 1-118-S-808-0 |
| 60 | BB-S-13 | SECTIONS AND DETAILS | 1-118-S-809-0 |
| 61 | BB-S-14 | TYPICAL SECTIONS AND DETAILS | 1-118-S-810-0 |
| *FIRE PROTECTION* | | | |
| 62 | BB-FP-01 | FIRE PROTECTION NOTES, SYMBOLS, ABBREVIATIONS & DWG LIST | 1-118-FP-811-0 |
| 63 | BB-FP-11 | FIRE PROTECTION GROUND FLOOR DEMOLITION PLAN | 1-118-FP-812-0 |
| 64 | BB-FP-21 | FIRE PROTECTION GROUND FLOOR CONSTRUCTION PLAN AND RCP | 1-118-FP-813-0 |
| 65 | BB-FP-81 | FIRE PROTECTION DETAILS | 1-118-FP-814-0 |
| *PLUMBING* | | | |
| 66 | BB-P-01 | PLUMBING NOTES, SYMBOLS, ABBREVIATIONS AND DRAWING LIST | 1-118-P-815-0 |
| 67 | BB-P-21 | PLUMBING GROUND FLOOR CONSTRUCTION PLAN | 1-118-P-816-0 |
| 68 | BB-P-81 | PLUMBING DETAILS | 1-118-P-817-0 |
| *MECHANICAL* | | | |
| 69 | BB-M-01 | MECHANICAL NOTES, SYMBOLS & LEGENDS | 1-118-M-818-0 |
| 70 | BB-M-11 | MECHANICAL FIRST FLOOR DEMOLITION PLAN | 1-118-M-819-0 |
| 71 | BB-M-21 | MECHANICAL FIRST FLOOR CONSTRUCTION PLAN | 1-118-M-820-0 |
| 72 | BB-M-22 | MECHANICAL ROOF CONSTRUCTION PLAN | 1-118-M-821-0 |
| 73 | BB-M-23 | MECHANICAL EXTERIOR BUILDING ELEVATIONS | 1-118-M-822-0 |
| 74 | BB-M-61 | MECHANICAL SCHEDULES | 1-118-M-823-0 |
| 75 | BB-M-81 | MECHANICAL DETAILS 1 OF 2 | 1-118-M-824-0 |
| 76 | BB-M-82 | MECHANICAL DETAILS 2 OF 2 | 1-118-M-825-0 |
| 77 | BB-M-91 | MECHANICAL CONTROLS | 1-118-M-826-0 |
| *ELECTRICAL* | | | |
| 78 | BB-E-01 | ONE LINE DIAGRAM & PANEL SCHEDULES - DEMOLITION | 1-118-E-827-0 |
| 79 | BB-E-02 | GROUND FLOOR - DEMOLITION PLAN | 1-118-E-828-0 |
| 80 | BB-E-03 | ROOF DEMOLITION PLAN | 1-118-E-829-0 |
| 81 | BB-E-04 | SITE DUCTBANK PLAN | 1-118-E-830-0 |
| 82 | BB-E-05 | ONE LINE DIAGRAMS | 1-118-E-831-0 |
| 83 | BB-E-06 | GROUND FLOOR - POWER PLAN | 1-118-E-832-0 |
| 84 | BB-E-07 | GROUND FLOOR - LIGHTING PLAN | 1-118-E-833-0 |
| 85 | BB-E-08 | ROOF PLAN - POWER & LIGHTNING PROTECTION | 1-118-E-834-0 |
| 86 | BB-E-09 | PANEL SCHEDULES | 1-118-E-835-0 |
| *FIRE ALARM* | | | |
| 87 | BB-FA-01 | FIRE ALARM NOTES, SYMBOLS, AND LEGEND | 1-118-FA-836-0 |
| 88 | BB-FA-11 | FIRE ALARM FIRST FLOOR DEMOLITION PLAN | 1-118-FA-837-0 |
| 89 | BB-FA-21 | FIRE ALARM FIRST FLOOR CONSTRUCTION PLAN | 1-118-FA-838-0 |
| 90 | BB-FA-22 | FIRE ALARM ROOF CONSTRUCTION PLAN | 1-118-FA-839-0 |
| 91 | BB-FA-81 | FIRE ALARM RISER DIAGRAM AND DETAILS | 1-118-FA-840-0 |
| *CIVIL* | | | |
| 92 | BB-C-01 | GENERAL NOTES | 1-118-C-841-0 |
| 93 | BB-C-02 | EXISTING CONDITIONS/ DEMOLITION PLAN | 1-118-C-842-0 |
| 94 | BB-C-03 | SITE CONSTRUCTION PLAN | 1-118-C-843-0 |
| 95 | BB-C-04 | UTILITY CONSTRUCTION PLAN | 1-118-C-844-0 |
| 96 | BB-C-05 | GRADING AND EROSION CONTROL PLAN | 1-118-C-845-0 |
| 97 | BB-C-06 | CIVIL DETAILS 1 | 1-118-C-846-0 |
| 98 | BB-C-07 | CIVIL DETAILS 2 | 1-118-C-847-0 |

### CXA BUILDING

| | | | |
|---|---|---|---|
| *GENERAL* | | | |
| 99 | CXA-G-01 | BUILDING INTRO | 1-118-G-848-0 |
| 100 | CXA-G-02 | CXA- LIFE SAFETY PLANS | 1-118-G-849-0 |
| 101 | CXA-G-02.1 | CXA- FIRE SEPARATION PLAN | 1-118-G-850-0 |
| 102 | CXA-G-03 | CXA- SITE RESTORATION | 1-118-G-851-0 |
| *ENVIRONMENTAL* | | | |
| 103 | CXA-H-10 | GENERAL ASBESTOS ABATEMENT NOTES | 1-118-G-852-0 |
| 104 | CXA-H-11 | GROUND FLOOR- ASBESTOS ABATEMENT PLAN | 1-118-G-853-0 |
| 105 | CXA-H-20 | GENERAL LEAD REMEDIATION NOTES | 1-118-G-854-0 |
| 106 | CXA-H-21 | EAST AND WEST ELEVATION- LEAD REMEDIATION PLAN | 1-118-G-855-0 |
| 107 | CXA-H-81 | NORTH AND SOUTH ELEVATION- LEAD REMEDIATION PLAN | 1-118-G-856-0 |
| *ARCHITECTURAL* | | | |
| 108 | CXA-A-01 | CXA- GROUND FLOOR DEMOLITION PLAN | 1-118-A-857-0 |
| 109 | CXA-A-02 | CXA- ROOF FLOOR DEMOLITION PLAN | 1-118-A-858-0 |
| 110 | CXA-A-03 | CXA- DEMOLITION ELEVATIONS | 1-118-A-859-0 |
| 111 | CXA-A-04 | CXA- DEMOLITION ELEVATIONS | 1-118-A-860-0 |
| 112 | CXA-A-05 | CXA- DEMOLITION REFLECTED CEILING PLAN | 1-118-A-861-0 |
| 113 | CXA-A-11 | CXA- GROUND FLOOR PLAN | 1-118-A-862-0 |
| 114 | CXA-A-12 | CXA- ATTIC LEVEL PLAN | 1-118-A-863-0 |
| 115 | CXA-A-13 | CXA- ROOF PLAN | 1-118-A-864-0 |
| 116 | CXA-A-21 | CXA- EXTERIOR BUILDING ELEVATIONS | 1-118-A-865-0 |
| 117 | CXA-A-22 | CXA- EXTERIOR BUILDING ELEVATIONS | 1-118-A-866-0 |
| 118 | CXA-A-23 | CXA- PORCH BUILDING ELEVATIONS | 1-118-A-867-0 |
| 119 | CXA-A-24 | CXA- DRIVE-THROUGH ELEVATIONS | 1-118-A-868-0 |
| 120 | CXA-A-31 | CXA- BUILDING SECTIONS | 1-118-A-869-0 |
| 121 | CXA-A-32 | CXA- BUILDING SECTIONS | 1-118-A-870-0 |
| 122 | CXA-A-33 | CXA- ENLARGED SECTIONS | 1-118-A-871-0 |
| 123 | CXA-A-34 | CXA- WALL ENLARGED SECTIONS 2 | 1-118-A-872-0 |
| 124 | CXA-A-41 | CXA- GROUND LEVEL RCP | 1-118-A-873-0 |
| 125 | CXA-A-42 | CXA- ATTIC LEVEL RCP | 1-118-A-874-0 |
| 126 | CXA-A-80 | COLUMN DETAILS | 1-118-A-875-0 |
| 127 | CXA-A-81 | COLUMN DETAILS 2 | 1-118-A-876-0 |
| 128 | CXA-A-82 | WOOD RESTORATION DETAILS | 1-118-A-877-0 |
| 129 | CXA-A-83 | ROOFING DETAILS | 1-118-A-878-0 |
| 130 | CXA-A-84 | PARTITION DETAILS | 1-118-A-879-0 |
| 131 | CXA-A-85 | OVERHEAD DOOR DETAIL | 1-118-A-880-0 |
| 132 | CXA-A-86 | DETAILS | 1-118-A-881-0 |
| 133 | CXA-A-87 | FENCE AND GATE DETAILS | 1-118-A-882-0 |
| 134 | CXA-A-88 | DRIVE THROUGH GATE DETAILS | 1-118-A-883-0 |
| 135 | CXA-A-91 | FINISH PLAN AND FINISH SCHEDULE | 1-118-A-884-0 |
| 136 | CXA-A-92 | DOOR & HARDWARE SCHEDULES & DETAILS | 1-118-A-885-0 |
| 137 | CXA-A-93 | WINDOW SCHEDULE | 1-118-A-886-0 |
| 138 | CXA-A-94 | SIGNAGE TYPES AND DETAILS | 1-118-A-887-0 |
| *STRUCTURAL* | | | |
| 139 | CXA-S-01 | STRUCTURAL NOTES | 1-118-S-888-0 |
| 140 | CXA-S-02 | STRUCTURAL ABBREVIATIONS AND SYMBOLS | 1-118-S-889-0 |
| 141 | CXA-S-03 | DEMOLITION - GROUND FLOOR PLAN | 1-118-S-890-0 |
| 142 | CXA-S-04 | DEMOLITION - ROOF PLAN | 1-118-S-891-0 |
| 143 | CXA-S-05 | FOUNDATION PLAN | 1-118-S-892-0 |
| 144 | CXA-S-06 | GROUND FLOOR PLAN | 1-118-S-893-0 |
| 145 | CXA-S-07 | ROOF PLAN | 1-118-S-894-0 |
| 146 | CXA-S-08 | SECTION | 1-118-S-895-0 |
| 147 | CXA-S-09 | SECTIONS | 1-118-S-896-0 |
| 148 | CXA-S-10 | SECTIONS AND DETAILS | 1-118-S-897-0 |
| 149 | CXA-S-11 | SECTIONS | 1-118-S-898-0 |
| 150 | CXA-S-12 | SECTIONS | 1-118-S-899-0 |
| *FIRE PROTECTION* | | | |
| 151 | CXA-FP-01 | FIRE PROTECTION NOTES, SYMBOLS, ABBREVIATIONS & DWG LIST | 1-118-FP-900-0 |
| 152 | CXA-FP-11 | FIRE PROTECTION FIRST FLOOR DEMOLITION RCP | 1-118-FP-901-0 |
| 153 | CXA-FP-21 | FIRE PROTECTION FIRST FLOOR AND ATTIC CONSTRUCTION RCP | 1-118-FP-902-0 |
| 154 | CXA-FP-81 | FIRE PROTECTION DETAILS | 1-118-FP-903-0 |
| *PLUMBING* | | | |
| 155 | CXA-P-01 | PLUMBING NOTES, SYMBOLS, ABBREVIATIONS AND DRAWING LIST | 1-118-P-904-0 |
| 156 | CXA-P-21 | PLUMBING FIRST FLOOR CONSTRUCTION PLAN | 1-118-P-905-0 |
| 157 | CXA-P-81 | PLUMBING DETAILS | 1-118-P-906-0 |
| *MECHANICAL* | | | |
| 158 | CXA-M-01 | MECHANICAL NOTES, SYMBOLS AND LEGENDS | 1-118-M-907-0 |
| 159 | CXA-M-11 | MECHANICAL FIRST FLOOR DEMOLITION PLAN | 1-118-M-908-0 |
| 160 | CXA-M-21 | MECHANICAL FIRST FLOOR CONSTRUCTION PLAN | 1-118-M-909-0 |
| 161 | CXA-M-61 | MECHANICAL SCHEDULES | 1-118-M-910-0 |
| 162 | CXA-M-81 | MECHANICAL DETAILS | 1-118-M-911-0 |
| 163 | CXA-M-91 | MECHANICAL CONTROLS | 1-118-M-912-0 |
| *ELECTRICAL* | | | |
| 164 | CXA-E-01 | ONE LINE DIAGRAM- DEMOLITION | 1-118-E-913-0 |
| 165 | CXA-E-02 | GROUND FLOOR DEMOLITION PLAN | 1-118-E-914-0 |
| 166 | CXA-E-03 | SITE DUCTBANK PLAN | 1-118-E-915-0 |
| 167 | CXA-E-04 | ONE LINE DIAGRAMS | 1-118-E-916-0 |
| 168 | CXA-E-05 | GROUND FLOOR - POWER PLAN | 1-118-E-917-0 |
| 169 | CXA-E-06 | GROUND FLOOR - LIGHTING PLAN | 1-118-E-918-0 |
| 170 | CXA-E-07 | ATTIC LEVEL - POWER & LIGHTING PLAN | 1-118-E-919-0 |
| 171 | CXA-E-08 | ROOF - LIGHTING & LIGHTING PROTECTION PLAN | 1-118-E-920-0 |
| 172 | CXA-E-09 | PANEL SCHEDULES | 1-118-E-921-0 |
| *FIRE ALARM* | | | |
| 173 | CXA-FA-01 | FIRE ALARM NOTES, SYMBOLS, LEGEND, AND RISER DIAGRAM | 1-118-FA-922-0 |
| 174 | CXA-FA-11 | FIRE ALARM FIRST FLOOR DEMOLITION PLAN | 1-118-FA-923-0 |
| 175 | CXA-FA-12 | FIRE ALARM ATTIC DEMOLITION PLAN | 1-118-FA-924-0 |
| 176 | CXA-FA-21 | FIRE ALARM FIRST FLOOR PLAN | 1-118-FA-925-0 |
| 177 | CXA-FA-22 | FIRE ALARM ATTIC PLAN | 1-118-FA-926-0 |
| 178 | CXF-FA-81 | FIRE ALARM DETAILS | 1-118-FA-927-0 |
| *CIVIL* | | | |
| 179 | CXA-C-01 | GENERAL NOTES | 1-118-C-928-0 |
| 180 | CXA-C-02 | EXISTING CONDITIONS/ DEMOLITION PLAN | 1-118-C-929-0 |
| 181 | CXA-C-03 | SITE CONSTRUCTION PLAN | 1-118-C-930-0 |
| 182 | CXA-C-04 | UTILITY CONSTRUCTION PLAN | 1-118-C-931-0 |
| 183 | CXA-C-05 | GRADING AND EROSION CONTROL PLAN | 1-118-C-932-0 |
| 184 | CXA-C-06 | CIVIL DETAILS 1 | 1-118-C-933-0 |
| 185 | CXA-C-07 | CIVIL DETAILS 2 | 1-118-C-934-0 |

### CXD BUILDING

| | | | |
|---|---|---|---|
| *GENERAL* | | | |
| 186 | CXD-G-01 | BUILDING INTRO | 1-118-G-935-0 |
| 187 | CXD-G-02 | CXD- LIFE SAFTEY PLANS | 1-118-G-936-0 |
| 188 | CXD-G-03 | CXD- SITE RESTORATION | 1-118-G-937-0 |
| *ENVIRONMENTAL* | | | |
| 189 | CXD-H-10 | GROUND FLOOR- ASBESTOS ABATEMENT PLAN | 1-118-G-938-0 |
| 190 | CXD-H-11 | GROUND FLOOR- ASBESTOS ABATEMENT PLAN | 1-118-G-939-0 |
| 191 | CXD-H-20 | GENERAL LEAD REMEDIATION NOTES | 1-118-G-940-0 |
| 192 | CXD-H-21 | NORTH AND EAST ELEVATIONS- LEAD REMEDIATION PLAN | 1-118-G-941-0 |
| 193 | CXD-H-22 | SOUTH AND WEST ELEVATIONS- LEAD REMEDIATION PLAN | 1-118-G-942-0 |
| *ARCHITECTURAL* | | | |
| 194 | CXD-A-01 | CXD- GROUND FLOOR DEMOLITION PLAN | 1-118-A-943-0 |
| 195 | CXD-A-02 | CXD- ROOF DEMOLITION PLAN | 1-118-A-944-0 |
| 196 | CXD-A-03 | CXD- EXTERIOR BUILDING ELEVATIONS | 1-118-A-945-0 |
| 197 | CXD-A-04 | CXD- RCP DEMO PLAN | 1-118-A-946-0 |
| 198 | CXD-A-11 | CXD- GROUND FLOOR PLAN | 1-118-A-947-0 |
| 199 | CXD-A-12 | CXD- ROOF PLAN | 1-118-A-948-0 |
| 200 | CXD-A-21 | CXD- EXTERIOR BUILDING ELEVATIONS | 1-118-A-949-0 |
| 201 | CXD-A-22 | CXD- EXTERIOR BUILDING PORCH ELEVATIONS | 1-118-A-950-0 |
| 202 | CXD-A-31 | CXD- BUILDING SECTIONS | 1-118-A-951-0 |
| 203 | CXD-A-32 | CXD- ENLARGED SECTION | 1-118-A-952-0 |
| 204 | CXD-A-41 | CXD- GROUND FLOOR REFLECTED CEILING PLAN | 1-118-A-953-0 |
| 205 | CXD-A-51 | COURTYARD PLAN AND SECTIONS | 1-118-A-954-0 |
| 206 | CXD-A-80 | PARTITION TYPE DETAILS | 1-118-A-955-0 |
| 207 | CXD-A-81 | ROOF DETAILS | 1-118-A-956-0 |
| 208 | CXD-A-82 | CXD COLUMN DETAILS | 1-118-A-957-0 |
| 209 | CXD-A-83 | ROLL UP DOOR DETAILS | 1-118-A-958-0 |
| 210 | CXD-A-84 | FENCE AND GATE DETAILS | 1-118-A-959-0 |
| 211 | CXD-A-85 | DETAILS | 1-118-A-960-0 |
| 212 | CXD-A-91 | CDX FINISH PLAN AND FINISH SCHEDULE | 1-118-A-961-0 |
| 213 | CXD-A-92 | DOOR SCHEDULE AND DOOR DETAILS | 1-118-A-962-0 |
| 214 | CXD-A-93 | WINDOW SCHEDULE AND WINDOW DETAILS | 1-118-A-963-0 |
| 215 | CXD-A-94 | SIGNAGE TYPES AND DETAILS | 1-118-A-964-0 |
| *STRUCTURAL* | | | |
| 216 | CXD-S-01 | STRUCTURAL NOTES | 1-118-S-965-0 |
| 217 | CXD-S-02 | STRUCTURAL ABBREVIATIONS AND SYMBOLS | 1-118-S-966-0 |
| 218 | CXD-S-03 | DEMOLITION- GROUND FLOOR PLAN | 1-118-S-967-0 |
| 219 | CXD-S-04 | DEMOLITION- ROOF PLAN | 1-118-S-968-0 |
| 220 | CXD-S-05 | GROUND FLOOR PLAN | 1-118-S-969-0 |
| 221 | CXD-S-06 | SECTIONS | 1-118-S-970-0 |
| 222 | CXD-S-07 | SECTIONS AND DETAILS | 1-118-S-971-0 |
| *FIRE PROTECTION* | | | |
| 223 | CXD-FP-01 | FIRE PROTECTION NOTES, SYMBOLS, ABBREVIATIONS & DWG LIST | 1-118-FP-972-0 |
| 224 | CXD-FP-11 | FIRE PROTECTION GROUND FLOOR AND ATTIC DEMOLITION PLAN | 1-118-FP-973-0 |
| 225 | CXD-FP-21 | FIRE PROTECTION GROUND FL. AND ATTIC CONSTRUCTION RCP | 1-118-FP-974-0 |
| 226 | CXD-FP-81 | FIRE PROTECTION DETAILS | 1-118-FP-975-0 |
| *MECHANICAL* | | | |
| 227 | CXD-M-01 | MECHANICAL NOTES, SYMBOLS AND LEGENDS | 1-118-M-976-0 |
| 228 | CXD-M-11 | MECHANICAL FIRST FLOOR DEMOLITION | 1-118-M-977-0 |
| 229 | CXD-M-21 | MECHANICAL FIRST FLOOR CONSTRUCTION PLAN | 1-118-M-978-0 |
| 230 | CXD-M-61 | MECHANICAL SCHEDULE, DETAILS AND CONTROLS | 1-118-M-979-0 |
| *ELECTRICAL* | | | |
| 231 | CXD-E-01 | ONE LINE DIAGRAM- DEMOLITION | 1-118-E-980-0 |
| 232 | CXD-E-02 | GROUND FLOOR DEMOLITION- POWER & LIGHTING PLAN | 1-118-E-981-0 |
| 233 | CXD-E-03 | SITE DUCTBANK PLAN | 1-118-E-982-0 |
| 234 | CXD-E-04 | ONE LINE DIAGRAM | 1-118-E-983-0 |
| 235 | CXD-E-05 | GROUND FLOOR - POWER PLAN | 1-118-E-984-0 |
| 236 | CXD-E-06 | GROUND FLOOR - LIGHTING PLAN | 1-118-E-985-0 |
| 237 | CXD-E-07 | PANEL SCHEDULES | 1-118-E-986-0 |
| *FIRE ALARM* | | | |
| 238 | CXD-FA-01 | FIRE ALARM NOTES, SYMBOLS, LEGEND, AND RISER DIAGRAM | 1-118-FA-987-0 |
| 239 | CXD-FA-11 | FIRE ALARM FIRST FLOOR DEMOLITION PLAN | 1-118-FA-988-0 |
| 240 | CXD-FA-12 | FIRE ALARM ATTIC DEMOLITION PLAN | 1-118-FA-989-0 |
| 241 | CXD-FA-21 | FIRE ALARM FIRST FLOOR PLAN | 1-118-FA-990-0 |
| 242 | CXD-FA-22 | FIRE ALARM ATTIC PLAN | 1-118-FA-991-0 |
| 243 | CXD-FA-81 | FIRE ALARM DETAILS | 1-118-FA-992-0 |
| *CIVIL* | | | |
| 244 | CXD-C-01 | GENERAL NOTES | 1-118-C-993-0 |
| 245 | CXD-C-02 | EXISTING CONDITIONS/ DEMOLITION PLAN | 1-118-C-994-0 |
| 246 | CXD-C-03 | SITE CONSTRUCTION PLAN | 1-118-C-995-0 |
| 247 | CXD-C-04 | UTILITY CONSTRUCTION PLAN | 1-118-C-996-0 |
| 248 | CXD-C-05 | GRADING AND EROSION CONTROL PLAN | 1-118-C-997-0 |
| 249 | CXD-C-06 | CIVIL DETAILS 1 | 1-118-C-998-0 |
| 250 | CXD-C-07 | CIVIL DETAILS 2 | 1-118-C-999-0 |

### CXE BUILDING

| | | | |
|---|---|---|---|
| *GENERAL* | | | |
| 251 | CXE-G-01 | BUILDING INTRO | 1-118-G-1000-0 |
| 252 | CXE-G-02 | CXE & CXF- LIFE SAFETY PLANS | 1-118-G-1001-0 |
| 253 | CXE-G-03 | CXE- SITE RESTORATION | 1-118-G-1002-0 |
| *ENVIRONMENTAL* | | | |
| 254 | CXE-H-10 | GENERAL ASBESTOS ABATEMENT NOTES | 1-118-G-1003-0 |
| 255 | CXE-H-11 | ROOF- ASBESTOS ABATEMENT PLAN | 1-118-G-1004-0 |
| 256 | CXE-H-12 | GROUND FLOOR- ASBESTOS ABATEMENT PLAN | 1-118-G-1005-0 |
| 257 | CXE-H-20 | GENERAL LEAD REMEDIATION NOTES | 1-118-G-1006-0 |
| 258 | CXE-H-21 | NORTH & EAST ELEVATION- LEAD REMEDIATION PLAN | 1-118-G-1007-0 |
| 259 | CXE-H-22 | SOUTH & WEST ELEVATION- LEAD REMEDIATION PLAN | 1-118-G-1008-0 |
| *ARCHITECTURAL* | | | |
| 260 | CXE-A-01 | CXE- GROUND FLOOR DEMOLITION PLAN | 1-118-A-1009-0 |
| 261 | CXE-A-02 | CXE- ROOF DEMOLITION PLAN | 1-118-A-1010-0 |
| 262 | CXE-A-03 | CXE- EXTERIOR DEMOLITION ELEVATIONS | 1-118-A-1011-0 |
| 263 | CXE-A-04 | CXE- RCP DEMO PLAN | 1-118-A-1012-0 |
| 264 | CXE-A-11 | CXE- GROUND FLOOR PLAN | 1-118-A-1013-0 |
| 265 | CXE-A-12 | CXE- ATTIC PLAN | 1-118-A-1014-0 |
| 266 | CXE-A-13 | CXE- ROOF PLAN | 1-118-A-1015-0 |
| 267 | CXE-A-21 | CXE- EXTERIOR BUILDING ELEVATIONS | 1-118-A-1016-0 |
| 268 | CXE-A-22 | CXE- EXTERIOR BUILDING PORCH ELEVATIONS | 1-118-A-1017-0 |
| 269 | CXE-A-31 | CXE- BUILDING SECTIONS | 1-118-A-1018-0 |
| 270 | CXE-A-32 | CXE- BUILDING SECTIONS | 1-118-A-1019-0 |
| 271 | CXE-A-41 | CXE- GROUND FLOOR REFLECTED CEILING PLAN | 1-118-A-1020-0 |
| 272 | CXE-A-42 | CXE- ATTIC REFLECTED CEILING PLAN | 1-118-A-1021-0 |
| 273 | CXE-A-80 | PARTITION TYPES | 1-118-A-1022-0 |
| 274 | CXE-A-81 | ROOF DETAILS | 1-118-A-1023-0 |
| 275 | CXE-A-82 | CXE - COLUMN DETAILS | 1-118-A-1024-0 |
| 276 | CXE-A-83 | CXE - COLUMN DETAILS 2 | 1-118-A-1025-0 |
| 277 | CXE-A-84 | ROLL UP DOOR DETAILS | 1-118-A-1026-0 |
| 278 | CXE-A-85 | DETAILS | 1-118-A-1027-0 |
| 279 | CXE-A-91 | FINISH PLAN AND FINISH SCHEDULE | 1-118-A-1028-0 |
| 280 | CXE-A-92 | DOOR SCHEDULE AND DOOR DETAILS | 1-118-A-1029-0 |
| 281 | CXE-A-93 | SIGNAGE TYPES AND DETAILS | 1-118-A-1030-0 |
| *STRUCTURAL* | | | |
| 282 | CXE-S-01 | STRUCTURAL NOTES | 1-118-S-1031-0 |
| 283 | CXE-S-02 | STRUCTURAL ABBREVIATIONS AND SYMBOLS | 1-118-S-1032-0 |
| 284 | CXE-S-03 | DEMOLITION - GROUND FLOOR PLAN | 1-118-S-1033-0 |
| 285 | CXE-S-04 | DEMOLITION - ROOF PLAN | 1-118-S-1034-0 |
| 286 | CXE-S-05 | GROUND FLOOR PLAN | 1-118-S-1035-0 |
| 287 | CXE-S-06 | SECTIONS | 1-118-S-1036-0 |
| 288 | CXE-S-07 | SECTIONS AND DETAILS | 1-118-S-1037-0 |
| *FIRE PROTECTION* | | | |
| 289 | CXE-FP-01 | FIRE PROTECTION NOTES, SYMBOLS, ABBREVIATIONS & DWG LIST | 1-118-FP-1038-0 |
| 290 | CXE-FP-11 | FIRE PROTECTION GROUND FLOOR AND ATTIC DEMOLITION PLAN | 1-118-FP-1039-0 |
| 291 | CXE-FP-21 | FIRE PROTECTION GROUND FL. AND ATTIC CONSTRUCTION RCP | 1-118-FP-1040-0 |
| 292 | CXE-FP-81 | FIRE PROTECTION DETAILS | 1-118-FP-1041-0 |
| *MECHANICAL* | | | |
| 293 | CXE-M-01 | MECHANICAL NOTES, SYMBOLS AND LEGENDS | 1-118-M-1042-0 |
| 294 | CXE-M-11 | MECHANICAL FIRST FLOOR DEMOLITION PLAN | 1-118-M-1043-0 |
| *ELECTRICAL* | | | |
| 295 | CXE-E-01 | ONE LINE DIAGRAM- DEMOLITION | 1-118-E-1044-0 |
| 296 | CXE-E-02 | GROUND FLOOR DEMOLITION- POWER AND LIGHTING PLAN | 1-118-E-1045-0 |
| 297 | CXE-E-03 | SITE DUCTBANK PLAN | 1-118-E-1046-0 |
| 298 | CXE-E-04 | ONE LINE DIAGRAMS | 1-118-E-1047-0 |
| 299 | CXE-E-05 | GROUND FLOOR - POWER PLAN | 1-118-E-1048-0 |
| 300 | CXE-E-06 | GROUND FLOOR- LIGHTING PLAN | 1-118-E-1049-0 |
| 301 | CXE-E-07 | ATTIC LEVEL- LIGHTING PLAN | 1-118-E-1050-0 |
| 302 | CXE-E-08 | ROOF LEVEL- LIGHTING & LIGHTNING PROTECTION PLAN | 1-118-E-1051-0 |
| 303 | CXE-E-09 | PANEL SCHEDULES | 1-118-E-1052-0 |
| *FIRE ALARM* | | | |
| 304 | CXE-FA-01 | FIRE ALARM NOTES, SYMBOLS, LEGEND, AND RISER DIAGRAM | 1-118-FA-1053-0 |
| 305 | CXE-FA-11 | FIRE ALARM FIRST FLOOR DEMOLITION PLAN | 1-118-FA-1054-0 |
| 306 | CXE-FA-12 | FIRE ALARM ATTIC DEMOLITION PLAN | 1-118-FA-1055-0 |
| 307 | CXE-FA-21 | FIRE ALARM FIRST FLOOR PLAN | 1-118-FA-1056-0 |
| 308 | CXE-FA-22 | FIRE ALARM ATTIC PLAN | 1-118-FA-1057-0 |
| 309 | CXE-FA-81 | FIRE ALARM DETAILS | 1-118-FA-1058-0 |
| *CIVIL* | | | |
| 310 | CXE-C-01 | GENERAL NOTES | 1-118-C-1059-0 |
| 311 | CXE-C-02 | EXISTING CONDITIONS/ DEMOLITION PLAN | 1-118-C-1060-0 |
| 312 | CXE-C-03 | SITE CONSTRUCTION PLAN | 1-118-C-1061-0 |
| 313 | CXE-C-04 | UTILITY CONSTRUCTION PLAN | 1-118-C-1062-0 |
| 314 | CXE-C-05 | GRADING AND EROSION CONTROL PLAN | 1-118-C-1063-0 |
| 315 | CXE-C-06 | CIVIL DETAILS 1 | 1-118-C-1064-0 |
| 316 | CXE-C-07 | CIVIL DETAILS 2 | 1-118-C-1065-0 |

8/31/2022 2:01:30 PM

CONSULTANT INFORMATION
The LiRo Group
3 Aerial Way, Syosset, New York 11791
(516) 938-5476 www.liro.com

CONSULTANT SEAL
REGISTERED ARCHITECT ROBERT D. YOUNG JR. 023290 STATE OF NEW YORK

| REVISION NUMBER | DATE | MADE BY | APP'D BY | REVISION |
|---|---|---|---|---|

RECORD DRAWING CERTIFICATION
☐ AS BUILT – CHANGES AS NOTED ☐ AS BUILT – NO CHANGES

CONTRACTOR
NAME
SIGNATURE
TITLE DATE

PROJECT COORDINATOR
NAME
SIGNATURE
TITLE DATE

WESTCHESTER COUNTY, NEW YORK
DEPARTMENT OF PUBLIC WORKS AND TRANSPORTATION
DIVISION OF ENGINEERING

**INFRASTRUCTURE REHABILITATION - PHASE 3**
**PLAYLAND PARK, RYE, NEW YORK**
**DRAWING LIST**

CONTRACT NUMBER: 22-532
SHEET NUMBER: T-02
DWG NO.: 2 of 664
SCALE:
DATE: 08/23/2022
DPW FILE NUMBER: 1-118-G-752-0
REV. NO.: 0

# DRAWING LIST- VOLUME 2

## CXF BUILDING

| | | | |
|---|---|---|---|
| *GENERAL* | | | |
| 317 | CXF-G-01 | BUILDING INTRO | 1-118-G-1066-0 |
| 318 | CXF-G-02 | CXE & CXF - LIFE SAFETY PLANS | 1-118-G-1067-0 |
| 319 | CXF-G-03 | CXE - SITE RESTORATION | 1-118-G-1068-0 |
| *ENVIRONMENTAL* | | | |
| 320 | CXF-H-10 | GENERAL ASBESTOS ABATEMENT NOTES | 1-118-G-1069-0 |
| 321 | CXF-H-11 | ROOF ASBESTOS ABATEMENT PLAN | 1-118-G-1070-0 |
| 322 | CXF-H-20 | GENERAL LEAD REMEDIATION NOTES | 1-118-G-1071-0 |
| 323 | CXF-H-21 | NORTH, SOUTH & EAST LEAD REMEDIATION PLAN | 1-118-G-1072-0 |
| *ARCHITECTURAL* | | | |
| 324 | CXF-A-01 | CXF - GROUND FLOOR DEMOLITION PLAN | 1-118-A-1073-0 |
| 325 | CXF-A-02 | CXF - ROOF DEMOLITION PLAN | 1-118-A-1074-0 |
| 326 | CXF-A-03 | CXF - EXTERIOR DEMOLITION ELEVATIONS | 1-118-A-1075-0 |
| 327 | CXF-A-04 | CXF - RCP DEMOLITION PLAN | 1-118-A-1076-0 |
| 328 | CXF-A-11 | CXF - GROUND FLOOR PLAN | 1-118-A-1077-0 |
| 329 | CXF-A-12 | CXF - ROOF PLAN | 1-118-A-1078-0 |
| 330 | CXF-A-21 | CXF - EXTERIOR ELEVATIONS | 1-118-A-1079-0 |
| 331 | CXF-A-22 | CXF - INTERIOR COLONNADE ELEVATIONS | 1-118-A-1080-0 |
| 332 | CXF-A-31 | CXF - SECTIONS | 1-118-A-1081-0 |
| 333 | CXF-A-32 | CXF - ENLARGED SECTION | 1-118-A-1082-0 |
| 334 | CXF-A-33 | CXF - CANOPY SECTIONS | 1-118-A-1083-0 |
| 335 | CXF-A-34 | CXF - COLONNADE SECTIONS | 1-118-A-1084-0 |
| 336 | CXF-A-41 | CXF - GROUND FLOOR REFLECTED CEILING PLAN | 1-118-A-1085-0 |
| 337 | CXF-A-80 | PARTITION TYPES AND DETAILS | 1-118-A-1086-0 |
| 338 | CXF-A-81 | ROOF AND CEILING DETAILS | 1-118-A-1087-0 |
| 339 | CXF-A-82 | CXF COLONNADE COLUMN DETAILS | 1-118-A-1088-0 |
| 340 | CXF-A-83 | BALUSTRADE DETAILS | 1-118-A-1089-0 |
| 341 | CXF-A-84 | BALUSTRADE DETAILS | 1-118-A-1090-0 |
| 342 | CXF-A-85 | FENCE AND RAMP DETAIL | 1-118-A-1091-0 |
| 343 | CXF-A-86 | COUNTER DOOR DETAILS | 1-118-A-1092-0 |
| 344 | CXF-A-87 | BENCH AND MURAL DETAILS | 1-118-A-1093-0 |
| 345 | CXF-A-88 | STEEL FENCE AND GATE DETAIL | 1-118-A-1094-0 |
| 346 | CXF-A-91 | FINISH PLAN AND FINISH SCHEDULE | 1-118-A-1095-0 |
| 347 | CXF-A-92 | DOOR SCHEDULE AND DOOR DETAILS | 1-118-A-1096-0 |
| 348 | CXF-A-93 | WINDOW SCHEDULE AND WINDOW DETAILS | 1-118-A-1097-0 |
| 349 | CXF-A-94 | SIGNAGE TYPES, SCHEDULES AND DETAILS | 1-118-A-1098-0 |
| *STRUCTURAL* | | | |
| 350 | CXF-S-01 | STRUCTURAL NOTES | 1-118-S-1099-0 |
| 351 | CXF-S-02 | STRUCTURAL SYMBOLS & ABBREVIATIONS | 1-118-S-1100-0 |
| 352 | CXF-S-03 | DEMOLITION- GROUND FLOOR PLAN | 1-118-S-1101-0 |
| 353 | CXF-S-04 | DEMOLITION- SECTIONS & DETAILS | 1-118-S-1102-0 |
| 354 | CXF-S-05 | FOUNDATION PLAN | 1-118-S-1103-0 |
| 355 | CXF-S-06 | GROUND FLOOR PLAN | 1-118-S-1104-0 |
| 356 | CXF-S-07 | ROOF PLAN | 1-118-S-1105-0 |
| 357 | CXF-S-08 | SECTIONS & DETAILS | 1-118-S-1106-0 |
| 358 | CXF-S-09 | TYPICAL SECTIONS & DETAILS | 1-118-S-1107-0 |
| 359 | CXF-S-10 | SECTIONS & DETAILS | 1-118-S-1108-0 |
| *FIRE PROTECTION* | | | |
| 360 | CXF-FP-01 | FIRE PROTECTION NOTES, SYMBOLS, ABBREVIATIONS & DWG LIST | 1-118-FP-1109-0 |
| 361 | CXF-FP-11 | FIRE PROTECTION GROUND FLOOR DEMOLITION RCP | 1-118-FP-1110-0 |
| 362 | CXF-FP-21 | FIRE PROTECTION GROUND FLOOR CONSTRUCTION RCP | 1-118-FP-1111-0 |
| 363 | CXF-FP-81 | FIRE PROTECTION DETAILS | 1-118-FP-1112-0 |
| *PLUMBING* | | | |
| 364 | CXF-P-01 | PLUMBING NOTES, SYMBOLS, ABBREVIATIONS, AND DRAWING LIST | 1-118-P-1113-0 |
| 365 | CXF-P-11 | PLUMBING GROUND FLOOR DEMOLITION PLAN | 1-118-P-1114-0 |
| 366 | CXF-P-21 | PLUMBING FIRST FLOOR CONSTRUCTION PLAN | 1-118-P-1115-0 |
| 367 | CXF-P-81 | PLUMBING DETAILS | 1-118-P-1116-0 |
| *MECHANICAL* | | | |
| 368 | CXF-M-01 | MECHANICAL NOTES, SYMBOLS AND LEGENDS | 1-118-M-1117-0 |
| 369 | CXF-M-21 | MECHANICAL FIRST FLOOR CONSTRUCTION PLAN | 1-118-M-1118-0 |
| 370 | CXF-M-22 | MECHANICAL ROOF CONSTRUCTION PLAN | 1-118-M-1119-0 |
| 371 | CXF-M-61 | MECHANICAL SCHEDULES | 1-118-M-1120-0 |
| 372 | CXF-M-81 | MECHANICAL DETAILS | 1-118-M-1121-0 |
| 373 | CXF-M-91 | MECHANICAL CONTROLS | 1-118-M-1122-0 |
| *ELECTRICAL* | | | |
| 374 | CXF-E-01 | ONE LINE DIAGRAM- DEMOLITION | 1-118-E-1123-0 |
| 375 | CXF-E-02 | GROUND FLOOR DEMOLITION- POWER & LIGHTING PLAN | 1-118-E-1124-0 |
| 376 | CXF-E-03 | SITE DUCTBANK PLAN | 1-118-E-1125-0 |
| 377 | CXF-E-04 | ONE LINE DIAGRAM | 1-118-E-1126-0 |
| 378 | CXF-E-05 | GROUND FLOOR- POWER PLAN | 1-118-E-1127-0 |
| 379 | CXF-E-06 | GROUND FLOOR - LIGHTING PLAN | 1-118-E-1128-0 |
| 380 | CXF-E-07 | ROOF LEVEL - POWER & LIGHTING PLAN | 1-118-E-1129-0 |
| 381 | CXF-E-08 | PANEL SCHEDULES | 1-118-E-1130-0 |
| *FIRE ALARM* | | | |
| 382 | CXF-FA-01 | FIRE ALARM NOTES, SYMBOLS, LEGEND, AND RISER DIAGRAM | 1-118-FA-1131-0 |
| 383 | CXF-FA-11 | FIRE ALARM FIRST FLOOR DEMOLITION PLAN | 1-118-FA-1132-0 |
| 384 | CXF-FA-21 | FIRE ALARM FIRST FLOOR PLAN | 1-118-FA-1133-0 |
| 385 | CXF-FA-81 | FIRE ALARM DETAILS | 1-118-FA-1134-0 |
| *CIVIL* | | | |
| 386 | CXF-C-01 | OVERALL SITE PLAN | 1-118-C-1135-0 |
| 387 | CXF-C-02 | EXISTING CONDITIONS/ DEMOLITION PLAN | 1-118-C-1136-0 |
| 388 | CXF-C-03 | SITE CONSTRUCTION PLAN | 1-118-C-1137-0 |
| 389 | CXF-C-04 | UTILITY CONSTRUCTION PLAN | 1-118-C-1138-0 |
| 390 | CXF-C-05 | GRADING AND EROSION CONTROL PLAN | 1-118-C-1139-0 |
| 391 | CXF-C-06 | OVERALL SITE PLAN | 1-118-C-1140-0 |
| 392 | CXF-C-07 | OVERALL SITE PLAN | 1-118-C-1141-0 |

## DRAGON COASTER VENDORS (DCV)

| | | | |
|---|---|---|---|
| *GENERAL* | | | |
| 393 | DCV-G-01 | BUILDING INTRO | 1-118-G-1142-0 |
| 394 | DCV-G-02 | LIFE SAFETY PLAN | 1-118-G-1143-0 |
| 395 | DCV-G-03 | SITE RESTORATION PLAN | 1-118-G-1144-0 |
| *ENVIRONMENTAL* | | | |
| 396 | DCV-H-10 | GENERAL ASBESTOS ABATEMENT NOTES | 1-118-G-1145-0 |
| 397 | DCV-H-11 | GROUND FLOOR- ASBESTOS ABATEMENT PLAN | 1-118-G-1146-0 |
| 398 | DCV-H-20 | GENERAL LEAD REMEDIATION NOTES | 1-118-G-1147-0 |
| 399 | DCV-H-21 | NORTH AND SOUTH ELEVATION LEAD REMEDIATION PLAN | 1-118-G-1148-0 |
| *ARCHITECTURAL* | | | |
| 400 | DCV-A-01 | DEMOLITION PLAN | 1-118-A-1149-0 |
| 401 | DCV-A-02 | DEMOLITION REFLECTED CEILING PLAN | 1-118-A-1150-0 |
| 402 | DCV-A-03 | DEMOLITION ROOF PLAN | 1-118-A-1151-0 |
| 403 | DCV-A-04 | DEMOLITION ELEVATIONS 1 OF 3 | 1-118-A-1152-0 |
| 404 | DCV-A-05 | DEMOLITION ELEVATIONS 2 OF 3 | 1-118-A-1153-0 |
| 405 | DCV-A-06 | DEMOLITION ELEVATIONS 3 OF 3 | 1-118-A-1154-0 |
| 406 | DCV-A-07 | DEMOLITION SECTION | 1-118-A-1155-0 |
| 407 | DCV-A-10 | GROUND FLOOR- CONSTRUCTION PLAN | 1-118-A-1156-0 |
| 408 | DCV-A-11 | GROUND FLOOR- REFLECTED CEILING PLAN | 1-118-A-1157-0 |
| 409 | DCV-A-12 | ATTIC PLAN | 1-118-A-1158-0 |
| 410 | DCV-A-13 | ROOF PLAN | 1-118-A-1159-0 |
| 411 | DCV-A-14 | FINISH PLAN | 1-118-A-1160-0 |
| 412 | DCV-A-20 | EXTERIOR ELEVATIONS 1 OF 3 | 1-118-A-1161-0 |
| 413 | DCV-A-21 | EXTERIOR ELEVATIONS 2 OF 3 | 1-118-A-1162-0 |
| 414 | DCV-A-22 | EXTERIOR ELEVATIONS 3 OF 3 | 1-118-A-1163-0 |
| 415 | DCV-A-30 | SECTION AT DIAGONAL COLONNADE AND DRAGON COASTER STATION | 1-118-A-1164-0 |
| 416 | DCV-A-31 | SECTION AT TOWER 6 AND GUEST SERVICES | 1-118-A-1165-0 |
| 417 | DCV-A-32 | SECTION AT TICKET ROOM | 1-118-A-1166-0 |
| 418 | DCV-A-33 | SECTION AT VENDOR SPACE | 1-118-A-1167-0 |
| 419 | DCV-A-50 | ENLARGED COLONNADE SECTION AND ELEVATION- EXTERIOR | 1-118-A-1168-0 |
| 420 | DCV-A-51 | ENLARGED COLONNADE SECTION- INTERIOR | 1-118-A-1169-0 |
| 421 | DCV-A-52 | ENLARGED TOWER SECTIONS | 1-118-A-1170-0 |
| 422 | DCV-A-53 | ENLARGED EXTERIOR ELEVATIONS | 1-118-A-1171-0 |
| 423 | DCV-A-54 | ENLARGED PLANS AT COURTYARD | 1-118-A-1172-0 |
| 424 | DCV-A-80 | CUSTOM FABRICATIONS | 1-118-A-1173-0 |
| 425 | DCV-A-81 | TOWER DETAILS | 1-118-A-1174-0 |
| 426 | DCV-A-82 | TOWER PIER DETAILS | 1-118-A-1175-0 |
| 427 | DCV-A-83 | COLUMN DETAILS 1 OF 2 | 1-118-A-1176-0 |
| 428 | DCV-A-84 | COLUMN DETAILS 2 OF 2 | 1-118-A-1177-0 |
| 429 | DCV-A-85 | BALUSTRADE AND MOUNTING DETAILS | 1-118-A-1178-0 |
| 430 | DCV-A-86 | MILLWORK DETAILS | 1-118-A-1179-0 |
| 431 | DCV-A-87 | LIGHTING AND FLAG MOUNTING DETAILS AT BALUSTRADE | 1-118-A-1180-0 |
| 432 | DCV-A-88 | ROOF DETAILS | 1-118-A-1181-0 |
| 433 | DCV-A-90 | DRAGON COASTER TICKET BOOTH DETAILS | 1-118-A-1182-0 |
| 434 | DCV-A-91 | COUNTER DOOR DETAILS | 1-118-A-1183-0 |
| 435 | DCV-A-92 | ROLL UP DOOR DETAILS | 1-118-A-1184-0 |
| 436 | DCV-A-93 | FENCE DETAILS | 1-118-A-1185-0 |
| 437 | DCV-A-94 | SIGNAGE DETAILS | 1-118-A-1186-0 |
| 438 | DCV-A-95 | DOOR AND HARDWARE SCHEDULE | 1-118-A-1187-0 |
| 439 | DCV-A-96 | WINDOW SCHEDULE AND WINDOW DETAILS | 1-118-A-1188-0 |
| 440 | DCV-A-97 | WALL PARTITION SCHEDULE | 1-118-A-1189-0 |
| 441 | DCV-A-98 | EXTERIOR PAINT FINISH SCHEDULE 1 OF 2 | 1-118-A-1190-0 |
| 442 | DCV-A-99 | EXTERIOR PAINT FINISH SCHEDULE 2 OF 2 | 1-118-A-1191-0 |
| *STRUCTURAL* | | | |
| 443 | DCV-S-01 | STRUCTURAL NOTES | 1-118-S-1192-0 |
| 444 | DCV-S-02 | STRUCTURAL ABBREVIATIONS & SYMBOLS | 1-118-S-1193-0 |
| 445 | DCV-S-03 | DEMOLITION- GROUND FLOOR PLAN | 1-118-S-1194-0 |
| 446 | DCV-S-04 | DEMOLITION- SECTION | 1-118-S-1195-0 |
| 447 | DCV-S-05 | SHORING PLAN | 1-118-S-1196-0 |
| 448 | DCV-S-06 | FOUNDATION PLAN | 1-118-S-1197-0 |
| 449 | DCV-S-07 | TOWER FOUNDATION PLAN, SECTION AND DETAILS | 1-118-S-1198-0 |
| 450 | DCV-S-08 | GROUND FLOOR PLAN | 1-118-S-1199-0 |
| 451 | DCV-S-09 | TOWER SUPERSTRUCTURE- PLANS | 1-118-S-1200-0 |
| 452 | DCV-S-10 | CEILING FRAMING PLAN | 1-118-S-1201-0 |
| 453 | DCV-S-11 | TOWER SUPERSTRUCTURE- PLANS II | 1-118-S-1202-0 |
| 454 | DCV-S-12 | SECTION | 1-118-S-1203-0 |
| 455 | DCV-S-13 | SECTION | 1-118-S-1204-0 |
| 456 | DCV-S-14 | TOWER SUPERSTRUCTURE - SECTIONS AND DETAILS | 1-118-S-1205-0 |
| 457 | DCV-S-15 | TYPICAL SECTIONS AND DETAILS | 1-118-S-1206-0 |
| 458 | DCV-S-16 | SECTIONS AND DETAILS | 1-118-S-1207-0 |
| 459 | DCV-S-17 | PART PLAN AND SECTIONS | 1-118-S-1208-0 |
| *FIRE PROTECTION* | | | |
| 460 | DCV-FP-01 | FIRE PROTECTION NOTES, SYMBOLS, ABBREVIATIONS & DWG LIST | 1-118-FP-1209-0 |
| 461 | DCV-FP-11 | FIRE PROTECTION FIRST FLOOR DEMOLITION RCP | 1-118-FP-1210-0 |
| 462 | DCV-FP-21 | FIRE PROTECTION FIRST FLOOR CONSTRUCTION RCP | 1-118-FP-1211-0 |
| 463 | DCV-FA-81 | FIRE PROTECTION DETAILS | 1-118-FP-1212-0 |
| *PLUMBING* | | | |
| 464 | DCV-P-01 | PLUMBING NOTES, SYMBOLS, ABBREVIATIONS, AND DRAWING LIST | 1-118-P-1213-0 |
| 465 | DCV-P-11 | PLUMBING FIRST FLOOR AND ROOF DEMOLITION PLANS | 1-118-P-1214-0 |
| 466 | DCV-P-21 | PLUMBING FIRST FLOOR AND ROOF CONSTRUCTION PLAN | 1-118-P-1215-0 |
| 467 | DCV-P-81 | PLUMBING DETAILS | 1-118-P-1216-0 |
| *MECHANICAL* | | | |
| 468 | DCV-M-01 | MECHANICAL NOTES, SYMBOLS & LEGENDS | 1-118-M-1217-0 |
| 469 | DCV-M-11 | MECHANICAL FIRST FLOOR DEMOLITION PLAN | 1-118-M-1218-0 |
| 470 | DCV-M-12 | MECHANICAL ROOF DEMOLITION PLAN | 1-118-M-1219-0 |
| 471 | DCV-M-21 | MECHANCIAL FIRST FLOOR CONSTRUCTION PLAN | 1-118-M-1220-0 |
| 472 | DCV-M-22 | MECHANICAL ATTIC CONSTUCTION PLAN | 1-118-M-1221-0 |
| 473 | DCV-M-61 | MECHANICAL SCHEDULES | 1-118-M-1222-0 |
| 474 | DCV-M-81 | MECHANCAL DETAILS AND CONTROLS | 1-118-M-1223-0 |
| *ELECTRICAL* | | | |
| 475 | DCV-E-01 | ONE LINE DIAGRAM- DEMOLITION | 1-118-E-1224-0 |
| 476 | DCV-E-02 | VENDORS GROUND FLOOR- DEMOLITION | 1-118-E-1225-0 |
| 477 | DCV-E-03 | COLONNADE & TOWERS - DEMOLITION | 1-118-E-1226-0 |
| 478 | DCV-E-04 | ROOF PLAN - DEMOLITION | 1-118-E-1227-0 |
| 479 | DCV-E-05 | ONE LINE DIAGRAM & PANEL SCHEDULES | 1-118-E-1228-0 |
| 480 | DCV-E-06 | GROUND FLOOR - POWER PLAN | 1-118-E-1229-0 |
| 481 | DCV-E-07 | GROUND FLOOR - LIGHTING PLAN | 1-118-E-1230-0 |
| 482 | DCV-E-08 | ROOF PLAN- POWER, LIGHTING & LIGHTNING PROTECTION | 1-118-E-1231-0 |
| 483 | DCV-E-09 | EXTERIOR LIGHTING CONTROLS | 1-118-E-1232-0 |
| *FIRE ALARM* | | | |
| 484 | DCV-FA-01 | FIRE ALARM NOTES, SYMBOLS, LEGEND, AND RISER DIAGRAM | 1-118-FA-1233-0 |
| 485 | DCV-FA-11 | FIRE ALARM FIRST FLOOR DEMOLITION PLAN | 1-118-FA-1234-0 |
| 486 | DCV-FA-21 | FIRE ALARM GROUND FLOOR PLAN | 1-118-FA-1235-0 |
| 487 | DCV-FA-22 | FIRE ALARM ROOF PLAN | 1-118-FA-1236-0 |
| 488 | DCV-FA-81 | FIRE ALARM DETAILS | 1-118-FA-1237-0 |
| *CIVIL* | | | |
| 489 | DCV-C-01 | GENERAL NOTES | 1-118-C-1238-0 |
| 490 | DCV-C-02 | EXISTING CONDITIONS/ DEMOLITION PLAN | 1-118-C-1239-0 |
| 491 | DCV-C-03 | SITE CONSTRUCTION PLAN | 1-118-C-1240-0 |
| 492 | DCV-C-04 | UTILITY CONSTRUCTION PLAN | 1-118-C-1241-0 |
| 493 | DCV-C-05 | GRADING AND EROSION CONTROL PLAN | 1-118-C-1242-0 |
| 494 | DCV-C-06 | CIVIL DETAILS 1 | 1-118-C-1243-0 |
| 495 | DCV-C-07 | CIVIL DETAILS 2 | 1-118-C-1244-0 |

## RESTAURANT KITCHEN WITH FOOD VENDING (K)

| | | | |
|---|---|---|---|
| *GENERAL* | | | |
| 496 | K-G-01 | BUILDING 3D VIEW | 1-118-G-1245-0 |
| 497 | K-G-02 | CODE PLAN | 1-118-G-1246-0 |
| *ENVIRONMENTAL* | | | |
| 498 | K-H-10 | GENERAL ASBESTOS ABATEMENT NOTES | 1-118-G-1247-0 |
| 499 | K-H-11 | GROUND FLOOR AND ELEVATIONS ASBESTOS REMOVAL PLAN | 1-118-G-1248-0 |
| 500 | K-H-20 | GENERAL LEAD REMEDIATION NOTES | 1-118-G-1249-0 |
| 501 | K-H-21 | GROUND FLOOR AND ELEVATION LEAD REMEDIATION PLAN | 1-118-G-1250-0 |
| *ARCHITECTURAL* | | | |
| 502 | K-A-01 | GROUND FLOOR DEMOLITION PLAN | 1-118-A-1251-0 |
| 503 | K-A-02 | GROUND FLOOR DEMOLITION- REFLECTED CEILING PLANS | 1-118-A-1252-0 |
| 504 | K-A-03 | ROOF DEMOLITION PLAN | 1-118-A-1253-0 |
| 505 | K-A-04 | EXTERIOR DEMOLITION ELEVATIONS | 1-118-A-1254-0 |
| 506 | K-A-05 | EXTERIOR DEMOLITION ELEVATIONS | 1-118-A-1255-0 |
| 507 | K-A-11 | GROUND FLOOR CONSTRUCTION PLAN | 1-118-A-1256-0 |
| 508 | K-A-12 | ATTIC AND LOW ROOF CONSTRUCTION PLAN | 1-118-A-1257-0 |
| 509 | K-A-13 | GROUND FLOOR- REFLECTED CEILING PLANS | 1-118-A-1258-0 |
| 510 | K-A-14 | ATTIC REFLECTED CEILING PLAN | 1-118-A-1259-0 |
| 511 | K-A-15 | ROOF CONSTRUCTION PLAN | 1-118-A-1260-0 |
| 512 | K-A-21 | EXTERIOR BUILDING ELEVATIONS- EAST AND SOUTH | 1-118-A-1261-0 |
| 513 | K-A-22 | EXTERIOR BUILDING ELEVATIONS- NORTH AND WEST | 1-118-A-1262-0 |
| 514 | K-A-31 | BUILDING SECTIONS | 1-118-A-1263-0 |
| 515 | K-A-32 | BUILDING SECTIONS 2 | 1-118-A-1264-0 |
| 516 | K-A-81 | CEILING, FLOOR, AND PLANTER DETAILS | 1-118-A-1265-0 |
| 517 | K-A-82 | ROOF DETAILS | 1-118-A-1266-0 |
| 518 | K-A-83 | ROOF SIGNAGE DETAILS | 1-118-A-1267-0 |
| 519 | K-A-84 | COLUMN DETAILS | 1-118-A-1268-0 |
| 520 | K-A-85 | CANOPY DETAILS | 1-118-A-1269-0 |
| 521 | K-A-86 | COUNTER ROLL UP DOOR DETAILS | 1-118-A-1270-0 |
| 522 | K-A-87 | SIGNAGE DETAILS | 1-118-A-1271-0 |
| 523 | K-A-88 | WINDOW SCHEDUES & DETAILS | 1-118-A-1272-0 |
| 524 | K-A-91 | FINISHES & MATERIAL SCHEDULE | 1-118-A-1273-0 |
| 525 | K-A-92 | EXTERIOR FINISH ELEVATIONS & DETAILS | 1-118-A-1274-0 |
| 526 | K-A-93 | DOOR & FRAME DETAILS | 1-118-A-1275-0 |
| 527 | K-A-94 | WALL PARTITION SCHEDULE | 1-118-A-1276-0 |
| *STRUCUTRAL* | | | |
| 528 | K-S-01 | STRUCTURAL NOTES | 1-118-S-1277-0 |
| 529 | K-S-02 | STRUCTURAL ABBREVIATIONS & SYMBOLS | 1-118-S-1278-0 |
| 530 | K-S-03 | DEMOLITION- GROUND FLOOR PLAN | 1-118-S-1279-0 |
| 531 | K-S-04 | DEMOLITION- ROOF PLAN | 1-118-S-1280-0 |
| 532 | K-S-05 | SHORING PLAN | 1-118-S-1281-0 |
| 533 | K-S-06 | FOUNDATION PLAN | 1-118-S-1282-0 |
| 534 | K-S-07 | GROUND FLOOR PLAN | 1-118-S-1283-0 |
| 535 | K-S-08 | CEILING FRAMING PLAN | 1-118-S-1284-0 |
| 536 | K-S-09 | ROOF PLAN | 1-118-S-1285-0 |
| 537 | K-S-10 | SECTION | 1-118-S-1286-0 |
| 538 | K-S-11 | SECTIONS AND DETAILS | 1-118-S-1287-0 |
| 539 | K-S-12 | SECTIONS AND DETAILS | 1-118-S-1288-0 |
| 540 | K-S-13 | SECTIONS AND DEAILS | 1-118-S-1289-0 |
| *FIRE PROTECTION* | | | |
| 541 | K-FP-01 | FIRE PROTECTION NOTES, SYMBOLS, ABBREVIATIONS & DWG LIST | 1-118-FP-1290-0 |
| 542 | K-FP-11 | FIRE PROTECTION GROUND FLOOR DEMOLITION PLAN | 1-118-FP-1291-0 |
| 543 | K-FP-21 | FIRE PROTECTION GROUND FLOOR AND ATTIC CONSTRUCTION RCP | 1-118-FP-1292-0 |
| 544 | K-FP-81 | FIRE PROTECTION DETAILS | 1-118-FP-1293-0 |
| *PLUMBING* | | | |
| 545 | K-P-01 | PLUMBING NOTES, SYMBOLS, ABBREVIATIONS AND DRAWING LIST | 1-118-P-1294-0 |
| 546 | K-P-11 | PLUMBING GROUND FLOOR DEMOLITION PLAN | 1-118-P-1295-0 |
| 547 | K-P-21 | PLUMBING GROUND FLOOR CONSTRUCTION PLAN | 1-118-P-1296-0 |
| 548 | K-P-81 | PLUMBING DETAILS | 1-118-P-1297-0 |
| *MECHANICAL* | | | |
| 549 | K-M-01 | MECHANICAL NOTES, SYMBOLS AND LEGENDS | 1-118-M-1298-0 |
| 550 | K-M-11 | MECHANICAL FIRST FLOOR DEMOLITION PLAN | 1-118-M-1299-0 |
| 551 | K-M-12 | MECHANICAL ROOF DEMOLITION PLAN | 1-118-M-1300-0 |
| 552 | K-M-21 | MECHANICAL FIRST FLOOR CONSTRUCTION PLAN | 1-118-M-1301-0 |
| 553 | K-M-22 | MECHANICAL ATTIC FLOOR CONSTRUCTION PLAN | 1-118-M-1302-0 |
| 554 | K-M-23 | MECHANICAL ROOF CONSTRUCTION PLAN | 1-118-M-1303-0 |
| 555 | K-M-61 | MECHANICAL SCHEDULES | 1-118-M-1304-0 |
| 556 | K-M-81 | MECHANICAL DETAILS 1 OF 2 | 1-118-M-1305-0 |
| 557 | K-M-82 | MECHANICAL DETAILS 2 OF 2 | 1-118-M-1306-0 |
| 558 | K-M-91 | MECHANICAL CONTROLS | 1-118-M-1307-0 |
| *ELECTRICAL* | | | |
| 559 | K-E-01 | ONE LINE DIAGRAM- DEMOLITION | 1-118-E-1308-0 |
| 560 | K-E-02 | GROUND FLOOR - DEMOLITION POWER & LIGHTING PLAN | 1-118-E-1309-0 |
| 561 | K-E-03 | ROOF DEMOLITION PLAN | 1-118-E-1310-0 |
| 562 | K-E-04 | SITE DUCTBANK PLAN | 1-118-E-1311-0 |
| 563 | K-E-05 | ONE LINE DIAGRAMS & EXTERIOR LIGHTING CONTROL | 1-118-E-1312-0 |
| 564 | K-E-06 | PANEL SCHEDULES | 1-118-E-1313-0 |
| 565 | K-E-07 | GROUND FLOOR - POWER PLAN | 1-118-E-1314-0 |
| 566 | K-E-08 | SECOND LEVEL- POWER PLAN | 1-118-E-1315-0 |
| 567 | K-E-09 | GROUND FLOOR - LIGHTING PLAN | 1-118-E-1316-0 |
| 568 | K-E-10 | SECOND FLOOR - LIGHTING PLAN | 1-118-E-1317-0 |
| 569 | K-E-11 | ROOF PLAN - POWER & LIGHTING PROTECTION | 1-118-E-1318-0 |
| *FIRE ALARM* | | | |
| 570 | K-FA-01 | FIRE ALARM NOTES, SYMBOLS, LEGEND, AND RISER DIAGRAM | 1-118-FA-1319-0 |
| 571 | K-FA-11 | FIRE ALARM FIRST FLOOR DEMOLITION PLAN | 1-118-FA-1320-0 |
| 572 | K-FA-21 | FIRE ALARM FIRST FLOOR PLAN | 1-118-FA-1321-0 |
| 573 | K-FA-22 | FIRE ALARM ATTIC FLOOR PLAN | 1-118-FA-1322-0 |
| 574 | K-FA-81 | FIRE ALARM DETAILS | 1-118-FA-1323-0 |
| *CIVIL* | | | |
| 575 | K-C-01 | GENERAL NOTES | 1-118-C-1324-0 |
| 576 | K-C-02 | EXISTING CONDITIONS/ DEMOLITION PLAN | 1-118-C-1325-0 |
| 577 | K-C-03 | SITE CONSTRUCTION PLAN | 1-118-C-1326-0 |
| 578 | K-C-04 | UTILITY CONSTRUCTION PLAN | 1-118-C-1327-0 |
| 579 | K-C-05 | GRADING AND EROSION CONTROL PLAN | 1-118-C-1328-0 |
| 580 | K-C-06 | CIVIL DETAILS 1 | 1-118-C-1329-0 |
| 581 | K-C-07 | CIVIL DETAILS 2 | 1-118-C-1330-0 |

## SOUTHEAST ARCADE (SA)

| | | | |
|---|---|---|---|
| *GENERAL* | | | |
| 582 | SA-G-01 | BUILDING INTRO | 1-118-G-1331-0 |
| 583 | SA-G-02 | EGRESS PLANS AND CODE ANALYSIS | 1-118-G-1332-0 |
| 584 | SA-G-03 | SITE RESTORATION PLAN | 1-118-G-1333-0 |
| *ENVIRONMENTAL* | | | |
| 585 | SA-H-20 | GENERAL LEAD REMEDIATION NOTES | 1-118-G-1334-0 |
| 586 | SA-H-21 | NORTH AND EAST ELEVATIONS- LEAD REMEDIATION PLAN | 1-118-G-1335-0 |
| 587 | SA-H-22 | WEST ELEVATION- LEAD REMEDIATION PLAN | 1-118-G-1336-0 |
| *ARCHITECTURAL* | | | |
| 588 | SA-A-01 | SE ARCADE GROUND FLOOR - DEMOLITION PLAN | 1-118-A-1337-0 |
| 589 | SA-A-02 | SE GROUND FLOOR DEMOLITION - REFLECTED CEILING PLAN | 1-118-A-1338-0 |
| 590 | SA-A-03 | SE ARCADE SECOND FLOOR - DEMOLITION PLAN & RCP | 1-118-A-1339-0 |
| 591 | SA-A-04 | SE ARCADE ROOF FLOOR - DEMOLITION PLAN | 1-118-A-1340-0 |
| 592 | SA-A-05 | SE ARCADE EXTERIOR DEMOLITION ELEVATIONS 1 | 1-118-A-1341-0 |
| 593 | SA-A-06 | SE ARCADE EXTERIOR DEMOLITION ELEVATIONS 2 | 1-118-A-1342-0 |
| 594 | SA-A-11 | SE ARCADE GROUND FLOOR PLAN | 1-118-A-1343-0 |
| 595 | SA-A-12 | SE ARCADE REFLECTED CEILING PLANS | 1-118-A-1344-0 |
| 596 | SA-A-13 | SE ARCADE MEZZANINE - PLANS & RCP | 1-118-A-1345-0 |
| 597 | SA-A-14 | SE ARCADE ROOF PLAN | 1-118-A-1346-0 |
| 598 | SA-A-15 | SE ARCADE FINISH PLANS | 1-118-A-1347-0 |
| 599 | SA-A-21 | EXTERIOR BUILDING ELEVATIONS 1 | 1-118-A-1348-0 |
| 600 | SA-A-22 | EXTERIOR BUILDING ELEVATIONS 2 | 1-118-A-1349-0 |
| 601 | SA-A-31 | INTERIOR BUILDING SECTIONS 1 OF 2 | 1-118-A-1350-0 |
| 602 | SA-A-32 | INTERIOR BUILDING SECTIONS 2 OF 2 | 1-118-A-1351-0 |
| 603 | SA-A-71 | STAIR DETAILS | 1-118-A-1352-0 |
| 604 | SA-A-81 | CANOPY DETAILS | 1-118-A-1353-0 |
| 605 | SA-A-82 | SIGNAGE DETAILS | 1-118-A-1354-0 |
| 606 | SA-A-83 | FENCE DETAILS | 1-118-A-1355-0 |
| 607 | SA-A-84 | CEILING DETAILS | 1-118-A-1356-0 |
| 608 | SA-A-85 | ROOF MONITOR DETAILS | 1-118-A-1357-0 |
| 609 | SA-A-91 | DOOR & HARDWARE SCHEDULE | 1-118-A-1358-0 |
| 610 | SA-A-92 | WINDOW, LOUVERS SCHEDULES & DETAILS | 1-118-A-1359-0 |
| 611 | SA-A-93 | PARTITION TYPES AND FLOORING DETAILS | 1-118-A-1360-0 |
| 612 | SA-A-94 | COLUMN DETAILS | 1-118-A-1361-0 |
| *STRUCTURAL* | | | |
| 613 | SA-S-01 | STRUCTURAL NOTES | 1-118-S-1362-0 |
| 614 | SA-S-02 | STRUCTURAL ABBREVIATIONS & SYMBOLS | 1-118-S-1363-0 |
| 615 | SA-S-03 | DEMOLITION- GROUND FLOOR PLAN | 1-118-S-1364-0 |
| 616 | SA-S-04 | DEMOLITION- ROOF PLAN | 1-118-S-1365-0 |
| 617 | SA-S-05 | FOUNDATION PLAN | 1-118-S-1366-0 |
| 618 | SA-S-06 | GROUND FLOOR PLAN | 1-118-S-1367-0 |
| 619 | SA-S-07 | SECTIONS AND DETAILS | 1-118-S-1368-0 |
| 620 | SA-S-08 | SECTIONS | 1-118-S-1369-0 |
| 621 | SA-S-09 | SECTIONS AND DETAILS | 1-118-S-1370-0 |
| 622 | SA-S-10 | SECTIONS AND DETAILS | 1-118-S-1371-0 |
| 623 | SA-S-11 | SECTIONS AND DETAILS | 1-118-S-1372-0 |
| 624 | SA-S-12 | SECTIONS AND DETAILS | 1-118-S-1373-0 |
| *FIRE PROTECTION* | | | |
| 625 | SA-FP-01 | FIRE PROTECTION NOTES, SYMBOLS, ABBREVIATIONS & DWG LIST | 1-118-FP-1374-0 |
| 626 | SA-FP-11 | FIRE PROTECTION GROUND AND SECOND FLOOR DEMOLITION RCP | 1-118-FP-1375-0 |
| 627 | SA-FP-21 | FIRE PROTECTION GROUND AND SECOND FLOOR CONSTRUCTION RCP | 1-118-FP-1376-0 |
| 628 | SA-FP-81 | FIRE PROTECTION DETAILS | 1-118-FP-1377-0 |
| *PLUMBING* | | | |
| 629 | SA-P-01 | PLUMBING NOTES, SYMBOLS, ABBREVIATIONS AND DRAWING LIST | 1-118-P-1378-0 |
| 630 | SA-P-11 | PLUMBING GROUND FLOOR AND 2ND LEVEL DEMOLITION PLANS | 1-118-P-1379-0 |
| 631 | SA-P-21 | PLUMBING GROUND FLOOR AND 2ND LEVEL CONSTRUCTION PLANS | 1-118-P-1380-0 |
| 632 | SA-P-81 | PLUMBING DETAILS | 1-118-P-1381-0 |
| *MECHANICAL* | | | |
| 633 | SA-M-01 | MECHANICAL NOTES, SYMBOLS & LEGENDS | 1-118-M-1382-0 |
| 634 | SA-M-11 | MECHANICAL FIRST FLOOR DEMOLITION PLAN | 1-118-M-1383-0 |
| 635 | SA-M-12 | MECHANICAL SECOND FLOOR DEMOLITION PLAN | 1-118-M-1384-0 |
| 636 | SA-M-21 | MECHANICAL FIRST FLOOR CONSTRUCTION PLAN | 1-118-M-1385-0 |
| 637 | SA-M-22 | MECHANICAL SECOND FLOOR CONSTRUCTION PLAN | 1-118-M-1386-0 |
| 638 | SA-M-23 | MECHANICAL EXTERIOR BUILDING ELEVATIONS | 1-118-M-1387-0 |
| 639 | SA-M-61 | MECHANICAL SCHEDULES | 1-118-M-1388-0 |
| 640 | SA-M-81 | MECHANICAL DETAILS | 1-118-M-1389-0 |
| 641 | SA-M-91 | MECHANICAL CONTROLS | 1-118-M-1390-0 |
| *ELECTRICAL* | | | |
| 642 | SA-E-01 | ONE LINE DIAGRAMS & PANEL SCHEDULES - DEMOLITION | 1-118-E-1391-0 |
| 643 | SA-E-02 | GROUND FLOOR - DEMOLITION POWER & LIGHTING PLAN | 1-118-E-1392-0 |
| 644 | SA-E-03 | SECOND LEVEL - DEMOLITION PLAN | 1-118-E-1393-0 |
| 645 | SA-E-04 | ONE LINE DIAGRAM & PANEL SCHEDULES | 1-118-E-1394-0 |
| 646 | SA-E-05 | GROUND FLOOR - POWER PLAN | 1-118-E-1395-0 |
| 647 | SA-E-06 | SECOND LEVEL - POWER PLAN | 1-118-E-1396-0 |
| 648 | SA-E-07 | GROUND FLOOR - LIGHTING PLAN | 1-118-E-1397-0 |
| 649 | SA-E-08 | SECOND LEVEL - LIGHTING PLAN | 1-118-E-1398-0 |
| 650 | SA-E-09 | ROOF PLAN - LIGHTNING PROTECTION | 1-118-E-1399-0 |
| *FIRE ALARM* | | | |
| 651 | SA-FA-01 | FIRE ALARM NOTES, SYMBOLS, LEGEND, AND RISER DIAGRAM | 1-118-FA-1400-0 |
| 652 | SA-FA-11 | FIRE ALARM FIRST FLOOR DEMOLITION PLAN | 1-118-FA-1401-0 |
| 653 | SA-FA-21 | FIRE ALARM FIRST FLOOR PLAN | 1-118-FA-1402-0 |
| 654 | SA-FA-22 | FIRE ALARM SECOND FLOOR PLAN | 1-118-FA-1403-0 |
| 655 | SA-FA-81 | FIRE ALARM DETAILS | 1-118-FA-1404-0 |
| *CIVIL* | | | |
| 656 | SA-C-01 | GENERAL NOTES | 1-118-C-1405-0 |
| 657 | SA-C-02 | EXISTING CONDITIONS/ DEMOLITION PLAN | 1-118-C-1406-0 |
| 658 | SA-C-03 | SITE CONSTRUCTION PLAN | 1-118-C-1407-0 |
| 659 | SA-C-04 | UTILITY CONSTRUCTION PLAN | 1-118-C-1408-0 |
| 660 | SA-C-05 | GRADING AND EROSION CONTROL PLAN | 1-118-C-1409-0 |
| 661 | SA-C-06 | CIVIL DETAILS 1 | 1-118-C-1410-0 |
| 662 | SA-C-07 | CIVIL DETAILS 2 | 1-118-C-1411-0 |

## DETAILS (ELECTRICAL)

| | | | |
|---|---|---|---|
| 663 | DT-E-01 | DETAILS 1 | 1-118-E-1412-0 |
| 664 | DT-E-02 | DETAILS 2 | 1-118-E-1413-0 |

8/31/2022 2:01:30 PM


CONSULTANT INFORMATION

The LiRo Group

3 Aerial Way, Syosset, New York 11791
(516) 938-5476 www.liro.com


CONSULTANT SEAL

REGISTERED ARCHITECT · ROBERT D. YOUNG JR · 023220 · STATE OF NEW YORK

| REVISION NUMBER | DATE | MADE BY | APP'D BY | REVISION |
|---|---|---|---|---|

RECORD DRAWING CERTIFICATION

☐ AS BUILT – CHANGES AS NOTED ☐ AS BUILT – NO CHANGES

| CONTRACTOR | PROJECT COORDINATOR |
|---|---|
| NAME | NAME |
| SIGNATURE | SIGNATURE |
| TITLE DATE | TITLE DATE |

WESTCHESTER COUNTY, NEW YORK
DEPARTMENT OF PUBLIC WORKS AND TRANSPORTATION
DIVISION OF ENGINEERING

**INFRASTRUCTURE REHABILITATION - PHASE 3**
**PLAYLAND PARK, RYE, NEW YORK**
**DRAWING LIST**

| | |
|---|---|
| CONTRACT NUMBER | 22-532 |
| SHEET NUMBER | T-02A |
| DWG NO.: | 3 of 664 |
| SCALE: | |
| DATE: | 08/23/2022 |
| DPW FILE NUMBER | 1-118-G-752A-0 |
| REV. NO. | 0 |

## ACCESSIBILITY DETAILS- AS PER ICC/ANSI A 117.1-2009

### CLEAR FLOOR SPACE AT WATER CLOSET

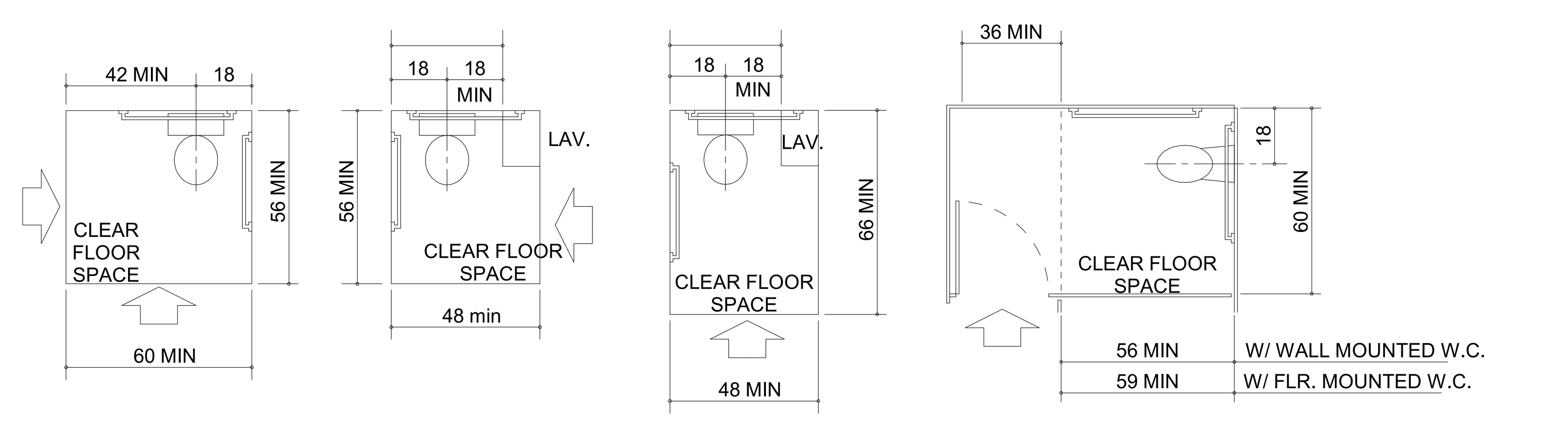


### AMBULATORY ACCESSIBLE TOILET

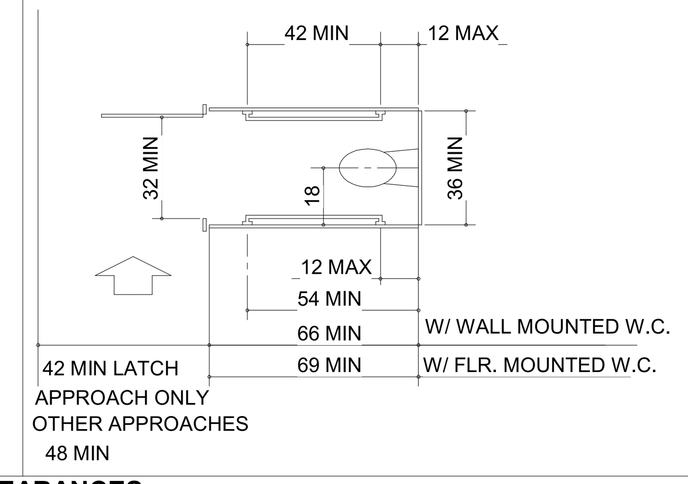


### GRAB BAR AT WATER CLOSET

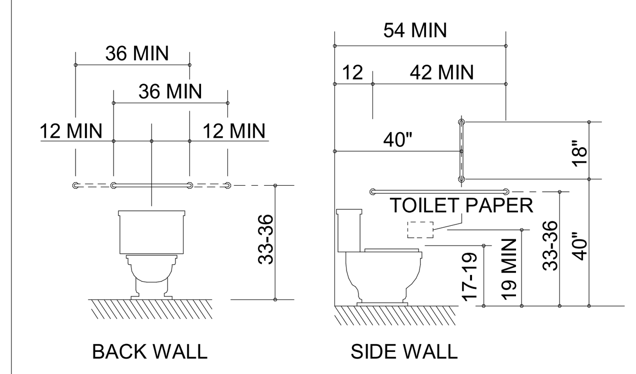


### SINK CLEARANCE

THE WIDTH OF THE RECESSED KNEE-WELL AT SINKS IS A MINIMUM OF 30"

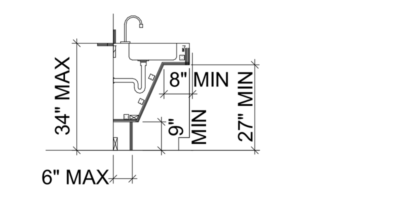


### DOOR CLEARANCES

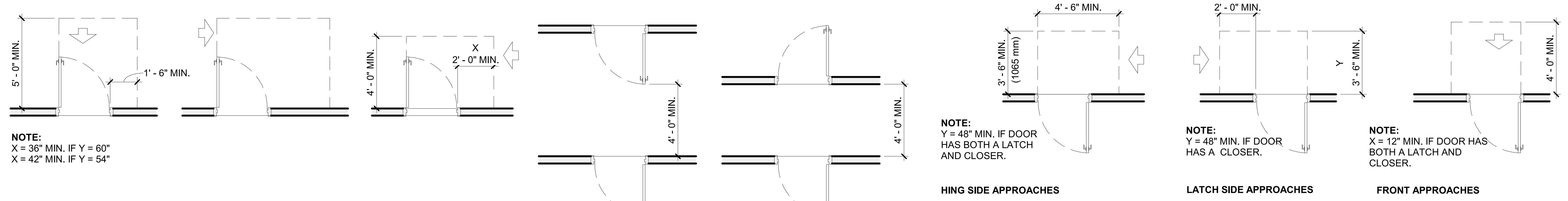


**PULL SIDE APPROACH - SWINGING DOORS**

**PUSH SIDE APPROACH - SWINGING DOORS**

**NOTE:**
32" CLEARANCE MINIMUM ALLOWED ON THE ACCESSIBLE ROUTE ONLY AT DOORWAYS.

### ACCESSIBLE STAIRS

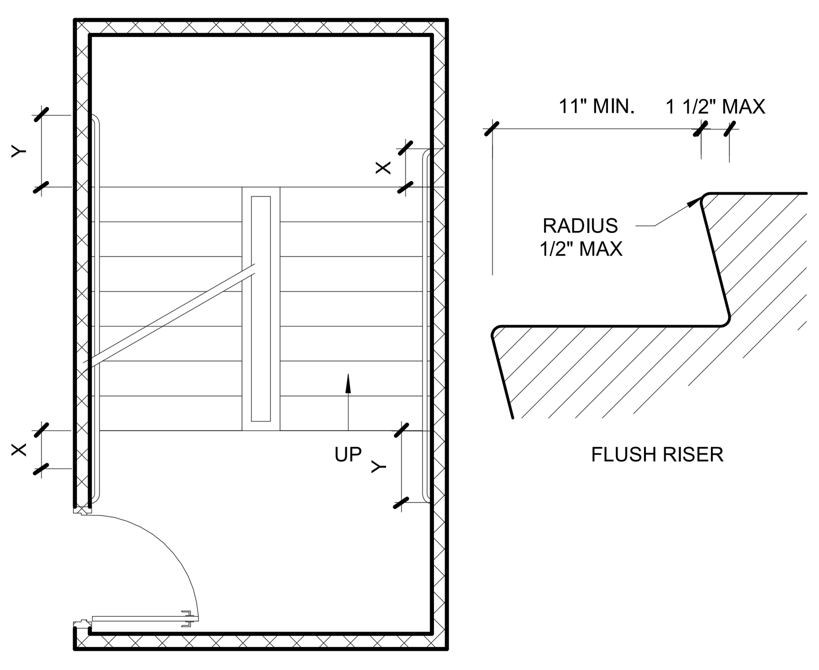


NOTE:
X IS THE 12 IN MINIMUM HANDRAIL EXTENSION REQUIRED OF EACH TOP RISER. Y IS THE MINIMUM HANDRAIL EXTENSION OF 12IN. PLUS THE WIDTH OF ONE TREAD THAT IS REQUIRED OF EACH BOTTOM RISER.

### CLEAR PATH OF TRAVEL

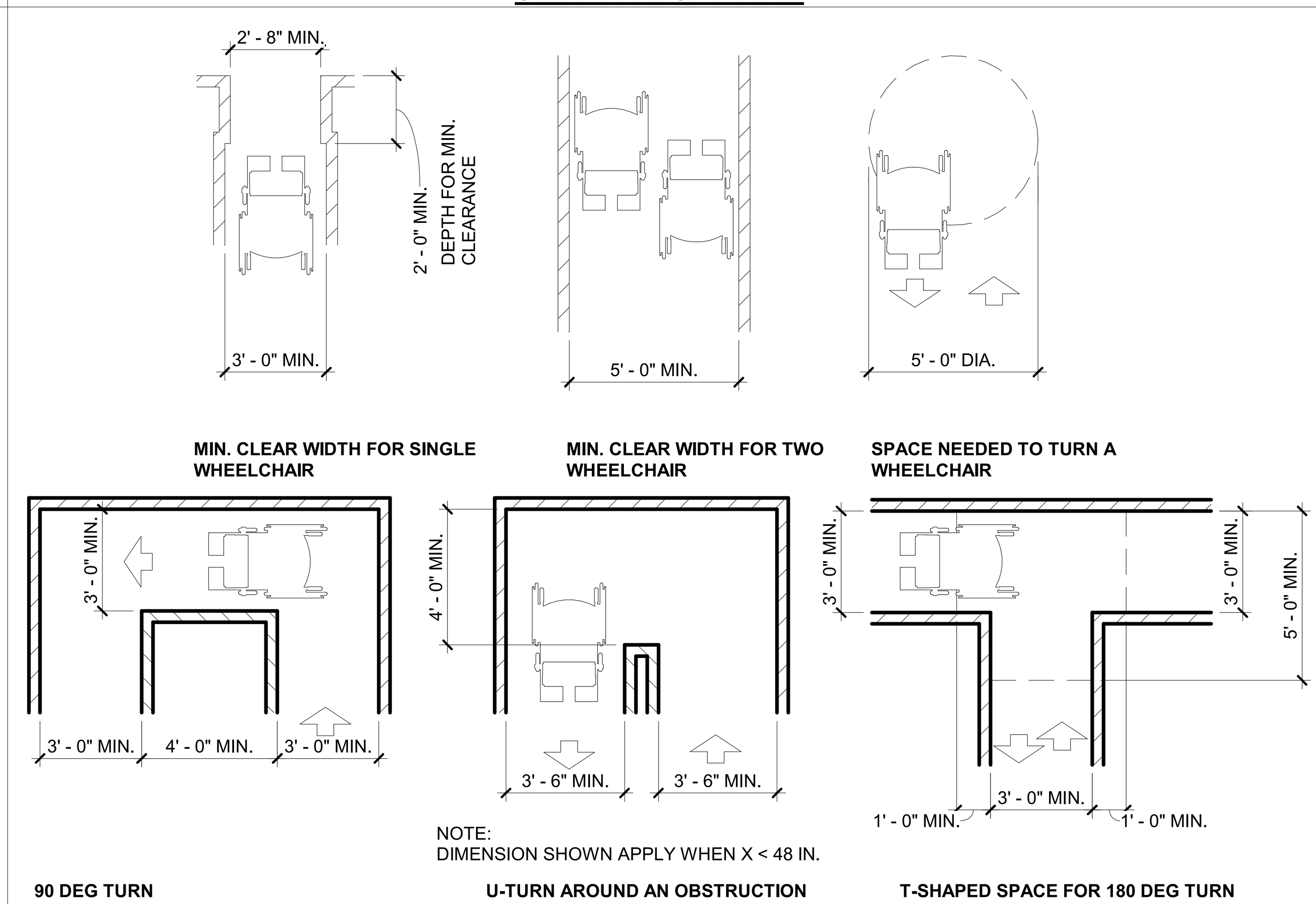


### REACH LIMITS

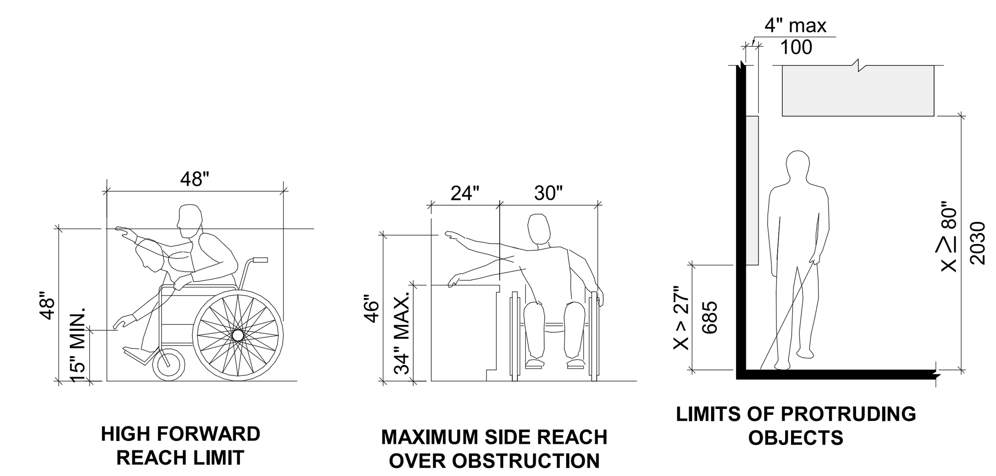


### SIGNAGE

### MOUNTING HEIGHTS

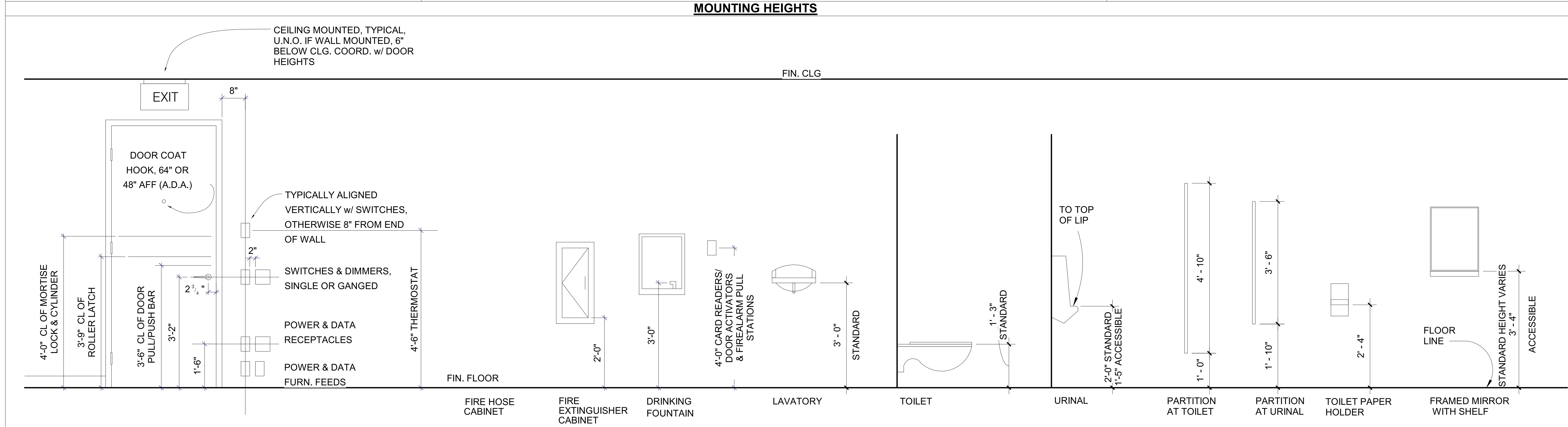


## GENERAL SYMBOLS

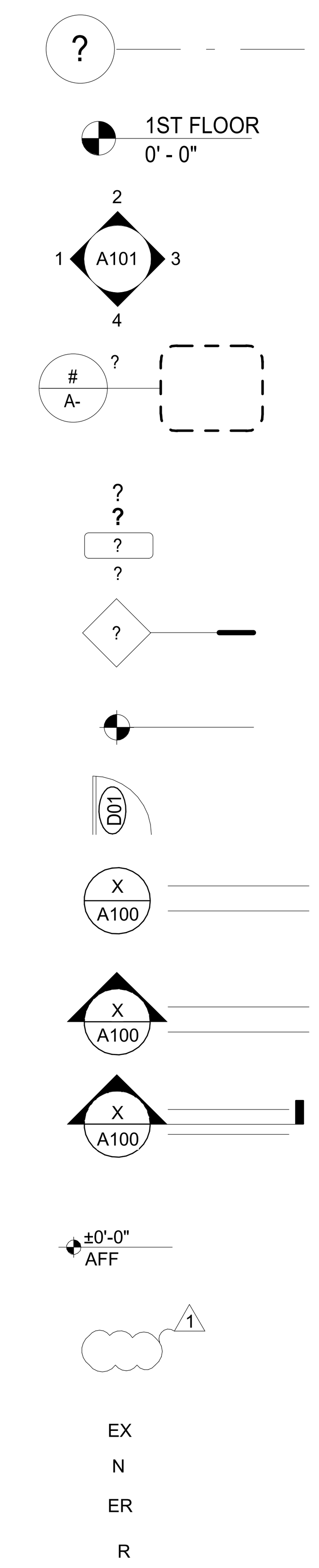

- **COLUMN LINE DESIGNATIONS**
- **SECTION FLOOR ELEVATION** (1ST FLOOR 0' - 0")
- **ELEVATION TAG** (A101)
- **DETAILS** DETAIL NUMBER SHEET NUMBER
- **ROOM TAG** ROOM NAME ROOM NUMBER AREA
- WALL/PARTITION TAG
- LEVEL MARKER
- DOOR & DOOR NUMBER (D01)
- DETAIL NUMBER SHEET NUMBER (X / A100)
- ELEVATION NUMBER SHEET NUMBER (X / A100)
- SECTION NUMBER SHEET NUMBER (X / A100)
- ELEVATION (±0'-0" AFF)
- REVISION NUMBER
- REVISION CLOUD

| | |
|---|---|
| EX | DENOTES: EXISTING TO REMAIN |
| N | DENOTES: NEW |
| ER | DENOTES: EXISTING TO RELOCATE |
| R | DENOTES: REMOVE & SALVAGE FOR REUSE |

### FILLED REGION PATTERNS

## ABBREVIATIONS

| | |
|---|---|
| < | ANGLE |
| @ | AT |
| AB | ANCHOR BOLT |
| ABV | ABOVE |
| A/C | AIR CONDITIONING |
| ACP | ACOUSTICAL CEILING PANEL |
| ACT | ACOUSTICAL CEILING TILE |
| ADJ | ADJUSTABLE |
| AFF | ABOVE FINISHED FLOOR |
| AHU | AIR HANDLING UNIT |
| ALT | ALTERNATE |
| ALUM | ALUMINUM |
| AP | ACCESS PANEL |
| APPR | APPROXIMATE |
| ARCH | ARCHITECT(URAL) |
| ASB | ASBESTOS |
| AVG | AVERAGE |
| BD | BOARD |
| BLDG | BUILDING |
| BLK | BLOCK |
| BLKG | BLOCKING |
| BTWN | BETWEEN |
| C | CARPET |
| CAB | CABINET |
| CAL. | CALIBER |
| CCTV | CLOSED CIRCUIT TELEVISION |
| CIP | CAST IN PLACE CONCRETE |
| CJ | CONTROL JOINT |
| CL | CENTERLINE |
| CLG | CEILING |
| CL. | CLOSET |
| CLR | CLEAR |
| CMU | CONCRETE MASONRY UNIT |
| CNTR | COUNTER |
| CO | CLEAN OUT |
| COL | COLUMN |
| CONC. | CONCRETE |
| CONSTR. | CONSTRUCT(ION) |
| CONT. | CONTINUOUS |
| CONTR | CONTRACT(OR) |
| CORR. | CORRIDOR |
| CPT | CARPET TILES |
| CTSK | COUNTERSINK |
| CT | CERAMIC TILE |
| CUH | CABINET UNIT HEATER |
| CU YD | CUBIC YARD |
| CW | COLD WATER |
| DBL | DOUBLE |
| DEMO | DEMOLISH, DEMOLITION |
| DEPT | DEPARTMENT |
| DG | DOOR GRILLE |
| DIA. | DIAMETER |
| DIM | DIMENSION |
| DN | DOWN |
| DP | DAMPPROOFING |
| DR | DOOR |
| DTL | DETAIL |
| DW | DRYWALL |
| DWG | DRAWING |
| DWR | DRAWER |
| E | EAST |
| EA | EACH |
| EF | EXHAUST FAN |
| EJ | EXPANSION JOINT |
| EL | ELEVATION |
| ELEC | ELECTRICAL |
| ELEV | ELEVATOR |
| EMER | EMERGENCY |
| EPX | EPOXY |
| EQ | EQUAL |
| EQUIP | EQUIPMENT |
| EXH | EXHAUST |
| EXIST | EXISTING |
| FA | FIRE ALARM |
| FD | FLOOR DRAIN |
| FE | FIRE EXTINGUISHER |
| FEC | FIRE EXTINGUISHER CABINET |
| FF | FINISHED FLOOR |
| FFE | FINISHED FLOOR ELEVATION |
| FGL | FIBERGLASS |
| FH | FIRE HYDRANT |
| FIN | FINISH(ED) |
| FIX | FIXTURE |
| FLSHG | FLASHING |
| FLR | FLOOR |
| FLUR | FLUORESCENT |
| FND | FOUNDATION |
| FOC | FACE OF CONCRETE |
| FP | FIRE PROTECTION |
| FR | FIRE RATED |
| FRMG | FRAMING |
| FRP | FIBERGLASS REINF PLASTIC |
| FT | FOOT, FEET |
| FURN | FURNITURE |
| FURR | FURRING |
| GA | GAUGE |
| GAL | GALVANIZED |
| GB | GRAB BAR |
| GC | GENERAL CONTRACTOR |
| GEN | GENERAL |
| GL | GLASS |
| GR | GRADE |
| GS | GALVANIZED STEEL |
| GWT | GLAZED WALL TILE |
| GYP | GYPSUM |
| HOB | HOSE BIBB |
| HBD | HARDBOARD |
| HDR | HEADER |
| HDWD | HARDWOOD |
| HDWR | HARDWARE |
| HGT | HEIGHT |
| HM | HOLLOW METAL |
| HORIZ | HORIZONTAL |
| HR | HOUR |
| HTG | HEATING |
| HTR | HEATER |
| HVAC | HEATING, VENTILATING AIR CONDITIONING |
| HW | HOT WATER |
| IN | INCH |
| INCL | INCLUDE |
| INFO | INFORMATION |
| INST | INSTALL(ATION) |
| INSUL | INSULATE(ION) |
| INT | INTERIOR |
| JAN | JANITOR |
| JST | JOIST |
| JT | JOINT |
| KIT | KITCHEN |
| K-O | KNOCK-OUT |
| LAM | LAMINATE |
| LAV | LAVATORY |
| LBS | POUNDS |
| LF | LINEAR FEET (FOOT) |
| LH | LEFT HAND |
| LVR | LOUVER |
| M | METER(S) |
| MACH | MACHINE |
| MAS | MASONRY |
| MATL | MATERIAL |
| MAX | MAXIUM |
| MECH | MECHANICAL |
| MFR | MANUFACTURER |
| MIN | MINIMUM |
| MIR | MIRROR |
| MISC | MISCELLANEOUS |
| MLDG | MOLDING |
| MTD | MOUNTED |
| MTL | METAL |
| MUL | MULLION |
| MWP | MEMBRANE WATERPROOFING |
| N | NORTH |
| NIC | NOT IN CONTRACT |
| NO | NUMBER |
| NTS | NOT TO SCALE |
| OC | ON CENTER |
| OH | OVERHEAD |
| OPNG | OPENING |
| OPP | OPPOSITE |
| PERF | PERFORATE(D) |
| PERM | PERIMETER |
| PIP | POURED IN PLACE |
| PL | PLATE |
| PLAM | PLASTIC LAMINATE |
| PLAS | PLASTER |
| PLUMB | PLUMBING |
| PLYWD | PLYWOOD |
| PNL | PANEL |
| PT | PAINT |
| PREFAB | PREFABRICATE(D) |
| PREFIN | PREFINISHED |
| PREP | PREPARE |
| PROJ | PROJECT |
| PCT | PORCELAIN TILE |
| PTN | PARTITION |
| PVMT | PAVEMENT |
| QTY | QUANTITY |
| R | RISER |
| RA | RETURN AIR |
| RAD | RADIUS |
| RB | RUBBER BASE |
| RD | ROOF DRAIN |
| RECP | RECEPTACLE |
| REF | REFERENCE |
| REFG | REFRIGERATOR |
| REINF | REINFORCE(D)(ING) |
| REQD | REQUIRED |
| RES | RESILIENT |
| RET | RETURN |
| RH | RIGHT HAND |
| RM | ROOM |
| RO | ROUGH OPENING |
| RTU | ROOFTOP UNIT |
| S | SOUTH |
| SCH | SCHEDULE |
| SHLVG | SHELVING |
| SHT | SHEET |
| SHTH | SHEATHING |
| SOF | SPRAY FIREPROOFING |
| SPEC | SPECIFICATION |
| SPR | SPRINKLER |
| SQ | SQUARE |
| SS | STAINLESS STEEL |
| ST. | STREET |
| ST | STONE |
| STD | STANDARD |
| STL | STEEL |
| STOR | STORAGE |
| STRUCT | STRUCTURAL |
| SUSP | SUSPENSION |
| T | TREAD |
| TBD | TO BE DETERMINE |
| T&B | TOP & BOTTOM |
| TEL | TELEPHONE |
| T&G | TONGUE & GROOVE |
| THHD | THRESHOLD |
| THK | THICK(NESS) |
| THRU | THROUGH |
| TOS | TOP OF STEEL |
| TEX. | TEXTURES PAINT |
| TRT | TREAT(ED) |
| TOS | TOP OF SLAB |
| TV | TELEVISION |
| TYP | TYPICAL |
| UC | UNDERCUT |
| UG | UNDERGROUND |
| UH | UNIT HEATER |
| UNFIN | UNFINISHED |
| U.N.O. | UNLESS NOTED OTHERWISE |
| VERT | VERTICAL |
| VIF | VERIFY IN FIELD |
| W | WEST |
| W/ | WITH |
| WB | WOOD BASE |
| WC | WATER CLOSET |
| WD | WOOD BASE |
| WDW | WINDOW |
| WGL | WIRE GLASS |
| WH | WATER HEATER |
| W/O | WITHOUT |
| WP | WATERPROOFING |
| WPT | WORKING POINT |
| WR | WATER RESISTANT |
| WSCT | WAINSCOT |
| WT | WEIGHT |


CONSULTANT INFORMATION
The LiRo Group
3 Aerial Way, Syosset, New York 11791
(516) 938-5476 www.liro.com


CONSULTANT SEAL
REGISTERED ARCHITECT ROBERT D. YOUNG JR 023220 STATE OF NEW YORK

| REVISION NUMBER | DATE | MADE BY | APP'D BY | REVISION |
|---|---|---|---|---|

RECORD DRAWING CERTIFICATION
☐ AS BUILT – CHANGES AS NOTED ☐ AS BUILT – NO CHANGES

CONTRACTOR
NAME
SIGNATURE
TITLE DATE

PROJECT COORDINATOR
NAME
SIGNATURE
TITLE DATE

WESTCHESTER COUNTY, NEW YORK
DEPARTMENT OF PUBLIC WORKS AND TRANSPORTATION
DIVISION OF ENGINEERING

**INFRASTRUCTURE REHABILITATION - PHASE 3**
**PLAYLAND PARK, RYE, NEW YORK**
**ACCESSIBILITY DETAILS, GENERAL SYMBOLS AND ABBREVIATIONS**

CONTRACT NUMBER: 22-532
SHEET NUMBER: T-03
DWG NO.: 4 of 664
SCALE: As indicated
DATE: 08/23/2022
DPW FILE NUMBER: 1-118-G-753-0
REV. NO. 0

8/30/2022 4:16:25 PM

## INFRASTRUCTURE REHABILITATION PHASE 3
## DESIGN SCOPES

**SA**

- SOUTHEAST ARCADE: EXTERIOR ALTERNATION OF BUILDING ENVELOPE INCLUDING SIDING AND ROOFING. RECONSTRUCTION OF DETERIORATED TIMBER FLOOR AND FLOOR FRAMING. VENDOR-READY INTERIOR FOR GAMES OR ARCADE VENDORS (MINIMAL UTILITIES). SEASONAL USE (NO HEAT OR AC) WITH LIGHTING FIXTURES, OUTLETS AND RELATED CONDUIT AND WIRING WORK.

**BB**

- NORTHEAST BURGER BARN: EXTERIOR ALTERNATION OF BUILDING ENVELOPE INCLUDING SIDING AND ROOFING. NEW ADDITION IN EXISTING FOOTPRINT. VENDOR-READY INTERIOR FOR CONVERSION TO RESTAURANT, INCLUDING UTILITIES FOR FIT-OUT OF KITCHEN BY FOOD SERVICE VENDOR. SEASONAL USE (NO HEAT OR AC) WITH LIGHTING FIXTURES, OUTLETS AND RELATED CONDUIT AND WIRING WORK.

**DCV**

- DRAGON COASTER VENDORS: REMOVE NON-HISTORICAL "DIPPIN DOTS" CONSTRUCTION. REMOVE AND REBUILD TOWERS # 6 AND #7 IN ENTIRETY, INCLUDING NEW FOUNDATIONS. EXTERIOR ALTERNATION COLONNADE, BOARDWALK AND BOARDWALK FOUNDATIONS, AND VENDOR FAÇADES. DEMOLISH INTERIOR SPACES AND REHAB TO VENDOR-READY FOR FOOD SERVICE FIT-OUT FOR SEASONAL USE (NO HEAT OR AC). PROVIDE REROOFING OF ENTIRE DRAGON COASTER STATION.

**K**

- RESTAURANT KITCHEN WITH FOOD VENDING (A.K.A. NATHAN'S): EXTERIOR ALTERNATION AND/OR REBUILDING. BUILDING MODIFICATIONS FOR NEW ADDITION CONNECTING TO PLAZA RESTAURANT BUILDING. INTERIOR "VENDOR READY" FOR KITCHEN FIT-OUT BY FOOD SERVICE VENDOR.

**CXA**

BUILDING SHELL AND MECHANICAL SYSTEMS TO ANTICIPATE FOUR-SEASON USE.

**CXD**

- CROSS AXIS BUILDING A (NORTH GAMES): EXTERIOR ALTERNATION INCLUDING ROOFING AND REHABILITATION OF PORCH & BOARDWALK. INTERIOR REHABILITATION, INCLUDING SELECTIVE REPLACEMENT OF EXISTING DETERIORATED TIMBER FRAMING ELEMENTS, TO VENDOR-READY SPACES FOR GAMES VENDORS (MINIMAL UTILITIES). SEASONAL USE (NO HEAT OR AC) WITH LIGHTING FIXTURES, OUTLETS AND RELATED CONDUIT AND WIRING WORK. IN THE BACK, REMOVE AND REBUILD BUILDING ADDITIONS (VENDOR OFFICE/LOUNGE AND STORAGE SHED).

**CXE**

- CROSS AXIS BUILDING D: EXTERIOR ALTERNATION INCLUDING ROOFING AND REHABILITATION OF PORCH & BOARDWALK. INTERIOR REHABILITATION, INCLUDING SELECTIVE REPLACEMENT OF EXISTING DETERIORATED TIMBER FRAMING ELEMENTS, TO VENDOR-READY SPACES FOR GAMES VENDORS (MINIMAL UTILITIES). SEASONAL USE (NO HEAT OR AC) WITH LIGHTING FIXTURES, OUTLETS AND RELATED CONDUIT AND WIRING WORK.

**CXF**

- CROSS AXIS BUILDING E (SOUTH GAMES): EXTERIOR ALTERNATION INCLUDING ROOFING AND REHABILITATION OF PORCH & BOARDWALK. INTERIOR REHABILITATION, INCLUDING SELECTIVE REPLACEMENT OF EXISTING DETERIORATED TIMBER FRAMING ELEMENTS, TO VENDOR-READY SPACES FOR GAMES VENDORS (MINIMAL UTILITIES). SEASONAL USE (NO HEAT OR AC) WITH LIGHTING FIXTURES, OUTLETS AND RELATED CONDUIT AND WIRING WORK.

- CROSS AXIS BUILDING F: REMOVE "LITTLE CARVEL/LUIGI'S" AND REBUILD, INCLUDING NEW STRUCTURAL FOUNDATIONS, SUPERSTRUCTURE, AND INTERIOR VENDOR-READY FOR FOOD SERVICE FIT-OUT. SEASONAL USE (NO HEAT OR AC) WITH LIGHTING FIXTURES, OUTLETS AND RELATED CONDUIT AND WIRING WORK. REMOVE DEMISING WALL TO INTEGRATE WITH THE ADJACENT NEWLY-BUILT VENDOR BUILDING TO THE EAST.

### 403.3.4 LOCATION OF TOILET FACILITIES IN MALLS

RESTAURANT KITCHEN WITH FOOD VENDING (K) TO MAIN RESTROOM: 71'-6"
CROSS AXIS BUILDING A (CXA) TO CROSS AXIS RESTROOM: 200'-0"
CROSS AXIS BUILDING D (CXD) TO CROSS AXIS RESTROOM: 113'- 6"
CROSS AXIS BUILDING E (CXE) TO CROSS AXIS RESTROOM: 176'-0"
CROSS AXIS BUILDING F (CXF) TO CROSS AXIS RESTROOM: 242'-0"
DRAGON COASTER VENDOR (DCV) TO CROSS AXIS RESTROOM: 259'-0"
SOUTHEAST ARCADE (SA) TO BUMPER CAR RESTROOM: 340'-0"
BURGER BARN (BB): WITHIN THE BUILDING

### LEGEND

EXISTING STRUCTURE

FIRE RATED EXTERIOR WALL (REFER TO BUILDING FOR MORE INFORMATION)

PHASE 3 OVERHEAD STRUCTURE

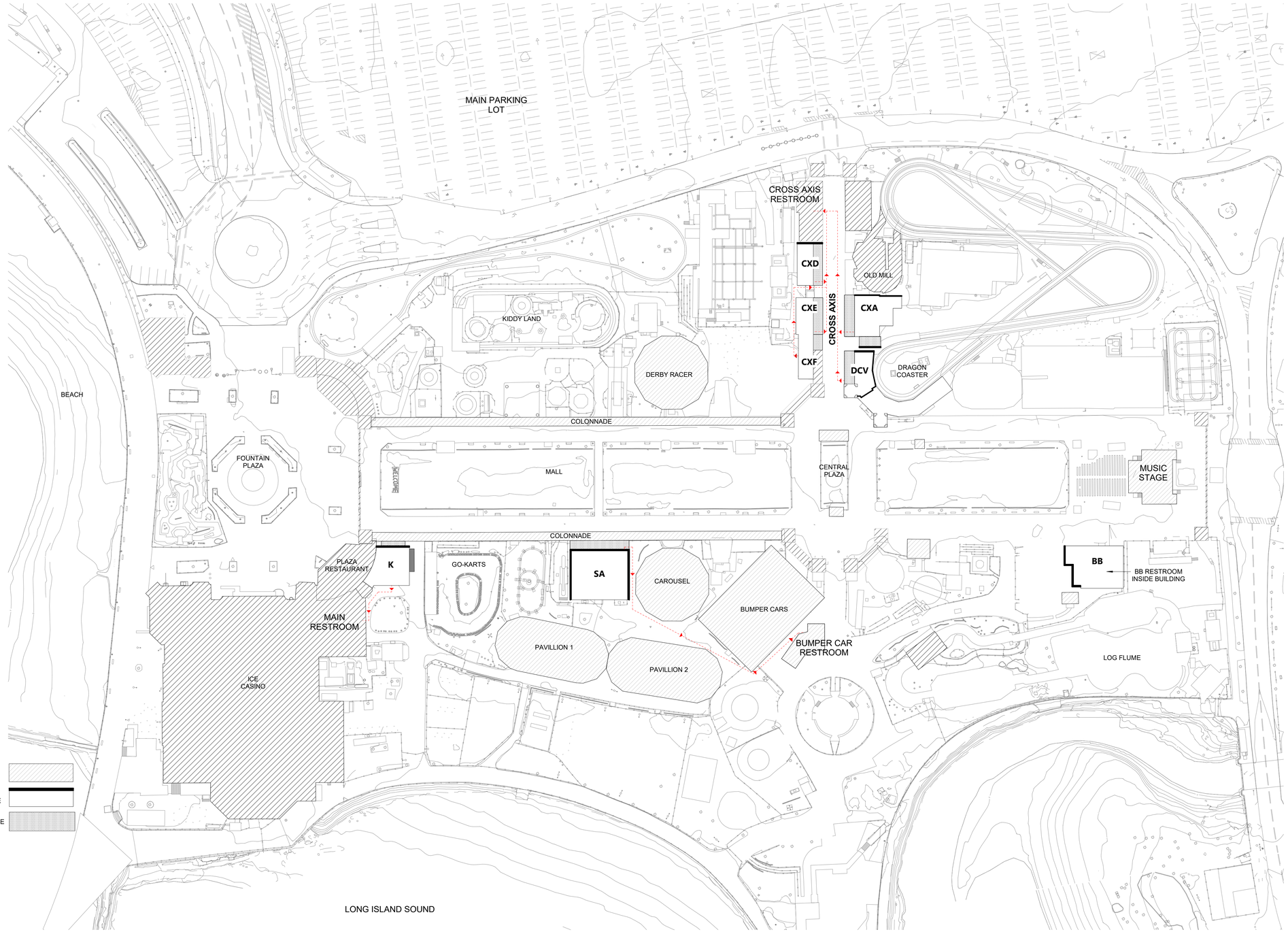


1 PLAYLAND PARK SITE PLAN
1" = 60'-0"

8/30/2022 4:16:26 PM

CONSULTANT INFORMATION
The LiRo Group
3 Aerial Way, Syosset, New York 11791
(516) 938-5476 www.liro.com

CONSULTANT SEAL
REGISTERED ARCHITECT ROBERT D. YOUNG JR. 023280 STATE OF NEW YORK

| REVISION NUMBER | DATE | MADE BY | APP'D BY | REVISION |
|---|---|---|---|---|
| | | | | |

RECORD DRAWING CERTIFICATION
☐ AS BUILT – CHANGES AS NOTED ☐ AS BUILT – NO CHANGES

CONTRACTOR
NAME
SIGNATURE
TITLE DATE

PROJECT COORDINATOR
NAME
SIGNATURE
TITLE DATE

WESTCHESTER COUNTY, NEW YORK
DEPARTMENT OF PUBLIC WORKS AND TRANSPORTATION
DIVISION OF ENGINEERING

**INFRASTRUCTURE REHABILITATION - PHASE 3**
**PLAYLAND PARK, RYE, NEW YORK**
**SITE PLAN & SCOPE OF WORK**

| | |
|---|---|
| CONTRACT NUMBER | 22-532 |
| SHEET NUMBER | T-04 |
| DWG NO.: | 5 of 664 |
| SCALE: | 1" = 60'-0" |
| DATE: | 08/23/2022 |
| DPW FILE NUMBER | 1-118-G-754-0 |
| REV. NO. | 0 |

## EFFECTIVE FLOOD INSURANCE RATE MAP

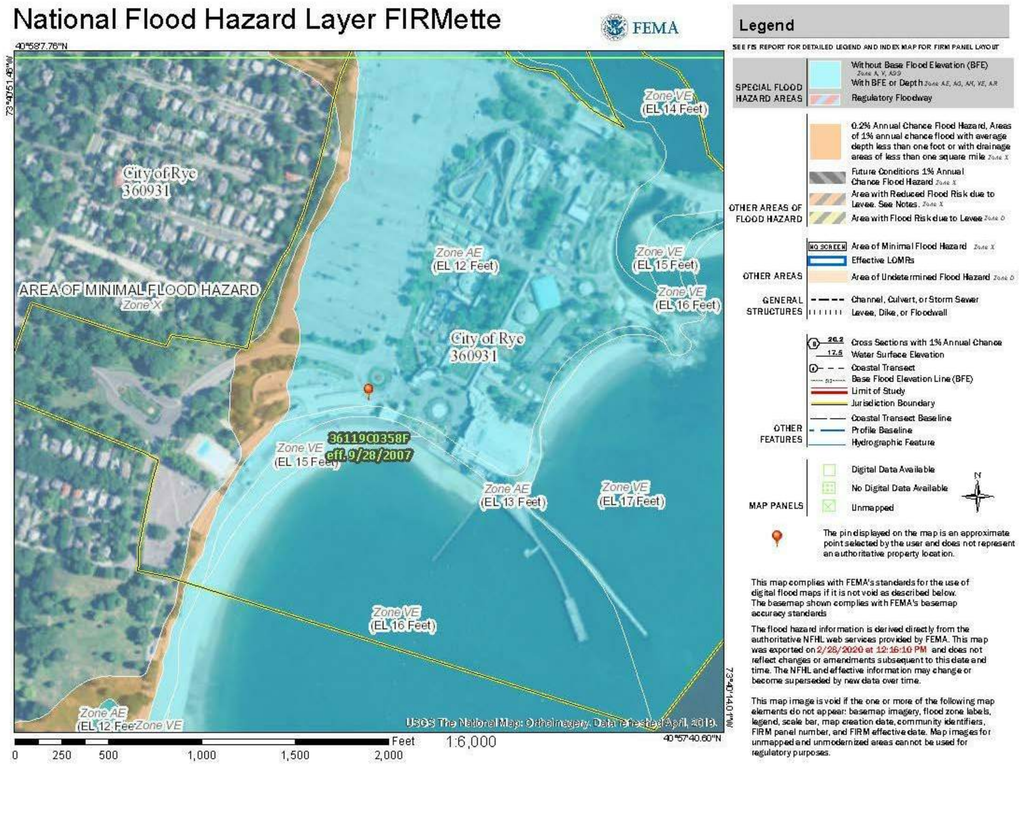


## PRELIMINARY FLOOD INSURANCE RATE MAP

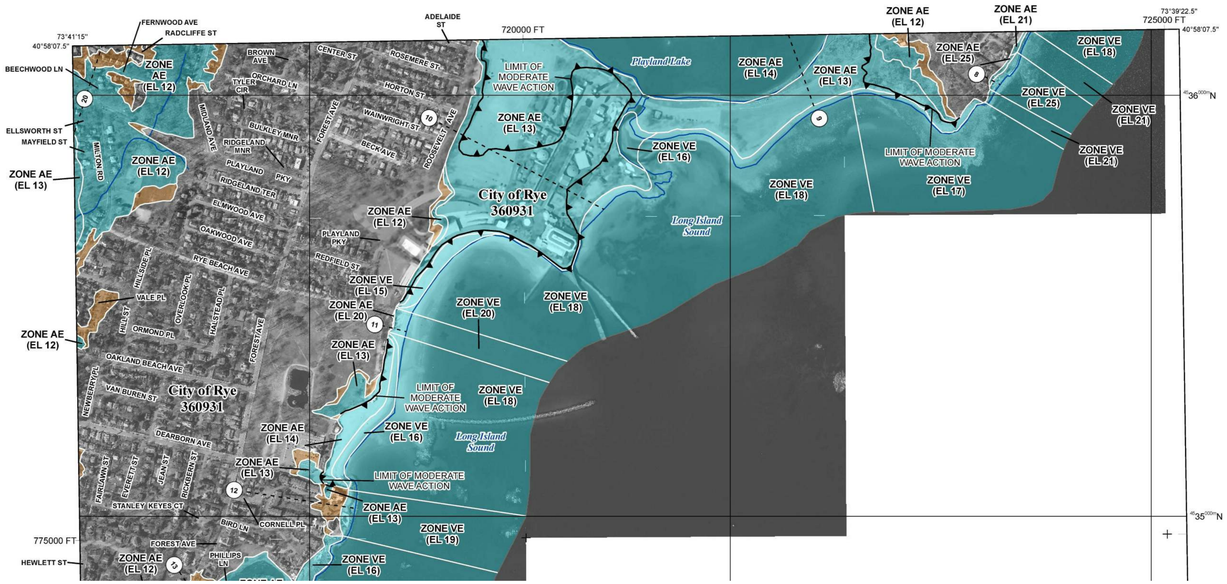


### SCALE

Map Projection:
Universal Transverse Mercator Zone 18N; North American Datum 1983;
GRS_1980 Spheroid; North American Vertical Datum of 1988

1 inch = 500 feet 1:6,000

0 500 1,000 2,000 Feet

0 125 250 500 Meters

### PANEL LOCATOR

* PANEL NOT PRINTED

National Flood Insurance Program

NATIONAL FLOOD INSURANCE PROGRAM
FLOOD INSURANCE RATE MAP

WESTCHESTER COUNTY, NEW YORK
All Jurisdictions

PANEL 358 OF 426

FEMA

Panel Contains:

| COMMUNITY | NUMBER | PANEL | SUFFIX |
|---|---|---|---|
| RYE, CITY OF | 360931 | 0358 | G |

PRELIMINARY
DECEMBER 8, 2014

VERSION NUMBER
2.2.2.1

MAP NUMBER
36119C0358G

MAP REVISED

### FLOOD HAZARD INFORMATION

SEE FIS REPORT FOR DETAILED LEGEND AND INDEX MAP FOR FIRM PANEL LAYOUT

THE INFORMATION DEPICTED ON THIS MAP AND SUPPORTING DOCUMENTATION ARE ALSO AVAILABLE IN DIGITAL FORMAT AT
HTTP://MSC.FEMA.GOV

| | |
|---|---|
| SPECIAL FLOOD HAZARD AREAS | Without Base Flood Elevation (BFE) *Zone A, V, A99*; With BFE or Depth *Zone AE, AO, AH, VE, AR*; Regulatory Floodway |
| OTHER AREAS OF FLOOD HAZARD | 0.2% Annual Chance Flood Hazard, Areas of 1% Annual Chance Flood with average depth less than one foot or with drainage areas of less than one square mile *Zone X*; Future Conditions 1% Annual Chance Flood Hazard *Zone X*; Area with Reduced Flood Risk due to Levee See Notes *Zone X* |
| OTHER AREAS | NO SCREEN Area of Minimal Flood Hazard *Zone X*; Area of Undetermined Flood Hazard *Zone D* |
| GENERAL STRUCTURES | Channel, Culvert, or Storm Sewer; Levee, Dike, or Floodwall |
| OTHER FEATURES | Cross Sections with 1% Annual Chance Water Surface Elevation (18.2 / 17.5); Coastal Transect; Coastal Transect Baseline; Profile Baseline; Hydrographic Feature; Base Flood Elevation Line (BFE); Limit of Study; Jurisdiction Boundary |

### NOTES TO USERS

For information and questions about this map, available products associated with this FIRM including historic versions of this FIRM, how to order products or the National Flood Insurance Program in general, please call the FEMA Map Information eXchange at 1-877-FEMA-MAP (1-877-336-2627) or visit the FEMA Map Service Center website at http://msc.fema.gov. Available products may include previously issued Letters of Map Change, a Flood Insurance Study Report, and/or digital versions of this map. Many of these products can be ordered or obtained directly from the website. Users may determine the current map date for each FIRM panel by visiting the FEMA Map Service Center website or by calling the FEMA Map Information eXchange.

Communities annexing land on adjacent FIRM panels must obtain a current copy of the adjacent panel as well as the current FIRM Index. These may be ordered directly from the Map Service Center at the number listed above.

For community and countywide map dates refer to the Flood Insurance Study report for this jurisdiction.

To determine if flood insurance is available in this community, contact your Insurance agent or call the National Flood Insurance Program at 1-800-638-6620.

Base map information shown on this FIRM was provided in digital format by New York State Cyber and Critical Infrastructure. This information was derived from digital orthophotography at a 0.5 foot ground resolution from imagery flown in April 2013.

LIMIT OF MODERATE WAVE ACTION: Zone AE has been divided by a Limit of Moderate Wave Action (LIMWA). The LIMWA represents the approximate landward limit of the 1.5-foot breaking wave. The effects of wave hazards between the VE Zone and the LIMWA (or between the shoreline and the LIMWA for areas where VE Zones are not identified) will be similar to, but less severe than those in the VE Zone.

Limit of Moderate Wave Action (LIMWA)

8/30/2022 4:16:27 PM

CONSULTANT INFORMATION
The LiRo Group
3 Aerial Way, Syosset, New York 11791
(516) 938-5476 www.liro.com

CONSULTANT SEAL
REGISTERED ARCHITECT ROBERT D. TOMASO 023280 STATE OF NEW YORK

| REVISION NUMBER | DATE | MADE BY | APP'D BY | REVISION |
|---|---|---|---|---|

RECORD DRAWING CERTIFICATION
☐ AS BUILT – CHANGES AS NOTED ☐ AS BUILT – NO CHANGES

CONTRACTOR
NAME
SIGNATURE
TITLE DATE

PROJECT COORDINATOR
NAME
SIGNATURE
TITLE DATE

WESTCHESTER COUNTY, NEW YORK
DEPARTMENT OF PUBLIC WORKS AND TRANSPORTATION
DIVISION OF ENGINEERING

INFRASTRUCTURE REHABILITATION - PHASE 3
PLAYLAND PARK, RYE, NEW YORK
FEMA MAPS

| | |
|---|---|
| CONTRACT NUMBER | 22-532 |
| SHEET NUMBER | T-05 |
| DWG NO.: | 6 of 664 |
| SCALE: | |
| DATE: | 08/23/2022 |
| DPW FILE NUMBER | 1-118-G-755-0 |
| REV. NO. | 0 |

## INFORMATION FOR THE CONTRACTOR

1. PLAYLAND MAINTENANCE AND OPERATIONS WILL BE ONGOING THROUGHOUT THE PARK AT ALL TIMES FOR THE DURATION OF THE CONTRACT. CONTRACTOR TO COOPERATE AND COORDINATE WITH OPERATIONS AS REQUIRED AND AS DIRECTED.
2. CONTRACTOR SHOULD BE AWARE THAT MULTIPLE CONTRACTORS WILL BE WORKING ON THE SITE CONCURRENTLY, AS INDICATED IN THIS DRAWING.
3. PROVIDE TEMPORARY SECURITY AS REQUIRED AND MAINTAIN ACCESS FOR EMERGENCY VEHICLES AT ALL TIMES.
4. ALSO REFER TO DETAILED SITE STAGING DRAWINGS FOR INDIVIDUAL CONTRACT COMPONENTS, FURTHER IN THIS DRAWING PACKAGE.
5. PROVIDE JOBSITE ENCLOSURE AS REQUIRED FOR PUBLIC SAFETY IN ALL AREAS OUTSIDE OF THE PARK SECURED AREA.

## PLAYLAND PARK CAPITAL CONTRACTS LEGEND

| KEY | CONTRACT # | SCOPE |
|---|---|---|
| | CONTRACT 19-502 | • SWITCHGEAR |
| | CONTRACT 20-530 | • INFRASTRUCTURE REHABILITATION - PHASE 2 |
| | CONTRACT 20-531 | • SITE IMPROVEMENTS |
| | CONTRACT 20-504 | • BATHHOUSE |
| | CONTRACT 21-541 | • EMERGENCY INFRASTRUCTURE REHABILITATION-PHASE 1 |
| | CONTRACT 21-542 | • EMERGENCY INFRASTRUCTURE REHABILITATION-PHASE 1 |
| | CONTRACT 22-523 | • INFRASTRUCTURE REHABILITATION - PHASE 3 |

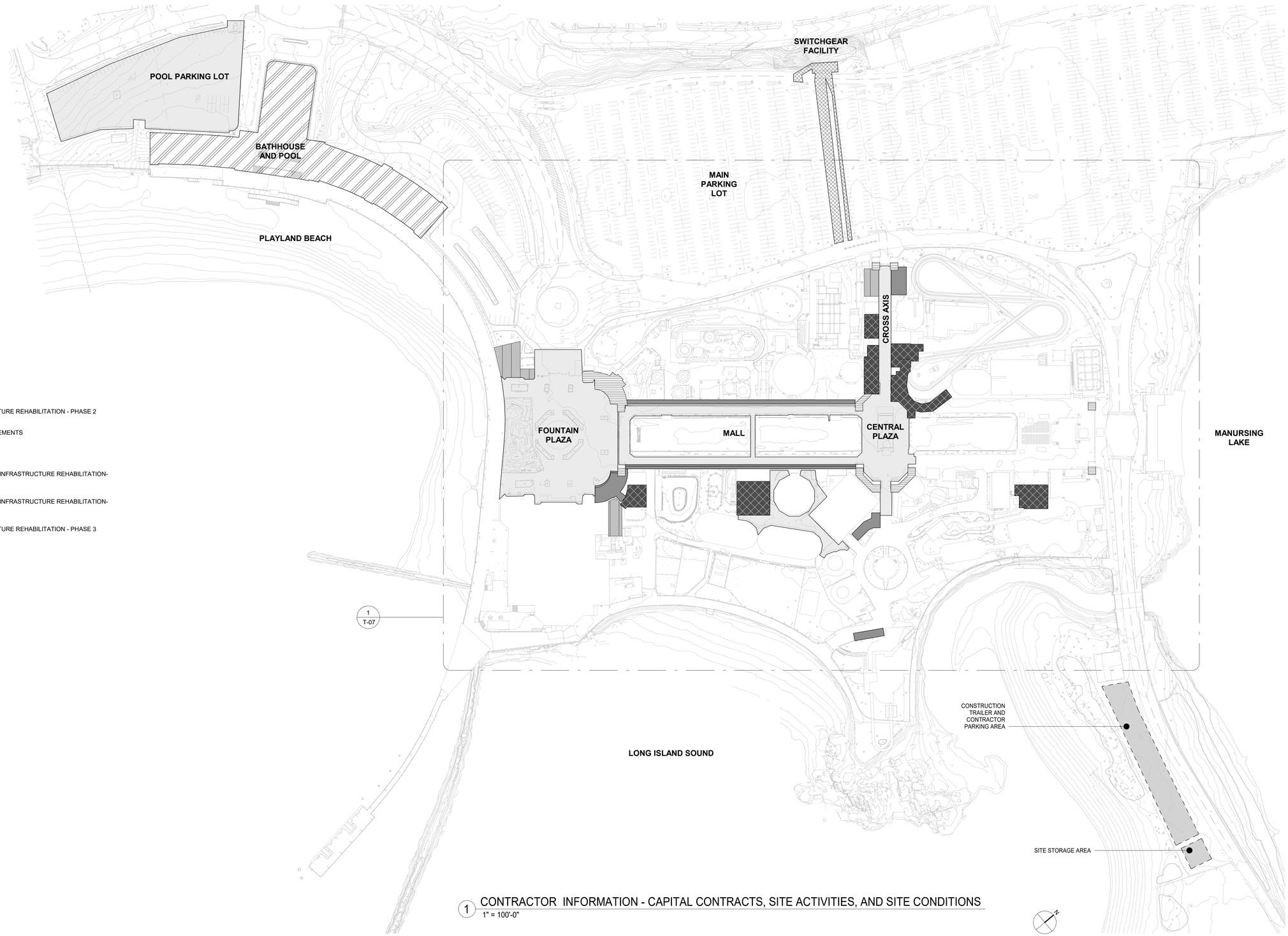


1 CONTRACTOR INFORMATION - CAPITAL CONTRACTS, SITE ACTIVITIES, AND SITE CONDITIONS
1" = 100'-0"

8/30/2022 4:16:28 PM

CONSULTANT INFORMATION
The LiRo Group
3 Aerial Way, Syosset, New York 11791
(516) 938-5476 www.liro.com

CONSULTANT SEAL
REGISTERED ARCHITECT ROBERT D. YOUNG JR. 023290 STATE OF NEW YORK

| REVISION NUMBER | DATE | MADE BY | APP'D BY | REVISION |
|---|---|---|---|---|

RECORD DRAWING CERTIFICATION
AS BUILT – CHANGES AS NOTED
AS BUILT – NO CHANGES

CONTRACTOR
NAME
SIGNATURE
TITLE DATE

PROJECT COORDINATOR
NAME
SIGNATURE
TITLE DATE

WESTCHESTER COUNTY, NEW YORK
DEPARTMENT OF PUBLIC WORKS AND TRANSPORTATION
DIVISION OF ENGINEERING

**INFRASTRUCTURE REHABILITATION - PHASE 3**
**PLAYLAND PARK, RYE, NEW YORK**
**CONTRACTOR INFORMATION - CAPITAL CONTRACTS, SITE ACTIVITIES, AND SITE CONDITIONS**

| | |
|---|---|
| CONTRACT NUMBER | 22-532 |
| SHEET NUMBER | T-06 |
| DWG NO.: | 7 of 664 |
| SCALE: | 1" = 100'-0" |
| DATE: | 08/23/2022 |
| DPW FILE NUMBER | 1-118-G-756-0 |
| REV. NO. | 0 |

## PLAYLAND PARK CAPITAL CONTRACTS LEGEND

| KEY | CONTRACT # | SCOPE |
|---|---|---|
| | CONTRACT 19-502 | • SWITCHGEAR |
| | CONTRACT 20-530 | • INFRASTRUCTURE REHABILITATION - PHASE 2 |
| | CONTRACT 20-531 | • SITE IMPROVEMENTS |
| | CONTRACT 20-504 | • BATHHOUSE |
| | CONTRACT 21-541 | • EMERGENCY INFRASTRUCTURE REHABILITATION- PHASE 1 |
| | CONTRACT 21-542 | • EMERGENCY INFRASTRUCTURE REHABILITATION- PHASE 1 |
| | CONTRACT 22-523 | • INFRASTRUCTURE REHABILITATION - PHASE 3 |

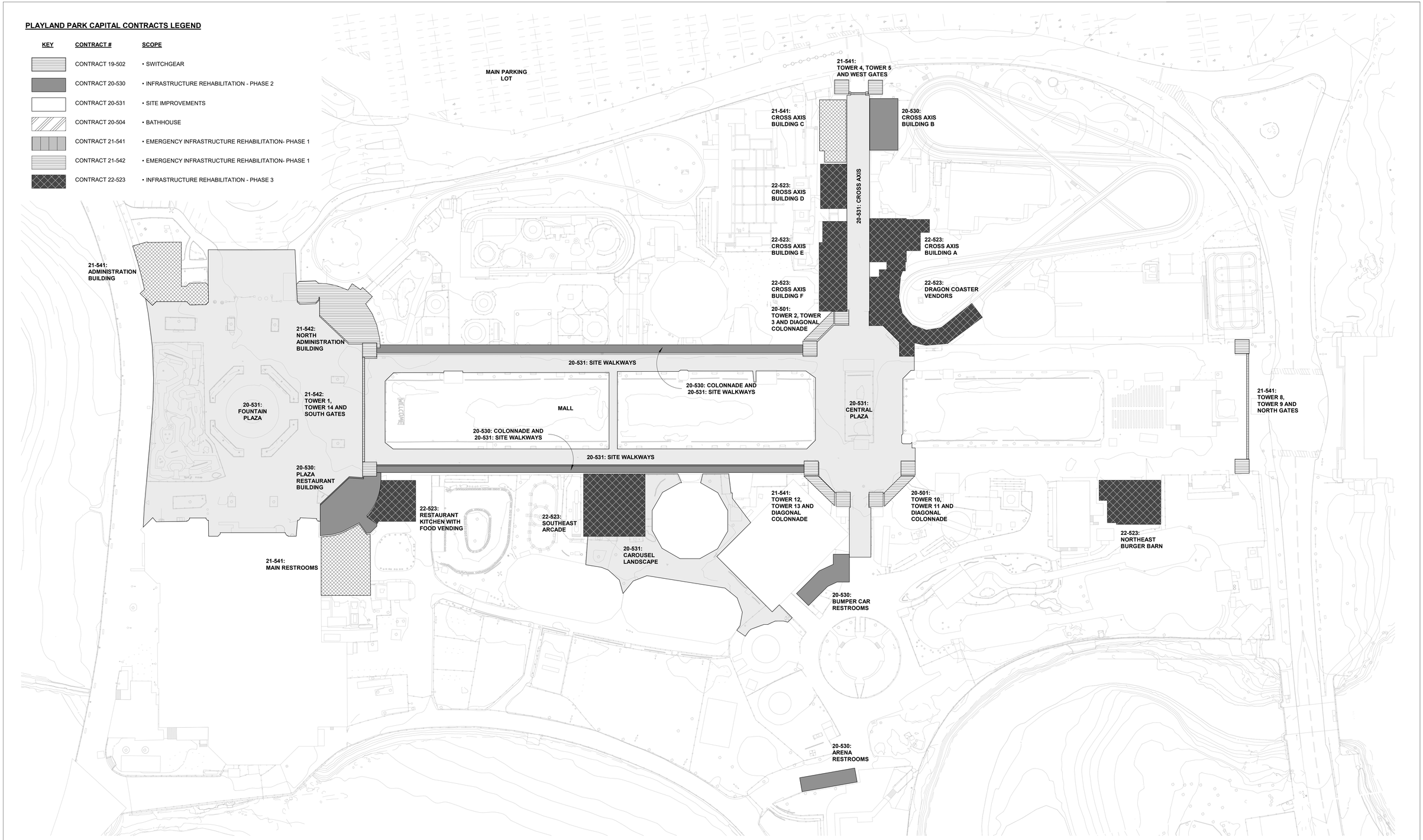


1 SITE PLAN DETAIL - CAPITAL CONTRACTS
1" = 50'-0"

8/30/2022 4:16:29 PM

CONSULTANT INFORMATION

The LiRo Group
3 Aerial Way, Syosset, New York 11791
(516) 938-5476 www.liro.com

CONSULTANT SEAL

REGISTERED ARCHITECT ROBERT D. TOWNSEND 023280 STATE OF NEW YORK

| REVISION NUMBER | DATE | MADE BY | APP'D BY | REVISION |
|---|---|---|---|---|

RECORD DRAWING CERTIFICATION

☐ AS BUILT – CHANGES AS NOTED ☐ AS BUILT – NO CHANGES

CONTRACTOR
NAME
SIGNATURE
TITLE DATE

PROJECT COORDINATOR
NAME
SIGNATURE
TITLE DATE

WESTCHESTER COUNTY, NEW YORK
DEPARTMENT OF PUBLIC WORKS AND TRANSPORTATION
DIVISION OF ENGINEERING

**INFRASTRUCTURE REHABILITATION - PHASE 3**
**PLAYLAND PARK, RYE, NEW YORK**
**CONTRACTOR INFORMATION - SITE PLAN DETAIL**

| | |
|---|---|
| CONTRACT NUMBER | 22-532 |
| SHEET NUMBER | T-07 |
| DWG NO.: | 8 of 664 |
| SCALE: | 1" = 50'-0" |
| DATE: | 08/23/2022 |
| DPW FILE NUMBER | 1-118-G-757-0 |
| REV. NO. | 0 |

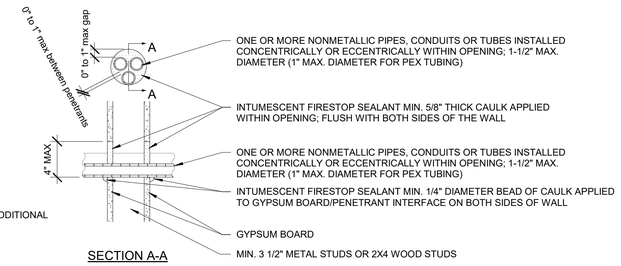


UL DESIGN: W-L-2300
REFER TO UL DESIGN FOR ADDITIONAL REQUIREMENTS

F RATING - 1 HOUR
T RATING - 0 HOUR

SECTION A-A

## 11 MULTIPLE NONMETALLIC PIPE FIRESTOPPING-
1 1/2" = 1'-0"

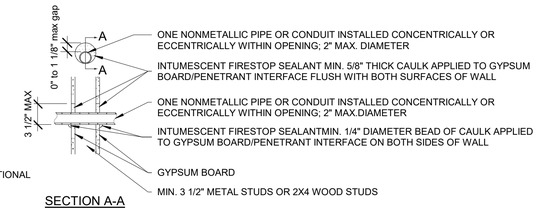


UL DESIGN: W-L-2299
REFER TO UL DESIGN FOR ADDITIONAL REQUIREMENTS

F RATING - 1 HOUR
T RATING - 0 HOUR

SECTION A-A

## 8 NONMETALLIC PIPE FIRESTOPPING
1" = 1'-0"

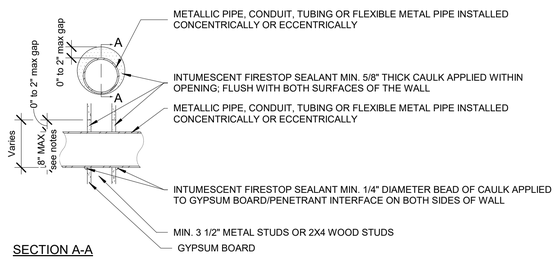


UL DESIGN: W-L-1296
REFER TO UL DESIGN FOR ADDITIONAL REQUIREMENTS

F RATING - 1 HOUR
T RATING - 0 HOUR

SECTION A-A

## 6 METALLIC PIPE FIRESTOPPING
1" = 1'-0"

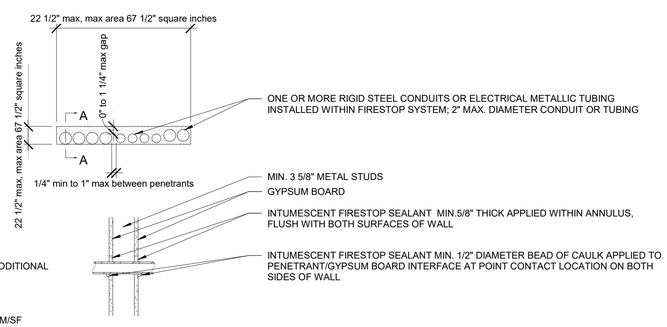


UL DESIGN: W-L-1228
REFER TO UL DESIGN FOR ADDITIONAL REQUIREMENTS

F RATING - 1 HOUR
T RATING - 0 HOUR
L RATING AT AMBIENT < 1 CFM/SF
L RATING AT 400 F - 2 CFM/SF

SECTION A-A

## 3 MULTIPLE METALLIC PIPE FIRESTOPPING
1" = 1'-0"

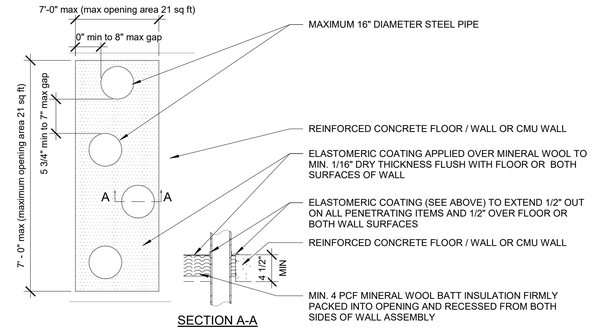


UL DESIGN: C-AJ-8106
REFER TO UL DESIGN FOR ADDITIONAL REQUIREMENTS

F RATING - 2 HOUR
T RATING - 0 HOUR

SECTION A-A

## 10 STEEL PIPE FIRESTOPPING
1" = 1'-0"

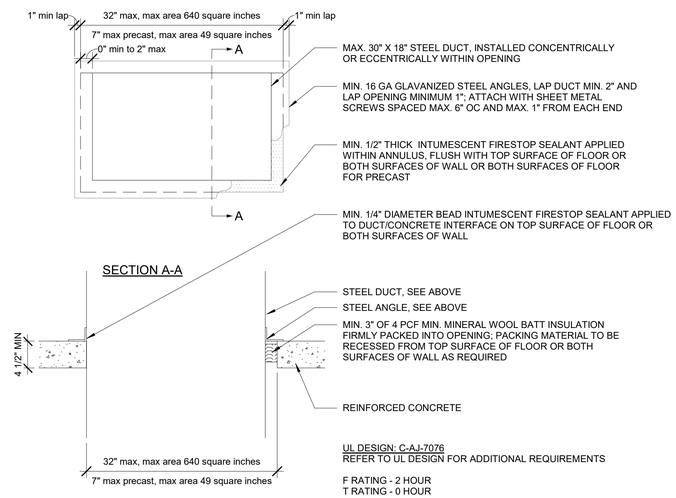


SECTION A-A

UL DESIGN: C-AJ-7076
REFER TO UL DESIGN FOR ADDITIONAL REQUIREMENTS

F RATING - 2 HOUR
T RATING - 0 HOUR

## 5 STEEL DUCT FIRESTOPPING
1" = 1'-0"

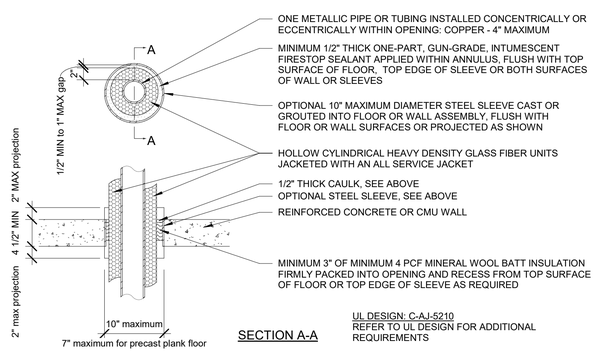


SECTION A-A

UL DESIGN: C-AJ-5210
REFER TO UL DESIGN FOR ADDITIONAL REQUIREMENTS

F RATING - 1 1/2 HOUR
T RATING - 1 HOUR

## 2 INSULATED METAL PIPE FIRESTOPPING
1" = 1'-0"

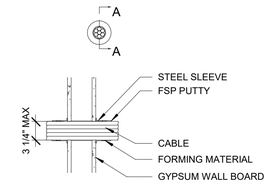


UL DESIGN: UL1479
REFER TO UL DESIGN FOR ADDITIONAL REQUIREMENTS

F RATING - 2 HOUR MAX

SECTION A-A

## 9 CABLE BUNDLE PARTITION FIRESTOPPING
1" = 1'-0"

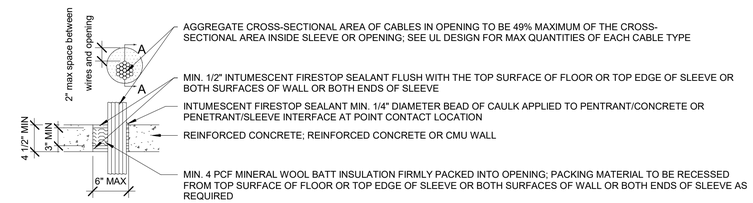


SECTION A-A

UL DESIGN: C-AJ-3200
REFER TO UL DESIGN FOR ADDITIONAL REQUIREMENTS

F RATING - 2 HOUR
T RATING - 1/4 HOUR

## 7 CABLE BUNDLE FIRESTOPPING
1" = 1'-0"

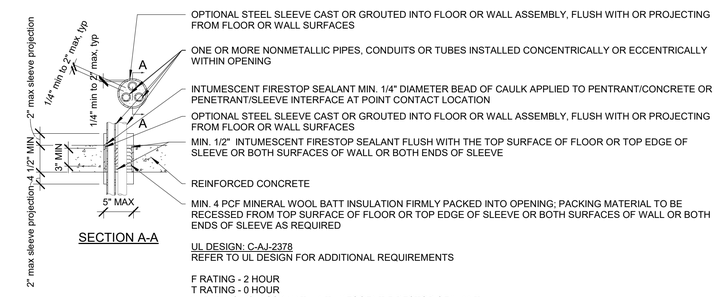


SECTION A-A

UL DESIGN: C-AJ-2378
REFER TO UL DESIGN FOR ADDITIONAL REQUIREMENTS

F RATING - 2 HOUR
T RATING - 0 HOUR
W RATING - CLASS 1 WITH INTUMESCENT FIRESTOP SEALANT

## 4 MULTIPLE NONMETALLIC PIPE FIRESTOPPING- CONCRETE FLOOR
1" = 1'-0"

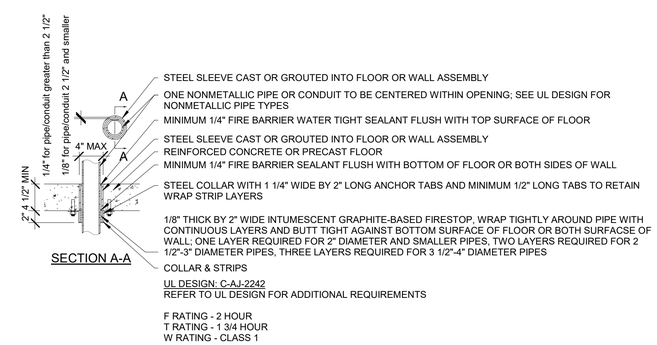


SECTION A-A

UL DESIGN: C-AJ-2242
REFER TO UL DESIGN FOR ADDITIONAL REQUIREMENTS

F RATING - 2 HOUR
T RATING - 1 3/4 HOUR
W RATING - CLASS 1

## 1 NONMETALLIC PIPE FIRESTOP COLLAR W/ SLEEVE
1" = 1'-0"

8/30/2022 4:16:31 PM

CONSULTANT INFORMATION

The LiRo Group
3 Aerial Way, Syosset, New York 11791
(516) 938-5476 www.liro.com

CONSULTANT SEAL

REGISTERED ARCHITECT ROBERT D. CONNIGLIO 023280 STATE OF NEW YORK

| REVISION NUMBER | DATE | MADE BY | APP'D BY | REVISION |
|---|---|---|---|---|

RECORD DRAWING CERTIFICATION

☐ AS BUILT – CHANGES AS NOTED ☐ AS BUILT – NO CHANGES

CONTRACTOR
NAME
SIGNATURE
TITLE DATE

PROJECT COORDINATOR
NAME
SIGNATURE
TITLE DATE

WESTCHESTER COUNTY, NEW YORK
DEPARTMENT OF PUBLIC WORKS AND TRANSPORTATION
DIVISION OF ENGINEERING

**INFRASTRUCTURE REHABILITATION - PHASE 3**
**PLAYLAND PARK, RYE, NEW YORK**
**FIRESTOPPING DETAILS 1 OF 2**

| | |
|---|---|
| CONTRACT NUMBER | 22-532 |
| SHEET NUMBER | T- 08 |
| DWG NO.: | 9 of 664 |
| SCALE: | As indicated |
| DATE: | 08/23/2022 |
| DPW FILE NUMBER | 1-118-G-758-0 |
| REV. NO. | 0 |

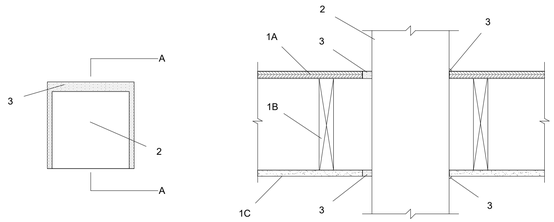


SECTION A-A

1A. **FLOORING SYSTEM -** LUMBER OR PLYWOOD SUBFLOOR WITH FINISH FLOOR OF LUMBER
1B. **WOOD JOISTS -** NOM 10 IN. DEEP (OR DEEPER) LUMBER
1C. **GYPSUM BOARD* -** THICKNESS, TYPE, NUMBER OF LAYERS AND FASTENERS AS REQUIRED IN THE INDIVIDUAL FLOOR-CEILING DESIGN.

2. **STEEL DUCT -** SQUARE OR RECTANGULAR DUCT FORMED FROM NO. 28 GAUGE (OR HEAVIER) GALVANIZED STEEL.

3. **FILL, VOID OR CAVITY MATERIAL* - SEALANT -** MIN 3/4 IN. THICKNESS OF FILL MATERIAL APPLIED WITHIN THE ANNULUS, FLUSH WITH THE TOP SURFACE OF THE FLOOR OR SOLE PLATE.

**SYSTEM NO. F-C-7023**
REFER TO UL DESIGN FOR ADDITIONAL REQUIREMENTS

F RATINGS - 1 HR
T RATING- 1/4 HR

## 6 STEEL DUCT FLOOR/ CEILING- F-C-7023
1 1/2" = 1'-0"

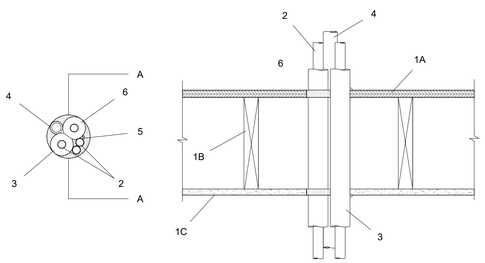


SECTION A-A

1A. **FLOORING SYSTEM -** LUMBER OR PLYWOOD SUBFLOOR WITH FINISH FLOOR OF LUMBER, PLYWOOD
1B. **WOOD JOISTS -** NOM 10 IN. DEEP (OR DEEPER) LUMBER, STEEL OR COMBINATION LUMBER AND STEEL JOISTS
1C. **GYPSUM BOARD* -** THICKNESS, TYPE, NUMBER OF LAYERS AND FASTENERS AS REQUIRED IN THE INDIVIDUAL FLOOR-CEILING DESIGN. MAX DIAM OF OPENING IS 4-1/2 IN.

2. **THROUGH PENETRANT -** ONE OR MORE METALLIC PIPES, CONDUITS OR TUBING TO BE INSTALLED EITHER CONCENTRICALLY OR ECCENTRICALLY WITHIN THE OPENING.

3. **TUBE INSULATION - PLASTICS# -** NOM 1 IN. THICK ACRYLONITRILE BUTADIENE/POLYVINYL CHLORIDE (AB/PVC) FLEXIBLE FOAM FURNISHED IN THE FORM OF TUBING.

4. **NONMETALLIC THROUGH PENETRANT -** ONE NONMETALLIC PIPE, CONDUIT OR TUBE TO BE INSTALLED WITHIN THE FIRESTOP SYSTEM.

5. **CABLES -** MAX TWO 4 PAIR NO. 18 AWG (OR SMALLER) CABLES WITH PVC INSULATION AND JACKETING.

6. **FILL, VOID OR CAVITY MATERIAL* - CAULK OR SEALANT -** MIN 3/4 IN. THICKNESS OF FILL MATERIAL APPLIED WITHIN THE ANNULUS, FLUSH WITH THE TOP SURFACE OF THE FLOOR OR SOLE PLATE.

**SYSTEM NO. F-C-8021**
REFER TO UL DESIGN FOR ADDITIONAL REQUIREMENTS

F RATINGS - 1 HR
T RATING- 1/2 HR AND 1 HR (SEE ITEM 2)

## 4 MULTIPLE THROUGH PENETRANT FLOOR/CEILING - F-C-8021
1 1/2" = 1'-0"

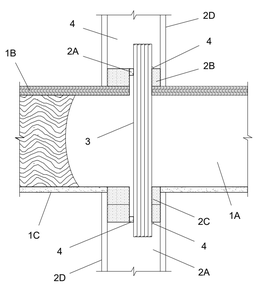


1A. **WOOD JOISTS -** NOM 10 IN. DEEP (OR DEEPER) LUMBER
1B. **FLOORING SYSTEM -** LUMBER OR PLYWOOD SUBFLOOR WITH FINISH FLOOR OF LUMBER. MAX DIAM OF FLOOR OPENING IS 3 IN.
1C. **GYPSUM BOARD* -** THICKNESS, TYPE, NUMBER OF LAYERS AND FASTENERS SHALL BE AS SPECIFIED IN THE INDIVIDUAL FLOOR-CEILING DESIGN. MAX DIAM OF OPENING IS 3 IN.

2A. **STUDS -** NOM 2 BY 4 IN., 2 BY 6 IN. OR DOUBLE NOM 2 BY 4 IN. LUMBER STUDS.
2B. **SOLE PLATE -** NOM 2 BY 4 IN. OR 2 BY 6 IN. LUMBER PLATES OR DOUBLE NOM 2 BY 4 IN. LUMBER PLATES TIGHTLY BUTTED TOGETHER.
2C. **TOP PLATE -** THE SINGLE OR DOUBLE TOP PLATE SHALL CONSIST OF ONE OR TWO NOM 2 BY 4 IN. OR NOM 2 BY 6 IN. LUMBER PLATES OR ONE OR TWO SETS OF PARALLEL NOM 2 BY 4 IN.
2D. **GYPSUM BOARD* -** MIN 1/2 IN. THICK GYPSUM BOARD.

3. **CABLES -** CABLES TO BE RIGIDLY SUPPORTED ON BOTH SIDES OF THE FLOOR-CEILING ASSEMBLY.

4. **FILL, VOID OR CAVITY MATERIAL* - SEALANT -** MIN 1/2 IN. THICKNESS OF FILL MATERIAL APPLIED AROUND CABLE BUNDLE WITHIN THE ANNULUS ON TOP SURFACE OF CHASE WALL SOLE PLATE OR TOP SURFACE OF FLOOR.

**SYSTEM NO. F-C-3010**
REFER TO UL DESIGN FOR ADDITIONAL REQUIREMENTS

F RATINGS - 1 HR
T RATING- 1 HR

## 2 ELECTRICAL/ TELECOM/ DATA CABLES - F-C-3010
1 1/2" = 1'-0"

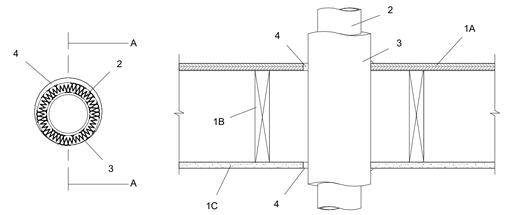


SECTION A-A

1A. **FLOORING SYSTEM -** LUMBER OR PLYWOOD SUBFLOOR WITH FINISH FLOOR OF LUMBER, PLYWOOD AS SPECIFIED IN THE INDIVIDUAL FLOOR-CEILING DESIGN.
1B. **WOOD JOISTS -** NOM 10 IN. DEEP (OR DEEPER) LUMBER
1C. **GYPSUM BOARD* -** THICKNESS, TYPE, NUMBER OF LAYERS AND FASTENERS AS REQUIRED IN THE INDIVIDUAL FLOOR-CEILING DESIGN.

2. **THROUGH PENETRANTS -** ONE METALLIC PIPE OR TUBING TO BE INSTALLED EITHER CONCENTRICALLY OR ECCENTRICALLY WITHIN THE OPENING.

**3. PIPE COVERING**

4. **FILL, VOID OR CAVITY MATERIAL* - SEALANT -** MIN 3/4 IN. THICKNESS OF FILL MATERIAL APPLIED WITHIN THE ANNULUS, FLUSH WITH THE TOP SURFACE OF THE FLOOR OR SOLE PLATE. MIN 5/8 IN. THICKNESS OF FILL MATERIAL APPLIED WITHIN THE ANNULUS, FLUSH WITH BOTTOM SURFACE OF CEILING OR TOP PLATE.

SYSTEM NO: F-C-5043
REFER TO UL DESIGN FOR ADDITIONAL REQUIREMENTS

F RATING - 1 HOUR
T RATING - 3/4 AND 1 HR REFER TO UL DESIGN FOR ADDITIONAL INFORMATION

## 5 FLOOR/ CEILING PIPE COVERING- F-C-5043
1 1/2" = 1'-0"

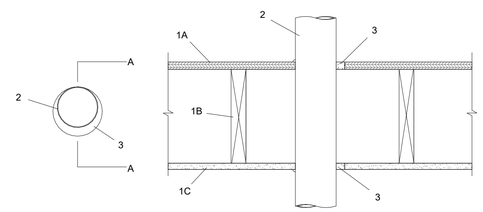


SECTION A-A

**THE F AND FH RATINGS OF THE FIRESTOP SYSTEM ARE EQUAL TO THE FIRE RATING OF THE FLOOR-CEILING ASSEMBLY**. :
1A. **FLOORING SYSTEM -** LUMBER OR PLYWOOD SUBFLOOR WITH FINISH FLOOR OF LUMBER.
1B. **WOOD JOISTS -** NOM 10 IN. DEEP (OR DEEPER) LUMBER.
1C. **GYPSUM BOARD* -** THICKNESS, TYPE, NUMBER OF LAYERS AND FASTENERS AS REQUIRED IN THE INDIVIDUAL FLOOR-CEILING DESIGN. DIAM OF OPENING TO BE MAX 1 IN. GREATER THAN DIAM OF PIPE.

2. **THROUGH PENETRANT -** ONE METALLIC PIPE, CONDUIT OR TUBING TO BE INSTALLED EITHER CONCENTRICALLY OR ECCENTRICALLY WITHIN THE OPENING.

3. **FILL, VOID OR CAVITY MATERIAL* - SEALANT -** MIN 3/4 IN. THICKNESS OF FILL MATERIAL APPLIED WITHIN THE ANNULUS, FLUSH WITH THE TOP SURFACE OF THE FLOOR OR SOLE PLATE. MIN 5/8 IN. THICKNESS OF FILL MATERIAL APPLIED WITHIN THE ANNULUS, FLUSH WITH BOTTOM SURFACE OF CEILING OR TOP PLATE.

**SYSTEM NO. F-C-1074**
REFER TO UL DESIGN FOR ADDITIONAL REQUIREMENTS

F RATINGS - 1 AND 2 HR (SEE ITEM 1)
T RATING- 1/4, 1/2 AND 1HR REFER TO UL DESIGN FOR ADDITIONAL INFORMATION

## 3 FLOOR/ CEILING METALLIC PIPE - F-C-1074
1 1/2" = 1'-0"

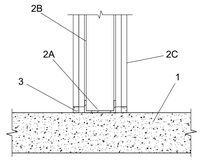


**1. FLOOR ASSEMBLY** - MIN 4-1/2 IN. THICK REINFORCED LIGHTWEIGHT OR NORMAL WEIGHT STRUCTURAL CONCRETE.

2**A. STEEL FLOOR RUNNER** - FLOOR RUNNERS OF WALL ASSEMBLY SHALL CONSIST OF MIN NO. 25 GAUGE GALV STEEL CHANNELS SIZED TO ACCOMMODATE STEEL STUDS (ITEM 2C). FLOOR RUNNERS TO BE PROVIDED WITH MIN 1-1/4 IN. FLANGES. RUNNERS SECURED WITH STEEL FASTENERS SPACED 12 IN. OC.
2**B. STUDS** - STEEL STUDS TO BE MIN 3-1/2 IN. WIDE. STUDS CUT 1/2 TO 3/4 IN. LESS IN LENGTH THAN ASSEMBLY HEIGHT WITH BOTTOM NESTING IN, RESTING ON AND FASTENED TO FLOOR RUNNER WITH SHEET METAL SCREWS.
2**C. GYPSUM BOARD*** - GYPSUM BOARD INSTALLED TO A MIN TOTAL THICKNESS OF 5/8 OR 1-1/4 IN. ON EACH SIDE OF WALL FOR A 1 OR 2 HR RATED WALL, RESPECTIVELY.

THE HOURLY FIRE RATING OF THE JOINT SYSTEM IS EQUAL TO THE HOURLY FIRE RATING OF THE WALL.

**3. FILL,VOID OR CAVITY MATERIAL* - CAULK OR SEALANT** - MAX SEPARATION BETWEEN TOP OF FLOOR AND BOTTOM OF GYPSUM BOARD IS 1 IN. MIN 5/8 IN. THICKNESS OF FILL MATERIAL INSTALLED ON EACH SIDE OF THE WALL BETWEEN THE BOTTOM OF THE GYPSUM BOARD AND THE TOP OF THE CONCRETE FLOOR, FLUSH WITH EACH SURFACE OF THE WALL.

**SYSTEM NO.BW-S-0007**

ASSEMBLY RATINGS - 1 AND 2 HR (SEE ITEM 2)
L RATING AT AMBIENT - LESS THAN 1 CFM/LIN FT
L RATING AT 400° F - LESS THAN 1 CFM/LIN FT
JOINT WIDTH - 1 IN. MAX

## 1 JOINT BOTTOM OF WALL STATIC- BWS0007
1 1/2" = 1'-0"

8/30/2022 4:16:31 PM


CONSULTANT INFORMATION
The LiRo Group
3 Aerial Way, Syosset, New York 11791
(516) 938-5476 www.liro.com


CONSULTANT SEAL
REGISTERED ARCHITECT ROBERT D. VOLKMANN 023220 STATE OF NEW YORK

| REVISION NUMBER | DATE | MADE BY | APP'D BY | REVISION |
|---|---|---|---|---|

RECORD DRAWING CERTIFICATION
☐ AS BUILT – CHANGES AS NOTED ☐ AS BUILT – NO CHANGES

CONTRACTOR
NAME
SIGNATURE
TITLE DATE

PROJECT COORDINATOR
NAME
SIGNATURE
TITLE DATE

WESTCHESTER COUNTY, NEW YORK
DEPARTMENT OF PUBLIC WORKS AND TRANSPORTATION
DIVISION OF ENGINEERING

**INFRASTRUCTURE REHABILITATION - PHASE 3**
**PLAYLAND PARK, RYE, NEW YORK**
**FIRESTOPPING DETAILS 2 OF 2**

| | |
|---|---|
| CONTRACT NUMBER | 22-532 |
| SHEET NUMBER | T- 09 |
| DWG NO.: | 10 of 664 |
| SCALE: | 1 1/2" = 1'-0" |
| DATE: | 08/23/2022 |
| DPW FILE NUMBER | 1-118-G-759-0 |
| REV. NO. | 0 |

## SYMBOLS:

### LIGHTING AND POWER

| SYMBOL | DESCRIPTION |
|---|---|
| 7 | HOMERUN TO PANEL OR EQUIPMENT AS NOTED. CONDUIT SHALL BE 3/4"C, 2#12 & 1#12 GND. U.O.N.. NUMBER INDICATES CIRCUIT |
| | HOMERUN TO PANEL OR EQUIPMENT AS NOTED. CONDUIT SHALL BE 3/4"C, 2#12 & 1#12 GND. U.O.N. |
| | EXISTING CONDITIONS |
| | EXPOSED CONDUIT RUN |
| E | UNDERGROUND ELECTRICAL DUCTBANK |
| | CONDUIT TURNING UP |
| | CONDUIT TURNING DOWN |
| | BARE COPPER GROUND OR LPS COPPER WIRE ROPE |
| (J) [J] | CEILING MOUNTED JUNCTION/SPLICE BOX, SIZE AS REQUIRED. SUBSCRIPT 'F' INDICATES FLOOR MOUNTED. |
| | GROUND |
| [J] | JUNCTION BOX/FLEXIBLE CONDUIT FOR EQUIPMENT CONNECTION WITH POWER AND GROUND WIRES. 'SEALTITE' AS REQUIRED. |
| | MOTOR STARTER, SIZE 1 STARTERS UNLESS OTHERWISE NOTED. |
| | LIGHTING AND POWER PANELBOARD, SURFACE MOUNTED ON WALL. |
| RP | RELAY LIGHTING PANEL |
| $S_a$ | SINGLE POLE TOGGLE SWITCH. SUBSCRIPT DENOTES FIXTURES CONTROLLED. 'K' INDICATES KEY OPERATED. '3' INDICATES THREE-WAY SWITCH. |
| RS | WALL MOUNTED DUPLEX THREE WIRE GROUNDED RECEPTACLE, 20A, 125V. MOUNTED AT 18" AFF. R- RECEPTACLE, 5-CIRCUIT, (F)-FLUSH MOUNTED, (GFI)-GROUND FAULT INTERRUPTER, (WP)-WEATHERPROOF BOX-LOCKABLE, (FL) FLOOR |
| R 5 | QUADRUPLEX THREE WIRE GROUNDED RECEPTACLE, 20A, 125V. MOUNTED AT 18" AFF. R-RECEPTACLE, 5-CIRCUIT, (F)-FLUSH MOUNTED, (GFI)-GROUND FAULT INTERRUPTER, (WP)-WEATHERPROOF BOX-LOCKABLE |
| [R] | REMOTE CONTROL SWITCH/RELAY. RATING AS REQUIRED OR INDICATED. |
| | CIRCUIT BREAKER. |
| (C#) | CABLE & CONDUIT ID |
| | AIR TERMINAL / LIGHTNING PROTECTION |
| | REMOVALS FOR RESTORATION OR TO BE DISCARDED (AS NOTED) |
| 100AF 25AT 3P | CIRCUIT BREAKER:<br>AF DENOTES AMP FRAME<br>AT DENOTES AMP TRIP<br>3P DENOTES NUMBER OF POLES<br>(SHALL BE 3 POLE UNLESS OTHERWISE NOTED) |
| | WALL MOUNTED EXIT LIGHT. DIRECTIONAL ARROWS INDICATES THE TRAVEL DIRECTION. |
| [D] | DISCONNECT |
| | COPPER CLAD GROUND ROD |
| X 1 | LIGHTING FIXTURE IDENTIFICATION<br>X - INDICATES FIXTURE TYPE<br>1 - INDICATES CIRCUIT NO. |
| (PS) | PHOTOCELL |

*FOR ALL LIGHTING CONTROLS SYMBOLS SEE LIGHTING CONTROL DRAWINGS WITHIN EACH PACKAGE.

## GENERAL REQUIREMENTS

1. THE WORK COVERED BY THESE SPECIFICATIONS AND THE DRAWINGS CONSISTS OF REMOVAL OF EXISTING EQUIPMENT AND COMPONENTS AND FURNISHING NEW EQUIPMENT, MATERIALS, LABOR AND SERVICES PROVIDE COMPLETE AND FUNCTIONAL ELECTRICAL WORK AS SHOWN ON THE DRAWINGS.
2. WORK SHALL BE DONE IN ACCORDANCE WITH ALL APPLICABLE CODES, LAWS, RULES AND REGULATIONS. CONTRACTOR SHALL OBTAIN AND PAY FOR PERMITS, INSPECTIONS, FEES, ETC..
3. CONTRACTOR SHALL VISIT THE SITE AND VERIFY ALL FIELD CONDITIONS, DIMENSIONS AND DISTANCES BEFORE STARTING THE WORK. CONTRACTOR SHALL REPORT DISCREPANCIES TO OWNER AND ENGINEER FOR RESOLUTION.
4. A WORK SCHEDULE SHALL BE SUBMITTED TO THE OWNER FOR APPROVAL. WORK REQUIRING INTERRUPTION TO EXISTING SERVICES SHALL BE PERFORMED AT TIMES APPROVED BY THE OWNER. NO SYSTEM SHALL BE SHUT DOWN, DISCONNECTED OR REMOVED WITHOUT PRIOR APPROVAL.
5. THE CONTRACTOR SHALL BE RESPONSIBLE FOR THE SAFE-KEEPING OF HIS OWN PROPERTY ON THE JOB SITE. OWNER ASSUMES NO RESPONSIBILITY FOR PROTECTION OF PROPERTIES AGAINST FIRE, THEFT AND ENVIRONMENTAL CONDITIONS.
6. AN INSULATED GROUND CONDUCTOR SHALL BE INSTALLED WITH ALL NEW POWER CIRCUITS. ALL CONDUCTORS SHALL BE COPPER, ALL POWER PANEL BUSSES SHALL BE COPPER.
7. PROVIDE ALL REQUIRED CONDUITS, WIREWAYS, CABLES, FITTINGS, PULLBOXES, HANGERS, SUPPORTS, MISCELLANEOUS STRUCTURAL STEEL SLEEVES, ETC FOR A COMPLETED AND FUNCTIONAL ELECTRICAL SYSTEM.
8. SEALTIGHT FLEXIBLE CONDUITS SHALL BE INSTALLED TO CONNECT MOTORS AND EQUIPMENT SUBJECT TO VIBRATION, AND SHALL NOT EXCEED 18". PROVIDE GROUNDING STRAP ACROSS FLEXIBLE CONDUIT.
9. SUBMIT SHOP DRAWINGS FOR APPROVAL FOR ALL MATERIALS AND EQUIPMENT. NO SUBMISSION WILL BE ACCEPTED WITHOUT THE SIGNED APPROVAL OF THE CONTRACTOR.
10. PRIOR TO FINAL PAYMENT, CONTRACTOR SHALL PROVIDE TO OWNER ONE SET OF REPRODUCIBLE AS-BUILT/RECORD DRAWINGS. DRAWINGS SHALL CLEARLY INDICATE ALL PIPE AND ELECTRICAL CONDUIT ROUTING ON PLANS AS WELL AS ALL DEVIATIONS FROM THE CONTRACT DOCUMENTS.
11. THE TERM "FURNISH" SHALL MEAN TO OBTAIN AND SUPPLY TO THE JOB SITE. THE TERM "INSTALL" SHALL MEAN TO FIX IN POSITION AND CONNECT FOR USE. THE TERM "PROVIDE" SHALL MEAN FURNISH AND INSTALL.
12. EQUIPMENT, MATERIAL AND WORKMANSHIP SHALL BE GUARANTEED IN WRITING AGAINST DEFECTS FOR ONE YEAR FOLLOWING DATE OF ACCEPTANCE. DEFECTS SHALL BE CORRECTED IMMEDIATELY AT NO COST TO THE OWNER.
13. ALL ELECTRICAL WORK SHALL COMPLY WITH THE REQUIREMENTS OF THE NATIONAL ELECTRICAL CODE, LATEST EDITION (NFPA-70), DEPARTMENT OF LICENSES AND INSPECTIONS, AND ANY OTHER AUTHORITIES THAT MAY HAVE JURISDICTION THEREOF.
14. DRAWINGS ARE INTENDED TO SHOW APPROXIMATE AND RELATIVE LOCATIONS OF EQUIPMENT. DRAWINGS SHALL BE SCALED TO DETERMINE LENGTHS, LOCATIONS OR CLEARANCES.
15. ELECTRICAL WORK SHALL BE COORDINATED BY THE CONTRACTOR WITH OTHER TRADES INVOLVED IN THE CONSTRUCTION PROJECT. ALL WORK SHALL BE CAREFULLY LAID OUT IN ADVANCE, COORDINATING ELECTRICAL FEATURES WITH ARCHITECTURAL, STRUCTURAL, AND MECHANICAL FEATURES OF CONSTRUCTION.
16. LISTINGS: ALL EQUIPMENT AND MATERIALS FOR WHICH UNDERWRITERS LABORATORIES, INC. PROVIDES PRODUCT LISTING SERVICE SHALL BE UNDERWRITERS LABORATORIES APPROVED AND BEAR THE U.L. LABEL.
17. CONTRACTOR SHALL PERFORM ALL OPERATIONS NECESSARY TO INSTALL, ADJUST AND PUT INTO SATISFACTORY OPERATION ALL ELECTRICAL EQUIPMENT. CONTRACTOR SHALL INSURE THAT PHASE ROTATIONS IS CONSISTENT FOR THE SYSTEM.
18. ALL NEW WIRING CONDUCTORS SHALL BE COPPER. MINIMUM WIRE SIZE SHALL BE #12 UNLESS NOTED OTHERWISE.
19. ALL GROUNDING SHALL BE PER THE REQUIREMENTS OR ARTICLE 250 OF THE NATIONAL ELECTRICAL CODE.
20. ELECTRICAL DRAWINGS ARE ESSENTIALLY DIAGRAMMATIC, LOCATIONS OF EQUIPMENT ARE SHOWN TO SCALE WHERE POSSIBLE BUT MAY BE DISTORTED FOR CLARITY. IT IS NOT WITHIN THE SCOPE OF THE DRAWINGS TO SHOW ALL NECESSARY BENDS, OFFSETS AND OBSTRUCTIONS. INCLUDE ALL WORKS TO CONFORM THE STRUCTURE, PRESERVE HEADROOM AND KEEP OPENINGS AND PASSAGEWAYS CLEAR.
21. NO HOLES OR RECESSES MAY BE CUT IN WALLS, FLOORS, CEILINGS, OR ANY PART OF THE BUILDING TO ADMIT CONDUIT OR OTHER WORK OF THIS CONTRACT WITHOUT PRIOR SUBMISSION TO AND REVIEW AND APPROVAL BY OWNER AND/OR ENGINEER. WORK SHALL BE PERFORMED BY COMPETENT PERSONS SKILLED IN THIS FIELD IN A NEAT AND CRAFTSMAN LIKE MANNER. ANY CUTTING, DRILLING, CORING, ETC. SHALL BE DONE CORRECTLY TO MINIMIZE THE SPREAD OF DUST. PROVIDE DUST PROTECTION AS APPROVED BY OWNER AND/OR ENGINEER. THE PORTIONS CUT MUST BE RESTORED TO THEIR ORIGINAL CONDITION. INCLUDE ALL COSTS FOR ALL CUTTING AND PATCHING REQUIRED FOR THE ELECTRICAL WORK IN THE BASE BID EXACT LOCATION OF CONDUIT PENETRATION(S) SHALL BE DETERMINED IN FIELD.
22. PROVIDE AND INSTALL SLEEVES AND APPROVED FOR PENETRATIONS THROUGH BLOCK OR CONCRETE WALLS AND FLOORS.
23. OBTAIN ALL REQUIRED PERMITS AND ARRANGE FOR ALL REQUIRED INSPECTIONS FOR THE EXECUTION OF ELECTRICAL WORK. PROVIDE ALL INSTRUMENTS AND EQUIPMENT AS NECESSARY TO PERFORM ALL TESTS REQUIRED BY THE AUTHORITIES HAVING JURISDICTION. CORRECT ALL FAILURES AND REPLACE ANY DAMAGED PORTIONS OF THE WORK RESULTING FROM TESTS. THIS SHALL INCLUDE ALL COSTS ASSOCIATED WITH THE TESTS, PERMITS AND/OR FEES.
24. ALL WORK SHALL BE PERMANENTLY AND EFFECTIVELY GROUNDED WHETHER OR NOT SUCH CONNECTIONS ARE SPECIFICALLY SHOWN OR SPECIFIED. GROUND RESISTANCE AT ANY POINT SHALL NOT EXCEED THE REQUIREMENT OF THE NEC.

## GENERAL REQUIREMENTS CONTINUED

25. CONTRACTOR SHALL PROVIDE FOR ALL MATERIAL AND LABOR REQUIRED FOR COMPLETE INSTALLATION(S) AS SHOWN AND AS SPECIFIED TO THE COMPLETE SATISFACTION OF THE OWNER AND/OR ENGINEER.
26. CONTRACTOR SHALL CAREFULLY EXAMINE THE DRAWINGS AND SPECIFICATIONS, VISIT THE SITE OF THE WORK AND FULLY BECOME INFORMED AS TO ALL CONDITIONS AND MATTERS THAT CAN, IN ANY WAY, AFFECT THE WORK OR THE COST THEREOF. SHOULD THERE BE DISCREPANCIES BETWEEN EXISTING CONDITIONS AND NEW WORK FROM THE DRAWINGS, SPECIFICATIONS OR OTHER DOCUMENTS, OR BE IN DOUBT AS TO THEIR MEANING, NOTIFY THE OWNER AND/OR THE ENGINEER AT ONCE, IN WRITING, OF ANY DISCREPANCIES AND OBTAIN CLARIFICATION PRIOR TO SUBMITTING ANY BID. ABSENCE OF SUCH NOTIFICATION SHALL BE INTERPRETED TO INDICATE NO DISCREPANCIES OR CONFLICTS EXIST. ADDITIONAL COMPENSATION SHALL NOT BE GRANTED AFTER AWARD OF CONTRACT FOR ANY WORK NECESSARY TO COMPLY WITH THESE REQUIREMENTS.
27. CONDITIONS OF THE SITE: THE ACT OF SUBMITTING A BID SHALL BE EVIDENCE THAT THE CONTRACTOR HAS PROPERLY EXAMINED THE SITE AND FAMILIARIZED HIMSELF WITH ALL EXISTING CONDITIONS WITHIN THE SCOPE OF THIS WORK AND ACCEPTED SUCH CONDITIONS, AND MADE ALLOWANCES THEREFORE IN PREPARING THE COSTS.
28. THE DRAWINGS MAY NOT SHOW COMPLETE OR ACCURATE DETAILS OF THE EXISTING BUILDING IN EVERY RESPECT. EXACT LOCATIONS AND RELATIONSHIPS ARE TO BE DETERMINED IN THE FIELD AND THE WORK SHALL BE CONSTRUCTED TO THE SATISFACTION OF THE ENGINEER.
29. EXAMINE ALL CONTRACT DRAWINGS AND COOPERATE WITH OTHER CONTRACTORS PROVIDING LABOR, MATERIALS AND OTHER WORK, SO THAT THE WORK AS A WHOLE SHALL BE EXECUTED AND COMPLETED WITHOUT CONFLICT OR DELAY. VERIFY WITH OTHER TRADES THE LOCATIONS OF DEVICES, EQUIPMENT, VOLTAGE AND PHASE, BEFORE COMMENCING ANY WORK. WORK INSTALLED IMPROPERLY DUE TO NON-COORDINATION SHALL BE CHANGED AND CORRECTED AT NO ADDITIONAL COST.
30. REMOVAL AND RELOCATION OF CERTAIN EXISTING WORK MAY BE NECESSARY FOR THE PERFORMANCE OF GENERAL WORK. ALL EXISTING CONDITIONS ARE NOT COMPLETELY DETAILED ON THE DRAWINGS. SURVEY THE SITE AND MAKE ALL NECESSARY MODIFICATIONS REQUIRED BASED ON EXISTING CONDITIONS. FOR DEMOLITION OF EXISTING WORK, INCLUDE ALL MATERIALS AND LABOR IN THE BID PRICE. NO ALLOWANCE SHALL BE MADE FOR FAILURE TO DO SO.

## GENERAL DEMOLITION NOTES

1. REMOVE FROM SITE ALL ITEMS DESIGNATED TO BE REMOVED. REMOVE ALL OUTLETS, BOXES, SUPPORTS, STEMS, DISCONNECT SWITCHES, ETC. RELATED TO ITEMS DESIGNATED TO BE REMOVED. UNLESS OTHERWISE SPECIFIED IN GENERAL, ALL CONDUIT AND WIRING SERVING REMOVED ITEMS SHALL BE REMOVED BACK TO THE SOURCE OF SUPPLY.
2. THE DRAWINGS DO NOT PURPORT TO SHOW ALL OBJECTS EXISTING AT THE SITE. BEFORE COMMENCING THE WORK, THE CONTRACTOR MUST VERIFY AT THE SITE ALL OBJECTS TO BE REMOVED OR PRESERVED, AND REPORT ANY DISCREPANCIES OR QUESTIONABLE ITEMS.
3. THE CONTRACTOR SHALL USE ALL MEANS NECESSARY TO PROTECT EXISTING OBJECTS NOT SHOWN TO BE REMOVED AND/OR EQUIPMENT DESIGNATED TO REMAIN, AND IN THE EVENT OF DAMAGE, IMMEDIATELY MAKE ALL REPAIRS AND REPLACEMENTS NECESSARY TO RESTORE SAID OBJECT AND EQUIPMENT TO THEIR ORIGINAL STATE PRIOR TO COMMENCING WORK.
4. ALL ELECTRICAL MATERIAL REMOVED DURING CONSTRUCTION SHALL BECOME THE PROPERTY OF THE CONTRACTOR AND SHALL BE REMOVED FROM THE PREMISES AND LEGALLY DISPOSED OF UNLESS OTHERWISE INDICATED.
5. COVER AND PROTECT ALL FLOORS, WALLS, CEILINGS AND FINISHES DURING DEMOLITION OPERATIONS. ANY FINISHES OR SURFACES DISTURBED AS A RESULT OF THE WORK IN THIS CONTRACT, SHALL BE REPAIRED AND PAINTED TO MATCH EXISTING.
6. CONTRACTOR SHALL NOT ALLOW RUBBISH AND DEMOLISHED ELECTRICAL MATERIAL ACCUMULATE. DEMOLISHED MATERIAL SHALL BE REMOVED ON A DAILY BASIS AND THE PREMISES SHALL BE KEPT AS CLEAN AND EMPTY AS POSSIBLE DURING DEMOLITION. ALL REMOVED MATERIAL SHALL BE DISPOSED OF BY LEGAL MEANS.
7. UNLESS NOTED OTHERWISE REMOVE ALL EXPOSED CONDUIT AND WIRING BACK TO THE SOURCE OF SUPPLY, INCLUDING CONDUIT AND WIRING ABOVE ACCESSIBLE CEILING FINISHES, WHERE SHOWN ON THE DRAWINGS.
8. REMOVE DIRT, DEBRIS, TRASH, ETC. AT THE END OF EACH DAY. BROOM CLEAN CONSTRUCTION AREA AT COMPLETION OF PROJECT TO THE SATISFACTION OF THE OWNER.
9. CONTRACTOR IS ADVISED, VARIOUS PROJECT DEMOLITION DRAWINGS REFER TO EXISTING CONDUIT, JUNCTION BOXES, DEVICES, ETC. TO REMAIN AND BE SUPPORTED DURING THE PHYSICAL DEMOLITION OF THE COLONNADES. THESE MAY NO LONGER BE IN USE OR ACTUALLY FEED-THROUGH CIRCUITS TO OTHER AREAS. CONTRACTOR SHALL PROVIDE 30 MAN-HOURS OF LABOR IN HIS/HER BID FOR THE INVESTIGATION AND TRACING OUT/DUCUMENT THE USAGE OF VARIOUS CONDUITS AS SHOWN TO REMAIN. REPORT FINDING TO THE ENGINEER FOR FURTHER DIRECTION.

## SPECIAL INSPECTIONS:

SPECIAL INSPECTIONS SHALL BE CARRIED OUT WITH APPLICABLE BUILDING CODE SECTIONS INCLUDING BUT NOT LIMITED TO THE FOLLOWING:

A. FIRE-RESISTANT PENETRATIONS AND JOINTS / BC 1704.27

## ABBREVIATIONS:

A
- A — AMPERE
- AC — ALTERNATING CURRENT
- AFF — ABOVE FINISHED FLOOR
- ARCH — ARCHITECTURAL
- ATS — AUTOMATIC TRANSFER SWITCH
- A/C — AIR CONDITIONING
- AL — ALUMINUM

C
- C — CONDUIT
- CAB — CABINET
- CLG — CEILING
- CB — CIRCUIT BREAKER
- CKT(S) — CIRCUIT(S)
- COL — COLUMN
- CU — COPPER

D
- DEC — DECORATIVE LIGHTING
- DISC — DISCONNECT
- DWG — DRAWING

E
- EC — EMPTY CONDUIT
- ELEC — ELECTRIC
- EMR — ELEVATOR MECHANICAL ROOM
- ETR — EXISTING TO REMAIN
- EXH — EXHAUST
- EXIST — EXISTING

F
- FL — FLOOR

G
- G — GUARD
- GND — GROUND
- GFI — GROUND FAULT INTERRUPTER
- GRC — GALVANIZED RIGID CONDUIT

I
- IG — ISOLATED GROUND

J
- JB — JUNCTION BOX

K
- KVA — KILOVOLT AMPERE
- KW — KILOWATT
- KWH — KILOWATT HOUR

L
- LP — LIGHTING PANEL
- LPS — LIGHTNING PROTECTION SYSTEM
- LS — LOUDSPEAKER
- LTG — LIGHTING

M
- MATV — MASTER TELEVISION
- MCC — MOTOR CONTROL CENTER
- MCP — MINI POWER CENTER
- MECH — MECHANICAL
- MER — MECHANICAL EQUIPMENT ROOM
- MIC — MICROPHONE
- MTD — MOUNTED

N
- N — NEUTRAL
- N.C. — NORMALLY CLOSED
- N.O. — NORMALLY OPEN

O
- OVD — OVERRIDE

P
- P — POLE(S)
- PB — PULL BOX
- PNL — PANEL

R
- RC — REMOTE CONTROL
- RGS — RIGID GALVANIZED STEEL

S
- SP — SPARE
- SSB — SOLID STATE BALLAST
- STD — STANDARD
- SW — SWITCH
- SWBD — SWITCHBOARD

T
- TEL — TELEPHONE
- TV — TELEVISION
- TYP — TYPICAL

U
- U.O.N. — UNLESS OTHERWISE NOTED

V
- V — VOLT

W
- W — WATT
- WP — WEATHERPROOF

## CONDUIT SEPARATION REQUIREMENTS

AV SYSTEM WIRING IS DIVIDED INTO SEPARATE WIRING GROUPS ACCORDING TO THEIR NOMINAL VOLTAGE LEVELS. THESE WIRING GROUPS MUST NEVER BE INTERMIXED WITHIN COMMON CONDUITS, RACEWAYS, OR JUNCTION BOXES. ANY WIRING CLASSIFIED WITHIN A GIVEN GROUP CAN BE COMBINED IN CONDUIT CARRYING OTHER WIRING FROM THE SAME GROUP.

AV WIRING TYPES

| | VOLTAGE LEVELS | CIRCUIT TYPES |
|---|---|---|
| GROUP A | 0 TO 100 mV | MICROPHONES<br>SENSITIVE CIRCUITS |
| GROUP B | 100 mV TO 10 V | AUDIO TIE LINES<br>VIDEO TIE LINES<br>DATA TIE LINES<br>DIGITAL CIRCUITS<br>CONTROL CIRCUITS |
| GROUP C | 10 V TO 70 V | LOUDSPEAKERS<br>CONTROL CIRCUITS |
| GROUP D | N/A | FIBER OPTICS |
| GROUP E | 120 V | AUDIO VIDEO TECHNICAL POWER (AVTP) |

AV CONDUIT SEPARATION

| | GROUP A | GROUP B | GROUP C | GROUP D | GROUP E |
|---|---|---|---|---|---|
| GROUP A | ADJACENT | 1 FOOT | 1 FOOT | ADJACENT | 2 FEET |
| GROUP B | 1 FOOT | ADJACENT | 1 FOOT | ADJACENT | 2 FEET |
| GROUP C | 1 FOOT | 1 FOOT | ADJACENT | ADJACENT | 1 FOOT |
| GROUP D | ADJACENT | ADJACENT | ADJACENT | ADJACENT | 1 FOOT |
| GROUP E | 2 FEET | 2 FEET | 1 FOOT | 1 FOOT | ADJACENT |
| 120 V BRANCH CIRCUITS | 2 FEET | 2 FEET | 1 FOOT | 1 FOOT | 1 FOOT |
| DIMMER CONTROLLED LIGHTING | 2 FEET | 2 FEET | 1 FOOT | 1 FOOT | 1 FOOT |
| SCR CONTROLLED DEVICES | 3 FEET | 3 FEET | 2 FEET | 1 FOOT | 1 FOOT |
| HIGH VOLTAGE FEEDER CIRCUITS | 6 FEET | 6 FEET | 3 FEET | 1 FOOT | 1 FOOT |
| ALL OTHERS (PLUMBING, HEAT, ETC.) | 2 FEET | 2 FEET | 2 FEET | 2 FEET | 2 FEET |
| | | | | | |

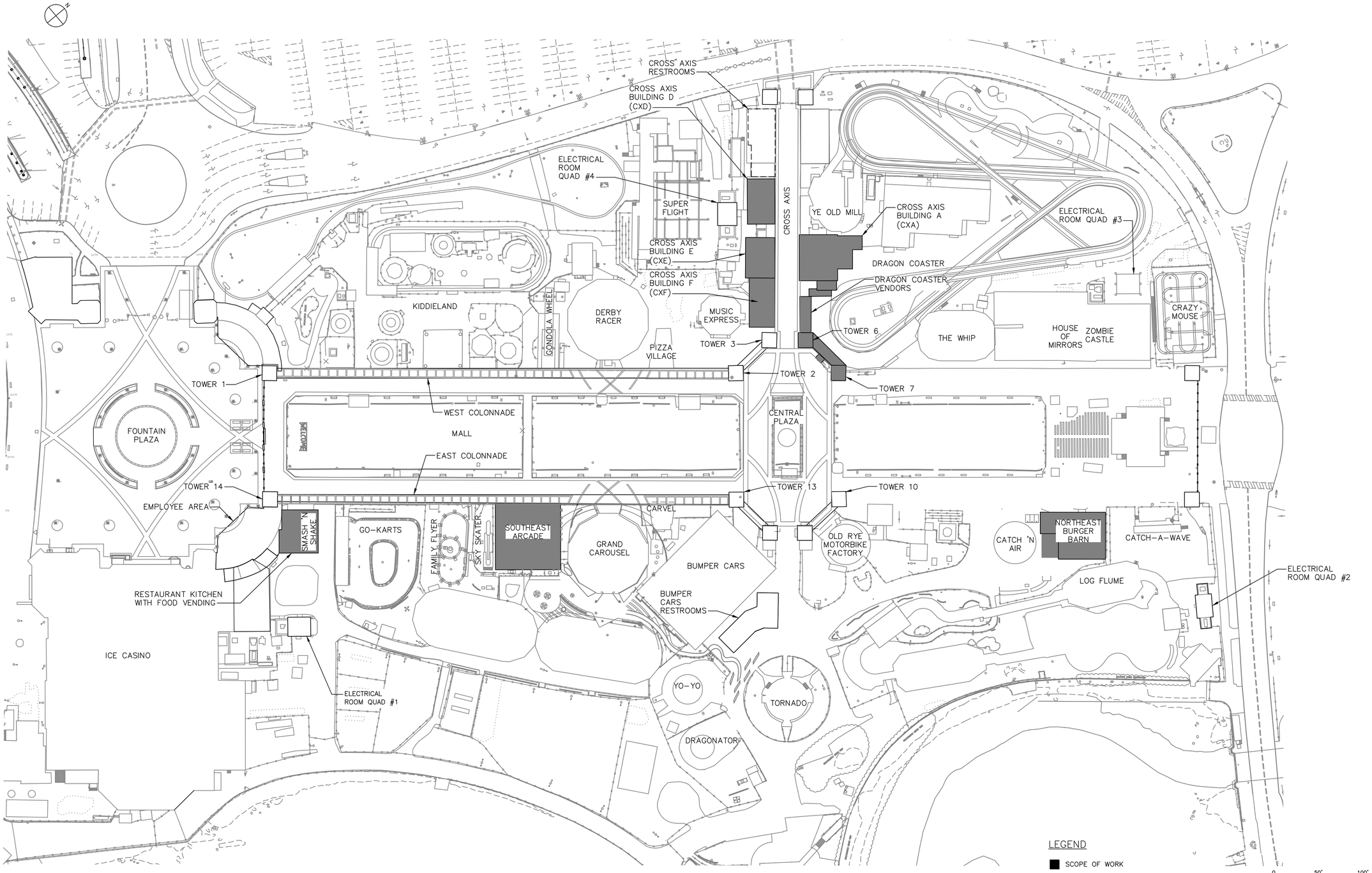


SITE PLAN
SCALE: 1" = 50'

Drawing Name: G:\SavinAutocad\2060\25-Playland-Mega-3\GE\GE002.dwg
Rev#: Projectname: ---- Comments: ----
Printed by: MGodby Date: 30 August 2022 8:44 AM Designed by: ----
Xrefs: [TB_24X36_WestchesterCo_3.dwg] [TSG-SVLOGO.dwg] [TWS-SP0001.dwg] [TWC-SP0001.dwg] [SITE_PAVING.dwg

CONSULTANT INFORMATION
Savin Engineers, P.C.

CONSULTANT SEAL
STATE OF NEW YORK
STEVEN A. MARTINO
083631
LICENSED PROFESSIONAL ENGINEER

| REVISION NUMBER | DATE | MADE BY | APP'D BY | REVISION |
|---|---|---|---|---|

RECORD DRAWING CERTIFICATION
☐ AS BUILT – CHANGES AS NOTED ☐ AS BUILT – NO CHANGES

CONTRACTOR
NAME
SIGNATURE
TITLE DATE

PROJECT COORDINATOR
NAME
SIGNATURE
TITLE DATE

WESTCHESTER COUNTY, NEW YORK
DEPARTMENT OF PUBLIC WORKS AND TRANSPORTATION
DIVISION OF ENGINEERING

**INFRASTRUCTURE REHABILITATION - PHASE 3**
**PLAYLAND PARK, RYE, NEW YORK**
**GENERAL**
**SITE PLAN**

| | |
|---|---|
| CONTRACT NUMBER | 22-523 |
| SHEET NUMBER | GE-E-02 |
| DWG NO.: | |
| SCALE: | AS SHOWN |
| DATE: | 8/23/2022 |
| DPW FILE NUMBER | 1-118-G-761-0 |
| REV. NO. | 0 |

12 of 664

## LIGHTING FIXTURE SCHEDULE

| SYMBOL | TYPE | MOUNTING | LUMENS-WATTS | DESCRIPTION | ACCEPTABLE MANUFACTURER'S CATALOG NUMBERS | |
|---|---|---|---|---|---|---|
| | B1 | BOLLARD | 1242-25 | EXTERIOR BOLLARD<br>(PARKS STANDARD - MATCH EXISTING) | CYCLONE LIGHTING<br>CBM1701C FGF 5 25W 3K 120 NONE NONE BZ TX MG | PARKS STANDARD -<br>NO EXCEPTIONS TAKEN |
| | C1 | CEILING | 5358-45 | TOWER CEILING LIGHTING<br>(SURFACE MOUNT) | BEGHELLI USA<br>BS400LED HT MO WT30 120-277V | OR APPROVED EQUAL |
| | EM | WALL / CEILING | - | INTERIOR EMERGENCY LIGHT<br>(ALL AREAS) | HOLOPHANE<br>DSL46 SP1100L UVOLT LTP SDRT | OR APPROVED EQUAL |
| | EX | WALL / CEILING | - | EXIT LIGHT - SINGLE FACE/DOUBLE FACE LED SELF POWERED WITH DUAL VOLTAGE 120V. RED LETTERS ON STENCIL FACE PANEL, UNIVERSAL ARROWS | LITHONIA LIGHTING<br>LE P W 2 R EL N TP SD | OR APPROVED EQUAL |
| | F1 | ROOF | 69360-510 | SITE FLOOD LIGHTS<br>(TOWER ROOF) | UTOPIA LIGHTING<br>STL 2G 535LED 30K UNV WH O40 | OR APPROVED EQUAL |
| | F2 | ROOF | 39000-300 | DRAGON COASTER FLOOD LIGHTS | TOPAZ LIGHTING<br>F-FL/300/40K/TR-87 | OR APPROVED EQUAL |
| | H2 | ROOF | - | HALF LANTERN FIXTURES (TOWERS)<br>3000 LUMENS, 0-10V DIMMING<br>CUSTOM - SEE ARCH. DWGS | AURORA LAMPWORKS, INC.<br>(718) 384-6039 | GRAND LIGHT<br>https://grandlight.com/<br>203-828-6596 |
| | H3 | ROOF | - | ACORN HISTORICAL GLASS FIXTURE<br>(NORTH COLONNADE ROOFTTOP - TOWER ROOF)<br>CUSTOM - SEE ARCH. DWGS | AURORA LAMPWORKS, INC.<br>(718) 384-6039 | GRAND LIGHT<br>https://grandlight.com/<br>203-828-6596 |
| | H6 | ROOF | - | EXTERIOR REFURBISHED FINIAL HISTORICAL FIXTURE<br>(LOCATED ON "GAMES" SIGNAGE FOR CXA, CXE)<br>CUSTOM - SEE ARCH. DWGS | AURORA LAMPWORKS, INC.<br>(718) 384-6039 | GRAND LIGHT<br>https://grandlight.com/<br>203-828-6596 |
| | L1 | SURFACE | 2800-28 | INTERIOR LINEAR LIGHT | DAYOLITE<br>PRFL24 D FL 35 SO 4 S W DIM10 | OR APPROVED EQUAL |
| | L3 | PENDANT | 6023-45 | PENDANT LIGHT FOR<br>SERVICE ROOMS & ATTIC SPACES | UTOPIA LIGHTING<br>DW LP 4 45LED 40K HE UNV IAF GR DP EMG8 | OR APPROVED EQUAL |
| | L4 | PENDANT | 2800-28 | INTERIOR LINEAR LIGHT | DAYOLITE<br>PRFL24 D FL 35 SO 4 P D W DIM10 | OR APPROVED EQUAL |
| | L5 | WALL | 3.5W/FT<br>115LPW<br>LENGTHS VARY | RIBBON EMBEDDED LED / ASSOCIATED FIXTURE DRIVER<br>(TOWER MURAL PANELS)<br>SEE ARCH. DWGS | LUMEN WARM<br>LWDY1 *XCU ACL CFDY DYBK HPC420 35K<br>*XCU - CONFIRM LENGTHS WITH ARCHITECT /<br>LUMEN WARM<br>LW DIM TRC 0 10V 100-277VAC CV 24V XXW IP67 JBX | OR APPROVED EQUAL |
| | L6 | POST | 1100-75 | RESTAURANT KITCHEN ROOFTOP SIGNAGE<br>HOUSING / LED BULB | INCON LIGHTING 85315-E26 /<br>CREE LIGHTING A19 75W P1 30K E26 U1 | OR APPROVED EQUAL |
| | M1 | ROOF | 600-10 | MARQUEE SKYWARD FACING CUSTOM BENDING<br>(COLONNADE ROOF) | CELESTIAL LIGHTING<br>AQR-Q-GC-12-SC-SAT-*XRCV<br>*XRCV SEE ARCHITECTURAL PLANVIEWS FOR LINEAR FOOT | OR APPROVED EQUAL |
| | M2 | CEILING /<br>EXTERIOR SOFFIT | 600-10 | MARQUEE DOWNWARD FACING SKY LIGHTS<br>(CXD EXTERIOR SOFFIT, CANOPY) | CELESTIAL LIGHTING<br>AQR-Q-GC-12-SC-SAT | OR APPROVED EQUAL |
| | R2 | EXTERIOR SOFFIT | 1000-12 | RECESSED CAN FIXTURE / HOUSING<br>(EXTERIOR SOFFIT - VARIOUS BUILDINGS - SEE PLANS) | LIGHTHEADED LIGHTING<br>2 115 T 11 C BRO40-30-8010 / D4B-F-R-T-3-P-120 | OR APPROVED EQUAL |
| | R2A | INTERIOR SOFFIT | 1000-9 | RECESSED CAN FIXTURE / HOUSING<br>(INTERIOR HALLWAY - SEE PLANS) | LIGHTHEADED LIGHTING<br>2 120 T 11 NICS BRO40 30 8010 / D4B-F-RT-3-P-120 | OR APPROVED EQUAL |
| | R6 | CEILING | 1302-13 | CROSS AXIS PORCH LIGHTING<br>(CEILING - SURFACE MOUNT) | INTENSE LIGHTING<br>SS4G4DS L2 358 I200 ICS430 HZ SFW | OR APPROVED EQUAL |
| | R7 | EXTERIOR SOFFIT | 1131-20 | 2" RECESSED DOWNLIGHT<br>(LOCATED IN "GAMES" SIGNAGE FOR CXA, CXE) | GOTHAM LIGHTING<br>EV02HYP 30/15 X* X* X* MVOLT UGZ<br>*X COORDINATE COLOR FINISHES WITH ARCHITECT | OR APPROVED EQUAL |
| | S2 | CEILING | - | INTERIOR SUSPENDED LED LIGHT LARGE<br>(BURGER BARN) | HOLOPHANE INDOOR LIGHTING<br>02454 SERIES 24N 20DIN 12 L W X* F1 LAMP<br>*XFT COORDINATE STEM LENGTH WITH ARCHITECT | OR APPROVED EQUAL |
| | T1 | KNUCKLE<br>UP LIGHT | 1466-18 | TREE UPLIGHT WITH SHORT FLUSH EXTERNAL CAP AND INTEGRAL HONEYCOMB LOUVER. 30K COLOR TEMPERATURE. | ACUITY BRANDS LIGHTING - HYDREL<br>PALM BR P1 80CRI 30K 120 25DEG WSL KM IHL C1 BRT | OR APPROVED EQUAL |
| | U1 | INTERIOR SOFFIT | 2300-24 | INTERIOR SOFFIT - SERVICE & UTILITY ROOMS | LIGHTHEADED LIGHTING<br>2 120 T 01 WHO BRO40 30 8023 | OR APPROVED EQUAL |
| | U3 | CEILING | 4700-42 | RECESSED WET LOCATION TROFFER 2x2<br>(KITCHENS) | LITHONIA LIGHTING<br>2WRTL F L24 5000LM MVOLT GZ1 40K 90CRI E10WCP | OR APPROVED EQUAL |
| | U4 | WALL<br>UP LIGHT | | BURGER BARN DECORATIVE TOWER<br>INTERIOR UPLIGHT | | OR APPROVED EQUAL |

SEQUENCE OF LIGHTING OPERATIONS:

GENERAL: ALL LIGHTING CONTROLS SHALL BE FROM THE SAME MANUFACTURER. ALL LIGHTING CONTROL DEVICES MUST BE CAPABLE OF CONNECTION TO MASTER SYSTEM (FUTURE CONTRACT).

DINING ROOM, OFFICES & GAMES:

- ALL THE DEVICES ARE CONNECTED TO THE LOCAL SPACE'S OWN NETWORK AND ALL LIGHTING CONTROL SHALL CONTROL ONLY THAT SPACE. BY DEFAULT, NORMAL LIGHTING LOAD IS TURNED ON AUTOMATICALLY BY CEILING MOUNTED OCCUPANCY SENSORS. UPON 15 MINUTES OF VACANCY DETECTED, THE NORMAL LIGHTING LOAD SHALL TURN THE SPACE'S LIGHTING FIXTURES OFF.
- OCCUPANCY SENSORS ARE THE ONLY CONTROLS ASSOCIATED WITH THE SPACE'S LIGHTING FIXTURES. THE SPACE SHALL BE PROGRAMMED TO TURN ON THE LIGHTS AT 100% OF THE LIGHTING FIXTURE OUTPUT RATING UPON DETECTION OF OCCUPANCY OR TURN OFF THE LIGHTS TO 0% OF THE LIGHTING FIXTURE OUTPUT RATING UPON DETECTION OF VACANCY AFTER 15 MINUTES. THE OCCUPANCY SENSORS SHALL USE BOTH PASSIVE INFRARED AND MICROPHONIC TECHNOLOGIES. BOTH TECHNOLOGIES WITHIN THE SENSOR MUST DETECT AN OCCUPANT IN THE SPACE IN ORDER TO TURN ON THE SPACE'S LIGHTING FIXTURES, BUT ONLY ONE OF THE TECHNOLOGIES NEED TO REMAIN ACTIVATED AND CONTINUALLY SENSE OCCUPANCY IN ORDER FOR THE LIGHTING FIXTURES TO REMAIN ON. DUAL–TECHNOLOGY SENSORS SHALL BE SELF–ADAPTIVE TO AUTOMATICALLY ADJUST SENSITIVITY AND TIMING.

SPRINKLER/ELECTRICAL/UTILITY ROOMS, STORAGE/ATTIC SPACES & KITCHENS:

- DUE TO LIFE SAFETY REQUIREMENTS, ALL NORMAL LIGHTING ASSOCIATED FIXTURES WITHIN THE SPACE SHALL BE CONTROLLED AND OPERATED VIA A MANUAL 120 VOLT ON/OFF LIGHT SWITCH.

EXTERIOR LIGHTING:

SUMMARY: PHOTOSENSOR–CONTROLLED NORMAL LIGHTING LOAD

- ALL EXTERIOR LIGHTING SHALL BE PHOTOSENSOR CONTROLLED VIA A RELAY PANEL. OUTDOOR LIGHTING SHALL BE ON DURING DUSK TO DAWN.
- APPLIES TO EXTERIOR SOFFITS, FLOODLIGHTS, COLONNADE LIGHTING, CROSS AXIS PORCH LIGHTING, AND TOWER LIGHTING.
- REFER TO DT–E–01 FOR EXTERIOR LIGHTING WIRING DETAIL.
-

Drawing Name: G:\SavinAutocad\2060\25-Playland-Mega-3\GE\GE003.dwg
Projectname: 211001F02 Comments: ----
Printed by: MGoaby Date: 30 August 2022 8:44 AM Designed by: ----
Rev#:
Xrefs: [TB_24X36_WestchesterCo_3.dwg] [TSG-SVLOGO.dwg]

CONSULTANT INFORMATION

Savin Engineers, P.C.

CONSULTANT SEAL

STATE OF NEW YORK · STEVEN A. MARTINO · 083631 · LICENSED PROFESSIONAL ENGINEER

| REVISION NUMBER | DATE | MADE BY | APP'D BY | REVISION |
|---|---|---|---|---|
| | | | | |

RECORD DRAWING CERTIFICATION

☐ AS BUILT – CHANGES AS NOTED ☐ AS BUILT – NO CHANGES

CONTRACTOR
NAME
SIGNATURE
TITLE DATE

PROJECT COORDINATOR
NAME
SIGNATURE
TITLE DATE

WESTCHESTER COUNTY, NEW YORK
DEPARTMENT OF PUBLIC WORKS AND TRANSPORTATION
DIVISION OF ENGINEERING

INFRASTRUCTURE REHABILITATION - PHASE 3
PLAYLAND PARK, RYE, NEW YORK
GENERAL
LIGHTING FIXTURE SCHEDULE

CONTRACT NUMBER 22-523
SHEET NUMBER GE-E-03
DWG NO.:
SCALE: AS SHOWN
DATE: 8/23/2022
DPW FILE NUMBER 1-118-G-762-0
REV. NO. 0

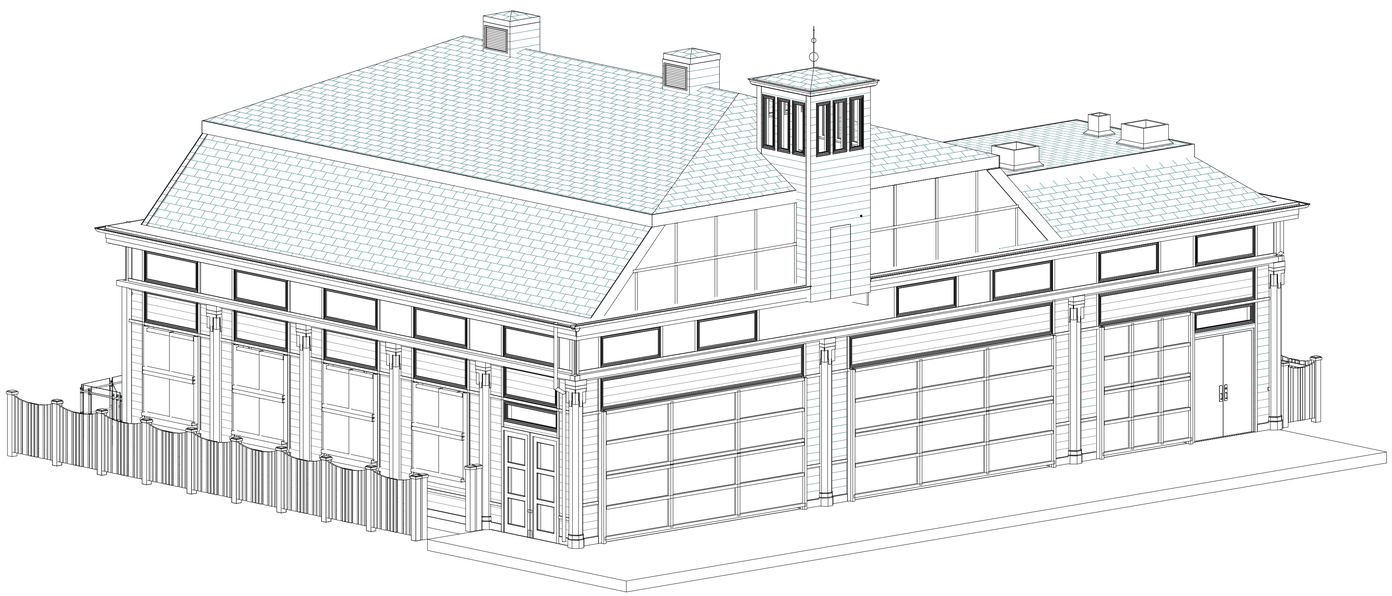

1 NORTH EAST BURGER BARN

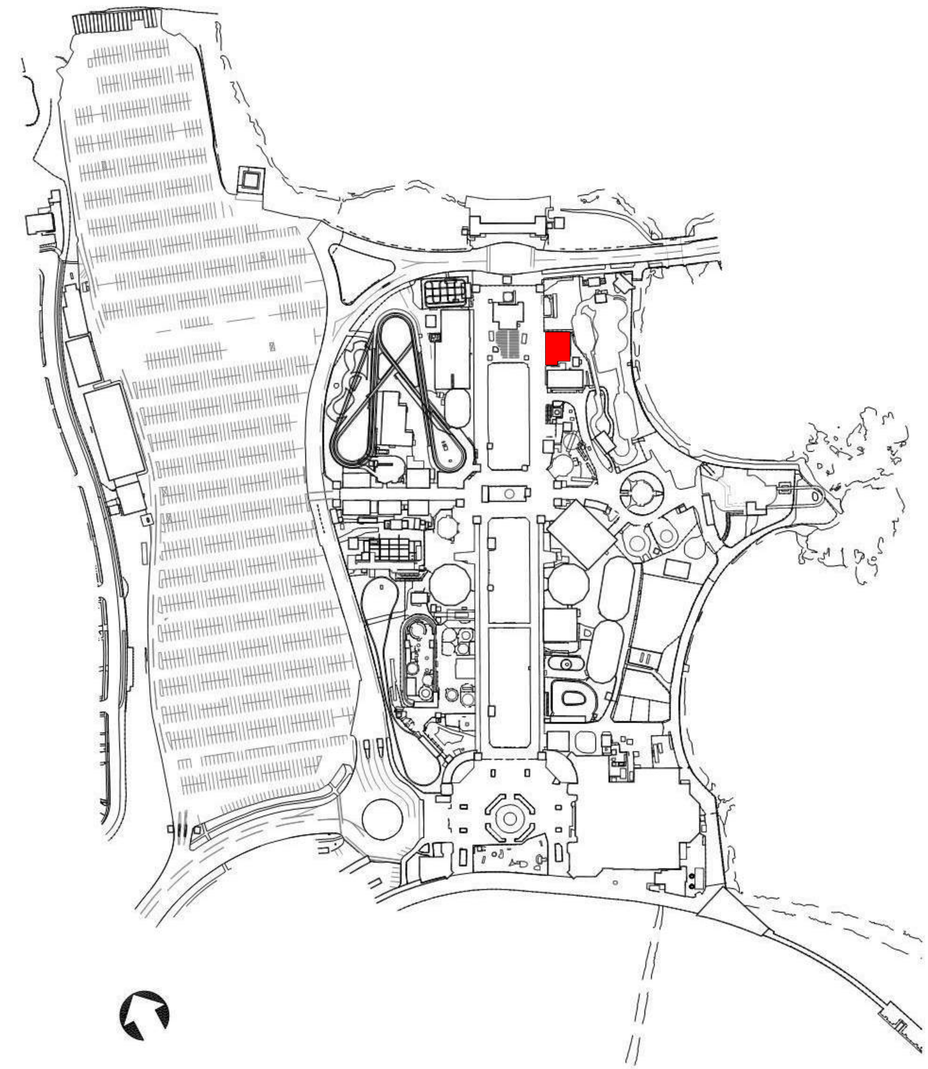

2 KEY MAP
N.T.S.

8/30/2022 3:04:41 PM

CONSULTANT INFORMATION

The LiRo Group

3 Aerial Way, Syosset, New York 11791
(516) 938-5476 www.liro.com

CONSULTANT SEAL

REGISTERED ARCHITECT ROBERT D. JOHNSON 023220 STATE OF NEW YORK

| REVISION NUMBER | DATE | MADE BY | APP'D BY | REVISION |
|---|---|---|---|---|
| | | | | |

RECORD DRAWING CERTIFICATION

☐ AS BUILT – CHANGES AS NOTED ☐ AS BUILT – NO CHANGES

CONTRACTOR
NAME
SIGNATURE
TITLE DATE

PROJECT COORDINATOR
NAME
SIGNATURE
TITLE DATE

WESTCHESTER COUNTY, NEW YORK
DEPARTMENT OF PUBLIC WORKS AND TRANSPORTATION
DIVISION OF ENGINEERING

**INFRASTRUCTURE REHABILITATION - PHASE 3**
**PLAYLAND PARK, RYE, NEW YORK**
**NORTH EAST BURGER BARN**
**BUILDING INTRO**

| | |
|---|---|
| CONTRACT NUMBER | 22-523 |
| SHEET NUMBER | BB-G-01 |
| DWG NO.: | 14 of 664 |
| SCALE: | 12" = 1'-0" |
| DATE: | 08/23/2022 |
| DPW FILE NUMBER | 1-118-G-763-0 |
| REV. NO. | 0 |

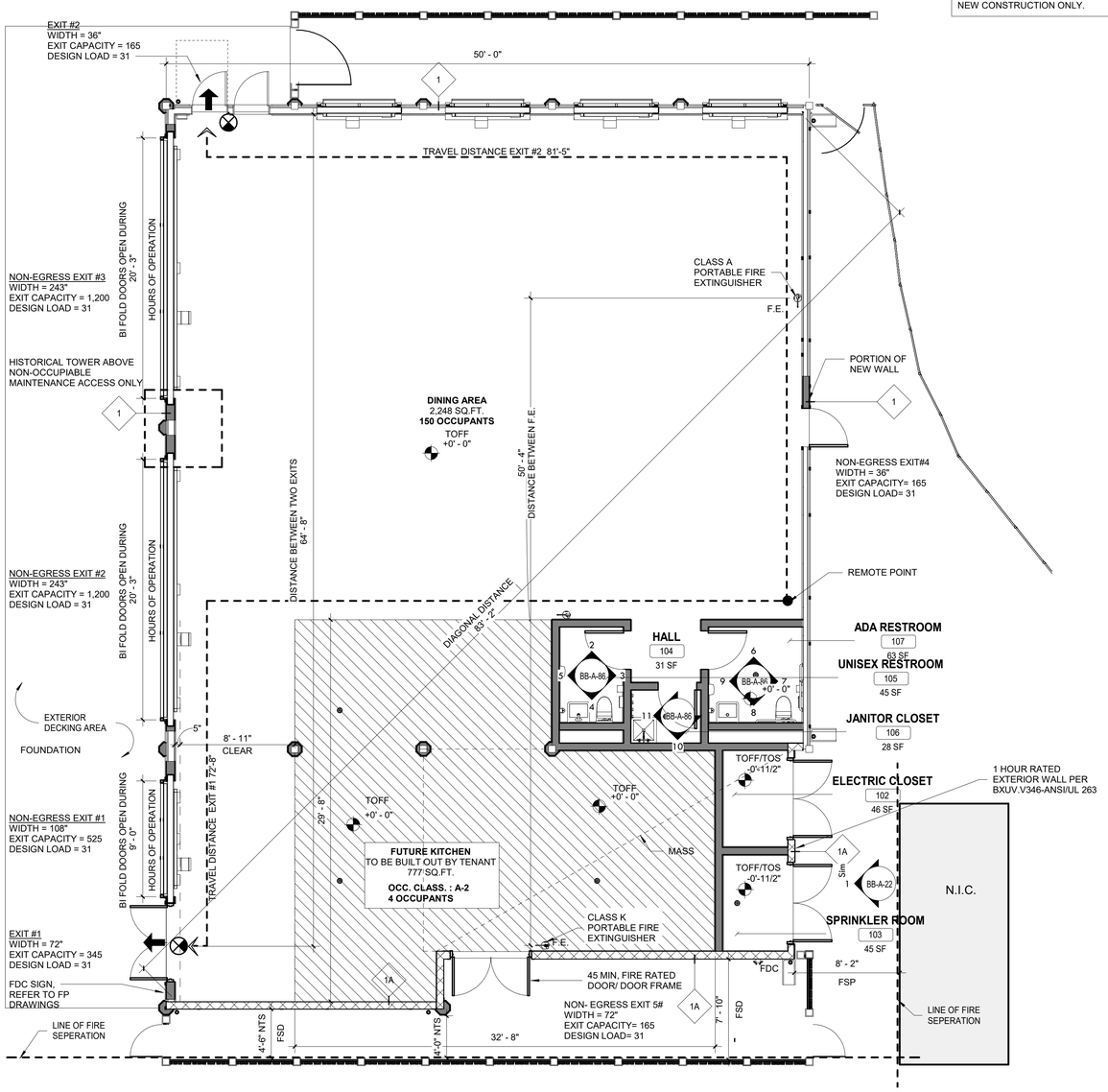


1 GROUND LEVEL PLAN EGRESS PLAN
3/16" = 1'-0"

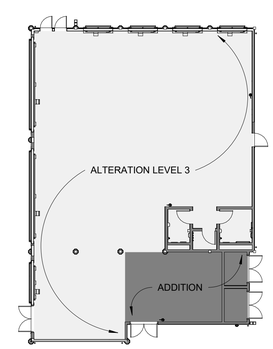


2 GROUND LEVEL KEY PLAN
1/16" = 1'-0"

## EXISTING BUILDING CODE

EBC 302.4 - EXISTING MATERIALS
MATERIALS ALREADY IN USE IN A BUILDING IN COMPLIANCE WITH REQUIREMENTS OR APPROVALS IN EFFECT AT THE TIME OF THEIR ERECTION OR INSTALLATION SHALL BE PERMITTED TO REMAIN IN USE UNLESS DETERMINED BY THE BUILDING OFFICIAL TO BE UNSAFE.

EBC 302.5 - NEW REPLACEMENT MATERIALS
EXCEPT AS OTHERWISE REQUIRED OR PERMITTED BY THIS CODE, MATERIALS PERMITTED BY THE APPLICABLE CODE FOR NEW CONSTRUCTION SHALL BE USED. LIKE MATERIALS SHALL BE PERMITTED FOR REPAIRS AND ALTERATIONS, PROVIDED THAT UNSAFE CONDITIONS ARE NOT CREATED. HAZARDOUS MATERIALS SHALL NOT BE USED WHERE THE CODE FOR NEW CONSTRUCTION WOULD NOT PERMIT THEIR USE IN BUILDINGS OF SIMILAR OCCUPANCY, PURPOSE AND LOCATION.

EBC 305.5 - ADDITIONS
PROVISIONS FOR NEW CONSTRUCTION SHALL APPLY TO ADDITIONS.

EBC 907.1 - ENERGY CONSERVATION MINIMUM REQUIREMENTS
LEVEL 3 ALTERATIONS TO EXISTING BUILDINGS OR STRUCTURES ARE PERMITTED WITHOUT REQUIRING THE ENTIRE BUILDING OR STRUCTURE TO COMPLY WITH THE ENERGY REQUIREMENTS OF THE ENERGY CONSERVATION CONSTRUCTION CODE OF NEW YORK STATE OR RESIDENTIAL CODE OF NEW YORK STATE. THE ALTERATIONS SHALL CONFORM TO THE ENERGY REQUIREMENTS OF THE ENERGY CONSERVATION CONSTRUCTION CODE OF NEW YORK STATE OR RESIDENTIAL CODE OF NEW YORK STATE AS THEY RELATE TO NEW CONSTRUCTION ONLY.

## 2020 NYS ENERGY CONSERVATION CODE

[NY] C501.6 HISTORIC BUILDINGS
PROVISIONS OF THIS CODE RELATING TO THE CONSTRUCTION, REPAIR, ALTERATION, RESTORATION AND MOVEMENT OF STRUCTURES, AND CHANGE OF OCCUPANCY SHALL NOT BE MANDATORY FOR HISTORIC BUILDINGS.

## CODE ANALYSIS

| | | |
|---|---|---|
| NEW YORK STATE BUILDING CODE 2020 | | (BC) |
| NEW YORK STATE EXISTING BUILDING CODE 2020 | | (EBC) |
| ENERGY CONSERVATION CONSTRUCTION CODE OF NEW YORK STATE | | (ECCC) |
| NFPA 13 2016 | | (NFPA 13) |
| | **REQUIRED** | **PROPOSED** |
| OCCUPANCY CLASSIFICATION | A-2 | RESTAURANT |
| CONSTRUCTION TYPE (TBL 601) | VB | (FULLY SPRINKLERED) |
| HEIGHT (FT) (TBL 504.3) | 33.00' | < 60 (MAX. ALLOWABLE) |
| NUMBER OF STORIES (TBL 504.4) | 1 | < 2 (MAX. ALLOWABLE) |
| BUIDLING ALLOWABLE AREA (SF) (506.2 & 506.2) | 3,701 | < 24,000 (MAX. ALLOWABLE) |
| **FIRE-RESISTANCE RATING REQUIREMENTS (TBL 601)** | **REQUIRED** | **PROPOSED** |
| PRIMARY STRUCTURE FRAME | 0 | 0 |
| BEARING WALLS | | |
| EXTERIOR (TBL 602) | | |
| FIRE SEPARATION DISTANCE < = 10 FT | 1 HOUR | 1 HOUR |
| FIRE SEPARATION DISTANCE > = 10 FT | 0 | 0 |
| INTERIOR | | |
| NON BEARING WALLS AND PARTITIONS | | |
| EXTERIOR (TBL 602) | | |
| FIRE SEPARATION DISTANCE < = 10 FT | 1 | N/A |
| FIRE SEPARATION DISTANCE > = 10 FT | 0 | 0 |
| INTERIOR | | |
| FLOOR CONSTRUCTION | | |
| INCLUDING SUPPORTING BEAM AND JOINTS | 0 | 0 |
| ROOF CONSTRUCTION | | |
| INCLUDING SUPPORTING BEAM AND JOINTS | 0 | 0 |
| **ALLOWABLE AREA OF OPENINGS (BC 705.8)** | | |
| FIRE SEPARATION DISTANCE <15FT; >10FT (UNPROTECTED, SPRINKLERED) | 45% | 45% |
| FIRE SEPARATION DISTANCE > 20 FT (UNPROTECTED, SPRINKLER) | NO LIMIT | |
| **INTERIOR FINISHES CLASS (BC 803)** | | |
| WALL AND CEILING | C | |
| FLOORS - RADIANT FLUX | CLASS II | |
| **PORTABLE FIRE EXTINGUISHERS (BC 906)** | | |
| FIRE HAZARD | CLASS A | |
| HAZARD OCCUPANCY | ORDINARY | |
| MINIMUM RATED SINGLE EXTINGUISHER | 2-A | |
| MAXIMUM FLOOR AREA PER UNIT OF A | 1,500 SF | |
| MAXIMUM FLOOR AREA FOR EXTINGISHER | 11, 250 SF | |
| MAXIMUM DISTANCE OF TRAVEL TO EXTINGUSHER | 75' | |
| **NUMBER OF TYPE 2-A EXINGUISHERS** | **REQUIRED** | **PROPOSED** |
| FIRST FLOOR | 2 | 2 |
| **MEANS OF EGRESS** | | |
| MAX. FLOOR AREA ALLOWANCES PER OCCUPANT (TBL 1004.5) (SF) | | |
| UNCONCENTRATED TABLES AND CHAIRS | 15 GROSS | |
| KTCHEN | 200 GROSS | |
| **OCCUPANT LOAD** | | |
| DINING AREA , UNCONCENTRATED (TABLES & CHAIRS) (2,248 SF) | 149.86 | 150 PROPOSED |
| KITCHEN, COMMERCIAL (777 SF) | 3.885 | 4 PROPOSED |
| **MINIMUM NUMBER OF EXISTS** | **REQUIRED** | **PROPOSED** |
| OCCUPANT LOAD: 1 - 500 | 2 | 2 |
| DIAGONAL DISTANCE (FT) | | 83'-2" NON-EGRESS EXITS PROVIDED; BIFOLD OPEN DURING BUSINESS HOURS |
| **EXIT CONFIGURATION** | | |
| DISTANCE BETWEEN TWO EXISTS > = 1/2 OF THE DIAGONAL DIMENSION (BC 1007.1.1) (FT) | 41'-6" | 64'-8" |
| EGRESS WIDTH FACTOR | 0.2 | SEE PLAN |
| **MAXIMUM COMMON PATH OF EGRESS TRAVEL** (TBL10006.2.1) | **REQUIRED** | **PROPOSED** |
| A OCCUPANY WITH SPRINKLER SYSTEM | 30' | NOT REQUIRED |
| **MAXIMUM TRAVEL DISTANCE (BC 1017.2)** | | |
| A OCCUPANCY WITH SPRINKELR SYSTEM | 250' | 57'-11" |
| MINIMUM NUMBER OF REQUIRED PLUMBING FIXTURES (TABLE 2902.1) | | |
| ASSEMBLY- RESTAURANT | **REQUIRED** | **PROPOSED** |
| WATER CLOSETS | | |
| MALE | 1 PER 75 | MALE 2 |
| FEMALE | 1 PER 75 | FEMALE 2 |
| LAVATORIES | | |
| MALE | 1 PER 200 | MALE 1 |
| FEMALE | 1 PER 200 | FEMALE 1 |
| DRINKING FOUNTAINS | 1 PER 500 | NOT REQUIRED PER 2902.5 & PC 410.4 |
| SERVICE SINK | 1 SERVICE SINK | 1 SERVICE SINK |

## ENERGY CODE COMPLIANCE

2020 ENERGY CODE COMPLIANCE
CLIMATE ZONE 4 MARINE
TABLE C402.1.4_THERMAL ENVELOPE U-FACTOR

| | |
|---|---|
| **ROOFS** | |
| INSULATION ENTIRELY ABOVE ROOF DECK | R 38 |
| **WALLS, ABOVE GRADE** | |
| WOOD FRAMED AND OTHER | R 20 |
| **FLOORS** | |
| MASS | R 10 |
| JOISTS/ FRAMING | R 30 |
| **OPAQUE DOORS** | |
| SWINGING DOORS | U-0.61 |
| GARAGE DOORS <14% GLAZING | U-0.31 |

TABLE 508.4 _REQUIRED SEPARTATION OF OCCUPANCIES
SPRINKLERED
A-2 TO A-2 NOT REQUIRED
A-2 TO U NOT REQUIRED
TABLE 602 _REQUIREMENTS FOR EXTERIOR WALLS BASED ON FIRE SEPARATION

| FIRE SEPARATION DISTANCE | TYPE OF CONSTRUCTION | HOURS REQ'D |
|---|---|---|
| X < 5 | ALL | 1 |
| 5≤ X <10 | OTHERS | 1 |
| 10 < X < 30 | VB | 0 |
| SOUTH WEST WALL PROPOSED TO BE 1 HOUR RATED | | |

ADDITION TO MEET PRESCRITIVE METHOD C502.2 IN 2020 ENERGY CONSERVATION CONSTRUCTION CODE OF NEW YORK STATE.

## LEGEND

EX. WOOD FENCE
NEW WOOD FENCE UNDER SITE IMPROVEMENTS TO BE PROTECTED DURING CONSTRUCTION.
101 DOOR TAG
1i WINDOW TAG
1i WALL TAG
FE FIRE EXTINGUISHER
N.I.C. NOT IN CONTRACT
Room name
101
150 SF
ROOM TAG
EGRESS LIGHT FIXTURE: SEE ELECTRICAL DWGS FOR MORE INFO
INDICATES REMOVAL
1 HR FIRE RATED WALL
LINE OF FIRE SEPERATION

## HISTORIC BUILDING

*PLAYLAND AMUSEMENT PARK* IS A DESIGNATED NATIONAL HISTORIC LANDMARK AND IS LISTED ON THE NATIONAL REGISTER OF HISTORIC PLACES.
NATIONAL HISTORIC PLACES REGISTER REFERNCE NUMBER 80004529 _NHL
NATIONAL ARCHIVES IDENTIFIER 75316138
THE NORTH EAST BURGER BARN IS A LISTED STRUCTURE OF THE LANDMARK AND THEREFORE AN *HISTORIC BUILDING* UNDER THE 2020 BUILDING CODE AND THE 2020 EXISTING BUILDING CODE OF NEW YORK STATE.

## EXISTING BUILDING CODE

EBC 302.4 - EXISTING MATERIALS
MATERIALS ALREADY IN USE IN A BUILDING IN COMPLIANCE WITH REQUIREMENTS OR APPROVALS IN EFFECT AT THE TIME OF THEIR ERECTION OR INSTALLATION SHALL BE PERMITTED TO REMAIN IN USE UNLESS DETERMINED BY THE BUILDING OFFICIAL TO BE UNSAFE.
EBC 302.5 - NEW REPLACEMENT MATERIALS
EXCEPT AS OTHERWISE REQUIRED OR PERMITTED BY THIS CODE, MATERIALS PERMITTED BY THE APPLICABLE CODE FOR NEW CONSTRUCTION SHALL BE USED. LIKE MATERIALS SHALL BE PERMITTED FOR REPAIRS AND ALTERATIONS, PROVIDED THAT UNSAFE CONDITIONS ARE NOT CREATED. HAZARDOUS MATERIALS SHALL NOT BE USED WHERE THE CODE FOR NEW CONSTRUCTION WOULD NOT PERMIT THEIR USE IN BUILDINGS OF SIMILAR OCCUPANCY, PURPOSE AND LOCATION.
EBC 305.5 - ADDITIONS
PROVISIONS FOR NEW CONSTRUCTION SHALL APPLY TO ADDITIONS.

## GENERAL NOTE

FOUNDATION VENTILATION FROM EXTERIOR DECKING

8/30/2022 3:04:46 PM

CONSULTANT INFORMATION
The LiRo Group
3 Aerial Way, Syosset, New York 11791
(516) 938-5476 www.liro.com

CONSULTANT SEAL
REGISTERED ARCHITECT ROBERT D. JOHNSON 023280 STATE OF NEW YORK

| REVISION NUMBER | DATE | MADE BY | APP'D BY | REVISION |
|---|---|---|---|---|

RECORD DRAWING CERTIFICATION
☐ AS BUILT – CHANGES AS NOTED ☐ AS BUILT – NO CHANGES

CONTRACTOR
NAME
SIGNATURE
TITLE DATE

PROJECT COORDINATOR
NAME
SIGNATURE
TITLE DATE

WESTCHESTER COUNTY, NEW YORK
DEPARTMENT OF PUBLIC WORKS AND TRANSPORTATION
DIVISION OF ENGINEERING

**INFRASTRUCTURE REHABILITATION - PHASE 3**
**PLAYLAND PARK, RYE, NEW YORK**
**NORTH EAST BURGER BARN**
**EGRESS PLANS AND CODE ANALYSIS**

| | |
|---|---|
| CONTRACT NUMBER | 22-523 |
| SHEET NUMBER | BB-G-02 |
| DWG NO.: | 15 of 664 |
| SCALE: | As indicated |
| DATE: | 08/23/2022 |
| DPW FILE NUMBER | 1-118-G-764-0 |
| REV. NO. | 0 |

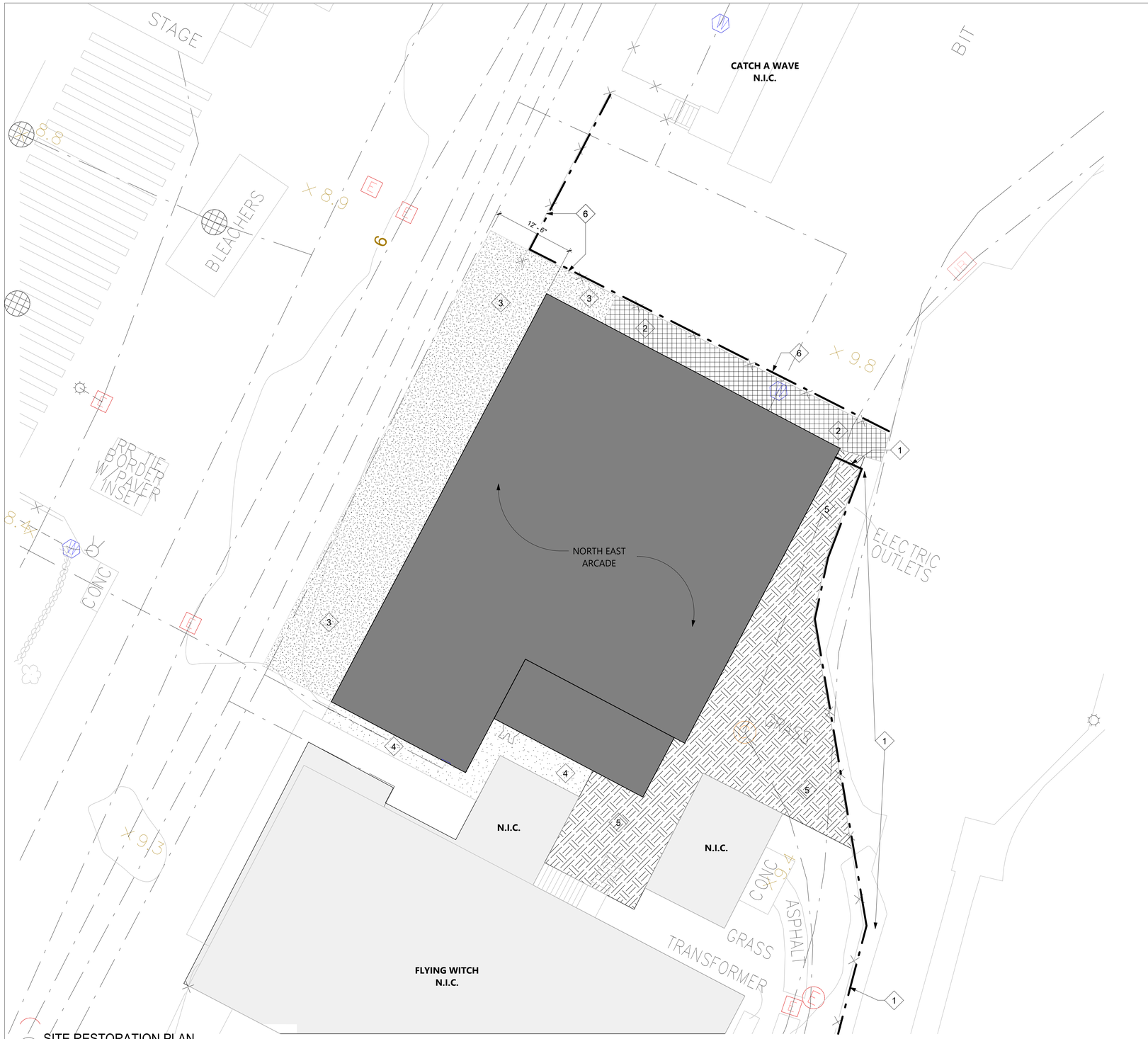


1 SITE RESTORATION PLAN
1/8" = 1'-0"

## RESTORATION KEY NOTES

1. EXISTING CHAINLINK FENCE TO BE REMOVED DURING CONSTRUCTION AND STORED FOR FUTURE REUSE.
2. EXISTING ASPHALT TO BE REMOVED AND REPLACED
3. EXISTING ASPHALT TO BE REMOVED AND NEW IPE BOARDWALK TO BE INSTALLED.
4. EXISTING WOODEN BOARDWALK TO BE REMOVED AND REPLACED WITH NEW ASPHALT TO MATCH.
5. EXISTING GRASS TO BE RESTORED WITH NEW SOD. REFER TO LANDSCAPE ENGINEERS DRAWINGS FOR MORE INFORMATION.
6. EXISTING WOOD FENCE TO BE REMOVED AND REPLACED.
7. NEW CHAIN LINK GATE TO BE INSTALLED DURING CONSTRUCTION.

## SHEET NOTES

1. PROVIDE PROTECTION FOR EXISTING FEATURES TO REMAIN. PROVIDE PROTECTION PLAN FOR APPROVAL.
2. SCHEDULE AND COMPLETE WORK AS REQUIRED TO GIVE THE SITE IMPROVEMENT CONTRACTORS ACCESS TO THEIR JOBSITE.

## CONSTRUCTION NOTES

A. CONTRACTOR TO ENSURE NO DAMAGE OCCURS TO ANY EXISTING CONSTRUCTION ON PARK PROPERTY NOT CALLED OUT TO HAVE ANY WORK DONE ON. IT IS THE RESPONSIBILITY OF THE CONTRACTOR TO PROTECT AS REQUIRED. CONTRACTOR IS RESPONSIBLE FOR ANY DAMAGES THAT OCCUR DURING COURSE OF PROJECT.

B. CONTRACTOR TO REPLACE ALL PLANTED MATTER DISTRIBUTED DURING CONSTRUCTION UNLESS OTHERWISE NOTED.

C. CONTRACTOR TO REPAIR EXISTING ASPHALT AS REQUIRED TO MATCH ADJACENT LOOK, FINISH AND UNIFORM APPEARANCE.

D. CONTRACTOR TO REPAIR SOD AS REQUIRED.

## RESTORATION LEGEND

- EXISTING ASPHALT TO BE REMOVED AND REPLACED WITH IPE DECKING.
- EXISTING WOODEN BOARDWALK TO BE REMOVED AND REPLACED WITH ASPHALT.
- EXISTING GRASS TO BE RESTORED. REFER TO LANDSCAPE ARCHITECT'S DRAWINGS FOR MORE INFORMATION.
- EXISTING ASPHALT TO BE REMOVED AND REPLACED
- EXISTING CHAIN LINK FENCE
- N.I.C. — EXISTING SCOPE NOT IN CONTRACT
- EXISTING WOODEN FENCE

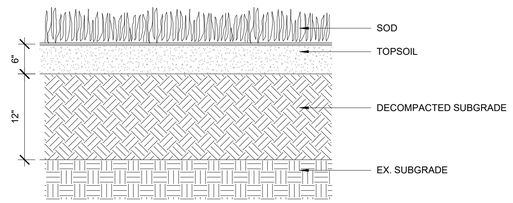


2 SOD DETAIL
3" = 1'-0"

8/30/2022 3:04:47 PM

CONSULTANT INFORMATION

The LiRo Group
3 Aerial Way, Syosset, New York 11791
(516) 938-5476 www.liro.com

CONSULTANT SEAL

REGISTERED ARCHITECT ROBERT D. YOUNG 023290 STATE OF NEW YORK

| REVISION NUMBER | DATE | MADE BY | APP'D BY | REVISION |
|---|---|---|---|---|
| | | | | |

RECORD DRAWING CERTIFICATION

☐ AS BUILT – CHANGES AS NOTED ☐ AS BUILT – NO CHANGES

CONTRACTOR
NAME
SIGNATURE
TITLE DATE

PROJECT COORDINATOR
NAME
SIGNATURE
TITLE DATE

WESTCHESTER COUNTY, NEW YORK
DEPARTMENT OF PUBLIC WORKS AND TRANSPORTATION
DIVISION OF ENGINEERING

**INFRASTRUCTURE REHABILITATION - PHASE 3**
**PLAYLAND PARK, RYE, NEW YORK**
**NORTH EAST BURGER BARN**
**SITE RESTORATION PLAN**

| | |
|---|---|
| CONTRACT NUMBER | 22-523 |
| SHEET NUMBER | BB-G-03 |
| DWG NO.: | 16 of 664 |
| SCALE: | As indicated |
| DATE: | 08/23/2022 |
| DPW FILE NUMBER | 1-118-G-765-0 |
| REV. NO. | 0 |

# PLAYLAND REHABILITATION & UPGRADES
# NORTHEAST ARCADE - ASBESTOS ABATEMENT
## 1 PLAYLAND PKWY, RYE, NY 10580

**DETAILS:**

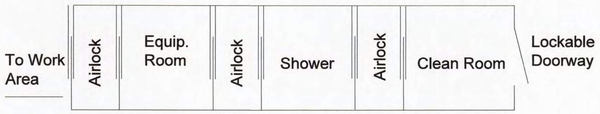


1 BB-H-10 LARGE PROJECT REMOTE WORKER DECONTAMINATION UNIT
Not To Scale

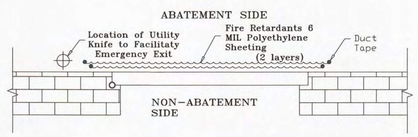


2 BB-H-10 TYPICAL SOFT WALL BARRIER AT OPENINGS LESS THAN 32SF
Not To Scale

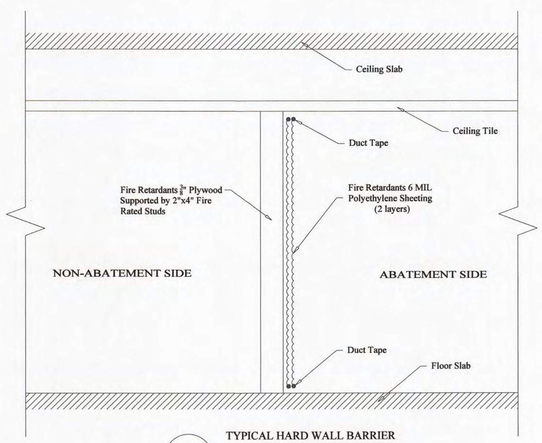


3 BB-H-10 TYPICAL HARD WALL BARRIER AT OPENINGS MORE THAN 32SF
Not To Scale

**SCOPE OF WORK TABLE:**

| Work area | Location | Description of Asbestos Materials | Approximate Quantity of ACM | ICR 56 Procedure |
|---|---|---|---|---|
| 1 | BB Northeast Arcade | Roof Tar Paper | 3000 SF | 56.11.6 |
| 2 | | Transite Siding | 800 SF | |

**KEYPLAN:**

**LEGEND:**

- WORK AREA LIMITS
- P/W R # — REMOTE WORKER DECONTAMINATION UNIT
- WC — WASTE HOLDING AREA
- AIRLOCK
- W — TEMPORARY WATER SOURCE
- E — TEMPORARY ELECTRICAL SOURCE

**PROJECT NOTES:**

1. The Contractor shall be aware of all conditions of the Project and is responsible for verifying quantities and locations of all Work to be performed. Failure to do so shall not relieve the Contractor of its obligation to furnish all labor and materials necessary to perform the Work.
2. All Work shall be performed in strict accordance with the Project Documents and all governing codes, rules, and regulations. Where conflicts occur between the Project Documents and applicable codes, rules, and regulations, the more stringent shall apply.
3. All abatement work shall be coordinated with General Contractor work; Abatement may be phased with other contract work.
4. Working hours shall be as required and approved by the Owner. Asbestos abatement activities including, but not limited to, work area preparation, gross removal activities, cleaning activities, waste removal, etc. may need to be performed during 'off-hours' (including nights and weekends). In addition, multiple mobilizations may be required to perform the work identified in this project. The Contractor shall coordinate and schedule all Work with the facility and Owner's representative.
5. The Contractor shall prepare and coordinate with facility representative the posting of appropriate signage at the entranceway that redirects park occupants away from the area of the abatement.
6. The Contractor shall use barrier tape to extend the limits of the active, regulated work areas closed to the public and other non-abatement trades.
7. The Contractor shall be responsible for defining and coordinating the phases of the abatement with the facility and DPW, as well as securing any site specific variances, permits, and any necessary NYS DOL approvals.
8. The asbestos abatement Contractor shall coordinate locations of decontamination units, routes of egress, temporary water and power connections and waste container locations with the Owner and the Facility.
9. The Contractor may need to supply temporary power/water sources if they cannot be provided by facility.
10. The General Contractor shall supply any and all scaffolding for the work area(s) under this contract. Scaffolding structure and maintenance shall be in strict accordance with local, state and federal safety requirements.
11. The Contractor is to protect any and all exposed surfaces not targeted for abatement.
12. The Contractor shall request and receive in writing prior to preceding with any work info from the owner regarding surfaces/materials that require protection.
13. Regular waste generated by the abatement work of this contract shall be stored securely using a closed waste container.

5/3/2022 11:43:22 AM

CONSULTANT INFORMATION
The LiRo Group
3 Aerial Way, Syosset, New York 11791
(516) 938-5476 www.liro.com

CONSULTANT SEAL
STATE OF NEW YORK · PETER JOSEPH GERBASI · No. 070446 · PROFESSIONAL ENGINEER

| REVISION NUMBER | DATE | MADE BY | APP'D BY | REVISION |
|---|---|---|---|---|

RECORD DRAWING CERTIFICATION
AS BUILT – CHANGES AS NOTED
AS BUILT – NO CHANGES

CONTRACTOR
NAME
SIGNATURE
TITLE DATE

PROJECT COORDINATOR
NAME
SIGNATURE
TITLE DATE

WESTCHESTER COUNTY, NEW YORK
DEPARTMENT OF PUBLIC WORKS AND TRANSPORTATION
DIVISION OF ENGINEERING

INFRASTRUCTURE REHABILITATION - PHASE 3
PLAYLAND PARK, RYE, NEW YORK
NORTHEAST BURGER BARN
GENERAL ASBESTOS ABATEMENT NOTES

| | |
|---|---|
| CONTRACT NUMBER | 22-523 |
| SHEET NUMBER | BB-H-10 |
| DWG NO.: | |
| SCALE: | NOT TO SCALE |
| DATE: | 08/23/2022 |
| DPW FILE NUMBER | 1-118-G-766-0 |
| REV. NO. | 0 |

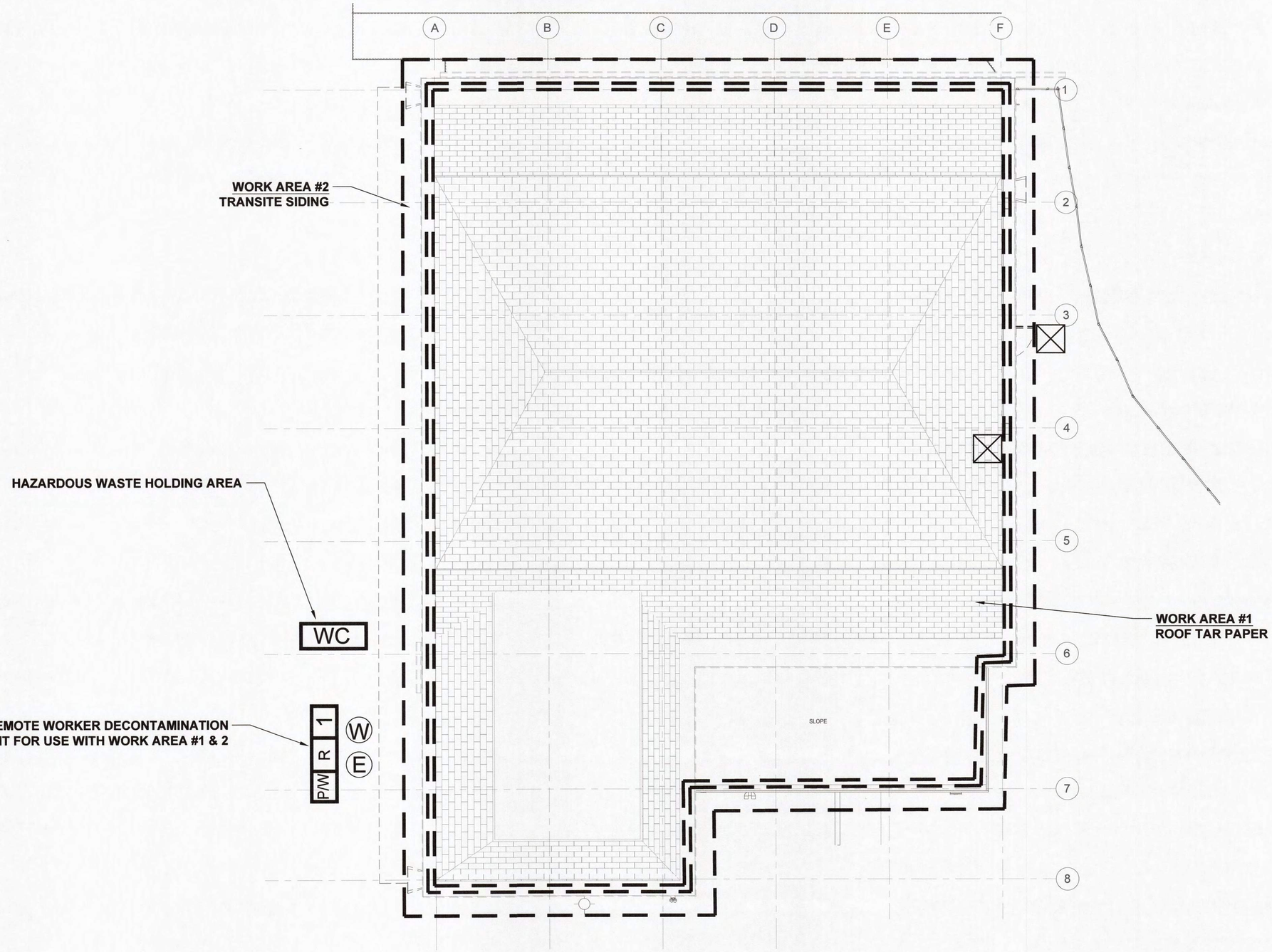


1 ROOF - ASBESTOS ABATEMENT PLAN
NTS

5/3/2022 11:43:22 AM

CONSULTANT INFORMATION
The LiRo Group
3 Aerial Way, Syosset, New York 11791
(516) 938-5476 www.liro.com

CONSULTANT SEAL
STATE OF NEW YORK
PETER JOSEPH GERBASI
No. 070446
LICENSED PROFESSIONAL ENGINEER

| REVISION NUMBER | DATE | MADE BY | APP'D BY | REVISION |
|---|---|---|---|---|

RECORD DRAWING CERTIFICATION
☐ AS BUILT – CHANGES AS NOTED ☐ AS BUILT – NO CHANGES

CONTRACTOR
NAME
SIGNATURE
TITLE DATE

PROJECT COORDINATOR
NAME
SIGNATURE
TITLE DATE

WESTCHESTER COUNTY, NEW YORK
DEPARTMENT OF PUBLIC WORKS AND TRANSPORTATION
DIVISION OF ENGINEERING

**INFRASTRUCTURE REHABILITATION - PHASE 3**
**PLAYLAND PARK, RYE, NEW YORK**
**NORTHEAST BURGER BARN**
**ROOF - ASBESTOS ABATEMENT PLAN**

| | |
|---|---|
| CONTRACT NUMBER | 22-523 |
| SHEET NUMBER | BB-H-11 |
| DWG NO.: | |
| SCALE: | NOT TO SCALE |
| DATE: | 08/23/2022 |
| DPW FILE NUMBER | 1-118-G-767-0 |
| REV. NO. | 0 |

# PLAYLAND REHABILITATION & UPGRADES
# NORTHEAST ARCADE - LEAD REMEDIATION
## 1 PLAYLAND PKWY, RYE, NY 10580

**DETAILS:**

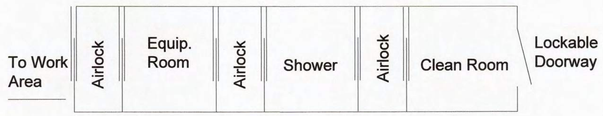


1 BB-H-20 LARGE PROJECT REMOTE WORKER DECONTAMINATION UNIT
Not To Scale

**SCOPE OF WORK TABLE:**

| Work area | Location | Description | Material | Quantity | Procedure |
|---|---|---|---|---|---|
| 1 | Exterior | Entire | Cornice/Fascia Elements | 1200 SF | Manual Wet Scraping/Chemical Strip |
| 2 | | | Wall Cladding/Trim Elements | 3500 SF | |
| 3 | | | Columns | 420 SF | |

**PROJECT NOTES:**

1. All layers of coating shall be considered as LBP and removed down to the substrates. Substrates coated with LBP and targeted for demolition may be removed and disposed of solid structure waste following TCLP testing.
2. Substrates coated with LBP and targeted for refurbish and recoating shall be abated using manual wet scraping or chemical stripping procedures, localized testing of chemical strapping products shall proceed broader use and only after approval by the DPW Environmental Consultant.
3. The abatement contractor shall separate paint chips and contaminated dust/particulate generated by the abatement from other project waste streams including worker personal protective equipment and plastic sheeting. All waste other than lead paint chips and contaminated dust/particulate shall be TCLP tested prior to disposal.
4. Waste generated by the work of this method shall be stored on site in a NYSDEC compliant Hazardous and Waste Storage Area and transported under manifest to the disposal site.
5. The contractor shall prepare a project specific work plan and project specific HASP for the work of this contract.
6. LBP remediation shall be consistent with guidelines from SSPC and work shall comply with the OSHA regulations including using of decontamination units and hand wash stations.
7. The contractor may propose alternate LBP removal procedures however, use of alternate procedures will require approval by DPW Environmental Consultant; the abatement contractor is responsible with maintaining the physical conditions and integrity of the targeted substrates, and the surrounding structures during abatement work.
8. The Contractor shall request and receive in writing prior to preceding with any work info from the owner regarding surfaces/materials that require protection.

**LEGEND:**

- WORK AREA LIMITS
- WS — OSHA HANDWASHING STATION
- HWSA — HAZARDOUS WASTE STORAGE AREA
- AIRLOCK
- W — TEMPORARY WATER SOURCE
- E — TEMPORARY ELECTRICAL SOURCE
- CORNICE / FASCIA ELEMENTS
- WALL CLADDING / TRIM ELEMENTS
- COLUMNS

**KEYPLAN:**

5/3/2022 11:43:22 AM

CONSULTANT INFORMATION
The LiRo Group
3 Aerial Way, Syosset, New York 11791
(516) 938-5476 www.liro.com

CONSULTANT SEAL
STATE OF NEW YORK PETER JOSEPH GERBASI No. 070446 LICENSED PROFESSIONAL ENGINEER

| REVISION NUMBER | DATE | MADE BY | APP'D BY | REVISION |
|---|---|---|---|---|

RECORD DRAWING CERTIFICATION
AS BUILT – CHANGES AS NOTED
AS BUILT – NO CHANGES

CONTRACTOR
NAME
SIGNATURE
TITLE DATE

PROJECT COORDINATOR
NAME
SIGNATURE
TITLE DATE

WESTCHESTER COUNTY, NEW YORK
DEPARTMENT OF PUBLIC WORKS AND TRANSPORTATION
DIVISION OF ENGINEERING

INFRASTRUCTURE REHABILITATION - PHASE 3
PLAYLAND PARK, RYE, NEW YORK
NORTHEAST BURGER BARN
GENERAL LEAD REMEDIATION NOTES

| | |
|---|---|
| CONTRACT NUMBER | 22-523 |
| SHEET NUMBER | BB-H-20 |
| DWG NO.: | |
| SCALE: | NOT TO SCALE |
| DATE: | 08/23/2022 |
| DPW FILE NUMBER | 1-118-G-768-0 |
| REV. NO. | 0 |

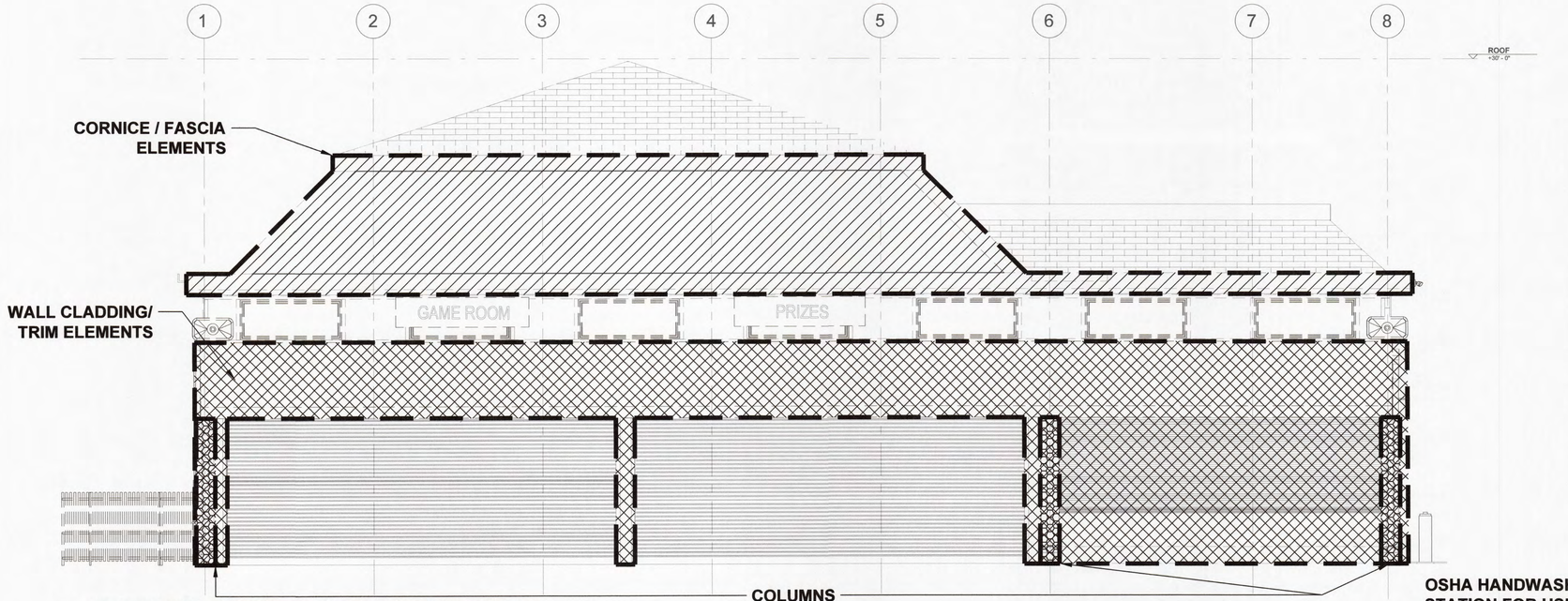


1 NORTH WEST ELEVATION - LEAD REMEDIATION PLAN
NTS

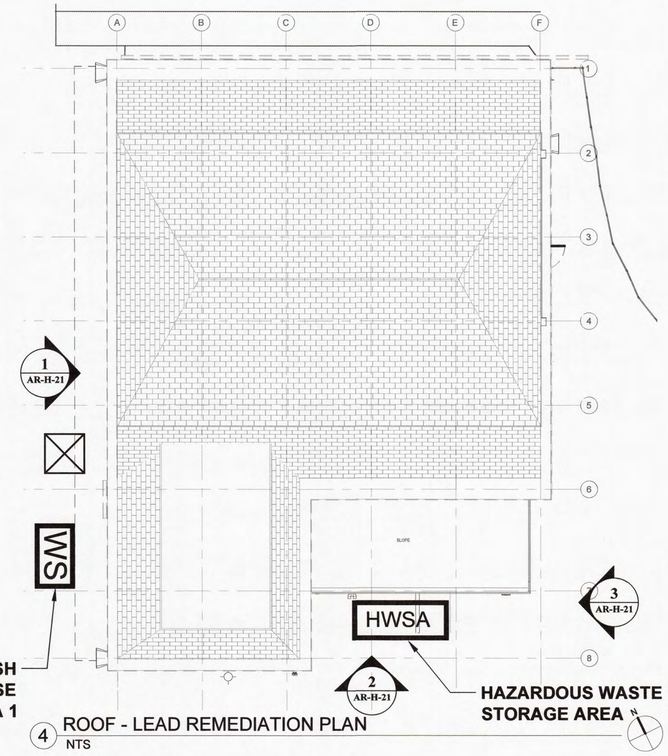


4 ROOF - LEAD REMEDIATION PLAN
NTS

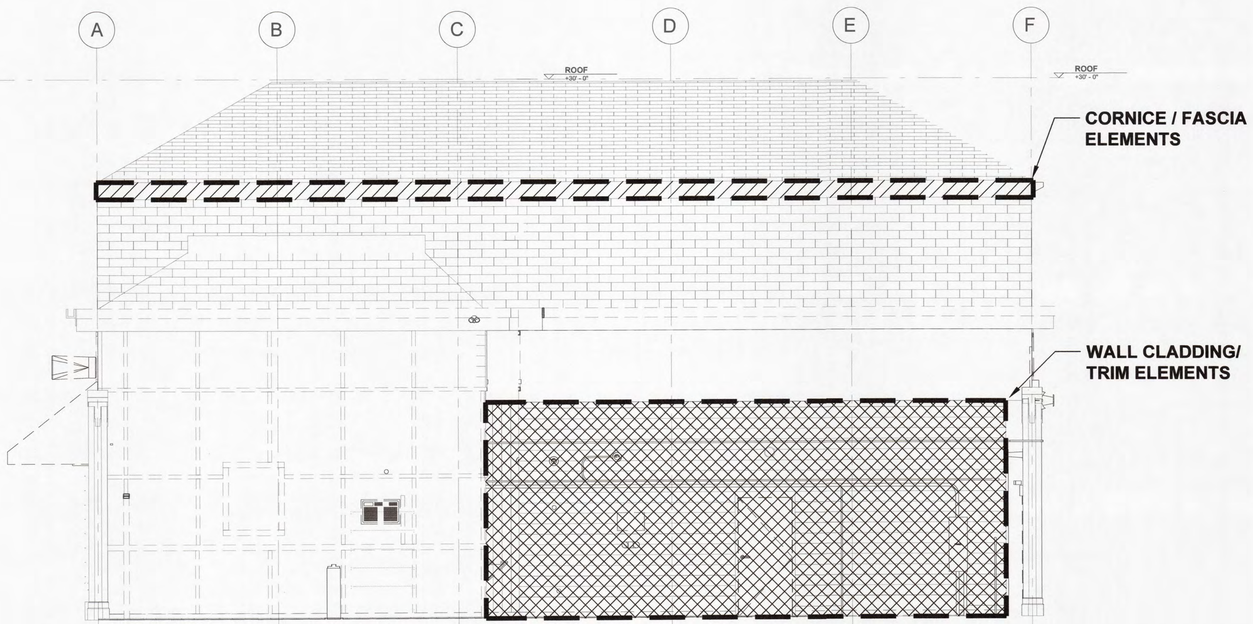


2 SOUTH WEST ELEVATION 1 - LEAD REMEDIATION PLAN
NTS

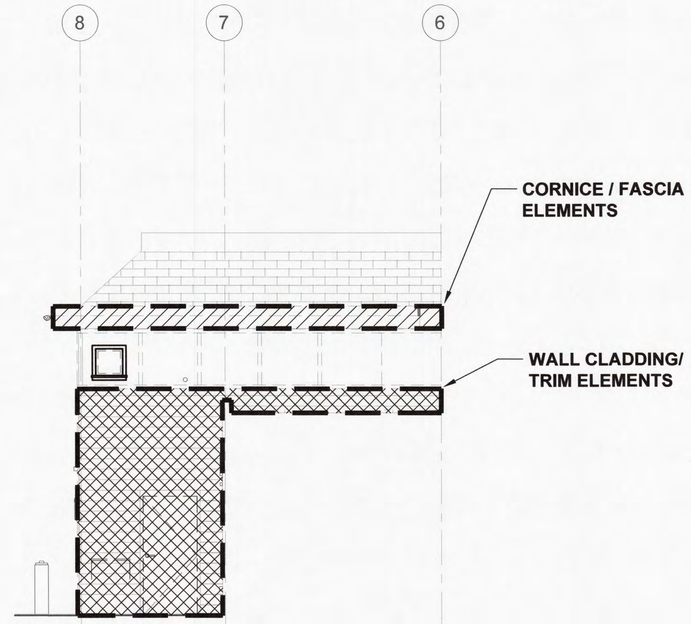


3 SOUTH EAST ELEVATION 1 - LEAD REMEDIATION PLAN
NTS

5/3/2022 11:43:22 AM

CONSULTANT INFORMATION

The LiRo Group
3 Aerial Way, Syosset, New York 11791
(516) 938-5476 www.liro.com

CONSULTANT SEAL

STATE OF NEW YORK · PETER JOSEPH GERBASI · No. 070446 · LICENSED PROFESSIONAL ENGINEER

| REVISION NUMBER | DATE | MADE BY | APP'D BY | REVISION |
|---|---|---|---|---|
| | | | | |

RECORD DRAWING CERTIFICATION

☐ AS BUILT – CHANGES AS NOTED ☐ AS BUILT – NO CHANGES

CONTRACTOR
NAME
SIGNATURE
TITLE DATE

PROJECT COORDINATOR
NAME
SIGNATURE
TITLE DATE

WESTCHESTER COUNTY, NEW YORK
DEPARTMENT OF PUBLIC WORKS AND TRANSPORTATION
DIVISION OF ENGINEERING

**INFRASTRUCTURE REHABILITATION - PHASE 3**
**PLAYLAND PARK, RYE, NEW YORK**
**NORTHEAST BURGER BARN**
**NW, SW & SE ELEVATIONS - LEAD REMEDIATION PLAN**

| | |
|---|---|
| CONTRACT NUMBER | 22-523 |
| SHEET NUMBER | BB-H-21 |
| DWG NO.: | |
| SCALE: | NOT TO SCALE |
| DATE: | 08/23/2022 |
| DPW FILE NUMBER | 1-118-G-769-0 |
| REV. NO. | 0 |

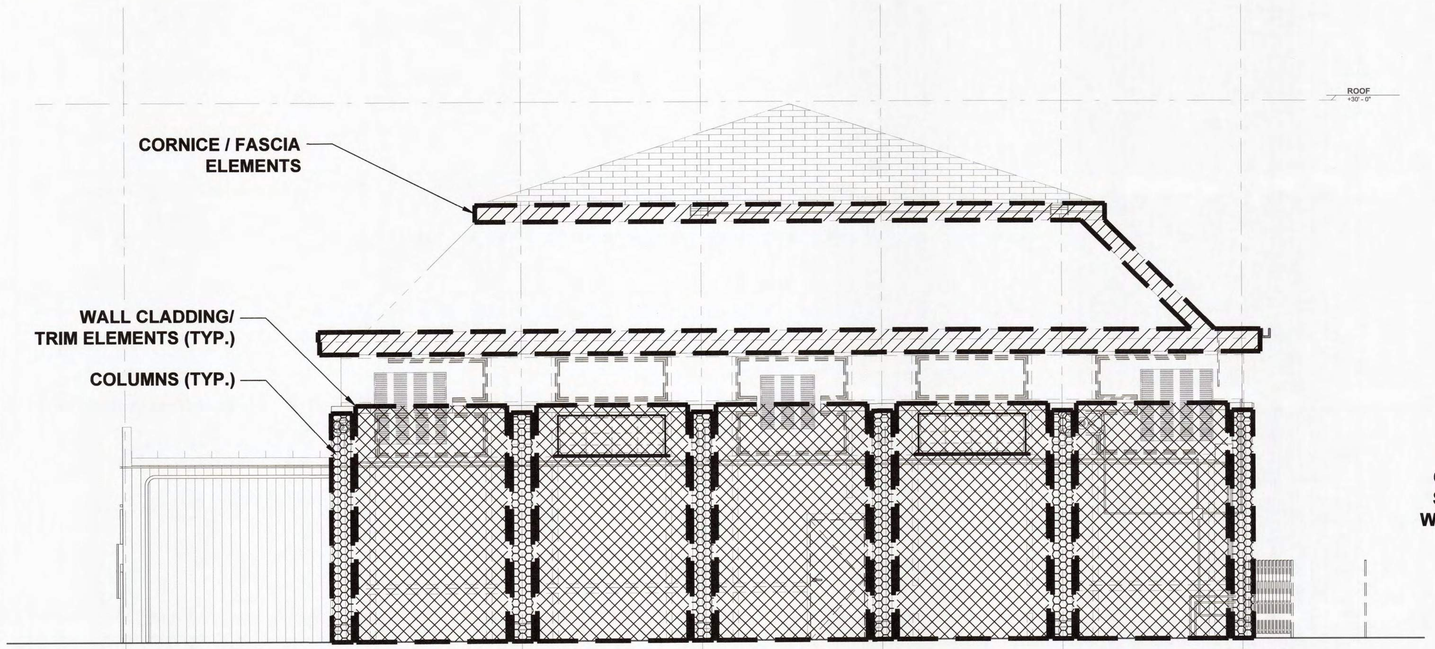


1 SOUTH EAST ELEVATION 2 - LEAD REMEDIATION PLAN
NTS

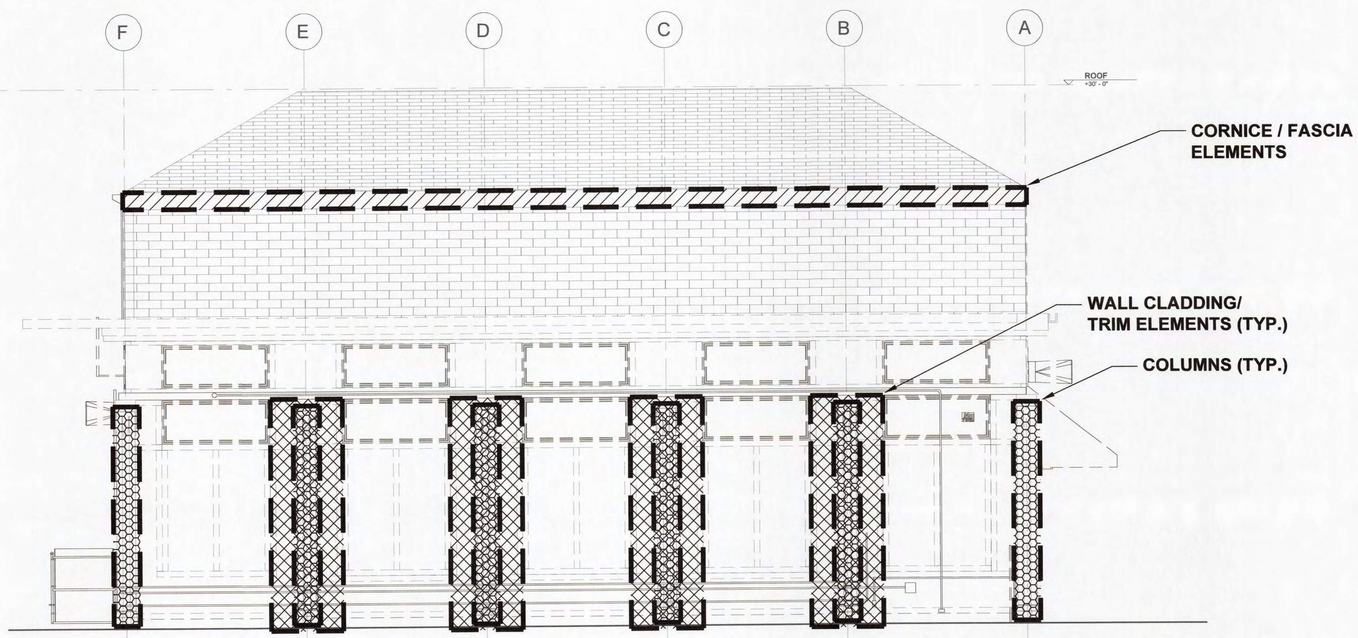


2 NORTH EAST ELEVATION - LEAD REMEDIATION PLAN
NTS

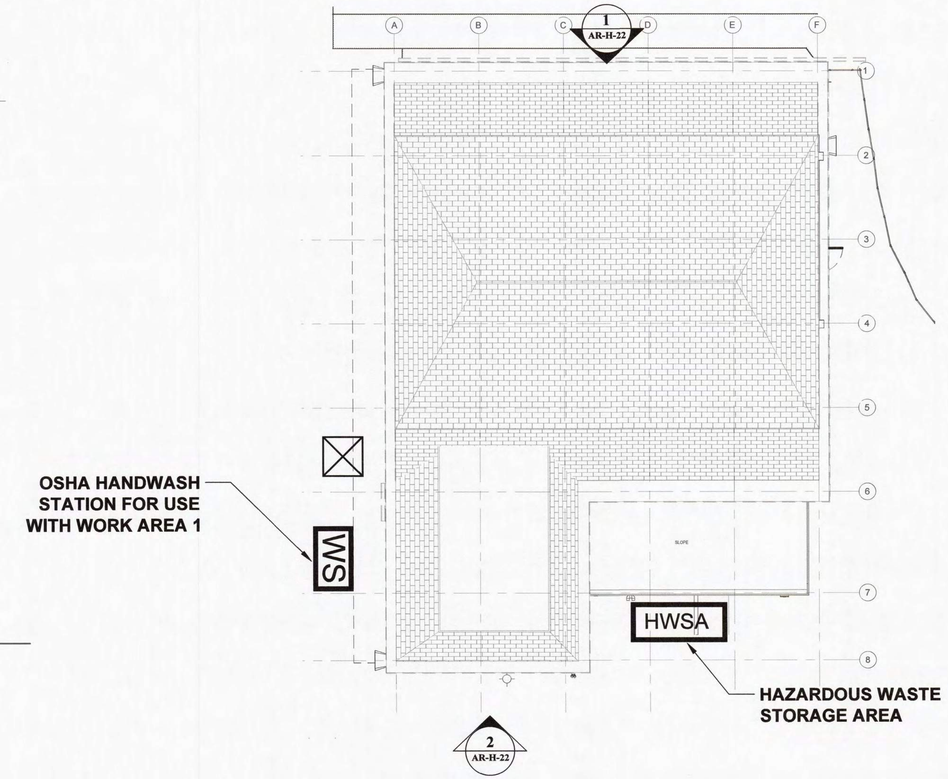


3 ROOF - LEAD REMEDIATION PLAN
NTS

5/3/2022 11:43:22 AM

CONSULTANT INFORMATION

The LiRo Group

3 Aerial Way, Syosset, New York 11791
(516) 938-5476 www.liro.com

CONSULTANT SEAL

STATE OF NEW YORK · PETER JOSEPH BASSI · LICENSED PROFESSIONAL ENGINEER · NO. 070446

| REVISION NUMBER | DATE | MADE BY | APP'D BY | REVISION |
|---|---|---|---|---|

RECORD DRAWING CERTIFICATION

☐ AS BUILT – CHANGES AS NOTED ☐ AS BUILT – NO CHANGES

CONTRACTOR
NAME
SIGNATURE
TITLE DATE

PROJECT COORDINATOR
NAME
SIGNATURE
TITLE DATE

WESTCHESTER COUNTY, NEW YORK
DEPARTMENT OF PUBLIC WORKS AND TRANSPORTATION
DIVISION OF ENGINEERING

**INFRASTRUCTURE REHABILITATION - PHASE 3**
**PLAYLAND PARK, RYE, NEW YORK**
**NORTHEAST BURGER BARN**
**NE & SE ELEVATIONS - LEAD REMEDIATION PLAN**

| | |
|---|---|
| CONTRACT NUMBER | 22-523 |
| SHEET NUMBER | BB-H-22 |
| DWG NO.: | |
| SCALE: | NOT TO SCALE |
| DATE: | 08/23/2022 |
| DPW FILE NUMBER | 1-118-G-770-0 |
| REV. NO. | 0 |

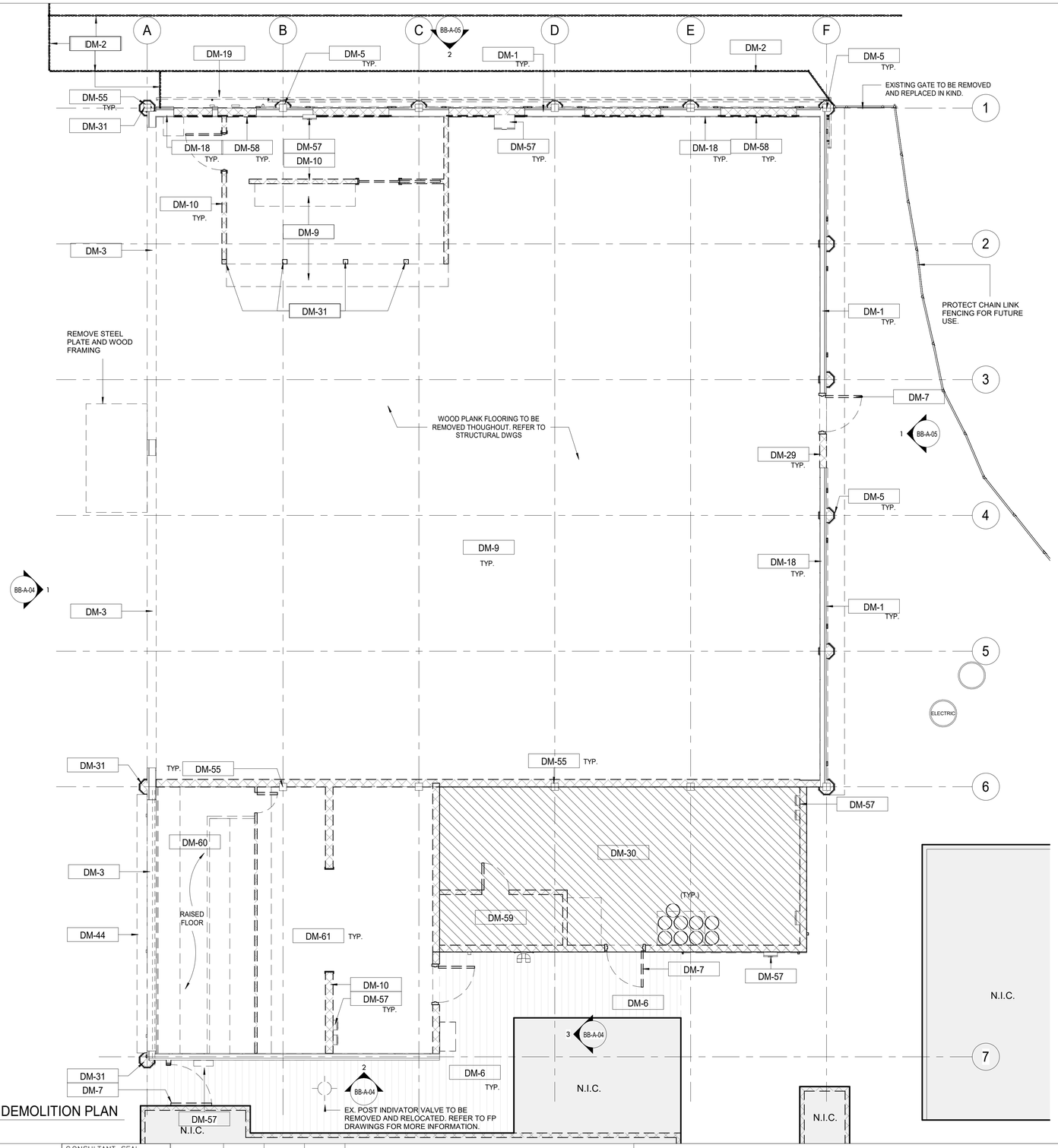


1 GROUND LEVEL DEMOLITION PLAN
1/4" = 1'-0"

## DEMOLITION GENERAL NOTES

1. ALL DEMOLITION AND REMOVAL WORK SHALL BE COMPLETED AS INDICATED AND NOTED ON THE DRAWINGS AND AS SPECIFIED.
2. PRIOR TO STARTING WORK, MAKE A THOROUGH EXAMINATION OF THE PORTIONS OF THE STRUCTURE IN WHICH THE WORK IS TO BE PERFORMED. CHECK ALL THE WORK AT ADJOINING OR UNDERLYING LOCATIONS. REPORT TO THE ARCHITECT ANY AND ALL CONDITIONS WHICH MAY INTERFERE WITH OR OTHERWISE PREVENT THE PROPER EXECUTION AND COMPLETION OF THE WORK. DO NOT START WORK UNTIL SUCH CONDITIONS HAS BEEN EXAMINED AND MUTUALLY AGREED UPON WITH THE ARCHITECT.
3. DASHED LINES INDICATE WALLS, FIXTURES, EQUIPMENT, ETC. TO BE REMOVED AND DISPOSED OF BY G.C. . ANY QUESTIONS ON SCOPE OF DEMOLITION MUST BE DIRECTED TO THE ARCHITECT PRIOR TO BID. PROVIDE SHORING AND BRACING AS REQUIRED.
4. THE EXISTING WORK REQUIRED TO BE REMOVED SHALL BE AS INDICATED BUT SHALL ALSO EXTEND TO INCLUDE ANY AND ALL OTHER EXISTING MATERIALS OR WORK NECESSARY TO INSTALL THE NEW WORK AS SHOWN AND SPECIFIED AND TO CONNECT SAME WITH THE EXISTING WORK IN AN APPROVED MANNER.
5. ALTER AND RESTORE EXISTING WALLS, PARTITIONS, COLUMNS, CEILING AND FLOORS, AND THEIR RESPECTIVE FINISHED SURFACES TO ACCOMMODATE NEW CONSTRUCTION AND FINISHES, IN ACCORDANCE WITH DRAWINGS AND SPECIFICATIONS.
6. IMMEDIATELY NOTIFY THE OWNER'S REPRESENTATIVES OF ANY HAZARDOUS MATERIALS ENCOUNTERED DURING DEMOLITION/REMOVAL.
7. ALL DIMENSIONS AND CONSTRUCTION CONDITIONS TO BE VERIFIED BY THE CONTRACTOR PRIOR TO THE START OF WORK.
8. CONTAINERIZED DEMOLITION DEBRIS SHALL BE TCLP TESTED TO CONFIRM WASTE MAY BE DISPOSED OF AS NON-HAZARDOUS.
9. ALL ITEMS SCHEDULED FOR DEMOLITION SHALL BE REMOVED FROM THE SITE UNLESS OTHERWISE NOTED. CONTRACTOR SHALL BE RESPONSIBLE FOR CLEANING OF SITE ON A DAILY BASIS.
10. REFER TO ELECTRICAL, MECHANICAL, STRUCTURAL, PLUMBING, ETC. DEMOLITION DRAWINGS FOR ADDITIONAL ITEMS.
11. PATCH AND REPAIR SURFACES (FLOOR, WALL, CEILING) DAMAGED IN PREPARATION FOR NEW EQUIPMENT AND FINISHES.
12. PRIOR TO DEMOLITION, CONTRACTOR IS REQUIRED TO POSSES AN ASBESTOS -CONTAINMENT MATERIALS (ACM) PERMIT FROM THE DEPARTMENT OF LABOR.

## DEMOLITION LEGEND

- INDICATES REMOVAL
- INDICATES WALL TO BE REMOVED (REFER TO KEYNOTE FOR EXTENT OF REMOVAL)
- N.I.C. — INDICATES SCOPE NOT IN CONTRACT
- FIRE HYDRANT TO BE RELOCATED
- ? — KEY NOTES

## KEYNOTE LEGEND DEMO.

| KEY VALUE | KEYNOTE TEXT |
|---|---|
| DM-1 | REMOVE EXISTING WOOD SIDING. |
| DM-2 | REMOVE EXISTING GATE. |
| DM-3 | REMOVE ROLL DOWN DOOR AND ASSOCIATED HARDWARE. |
| DM-5 | REMOVE COLUMN ENCLOSURES. CAREFULLY REMOVE AT LEAST ONE COLUMN ENCLOSURE TO USE AS REFERENCE IN ORDER TO REPLICATE TRIMS TO MATCH LOCATION, SIZE AND SHAPE AS INDICATED. COORDINATE WITH STRUCTURAL DRAWINGS. |
| DM-6 | REMOVE EXISTING WOOD DECKING. (COORDINATE EXTENT OF REMOVAL REQUIRED TO REPAIR FLOOR JOISTS TO REMAIN AS NEEDED - SEE STRUCTURAL DRAWINGS). |
| DM-7 | REMOVE EXISTING DOOR & FRAME. |
| DM-9 | CONTRACTOR TO REMOVE ANY REMAINING EQUIPMENT AND BUILDING CONTENT. CONTENT MAY INCLUDE BUT NOT LIMITED TO REFRIGERATOR, STORAGE, RACKS, AC UNITS, GAMES ETC. |
| DM-10 | REMOVE INTERIOR PARTITION. |
| DM-18 | REMOVE EXISTING PANELS & TRIMS. |
| DM-19 | DISCONNECT AND REMOVE EXISTING SUSPENDED EQUIPMENT SUCH AS CAMERAS, SPEAKERS, ETC. SEE ELECTRICAL DRAWINGS FOR DETAILS. |
| DM-29 | REMOVE SECTION OF EXISTING WALL. PROVIDE HEADER AS REQUIRED TO CREATE A DOOR OPENING. SEE ELEVATIONS FOR EXTENT. |
| DM-30 | EXISTING STRUCTURE TO BE REMOVED IN ITS ENTIRETY. SEE PLANS FOR EXTENT OF REMOVAL. |
| DM-31 | REMOVE EXISTING COLUMN. |
| DM-44 | REMOVE EXISTING STEP. |
| DM-55 | EXISTING COLUMN AND BRACE TO REMAIN AND BE PROTECTED. |
| DM-57 | REMOVE EXISTING ELECTRICAL PANEL & ALL ELECTRICAL DISTRIBUTION AND FIXURES. SEE ELECTRICAL DRAWINGS. |
| DM-58 | REMOVE PLYWOOD BOARDS AND COVERINGS FROM THE WINDOW ON BOTH INTERIOR AND EXTERIOR. |
| DM-59 | EXISTING SPRINKLER ROOM AND ALL ASSOCIATED PIPING AND EQUIPMENT TO BE RELOCATED. REFER TO FIRE PROTECTION PLAN FOR MORE INFORMATION. |
| DM-60 | RAISED FLOOR CONSTRUCTION TO BE REMOVED. |
| DM-61 | REMOVE EXISTING FLOORING TO THE CONCRETE SLAB ON GRADE. |

8/30/2022 3:03:36 PM

CONSULTANT INFORMATION

The LiRo Group
3 Aerial Way, Syosset, New York 11791
(516) 938-5476 www.liro.com

CONSULTANT SEAL

REGISTERED ARCHITECT ROBERT D. JOHNSON 023280 STATE OF NEW YORK

| REVISION NUMBER | DATE | MADE BY | APP'D BY | REVISION |
|---|---|---|---|---|

RECORD DRAWING CERTIFICATION

☐ AS BUILT – CHANGES AS NOTED ☐ AS BUILT – NO CHANGES

CONTRACTOR
NAME
SIGNATURE
TITLE DATE

PROJECT COORDINATOR
NAME
SIGNATURE
TITLE DATE

WESTCHESTER COUNTY, NEW YORK
DEPARTMENT OF PUBLIC WORKS AND TRANSPORTATION
DIVISION OF ENGINEERING

INFRASTRUCTURE REHABILITATION - PHASE 3
PLAYLAND PARK, RYE, NEW YORK
NORTH EAST BURGER BARN
GROUND FLOOR DEMOLITION PLAN

| | |
|---|---|
| CONTRACT NUMBER | 22-523 |
| SHEET NUMBER | BB-A-01 |
| DWG NO.: | 22 of 664 |
| SCALE: | As indicated |
| DATE: | 08/23/2022 |
| DPW FILE NUMBER | 1-118-A-771-0 |
| REV. NO. | 0 |

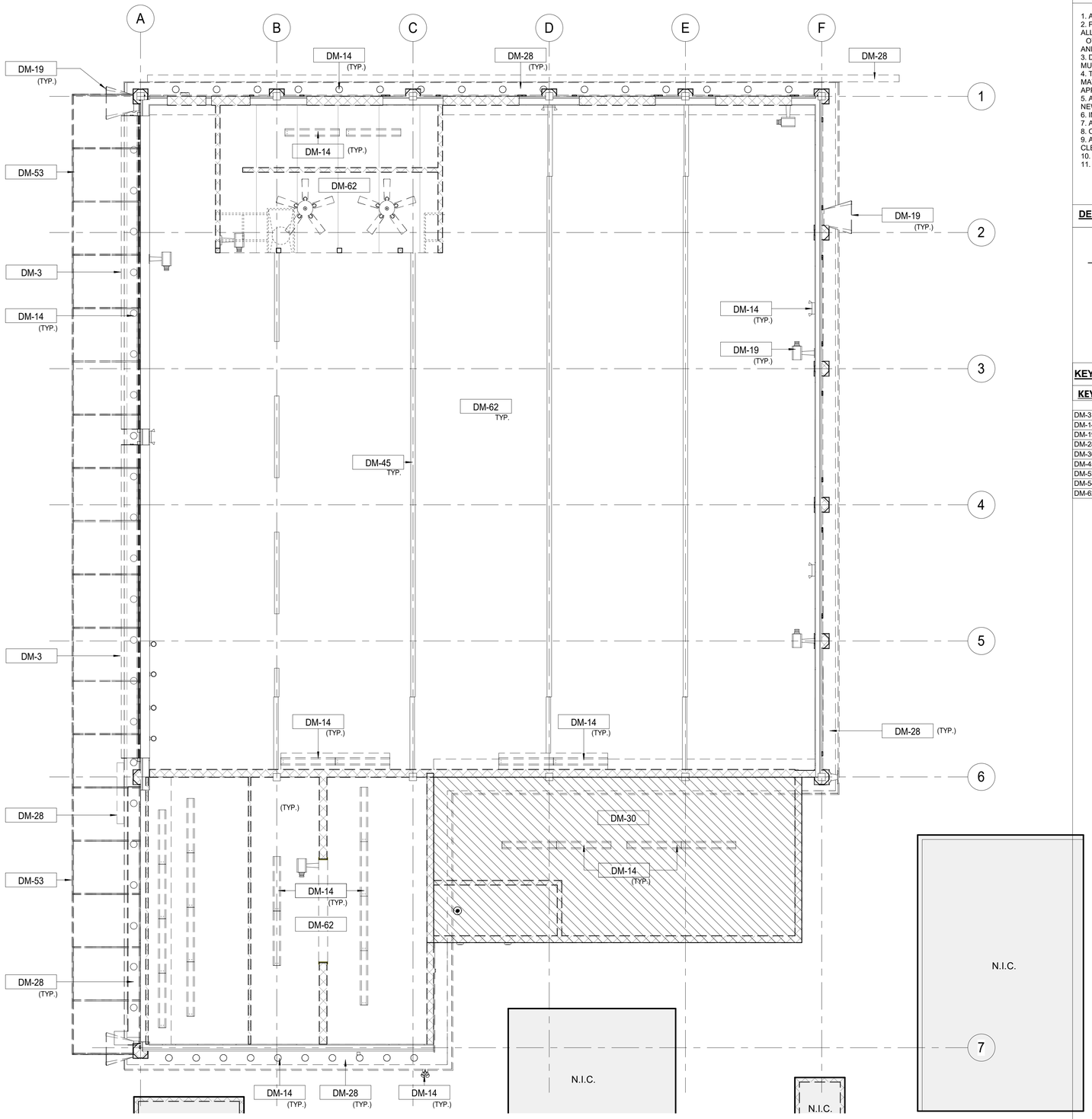


1 GROUND LEVEL DEMOLITION REFLECTED CEILING PLAN
1/4" = 1'-0"

## DEMOLITION RCP GENERAL NOTES

1. ALL DEMOLITION AND REMOVAL WORK SHALL BE COMPLETED AS INDICATED AND NOTED ON THE DRAWINGS AND AS SPECIFIED.
2. PRIOR TO STARTING WORK, MAKE A THOROUGH EXAMINATION OF THE PORTIONS OF THE STRUCTURE IN WHICH THE WORK IS TO BE PERFORMED. CHECK ALL THE WORK AT ADJOINING OR UNDERLYING LOCATIONS. REPORT TO THE ARCHITECT ANY AND ALL CONDITIONS WHICH MAY INTERFERE WITH OR OTHERWISE PREVENT THE PROPER EXECUTION AND COMPLETION OF THE WORK. DO NOT START WORK UNTIL SUCH CONDITIONS HAS BEEN EXAMINED AND MUTUALLY AGREED UPON WITH THE ARCHITECT.
3. DASHED LINES INDICATE WALLS, FIXTURES, EQUIPMENT, ETC. TO BE REMOVED AND DISPOSED OF BY G.C. . ANY QUESTIONS ON SCOPE OF DEMOLITION MUST BE DIRECTED TO THE ARCHITECT PRIOR TO BID. PROVIDE SHORING AND BRACING AS REQUIRED.
4. THE EXISTING WORK REQUIRED TO BE REMOVED SHALL BE AS INDICATED BUT SHALL ALSO EXTEND TO INCLUDE ANY AND ALL OTHER EXISTING MATERIALS OR WORK NECESSARY TO INSTALL THE NEW WORK AS SHOWN AND SPECIFIED AND TO CONNECT SAME WITH THE EXISTING WORK IN AN APPROVED MANNER.
5. ALTER AND RESTORE EXISTING WALLS, PARTITIONS, COLUMNS, CEILING AND FLOORS, AND THEIR RESPECTIVE FINISHED SURFACES TO ACCOMMODATE NEW CONSTRUCTION AND FINISHES, IN ACCORDANCE WITH DRAWINGS AND SPECIFICATIONS.
6. IMMEDIATELY NOTIFY THE OWNER'S REPRESENTATIVES OF ANY HAZARDOUS MATERIALS ENCOUNTERED DURING DEMOLITION/REMOVAL.
7. ALL DIMENSIONS AND CONSTRUCTION CONDITIONS TO BE VERIFIED BY THE CONTRACTOR PRIOR TO THE START OF WORK.
8. CONTAINERIZED DEMOLITION DEBRIS SHALL BE TCLP TESTED TO CONFIRM WASTE MAY BE DISPOSED OF AS NON-HAZARDOUS.
9. ALL ITEMS SCHEDULED FOR DEMOLITION SHALL BE REMOVED FROM THE SITE UNLESS OTHERWISE NOTED. CONTRACTOR SHALL BE RESPONSIBLE FOR CLEANING OF SITE ON A DAILY BASIS.
10. REFER TO ELECTRICAL, MECHANICAL, STRUCTURAL, PLUMBING, ETC. DEMOLITION DRAWINGS FOR ADDITIONAL ITEMS.
11. PATCH AND REPAIR SURFACES (FLOOR, WALL, CEILING) DAMAGED IN PREPARATION FOR NEW EQUIPMENT AND FINISHES.

## DEMOLITION LEGEND

- INDICATES REMOVAL
- INDICATES WALL TO BE REMOVED (REFER TO KEYNOTE FOR EXTENT OF REMOVAL)
- N.I.C. — INDICATES SCOPE NOT IN CONTRACT
- FIRE HYDRANT TO BE RELOCATED
- ? — KEY NOTES

## KEYNOTE LEGEND DEMO.

| KEY VALUE | KEYNOTE TEXT |
|---|---|
| DM-3 | REMOVE ROLL DOWN DOOR AND ASSOCIATED HARDWARE. |
| DM-14 | REMOVE EXISTING LIGHTING FIXTURES AND ELECTRICAL WIRING CONNECTED TO THESE FIXTURES. SEE ELECTRICAL FOR DETAILS. |
| DM-19 | DISCONNECT AND REMOVE EXISTING SUSPENDED EQUIPMENT SUCH AS CAMERAS, SPEAKERS, ETC. SEE ELECTRICAL DRAWINGS FOR DETAILS. |
| DM-28 | REMOVE EXISTING GUTTER, FASCIA, AND SOFFITS. |
| DM-30 | EXISTING STRUCTURE TO BE REMOVED IN ITS ENTIRETY. SEE PLANS FOR EXTENT OF REMOVAL. |
| DM-45 | EXISTING TRUSS TO REMAIN AND BE PROTECTED DURING CONSTRUCTION. |
| DM-53 | REMOVE EXISTING AWNING. PROVIDE FOR DELIVERY TO THE OWNER AS DIRECTED BY THE A/E. |
| DM-54 | CONTRACTOR TO CAREFULLY REMOVE, STORE AND CATALOG EXISTING "LANTERN" STYLE FIXTURE FOR REPLICATION. (TO BE UPDATED) |
| DM-62 | REMOVE CEILING THROUGHOUT. PROTECT STRUCTURE AS NEEDED. |

8/30/2022 3:03:41 PM

CONSULTANT INFORMATION
The LiRo Group
3 Aerial Way, Syosset, New York 11791
(516) 938-5476 www.liro.com

CONSULTANT SEAL
REGISTERED ARCHITECT ROBERT D. CORNING 023220 STATE OF NEW YORK

| REVISION NUMBER | DATE | MADE BY | APP'D BY | REVISION |
|---|---|---|---|---|

RECORD DRAWING CERTIFICATION
AS BUILT – CHANGES AS NOTED
AS BUILT – NO CHANGES

CONTRACTOR
NAME
SIGNATURE
TITLE DATE

PROJECT COORDINATOR
NAME
SIGNATURE
TITLE DATE

WESTCHESTER COUNTY, NEW YORK
DEPARTMENT OF PUBLIC WORKS AND TRANSPORTATION
DIVISION OF ENGINEERING

**INFRASTRUCTURE REHABILITATION - PHASE 3**
**PLAYLAND PARK, RYE, NEW YORK**
**NORTH EAST BURGER BARN**
**GROUND FLOOR DEMOLITION- REFLECTED CEILING PLANS**

| | |
|---|---|
| CONTRACT NUMBER | 22-523 |
| SHEET NUMBER | BB-A-02 |
| DWG NO.: | 23 of 664 |
| SCALE: | As indicated |
| DATE: | 08/23/2022 |
| DPW FILE NUMBER | 1-118-A-772-0 |
| REV. NO. | 0 |

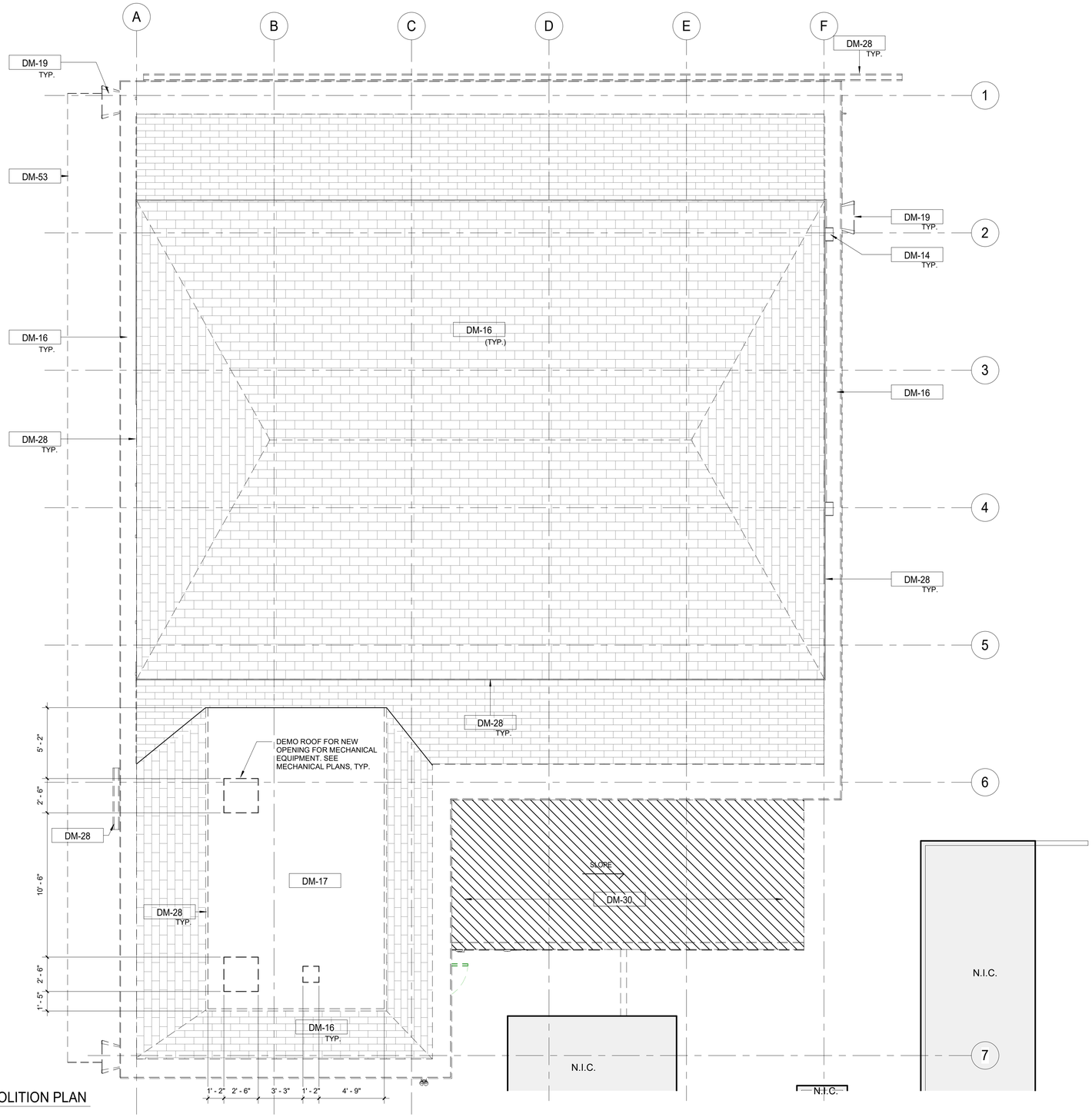


1 ROOF LEVEL DEMOLITION PLAN
1/4" = 1'-0"

## DEMOLITION GENERAL NOTES

1. ALL DEMOLITION AND REMOVAL WORK SHALL BE COMPLETED AS INDICATED AND NOTED ON THE DRAWINGS AND AS SPECIFIED.
2. PRIOR TO STARTING WORK, MAKE A THOROUGH EXAMINATION OF THE PORTIONS OF THE STRUCTURE IN WHICH THE WORK IS TO BE PERFORMED. CHECK ALL THE WORK AT ADJOINING OR UNDERLYING LOCATIONS. REPORT TO THE ARCHITECT ANY AND ALL CONDITIONS WHICH MAY INTERFERE WITH OR OTHERWISE PREVENT THE PROPER EXECUTION AND COMPLETION OF THE WORK. DO NOT START WORK UNTIL SUCH CONDITIONS HAS BEEN EXAMINED AND MUTUALLY AGREED UPON WITH THE ARCHITECT.
3. DASHED LINES INDICATE WALLS, FIXTURES, EQUIPMENT, ETC. TO BE REMOVED AND DISPOSED OF BY G.C. . ANY QUESTIONS ON SCOPE OF DEMOLITION MUST BE DIRECTED TO THE ARCHITECT PRIOR TO BID. PROVIDE SHORING AND BRACING AS REQUIRED.
4. THE EXISTING WORK REQUIRED TO BE REMOVED SHALL BE AS INDICATED BUT SHALL ALSO EXTEND TO INCLUDE ANY AND ALL OTHER EXISTING MATERIALS OR WORK NECESSARY TO INSTALL THE NEW WORK AS SHOWN AND SPECIFIED AND TO CONNECT SAME WITH THE EXISTING WORK IN AN APPROVED MANNER.
5. ALTER AND RESTORE EXISTING WALLS, PARTITIONS, COLUMNS, CEILING AND FLOORS, AND THEIR RESPECTIVE FINISHED SURFACES TO ACCOMMODATE NEW CONSTRUCTION AND FINISHES, IN ACCORDANCE WITH DRAWINGS AND SPECIFICATIONS.
6. IMMEDIATELY NOTIFY THE OWNER'S REPRESENTATIVES OF ANY HAZDAROUS MATERIALS ENCOUNTERED DURING DEMOLITION/REMOVAL.
7. ALL DIMENSIONS AND CONSTRUCTION CONDITIONS TO BE VERIFIED BY THE CONTRACTOR PRIOR TO THE START OF WORK.
8. CONTAMINERIZED DEMOLITION DEBRIS SHALL BE TCLP TESTED TO CONFIRM WASTE MAY BE DISPOSED OF AS NON-HAZARDOUS.
9. ALL ITEMS SCHEDULED FOR DEMOLITION SHALL BE REMOVED FROM THE SITE UNLESS OTHERWISE NOTED. CONTRACTOR SHALL BE RESPONSIBLE FOR CLEANING OF SITE ON A DAILY BASIS.
10. REFER TO ELECTRICAL, MECHANICAL, STRUCTURAL, PLUMBING, ETC. DEMOLITION DRAWINGS FOR ADDITIONAL ITEMS.
11. PATCH AND REPAIR SURFACES (FLOOR, WALL, CEILING) DAMAGED IN PREPARATION FOR NEW EQUIPMENT AND FINISHES.

## DEMOLITION LEGEND

INDICATES REMOVAL

INDICATES WALL TO BE REMOVED (REFER TO KEYNOTE FOR EXTENT OF REMOVAL)

N.I.C. — INDICATES SCOPE NOT IN CONTRACT

FIRE HYDRANT TO BE RELOCATED

? — KEY NOTES

## KEYNOTE LEGEND DEMO.

| KEY VALUE | KEYNOTE TEXT |
|---|---|
| DM-14 | REMOVE EXISTING LIGHTING FIXTURES AND ELECTRICAL WIRING CONNECTED TO THESE FIXTURES. SEE ELECTRICAL FOR DETAILS. |
| DM-16 | REMOVE EXISTING ROOFING SHINGLES, UNDERLAYMENT AND ANY ROTTED WOOD SHEATHING. REPLACE DAMAGED SHEATHING TO MATCH EXISTING. COORDINATE WITH A/E. |
| DM-17 | REMOVE EXISTING ROOFING MEMBRANES, UNDERLAYMENT AND ANY ROTTED WOOD SHEATHING. REPLACE EXISTING DAMAGED SHEATHING TO MATCH EXISTING. COORDINATE WITH A/E. |
| DM-19 | DISCONNECT AND REMOVE EXISTING SUSPENDED EQUIPMENT SUCH AS CAMERAS, SPEAKERS, ETC. SEE ELECTRICAL DRAWINGS FOR DETAILS. |
| DM-28 | REMOVE EXISTING GUTTER, FASCIA, AND SOFFITS. |
| DM-30 | EXISTING STRUCTURE TO BE REMOVED IN ITS ENTIRETY. SEE PLANS FOR EXTENT OF REMOVAL. |
| DM-53 | REMOVE EXISTING AWNING. PROVIDE FOR DELIVERY TO THE OWNER AS DIRECTED BY THE A/E. |

8/30/2022 3:03:42 PM

CONSULTANT INFORMATION

The LiRo Group
3 Aerial Way, Syosset, New York 11791
(516) 938-5476 www.liro.com

CONSULTANT SEAL

REGISTERED ARCHITECT ROBERT D. YOUNG JR. 023280 STATE OF NEW YORK

| REVISION NUMBER | DATE | MADE BY | APP'D BY | REVISION |
|---|---|---|---|---|

RECORD DRAWING CERTIFICATION

☐ AS BUILT – CHANGES AS NOTED ☐ AS BUILT – NO CHANGES

CONTRACTOR
NAME
SIGNATURE
TITLE DATE

PROJECT COORDINATOR
NAME
SIGNATURE
TITLE DATE

WESTCHESTER COUNTY, NEW YORK
DEPARTMENT OF PUBLIC WORKS AND TRANSPORTATION
DIVISION OF ENGINEERING

**INFRASTRUCTURE REHABILITATION - PHASE 3**
**PLAYLAND PARK, RYE, NEW YORK**
**NORTH EAST BURGER BARN**
**ROOF DEMOLITION PLAN**

| | |
|---|---|
| CONTRACT NUMBER | 22-523 |
| SHEET NUMBER | BB-A-03 |
| DWG NO.: | 24 of 664 |
| SCALE: | As indicated |
| DATE: | 08/23/2022 |
| DPW FILE NUMBER | 1-118-A-773-0 |
| REV. NO. | 0 |

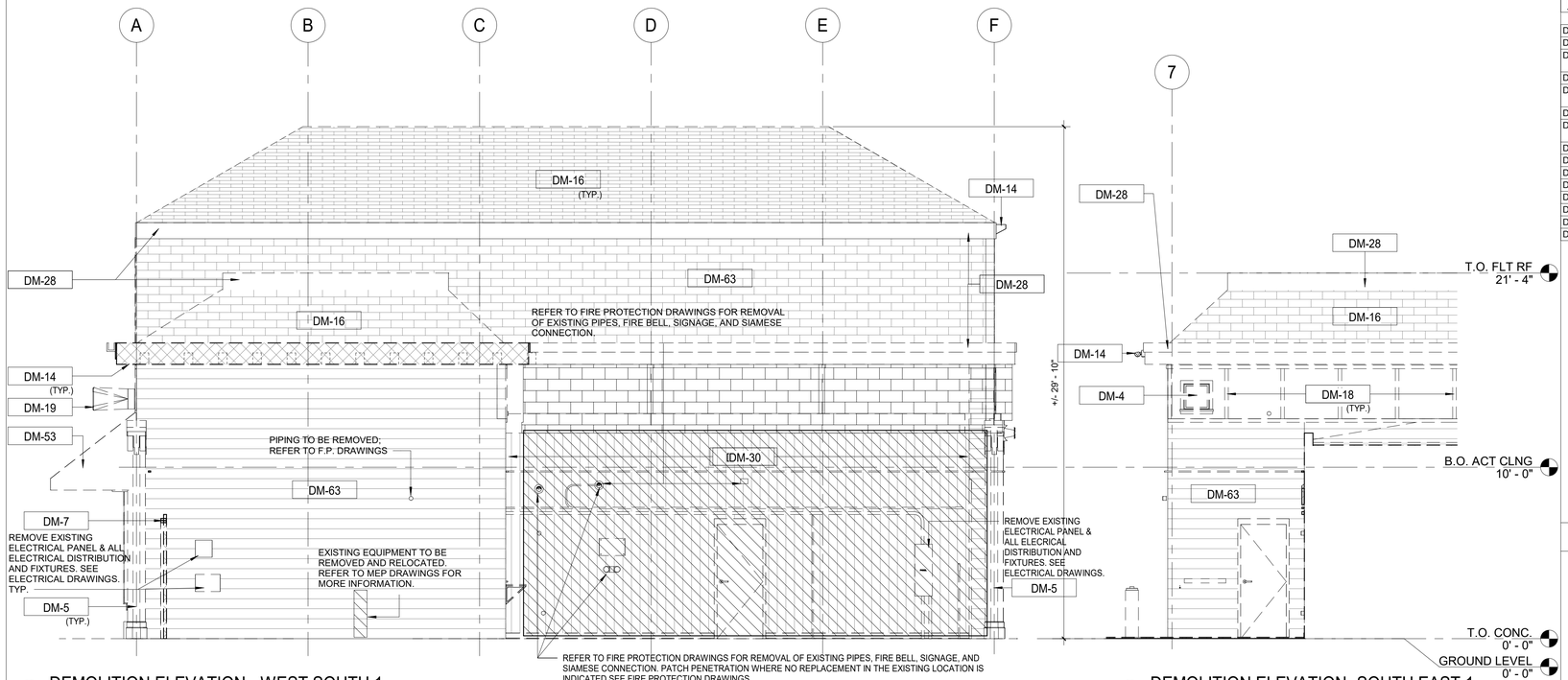


2 DEMOLITION ELEVATION- WEST SOUTH 1
1/4" = 1'-0"




3 DEMOLITION ELEVATION- SOUTH EAST 1
1/4" = 1'-0"

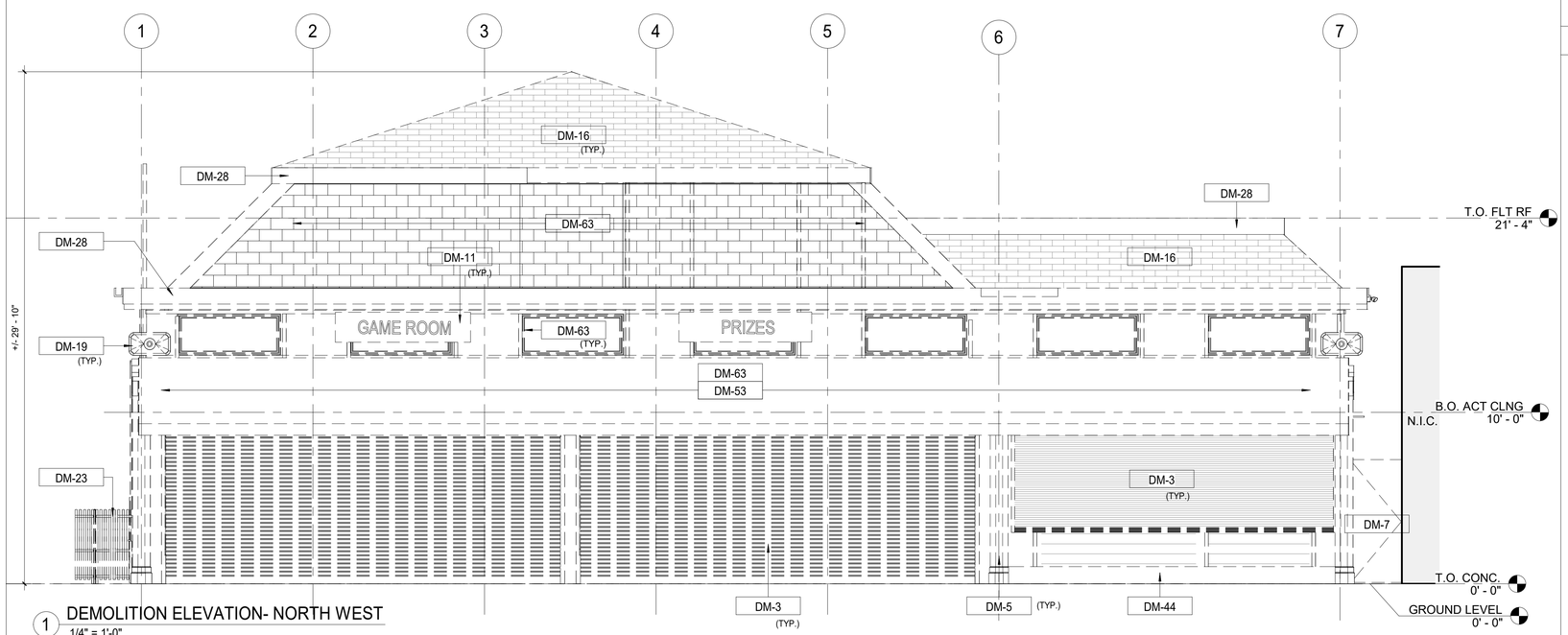


1 DEMOLITION ELEVATION- NORTH WEST
1/4" = 1'-0"

## KEYNOTE LEGEND DEMO.

| KEY VALUE | KEYNOTE TEXT |
|---|---|
| DM-3 | REMOVE ROLL DOWN DOOR AND ASSOCIATED HARDWARE. |
| DM-4 | REMOVE EXISTING WINDOW & FRAME. |
| DM-5 | REMOVE COLUMN ENCLOSURES. CAREFULLY REMOVE AT LEAST ONE COLUMN ENCLOSURE TO USE AS REFERENCE IN ORDER TO REPLICATE TRIMS TO MATCH LOCATION, SIZE AND SHAPE AS INDICATED. COORDINATE WITH STRUCTURAL DRAWINGS. |
| DM-7 | REMOVE EXISTING DOOR & FRAME. |
| DM-11 | CAREFULLY REMOVE AND RETURN TO OWNER ALL EXISTING SIGNAGE AND LETTERING. COORDINATE SIGNAGE REMOVAL WITH OWNER PRIOR TO REMOVAL OF ANY SIGNAGE. |
| DM-14 | REMOVE EXISTING LIGHTING FIXTURES AND ELECTRICAL WIRING CONNECTED TO THESE FIXTURES. SEE ELECTRICAL FOR DETAILS. |
| DM-16 | REMOVE EXISTING ROOFING SHINGLES, UNDERLAYMENT AND ANY ROTTED WOOD SHEATHING. REPLACE DAMAGED SHEATHING TO MATCH EXISTING. COORDINATE WITH A/E. |
| DM-18 | REMOVE EXISTING PANELS & TRIMS. |
| DM-19 | DISCONNECT AND REMOVE EXISTING SUSPENDED EQUIPMENT SUCH AS CAMERAS, SPEAKERS, ETC. SEE ELECTRICAL DRAWINGS FOR DETAILS. |
| DM-23 | REMOVE EXISTING FENCE. |
| DM-28 | REMOVE EXISTING GUTTER, FASCIA, AND SOFFITS. |
| DM-30 | EXISTING STRUCTURE TO BE REMOVED IN ITS ENTIRETY. SEE PLANS FOR EXTENT OF REMOVAL. |
| DM-44 | REMOVE EXISTING STEP. |
| DM-53 | REMOVE EXISTING AWNING. PROVIDE FOR DELIVERY TO THE OWNER AS DIRECTED BY THE A/E. |
| DM-63 | CONTRACTOR TO CAREFULLY DOCUMENT AND REMOVE ALL EXISTING FACADE MATERIALS AND TRIM. |

## DEMOLITION GENERAL NOTES

1. ALL DEMOLITION AND REMOVAL WORK SHALL BE COMPLETED AS INDICATED AND NOTED ON THE DRAWINGS AND AS SPECIFIED.
2. PRIOR TO STARTING WORK, MAKE A THOROUGH EXAMINATION OF THE PORTIONS OF THE STRUCTURE IN WHICH THE WORK IS TO BE PERFORMED. CHECK ALL THE WORK AT ADJOINING OR UNDERLYING LOCATIONS. REPORT TO THE ARCHITECT ANY AND ALL CONDITIONS WHICH MAY INTERFERE WITH OR OTHERWISE PREVENT THE PROPER EXECUTION AND COMPLETION OF THE WORK. DO NOT START WORK UNTIL SUCH CONDITIONS HAS BEEN EXAMINED AND MUTUALLY AGREED UPON WITH THE ARCHITECT.
3. DASHED LINES INDICATE WALLS, FIXTURES, EQUIPMENT, ETC. TO BE REMOVED AND DISPOSED OF BY G.C. .ANY QUESTIONS ON SCOPE OF DEMOLITION MUST BE DIRECTED TO THE ARCHITECT PRIOR TO BID. PROVIDE SHORING AND BRACING AS REQUIRED.
4. THE EXISTING WORK REQUIRED TO BE REMOVED SHALL BE AS INDICATED BUT SHALL ALSO EXTEND TO INCLUDE ANY AND ALL OTHER EXISTING MATERIALS OR WORK NECESSARY TO INSTALL THE NEW WORK AS SHOWN AND SPECIFIED AND TO CONNECT SAME WITH THE EXISTING WORK IN AN APPROVED MANNER.
5. ALTER AND RESTORE EXISTING WALLS, PARTITIONS, COLUMNS, CEILING AND FLOORS, AND THEIR RESPECTIVE FINISHED SURFACES TO ACCOMMODATE NEW CONSTRUCTION AND FINISHES, IN ACCORDANCE WITH DRAWINGS AND SPECIFICATIONS.
6. IMMEDIATELY NOTIFY THE OWNER'S REPRESENTATIVES OF ANY HAZDAROUS MATERIALS ENCOUNTERED DURING DEMOLITION/REMOVAL.
7. ALL DIMENSIONS AND CONSTRUCTION CONDITIONS TO BE VERIFIED BY THE CONTRACTOR PRIOR TO THE START OF WORK.
8. CONTAINERIZED DEMOLITION DEBRIS SHALL BE TCLP TESTED TO CONFIRM WASTE MAY BE DISPOSED OF AS NON-HAZARDOUS.
9. ALL ITEMS SCHEDULED FOR DEMOLITION SHALL BE REMOVED FROM THE SITE UNLESS OTHERWISE NOTED. CONTRACTOR SHALL BE RESPONSIBLE FOR CLEANING OF SITE ON A DAILY BASIS.
10. REFER TO ELECTRICAL, MECHANICAL, STRUCTURAL, PLUMBING, ETC. DEMOLITION DRAWINGS FOR ADDITIONAL ITEMS.
11. PATCH AND REPAIR SURFACES (FLOOR, WALL, CEILING) DAMAGED IN PREPARATION FOR NEW EQUIPMENT AND FINISHES.

## DEMOLITION LEGEND

- INDICATES REMOVAL
- INDICATES WALL TO BE REMOVED (REFER TO KEYNOTE FOR EXTENT OF REMOVAL)
- N.I.C. — INDICATES SCOPE NOT IN CONTRACT
- FIRE HYDRANT TO BE RELOCATED
- ? — KEY NOTES

8/30/2022 3:03:46 PM

CONSULTANT INFORMATION

The LiRo Group
3 Aerial Way, Syosset, New York 11791
(516) 938-5476 www.liro.com

CONSULTANT SEAL

REGISTERED ARCHITECT ROBERT D. VOLKING JR. 023220 STATE OF NEW YORK

| REVISION NUMBER | DATE | MADE BY | APP'D BY | REVISION |
|---|---|---|---|---|

RECORD DRAWING CERTIFICATION

☐ AS BUILT – CHANGES AS NOTED ☐ AS BUILT – NO CHANGES

CONTRACTOR
NAME
SIGNATURE
TITLE DATE

PROJECT COORDINATOR
NAME
SIGNATURE
TITLE DATE

WESTCHESTER COUNTY, NEW YORK
DEPARTMENT OF PUBLIC WORKS AND TRANSPORTATION
DIVISION OF ENGINEERING

**INFRASTRUCTURE REHABILITATION - PHASE 3**
**PLAYLAND PARK, RYE, NEW YORK**
**NORTH EAST BURGER BARN**
**EXTERIOR DEMOLITION ELEVATIONS 1**

| | |
|---|---|
| CONTRACT NUMBER | 22-523 |
| SHEET NUMBER | BB-A-04 |
| DWG NO.: | 25 of 664 |
| SCALE: | As indicated |
| DATE: | 08/23/2022 |
| DPW FILE NUMBER | 1-118-A-774-0 |
| REV. NO. | 0 |

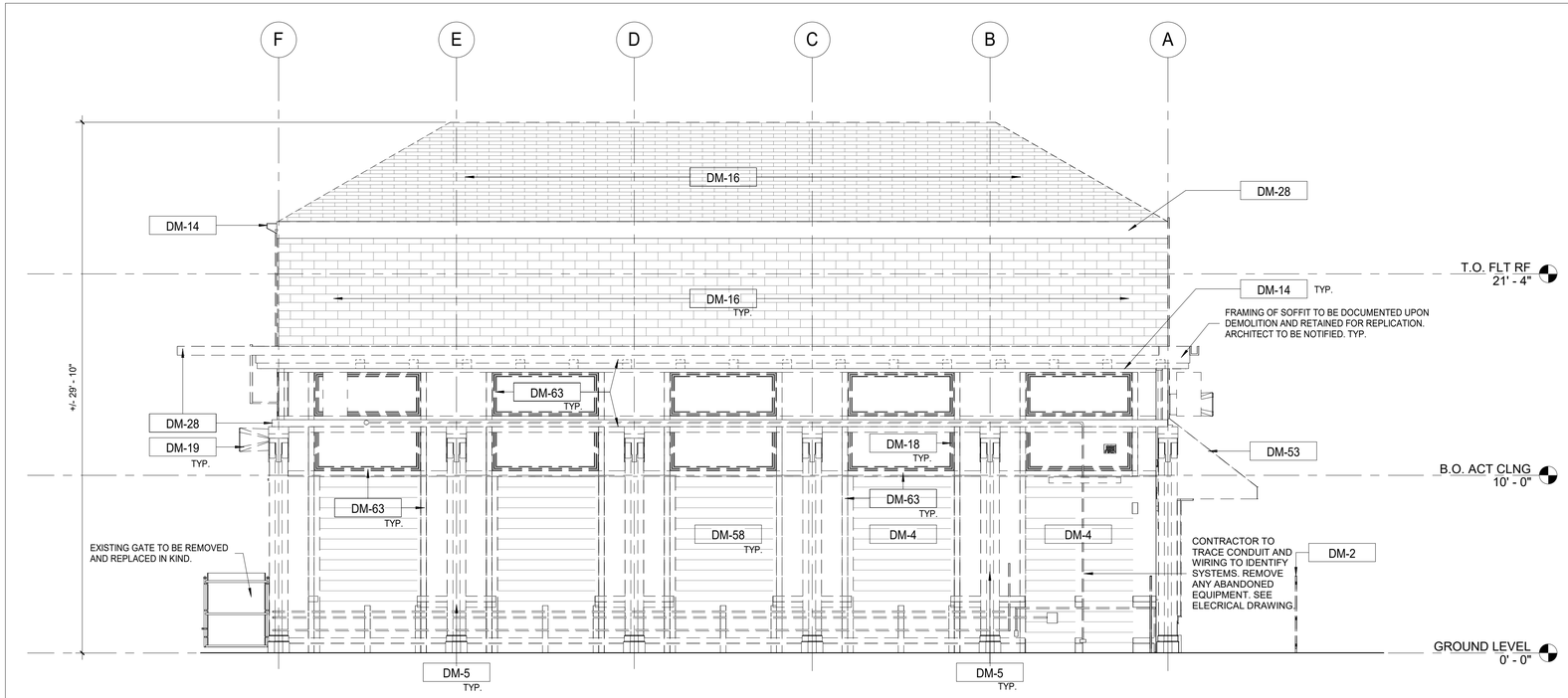


2 DEMOLITION ELEVATION- NORTH EAST
1/4" = 1'-0"

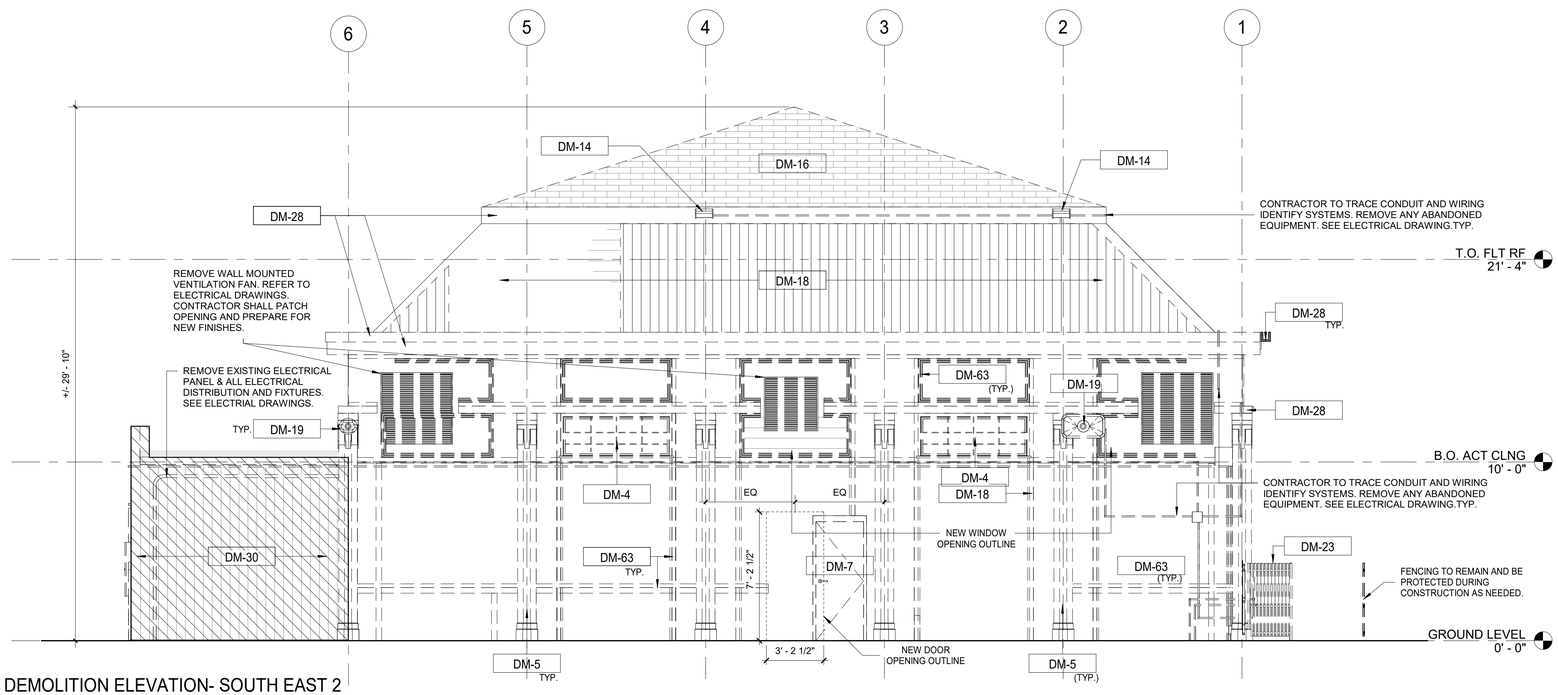


1 DEMOLITION ELEVATION- SOUTH EAST 2
1/4" = 1'-0"

## DEMOLITION GENERAL NOTES

1. ALL DEMOLITION AND REMOVAL WORK SHALL BE COMPLETED AS INDICATED AND NOTED ON THE DRAWINGS AND AS SPECIFIED.
2. PRIOR TO STARTING WORK, MAKE A THOROUGH EXAMINATION OF THE PORTIONS OF THE STRUCTURE IN WHICH THE WORK IS TO BE PERFORMED. CHECK ALL THE WORK AT ADJOINING OR UNDERLYING LOCATIONS. REPORT TO THE ARCHITECT ANY AND ALL CONDITIONS WHICH MAY INTERFERE WITH OR OTHERWISE PREVENT THE PROPER EXECUTION AND COMPLETION OF THE WORK. DO NOT START WORK UNTIL SUCH CONDITIONS HAS BEEN EXAMINED AND MUTUALLY AGREED UPON WITH THE ARCHITECT.
3. DASHED LINES INDICATE WALLS, FIXTURES, EQUIPMENT, ETC. TO BE REMOVED AND DISPOSED OF BY G.C. ANY QUESTIONS ON SCOPE OF DEMOLITION MUST BE DIRECTED TO THE ARCHITECT PRIOR TO BID. PROVIDE SHORING AND BRACING AS REQUIRED.
4. THE EXISTING WORK REQUIRED TO BE REMOVED SHALL BE AS INDICATED BUT SHALL ALSO EXTEND TO INCLUDE ANY AND ALL OTHER EXISTING MATERIALS OR WORK NECESSARY TO INSTALL THE NEW WORK AS SHOWN AND SPECIFIED AND TO CONNECT SAME WITH THE EXISTING WORK IN AN APPROVED MANNER.
5. ALTER AND RESTORE EXISTING WALLS, PARTITIONS, COLUMNS, CEILING AND FLOORS, AND THEIR RESPECTIVE FINISHED SURFACES TO ACCOMMODATE NEW CONSTRUCTION AND FINISHES, IN ACCORDANCE WITH DRAWINGS AND SPECIFICATIONS.
6. IMMEDIATELY NOTIFY THE OWNER'S REPRESENTATIVES OF ANY HAZDAROUS MATERIALS ENCOUNTERED DURING DEMOLITION/REMOVAL.
7. ALL DIMENSIONS AND CONSTRUCTION CONDITIONS TO BE VERIFIED BY THE CONTRACTOR PRIOR TO THE START OF WORK.
8. CONTAINERIZED DEMOLITION DEBRIS SHALL BE TCLP TESTED TO CONFIRM WASTE MAY BE DISPOSED OF AS NON-HAZARDOUS.
9. ALL ITEMS SCHEDULED FOR DEMOLITION SHALL BE REMOVED FROM THE SITE UNLESS OTHERWISE NOTED. CONTRACTOR SHALL BE RESPONSIBLE FOR CLEANING OF SITE ON A DAILY BASIS.
10. REFER TO ELECTRICAL, MECHANICAL, STRUCTURAL, PLUMBING, ETC. DEMOLITION DRAWINGS FOR ADDITIONAL ITEMS.
11. PATCH AND REPAIR SURFACES (FLOOR, WALL, CEILING) DAMAGED IN PREPARATION FOR NEW EQUIPMENT AND FINISHES.

## DEMOLITION LEGEND

- INDICATES REMOVAL
- INDICATES WALL TO BE REMOVED (REFER TO KEYNOTE FOR EXTENT OF REMOVAL)
- N.I.C. — INDICATES SCOPE NOT IN CONTRACT
- FIRE HYDRANT TO BE RELOCATED
- ? — KEY NOTES

## KEYNOTE LEGEND DEMO.

| KEY VALUE | KEYNOTE TEXT |
|---|---|
| DM-2 | REMOVE EXISTING GATE. |
| DM-4 | REMOVE EXISTING WINDOW & FRAME. |
| DM-5 | REMOVE COLUMN ENCLOSURES. CAREFULLY REMOVE AT LEAST ONE COLUMN ENCLOSURE TO USE AS REFERENCE IN ORDER TO REPLICATE TRIMS TO MATCH LOCATION, SIZE AND SHAPE AS INDICATED. COORDINATE WITH STRUCTURAL DRAWINGS. |
| DM-7 | REMOVE EXISTING DOOR & FRAME. |
| DM-14 | REMOVE EXISTING LIGHTING FIXTURES AND ELECTRICAL WIRING CONNECTED TO THESE FIXTURES. SEE ELECTRICAL FOR DETAILS. |
| DM-16 | REMOVE EXISTING ROOFING SHINGLES, UNDERLAYMENT AND ANY ROTTED WOOD SHEATHING. REPLACE DAMAGED SHEATHING TO MATCH EXISTING. COORDINATE WITH A/E. |
| DM-18 | REMOVE EXISTING PANELS & TRIMS. |
| DM-19 | DISCONNECT AND REMOVE EXISTING SUSPENDED EQUIPMENT SUCH AS CAMERAS, SPEAKERS, ETC. SEE ELECTRICAL DRAWINGS FOR DETAILS. |
| DM-23 | REMOVE EXISTING FENCE. |
| DM-28 | REMOVE EXISTING GUTTER, FASCIA, AND SOFFITS. |
| DM-30 | EXISTING STRUCTURE TO BE REMOVED IN ITS ENTIRETY. SEE PLANS FOR EXTENT OF REMOVAL. |
| DM-53 | REMOVE EXISTING AWNING. PROVIDE FOR DELIVERY TO THE OWNER AS DIRECTED BY THE A/E. |
| DM-58 | REMOVE PLYWOOD BOARDS AND COVERINGS FROM THE WINDOW ON BOTH INTERIOR AND EXTERIOR. |
| DM-63 | CONTRACTOR TO CAREFULLY DOCUMENT AND REMOVE ALL EXISTING FACADE MATERIALS AND TRIM. |

8/30/2022 3:03:48 PM


CONSULTANT INFORMATION
The LiRo Group
3 Aerial Way, Syosset, New York 11791
(516) 938-5476 www.liro.com


CONSULTANT SEAL
REGISTERED ARCHITECT ROBERT D. COMINO 023220 STATE OF NEW YORK

| REVISION NUMBER | DATE | MADE BY | APP'D BY | REVISION |
|---|---|---|---|---|

RECORD DRAWING CERTIFICATION
☐ AS BUILT – CHANGES AS NOTED ☐ AS BUILT – NO CHANGES

CONTRACTOR
NAME
SIGNATURE
TITLE DATE

PROJECT COORDINATOR
NAME
SIGNATURE
TITLE DATE

WESTCHESTER COUNTY, NEW YORK
DEPARTMENT OF PUBLIC WORKS AND TRANSPORTATION
DIVISION OF ENGINEERING

**INFRASTRUCTURE REHABILITATION - PHASE 3**
**PLAYLAND PARK, RYE, NEW YORK**
**NORTH EAST BURGER BARN**
**EXTERIOR DEMOLITION ELEVATIONS 2**

| | |
|---|---|
| CONTRACT NUMBER | 22-523 |
| SHEET NUMBER | BB-A-05 |
| DWG NO.: | 26 of 664 |
| SCALE: | As indicated |
| DATE: | 08/23/2022 |
| DPW FILE NUMBER | 1-118-A-775-0 |
| REV. NO. | 0 |

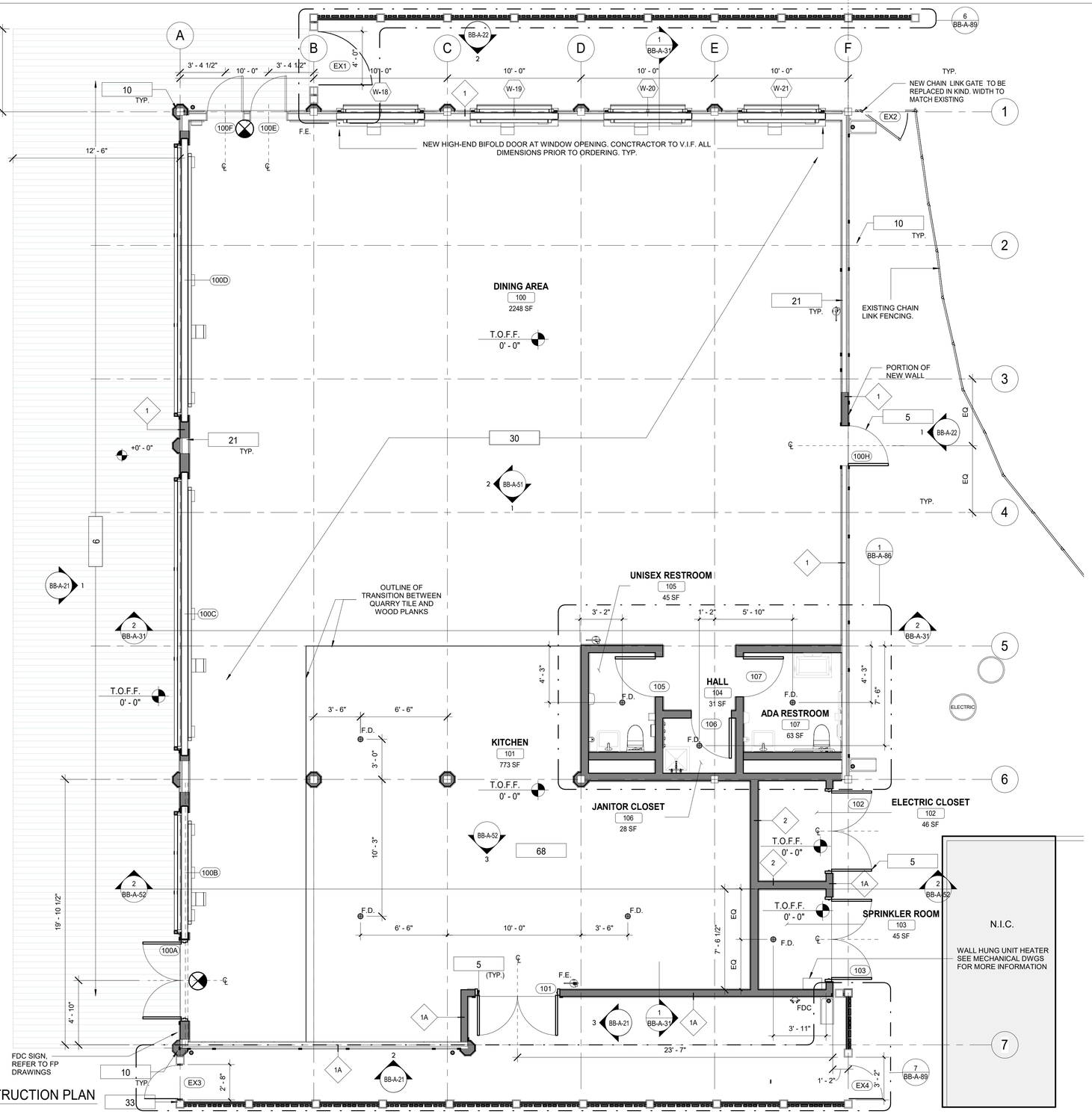


1 CONSTRUCTION PLAN
1/4" = 1'-0"

## FLOOR PLAN GENERAL NOTES

1. ALL METAL STUDS 20 GA- TYPICAL NON-LOAD BEARING PARTITIONS. SEE USG STEEL- FRAMED DRYWALL SYSTEMS " LIMITING HEIGHT"- STEEL STUD ASSEMBLIES CHART. USE THE L/240 ALLOWABLE DEFLECTION FIGURES ONLY.
2. DIMENSIONS ARE TO FACE OF GYPSUM WALL BOARD, EXISTING WALL, GRID LINES, OR CENTERLINE OF COLUMN. ALL ELEVATIONS ARE NOTED FROM FINISH FLOOR ELEVATIONS.
3. PROVIDE DRYWALL TRIM AT ALL EXPOSED EDGES AND CORNERS.
4. MINIMUM DIMENSION FROM ANY CORNER OR WALL TO FRAMING STUD AT DOOR JAMB OPENING SHALL BE 4" (U.O.N.).
5. PROVIDE METAL BLOCKING FOR ANY WALL MOUNTED EQUIPMENT OR ACCESSORIES. COORDINATE ALL BLOCKING REQUIREMENTS NECESSARY WITH OTHER TRADES.
6. THE G.C. SHALL VERIFY DIMENSIONS OF THE EXISTING SPACE AND OF ANY EXISTING CONSTRUCTION TO REMAIN BY ACTUAL MEASUREMENT BEFORE ANY WORK IS PERFORMED. IF ANY MEASUREMENTS DIFFER FROM DIMENSIONS SHOWN ON PLAN, G.C. IS TO NOTIFY THE ARCHITECT IMMEDIATELY. THE G.C. SHALL BE RESPONSIBLE FOR CORRECTING ANY AND ALL DISCREPANCIES FOUND AFTER THE WORK IS PERFORMED, AT NO ADDITIONAL EXPENSE TO THE OWNER.
7. G.C. TO VERIFY ALL FINISHED DIMENSIONS. FIELD CONDITIONS ALTERING ANY DIMENSIONS SHOULD BE BROUGHT TO THE ATTENTION OF THE OWNER AND ARCHITECT.
8. THE G.C. SHALL PROVIDE CAULK JOINTS WHERE GYP. BD. MEETS THE FLOOR OR ROOF DECK.
9. THE G.C. SHALL BE RESPONSIBLE FOR COORDINATING WITH OWNER ON ALL WORK TO BE PERFORMED BY THE OWNER. ANY POTENTIAL CONFLICTS OR DELAYS CAUSED BY THE OWNER'S SUBCONTRACTORS MUST BE DOCUMENTED IN WRITING TO THE OWNER BEFORE THE DELAY IS ACTUALLY INCURRED FOR IT TO BE CONSIDERED. OTHERWISE THE G.C. WILL BE RESPONSIBLE FOR MEETING THE SCHEDULE AS OUTLINED IN THE CONTRACT.
10. THE G.C. SHALL SUPPLY ALL MATERIAL, LABOR, AND COORDINATION REQUIRED FOR THE INSTALLATION OF ALL OWNER- SUPPLIED ITEMS AS DESCRIBED IN THE DOCUMENTS, U.N.O.
11. THE G.C. IS RESPONSIBLE FOR ALL FLOOR AND WALL PENETRATIONS FOR ELECTRICAL AND MECHANICAL WORK. ALL SUCH OPENING SHALL BE FRAMED AND REINFORCED.
12. FLOOR SURFACES SHALL BE LEVELED TO ASSURE SMOOTH SURFACE FOR FINISH FLOOR INSTALLATION. G.C. SHALL ALSO PAY SPECIAL ATTENTION THAT ALL WALL SURFACES ARE SMOOTH WHERE MURALS WILL BE DIRECTLY APPLIED TO WALL.
13. G.C. TO COORDINATE ALL UTILITY STUB-UPS AND LOCATION OF ALL EQUIPMENT PRIOR TO INSTALLING ANY ONE ITEM.
14. REFER TO SHEET PR-A-63 FOR PARTITION TYPE INFORMATION.
15. PROVIDE PAINTED ACCESS PANELS IN WALLS & CEILING AT CONCEALED ITEMS. SUCH AS VALVES, CONTROLS, SWITCHES OR ANY OTHER ITEMS THAT REQUIRES ACCESS. G.C. TO DETERMINE ACCESS PANEL LOCATION W/ ARCHITECT PRIOR TO INSTALLATION.

## CONSTRUCTION NOTES

1. DIMENSIONS ARE TO FACE OF GYPSUM WALL BOARD, GRID LINES, OR CENTERLINE OF COLUMN. ALL ELEVATIONS ARE NOTED FROM FINISH FLOOR ELEVATIONS.
2. PROVIDE DRYWALL TRIM AT ALL EXPOSED EDGES AND CORNERS.
3. MINIMUM DIMENSION FROM ANY CORNER OR WALL TO FRAMING STUD AT DOOR JAMB OPENING SHALL BE 4" (U.O.N.).
4. PROVIDE FIRE RETARDANT WOOD BLOCKING FOR ANY WALL MOUNTED EQUIPMENT OR ACCESSORIES. COORDINATE ALL BLOCKING REQUIREMENTS NECESSARY WITH OTHER TRADES.
5. THE CONTRACTOR SHALL VERIFY DIMENSIONS OF THE EXISTING SPACE AND OF ANY EXISTING CONSTRUCTION TO REMAIN BY ACTUAL MEASUREMENT BEFORE ANY WORK IS PERFORMED. IF ANY MEASUREMENTS DIFFER FROM DIMENSIONS SHOWN ON PLAN, G.C. IS TO NOTIFY THE ARCHITECT IMMEDIATELY. THE CONTRACTOR SHALL BE RESPONSIBLE FOR CORRECTING ANY AND ALL DISCREPANCIES FOUND AFTER THE WORK IS PERFORMED, AT NO ADDITIONAL EXPENSE TO THE OWNER.
6. THE G.C. SHALL PROVIDE CAULK JOINTS WHERE GYP. BD. MEETS THE FLOOR OR ROOF DECK.
7. THE G.C. SHALL BE RESPONSIBLE FOR COORDINATING WITH OWNER ON ALL WORK TO BE PERFORMED BY THE OWNER. ANY POTENTIAL CONFLICTS OR DELAYS CAUSED BY THE OWNER'S SUBCONTRACTORS MUST BE DOCUMENTED IN WRITING TO THE OWNER BEFORE THE DELAY IS ACTUALLY INCURRED FOR IT TO BE CONSIDERED. OTHERWISE THE G.C. WILL BE RESPONSIBLE FOR MEETING THE SCHEDULE AS OUTLINED IN THE CONTRACT.
8. THE CONTRACTOR TO VERIFY ALL FINISHED DIMENSIONS. FIELD CONDITIONS ALTERING ANY DIMENSIONS SHOULD BE BROUGHT TO THE ATTENTION OF THE OWNER AND ARCHITECT.
9. THE CONTRACTOR SHALL SUPPLY ALL MATERIAL, LABOR, AND COORDINATION REQUIRED FOR THEINSTALLATION OF ALL OWNER-SUPPLIED ITEMS AS DESCRIBED IN THE DOCUMENTS, U.N.O.
10.THE CONTRACTOR IS RESPONSIBLE FOR ALL FLOOR AND WALL PENETRATIONS FOR ELECTRICAL AND MECHANICAL WORK. ALL SUCH OPENING SHALL BE FRAMED AND REINFORCED.
11.FLOOR SURFACES SHALL BE LEVELED TO ASSURE SMOOTH SURFACE FOR FINISH FLOOR INSTALLATION.
12.THE CONTRACTOR. TO COORDINATE ALL UTILITY STUB-UPS AND LOCATION OF ALL EQUIPMENT PRIOR TO INSTALLING ANY ONE ITEM.
13.PROVIDE PAINTED ACCESS PANELS IN WALLS & CEILING AT CONCEALED ITEMS SUCH AS VALVES, CONTROLS, SWITCHES OR ANY OTHER ITEMS THAT REQUIRES ACCESS. G.C. TO DETERMINE ACCESS PANEL LOCATION W/ ARCHITECT PRIOR TO INSTALLATION.

## CONSTRUCTION LEGEND

| | |
|---|---|
| INDICATES PATCH/REPAIR | |
| N.I.C. | INDICATES SCOPE NOT IN CONTRACT |
| ? | KEY NOTES |
| Ref 1 A101 1 Ref | ELEVATION MARKER |
| 1i | WALL TAG |
| 1t | WINDOW TAG |
| 101 | DOOR TAG |
| Room name 101 150 SF | ROOM TAG |
| | IPE DECKING |
| FD | FLOOR DRAIN |
| ? | PLUMBING FIXTURE |
| FE | FIRE EXTINGUISHER |
| | EGRESS LIGHT FIXTURE: LED FLOOD LIGHT SEE ELECTRICAL DWGS FOR MORE INFO |

## KEYNOTE LEGEND CONST.

| KEY VALUE | KEYNOTE TEXT |
|---|---|
| 5 | PROVIDE AND INSTALL DOOR INCLUDING FRAME, SILL, LINTEL AND ANY ASSOCIATE HARDWARE. SEE DOOR SCHEDULE. |
| 6 | INSTALL NEW IPE DECKING. SEE STRUCTURAL FOR DETAILS. |
| 10 | PROVIDE AND INSTALL COLUMN ENCLOSURES. SEE DETAILS. |
| 21 | NEW INTERIOR WALL. SEE WALL SCHEDULE. |
| 30 | NEW 2x6 WOOD FLOOR. |
| 33 | NEW WOOD FENCE. SEE DETAILS. |
| 68 | NEW QUARRY TILE WITH 6" QUARRY TILE COVE BASE. SUPPRESS CONCRETE SLAB AS SHOWN IN STRUCTURAL DRAWING SO QUARRY TILE IS FLUSH WITH ADJACENT SURFACE. |

8/30/2022 3:03:54 PM

CONSULTANT INFORMATION

The LiRo Group
3 Aerial Way, Syosset, New York 11791
(516) 938-5476 www.liro.com

CONSULTANT SEAL

REGISTERED ARCHITECT ROBERT D. JOHNSON 023290 STATE OF NEW YORK

| REVISION NUMBER | DATE | MADE BY | APP'D BY | REVISION |
|---|---|---|---|---|
| | | | | |

RECORD DRAWING CERTIFICATION

☐ AS BUILT – CHANGES AS NOTED ☐ AS BUILT – NO CHANGES

CONTRACTOR
NAME
SIGNATURE
TITLE DATE

PROJECT COORDINATOR
NAME
SIGNATURE
TITLE DATE

WESTCHESTER COUNTY, NEW YORK
DEPARTMENT OF PUBLIC WORKS AND TRANSPORTATION
DIVISION OF ENGINEERING

**INFRASTRUCTURE REHABILITATION - PHASE 3**
**PLAYLAND PARK, RYE, NEW YORK**
**NORTH EAST BURGER BARN**
**CONSTRUCTION PLANS**

| | |
|---|---|
| CONTRACT NUMBER | 22-523 |
| SHEET NUMBER | BB-A-11 |
| DWG NO.: | 27 of 664 |
| SCALE: | 1/4" = 1'-0" |
| DATE: | 08/23/2022 |
| DPW FILE NUMBER | 1-118-A-776-0 |
| REV. NO. | 0 |

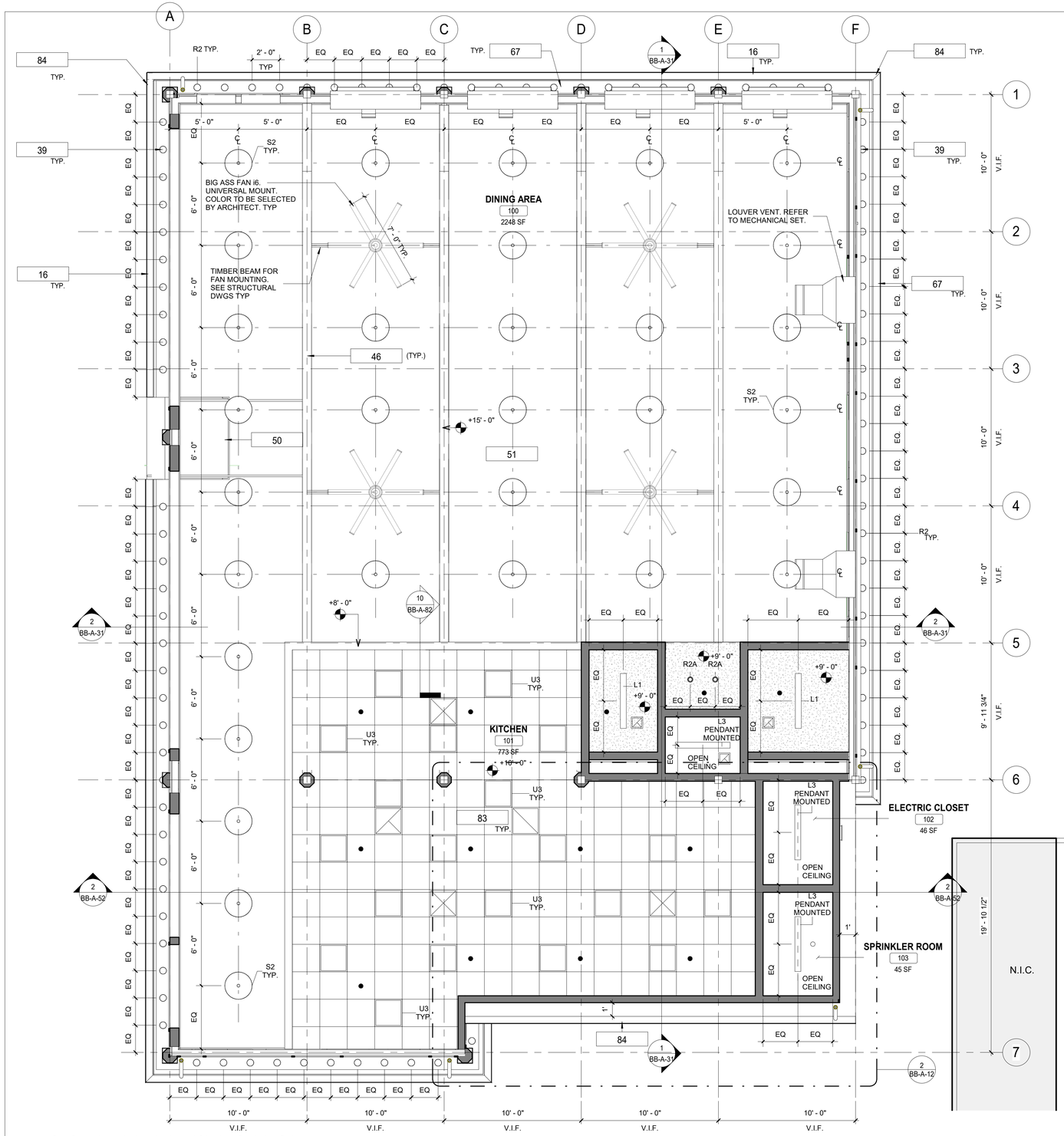


1 GROUND LEVEL REFLECTED CEILING PLAN
1/4" = 1'-0"

## GENERAL NOTES

1. CEILING TILES TO BE CENTERED BOTH WAYS IN EACH OR UNLESS DIMENSIONED OTHERWISE.
2. ALL DIMENSIONS ARE TO THE CENTER OF LIGHT FIXTURE, U.N.O.
3. FIXTURES LOCATED WITHIN THE CEILING GRID, ARE NOT NECESSARILY CENTERED IN EACH CEILING TILE. FOLLOW DIMENSIONS ON PLAN. IF NO DIMENSION IS PRESENT CONTACT ARCHITECT TO VERIFY LOCATION.
4. LIGHT FIXTURES TO BE LOCATED AS INDICATED ON THIS PLAN. REFER TO ELECTRICAL DRAWINGS FOR EXACT NUMBER AND TYPE OF LIGHT FIXTURE. CONTACT ARCHITECT/ ENGINEER IMMEDIATELY IF THERE ARE ANY DISCREPANCIES.
5. REFER TO MECHANICAL DRAWINGS FOR MECHANICAL DUCT DISTRIBUTION SYSTEM.
6. THE G.C. SHALL SET ALL CEILING AND SOFFITS USING A LASER LEVEL TO ACHIEVE A CEILING THAT IS PLUMBING, LEVEL, AND SQUARE TO ALL WALLS AND SOFFITS.
7. ALL NOTED CEILING DIMENSIONS ARE INDICATED AS CLEAR ABOVE FINISHED FLOOR DIMENSIONS. VERIFY THICKNESS OF FLOOR CONSTRUCTION WITH FLOOR SUBCONTRACTOR PRIOR TO THE INSTALLATION OF ANY NEW CEILING CONSTRUCTION IN ORDER TO ACHIEVE NOTED REQUIRED DIMENSIONS.
8. ALL SOFFIT DIMENSIONS ARE TO FINISH FACE, U.N.O.
9. ALL EXTERIOR DIMENSIONS ARE TO THE FACE OF EXTERIOR FINISH, U.N.O.
10. G.C. TO PROVIDE ADEQUATE CLEARANCES FOR FIXTURES, DUCTS, CEILINGS, AND PERTINENT ITEMS NECESSARY TO MAINTAIN THE SPECIFIC HEIGHTS ABOVE FINISH FLOOR. COORDINATE MECHANICAL, ELECTRICAL AND PLUMBING AS REQUIRED.
11. ADDITIONAL HANGER AND SAFETY WIRES FOR LIGHT FIXTURES AND AIR SUPPLY/ RETURN DIFFUSERS AS REQUIRED BY LOCAL CODES TO BE THE RESPONSIBILITY OF THE SUB-CONTRACTOR. ALL WIRING SUPPORT TO BE "CEILING GRADE" AS CONCURRENT WITH ELECTRICAL CODE ADOPTED FOR JURISDICTION OF PROJECT.
12. ALL CEILING ELEVATIONS DIMENSIONED FROM FINISH FLOOR BELOW.

## PLAN NOTES

1. CONTRACTOR SHALL PROVIDE THE NECESSARY FRAMING OR BRIDGING FOR ALL LIGHT FIXTURES, ETC., AS WELL AS REQUIRED CUTOUTS.
2. CONTRACTOR SHALL NOTIFY THE ARCHITECT OF ANY POSSIBLE INTERFERENCES BEFORE PROCEEDING WITH CEILING INSTALLATION.
3. CEILING CONSTRUCTION SHALL NOT BE CLOSED IN UNTIL THE CONSTRUCTION MANAGER AND AUTHORITIES HAVING JURISDICTION HAVE HAD AN OPPORTUNITY TO INSPECT THE AREA AND ASCERTAIN THAT ALL PLUMBING, ELECTRICAL CONDUITS AND LINES HAVE BEEN INSTALLED PROPERLY.
4. FASCIAS OR ANY BREAK IN THE CEILING HEIGHTS CREATED BY THE INSTALLATION AND/OR ALTERATION OF PIPING OR OTHER EQUIPMENT SHALL BE FORMED OF GYPSUM WALLBOARD ON FURRING CHANNELS.
5. THE CEILING PANEL JOINTS SHALL BE ALIGNED PERFECTLY WITH RECESSED LIGHTING FIXTURES.
6. ALL JOINTS IN THE CEILING PANELS SHALL BE SQUARE, LEVEL AND PERFECTLY ALIGNED WITH EACH OTHER AND WITH BUILDING FIXTURES.
7. CONTRACTOR SHALL PROVIDE CUTOUTS AND OTHER SPECIAL PROVISIONS IN ACOUSTICAL WORK AS REQUIRED FOR LIGHTING FIXTURES, AND OTHER INSERTED ITEMS. GENERAL CONSTRUCTION CONTRACTOR SHALL INSTALL ACCESS PANELS IN T1-11 BOARD CEILINGS FOR ACCESS TO PLUMBING, TELEPHONE & ELECTRICAL CONTROL EQUIPMENT REQUIRING ACCESS.
8. IN GENERAL, WITHIN EACH AREA, CEILING WORK REQUIREMENTS SHALL BE EXECUTED IN SUCH A MANNER AS TO PROVIDE CONTINUOUS MATCHED AND ALIGNED CEILINGS. THE FINAL CEILING INSTALLATION SHALL BE FREE OF ALL VISUAL DEFECTS.
9. * COMMERCIAL KITCHEN CEILING TILES SHALL MEET GUIDELINES FOR FOOD PREPARATION AND PROCESSING.

## RCP LEGEND

- R-2 EXTERIOR RECESSED CAN IN SOFFIT
- S-2 INTERIOR SUSPENDED LED LIGHT
- R-1 2x2 RECESSED LIGHT
- U-3 INTERIOR RECESSED CAN LIGHT
- GYPSUM WALL BOARD CEILING GYP-1
- 2x2 ACT CEILING TILE; *SEE RCP NOTES
- N.I.C. — INDICATES SCOPE NOT IN CONTRACT
- ? — KEY NOTES
- EX — EX- EXIT SIGN
- SUPPLY DIFFUSER. SEE MECHANICAL DRAWINGS
- EXHAUST GRILL. SEE MECHANICAL DRAWINGS
- RETURN GRILL. SEE MECHANICAL DRAWINGS
- OS — OS - OCCUPANCY SENSOR
- CEILING FAN

## KEYNOTE LEGEND CONST.

| KEY VALUE | KEYNOTE TEXT |
|---|---|
| 16 | PROVIDE AND INSTALL ALUMINUM METAL DRIP EDGE, DOWNSPOUT AND GUTTER AT PERIMETER OF ROOF. |
| 39 | NEW SOFFIT WITH RECESSED LIGHTS AS INDICATED ON RCP |
| 46 | EXISTING ROOF BEAMS AND TRUSSES TO NOT BE PAINTED. |
| 50 | CONSTRUCT NEW DECORATIVE TOWER. SEE DETAILS. |
| 51 | NEW BIRD NETTING INSTALLED TIGHT UNDER ALL INTERIOR WOOD TRUSSES. ENSURE NO DAMAGE OCCURS TO EXISTING STRUCTURE SO AS TO ALTER ITS STRUCTURAL INTEGRITY. ZIPPERS TO BE COORDINATED WITH LOCATION OF SPRINKLER HEADS. |
| 67 | NEW FASCIA BOARD AND SOFFIT. |
| 83 | FDA AND USDA COMPLIANT SQUARE LAY IN CEILING TILES. |
| 84 | HALF ROUND ALUMINUM GUTTER AND DOWNSPOUT. |

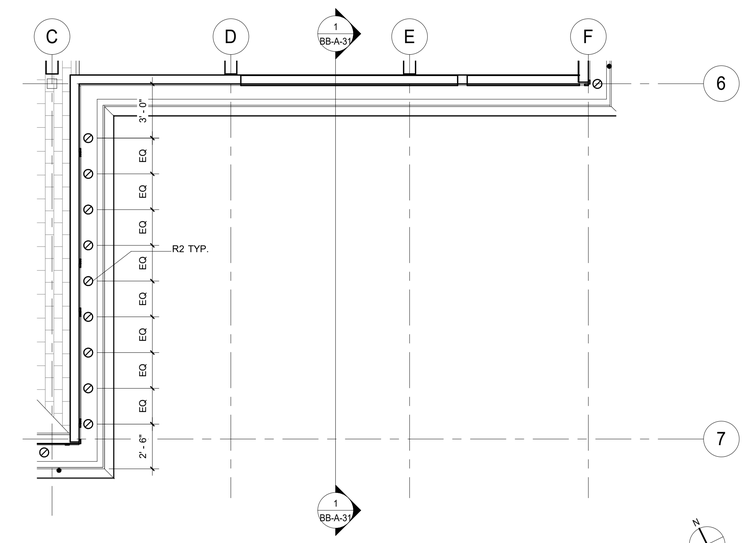


2 GROUND LEVEL REFLECTED CEILING PLAN CALLOUT
1/4" = 1'-0"

8/30/2022 3:04:01 PM

CONSULTANT INFORMATION

The LiRo Group
3 Aerial Way, Syosset, New York 11791
(516) 938-5476 www.liro.com

CONSULTANT SEAL

| REVISION NUMBER | DATE | MADE BY | APP'D BY | REVISION |
|---|---|---|---|---|

RECORD DRAWING CERTIFICATION
☐ AS BUILT – CHANGES AS NOTED ☐ AS BUILT – NO CHANGES

CONTRACTOR
NAME
SIGNATURE
TITLE DATE

PROJECT COORDINATOR
NAME
SIGNATURE
TITLE DATE

WESTCHESTER COUNTY, NEW YORK
DEPARTMENT OF PUBLIC WORKS AND TRANSPORTATION
DIVISION OF ENGINEERING

**INFRASTRUCTURE REHABILITATION - PHASE 3**
**PLAYLAND PARK, RYE, NEW YORK**
**NORTH EAST BURGER BARN**
**REFLECTED CEILING PLAN**

| | |
|---|---|
| CONTRACT NUMBER | 22-523 |
| SHEET NUMBER | BB-A-12 |
| DWG NO.: | 28 of 664 |
| SCALE: | As indicated |
| DATE: | 08/23/2022 |
| DPW FILE NUMBER | 1-118-A-777-0 |
| REV. NO. | 0 |

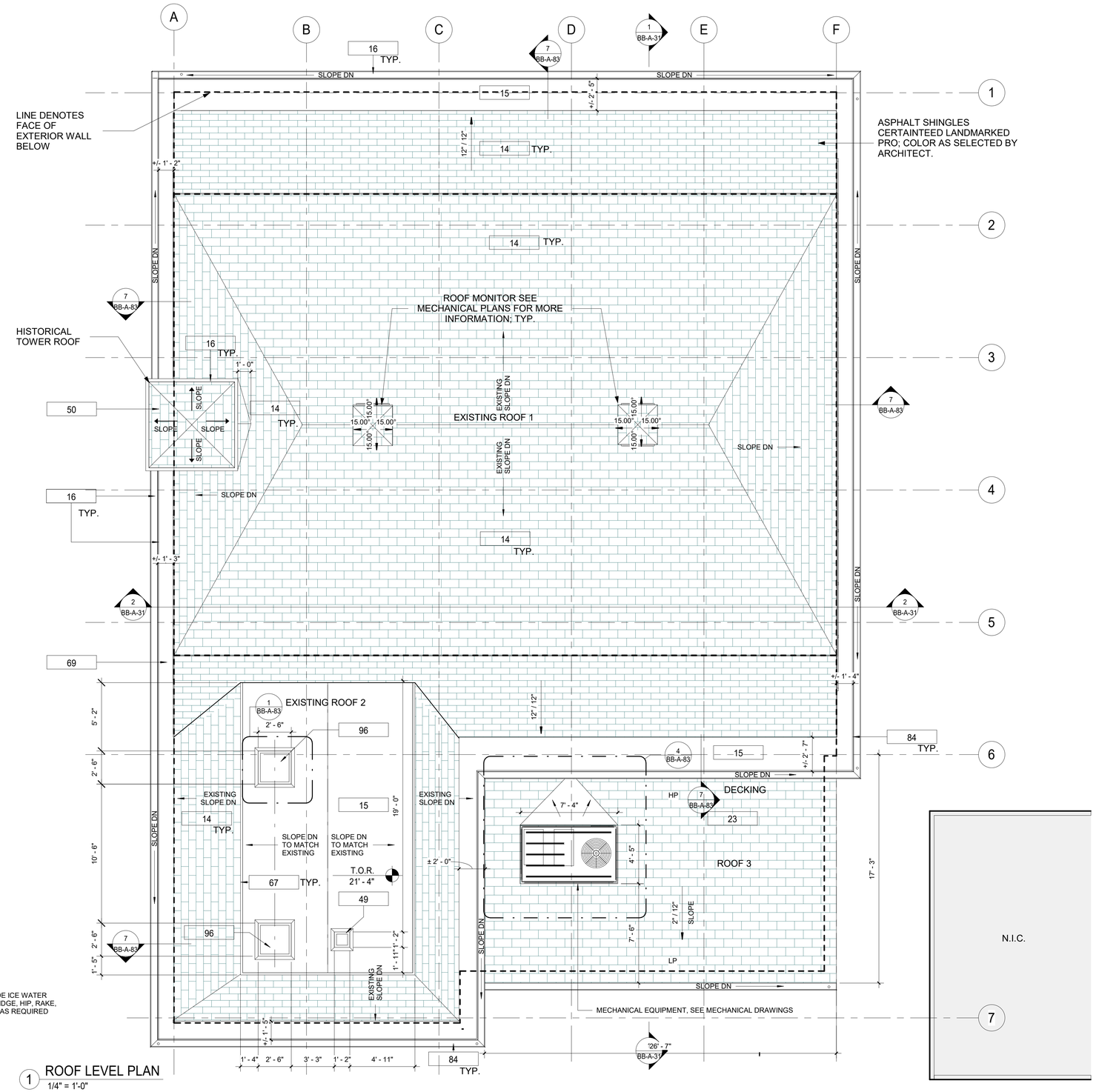


1 ROOF LEVEL PLAN
1/4" = 1'-0"

## CONSTRUCTION GENERAL NOTES

1. PROVIDE LEVEL ROOF CURB FOR ALL MECHANICAL EQUIPMENT.
2. CRICKET ALL AREAS WHERE WATER FLOW IS INTERRUPTED- MINIMUM SLOPE FOR CRICKETS 1/2" PER FOOT.
3. REFER TO MECHANICAL DRAWINGS FOR ALL ROOF TOP MOUNTED EQUIPMENT LOCATIONS & SPECIFICATIONS. EQUIPMENT SHOWN IS FOR COORDINATION ONLY.
4. REFER TO PLUMBING, MECHANICAL, & ELECTRICAL DRAWINGS FOR ANY ADDITIONAL ROOF PENERATIONS.
5. ROOFING SYSTEM AND ACCESSORIES INSTALLATION AND DETAILS SHALL BE IN STRICT CONFORMANCE WITH MANUFACTURER'S STANDARDS AND RECOMMENDATIONS. ROOFING CONTRACTOR SHALL COMPLY WITH ALL WARRANTEE REQUIREMENTS SET FORTH BY MANUFACTURER. CONTACT ARCHITECT FOR ANY "NON- STANDARD" DETAILS.
6. REFER TO SHEET PR-A-52 & PR-A-53 FOR TYPICAL ROOF DETAILS.
7. SEE MECHANICAL DRAWINGS FOR RTU SIZING & LOCATIONS.
8. SEE STRUCTURAL DRAWINGS FOR RTU OPENING FRAMING & REINFORCING.
9. NEW ROOFING AND CRICKETING ARE SHOWN FOR DESIGN INTENT ONLY.

## ROOF PLAN NOTES

1. ICE AND WATER SHEILD TO BE APPLIED TO ROOF DECKING AT EAVES, VALLEYS, PENETRATIONS AND AREAS BELOW A 4: 12 PITCH.
2. REFER TO PLUMBING PLAN AND ELECTRICAL DRAWINGS FOR ANY ADDITIONAL ROOF PENETRTIONS.
3. ROOFING SYSTEM AND ACCESSORIES INSTALLATION AND DETAILS SHALL BE IN STRICT CONFORMANCE WITH MANUFACTURER'S STANDARDS AND RECOMMENDATIONS. ROOFING CONTRACTOR SHALL COMPLY WITH ALL WARRANTY REQUIREMENTS SET FORTH BY MANUFACTURER. CONTACT ARCHITECT FOR ANY "NON-STANDARD' DETAILS.
4. FOR ALL EXSISTING ROOFS SLOPES ARE EXISTING. VERIFY IN FIELD.

## CONSTRUCTION LEGEND

- R-2 EXTERIOR RECESSED CAN IN SOFFIT
- S-2 INTERIOR SUSPENDED LED LIGHT
- R-1 2x2 RECESSED LIGHT
- U-3 INTERIOR RECESSED CAN LIGHT
- GYPSUM WALL BOARD CEILING GYP-1
- 2x2 ACT CEILING TILE; *SEE RCP NOTES
- N.I.C. — INDICATES SCOPE NOT IN CONTRACT
- ? — KEY NOTES
- EX — EX- EXIT SIGN
- SUPPLY DIFFUSER. SEE MECHANICAL DRAWINGS
- EXHAUST GRILL. SEE MECHANICAL DRAWINGS
- RETURN GRILL. SEE MECHANICAL DRAWINGS
- OS — OS - OCCUPANCY SENSOR
- CEILING FAN

## KEYNOTE LEGEND CONST.

| KEY VALUE | KEYNOTE TEXT |
|---|---|
| 14 | PROVIDE NEW ASPHALT SHINGLE ROOFING,UNDERLAYMENT, AND REPLACE IN KIND EXISTING DECKING AS REQUIRED (COORDINATE WITH STRUCTURAL). |
| 15 | PROVIDE AND INSTALL SBS MODIFIED BITUMEN ROOFING AND UNDERLAYMENT. |
| 16 | PROVIDE AND INSTALL ALUMINUM METAL DRIP EDGE, DOWNSPOUT AND GUTTER AT PERIMETER OF ROOF. |
| 23 | NEW ROOF WITH BATT INSULATION (R-38 MIN) PACKED BETWEEN JOISTS. PROVIDE AND INSTALL SHINGLES, UNDERLAYMENT SHEATHING AND FLASHING SYSTEM. |
| 49 | NEW CURBS FOR KITCHEN EXHAUST. |
| 50 | CONSTRUCT NEW DECORATIVE TOWER. SEE DETAILS. |
| 67 | NEW FASCIA BOARD AND SOFFIT. |
| 69 | NEW SHEET METAL AT ROOF PERIMETER. |
| 84 | HALF ROUND ALUMINUM GUTTER AND DOWNSPOUT. |
| 96 | NEW OPENING AND PREFAB ALUMINUM ROOF CURB FOR FUTURE EQUIPMENT BY TENANT |

8/30/2022 3:04:03 PM

CONSULTANT INFORMATION

The LiRo Group
3 Aerial Way, Syosset, New York 11791
(516) 938-5476 www.liro.com

CONSULTANT SEAL

REGISTERED ARCHITECT ROBERT D. YOUNG 023280 STATE OF NEW YORK

| REVISION NUMBER | DATE | MADE BY | APP'D BY | REVISION |
|---|---|---|---|---|

RECORD DRAWING CERTIFICATION

☐ AS BUILT – CHANGES AS NOTED ☐ AS BUILT – NO CHANGES

CONTRACTOR
NAME
SIGNATURE
TITLE DATE

PROJECT COORDINATOR
NAME
SIGNATURE
TITLE DATE

WESTCHESTER COUNTY, NEW YORK
DEPARTMENT OF PUBLIC WORKS AND TRANSPORTATION
DIVISION OF ENGINEERING

**INFRASTRUCTURE REHABILITATION - PHASE 3**
**PLAYLAND PARK, RYE, NEW YORK**
**NORTH EAST BURGER BARN**
**ROOF CONSTRUCTION PLAN**

| | |
|---|---|
| CONTRACT NUMBER | 22-523 |
| SHEET NUMBER | BB-A-13 |
| DWG NO.: | 29 of 664 |
| SCALE: | As indicated |
| DATE: | 08/23/2022 |
| DPW FILE NUMBER | 1-118-A-778-0 |
| REV. NO. | 0 |

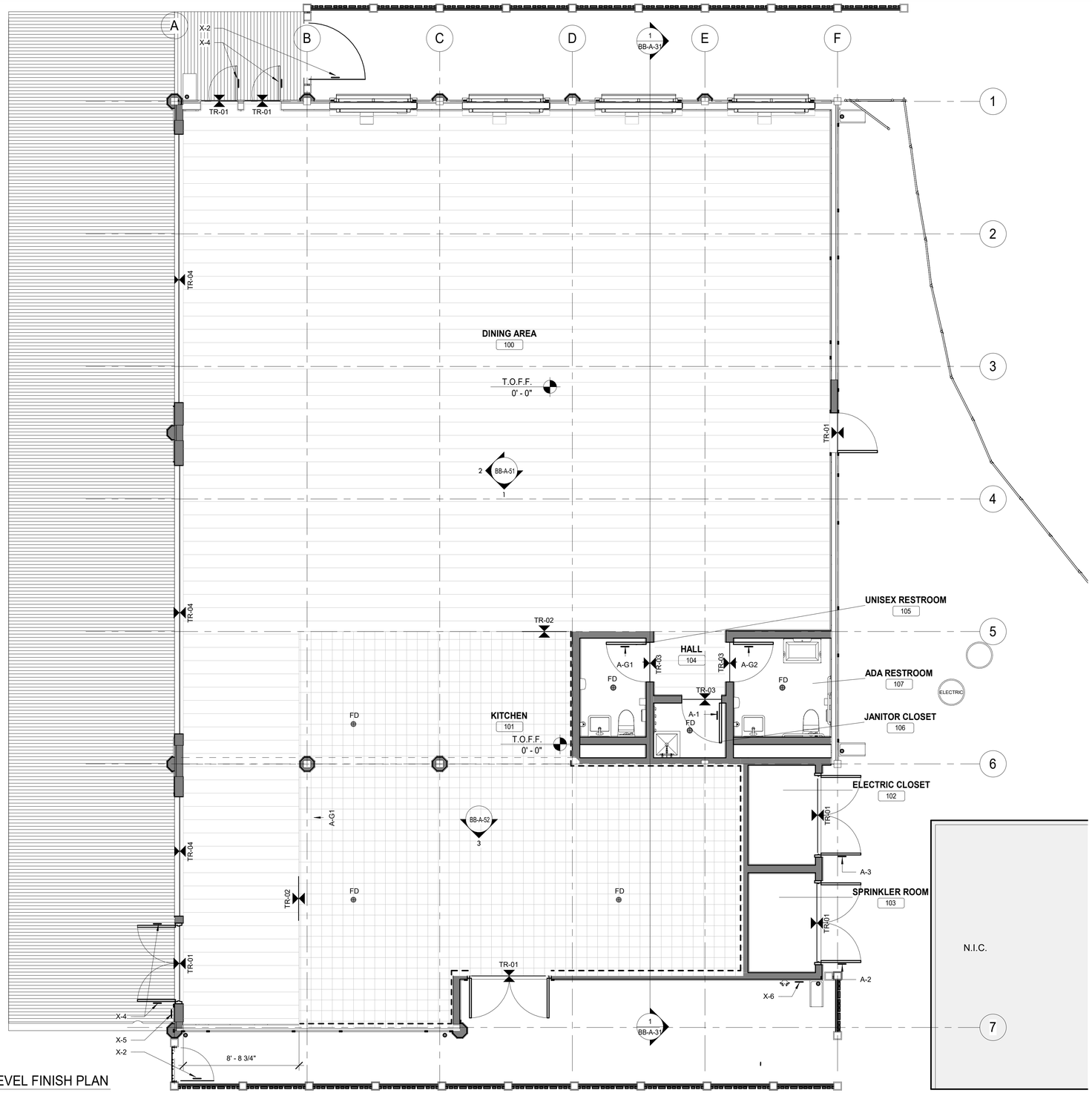


1 GROUND LEVEL FINISH PLAN
1/4" = 1'-0"

## FINISH GENERAL NOTES

1. INDICATES TYPICAL FINISHES WITHIN ROOM, U.O.N. SEE FINISH SCHEDULE FOR MORE INFORMATION.
2. ALL FLOOR COVERING MATERIALS TO BE INSTALLED PER MANUFACTURER'S STANDARD DETAILS AND SPECIFICATIONS. VERIFY WITH MANUFACTURER PRIOR TO INSTALLATION.
3. THE GC IS RESPONSIBLE FOR PROVIDING A SMOOTH LEVEL FLOOR SURFACE THAT MEETS MANUFACTURERS INSTALLATION SPECIFICATIONS PRIOR TO THE INSTALLATION OF ALL FLOORING MATERIALS.
4. THE FLOORING SUB CONTRACTOR IS RESPONSIBLE FOR VERIFYING THAT THE CONDITIONS OF THE BASE FLOOR MEETS THE INSTALLATION SPECIFICATIONS PRIOR TO THE INSTALLATION OF THE NEW FLOORING MATERIAL.
5. ALL MATERIAL TRANSITIONS AND DOOR THRESHOLDS TO TAKE PLACE AT DOOR CENTERLINE U.O.N.
6. ALL DIMENSIONS ARE TO CENTERLINE OF TRANSITION BETWEEN FLOORING MATERIALS OR FINISH COLOR OF SAME MATERIAL. PLANS DO NOT SHOW ALL TILES OF SAME MATERIALS. CONTRACTOR TO START TILES AT POINT AS INDICATED ON PLANS.
7. THE GC SHALL BE RESPONSIBLE FOR PROPER PREPARATION OF ALL NEW AND EXISTING SURFACES IN A SATISFACTORY MANNER TO RECEIVE NEW FINISHES. THIS INCLUDES DEMOLITION AND REMOVAL OF NECESSARY ITEMS. TOUCH-UP AND/OR REFINISH OF SURFACES DAMAGED BY SUBSEQUENT WORK SHALL BE PERFORMED IN CONFORMANCE WITH THE MANUFACTURERS'S RECOMMENDED INSTALLATION METHODS.
8. ALL SURFACES WHICH ARE TO RECEIVE PAINT FINISH SHALL BE PRIMED AND FINISHED IN ACCORDANCE WITH THE WRITTEN SPECIFICATIONS.
9. ALL JOINTS IN GYPSUM BOARD WALLS SHALL BE FINISHED WITH PAPER TAPE 2" WIDE AND THREE COATS OF VINYL, DRY OR PREMIXED JOINT COMPOUND. ALL OUTSIDE CORNERS SHALL BE FINISHED WITH METAL CORNER BEADS, TAPED AND SPACKLED. ALL AREAS TO BE PAINTED SHALL BE SANDED SMOOTH. JUST PRIOR TO THE APPLICAION OF THE FIRST COAR OF PAINT, WIPE SANDED SURFACES WITH A DAMP CLOTH IN ORDER TO LAY FLAT ANY NAP WHICH MAY HAVE FORMED IN SANDING.
10. THE PAINT CONTRACTOR SHALL REMOVE ALL HARDWARE, SWITCH COVERS, ETC. PRIOR TO PAINTING AND BE RESPONSIBLE FOR THE REINSTALLATION AFTER PAINTING IS COMPLETED.
11. FINISH FLOORING INSTALLATION SHALL BE IN CONFORMANCE WITH THE MANUFACTURER'S RECOMMENDED INSTALLATION GUIDELINES. COORDINATE THE INSTALLATION WITH OTHER TRADES, SUCH AS ELECTRICAL.
12. ALL JOINTS BETWEEN MATERIALS TO BE TIGHT AND CONSTRUCTED IN A NEAT WORKMANLIKE MANNER.
13. ALL FINISHES SHALL BE TOUCHED UP TO CORRECT ANY IMPERFECTIONS AFTER INSTALLATION. FIXTURE CONTRACTOR SHALL PROVIDE TO THE GENERAL CONTRACTOR ALL MATERIALS FOR TOUCH UP WORK.
14. THE INTENT OF THE FINISH SPECIFICATIONS IS TO PROVIDE A SATISFACTORY FINISH TO ALL PARTS OF THE WORK. COVER ALL SURFACES THOROUGHLY. IF THE SPECIFIED NUMBER OF COATS DOES NOT ACCOMPLISH THE INTENT, THE GC SHALL BE RESPONSIBLE FOR THE APPLICAION OF ADDITIONAL COATS OF THE SPECIFIED MATERIAL TO GIVE SATISFACTORY COVERAGE, AT NO ADDITIONAL COST TO OWNER.
15. CLEAN ALL GLASS SURFACES WITH LIQUID GLASS CLEANER AT PROJECT COMPLETION.
16. REFERENCE SPECIFICATIONS FOR COMPLATE FINISH DOCUMENTATION AND MANUFACTURER INSTALLATION AND MAINTENANCE DOCUMENTATION.

## FINISH LEGEND

| | | | | | |
|---|---|---|---|---|---|
| N.I.C. | INDICATES SCOPE NOT IN CONTRACT | | SIGNAGE - SEE DETAIL | | QUARRY TILE |
| | IPE WOOD DECKING | TR-XX | TRANSITION STRIP - SEE DETAIL | | RESIN FLOORING |
| | | | EXTENT OF FRP ON WALL | | WOOD PLANKS |

## NORTH EAST BURGER BARN FINISH SCHEDULE

| ROOM # | ROOM NAME | CEILING | WALLS | WALL BASE | FLOOR | DOORS AND TRIM |
|---|---|---|---|---|---|---|
| 100 | DINING AREA | P-13 | GYP, P-13 | WB-1 | WD-2 | REFER TO BB-A-91 |
| 101 | KITCHEN | CP-1 | FRP-1 | WB-2 | QT-1 | REFER TO BB-A-91 |
| 102 | ELECTRIC CLOSET | OPEN CEILING | GYP, P-13 | WB-3 | EP-1 | REFER TO BB-A-91 |
| 103 | SPRINKLER ROOM | OPEN CEILING | GYP, P-13 | WB-3 | EP-1 | REFER TO BB-A-91 |
| 104 | HALL | GYP, P-13 | GYP, P-13 | WB-1 | WD-2 | REFER TO BB-A-91 |
| 105 | UNISEX RESTROOM | GYP, P-13 | CT-X | WB-3 | EP-1 | REFER TO BB-A-91 |
| 106 | JANITOR CLOSET | GYP, P-13 | CT-5 GYP, P-13 | WB-3 | EP-1 | REFER TO BB-A-91 |
| 107 | ADA RESTROOM | GYP, P-13 | CT-X | WB-3 | EP-1 | REFER TO BB-A-91 |

## FINISH LEGEND

| | |
|---|---|
| CEILING | (FOR CEILING DETAILS, SEE BB-A-82) |
| CP-1 | CEILING PANEL : COMMERCIAL KITCHEN CEILING TILES THAT MEET GUIDELINES FOR FOOD PREPARATION AND PROCESSING. |
| GYP | GYPSUM BOARD - **COLOR:** AS INDICATED ON FINISH SCHEDULE |
| WALL | (FOR WALL DETAILS, SEE BB-A-86) |
| GYP | GYPSUM BOARD - **COLOR:** AS INDICATED ON FINISH SCHEDULE |
| FRP-1 | **MODEL:** EMBOSSED TEXTURE .09" - **COLOR:** WHITE |
| CT-X | **MFR:** DALTILE - **MODEL:** 6" x 18" - **COLOR:** MULTIPLE COLORS SEE DETAIL 12/BB-A-86 - **GROUT COLOR:** FROST 77 |
| CT-5 | **MFR:** DALTILE - **MODEL:** 6" x 18" - **COLOR:** ARTIC WHITE - **GROUT COLOR:** FROST 77 |
| WALL BASE | (FOR WALL BASE DETAILS, SEE BB-A-86) |
| WB-1 | MATERIAL: HARDWOOD OR MFD - **COLOR:** AS INDICATED ON FINISH PLANS - **SIZE:** 1"x6" - **REMARK:** SQUARE BASE |
| WB-2 | QUARRY TILE - **MODEL:** 6x6 QUARRY TILE - **COLOR:** TO MATCH QUARRY TILE IN PREVIOUS PHASES |
| WB-3 | **MFR:** DUR-A-FLEX - **MATERIAL:** EPOXY COVE BASE - **MODEL:** MACRO CHIP COLOR BLEND - **COLOR:** PEWTER |
| FLOORING | |
| WD-1 | IPE DECKING - 2" x6" PREMIUM GRADE / FAS - **COLOR:** TBD- **REMARK:** NOMINAL |
| WD-2 | WOOD PLANKS - **MODEL:** 2"x6" - **COLOR:** ARCHITECT TO SELECT |
| EP-1 | EPOXY FLOORING **MFR:** DUR-A-FLEX - **MODEL:** MACRO CHIP COLOR BLEND - **COLOR:** PEWTER- **REMARK:** COVE BASE TO MATCH, WB-3 |
| QT-1 | QUARRY TILE - **MODEL:** 6x6 QUARRY TILE - **COLOR:** TO MATCH QUARRY TILE IN PREVIOUS PHASES **REMARK:** COVE BASE TO MATCH, WB-2 |
| THRESHOLD | (FOR THRESHOLD DETAILS, SEE BB-A-91 & BB-A-87) |
| TR-01 | EXTERIOR DOOR SILL (SWING DOOR) |
| TR-02 | WOOD PLANK TO QUARRY TILE TRANSITION DETAIL |
| TR-03 | EPOXY TRANSITION DETAIL |
| TR-04 | EXTERIOR DOOR SILL ( BIFOLD DOOR) |

8/30/2022 3:04:07 PM

CONSULTANT INFORMATION
The LiRo Group
3 Aerial Way, Syosset, New York 11791
(516) 938-5476 www.liro.com

CONSULTANT SEAL
REGISTERED ARCHITECT ROBERT D. TOWNSEND 023230 STATE OF NEW YORK

| REVISION NUMBER | DATE | MADE BY | APP'D BY | REVISION |
|---|---|---|---|---|

RECORD DRAWING CERTIFICATION
☐ AS BUILT – CHANGES AS NOTED ☐ AS BUILT – NO CHANGES

CONTRACTOR
NAME
SIGNATURE
TITLE DATE

PROJECT COORDINATOR
NAME
SIGNATURE
TITLE DATE

WESTCHESTER COUNTY, NEW YORK
DEPARTMENT OF PUBLIC WORKS AND TRANSPORTATION
DIVISION OF ENGINEERING

**INFRASTRUCTURE REHABILITATION - PHASE 3**
**PLAYLAND PARK, RYE, NEW YORK**
**NORTH EAST BURGER BARN**
**FINISH PLAN**

| | |
|---|---|
| CONTRACT NUMBER | 22-523 |
| SHEET NUMBER | BB-A-14 |
| DWG NO.: | 30 of 664 |
| SCALE: | As indicated |
| DATE: | 08/23/2022 |
| DPW FILE NUMBER | 1-118-A-779-0 |
| REV. NO. | 0 |

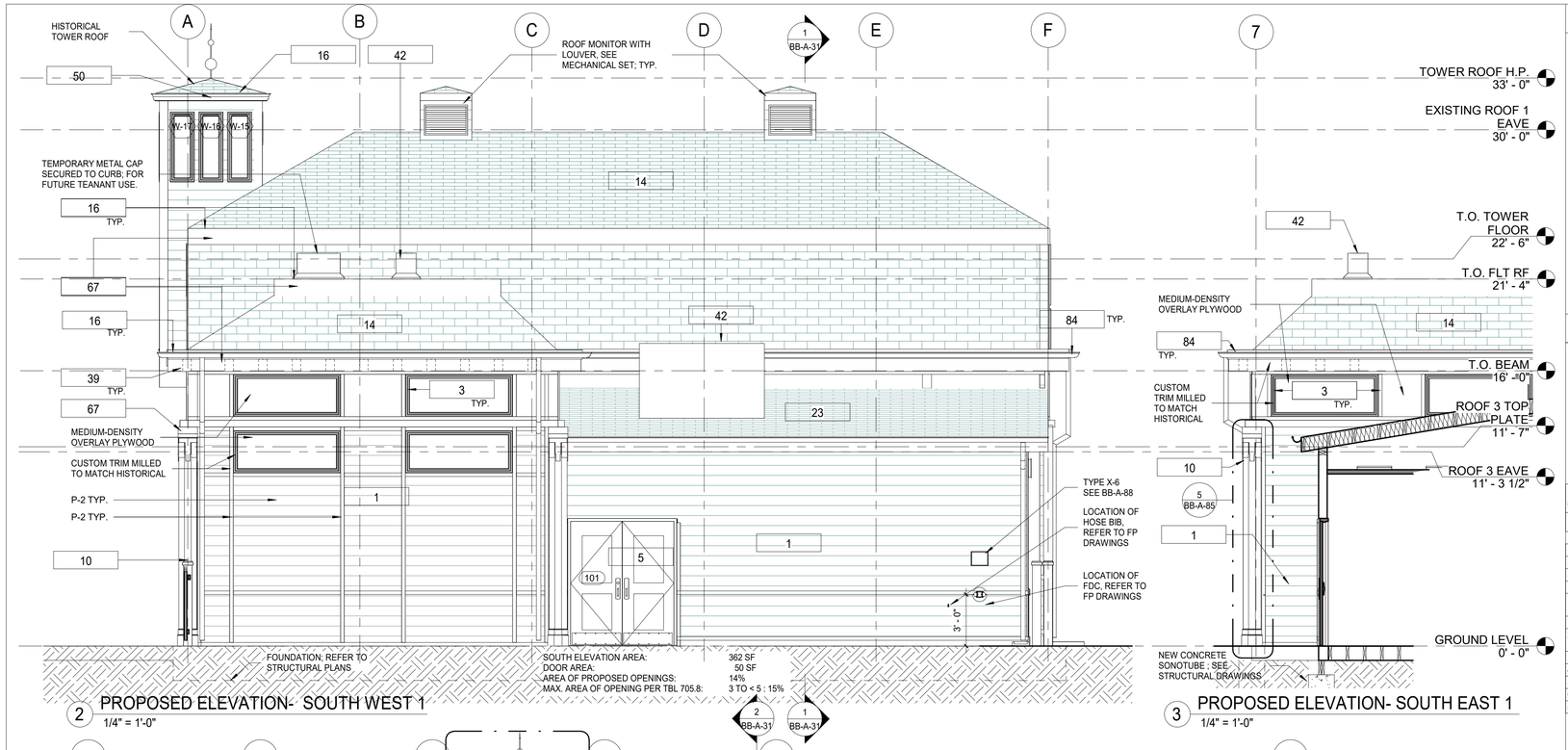


2 PROPOSED ELEVATION- SOUTH WEST 1
1/4" = 1'-0"

3 PROPOSED ELEVATION- SOUTH EAST 1
1/4" = 1'-0"

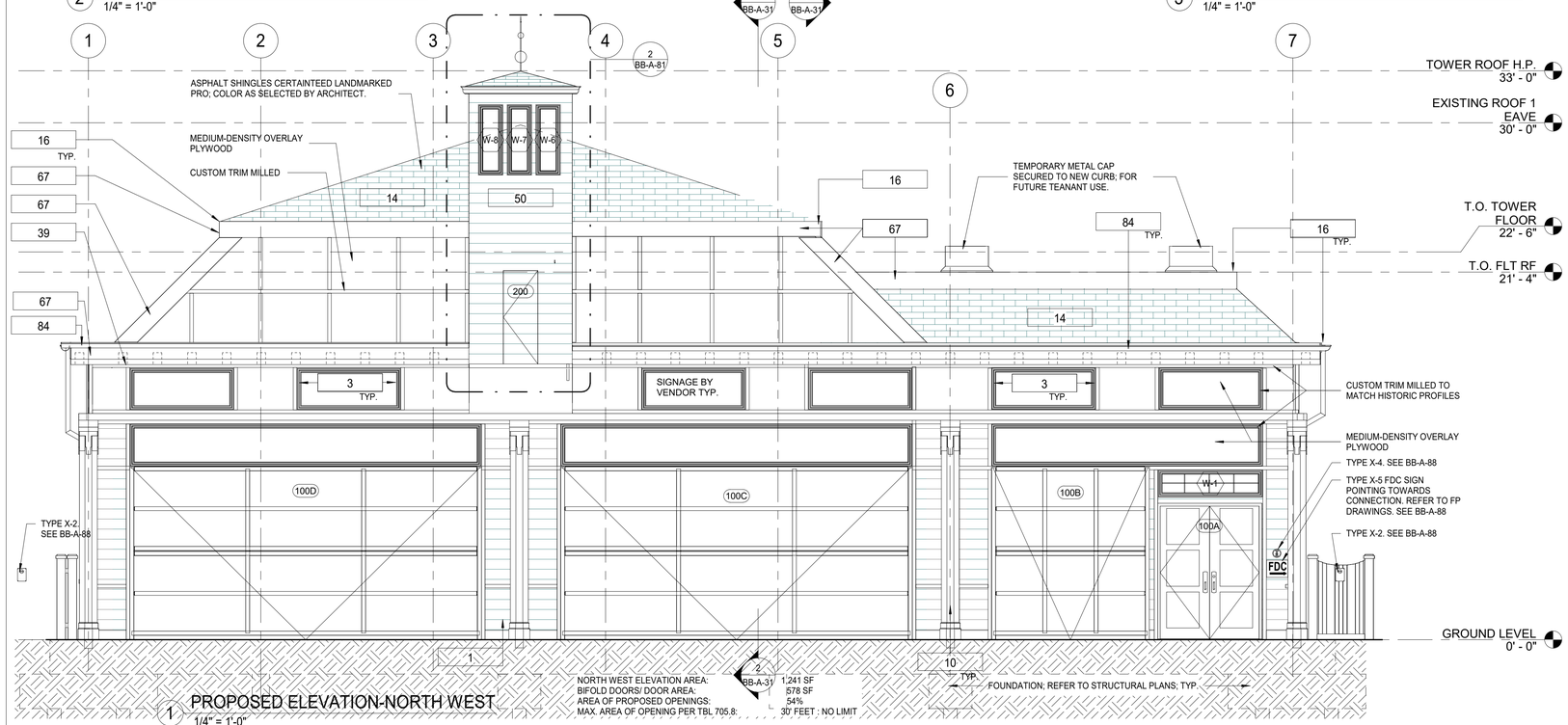


1 PROPOSED ELEVATION-NORTH WEST
1/4" = 1'-0"

## CONSTRUCTION GENERAL NOTES

1. THE ARCHITECT DOES NOT CERTIFY DIMENSIONS OR CONDITIONS OF EXISTING CONSTRUCTION. CONTRACTOR SHALL NOTIFY ARCHITECT IMMEDIATELY OF ANY DISCREPANCY BETWEEN DRAWINGS AND EXISTING CONDITIONS. IN ADDITION, CONTRACTOR SHALL NOTIFY THE ARCHITECT OF ANY DEFECTIVE CONSTRUCTION UNCOVERED DURING CONSTRUCTION.
2. CONTRACTOR SHALL KEEP WORK SITE FREE FROM DEBRIS AND ACCUMULATED REFUSE, AND SHALL HAVE SOLE RESPONSIBILITY FOR PROTECTING ALL DANGEROUS AREAS FROM ENTRY BY UNAUTHORIZED PARTIES. ALL CONSTRUCTION SCRAPS, DIRT, AND DEBRIS SHALL BE REMOVED FROM THE PREMISES DAILY. SITE SHALL BE LEFT BROOM CLEAN AT THE END OF EACH WORKING DAY. AT THE COMPLETION OF THE WORK, HE PREMISES SHALL BE LEFT IN A BROOM CLEAN CONDITION.
3. ALL WORK TO BE PERFORMED IN A WORKMANLIKE FASHION. MATERIALS UTILIZED SHALL BE AS SPECIFIED ON THE DRAWINGS OR IN THE JOB SPECIFICATIONS, OR, IF GENERIC, IN COMPLIANCE WITH ASTM, NEW YORK CODE, OR OTHER GENERALLY ACCEPTED STANDARDS.
4. WHERE EXISTING EQUIPMENT OR CONSTRUCTION IS REMOVED OR ALTERED, ALL REMAINING SURFACES AND FINISHES AFFECTED SHALL BE PATCHED AND FINISHED TO MATCH ADJACENT CONSTRUCTION/PRE-EXISTING CONDITION.
5. ALL EXITS SHALL BE KEPT READILY ACCESSIBLE AND UNOBSTRUCTED AT ALL TIMES. ALL EXITS SHALL BE KEPT READILY ACCESSIBLE AND UNOBSTRUCTED AT ALL TIMES.
6. ALL INFILLED OPENINGS TO BE FLUSH WITH EXISTING MASONRY WALL SURFACES, EXTERIOR OF NEW AND OLD TO BE FLUSH AND MATCH WITH EXISTING ADJACENT WALL SYSTEM.
7. THE G.C. SHALL VERIFY DIMENSIONS OF THE EXISTING SPACE AND OF ANY EXISTING CONSTRUCTION TO REMAIN BY ACTUAL MEASUREMENT BEFORE ANY WORK IS PERFORMED. IF ANY MEASUREMENTS DIFFER FROM DIMENSIONS SHOWN ON PLAN, G.C. IS TO NOTIFY THE ARCHITECT IMMEDIATELY. THE G.C. SHALL BE RESPONSIBLE FOR CORRECTING ANY AND ALL DISCREPANCIES FOUND AFTER THE WORK IS PERFORMED, AT NO ADDITIONAL EXPENSE TO THE OWNER.
8. G.C. TO VERIFY ALL FINISHED DIMENSIONS. FIELD CONDITIONS ALTERING ANY DIMENSIONS SHOULD BE BROUGHT TO THE ATTENTION OF THE OWNER AND ARCHITECT.
9. THE G.C. SHALL BE RESPONSIBLE FOR COORDINATING WITH OWNER ON ALL WORK TO BE PERFORMED BY THE OWNER. ANY POTENTIAL CONFLICTS OR DELAYS CAUSED BY THE OWNER'S SUBCONTRACTORS MUST BE DOCUMENTED IN WRITING TO THE OWNER BEFORE THE DELAY IS ACTUALLY INCURRED FOR IT TO BE CONSIDERED. OTHERWISE THE G.C. WILL BE RESPONSIBLE FOR MEETING THE SCHEDULE AS OUTLINED IN THE CONTRACT.

## CONSTRUCTION LEGEND

- INDICATES NEW/ RESTORED STUCCO & NEW PAINT
- INDICATES SCOPE NOT IN CONTRACT
- ? KEY NOTES
- 1t WINDOW TAG
- 101 DOOR TAG

## KEYNOTE LEGEND CONST.

| KEY VALUE | KEYNOTE TEXT |
|---|---|
| 1 | PROVIDE AND INSTALL NEW 1x8 MILLED YELLOW PINE - TONGUE AND GROOVE - NO BEVEL |
| 3 | REPLICATE TRIMS TO MATCH DOCUMENTED TRIM, LOCATIONS, SIZE AND SHAPE. FINISH PAINT COLORS AS SCHEDULED. |
| 5 | PROVIDE AND INSTALL DOOR INCLUDING FRAME, SILL, LINTEL AND ANY ASSOCIATE HARDWARE. SEE DOOR SCHEDULE. |
| 10 | PROVIDE AND INSTALL COLUMN ENCLOSURES. SEE DETAILS. |
| 14 | PROVIDE NEW ASPHALT SHINGLE ROOFING,UNDERLAYMENT, AND REPLACE IN KIND EXISTING DECKING AS REQUIRED (COORDINATE WITH STRUCTURAL). |
| 16 | PROVIDE AND INSTALL ALUMINUM METAL DRIP EDGE, DOWNSPOUT AND GUTTER AT PERIMETER OF ROOF. |
| 23 | NEW ROOF WITH BATT INSULATION (R-38 MIN) PACKED BETWEEN JOISTS. PROVIDE AND INSTALL SHINGLES, UNDERLAYMENT SHEATHING AND FLASHING SYSTEM. |
| 39 | NEW SOFFIT WITH RECESSED LIGHTS AS INDICATED ON RCP |
| 42 | NEW MECHANICAL EQUIPMENT. SEE MECHANICAL DRAWINGS. |
| 50 | CONSTRUCT NEW DECORATIVE TOWER. SEE DETAILS. |
| 67 | NEW FASCIA BOARD AND SOFFIT. |
| 84 | HALF ROUND ALUMINUM GUTTER AND DOWNSPOUT. |

## PLAYLAND MASTER PAINT SCHEDULE

| KEY | COLOR | MANUFACTURER | REMARKS |
|---|---|---|---|
| P-1 | MYSTICAL POWERS #901 | BENJAMIN MOORE | |
| P-2 | HERITAGE RED #HC-181 | BENJAMIN MOORE | |
| P-3 | NEW YORK STATE OF MIND #805 | BENJAMIN MOORE | |
| P-4 | LAZY SUNDAY #803 | BENJAMIN MOORE | |
| P-5 | DEEP JUNGLE #595 | BENJAMIN MOORE | |
| P-6 | LUCK OF THE IRISH #588 | BENJAMIN MOORE | |
| P-7 | MAJOLICA GREEN #0013 | SHERWIN WILLIAMS | |
| P-8 | ANTELOPE CANYON #125 | BENJAMIN MOORE | |
| P-9 | FORSYTHIA #6907 | SHERWIN WILLIAMS | |
| P-10 | CAPE BLUE #1642 | BENJAMIN MOORE | |
| P-11 | WHITE SNOW #9541 | SHERWIN WILLIAMS | |
| P-12 | TRICORN BLACK #6258 | SHERWIN WILLIAMS | |
| P-13 | READY WHITE MIX | | INTERIOR USE ONLY |
| P-14 | STUCCO TO MATCH P-1 | | FOR ALL NEW STUCCO SURFACES |
| P-15 | VAN DEUSEN BLUE #HC-156 | BENJAMIN MOORE | |
| P-16 | #RAL9001 | | TYPICAL ROLL UP DOOR COLOR |
| P-17 | FLORIDA BEACHES #900 | BENJAMIN MOORE | |
| P-18 | PIRATES COVE PEACH #903 | BENJAMIN MOORE | |
| P-19 | JADITE #6459 | SHERWIN WILLIAMS | |
| P-20 | DECISIVE YELLOW #6902 | SHERWIN WILLIAMS | |

8/30/2022 3:04:10 PM


CONSULTANT INFORMATION
The LiRo Group
3 Aerial Way, Syosset, New York 11791
(516) 938-5476 www.liro.com


CONSULTANT SEAL
REGISTERED ARCHITECT ROBERT D. KOMMINK 023290 STATE OF NEW YORK

| REVISION NUMBER | DATE | MADE BY | APP'D BY | REVISION |
|---|---|---|---|---|

RECORD DRAWING CERTIFICATION
☐ AS BUILT – CHANGES AS NOTED ☐ AS BUILT – NO CHANGES

CONTRACTOR
NAME
SIGNATURE
TITLE DATE

PROJECT COORDINATOR
NAME
SIGNATURE
TITLE DATE

WESTCHESTER COUNTY, NEW YORK
DEPARTMENT OF PUBLIC WORKS AND TRANSPORTATION
DIVISION OF ENGINEERING

**INFRASTRUCTURE REHABILITATION - PHASE 3**
**PLAYLAND PARK, RYE, NEW YORK**
**NORTH EAST BURGER BARN**
**EXTERIOR ELEVATION 1**

| | |
|---|---|
| CONTRACT NUMBER | 22-523 |
| SHEET NUMBER | BB-A-21 |
| DWG NO.: | 31 of 664 |
| SCALE: | 1/4" = 1'-0" |
| DATE: | 08/23/2022 |
| DPW FILE NUMBER | 1-118-A-780-0 |
| REV. NO. | 0 |

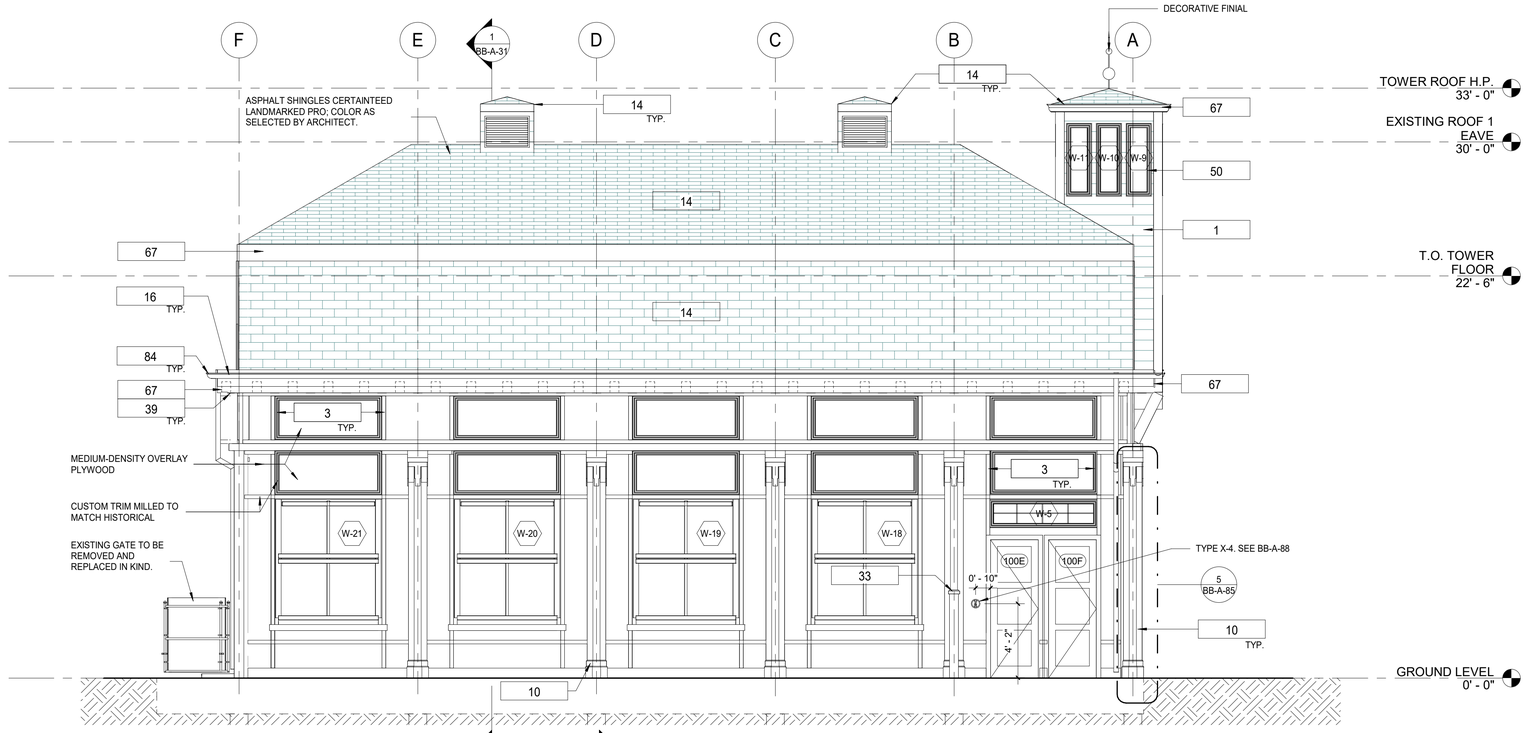


2 PROPOSED ELEVATION- NORTH EAST
1/4" = 1'-0"

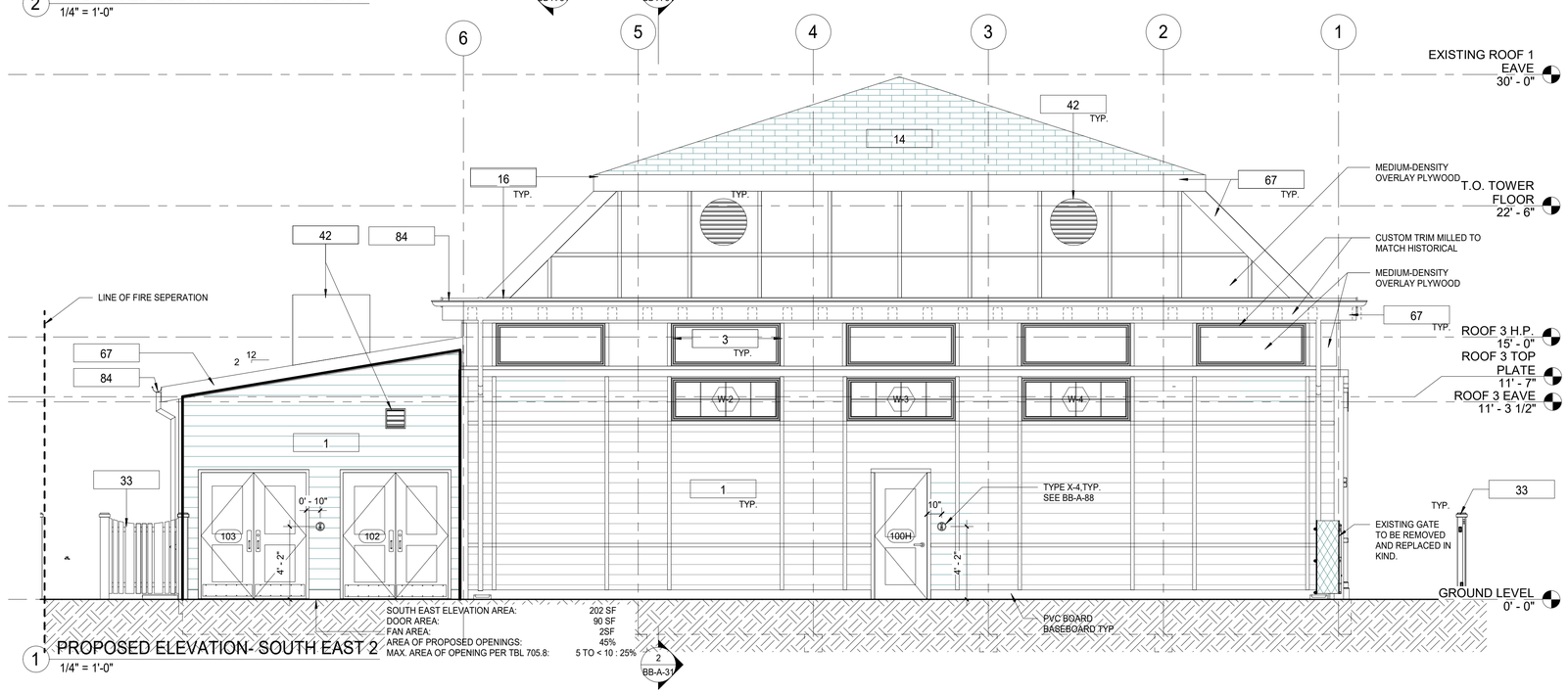


| | |
|---|---|
| SOUTH EAST ELEVATION AREA: | 202 SF |
| DOOR AREA: | 90 SF |
| FAN AREA: | 2SF |
| AREA OF PROPOSED OPENINGS: | 45% |
| MAX. AREA OF OPENING PER TBL 705.8: | 5 TO < 10 : 25% |

1 PROPOSED ELEVATION- SOUTH EAST 2
1/4" = 1'-0"

## CONSTRUCTION GENERAL NOTES

1. THE ARCHITECT DOES NOT CERTIFY DIMENSIONS OR CONDITIONS OF EXISTING CONSTRUCTION. CONTRACTOR SHALL NOTIFY ARCHITECT IMMEDIATELY OF ANY DISCREPANCY BETWEEN DRAWINGS AND EXISTING CONDITIONS. IN ADDITION, CONTRACTOR SHALL NOTIFY THE ARCHITECT OF ANY DEFECTIVE CONSTRUCTION UNCOVERED DURING CONSTRUCTION.
2. CONTRACTOR SHALL KEEP WORK SITE FREE FROM DEBRIS AND ACCUMULATED REFUSE, AND SHALL HAVE SOLE RESPONSIBILITY FOR PROTECTING ALL DANGEROUS AREAS FROM ENTRY BY UNAUTHORIZED PARTIES. ALL CONSTRUCTION SCRAPS, DIRT, AND DEBRIS SHALL BE REMOVED FROM THE PREMISES DAILY. SITE SHALL BE LEFT BROOM CLEAN AT THE END OF EACH WORKING DAY. AT THE COMPLETION OF THE WORK, HE PREMISES SHALL BE LEFT IN A BROOM CLEAN CONDITION.
3. ALL WORK TO BE PERFORMED IN A WORKMANLIKE FASHION. MATERIALS UTILIZED SHALL BE AS SPECIFIED ON THE DRAWINGS OR IN THE JOB SPECIFICATIONS, OR, IF GENERIC, IN COMPLIANCE WITH ASTM, NEW YORK CODE, OR OTHER GENERALLY ACCEPTED STANDARDS.
4. WHERE EXISTING EQUIPMENT OR CONSTRUCTION IS REMOVED OR ALTERED, ALL REMAINING SURFACES AND FINISHES AFFECTED SHALL BE PATCHED AND FINISHED TO MATCH ADJACENT CONSTRUCTION/PRE- EXISTING CONDITION.
5. ALL EXITS SHALL BE KEPT READILY ACCESSIBLE AND UNOBSTRUCTED AT ALL TIMES. ALL EXITS SHALL BE KEPT READILY ACCESSIBLE AND UNOBSTRUCTED AT ALL TIMES.
6. ALL INFILLED OPENINGS TO BE FLUSH WITH EXISTING MASONRY WALL SURFACES, EXTERIOR OF NEW AND OLD TO BE FLUSH AND MATCH WITH EXISTING ADJACENT WALL SYSTEM.
7. THE G.C. SHALL VERIFY DIMENSIONS OF THE EXISTING SPACE AND OF ANY EXISTING CONSTRUCTION TO REMAIN BY ACTUAL MEASUREMENT BEFORE ANY WORK IS PERFORMED. IF ANY MEASUREMENTS DIFFER FROM DIMENSIONS SHOWN ON PLAN, G.C. IS TO NOTIFY THE ARCHITECT IMMEDIATELY. THE G.C. SHALL BE RESPONSIBLE FOR CORRECTING ANY AND ALL DISCREPANCIES FOUND AFTER THE WORK IS PERFORMED, AT NO ADDITIONAL EXPENSE TO THE OWNER.
8. G.C. TO VERIFY ALL FINISHED DIMENSIONS. FIELD CONDITIONS ALTERING ANY DIMENSIONS SHOULD BE BROUGHT TO THE ATTENTION OF THE OWNER AND ARCHITECT.
9. THE G.C. SHALL BE RESPONSIBLE FOR COORDINATING WITH OWNER ON ALL WORK TO BE PERFORMED BY THE OWNER. ANY POTENTIAL CONFLICTS OR DELAYS CAUSED BY THE OWNER'S SUBCONTRACTORS MUST BE DOCUMENTED IN WRITING TO THE OWNER BEFORE THE DELAY IS ACTUALLY INCURRED FOR IT TO BE CONSIDERED. OTHERWISE THE G.C. WILL BE RESPONSIBLE FOR MEETING THE SCHEDULE AS OUTLINED IN THE CONTRACT.

## CONSTRUCTION LEGEND

| | |
|---|---|
| | INDICATES NEW/ RESTORED STUCCO & NEW PAINT |
| | INDICATES SCOPE NOT IN CONTRACT |
| ? | KEY NOTES |
| 1t | WINDOW TAG |
| 101 | DOOR TAG |

## KEYNOTE LEGEND CONST.

| KEY VALUE | KEYNOTE TEXT |
|---|---|
| 1 | PROVIDE AND INSTALL NEW 1x8 MILLED YELLOW PINE - TONGUE AND GROOVE - NO BEVEL |
| 3 | REPLICATE TRIMS TO MATCH DOCUMENTED TRIM, LOCATIONS, SIZE AND SHAPE. FINISH PAINT COLORS AS SCHEDULED. |
| 10 | PROVIDE AND INSTALL COLUMN ENCLOSURES. SEE DETAILS. |
| 14 | PROVIDE NEW ASPHALT SHINGLE ROOFING,UNDERLAYMENT, AND REPLACE IN KIND EXISTING DECKING AS REQUIRED (COORDINATE WITH STRUCTURAL). |
| 16 | PROVIDE AND INSTALL ALUMINUM METAL DRIP EDGE, DOWNSPOUT AND GUTTER AT PERIMETER OF ROOF. |
| 33 | NEW WOOD FENCE. SEE DETAILS. |
| 39 | NEW SOFFIT WITH RECESSED LIGHTS AS INDICATED ON RCP |
| 42 | NEW MECHANICAL EQUIPMENT. SEE MECHANICAL DRAWINGS. |
| 50 | CONSTRUCT NEW DECORATIVE TOWER. SEE DETAILS. |
| 67 | NEW FASCIA BOARD AND SOFFIT. |
| 84 | HALF ROUND ALUMINUM GUTTER AND DOWNSPOUT. |

## PLAYLAND MASTER PAINT SCHEDULE

| KEY | COLOR | MANUFACTURER | REMARKS |
|---|---|---|---|
| P-1 | MYSTICAL POWERS #901 | BENJAMIN MOORE | |
| P-2 | HERITAGE RED #HC-181 | BENJAMIN MOORE | |
| P-3 | NEW YORK STATE OF MIND #805 | BENJAMIN MOORE | |
| P-4 | LAZY SUNDAY #803 | BENJAMIN MOORE | |
| P-5 | DEEP JUNGLE #595 | BENJAMIN MOORE | |
| P-6 | LUCK OF THE IRISH #588 | BENJAMIN MOORE | |
| P-7 | MAJOLICA GREEN #0013 | SHERWIN WILLIAMS | |
| P-8 | ANTELOPE CANYON #125 | BENJAMIN MOORE | |
| P-9 | FORSYTHIA #6907 | SHERWIN WILLIAMS | |
| P-10 | CAPE BLUE #1642 | BENJAMIN MOORE | |
| P-11 | WHITE SNOW #9541 | SHERWIN WILLIAMS | |
| P-12 | TRICORN BLACK #6258 | SHERWIN WILLIAMS | |
| P-13 | READY WHITE MIX | | INTERIOR USE ONLY |
| P-14 | STUCCO TO MATCH P-1 | | FOR ALL NEW STUCCO SURFACES |
| P-15 | VAN DEUSEN BLUE #HC-156 | BENJAMIN MOORE | |
| P-16 | #RAL9001 | | TYPICAL ROLL UP DOOR COLOR |
| P-17 | FLORIDA BEACHES #900 | BENJAMIN MOORE | |
| P-18 | PIRATES COVE PEACH #903 | BENJAMIN MOORE | |
| P-19 | JADITE #6459 | SHERWIN WILLIAMS | |
| P-20 | DECISIVE YELLOW #6902 | SHERWIN WILLIAMS | |

8/30/2022 3:04:13 PM

CONSULTANT INFORMATION

The LiRo Group
3 Aerial Way, Syosset, New York 11791
(516) 938-5476 www.liro.com

CONSULTANT SEAL

REGISTERED ARCHITECT ROBERT D. JOHNSON 023280 STATE OF NEW YORK

| REVISION NUMBER | DATE | MADE BY | APP'D BY | REVISION |
|---|---|---|---|---|

RECORD DRAWING CERTIFICATION

☐ AS BUILT – CHANGES AS NOTED ☐ AS BUILT – NO CHANGES

CONTRACTOR
NAME
SIGNATURE
TITLE DATE

PROJECT COORDINATOR
NAME
SIGNATURE
TITLE DATE

WESTCHESTER COUNTY, NEW YORK
DEPARTMENT OF PUBLIC WORKS AND TRANSPORTATION
DIVISION OF ENGINEERING

**INFRASTRUCTURE REHABILITATION - PHASE 3**
**PLAYLAND PARK, RYE, NEW YORK**
**NORTH EAST BURGER BARN**
**EXTERIOR ELEVATION 2**

| | |
|---|---|
| CONTRACT NUMBER | 22-523 |
| SHEET NUMBER | BB-A-22 |
| DWG NO.: | 32 of 664 |
| SCALE: | 1/4" = 1'-0" |
| DATE: | 08/23/2022 |
| DPW FILE NUMBER | 1-118-A-781-0 |
| REV. NO. | 0 |

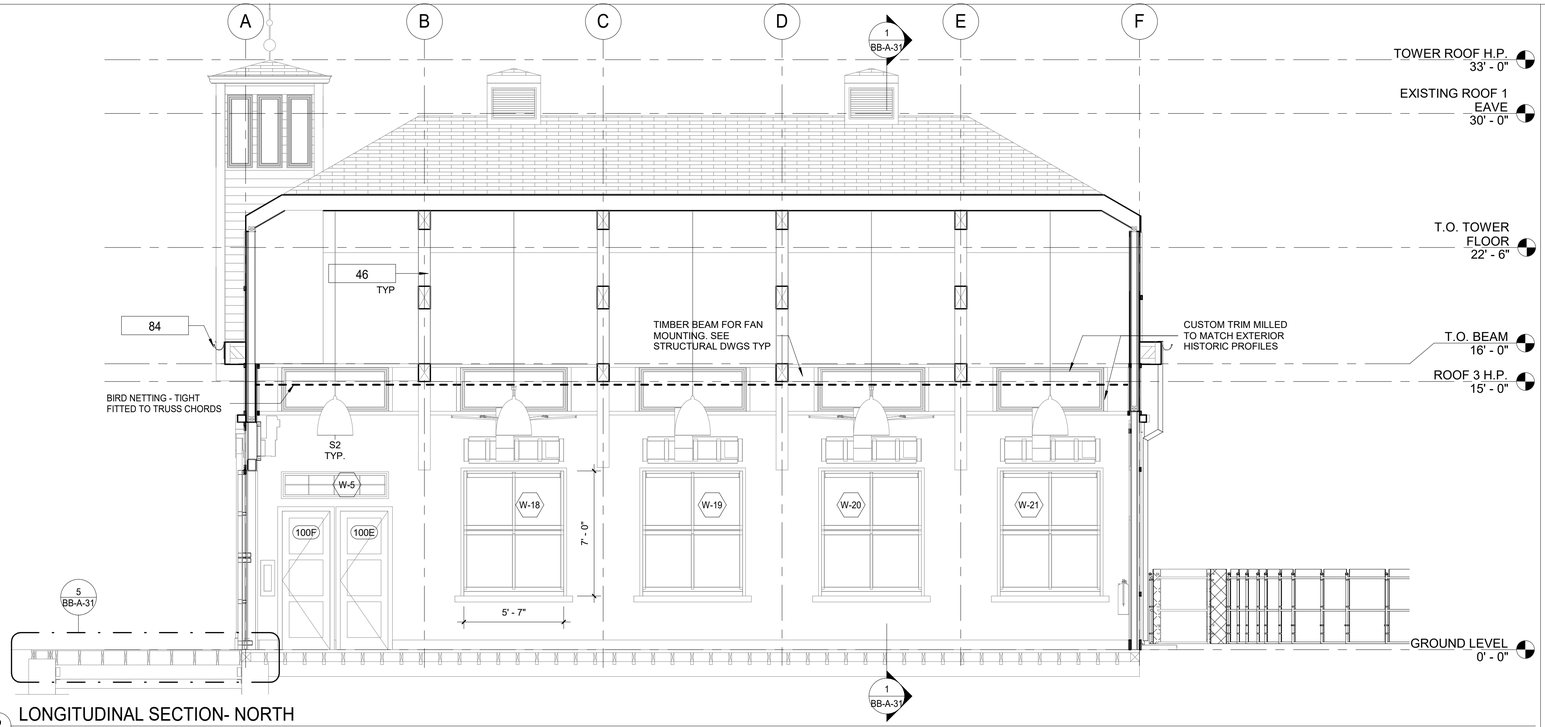


2 LONGITUDINAL SECTION- NORTH
1/4" = 1'-0"

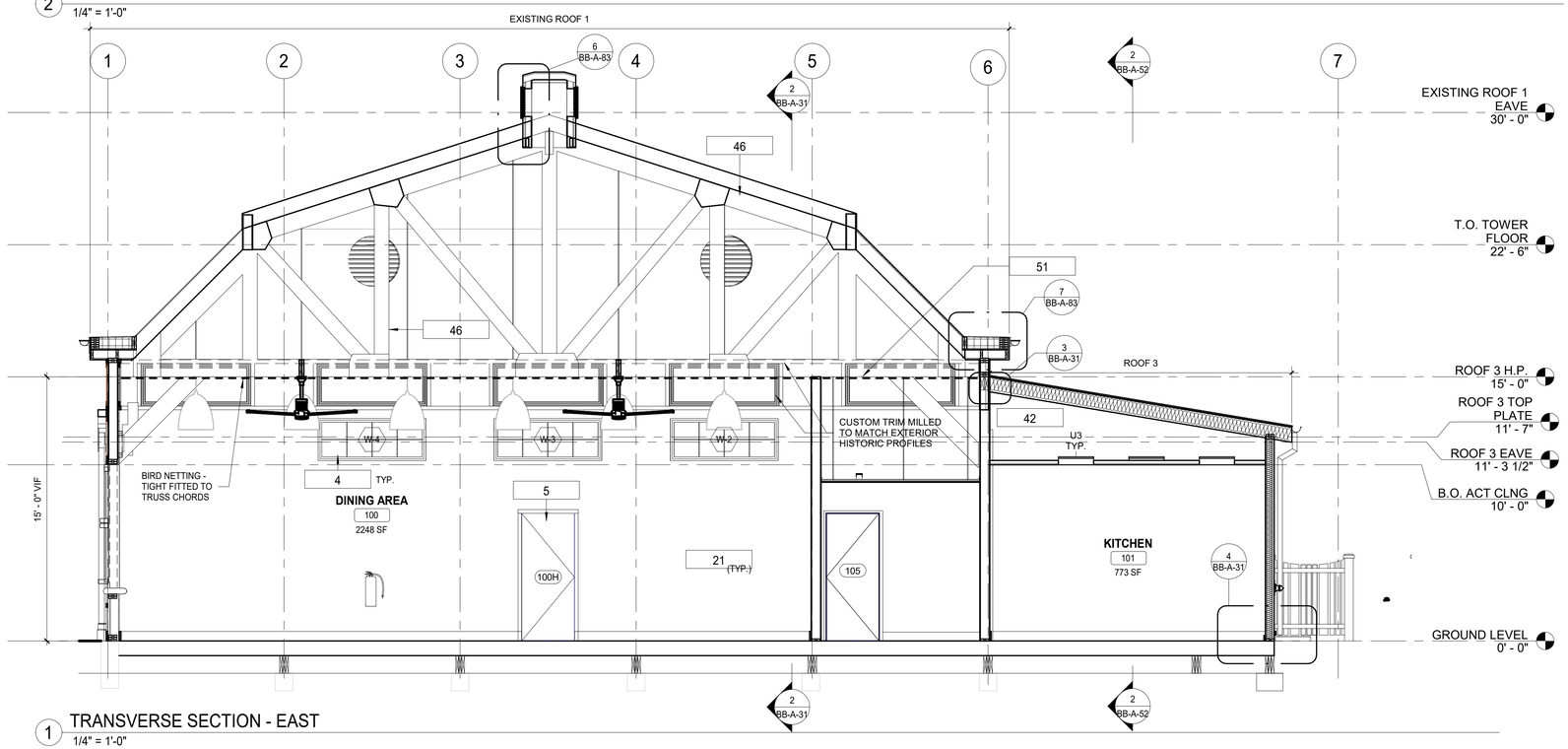


1 TRANSVERSE SECTION - EAST
1/4" = 1'-0"

LEGEND

- INDICATES SCOPE NOT IN CONTRACT
- ? KEY NOTES
- 1i WALL TAG
- 1t WINDOW TAG
- 101 DOOR TAG
- Room name 101 150 SF ROOM TAG

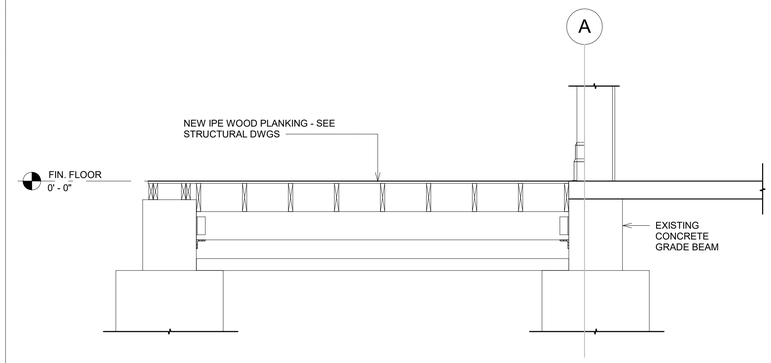


5 BUILDING SECTION_BOARDWALK
1/2" = 1'-0"

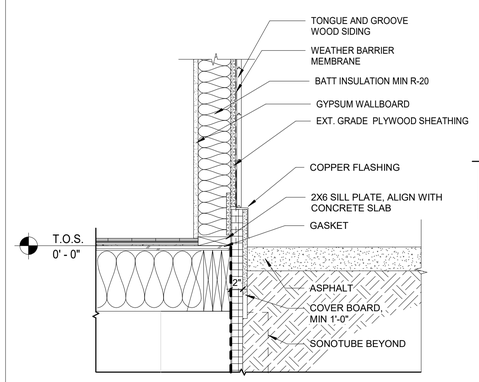


4 EXTERIOR SILL DETAIL AT SLAB ON GRADE
1" = 1'-0"

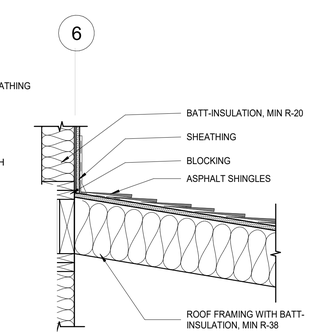


3 BUILDING SECTION AT LOW ROOF
1" = 1'-0"

**KEYNOTE LEGEND CONST.**

| KEY VALUE | KEYNOTE TEXT |
|---|---|
| 4 | NEW WINDOWS. SEE WINDOW SCHEDULE. |
| 5 | PROVIDE AND INSTALL DOOR INCLUDING FRAME, SILL, LINTEL AND ANY ASSOCIATE HARDWARE. SEE DOOR SCHEDULE. |
| 21 | NEW INTERIOR WALL. SEE WALL SCHEDULE. |
| 42 | NEW MECHANICAL EQUIPMENT. SEE MECHANICAL DRAWINGS. |
| 46 | EXISTING ROOF BEAMS AND TRUSSES TO NOT BE PAINTED. |
| 51 | NEW BIRD NETTING INSTALLED TIGHT UNDER ALL INTERIOR WOOD TRUSSES. ENSURE NO DAMAGE OCCURS TO EXISTING STRUCTURE SO AS TO ALTER ITS STRUCTURAL INTEGRITY. ZIPPERS TO BE COORDINATED WITH LOCATION OF SPRINKLER HEADS. |
| 84 | HALF ROUND ALUMINUM GUTTER AND DOWNSPOUT. |

8/30/2022 3:04:18 PM

CONSULTANT INFORMATION

The LiRo Group
3 Aerial Way, Syosset, New York 11791
(516) 938-5476 www.liro.com

CONSULTANT SEAL

REGISTERED ARCHITECT ROBERT D. YOUNGLUN 023290 STATE OF NEW YORK

| REVISION NUMBER | DATE | MADE BY | APP'D BY | REVISION |
|---|---|---|---|---|
| | | | | |

RECORD DRAWING CERTIFICATION

☐ AS BUILT – CHANGES AS NOTED ☐ AS BUILT – NO CHANGES

CONTRACTOR
NAME
SIGNATURE
TITLE DATE

PROJECT COORDINATOR
NAME
SIGNATURE
TITLE DATE

WESTCHESTER COUNTY, NEW YORK
DEPARTMENT OF PUBLIC WORKS AND TRANSPORTATION
DIVISION OF ENGINEERING

**INFRASTRUCTURE REHABILITATION - PHASE 3**
**PLAYLAND PARK, RYE, NEW YORK**
**NORTH EAST BURGER BARN**
**BUILDING SECTIONS**

| | |
|---|---|
| CONTRACT NUMBER | 22-523 |
| SHEET NUMBER | BB-A-31 |
| DWG NO.: | 33 of 664 |
| SCALE: | As indicated |
| DATE: | 08/23/2022 |
| DPW FILE NUMBER | 1-118-A-782-0 |
| REV. NO. | 0 |

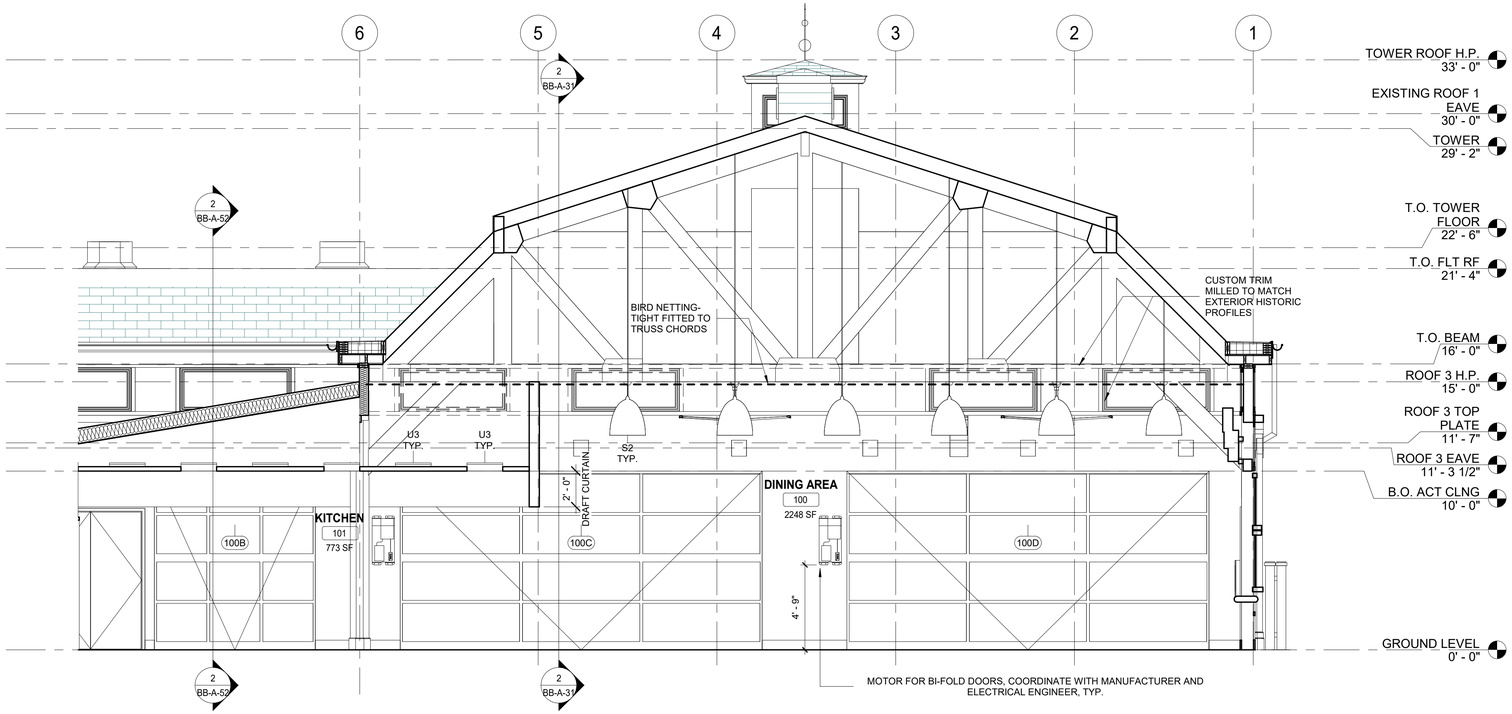


2 INTERIOR ELEVATION - WEST
1/4" = 1'-0"

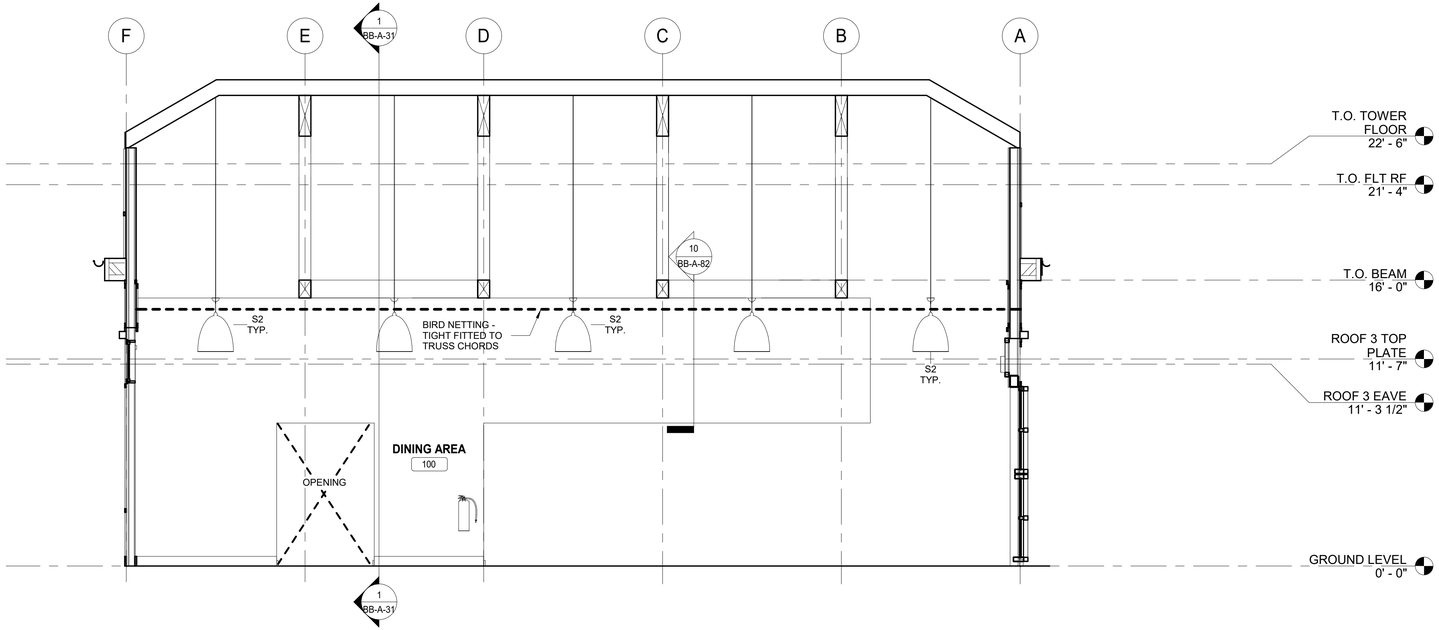


1 INTERIOR ELEVATION - SOUTH
1/4" = 1'-0"

**LEGEND**

- INDICATES SCOPE NOT IN CONTRACT
- ? KEY NOTES
- 1t WALL TAG
- 1t WINDOW TAG
- 101 DOOR TAG
- Room name 101 150 SF ROOM TAG

8/30/2022 3:04:19 PM

CONSULTANT INFORMATION

The LiRo Group
3 Aerial Way, Syosset, New York 11791
(516) 938-5476 www.liro.com

CONSULTANT SEAL

REGISTERED ARCHITECT ROBERT D. JOHNSON 023290 STATE OF NEW YORK

| REVISION NUMBER | DATE | MADE BY | APP'D BY | REVISION |
|---|---|---|---|---|

RECORD DRAWING CERTIFICATION

☐ AS BUILT – CHANGES AS NOTED ☐ AS BUILT – NO CHANGES

CONTRACTOR
NAME
SIGNATURE
TITLE DATE

PROJECT COORDINATOR
NAME
SIGNATURE
TITLE DATE

WESTCHESTER COUNTY, NEW YORK
DEPARTMENT OF PUBLIC WORKS AND TRANSPORTATION
DIVISION OF ENGINEERING

**INFRASTRUCTURE REHABILITATION - PHASE 3**
**PLAYLAND PARK, RYE, NEW YORK**
**NORTH EAST BURGER BARN**
**INTERIOR ELEVATIONS**

| | |
|---|---|
| CONTRACT NUMBER | 22-523 |
| SHEET NUMBER | BB-A-51 |
| DWG NO.: | 34 of 664 |
| SCALE: | 1/4" = 1'-0" |
| DATE: | 08/23/2022 |
| DPW FILE NUMBER | 1-118-A-783-0 |
| REV. NO. | 0 |

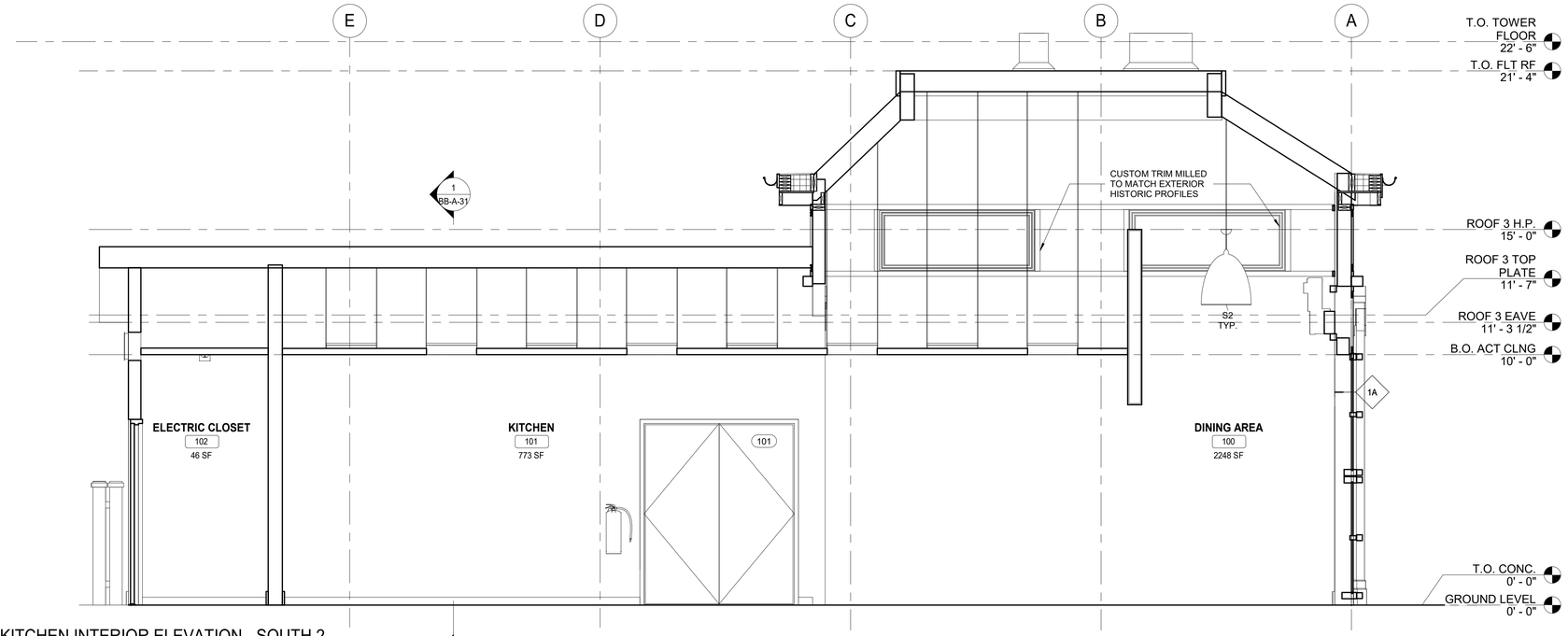


3 KITCHEN INTERIOR ELEVATION - SOUTH 2
3/8" = 1'-0"

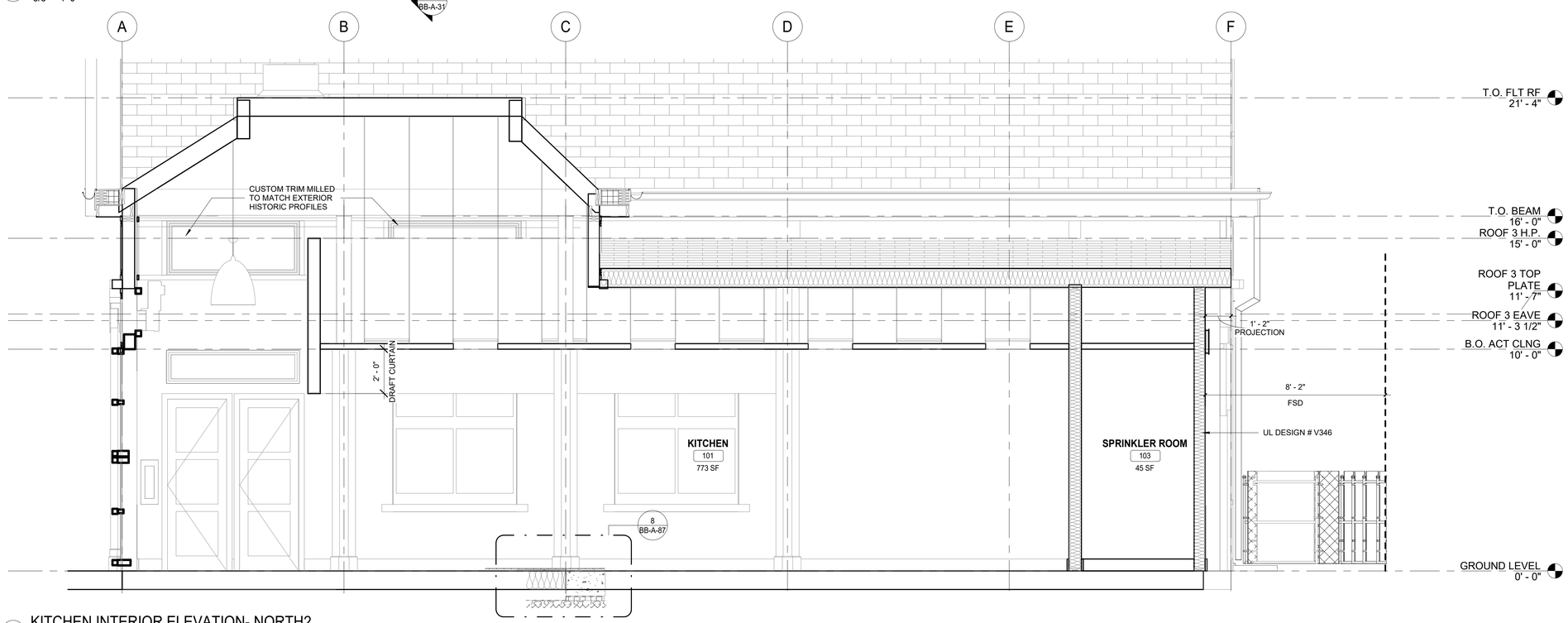


2 KITCHEN INTERIOR ELEVATION- NORTH2
3/8" = 1'-0"

**LEGEND**

- INDICATES SCOPE NOT IN CONTRACT
- ? KEY NOTES
- 1l WALL TAG
- 1t WINDOW TAG
- 101 DOOR TAG
- Room name 101 150 SF ROOM TAG

8/30/2022 3:04:21 PM

CONSULTANT INFORMATION

The LiRo Group
3 Aerial Way, Syosset, New York 11791
(516) 938-5476 www.liro.com

CONSULTANT SEAL

REGISTERED ARCHITECT ROBERT D. YOUNG JR. 023280 STATE OF NEW YORK

| REVISION NUMBER | DATE | MADE BY | APP'D BY | REVISION |
|---|---|---|---|---|

RECORD DRAWING CERTIFICATION

☐ AS BUILT – CHANGES AS NOTED ☐ AS BUILT – NO CHANGES

CONTRACTOR
NAME
SIGNATURE
TITLE DATE

PROJECT COORDINATOR
NAME
SIGNATURE
TITLE DATE

WESTCHESTER COUNTY, NEW YORK
DEPARTMENT OF PUBLIC WORKS AND TRANSPORTATION
DIVISION OF ENGINEERING

**INFRASTRUCTURE REHABILITATION - PHASE 3**
**PLAYLAND PARK, RYE, NEW YORK**
**NORTH EAST BURGER BARN**
**KITCHEN INTERIOR ELEVATIONS**

| | |
|---|---|
| CONTRACT NUMBER | 22-523 |
| SHEET NUMBER | BB-A-52 |
| DWG NO.: | 35 of 664 |
| SCALE: | As indicated |
| DATE: | 08/23/2022 |
| DPW FILE NUMBER | 1-118-A-784-0 |
| REV. NO. | 0 |

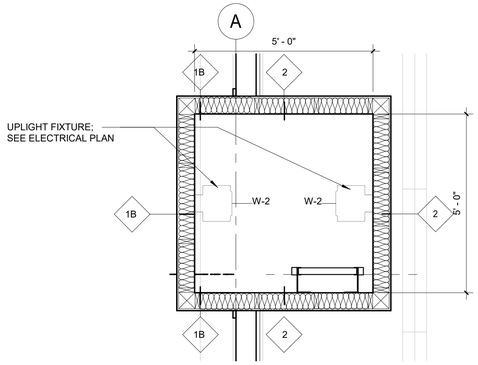


7 TOWER RCP
1/2" = 1'-0"

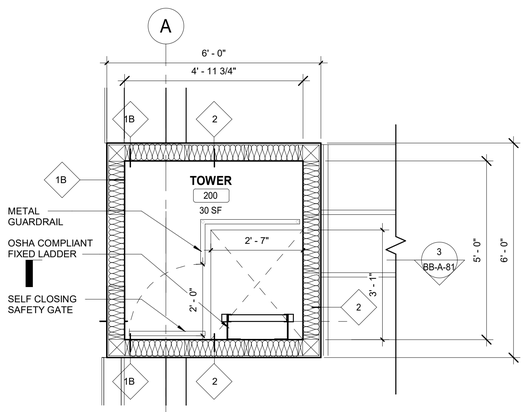


5 TOWER MEZZ FLOOR PLAN
1/2" = 1'-0"

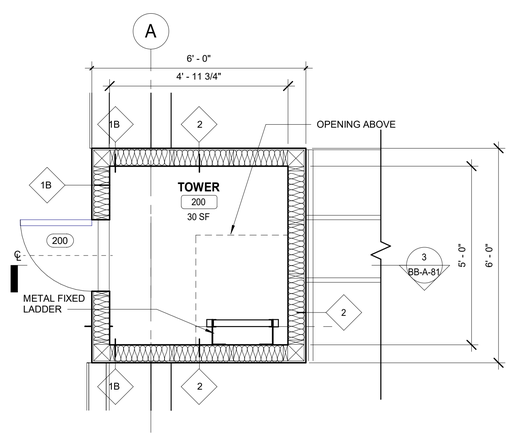


4 TOWER FLOOR PLAN
1/2" = 1'-0"

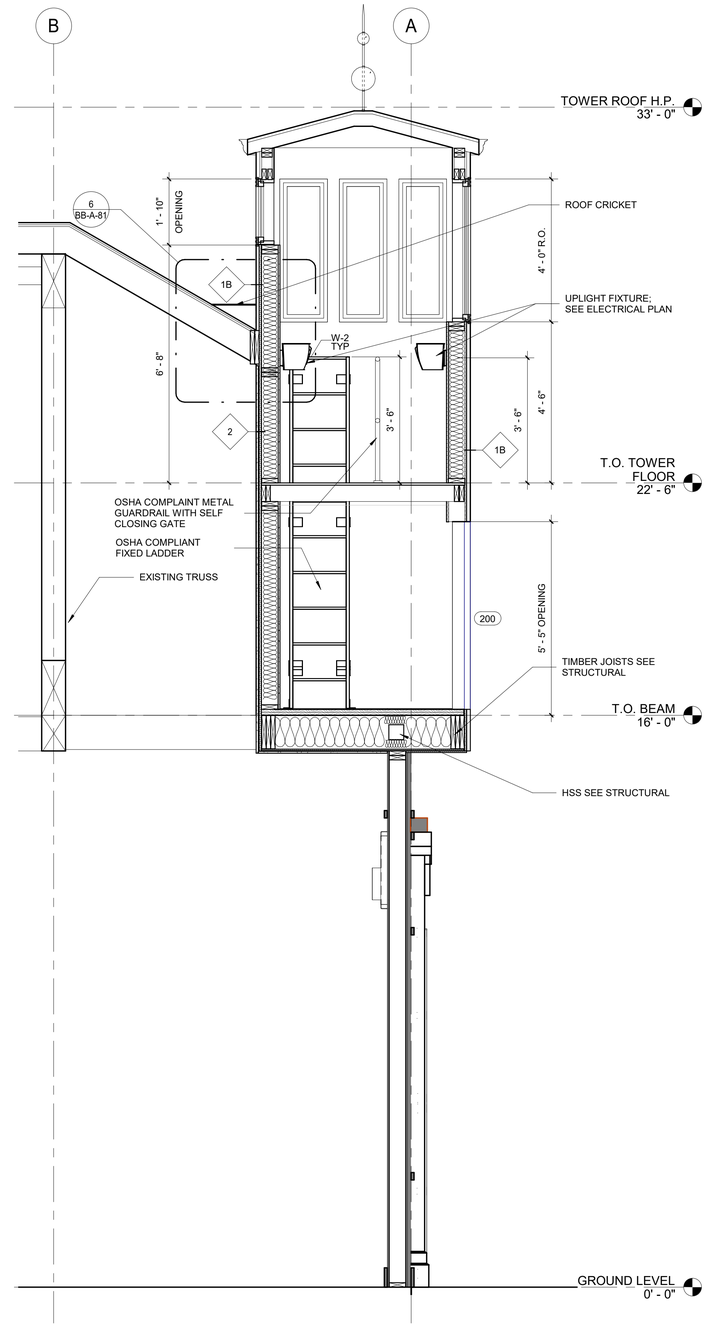


3 BUILDING TOWER SECTION
1/2" = 1'-0"

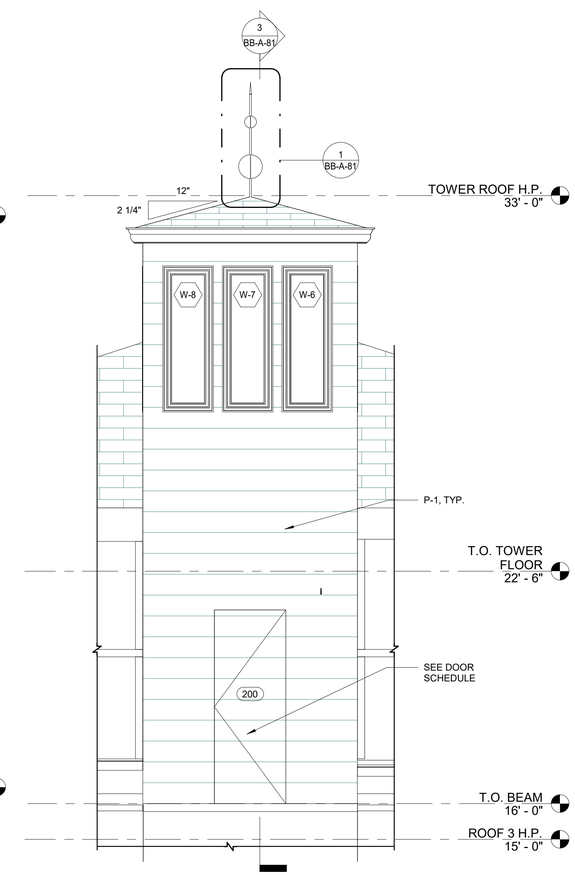


2 BUILDING TOWER ELEVATION
1/2" = 1'-0"

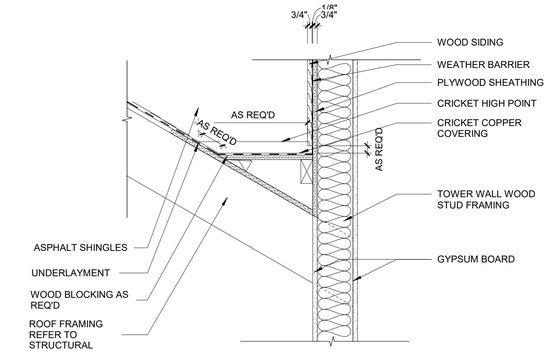


6 ROOF CRICKET DETAIL
1" = 1'-0"

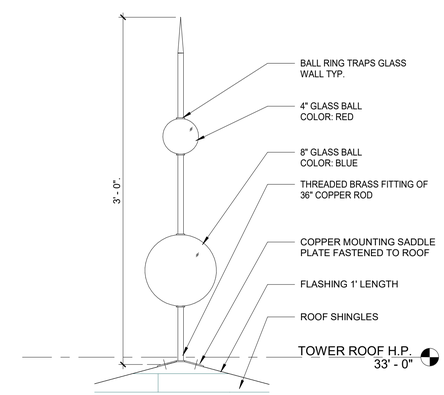


1 BUILDING TOWER FINIAL DETAIL
1 1/2" = 1'-0"

8/30/2022 3:04:23 PM

CONSULTANT INFORMATION

The LiRo Group
3 Aerial Way, Syosset, New York 11791
(516) 938-5476 www.liro.com

CONSULTANT SEAL

REGISTERED ARCHITECT ROBERT D. TOWNSEND 023230 STATE OF NEW YORK

| REVISION NUMBER | DATE | MADE BY | APP'D BY | REVISION |
|---|---|---|---|---|
| | | | | |

RECORD DRAWING CERTIFICATION

☐ AS BUILT – CHANGES AS NOTED ☐ AS BUILT – NO CHANGES

CONTRACTOR
NAME
SIGNATURE
TITLE DATE

PROJECT COORDINATOR
NAME
SIGNATURE
TITLE DATE

WESTCHESTER COUNTY, NEW YORK
DEPARTMENT OF PUBLIC WORKS AND TRANSPORTATION
DIVISION OF ENGINEERING

**INFRASTRUCTURE REHABILITATION - PHASE 3**
**PLAYLAND PARK, RYE, NEW YORK**
**NORTH EAST BURGER BARN**
**BUILDING TOWER DETAILS**

| | |
|---|---|
| CONTRACT NUMBER | 22-523 |
| SHEET NUMBER | BB-A-81 |
| DWG NO.: | 36 of 664 |
| SCALE: | As indicated |
| DATE: | 08/23/2022 |
| DPW FILE NUMBER | 1-118-A-785-0 |
| REV. NO. | 0 |

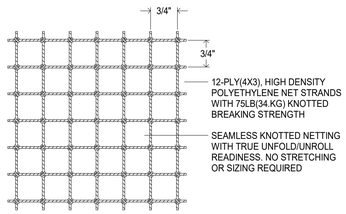


1 NET DETAILS - BIRD NETTING PARTIAL VIEW

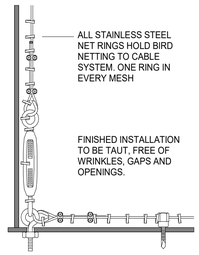


2 NET DETAILS - NET CABLE CONNECTION

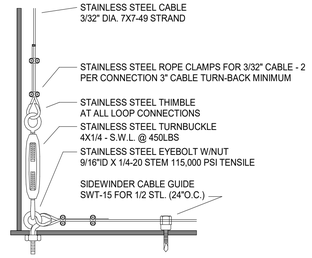


3 NET DETAILS - SUPPORT CABLE CONNECTIONS

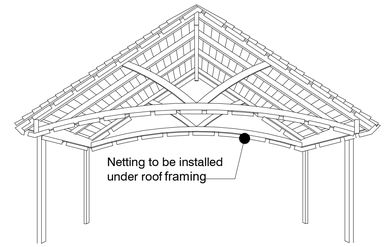


4 NET DETAILS - TRUSS NET LOCATION

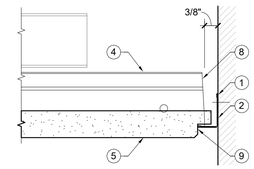


5 FEILD - CUT GRID AND PANEL AT WALL ANGLE
6" = 1'-0"

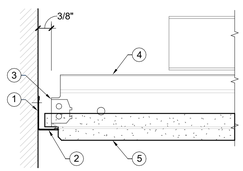


6 FULL CEILING PANEL WITH WALL ANGLE
6" = 1'-0"

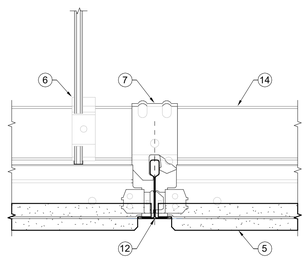


7 PANEL AND GRID SECTION CUT THROUGH MAIN TEE
6" = 1'-0"

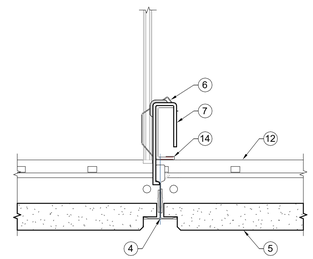


8 SECTION CUT THROUGH ACT CROSS TEE
6" = 1'-0"

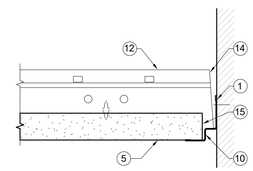


9 FIELD - CUT GRID PANEL
6" = 1'-0"

**GENERAL REFLECTED CEILING PLAN NOTES:**

1. IN OPEN CEILING AREAS THE STRUCTURE ABOVE SHALL BE PAINTED THE STANDARD CEILING PAINT COLOR. USE THE NUMBER OF COATS REQUIRED TO FULLY COVER THE CEILING CONSTRUCTION.

2. CONTRACTOR SHALL PROVIDE THE NECESSARY FRAMING OR BRIDGING FOR ALL LIGHT FIXTURES, DIFFUSERS, RETURNS, ETC., AS WELL AS REQUIRED CUTOUTS.

3. CONTRACTOR SHALL NOTIFY THE ARCHITECT OF ANY POSSIBLE INTERFERENCES BEFORE PROCEEDING WITH CEILING INSTALLATION.

4. CEILING CONSTRUCTION SHALL NOT BE CLOSED IN UNTIL THE CONSTRUCTION MANAGER AND AUTHORITIES HAVING JURISDICTION HAVE HAD AN OPPORTUNITY TO INSPECT THE AREA AND ASCERTAIN THAT ALL DUCTWORK, PLUMBING, ELECTRICAL CONDUITS AND LINES HAVE BEEN INSTALLED PROPERLY.

5. CARRYING CHANNELS FOR THE CEILING SHALL BE BOLTED TO HANGERS, AS REQUIRED BUT NOT MORE THAN 4'-0" O.C. AND 6" MIN. FROM WALLS AND PARTITIONS PARALLEL TO THE CHANNELS.

6. FASCIAS OR ANY BREAK IN THE CEILING HEIGHTS CREATED BY THE INSTALLATION AND/OR ALTERATION OF HEATING, VENTILATING, A/C OR MECHANICAL DUCTS, PIPING OR OTHER EQUIPMENT SHALL BE FORMED OF GYPSUM WALLBOARD ON FURRING CHANNELS.

7. THE CEILING TILE JOINTS SHALL BE ALIGNED PERFECTLY WITH RECESSED LIGHTING FIXTURES.

8. ALL JOINTS IN THE TILE FIELD SHALL BE SQUARE, LEVEL AND PERFECTLY ALIGNED WITH EACH OTHER AND WITH BUILDING FIXTURES.

9. CONTRACTOR SHALL PROVIDE CUTOUTS AND OTHER SPECIAL PROVISIONS IN ACOUSTICAL WORK AS REQUIRED FOR LIGHTING FIXTURES, REGISTERS, DIFFUSERS AND OTHER INSERTED ITEMS. GENERAL CONSTRUCTION CONTRACTOR SHALL INSTALL ACCESS PANELS IN GYPSUM DRYWALL CEILINGS FOR ACCESS TO AIR CONDITIONING, PLUMBING, TELEPHONE & ELECTRICAL CONTROL EQUIPMENT REQUIRING ACCESS.

10. IN GENERAL, WITHIN EACH AREA, CEILING WORK REQUIREMENTS SHALL BE EXECUTED IN SUCH A MANNER AS TO PROVIDE CONTINUOUS MATCHED AND ALIGNED CEILINGS. THE FINAL CEILING INSTALLATION SHALL BE FREE OF ALL VISUAL DEFECTS.

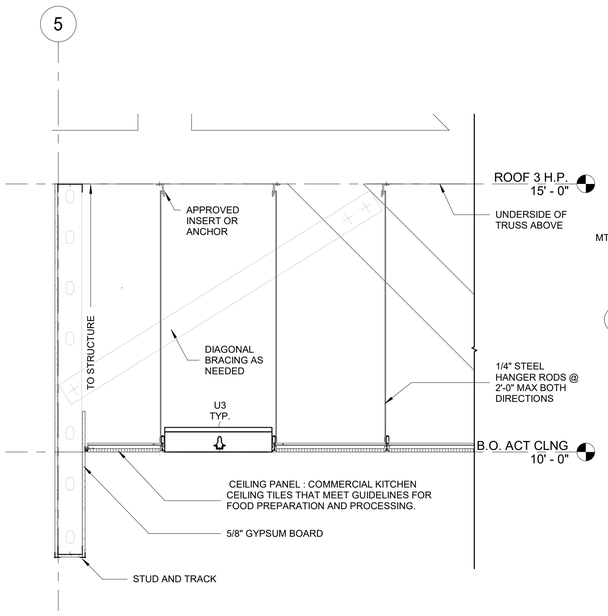


10 CEILING DETAILS_ SMOKE BAFFLE
3/4" = 1'-0"

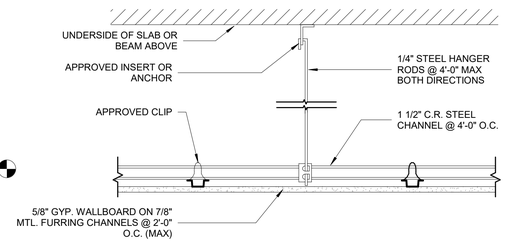


11 TYP. GYPSUM BD CEILING DETAIL
1 1/2" = 1'-0"

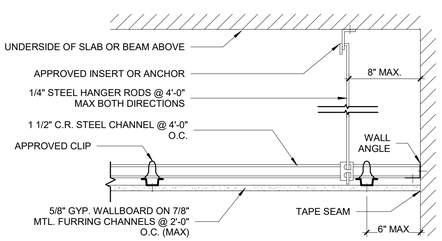


12 TYP. GYPSUM BD MAIN RUNNER AT PERIMETER DETAIL
1 1/2" = 1'-0"

NOTES:

A. DROP CLIPS SHALL BE OF LENGTH REQUIRED TO PROVIDE CLEARANCE FOR LIGHTING FIXTURES AND OTHER ITEMS ABOVE CEILING. WHERE CLEARANCE IS LIMITED PROVIDE CLIPS THAT CONNECT RUNNER TIGHT TO THE BOTTOM OF CARRYING CHANNELS.

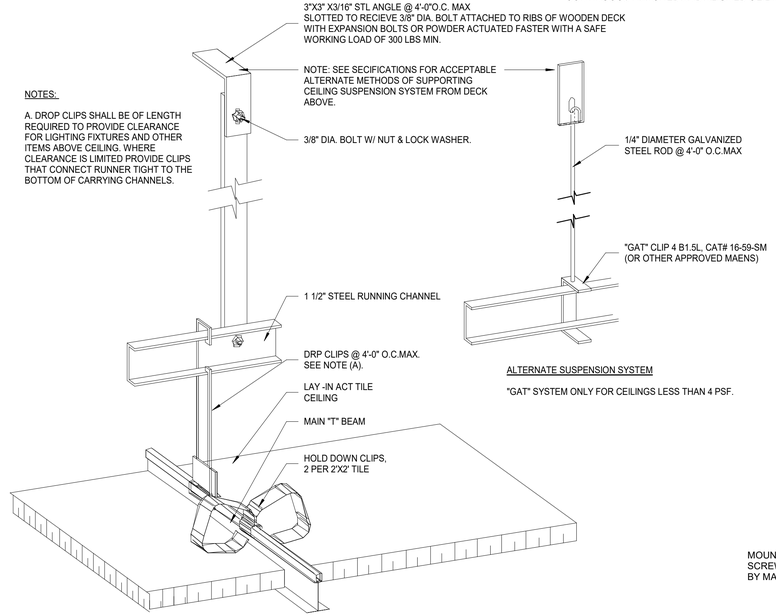


13 TYPICAL ACT CEILING DETAIL
3" = 1'-0"

**KEYNOTES- STEEL CHANNEL SUSPENSION BASIC CEILING DETAILS:**

1. ATTACH WALL ANGLE AT CEILING PERIMETER.
2. WALL ANGLE
3. REMOVE CLIP FROM CROSS TEE AT WALL ANGLE.
4. CROSS TEE
5. CEILING PANEL
6. STEEL HANGER ROD AND CHANNEL CLIP BY OTHERS.
7. ATTACH GRID TO CARRYING CHANNEL WITH USG V-14 FURRING CLIP OR EQUAL.
8. FIELD-CUT CROSS TEE AT WALL ANGLE
9. FIELD-CUT EDGE TO MATCH PANEL PROFILE.
10. SHADOW MOLDING
11. REMOVE CLIP FROM MAIN TEE AT WALL ANGLE.
12. MAIN TEE
13. FIELD- CUT MAIN TEE AT WALL ANGLE.
14. STEEL CARRYING CHANNEL BY OTHERS.
15. SQUARE-CUT PANEL AT PERIMETER (OPTIONAL INSTALLATION)

**NOTE:** USE MECHANICAL FASTENERS AS REQUIRED BY CODE FOR COMPLIANCE.

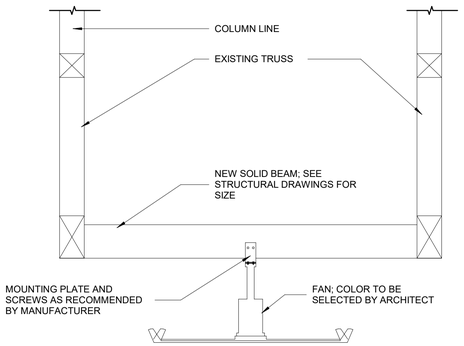


14 FAN MOUNTING DETAIL
1/2" = 1'-0"

8/30/2022 3:04:24 PM

CONSULTANT INFORMATION

The LiRo Group
3 Aerial Way, Syosset, New York 11791
(516) 938-5476 www.liro.com

CONSULTANT SEAL

REGISTERED ARCHITECT ROBERT D. YOUNGLUN 023390 STATE OF NEW YORK

| REVISION NUMBER | DATE | MADE BY | APP'D BY | REVISION |
|---|---|---|---|---|

RECORD DRAWING CERTIFICATION

☐ AS BUILT – CHANGES AS NOTED ☐ AS BUILT – NO CHANGES

CONTRACTOR
NAME
SIGNATURE
TITLE DATE

PROJECT COORDINATOR
NAME
SIGNATURE
TITLE DATE

WESTCHESTER COUNTY, NEW YORK
DEPARTMENT OF PUBLIC WORKS AND TRANSPORTATION
DIVISION OF ENGINEERING

**INFRASTRUCTURE REHABILITATION - PHASE 3**
**PLAYLAND PARK, RYE, NEW YORK**
**NORTH EAST BURGER BARN**
**CEILING DETAILS**

| | |
|---|---|
| CONTRACT NUMBER | 22-523 |
| SHEET NUMBER | BB-A-82 |
| DWG NO.: | 37 of 664 |
| SCALE: | As indicated |
| DATE: | 08/23/2022 |
| DPW FILE NUMBER | 1-118-A-786-0 |
| REV. NO. | 0 |

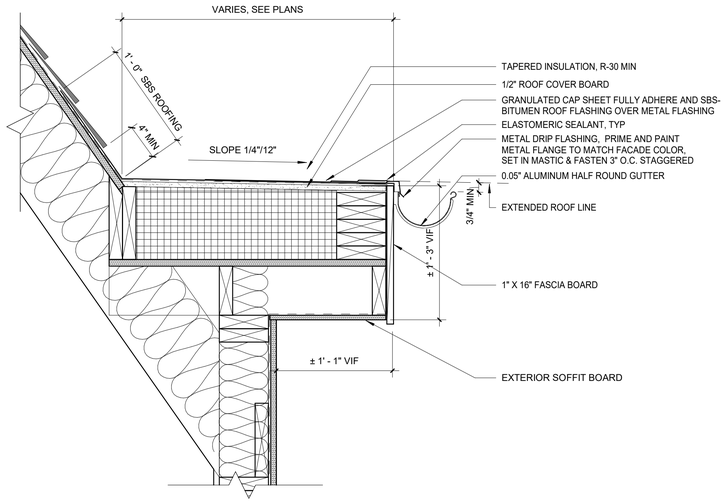


7 TYPICAL EXISTING ROOF REPLACEMENT
1 1/2" = 1'-0"

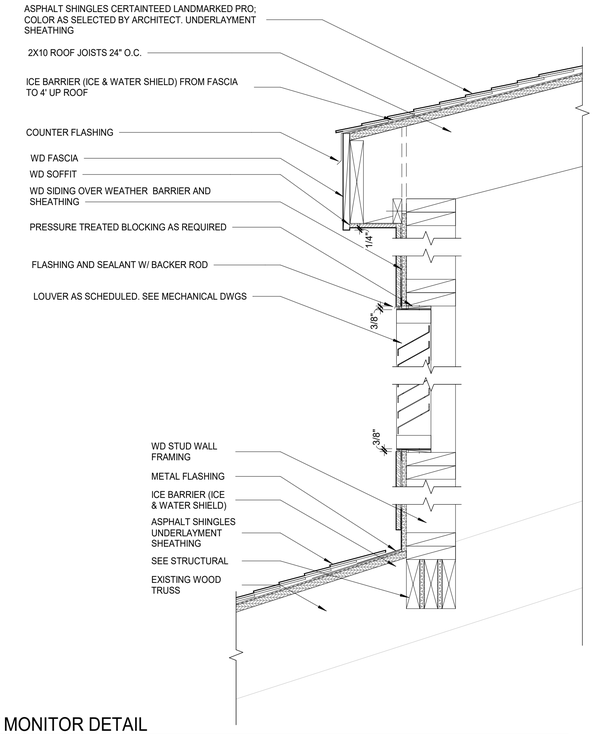


6 ROOF MONITOR DETAIL
1 1/2" = 1'-0"

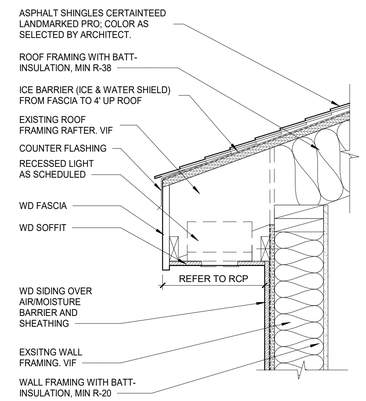


5 INSULATED EXTERIOR SOFFIT
1 1/2" = 1'-0"

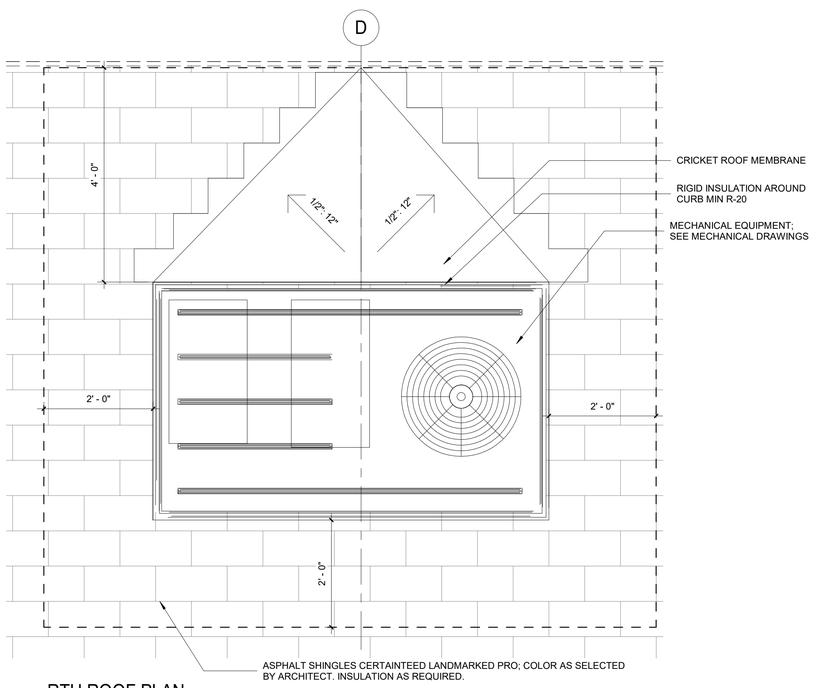


4 RTU ROOF PLAN
3/4" = 1'-0"

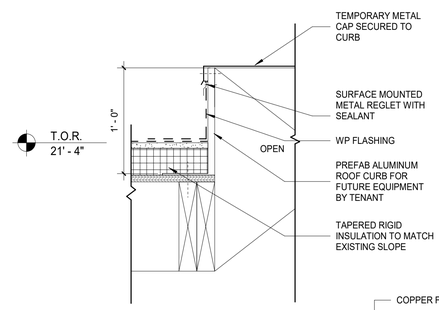


3 ALUMN. ROOF CURB DETAIL
1 1/2" = 1'-0"

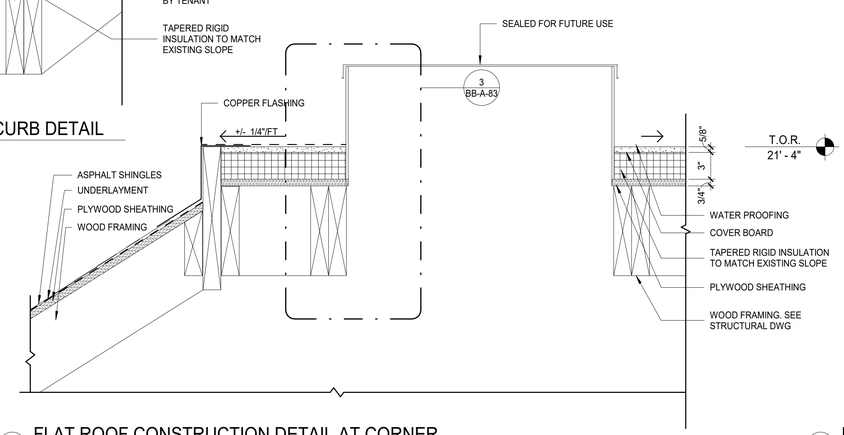


2 FLAT ROOF CONSTRUCTION DETAIL AT CORNER
1 1/2" = 1'-0"

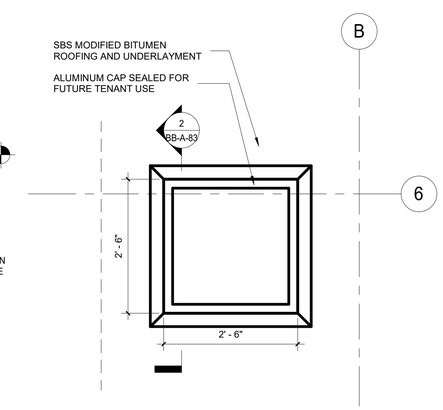


1 ROOF CAP PLAN
3/4" = 1'-0"

8/30/2022 3:04:26 PM

CONSULTANT INFORMATION
The LiRo Group
3 Aerial Way, Syosset, New York 11791
(516) 938-5476 www.liro.com

CONSULTANT SEAL
REGISTERED ARCHITECT ROBERT D. YOUNG JR. 023290 STATE OF NEW YORK

| REVISION NUMBER | DATE | MADE BY | APP'D BY | REVISION |
|---|---|---|---|---|

RECORD DRAWING CERTIFICATION
☐ AS BUILT – CHANGES AS NOTED ☐ AS BUILT – NO CHANGES

CONTRACTOR
NAME
SIGNATURE
TITLE DATE

PROJECT COORDINATOR
NAME
SIGNATURE
TITLE DATE

WESTCHESTER COUNTY, NEW YORK
DEPARTMENT OF PUBLIC WORKS AND TRANSPORTATION
DIVISION OF ENGINEERING

**INFRASTRUCTURE REHABILITATION - PHASE 3**
**PLAYLAND PARK, RYE, NEW YORK**
**NORTH EAST BURGER BARN**
**ROOF DETAILS**

| | |
|---|---|
| CONTRACT NUMBER | 22-523 |
| SHEET NUMBER | BB-A-83 |
| DWG NO.: | 38 of 664 |
| SCALE: | As indicated |
| DATE: | 08/23/2022 |
| DPW FILE NUMBER | 1-118-A-787-0 |
| REV. NO. | 0 |

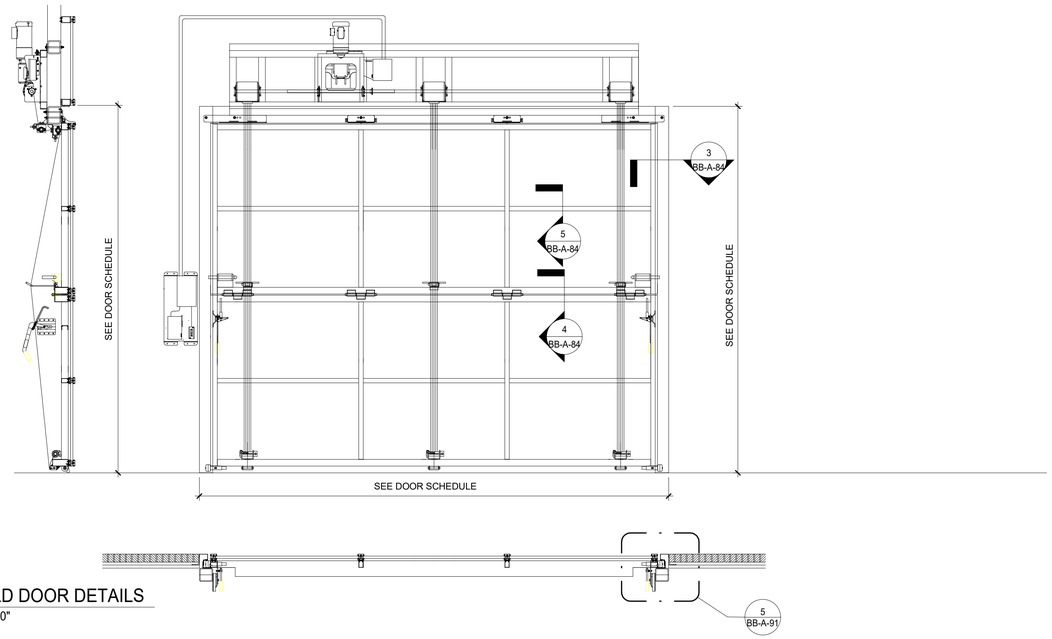


2 BIFOLD DOOR DETAILS
3/8" = 1'-0"

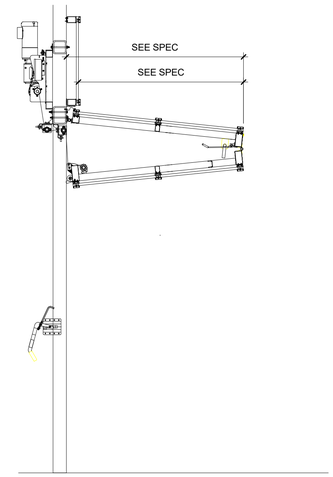


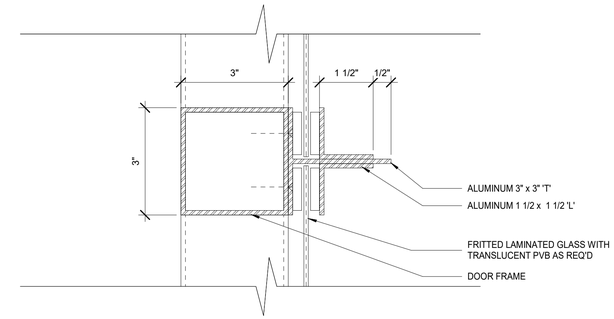


5 BIFOLD DOOR DETAIL 1
6" = 1'-0"

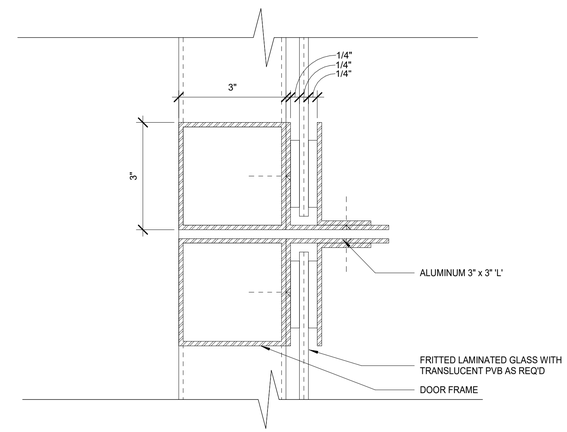


4 BIFOLD DOOR DETAIL 2
6" = 1'-0"

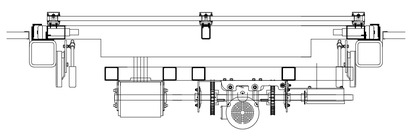

8 BIFOLD WINDOW PLAN
3/4" = 1'-0"

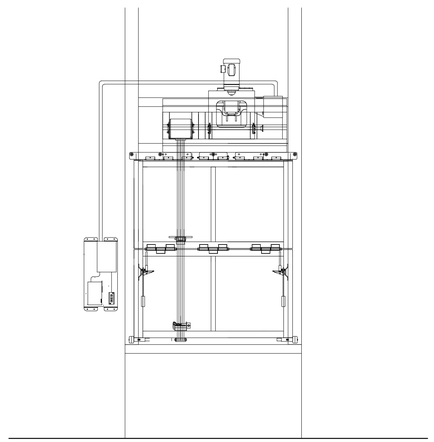

6 BIFOLD WINDOW ELEVATION
3/8" = 1'-0"

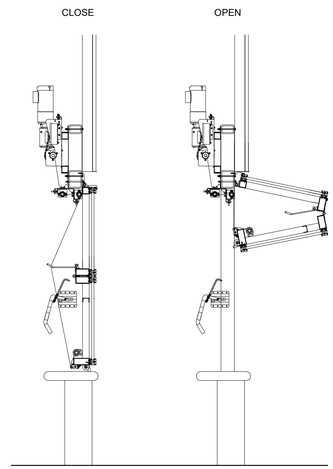


7 BIFOLD WINDOW SECTION
3/8" = 1'-0"

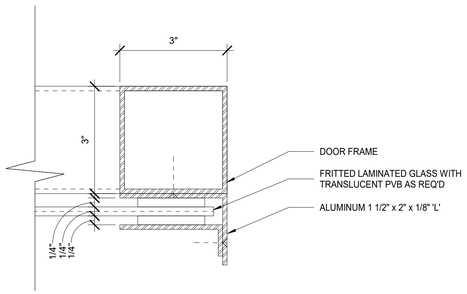


3 BIFOLD DOOR DETAIL 3
6" = 1'-0"

8/30/2022 3:04:27 PM

CONSULTANT INFORMATION

The LiRo Group
3 Aerial Way, Syosset, New York 11791
(516) 938-5476 www.liro.com

CONSULTANT SEAL

REGISTERED ARCHITECT ROBERT D. JOHNSON 023280 STATE OF NEW YORK

| REVISION NUMBER | DATE | MADE BY | APP'D BY | REVISION |
|---|---|---|---|---|
| | | | | |

RECORD DRAWING CERTIFICATION

☐ AS BUILT – CHANGES AS NOTED ☐ AS BUILT – NO CHANGES

CONTRACTOR
NAME
SIGNATURE
TITLE DATE

PROJECT COORDINATOR
NAME
SIGNATURE
TITLE DATE

WESTCHESTER COUNTY, NEW YORK
DEPARTMENT OF PUBLIC WORKS AND TRANSPORTATION
DIVISION OF ENGINEERING

**INFRASTRUCTURE REHABILITATION - PHASE 3**
**PLAYLAND PARK, RYE, NEW YORK**
**NORTH EAST BURGER BARN**
**BIFOLD DOOR DETAILS**

| | |
|---|---|
| CONTRACT NUMBER | 22-523 |
| SHEET NUMBER | BB-A-84 |
| DWG NO.: | 39 of 664 |
| SCALE: | As indicated |
| DATE: | 08/23/2022 |
| DPW FILE NUMBER | 1-118-A-788-0 |
| REV. NO. | 0 |

## PAINTING SCHEDULE

| KEY | COLOR | MANUFACTURER | SWATCH NAME / # | REMARKS |
|---|---|---|---|---|
| P- 1 | MYSTICAL POWERS #901 | BENJAMIN MOORE | --- | |
| P- 2 | HERITAGE RED #HC-181 | BENJAMIN MOORE | --- | |
| P- 3 | NEW YORK STATE OF MIND #805 | BENJAMIN MOORE | --- | |
| P- 4 | LAZY SUNDAY #803 | BENJAMIN MOORE | --- | |
| P- 5 | DEEP JUNGLE #595 | BENJAMIN MOORE | --- | |
| P- 6 | LUCK OF THE IRISH #588 | BENJAMIN MOORE | --- | |
| P- 7 | MAJOLICA GREEN #0013 | SHERWIN WILLIAMS | | |
| P- 8 | ANTELOPE CANYON #125 | BENJAMIN MOORE | | |
| P- 9 | FORSYTHIA #6907 | SHERWIN WILLIAMS | | |
| P- 10 | CAPE BLUE #1642 | BENJAMIN MOORE | | |
| P- 11 | WHITE SNOW #9541 | SHERWIN WILLIAMS | | |
| P- 12 | TRICORN BLACK #6258 | SHERWIN WILLIAMS | | |
| P- 13 | READY MIX WHITE | | | INTERIOR USE ONLY |
| P- 14 | STUCCO PAINT TO MATCH P-1 | KEIM | | |
| P- 15 | VAN DEUSEN BLUE #HC-156 | BENJAMIN MOORE | | |

NOTES:
1. KILN DRIED WOOD IS TO BE USED FOR COLUMN CLADDINGS.
2. PRESSURE-TREATED WOOD ARE TO BE USED FOR BLOCKING SUBSTRATE AS REQUIRED BY CLADDING INSTALLATIONS.
3. STAINLESS STEEL NAILS FASTENERS ARE TO BE USED FOR CLADDDING, BLOCKING INSTALLATIONS.
4. HARDWOOD IS TO BE USED FOR SPLINE SHIM CLADDIING CONNECTION.
5. SPLICE WOOD CLADDING PANEL OF INDIVIDUAL PIECES WHEN PANEL WIDTH EXCEEDS WIDTH OF WOOD PLANK AVAILABLE
6. **ALL DIMENSIONS TO BE VERIFIED IN FIELD**

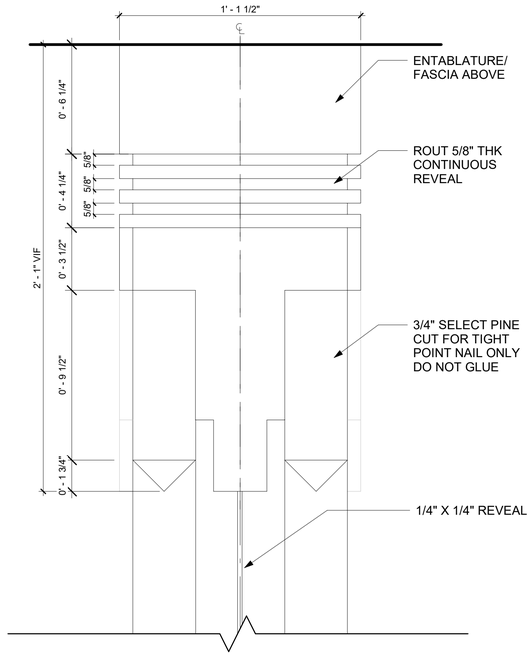


8 COLUMN CAPITAL DETAIL
3" = 1'-0"

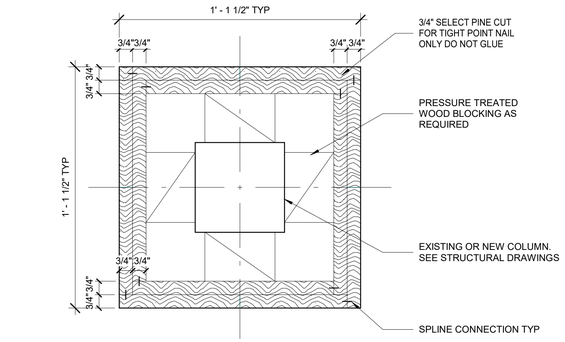


10 COLUMN DETAIL AT TRIM 2
3" = 1'-0"

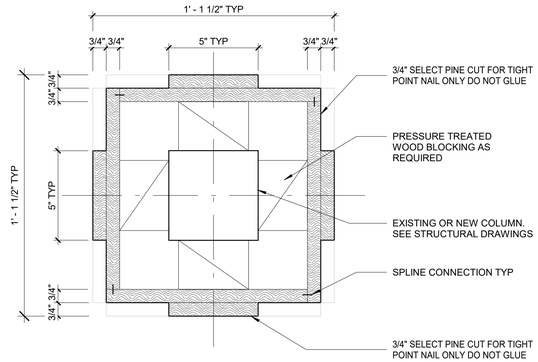


9 TYPE 1 - COLUMN DETAIL AT TRIM 3
3" = 1'-0"

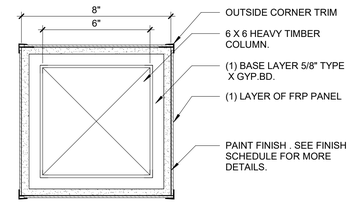


11 INTERIOR COLUMN ENCLOSURE DETAIL
3" = 1'-0"

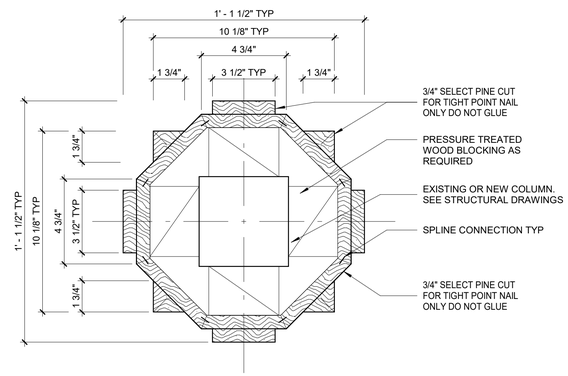


7 COLUMN DETAIL AT TRIM 1
3" = 1'-0"

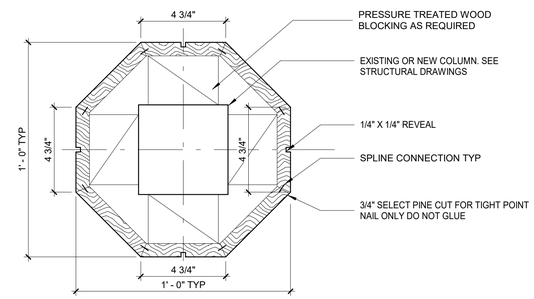


6 COLUMN DETAIL AT SHAFT
3" = 1'-0"

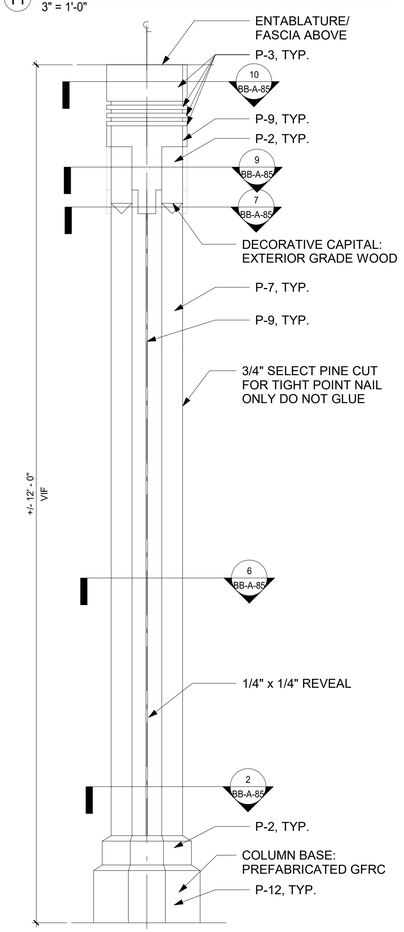


5 WOOD COLUMN ENCLOSURE DETAILS
1" = 1'-0"

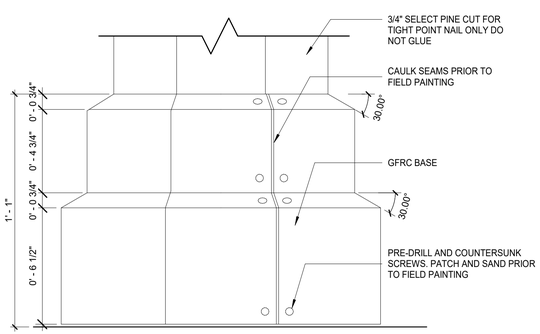


4 ELEVATION- COLUMN BASE
3" = 1'-0"

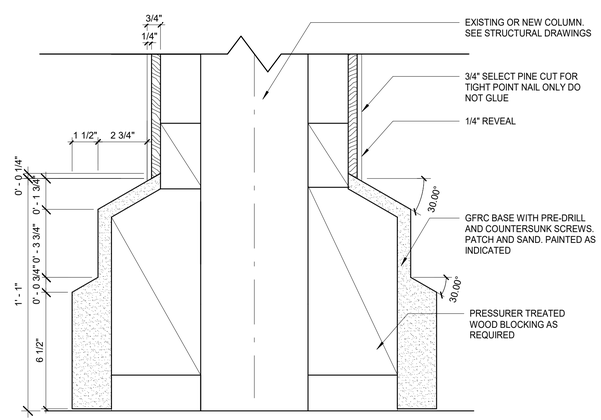


3 SECTION- COLUMN BASE
3" = 1'-0"

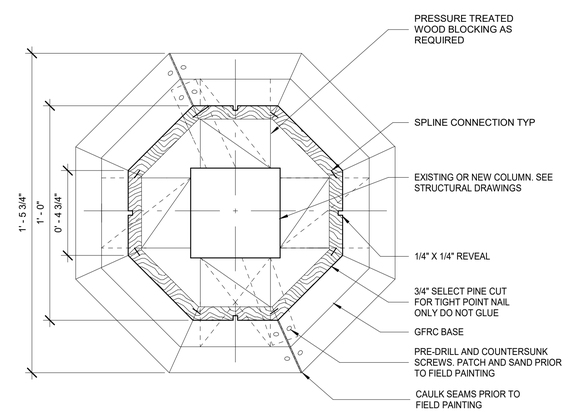


2 COLUMN DETAIL AT BASE
3" = 1'-0"

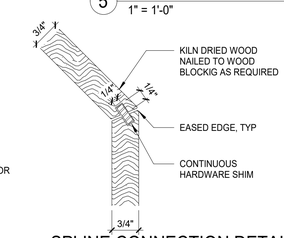


1 SPLINE CONNECTION DETAIL
6" = 1'-0"

8/30/2022 3:04:28 PM

CONSULTANT INFORMATION
The LiRo Group
3 Aerial Way, Syosset, New York 11791
(516) 938-5476 www.liro.com

CONSULTANT SEAL
REGISTERED ARCHITECT ROBERT D. TOWNSEND 023230 STATE OF NEW YORK

| REVISION NUMBER | DATE | MADE BY | APP'D BY | REVISION |
|---|---|---|---|---|

RECORD DRAWING CERTIFICATION
☐ AS BUILT – CHANGES AS NOTED ☐ AS BUILT – NO CHANGES

CONTRACTOR
NAME
SIGNATURE
TITLE DATE

PROJECT COORDINATOR
NAME
SIGNATURE
TITLE DATE

WESTCHESTER COUNTY, NEW YORK
DEPARTMENT OF PUBLIC WORKS AND TRANSPORTATION
DIVISION OF ENGINEERING

**INFRASTRUCTURE REHABILITATION - PHASE 3**
**PLAYLAND PARK, RYE, NEW YORK**
**NORTH EAST BURGER BARN**
**COLUMN DETAILS**

| | |
|---|---|
| CONTRACT NUMBER | 22-523 |
| SHEET NUMBER | BB-A-85 |
| DWG NO.: | 40 of 664 |
| SCALE: | As indicated |
| DATE: | 08/23/2022 |
| DPW FILE NUMBER | 1-118-A-789-0 |
| REV. NO. | 0 |

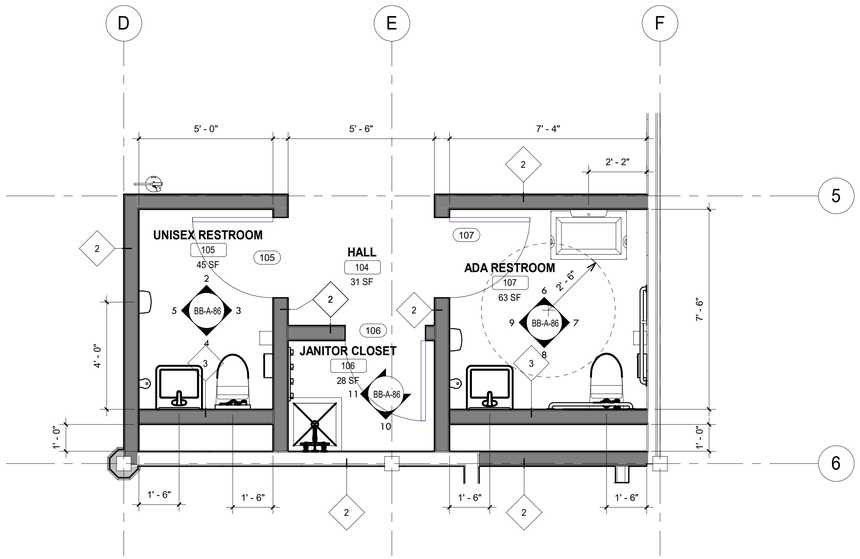


1 ENLARGED BATHROOM PLAN
3/8" = 1'-0"

**BATHROOM TILE COLOR SCHEDULE**

| KEY | COLOR | MANUFACTURER | MODEL | SIZE | REMARKS |
|---|---|---|---|---|---|
| CT-5 | ARTIC WHITE | DALTILE | COLOR WHEEL LINEAR | 6" x 18" | 80% OF TOTAL WALL |
| CT-6 | BISCUIT | DALTILE | COLOR WHEEL LINEAR | 6" x 18" | 5% OF TOTAL WALL |
| CT-7 | MUSTARD | DALTILE | COLOR WHEEL LINEAR | 6" x 18" | 3% OF TOTAL WALL |
| CT-8 | CURRANT | DALTILE | COLOR WHEEL LINEAR | 6" x 18" | 3% OF TOTAL WALL |
| CT-9 | SEA BREEZE | DALTILE | COLOR WHEEL LINEAR | 6" x 18" | 3% OF TOTAL WALL |
| CT-10 | OCEAN BLUE | DALTILE | COLOR WHEEL LINEAR | 6" x 18" | 3% OF TOTAL WALL |
| CT-11 | PLUB CRAZY | DALTILE | COLOR WHEEL LINEAR | 6" x 18" | 3% OF TOTAL WALL |

**TOILET ACCESSORIES SCHEDULE - "TA"**

| TAG | DESCRIPTION |
|---|---|
| TA-1 | TOILET TISSUE DISPENSER |
| TA-2 | SANITARY NAPKIN DISPOSAL |
| TA-3 | FRAMED MIRROR |
| TA-4 | ADA GRAB BARS - MULTIPLE LENGTHS |
| TA-5 | SENSOR OPERATED HAND DRYER |
| TA-6 | BABY CHANGING STATION |
| TA-7 | 4 POLE MOP HOLDER |
| TA-8 | SEAT COVER DISPENSER |
| TA-9 | AUTOMATIC SOAP DISPENSER |
| TA-10 | 18"X 36" HEAVY DUTY WALL SHELF |
| TA-11 | COAT HOOK |

**PLUMBING FIXTURE SCHEDULE - "PF"**

| TAG | DESCRIPTION | REMARKS |
|---|---|---|
| PF-1 | WALL MOUNTED WATER CLOSET | |
| PF-3 | WALL MOUNTED LAVATORY | |
| PF-5 | SERVICE SINK | COMPATIABLE STAINLESS STEEL WALL GUARDS |
| PF-7 | LAVATORY FAUCET | BATTERY OPERATED |
| PF-12 | FLUSHOMETER - LAVATORY | BATTERY OPERATED. FLUSH CONTROL ON OPEN SIDE. |
| PF-14 | SERVICE SINK FAUCET | |

**GENERAL NOTES:**

1. ALL GYPSUM BOARD IN RESTROOM & "WET" AREAS TO BE MOISTURE RESISTANT (MR).
2. FOR INTERIOR FINISHES. REFER TO BB-A-14
3. PLUMBING FIXTURES TO BE PROVIDED BY THE GENERAL CONTRACTOR
4. ALL PLUMBING FIXTURES, FAUCETS AND ACCESSORIES TO BE ADA COMPLIANT.
5. ALL EXPOSED PIPING UNDER LAVATORIES TO BE INSULATED TO PROTECT FROM CONTACT. THERE SHALL BE NO SHARP OR ABRASIVE SURFACES UNDER LAVATORIES.

FOR CERAMIC TILE PATTERNS & STAINLESS STEEL EDGE (TYPICAL FOR ALL CERAMIC TILE WALLS):
1. STAINLESS STEEL EDGE (BOTH FOR WALLS & FLOORS WHERE NECESSARY SHALL BE SS 304 E100 SCHLUTER- SCHIENE OR APPROVED EQUAL

2. BEFORE INSTALLATION OF CERAMIC TILE WALLS CONTRACTOR TO BUILK MOCK- UPS AS LISTED BELOW FOR ARCHITECT'S REVIEW & APPROVAL:
   - (1) FOR SS EDGE/ CERAMIC TILE TRANSITION
   - (1) FOR CERAMIC PATTERN

3. ALL WALL CORNERS/ EDGE CERAMIC TILES TO BE BULLNOSE AS SPECIFIED, TYP. FOR ALL CORNERS

4. ALL CERAMIC TILE SPACING SHALL BE 1/8".

5. ALL GROUTS SHALL BE EPOXY BASE. SEE SPECIFICATION, TYPICAL FOR ALL AREAS

**LEGEND:**

| | |
|---|---|
| 1i | WALL TAG |
| 101 | DOOR TAG |
| Room name 101 150 SF | ROOM TAG |
| 1 Ref A101 1 Ref | ELEVATION MARKER |
| FD | FLOOR DRAIN |
| ? | PLUMBING FIXTURE |
| 1i | TOILET ACCESSORIE |

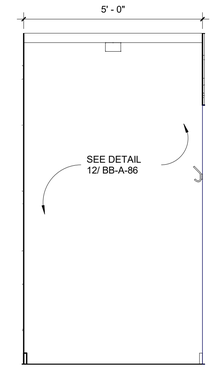


2 UNISEX RESTROOM- 2
1/2" = 1'-0"

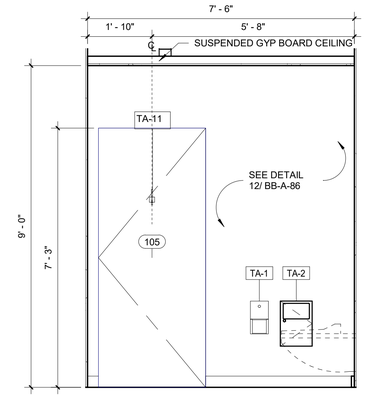


3 UNISEX RESTROOM- 3
1/2" = 1'-0"

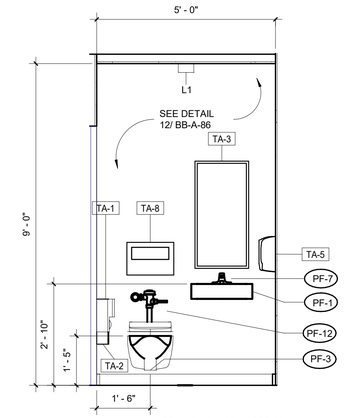


4 UNISEX RESTROOM- 4
1/2" = 1'-0"

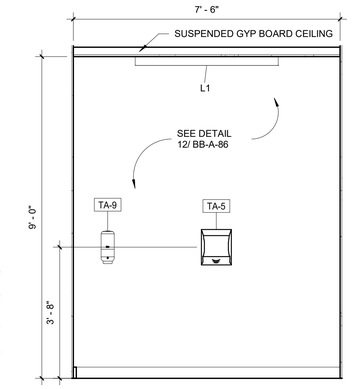


5 UNISEX RESTROOM- 5
1/2" = 1'-0"

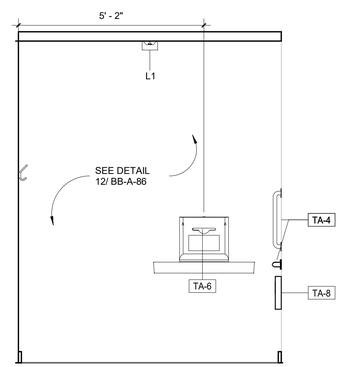


6 ADA RESTROOM- 6
1/2" = 1'-0"

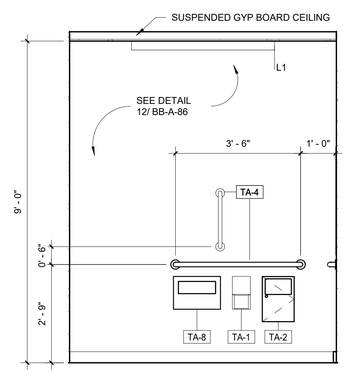


7 ADA RESTROOM- 7
1/2" = 1'-0"

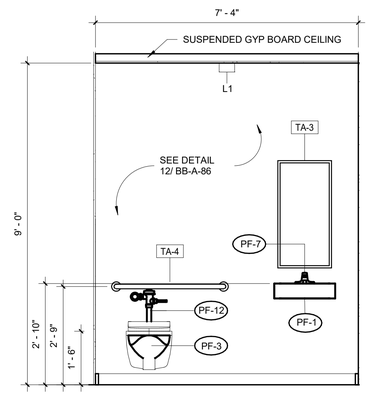


8 ADA RESTROOM- 8
1/2" = 1'-0"

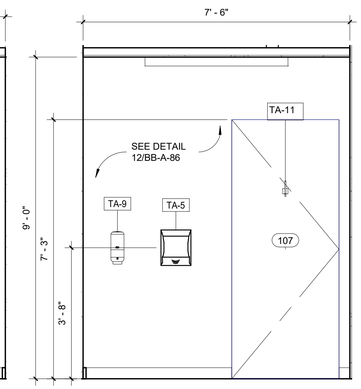


9 ADA RESTROOM- 9
1/2" = 1'-0"

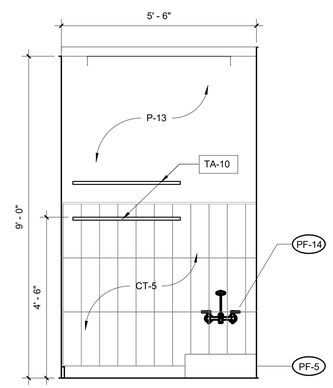


10 JANITOR CLOSET- 10
1/2" = 1'-0"

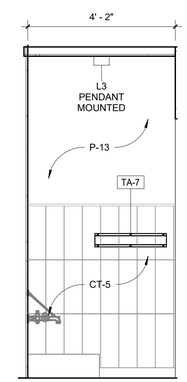


11 JANITOR CLOSET- 11
1/2" = 1'-0"

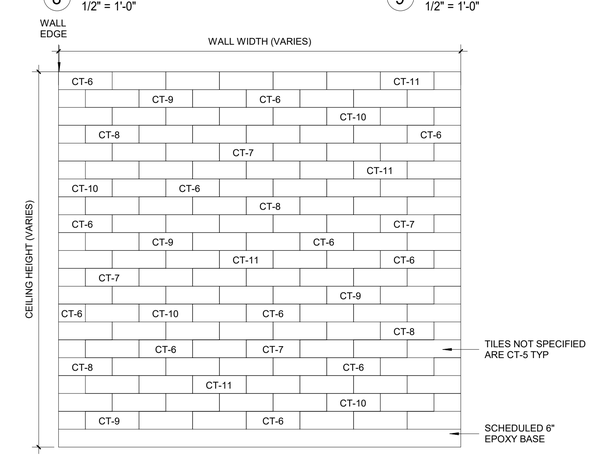


12 TYPICAL BATHROOM TILE LAYOUT
1/2" = 1'-0"

NOTE:
SEE BATHROOM TILE COLOR SCHEDULE

8/30/2022 3:04:31 PM

CONSULTANT INFORMATION
The LiRo Group
3 Aerial Way, Syosset, New York 11791
(516) 938-5476 www.liro.com

CONSULTANT SEAL
REGISTERED ARCHITECT ROBERT D. YOUNG JR. 023280 STATE OF NEW YORK

| REVISION NUMBER | DATE | MADE BY | APP'D BY | REVISION |
|---|---|---|---|---|

RECORD DRAWING CERTIFICATION
☐ AS BUILT – CHANGES AS NOTED ☐ AS BUILT – NO CHANGES

CONTRACTOR
NAME
SIGNATURE
TITLE DATE

PROJECT COORDINATOR
NAME
SIGNATURE
TITLE DATE

WESTCHESTER COUNTY, NEW YORK
DEPARTMENT OF PUBLIC WORKS AND TRANSPORTATION
DIVISION OF ENGINEERING

**INFRASTRUCTURE REHABILITATION - PHASE 3**
**PLAYLAND PARK, RYE, NEW YORK**
**NORTH EAST BURGER BARN**
**ENLARGED BATHROOM PLANS**

CONTRACT NUMBER **22-523**
SHEET NUMBER **BB-A-86**
DWG NO.: 41 of 664
SCALE: **As indicated**
DATE: **08/23/2022**
DPW FILE NUMBER **1-118-A-790-0**
REV. NO. 0

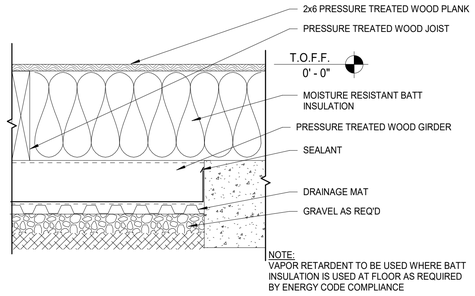


9 WOOD FLOOR CONSTRUCTION DETAIL
1 1/2" = 1'-0"

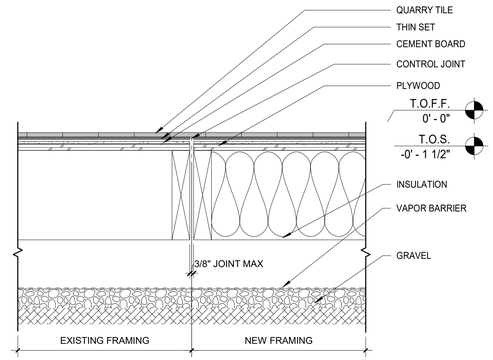


8 QUARRY TILE FLOOR CONSTRUCTION
1 1/2" = 1'-0"

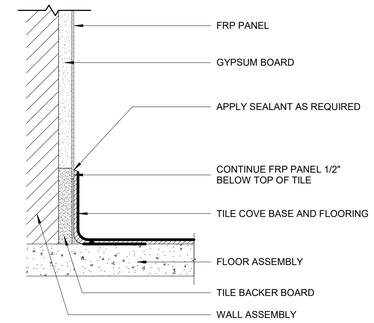


7 FRP_QUARRY TILE BASE DETAIL
3" = 1'-0"

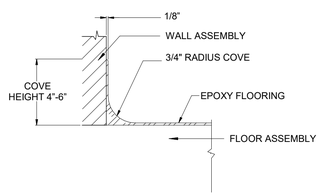


6 EPOXY FLOORING- CAPLESS COVE BASE DETAIL
6" = 1'-0"

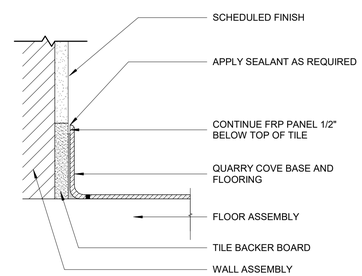


5 QUARRY TILE BASE DETAIL
3" = 1'-0"

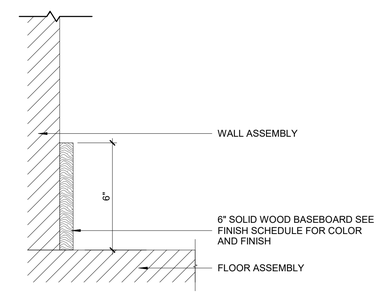


4 WOOD BASE
3" = 1'-0"

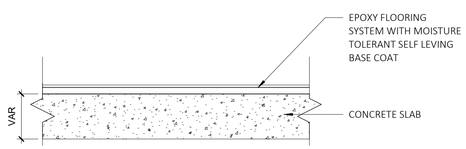


3 TYPICAL EPOXY FLOOR DETAIL
6" = 1'-0"

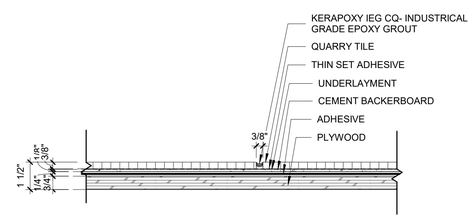


2 QUARRY TILE INSTALLATION DETAIL
3" = 1'-0"

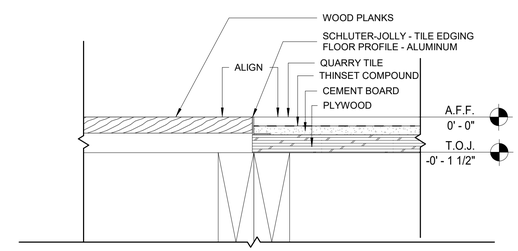


1 WOOD PLANK TO QUARRY TILE DETAIL_ TR-02
3" = 1'-0"

8/30/2022 3:04:32 PM

CONSULTANT INFORMATION
The LiRo Group
3 Aerial Way, Syosset, New York 11791
(516) 938-5476 www.liro.com

CONSULTANT SEAL
REGISTERED ARCHITECT ROBERT D. YOUNG JR. 023280 STATE OF NEW YORK

| REVISION NUMBER | DATE | MADE BY | APP'D BY | REVISION |
|---|---|---|---|---|
| | | | | |

RECORD DRAWING CERTIFICATION
☐ AS BUILT – CHANGES AS NOTED ☐ AS BUILT – NO CHANGES

CONTRACTOR
NAME
SIGNATURE
TITLE DATE

PROJECT COORDINATOR
NAME
SIGNATURE
TITLE DATE

WESTCHESTER COUNTY, NEW YORK
DEPARTMENT OF PUBLIC WORKS AND TRANSPORTATION
DIVISION OF ENGINEERING

**INFRASTRUCTURE REHABILITATION - PHASE 3**
**PLAYLAND PARK, RYE, NEW YORK**
**NORTH EAST BURGER BARN**
**FLOORING DETAILS**

| | |
|---|---|
| CONTRACT NUMBER | 22-523 |
| SHEET NUMBER | BB-A-87 |
| DWG NO.: | 42 of 664 |
| SCALE: | As indicated |
| DATE: | 08/23/2022 |
| DPW FILE NUMBER | 1-118-A-791-0 |
| REV. NO. | 0 |

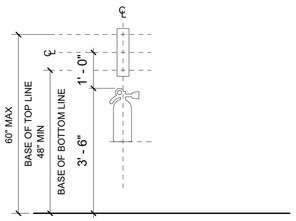


1 FIRE EXTINGUISHER SIGN LOCATION ELEVATION
1/2" = 1'-0"

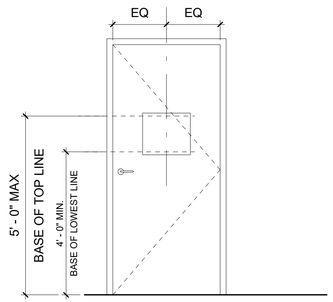


2 SIGN LOCATION ELEVATION TYPICAL DOOR CONDITION 2
1/2" = 1'-0"

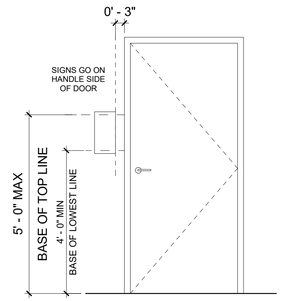


3 SIGN LOCATION ELEVATION TYPICAL DOOR CONDITION
1/2" = 1'-0"

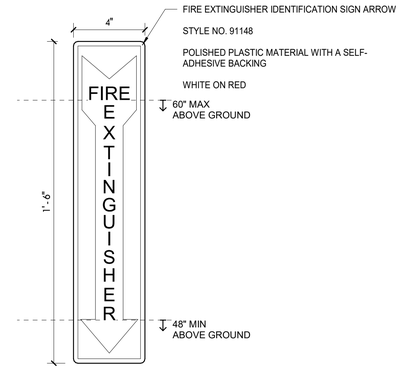


4 TYPE X-1 - FIRE EXTINGUISHER SIGN
3" = 1'-0"

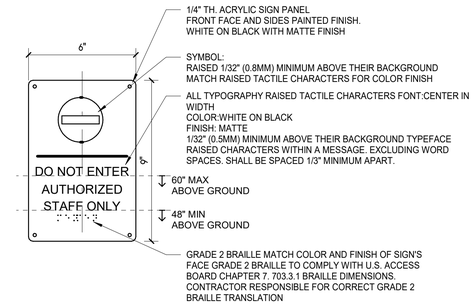


5 TYPE X-2 - STAFF ONLY SIGN
3" = 1'-0"

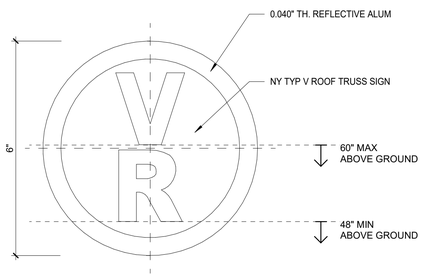


6 TYPE X-4 TRUSS SIGNAGE CLASS VR
6" = 1'-0"

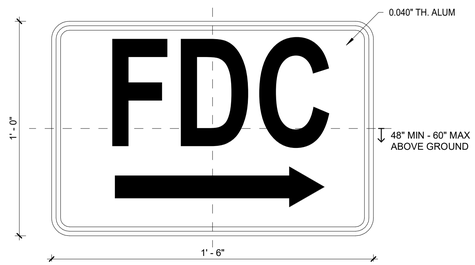


7 TYPE X-5 FDC SIGNAGE
3" = 1'-0"

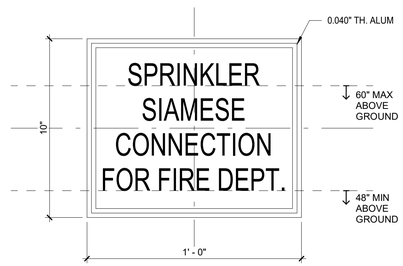


8 TYPE X-6 SIAMESE CONNECTION SIGNAGE
3" = 1'-0"

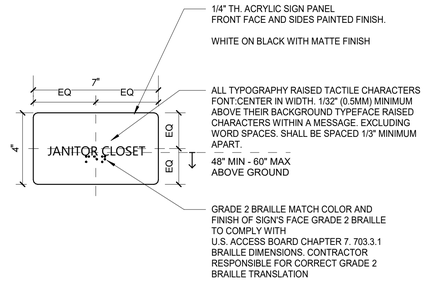


9 TYPE A-1 - JANITOR CLOSET ID SIGN
3" = 1'-0"

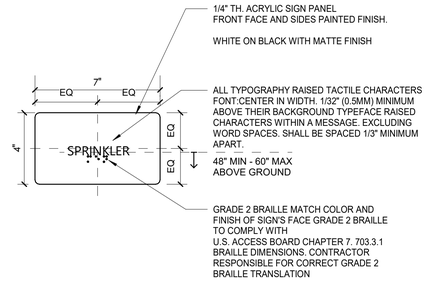


10 TYPE A-2 - SPRINKLER ROOM ID SIGN
3" = 1'-0"

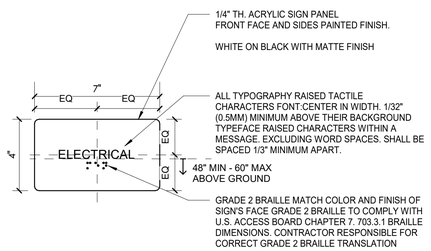


11 TYPE A-3 - ELECTRICAL CLOSET ID SIGN
3" = 1'-0"

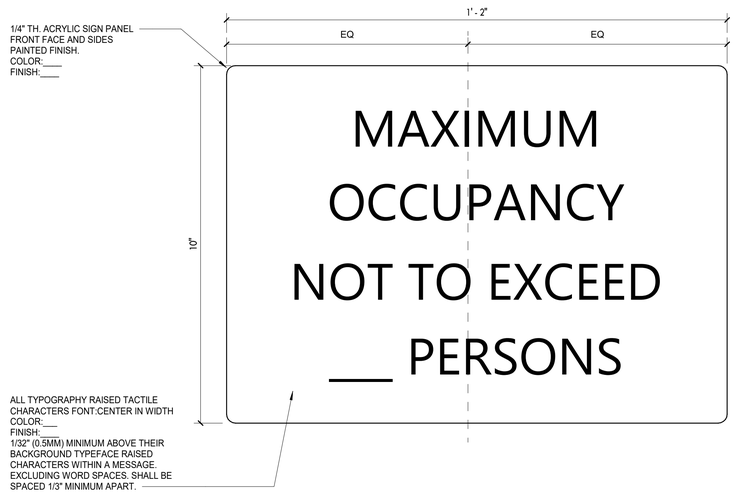


12 TYPE A-3 - CAPACITY SIGN
6" = 1'-0"

13 TYPE G-1 - UNISEX TOILET ID SIGN
6" = 1'-0"

14 TYPE G-2 - UNISEX ADA TOILET ID SIGN
6" = 1'-0"

8/30/2022 3:04:33 PM

CONSULTANT INFORMATION

The LiRo Group
3 Aerial Way, Syosset, New York 11791
(516) 938-5476 www.liro.com

CONSULTANT SEAL

REGISTERED ARCHITECT ROBERT D. YOUNG JR. 023280 STATE OF NEW YORK

| REVISION NUMBER | DATE | MADE BY | APP'D BY | REVISION |
|---|---|---|---|---|

RECORD DRAWING CERTIFICATION

☐ AS BUILT – CHANGES AS NOTED ☐ AS BUILT – NO CHANGES

CONTRACTOR
NAME
SIGNATURE
TITLE DATE

PROJECT COORDINATOR
NAME
SIGNATURE
TITLE DATE

WESTCHESTER COUNTY, NEW YORK
DEPARTMENT OF PUBLIC WORKS AND TRANSPORTATION
DIVISION OF ENGINEERING

**INFRASTRUCTURE REHABILITATION - PHASE 3**
**PLAYLAND PARK, RYE, NEW YORK**
**NORTH EAST BURGER BARN**
**SIGNAGE DETAILS**

| | |
|---|---|
| CONTRACT NUMBER | 22-523 |
| SHEET NUMBER | BB-A-88 |
| DWG NO.: | 43 of 664 |
| SCALE: | As indicated |
| DATE: | 08/23/2022 |
| DPW FILE NUMBER | 1-118-A-792-0 |
| REV. NO. | 0 |

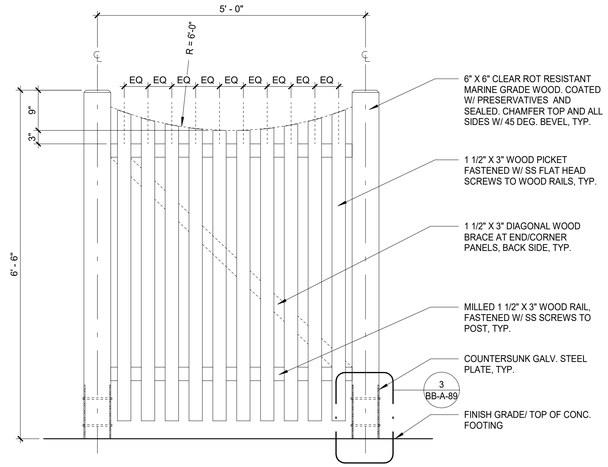


1 TYPICAL WOOD PICKET ELEVATION
3/4" = 1'-0"

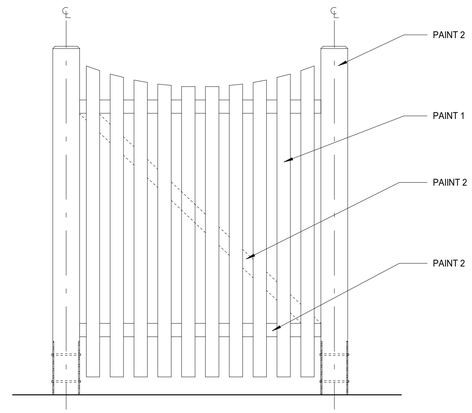


2 TYPICAL WOOD PICKET PAINT ELEVATION
3/4" = 1'-0"

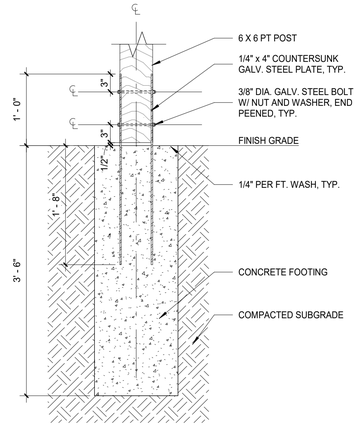


3 WOOD FENCE PIER DETAIL
1" = 1'-0"

## GATE SCHEDULE

| DOOR NUMBER | DOOR TYPE | WIDTH | HEIGHT | GATE MATERIAL | FINISH | HDWR SET | REMARKS |
|---|---|---|---|---|---|---|---|
| EX1 | GATE | 4'-0" | 6'-0" | WOOD | PAINT | PROVIDE SELF CLOSING HINGES & D HANDLE. TO BE APPROVED BY ARCHITECT | |
| EX2 | GATE | 2'-6" | 6'-0" | WOOD | PAINT | PROVIDE SELF CLOSING HINGES & D HANDLE. TO BE APPROVED BY ARCHITECT | EXIT DEVICE |
| EX3 | GATE | 3'-0" | 6'-0" | WOOD | PAINT | PROVIDE SELF CLOSING HINGES & D HANDLE. TO BE APPROVED BY ARCHITECT | EXIT DEVICE |

## PLAYLAND MASTER PAINT SCHEDULE

| KEY | COLOR | MANUFACTURER | REMARKS |
|---|---|---|---|
| P-1 | MYSTICAL POWERS #901 | BENJAMIN MOORE | |
| P-2 | HERITAGE RED #HC-181 | BENJAMIN MOORE | |
| P-3 | NEW YORK STATE OF MIND #805 | BENJAMIN MOORE | |
| P-4 | LAZY SUNDAY #803 | BENJAMIN MOORE | |
| P-5 | DEEP JUNGLE #595 | BENJAMIN MOORE | |
| P-6 | LUCK OF THE IRISH #588 | BENJAMIN MOORE | |
| P-7 | MAJOLICA GREEN #0013 | SHERWIN WILLIAMS | |
| P-8 | ANTELOPE CANYON #125 | BENJAMIN MOORE | |
| P-9 | FORSYTHIA #6907 | SHERWIN WILLIAMS | |
| P-10 | CAPE BLUE #1642 | BENJAMIN MOORE | |
| P-11 | WHITE SNOW #9541 | SHERWIN WILLIAMS | |
| P-12 | TRICORN BLACK #6258 | SHERWIN WILLIAMS | |
| P-13 | READY WHITE MIX | | INTERIOR USE ONLY |
| P-14 | STUCCO TO MATCH P-1 | | FOR ALL NEW STUCCO SURFACES |
| P-15 | VAN DEUSEN BLUE #HC-156 | BENJAMIN MOORE | |
| P-16 | #RAL9001 | | TYPICAL ROLL UP DOOR COLOR |
| P-17 | FLORIDA BEACHES #900 | BENJAMIN MOORE | |
| P-18 | PIRATES COVE PEACH #903 | BENJAMIN MOORE | |
| P-19 | JADITE #6459 | SHERWIN WILLIAMS | |
| P-20 | DECISIVE YELLOW #6902 | SHERWIN WILLIAMS | |

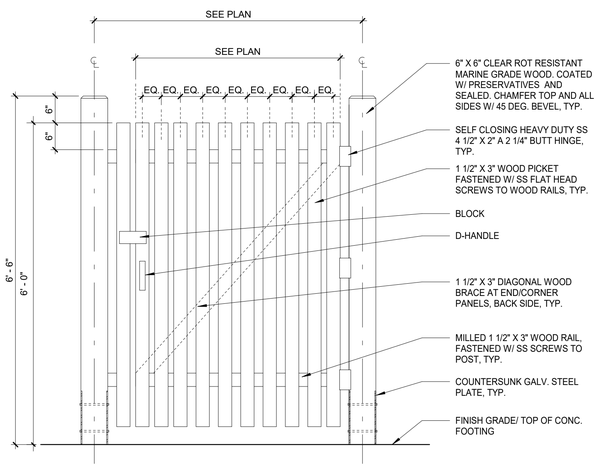


4 TYPICAL WOOD PICKET SINGLE GATE ELEVATION
3/4" = 1'-0"

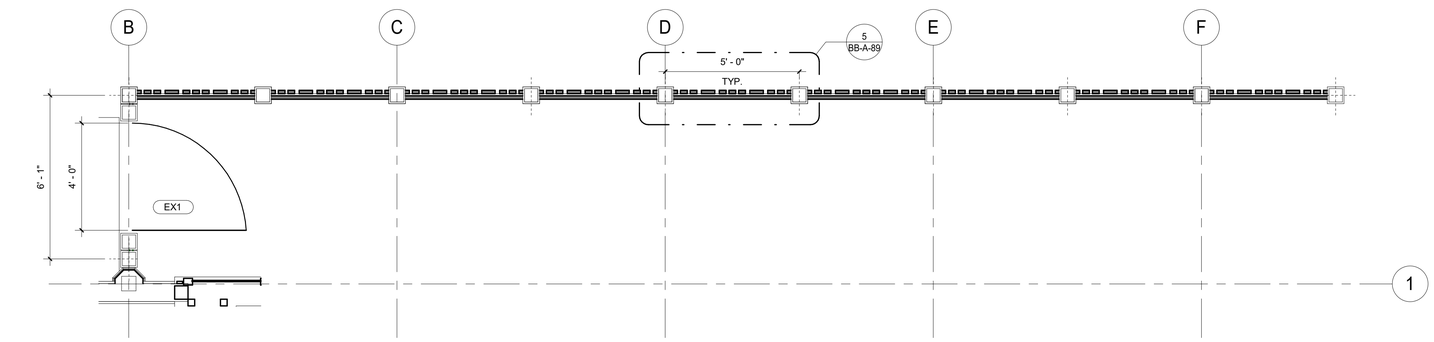


6 NORTH EAST FENCE PLAN
3/8" = 1'-0"

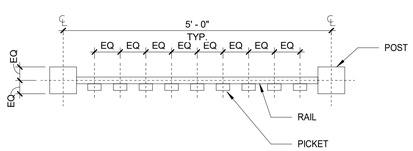


5 TYPICAL WOOD PICKET PLAN
3/4" = 1'-0"

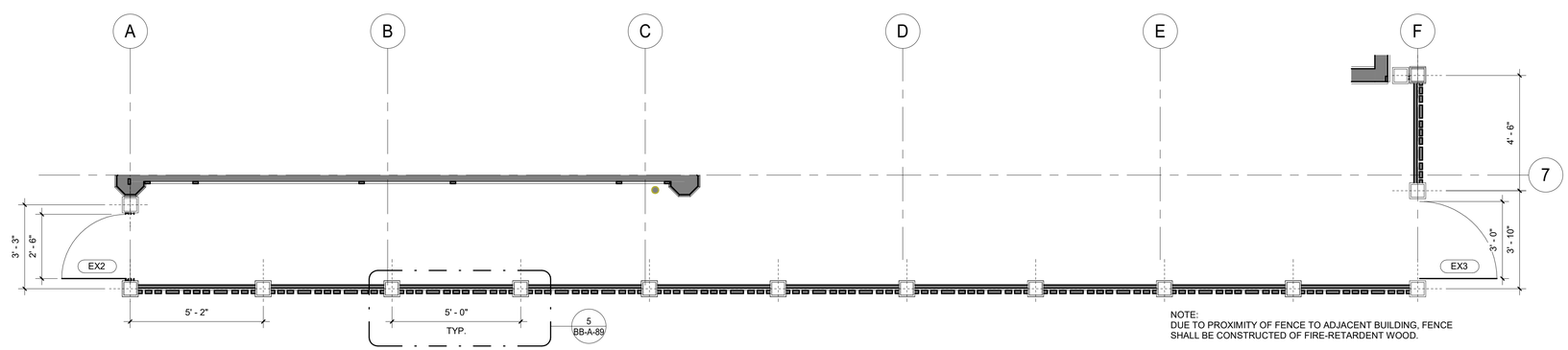


NOTE:
DUE TO PROXIMITY OF FENCE TO ADJACENT BUILDING, FENCE SHALL BE CONSTRUCTED OF FIRE-RETARDENT WOOD.

7 SOUTH WEST FENCE PLAN
3/8" = 1'-0"

8/30/2022 3:04:35 PM

CONSULTANT INFORMATION
The LiRo Group
3 Aerial Way, Syosset, New York 11791
(516) 938-5476 www.liro.com

CONSULTANT SEAL
REGISTERED ARCHITECT ROBERT D. YOUNG JR. 023280 STATE OF NEW YORK

| REVISION NUMBER | DATE | MADE BY | APP'D BY | REVISION |
|---|---|---|---|---|

RECORD DRAWING CERTIFICATION
☐ AS BUILT – CHANGES AS NOTED ☐ AS BUILT – NO CHANGES

CONTRACTOR
NAME
SIGNATURE
TITLE DATE

PROJECT COORDINATOR
NAME
SIGNATURE
TITLE DATE

WESTCHESTER COUNTY, NEW YORK
DEPARTMENT OF PUBLIC WORKS AND TRANSPORTATION
DIVISION OF ENGINEERING

**INFRASTRUCTURE REHABILITATION - PHASE 3**
**PLAYLAND PARK, RYE, NEW YORK**
**NORTH EAST BURGER BARN**
**FENCE DETAILS**

| | |
|---|---|
| CONTRACT NUMBER | 22-523 |
| SHEET NUMBER | BB-A-89 |
| DWG NO.: | 44 of 664 |
| SCALE: | As indicated |
| DATE: | 08/23/2022 |
| DPW FILE NUMBER | 1-118-A-793-0 |
| REV. NO. | 0 |

## NORTH EAST ARCADE AKA BURGER BARN DOOR SCHEDULE

| DOOR NUMBER | FROM ROOM | TO ROOM | TYPE | DOOR | | | | | | | | | FRAME | | | DETAIL | | | R-VALUE | FIRE RATING | HARDWARE SET | REMARKS |
|---|---|---|---|---|---|---|---|---|---|---|---|---|---|---|---|---|---|---|---|---|---|---|
| | | | | NEW OPENING | EX. OPENING | PANEL TYPE | WIDTH | HEIGHT | DOOR THICKNESS | MATERIAL | GLASS | FINISH/COLOR INSIDE | FINISH/COLOR OUTSIDE | FRAME TYPE | MATL | FINISH | HEAD | JAMB | THRESHOLD | | | |
| 100A | DINING | EXTERIOR | PANEL | X | - | F | 5' - 9" | 7' - 9" | 0' - 1 3/4" | H.M. | YES | TBD | TBD | 2 | H.M. | TBD | 4 | 3 | 9 | - | - | 1/4" CLEAR GLASS AT TRANSOM & 1/4" LAMINATED CLEAR GLASS AT DOOR |
| 100B | DINING | EXTERIOR | BIFOLD | X | - | C-2 | 9' - 0" | 10' - 0" | | Aluminum | YES | BLACK 70% KYNAR 500 PVDF (2605) | BLACK 70% KYNAR 500 PVDF (2605) | BY MANU. | Steel | BLACK 70% KYNAR 500 PVDF (2605) | | 5 | 8 | - | - | BY MANU. FRITTED LAMINATED GLASS. MOTORIZED |
| 100C | DINING | EXTERIOR | BIFOLD | X | - | C-2 | 20' - 3" | 10' - 0" | | Aluminium | YES | BLACK 70% KYNAR 500 PVDF (2605) | BLACK 70% KYNAR 500 PVDF (2605) | BY MANU. | Steel | BLACK 70% KYNAR 500 PVDF (2605) | | 5 | 8 | - | - | BY MANU. FRITTED LAMINATED GLASS. MOTORIZED |
| 100D | DINING | EXTERIOR | BIFOLD | X | - | C-2 | 20' - 3" | 10' - 0" | | Aluminium | YES | BLACK 70% KYNAR 500 PVDF (2605) | BLACK 70% KYNAR 500 PVDF (2605) | BY MANU. | Steel | BLACK 70% KYNAR 500 PVDF (2605) | | 5 | 8 | - | - | BY MANU. FRITTED LAMINATED GLASS. MOTORIZED |
| 100E | DINING | EXTERIOR | PANEL | X | - | E | 2' - 8" | 7' - 9" | 0' - 1 3/4" | H.M. | YES | TBD | TBD | 4 | H.M. | TBD | 4 | 2,3 | 9 | - | - | 11 1/4" CLEAR GLASS AT TRANSOM & 1/4" LAMINATED CLEAR GLASS AT DOOR |
| 100F | DINING | EXTERIOR | PANEL | X | - | E | 2' - 8" | 7' - 9" | 0' - 1 3/4" | H.M. | YES | TBD | TBD | 4 | H.M. | TBD | 4 | 2,3 | 9 | - | - | 11 1/4" CLEAR GLASS AT TRANSOM & 1/4" LAMINATED CLEAR GLASS AT DOOR |
| 100H | DINING | EXTERIOR | PANEL | X | - | B | 3' - 0" | 7' - 3" | 0' - 1 3/4" | H.M. | NO | TBD | TBD | 2 | H.M. | TBD | 2 | 3 | 9 | - | - | 11 |
| 101 | KITCHEN | EXTERIOR | DOUBLE | X | - | D | 6' - 0" | 7' - 3" | 0' - 1 3/4" | H.M. | NO | TBD | TBD | 1 | H.M. | TBD | 4 | 3 | 9 | 4.75 | 45 MIN. | 1 FIRE RATED DOOR AND FRAME |
| 102 | ELECTRIC CLOSET | EXTERIOR | DOUBLE | X | - | D | 6' - 0" | 7' - 3" | 0' - 1 3/4" | H.M. | NO | TBD | TBD | 1 | H.M. | TBD | 4 | 3 | 9 | 4.75 | 45 MIN. | 10 FIRE RATED DOOR AND FRAME |
| 103 | SPRINKLER ROOM | EXTERIOR | DOUBLE | X | - | D | 6' - 0" | 7' - 3" | 0' - 1 3/4" | H.M. | NO | TBD | TBD | 1 | H.M. | TBD | 4 | 3 | 9 | 4.75 | 45 MIN. | 10 FIRE RATED DOOR AND FRAME |
| 105 | HALL | UNISEX RESTROOM | PANEL | X | - | B | 3' - 0" | 7' - 3" | 0' - 1 3/4" | H.M. | NO | TBD | TBD | 1 | H.M. | TBD | 6 | 5 | 11 | - | - | 15 |
| 106 | HALL | JANITOR CLOSET | PANEL | X | - | B | 3' - 0" | 7' - 3" | 0' - 1 3/4" | H.M. | NO | TBD | TBD | 1 | H.M. | TBD | 6 | 5 | 11 | - | - | 15 |
| 107 | HALL | ADA RESTROOM | PANEL | X | - | B | 3' - 0" | 7' - 3" | 0' - 1 3/4" | H.M. | NO | TBD | TBD | 1 | H.M. | TBD | 6 | 5 | 11 | - | - | 16 |
| 200 | TOWER | EXTERIOR | FLUSH | X | - | G | 2' - 0" | 5' - 5" | 0' - 1 3/4" | H.M. | NO | TBD | TBD | - | - | TBD | | 10 | - | - | - | 17 FRAMELSS DOOR /MATERIAL TO MATCH FACADE |

**NOTE:** GC TO CONFIRM DOOR SIZES IN FIELD PRIOR TO ORDERING

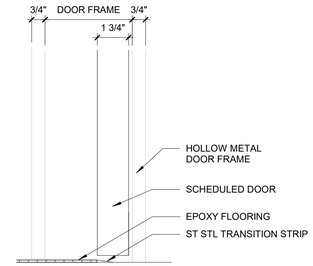


11 EPOXY FLOOR TRANSITION- TR-03
3" = 1'-0"

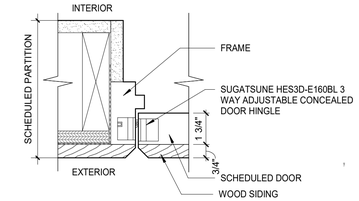


10 CONCEALED HINGES- JAMB DETAIL
3" = 1'-0"

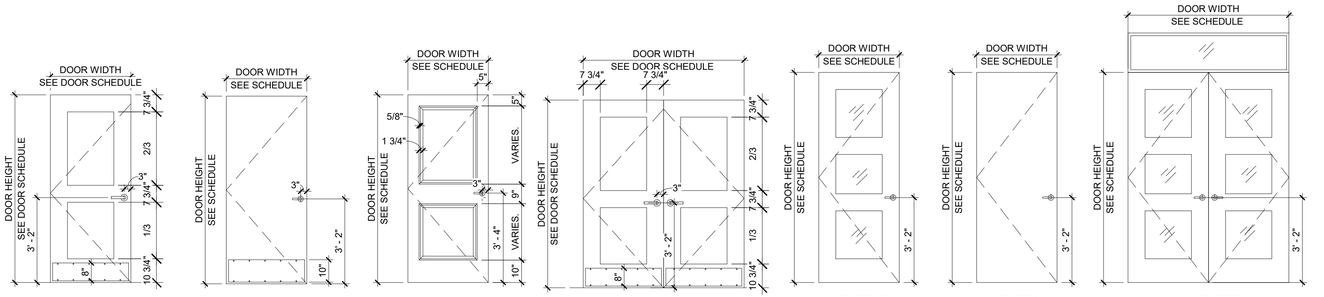


TYPE A-1
DOUBLE PANEL
H.M. DOOR

TYPE A-2
FLUSH
H.M. DOOR

TYPE B
DOUBLE PANEL
WOOD DOOR

TYPE D
DOUBLE PANEL
DOUBLE H.M. DOOR

TYPE E
TRIPLE PANEL
INSULATED GLASS DOOR

TYPE G
FLUSH
WOOD DOOR

TYPE F
TRIPLE PANEL
DOUBLE INSULATED GLASS DOOR

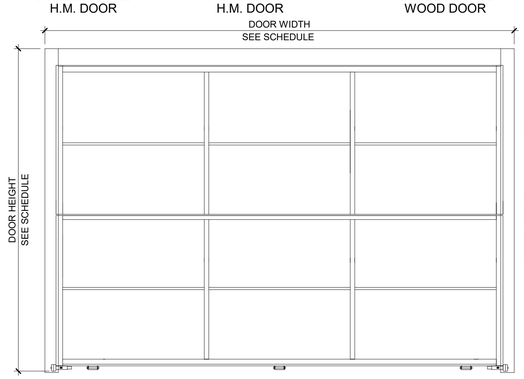


TYPE C-2
BI-FOLD
ROLL-UP DOOR

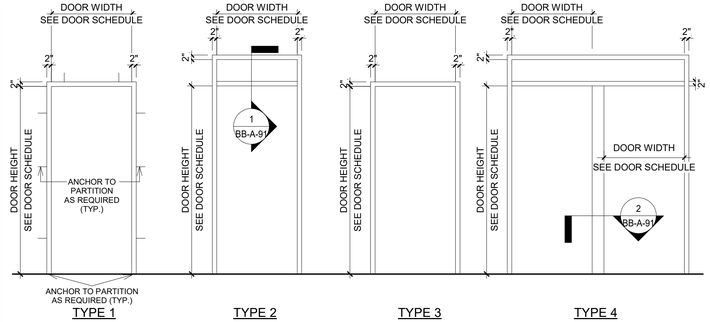


TYPE 1
H.M. FRAME

TYPE 2
H.M. FRAME WITH TRANSOM
12 GAUGE

TYPE 3
WOOD FRAME

TYPE 4
H.M. FRAME WITH TRANSOM
12 GAUGE

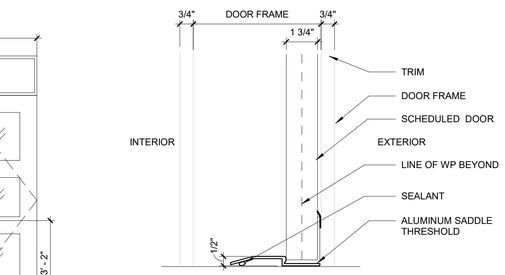


9 EXTERIOR DOOR SILL DETAIL - TR-01
3" = 1'-0"

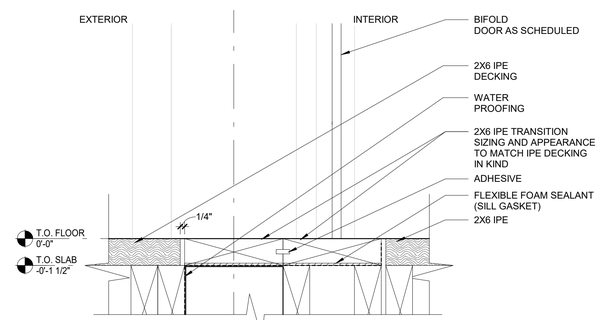


8 IPE TO WOOD PLANK TRANSITION- TR-04
3" = 1'-0"

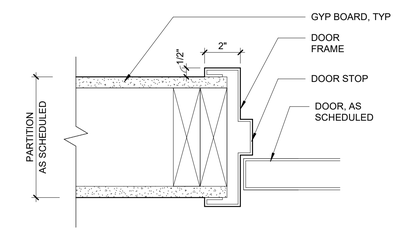


7 H.M. DOOR FRAME-JAMB DETAIL- INTERIOR
3" = 1'-0"

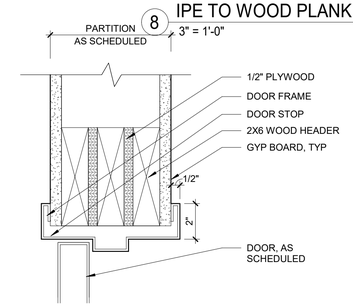


6 H.M. DOOR FRAME-HEAD DETAIL- INTERIOR
3" = 1'-0"

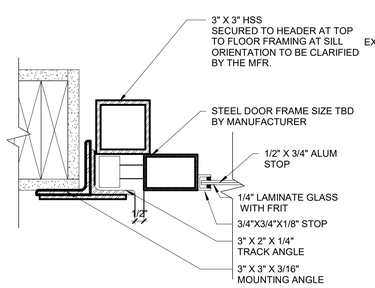


5 BIFOLD DOOR JAMB DETAIL
3" = 1'-0"

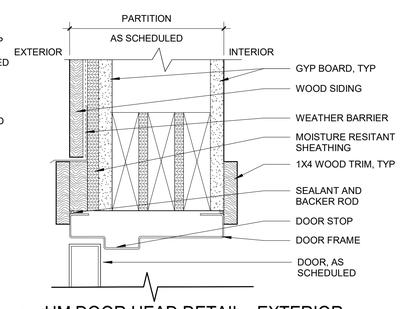


4 HM DOOR HEAD DETAIL - EXTERIOR
3" = 1'-0"

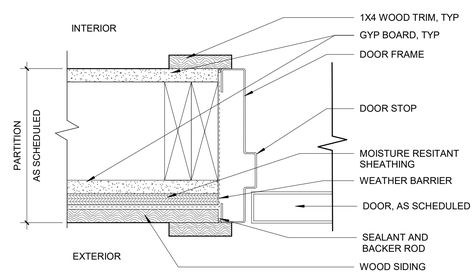


3 HM DOOR JAMB DETAIL- EXTERIOR
3" = 1'-0"

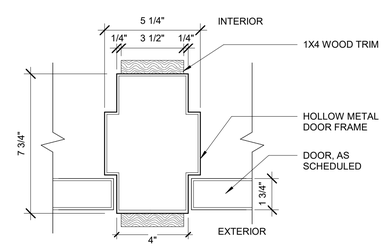


2 H.M. FRAME- TYPE 4 INTERMEDIATE JAMB DETAIL
3" = 1'-0"

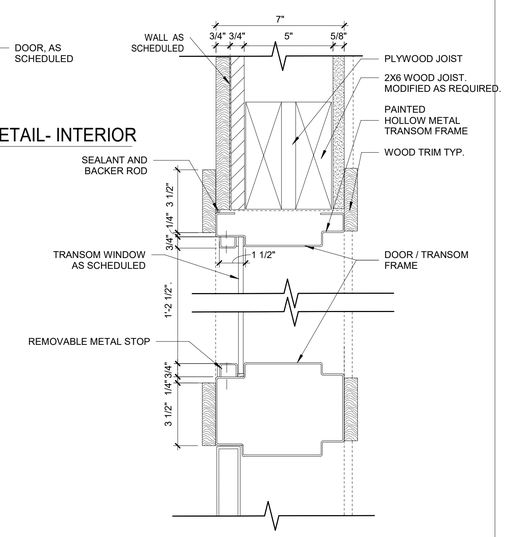


1 HM DOOR AND TRANSOM FRAME DETAIL
3" = 1'-0"

8/30/2022 3:04:38 PM

CONSULTANT INFORMATION
The LiRo Group
3 Aerial Way, Syosset, New York 11791
(516) 938-5476 www.liro.com

CONSULTANT SEAL
REGISTERED ARCHITECT ROBERT D. LONGO 023280 STATE OF NEW YORK

| REVISION NUMBER | DATE | MADE BY | APP'D BY | REVISION |
|---|---|---|---|---|

RECORD DRAWING CERTIFICATION
☐ AS BUILT – CHANGES AS NOTED ☐ AS BUILT – NO CHANGES

CONTRACTOR
NAME
SIGNATURE
TITLE DATE

PROJECT COORDINATOR
NAME
SIGNATURE
TITLE DATE

WESTCHESTER COUNTY, NEW YORK
DEPARTMENT OF PUBLIC WORKS AND TRANSPORTATION
DIVISION OF ENGINEERING

**INFRASTRUCTURE REHABILITATION - PHASE 3**
**PLAYLAND PARK, RYE, NEW YORK**
**NORTH EAST BURGER BARN**
**DOOR & HARDWARE SCHEDULE**

| | |
|---|---|
| CONTRACT NUMBER | 22-523 |
| SHEET NUMBER | BB-A-91 |
| DWG NO.: | 45 of 664 |
| SCALE: | As indicated |
| DATE: | 08/23/2022 |
| DPW FILE NUMBER | 1-118-A-794-0 |
| REV. NO. | 0 |

| NORTH EAST ARCADE AKA BURGER BARN WINDOW SCHEDULE | | | | | | | | | | | |
|---|---|---|---|---|---|---|---|---|---|---|---|
| WINDOW NUMBER | LEVEL | WINDOW TYPE | OPERATION | ROUGH WIDTH | ROUGH HEIGHT | SILL HEIGHT | WINDOW MATERIAL | FINISH | EXTERIOR TRIM | INTERIOR TRIM | REMARK |
| W-1 | GROUND LEVEL | 2 | AWNING | 6' - 0" | 1' - 6" | 8' - 3 3/4" | ALUMINUM | BLACK 70% KYNAR 500 PVDF (2605) | P-2 | P-13 | 1" INSULATED GLASS UNIT |
| W-2 | GROUND LEVEL | 2 | AWNING | 6' - 2 1/2" | 2' - 5 1/2" | 10' - 3" | ALUMINUM | BLACK 70% KYNAR 500 PVDF (2605) | P-2 | P-13 | 1" INSULATED GLASS UNIT |
| W-3 | GROUND LEVEL | 2 | AWNING | 6' - 2 1/2" | 2' - 5 1/2" | 10' - 3" | ALUMINUM | BLACK 70% KYNAR 500 PVDF (2605) | P-2 | P-13 | 1" INSULATED GLASS UNIT |
| W-4 | GROUND LEVEL | 2 | AWNING | 6' - 2 1/2" | 2' - 5 1/2" | 10' - 3" | ALUMINUM | BLACK 70% KYNAR 500 PVDF (2605) | P-2 | P-13 | 1" INSULATED GLASS UNIT |
| W-5 | GROUND LEVEL | 2 | AWNING | 6' - 0" | 1' - 6" | 8' - 5 1/2" | ALUMINUM | BLACK 70% KYNAR 500 PVDF (2605) | P-2 | P-13 | 1" INSULATED GLASS UNIT |
| W-6 | T.O. TOWER FLOOR | 1 | CASEMENT | 1' - 4" | 4' - 0" | 4' - 6" | ALUMINUM | BLACK 70% KYNAR 500 PVDF (2605) | P-2 | P-13 | BEDHEIM EXTERIOR SPG - SENTRY GLASS PLUS. COLOR: FLAME RED |
| W-7 | T.O. TOWER FLOOR | 1 | CASEMENT | 1' - 4" | 4' - 0" | 4' - 6" | ALUMINUM | BLACK 70% KYNAR 500 PVDF (2605) | P-2 | P-13 | BEDHEIM EXTERIOR SPG - SENTRY GLASS PLUS. COLOR: FOREST GREEN |
| W-8 | T.O. TOWER FLOOR | 1 | CASEMENT | 1' - 4" | 4' - 0" | 4' - 6" | ALUMINUM | BLACK 70% KYNAR 500 PVDF (2605) | P-2 | P-13 | BEDHEIM EXTERIOR SPG - SENTRY GLASS PLUS. COLOR: HONEY |
| W-9 | T.O. TOWER FLOOR | 1 | CASEMENT | 1' - 4" | 4' - 0" | 4' - 6" | ALUMINUM | BLACK 70% KYNAR 500 PVDF (2605) | P-2 | P-13 | BEDHEIM EXTERIOR SPG - SENTRY GLASS PLUS. COLOR: FLAME RED |
| W-10 | T.O. TOWER FLOOR | 1 | CASEMENT | 1' - 4" | 4' - 0" | 4' - 6" | ALUMINUM | BLACK 70% KYNAR 500 PVDF (2605) | P-2 | P-13 | BEDHEIM EXTERIOR SPG - SENTRY GLASS PLUS. COLOR: FOREST GREEN |
| W-11 | T.O. TOWER FLOOR | 1 | CASEMENT | 1' - 4" | 4' - 0" | 4' - 6" | ALUMINUM | BLACK 70% KYNAR 500 PVDF (2605) | P-2 | P-13 | BEDHEIM EXTERIOR SPG - SENTRY GLASS PLUS. COLOR: HONEY |
| W-12 | T.O. TOWER FLOOR | 1 | CASEMENT | 1' - 4" | 1' - 10" | 6' - 8" | ALUMINUM | BLACK 70% KYNAR 500 PVDF (2605) | P-2 | P-13 | BEDHEIM EXTERIOR SPG - SENTRY GLASS PLUS. COLOR: FLAME RED |
| W-13 | T.O. TOWER FLOOR | 1 | CASEMENT | 1' - 4" | 1' - 10" | 6' - 8" | ALUMINUM | BLACK 70% KYNAR 500 PVDF (2605) | P-2 | P-13 | BEDHEIM EXTERIOR SPG - SENTRY GLASS PLUS. COLOR: FOREST GREEN |
| W-14 | T.O. TOWER FLOOR | 1 | CASEMENT | 1' - 4" | 1' - 10" | 6' - 8" | ALUMINUM | BLACK 70% KYNAR 500 PVDF (2605) | P-2 | P-13 | BEDHEIM EXTERIOR SPG - SENTRY GLASS PLUS. COLOR: HONEY |
| W-15 | T.O. TOWER FLOOR | 1 | CASEMENT | 1' - 4" | 4' - 0" | 4' - 6" | ALUMINUM | BLACK 70% KYNAR 500 PVDF (2605) | P-2 | P-13 | BEDHEIM EXTERIOR SPG - SENTRY GLASS PLUS. COLOR: FLAME RED |
| W-16 | T.O. TOWER FLOOR | 1 | CASEMENT | 1' - 4" | 4' - 0" | 4' - 6" | ALUMINUM | BLACK 70% KYNAR 500 PVDF (2605) | P-2 | P-13 | BEDHEIM EXTERIOR SPG - SENTRY GLASS PLUS. COLOR: FOREST GREEN |
| W-17 | T.O. TOWER FLOOR | 1 | CASEMENT | 1' - 4" | 4' - 0" | 4' - 6" | ALUMINUM | BLACK 70% KYNAR 500 PVDF (2605) | P-2 | P-13 | BEDHEIM EXTERIOR SPG - SENTRY GLASS PLUS. COLOR: HONEY |
| W-18 | GROUND LEVEL | 3 | VERTICAL BIFOLD | 2' - 0" | 6' - 10" | 2' - 8" | ALUMINUM | BLACK 70% KYNAR 500 PVDF (2605) | P-2 | P-13 | FRITTED LAMINATED GLASS. MOTORIZED |
| W-19 | GROUND LEVEL | 3 | VERTICAL BIFOLD | 6' - 0" | 6' - 10" | 2' - 8" | ALUMINUM | BLACK 70% KYNAR 500 PVDF (2605) | P-2 | P-13 | FRITTED LAMINATED GLASS. MOTORIZED |
| W-20 | GROUND LEVEL | 3 | VERTICAL BIFOLD | 6' - 0" | 6' - 10" | 2' - 8" | ALUMINUM | BLACK 70% KYNAR 500 PVDF (2605) | P-2 | P-13 | FRITTED LAMINATED GLASS. MOTORIZED |
| W-21 | GROUND LEVEL | 3 | VERTICAL BIFOLD | 6' - 0" | 6' - 10" | 2' - 8" | ALUMINUM | BLACK 70% KYNAR 500 PVDF (2605) | P-2 | P-13 | FRITTED LAMINATED GLASS. MOTORIZED |

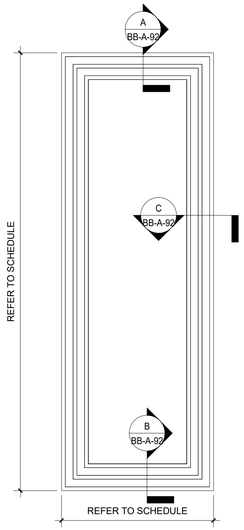


1 WINDOW ELEVATION TYPE 1 -CASEMENT
1 1/2" = 1'-0"

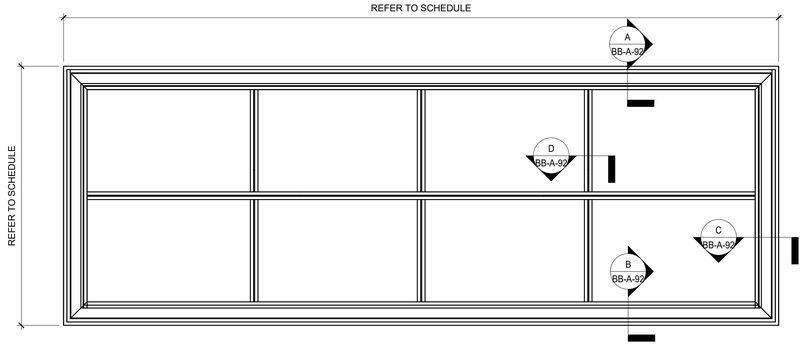


2 WINDOW ELEVATION TYPE 2
1 1/2" = 1'-0"

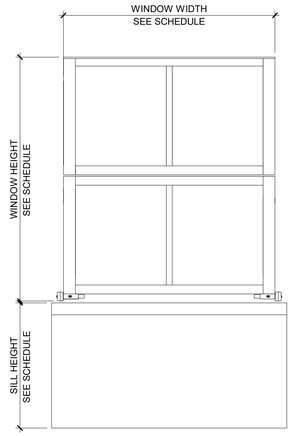


3 WINDOW ELEVATION TYPE 3
1/2" = 1'-0"

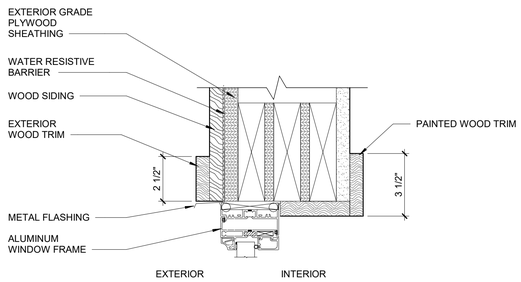


A WINDOW HEAD - DETAIL
3" = 1'-0"

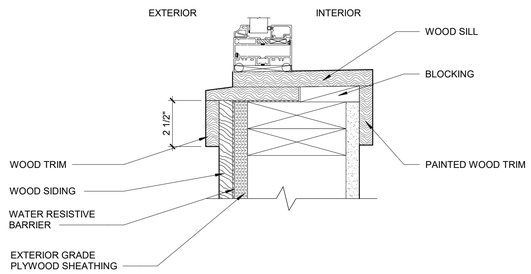


B WINDOW SILL - DETAIL
3" = 1'-0"

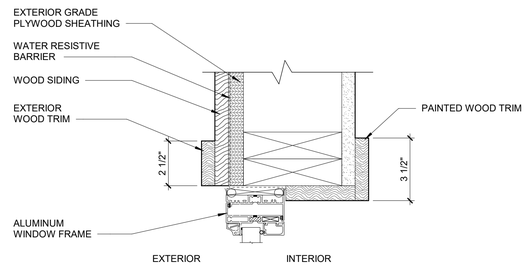


C WINDOW JAMB - DETAIL
3" = 1'-0"

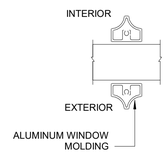


D WINDOW MULLION - DETAIL
6" = 1'-0"

8/30/2022 3:04:39 PM

CONSULTANT INFORMATION
The LiRo Group
3 Aerial Way, Syosset, New York 11791
(516) 938-5476 www.liro.com

CONSULTANT SEAL
REGISTERED ARCHITECT ROBERT D. YOUNG 023280 STATE OF NEW YORK

| REVISION NUMBER | DATE | MADE BY | APP'D BY | REVISION |
|---|---|---|---|---|

RECORD DRAWING CERTIFICATION
☐ AS BUILT – CHANGES AS NOTED ☐ AS BUILT – NO CHANGES

CONTRACTOR
NAME
SIGNATURE
TITLE DATE

PROJECT COORDINATOR
NAME
SIGNATURE
TITLE DATE

WESTCHESTER COUNTY, NEW YORK
DEPARTMENT OF PUBLIC WORKS AND TRANSPORTATION
DIVISION OF ENGINEERING

**INFRASTRUCTURE REHABILITATION - PHASE 3**
**PLAYLAND PARK, RYE, NEW YORK**
**NORTH EAST BURGER BARN**
**WINDOW SCHEDULE AND DETAILS**

| | |
|---|---|
| CONTRACT NUMBER | 22-523 |
| SHEET NUMBER | BB-A-92 |
| DWG NO.: | 46 of 664 |
| SCALE: | As indicated |
| DATE: | 08/23/2022 |
| DPW FILE NUMBER | 1-118-A-795-0 |
| REV. NO. | 0 |

## GENERAL PARTITION NOTES:

1. SEE SPECIFICATIONS FOR GYPSUM BOARD AND OTHER WALL BOARD TYPES, APPLICATIONS AND THICKNESS UNLESS NOTED OTHERWISE ON THE DRAWINGS.
2. REFER TO THE LATEST EDITION OF UNDERWRITERS LABORATORIES INC. FIRE RESISTANCE DIRECTORY FOR ADDITIONAL REQUIREMENTS ON UL RATED ASSEMBLIES AS NOTED IN THE PARTITION DESCRIPTIONS. WHERE UL# IS NOTED USE UL IN LIEU OF CHART ABOVE.
3. SOUND RATED PARTITIONS TYPES: WALL TYPE DESIGNATIONS INDICATED WITH AN "S" (XXS) ARE SOUND RATED AND REQUIRE SAFB (SOUND ATTENUATION FIRE BATT/BLANKET INSULATION) AND ACOUSTICAL SEALANT.

### EXTERIOR TWO SIDED - ONE LAYER

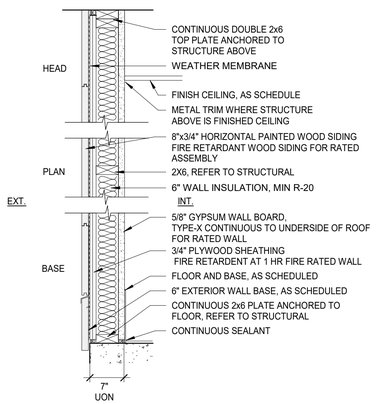


1 **EXTERIOR WALL - NOT RATED**
1 LAYER 5/8" IMPACT & MOLD-RESISTANT GYP. BD. UP TO 8' A.F.F. AND 5/8" MOLD-RESISTANT GYP. BD. TO CEILING ON THE INTERIOR SIDE

1A **EXTERIOR WALL - 1 HR RATED - BXUV.V346-ANSI/UL 263**
5/8" GWB-X , M-BLOC – MOISTURE RESISTANT, 2X6 WOOD STUD, 5/8" GWB-X, M-BLOC , ½" FIRE-RETARDANT SHEATHING, 1/8" DRAINAGE TYPE WEATHER BARRIER ,WOOD SIDING

### EXTERIOR TWO SIDED - ONE LAYER

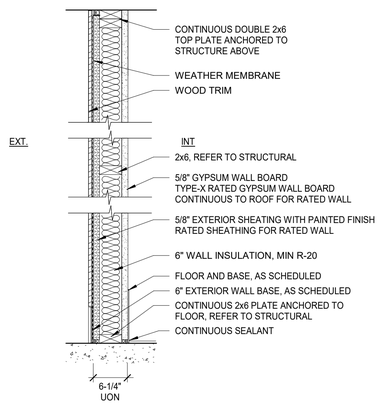


1B **EXTERIOR WALL - NOT RATED**
1 LAYER 5/8" EXTERIOR PAINTED FINISH PLYWOOD
1 LAYER 5/8" GYPSUM BOARD FLOOR TO CEILING

1C **EXTERIOR WALL - 1 HR RATED - BXUV.V346-ANSI/UL 263**
5/8" GWB-X , M-BLOC – MOISTURE RESISTANT, 2X6 WOOD STUD, 5/8" GWB-X, M-BLOC , ½" FIRE-RETARDANT SHEATHING, 1/8" DRAINAGE TYPE WEATHER BARRIER ,WOOD TRIM

### TWO SIDED - ONE LAYER

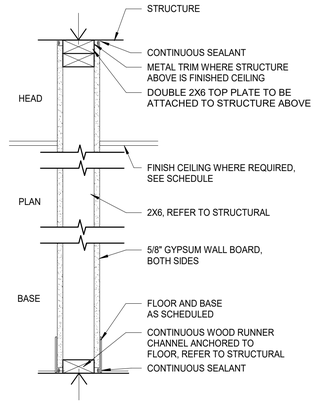


2 **INTERIOR PARTITION - NO RATING**
5-1/2" WOOD STUDS
1 LAYER 5/8" GYP. BD. EACH SIDE.

### TWO SIDED - ONE LAYER

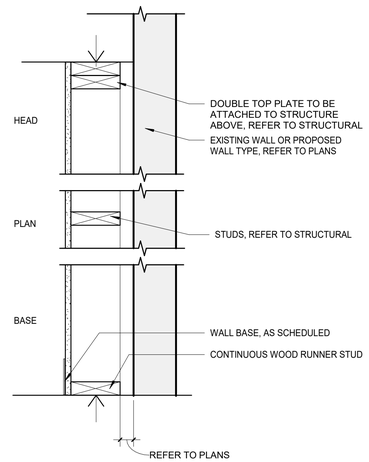


3 **CHASE WALL**
6" WOOD STUDS
1 LAYER 5/8" GYP. BD.

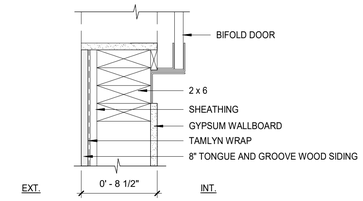


JAMB DETAIL FOR BIFOLD DOOR

2 **NO RATING**
1 LAYER 5/8" IMPACT & MOLD-RESISTANT GYP. BD. UPTO 8' A.F.F. AND 5/8" MOLD-RESISTANT GYP. BD. TO CEILING ON THE INTERIOR SIDE

## PARTITIONS AND EXTERIOR WALL TYPES

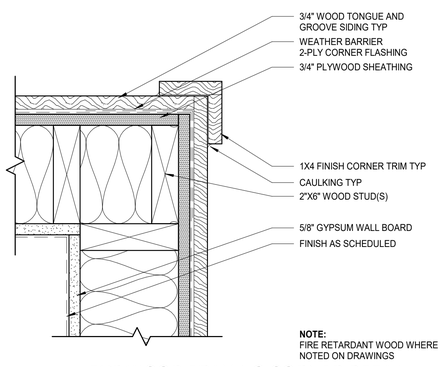


1 TYP WOOD FRAMING CORNER DETAIL
3" = 1'-0"

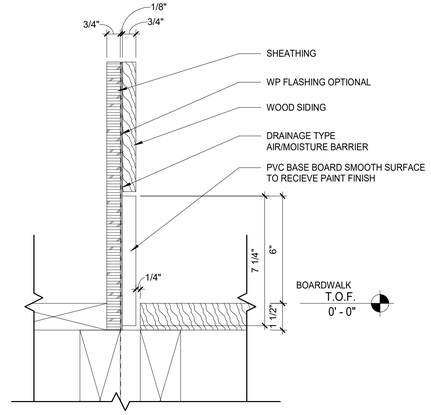


2 EXTERIOR BASE BOARD DETAIL
3" = 1'-0"

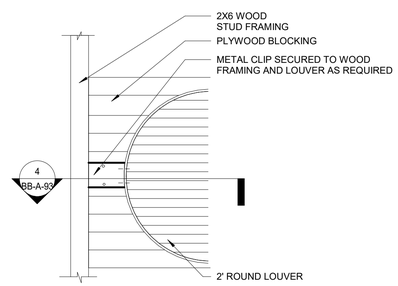


3 TYPICAL ROUND LOUVER ELEVATION DETAIL
1 1/2" = 1'-0"

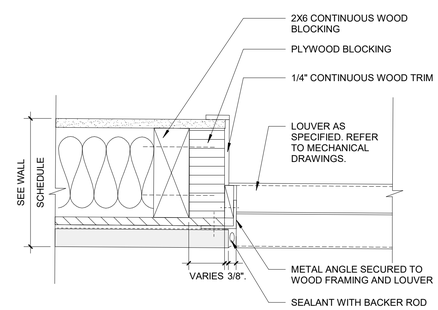


4 TYPICAL ROUND LOUVER JAMB DETAIL
6" = 1'-0"

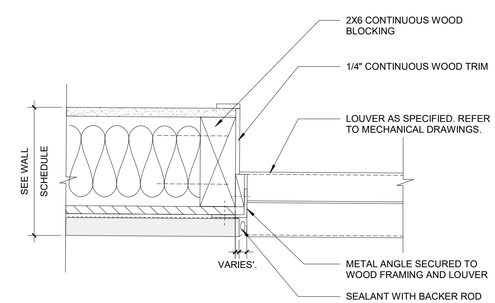


5 TYPICAL NON-ROUND LOUVER JAMB DETAIL
6" = 1'-0"

8/30/2022 3:04:40 PM

CONSULTANT INFORMATION
The LiRo Group
3 Aerial Way, Syosset, New York 11791
(516) 938-5476 www.liro.com

CONSULTANT SEAL
REGISTERED ARCHITECT ROBERT D. YOUNG JR. 023280 STATE OF NEW YORK

| REVISION NUMBER | DATE | MADE BY | APP'D BY | REVISION |
|---|---|---|---|---|

RECORD DRAWING CERTIFICATION
☐ AS BUILT – CHANGES AS NOTED ☐ AS BUILT – NO CHANGES

CONTRACTOR
NAME
SIGNATURE
TITLE DATE

PROJECT COORDINATOR
NAME
SIGNATURE
TITLE DATE

WESTCHESTER COUNTY, NEW YORK
DEPARTMENT OF PUBLIC WORKS AND TRANSPORTATION
DIVISION OF ENGINEERING

**INFRASTRUCTURE REHABILITATION - PHASE 3**
**PLAYLAND PARK, RYE, NEW YORK**
**NORTH EAST BURGER BARN**
**PARTITION TYPES & WALL DETAILS**

| | |
|---|---|
| CONTRACT NUMBER | 22-523 |
| SHEET NUMBER | BB-A-93 |
| DWG NO.: | 47 of 664 |
| SCALE: | As indicated |
| DATE: | 08/23/2022 |
| DPW FILE NUMBER | 1-118-A-796-0 |
| REV. NO. | 0 |

# STRUCTURAL NOTES

## GENERAL

G-1 THESE NOTES ARE GENERAL AND SUPPLEMENTAL TO THE SPECIFICATIONS. THESE NOTES APPLY TO THE ENTIRE PROJECT UNLESS MODIFIED OR NOTED OTHERWISE IN THE CONTRACT DOCUMENTS.

G-2 STANDARD DETAILS, SHOWN ON DRAWINGS AR-S-12 THRU AR-S-14 SHALL BE USED WHEN REFERRED TO OR WHEN NO MORE RESTRICTIVE OR DIFFERENT DETAILS ARE SHOWN ON THE DRAWINGS.

G-3 DESIGN WAS IN ACCORDANCE WITH AND CONSTRUCTION SHALL COMPLY WITH THE PROVISIONS OF THE NEW YORK STATE BUILDING CODE (2020 NYSBC). THE DESIGN LOADS AND OTHER DESIGN VALUES GIVEN BELOW WERE USED FOR DESIGN OF STRUCTURES UON ON THE DRAWINGS.

G-4 DESIGN LOADS FOR NEW ELEMENTS:
LIVE LOADS:
NORTHEAST BURGER BARN:
FLOOR.: 100 PSF
SNOW LOADS:
GROUND SNOW LOAD, Pg = 30 PSF
FLAT ROOF SNOW LOAD = 21 PSF
SNOW EXPOSURE FACTOR, Ce = 0.9
SNOW LOAD IMPORTANCE FACTOR, I = 1.1
THERMAL FACTOR, Ct = 1.0

WIND DESIGN:
BASIC WIND SPEED, V = 126 MPH
BUILDING CATEGORY III
WIND EXPOSURE CATEGORY B
INTERNAL PRESSURE COEFFICIENT, GCpi = ±0.18

SEISMIC DESIGN:
SPECTRAL RESPONSE COEFFICIENTS:
SDS = 0.296
SD1 = 0.096
SITE CLASS E
SEISMIC DESIGN CATEGORY B
SEISMIC IMPORTANCE FACTOR I = 1.25
BASIC SEISMIC FORCE RESISTING SYSTEM IS AS SHOWN ON DRAWINGS
DESIGN BASE SHEAR, V = AS SHOWN ON DRAWINGS
ANALYSIS PROCEDURE IS EQUIVALENT LATERAL FORCE METHOD, UON.
RESPONSE MODIFICATION FACTOR, R:
NORTHEAST BURGER BARN: R = 7

LOADS INDICATED ABOVE REFLECT DESIGN LOADS FOR ANY NEW OR REHABILITATED STRUCTURAL ELEMENTS. THEY SHOULD NOT BE TAKEN AS DESIGN LOADS FOR THE STRUCTURE AS A WHOLE.

G-5 ALL DIMENSIONS INDICATED (*) ARE TO BE VERIFIED EITHER BY FIELD MEASUREMENTS FOR EXISTING STRUCTURES OR BY SHOP DRAWINGS FOR EQUIPMENT FURNISHED. STRUCTURAL DIMENSIONS NOT SHOWN BUT CONTROLLED BY OR RELATED TO EQUIPMENT SHALL BE VERIFIED BY THE CONTRACTOR WITH THE MANUFACTURER PRIOR TO CONSTRUCTION.

G-6 STRUCTURAL DRAWINGS SHALL BE USED IN COORDINATION WITH THE DRAWINGS OF ALL OTHER DISCIPLINES AND MANUFACTURER'S SHOP DRAWINGS.

G-7 IF A CONFLICT IS FOUND BETWEEN DIFFERENT PORTIONS OF THE CONTRACT DOCUMENTS, THE CONTRACTOR SHALL NOTIFY THE ENGINEER IMMEDIATELY. CONTINUED CONSTRUCTION OF THE AREA IN CONFLICT SHALL BE AT THE CONTRACTOR'S OWN RISK UNTIL THE CONFLICT IS RESOLVED BY THE ENGINEER.

G-8 WHENEVER ONE MEMBER IS FASTENED TO ANOTHER WITH FASTENINGS (BOLTS, WELDS, ETC.) SET AT A UNIFORM SPACING, THERE SHALL BE A MINIMUM OF TWO FASTENINGS PER PIECE CONNECTED AND THE FIRST AND LAST FASTENINGS SHALL BE LOCATED NOT TO EXCEED 0.25 OF FASTENER SPACING FROM EACH END.

G-9 STRUCTURES HAVE BEEN DESIGNED FOR OPERATIONAL LOADS ON THE COMPLETED STRUCTURE. DURING CONSTRUCTION, THE STRUCTURES SHALL BE PROTECTED BY BRACING AND TEMPORARY SUPPORTS WHEREVER EXCESSIVE CONSTRUCTION LOADS MAY OCCUR. OVERSTRESSING OF ANY STRUCTURAL ELEMENT IS PROHIBITED.

G-10 NO BACKFILL SHALL BE PLACED AGAINST ANY WALL UNLESS ALL SUPPORTING ELEMENTS OF THE STRUCTURE HAVE BEEN CONSTRUCTED AND HAVE REACHED THE SPECIFIED MINIMUM CONCRETE STRENGTH.

G-11 THE CONTRACTOR IS RESPONSIBLE FOR VERIFYING ALL EXISTING INFORMATION IN THE FIELD AS REQUIRED FOR NEW WORK.

## FOUNDATIONS

F-1 DESIGN ASSUMPTIONS:
A) ALLOWABLE BEARING PRESSURE: 1. SOUND ROCK – 8 TSF, 2. OVERBURDEN – 1 TSF.
B) GROUNDWATER: EXISTING GROUNDWATER ELEVATIONS VARY ACROSS SITE.

F-2 GRAVITY UNDER DRAINS SHALL BE PROVIDED TO PERMANENTLY LOWER GROUNDWATER.

F-3 CONCRETE GENERAL NOTES APPLY TO FOUNDATIONS.

F-4 MINIMUM DEPTH FROM ADJACENT FINISHED GRADE TO BOTTOM OF FOUNDATION, 4'-0"

F-5 FOUNDATIONS BEARING ON ROCK SHALL BE CONSTRUCTED SUCH THAT ROCK SURFACE IS LEVEL, UNLESS APPROVED BY ENGINEER.

F-6 COMPACTED SELECT GRANULAR FILL 12 INCHES THICK MINIMUM, SHALL BE PLACED BELOW ALL CONCRETE FOUNDATIONS UNLESS DIRECTLY BEARING ON SOUND ROCK.

## STRUCTURAL METALS

S-1 DETAIL, FABRICATE, AND ERECT STRUCTURAL STEEL IN ACCORDANCE WITH AISC SPECIFICATION FOR STRUCTURAL STEEL BUILDINGS, ALLOWABLE STRESS DESIGN AND LRFD DESIGN (LRFD MANUAL OF STEEL CONSTRUCTION, CURRENT EDITION).

S-2 STEEL MATERIAL:
A) STRUCTURAL TUBING, ASTM A 500, GRADE B.
B) STRUCTURAL PIPE, ASTM A 53, GRADE B.
C) PLATES AND ANGLES, ASTM A 36 UNO.
D) STRUCTURAL W SHAPES, ASTM A 992 (MIN. YIELD STRENGTH OF 50 KSI).
E) STRUCTURAL S, M, & H SHAPES ASTM A572 GRADE 50.

S-3 PROVIDE MIN 3/4" DIAMETER ASTM A 325 HIGH STRENGTH BOLTS WITH FULLY TIGHTENED TYPE N CONNECTIONS FOR STRUCTURAL STEEL UON.

S-4 PROVIDE TYPICAL STEEL BEAM CONNECTIONS FOR A CAPACITY NOT LESS THAN THE TOTAL UNIFORM LOAD CAPACITY TABULATED IN THE AISC TABLES FOR ALLOWABLE LOADS OF BEAMS UNLESS NOTED OTHERWISE.

S-5 CAST IN PLACE ANCHOR BOLTS FOR STRUCTURAL STEEL SHALL CONFORM TO ASTM A307 UON.

S-6 DO NOT PAINT STEEL SURFACES WHICH ARE TO BE WELDED OR ARE TO BE ENCASED IN CONCRETE.

S-7 STAINLESS STEEL SHALL BE TYPE 316 FOR BOLTED CONSTRUCTIONS AND 316L FOR WELDED CONSTRUCTIONS.

S-8 ALUMINUM SHALL BE ALLOY 6061-T6.

S-9 ALL GROOVE AND BUTT WELDS SHALL BE FULL PENETRATION.

S-10 FILLET WELD SIZES SHALL BE THE MINIMUM SIZE REQUIRED BY AISC CODE FOR PLATE SIZES TO BE CONNECTED AND SHALL BE APPLIED TO THE ENTIRE JOINT CONTACT LENGTH, BUT NOT LESS THAN 3/16".

S-11 DETAIL, FABRICATE, AND ERECT ALUMINUM IN ACCORDANCE WITH THE ALUMINUM ASSOCIATION CONSTRUCTION MANUAL CURRENT EDITION.

S-12 ALL BOLTS, ANCHOR BOLTS, AND CONCRETE ANCHORS CONNECTING ALUMINUM SHALL BE TYPE 316 STAINLESS STEEL UON.

S-13 ALUMINUM SHALL BE ISOLATED FROM CONTACT WITH CONCRETE OR DISSIMILAR METALS.

## EXCAVATION

E-1 CONTRACTOR SHALL PERFORM ALL EXCAVATION IN ACCORDANCE WITH STATE, LOCAL AND FEDERAL REQUIREMENTS INCLUDING OSHA BRACING AND EXCAVATION REQUIREMENTS.

E-2 TEMPORARY SHEETING AND BRACING IS NOT SHOWN ON CONTRACT DRAWINGS. ALL EXCAVATIONS WITH A POTENTIAL FOR CAVE-IN SHALL BE PROVIDED WITH EXCAVATION PROTECTION SYSTEMS IN ACCORDANCE WITH OSHA 1926. SLOPING AND BENCHING WHICH WILL ENCROACH ON AREAS SLATED TO REMAIN ACCESSIBLE OR THAT MAY ENCROACH ON EXISTING FOOTINGS AND STRUCTURES SHALL NOT BE PERMITTED.

E-3 CONTRACTOR SHALL ENGAGE THE SERVICES OF A LICENSED PROFESSIONAL ENGINEER REGISTERED IN THE STATE OF NEW YORK TO DESIGN ALL TEMPORARY SHEETING AND BRACING AND RELATED APPURTENANCES. CONTRACTOR TO SUBMIT SUCH PLANS TO ENGINEER FOR INFORMATION.

E-4 CONTRACTOR SHALL BE RESPONSIBLE FOR DEWATERING OF OPEN EXCAVATIONS.

E-5 ALL EXCAVATED MATERIALS SHALL BE REMOVED FROM SITE TO A FACILITY AS REQUIRED BY STATE, LOCAL FEDERAL LAW.

## TIMBER

T-1 ALL WOOD FRAMING MEMBERS INCLUDING, BUT NOT LIMITED TO, WALL STUDS AND JOISTS, ARE INTENDED TO ACT AS A SYSTEM AS DETAILED IN THE STRUCTURAL DRAWINGS AND ONCE CONSTRUCTION IS COMPLETE. IT IS THE RESPONSIBILITY OF THE CONTRACTOR TO ENSURE SAFETY AND STABILITY OF WOOD FRAMING SYSTEMS (I.E. TEMPORARY BRACING IF REQUIRED) DURING CONSRTUCTION AS A RESULT OF CONSTRUCTION METHODS AND SEQUENCES.

T-2 ALL TIMBER BELOW FLOOR DECKING SHALL BE PRESSURE-TREATED SOUTHERN PINE LUMBER.

T-3 STORAGE OF ALL LUMBER AND TIMBER ON SITE SHALL BE KEPT OFF GROUND, UNDER COVER AND PROTECTED FROM DAMAGE.

T-4 ALL DIMENSIONAL LUMBER SHALL BE CERTIFIED BY THE SUPPLIER IN WRITING TO BE KILN DRIED.

T-5 STRUCTURE SHALL NOT BE ENCLOSED UNLESS LUMBER MOISTURE CONTENT HAS BEEN VERIFIED TO BE AT OR BELOW 15%. ANY SIGNS OF MOLD SHALL BE REMOVED AND TREATED IN ACCORDANCE WITH PROJECT SPECIFICATIONS OR INDUSTRY STANDARDS.

T-6 ALL LUMBER IN CONTACT WITH THE GROUND OR CONCRETE SHALL BE PRESSURE TREATED.

T-7 FASTENERS FOR PRESERVATIVE TREATED AND FIRE RETARDANT TREATED WOOD SHALL BE OF HOT DIPPED ZINC COATED GALVANIZED STEEL OR STAINLESS STEEL AND SHALL FOLLOW CURRENT SIMPSON GUIDELINES BASED ON WEATHER EXPOSURE. WHERE STAINLESS STEEL CONNECTORS OR HOT DIPPED GALVANIZED CONNECTORS ARE SPECIFIED IN THE DRAWINGS, STAINLESS STEEL OR HOT DIPPED GALVANIZED FASTENERS SHALL BE USED TO MATCH CONNECTOR TYPE.

T-8 ALL PLATES AND LEDGERS SHALL BE FASTENED WITH A MINIMUM (3) ANCHORS PER PIECE UNLESS NOTED OTHERWISE.

T-9 ALL METAL HARDWARE AND FRAMING ACCESSORIES SHALL BE MANUFACTURED BY SIMPSON STRONG-TIE COMPANY. ALL ITEMS SHALL BE INSTALLED PER THE SIMPSON'S INSTALLATION REQUIREMENTS. ALL NAIL HOLES SHALL BE FILLED WITH THE RECOMMENDED FASTENER UNLESS NOTED OTHERWISE ON THE DRAWING.

T-10 HOLES FOR BOLTS SHALL BE DRILLED WITH A BIT OF THE SAME NOMIMAL DIAMETER AS THE BOLT + 1/16". LEAD HOLES FOR LAG SCREWS SHALL BE BORED PER NDS 11.1.3.

T-11 ALL BOLTS, CARRIAGE BOLTS, LAG SCREWS, EXPANSION BOLTS AND EPOXY BOLTS SHALL BE INSTALLED WITH STANDARD CUT WASHERS UNDER THE BOLT HEAD AND NUTS THAT BEAR DIRECTLY ON THE WOOD. ALL NUTS SHALL BE TIGHTENED AT THE TIME OF INSTALLATION AND RE-TIGHTENED IF NECESSARY, DUE TO WOOD SHRINKAGE, PRIOR TO CLOSE OUT OR COMPLETION OF THE PROJECT. BOLTS AND LAG SCREWS SHALL CONFORM TO ANSI/ASME STANDARD B18.2.1. WOOD SCREWS SHALL CONFORM TO B18.6.1. ALL BOLTS SHALL CONFORM TO ASTM A307 GRADE A UNLESS NOTED OTHERWISE.

T-12 CUTTING AND NOTCHING OF SAWN LUMBER RAFTERS AND STUDS SHALL BE IN CONFORMANCE WITH THE FOLLOWING CRITERIA:

A. JOISTS NOTCHES AT THE ENDS OF JOISTS SHALL NOT EXCEED 1/5 OF THE JOIST DEPTH. HOLES IN JOISTS SHALL NOT BE WITHIN 2½ INCHES OF THE TOP OR BOTTOM OF THE JOIST, AND THE DIAMETER OF ANY SUCH HOLE SHALL NOT EXCEED 1/4 THE DEPTH OF THE JOIST. NOTCHES IN THE TOP OR BOTTOM OF THE JOISTS SHALL NOT EXCEED 1/6 THE DEPTH AND SHALL NOT BE LOCATED IN THE MIDDLE OF THE THIRD SPAN.

B. RAFTERS NOTCHES AT THE ENDS OF RAFTERS OR CEILING JOISTS SHALL NOT EXCEED 1/5 OF THE DEPTH. NOTCHES IN THE TOP OR BOTTOM OF THE RAFTER OR CEILING JOIST SHALL NOT EXCEED 1/6 THE DEPTH AND SHALL NOT BE LOCATED IN THE MIDDLE 1/3 OF THE SPAN. EXCEPT THAT A NOTCH NOT EXCEEDING 1/3 OF THE DEPTH IS PERMITTED IN THE TOP OF THE RAFTERS OR CEILING JOIST NOT FURTHER FROM THE FACE OF THE SUPPORT THAN THE DEPTH OF THE MEMBER. HOLES BORED IN RAFTERS OR CEILING JOISTS SHALL NOT BE WITHIN 2½" INCHES OF THE TOP AND BOTTOM AND THEIR DIAMETER SHALL NOT EXCEED 1/4 THE DEPTH OF THE MEMBER.

C. WALL STUDS A MAXIMUM OF 2¼" DIAMETER NEATLY BORED HOLE MAY BE PLACED IN THE CENTER OF ALL BEARING 2x6 STUDS WITH NO ADDITIONAL REINFORCEMENT REQUIRED.

## SPECIAL INSPECTIONS – NORTHEAST BURGER BARN

S-1 SPECIAL INSPECTION SHALL COMPLY WITH SPECIFICATIONS.

S-2 SPECIAL INSPECTION WILL BE PERFORMED IN ACCORDANCE WITH CHAPTER 17 OF THE NYS BUILDING CODE.

S-3 SPECIAL INSPECTION WILL BE PERFORMED ON THE FOLLOWING STRUCTURAL SYSTEMS:
A) STRUCTURAL STEEL CONSTRUCTION (1705.2).
B) WOOD CONSTRUCTION (1705.5).
C) CONCRETE CONSTRUCTION (1705.3).
D) SOILS (1705.6).
E) DRIVEN DEEP FOUNDATIONS (1705.7)
F) WIND RESISTANCE (1705.11)
G) SISMIC RESISTANCE (1705.12)

## DEMOLITION

LEGEND

EXISTING REINFORCED CONCRETE WALL OR STRUCTURE TO BE DEMOLISHED

SAW CUT LINE – FULL DEPTH UNLESS NOTED OTHERWISE

D-1 CONTRACTOR IS ALERTED THAT LIMITS OF DEMOLITION SHOWN IS APPROXIMATE. ACTUAL LIMITS SHALL BETHE MINIMUM REQUIRED FOR NEW STRUCTURE. CONTRACTOR TO CO-ORDINATE AND SUBMIT DEMOLITION PROCEDURE PER SPECIFICATIONS.

D-2 ALL ITEMS SHOWN ARE EXISTING TO REMAIN UNLESS NOTED OTHERWISE.

D-3 FOR ADDITIONAL DEMOLITION REQUIREMENTS SEE SPECIFICATIONS (024116).

D-4 ALL EXISTING CONCRETE TO BE DEMOLISHED IS STEEL REINFORCED UNLESS NOTED OTHERWISE. REINFORCING STEEL NOT SHOWN FOR CLARITY.

D-5 FOR ADDITIONAL DEMOLITION NOT SHOWN, SEE G, A, M, E, H, AND P DRAWINGS.

## PILE NOTES

P-1 PILES SHALL BE DESIGNED AND INSTALLED BY A QUALIFIED PILE CONTRACTOR IN ACCORDANCE WITH THE BORED-IN PILE SPECIFICATIONS AND SUBJECT TO THE REQUIREMENTS LISTED HEREIN.

P-2 THE CONTRACTOR SHALL ENGAGE A LICENSED PROFESSIONAL ENGINEER REGISTERED IN THE STATE OF NEW YORK TO DESIGN PILE AND SUBMIT THE DESIGN TO THE ENGINEER FOR APPROVAL.

P-3 THE BORED-IN PILE SHALL BE 10 INCHES IN DIAMETER AND DESIGNED AND INSTALLED FOR
ULTIMATE LOAD IN COMPRESSION = 60 TONS
ALLOWABLE LOAD IN COMPRESSION = 30 TONS

P-4 ALL BORED-IN PILES SHALL BE GROUTED WITH A MINIMUM 28 DAY COMPRESSIVE STRENGTH OF 4000 PSI.

P-5 ALL BORED-IN PILES SHALL HAVE FULL LENGTH 1-1/4" Ø THREADBARS. THE THREADBARS SHALL CONFORM TO THE REQUIREMENTS OF ASTM A722, GRADE 150 AS MANUFACTURED BY DYWIDAG OR APPROVED EQUAL, UNLESS NOTED OTHERWISE. PROVIDE BEARING PLATES AND NUTS IN ACCORDANCE WITH THE THREADBAR MANUFACTURER'S RECOMMENDATIONS.

P-6 PROVIDE CENTRALIZERS FOR THREADBARS AT 10 FEET MAXIMUM VERTICAL SPACING.

P-7 CUT OFF THE ELEVATIONS OF THE BORED-IN PILES AS SHOWN ON DRAWINGS.

P-8 ALL BORED-IN PILES SHALL BE INSTALLED WITH A MAXIMUM LATERAL TOLERANCE OF THREE INCHES.

P-9 DRILLING OPERATION SHALL BE PERFORMED IN THE PRESENCE OF THE ENGINEER.

P-10 ONE (1) STATIC AXIAL COMPRESSION LOAD TEST WILL BE REQUIRED.

P-11 THE INSTALLATION METHOD USED FOR THE SUCCESSFUL COMPLETION OF LOAD TESTING SHALL BE USED FOR ALL THE PRODUCTION PILES.

P-12 THE CONTRACTOR SHALL SUBMIT A STATIC AXIAL LOAD TESTING PROGRAM CONSISTING OF ONE (1) COMPRESSION TEST AND ONE (1) TENSION TEST SHOWING PROPOSED PILE LOAD TEST LOCATIONS FOR APPROVAL OF THE ENGINEER.

P-13 COMPRESSION LOAD TESTING SHALL CONFORM TO ASTM D1143 AND THE PROJECT SPECIFICATIONS. UPLIFT LOAD TESTING SHALL CONFORM TO THE PROJECT SPECIFICATIONS AND ASTM D3689.

P-14 A MINIMUM PERIOD OF TWO (2) WEEKS SHALL ELAPSE FROM THE INSTALLATION OF THE TEST PILE TO THE COMMENCEMENT OF THE LOAD TEST.

P-15 TWO (2) TELLTALE RODS SHALL BE INSTALLED IN THE LOAD TEST PILE. THE BOTTOM END OF ONE TELLTALE ROD SHALL BE AT THE BOTTOM OF THE TEST PILE, AND THE BOTTOM END OF THE OTHER ROD SHALL BE TERMINATED MIDWAY BETWEEN PILE CUT-OFF AND PILE TIP. THE TELLTALE SHALL CONSIST OF A STEEL SOUNDING ROD EXTENDED TO AN ELEVATION DESIGNATED BY THE ENGINEER. THE TELLTALES SHALL BE PROTECTED BY A STEEL TUBE EMBEDDED IN GROUT. THE TELLTALE SHALL BE CENTERED IN THE TUBE IN A MANNER TO AVOID FRICTION BETWEEN THE TELLTALE AND THE TUBE.

P-16 THE LOADING PROCEDURE FOR STATIC AXIAL COMPRESSION TEST SHALL BE IN ACCORDANCE WITH NEW YORK STATE BUILDING CODE.

P-17 MEASUREMENTS OF MOVEMENT OF THE PILE BUTT, TELLTALES, REFERENCE BEAMS, ETC. SHALL BE TAKEN BY LICENSED SURVEYOR (REGISTERED IN THE STATE OF NEW YORK) ENGAGED BY THE OWNER.

P-18 MONITORING OF LOAD TEST SHALL BE PERFORMED BY A PROFESSIONAL ENGINEER REGISTERED IN THE STATE OF NEW YORK AND HIRED BY THE OWNER.

P-19 THE DIAL GAUGES FOR MONITORING THE MOVEMENT OF THE PILE SHALL HAVE A MINIMUM TRAVEL OF THREE (3) INCHES AND SHALL BE AT LEAST THREE (3) INCHES IN DIAMETER.

## CONCRETE (EXCEPT PRECAST)

C-1 CONCRETE STRENGTH CLASSES (28-DAY COMPRESSIVE STRENGTH): CLASS A (5000 PSI) STRUCTURES, REINFORCED DUCT BANKS, AND PIPE ENCASEMENT. FOR CONCRETE WALLS GREATER THAN 2 FEET THICK FOLLOW ACI RECOMMENDATIONS FOR MASS CONCRETE. CLASS D (2500 PSI) SIDEWALKS, CURBS AND GUTTERS, CONCRETE FILL, THRUST BLOCKS, UNREINFORCED DUCT BANKS AND PIPE ENCASEMENT, FENCE POST EMBEDMENT.

C-2 REINFORCEMENT: ASTM A615, GRADE 60, OR ASTM A706, GRADE 60 WHERE REINFORCEMENT IS TO BE WELDED.

C-3 CONCRETE COVER FOR REINFORCING:
A) SURFACES CAST AGAINST SUBGRADE 3" MIN.
B) FORMED SURFACES IN CONTACT WITH SOIL OR LIQUID 2" MIN.
C) SURFACES NOT IN CONTACT WITH WEATHER, SOIL, OR LIQUID 1 1/2" MIN.

C-4 CONSTRUCTION JOINTS & CONTROL JOINTS SHALL BE LOCATED AS SHOWN ON THE DRAWINGS. WHERE NOT SHOWN, CONSTRUCTION JOINTS SHALL BE LOCATED AT NO MORE THAN 30 FEET ON CENTER. JOINT LOCATIONS SHALL BE AS APPROVED BY THE ENGINEER.

C-5 EQUIPMENT SUPPORTS, ANCHORAGES, OPENINGS, RECESSES AND REVEALS NOT SHOWN ON THE STRUCTURAL DRAWINGS BUT REQUIRED BY OTHER DISCIPLINES, SHALL BE PROVIDED FOR PRIOR TO PLACING CONCRETE.

C-6 SPLICES SHALL BE CLASS 'B' CONFORMING TO THE PROVISIONS OF ACI 318 UNLESS NOTED OTHERWISE.

C-7 AT ALL TYPICAL CURBS, EQUIPMENT PADS, AND PIPE SUPPORT PIERS, REINFORCING DOWELS SHOWN MAY BE REPLACED WITH MATCHING DOWELS SET IN EPOXY IN DRILLED HOLES AS SPECIFIED. DOWELS LOCATED CLOSER THAN 3" FROM ANY EDGE OF CONCRETE SHALL NOT BE REPLACED WITH DRILLED DOWELS.

C-8 DRILLED EPOXY DOWELS (WHERE DOWELS ARE SHOWN TO BE PLACED INTO HARDENED CONCRETE):
A) THE HOLE DIAMETER SHALL BE NO LARGER THAN 1/8" GREATER THAN THE DIAMETER OF THE REINFORCING BAR AT THE DEFORMATIONS.
B) THE DEPTH OF EMBEDMENT SHALL BE 12 BAR DIAMETERS, UNLESS SHOWN OTHERWISE.
C) ADJUST THE DOWEL LOCATIONS AS NEEDED TO AVOID DRILLING THROUGH ANY REINFORCING BARS.IF THE DOWEL LOCATION NEEDS TO BE MODIFIED, CONTACT THE ENGINEER.

C-9 SLABS WITH SLOPING SURFACES SHALL HAVE THE INDICATED SLAB THICKNESS MAINTAINED AS THE MINIMUM. SLAB BOTTOMS CAN EITHER SLOPE WITH THE TOP SURFACE OR BE LEVEL. REINFORCEMENT IN SLABS WITH SLOPING SURFACES SHALL BE PLACED AT THE REQUIRED CLEARANCE FROM THE SLAB SURFACE.

C-10 SLOPES SHOWN ON SLAB SURFACES BY FLOW ARROWS SHALL BE 1.0 PERCENT UNLESS NOTED OTHERWISE.

C-11 WHERE HORIZONTAL CONSTRUCTION JOINTS, LOCATED ABOVE THE FOUNDATION SLAB, EXTEND BEYOND WHERE NEEDED, THEY SHALL BE TERMINATED AT A VERTICAL CONSTRUCTION JOINT APPROVED BY THE ENGINEER.

C-12 DOWELS, ANCHOR BOLTS, PIPES, WATERSTOPS AND OTHER EMBEDDED ITEMS SHALL BE HELD SECURELY IN POSITION WHILE CONCRETE IS BEING PLACED.

C-13 CONDUITS AND OTHER SIMILAR ITEMS EMBEDDED IN OR PENETRATING THROUGH CONCRETE SHALL BE SPACED ON CENTER NOT LESS THAN 3 TIMES THEIR OUTSIDE DIMENSION, BUT NOT LESS THAN 2 1/2" CLEAR IN CLASS 45F CONCRETE OR 2" CLEAR IN CLASS 45 CONCRETE. SUCH ITEMS SHALL NOT EXCEED 1/3 OF THE MEMBER THICKNESS.

C-14 REINFORCING BARS AND ACCESSORIES SHALL NOT BE IN CONTACT WITH ANY METAL PIPE, PIPE FLANGE, METAL CONDUIT, OR OTHER METAL PARTS EMBEDDED IN CONCRETE. A MINIMUM CLEARANCE OF 2 INCHES SHALL BE PROVIDED.

C-15 ALL JOINTS WHICH ARE IN MEMBERS IN CONTACT WITH LIQUID OR BELOW GRADE SHALL HAVE A WATERSTOP. CONSTRUCTION JOINTS SHALL HAVE A 6" PVC FLATSTRIP WATERSTOP. EXPANSION JOINTS SHALL HAVE A 9" PVC CENTERBULB WATERSTOP.

C-16 IN VERTICAL JOINTS, WATERSTOP SHALL STOP NO LESS THAN 18" ABOVE THE MAXIMUM WATER SURFACE OR 18" ABOVE GRADE, WHICHEVER IS HIGHER.

C-17 AT JOINT INTERSECTIONS, WATERSTOPS SHALL BE CONNECTED SO AS TO FORM A COMPLETE SEAL USING CONNECTION PIECES AS NEEDED.

C-18 ALL EXPOSED CORNERS SHALL HAVE A 3/4" CHAMFER OR A 1/2" RADIUS TOOLED CORNER.

Drawing Name: G:\SavinAutocad\2060\25-Playland-Mega-3\S\BBS-1001.dwg
Rev#: Projectname: 211001F02 Comments: ----
Printed by: MGodby Date: 24 August 2022 3:02 PM Designed by: ----
Xrefs: [TB_24X36_WestchesterCo_3.dwg] [TSG-SVLOGO.dwg] [BCR-A-04.dwg] [BCRE-101.dwg]

# STRUCTURAL ABBREVIATIONS

| | |
|---|---|
| AB | ANCHOR BOLT |
| ADDL | ADDITIONAL |
| ADH | ADHESIVE |
| ADJ | ADJUSTABLE/ADJACENT |
| AFF | ABOVE FINISHED FLOOR |
| AGG | AGGREGATE |
| AL | ALUMINUM |
| ALT | ALTERNATE |
| APPROX | APPROXIMATE |
| ARCH | ARCHITECTURAL |
| AVG | AVERAGE |
| B | BORING |
| BLDG | BUILDING |
| BM | BEAM/BENCH MARK |
| BOF | BOTTOM OF FOOTING |
| BOS | BOTTOM OF STEEL |
| BOT | BOTTOM |
| BRG | BEARING |
| BT | BOLT |
| C | CHANNEL |
| C TO C | CENTER TO CENTER |
| CANT | CANTILEVER |
| CJ | CONSTRUCTION JOINT |
| CL | CENTER LINE |
| CLR | CLEAR |
| CMU | CONCRETE MASONRY UNIT |
| CO | CLEAN OUT |
| COL | COLUMN |
| CONC | CONCRETE |
| CONST | CONSTRUCTION |
| CONT | CONTINUOUS |
| CONTR | CONTRACTOR |
| CP | CONCRETE PLANK |
| CLJ | CONTROL JOINT |
| CTR | CENTER |
| CY | CUBIC YARD |
| DET | DETAIL |
| DIA (ø) | DIAMETER |
| DIAG | DIAGONAL |
| DIM | DIMENSION |
| DIST | DISTANCE |
| DN | DOWN |
| DO | DITTO |
| DP | DEEP |
| DWG | DRAWING |
| DWL | DOWEL |
| E | EAST |
| EA | EACH |
| EF | EACH FACE |
| EL | ELEVATION |
| ELEV | ELEVATOR |
| ENGR | ENGINEER |
| EMB | EMBEDMENT |
| ENCL | ENCLOSURE |
| ENT | ENTRANCE |
| EQ | EQUAL |
| EQPT | EQUIPMENT |
| EW | EACH WAY |
| EXIST | EXISTING |
| EXP | EXPANSION |
| EXP JT | EXPANSION JOINT |
| EXT | EXTERIOR |
| FAB | FABRICATE |
| FD | FLOOR DRAIN |
| FDN | FOUNDATION |
| FFL | FINISH FLOOR |
| FIN | FINISH |
| FLR | FLOOR |
| FT | FEET |
| FTG | FOOTING |
| F&C | FRAME&COVER |
| F&G | FRAME&GRATE |

| | |
|---|---|
| GA | GAUGE |
| GALV | GALVANIZE |
| GB | GRADE BEAM |
| GR | GRADE |
| GRTG | GRATING |
| HGT | HEIGHT |
| HORZ | HORIZONTAL |
| HP | HIGH POINT |
| HSS | HOLLOW STRUCTURAL STEEL |
| ID | INSIDE DIAMETER |
| IF | INSIDE FACE |
| IN | INCH |
| INCL | INCLUDE |
| INT | INTERIOR |
| INV | INVERT |
| J | JOIST |
| JB | JUNCTION BOX |
| JCT | JUNCTION |
| JT | JOINT |
| L | LENGTH/ANGLE |
| LF | LINEAR FEET |
| LG | LONG |
| LL | LIVE LOAD |
| LLH | LONG LEG HORIZONTAL |
| LLV | LONG LEG VERTICAL |
| LOC | LOCATION |
| LP | LOW POINT |
| LVR | LOUVER |
| LWL | LOW WATER LEVEL |
| MAS | MASONRY |
| MATL | MATERIAL |
| MAX | MAXIMUM |
| MECH | MECHANICAL |
| MET | METAL |
| MFR | MANUFACTURER |
| MG | MILLION GALLONS |
| MGD | MILLION GALLONS PER DAY |
| MH | MANHOLE |
| MIN | MINIMUM |
| MISC | MISCELLANEOUS |
| MO | MASONRY OPENING |
| MOD | MODIFY/MODIFIED |
| MTD | MOUNTED |
| N | NORTH |
| NA | NOT APPLICABLE |
| NIC | NOT IN CONTRACT |
| NO | NUMBER |
| NOM | NOMINAL |
| NTS | NOT TO SCALE |
| OC | ON CENTER |
| OD | OUTSIDE DIAMETER |
| OF | OUTSIDE FACE |
| OPNG | OPENING |
| OPP | OPPOSITE |
| OT | OPEN TRUSS |
| OVHD | OVERHEAD |
| PAR | PARALLEL |
| PC | POINT OF CURVE/PIECE |
| PCO | PILE CUT OFF |
| PI | POINT OF INTERSECTION |
| PL | PLATE/PROPERTY LINE |
| PREFAB | PREFABRICATED |
| PSF | POUNDS PER SQUARE FOOT |
| PSI | POUNDS PER SQUARE INCH |
| PT | POINT OF TANGENCY |
| PTN | PARTITION |
| PVMT | PAVEMENT |
| QTY | QUANTITY |

| | |
|---|---|
| R | RISER |
| RAD | RADIUS |
| RCP | REINFORCED CONCRETE PIPE |
| RD | ROOF DRAIN |
| REINF | REINFORCEMENT |
| RECT | RECTANGULAR |
| REM | REMOVE |
| REQD | REQUIRED |
| RF | ROOF |
| RO | ROUGH OPENING |
| S | SOUTH |
| SCHED | SCHEDULE |
| SECT | SECTION |
| SF | SQUARE FEET |
| SHT | SHEET |
| SIM | SIMILAR |
| SJ | STEEL JOIST |
| SPEC | SPECIFICATION |
| SQ | SQUARE |
| SS | STAINLESS STEEL |
| STA | STATION |
| STD | STANDARD |
| STR | STAIR |
| STIF | STIFFENER |
| STIR | STIRRUP |
| STL | STEEL |
| STRUC | STRUCTURAL |
| SUB | SUBSTITUTE |
| SYM | SYMMETRICAL |
| T | TREAD |
| T&B | TOP AND BOTTOM |
| T&G | TOUNGE AND GROOVE |
| TAN | TANGENT |
| TEMP | TEMPERATURE |
| THK | THICK |
| TOC | TOP OF CURB/CONCRETE |
| TOD | TOP OF DECK |
| TOF | TOP OF FOOTING |
| TOM | TOP OF MASONRY/MANHOLE |
| TOS | TOP OF SLAB/STEEL |
| TOW | TOP OF WALL |
| TYP | TYPICAL |
| UNO | UNLESS NOTED OTHERWISE |
| VERT | VERTICAL |
| W | WEST/WIDTH/WIDE FLANGE |
| W/ | WITH |
| W/O | WITHOUT |
| WL | WATER LEVEL |
| WP | WATERPROOF/WALL PIPE |
| WPT | WALL PENETRATING TYPE |
| WS | WATER SURFACE |
| WT | WEIGHT |
| WWF | WELDED WIRE FABRIC |
| YD | YARD |
| YR | YEAR |

# SYMBOLS

- UNDISTURBED EARTH
- COMPACTED BACKFILL
- SELECT GRANULAR FILL MATERIAL
- CONCRETE BLOCK
- BRICK
- FINISHED WOOD
- CONCRETE
- ROUGH WOOD
- RIGID INSULATION
- REINFORCED STEEL IN CONCRETE
- WELDED WIRE FABRIC
- BLANKET INSULATION
- STEEL
- DENOTES MOMENT CONNECTION

Drawing Name: G:\SavinAutocad\2060\25-Playland-Mega-3\S\BBS-1002.dwg
Rev#: Projectname: ---- Comments: All inquiries regarding this drawing(s) or project should be made to NYC Environmental Protection, Bureau of Engineering Design and Construction.
Printed by: ---- Date: 8/23/2022 Time: 2:44:41 PM Designed by: ----

CONSULTANT INFORMATION

Savin Engineers, P.C.

CONSULTANT SEAL

STATE OF NEW YORK — LICENSED PROFESSIONAL ENGINEER — No. 085362

| REVISION NUMBER | DATE | MADE BY | APP'D BY | REVISION |
|---|---|---|---|---|
| | | | | |

RECORD DRAWING CERTIFICATION

☐ AS BUILT – CHANGES AS NOTED ☐ AS BUILT – NO CHANGES

CONTRACTOR
NAME
SIGNATURE
TITLE DATE

PROJECT COORDINATOR
NAME
SIGNATURE
TITLE DATE

WESTCHESTER COUNTY, NEW YORK
DEPARTMENT OF PUBLIC WORKS AND TRANSPORTATION
DIVISION OF ENGINEERING

**INFRASTRUCTURE REHABILITATION - PHASE 3**
**PLAYLAND PARK, RYE, NEW YORK**
**NORTHEAST BURGER BARN**
**STRUCTURAL ABBREVIATIONS AND SYMBOLS**

| | |
|---|---|
| CONTRACT NUMBER | 22-523 |
| SHEET NUMBER | BB-S-02 |
| DWG NO.: | |
| SCALE: | AS SHOWN |
| DATE: | 8/23/2022 |
| DPW FILE NUMBER | 1-118-S-798-0 |
| REV. NO. | 0 |

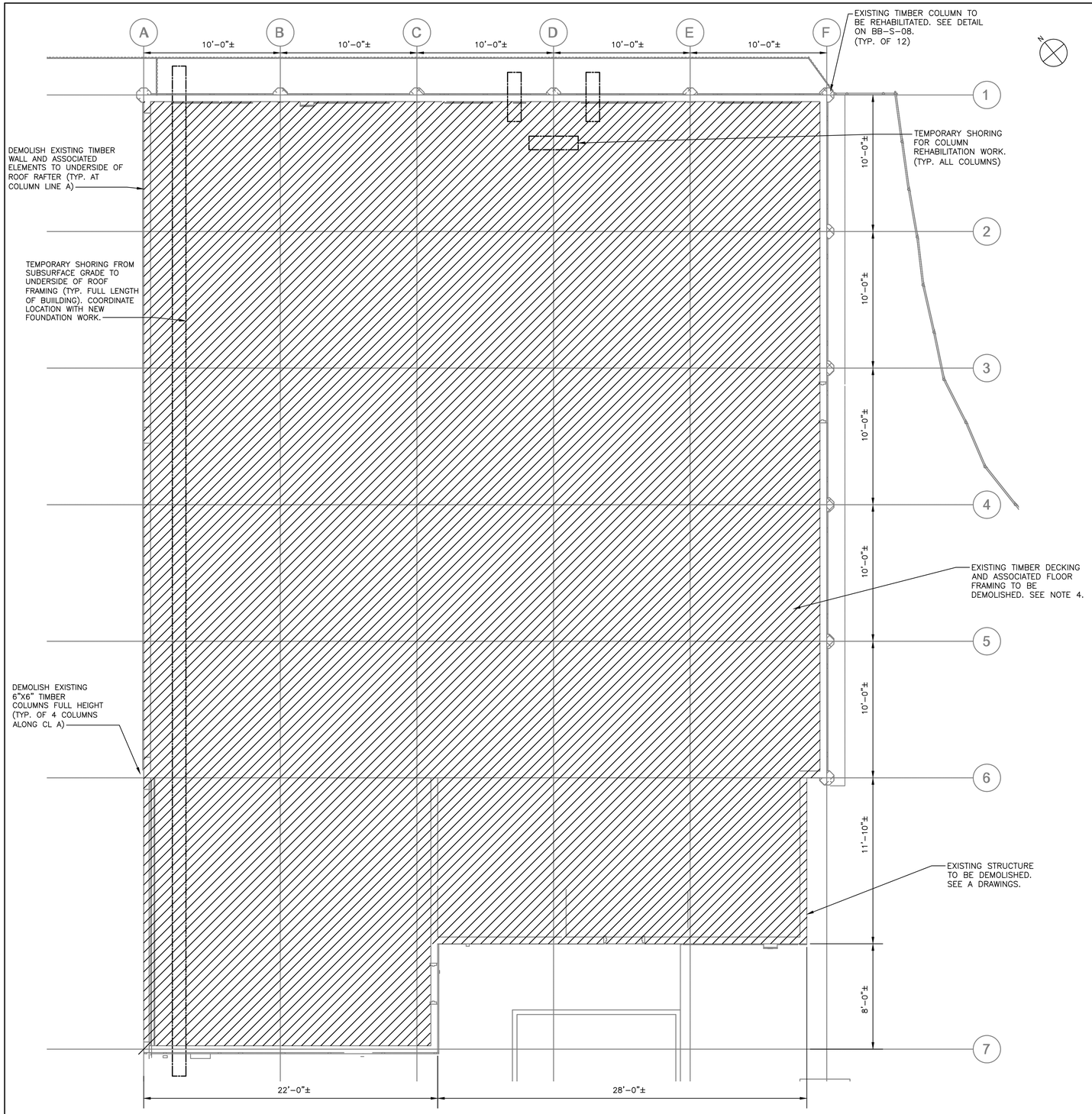


DEMOLITION – GROUND FLOOR PLAN
1/4"=1'-0"

NOTES:

1. FOR STRUCTURAL NOTES, SEE DRAWING BB-S-01.
2. FOR STRUCTURAL ABBREVIATIONS AND SYMBOLS, SEE DRAWING BB-S-02.
3. REHABILITATION OF THE NORTH EAST ARCADES INCLUDES VARIOUS ELEMENTS SLATED FOR REMOVAL AND REPLACEMENT IN-KIND FOR DETERIORATED MEMBERS. CONTRACTOR IS TO ALERT THE ENGINEER 6 WEEKS PRIOR TO START OF REHABILITATION WORK TO PERFORM FIELD INSPECTIONS OF THE REPAIR ITEMS IDENTIFIED BELOW. UPON COMPLETION OF THE FIELD INSPECTION WORK, THE ENGINEER WILL PROVIDE TO THE CONTRACTOR IN WRITING THE DEFINED LIMITS OF REPLACEMENT WORK. REHABILITATION WORK FOR VARIOUS ELEMENTS SHALL BE PERFORMED PER DETAILS AND SEQUENCES AS OUTLINED DRAWINGS, AR-S-03, AR-S-04, AR-S-05, AR-S-06, AR-S-07, AND AR-S-08. FOR THE PURPOSES OF BIDDING, CONTRACTOR SHALL INCLUDE IN THEIR BID THE QUANTITIES FOR EACH ELEMENT AS MENTIONED BELOW.

| STRUCTURAL ELEMENTS TO BE REPAIRED/REPLACED | QUANTITY | UNITS | REMARKS |
|---|---|---|---|
| COLUMN EPOXY CRACK REPAIR | 80 | LF | SEE DETAILS ON AR-S-09 |

EXECUTION OF THE ABOVE REHABILITATING WORK SHALL BE COORDINATED WITH OVERALL CONSTRUCTION SEQUENCE AND PHASING. SEE SPECIFICATIONS.

4. EXISTING FRAMING INCLUDES 3"X12" TIMBER GIRDERS AT 6'-0" O.C. RUNNING NORTH TO SOUTH AND 3"X6" TIMBER FLOOR JOISTS AT 16" O.C. RUNNING EAST TO WEST.

0 4' 8'
SCALE: 1/4" = 1'-0"

CONSULTANT INFORMATION
Savin Engineers, P.C.

CONSULTANT SEAL

| REVISION NUMBER | DATE | MADE BY | APP'D BY | REVISION |
|---|---|---|---|---|

RECORD DRAWING CERTIFICATION
☐ AS BUILT – CHANGES AS NOTED ☐ AS BUILT – NO CHANGES

CONTRACTOR
NAME
SIGNATURE
TITLE DATE

PROJECT COORDINATOR
NAME
SIGNATURE
TITLE DATE

WESTCHESTER COUNTY, NEW YORK
DEPARTMENT OF PUBLIC WORKS AND TRANSPORTATION
DIVISION OF ENGINEERING

INFRASTRUCTURE REHABILITATION - PHASE 3
PLAYLAND PARK, RYE, NEW YORK
NORTHEAST BURGER BARN
DEMOLITION - GROUND FLOOR PLAN

CONTRACT NUMBER 22-523
SHEET NUMBER BB-S-03
DWG NO.: 50 of 664
SCALE: AS SHOWN
DATE: 8/23/2022
DPW FILE NUMBER 1-118-S-799-0
REV. NO. 0

Drawing Name: \\se-fs-01\Environmental\2060.25 – Playland Rehabilitation\04 – Design\MEGA CONTRACT #3\Drawings\CADD\S\BBS-1003.dwg
Projectname: 211001F02 Comments: ----
Printed by: ######## Date: 26 August 2022 11:43 AM Designed by: ----

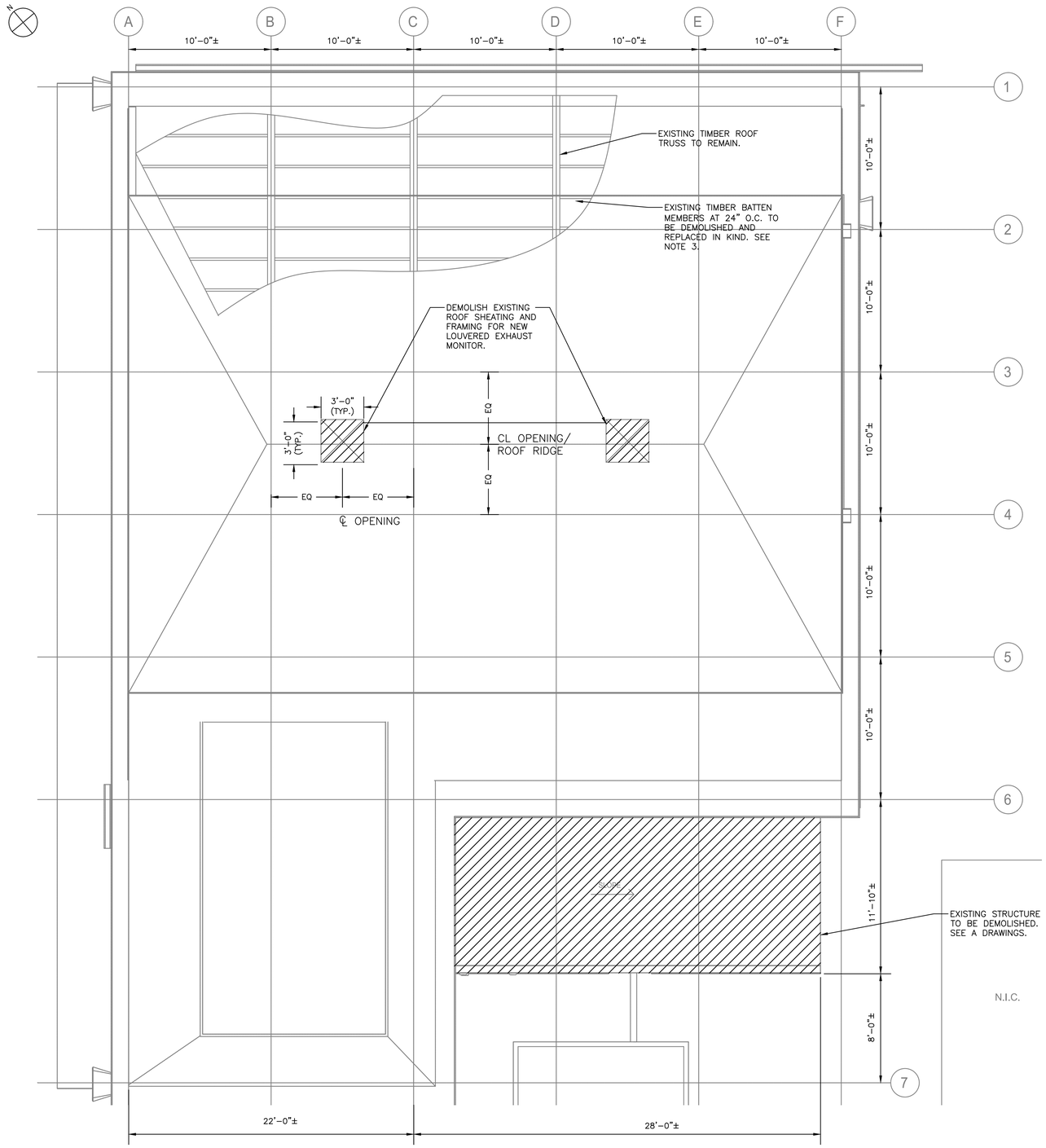


DEMOLITION – ROOF PLAN

1/4"=1'-0"

NOTES:

1. FOR STRUCTURAL NOTES, SEE DRAWING BB–S–01.
2. FOR STRUCTURAL ABBREVIATIONS AND SYMBOLS, SEE DRAWING BB–S–02.
3. REHABILITATION OF THE NORTH EAST ARCADES INCLUDES VARIOUS ELEMENTS SLATED FOR REMOVAL AND REPLACEMENT IN–KIND FOR DETERIORATED MEMBERS. CONTRACTOR IS TO ALERT THE ENGINEER 6 WEEKS PRIOR TO START OF REHABILITATION WORK TO PERFORM FIELD INSPECTIONS OF THE REPAIR ITEMS IDENTIFIED BELOW. UPON COMPLETION OF THE FIELD INSPECTION WORK, THE ENGINEER WILL PROVIDE TO THE CONTRACTOR IN WRITING THE DEFINED LIMITS OF REPLACEMENT WORK. REHABILITATION WORK FOR VARIOUS ELEMENTS SHALL BE PERFORMED PER DETAILS AND SEQUENCES AS OUTLINED DRAWINGS, AR–S–03, AR–S–04, AR–S–05, AR–S–06, AR–S–07, AND AR–S–08. FOR THE PURPOSES OF BIDDING, CONTRACTOR SHALL INCLUDE IN THEIR BID THE QUANTITIES FOR EACH ELEMENT AS MENTIONED BELOW.

| STRUCTURAL ELEMENTS TO BE REPAIRED/REPLACED | QUANTITY | UNITS | REMARKS |
|---|---|---|---|
| 2"x6" TIMBER BATTEN MEMBERS | 25 | EA | APPROXIMATELY 10 FT EACH |
| 1"x6" TIMBER ROOF DECKING | 1000 | EA | |

NOTE THAT BATTEN MEMBER AND ROOF DECKING LOCATIONS MAY BE ANYWHERE WITHIN THE LIMITS OF THE ROOF. EXECUTIONS OF THE ABOVE REHABILITATING WORK SHALL BE COORDINATED WITH OVERALL CONSTRUCTION SEQUENCE AND PHASING. SEE SPECIFICATION.

0 4' 8'
SCALE: 1/4" = 1'-0"

CONSULTANT INFORMATION

Savin Engineers, P.C.

CONSULTANT SEAL

STATE OF NEW YORK · MICHAEL J. MCGOVERN · LICENSED PROFESSIONAL ENGINEER · LIC. 085394

| REVISION NUMBER | DATE | MADE BY | APP'D BY | REVISION |
|---|---|---|---|---|

RECORD DRAWING CERTIFICATION

☐ AS BUILT – CHANGES AS NOTED ☐ AS BUILT – NO CHANGES

CONTRACTOR
NAME
SIGNATURE
TITLE DATE

PROJECT COORDINATOR
NAME
SIGNATURE
TITLE DATE

WESTCHESTER COUNTY, NEW YORK
DEPARTMENT OF PUBLIC WORKS AND TRANSPORTATION
DIVISION OF ENGINEERING

**INFRASTRUCTURE REHABILITATION - PHASE 3**
**PLAYLAND PARK, RYE, NEW YORK**
**NORTHEAST BURGER BARN**
**DEMOLITION - ROOF PLAN**

| CONTRACT NUMBER | SHEET NUMBER |
|---|---|
| 22-523 | BB-S-04 |

DWG NO.:
SCALE: AS SHOWN
DATE: 8/23/2022
DPW FILE NUMBER 1-118-S-800-0 REV. NO. 0



Drawing Name: G:\SavinAutocad\2060\25-Playland-Mega-3\S\BBS-1004.dwg
Rev#: Projectname: 211001F02 Comments: ----
Printed by: MGodby Date: 24 August 2022 3:03 PM Designed by: ----
Xrefs: [TB_24X36_WestchesterCo_3.dwg] [TSG-SVL060.dwg] [AR-A-03.dwg] [AR-S-1002.dwg]

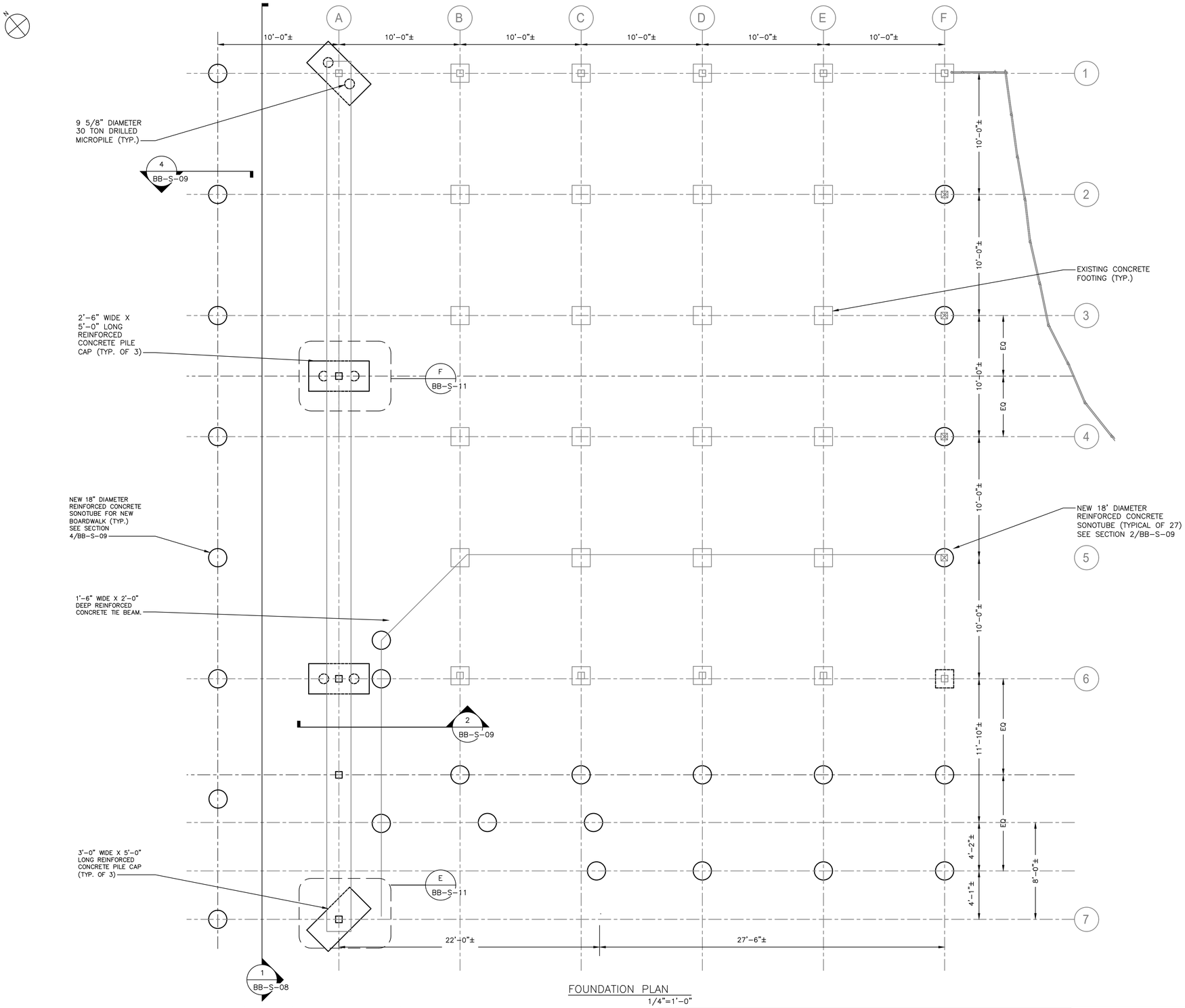


FOUNDATION PLAN
1/4"=1'-0"

NOTES:

1. FOR STRUCTURAL NOTES, SEE DRAWING BB-S-01.
2. FOR STRUCTURAL ABBREVIATIONS AND SYMBOLS, SEE DRAWING BB-S-02.

0 4' 8'
SCALE: 1/4" = 1'-0"

Drawing Name: \\se-fs-01\Environmental\2000.25 - Playland Rehabilitation\04 - Design\MEGA
CONTRACT #3\Drawings\CADD\S\BBS-1012.dwg
Projectname: 211001F02 Comments: ----
Printed by: ######## Date: 26 August 2022 12:35 PM Designed by: ----

CONSULTANT INFORMATION
Savin Engineers, P.C.

CONSULTANT SEAL

| REVISION NUMBER | DATE | MADE BY | APP'D BY | REVISION |
|---|---|---|---|---|

RECORD DRAWING CERTIFICATION
AS BUILT - CHANGES AS NOTED
AS BUILT - NO CHANGES

CONTRACTOR
NAME
SIGNATURE
TITLE DATE

PROJECT COORDINATOR
NAME
SIGNATURE
TITLE DATE

WESTCHESTER COUNTY, NEW YORK
DEPARTMENT OF PUBLIC WORKS AND TRANSPORTATION
DIVISION OF ENGINEERING

INFRASTRUCTURE REHABILITATION - PHASE 3
PLAYLAND PARK, RYE, NEW YORK
NORTHEAST BURGER BARN
FOUNDATION PLAN

| | |
|---|---|
| CONTRACT NUMBER | 22-523 |
| SHEET NUMBER | BB-S-05 |
| DWG NO.: | 52 of 664 |
| SCALE: | AS SHOWN |
| DATE: | 8/23/2022 |
| DPW FILE NUMBER | 1-118-S-801-0 |
| REV. NO. | 0 |

NOTES:

1. FOR STRUCTURAL NOTES, SEE DRAWING BB-S-01.
2. FOR STRUCTURAL ABBREVIATIONS AND SYMBOLS, SEE DRAWING BB-S-02.

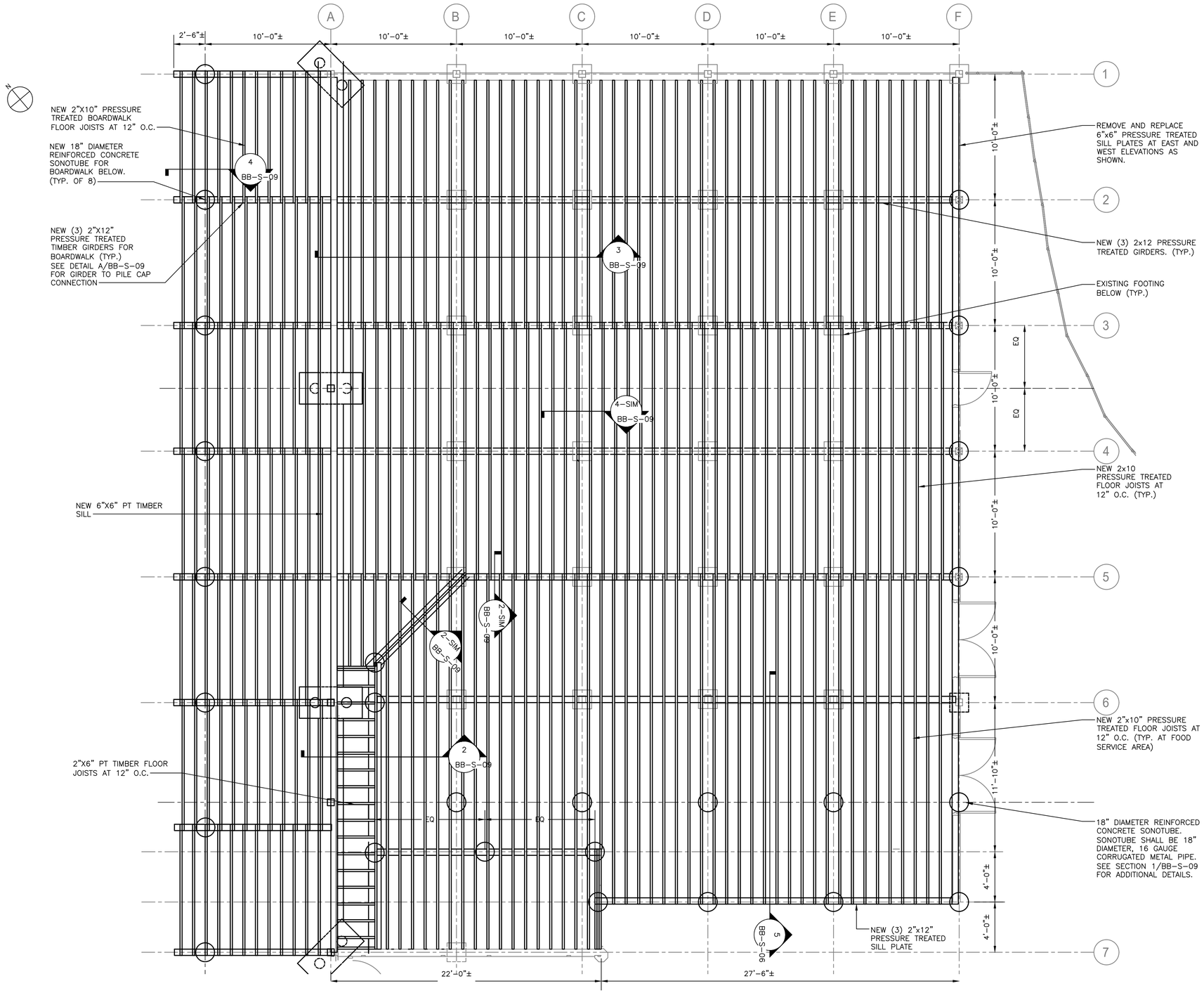


GROUND FLOOR PLAN
1/4"=1'-0"

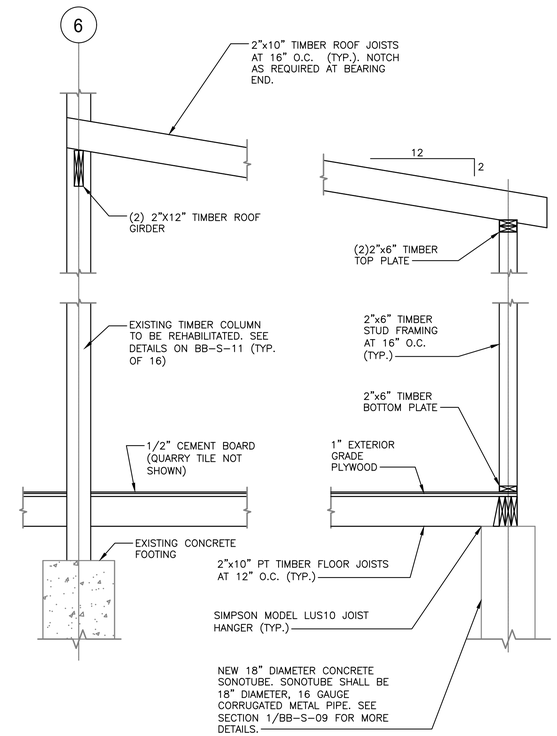


5 SECTION
BB-S-06 SCALE: N.T.S.

0 4' 8'
SCALE: 1/4" = 1'-0"

Drawing Name: \\se-fs-01\Environmental\2060.25 - Playland Rehabilitation\04 - Design\MEGA
CONTRACT #3\Drawings\CADD\S\BBS-1005.dwg
Projectname: 211001F02 Comments: ----
Printed by: ######## Date: 26 August 2022 12:26 PM Designed by: ----

CONSULTANT INFORMATION
Savin Engineers, P.C.

CONSULTANT SEAL

| REVISION NUMBER | DATE | MADE BY | APP'D BY | REVISION |
|---|---|---|---|---|

RECORD DRAWING CERTIFICATION
AS BUILT - CHANGES AS NOTED
AS BUILT - NO CHANGES

CONTRACTOR
NAME
SIGNATURE
TITLE DATE

PROJECT COORDINATOR
NAME
SIGNATURE
TITLE DATE

WESTCHESTER COUNTY, NEW YORK
DEPARTMENT OF PUBLIC WORKS AND TRANSPORTATION
DIVISION OF ENGINEERING

INFRASTRUCTURE REHABILITATION - PHASE 3
PLAYLAND PARK, RYE, NEW YORK
NORTHEAST BURGER BARN
GROUND FLOOR PLAN

| | |
|---|---|
| CONTRACT NUMBER | 22-523 |
| SHEET NUMBER | BB-S-06 |
| DWG NO.: | 53 of 664 |
| SCALE: | AS SHOWN |
| DATE: | 8/23/2022 |
| DPW FILE NUMBER | 1-118-S-802-0 |
| REV. NO. | 0 |

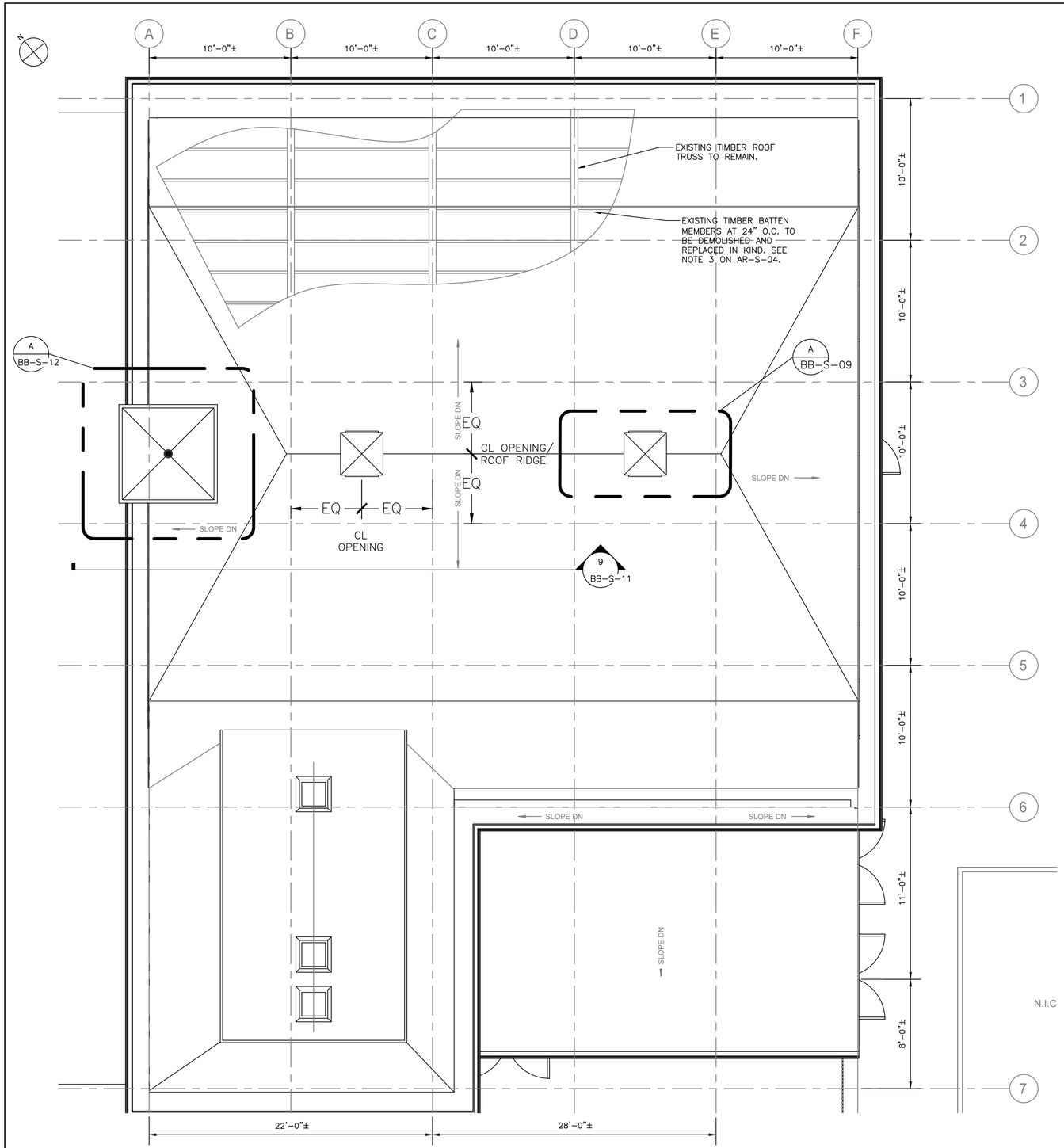


NORTHEAST ARCADE – ROOF PLAN
1/4"=1'-0"

N.I.C

NOTES:

1. FOR STRUCTURAL NOTES, SEE DRAWING BB-S-01.
2. FOR STRUCTURAL ABBREVIATIONS AND SYMBOLS, SEE DRAWING BB-S-02.

0 4' 8'
SCALE: 1/4" = 1'-0"

Drawing Name: \\se-fs-01\Environmental\2060.25 - Playland Rehabilitation\04 - Design\MEGA CONTRACT #3\Drawings\CADD\S\BBS-1006.dwg
Projectname: 211001F02 Comments:
Printed by: ### Date: 26 August 2022 11:46 AM Designed by:

CONSULTANT INFORMATION
Savin Engineers, P.C.

CONSULTANT SEAL
STATE OF NEW YORK
LICENSED PROFESSIONAL ENGINEER

| REVISION NUMBER | DATE | MADE BY | APP'D BY | REVISION |
|---|---|---|---|---|

RECORD DRAWING CERTIFICATION
☐ AS BUILT – CHANGES AS NOTED ☐ AS BUILT – NO CHANGES

CONTRACTOR
NAME
SIGNATURE
TITLE DATE

PROJECT COORDINATOR
NAME
SIGNATURE
TITLE DATE

WESTCHESTER COUNTY, NEW YORK
DEPARTMENT OF PUBLIC WORKS AND TRANSPORTATION
DIVISION OF ENGINEERING

**INFRASTRUCTURE REHABILITATION - PHASE 3**
**PLAYLAND PARK, RYE, NEW YORK**
**NORTHEAST BURGER BARN**
**ROOF PLAN**

| | |
|---|---|
| CONTRACT NUMBER | 22-523 |
| SHEET NUMBER | BB-S-07 |
| DWG NO.: | 54 of 664 |
| SCALE: | AS SHOWN |
| DATE: | 8/23/2022 |
| DPW FILE NUMBER | 1-118-S-803-0 |
| REV. NO.: | 0 |

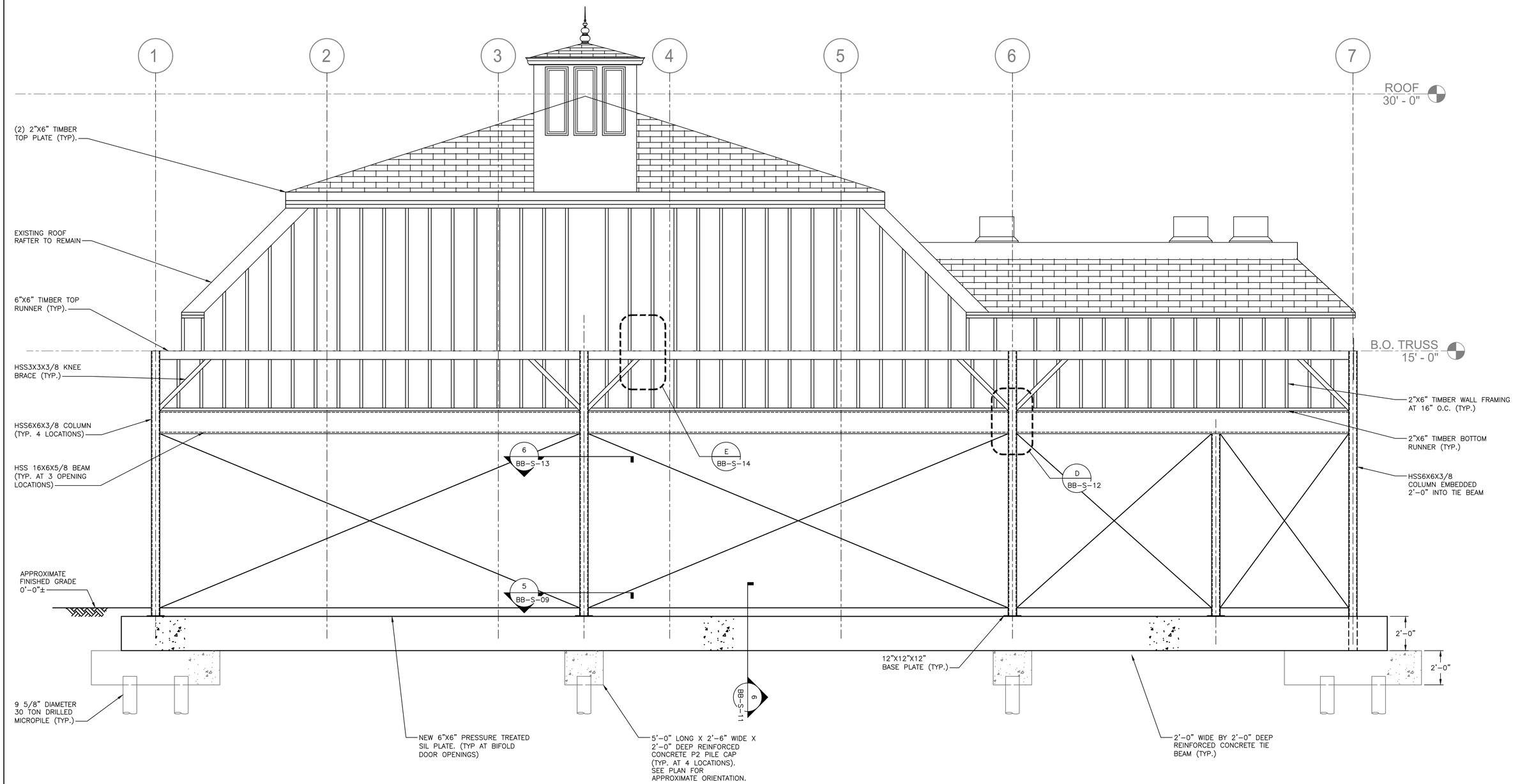


1 BB-S-05 SECTION
SCALE: 3/8 = 1'-0"

Drawing Name: \\se-fs-01\Environmental\2060.25 - Playland Rehabilitation\04 - Design\MEGA CONTRACT #3\Drawings\CADD\S\BBS-1010.dwg
Projectname: ---- Comments: ----
Printed by: ######## Date: 26 August 2022 11:52 AM Designed by: ----

CONSULTANT INFORMATION

Savin Engineers, P.C.

CONSULTANT SEAL

| REVISION NUMBER | DATE | MADE BY | APP'D BY | REVISION |
|---|---|---|---|---|

RECORD DRAWING CERTIFICATION

☐ AS BUILT - CHANGES AS NOTED ☐ AS BUILT - NO CHANGES

CONTRACTOR
NAME
SIGNATURE
TITLE DATE

PROJECT COORDINATOR
NAME
SIGNATURE
TITLE DATE

WESTCHESTER COUNTY, NEW YORK
DEPARTMENT OF PUBLIC WORKS AND TRANSPORTATION
DIVISION OF ENGINEERING

**INFRASTRUCTURE REHABILITATION - PHASE 3**
**PLAYLAND PARK, RYE, NEW YORK**
**NORTHEAST BURGER BARN**
**SECTIONS AND DETAILS**

| | |
|---|---|
| CONTRACT NUMBER | 22-523 |
| SHEET NUMBER | BB-S-08 |
| DWG NO.: | 55 of 664 |
| SCALE: | AS SHOWN |
| DATE: | 8/23/2022 |
| DPW FILE NUMBER | 1-118-S-804-0 |
| REV. NO. | 0 |

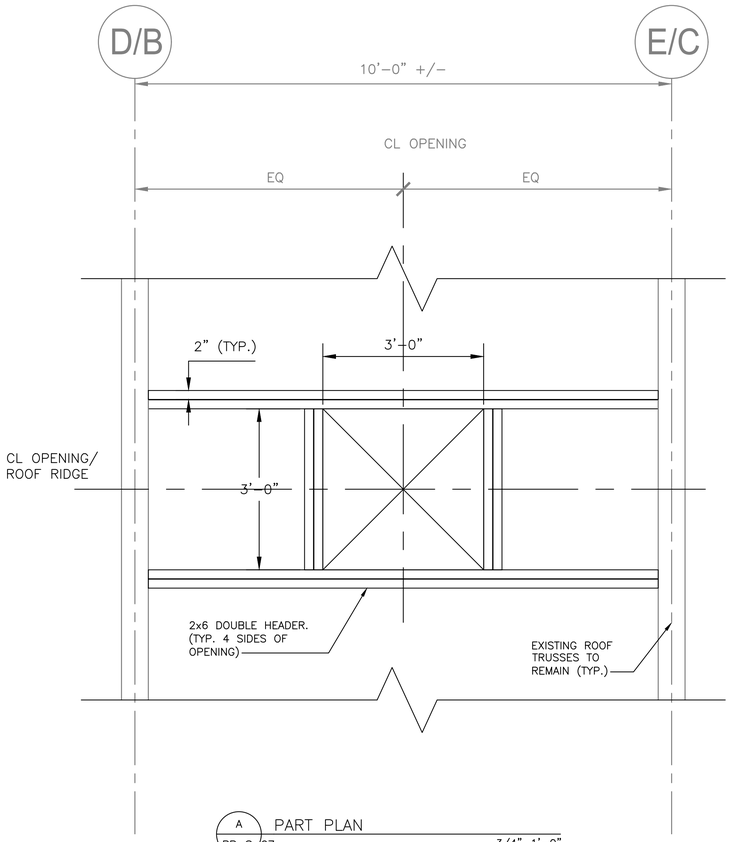


A BB-S-07 PART PLAN 3/4"=1'-0"

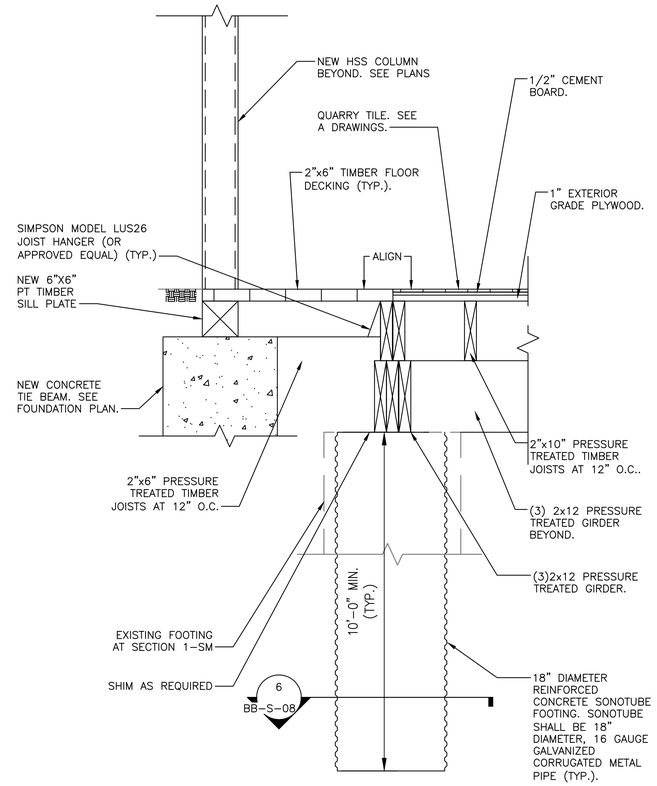


2 BB-S-10 SECTION 1"=1'-0"

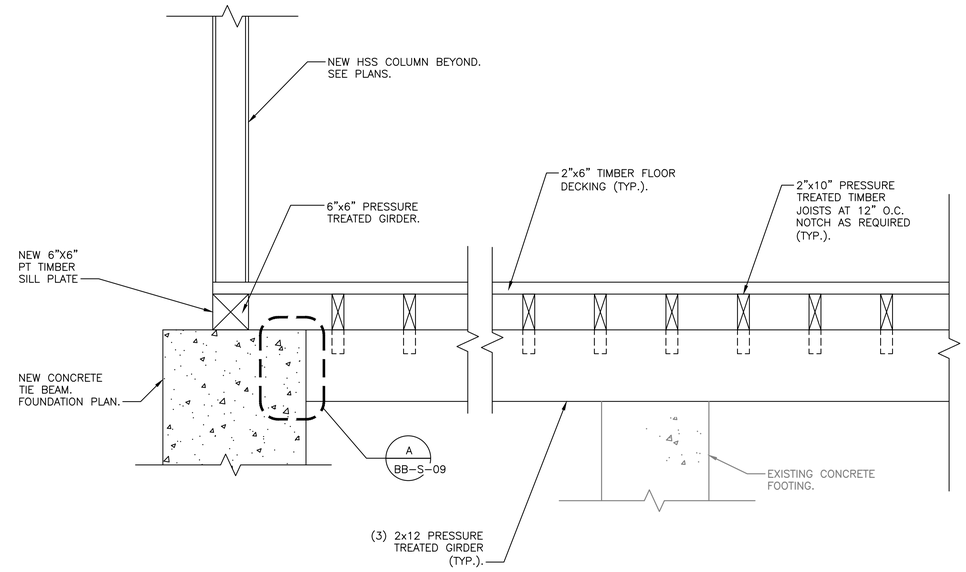


3 BB-S-06 SECTION 1"=1'-0"

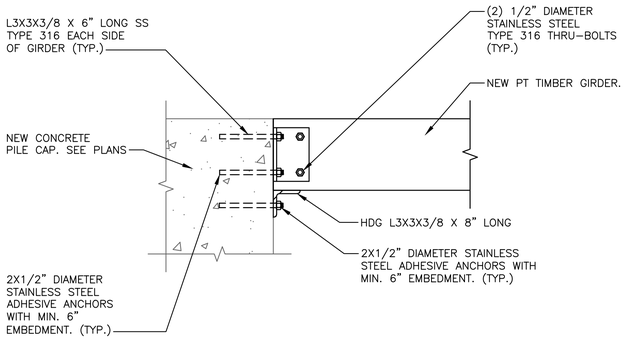


A BB-S-09 DETAIL – TYPICAL GIRDER TO CONCRETE CONNECTION N.T.S.

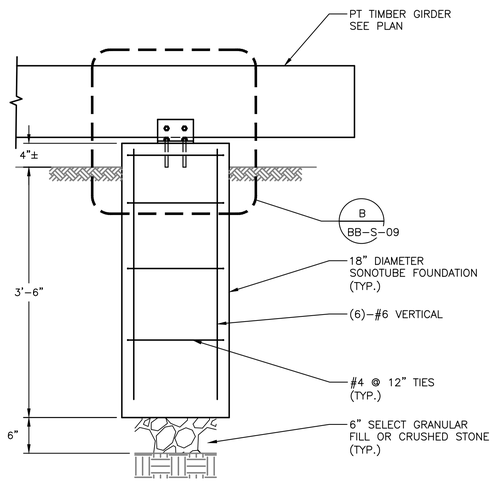


4 BB-S-06 TYPICAL BOARDWALK SONOTUBE SECTION 1" = 1'-0"

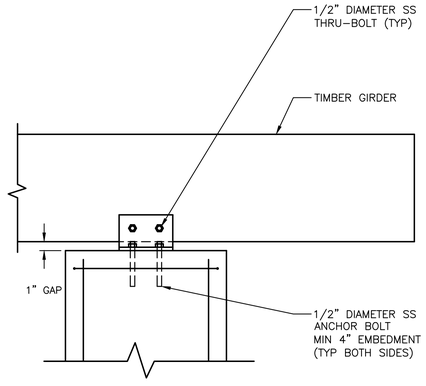


B BB-S-09 DETAIL 1 1/2" = 1'-0"

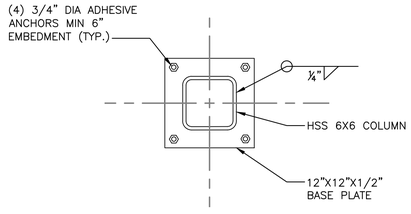


5 BB-S-08 SECTION SCALE: N.T.S.

CONSULTANT INFORMATION

Savin Engineers, P.C.

CONSULTANT SEAL

| REVISION NUMBER | DATE | MADE BY | APP'D BY | REVISION |
|---|---|---|---|---|

RECORD DRAWING CERTIFICATION

☐ AS BUILT – CHANGES AS NOTED ☐ AS BUILT – NO CHANGES

CONTRACTOR: NAME / SIGNATURE / TITLE / DATE

PROJECT COORDINATOR: NAME / SIGNATURE / TITLE / DATE

WESTCHESTER COUNTY, NEW YORK
DEPARTMENT OF PUBLIC WORKS AND TRANSPORTATION
DIVISION OF ENGINEERING

**INFRASTRUCTURE REHABILITATION - PHASE 3**
**PLAYLAND PARK, RYE, NEW YORK**
**NORTHEAST BURGER BARN**
**SECTIONS**

| CONTRACT NUMBER | SHEET NUMBER |
|---|---|
| 22-523 | BB-S-09 |

DWG NO.: 56 of 664
SCALE: AS SHOWN
DATE: 8/23/2022
DPW FILE NUMBER: 1-118-S-805-0 REV. NO.: 0

Drawing Name: \\se-fs-01\Environmental\2060.25 - Playland Rehabilitation\04 - Design\Mt.GA
CONTRACT #3\Drawings\CADD\xref\tb_24x36_westchesterco_3.dwg
Projectname: ---- Comments: All inquiries regarding this drawing(s) or project should be made to NYC Environmental Protection, Bureau of Engineering Design and Construction.
Printed by: ### Date: 26 August 2022 12:00 PM Designed by: ---

## NOTES:

CONTRACTOR SHALL SUBMIT A COLUMN REPAIR SEQUENCE OF CONSTRUCTION TO ENGINEER FOR REVIEW. THE FOLLOWING SHALL BE THE MINIMUM REQUIRED.

1. TEMPORARY SHORING AT EACH COLUMN LOCATION SHALL HAVE A MINIMUM 10–TON CAPACITY.
2. COLUMN REPAIR SHALL BE LIMITED TO MAXIMUM 2 COLUMNS AT A TIME. COLUMNS UNDER REPAIR MUST NOT BE ADJACENT TO EACH OTHER.
3. ALL HARDWARE SHALL BE TYPE 316 STAINLESS STEEL, UNLESS OTHERWISE NOTED.

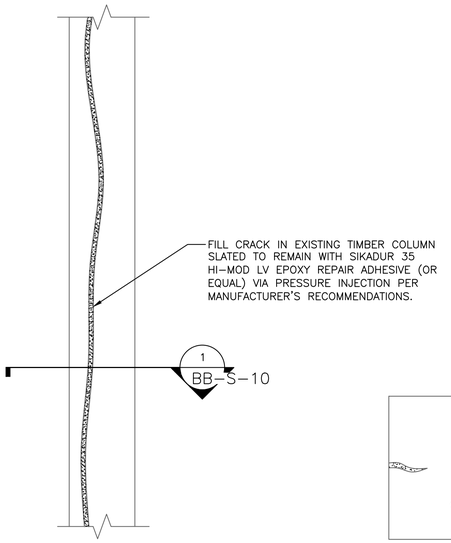


SECTION VIEW
SCALE: N.T.S.

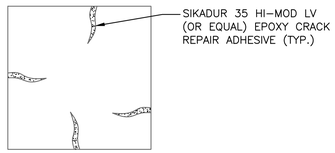


1 BB–S–10 SECTION
N.T.S.

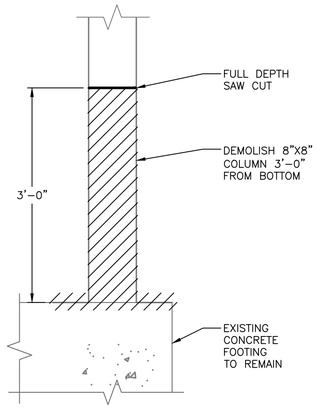


DEMOLITION
N.T.S.

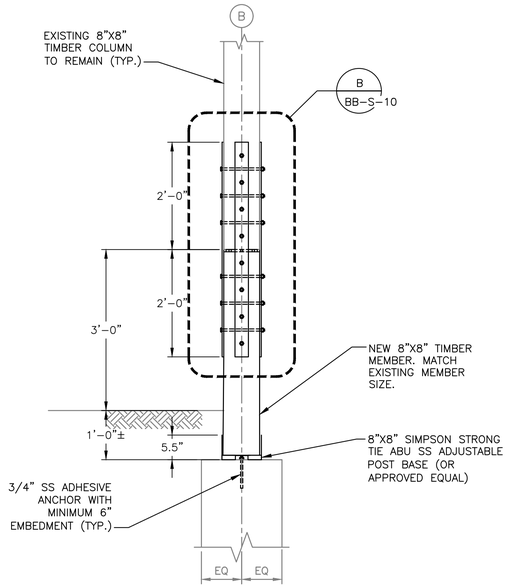


SECTION
SCALE: 3/4 = 1'–0"

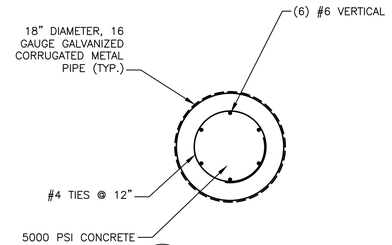


6 BB–S–09 SECTION
SCALE: 1" = 1'–0"

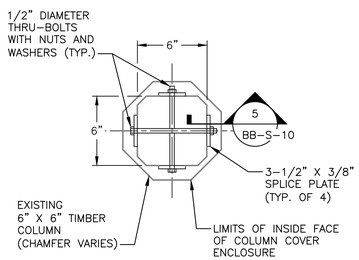


2 BB–S–10 SECTION
SCALE: 1 1/2 = 1'–0"

BB–S–10

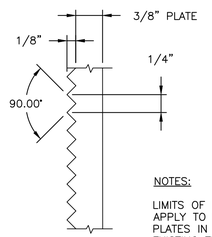


NOTES:

LIMITS OF KNURLING SHALL APPLY TO FACE OF ALL SPLICE PLATES IN CONTACT WITH EXISTING TIMBER COLUMN. KNURLING SHALL RUN AXIALLY AND HORIZONTALLY.

5 BB–S–10 SECTION
SCALE: N.T.S.

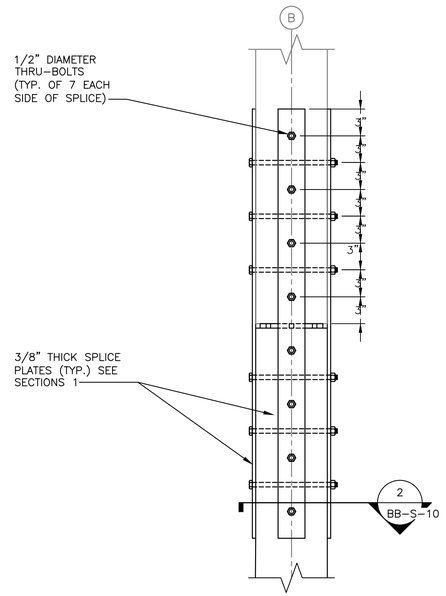


B BB–S–10 DETAIL
SCALE: 1 1/2 = 1'–0"

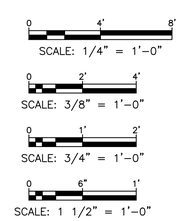


CONSULTANT INFORMATION

Savin Engineers, P.C.

CONSULTANT SEAL

| REVISION NUMBER | DATE | MADE BY | APP'D BY | REVISION |
|---|---|---|---|---|
| | | | | |

RECORD DRAWING CERTIFICATION

☐ AS BUILT – CHANGES AS NOTED ☐ AS BUILT – NO CHANGES

CONTRACTOR
NAME
SIGNATURE
TITLE DATE

PROJECT COORDINATOR
NAME
SIGNATURE
TITLE DATE

WESTCHESTER COUNTY, NEW YORK
DEPARTMENT OF PUBLIC WORKS AND TRANSPORTATION
DIVISION OF ENGINEERING

**INFRASTRUCTURE REHABILITATION - PHASE 3**
**PLAYLAND PARK, RYE, NEW YORK**
**NORTHEAST BURGER BARN**
**SECTIONS AND DETAILS**

| | |
|---|---|
| CONTRACT NUMBER | 22-523 |
| SHEET NUMBER | BB-S-10 |
| DWG NO.: | 57 of 664 |
| SCALE: | AS SHOWN |
| DATE: | 8/23/2022 |
| DPW FILE NUMBER | 1-118-S-806-0 |
| REV. NO.: | 0 |

Drawing Name: \\se-fs-01\Environmental\2060.25 - Playland Rehabilitation\04 - Design\MEGA CONTRACT #3\Drawings\CADD\S\BBS-1013.dwg
Projectname: ---- Comments: ----
Plotted by: ######## Date: 26 August 2022 ~~Designed by: ----~~

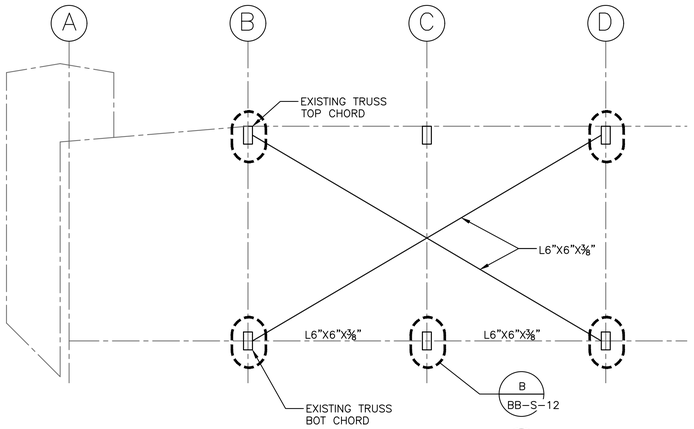


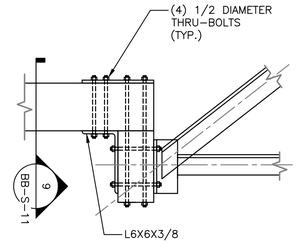


E BB-S-12 DETAIL 1/4"=1'-0"

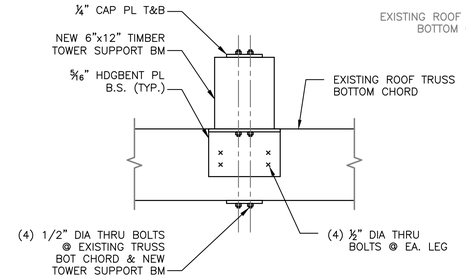


9 BB-S-11 SECTION 1/4"=1'-0"

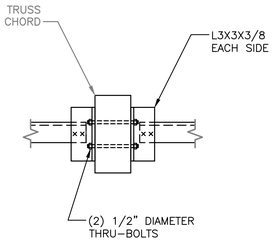


B BB-S-11 DETAIL 1/4"=1'-0"

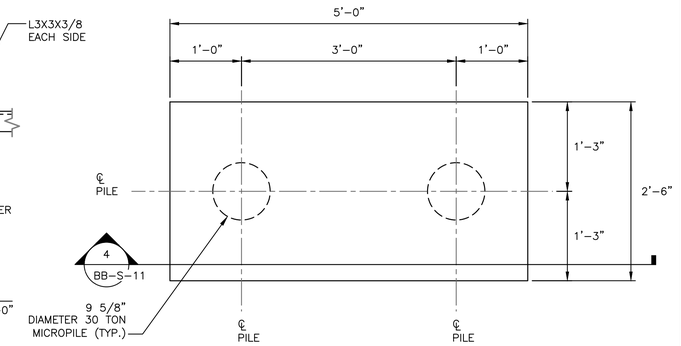


F BB-S-05 PART PLAN 1"=1'-0"

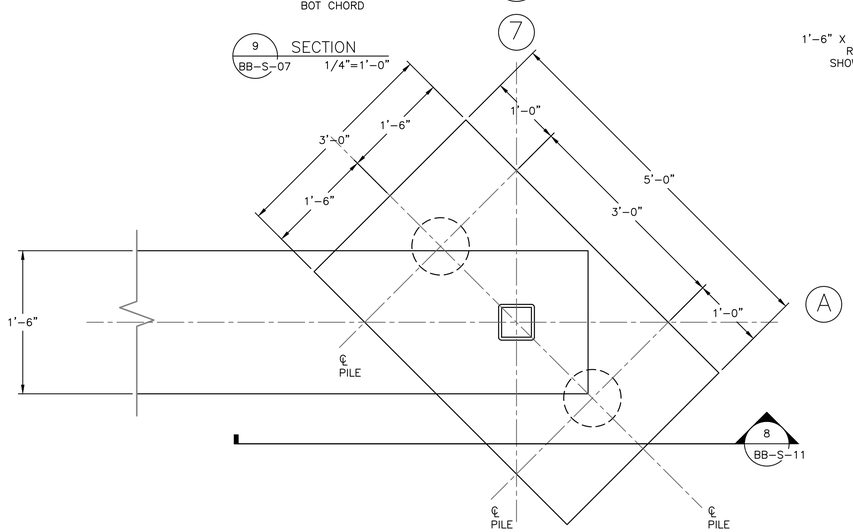


9 BB-S-07 SECTION 1/4"=1'-0"

E BB-S-05 PART PLAN 1"=1'-0"

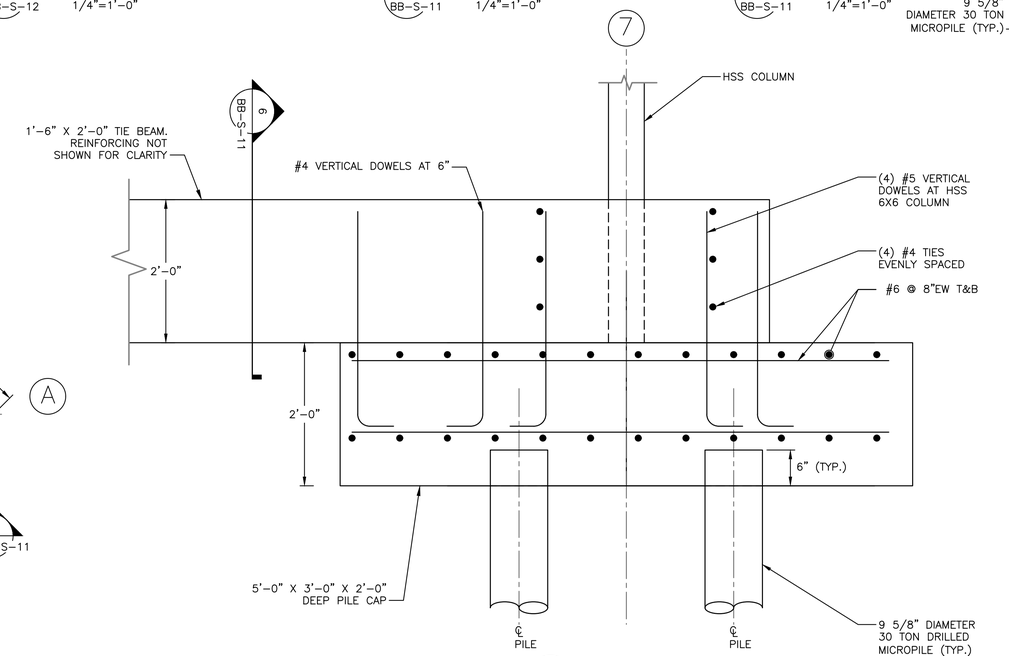


8 BB-S-11 SECTION 1"=1'-0"

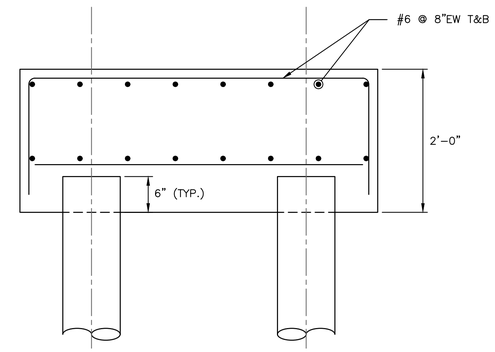


4 BB-S-11 SECTION 1"=1'-0"

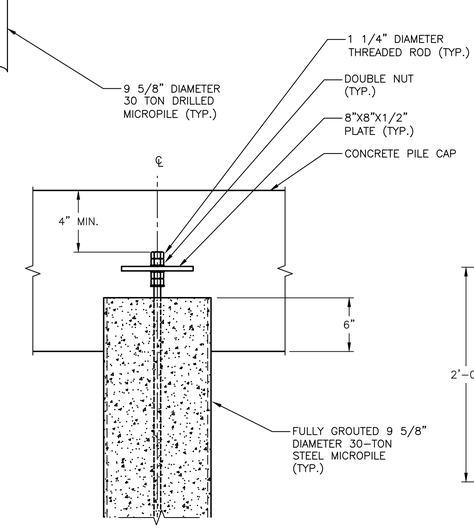


A TYPICAL PILE HEAD DETAIL SCALE: 1 1/2" = 1'-0"

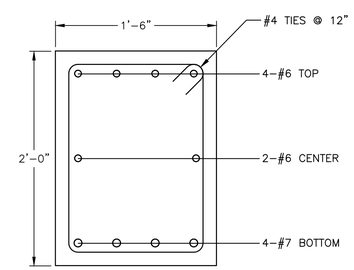


6 BB-S-08 TIE BEAM SECTION SCALE: 1 1/2" = 1'-0"

BASIC DEVELOPMENT LENGTH AND SPLICE LENGTH

FOR BARS IN TENSION

fy = 60,000 psi — fc = 4000 psi OR GREATER, NORMAL WEIGHT CONCRETE

| BASIC DEVELOPMENT LENGTH ** l d | | | | BAR SIZE | CLASS B SPLICE LENGTH ** 1.3 x l d | | | |
|---|---|---|---|---|---|---|---|---|
| CLEAR SPACING > 3" | | CLEAR SPACING < 3" | | | CLEAR SPACING > 3" | | CLEAR SPACING < 3" | |
| BASIC | TOP * | BASIC | TOP * | | BASIC | TOP * | BASIC | TOP * |
| 1'-0" | 1'-4" | 1'-9" | 2'-2" | #3 | 1'-4" | 1'-9" | 2'-2" | 2'-11" |
| 1'-4" | 1'-8" | 2'-2" | 2'-9" | #4 | 1'-8" | 2'-2" | 2'-9" | 3'-7" |
| 1'-8" | 2'-2" | 2'-10" | 3'-7" | #5 | 2'-2" | 2'-10" | 3'-7" | 4'-8" |
| 2'-0" | 2'-6" | 3'-3" | 4'-2" | #6 | 2'-6" | 3'-3" | 4'-2" | 5'-5" |
| 3'-6" | 4'-7" | 5'-11" | 7'-7" | #7 | 4'-7" | 5'-11" | 7'-7" | 9'-11" |
| 4'-0" | 5'-2" | 6'-9" | 8'-8" | #8 | 5'-2" | 6'-9" | 8'-8" | 11'-4" |
| 4'-6" | 5'-10" | 7'-7" | 9'-10" | #9 | 5'-10" | 7'-7" | 9'-9" | 12'-9" |
| 5'-0" | 6'-5" | 8'-6" | 11'-10" | #10 | 6'-5" | 8'-6" | 11'-0" | 13'-7" |
| 5'-7" | 7'-4" | 9'-5" | 12'-6" | #11 | 7'-4" | 9'-5" | 12'-6" | 14'-9" |

NOTES:

* TOP REINFORCEMENT IS HORIZONTAL REINFORCEMENT SO PLACED THAT MORE THAN 12 INCHES OF FRESH CONCRETE IS CAST IN THE MEMBER BELOW THE REINFORCEMENT

** LENGTHS SHOWN IN CHART SHALL BE MODIFIED WHERE REQUIRED TO CONFORM TO THE PROVISIONS OF ACI 318, SECTION 12.2

*** UNCOATED REINFORCEMENT

DEVELOPMENT LENGTH OF STANDARD HOOKS

FOR BARS IN TENSION

fy = 60,000 psi — fc = 4000 psi OR GREATER, NORMAL WEIGHT CONCRETE

| BAR SIZE | DEVELOPMENT LENGTH, l dh | |
|---|---|---|
| | BASIC | W/CONC. COVER * |
| #3 | 8" | 6" |
| #4 | 10" | 7" |
| #5 | 1'-0" | 9" |
| #6 | 1'-3" | 11" |
| #7 | 1'-5" | 1'-0" |
| #8 | 1'-7" | 1'-2" |
| #9 | 1'-10" | 1'-4" |
| #10 | 2'-1" | 1'-6" |
| #11 | 2'-3" | 1'-7" |

NOTES:

* SIDE COVER NORMAL TO PLANE OF HOOK AT LEAST 2 1/2"; AND FOR 90° HOOK, END COVER BEYOND OUTSIDE END OF HOOK AT LEAST 2".

** UNCOATED REINFORCEMENT

CONSULTANT INFORMATION

Savin Engineers, P.C.

CONSULTANT SEAL

STATE OF NEW YORK — LICENSED PROFESSIONAL ENGINEER — No. 053364

| REVISION NUMBER | DATE | MADE BY | APP'D BY | REVISION |
|---|---|---|---|---|

RECORD DRAWING CERTIFICATION

☐ AS BUILT – CHANGES AS NOTED ☐ AS BUILT – NO CHANGES

CONTRACTOR: NAME / SIGNATURE / TITLE / DATE

PROJECT COORDINATOR: NAME / SIGNATURE / TITLE / DATE

WESTCHESTER COUNTY, NEW YORK
DEPARTMENT OF PUBLIC WORKS AND TRANSPORTATION
DIVISION OF ENGINEERING

**INFRASTRUCTURE REHABILITATION - PHASE 3**
**PLAYLAND PARK, RYE, NEW YORK**
**NORTHEAST BURGER BARN**
**SECTIONS AND DETAILS**

| CONTRACT NUMBER | SHEET NUMBER |
|---|---|
| 22-523 | BB-S-11 |

DWG NO.: 58 of 664

SCALE: AS SHOWN

DATE: 8/23/2022

DPW FILE NUMBER: 1-118-S-807-0 — REV. NO.: 0

Drawing Name: \\ee-fs-01\Environmental\2060.25 - Playland Rehabilitation\04 - Design\MEGA CONTRACT #3\Drawings\CADD\S\BBS-1015.dwg
Projectname: ---- Comments: ----
Plotted by: ######## Date: 26 August 2022 11:55 AM Designed by: ----

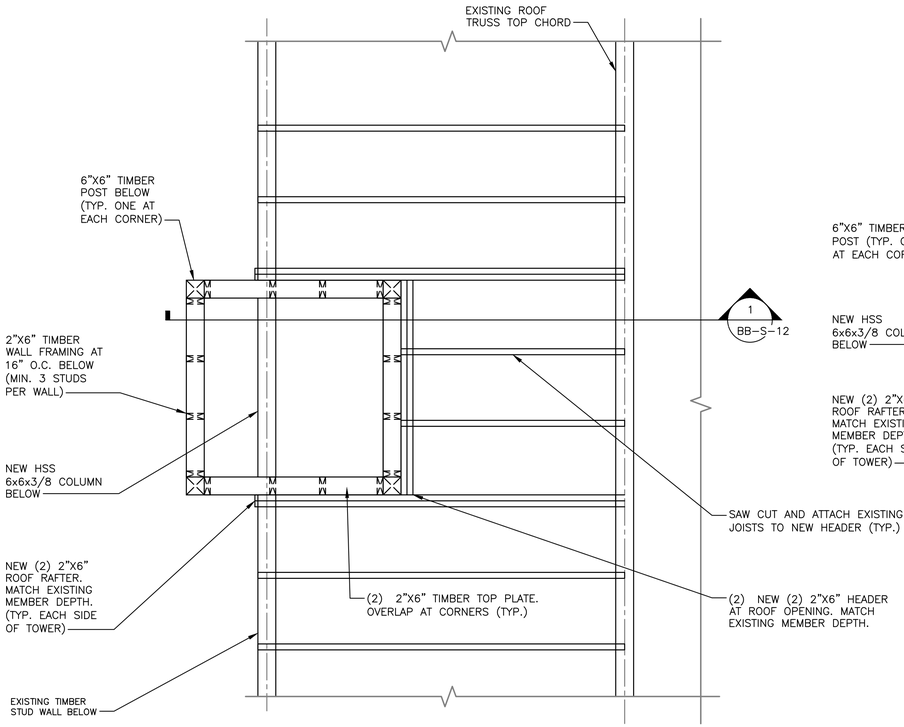


A PART PLAN AT ROOF TRUSS TOP CHORD
BB-S-07 1/2"=1'-0"

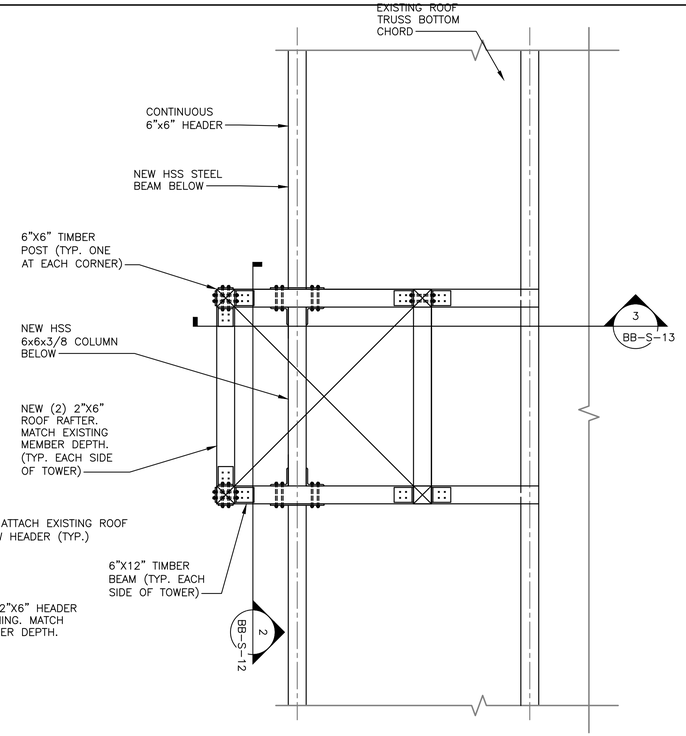


B PART PLAN AT ROOF TRUSS BOT CHORD
BB-S-12 1/2"=1'-0"

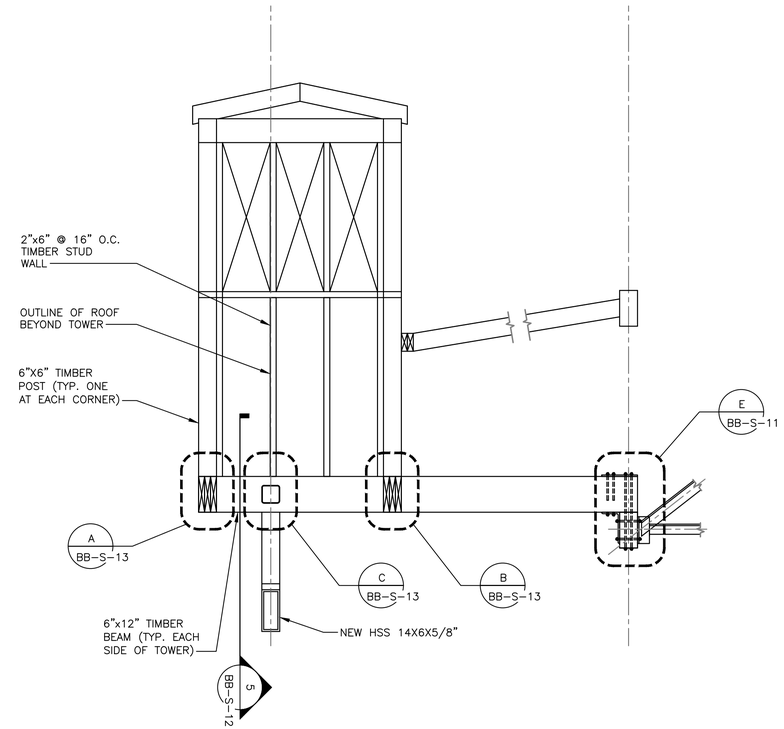


1 SECTION
BB-S-12 1/2"=1'-0"

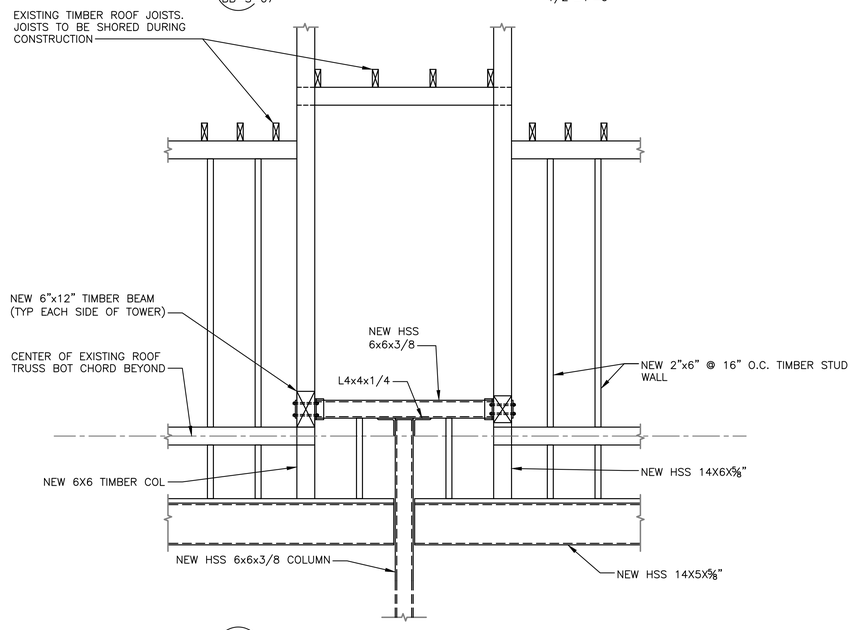


2 SECTION
BB-S-12 1/2"=1'-0"

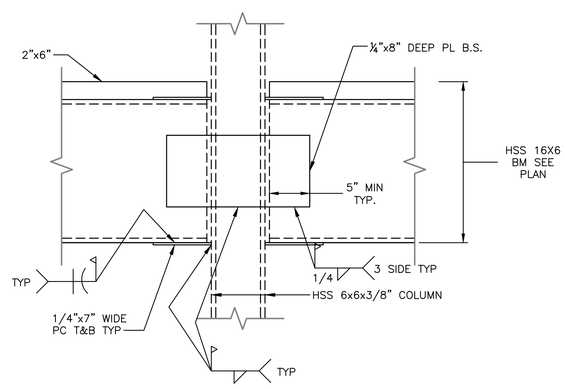


D DETAIL
BB-S-08 1/2"=1'-0"

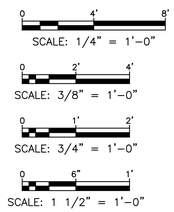


CONSULTANT INFORMATION
Savin Engineers, P.C.

CONSULTANT SEAL

| REVISION NUMBER | DATE | MADE BY | APP'D BY | REVISION |
|---|---|---|---|---|

RECORD DRAWING CERTIFICATION
☐ AS BUILT – CHANGES AS NOTED ☐ AS BUILT – NO CHANGES

CONTRACTOR
NAME
SIGNATURE
TITLE DATE

PROJECT COORDINATOR
NAME
SIGNATURE
TITLE DATE

WESTCHESTER COUNTY, NEW YORK
DEPARTMENT OF PUBLIC WORKS AND TRANSPORTATION
DIVISION OF ENGINEERING

**INFRASTRUCTURE REHABILITATION - PHASE 3**
**PLAYLAND PARK, RYE, NEW YORK**
**NORTHEAST BURGER BARN**
**SECTIONS AND DETAILS**

| | |
|---|---|
| CONTRACT NUMBER | 22-523 |
| SHEET NUMBER | BB-S-12 |
| DWG NO.: | 59 of 664 |
| SCALE: | AS SHOWN |
| DATE: | 8/23/2022 |
| DPW FILE NUMBER | 1-118-S-808-0 |
| REV. NO. | 0 |

Drawing Name: \\se-fs-01\Environmental\2060.25 – Playland Rehabilitation\04 – Design\MEGA
CONTRACT #3\Drawings\CADD\S\BBS-1016.dwg
Projectname: ---- Comments: ----
Printed by: ######## Date: 26 August 2022 11:54 AM Designed by: ----

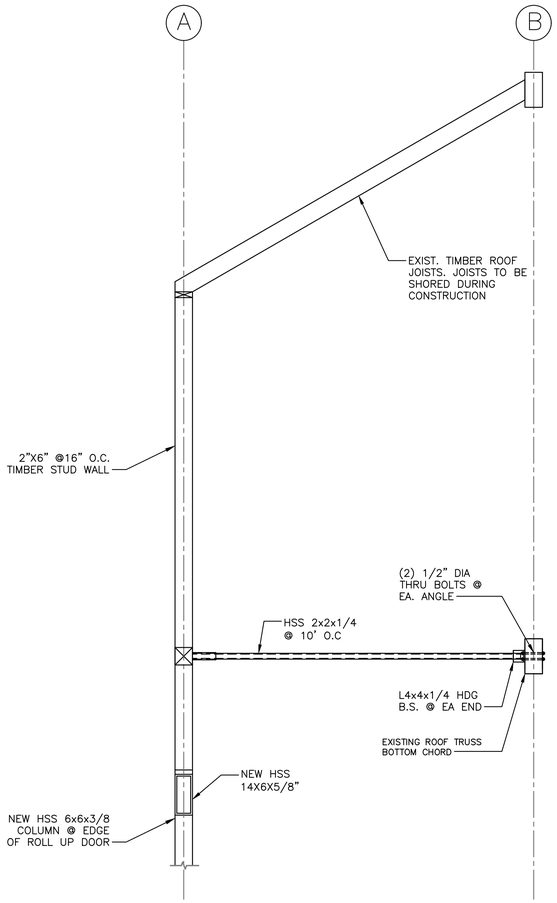


3 SECTION
BB-S-12 1/2"=1'-0"

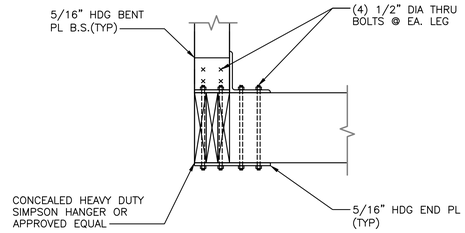


A DETAIL
BB-S-12 1"=1'-0"

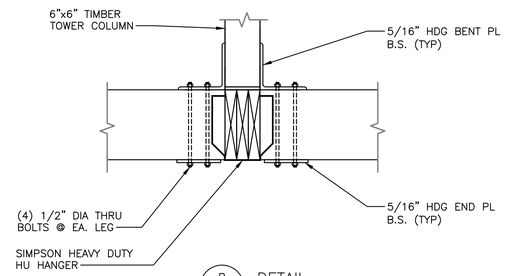


B DETAIL
BB-S-12 1"=1'-0"

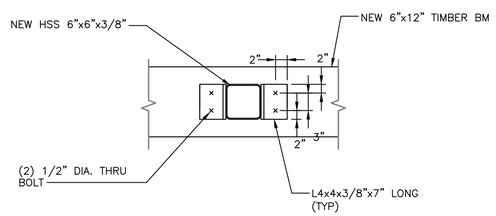


C DETAIL
BB-S-12 1"=1'-0"

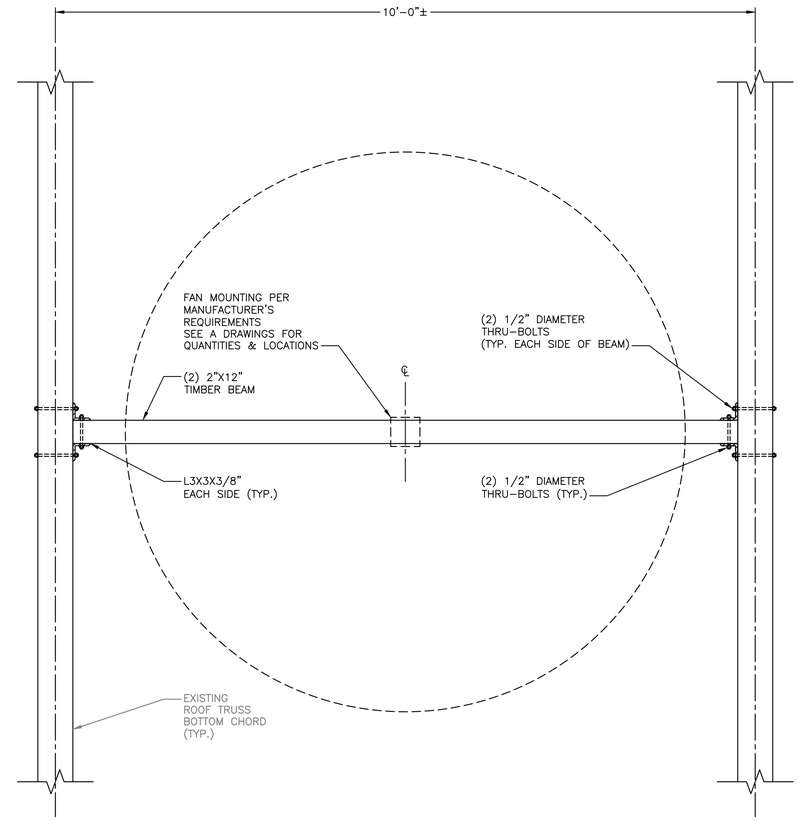


PART PLAN – TYPICAL BEAM FOR FAN MOUNTING
1"=1'-0"

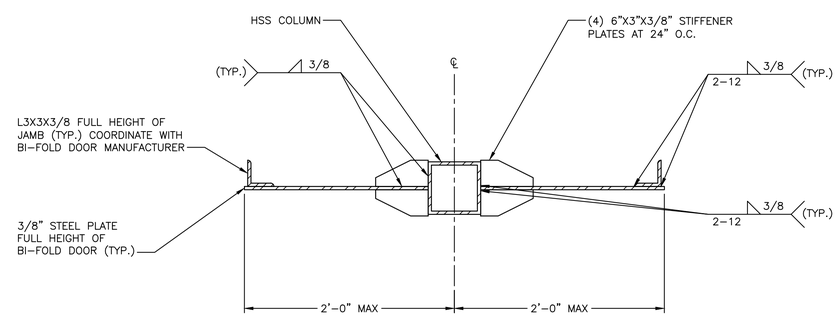


6 SECTION DETAIL – BIFOLD DOOR JAM
BB-S-08 1 1/2"=1'-0"

Drawing Name: G:\SavinAutocad\2060\25-Playland-Mega-3\S\BBS-1017.dwg
Rev#: Projectname: ---- Comments: ---- Printed by: MGodby Date: 24 August 2022 3:05 PM Designed by: ----
Xrefs: [TSG-SVLOGO.dwg] [TB_24X36_WestchesterCo_3.dwg] [AR-S-1006.dwg

CONSULTANT INFORMATION
Savin Engineers, P.C.

CONSULTANT SEAL

| REVISION NUMBER | DATE | MADE BY | APP'D BY | REVISION |
|---|---|---|---|---|

RECORD DRAWING CERTIFICATION
☐ AS BUILT – CHANGES AS NOTED ☐ AS BUILT – NO CHANGES

CONTRACTOR
NAME
SIGNATURE
TITLE DATE

PROJECT COORDINATOR
NAME
SIGNATURE
TITLE DATE

WESTCHESTER COUNTY, NEW YORK
DEPARTMENT OF PUBLIC WORKS AND TRANSPORTATION
DIVISION OF ENGINEERING

**INFRASTRUCTURE REHABILITATION - PHASE 3**
**PLAYLAND PARK, RYE, NEW YORK**
**NORTHEAST BURGER BARN**
**SECTIONS AND DETAILS**

| | |
|---|---|
| CONTRACT NUMBER | 22-523 |
| SHEET NUMBER | BB-S-13 |
| DWG NO.: | 60 of 664 |
| SCALE: | AS SHOWN |
| DATE: | 8/23/2022 |
| DPW FILE NUMBER | 1-118-S-809-0 |
| REV. NO. | 0 |

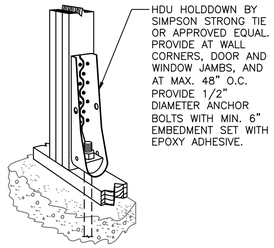


HOLD DOWN/TENSION TIE
SCALE: N.T.S.

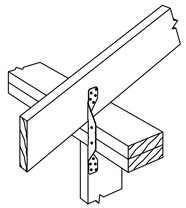

SIMPSON STRONG TIE H2 (OR APPROVED EQUAL). TYPICAL AT EACH RAFTER.

HURRICANE TIE
SCALE: N.T.S.

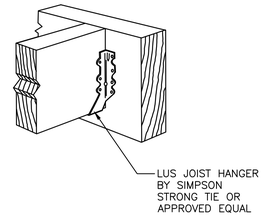


FACE MOUNTED JOIST HANGER
SCALE: N.T.S.

NOTES:

1. FOR STRUCTURAL NOTES, SEE DRAWING BB-S-02.
2. FOR STRUCTURAL ABBREVIATIONS AND SYMBOLS, SEE DRAWING K-S-02.

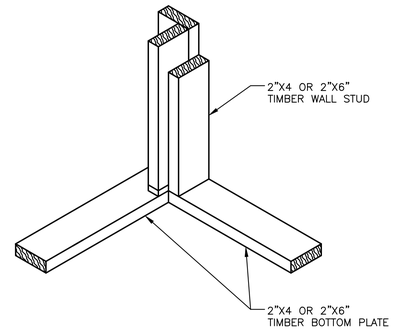


TYPICAL STUDS AT CORNERS DETAIL
N.T.S.

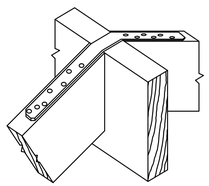

SIMPSON STRONG TIE (OR APPROVED EQUAL) AT EACH RAFTER. ATTACH DIRECTLY TO RAFTER

RIDGE STRAPPING
SCALE: N.T.S.

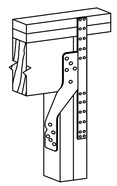

SIMPSON STRONG TIE H6 (OR APPROVED EQUAL) TYPICAL AT ALL EXTERIOR HEADER LOCATIONS.

HEADER TO JACK STUD CONNECTION
SCALE: N.T.S.

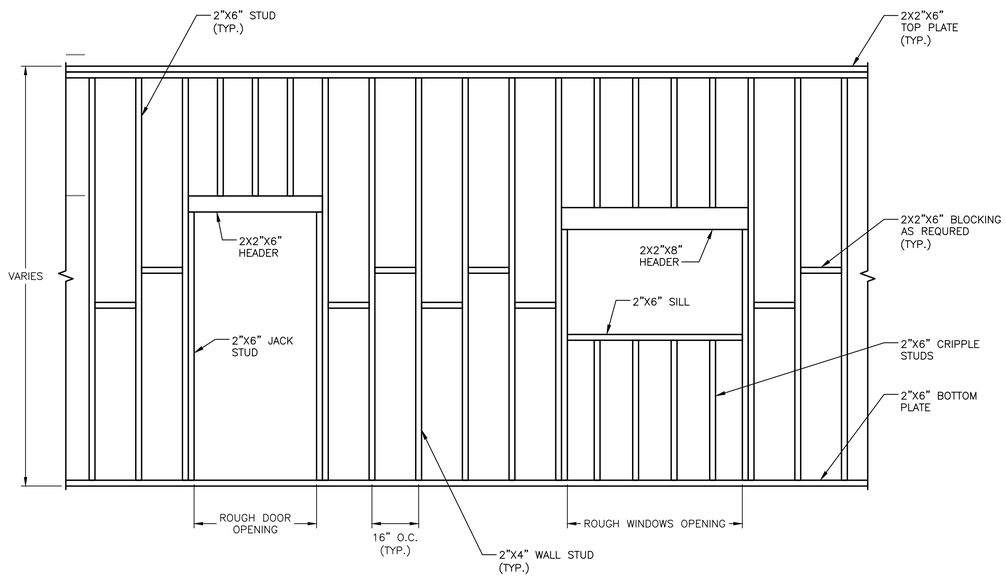


DETAIL WALL ELEVATION
N.T.S.

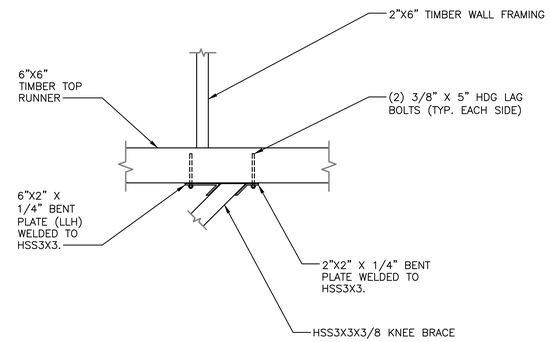


E
BB-S-08
DETAIL
1"=1'-0"

SCALE: 3/4" = 1'-0"

SCALE: 1 1/2" = 1'-0"

Drawing Name: G:\Savin\Autocad\2060\25-Playland-Mega-3\S\BBS-1018.dwg
Projectname: ---- Comments: ----
Printed by: MGadby Date: 24 August 2022 3:05 PM Designed by: ----
Reqf: ----
Xrefs: [TSC-SVL060.dwg] [TB_24X36_WestchesterCo_3.dwg] [AR-S-1006.dwg]

CONSULTANT INFORMATION
Savin Engineers, P.C.

CONSULTANT SEAL
STATE OF NEW YORK
LICENSED PROFESSIONAL ENGINEER

| REVISION NUMBER | DATE | MADE BY | APP'D BY | REVISION |
|---|---|---|---|---|

RECORD DRAWING CERTIFICATION
AS BUILT – CHANGES AS NOTED
AS BUILT – NO CHANGES

CONTRACTOR
NAME
SIGNATURE
TITLE DATE

PROJECT COORDINATOR
NAME
SIGNATURE
TITLE DATE

WESTCHESTER COUNTY, NEW YORK
DEPARTMENT OF PUBLIC WORKS AND TRANSPORTATION
DIVISION OF ENGINEERING

INFRASTRUCTURE REHABILITATION - PHASE 3
PLAYLAND PARK, RYE, NEW YORK
NORTHEAST BURGER BARN
TYPICAL SECTIONS AND DETAILS

| | |
|---|---|
| CONTRACT NUMBER | 22-523 |
| SHEET NUMBER | BB-S-14 |
| DWG NO.: | |
| SCALE: | AS SHOWN |
| DATE: | 8/23/2022 |
| DPW FILE NUMBER | 1-118-S-810-0 |
| REV. NO. | 0 |

# FIRE PROTECTION SAFETY NOTES:

1. SPECIAL PRECAUTION SHALL BE TAKEN BY THE CONTRACTOR SO THAT EQUIPMENT OF THIS APPLICATION AND ITS INSTALLATION WILL NOT AFFECT THE FOLLOWING: EGRESS TO AND FROM THE BUILDING. FIRE SAFETY OR CREATE A FIRE HAZARD. STRUCTURAL SAFETY OF THE BUILDING. ACCUMULATION OF DUST AND DEBRIS. (THE CONTRACTOR SHALL LEAVE THE SITE BROOM CLEANED EACH DAY.)

# FIRE PROTECTION GENERAL NOTES:

1. DIMENSIONS, LOCATIONS AND SIZES INDICATED ON THE PLANS AND THE ELEVATION ARE APPROXIMATE AND SHALL BE VERIFIED BY FIELD INSPECTION BY THE CONTRACTOR.

2. SOME EXISTING PIPE AND EQUIPMENT IS SHOWN FOR CLARIFICATION OF THIS CONTRACT, BUT MUST BE PROTECTED BY THE CONTRACTOR.

3. NO WORK SHALL BE INITIATED UNTIL A WORK PERMIT IS OBTAINED BY THE CONTRACTOR AND A SAFETY PLAN IS SUBMITTED AND IS APPROVED.

4. CONTRACTOR IS RESPONSIBLE FOR OBTAINING ALL PERMITS, EQUIPMENT USE PERMITS, ALL INSPECTION APPROVALS, AND LETTER OF COMPLETION FROM THE DEPARTMENT OF BUILDINGS FOR WORK UNDER THIS CONTRACT AS APPLICABLE.

5. ANY EXISTING MATERIALS, PIPING, ETC., NOT INDICATED FOR DEMOLITION WHICH ARE REMOVED BY THE CONTRACTOR IN ORDER TO INSTALL NEW WORK SHALL BE REINSTALLED BY THE CONTRACTOR. IF EXISTING WORK IS DAMAGED IT SHALL BE REPLACED AT THE CONTRACTOR'S EXPENSE. ALL SURFACES OR FINISHES THAT ARE DAMAGED OR OTHERWISE AFFECTED BY WORK OF THIS CONTRACT SHALL BE PATCHED, REPAIRED, PAINTED OR REPLACED TO MATCH THE PRE-EXISTING CONDITION AND THE NEW WORK.

6. CONTRACTOR MAY PROPOSE ALTERNATE ROUTING IN DIFFICULT AREAS WHERE REPLACEMENT IN KIND IS NOT PRACTICAL. ANY AND ALL ALTERNATE ROUTING IS SUBJECT TO PRIOR REVIEW AND APPROVAL BY THE ENGINEER.

7. A FIRE WATCH SHALL BE PROVIDED WHEN SPRINKLER COVERAGE IS IMPACTED TO MAINTAIN BUILDING OPERATIONS OR AS REQUIRED.

# FIRE PROTECTION SYMBOL LIST

| | |
|---|---|
| — — — — — FS DRY— — | NEW DRY SPRINKLER PIPING |
| — — — — — DRY(E) — | EXISTING TO REMAIN DRY SPRINKLER PIPING |
| ○ | NEW UPRIGHT SPRINKLER HEAD |
| ○ | EXISTING UPRIGHT SPRINKLER HEAD |
| ● | NEW CONCEALED PENDENT SPRINKLER HEAD-ORDINARY TEMPERATURE |
| | SPRINKLER DRY PIPE VALVE |
| | FIRE HOSE CABINET |
| | SIAMESE CONNECTION |
| | CHECK VALVE |
| | CHECK VALVE W/ ALARM |
| | WATER MOTOR ALARM BELL |
| ⊗ | PIPE RISER |
| | PIPE DROP |
| | PIPE UP |
| | POINT OF CONNECTION |
| | POINT OF DISCONNECTION |
| | PREACTION 6" BELL |
| | SOLENOID VALVE |
| | OS & Y VALVE |
| # | REVISION SYMBOL |
| F# | REFER TO SUPPLEMENTAL FIGURE INDICATED BY NUMBER (I.E. F2 REFERS TO FIGURE 2) |
| XXX / X | EQUIPMENT TAG / EQUIPMENT NUMBER |
| X / X-XXX | DETAIL TAG/ CALL OUT TAG / FIRE PROTECTION SHEET NUMBER |

# SHOP DWGS/EQUIPMENT SUBMITTALS

THE CONTRACTOR MUST SUBMIT ANY EQUIPMENT ALTERNATES 2 WEEKS PRIOR TO BIDS DUE FOR REVIEW AND COMMENTS. ALTERNATES MUST BE ACCEPTED BY LIRO ENGINEERS, INC., THE ARCHITECT, AND THE OWNER PRIOR TO INCLUSION IN BID. THE CONTRACTOR IS RESPONSIBLE TO COORDINATE EQUIPMENT ALTERNATES WITH OTHER TRADES AND MAKE ADJUSTMENTS TO THE MECHANICAL SYSTEMS, AS REQUIRED, TO ACCOMMODATE THESE NEW ALTERNATES.

THE CONTRACTOR IS RESPONSIBLE TO SUBMIT ALL OF THE FOLLOWING ITEMS FOR REVIEW/APPROVAL BY NO MORE THAN 3 WEEKS AFTER THE CONTRACTOR'S CONTRACT/BID HAS BEEN AWARDED. ALL SUBMITTALS MUST BE SENT TOGETHER AS A **SINGLE PACKAGE** WITH MANUFACTURER'S SPECIFIC MODELS AND SPECIFICATIONS OUTLINED TO MATCH THE SCHEDULED REQUIREMENTS. EACH SUBMITTAL MUST BE LABELED WITH THE UNIT DESIGNATION USED WITHIN THIS DRAWING SET. IF THE SUBMITTAL PACKAGE IS FOUND TO BE INCOMPLETE UPON RECEIPT, THE PACKAGE WILL BE HELD AND WILL NOT BE REVIEWED UNTIL THE REMAINDER OF THE PACKAGE IS RECEIVED. SIX (6) HARD COPIES OF THE SUBMITTAL PACKAGE MUST BE SENT TO LIRO ENGINEERS, INC. DIGITAL SHOP DRAWING SUBMISSIONS ARE ACCEPTABLE.

# SCOPE OF WORK:

1. THE INSTALLATION OF NEW DRY FS EQUIPMENT.

2. PROPOSED FIRE SPRINKLER HEAD LOCATIONS AND PIPING ARE AS NOTED ON PLANS. EXACT PIPING FROM THE FIRE SPRINKLER MAIN TO ALL HEADS IS TO BE COORDINATED AND HYDRAULICALLY CALCULATED BY THE F.S.C. & SUBMITTED TO THE ENGINEER FOR APPROVAL.

NOTE: THIS SCOPE OF WORK DESCRIPTION IS PROVIDED TO GIVE AN OVERALL "MACRO" DESCRIPTION OF THIS PROJECT. F.S.C. IS RESPONSIBLE TO REVIEW ALL ENGINEERING AND ARCHITECTURAL DRAWINGS AND VISIT THE SITE IF NEEDED, PRIOR TO SUBMISSION OF BID.

## SPRINKLER HEAD SCHEDULE

| | MANUFACTURER | MODEL | DESCRIPTION | K-FACTOR | QUANTITY |
|---|---|---|---|---|---|
| ○ | RELIABLE | F1FR | DRY ORDINARY UPRIGHT SPRINKLE HEAD | 5.6 | 37 |
| ● | RELIABLE | F1FR | DRY ORDINARY CONCEALED SPRINKLE HEAD | 5.6 | 13 |

## ABBREVIATION

| | |
|---|---|
| ACV | ALARM CHECK VALVE |
| B.O.P. | BOTTOM OF PIPE |
| (E) | EXISTING TO REMAIN |
| F.S.C. | FIRE SPRINKLER CONTRACTOR |
| P.C | PLUMBING CONTRACTOR |
| TYP | TYPICAL |
| W/ | WITH |
| NYS | NEW YORK STATE |
| U/P | UNDERGROUND PIPING |
| W | WATER |

## DRAWING NOTATIONS

| | |
|---|---|
| | DRAWING NOTE TAB |
| | RISER DESIGNATION |
| | POINT OF CONNECTION |
| | POINT OF DISCONNECTION |

# DESIGN CRITERIA

1. AREA OF APPLICATION = 1950 SQ. FT

2. OCCUPANCY CLASSIFICATION = ORDINARY HAZARD GROUP 2

3. MAXIMUM COVERAGE PER SPRINKLER HEAD = 130 SQ. FT

4. DESIGN DENSITY = 0.20 GPM/SQ. FT

5. NUMBER OF SPRINKLER HEADS WITHIN AREA OF APPLICATION = 26

6. "K" FACTOR OF SPRINKLER HEADS = 5.6

7. DESIGN CRITERIA REQUIREMENTS BASED ON:
   - 2020 BUILDING CODE OF NEW YORK STATE
   - 2016 NFPA 13

# ORDINARY HAZARD PIPE SCHEDULE

| STEEL | | COPPER | |
|---|---|---|---|
| 1IN. | 2 SPRINKLERS | 1IN. | 2 SPRINKLERS |
| 1 1/4 IN. | 3 SPRINKLERS | 1 1/4 IN. | 3 SPRINKLERS |
| 1 1/2IN. | 5 SPRINKLERS | 1 1/2IN. | 5 SPRINKLERS |
| 2 IN. | 10 SPRINKLERS | 2 IN. | 12 SPRINKLERS |
| 2 1/2 IN. | 20 SPRINKLERS | 2 1/2 IN. | 25 SPRINKLERS |
| 3 IN. | 40 SPRINKLERS | 3 IN. | 45 SPRINKLERS |
| 3 1/2 IN. | 65 SPRINKLERS | 3 1/2 IN. | 75 SPRINKLERS |
| 4 IN. | 100 SPRINKLERS | 4 IN. | 115 SPRINKLERS |
| 5 IN. | 160 SPRINKLERS | 5 IN. | 180 SPRINKLERS |
| 6 IN. | 275 SPRINKLERS | 6 IN. | 300 SPRINKLERS |
| 8 IN. | SEE SECTION 8.2 | 8 IN. | SEE SECTION 8.2 |

FOR SI UNITS, 1 IN. = 25.4 MM.

# MAX DISTANCE BETWEEN HANGERS (FT.-IN.)

| | NOMINAL PIPE SIZE (IN.) | | | | | | | | | | | |
|---|---|---|---|---|---|---|---|---|---|---|---|---|
| | 3/4 | 1 | 1 1/4 | 1 1/2 | 2 | 2 1/2 | 3 | 3 1/2 | 4 | 5 | 6 | 8 |
| STEEL PIPE EXCEPT THREADED LIGHTWALL | N/A | 12-0 | 12-0 | 15-0 | 15-0 | 15-0 | 15-0 | 15-0 | 15-0 | 15-0 | 15-0 | 15-0 |
| THREADED LIGHTWALL STEEL PIPE | N/A | 12-0 | 12-0 | 12-0 | 12-0 | 12-0 | 12-0 | N/A | N/A | N/A | N/A | N/A |
| COPPER TUBE | 8-0 | 8-0 | 10-0 | 10-0 | 12-0 | 12-0 | 12-0 | 15-0 | 15-0 | 15-0 | 15-0 | 15-0 |

# CODE REFERENCE

2020 NEW YORK STATE BUILDING CODE
2016 NFPA 13

# FIRE PROTECTION NOTES

1. THE DRAWINGS SHOW THE LAYOUT OF THE SYSTEM AND INDICATE THE APPROXIMATE LOCATIONS OF EQUIPMENT AND PIPING. CONTRACTOR IS CAUTIONED NOT TO SCALE THE DRAWINGS. THE PIPING SHALL BE RUN APPROXIMATELY IN THE AREAS AS INDICATED ON THE DRAWINGS, [HOWEVER, TO THE ARRANGEMENT OF THE PIPING SYSTEMS AS MAY BE REFERENCED WITH WORK OF OTHER TRADES]. CONTRACTOR SHALL REVIEW AND COORDINATE WITH STRUCTURAL, ELECTRICAL AND MECHANICAL DRAWINGS. PARTITIONS, STRUCTURAL MEMBERS, ETC. ARE DESIGNED TO BE FURRED OR CLOSED IN AND TO INCLUDE ROUGH-IN PIPING. CONTRACTOR SHALL FURNISH ALL OFFSETS, ADDITIONAL FITTINGS, ETC. WHETHER SHOWN ON DRAWINGS OR NOT, AS REQUIRED TO MEET INSTALLATION CONDITIONS.

2. CONTRACTOR IS TO COMPLY WITH LATEST NFPA AND N.Y.S. CODES, AND COORDINATE HIS WORK WITH OTHER TRADES AND MAKE NECESSARY ADJUSTMENTS.

3. CONTRACTOR IS TO PREPARE SHOP DRAWINGS FOR ENGINEERS REVIEW AFTER MAKING A COMPLETE FIELD SURVEY.

4. CONTRACTOR IS TO REPORT ANY CONDITION REQUIRING CHANGES FROM PLANS TO ENGINEER PRIOR TO STARTING WORK.

5. BRANCH LINES AND MAINS (1 1/2" OR LESS) - SCHEDULE 40 FM APPROVED

6. BRANCH LINES AND MAINS (2" OR LARGER) - THINWALL (THICKNESS LESS THEN SCHEDULE 40 MORE THEN SCHEDULE 10 & FM APPROVED)

7. CONTRACTOR IS TO PERFORM A HYDROSTATIC TEST FOR 2 HRS. @ 200 PSI WITH NO LEAKAGE AND PROVIDE A TEST CERTIFICATE TO ENGINEER

8. CONTRACTOR IS TO EMPLOY EXPERIENCED WORKMEN WHO ARE TO FAMILIARIZE THEMSELVES WITH THE BUILDING AND OBSERVE SAFETY REQUIREMENTS.

9. CONTRACTOR TO ADJUST HEAD LOCATION TO COORDINATE WITH LIGHTS, DUCTS, ETC.

10. PERMIT FROM LOCAL AUTHORITY, TO BE OBTAINED BY CONTRACTOR.

11. ALL WORK TO BE APPROVED BY OWNERS ENGINEER, STATE AUTHORITIES HAVING JURISDICTION AND MUNICIPAL FIRE, PLUMBING, BUILDING AND WATER DEPARTMENTS.

12. U.L. AND/OR FM APPROVED EQUIPMENT TO BE USED.

13. WORK TO BE IN ACCORDANCE WITH MUNICIPAL WATER DEPT. RULES

14. SYSTEM IS TO BE MAINTAINED AND TESTED BY THE OWNER OR HIS AGENT IN ACCORDANCE WITH APPLICABLE LOCAL AND STATE CODES AND IN CONFORMANCE WITH NFPA 13A, LATEST EDITION.

15. IF BUILDING OCCUPANCY OR CONSTRUCTION CHANGES, THE SPRINKLER SYSTEM IS TO BE UPDATED ACCORDINGLY BY THE OWNER OR HIS AGENT.

16. CONTRACTOR IS TO NEATLY CUT AND PATCH IN A FIRST CLASS WORKMANLIKE MANNER, ALL HOLES AND PENETRATIONS IN WALLS, CEILINGS, FLOORS, PARTITIONS, ETC.

17. THE ENGINEER IS NOT RETAINED FOR SUPERVISION.

18. THE INSTALLATION OF THIS SYSTEM WILL REQUIRE THE CLOSING OF ONE OR MORE FIRE PROTECTION CONTROL VALVES. THESE VALVE CLOSURES SHOULD BE CLOSELY COORDINATED WITH THE OWNERS WHO SHOULD CONTACT THE LOCAL FIRE DEPARTMENT, INSURANCE INTERESTS, ETC. PRIOR TO VALVE CLOSURES.

19. ACTUAL DESIGN DENSITY MAY EXCEED STANDARDS, HOWEVER, IT IS A MINIMUM TO BE USED BY THE CONTRACTOR.

20. ALL ALARMS RELATING TO THE SPRINKLER SYSTEM SHOULD BE ACTIVATED UPON PLACING THE SPRINKLER SYSTEM IN SERVICE.

21. THE INSTALLATION COMPONENTS, SIZING, SPACING, MATERIALS LOCATION CLEARANCES, POSITION AND TYPE OF SYSTEM SHALL CONFORM TO NFPA 13 AND NYS UNIFORM FIRE PREVENTION BUILDING CODE LATEST EDITION.

22. SPRINKLERS SHALL BE PROTECTED AGAINST FREEZING AND INJURY AS PER NFPA CODE.

23. INSPECTION AND TESTS OF SPRINKLER SYSTEM SHALL BE CONDUCTED AS SPECIFIED IN NFPA CODE.

24. WATER SUPPLY TEST PIPES AND GAUGES SHALL BE PROVIDED AS SPECIFIED IN CHAPTER 2-9 OF NPPA 13.

25. PIPING SPECIFICATIONS, PIPE SCHEDULES, SYSTEM TEST PIPES, PROTECTION AGAINST CORROSION, DAMAGE FITTINGS, VALVES, HANGERS, SPRINKLERS, GUARDS AND SHIELDS SHALL BE IN ACCORDANCE WITH CHAPTER 3 AND CHAPTER 8 OF NFPA 13, LATEST EDITION. PIPING SHALL BE PAINTED TO PREVENT CORROSION.

26. STOCK OF EXTRA SPRINKLERS WILL BE FURNISHED AS PER CHAPTER 3 OF NFPA 13 (REQUIRED FOR EACH TEMPERATURE RATING).

27. SPRINKLER ALARMS WILL BE IN ACCORDANCE WITH NFPA 13.

28. SPACING, LOCATION AND POSITION OF SPRINKLERS SHALL BE IN ACCORDANCE WITH CHAPTER 4 OF NFPA 13.

29. ALL PIPING PASSING THROUGH WALLS SHALL COMPLY WITH NFPA FOR FIRE PROOFING.

30. DISTANCE OF SPRINKLERS FROM HEAT SOURCES SHALL BE IN ACCORDANCE WITH TABLE 3-16.6.3 OF NFPA 13.

31. PROVIDE WATER SUPPLY LETTER WITH FLOW TEST DATA.

32. ALL PIPES PASSING THROUGH FOUNDATION WALLS TO BE PROTECTED.

33. ALL VALVES SHALL BE IDENTIFIED AS REQUIRED BY NFPA 13.

34. DRAINAGE TO CONFORM TO CHAPTER 3-11 OF NFPA 13.

35. A ONE PIECE REDUCING FITTING OF GOOD DESIGN SHOULD BE USED WHEREVER A CHANGE IS MADE IN THE SIZE OF PIPE AS PER SECTION 3-12.2.7 OF NFPA 13.

36. ALL VALVES ON CONNECTIONS TO WATER SUPPLIES AND IN SUPPLY TO SPRINKLERS SHALL BE APPROVED O.S. &Y. OR APPROVED INDICATOR TYPE WITH TAMPER SWITCHES.

37. DRAIN VALVES AND TEST VALVES SHALL BE APPROVED TYPE AS PER SECTION 3-14.1.2 OF NFPA 13.

38. HANGERS SHALL BE OF A TYPE APPROVED FOR USE WITH THE PIPE OR TUBE INVOLVED, SPRINKLER PIPING SHOULD BE SUPPORTED BY ADJUSTABLE HANGERS PER NFPA 13, SECTION 3-15.

39. PROVISIONS SHOULD BE MADE TO FACILITATE FLUSHING SYSTEM PIPING BY PROVIDING FLUSHING CONNECTIONS CONSISTING OF A CAPPED NIPPLE 4" LONG ON THE END OF THE CROSS MAIN, AS PER SECTION 3- 8.2 OF NFPA 13.

40. SPRINKLER SHALL BE AN APPROVED TYPE AS PER SECTION 3-16 OF NFPA 13.

41. TEMPERATURE RATING SHALL COMPLY WITH SEC. 3-16.6 OF NFPA 13.

42. CLEARANCES BETWEEN SPRINKLERS AND STORAGE OR PARTITIONS AS PER NFPA 13, SECTION 4-2.5

43. SPACING AND LOCATION OF SPRINKLER SHALL COMPLY WITH CHAPTER 4 NFPA 13.

44. CONTRACTOR TO COORDINATE HIS WORK WITH OTHER TRADES.

45. ONLY EXPERIENCED SPRINKLER MECHANICS TO WORK ON THE SYSTEM.

46. ALL PIPING TO BE A MINIMUM OF 1" UNLESS OTHERWISE NOTED.

47. PROVIDE SHOP DRAWINGS WITH HYDRAULIC CALCULATIONS FOR REVIEW TO LOCAL FIRE MARSHALL AND INSURANCE UNDERWRITER AND ENGINEER FOR APPROVAL PRIOR TO INSTALLATION.

48. ALL FIRE PROTECTION EQUIPMENT SHALL BE INSTALLED PER MANUFACTURER'S REQUIREMENTS/SPECIFICATIONS.

49. ALL FIRE PROTECTION EQUIPMENT SHALL BE MOUNTED ON MINIMUM 6" HIGH CONCRETE PAD UNLESS OTHERWISE NOTED (PAVER AND CINDER BLOCK IS NOT ACCEPTABLE).

50. PERMIT IS REQUIRED PRIOR TO INSTALLATION, TO INCLUDE SIGNED AND SEALED SHOP DRAWINGS, HYDRAULIC CALCULATION, SHOP DRAWINGS, MANUFACTURERS INFORMATION ON HEADS AND APPLIANCES, COMPLIANCE WITH NFPA 13 AND SECTION 903 2020 NYSBC/FC.

# DRY SYSTEM COMPRESSOR SCHEDULE

| TAG | MANUFACTURER | MODEL | SERVICE | LOCATION | AVERAGE CFM | V.P.H.HZ | HP | RECOMMENDED WIRE SIZE | DIMENSION (L"xW"xH") | WEIGHT (LBS) | NOTES |
|---|---|---|---|---|---|---|---|---|---|---|---|
| DC-1 | GENERAL AIR PRODUCT | LT20033A | DRY SYSTEM | SPRINKLER ROOM | 2.43 | 230.1.60 | 1/3 | 12 | 33x13x28 | 115 | 1,2,3 |

## NOTES:

1. MOUNTING BRACKET.
2. PROVIDE AIR MAINTENANCE DEVICE (RELIABLE MODEL AMD-1)
3. PROVIDE WITH A 10 GALLON GENERAL AIR TANK
4. UL LISTED PRESSURE SWITCH. SET FOR 20 PSI ON AND 25 PSI OFF. REFER TO MANUFACTURER'S RECOMMENDATIONS FOR PROPER AIR PRESSURE.

# DRY PIPE VALVE SCHEDULE

| MANUFACTURER | MODEL | SERVICE | LOCATION | SIZE (INCH) |
|---|---|---|---|---|
| RELIABLE | D | DRY SYSTEM | SPRINKLER EQUIP. ROOM | 4 |

## NOTES:

1. FACTORY PREASSEMBLED TRIM - BASIC
2. PROVIDE WITH RELIABLE B1 ACCELERATOR. INSTALL AS PER MANUFACTURER'S RECOMMENDATIONS

# FIRE PROTECTION DRAWING LIST

| SHEET NO. | SHEET NAME | REVISON NO. | REVISION DATE |
|---|---|---|---|
| BB-FP-01 | FIRE PROTECTION NOTES, SYMBOLS, ABBREVIATIONS, AND DRAWING LIST | 0 | - |
| BB-FP-11 | FIRE PROTECTION GROUND FLOOR DEMOLITION RCP | 0 | - |
| BB-FP-21 | FIRE PROTECTION GROUND FLOOR CONSTRUCTION PLAN AND RCP | 0 | - |
| BB-FP-81 | FIRE PROTECTION DETAILS | 0 | - |


CONSULTANT INFORMATION

LiRo Engineers, Inc.
A LiRo Group Company
Syosset, N.Y. 516-214-8157[T]

CONSULTANT SEAL

STATE OF NEW YORK · FRANK F. ULLISE · No. 0901111 · LICENSED PROFESSIONAL ENGINEER


| REVISION NUMBER | DATE | MADE BY | APP'D BY | REVISION |
|---|---|---|---|---|
| | | | | |

RECORD DRAWING CERTIFICATION

☐ AS BUILT – CHANGES AS NOTED ☐ AS BUILT – NO CHANGES

CONTRACTOR: NAME / SIGNATURE / TITLE / DATE

PROJECT COORDINATOR: NAME / SIGNATURE / TITLE / DATE

WESTCHESTER COUNTY, NEW YORK
DEPARTMENT OF PUBLIC WORKS AND TRANSPORTATION
DIVISION OF ENGINEERING

**INFRASTRUCTURE REHABILITATION - PHASE 3**
**PLAYLAND PARK, RYE, NEW YORK**
**NORTHEAST BURGER BARN**
**FIRE PROTECTION NOTES, SYMBOLS, ABBREVIATIONS & DWG LIST**

| | |
|---|---|
| CONTRACT NUMBER | 22-523 |
| SHEET NUMBER | BB-FP-01 |
| DWG NO.: | 62 of 664 |
| SCALE: | AS INDICATED |
| DATE: | 08/23/2022 |
| DPW FILE NUMBER | 1-118-FP-811-0 |
| REV. NO. | 0 |

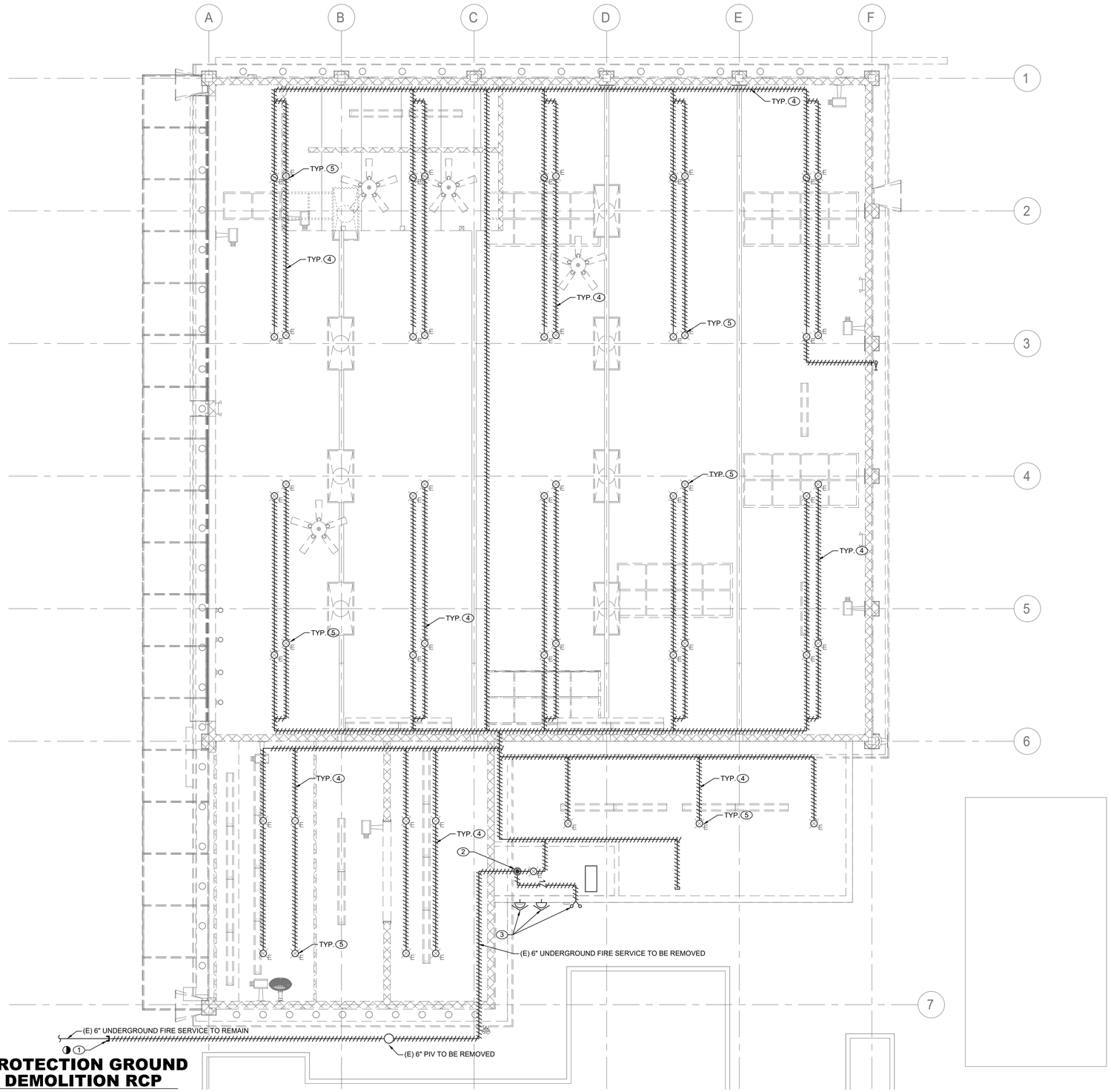


# FIRE PROTECTION GROUND FLOOR DEMOLITION RCP

SCALE: 1/4" = 1'-0

## SPRINKLER DEMOLITION NOTES:

1. CUT AND TEMPORARY CAP UNDERGROUND EXISTING 6" FIRE SERVICE FOR FUTURE RECONNECTION. REMOVE EXISTING POST INDICATOR VALVE.
2. REMOVE EXISTING 4" SERVICE, VALVES, DRY VALVE, COMPRESSOR AND ALL ASSOCIATED PIPING.
3. REMOVE EXISTING FDC, ALARM BELLS AND DRAIN PIPING.
4. DEMOLISH ALL EXISTING DRY SPRINKLER PIPING WITHIN THE NORTHEAST ARCADE BUILDING INCLUDING ATTIC SPACE.
5. DEMOLISH ALL EXISTING SPRINKLER HEADS WITHIN THE NORTHEAST ARCADE BUILDING.

## GENERAL NOTES:

1. COORDINATE WITH FACILITY PRIOR TO SHUTDOWN OF FIRE PROTECTION SYSTEM FOR ANY DEMOLITION AND CONSTRUCTION WORK.

2. CONTRACTOR SHALL PROVIDE FIRE WATCH AS NEEDED FOR THE DEPENDENT BUILDINGS BY THE DEMOLITION AND CONSTRUCTION WORK WHILE SPRINKLER COVERAGE IS IMPACTED.

3. CONTRACTOR TO COORDINATE WITH FACILITY WHEN WORKING AROUND OR ABOVE THE RIDE COMPONENTS, AND PROVIDE ALL NECESSARY MEASURES TO PROTECT THESE COMPONENTS PER THE REQUIREMENTS OF THE FACILITY.

CONSULTANT INFORMATION

LiRo Engineers, Inc.
*A LiRo Group Company*
Syosset, N.Y. 516-214-8157[T]

CONSULTANT SEAL

STATE OF NEW YORK · FRANK F. ULRICH · No. 090111 · LICENSED PROFESSIONAL ENGINEER

| REVISION NUMBER | DATE | MADE BY | APP'D BY | REVISION |
|---|---|---|---|---|
| | | | | |

RECORD DRAWING CERTIFICATION

☐ AS BUILT – CHANGES AS NOTED ☐ AS BUILT – NO CHANGES

CONTRACTOR: NAME / SIGNATURE / TITLE / DATE

PROJECT COORDINATOR: NAME / SIGNATURE / TITLE / DATE

WESTCHESTER COUNTY, NEW YORK
DEPARTMENT OF PUBLIC WORKS AND TRANSPORTATION
DIVISION OF ENGINEERING

**INFRASTRUCTURE REHABILITATION - PHASE 3**
**PLAYLAND PARK, RYE, NEW YORK**
**NORTHEAST BURGER BARN**
**FIRE PROTECTION GROUND FLOOR DEMOLITION RCP**

| | |
|---|---|
| CONTRACT NUMBER | 22-523 |
| SHEET NUMBER | BB-FP-11 |
| DWG NO.: | 63 of 664 |
| SCALE: | AS INDICATED |
| DATE: | 08/23/2022 |
| DPW FILE NUMBER | 1-118-FP-812-0 |
| REV. NO. | 0 |

# FIRE PROTECTION CONSTRUCTION NOTES:

1. RECONNECT NEW 6" FIRE SERVICE TO EXISTING.
2. INSTALL NEW SIGNAGE AND NEW FLUSH SIAMESE CONNECTION. SUCH SIGN SHALL HAVE THE LETTERS "FDC" AT LEAST 6 INCHES (152 MM) HIGH AND AN ARROW TO INDICATE THE LOCATION OF THE SIAMESE CONNECTION. SIGN SHALL BE LOCATED IN FRONT OF THE BUILDING AND POINTING IN THE DIRECTION OF THE SIAMESE CONNECTION. SIGN SHALL BE SUBJECT TO THE APPROVAL OF THE FIRE CODE OFFICIAL.
3. INSTALL NEW FIRE BELLS AND CONNECT TO FIRE ALARM SYSTEM.
4. INSTALL NEW AIR COMPRESSOR AND AIR PIPING. AIR COMPRESSOR SHALL BE INSTALLED ON A CONCRETE PAD. LOCATION OF THE NEW AIR COMPRESSOR AND TANK SHALL BE LOCATED IN THE FIELD. PROVIDE A SHUT OFF VALVE ON THE PIPING FROM THE AIR COMPRESSOR.

# GENERAL NOTES:

1. ALL DISTRIBUTION PIPING, SHALL BE PAINTED AS DIRECTED BY ARCHITECT. REFER TO SPECIFICATION FOR PAINT TYPE AND APPLICATION PROCEDURE.
2. COORDINATE WITH FACILITY PRIOR TO SHUTDOWN OF FIRE PROTECTION SYSTEM FOR ANY DEMOLITION AND CONSTRUCTION WORK.
3. CONTRACTOR SHALL PROVIDE FIRE WATCH AS NEEDED FOR ALL AFFECTED BUILDINGS WHILE SPRINKLER COVERAGE IS IMPACTED.
4. CONTRACTOR TO COORDINATE WITH FACILITY WHEN WORKING AROUND OR ABOVE THE RIDE COMPONENTS, AND PROVIDE ALL NECESSARY MEASURES TO PROTECT THESE COMPONENTS PER THE REQUIREMENTS OF THE FACILITY.
5. UPON COMPLETION, SYSTEM SHALL BE TESTED FOR PROPER OPERATION.

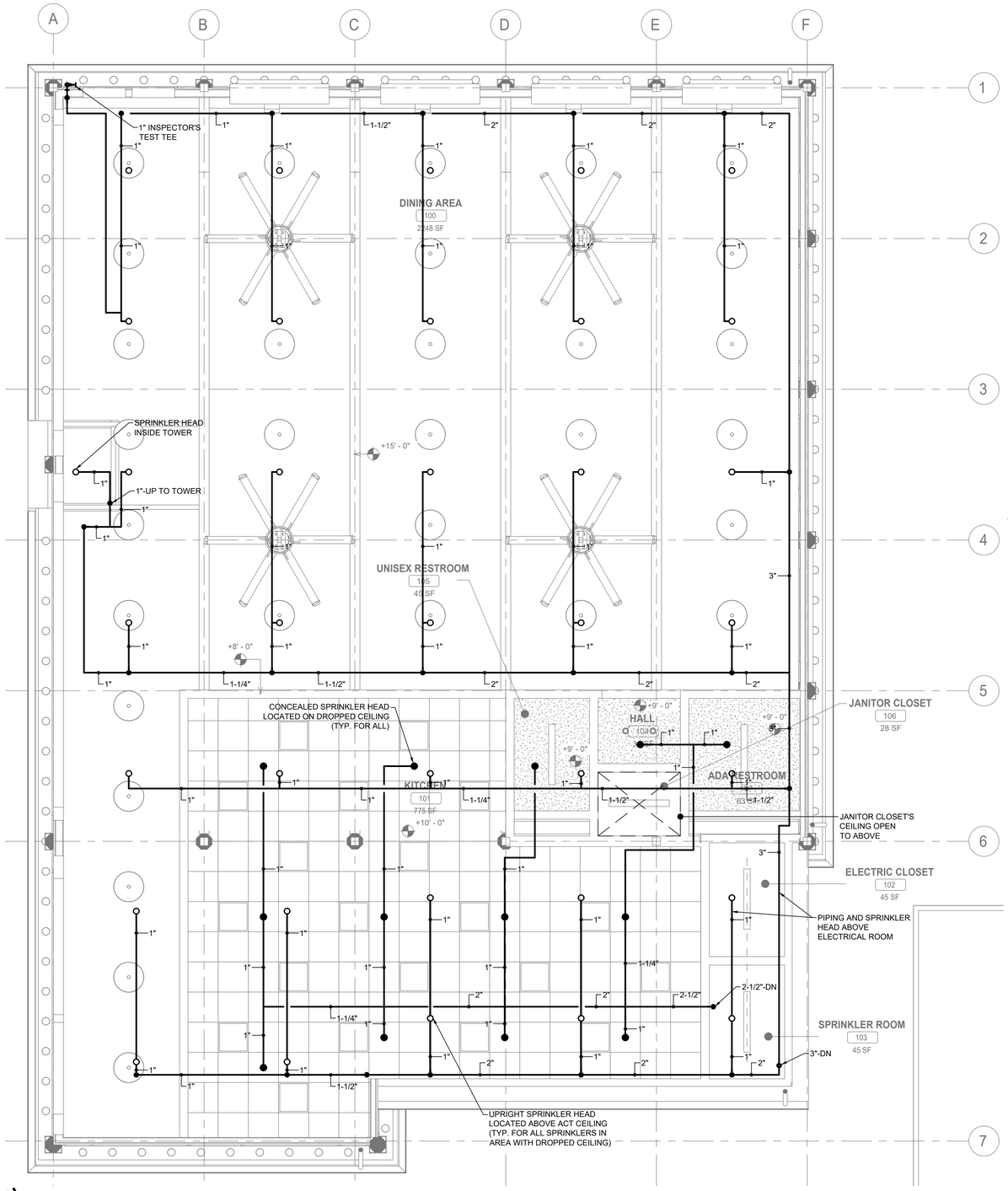


## FIRE PROTECTION GROUND FLOOR CONSTRUCTION PLAN

SCALE: 1/4" = 1'-0

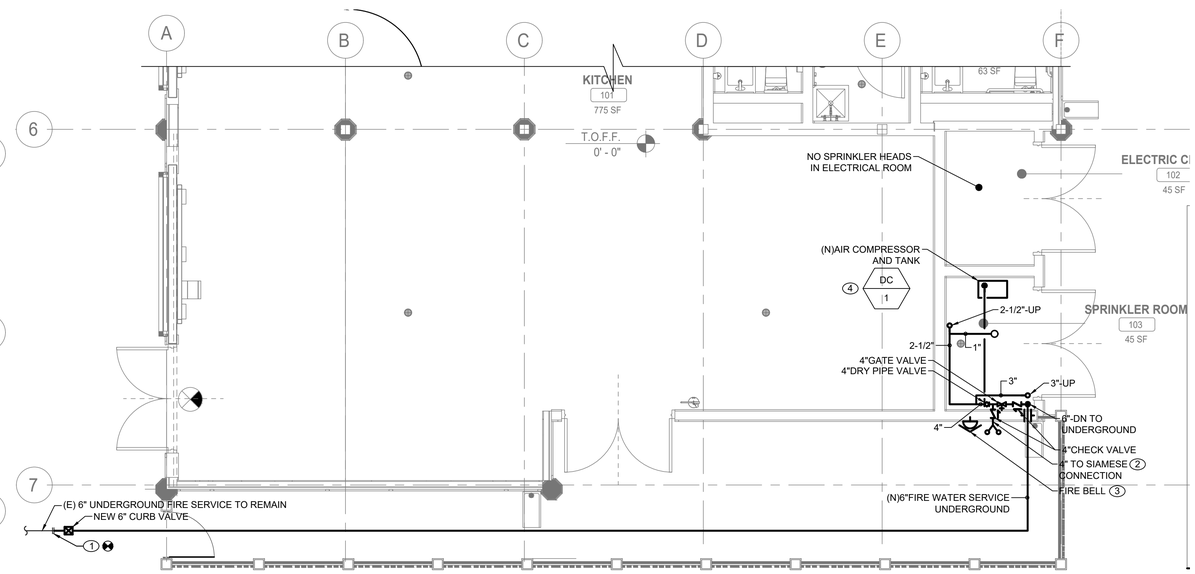


## FIRE PROTECTION SPRINKLER ROOM AND ELECTRICAL CLOSET CONSTRUCTION PARTIAL GROUND FLOOR PLAN

SCALE: 1/4" = 1'-0

CONSULTANT INFORMATION

LiRo Engineers, Inc.
A LiRo Group Company
Syosset, N.Y. 516-214-8157[T]

CONSULTANT SEAL

STATE OF NEW YORK · FRANK F. ULRICH · No. 090111 · LICENSED PROFESSIONAL ENGINEER

| REVISION NUMBER | DATE | MADE BY | APP'D BY | REVISION |
|---|---|---|---|---|
| | | | | |

RECORD DRAWING CERTIFICATION

☐ AS BUILT – CHANGES AS NOTED ☐ AS BUILT – NO CHANGES

CONTRACTOR: NAME / SIGNATURE / TITLE / DATE

PROJECT COORDINATOR: NAME / SIGNATURE / TITLE / DATE

WESTCHESTER COUNTY, NEW YORK
DEPARTMENT OF PUBLIC WORKS AND TRANSPORTATION
DIVISION OF ENGINEERING

INFRASTRUCTURE REHABILITATION - PHASE 3
PLAYLAND PARK, RYE, NEW YORK
NORTHEAST BURGER BARN
FIRE PROTECTION GROUND FLOOR CONSTRUCTION PLAN AND RCP

| | |
|---|---|
| CONTRACT NUMBER | 22-523 |
| SHEET NUMBER | BB-FP-21 |
| DWG NO.: | 64 of 664 |
| SCALE: | AS INDICATED |
| DATE: | 08/23/2022 |
| DPW FILE NUMBER | 1-118-FP-813-0 |
| REV. NO. | 0 |

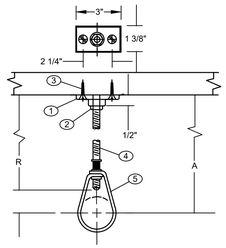


COMPONENTS

1. CLIP (CEILING FLANGE)
2. HEX NUT
3. WOOD SCREW
4. HANGER ROD
5. ADJUSTABLE HANGER RING

NFPA REQUIREMENTS / LIMITATIONS

1. NFPA 13 PERMITS THE USE OF 2 SCREW CEILING FLANGES ONLY
2. HAVING DIMENSIONS NOT LESS THAN THOSE OF NO. 18 X 1 1/2" WOOD SCREWS. DRIVE SCREWS AND NAILS ARE NOT ACCEPTABLE FASTENERS AND WOOD SCREWS ARE NOT TO BE DRIVEN.
3. FOR PIPE SIZES UP TO 2" AND IT CALLS FOR THE USE OF SCREWS

DESIGN DATA FOR CLIP HANGERS

| NOMINAL PIPE SIZE | MINIMUM A DIMENSION | HANGER TAKEOUT | ROD DIAMETER | FASTENERS | |
|---|---|---|---|---|---|
| | INCHES | INCHES | INCHES | QTY | ITEMS |
| 1/2 | 3 3/4 | -1 1/4 | 3/8 | 1<br>2<br>1 | 3/8" CEILING FLANGE (CLIP)<br>NO. 18 X 1 1/2" FLAT HEAD WOOD SCREWS<br>3/8" HEX NUT |
| 3/4 | 3 3/4 | -1 1/4 | " | | SEE ABOVE |
| 1 | 3 3/4 | -1 1/4 | " | | " " |
| 1 1/4 | 4 | -1 1/2 | " | | " " |
| 1 1/2 | 4 | -1 1/2 | " | | " " |
| 2 | 4 1/4 | -1 3/4 | " | | " " |

## 1 FP-81 PIPE HANGER DETAIL
SCALE: NOT TO SCALE

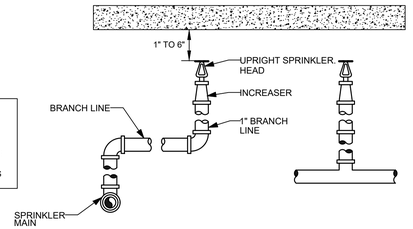


## 2 FP-81 UPRIGHT SPRINKLER DETAIL
SCALE: NOT TO SCALE

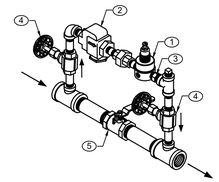


TRIMS:
1. REGULATOR, 5-100 PSI
2. STRAINER, 1/4" NPT, 90
3. CHECK VALVE, 1/4"
4. GLOBE VALVE, 1/4"
5. BALL VALVE, 3/4"

NOTES:
1. PROVIDE PRESSURE GAUGE UPSTREAM AND DOWNSTREAM OF AIR MAINTENANCE DEVICE.
2. PROVIDE RELIEF VALVE DOWNSTREAM OF AIR MAINTENANCE DEVICE, AND IT SHALL BE SET TO RELIEF PRESSURE NO LESS THAN 10 PSI IN EXCESS OF SYSTEM AIR PRESSURE PROVIDED.

## 3 FP-81 AIR MAINTENANCE DEVICE DETAIL
SCALE: NOT TO SCALE

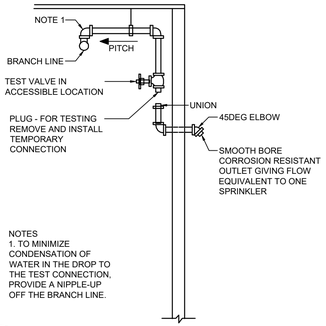


NOTES
1. TO MINIMIZE CONDENSATION OF WATER IN THE DROP TO THE TEST CONNECTION, PROVIDE A NIPPLE-UP OFF THE BRANCH LINE.

## 4 FP-81 DRY PIPE TEST CONNECTION
SCALE: NOT TO SCALE

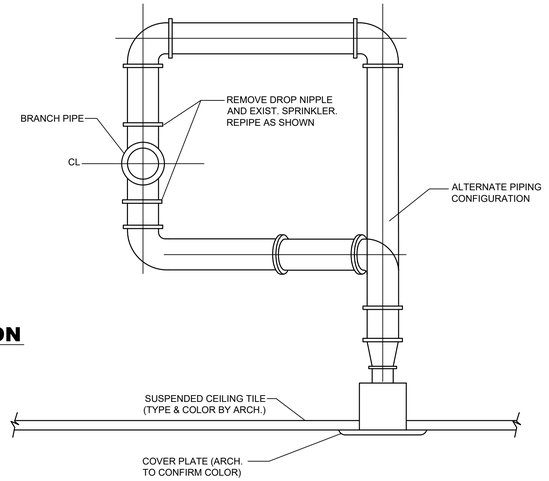


## 11 FP-81 TYPICAL SPRINKLER HEAD RELOCATION
SCALE: NOT TO SCALE

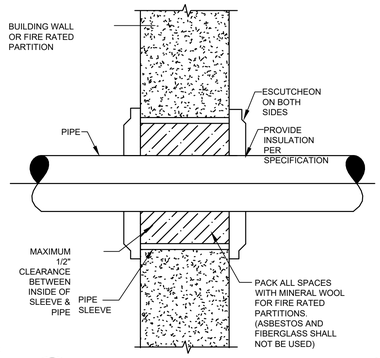


## 6 FP-81 PIPE PENETRATION
SCALE: NOT TO SCALE

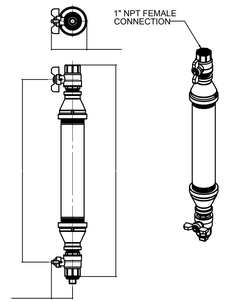


## 7 FP-81 DRY SYSTEM AUXILIARY DRAIN
SCALE: NOT TO SCALE

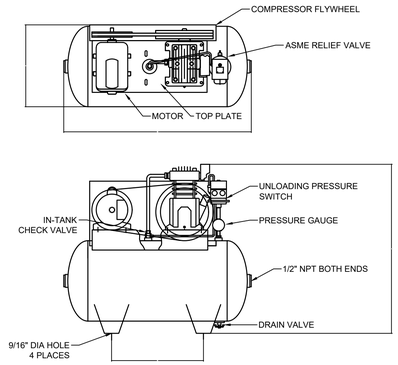


LEG DETAIL

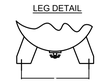

## 8 FP-81 DRY SYSTEM COMPRESSOR
SCALE: NOT TO SCALE

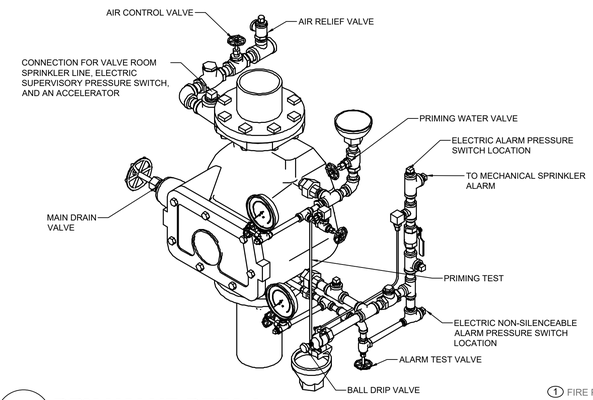


## 5 FP-81 DRY VALVE DETAIL
SCALE: NOT TO SCALE

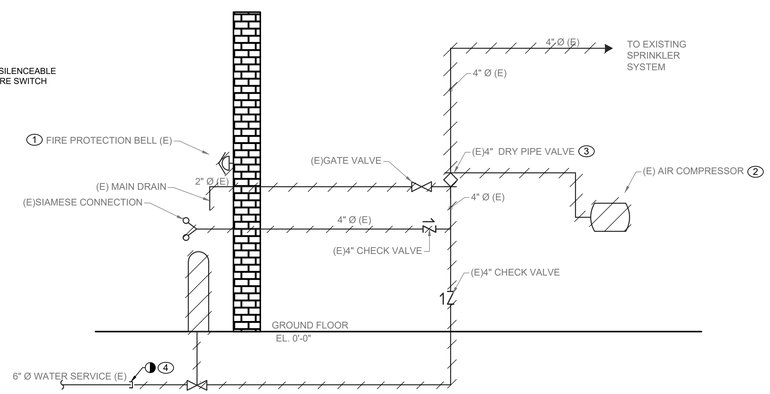


## 9 FP-81 SPRINKLER ROOM RISER - DEMOLITION
SCALE: NOT TO SCALE

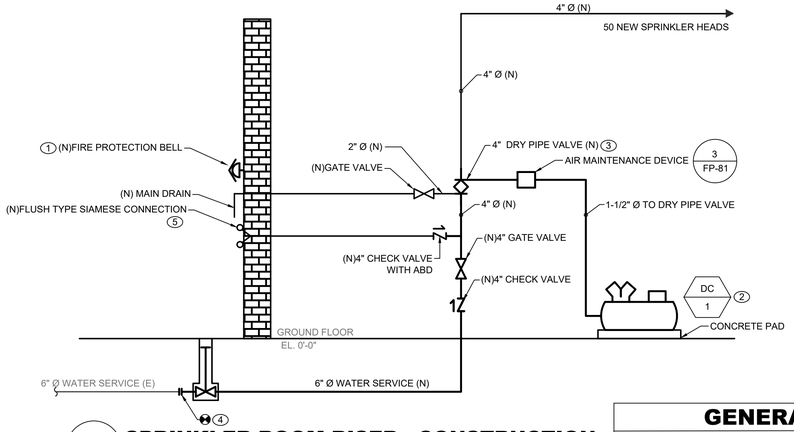


## 10 FP-81 SPRINKLER ROOM RISER - CONSTRUCTION
SCALE: NOT TO SCALE

## SPRINKLER DEMOLITION NOTES:

1. DISCONNECT FROM FIRE ALARM SYSTEM & DEMOLISH EXISTING FIRE BELL.
2. DEMOLISH EXISTING AIR COMPRESSOR AND ASSOCIATED AIR PIPING.
3. DEMOLISH EXISTING 4" DRY VALVE. DISCONNECT EXISTING FIRE ALARM DEVICES FOR FUTURE CONNECTION.
4. CUT AND TEMPORARILY CAP EXISTING 6" FIRE SERVICE FOR FUTURE CONNECTION BEHIND BUILDING LINE.

## SPRINKLER CONSTRUCTION NOTES:

1. INSTALL NEW FIRE BELL AND RECONNECT TO EXISTING ALARM SYSTEM. FIRE BELL SHALL BE LOCATED IN THE SAME LOCATION OF THE CURRENTLY INSTALLED AND CONNECTED FIRE BELL.
2. INSTALL NEW AIR COMPRESSOR AND AIR PIPING. AIR COMPRESSOR SHALL BE INSTALLED ON A CONCRETE PAD. LOCATION OF THE NEW AIR COMPRESSOR AND TANK SHALL BE LOCATED IN THE FIELD. PROVIDE A SHUT OFF VALVE ON THE PIPING FROM THE AIR COMPRESSOR.
3. INSTALL NEW 4" DRY VALVE. RECONNECT FIRE ALARM DEVICES TO EXISTING SYSTEM.
4. RECONNECT EXISTING 6" FIRE SERVICE TO NEW UNDERGROUND BEHIND BUILDING LINE.
5. INSTALL NEW SIGNAGE AND NEW SIAMESE CONNECTION. SUCH SIGN SHALL HAVE THE LETTERS "FDC" AT LEAST 6 INCHES (152 MM) HIGH AND AN ARROW TO INDICATE THE LOCATION OF THE SIAMESE CONNECTION. SIGN SHALL BE LOCATED IN FRONT OF THE GAMES ROW NORTH BATHROOM AND POINTING IN THE DIRECTION OF THE SIAMESE CONNECTION. SIGN SHALL BE SUBJECT TO THE APPROVAL OF THE FIRE CODE OFFICIAL.

## GENERAL NOTES:

1. ALL DISTRIBUTION PIPING, INCLUDING PIPING NOT BEING REPLACED, SHALL BE (RE)PAINTED. REFER TO SPECIFICATION FOR PAINT TYPE AND APPLICATION PROCEDURE.
2. COORDINATE WITH FACILITY PRIOR TO SHUTDOWN OF FIRE PROTECTION SYSTEM FOR ANY DEMOLITION AND CONSTRUCTION WORK.
3. CONTRACTOR SHALL PROVIDE FIRE WATCH AS NEEDED FOR THE BUILDING WHILE SPRINKLER COVERAGE IS IMPACTED.
4. UPON COMPLETION OF NEW EQUIPMENT, SYSTEM SHALL BE TESTED FOR PROPER OPERATION.
5. CONTRACTOR TO COORDINATE WITH FACILITY WHEN WORKING AROUND OR ABOVE THE RIDE COMPONENTS, AND PROVIDE ALL NECESSARY MEASURES TO PROTECT THESE COMPONENTS PER THE REQUIREMENTS OF THE FACILITY.


CONSULTANT INFORMATION
LiRo Engineers, Inc.
A LiRo Group Company
Syosset, N.Y. 516-214-8157[T]


CONSULTANT SEAL
STATE OF NEW YORK · FRANK F. ULLISE · No. 090111 · LICENSED PROFESSIONAL ENGINEER

| REVISION NUMBER | DATE | MADE BY | APP'D BY | REVISION |
|---|---|---|---|---|
| | | | | |

RECORD DRAWING CERTIFICATION
☐ AS BUILT – CHANGES AS NOTED ☐ AS BUILT – NO CHANGES

CONTRACTOR: NAME / SIGNATURE / TITLE / DATE
PROJECT COORDINATOR: NAME / SIGNATURE / TITLE / DATE

WESTCHESTER COUNTY, NEW YORK
DEPARTMENT OF PUBLIC WORKS AND TRANSPORTATION
DIVISION OF ENGINEERING

INFRASTRUCTURE REHABILITATION - PHASE 3
PLAYLAND PARK, RYE, NEW YORK
NORTHEAST BURGER BARN
FIRE PROTECTION DETAILS

| | |
|---|---|
| CONTRACT NUMBER | 22-523 |
| SHEET NUMBER | BB-FP-81 |
| DWG NO.: | 65 of 664 |
| SCALE: | AS INDICATED |
| DATE: | 08/23/2022 |
| DPW FILE NUMBER | 1-118-FP-814-0 |
| REV. NO. | 0 |

# PLUMBING SYMBOL LIST

| IDENTIFIER | DESCRIPTION |
|---|---|
| ——— — ——— CW | DOMESTIC COLD WATER |
| ——— W ——— | WASTE PIPING (ABOVE SLAB) |
| — — — - W - — — — — | WASTE PIPING (UNDER SLAB) |
| ——— S ——— | SANITARY PIPING (ABOVE SLAB) |
| — — — - S - — — — — | SANITARY PIPING (UNDER SLAB) |
| --------- V ---------- | SANITARY VENT PIPING |
| | FIELD CONNECT |
| | FIELD DISCONNECT |
| F# | REFER TO SUPPLEMENTAL FIGURE INDICATED BY NUMBER (I.E. F2 REFERS TO FIGURE 2) |
| XXX / XX | EQUIPMENT TAG / EQUIPMENT NUMBER |
| XXX / X-XXX | DETAIL TAG/CALL OUT TAG / PLUMBING SHEET NUMBER |

# PIPING ELEMENTS/VALVING

- BACKFLOW PREVENTER (DOUBLE CHECK VALVE ASSEMBLY)
- BALL VALVE
- CAP ON END OF PIPE
- CLEANOUT
- FD — FLOOR DRAIN
- GATE VALVE
- HB — HOSE BIBB
- VALVE IN VALVE BOX
- PIPE DROPPING DOWN
- PIPE RISING UP
- TEE OUTLET DOWN
- TEE OUTLET UP
- VALVE IN RISE OR DROP
- NFHB — NON FREEZE HOSE BIBB IN BOX W/VACUUM BREAKER

# SCOPE OF WORK

PLUMBING SCOPE OF WORK INCLUDES, BUT IS NOT LIMITED TO:

1. REMOVAL OF EXISTING WATER SERVICE.

2. THE INSTALLATION OF NEW PLUMBING FIXTURES AND ALL ASSOCIATED PIPING AND ACCESSORIES.

3. THE INSTALLATION OF NEW SANITARY AND DOMESTIC WATER SERVICES.

NOTE- THIS SCOPE OF WORK DESCRIPTION IS PROVIDED TO GIVE AN OVERALL "MACRO" DESCRIPTION OF THIS PROJECT. P.C. IS RESPONSIBLE TO REVIEW ALL ENGINEERING & ARCHITECTURAL DRAWINGS & VISIT THE SITE IF NEEDED, PRIOR TO SUBMISSION OF BID.

# CODE REFERENCE

2020 NEW YORK STATE BUILDING CODE
2020 NEW YORK STATE MECHANICAL CODE
2020 NEW YORK STATE PLUMBING CODE
2020 NEW YORK STATE ENERGY CONSERVATION CODE

# SECTION 704
# DRAINAGE PIPING INSTALLATION

**704.1 SLOPE OF HORIZONTAL DRAINAGE PIPING.**

HORIZONTAL DRAINAGE PIPING SHALL BE INSTALLED IN UNIFORM ALIGNMENT AT UNIFORM SLOPES. THE MINIMUM SLOPE OF HORIZONTAL DRAINAGE PIPE SHALL BE IN ACCORDANCE WITH TABLE 704.1.

**TABLE 704.1**
**SLOPE OF HORIZONTAL DRAINAGE PIPE**

| SIZE (INCHES) | MINIMUM SLOPE (INCH PER FOOT) |
|---|---|
| 2 1/2 OR LESS | 1/4 |
| 3 TO 6 | 1/8 |
| 8 OR LARGER | 1/16 |

# LEED NOTES

1. ALL ADHESIVES, SEALANTS, PAINTS & COATINGS APPLIED TO THE INTERIOR OF THE BUILDING (WITHIN THE WEATHER PROOFING SYSTEM, INCLUDING WALL CAVITIES) MUST NOT EXCEED THE LEED VOC LIMITS. PROVIDE A VOC SUBMITTAL AND MSDS FOR ALL ADHESIVES, SEALANTS, PAINTS AND COATINGS TO BE APPLIED.

# PLUMBING GENERAL NOTES:

1. ALL PLUMBING WORK UNDER THIS CONTRACT SHALL CONFORM TO THE LATEST EDITION OF THE PLUMBING CODE OF NEW YORK STATE (PC-NYS), THE NEW YORK STATE ENERGY CODE, AND THE REQUIREMENTS OF THE UTILITY AND THE LOCAL WATER COMPANY.
2. ALL MATERIALS SHALL BE NEW UNLESS NOTED OTHERWISE.
3. THE PLUMBING CONTRACTOR SHALL ASSUME RESPONSIBILITY FOR ALL LABOR AND MATERIALS SUPPLIED AND INSTALLED UNDER THIS CONTRACT AND SHALL GUARANTEE THE WORK PERFORMED UNDER THIS CONTRACT FOR A PERIOD OF ONE (1) YEAR FROM THE DATE OF ACCEPTANCE OF THIS WORK.
4. PLUMBING CONTRACTOR SHALL CONSULT WITH, COOPERATE AND COORDINATE WITH THE GENERAL CONTRACTOR, MECHANICAL CONTRACTOR, SPRINKLER CONTRACTOR, ELECTRICAL CONTRACTOR, ETC. IN ORDER TO MINIMIZE INTERFERENCES BETWEEN TRADES DURING PERFORMANCE OF THIS WORK.
5. THE PLUMBING CONTRACTOR SHALL PREPARE AND FILE ALL REQUIRED PLANS AND PERMITS WITH THE LOCAL AUTHORITIES. PC SHALL PAY THE FILING FEES AS REQUIRED. PC SHALL OBTAIN ALL APPROVALS AND SHALL PAY FOR ALL WORK PERMITS, INSPECTIONS AND SIGN-OFFS AS REQUIRED TO EXECUTE THIS WORK IN A MANNER IN CONFORMANCE WITH THE CODES AND AUTHORITIES HAVING JURISDICTION.
6. THE PLUMBING CONTRACTOR SHALL PERFORM ALL TESTS AND ARRANGE FOR ALL INSPECTIONS FOR WORK UNDER HIS CONTRACT AS REQUIRED BY LAW AND SHALL SUPPLY ALL CERTIFICATES OF INSURANCE AS REQUIRED BY THE LAW AND THE OWNER. REFER TO SECTION 107 (INSPECTIONS) OF THE PC-NYS.
7. THE PLUMBING CONTRACTOR SHALL MAKE ALL FINAL CONNECTIONS TO ALL PLUMBING EQUIPMENT REGARDLESS WHETHER ILLUSTRATED HEREIN WITHOUT ANY ADDITIONAL COSTS TO THE OWNER.
8. PLUMBING CONTRACTOR SHALL VISIT THE SITE & BECOME FAMILIAR WITH THE EXISTING CONDITIONS, INCLUDING THE SIZE OF CONNECTIONS, ROUGHING DIMENSIONS, ETC. BEFORE SUBMITTING A QUOTATION FOR THE WORK.
9. PLUMBING CONTRACTOR SHALL PERFORM ALL CUTTING, EXCAVATION, BACKFILLING, ROUGH & FINISH PATCHING AS PER THE SPECIFICATIONS AS REQUIRED FOR THE INSTALLATION OF THE WORK, UNLESS NOTED OTHERWISE.
10. ALL CONNECTIONS TO NEW AND/OR EXISTING EQUIPMENT SHALL BE SIZED AND INSTALLED IN ACCORDANCE WITH THE MANUFACTURER'S INSTRUCTIONS.
11. IT IS THE INTENT OF THIS CONTRACT THAT THE COMPLETED WORK BE FULLY OPERATIONAL.
12. ALL PIPE HANGERS AND SUPPORTS SHALL BE INSTALLED AT INTERVALS AND BE FABRICATED OF MATERIALS AS REQUIRED BY THE PC-NYS.
13. ALL NEW PLUMBING FIXTURES SHALL BE INSTALLED WITH ANGLE STOP VALVES IN THE SUPPLY LINES SERVING THE FIXTURE.
14. ALL NEW EXPOSED WATER AND WASTE PIPING SERVING THE FIXTURES SHALL BE CHROME PLATED AND SHALL HAVE CHROME PLATED ESCUTCHEONS RIGIDLY ATTACHED TO THE PIPING AT THE POINT OF WALL OR FLOOR PENETRATIONS.
15. PLUMBING CONTRACTOR SHALL SUBMIT SHOP DRAWINGS FOR ALL NEW PLUMBING FIXTURES AND EQUIPMENT TO BE SUPPLIED AND INSTALLED UNDER THIS CONTRACT FOR APPROVAL BEFORE INSTALLATION OF SAME.
16. WATERPROOF PIPE SLEEVES SHALL BE INSTALLED AT ALL PENETRATIONS THROUGH EXTERIOR WALLS. PIPE SLEEVES SHALL BE INSTALLED AT ALL WALL PENETRATIONS THROUGH INTERIOR WALLS AND FLOORS.
17. WATER HAMMER ELIMINATORS (APPROVED - FIELD FABRICATED OR MANUFACTURED) SHALL BE INSTALLED AT ALL RUN OUTS IN HOT AND/OR COLD WATER LINES SERVING TOILET ROOMS AND OTHER AREAS WHICH INCORPORATE "RAPID - ACTION" VALVES SUCH AS FLUSHOMETERS, SOLENOID VALVES, ETC.
18. ALL PIPING SHALL BE TESTED AT A MINIMUM PRESSURE OF 1-1/2 TIMES THE MAXIMUM OPERATING PRESSURE UNLESS OTHERWISE NOTED ON THE DOCUMENTS OR THE PLUMBING CODE AND IN ACCORDANCE WITH THE UTILITY REQUIREMENTS.
19. ALL REMOVALS PERFORMED UNDER THIS CONTRACT SHALL INCLUDE REMOVAL OF ALL DEBRIS AND DISPOSAL AT AN APPROPRIATE SITE.
20. ALL LAVATORIES DESIGNED FOR USE BY PERSONS CONFINED TO WHEELCHAIRS SHALL HAVE THE HOT & COLD WATER SERVICES, AS WELL AS THE TRAP, RECESSED & INSULATED IN ACCORDANCE WITH ADA REQUIREMENTS.
21. REFER TO THE ARCHITECTURAL PLANS FOR ALL STRUCTURAL DIMENSIONS.
22. ALL WORK TO BE COORDINATED WITH OTHER TRADES.
23. ALL PIPING PENETRATIONS TO BE SEALED AROUND WITH "NELSON" FIRE SEAL.
24. ALL WATER SERVICE PIPING WITHIN THE BUILDING IS TO BE INSULATED IN ACCORDANCE WITH ALL NEW YORK STATE PLUMBING CODE (NYS-PC) AND NYS ENERGY CODES.
25. ALL PLUMBING FIXTURES TO BE INSTALLED AS PER FACTORY RECOMMENDATIONS.
26. ALL PLUMBING FIXTURES TO BE TRAPPED, VENTED AND PROVIDED WITH AIR SHOCKS WHEN REQUIRED.
27. PLUMBING FIXTURES SHALL COMPLY WITH "WATER CONSERVATION" REQUIREMENT AS DETAILED IN THE NYS-PC.
28. GC IS RESPONSIBLE TO SUBMIT APPLICATION AND TAP FEES TO LOCAL WATER AUTHORITY AND HAVE OWNER FILL OUT APPLICATION UPON COMPLETION OF PLUMBING ROUGH-IN INSPECTION.
29. ALL WATER AND HORIZONTAL STORM DRAIN PIPING INCLUDING ROOF DRAIN BODY SHALL BE INSULATED.
30. FLOOR DRAINS AND FLOOR CLEAN-OUTS SHALL BE SET LEVEL WITH FINISHED FLOORS.
31. ALL PIPE DIMENSIONS ARE INSIDE CLEAR.
32. ALL PLUMBING FIXTURES TO HAVE ISOLATION VALVES.
33. P.C. IS RESPONSIBLE TO ADJUST HOT WATER HEATER (WH) TEMPERATURE TO ENSURE A TEMPERATURE RANGE OF 110°F TO 120°F AT THE INDIVIDUAL FIXTURE OUTPUT. P.C. MUST ENSURE A TEMPERATURE OF 120° F MAXIMUM AT THE FIXTURES TO PREVENT SCALDING.
34. BUILDING DOMESTIC WATER DEMAND & SIZING IS CALCULATED FROM NYS-PC SECTION 603, 604 & APPENDIX E.
35. BUILDING SANITARY DEMAND & SIZING IS CALCULATED FROM NYS-PC SECTIONS 709 AND 710.
36. ALL DFU CALCULATIONS ARE BASED OFF OF TABLE 709.1 OF THE NYS-PC.
37. ALL SANITARY WATER PIPING SHALL BE PITCHED IN ACCORDANCE WITH NYS-PC SECTION 704 BASED ON TABLE 704.1 SLOPE OF HORIZONTAL DRAINAGE PIPE.
38. ALL VENT SIZING IS BASED OFF OF SECTION 916 OF THE NYS PLUMBING CODE.
39. ALL PLUMBING EQUIPMENT SHALL BE INSTALLED PER MANUFACTURER'S REQUIREMENTS/SPECIFICATIONS.

# ABBREVIATIONS:

| | |
|---|---|
| AD | ACCESS DOOR |
| BFP | BACKFLOW PREVENTER |
| CO | CLEAN OUT |
| CW | COLD WATER |
| DCV | DOUBLE CHECK VALVE |
| DFU | DRAINAGE FIXTURE UNIT |
| DPCO | DECK PLATE CLEAN OUT |
| FC | FIELD CONNECT |
| FD | FLOOR DRAIN |
| FFD | FUNNEL FLOOR DRAIN |
| FU | FIXTURE UNIT |
| HW | HOT WATER |
| HWR | HOT WATER RETURN |
| IAW | IN ACCORDANCE WITH |
| IWFD | INDIRECT WASTE FUNNEL DRAIN |
| LAV | LAVATORY |
| JS | JANITOR'S SINK |
| NC | NORMALLY CLOSED |
| NO | NORMALLY OPEN |
| NYS-PC | NEW YORK STATE PLUMBING CODE |
| RD | ROOF DRAIN |
| S | SANITARY |
| SD | STORM DRAIN |
| TMV | THERMOSTATIC MIXING VALVE |
| U.O.N. | UNLESS OTHERWISE NOTED |
| UR | URINAL |
| V | VENT |
| WC | WATER CLOSET |
| PC | PLUMBING CONTRACTOR |
| MC | MECHANICAL CONTRACTOR |
| TYP. | TYPICAL |
| VIF | VERIFY IN FIELD |
| WCO | WALL CLEAN OUT |
| WFU | WATER FIXTURE UNITS |
| (N) | NEW |
| (E) | EXISTING |
| (D) | DEMO |

THE ABBREVIATIONS ARE SHOWN FOR GENERAL REFERENCE ONLY. THE PRESENCE OF AN ABBREVIATION ON THIS LIST DOES NOT IMPLY ITS USE ON THIS PROJECT. REFER TO DRAWINGS FOR SPECIFIC ABBREVIATIONS USED.

# PLUMBING FIXTURE SCHEDULE

| MARK | DESCRIPTION | SERVICE | | | | | | BASED ON: | | | REMARKS |
|---|---|---|---|---|---|---|---|---|---|---|---|
| | | TRAP | S/W | V | CW | TW | HW | ITEM | MANUFACTURER | MODEL | |
| PF-1 | WALL MOUNTED WATER CLOSET | - | 4" | 2" | 1-1/2" | - | - | BOWL FLUSH VALVE SEAT CARRIER | SLOAN | ST-2459 | FLUSH VALVE SLOAN 8111 SFSM-1.28 |
| PF-3 | LAVATORY - WALL-MOUNT | 1-1/2" | 1-1/2" | 1-1/2" | - | 1/2" | - | FAUCET SUPPORT DRAIN TRIM | DURAVIT | 2350500030 | FAUCET AMERICAN STANDARD 702B.103 |
| PF-5 | SERVICE SINK | 3" | 3" | 2" | 1/2" | - | 1/2" | FAUCET DRAIN TRIM | MUSTEE | 63M | FAUCET AMERICAN STANDARD 8344.212 |

NOTES:
1. PROVIDE ALL REQUIRED HANGERS, MOUNTING BRACKETS, AND HARDWARE FOR A COMPLETE INSTALLATION PER MANUFACTURES INSTRUCTIONS.
2. PROVIDE ALL LAVATORIES WITH POWER KIT PK00.WRK BATTERY PACK W/HOLDER AND MIXING VALVE 605XTMV1070.

# ELECTRIC DOMESTIC HOT WATER HEATER SCHEDULE

| TAG | MANUFACTURER | MODEL | LOCATION | HEATER KW | STORAGE CAPACITY GAL. | STORAGE WATER TEMP SETPOINT (DEG F) | ELECTRICAL | | DIMENSION | APPROX. SHIPPING WEIGHT (LBS) |
|---|---|---|---|---|---|---|---|---|---|---|
| | | | | | | | V-PH-HZ | AMPS | HxD (IN) | |
| WH-1 | BRADFORD WHITE | LE150L3-3 | JANITOR CLOSET | 3 | 47 | 110 | 240-1-60 | 12.5 | 34.5x24 | 140 |

NOTES:

# FLOOR DRAIN SCHEDULE

| TAG | TYPE | MANUFACTURER | MODEL | SERVICE |
|---|---|---|---|---|
| FD-1 | ADJUSTABLE | ZURN | FD-2320-R5 | ALL SPACES |

NOTES:
1. PROVIDE THE FOLLOWING FOR FD-1; CHORME PLATED STRAINER ASSEMBLY, 6" NICKEL HEAD ASSEMBLY, AND VANDAL PROOF.
2. PROVIDE BARRIER-TYPE TRAP SEAL PROTECTION DEVICE ZURN Z1072 OR APPROVED EQUAL.

# CLEANOUT SCHEDULE

| TAG | TYPE | MANUFACTURER | MODEL |
|---|---|---|---|
| CO | ADJUSTABLE DECK PLATE CLEAN OUT | WATTS | CO-1200-R |

# WALL HYDRANT SCHEDULE

| TAG | TYPE | MANUFACTURER | MODEL |
|---|---|---|---|
| NFHB | WALL HYDRANT | ZURN | Z1320XL |

# REDUCED PRESSURE ZONE VALVE SCHEDULE

| TAG | MANUFACTURER | MODEL | LOCATION | SIZE (IN) | PRESSURE DROP (PSI) |
|---|---|---|---|---|---|
| RPZ-1 | WATTS | LF009-S | SPRINKLER ROOM | 2 | 10 |

NOTES:
1. PROVIDE STRAINER.

# PLUMBING DRAWING LIST

| SHEET NO. | SHEET NAME | REVISON NO. | REVISION DATE |
|---|---|---|---|
| BB-P-01 | PLUMBING NOTES, SYMBOLS, ABBREVIATIONS AND DRAWING LIST | 0 | - |
| BB-P-21 | PLUMBING GROUND FLOOR CONSTRUCTION PLAN | 0 | - |
| BB-P-81 | PLUMBING DETAILS | 0 | - |


CONSULTANT INFORMATION
LiRo Engineers, Inc.
A LiRo Group Company
Syosset, N.Y. 516-214-8157[T]


CONSULTANT SEAL
STATE OF NEW YORK · FRANK F. ULISSE · No. 090111-1 · LICENSED PROFESSIONAL ENGINEER

| REVISION NUMBER | DATE | MADE BY | APP'D BY | REVISION |
|---|---|---|---|---|

RECORD DRAWING CERTIFICATION
☐ AS BUILT – CHANGES AS NOTED ☐ AS BUILT – NO CHANGES
CONTRACTOR: NAME / SIGNATURE / TITLE / DATE
PROJECT COORDINATOR: NAME / SIGNATURE / TITLE / DATE

WESTCHESTER COUNTY, NEW YORK
DEPARTMENT OF PUBLIC WORKS AND TRANSPORTATION
DIVISION OF ENGINEERING

**INFRASTRUCTURE REHABILITATION - PHASE 3**
**PLAYLAND PARK, RYE, NEW YORK**
**NORTHEAST BURGER BARN**
**PLUMBING NOTES, SYMBOLS, ABBREVIATIONS AND DRAWING LIST**

| | |
|---|---|
| CONTRACT NUMBER | 22-523 |
| SHEET NUMBER | BB-P-01 |
| DWG NO.: | 66 of 664 |
| SCALE: | AS INDICATED |
| DATE: | 08/23/2022 |
| DPW FILE NUMBER | 1-118-P-815-0 |
| REV. NO. | 0 |

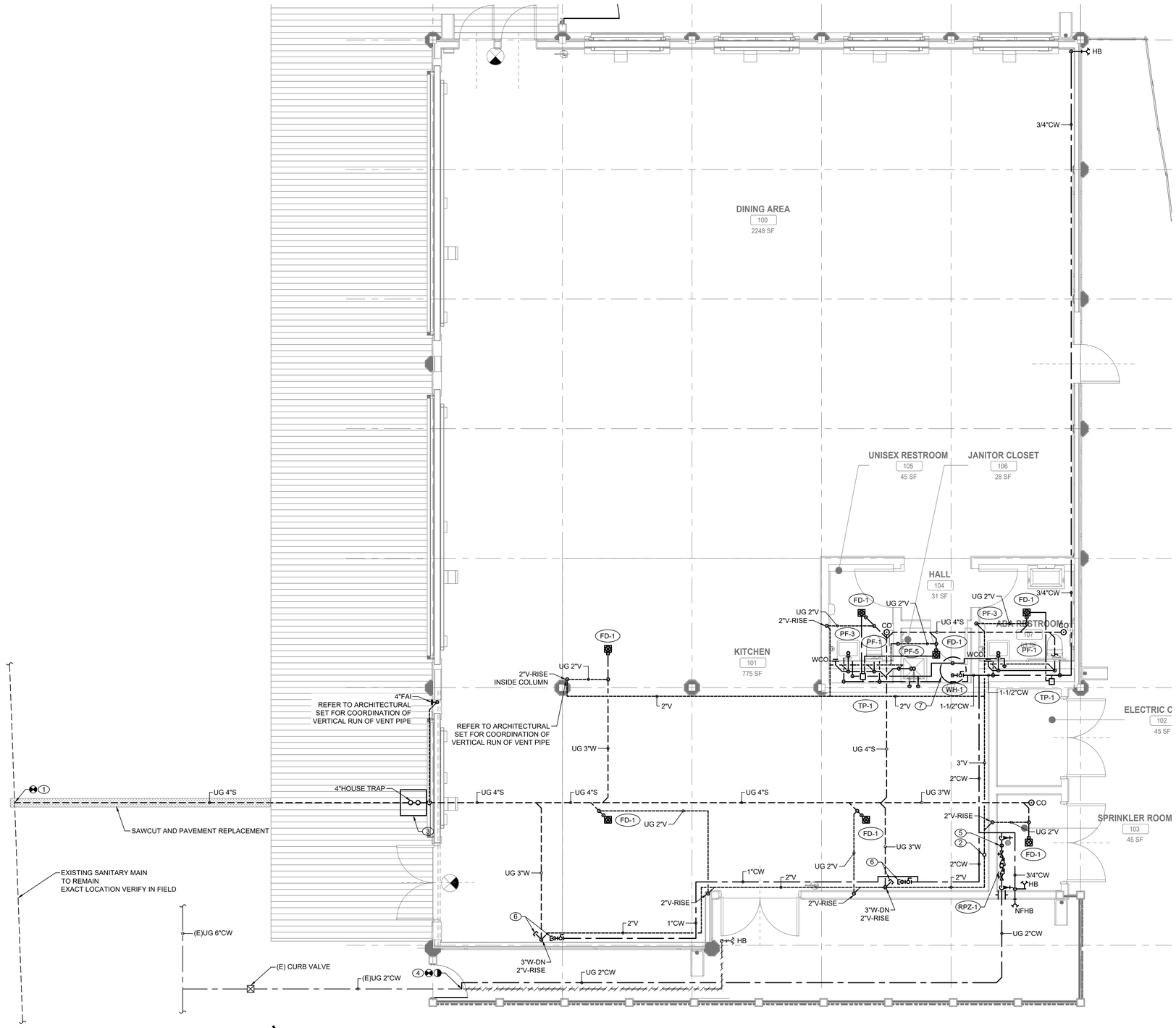


1 P-21 **PLUMBING GROUND FLOOR CONSTRUCTION PLAN**
SCALE: 1/4" = 1'-0

## PLUMBING CONSTRUCTION NOTES:

1. CONNECT NEW 4" SANITARY SERVICE TO EXISTING SEWER MAIN. CONTRACTOR TO VERIFY THE INVERT, SIZE, AND MATERIAL OF THE EXISTING SEWER PIPING TO FACILITATE NEW SANITARY SERVICE CONNECTION.
2. PROVIDE NEW 4" VENT THRU ROOF.
3. PROVIDE NEW 4"HOUSE TRAP IN PIT. PROVIDE ACCESS DOOR FOR MAINTENANCE. PROVIDE 4" FRESH AIR INTAKE THRU EXTERIOR WALL. TERMINATE VENT WITH INSECT SCREEN. HOUSE TRAP SHALL BE PROTECTED FROM FREEZING.
4. CUT EXISTING WATER SERVICE BELOW GROUND. ABANDON IN PLACE EXISTING WATER SERVICE PIPING, REMOVE PORTIONS OF PIPING THAT EXPOSED OR IN CONFLICT WITH NEW CONSTRUCTION. REMOVE EXISTING HOSE BIB FROM EXTERIOR OF THE BUILDING. VERIFY IN FIELD IF ANY OTHER FACILITIES CONNECTED TO THE SAME WATER SERVICE AND RECONNECT THEM AS NECESSARY. RECONNECT NEW 2" DOMESTIC COLD WATER SERVICE TO EXISTING WATER MAIN.
5. PROVIDE A COMPRESSED AIR CONNECTION FOR WINTERIZING.
6. PROVIDE 3"W AND 1"CW STUB-UP FOR FUTURE KITCHEN FIXTURES WITHIN EXPOSED NEXT TO THE WALL. CONNECTION SHALL BE ACCESSIBLE AFTER CONSTRUCTION.
7. PROVIDE NEW CEILING MOUNTED ELECTRIC WATER HEATER.
   ALL FAUCETS FOR LAVATORIES WITH MIXING VALVE TO PROVIDE TEMPERED WATER.

## GENERAL NOTES:

1. COORDINATE WITH FACILITY PRIOR TO SHUTDOWN OF WATER DISTRIBUTION SYSTEM FOR ANY DEMOLITION AND CONSTRUCTION WORK.
2. PROVIDE DRAIN VALVES AT BOTTOM FOR EACH BRANCH. PROVIDE ACCESS PANELS TO ALL VALVES ABOVE CEILING AND BEHIND WALLS.
3. INSTALL NEW WATER PIPING WITH PROPER SLOPES TO AVOID WATER TRAPS DURING WINTER SEASON.
4. CONTRACTOR TO COORDINATE WITH FACILITY WHEN WORKING AROUND OR ABOVE THE RIDE COMPONENTS, AND PROVIDE ALL NECESSARY MEASURES TO PROTECT THESE COMPONENTS PER THE REQUIREMENTS OF THE FACILITY.
5. UPON COMPLETION, SYSTEM SHALL BE TESTED FOR PROPER OPERATION.
6. SEWER CROSSING WATER MAINS, CONDUITS, OR OTHER UTILITY SHALL BE MINIMUM 18" CLEARANCE BETWEEN THE OUTSIDE OF THE UTILITY AND OUTSIDE OF THE SEWER. THE CROSSINGS SHALL BE ARRANGED SO THAT THE SEWER JOINTS WILL BE EQUIDISTANT AND AS FAR AS POSSIBLE FROM THE WATER MAIN JOINTS.

## RISER DIAGRAMS NOTES:

1. SANITARY AND DOMESTIC WATER RISER DIAGRAM IS PROVIDED AS A SCHEMATIC AID DELINEATING PROJECT SCOPE. CONTRACTOR SHALL FIELD-VERIFY CONDITIONS AND COMPLY WITH ALL PLUMBING REQUIREMENTS OF THE NEW YORK STATE BUILDING CODE.
2. ALL DOMESTIC WATER AND SANITARY PIPING SHALL BE IN FULL CONFORMANCE WITH THE NEW YORK STATE PLUMBING CODE.
3. PROVIDE AN AIR CHAMBER AT LEAST THE SIZE OF THE SUPPLY PIPE AT THE TOP OF EACH HOT AND COLD WATER RISER.
4. PROVIDE ALL REQUIRED OFFSETS, FITTINGS, VALVES, TRAPS, DRAINS, ETC., EVEN THOUGH TROUGH NOT INDICATED DUE TO SMALL SCALE OF THE DRAWING.
5. CHECK DRAWINGS OF OTHER TRADES AND ARRANGE WORK TO AVOID CONFLICTS.
6. USE REDUCING FITTINGS FOR CHANGES OF PIPE SIZE. USE NO BUSHING EXCEPT WITH SPECIAL PERMISSION.
7. PROVIDE CONTROL GATE VALVES WHERE NOTED OR REQUIRED FOR COMPLETE REGULATING CONTROL OF ALL SYSTEM, PLUMBING FIXTURES, AND EQUIPMENT. VALVES: ACCESSIBLE BUT NO VALVES INSTALLED WITH HANDLES POINTING DOWN.
8. PROVIDE DRAIN VALVES FOR EACH BRANCH AT BOTTOM OF CHASES. PROVIDE ACCESS PANELS TO ALL VALVES ABOVE CEILING AND BEHIND WALLS.
9. INSTALL NEW WATER PIPING WITH PROPER SLOPES TO AVOID WATER TRAPS DURING WINTER SEASON.

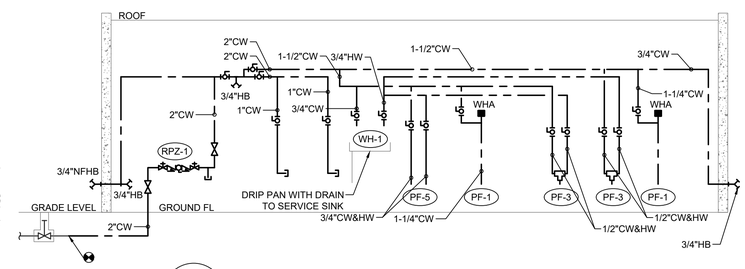


2 P-21 **DOMESTIC WATER RISER DIAGRAM**
SCALE: NOT TO SCALE

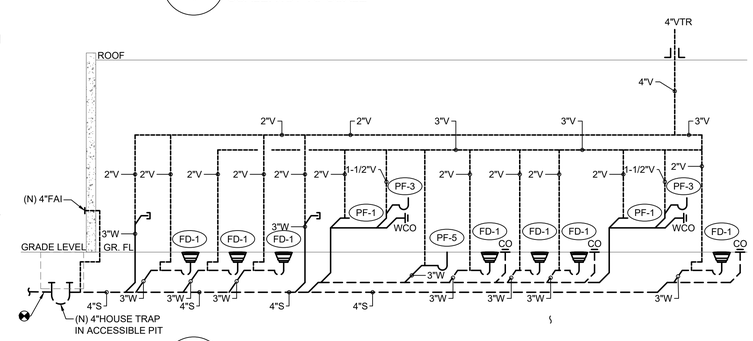


3 P-21 **SANITARY RISER DIAGRAM**
SCALE: NOT TO SCALE

CONSULTANT INFORMATION

**LiRo Engineers, Inc.**
*A LiRo Group Company*
Syosset, N.Y. 516-214-8157[T]

CONSULTANT SEAL

STATE OF NEW YORK · FRANK F. ULLISE · No. 090111 · LICENSED PROFESSIONAL ENGINEER

| REVISION NUMBER | DATE | MADE BY | APP'D BY | REVISION |
|---|---|---|---|---|
| | | | | |

RECORD DRAWING CERTIFICATION

☐ AS BUILT – CHANGES AS NOTED ☐ AS BUILT – NO CHANGES

CONTRACTOR
NAME
SIGNATURE
TITLE DATE

PROJECT COORDINATOR
NAME
SIGNATURE
TITLE DATE

WESTCHESTER COUNTY, NEW YORK
DEPARTMENT OF PUBLIC WORKS AND TRANSPORTATION
DIVISION OF ENGINEERING

**INFRASTRUCTURE REHABILITATION - PHASE 3**
**PLAYLAND PARK, RYE, NEW YORK**
**NORTHEAST BURGER BARN**
**PLUMBING GROUND FLOOR CONSTRUCTION PLAN**

| | |
|---|---|
| CONTRACT NUMBER | 22-523 |
| SHEET NUMBER | BB-P-21 |
| DWG NO.: | 67 of 664 |
| SCALE: | AS INDICATED |
| DATE: | 08/23/2022 |
| DPW FILE NUMBER | 1-118-P-816-0 |
| REV. NO. | 0 |

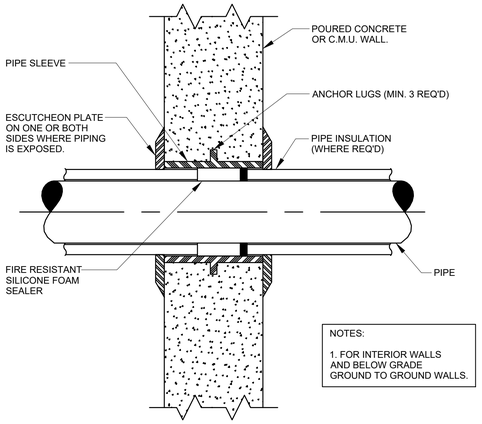


## 1 / P-81 PIPE SLEEVE THROUGH WALL DETAIL
SCALE: NOT TO SCALE

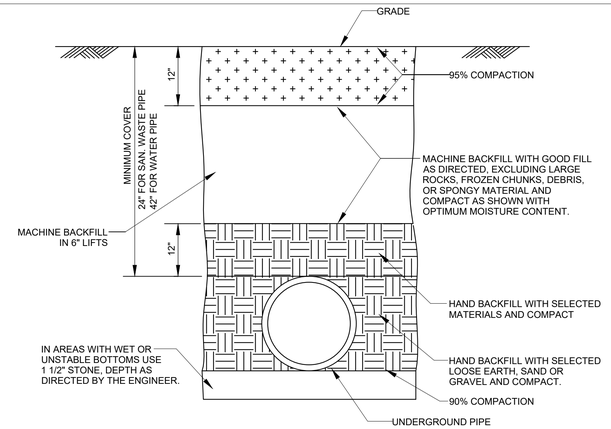


## 2 / P-81 PIPE TRENCH DETAIL
SCALE: NOT TO SCALE

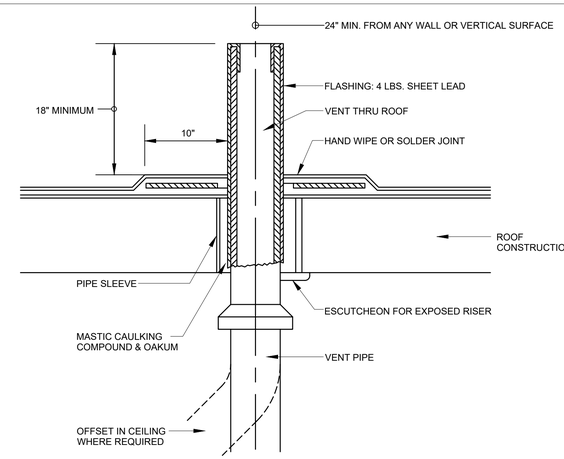


## 3 / P-81 VENT THRU ROOF DETAIL
SCALE: NOT TO SCALE

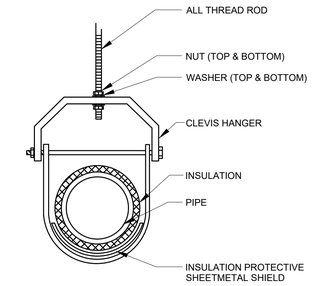


## 4 / P-81 TYPICAL CLEVIS HANGER DETAIL
SCALE: NOT TO SCALE

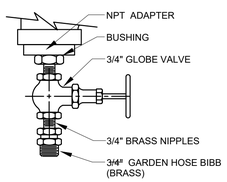


## 5 / P-81 DRAIN VALVE DETAIL
SCALE: NOT TO SCALE

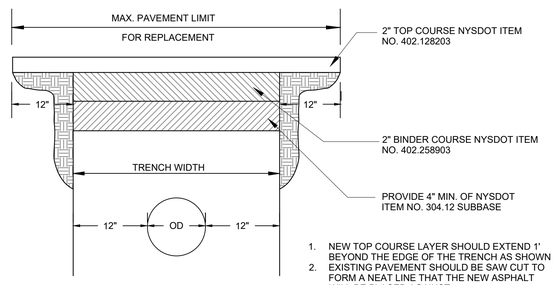


1. NEW TOP COURSE LAYER SHOULD EXTEND 1' BEYOND THE EDGE OF THE TRENCH AS SHOWN
2. EXISTING PAVEMENT SHOULD BE SAW CUT TO FORM A NEAT LINE THAT THE NEW ASPHALT WILL BE PLACED AGAINST.

## 6 / P-81 ASPHALTIC MACADAM PAVEMENT REPLACEMENT
SCALE: NOT TO SCALE

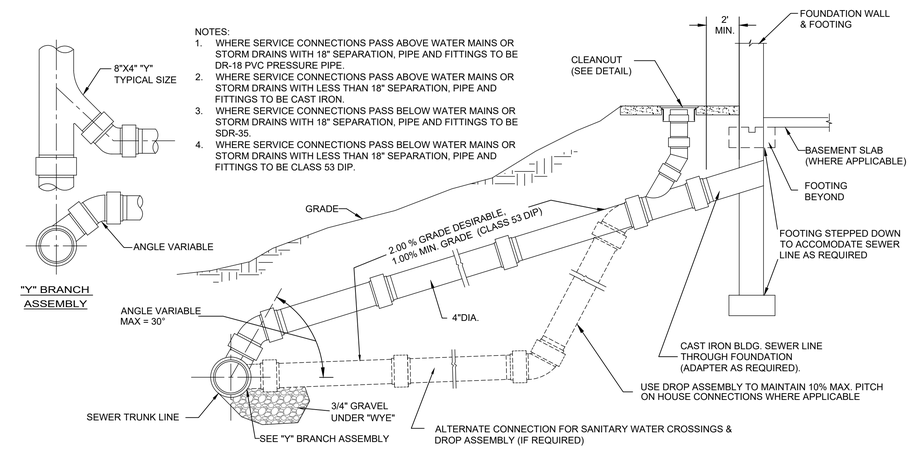


NOTES:
1. WHERE SERVICE CONNECTIONS PASS ABOVE WATER MAINS OR STORM DRAINS WITH 18" SEPARATION, PIPE AND FITTINGS TO BE DR-18 PVC PRESSURE PIPE.
2. WHERE SERVICE CONNECTIONS PASS ABOVE WATER MAINS OR STORM DRAINS WITH LESS THAN 18" SEPARATION, PIPE AND FITTINGS TO BE CAST IRON.
3. WHERE SERVICE CONNECTIONS PASS BELOW WATER MAINS OR STORM DRAINS WITH 18" SEPARATION, PIPE AND FITTINGS TO BE SDR-35.
4. WHERE SERVICE CONNECTIONS PASS BELOW WATER MAINS OR STORM DRAINS WITH LESS THAN 18" SEPARATION, PIPE AND FITTINGS TO BE CLASS 53 DIP.

## 7 / P-81 SEWER SERVICE CONNECTION/ DROP ASSEMBLY
SCALE: NOT TO SCALE

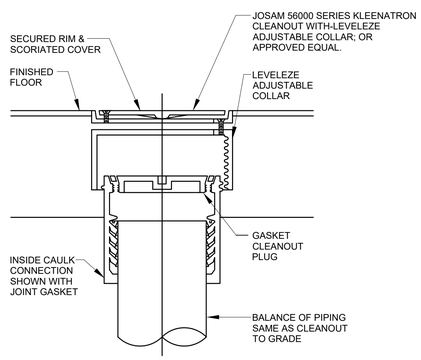


## 8 / P-81 FLOOR CLEANOUT DETAIL
SCALE: NOT TO SCALE

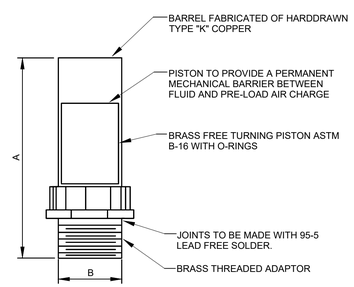


| PPP SIZE | P.D.I. SYMBOL | FIXTURE UNIT RATINGS | A SIZE | B SIZE |
|---|---|---|---|---|
| 1/2" | A | 1 - 11 | 5" | 1/2" |
| 3/4" | B | 12 - 32 | 5" | 3/4" |
| 1" | C | 33 - 60 | 7" | 1" |
| 1-1/4" | D | 61 - 113 | 7" | 1-1/4" |
| 1-1/2" | E | 114 - 154 | 9" | 1-1/2" |
| 2" | F | 155 - 330 | 9" | 2" |

NOTE: SEE WATER RISER DIAGRAMS FOR LOCATIONS OF WATER HAMMER ARRESTORS.

## 9 / P-81 WATER HAMMER ARRESTOR DETAIL
SCALE: NOT TO SCALE

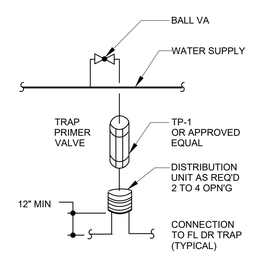


## 10 / P-81 TRAP PRIMER DETAIL
SCALE: NOT TO SCALE

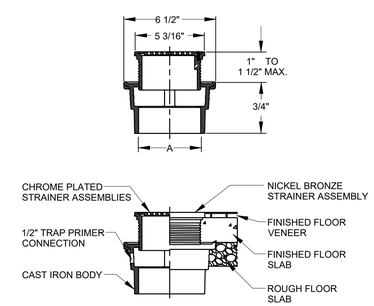


## 11 / P-81 FLOOR DRAIN DETAIL
SCALE: NOT TO SCALE

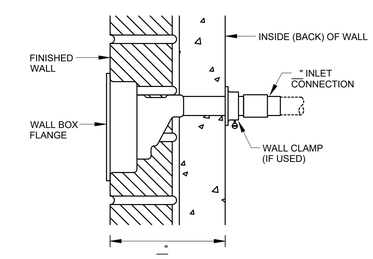


## 12 / P-81 FREEZE PROOF WALL HYDRANT
SCALE: NOT TO SCALE

CONSULTANT INFORMATION

LiRo Engineers, Inc.
A LiRo Group Company
Syosset, N.Y. 516-214-8157[T]

CONSULTANT SEAL

STATE OF NEW YORK · FRANK F. ULISSE · No. 090111 · LICENSED PROFESSIONAL ENGINEER

| REVISION NUMBER | DATE | MADE BY | APP'D BY | REVISION |
|---|---|---|---|---|
| | | | | |

RECORD DRAWING CERTIFICATION

☐ AS BUILT – CHANGES AS NOTED ☐ AS BUILT – NO CHANGES

CONTRACTOR
NAME
SIGNATURE
TITLE DATE

PROJECT COORDINATOR
NAME
SIGNATURE
TITLE DATE

WESTCHESTER COUNTY, NEW YORK
DEPARTMENT OF PUBLIC WORKS AND TRANSPORTATION
DIVISION OF ENGINEERING

**INFRASTRUCTURE REHABILITATION PHASE 3**
**PLAYLAND PARK, RYE, NEW YORK**
**SOUTHEAST ARCADE**
**PLUMBING DETAILS**

| | |
|---|---|
| CONTRACT NUMBER | 22-523 |
| SHEET NUMBER | BB-P-81 |
| DWG NO.: | 68 of 664 |
| SCALE: | AS INDICATED |
| DATE: | 08/23/2022 |
| DPW FILE NUMBER | 1-118-P-817-0 |
| REV. NO. | 0 |

# MECHANICAL GENERAL NOTES

1. ALL WORK AND MATERIALS SHALL BE PURCHASED AND INSTALLED IN ACCORDANCE WITH ALL NATIONAL & NEW YORK STATE CODES AND REGULATIONS (AS WELL AS ALL APPLICABLE LOCAL CODES & REGULATIONS). THE CONTRACTOR SHALL BE RESPONSIBLE TO ENSURE THAT ALL HVAC WORK IS PROVIDED AND INSTALLED IN STRICT ACCORDANCE WITH SEISMIC REQUIREMENTS.
2. DO NOT SCALE FROM THESE DRAWINGS.
3. THE EXACT MOUNTING HEIGHTS AND LOCATIONS OF ALL HVAC EQUIPMENT SHALL BE FIELD VERIFIED AND COORDINATED WITH ALL OTHER MECHANICAL, ELECTRICAL, PLUMBING, FIRE SPRINKLER, ARCHITECTURAL AND STRUCTURAL SYSTEMS. DURING SHOP DRAWINGS SUBMISSIONS, SHOW ALL MOUNTING HEIGHTS OF DUCTWORK, UNITS, ETC.
4. VERIFY ALL EQUIPMENT VOLTAGES WITH THE ELECTRICAL DESIGN PRIOR TO ORDERING EQUIPMENT.
5. PROVIDE PHASE LOSS PROTECTION FOR ALL POLY-PHASE MOTOR DEVICES.
6. DUCTWORK SHALL BE CONSTRUCTED OF GALVANIZED SHEET STEEL IN STRICT COMPLIANCE WITH THE LATEST EDITION OF THE ASHRAE, NFPA, AND SMACNA GUIDE RECOMMENDATIONS. ALL DUCTS TO HAVE PITTSBURGH TYPE LOCK FOR LONGITUDINAL SEAMS AND DRIVE SLIP / "S" SLIP FOR TRANSVERSE JOINTS. "DUCT-MATE" JOINT SYSTEM IS ACCEPTABLE IN LIEU OF PRIOR SEAM SYSTEMS. SIZES AS SHOWN INDICATE INSIDE CLEAR DIMENSIONS OF THE AIR PASSAGE. DUCTWORK SHALL BE FULLY INSULATED AS PER APPLICABLE CODES AND WRITTEN SPECIFICATIONS.
7. DUCT SIZES MUST BE VERIFIED FOR CLEARANCES AT THE JOB SITE PRIOR TO FABRICATION. DIMENSIONS MAY BE CHANGED TO ACCOMMODATE CONSTRUCTION AS LONG AS EFFECTIVE CROSS-SECTIONAL AREA IS MAINTAINED. DUCT TRANSITIONS SHALL BE CONSTRUCTED WITH A SLOPE OF 1" TO 4". ALL DEVIATIONS FROM ORIGINAL CONTRACT DRAWINGS SHALL BE REVIEWED BY ENGINEER DURING THE SHOP DRAWING PROCESS.
8. PROVIDE MANUAL BALANCING DAMPERS AS REQUIRED TO PROPERLY BALANCE EACH INDIVIDUAL AIR DISTRIBUTION SYSTEM. IF THE LOCATION OF THE BALANCING DAMPER IS NOT DEFINED ON THE DRAWINGS, THE FOLLOWING MINIMUMS STANDARDS SHALL GOVERN. ALL SUPPLY, RETURN, AND EXHAUST MAIN BRANCHES FROM TRUNKS, EACH SPLIT AND ALL SUB- BRANCHES FROM MAIN SHALL INCORPORATE BALANCING DAMPERS.
9. PROVIDE FLEXIBLE CONNECTORS AT ALL DUCT CONNECTIONS TO VIBRATING EQUIPMENT. THESE CONNECTORS SHALL BE INSTALLED IN CLOSE PROXIMITY TO SUCH EQUIPMENT.
10. PROVIDE FIRE DAMPERS WITH RATED ACCESS DOORS AT ALL DUCT PENETRATIONS THROUGH FIRE RATED WALLS, SMOKE AND FIRE STOPPING, SHAFT, FLOORS, RATED CEILINGS AND PARTITIONS AS REQUIRED TO MAINTAIN ARCHITECTURAL FIRE RATINGS. REFER TO THE ARCHITECTURAL PLANS AND SPECIFICATIONS FOR LOCATIONS AND FIRE RATING REQUIREMENTS. CONTRACTOR MUST FULLY REVIEW ALL ARCHITECTURAL AND ENGINEERING DRAWINGS AND VISIT THE SITE PRIOR TO SUBMITTING THE BID. NO EXTRAS WILL BE ALLOWED.
11. ALL ACCESS DOORS REQUIRED IN GENERAL CONSTRUCTION ARE TO BE PROVIDED AND INSTALLED BY THE CONTRACTOR. IT IS THE RESPONSIBILITY OF THE CONTRACTOR TO IDENTIFY SIZE, TYPE AND LOCATION OF SUCH DOORS FOR PROPER ACCESS TO ALL CONCEALED HVAC EQUIPMENT, VALVES AND OTHER RELATED EQUIPMENT. THE CONTRACTOR SHALL IDENTIFY THESE REQUIREMENTS ON A COORDINATED SHOP DRAWING PRIOR TO SYSTEM FABRICATION AND INSTALLATION.
12. ALL CEILING MOUNTED EQUIPMENT MUST BE SUPPORTED DIRECTLY FROM BUILDING STRUCTURE WITH COMBINATION SPRING AND NEOPRENE-IN-SHEAR HANGERS AND ROD. PROVIDE SUPPLEMENTARY STEEL AS REQUIRED TO ADEQUATELY SUPPORT THE LOAD.
13. THE CONTRACTOR MUST CONTRACT AN INDEPENDENT NEBB CERTIFIED AIR BALANCING & TESTING COMPANY TO PERFORM THE AIR BALANCING WORK AND ASSOCIATED SYSTEM AIR BALANCING REPORT. ALL WORK SHALL BE PERFORMED IN STRICT COMPLIANCE WITH ALL APPLICABLE CODES, REGULATIONS, PLANS AND WRITTEN SPECIFICATIONS. SUBMIT THE FINAL AIR BALANCE REPORT TO THE ENGINEER FOR REVIEW AND APPROVAL PRIOR TO SUBSTANTIAL COMPLETION OF THE PROJECT, AS DETERMINED BY THE AND OWNER/CLIENT. THE AIR BALANCE REPORT MUST INCLUDE ALL SUPPLY, RETURN, & EXHAUST AIR TERMINALS, FRESH AIR (OUTSIDE AIR) INTAKE AND VENTILATION EXHAUST CFM RATES FOR ALL UNITS. ALSO INCLUDE ACTUAL SUPPLY & RETURN AIR VELOCITY & STATIC PRESSURE READINGS ALONG WITH ALL MOTOR AMPERAGES FOR ALL UNITS.
14. THE CONTRACTOR IS TO INCLUDE IN THEIR BID ALL LOW VOLTAGE CONTROL WIRING, THERMOSTATS, RELAYS, TRANSFORMERS, STARTERS ETC FOR A COMPLETE OPERATING CONTROL SYSTEM AS DESCRIBED IN THE SEQUENCE OF OPERATIONS, THE CONTRACTOR IS ALSO RESPONSIBLE FOR LINE VOLTAGE CONTROL FOR EXHAUST FANS CONTROLLED FROM LIGHT SWITCH AND THERMOSTATS. ALL CONTROL WIRING IN THE AREAS THAT DO NOT HAVE DROPPED CEILINGS THE CONTRACTOR MUST PROVIDE ALL CONTROL WIRING CONDUIT. IN AREAS OF DROPPED CEILING PLENUM RATED CONTROL WIRING CAN BE RUN EXPOSED ABOVE CEILING.
15. ALL MECHANICAL EQUIPMENT SHALL BE INSTALLED PER MANUFACTURER'S REQUIREMENTS/SPECIFICATIONS.

# CODE REFERENCE

2020 NEW YORK STATE BUILDING CODE
2020 NEW YORK STATE MECHANICAL CODE
2020 NEW YORK STATE ENERGY CONSERVATION CODE

# MECHANICAL DEMOLITION NOTES

1. CONTRACTOR SHALL BE RESPONSIBLE FOR DEMOLITION OF MECHANICAL EQUIPMENT AND MATERIAL RELATING TO THEIR RESPECTIVE TRADE.

2. THE CONTRACTOR SHALL REMOVE, RELOCATE, REPLACE, ADJUST, ADAPT AND MODIFY EXISTING EQUIPMENT AND/OR SYSTEMS AS REQUIRED WHEN SUCH WORK IS UNCOVERED AND FOUND TO INTERFERE WITH COMPLETION OF WORK IN THIS CONTRACT OR OTHER CONTRACT WORK.

3. EXECUTE THE DEMOLITION IN CAREFUL AND ORDERLY MANNER WITH THE LEAST POSSIBLE DISTURBANCE TO THE PUBLIC, EGRESS OR THE FUNCTIONING OF THE EXISTING BUILDING.

4. TAKE NECESSARY PRECAUTIONS TO PREVENT DUST AND DIRT FROM RISING BY WETTING DEMOLISHED DEBRIS. EXCESSIVE USE OF WATER WILL NOT BE PERMITTED.

5. PRIOR TO DEMOLITION, CONTRACTOR SHALL REVIEW WITH OWNER ALL MATERIALS TO BE REMOVED, SHOULD THE OWNER WANT TO KEEP ANY MATERIALS THE CONTRACTOR SHALL REMOVE AND DELIVER THE PARTS TO THE OWNER ON THE SITE WHERE SO DIRECTED. OTHERWISE ALL DEMOLISHED OR REMOVED MATERIALS SHALL BECOME THE PROPERTY OF THE CONTRACTOR AND SHALL BE REMOVED FROM THE SITE AND BE DISPOSED OF IN A LEGAL MANNER.

6. DEMOLITION SHALL INCLUDE REMOVAL OF ALL PARTS AND PIECES IN THEIR ENTIRETY BACK TO POINTS INDICATED OR IF NOT INDICATED BACK TO THEIR POINT OF SOURCE.

7. WHERE CONDITIONS PROHIBIT TOTAL REMOVAL OF THE WORK, THE REMAINING PORTION SHALL BE CUT FLUSH WITH THE SURROUNDING SURFACE AND BE CAPPED, PLUGGED OR SEALED AND THE SURROUNDING SURFACE SHALL BE REFINISHED IN AN APPROVED MANNER.

9. DO NOT REMOVE EXISTING STRUCTURAL WORK. DO NOT REMOVE OPERATIONAL ELEMENTS AND SAFETY-RELATED COMPONENTS IN A MANNER RESULTING IN A REDUCTION OF CAPACITIES TO PERFORM IN THE MANNER INTENDED OR RESULTING IN DECREASED OPERATIONAL LIFE, INCREASED MAINTENANCE, OR DECREASED SAFETY.

10. REMOVALS, DISCONNECTIONS, AND RELOCATIONS SHALL BE PERFORMED BY WORKMEN SKILLED IN THE TRADE INVOLVED AND SHALL BE EMPLOYED BY A CONTRACTOR LICENSED IN THE TRADE INVOLVED. ALL WORK SHALL BE DONE IN ACCORDANCE WITH ACCEPTED TRADE PRACTICES.

11. PROVIDE ADEQUATE TEMPORARY SUPPORT FOR WORK TO REMAIN, TO PREVENT FAILURE. DO NOT ENDANGER OTHER WORK.

12. PROTECTION: PROVIDE ADEQUATE PROTECTION WHERE REQUIRED FOR THE PRESENT BUILDING AND ITS CONTENTS. TEMPORARY DUSTPROOF BARRIERS AND BARRICADES SHALL BE ERECTED WHERE REQUIRED FOR PROTECTION OF PERSONNEL, PROTECTION FROM DUST AND DIRT, FOR SECURITY, FIRE AND WEATHER PROTECTIVE REASONS.

13. CONTRACTOR SHALL TAKE EVERY PRECAUTION AGAINST FIRE BY EMPLOYING FIRE DEPARTMENT TYPE HOSES AND PORTABLE FIRE EXTINGUISHERS AS REQUIRED BY OSHA AND/OR THE OWNER'S INSURANCE UNDERWRITER.

14. BEFORE STARTING DEMOLITION OPERATIONS, PROVIDE THE NECESSARY PROTECTIVE DEVICES, WHERE REQUIRED, AND IN STRICT ACCORDANCE WITH OSHA RULES AND REGULATIONS.

14. USE TEMPORARY ENCLOSURES, OR OTHER SUITABLE METHODS TO LIMIT DUST AND DIRT RISING AND SCATTERING TO LOWEST PRACTICAL LEVEL. COMPLY WITH GOVERNING REGULATIONS PERTAINING TO ENVIRONMENTAL PROTECTION.

15. FIELD VERIFY DEMOLITION REQUIREMENTS AND EXISTING CONDITIONS. DEMOLITION NOTES ARE INDICATED IN NOTE FORM.

16. CONTRACTOR SHALL ESTABLISH A PATH OF TRAVEL AND TIME SCHEDULE FOR THE REMOVAL OF ALL DEBRIS AND WASTE, AND HAVE THIS APPROVED BY OWNER. CONTRACTOR IS TO ENSURE THAT ALL CORRIDORS AND PUBLIC AREAS BE KEPT FREE OF OBSTRUCTIONS, DEBRIS, AND ARE TO BE BROOM SWEPT CLEAN AT ALL TIMES.

17. CONTRACTOR SHALL VISIT THE SITE AND BECOME INFORMED AS TO THE CONDITION OF THE PREMISES AND THE EXTENT AND CHARACTER OF WORK REQUIRED. NO ADDITIONAL COMPENSATION WILL BE APPROVED DUE TO FIELD CONDITIONS.

# NYSECC ENERGY COMPLIANCE STATEMENT:

PER SECTION C101.7 OF THE 2020 NYSECC HISTORIC BUILDINGS ARE EXEMPT FROM THE REQUIREMENTS OF THE ENERGY CODE.

# HVAC SYMBOL LIST

| IDENTIFIER | DESCRIPTION |
|---|---|
| | NEW DUCTWORK OR PIPING |
| | EXISTING DUCTWORK OR PIPING TO BE REMOVED |
| | EXISTING DUCTWORK OR PIPING TO REMAIN |
| 24X12 / 24X12 | DOUBLE-LINE AND SINGLE-LINE RECTANGULAR DUCT, FIRST NUMBER INDICATES SIDE IN VIEW IN INCHES, SECOND NUMBER INDICATES SIDE IN DEPTH IN INCHES |
| | FLEXIBLE DUCTWORK |
| | REGULAR SUPPLY AIR DUCT (UP AND DOWN) |
| | REGULAR RETURN AIR DUCT (UP AND DOWN) |
| | REGULAR EXHAUST AIR DUCT (UP AND DOWN) |
| | REGULAR OUTSIDE AIR DUCT (UP AND DOWN) |
| VD | VOLUME DAMPER |
| BD | BACKDRAFT DAMPER |
| S | MOTOR OPERATED DAMPER |
| XXX / XX | EQUIPMENT TAG EQUIPMENT NUMBER |
| XXX / X-XXX | DETAIL TAG/CALL OUT TAG MECHANICAL SHEET NUMBER |
| T | THERMOSTAT |
| H | HUMIDISTAT |
| | EXHAUST GRILLE |
| F# | REFER TO SUPPLEMENTAL FIGURE INDICATED BY NUMBER (I.E. F2 REFERS TO FIGURE 2) |

# HVAC ABBREVIATIONS

| IDENTIFIER | DESCRIPTION |
|---|---|
| AC | DIRECT EXPANSION AIR CONDITION UNIT |
| CFM | CUBIC FEET PER MINUTE |
| COND | CONDENSATE |
| CU | CONDENSING UNIT |
| CUH | CABINET UNIT HEATER |
| DB | DRY BULB |
| DN | DOWN |
| EA | EXHAUST AIR |
| EF | EXHAUST FAN |
| EG | EXHAUST GRILLE |
| EUH | ELECTRIC UNIT HEATER |
| EER | ENERGY EFFICIENCY RATIO |
| EG | EXHAUST GRILLE |
| FAI | FRESH AIR INTAKE |
| GC | GENERAL CONTRACTOR |
| MBH | THOUSAND BTU PER HOUR |
| PC | PLUMBING CONTRACTOR |
| RG | RETURN GRILLE |
| RTU | ROOFTOP UNIT |
| SA | SUPPLY AIR |
| SD | SUPPLY DIFFUSER |
| TYP. | TYPICAL |
| VIF | VERIFY IN FIELD |
| WWM | WELDED WIRE MESH |

# SCOPE OF WORK

DEMOLITION

1. REMOVE TWO (2) EXISTING THRU WALL AC UNITS AS INDICATED.
2. REMOVE THREE (3) EXISTING WALL MOUNTED PROPELLER FANS AS INDICATED.
3. REMOVE THREE (3) EXISTING LOUVERS AS INDICATED.
4. REMOVE ONE (1) EXISTING UNIT HEATERS AND ASSOCIATED SUPPORTS, WIRING AND ACCESSORIES.

CONSTRUCTION

1. PROVIDE ONE (1) NEW ROOFTOP AIR HANDLING UNIT RTU-1. PROVIDE DUCTWORK TO NEW SPACES AS INDICATED.
2. PROVIDE ONE (1) NEW GENERAL KITCHEN EXHAUST FAN ON ROOF AND ASSOCIATED DUCTWORK AS INDICATED.
3. PROVIDE TWO (2) NEW INLINE EXHAUST FANS IN DINING AREA AS INDICATED.
4. PROVIDE ONE (1) NEW INLINE EXHAUST FANS FOR BATHROOM EXHAUST AS INDICATED.
5. PROVIDE SEVEN (7) NEW RAIN RESISTANT LOUVERS AS INDICATED.
6. PROVIDE ONE (1) NEW WALL MOUNTED ELECTRIC UNIT HEATER AS INDICATED.

# MECHANICAL DRAWING LIST

| SHEET NO. | SHEET NAME | REVISON NO. | REVISION DATE |
|---|---|---|---|
| BB-M-01 | MECHANICAL NOTES, SYMBOLS & LEGENDS | 0 | - |
| BB-M-11 | MECHANICAL 1ST FLOOR DEMOLITION PLAN | 0 | - |
| BB-M-21 | MECHANICAL 1ST FLOOR CONSTRUCTION PLAN | 0 | - |
| BB-M-22 | MECHANICAL ROOF CONSTRUCTION PLAN | 0 | - |
| BB-M-23 | MECHANICAL EXTERIOR BUILDING ELEVATIONS | 0 | - |
| BB-M-61 | MECHANICAL SCHEDULES | 0 | - |
| BB-M-81 | MECHANICAL DETAILS 1 OF 2 | 0 | - |
| BB-M-82 | MECHANICAL DETAILS 2 OF 2 | 0 | - |
| BB-M-91 | MECHANICAL CONTROLS | 0 | - |

# MECHANICAL VENTILATION SCHEDULE

| SPACE DETAILS | | MECH CODE REQUIREMENTS | | | | | | | DESIGN | | | | |
|---|---|---|---|---|---|---|---|---|---|---|---|---|---|
| ROOM | AREA (FT²) | # PEOPLE | OA / SQ FT | OA PER PERSON | # OF FIXT (TOILET/URINALS/SLOP SINK) | EXH CFM/SQFT | EXH CFM/FIXTURE | NET OA | MIN DESIGN OA FLOW (CFM) | ACTUAL SA FLOW (CFM) | ACTUAL RA FLOW (CFM) | ACTUAL EA FLOW (CFM) | NOTES |
| 101 KITCHEN | 775 | 16 | 0.12 | 7.5 | - | 0.7 | - | 543 | 680 | 1500 | 820 | 680 | 1 |
| 105 UNISEX BATHROOM | 105 | - | - | - | 1.0 | - | 70.0 | 70 | 70 | - | - | 100 | 1 |
| 106 JANITOR CLOSET | 28 | - | - | - | 1.0 | 1.0 | - | 30 | 70 | - | - | 100 | 2 |
| 107 ADA RESTROOM | 63 | - | - | - | 1.0 | - | 70.0 | 70 | 70 | - | - | 100 | 1 |

NOTES:
1. NEW YORK STATE MECHANICAL CODE.
2. ASHRAE 62.1 2019

# NATURAL VENTILATION SCHEDULE

| SPACE DETAILS | | | DESIGN | | | |
|---|---|---|---|---|---|---|
| ROOM | AREA (SF) | 4% FLOOR AREA (SF) | WINDOW FREE AREA (SF) | DOOR AREA (SF) | TOTAL OPENABLE AREA (SF) | NOTES |
| 100 RESTAURANT & DINING AREA | 2248 | 90 | - | 491 | 491 | 1,2 |

NOTES:
1. NEW YORK STATE MECHANICAL CODE.
2. NATURAL VENTILATION OF AN OCCUPIED SPACE SHALL BE THROUGH WINDOWS, DOORS, LOUVERS, AND OTHER OPENINGS TO THE OUTDOORS. THE MINIMUM OPENABLE AREA TO THE OUTDOORS SHALL BE 4 PERCENT OF THE FLOOR AREA BEING VENTILATED.

# TABLE 1: ENERGY CODE ANALYSIS TABLE FOR MECHANICAL SYSTEMS

(PER 2020 NYS ENERGY CODE)

| ITEM DESCRIPTION | | | PROPOSED VALUE | MINIMUM EFFECIENCY | CODE PRECRIBED VALUE AND CITATION | CITATION | SUPPORTING DOCUMENTATION |
|---|---|---|---|---|---|---|---|
| | UNIT TAG | EQUIPMENT TYPE | | | | | |
| HVAC EQUIPMENT PERFORMANCE | RTU-1 | SINGLE PACKAGED UNIT | SEER= 19.4 | SEER=14.0 | MINIMUM EFFICIENCY REQUIREMENTS: ELECTRICALLY OPERATED UNITARY AIR CONDITIONERS AND CONDENSING UNITS < 65,000 Btu/hb | C403.2.3(1) | MECHANICAL SCHEDULES |
| HVAC SYSTEM CONTROLS | ALL HEATING COOLING EQUIPMENT | THERMOSTATIC CONTROLS | DIGITAL THERMOSTATS | - | THERMOSTATIC CONTROLS FOR HVAC SYSTEM | C403.2.6 | MECHANICAL SCHEDULES AND PLANS |
| SHUTOFF DAMPERS | | | GRAVITY/BACKDRAFT DAMPERS PROVIDED IN LIEU OF MOTORIZED DAMPER MOTORIZED DAMPERS PER EXCEPTIONS 1 | - | BACKDRAFT DAMPER INSTALLED AT EXHAUST OPENINGS | C403.7.7 | MECHANICAL SCHEDULES AND PLANS |
| DUCT LEAKAGE | | | SMACNA HVAC DUCT LEAKAGE TEST | - | SMACNA HVAC DUCT LEAKAGE TEST | PER C403 | MECHANICAL DWGS. & SPECS |

# TABLE 2: ENERGY CODE COMPLIANCE INSPECTIONS FOR MECHANICAL SYSTEMS

(IIB - MECHANICAL AND SERVICE WATER HEATING INSPECTIONS)

| | INSPECTION TEST | FREQUENCY | REFERENCE STANDARDS | INSPECTION DESCRIPTION | ECC CITATION |
|---|---|---|---|---|---|
| IIB2 | SHUT-OFF DAMPERS | AS REQUIRED DURING INSTALLATION | APPROVED CONSTRUCTION DOCUMENTS | DAMPERS FOR STAIR AND ELEVATOR SHAFT VENTS AND OTHER OUTDOOR AIR INTAKES AND EXHAUST OPENINGS INTEGRAL TO THE BUILDING ENVELOPE SHALL BE VISUALLY INSPECTED TO VERIFY THAT SUCH DAMPERS, EXCEPT WHERE PERMITTED TO BE GRAVITY DAMPERS, COMPLY WITH APPROVED CONSTRUCTION DRAWINGS. MANUFACTURER'S LITERATURE SHALL BE REVIEWED TO VERIFY THAT THE PRODUCT HAS BEEN TESTED AND FOUND TO MEET THE STANDARD. | NYSECC C403.2.4.4, C403.7.7, OR ASHRAE 90.1-6.4.3.4 |
| IIB3 | HVAC AND SERVICE WATER HEATING EQUIPMENT | PRIOR TO FINAL MECHANICAL AND CONSTRUCTION INSPECTION | APPROVED CONSTRUCTION DOCUMENTS | EQUIPMENT SIZING, EFFICIENCIES AND OTHER PERFORMANCE FACTORS OF ALL MAJOR EQUIPMENT UNITS, AS DETERMINED BY THE APPLICANT OF RECORD, AND NO LESS THAN 15% OF MINOR EQUIPMENT UNITS, SHALL BE VERIFIED BY VISUAL INSPECTION AND, WHERE NECESSARY, REVIEW OF MANUFACTURER'S DATA. POOL HEATERS AND COVERS SHALL BE VERIFIED BY VISUAL INSPECTION | NYSECC C403.2, C404.2, C404.7, C406.2 |
| IIB4 | HVAC AND SERVICE WATER HEATING SYSTEM CONTROLS | AFTER INSTALLATION AND PRIOR TO FINAL ELECTRICAL AND CONSTRUCTION INSPECTION, EXCEPT THAT FOR CONTROLS WITH SEASONALLY DEPENDENT FUNCTIONALITY, SUCH TESTING SHALL BE PERFORMED BEFORE SIGN-OFF FOR ISSUANCE OF A FINAL CERTIFICATE OF OCCUPANCY | APPROVED CONSTRUCTION DOCUMENTS INCLUDING CONTROL SYSTEM NARRATIVES | NO LESS THAN 20% OF EACH TYPE OF REQUIRED CONTROLS AND ECONOMIZERS SHALL BE VERIFIED BY VISUAL INSPECTION AND TESTED FOR FUNCTIONALITY AND PROPER OPERATION. SUCH CONTROLS SHALL INCLUDE, BUT ARE NOT LIMITED TO, THERMOSTATIC AND ECONOMIZER CONTROLS | NYSECC C403.2.4, C403.2.5.1, C403.2.11, C403.3, C403.4, C404.3, C404.6, C404.7 |
| IIB6 | HVAC DUCT LEAKAGE TESTING | PRIOR TO CLOSING CEILINGS AND WALLS AND PRIOR TO FINAL CONSTRUCTION INSPECTION | APPROVED CONSTRUCTION DOCUMENTS; NYC MECHANICAL CODE | WHERE THE AIR HANDLER AND/OR SOME DUCTWORK IS IN UNCONDITIONED SPACE, DUCT-LEAKAGE TESTING SHALL BE PERFORMED EITHER AFTER ROUGH-IN OR POST-CONSTRUCTION TO ENSURE COMPLIANCE WITH ECC R403.3.3 AND R403.3.4. NOT LESS THAN 20% OF SUCH DUCTWORK SHALL BE TESTED | NYSECC C403 |

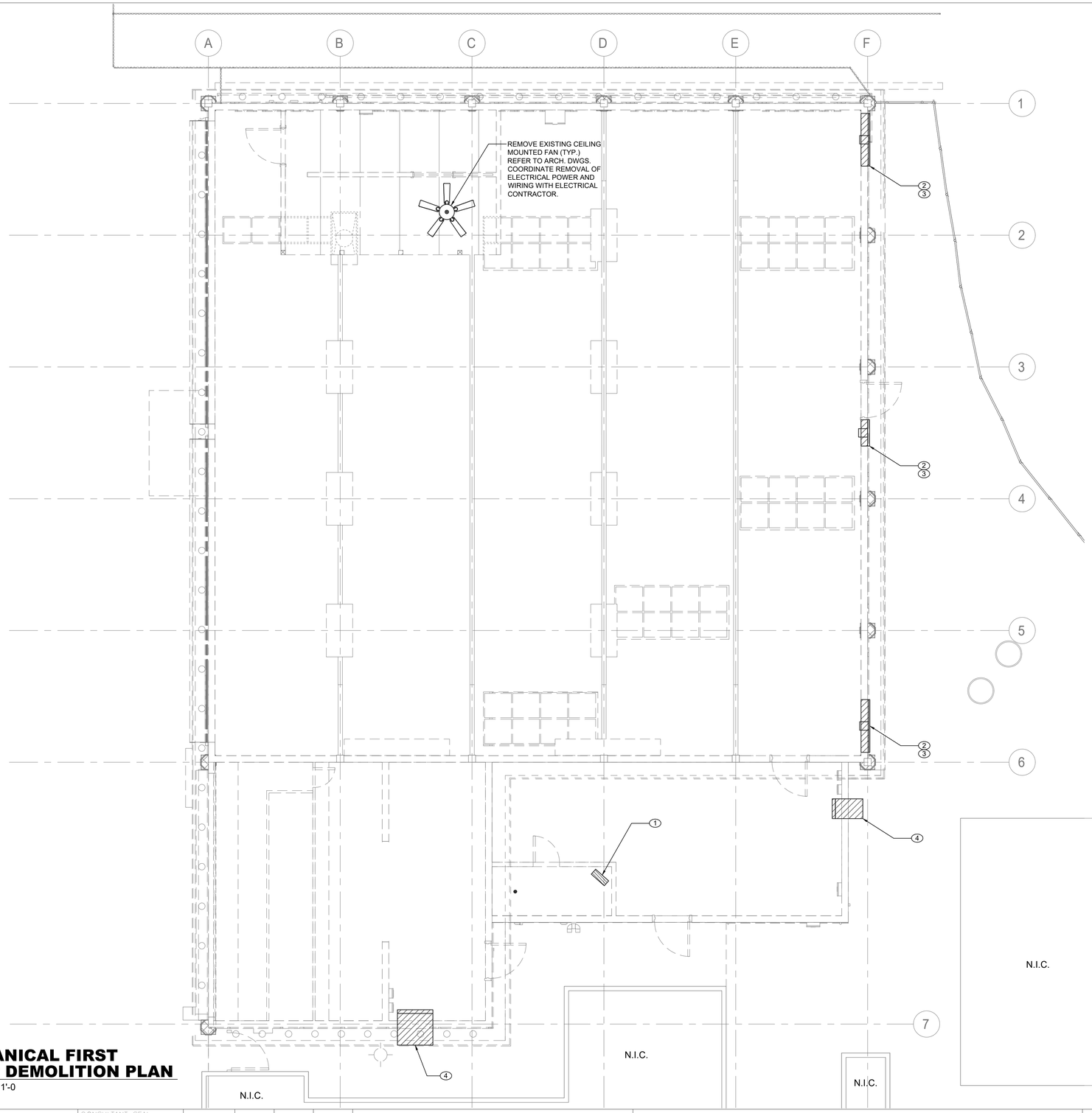


## GENERAL NOTES:

1. RETURN REMOVED EXISTING EQUIPMENT TO OWNER IF IT IS IN WORKING CONDITION.
2. CONTRACTOR TO COORDINATE WITH FACILITY WHEN WORKING AROUND OR ABOVE THE RIDE COMPONENTS, AND PROVIDE ALL NECESSARY MEASURES TO PROTECT THESE COMPONENTS PER THE REQUIREMENTS OF THE FACILITY.

## MECHANICAL DEMOLITION NOTES:

1. DEMOLISH EXISTING ELECTRIC UNIT HEATERS AND ASSOCIATED SUPPORTS, WIRING AND ACCESSORIES. COORDINATE REMOVAL OF ELECTRICAL POWER AND WIRING WITH ELECTRICAL DRAWINGS.
2. DEMOLISH EXISTING WALL MOUNTED PROPELLER FAN. COORDINATE REMOVAL OF ELECTRICAL POWER AND WIRING WITH ELECTRICAL CONTRACTOR. COORDINATE WITH GC TO SEAL EXISTING WALL PENETRATION.
3. DEMOLISH EXISTING LOUVER. COORDINATE WITH GC TO SEAL EXISTING WALL PENETRATION.
4. REMOVE EXISTING THRU WALL AC UNIT. IF NO LONGER IN WORKING CONDITION, DISPOSAL SHALL BE IN ACCORDANCE WITH EPA REQUIREMENTS. COORDINATE WITH GC TO SEAL EXISTING WALL PENETRATION.

# MECHANICAL FIRST FLOOR DEMOLITION PLAN

SCALE: 1/4" = 1'-0

CONSULTANT INFORMATION

LiRo Engineers, Inc.
*A LiRo Group Company*
Syosset, N.Y. 516-214-8157[T]

CONSULTANT SEAL

STATE OF NEW YORK · FRANK F. ULLISE · No. 090111-1 · LICENSED PROFESSIONAL ENGINEER

| REVISION NUMBER | DATE | MADE BY | APP'D BY | REVISION |
|---|---|---|---|---|

RECORD DRAWING CERTIFICATION

☐ AS BUILT – CHANGES AS NOTED ☐ AS BUILT – NO CHANGES

CONTRACTOR: NAME / SIGNATURE / TITLE / DATE

PROJECT COORDINATOR: NAME / SIGNATURE / TITLE / DATE

WESTCHESTER COUNTY, NEW YORK
DEPARTMENT OF PUBLIC WORKS AND TRANSPORTATION
DIVISION OF ENGINEERING

**INFRASTRUCTURE REHABILITATION - PHASE 3**
**PLAYLAND PARK, RYE, NEW YORK**
**NORTHEAST BURGER BARN**
**MECHANICAL FIRST FLOOR DEMOLITION PLAN**

| | |
|---|---|
| CONTRACT NUMBER | 22-523 |
| SHEET NUMBER | BB-M-11 |
| DWG NO.: | 70 of 664 |
| SCALE: | AS INDICATED |
| DATE: | 08/23/2022 |
| DPW FILE NUMBER | 1-118-M-819-0 |
| REV. NO. | 0 |

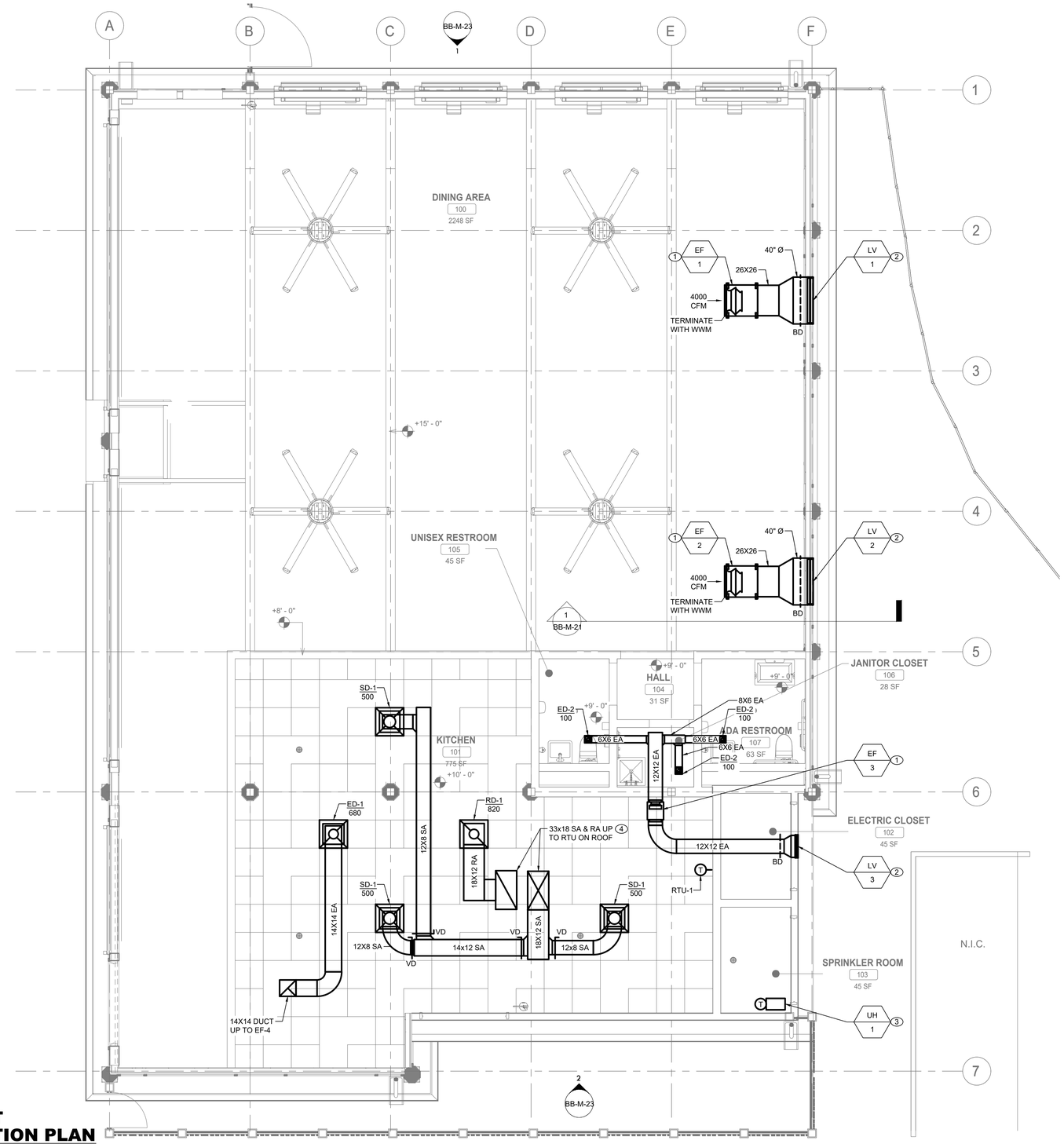


## MECHANICAL FIRST FLOOR CONSTRUCTION PLAN

SCALE: 1/4" = 1'-0

## GENERAL NOTES:

1. CONTRACTOR TO COORDINATE WITH FACILITY WHEN WORKING AROUND OR ABOVE THE RIDE COMPONENTS, AND PROVIDE ALL NECESSARY MEASURES TO PROTECT THESE COMPONENTS PER THE REQUIREMENTS OF THE FACILITY.
2. UPON COMPLETION, SYSTEM SHALL BE TESTED FOR PROPER OPERATION.

## MECHANICAL CONSTRUCTION NOTES:

1. PROVIDE NEW EXHAUST FANs AS SCHEDULED. COORDINATE ELECTRICAL POWER AND WIRING WITH ELECTRICAL CONTRACTOR. ALIGN CENTER OF EF-1 AND EF-2 WITH CENTER OF LV-1 AND LV-2 RESPECTIVELY.
2. PROVIDE NEW RAIN RESISTANT LOUVER AS SCHEDULED. INSTALL LV-1 AND LV-2 AT 21'4" AFF TO CENTER. REFER TO INSTALLATION DETAIL ON BB-M-81. INSTALL LV-3 10'4' AFF TO CENTER.
3. PROVIDE NEW ELECTRIC WALL MOUNTED UNIT HEATER. COORDINATE INSTALL HEIGHT IN FIELD.
4. PROVIDE SUPPLY AND RETURN DUCTWORK FROM ROOFTOP UNIT RTU-1 AND ROUTE ALONG INDICATED PATH. PROVIDE INSULATION TO ALL SUPPLY DUCTWORK. PROVIDE VOLUME DAMPERS AND SUPPLY DIFFUSERS/GRILLES AND BALANCE TO INDICATED VALUES.

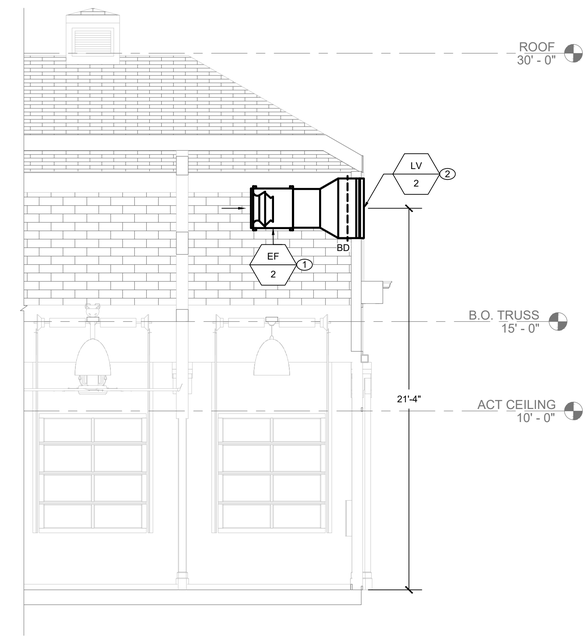


## 1 INTERIOR SECTION - NORTH

SCALE: 1/4" = 1'-0

CONSULTANT INFORMATION

LiRo Engineers, Inc.
A LiRo Group Company
Syosset, N.Y. 516-214-8157[T]

CONSULTANT SEAL

STATE OF NEW YORK · FRANK F. ULLOSE · No. 090111-1 · LICENSED PROFESSIONAL ENGINEER

| REVISION NUMBER | DATE | MADE BY | APP'D BY | REVISION |
|---|---|---|---|---|

RECORD DRAWING CERTIFICATION

☐ AS BUILT – CHANGES AS NOTED ☐ AS BUILT – NO CHANGES

CONTRACTOR: NAME / SIGNATURE / TITLE / DATE

PROJECT COORDINATOR: NAME / SIGNATURE / TITLE / DATE

WESTCHESTER COUNTY, NEW YORK
DEPARTMENT OF PUBLIC WORKS AND TRANSPORTATION
DIVISION OF ENGINEERING

**INFRASTRUCTURE REHABILITATION - PHASE 3**
**PLAYLAND PARK, RYE, NEW YORK**
**NORTHEAST BURGER BARN**
**MECHANICAL FIRST FLOOR CONSTRUCTION PLAN**

| | |
|---|---|
| CONTRACT NUMBER | 22-523 |
| SHEET NUMBER | BB-M-21 |
| DWG. NO.: | 71 of 664 |
| SCALE: | AS INDICATED |
| DATE: | 08/23/2022 |
| DPW FILE NUMBER: | 1-118-M-820-0 |
| REV. NO.: | 0 |

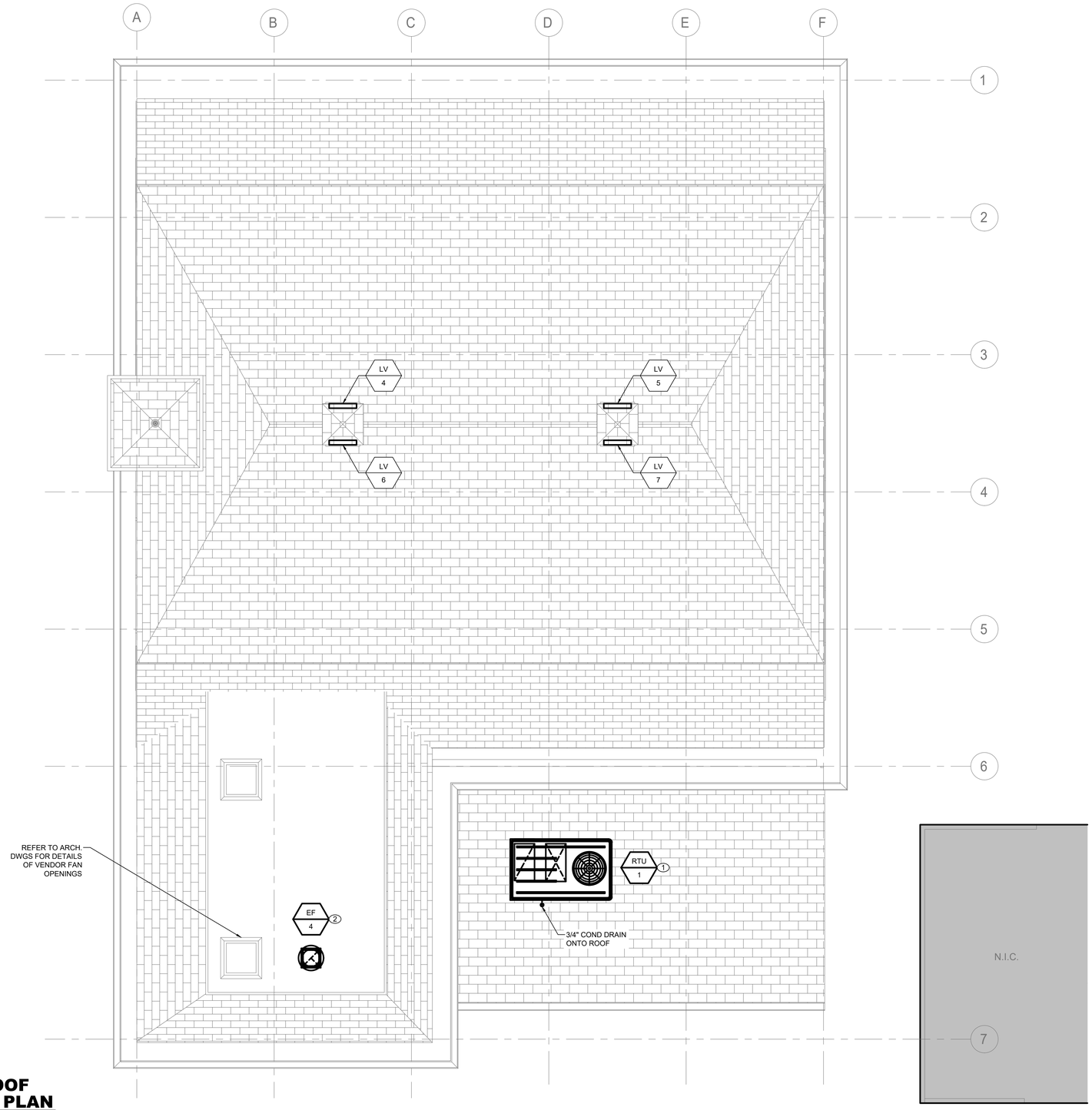


## GENERAL NOTES:

1. CONTRACTOR TO COORDINATE WITH FACILITY WHEN WORKING AROUND OR ABOVE THE RIDE COMPONENTS, AND PROVIDE ALL NECESSARY MEASURES TO PROTECT THESE COMPONENTS PER THE REQUIREMENTS OF THE FACILITY.
2. UPON COMPLETION, SYSTEM SHALL BE TESTED FOR PROPER OPERATION.

## MECHANICAL CONSTRUCTION NOTES:

(1) PROVIDE SUPPLY AND RETURN DUCTWORK FROM ROOFTOP UNIT RTU-1 AND ROUTE ALONG INDICATED PATH. PROVIDE INSULATION TO ALL SUPPLY DUCTWORK. PROVIDE VOLUME DAMPERS AND SUPPLY DIFFUSERS/GRILLES AND BALANCE TO INDICATED VALUES. PLACE UNIT ON NEW ROOF CURB AS SHOWN ON BB-M-82.

(2) PROVIDE NEW EXHAUST FAN AS SCHEDULED. COORDINATE ELECTRICAL POWER AND WIRING WITH ELECTRICAL DRAWINGS. ENSURE ALL WORK IMPACTING ROOF IS DONE IN ACCORDANCE WITH ROOFING MANUFACTURER WARRANTY.

N

## MECHANICAL ROOF CONSTRUCTION PLAN

SCALE: 1/4" = 1'-0

CONSULTANT INFORMATION

LiRo Engineers, Inc.
*A LiRo Group Company*
Syosset, N.Y. 516-214-8157[T]

CONSULTANT SEAL

STATE OF NEW YORK · FRANK F. ULLISE · No. 090111-1 · LICENSED PROFESSIONAL ENGINEER

| REVISION NUMBER | DATE | MADE BY | APP'D BY | REVISION |
|---|---|---|---|---|
| | | | | |

RECORD DRAWING CERTIFICATION

☐ AS BUILT – CHANGES AS NOTED ☐ AS BUILT – NO CHANGES

CONTRACTOR
NAME
SIGNATURE
TITLE DATE

PROJECT COORDINATOR
NAME
SIGNATURE
TITLE DATE

WESTCHESTER COUNTY, NEW YORK
DEPARTMENT OF PUBLIC WORKS AND TRANSPORTATION
DIVISION OF ENGINEERING

**INFRASTRUCTURE REHABILITATION - PHASE 3**
**PLAYLAND PARK, RYE, NEW YORK**
**NORTHEAST BURGER BARN**
**MECHANICAL ROOF CONSTRUCTION PLAN**

| | |
|---|---|
| CONTRACT NUMBER | 22-523 |
| SHEET NUMBER | BB-M-22 |
| DWG NO.: | 72 of 664 |
| SCALE: | AS INDICATED |
| DATE: | 08/23/2022 |
| DPW FILE NUMBER | 1-118-M-821-0 |
| REV. NO. | 0 |

1 **MECHANICAL BUILDING ELEVATION - NORTH**
1/4" = 1'-0"

2 **MECHANICAL BUILDING ELEVATION - SOUTH**
1/4" = 1'-0"

## GENERAL NOTES:

1. CONTRACTOR TO COORDINATE WITH FACILITY WHEN WORKING AROUND OR ABOVE THE RIDE COMPONENTS, AND PROVIDE ALL NECESSARY MEASURES TO PROTECT THESE COMPONENTS PER THE REQUIREMENTS OF THE FACILITY.
2. UPON COMPLETION, SYSTEM SHALL BE TESTED FOR PROPER OPERATION.

## MECHANICAL CONSTRUCTION NOTES:

1 PROVIDE NEW RAIN RESISTANT LOUVER AS SCHEDULED. REFER TO DETAIL ON BB-M-81.

CONSULTANT INFORMATION

LiRo Engineers, Inc.
*A LiRo Group Company*
Syosset, N.Y. 516-214-8157[T]

CONSULTANT SEAL

STATE OF NEW YORK · FRANK F. ULLISE · No. 090111-1 · LICENSED PROFESSIONAL ENGINEER

| REVISION NUMBER | DATE | MADE BY | APP'D BY | REVISION |
|---|---|---|---|---|
| | | | | |

RECORD DRAWING CERTIFICATION

☐ AS BUILT – CHANGES AS NOTED ☐ AS BUILT – NO CHANGES

CONTRACTOR
NAME
SIGNATURE
TITLE DATE

PROJECT COORDINATOR
NAME
SIGNATURE
TITLE DATE

WESTCHESTER COUNTY, NEW YORK
DEPARTMENT OF PUBLIC WORKS AND TRANSPORTATION
DIVISION OF ENGINEERING

**INFRASTRUCTURE REHABILITATION - PHASE 3**
**PLAYLAND PARK, RYE, NEW YORK**
**NORTHEAST BURGER BARN**
**MECHANICAL EXTERIOR BUILDING ELEVATIONS**

| | |
|---|---|
| CONTRACT NUMBER | 22-523 |
| SHEET NUMBER | BB-M-23 |
| DWG NO.: | 73 of 664 |
| SCALE: | AS INDICATED |
| DATE: | 08/23/2022 |
| DPW FILE NUMBER | 1-118-M-822-0 |
| REV. NO. | 0 |

# ROOFTOP AIR CONDITIONING UNIT SCHEDULE

| TAG | MANUFACTURER | MODEL | LOCATION | NOM. CAP. (TONS) | MIN. OA (CFM) | MAX. OA (CFM) | SUPPLY FAN | | | FILTER | | DX COOLING | | | | | | | HEATING | | COMPRESSOR | CONDENSER | | | EER | ELECTRICAL | | | OPERATING WEIGHT (±LBS) | DIMENSIONS LxWxH (IN) | NOTES |
|---|---|---|---|---|---|---|---|---|---|---|---|---|---|---|---|---|---|---|---|---|---|---|---|---|---|---|---|---|---|---|---|
| | | | | | | | AIR FLOW (CFM) | ESP (IN) | MOTOR BHP | TYPE | MERV | REFRIG TYPE | TOTAL CAP. (MBH) | SENSIBLE CAP. (MBH) | EAT DB (°F) | EAT WB (°F) | LAT DB (°F) | LAT WB (°F) | ELEC. KW | TOTAL CAP. (MBH) | TYPE/QTY | AMB. TEMP (°F) | FAN QTY | Kw | | MCA | MOCP | V-PH-HZ | | | |
| RTU-1 | TRANE | TZC048F3RGA | ROOF | 4 | 680 | - | 1500 | 0.47 | 0.38 | 2" PLEATED | 13 | R-410A | 46.4 | 41.3 | 82.0 | 64.4 | 56.5 | 53.8 | 18.0 | 61.5 | VARIABLE SPEED SCROLL/1 | 90 | 1 | 0.22 | 13.60 | 51 | 60 | 208-3-60 | 1009 | 89X54X41 | 1,2,3 |

NOTES:

1. PROVIDE DOWNFLOW SUPPLY AND RETURN UNIT CONFIGURATION, OVERSIZE SUPPLY FAN MOTOR, MOTORIZED OUTSIDE AIR DAMPER, NON-FUSED DISCONNECT, ECONOMIZER, ECONOMIZER HOOD, BAROMETRIC RELIEF HOOD AND 14" ROOF CURB.
2. FACTORY CONTROLS TO BE PROVIDED BY MANUFACTURER.
3. PROVIDE WITH MERV 13 FILTERS.

# FAN SCHEDULE

| TAG | MANUFACTURER | MODEL | LOCATION | SERVICE | TYPE | DRIVE | AIR FLOW (CFM) | TSP (IN. WG) | ELECTRICAL | | | | OPERATING WEIGHT (±LBS) | DIMENSIONS DxH (IN) | NOTES |
|---|---|---|---|---|---|---|---|---|---|---|---|---|---|---|---|
| | | | | | | | | | HP | BHP | RPM | V-PH-HZ | | | |
| EF-1 | GREENHECK | SQ-18-M2-VG | DINING ROOM | DINING ROOM | CENTRIFUGAL | DIRECT | 4000 | 0.22 | 1.00 | 0.37 | 949 | 115-1-60 | 137 | 30X30 | 1-5 |
| EF-2 | GREENHECK | SQ-18-M2-VG | DINING ROOM | DINING ROOM | CENTRIFUGAL | DIRECT | 4000 | 0.22 | 1.00 | 0.37 | 949 | 115-1-60 | 137 | 30X30 | 1-5 |
| EF-3 | GREENHECK | SQ-90-VG | KITCHEN | RESTROOMS | CENTRIFUGAL | DIRECT | 300 | 0.20 | 0.10 | 0.02 | 1086 | 115-1-60 | 49 | 15X15 | 1-5 |
| EF-4 | GREENHECK | G-095-VG | ROOF | KITCHEN | CENTRIFUGAL | DIRECT | 680 | 0.17 | 0.17 | 0.06 | 1242 | 115-1-60 | 29 | 22x27 | 1,3-6 |

NOTES:

1. PROVIDE ALL CONTACTS, RELAYS, AND DEVICES NECESSARY FOR BMS CONTROL OF FANS PER SEQUENCE OF OPERATIONS.
2. PROVIDE WALL MOUNT SWITCH FOR EF-1 AND EF-2, REFER TO CONTROLS.
3. PROVIDE THERMAL OVERLOAD FOR ALL SINGLE PHASE MOTORS.
4. PROVIDE SALT WATER RESISTANT HI-PRO POLYESTER COATING FOR ALL FANS.
5. FAN SHALL BE FURNISHED WITH NON FUSED DISCONNECT.
6. PROVIDE 12" ROOF CURBS FOR ALL ROOF MOUNTED FANS. INCLUDE 1.5" INSULATION ON CURB.

# LOUVER SCHEDULE

| TAG | MANUFACTURER | MODEL | SERVICE | LOCATION | MATERIAL | FINISH TYPE | DIAMETER (INCH) | WIDTH (INCH) | HEIGHT (INCH) | FREE AIR VELOCITY (FPM) | PRESSURE DROP (IN. WG) | MINIMUM FREE AREA (SQUARE FEET) | NOTES |
|---|---|---|---|---|---|---|---|---|---|---|---|---|---|
| LV-1 | GREENHECK | ESD-603 | EXHAUST | DINING ROOM WALL | ALUMINUM | BAKED ENAMEL | 40 | - | - | 917 | 0.13 | 4.4 | 1,3 |
| LV-2 | GREENHECK | ESD-603 | EXHAUST | DINING ROOM WALL | ALUMINUM | BAKED ENAMEL | 40 | - | - | 917 | 0.13 | 4.4 | 1,3 |
| LV-3 | GREENHECK | ESD-435 | EXHAUST | ELECTRICAL CLOSET | ALUMINUM | BAKED ENAMEL | - | 12 | 18 | 625 | 0.07 | 0.48 | 1,3 |
| LV-4 | GREENHECK | ESD-435 | EXHAUST | ROOF MONITOR | ALUMINUM | BAKED ENAMEL | - | 24 | 18 | - | - | 1.23 | 2 |
| LV-5 | GREENHECK | ESD-435 | EXHAUST | ROOF MONITOR | ALUMINUM | BAKED ENAMEL | - | 24 | 18 | - | - | 1.23 | 2 |
| LV-6 | GREENHECK | ESD-435 | EXHAUST | ROOF MONITOR | ALUMINUM | BAKED ENAMEL | - | 24 | 18 | - | - | 1.23 | 2 |
| LV-7 | GREENHECK | ESD-435 | EXHAUST | ROOF MONITOR | ALUMINUM | BAKED ENAMEL | - | 24 | 18 | - | - | 1.23 | 2 |

NOTES:

1. PROVIDE WITH ALUMINUM BIRD SCREEN AND BACKDRAFT DAMPERS.
2. PROVIDE WITH ALUMINUM BIRD SCREEN ONLY.
3. LV-1 AND LV-2 TO BE CIRCULAR GREENHECK SPECIALTY SHAPE "RA".

# DIFFUSER SCHEDULE

| TAG | MANUFACTURER | MODEL | SERVICE | NECK SIZE (IN) | FACE SIZE (IN) | MOUNTING | CFM | MAX PD (wg) | MAX VELOCITY (FPM) | MAX NC | NOTES |
|---|---|---|---|---|---|---|---|---|---|---|---|
| SD-1 | TITUS | TMS | GENERAL SUPPLY | 12 | 24x24 | LAY-IN / GYP | 321-425 | 0.10 | 600 | 30 | 1-6 |
| RD-1 | TITUS | 50F | GENERAL RETURN | 16X16 | 24X24 | LAY-IN / GYP | 732-972 | 0.05 | 600 | 30 | 1-6 |
| ED-1 | TITUS | 50F | GENERAL EXHAUST | 14X14 | 24x24 | LAY-IN / GYP | 528-732 | 0.05 | 600 | 30 | 1-6 |
| ED-2 | TITUS | 50F | GENERAL EXHAUST | 6x6 | 6x6 | LAY-IN / GYP | 57-114 | 0.05 | 600 | 30 | 1-6 |

NOTES:

1. COORDINATE AND CONFIRM CEILING AND/OR WALL MOUNT (T-BAR, SURFACE, REINFORCEMENT, ETC) WITH ARCHITECTURAL RCP AND WALL CONSTRUCTION BEFORE ORDERING.
2. PROVIDE WITH MOLDED INSULATION BLANKET.
3. INTEGRAL VOLUME DAMPERS NOT ACCEPTABLE. VOLUME DAMPERS PROVIDED BY MECHANICAL CONTRACTOR ON ALL RUN-OUTS. EXCEPTIONS REQUIRE APPROVAL WHEN REQUIRED.
4. PROVIDE ALL ALUMINUM CONSTRUCTION VERSION FOR GRDS LOCATED IN GYM, BATHROOM, LOCKER, SHOWER AREAS, AND IMAGING/MRI ROOMS.
5. PROVIDE INSULATED PLENUM ACCESSORY PER SECTION, ORDER SMALLER SIZES TO COMPLETE CEILING WHEN SECTIONS ARE LESS THAN 48" (REFER TO PLANS).
6. PROVIDE FLAT BLACK BLANK-OFFS WHERE NO AIRFLOW IS REQUIRED.

# ELECTRIC UNIT HEATER SCHEDULE

| TAG | MANUFACTURER | MODEL | SERVICE | TYPE | KW | AMPS | V-PH-HZ | NOTES |
|---|---|---|---|---|---|---|---|---|
| UH-1 | TRANE | UHEC-031A0C0 | SPRINKLER ROOM | WALL HUNG | 3.3 | 15.9 | 208-1-60 | 1 |

NOTES:

1. PROVIDE UNIT MOUNTED THERMOSTATS.

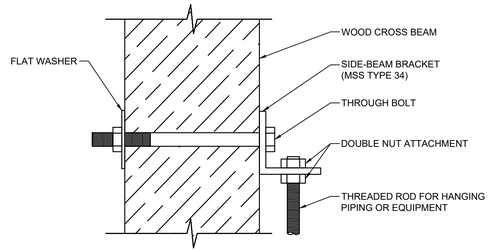


1 / M-81 **MECHANICAL ANCHORING DETAIL**
SCALE: NOT TO SCALE

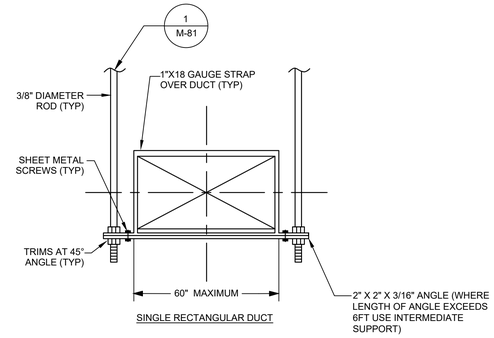


2 / M-81 **MECHANICAL DUCT HANGER DETAIL**
SCALE: NOT TO SCALE

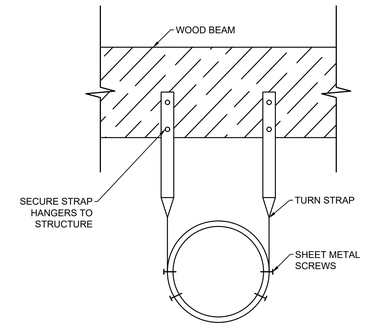


3 / M-81 **MECHANICAL ROUND DUCT HANGER DETAIL**
SCALE: NOT TO SCALE

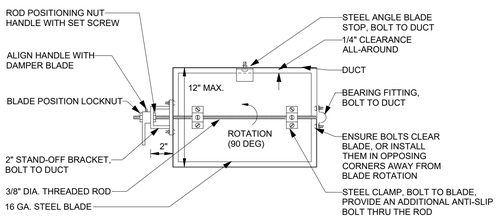


NOTES:

1. DAMPERS FOR ROUND DUCTS SHALL BE SIMILAR TO THE DAMPER SHOWN ABOVE.
2. ENSURE THAT FULL 90 DAMPER BLADE MOVEMENT IS UNOBSTRUCTED.
3. FOR DUCT HEIGHTS MORE THAN 12", PROVIDE FACTORY-FABRICATED OPPOSED BLADE DAMPERS.

4 / M-81 **MECHANICAL VOLUME DAMPER DETAIL**
SCALE: NOT TO SCALE

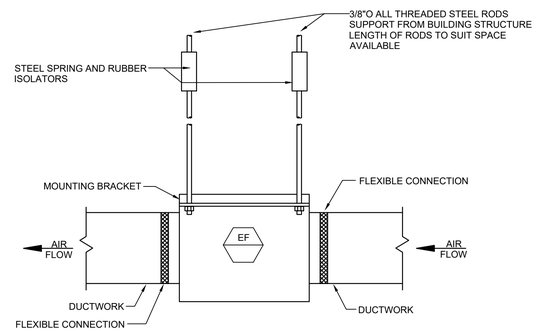


5 / M-81 **MECHANICAL FAN HANGING DETAIL**
SCALE: NOT TO SCALE

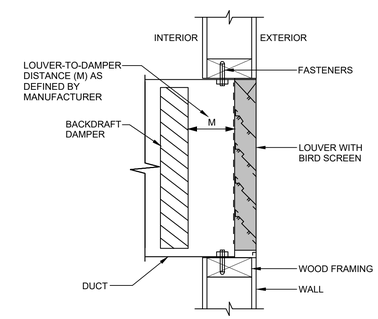


6 / M-81 **MECHANICAL LOUVER**
SCALE: NOT TO SCALE

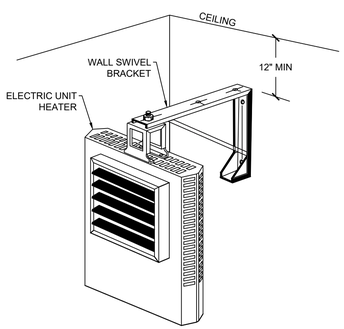


7 / M-81 **MECHANICAL WALL MOUNTED ELECTRIC UNIT HEATER DETAIL**
SCALE: NOT TO SCALE

CONSULTANT INFORMATION

LiRo Engineers, Inc.
*A LiRo Group Company*
Syosset, N.Y. 516-214-8157[T]

CONSULTANT SEAL

STATE OF NEW YORK · FRANK F. ULLOSE · No. 090111-1 · LICENSED PROFESSIONAL ENGINEER

| REVISION NUMBER | DATE | MADE BY | APP'D BY | REVISION |
|---|---|---|---|---|
| | | | | |

RECORD DRAWING CERTIFICATION

☐ AS BUILT – CHANGES AS NOTED ☐ AS BUILT – NO CHANGES

CONTRACTOR
NAME
SIGNATURE
TITLE DATE

PROJECT COORDINATOR
NAME
SIGNATURE
TITLE DATE

WESTCHESTER COUNTY, NEW YORK
DEPARTMENT OF PUBLIC WORKS AND TRANSPORTATION
DIVISION OF ENGINEERING

**INFRASTRUCTURE REHABILITATION - PHASE 3**
**PLAYLAND PARK, RYE, NEW YORK**
**NORTHEAST BURGER BARN**
**MECHANICAL DETAILS 1 OF 2**

| | |
|---|---|
| CONTRACT NUMBER | 22-523 |
| SHEET NUMBER | BB-M-81 |
| DWG NO.: | 75 of 664 |
| SCALE: | AS INDICATED |
| DATE: | 08/23/2022 |
| DPW FILE NUMBER | 1-118-M-824-0 |
| REV. NO. | 0 |

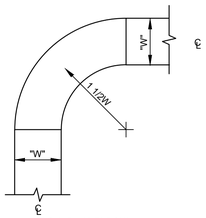


ROUND 90° **ELBOW**

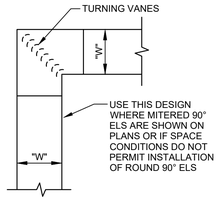


MITERED 90° **ELBOW**

CONSTRUCTION OF 90° **ELBOWS**

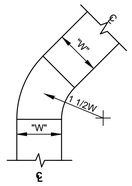


ROUND 45° **ELBOW**

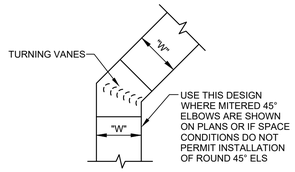


MITERED 45° ELBOW

CONSTRUCTION OF 45° ELBOWS

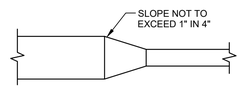


TYPICAL RECTANGULAR TRANSITION

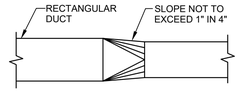


TYPICAL RECTANGULAR TO ROUND TRANSITION

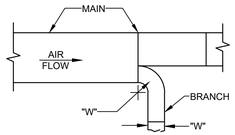


ROUND BRANCH TAKEOFF

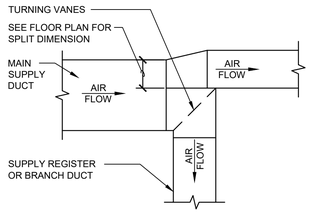


SQUARE BRANCH TAKEOFF

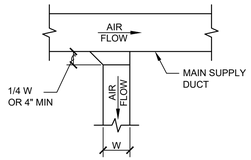


BRANCH DUCT TAKEOFF

CONSTRUCTION OF TAKEOFFS

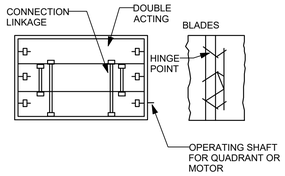


TYPICAL VOLUME DAMPER

INSTALLATION NOTES:

1. ALL DUCT TRANSITIONS SHALL BE CONSTRUCTED AND INSTALLED AS DETAILED BY SMACNA.
2. ALL DUCTS SHALL BE CONSTRUCTED AND ERECTED IN A NEAT AND WORKABLE MANNER.
3. DUCTS SHALL BE CONSTRUCTED OF THE WEIGHTS, GAUGES AND MATERIAL SPECIFIED.
4. THE DIMENSION SHOWN FOR ALL DUCTS SHOWN IN PLAN GIVE THE WIDTH FIRST AND THEN THE HEIGHT.
5. DUCT RISERS SHOULD BE SUPPORTED BY ANGLES AT EVERY FLOOR.
6. AIR TURN SHALL BE INSTALLED IN ALL ABRUPT ELBOWS TO PREVENT TURBULENCE.
7. DUCTS SHALL BE SECURELY ATTACHED TO THE BUILDING CONSTRUCTION IN AN APPROVED MANNER.
8. DIVERGING TRANSITION PIECES SHALL BE MADE AS GRADUAL AS POSSIBLE.
9. INSTALL FIRE DAMPERS IN ACCORDANCE WITH UL 555.
10. ACCESS PANELS SHOULD BE PLACED BEFORE AND/OR AFTER EQUIPMENT INSTALLED IN THE DUCT.
11. DUCT AREA SHOULD NOT BE DECREASED MORE THAN 10 PERCENT WHEN OBSTRUCTIONS CANNOT BE AVOIDED, AND THEN A STREAMLINED FITTING SHOULD BE USED.
12. FLEXIBLE FABRIC CONNECTIONS (OR EQUAL) SHOULD BE USED ON BOTH INLETS AND OUTLETS OF ALL FANS AND AIR HANDLING UNIT.
13. JOINTS AND SEAMS OF SUPPLY DUCTS SHALL BE FASTENED SECURELY AND MADE AIR TIGHT.
14. VANES SHORTER THAN 36" SHALL BE SINGLE WALL, WITH A 2" RADIUS AND 1 1/2" SPACING. VANES LARGER THAN 36" AND SHORTER THAN 48" SHALL BE DOUBLE WALL, WITH A 2" OUTER RADIUS, 1" INNER RADIUS, AND 2 1/8" SPACING. VANES LONGER THAN 48" SHALL BE DOUBLE WALL, WITH A 4 1/2" OUTER RADIUS, 2 1/4" INNER RADIUS, AND 3 1/4" SPACING. NO TURNING VANES SHALL INCLUDE A TRAILING EDGE.

## 1 / M-82 MECHANICAL DUCT CONSTRUCTION DETAIL

SCALE: NOT TO SCALE

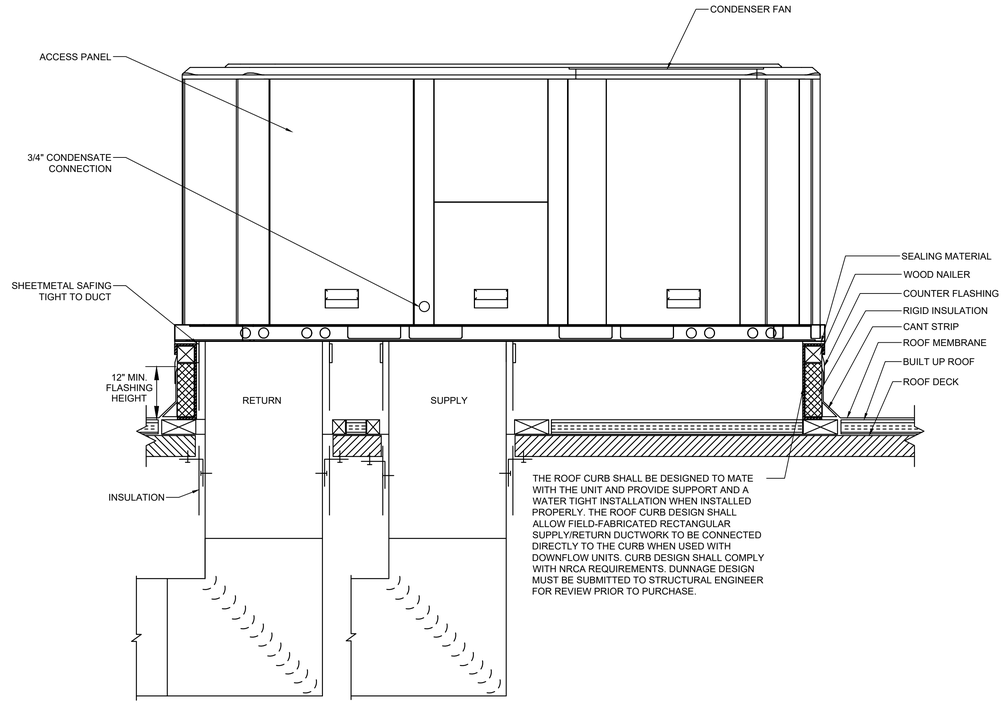


## 2 / M-82 ROOF TOP UNIT (RTU) DETAIL

SCALE: NOT TO SCALE

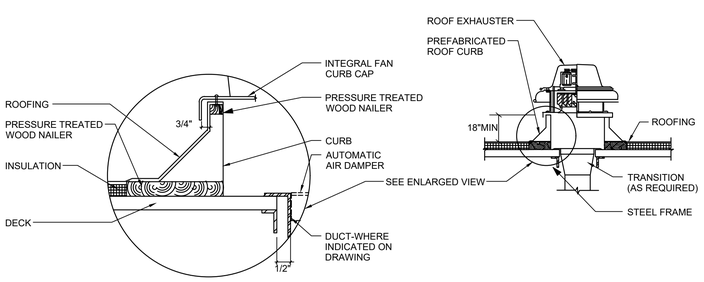


NOTES:
1. BACKDRAFT DAMPER SHALL BE FULL SIZE OF OPENING IN ROOF DECK.

## 3 / M-82 MECHANICAL ROOF FAN DETAIL

SCALE: NOT TO SCALE

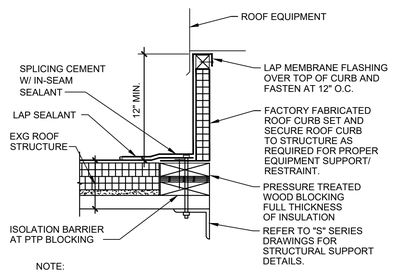


NOTE:
1. AT PENETRATIONS THROUGH EXISTING ROOF, FLASH INTO EXISTING ROOF SYSTEM AND PATCH TO MATCH AS REQUIRED BY ROOF SYSTEM MANUFACTURER.

## 4 / M-82 ROOF CURB DETAIL

SCALE: NOT TO SCALE

CONSULTANT INFORMATION

LiRo Engineers, Inc.
*A LiRo Group Company*
Syosset, N.Y. 516-214-8157[T]

CONSULTANT SEAL

STATE OF NEW YORK · FRANK F. ULUSE · No. 090111-1 · LICENSED PROFESSIONAL ENGINEER

| REVISION NUMBER | DATE | MADE BY | APP'D BY | REVISION |
|---|---|---|---|---|
| | | | | |

RECORD DRAWING CERTIFICATION

☐ AS BUILT – CHANGES AS NOTED ☐ AS BUILT – NO CHANGES

CONTRACTOR: NAME ____ SIGNATURE ____ TITLE ____ DATE ____

PROJECT COORDINATOR: NAME ____ SIGNATURE ____ TITLE ____ DATE ____

WESTCHESTER COUNTY, NEW YORK
DEPARTMENT OF PUBLIC WORKS AND TRANSPORTATION
DIVISION OF ENGINEERING

**INFRASTRUCTURE REHABILITATION - PHASE 3**
**PLAYLAND PARK, RYE, NEW YORK**
**NORTHEAST BURGER BARN**
**MECHANICAL DETAILS 2 OF 2**

| | |
|---|---|
| CONTRACT NUMBER | 22-523 |
| SHEET NUMBER | **BB-M-82** |
| DWG NO.: | 76 of 664 |
| SCALE: | **AS INDICATED** |
| DATE: | 08/23/2022 |
| DPW FILE NUMBER | **1-118-M-825** |
| REV. NO. | 0 |

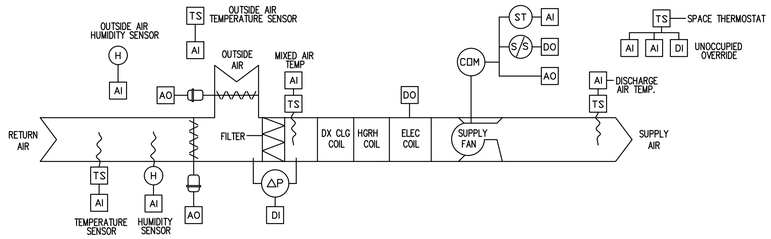


ROOFTOP UNIT - ELECTRIC HEATING COIL AND DX COOLING - SEQUENCE OF OPERATIONS:

1. GENERAL:
   a. SUPPLY FAN AND ASSOCIATED EXHAUST FANS SHALL RUN CONTINUOUSLY. THE SUPPLY FAN SHALL RUN AT THE FREQUENCY DETERMINED BY THE BALANCING CONTRACTOR.THE RTU SYSTEMS CONSISTS OF SUPPLY FANS W/ EC MOTOR CONTROLLER, BAROMETRIC (PASSIVE) RELIEF, RETURN AIR DAMPERS, ECONOMIZER, DAMPERS, DX COOLING COIL, HOT-GAS REHEAT COIL, AND GAS-FIRED HEATING COIL.
   b. THE RTU SYSTEM IS DESIGNED TO PROVIDE VENTILATION, HEATING AND COOLING SUPPLY AIR, AND MAKEUP FOR GENERAL KITCHEN EXHAUST TO A SINGLE ZONE. FUTURE KITCHEN HOOD MAKEUP AIR TO BE PROVIDED BY RESTAURANT VENDOR WITH DEDICATED SYSTEMS.
   c. THE RTU SYSTEM IS PROVIDED AS A PACKAGED SYSTEM, WITH MANUFACTURER PROVIDED UNIT CONTROLLER.
   d. THE CONTROL CONTRACTOR SHALL REVIEW MANUFACTURER SHOP DRAWINGS AND CONTROL DEVICE INSTALLATION, FURNISH AND INSTALL ALL REMAINING CONTROL DEVICES AND FIELD INSTALLED ACCESSORIES TO PERFORM THE SEQUENCES INDICATED. REFER TO EQUIPMENT SCHEDULES AND DETAILS FOR DEVICES INCLUDED WITH THE EQUIPMENT.
2. OCCUPIED MODE:
   a. SUPPLY FAN AND ASSOCIATED EXHAUST FANS SHALL RUN CONTINUOUSLY (SINGLE ZONE VAV).
   b. THE OUTSIDE AIR DAMPER SHALL OPEN TO THE POSITION REQUIRED TO MAINTAIN THE MINIMUM OUTSIDE AIR QUANTITY INDICATED. OUTSIDE AIR DAMPER SHALL NEVER BE POSITIONED BELOW THIS MINIMUM POSITION EXCEPT IN CASE OF ALARM.
   c. HEATING: WHEN THE SPACE TEMPERATURE IS AT OR BELOW THE HEATING SETPOINT, THE ELECTRIC COIL SHALL MODULATE TO MAINTAIN SPACE HEATING SETPOINT SUBJECT TO A DISCHARGE HIGH LIMIT OF 100 DEG. F (ADJUSTABLE) AND DISCHARGE LOW LIMIT OF 70 DEG. F (ADJUSTABLE).
   d. FREE COOLING: WHEN THE SPACE TEMPERATURE RISES 3 DEG. F (ADJUSTABLE) ABOVE THE SPACE HEATING SETPOINT, AND THE OUTSIDE AIR ENTHALPY IS LOWER THAN THE SPACE ENTHALPY, THE OUTSIDE AIR DAMPER SHALL MODULATE OPEN AND THE ASSOCIATED RELIEF DAMPER SHALL OPEN TO MAINTAIN THE OCCUPIED SETPOINT. THIS SHALL BE DONE SUBJECT TO LOW LIMIT OF 55 DEG. F (ADJUSTABLE) AND WITH THE ELECTRIC HEATING COIL DISABLED.
   e. COOLING: WHEN THE SPACE TEMPERATURE IS 3 DEG. F (ADJUSTABLE) ABOVE THE COOLING SETPOINT, AND THE OUTSIDE AIR CANNOT COOL THE SPACE, THE RESPECTIVE CONDENSING UNIT SHALL BE CYCLED WITH THE ELECTRIC HEATING COIL DISABLED TO MAINTAIN SPACE TEMPERATURE. USE 5 DEG. F (ADJUSTABLE) DEADBAND BETWEEN HEATING AND COOLING SETPOINTS.
3. ECONOMIZER OPERATION
   a. ECONOMIZER OPERATION IS ENABLED WHEN OUTDOOR AIR ENTHALPY IS LESS THAN RETURN AIR ENTHALPY.
   b. THE OUTSIDE AIR AND RETURN AIR DAMPERS SHALL MODULATE AS REQUIRED TO OPTIMIZE SUPPLY AIR TEMPERATURE SETPOINT VIA FREE COOLING.THIS IS TYPICALLY A FULLY OPEN OUTSIDE AIR DAMPER DURING SUMMER MONTHS, AND PARTIALLY OPEN OUTSIDE AIR AND RETURN AIR DAMPERS DURING WINTER MONTHS.
   c. IF ECONOMIZER MODE CAN NOT FULLY PROVIDE THE REQUIRED DISCHARGE AIR TEMPERATURE, THE DX COOLING COIL SHALL SUPPLEMENT AS REQUIRED.
4. UNOCCUPIED MODE:
   a. THE SUPPLY AND ASSOCIATED EXHAUST FAN SHALL BE OFF.
   b. THE OUTSIDE AIR DAMPER AND THE ASSOCIATED RELIEF AIR HOOD DAMPER SHALL BE FULLY CLOSED AND THE RETURN AIR DAMPER SHALL BE FULLY OPEN.
   c. ON DROP IN SPACE TEMPERATURE BELOW THE UNOCCUPIED HEATING SETPOINT, CYCLE THE FAN ON AND ELECTRICAL COIL SHALL OPERATE AT THE FULL RATE TO MAINTAIN REDUCED SPACE TEMPERATURE. USE 5 DEG. F (ADJUSTABLE) DEADBAND TO MINIMIZE SHORT CYCLING.
   d. A TIMED LOCAL OVERRIDE CONTROL SHALL ALLOW AN OCCUPANT TO OVERRIDE THE SCHEDULE AND PLACE THE UNIT IN OCCUPIED MODE FOR 1 HOUR (ADJUSTABLE). AT EXPIRATION OF THIS TIME, CONTROL OF THE UNIT SHALL AUTOMATICALLY RETURN TO THE SCHEDULE.
5. WARM-UP MODE:
   a. THE UNIT SHALL START PER AN OPTIMUM START PROGRAM.
   b. THE OUTSIDE AIR DAMPER AND THE ASSOCIATED RELIEF HOOD DAMPER SHALL BE FULLY CLOSED, THE RETURN AIR DAMPER SHALL BE FULLY OPEN, AND THE ASSOCIATED EXHAUST FAN SHALL BE OFF.
   c. THE SUPPLY FAN SHALL RUN AND THE ELECTRIC HEATING COIL SHALL MODULATE TO MAINTAIN OCCUPIED SETPOINT.
6. SAFETIES:
   a. DIFFERENTIAL PRESSURE ACROSS THE AIR FILTERS SHALL GENERATE AN ALARM AT UNIT CONTROLLER WHENEVER THE DIFFERENTIAL PRESSURE EXCEEDS IT'S ADJUSTABLE SETPOINT.
   b. IF THE DISCHARGE AIR TEMPERATURE DROPS BELOW 35 DEG F (ADJUSTABLE), THE SUPPLY FAN SHALL TURN OFF AND SHALL BE LOCKED OUT, AND AN ALARM SHALL BE ACTIVATED.
   c. IF THE DISCHARGE AIR TEMPERATURE RISES ABOVE 120 DEG. F (ADJUSTABLE), THE ELECTRIC HEATING COIL SHALL TURN OFF AND AN ALARM SHALL BE ACTIVATED.

## 1 / M-91 ROOFTOP UNIT - ELECTRIC COIL AND DX COOLING

SCALE: NOT TO SCALE

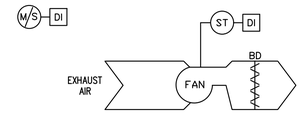


EXHAUST FAN - CONSTANT SPEED - SEQUENCE OF OPERATIONS:

GENERAL: EACH EXHAUST FAN CONSISTS OF FAN, BACKDRAFT DAMPER, AND EC MOTOR CONTROLLER

EXHAUST FAN TO BE LOCALLY CONTROLLED FROM SWITCH MOUNTED ADJACENT TO FAN.

1. OCCUPIED MODE:
   a. THE EXHAUST FAN SHALL RUN AT A CONSTANT VOLUME WHEN SWITCHED ON.
3. UNOCCUPIED MODE:
   a. THE EXHAUST FAN SHALL BE OFF WHEN SWITCHED OFF.

## 2 / M-91 EXHAUST FAN - CONSTANT SPEED (EF-1, EF-2, EF-3)

SCALE: NOT TO SCALE

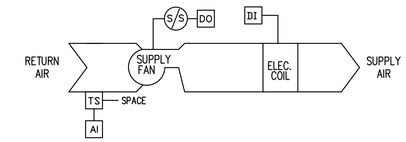


UNIT HEATER - ELECTRIC - SEQUENCE OF OPERATIONS:

1. ON DROP IN SPACE TEMPERATURE BELOW OCCUPIED HEATING SETPOINT, CYCLE THE FAN ON AND MODULATE (2 STAGE) ELECTRIC COIL TO MAINTAIN SPACE OCCUPIED SETPOINT, FAN SHALL HAVE DELAYED SHUT OFF AFTER VALVE CLOSES. USE 5 DEG. F (ADJUSTABLE) DEADBAND TO MINIMIZE SHORT CYCLING.

## 3 / M-91 UNIT HEATER - ELECTRIC

SCALE: NOT TO SCALE

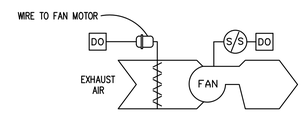


EXHAUST FAN - CONSTANT SPEED - SEQUENCE OF OPERATIONS:

INTERLOCK THE OPERATION OF THE EXHAUST FANS AND AUTOMATIC DAMPERS WITH THEIR RESPECTIVE HEATING AND COOLING EQUIPMENT, RTU-1,

1. OCCUPIED MODE:
   a. THE EXHAUST FAN SHALL RUN CONTINUOUSLY AND THE AUTOMATIC AIR DAMPER SHALL OPEN.
3. UNOCCUPIED MODE:
   a. THE EXHAUST FAN SHALL BE OFF AND THE AUTOMATIC AIR DAMPER SHALL BE CLOSED.
4. WARM-UP MODE:
   a. THE EXHAUST FAN SHALL BE OFF AND THE AUTOMATIC AIR DAMPER SHALL BE CLOSED.

## 4 / M-91 EXHAUST FAN (EF-4) - CONSTANT SPEED

SCALE: NOT TO SCALE

CONSULTANT INFORMATION

LiRo Engineers, Inc.
A LiRo Group Company
Syosset, N.Y. 516-214-8157[T]

CONSULTANT SEAL

STATE OF NEW YORK · FRANK F. DUSSE · No. 090111-1 · LICENSED PROFESSIONAL ENGINEER · SEAL

| REVISION NUMBER | DATE | MADE BY | APP'D BY | REVISION |
|---|---|---|---|---|
| | | | | |

RECORD DRAWING CERTIFICATION

☐ AS BUILT – CHANGES AS NOTED ☐ AS BUILT – NO CHANGES

CONTRACTOR: NAME / SIGNATURE / TITLE / DATE

PROJECT COORDINATOR: NAME / SIGNATURE / TITLE / DATE

WESTCHESTER COUNTY, NEW YORK
DEPARTMENT OF PUBLIC WORKS AND TRANSPORTATION
DIVISION OF ENGINEERING

**INFRASTRUCTURE REHABILITATION - PHASE 3**
**PLAYLAND PARK, RYE, NEW YORK**
**NORTHEAST BURGER BARN**
**MECHANICAL CONTROLS**

| | |
|---|---|
| CONTRACT NUMBER | 22-523 |
| SHEET NUMBER | BB-M-91 |
| DWG NO.: | 77 of 664 |
| SCALE: | AS INDICATED |
| DATE: | 08/23/2022 |
| DPW FILE NUMBER | 1-118-M-826-0 |
| REV. NO. | 0 |

**PANELBOARD** EXISTING- VENDOR SPACE — **LOCATION:** NE ARCADE VENDOR SPACE

1 **NEMA RATING** — 3 **POLES** — **MOUNTING:** SURFACE

175 **AMP BUS RATING** — MLO **AMP MAIN BREAKER** — 42 **KA SHORT CIRCUIT RATING**

208Y/120 **VOLTS** — 3 **PHASE** 4 **WIRE** — **LECTRONIC GRADE :** NO

| CIRCUIT NO. | DESCRIPTION | LOAD KVA PHASE A | PHASE B | PHASE C | BREAKER AMPS / POLES | NOTES | CIRCUIT NO. | DESCRIPTION | LOAD KVA PHASE A | PHASE B | PHASE C | BREAKER AMPS / POLES | NOTES |
|---|---|---|---|---|---|---|---|---|---|---|---|---|---|
| 1 | | | | | | | 2 | | | | | 20/1 | |
| 3 | | | | | 60/3 | | 4 | | | | | 20/1 | |
| 5 | | | | | | | 6 | | | | | 20/1 | |
| 7 | | | | | 15/1 | | 8 | | | | | 20/1 | |
| 9 | | | | | 15/1 | | 10 | | | | | 20/2 | |
| 11 | | | | | 20/1 | | 12 | | | | | | |
| 13 | LIGHTS | | | | 20/1 | | 14 | SPRINKLER ROOM HEATER | | | | | |
| 15 | | | | | 15/1 | | 16 | | | | | | |
| 17 | OUTSIDE LIGHTS | | | | 20/1 | | 18 | | | | | | |
| 19 | | | | | | | 20 | | | | | | |
| 21 | | | | | 20/3 | | 22 | FEED FOR PANEL IN OFFICE | | | | 150/3 | |
| 23 | | | | | | | 24 | | | | | | |
| | **TOTAL PHASE KVA THIS SIDE** | 0 | 0 | 0 | | | | **TOTAL PHASE KVA THIS SIDE** | 0 | 0 | 0 | | |
| | | | | | | | | **TOTAL KVA PER PHASE** | 0 | 0 | 0 | | |
| | | | | | | | | **TOTAL THREE PHASE KVA** | | 0 | | | |

NOTES:
1.
2.
3.
4.

NOTES CONT.:
5.
6.
7.
8.

**PANELBOARD** EXISTING PANEL — **LOCATION:** NE ARCADE OFFICE AREA

1 **NEMA RATING** — 3 **POLES** — **MOUNTING:** SURFACE

175 **AMP BUS RATING** — 150 **AMP MAIN BREAKER** — 42 **KA SHORT CIRCUIT RATING**

208Y/120 **VOLTS** — 3 **PHASE** 4 **WIRE** — **LECTRONIC GRADE :** NO

| CIRCUIT NO. | DESCRIPTION | LOAD KVA PHASE A | PHASE B | PHASE C | BREAKER AMPS / POLES | NOTES | CIRCUIT NO. | DESCRIPTION | LOAD KVA PHASE A | PHASE B | PHASE C | BREAKER AMPS / POLES | NOTES |
|---|---|---|---|---|---|---|---|---|---|---|---|---|---|
| 1 | BLANK | | | | | | 2 | PHOTO CANDY LOVE | | | | | |
| 3 | WAR GAMES Z | | | | 20/2 | | 4 | HOCKEY SUP DRILL TREASURE | | | | | |
| 5 | | | | | | | 6 | ALARM - LEAVE ON | | | | | |
| 7 | EA - DON'T TURN OFF | | | | | | 8 | SPARE | | | | 15/1 | |
| 9 | RIGHT FAN | | | | 20/1 | | 10 | JURRASSIC PARK | | | | | |
| 11 | OFF | | | | | | 12 | OUTSIDE RACE CAR & BIG CHOICE | | | | 20/1 | |
| 13 | CEILING FAN | | | | | | 14 | ATV, DAYTONA, PACMAN | | | | | |
| 15 | SPARE | | | | 15/1 | | 16 | SPARE | | | | 15/1 | |
| 17 | REDEMPTION AREA LIGHTS - LEAVE ON | | | | 15/2 | | 18 | REDEMPTION FANS | | | | 15/1 | |
| 19 | | | | | | | 20 | PINS | | | | 15/1 | |
| 21 | BASKETBALLS | | | | 15/1 | | 22 | WONDER WHEEL, B-HAUL, SUZUKA | | | | 15/1 | |
| 23 | SPARE | | | | 15/1 | | 24 | BIG BERTA, DUCKS MATCHUP | | | | 15/1 | |
| 25 | SPARE | | | | 15/1 | | 26 | SPARE | | | | 20/1 | |
| 27 | SPARE | | | | 15/1 | | 28 | SPARE | | | | 20/1 | |
| 29 | SPARE | | | | 15/1 | | 30 | SPARE | | | | 15/1 | |
| | **TOTAL PHASE KVA THIS SIDE** | 0 | 0 | 0 | | | | **TOTAL PHASE KVA THIS SIDE** | 0 | 0 | 0 | | |
| | | | | | | | | **TOTAL KVA PER PHASE** | 0 | 0 | 0 | | |
| | | | | | | | | **TOTAL THREE PHASE KVA** | | 0 | | | |

NOTES:
1.
2.
3.
4.

NOTES CONT.:
5.
6.
7.
8.

NOTES:

1. FOR ADDITIONAL NOTES, ABBREVIATIONS AND SYMBOLS, SEE DRAWING GE-E-01.
2. CONTRACTOR IS ADVISED THAT THIS BUILDING, UNLESS NOTED OTHERWISE, IS A COMPLETE ELECTRICAL "CUT". THIS INCLUDES ALL CONDUIT MOUNTED ON THE SIDE OF THE BUILDING.

KEY NOTES:

(1) INCOMING UNDERGROUND SERVICE TO BE INTERCEPTED, REMAIN AND BE REUSED.

(2) 200 AMP DISCONNECT SWITCH (EXTERIOR MOUNTED) FUSED AT 175 AMPS.

(3) DISCONNECT AND REMOVE ALL CONDUIT AND WIRE.

(4) DISCONNECT AND REMOVE ALL PANELS AND ALL ASSOCIATED BRANCH CIRCUITS, BREAKERS, CONDUIT AND WIRE. ASSUME FOR BIDDING PURPOSES 2000' OF CONDUIT AND WIRE.

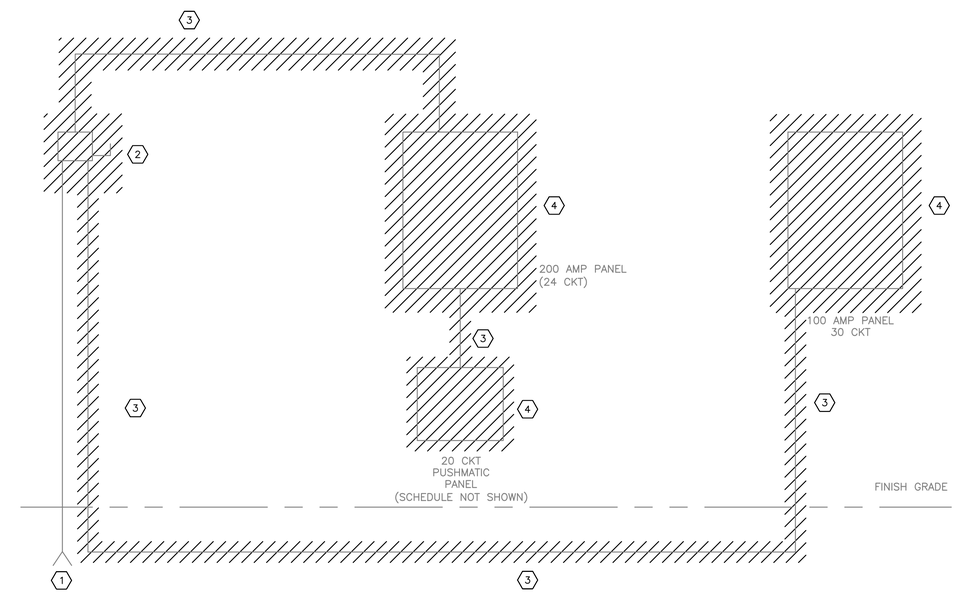


ONE LINE DIAGRAM – DEMOLITION
N.T.S.

Drawing Name: G:\SavinAutocad\2060\25-Playland-Mega-3\E\BBE-1001.dwg
Reref: Projectname: 211001F02 Comments: ----
Printed by: MGodby Date: 26 August 2022 5:03 PM Designed by: ----
Xrefs: [TB_24X36_WestchesterCo_3.dwg] [TSG-SVL000.dwg] [BCR-A-04.dwg] [BCR-101.dwg]

CONSULTANT INFORMATION

Savin Engineers, P.C.

CONSULTANT SEAL

STATE OF NEW YORK — STEVEN A. MARTINO — 093631 — LICENSED PROFESSIONAL ENGINEER

| REVISION NUMBER | DATE | MADE BY | APP'D BY | REVISION |
|---|---|---|---|---|
| | | | | |

RECORD DRAWING CERTIFICATION

☐ AS BUILT – CHANGES AS NOTED ☐ AS BUILT – NO CHANGES

CONTRACTOR: NAME / SIGNATURE / TITLE / DATE

PROJECT COORDINATOR: NAME / SIGNATURE / TITLE / DATE

WESTCHESTER COUNTY, NEW YORK
DEPARTMENT OF PUBLIC WORKS AND TRANSPORTATION
DIVISION OF ENGINEERING

**INFRASTRUCTURE REHABILITATION - PHASE 3**
**PLAYLAND PARK, RYE, NEW YORK**
**NORTHEAST BURGER BARN**
**ONE LINE DIAGRAM AND PANEL SCHEDULES - DEMOLITION**

| | |
|---|---|
| CONTRACT NUMBER | 22-523 |
| SHEET NUMBER | BB-E-01 |
| DWG NO.: | 78 of 664 |
| SCALE: | AS SHOWN |
| DATE: | 8/23/2022 |
| DPW FILE NUMBER | 1-118-E-827-0 |
| REV. NO. | 0 |

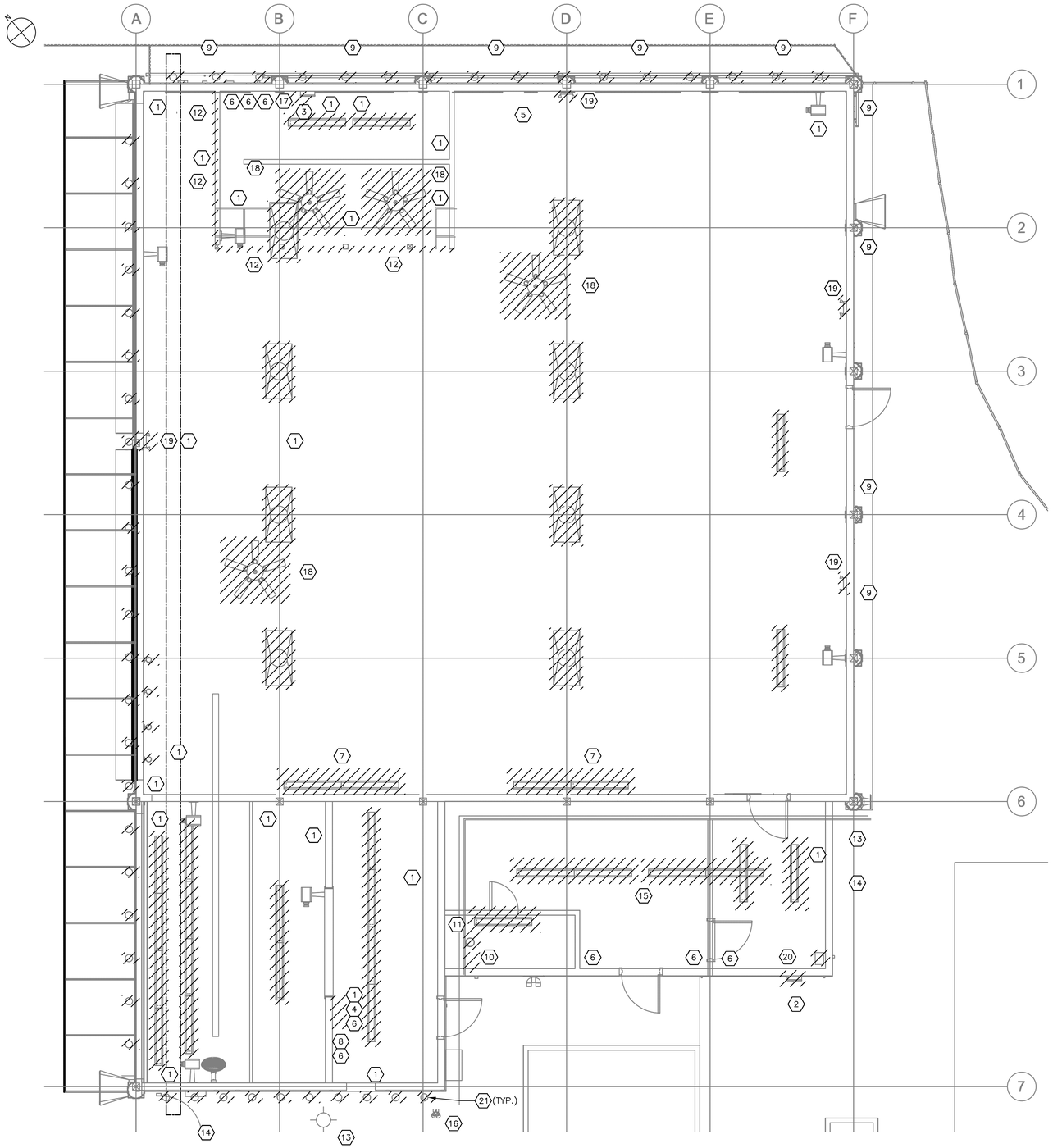


GROUND FLOOR DEMOLITION POWER AND LIGHTING PLAN

1/4"=1'-0"

| DEMOLITION LEGEND | |
|---|---|
| 1 | RECEPTACLE |
| 2 | HEAVY DUTY DISCONNECT SWITCH (SEE NOTE 12) |
| 3 | 30 CKT PANEL (150A) |
| 4 | 24 CKT PANEL (200A) |
| 5 | FIRE ALARM PANEL (SEE NOTE 8) |
| 6 | LIGHT SWITCH |
| 7 | WALL MOUNTED CABINET W/LIGHTS |
| 8 | GENERAL DUTY SAFETY SWITCH |
| 9 | SEE NOTE 9 |
| 10 | UNIT HEATER |
| 11 | 30A SERVICE DISCONNECT SWITCH (SPRINKLER ROOM) |
| 12 | PRIZE BOOTH LIGHTS (SEE NOTE 10) |
| 13 | THRU-WALL AIR CONDITIONING UNIT (REMOVED BY OTHERS) – DISCONNECT POWER |
| 14 | COMMUNICATIONS BOX (SEE NOTE 6) |
| 15 | EXISTING STRUCTURE (SEE NOTE 11) |
| 16 | EXTERIOR LIGHT |
| 17 | OUT OF SERVICE ELECTRIC METER |
| 18 | CEILING MOUNTED FAN (REMOVED BY OTHERS) – DISCONNECT POWER |
| 19 | EMERGENCY LIGHT |
| 20 | 20 CKT PUSHMATIC PANEL |
| 21 | COVE LIGHTS (SEE NOTE 14) |

NOTES:

1. FOR ADDITIONAL NOTES, ABBREVIATIONS AND SYMBOLS, SEE DRAWING GE-E-01.
2. ALL REMOVED EQUIPMENT SHALL BE RETURNED TO OWNER UPON REQUEST. OTHERWISE, ALL REMOVED MATERIAL SHALL BE LEGALLY DISPOSED OF.
3. DISCONNECT AND REMOVE ALL ELECTRICAL EQUIPMENT, LIGHTING, POWER, CONDUIT AND WIRE BACK TO SOURCE. REMOVE ALL PANELBOARDS.
4. CONTRACTOR SHALL DISCONNECT AND REMOVE ALL EXISTING, ABANDONED FLUORESCENT LIGHTING FIXTURES.
5. CONTRACTOR SHALL DEMOLISH ALL EXISTING JUNCTION BOXES AND ALL ASSOCIATED CONDUITS, WIRES, AND APPURTENANCES, UNLESS OTHERWISE NOTED. FOR BIDDING PURPOSES, ASSUME 2000 FEET OF 1" CONDUIT WITH 3#12 & 1#12 GND.
6. DISPOSITION OF EXISTING CCTV/DATA/COMMUNICATIONS CABINET(S) SHALL BE BY OTHERS. THIS INCLUDES BOTH INCOMING AND OUTGOING CONDUITS AND CABLES.
7. SEE DRAWING BB-E-01 FOR PANEL SCHEDULE DEMOLITION.
8. DISPOSITION OF EXISTING FIRE ALARM SYSTEM, INCLUDING DEVICES, CONTROL PANELS, AND ALL ASSOCIATED CONDUIT AND WIRE SHALL BE BY OTHERS.
9. ALL EXISTING CONDUIT AND WIRE SHALL BE DOCUMENTED PRIOR TO REMOVAL. CONTRACTOR IS ADVISED, THERE IS A SUBSTANTIAL AMOUNT OF EXISTING CONDUIT RUNNING ALONG THE NORTH AND EAST SIDES OF THE BUILDING. CONTRACTOR SHALL TRACE OUT/ COORDINATE WITH OWNER TO DETERMINE CONDUIT TO REMAIN AND BE PROTECTED DURING CONSTRUCTION OR TO BE REMOVED.
10. LIGHTS SURROUND THE NORTHEAST AND NORTHWEST SIDES ALONG THE TOP PERIMETER OF THE PRIZE BOOTH. LIGHTS ARE APPROXIMATELY 7 FEET AFF. CONTRACTOR SHALL DISCONNECT AND REMOVE LIGHTS.
11. EXISTING STRUCTURE TO BE REMOVED IN ITS ENTIRETY BY OTHERS. MINIMAL ELECTRICAL EQUIPMENT IN THIS SPACE. CONTRACTOR SHALL DISCONNECT AND REMOVE LIGHTING FIXTURES, UNIT HEATERS, RECEPTACLES, LIGHT SWITCHES, PANELBOARDS, AND ALL ASSOCIATED CONDUIT AND WIRE BACK TO SOURCE. FOR BIDDING PURPOSES, ASSUME 400 FEET OF 1" CONDUIT, 3#12 & 1#12 GND.
12. EXISTING 200 AMP HEAVY-DUTY DISCONNECT SWITCH FUSED AT 175 AMPS. CONTRACTOR SHALL DISCONNECT AND REMOVE SWITCH, AND REUSE THE EXISTING INCOMING SERVICE. SEE DRAWINGS BB-E-01, BB-E-04 AND BB-E-05 FOR MORE INFORMATION.
13. CONTRACTOR IS ADVISED, NEW INTRUSION/SECURITY SYSTEM AND ASSOCIATED EQUIPMENT PREVIOUSLY INSTALLED. DISPOSITION OF SYSTEM SHALL BE BY OTHERS. CONTRACTOR SHALL COORDINATE WITH THE OWNER.
14. DISCONNECT AND REMOVE ALL RECESSED MOUNTED EXTERIOR COVE LIGHTING.

0 4' 8'

SCALE: 1/4" = 1'-0"

CONSULTANT INFORMATION

Savin Engineers, P.C.

CONSULTANT SEAL

STATE OF NEW YORK · STEVEN A. MARTINO · 083631 · LICENSED PROFESSIONAL ENGINEER

| REVISION NUMBER | DATE | MADE BY | APP'D BY | REVISION |
|---|---|---|---|---|

RECORD DRAWING CERTIFICATION

☐ AS BUILT – CHANGES AS NOTED ☐ AS BUILT – NO CHANGES

CONTRACTOR: NAME / SIGNATURE / TITLE / DATE

PROJECT COORDINATOR: NAME / SIGNATURE / TITLE / DATE

WESTCHESTER COUNTY, NEW YORK
DEPARTMENT OF PUBLIC WORKS AND TRANSPORTATION
DIVISION OF ENGINEERING

**INFRASTRUCTURE REHABILITATION - PHASE 3**
**PLAYLAND PARK, RYE, NEW YORK**
**NORTHEAST BURGER BARN**
**GROUND FLOOR DEMOLITION PLAN**

| | |
|---|---|
| CONTRACT NUMBER | 22-523 |
| SHEET NUMBER | BB-E-02 |
| DWG NO.: | 79 of 664 |
| SCALE: | AS SHOWN |
| DATE: | 8/23/2022 |
| DPW FILE NUMBER | 1-118-E-828-0 |
| REV. NO. | 0 |

Drawing Name: G:\SavinAutocad\2060\25-Playland-Mega-3\E\BBE-1002.dwg
Projectname: 211001F02 Comments: ----
Printed by: MGoaby Date: 26 August 2022 5:03 PM Designed by: ----
Reref:
Xrefs: [TB_24X36_WestchesterCo_3.dwg] [TSG-SVL000.dwg] [AR-E-1003.dwg] [AR-A-01.dwg]

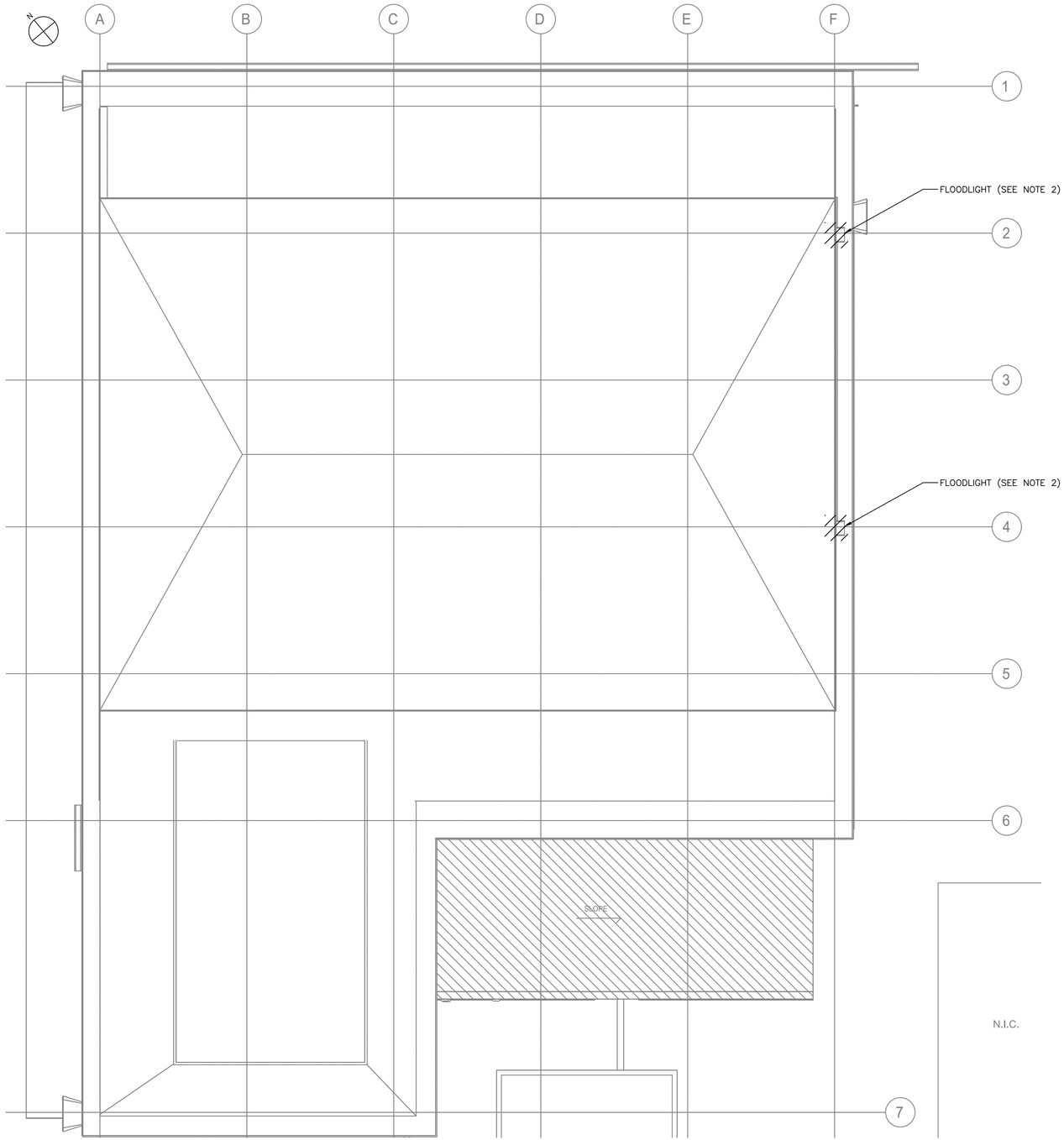


ROOF DEMOLITION POWER AND LIGHTING PLAN
1/4"=1'-0"

NOTES:

1. FOR ADDITIONAL NOTES, ABBREVIATIONS AND SYMBOLS, SEE DRAWING GE-E-01.
2. DISCONNECT AND REMOVE LIGHT FIXTURES. REMOVE ALL ASSOCIATED CONDUIT AND WIRE.
3. SEE DRAWING BB-E-02 FOR ADDITIONAL REMOVAL NOTES.

0 4' 8'
SCALE: 1/4" = 1'-0"

CONSULTANT INFORMATION

Savin Engineers, P.C.

CONSULTANT SEAL

STATE OF NEW YORK · STEVEN A. MARTINO · 083631 · LICENSED PROFESSIONAL ENGINEER

| REVISION NUMBER | DATE | MADE BY | APP'D BY | REVISION |
|---|---|---|---|---|
| | | | | |

RECORD DRAWING CERTIFICATION

☐ AS BUILT – CHANGES AS NOTED ☐ AS BUILT – NO CHANGES

CONTRACTOR
NAME
SIGNATURE
TITLE DATE

PROJECT COORDINATOR
NAME
SIGNATURE
TITLE DATE

WESTCHESTER COUNTY, NEW YORK
DEPARTMENT OF PUBLIC WORKS AND TRANSPORTATION
DIVISION OF ENGINEERING

**INFRASTRUCTURE REHABILITATION - PHASE 3**
**PLAYLAND PARK, RYE, NEW YORK**
**NORTHEAST BURGER BARN**
**ROOF DEMOLITION PLAN**

| CONTRACT NUMBER | SHEET NUMBER |
|---|---|
| 22-523 | BB-E-03 |

DWG NO.:
SCALE: AS SHOWN
DATE: 8/23/2022
DPW FILE NUMBER 1-118-E-829-0 REV. NO. 0



Drawing Name: G:\SavinAutocad\2060\25-Playland-Mega-3\E\BBE-1003.dwg
Projectname: 211001F02 Comments: ----
Printed by: MGadby Date: 26 August 2022 5:03 PM Designed by: ----
Rev#:
Xrefs: [TB_24X36_WestchesterCo_3.dwg] [TSG-SVL000.dwg] [AR-A-03.dwg]

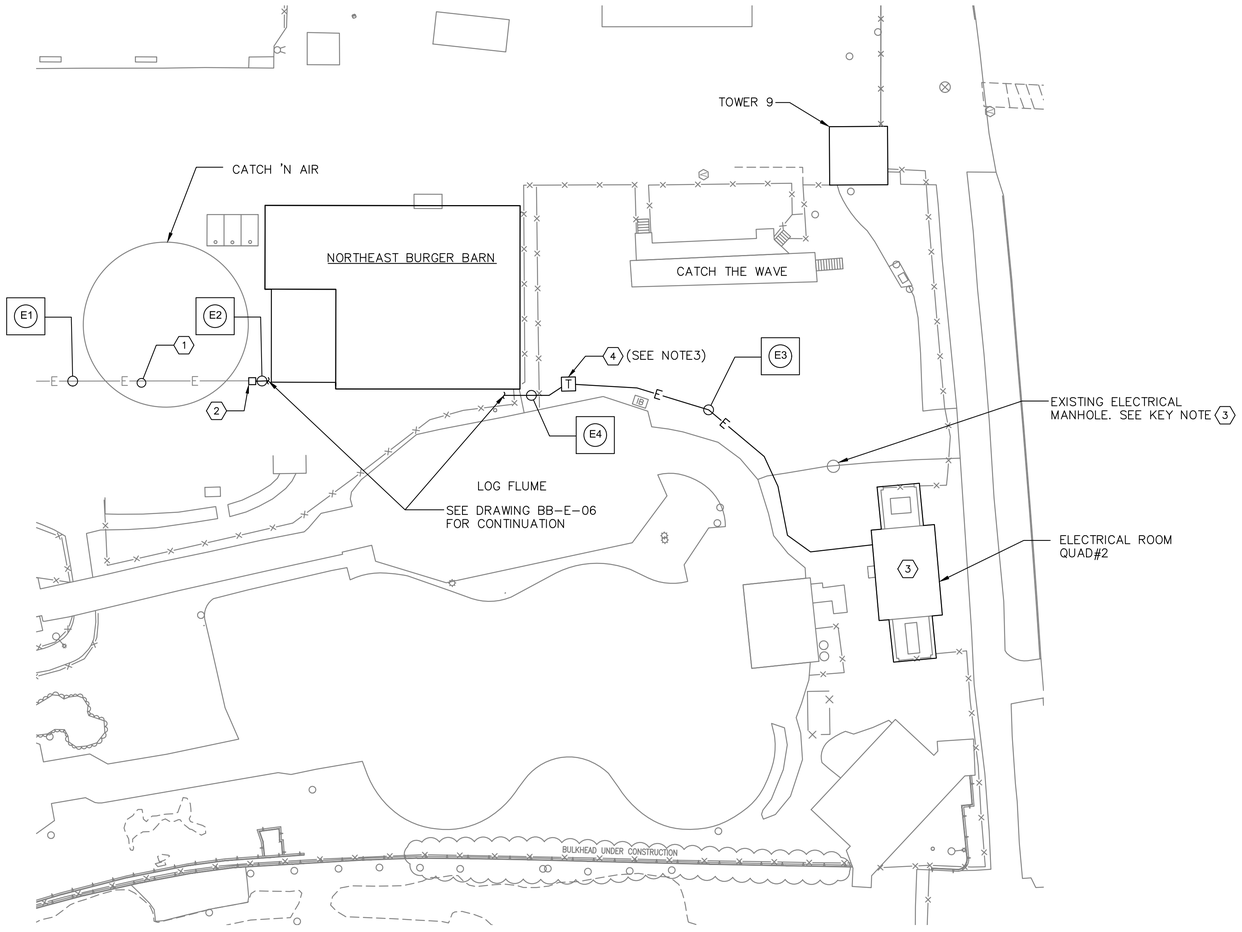


A BB-E-04 PARTIAL SITE PLAN
SCALE: 1" = 20"

NOTES:

1. FOR ADDITIONAL NOTES, ABBREVIATIONS AND SYMBOLS, SEE DRAWING GE-E-01.
2. CONTRACTOR SHALL TRACE OUT AND DOCUMENT EXISTING POWER SOURCE.
3. CONTRACTOR SHALL PROVIDE A MINIMUM OF 3 BOLLARDS FOR PROTECTION OF TRANSFORMER.

KEY NOTES:

1. EXISTING, INCOMING UNDERGROUND SERVICE TO BE REUSED. CONTRACTOR SHALL INTERCEPT EXISTING FEEDER WITH NEW SPLICE HANDHOLE.
2. NEW 24"X24"X30" DEEP POLYMER CONCRETE HANDHOLE. INTERCEPT EXISTING FEEDER AND SPLICE/EXTEND WITH NEW CONDUIT AND WIRE.
3. INTERNAL TO QUAD #2 ELECTRICAL ROOM, EXTEND WITH NEW 4" CONDUIT WITH 4 #350 KCMIL AND 1#4 GND TO 480/277 VOLT SWITCHBOARD. MODIFY EXISTING SWITCHBOARD TO ACCEPT A 300 AMP, 3-POLE CIRCUIT BREAKER FOR NEW BB-PP2 PANEL. CONTRACTOR IS ADVISED, THE NEW RUN IS SHOWN DIRECT TO QUAD #2 BUILDING. CONTRACTOR SHALL INVESTIGATE THE POTENTIAL USE OF SPARE CONDUIT FOR THE NEW CABLES. ADDITIONALLY, CONTRACTOR SHALL ASSUME, FOR BIDDING PURPOSES, A BUS TAP TO THE EXISTING SWITCHBOARD TO A NEW 300 AMP CIRCUIT BREAKER POTENTIALLY MOUNTED ON THE EXTERIOR OF THE STRUCTURE. ACTUAL CONNECTION SHALL BE DETERMINED IN THE FIELD.
4. NEW 225 KVA BB TRANSFORMER WITH 480 VOLT DELTA PRIMARY AND 208Y/120 VOLT, 3 PHASE, 4-WIRE SECONDARY. TRANSFORMER SHALL BE SUITABLE FOR OUTDOOR USE. MOUNT ON PROPERLY SIZED CONCRETE HOUSEKEEPING PAD. PAD SHALL BE MINIMUM 8" THICK AND 4000 PSI CONCRETE.

DUCTBANK SCHEDULE

| NAME | FROM | TO | CONDUIT SIZE | CABLE | REMARKS |
|---|---|---|---|---|---|
| E1 | POWER SOURCE | HANDHOLE | 2 1/2" | 4# 2/0 & 1 #6 GND | EXISTING - SEE NOTE 2 |
| E2 | HANDHOLE | BB-PP1 | 2 1/2" | 4 #2/0 & 1#6 GND | NEW RUN |
| E3 | 480V SWGR (QUAD #2) | TRANSFORMER | 3"C | 3-350 KCMIL & 1#4 GND | SEE KEY NOTE 3 |
| E4 | TRANSFORMER | BB-PP2 | 2 SETS OF 3 1/2"C | 4-350 KCMIL & 1#2 GND (EACH) | |

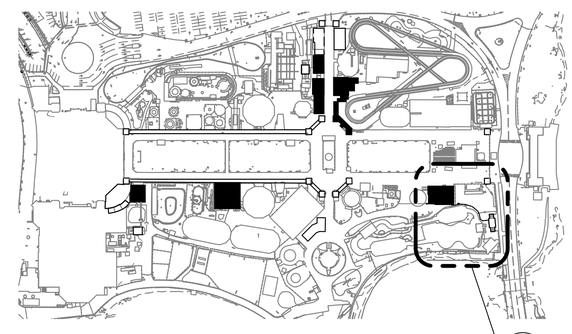

1 KEY PLAN
SCALE: 1" = 200'

A BB-E-04

0 20' 40'
SCALE: 1" = 20'-0"
0 200' 400'
SCALE: 1" = 200'-0"

Drawing Name: G:\SavinAutocad\2060\25-Playland-Mega-3\E\BBE-1004.dwg
Revit: Projectname: ---- Comments: ----
Printed by: MGodby Date: 26 August 2022 5:04 PM Designed by: ----
Xrefs: [TB_24X36_WestchesterCo_3.dwg] [TSC-SVL060.dwg] [TWS-SP0001.dwg] [TWC-SP0001.dwg] [COL-A-01.dwg] [AR-E-1006.dwg]

CONSULTANT INFORMATION

Savin Engineers, P.C.

CONSULTANT SEAL

STATE OF NEW YORK · STEVEN A. MARTINO · 083631 · LICENSED PROFESSIONAL ENGINEER

| REVISION NUMBER | DATE | MADE BY | APP'D BY | REVISION |
|---|---|---|---|---|

RECORD DRAWING CERTIFICATION

☐ AS BUILT - CHANGES AS NOTED ☐ AS BUILT - NO CHANGES

CONTRACTOR
NAME
SIGNATURE
TITLE DATE

PROJECT COORDINATOR
NAME
SIGNATURE
TITLE DATE

WESTCHESTER COUNTY, NEW YORK
DEPARTMENT OF PUBLIC WORKS AND TRANSPORTATION
DIVISION OF ENGINEERING

INFRASTRUCTURE REHABILITATION - PHASE 3
PLAYLAND PARK, RYE, NEW YORK
NORTHEAST BURGER BARN
SITE DUCTBANK PLAN

| | |
|---|---|
| CONTRACT NUMBER | 22-523 |
| SHEET NUMBER | BB-E-04 |
| DWG NO.: | 83 of 664 |
| SCALE: | AS SHOWN |
| DATE: | 8/23/2022 |
| DPW FILE NUMBER | 1-118-E-830-0 |
| REV. NO. | 0 |

NOTES:

1. FOR ADDITIONAL NOTES, ABBREVIATIONS AND SYMBOLS, SEE DRAWING GE–E–01.

KEY NOTES:

1. EXISTING UNDERGROUND FEEDER TO BE INTERCEPTED, SPLICED AND EXTENDED TO NEW PANEL.
2. INTERCEPT/SPLICE HANDHOLE.
3. NEW 200 AMP – 208Y/120 VOLT, 3 PHASE, 4 WIRE POWER PANEL WITH 225 AMP MAINS AND 175 AMP MAIN CIRCUIT BREAKER.
4. NEW RELAY PANEL BB–RP.
5. EXISTING 480/277V SWITCHBOARD IN QUAD #2 ELECTRIC ROOM.
6. BUS TAP FOR NEW POWER TO THE BURGER BARN.
7. NEW 300 AMP CIRCUIT BREAKER IN NEMA 3R ENCLOSURE (FOR 10' TAP RULE PER NEC).
8. 225 KVA TRANSFORMER. 480V DELTA PRIMARY–208Y/120V SECONDARY.
9. NEW 208Y/120V, 3–PHASE, 4–WIRE PANEL (BB–PP2) WITH 600AMP MAINS AND 600AMP MAIN CIRCUIT BREAKER.

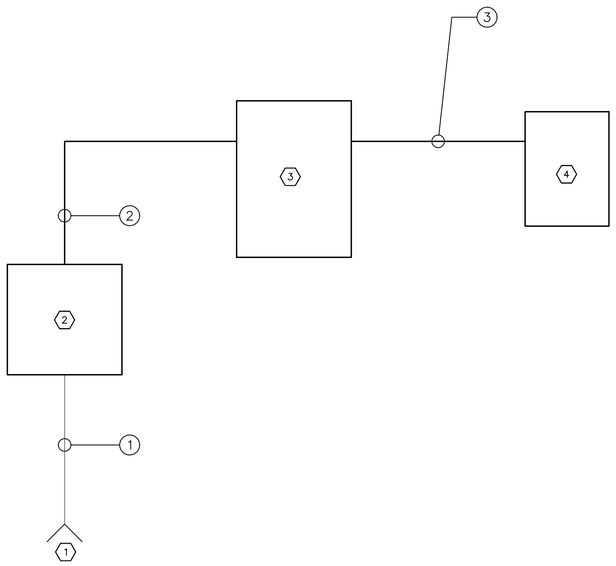


EXISTING SERVICE – ONE LINE DIAGRAM
N.T.S.

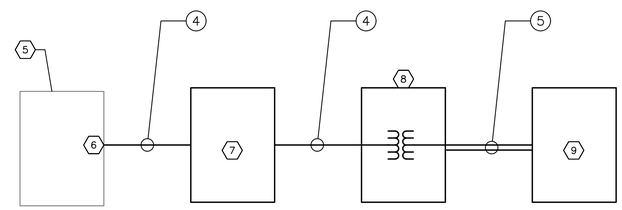


NEW SERVICE – SINGLE LINE DIAGRAM
N.T.S.

| CONDUIT AND WIRE LEGEND | |
|---|---|
| NO. | DESCRIPTION |
| 1 | 2 1/2"C, 4#2/0 & 1#6 GND (EXIST.) |
| 2 | 2 1/2"C, 4#2/0 & 1#6 GND (NEW) |
| 3 | 2"C, 12 # 12 & 6 # 12 GND |
| 4 | 3"C, 3–350KCMIL & 1#4 GND |
| 5 | 2 SETS OF 3 1/2"C, 4–350 KCMIL &1#2GND |

Drawing Name: G:\SavinAutocad\2060\25–Playland–Mega–3\E\BBE–1005.dwg
Projectname: 211001F02 Comments: ----
Printed by: MGoaby Date: 26 August 2022 5:04 PM Designed by: ----
Rev#:
Xrefs: [TB_24X36_WestchesterCo_3.dwg] [TSG–SVLOGO.dwg] [BCR–A–04.dwg] [BCR–101.dwg]

CONSULTANT INFORMATION

Savin Engineers, P.C.

CONSULTANT SEAL

STATE OF NEW YORK · STEVEN A. MARTINO · 083631 · LICENSED PROFESSIONAL ENGINEER

| REVISION NUMBER | DATE | MADE BY | APP'D BY | REVISION |
|---|---|---|---|---|

RECORD DRAWING CERTIFICATION

☐ AS BUILT – CHANGES AS NOTED ☐ AS BUILT – NO CHANGES

CONTRACTOR
NAME
SIGNATURE
TITLE DATE

PROJECT COORDINATOR
NAME
SIGNATURE
TITLE DATE

WESTCHESTER COUNTY, NEW YORK
DEPARTMENT OF PUBLIC WORKS AND TRANSPORTATION
DIVISION OF ENGINEERING

**INFRASTRUCTURE REHABILITATION - PHASE 3**
**PLAYLAND PARK, RYE, NEW YORK**
**NORTHEAST BURGER BARN**
**ONE LINE DIAGRAMS**

| | |
|---|---|
| CONTRACT NUMBER | 22-523 |
| SHEET NUMBER | BB-E-05 |
| DWG NO.: | |
| SCALE: | AS SHOWN |
| DATE: | 8/23/2022 |
| DPW FILE NUMBER | 1-118-E-831-0 |
| REV. NO. | 0 |

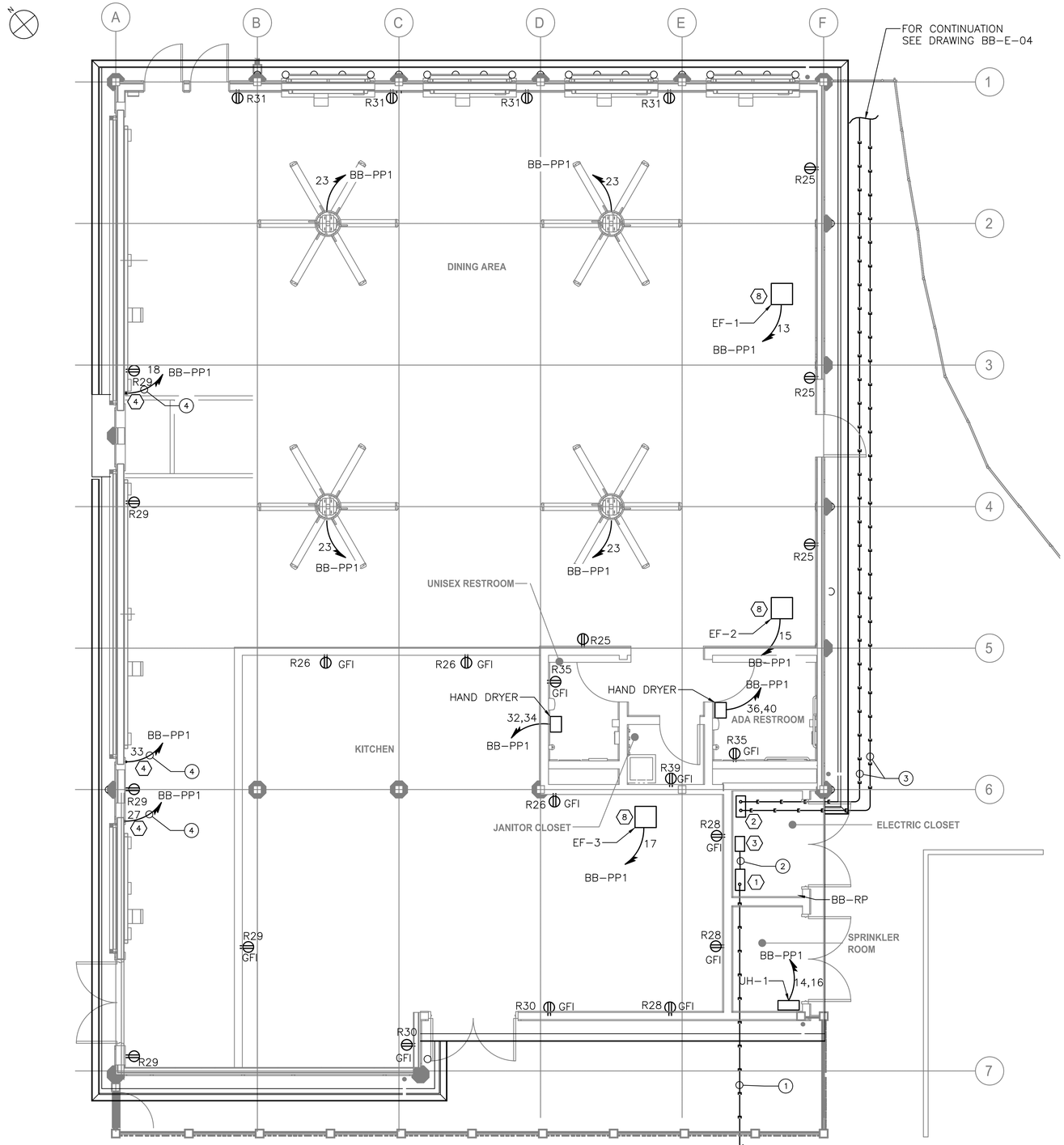


NORTHEAST BURGER BARN GROUND FLOOR POWER PLAN
1/4"=1'-0"

NOTES:

1. FOR ADDITIONAL NOTES, ABBREVIATIONS AND SYMBOLS, SEE DRAWING GE-E-01.
2. ALL RECEPTACLES DESIGNATORS ARE POWERED VIA PANEL BB-PP1, UNLESS OTHERWISE NOTED.
3. ALL CIRCUITS SHOWN ON THE DRAWING BUT NOT SPECIFICALLY CALLED OUT ON THE CABLE AND CONDUIT SCHEDULE SHALL BE 3/4" CONDUIT 2#12, 1#12G AWG.
4. ALL HVAC LOW VOLTAGE WIRING SHALL BE PERFORMED BY THE HVAC CONTRACTOR, INCLUDING BUT NOT LIMITED TO LOW VOLTAGE THERMOSTAT WIRING.
5. EXHAUST FAN STARTERS SHALL BE FURNISHED BY THE EXHAUST FAN MANUFACTURER. FOR EXHAUST FAN STARTER REQUIREMENTS, SEE HVAC CONTRACT DRAWINGS AND SPECIFICATIONS.
6. DISCONNECT SWITCHES OUTDOORS, IN RESTROOMS AND/OR IN JANITORS CLOSETS SHALL BE IN A NEMA 3R ELCLOSURE.
7. FOR PANEL SCHEDULE, SEE DRAWING BB-E-09.

KEY NOTES:

1. NEW 208Y/120V, 3-PHASE, 4-WIRE PANEL BB-PP1 WITH 225 AMP MAINS AND 175 AMP MAIN CIRCUIT BREAKER.
2. NEW 208Y/120V, 3-PHASE, 4-WIRE PANEL BB-PP2 WITH 600 AMP MAINS AND 600 AMP MAIN CIRCUIT BREAKER.
3. NEW EXTERIOR LIGHTING RELAY PANEL BB-RP.
4. APPROXIMATE LOCATION OF MOTOR FOR NEW ROLL-UP DOOR. CONTRACTOR SHALL CONFIRM MOTOR LOCATION IN THE FIELD. PROVIDE 30 AMP, 2 POLE DISCONNECT SWITCH AT ROLL-UP DOOR MOTOR.
5. CONTRACTOR SHALL COORDINATE BOTH THE POWER AND CONTROL OF FANS. CONTRACTOR SHALL PROVIDE FOR SWITCH CONTROL IN LOCATION AS REQUIRED BY STANDARD AMUSEMENTS. ADDITIONALLY ASSUME A TOTAL OF 100 FEET OF 3/4" CONDUIT WITH CAT 6 WIRE TO AGAIN A DESTINATION AS REQUIRED BY STANDARD AMUSEMENTS.

CONDUIT AND WIRE LEGEND

| NO. | DESCRIPTION |
|---|---|
| 1 | 2 1/2"C 4#2/0 & 1#6 GND |
| 2 | 2"C, 12#12 & 6#12 GND |
| 3 | 2 SETS OF 3 1/2"C, 4-350KCMIL & 1#2 GND |
| 4 | 3/4"C, 2#10 & 1#10 GND |

0 4' 8'
SCALE: 1/4" = 1'-0"

Drawing Name: G:\SavinAutocad\2060\25-Playland-Mega-3\E\BBE-1006.dwg
Reref: Projectname: 211001F02 Comments: ----
Printed by: MGodby Date: 26 August 2022 5:04 PM Designed by: ----
Xrefs: [TB_24X36_WestchesterCo_3.dwg] [TSC-SVL060.dwg] [AR-E-1007.dwg] [BB-A-11.dwg]

CONSULTANT INFORMATION
Savin Engineers, P.C.

CONSULTANT SEAL
STATE OF NEW YORK · STEVEN A. MARINO · 083631 · LICENSED PROFESSIONAL ENGINEER

| REVISION NUMBER | DATE | MADE BY | APP'D BY | REVISION |
|---|---|---|---|---|

RECORD DRAWING CERTIFICATION
AS BUILT - CHANGES AS NOTED
AS BUILT - NO CHANGES

CONTRACTOR
NAME
SIGNATURE
TITLE DATE

PROJECT COORDINATOR
NAME
SIGNATURE
TITLE DATE

WESTCHESTER COUNTY, NEW YORK
DEPARTMENT OF PUBLIC WORKS AND TRANSPORTATION
DIVISION OF ENGINEERING

INFRASTRUCTURE REHABILITATION - PHASE 3
PLAYLAND PARK, RYE, NEW YORK
NORTHEAST BURGER BARN
GROUND FLOOR POWER PLAN

| | |
|---|---|
| CONTRACT NUMBER | 22-523 |
| SHEET NUMBER | BB-E-06 |
| DWG NO.: | 83 of 664 |
| SCALE: | AS SHOWN |
| DATE: | 8/23/2022 |
| DPW FILE NUMBER | 1-118-E-832-0 |
| REV. NO. | 0 |

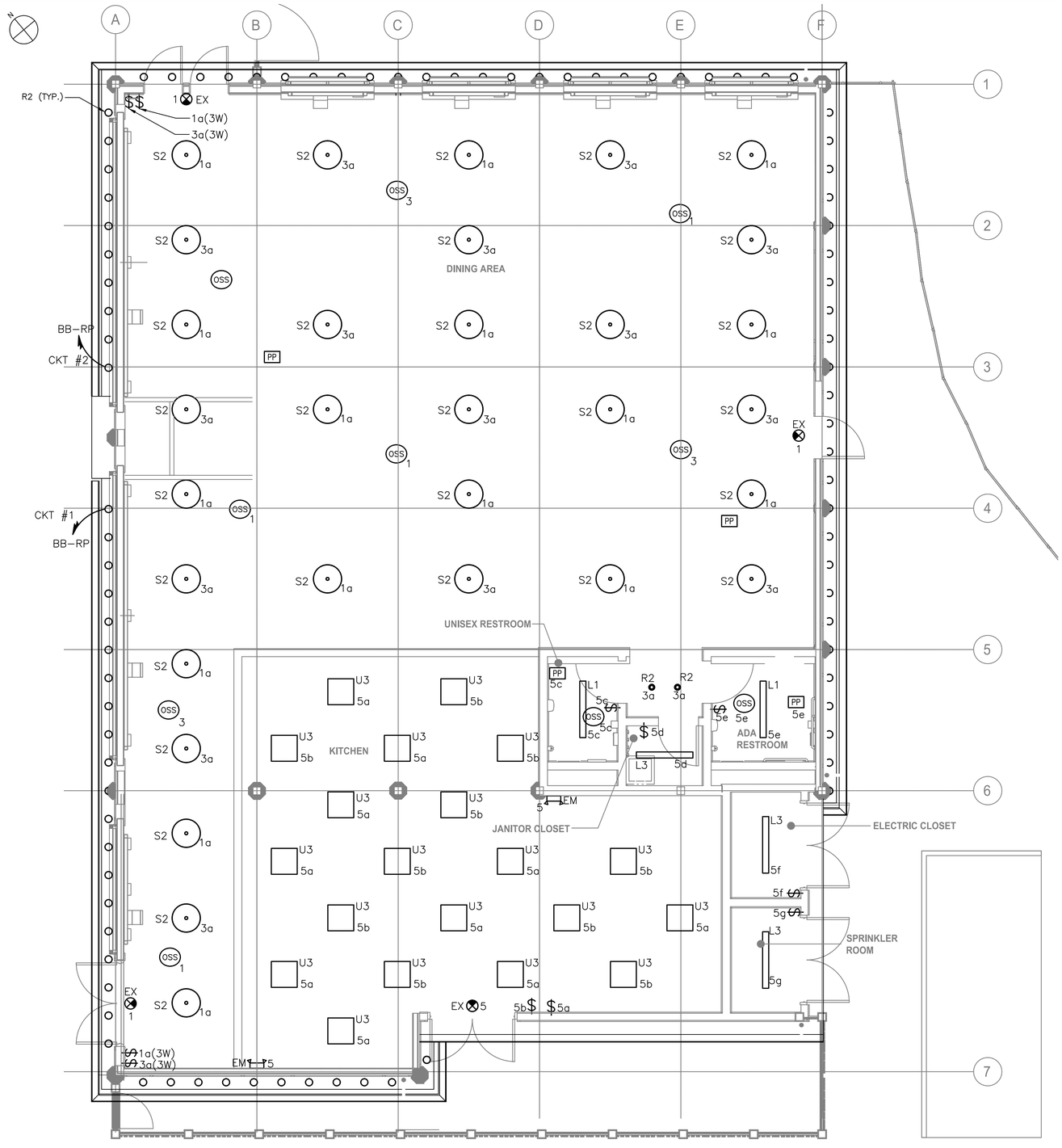


NORTHEAST BURGER BARN GROUND FLOOR LIGHTING PLAN

1/4"=1'-0"

NOTES:

1. FOR ADDITIONAL NOTES, ABBREVIATIONS AND SYMBOLS, SEE DRAWING GE-E-01.
2. ALL INTERIOR LIGHTING IS POWERED VIA LIGHTING PANEL BB-PP1, UNLESS NOTED OTHERWISE. CONTRACTOR SHALL CIRCUIT LIGHTING FIXTURES WITH 3/4" CONDUIT WITH 2#12 & 1#12GND.
3. EXIT SIGNS SHALL BE WIRED TO THE UN-SWITCHED LEG OF THE DESIGNATED CIRCUIT.
4. EMERGENCY FIXTURES SHALL BE WIRED TO THE UN-SWITCHED LEG OF THE DESIGNATED CIRCUIT.
5. ALL EXTERIOR LIGHTING SHALL BE CIRCUITED TO RELAY PANEL BB-RP. CONTRACTOR SHALL CIRCUIT LIGHTING FIXTURES WITH 3/4" CONDUIT WITH 2#12 & 1#12GND, UNLESS NOTED OTHERWISE. CONTRACTOR SHALL DAISY-CHAIN ALL EXTERIOR LIGHT FIXTURES WITH SAME CIRCUIT NUMBER BACK TO RELAY PANEL.
6. FOR LIGHTING PANEL SCHEDULE, REFER TO DRAWING BB-E-09.
7. ALL POWER PACKS SHOWN ON DRAWINGS SHALL BE CIRCUITED FROM PANEL BB-DINING-PP.
8. NUMBER DESIGNATORS NEXT TO FIXTURES AND/OR CONTROLS INDICATE CIRCUIT NUMBERS.
9. POWER PACKS SHALL BE MOUNTED ABOVE FINISHED CEILING.
10. ALL LIGHTING CONTROL COMPONENTS SHALL BE FROM A SINGLE MANUFACTURER, AND MUST BE FROM THE SAME MANUFACTURER FOR ALL BUILDINGS WITHIN THE CONTRACT AND AS PROVIDED ELSEWHERE AT THE PLAYLAND FACILITY.
11. LIGHTING CONTROLS SELECTED SHALL HAVE THE CAPABILITY TO BE CONNECTED TO A MASTER HEAD-END SYSTEM (FUTURE CONTRACT).
12. RELAY PANEL SHALL BE EQUIPPED WITH BOTH A BUILT-IN TIME CLOCK AND A PHOTOSENSOR CONTROL.
13. FOR EXTERIOR LIGHTING CONTROL WIRING INFORMATION, SEE EXTERIOR WIRING DETAIL SHOWN ON BB-E-09.
14. LIGHTING CONTROL ZONES ARE SEGREGATED BY AREA POWER-PACKS AS SHOWN ON THE DRAWING.
15. FOR INTERIOR LIGHTING CONTROL WIRING (INCLUDING BUT NOT LIMITED TO ETHERNET AND LOW VOLTAGE WIRING) INFORMATION SEE TYPICAL INTERIOR SPACE WIRING DIAGRAM DETAIL ON DT-E-01.
16. FOR LIGHTING FIXTURE SCHEDULE SEE DRAWING GE-E-03.

LIGHTING CONTROL LEGEND

| SYMBOL | DESCRIPTION |
|---|---|
| OSS | OCCUPANCY / VACANCY SENSOR - SMALL MOTION, DUAL TECHNOLOGY (PASSIVE INFRARED/MICROPHONICS) ACUITY BRANDS, nLIGHT SYSTEM CATALOG NUMBER: nCM-PDT-9-RJB OR APPROVED EQUAL |
| PP 12 | POWER / RELAY PACK - 120V RATED SELF CONTROLLED RELAY SWITCH, EQUIPPED WITH RJ45, PLENUM RATED, CONFIGURATIVE RELAY LOGIC ACUITY BRANDS, nLIGHT SYSTEM CATALOG NUMBER: nPP16-D-EFP-SA OR APPROVED EQUAL. |
| $ | 120V RATED LIGHTING SINGLE POLE SWITCH |
| RP | RELAY TIME CONTROL PANEL<br>PROGRAMMABLE ZONE CONTROL PANEL<br>UP TO 1 ADDRESS PER RELAY/DIMMING OUTPUT<br>EQUIPPED WITH 0-10V DIMMING OUTPUT PER RELAY<br>CATALOG NUMBER:<br>ARP INTENC08NLT-16SR-MVOLT-1VB-HLK-S-DTC<br>OR APPROVED EQUAL |
| PS | ANALOG PHOTOCELL - PHOTOSENSOR SUITABLE FOR OUTDOOR APPLICATIONS.<br>CATALOG NUMBER: LSA-APS-OL OR APPROVED EQUAL |
| n POD | RELAY TIME CONTROL PANEL<br>PROGRAMMABLE ZONE CONTROL PANEL<br>UP TO 1 ADDRESS PER RELAY/DIMMING OUTPUT<br>EQUIPPED WITH 0-10V DIMMING OUTPUT PER RELAY<br>CATALOG NUMBER: LSA-APS-OL OR APPROVED EQUAL |

0 4' 8'

SCALE: 1/4" = 1'-0"

Drawing Name: G:\SavinAutocad\2060\25-Playland-Mega-3\EXARE-1007.dwg
Reref: Projectname: 211001F02 Comments: ----
Printed by: MGodby Date: 26 August 2022 5:05 PM Designed by: ----
Xrefs: [TB_24X36_WestchesterCo_3.dwg] [TSC-SVL060.dwg] [AR-E-1004.dwg] [BB-A-11.dwg]

CONSULTANT INFORMATION

Savin Engineers, P.C.

CONSULTANT SEAL

STATE OF NEW YORK · STEVEN A. MARTINO · 083631 · LICENSED PROFESSIONAL ENGINEER

| REVISION NUMBER | DATE | MADE BY | APP'D BY | REVISION |
|---|---|---|---|---|

RECORD DRAWING CERTIFICATION

☐ AS BUILT - CHANGES AS NOTED ☐ AS BUILT - NO CHANGES

CONTRACTOR

NAME
SIGNATURE
TITLE DATE

PROJECT COORDINATOR

NAME
SIGNATURE
TITLE DATE

WESTCHESTER COUNTY, NEW YORK
DEPARTMENT OF PUBLIC WORKS AND TRANSPORTATION
DIVISION OF ENGINEERING

INFRASTRUCTURE REHABILITATION - PHASE 3
PLAYLAND PARK, RYE, NEW YORK

NORTHEAST BURGER BARN
GROUND FLOOR LIGHTING PLAN

| CONTRACT NUMBER | SHEET NUMBER |
|---|---|
| 22-523 | BB-E-07 |

DWG NO.:

SCALE: AS SHOWN

DATE: 8/23/2022

DPW FILE NUMBER 1-118-E-833-0 REV. NO. 0

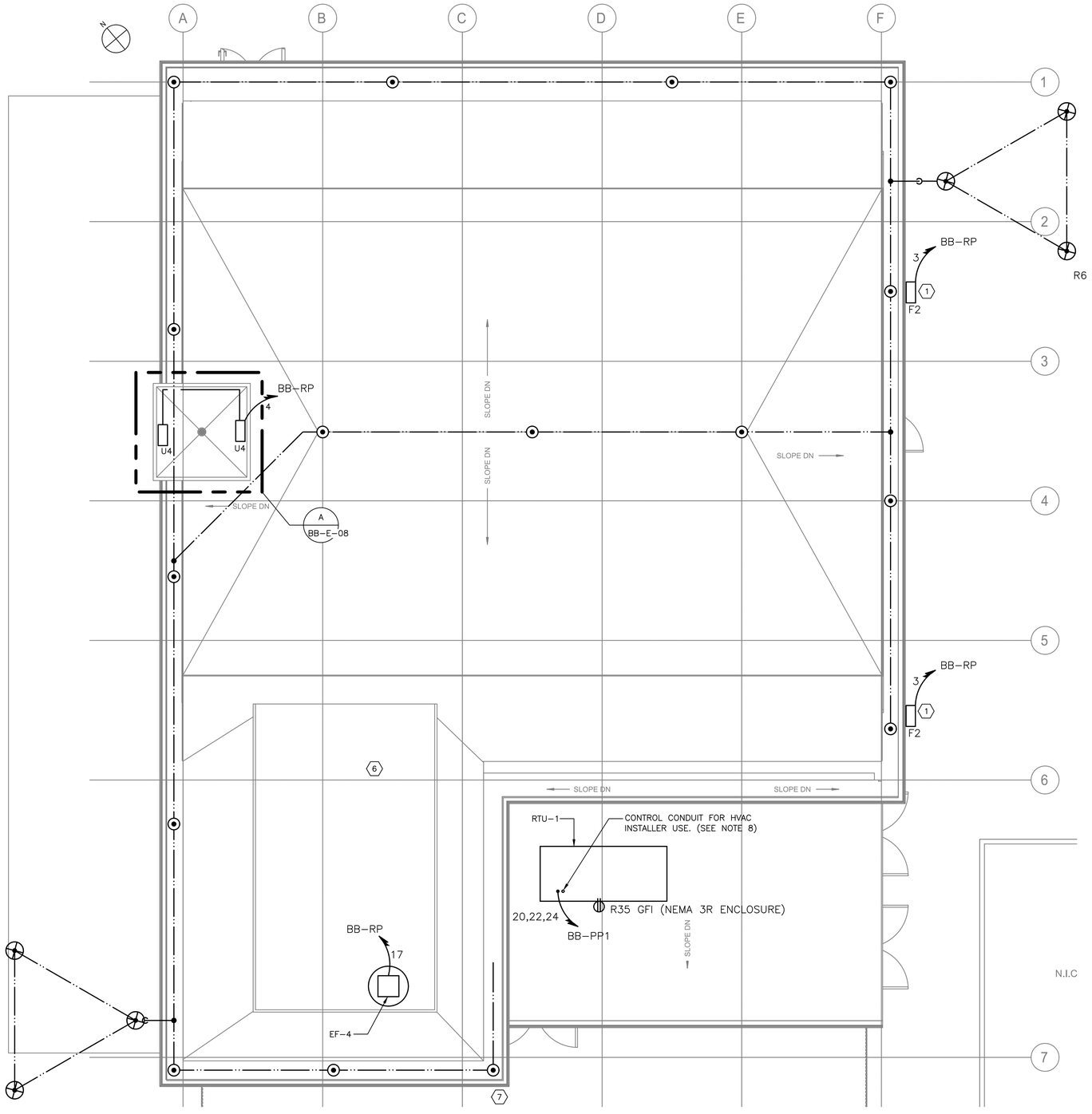


NORTHEAST BURGER BARN ROOF PLAN – POWER AND LIGHTNING PROTECTION
1/4"=1'-0"

NOTES:

1. FOR ADDITIONAL NOTES, ABBREVIATIONS AND SYMBOLS, SEE DRAWING GE–E–01.
2. CONTRACTOR IS ADVISED, THE LIGHTNING PROTECTION SYSTEM SHOWN SHALL BE USED AS A GUIDE AND FOR BIDDING PURPOSES. CONTRACTOR SHALL HIRE A CERTIFIED LIGHTNING PROTECTION SPECIALIST FOR INSTALLATION OF NEW SYSTEM. INSTALLER SHALL PROVIDE ALL THAT IS REQUIRED (PER NFPA 780) AND SHALL OBTAIN UL96A CERTIFICATION (MASTER LABEL) UPON COMPLETION. ADDITIONALLY, INSTALLER SHALL PROVIDE FOR ALL NECESSARY BONDING FOR COMPLETE SYSTEM.
3. CONTRACTOR SHALL COORDINATE WITH THE ARCHITECTURAL DRAWINGS FOR SPECIFIC INFORMATION ON THE NEW ROOF STRUCTURE AND MATERIALS.
4. TO MINIMIZE THE VISUAL IMPACT OF THE BUILDING ALL NEW DOWN CONDUCTORS SHALL BE ROUTED DOWN SIDE OF BUILDING. COORDINATE WITH ARCHITECTURAL FEATURES TO CONCEAL DOWN CONDUCTORS. CONTRACTOR SHALL COORDINATE WITH OTHER TRADES TO ACCOMPLISH THIS WORK. PROVIDE LPS BARE COPPER CABLE TO GROUND RODS.
5. CONTRACTOR IS ADVISED THE NEW DOWN CONDUCTOR SHALL BE BONDED TO THE LOWER METAL OVERHANG ROOF AND CONNECT TO THE EXISTING GROUND WIRE AND GROUND ROD AT GROUND LEVEL.
6. AT EACH LPS DOWN CONDUCTOR, PROVIDE TRIANGULAR GROUND GRID AS SHOWN (NOT ALL SHOWN).
7. EXHAUST FAN STARTERS SHALL BE FURNISHED BY THE EXHAUST FAN MANUFACTURER. FOR EXHAUST FAN STARTER REQUIREMENTS, SEE HVAC CONTRACT DRAWINGS AND SPECIFICATIONS.
8. ALL ROOF PENETRATIONS SHALL BE WATERPROOF. PENETRATION COMPONENTS FOR CONDUIT SHALL BE SUITABLE AND COMPATIBLE FOR INSTALLED ROOF. SEE ARCHITECTURAL AND PLUMBING DRAWINGS FOR ADDITIONAL INFORMATION.

KEY NOTES:

(1) PROVIDE NEW FLOODLIGHT. FIXTURE TYPE F2, CONTRACTOR SHALL PROVIDE ALL NECESSARY CONDUIT AND WIRE. FLOODLIGHT SHALL BE CIRCUITED FROM RELAY PANEL BB–RP.

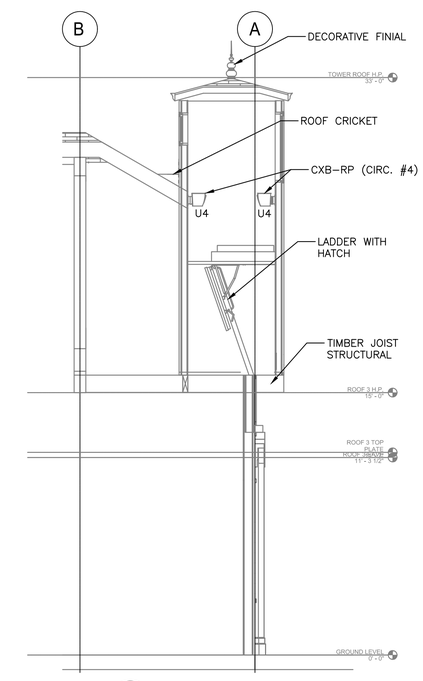


A BB–E–08 TOWER DETAIL 1/4"=1'-0"

0 4' 8'
SCALE: 1/4" = 1'-0"

Drawing Name: G:\SavinAutocad\2060\25-Playland-Mega-3\EV\ARE-1008.dwg
Projectname: 211001F02 Comments: ----
Printed by: MGodby Date: 26 August 2022 5:05 PM Designed by: ----
Xrefs: [TB_24X36_WestchesterCo_3.dwg] [TSG-SVL060.dwg] [BB-A-13.dwg] [AR-E-1001.dwg] [AR-E-1008.dwg]

CONSULTANT INFORMATION

Savin Engineers, P.C.

CONSULTANT SEAL

STATE OF NEW YORK · STEVEN A. MARINO · 093631 · LICENSED PROFESSIONAL ENGINEER

| REVISION NUMBER | DATE | MADE BY | APP'D BY | REVISION |
|---|---|---|---|---|
| 0 | 01/2021 | SJ | MM | FOR CODE REVIEW – NOT FOR CONSTRUCTION |

RECORD DRAWING CERTIFICATION

☐ AS BUILT – CHANGES AS NOTED ☐ AS BUILT – NO CHANGES

CONTRACTOR
NAME
SIGNATURE
TITLE DATE

PROJECT COORDINATOR
NAME
SIGNATURE
TITLE DATE

WESTCHESTER COUNTY, NEW YORK
DEPARTMENT OF PUBLIC WORKS AND TRANSPORTATION
DIVISION OF ENGINEERING

INFRASTRUCTURE REHABILITATION - PHASE 3
PLAYLAND PARK, RYE, NEW YORK
NORTHEAST BURGER BARN
ROOF PLAN - POWER AND LIGHTNING PROTECTION

| | |
|---|---|
| CONTRACT NUMBER | 22-523 |
| SHEET NUMBER | BB-E-08 |
| DWG NO.: | 25-7664 |
| SCALE: | AS SHOWN |
| DATE: | 8/23/2022 |
| DPW FILE NUMBER | 1-118-E-834-0 |
| REV. NO. | 0 |

**PANELBOARD:** BB-PP1 — **LOCATION:** BURGER BARN ELECTRICAL CLOSET

1 **NEMA RATING** — 3 **POLES** — **MOUNTING:** SURFACE

225 **AMP BUS RATING** — 175 **AMP MAIN BREAKER** — 42 **KA SHORT CIRCUIT RATING**

208Y/120 **VOLTS** — 3 **PHASE** 4 **WIRE** — **ELECTRONIC GRADE :** NO

| CIRCUIT NO. | DESCRIPTION | LOAD KVA PHASE A | LOAD KVA PHASE B | LOAD KVA PHASE C | BREAKER AMPS / POLES | NOTES | CIRCUIT NO. | DESCRIPTION | LOAD KVA PHASE A | LOAD KVA PHASE B | LOAD KVA PHASE C | BREAKER AMPS / POLES | NOTES |
|---|---|---|---|---|---|---|---|---|---|---|---|---|---|
| 1 | DINING AREA LIGHTING | 0.56 | | | 20/1 | | 2 | POWER TO BB-RP (120V) | | | | 20/1 | |
| 3 | DINING AREA LIGHTING | | 0.4 | | 20/1 | | 4 | BB-RP EXTERIOR SOFFIT | | 0.6 | | 20/1 | |
| 5 | KITCHEN & BATHROOM LIGHTING | | | 0.42 | 20/1 | | 6 | BB-RP EXTERIOR SOFFIT | | | 0.6 | 20/1 | |
| 7 | SPACE | | | | | | 8 | BB-RP EXTERIOR SOFFIT | 0.6 | | | 20/1 | |
| 9 | SPACE | | | | | | 10 | BB-RP EXTERIOR SOFFIT | | 0.6 | | 20/1 | |
| 11 | SPACE | | | | | | 12 | SPACE | | | | | |
| 13 | EF-1 | 1.8 | | | 30/1 | | 14 | UH-1 | 1.65 | | | 20/2 | |
| 15 | EF-2 | | 1.8 | | 30/1 | | 16 | | | 1.65 | | | |
| 17 | EF-3 AND EF-4 | | | 0.7 | 15/1 | | 18 | ROLL UP DOOR | | | 1.8 | 30/1 | |
| 19 | SPACE | | | | | | 20 | RTU-1 | 4.8 | | | 60/3 | |
| 21 | SPACE | | | | | | 22 | | | 4.8 | | | |
| 23 | CEILING FANS | | | 0.09 | 15/1 | | 24 | | | | 4.8 | | |
| 25 | DINING AREA RECEPTACLES | 0.5 | | | 20/1 | | 26 | KITCHEN RECEPTACLES (GFI) | 0.5 | | | 20/1 | |
| 27 | ROLL UP DOOR | | 0.5 | | 30/1 | | 28 | KITCHEN RECEPTACLES (GFI) | | 0.5 | | 20/1 | |
| 29 | DINING AREA RECEPTACLES | | | 0.5 | 20/1 | | 30 | KITCHEN RECEPTACLES (GFI) | | | 0.5 | 20/1 | |
| 31 | DINING AREA RECEPTACLES | 0.5 | | | 20/1 | | 32 | HAND DRYER | 2.3 | | | 30/2 | |
| 33 | ROLL UP DOOR | | 0.5 | | 30/1 | | 34 | | | 2.3 | | | |
| 35 | BATHROOM & UTILITY RM RECEPTACLES | | | 0.5 | 20/1 | | 36 | HAND DRYER | | | 2.3 | 30/2 | |
| 37 | SPACE | | | | | | 38 | | 2.3 | | | | |
| 39 | SPACE | | | | | | 40 | SPARE | | - | | 20/1 | |
| 41 | SPACE | | | | | | 42 | SPARE | | | - | 20/1 | |
| | **TOTAL PHASE KVA THIS SIDE** | 3.36 | 3.20 | 2.21 | | | | **TOTAL PHASE KVA THIS SIDE** | 12.15 | 10.45 | 10 | | |
| | | | | | | | | **TOTAL KVA PER PHASE** | 15.51 | 13.65 | 12.21 | | |
| | | | | | | | | **TOTAL THREE PHASE KVA** | | 41.37 | | | |

NOTES:
1.
2.
3.
4.

NOTES CONT.:
5.
6.
7.
8.

NORTHEAST BURGER BARN BUILDING PANEL SCHEDULE

N.T.S.

NOTES:

1. FOR ADDITIONAL NOTES, ABBREVIATIONS AND SYMBOLS, SEE DRAWING GE-E-01.
2. PANEL SCHEDULE FOR BB-PP2 HAS NOT BEEN SHOWN. THIS PANEL IS FOR FUTURE USE BY STANDARD AMUSEMENTS.

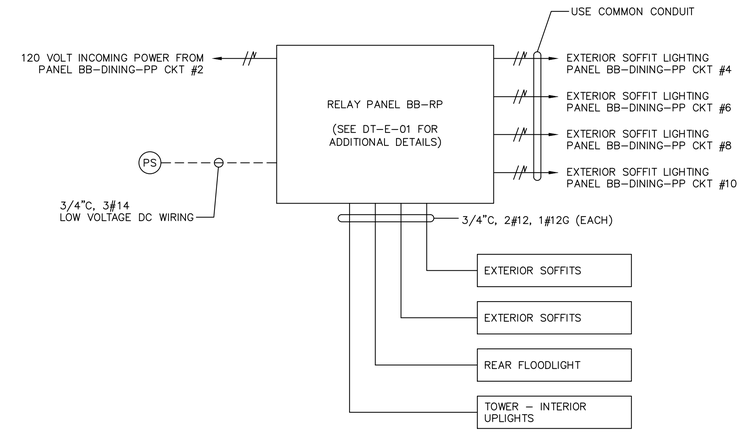


NORTHEAST BURGER BARN – EXTERIOR LIGHTING WIRING DETAIL

| BB-RP | LOCATION: BURGER BARN ELECTRICAL CLOSET | |
|---|---|---|
| CKT NO | DESCRIPTION | NOTES |
| 1 | EXTERIOR SOFFITS | |
| 2 | EXTERIOR SOFFITS | |
| 3 | REAR FLOODLIGHTS | |
| 4 | TOWER INTERIOR UPLIGHTS | |
| 5 | SPARE | |
| 6 | SPARE | |

Drawing Name: G:\SavinAutocad\2060\25-Playland-Mega-3\E\BBE-1009.dwg
Projectname: 211001F02 Comments: ----
Reqf: Printed by: MGodby Date: 26 August 2022 5:05 PM Designed by: ----
Xrefs: [TB_24X36_WestchesterCo_3.dwg] [TSG-SVLOGO.dwg] [AR-A-13.dwg] [AR-E-1001.dwg] [K-E-1004.dwg]

CONSULTANT INFORMATION

Savin Engineers, P.C.

CONSULTANT SEAL

STATE OF NEW YORK · STEVEN A. MARTINO · 083631 · LICENSED PROFESSIONAL ENGINEER

| REVISION NUMBER | DATE | MADE BY | APP'D BY | REVISION |
|---|---|---|---|---|
| | | | | |

RECORD DRAWING CERTIFICATION

☐ AS BUILT – CHANGES AS NOTED ☐ AS BUILT – NO CHANGES

CONTRACTOR: NAME ____ SIGNATURE ____ TITLE ____ DATE ____

PROJECT COORDINATOR: NAME ____ SIGNATURE ____ TITLE ____ DATE ____

WESTCHESTER COUNTY, NEW YORK
DEPARTMENT OF PUBLIC WORKS AND TRANSPORTATION
DIVISION OF ENGINEERING

**INFRASTRUCTURE REHABILITATION - PHASE 3**
**PLAYLAND PARK, RYE, NEW YORK**
**NORTHEAST BURGER BARN**
**PANEL SCHEDULES**

| CONTRACT NUMBER | SHEET NUMBER |
|---|---|
| 22-523 | BB-E-09 |

DWG NO.:
SCALE: AS SHOWN
DATE: 8/23/2022
DPW FILE NUMBER 1-118-E-835-0 REV. NO. 0

# FIRE ALARM GENERAL NOTES:

1. THE FIRE ALARM AND SMOKE DETECTION SYSTEM SHALL BE INSTALLED IN COMPLIANCE WITH THE NATIONAL FIRE PREVENTION CODE (NFPA 72 - 2016), NATIONAL LIFE SAFETY CODE (NFPA 101 - 2018), NATIONAL ELECTRICAL CODE (NFPA 70 - 2017), 2020 NEW YORK STATE BUILDING CODE, AND ALL LOCAL MUNICIPAL CODES HAVING JURISDICTION.
2. THE FIRE ALARM AND SMOKE DETECTION SYSTEM SHALL BE MAINTAINED AND TESTED IN COMPLIANCE WITH NFPA 72.
3. A CONTINUOUS FIRE WATCH SHALL BE PROVIDED IF THERE IS FIRE SYSTEM IMPAIRMENT.
4. ALL FIRE ALARM STROBES SHALL BE SYNCHRONIZED AND SHALL REMAIN FLASHING AFTER SYSTEM SILENCE FUNCTION.
5. CONTRACTOR TO UPDATE ALL NECESSARY CORRESPONDING FIRE ALARM SIGNALS WHEN PERFORMING ANY MODIFICATION TO THE BUILDING, WHERE APPLICABLE, MAKE SURE THE SAME UPDATES ARE COORDINATED AND TRANSMITTED TO THE CENTRAL STATION.
6. HORNS WILL SOUND A TEMPORAL 3-SIGNALING RHYTHM PER NFPA 72.
7. EXACT PLACEMENT OF DEVICES TO BE VERIFIED IN FIELD.
8. ALL SMOKE DETECTORS SHALL BE INSTALLED A MINIMUM OF 36" FROM ANY HVAC SUPPLY OR RETURN REGISTER.
9. FIRE ALARM WIRING SHALL BE INSTALLED IN A MINIMUM OF 3/4" RIGID GALVANIZED CONDUIT OR BY NEW YORK STATE BUILDING CODE APPROVED WIRING METHODS.
10. WALL MOUNTED HORNS AND VISUAL FIRE ALARMS (STROBES) SHALL BE MOUNTED NOT LESS THAN 6'-8" AND NOT GREATER THAN 8'-0" A.F.F. WHERE LOCAL CONDITIONS ARE TOO LOW TO PERMIT THE REQUIRED MINIMUM INSTALLATION HEIGHT, INSTALL THE STROBES AT 6" BELOW THE CEILING.
11. MANUAL PULL STATIONS SHALL BE MOUNTED AT 4'-0" A.F.F. AND SHALL BE INSTALLED WITHIN 5'-0" OF EXIT DOOR.
12. WIRING SHALL BE INSTALLED IN ACCORDANCE WITH NFPA 70 AND AS RECOMMENDED BY THE MANUFACTURER OF THE FIRE ALARM SYSTEM.
13. ALL EQUIPMENT AND COMPONENTS SHALL BE NEW AND SHALL BE TESTED AND LISTED BY A NATIONALLY RECOGNIZED APPROVALS AGENCY.
14. ALL EQUIPMENT SHALL BE ATTACHED TO WALLS AND CEILING/FLOOR ASSEMBLIES AND SHALL BE HELD FIRMLY IN PLACE. FASTENERS AND SUPPORTS SHALL BE ADEQUATE TO SUPPORT REQUIRED LOAD.
15. ALL FIELD WIRING SHALL BE ELECTRICALLY SUPERVISED FOR OPEN CIRCUIT AND GROUND FAULTS.
16. ALL BOXES AND CABINETS SHALL BE UL LISTED FOR THEIR USE AND PURPOSE.
17. DIALER OR ALARM COMMUNICATOR TRANSMITTER SHALL TRANSMIT ALL POINTS AS THEY ARE REPORTED TO THE HOST PANEL.
18. ALL DEVICES SHALL BE COMPATIBLE WITH EXISTING SYSTEM (EST3 BY EDWARDS). FIRE ALARM PRODUCTS SHALL BE APPROVED BY THE ENGINEER OR OWNER.
19. ALL PENETRATIONS SHALL BE FIRE PROOFED AS REQUIRED.

# FIRE ALARM CONSTRUCTION NOTES:

1. ELECTRICIAN SHALL COORDINATE WITH THE FIRE ALARM VENDOR TO PRODUCE A SEPARATE FIXED PRICE TO PERFORM THE SCOPE OF WORK CONTAINED ON THESE DRAWINGS IN CONNECTION WITH THE FIRE ALARM SYSTEM. THESE DRAWINGS ARE PROVIDED FOR BID PURPOSES ONLY AND TO ILLUSTRATE THE SCOPE OF WORK INTENT OF THIS PROJECT.
2. ELECTRICIAN SHALL OBTAIN SEPARATE PERMIT FOR FIRE ALARM PRIOR TO INSTALLATION.
3. PRIOR TO SUBMISSION OF THE FIRE ALARM SYSTEM BID, THE FIRE ALARM VENDOR IS RESPONSIBLE TO REVIEW ALL DRAWINGS (I.E., MECHANICAL/HVAC, ELECTRICAL, PLUMBING, FIRE SPRINKLER, AND ARCHITECTURAL). UPON SUBMISSION OF THE FIRE ALARM BID, THE FIRE ALARM VENDOR CERTIFIES THAT ALL DRAWINGS HAVE BEEN REVIEWED, THE SITE HAS BEEN VISITED/INSPECTED (IF APPLICABLE), AND THAT ALL LOCAL FIRE DEPARTMENT REQUIRED ITEMS ARE FULLY UNDERSTOOD AND INCLUDED IN THE BID PRICE (NO CHANGE ORDERS ALLOWED).
4. FIRE ALARM VENDOR MUST ADHERE TO NFPA 72, NFPA 101, AND ALL LOCAL CODES AND AUTHORITIES HAVING JURISDICTION. THE ENTIRE SYSTEM MUST BE DESIGNED IN ACCORDANCE WITH THESE AUTHORITIES HAVING JURISDICTION.
5. FIRE ALARM VENDOR SHALL INCLUDE THE COST OF THE ENGINEERING FEE, PROGRAMMING CHARGE, NEW EQUIPMENT, CONNECTION & TESTING, TROUBLESHOOTING, ATTENDANCE AT THE FIRE ALARM INSPECTION, ETC. AS PART OF THE TOTAL PRICE.
6. FIRE ALARM VENDOR MUST SUBMIT APPROVED, SIGNED AND SEALED DESIGN/BUILD DRAWINGS TO THE ENGINEER AND OWNER, INCLUDING: FIRE ALARM RISER DIAGRAM, LAYOUT, EQUIPMENT LIST, SPECIFICATIONS PRIOR TO START OF INSTALLATION. INSTALLATION OF THE NEW FIRE ALARM SYSTEM SHALL NOT PROCEED PRIOR TO WRITTEN APPROVAL BY THE ENGINEER.
7. FIRE ALARM VENDOR SHALL SUBMIT SHOP DRAWINGS IN COMPLIANCE WITH NFPA 72, 2020 NEW YORK STATE BUILDING CODE, AND 2020 NEW YORK STATE FIRE CODE SECTION 907.1.1.
8. ALL FIRE ALARM CABLES AND WIRING MUST BE PLENUM RETURN RATED CABLES.

# SCOPE OF WORK:

1. DEMOLISH EXISTING FIRE ALARM DEVICES IN NORTHEAST ARCADE AND FLYING WITCH. DEMOLISH ASSOCIATED WIRING BACK TO EXISTING PANEL. REMOVE, PROTECT, AND STORE EXISTING EXISTING FIRE ALARM CONTROL PANEL.
2. TEMPORARILY DISCONNECT FIRE ALARM DEVICES IN SHED OUTSIDE OF NORTHEAST ARCADE. POST TEMPORARY SIGNAGE NOTING FIRE ALARM DEVICES ARE OFFLINE. DO NOT PERFORM HOT WORK IN SHED WHILE FIRE ALARM DEVICES ARE TEMPORARILY OFFLINE.
3. INSTALL NEW FIRE ALARM DEVICES AS PER DRAWINGS. PROVIDE ALL NECESSARY WIRING, CONNECTIONS, CONDUIT, AND FITTINGS.
4. RE-INSTALL EXISTING FIRE ALARM PANEL IN NEW BURGER BARN ELECTRICAL ROOM. CONNECT NEW FIRE ALARM DEVICES TO PANEL AT NEW LOCATION. RE-CONNECT PANEL TO CENTRAL FIRE ALARM CONTROL PANEL IN MAIN ADMINISTRATION BUILDING VIA QUAD 2. PROVIDE ALL REQUIRED PROGRAMMING.
5. RE-CONNECT FIRE ALARM DEVICES IN SHED TO FIRE ALARM PANEL IN BURGER BARN ELECTRICAL ROOM. PROVIDE ALL NECESSARY WIRING, CONNECTIONS, CONDUIT, AND FITTINGS. TRENCH AND INSTALL NEW UNDERGROUND CONDUIT AS NECESSARY. COORDINATE WITH FIELD CONDITIONS.
6. NEW FIRE ALARM SYSTEM SHALL BE INSPECTED BY A THIRD PARTY INSPECTION AGENCY CERTIFIED BY WESTCHESTER COUNTY. ELECTRICIAN SHALL INCLUDE INSPECTION IN BASE BID SCOPE AND COORDINATE WITH INSPECTION AGENCY TO CERTIFY THE SYSTEM.
7. ELECTRICIAN SHALL COORDINATE WITH THE FIRE ALARM VENDOR (OPEN SYSTEMS METRO) TO RE-PROGRAM AND TEST THE CENTRAL FIRE ALARM SYSTEM IN THE PLAYLAND MAIN ADMINISTRATION BUILDING FOLLOWING THE INSTALLATION OF NEW SYSTEM AND DEVICES.
8. ELECTRICIAN SHALL COORDINATE WITH THE FIRE ALARM CENTRAL MONITORING PROVIDER (STATEWIDE MONITORING) TO TEST AND VERIFY CENTRAL MONITORING OF PARKWIDE SYSTEM FOLLOWING THE INSTALLATION OF NEW SYSTEM AND DEVICES.

# FIRE ALARM SYSTEM RISER NOTES:

1. REFER TO FA-81 FOR FIRE ALARM RISER DIAGRAMS.
2. LOCATION OF DEVICES AND EQUIPMENT ARE APPROXIMATE. FINAL LOCATIONS MUST BE DETERMINED ACCORDING TO THE SITE CONDITIONS.
3. VISUAL FIRE ALARMS (STROBES) SHALL HAVE MINIMUM 5'-0" CLEARANCE FROM ANY OBSTRUCTIONS, SHALL BE FIELD ADJUSTABLE, AND SHALL BE RATED AT 75 CANDELA MINIMUM, UNLESS OTHERWISE NOTED. ALL STROBES SHALL BE SYNCHRONIZED AT LINE OF SIGHT.
4. WALL MOUNTED HORNS AND VISUAL FIRE ALARMS (STROBES) SHALL BE MOUNTED NOT LESS THAN 6'-8" AND NOT GREATER THAN 8'-0" A.F.F. WHERE LOCAL CONDITIONS ARE TOO LOW TO PERMIT THE REQUIRED MINIMUM INSTALLATION HEIGHT, INSTALL THE STROBES AT 6" BELOW THE CEILING.
5. MANUAL PULL STATIONS SHALL BE MOUNTED AT 4'-0" A.F.F. AND SHALL BE INSTALLED WITHIN 5'-0" OF EXIT DOOR.
6. FUSE CUT OUT BOX SHALL COMPLY WITH THE NATIONAL ELECTRICAL CODE AND HAVE A REMOVABLE SOLID COPPER NEUTRAL BAR.
7. ALL CONDUITS AND CONTROL PANELS SHALL BE GROUNDED TO BUILDING STEEL/GROUND GRID WITH A MINIMUM #8 CONDUCTOR.
8. RISER DIAGRAM ON THIS DRAWING IS FOR DESIGN PURPOSE ONLY. FIRE ALARM CONTRACTOR SHALL PROVIDE A COMPLETE RISER DIAGRAM WITH ACTUAL FIELD WIRING REQUIRED.
9. EACH FIRE ALARM INITIATING AND INDICATING CIRCUIT SHALL BE ELECTRICALLY SUPERVISED.
10. EACH VISUAL FIRE ALARM CIRCUIT SHALL CONTAIN AT LEAST 20% SPARE CAPACITY.
11. ALL CONTROL PANELS, FUSE CUTOUTS, TROUBLE BELLS, ALARM BELLS AND SILENCE SWITCHES SHALL BE PROPERLY LABELED WITH MINIMUM 1/4" HIGH LETTERS.
12. WIRING FOR AUDIBLE AND VISUAL ALARM NOTIFICATION DEVICES SHALL BE ARRANGED SO THAT A LOSS OF A PORTION OF THE WIRING ON A FLOOR WILL NOT RENDER MORE THAN (60% OF THE DEVICES OF EACH TYPE INOPERATIVE, AND THE DEVICES SHALL BE SO CONNECTED TO THE CIRCUITRY (i.e., BY MEANS OF ALTERNATE CIRCUITS) AS TO MAINTAIN AT LEAST PARTIAL AUDIBILITY/VISIBILITY THROUGHOUT THE ENTIRE FLOOR.
13. THE FIRE ALARM CONTROL PANEL SHALL BE PROVIDED WITH A KEY SWITCH. DURING DAILY TESTS, THE KEY SWITCH SHALL BE USED TO BYPASS THE CIRCUITS THAT CONTROL DAMPERS AND FAN SHUTDOWN.
14. THE DAMPERS AND FAN BYPASS FUNCTION SHALL BE AUTOMATICALLY RESTORED TO BE NORMAL UN-SHUNTED CONDITION WITHIN FORTY-FIVE MINUTES, IF NOT DONE SO MANUALLY BEFORE FORTY-FIVE MINUTES.
15. PERFORM FIRE ALARM SYSTEM TESTING PER THE 2020 NEW YORK STATE FIRE CODE AND NFPA 72.

# FIRE ALARM LEGEND:

| SYMBOL | DESCRIPTION |
|---|---|
| FA | FIRE ALARM SUB PANEL |
| S | SMOKE DETECTOR |
| H | HEAT DETECTOR |
| F | MANUAL FIRE ALARM PULL STATION |
| # H | FIRE ALARM WALL MOUNTED HORN/STROBE<br># = CANDELA RATING |
| FCO | FUSED CUT OUT SWITCH/FUSED LOCKABLE DISCONNECT SWITCH |
| ST # | WALL MOUNTED STROBE<br># = CANDELA RATING |
| | FLOW SWITCH CONNECTED TO FIRE ALARM SYSTEM |
| GV | SPRINKLER VALVE TAMPER SWITCH CONNECTED TO FIRE ALARM SYSTEM |
| S | DUCT MOUNTED SMOKE DETECTOR |
| FSR | FIRE ALARM INTERFACE RELAY FOR HVAC FAN SHUTDOWN |

# FIRE ALARM ABBREVIATIONS:

| | |
|---|---|
| E | EXISTING TO REMAIN |
| ER | EXISTING TO BE RELOCATED |
| EL | EXISTING AS SHOWN IN NEW LOCATION |
| FACP | FIRE ALARM CONTROL PANEL |
| FCO | FUSED CUT OUT |
| FCU | FIRE ALARM CONTROL UNIT |
| FP | FIRE PROTECTION |
| N | NEW |
| RTU | ROOFTOP UNIT |
| SP | SPRINKLER |
| WP | WEATHERPROOF |
| X | EXISTING TO BE DEMOLISHED |

| | | SYSTEM OUTPUTS | | | | | | | | | | | | | | | | |
|---|---|---|---|---|---|---|---|---|---|---|---|---|---|---|---|---|---|---|
| | | Control Unit Annunciation | | | | | | Notification | | | | | | | | | Supp. | |
| | EVENT | A ACTUATE COMMON ALARM SIGNAL | B ACTUATE AUDIBLE ALARM SIGNAL | C INDICATE COMMON SUPERVISORY STATUS | D ACTUATE AUDIBLE SUPERVISORY SIGNAL | E INDICATE COMMON TROBLE SIGNAL | F ACTUATE AUDIBLE COMMON TROUBLE SIGNAL | G ACTIVATE HORNS AND STROBES THROUGHOUT THE PROTECTED AREA | H DISPLAY/PRINT CHANGE OF STATUS | I TRANSMIT AUTOMATIC ALARM SIGNAL TO SUPERVISING STATION | J TRANSMIT MANUAL ALARM SIGNAL TO SUPERVISING STATION | K TRANSMIT WATERFLOW ALARM SIGNAL TO SUPERVISING STATION | L TRANSMIT SUPERVISORY SIGNAL TO SUPERVISING STATION | M TRANSMIT CO ALARM SIGNAL TO SUPERVISING STATION | N TRANSMIT TROUBLE SIGNAL TO SUPERVISING STATION | O ACTIVATE TEMPORAL 4 SIGNAL ON ACTIVATED CO DETECTOR SOUNDER BASES | P SHUT DOWN CO PRODUCING EQUIPMENT | Q SHUT DOWN FANS/AIR HANDLING UNITS |
| 1 | ACTIVATION OF MANUAL PULL STATION | X | X | | | | | X | X | | X | | | | | | | |
| 2 | ACTIVATION OF SMOKE DETECTOR | X | X | | | | | X | X | X | | | | | | | | X |
| 3 | ACTIVATION OF DUCT MOUNTED SMOKE DETECTOR | X | X | | | | | X | X | X | | | | | | | | X |
| 4 | ACTIVATION OF HEAT DETECTOR | X | X | | | | | X | X | X | | | | | | | | X |
| 5 | WATERFLOW SWITCH FOR FIRE SPRINKLER SYSTEM | X | X | | | | | X | X | | | X | | | | | | X |
| 6 | ACTIVATION OF CARBON MONOXIDE DETECTOR | | | X | X | | | X | X | | | | | X | | X | X | |
| 7 | SPRINKLER VALVE (TAMPER SWITCH) | | | X | X | | | | X | | | | X | | | | | |
| 8 | FIRE ALARM LOSS OF PRIMARY/SECONDARY POWER | | | | | X | X | | X | | | | | | X | | | |
| 9 | FIRE ALARM SYSTEM WIRING FAILURE | | | | | X | X | | X | | | | | | X | | | |

## 1 FIRE ALARM SEQUENCE OF OPERATIONS MATRIX

SCALE: NOT TO SCALE

CONSULTANT INFORMATION

LiRo Engineers, Inc.
A LiRo Group Company
Syosset, N.Y. 516-214-8157[T]

CONSULTANT SEAL

STATE OF NEW YORK · FRANK F. ULRICH · No. 090111 · LICENSED PROFESSIONAL ENGINEER

| REVISION NUMBER | DATE | MADE BY | APP'D BY | REVISION |
|---|---|---|---|---|
| | | | | |

RECORD DRAWING CERTIFICATION

☐ AS BUILT – CHANGES AS NOTED ☐ AS BUILT – NO CHANGES

CONTRACTOR
NAME
SIGNATURE
TITLE DATE

PROJECT COORDINATOR
NAME
SIGNATURE
TITLE DATE

WESTCHESTER COUNTY, NEW YORK
DEPARTMENT OF PUBLIC WORKS AND TRANSPORTATION
DIVISION OF ENGINEERING

**INFRASTRUCTURE REHABILITATION - PHASE 3**
**PLAYLAND PARK, RYE, NEW YORK**
**NORTH EAST BURGER BARN**
**FIRE ALARM NOTES, SYMBOLS, AND LEGEND**

| | |
|---|---|
| CONTRACT NUMBER | 22-523 |
| SHEET NUMBER | BB-FA-01 |
| DWG NO.: | 87 of 664 |
| SCALE: | As indicated |
| DATE: | 08/23/2022 |
| DPW FILE NUMBER | 1-118-FA-836-0 |
| REV. NO. | 0 |

## FIRE ALARM CONSTRUCTION NOTES:

1. EXISTING FIRE ALARM PANEL SERVING THE NORTHEAST ARCADE. PANEL TO BE DISCONNECTED AND STORED FOR FUTURE RELOCATION (REFER TO GROUND FLOOR CONSTRUCTION PLAN). COORDINATE WITH FIRE ALARM SYSTEM VENDOR AS NECESSARY.
2. EXISTING FIRE ALARM DEVICES WITHIN THE NORTH EAST ARCADE TO BE REMOVED. WIRING TO BE DEMOLISHED BACK TO SOURCE. LOCATIONS OF EXISTING DEVICES ON THIS PLAN ARE APPROXIMATE, BASED ON ENGINEER SURVEY NOTES AND EXISTING DRAWINGS. CONTRACTOR SHALL SURVEY FIELD CONDITIONS AND INCLUDE NECESSARY DEMOLITION SCOPE IN BID PRICE.
3. FIRE ALARM DEVICES IN ADJACENT WORK SHED ARE EXISTING TO REMAIN AND SHALL BE TEMPORARILY DISCONNECTED FROM PANEL. PROVIDE JUNCTION BOXES TO TERMINATE WIRING FOR FUTURE RE-CONNECTION AND SIGNAGE IN SHED. REFER TO DEMOLITION RISER DIAGRAM ON FA-81 FOR ADDITIONAL INFORMATION.
4. FIRE ALARM DEVICES AND PANEL IN FLYING WITCH ARE TO BE REMOVED. DEMOLISH ALL FEEDERS BACK TO NORTHEAST ARCADE PANEL. REFER TO DEMOLITION RISER DIAGRAM ON FA-81 FOR ADDITIONAL INFORMATION.

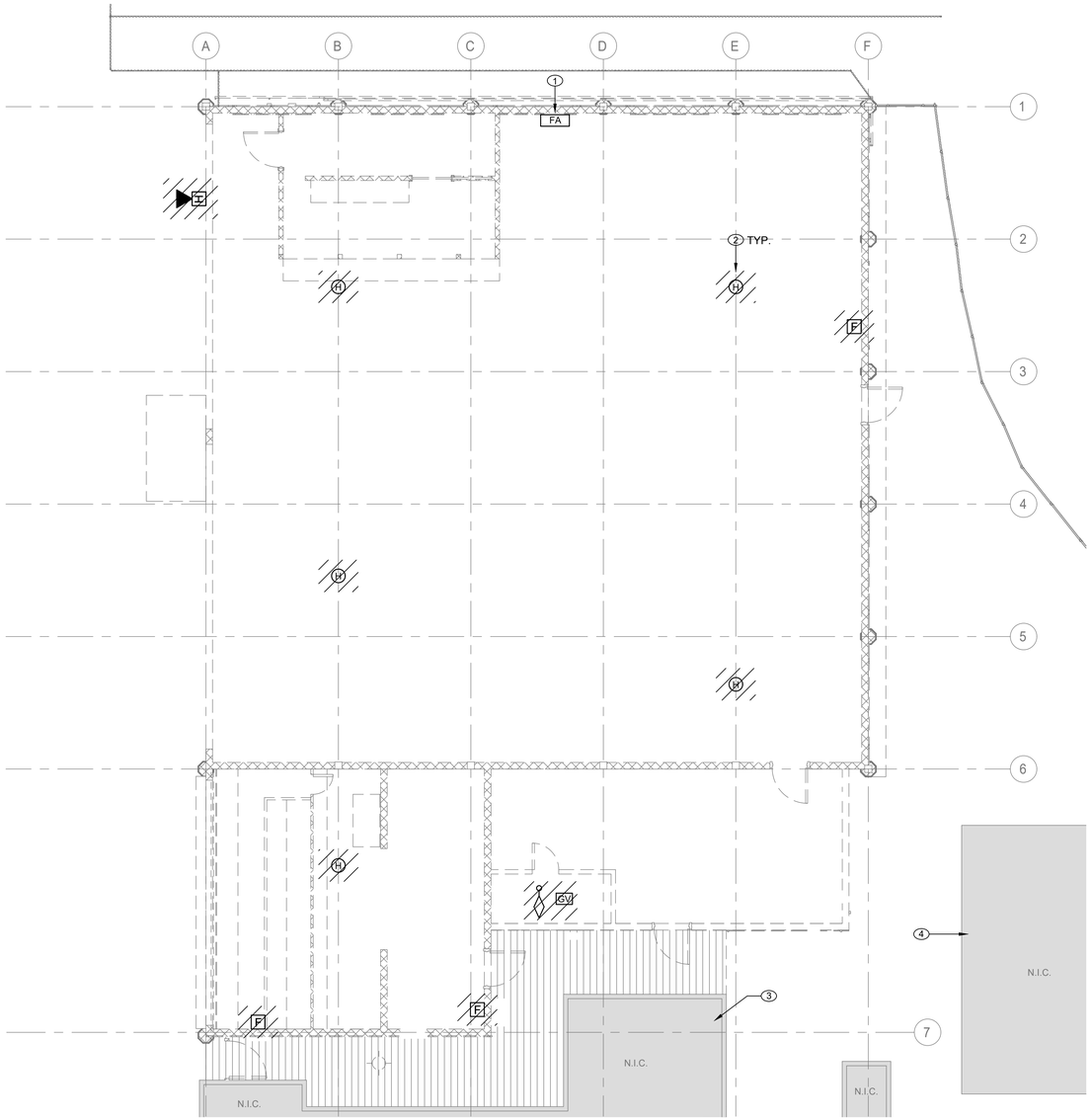


## 1 FIRE ALARM FIRST FLOOR DEMOLITION PLAN

SCALE: 3/16" = 1'-0"

CONSULTANT INFORMATION

LiRo Engineers, Inc.
A LiRo Group Company
Syosset, N.Y. 516-214-8157[T]

CONSULTANT SEAL

STATE OF NEW YORK · FRANK F. ULISSE · No. 090111-1 · LICENSED PROFESSIONAL ENGINEER

| REVISION NUMBER | DATE | MADE BY | APP'D BY | REVISION |
|---|---|---|---|---|
| | | | | |

RECORD DRAWING CERTIFICATION

☐ AS BUILT – CHANGES AS NOTED ☐ AS BUILT – NO CHANGES

CONTRACTOR: NAME / SIGNATURE / TITLE / DATE

PROJECT COORDINATOR: NAME / SIGNATURE / TITLE / DATE

WESTCHESTER COUNTY, NEW YORK
DEPARTMENT OF PUBLIC WORKS AND TRANSPORTATION
DIVISION OF ENGINEERING

**INFRASTRUCTURE REHABILITATION - PHASE 3**
**PLAYLAND PARK, RYE, NEW YORK**
**NORTH EAST BURGER BARN**
**FIRE ALARM FIRST FLOOR DEMOLITION PLAN**

| | |
|---|---|
| CONTRACT NUMBER | 22-523 |
| SHEET NUMBER | BB-FA-11 |
| DWG NO.: | 88 of 664 |
| SCALE: | As indicated |
| DATE: | 08/23/2022 |
| DPW FILE NUMBER | 1-118-FA-837-0 |
| REV. NO. | 0 |

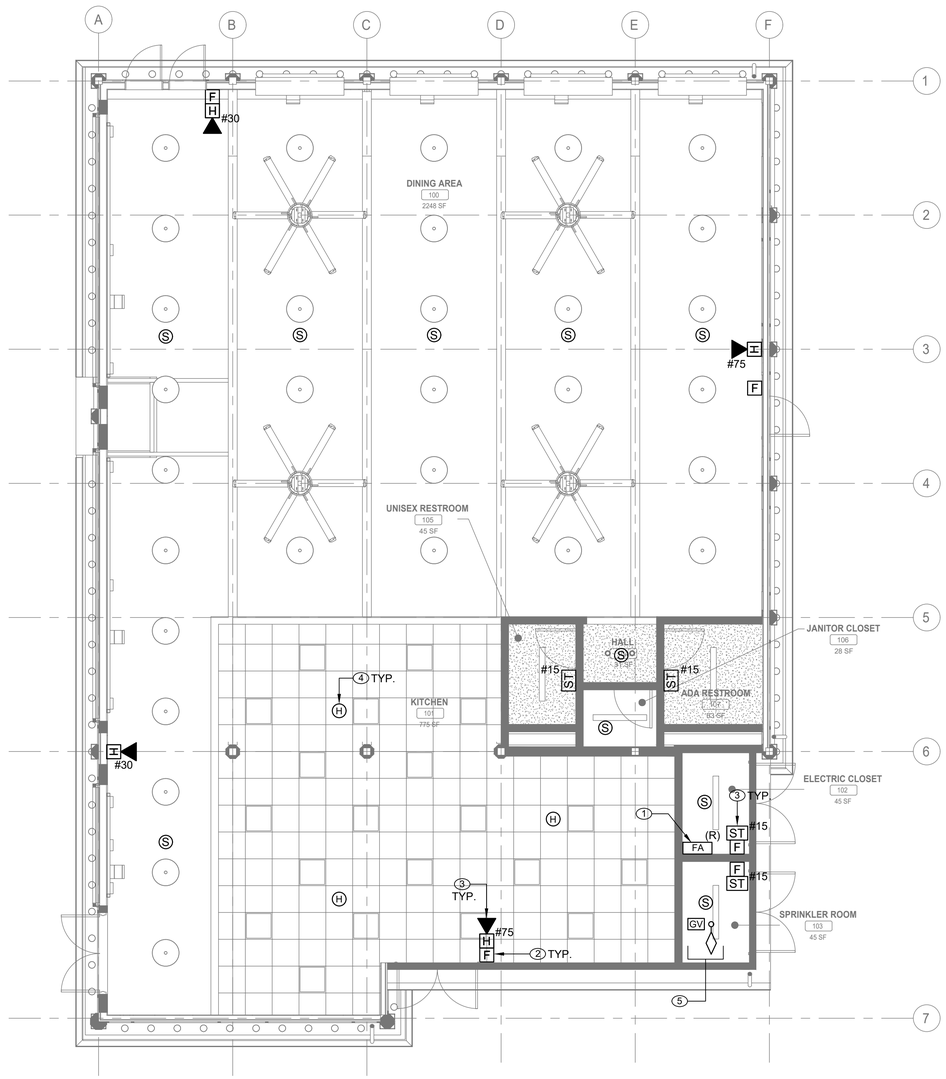


## 1 FIRE ALARM FIRST FLOOR CONSTRUCTION PLAN

SCALE: 3/16" = 1'-0"

## FIRE ALARM CONSTRUCTION NOTES:

1. EXISTING FIRE ALARM PANEL TO BE RELOCATED TO NEW ELECTRICAL CLOSET AND RE-CONNECTED TO PARKWIDE SYSTEM. PANEL TO SERVE ALL NEW DEVICES IN BUILDING. SYSTEM SHALL BE TESTED IN COORDINATION WITH FIRE ALARM SYSTEM VENDOR (EST).
2. NEW MANUAL PULL STATIONS SHALL BE INSTALLED AT 4'-0" ABOVE FINISHED FLOOR AT EACH BUILDING EXIT (MAX. DISTANCE OF 5'-0" FROM EXIT).
3. FIRE ALARM STROBES AND HORN STROBES SHALL BE FIELD ADJUSTABLE AND SET CANDELA RATING INDICATED ON PLAN. FIRE ALARM STROBES AND HORN STROBES SHALL BE INSTALLED AT 7'-4" ABOVE FINISHED FLOOR UNLESS OTHERWISE NOTED.
4. HEAT DETECTION SHALL BE PROVIDED FOR FUTURE KITCHEN EQUIPMENT. LOCATIONS SHOWN ARE APPROXIMATE. COORDINATE WITH TENANT KITCHEN LAYOUT (IF AVAILABLE) TO ENSURE COVERAGE OF COOKING EQUIPMENT.
5. PROVIDE TAMPER AND WATERFLOW SWITCHES FOR NEW SPRINKLER VALVE ASSEMBLIES AND CONNECT TO EXISTING FIRE ALARM SYSTEM. COORDINATE LOCATION AND QUANTITY WITH FIRE PROTECTION DRAWINGS AND SPRINKLER SYSTEM INSTALLER.

## FIRE ALARM GENERAL NOTES:

1. REFER TO DRAWING FA-001.00 FOR SYMBOLS, ABBREVIATIONS, AND NOTES. LAYOUT OF FIRE ALARM DEVICES ON THIS PLAN IS DIAGRAMMATIC; EXACT LOCATIONS OF DEVICES AND CONDUIT SHALL BE COORDINATED WITH FIELD CONDITIONS, ARCHITECTURAL REQUIREMENTS, AND MANUFACTURER RECOMMENDATIONS.
2. ALL DEVICES AND EQUIPMENT SHOWN ON THIS PLAN ARE NEW, UNLESS OTHERWISE NOTED.
3. INSTALL NEW FIRE ALARM SYSTEM IN STRICT ACCORDANCE WITH NFPA-72 AND NFPA-90A REQUIREMENTS.
4. CONTRACTOR SHALL INSTALL NEW FIRE ALARM SYSTEM AS INDICATED AND PROVIDE ALL NECESSARY WIRING, CONDUIT, AND APPARATUSES.
5. ALL VISUAL NOTIFICATION DEVICES IN THE SAME SPACE SHALL BE SYNCHRONIZED IN ACCORDANCE WITH NFPA-72.
6. COORDINATE INSTALLATION WITH FIRE ALARM SYSTEM VENDOR AND MANUFACTURER REQUIREMENTS.
7. COORDINATE FIRE ALARM DEVICES WITH ARCHITECTURAL FINISHES. CONCEAL CONDUIT IN FINISHED WALLS AND FLUSH MOUNT DEVICES WHERE POSSIBLE.
8. CONTRACTOR SHALL TEST THE FIRE ALARM SYSTEM AFTER COMPLETION OF INSTALLATION. FIRE ALARM SYSTEM SHALL BE TESTED AND VERIFIED TO BE WORKING PROPERLY PRIOR TO INSPECTION BY THE AUTHORITY HAVING JURISDICTION.
9. FOLLOWING INSTALLATION, CONTRACTOR SHALL PATCH, PAINT, AND RESTORE ALL WALLS AND CEILINGS TO MATCH EXISTING OR DESIRED NEW CONDITION.
10. FIRESTOP ALL FIRE-RATED FLOOR OR WALL PENETRATIONS TO MAINTAIN ORIGINAL FIRE RATING TO FULL DEPTH OF OPENING.
11. CONTRACTOR SHALL PROVIDE SLEEVE FOR CONDUIT PENETRATIONS THROUGH WALL AND CEILING FLOORS.

CONSULTANT INFORMATION

LiRo Engineers, Inc.
A LiRo Group Company
Syosset, N.Y. 516-214-8157[T]

CONSULTANT SEAL

STATE OF NEW YORK · FRANK F. ULISSE · No. 090111-1 · LICENSED PROFESSIONAL ENGINEER

| REVISION NUMBER | DATE | MADE BY | APP'D BY | REVISION |
|---|---|---|---|---|
| | | | | |

RECORD DRAWING CERTIFICATION

☐ AS BUILT – CHANGES AS NOTED ☐ AS BUILT – NO CHANGES

CONTRACTOR
NAME
SIGNATURE
TITLE DATE

PROJECT COORDINATOR
NAME
SIGNATURE
TITLE DATE

WESTCHESTER COUNTY, NEW YORK
DEPARTMENT OF PUBLIC WORKS AND TRANSPORTATION
DIVISION OF ENGINEERING

**INFRASTRUCTURE REHABILITATION - PHASE 3**
**PLAYLAND PARK, RYE, NEW YORK**
**NORTH EAST BURGER BARN**
**FIRE ALARM FIRST FLOOR CONSTRUCTION PLAN**

| | |
|---|---|
| CONTRACT NUMBER | 22-523 |
| SHEET NUMBER | BB-FA-21 |
| DWG NO.: | 89 of 664 |
| SCALE: | As indicated |
| DATE: | 08/23/2022 |
| DPW FILE NUMBER | 1-118-FA-838-0 |
| REV. NO. | 0 |

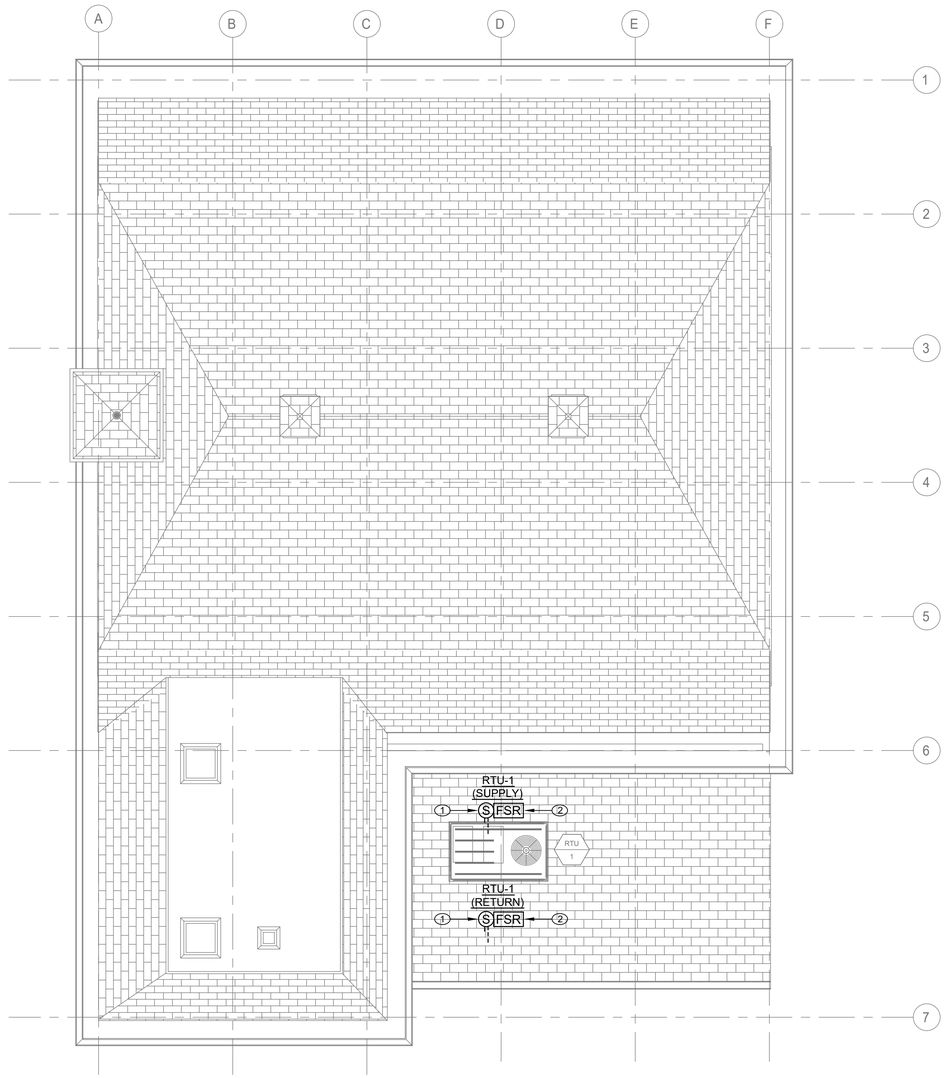


## 1 FIRE ALARM ROOF CONSTRUCTION PLAN

SCALE: 3/16" = 1'-0"

## FIRE ALARM CONSTRUCTION NOTES:

1. INSTALL DUCT MOUNTED SMOKE DETECTORS AT SUPPLY AND RETURN OF NEW ROOFTOP UNIT. COORDINATE INSTALLATION WITH MECHANICAL DRAWINGS AND MECHANICAL CONTRACTOR. CONNECT TO EXISTING FIRE ALARM SYSTEM.
2. PROVIDE FAN SHUTDOWN RELAYS AND CONNECT TO SUPPLY AND RETURN DUCT DETECTORS. COORDINATE INSTALLATION WITH MECHANICAL DRAWINGS AND MECHANICAL CONTRACTOR. PROVIDE WIRING AND PROGRAMMING FOR UNIT SHUTDOWN IN ACCORDANCE WITH FIRE ALARM SEQUENCE OF OPERATIONS.

## FIRE ALARM GENERAL NOTES:

1. REFER TO DRAWING FA-001.00 FOR SYMBOLS, ABBREVIATIONS, AND NOTES. LAYOUT OF FIRE ALARM DEVICES ON THIS PLAN IS DIAGRAMMATIC; EXACT LOCATIONS OF DEVICES AND CONDUIT SHALL BE COORDINATED WITH FIELD CONDITIONS, ARCHITECTURAL REQUIREMENTS, AND MANUFACTURER RECOMMENDATIONS.
2. ALL DEVICES AND EQUIPMENT SHOWN ON THIS PLAN ARE NEW, UNLESS OTHERWISE NOTED.
3. INSTALL NEW FIRE ALARM SYSTEM IN STRICT ACCORDANCE WITH NFPA-72 AND NFPA-90A REQUIREMENTS.
4. CONTRACTOR SHALL INSTALL NEW FIRE ALARM SYSTEM AS INDICATED AND PROVIDE ALL NECESSARY WIRING, CONDUIT, AND APPARATUSES.
5. ALL VISUAL NOTIFICATION DEVICES IN THE SAME SPACE SHALL BE SYNCHRONIZED IN ACCORDANCE WITH NFPA-72.
6. COORDINATE INSTALLATION WITH FIRE ALARM SYSTEM VENDOR AND MANUFACTURER REQUIREMENTS.
7. COORDINATE FIRE ALARM DEVICES WITH ARCHITECTURAL FINISHES. CONCEAL CONDUIT IN FINISHED WALLS AND FLUSH MOUNT DEVICES WHERE POSSIBLE.
8. CONTRACTOR SHALL TEST THE FIRE ALARM SYSTEM AFTER COMPLETION OF INSTALLATION. FIRE ALARM SYSTEM SHALL BE TESTED AND VERIFIED TO BE WORKING PROPERLY PRIOR TO INSPECTION BY THE AUTHORITY HAVING JURISDICTION.
9. FOLLOWING INSTALLATION, CONTRACTOR SHALL PATCH, PAINT, AND RESTORE ALL WALLS AND CEILINGS TO MATCH EXISTING OR DESIRED NEW CONDITION.
10. FIRESTOP ALL FIRE-RATED FLOOR OR WALL PENETRATIONS TO MAINTAIN ORIGINAL FIRE RATING TO FULL DEPTH OF OPENING.
11. CONTRACTOR SHALL PROVIDE SLEEVE FOR CONDUIT PENETRATIONS THROUGH WALL AND CEILING FLOORS.


CONSULTANT INFORMATION

LiRo Engineers, Inc.
A LiRo Group Company
Syosset, N.Y. 516-214-8157[T]


CONSULTANT SEAL

STATE OF NEW YORK · FRANK F. ULRICH · No. 090111 · LICENSED PROFESSIONAL ENGINEER

| REVISION NUMBER | DATE | MADE BY | APP'D BY | REVISION |
|---|---|---|---|---|
| | | | | |

RECORD DRAWING CERTIFICATION

☐ AS BUILT – CHANGES AS NOTED ☐ AS BUILT – NO CHANGES

CONTRACTOR: NAME / SIGNATURE / TITLE / DATE

PROJECT COORDINATOR: NAME / SIGNATURE / TITLE / DATE

WESTCHESTER COUNTY, NEW YORK
DEPARTMENT OF PUBLIC WORKS AND TRANSPORTATION
DIVISION OF ENGINEERING

**INFRASTRUCTURE REHABILITATION - PHASE 3**
**PLAYLAND PARK, RYE, NEW YORK**
**NORTH EAST BURGER BARN**
**FIRE ALARM ROOF CONSTRUCTION PLAN**

| | |
|---|---|
| CONTRACT NUMBER | 22-523 |
| SHEET NUMBER | BB-FA-22 |
| DWG NO.: | 90 of 664 |
| SCALE: | As indicated |
| DATE: | 08/23/2022 |
| DPW FILE NUMBER | 1-118-FA-839-0 |
| REV. NO. | 0 |

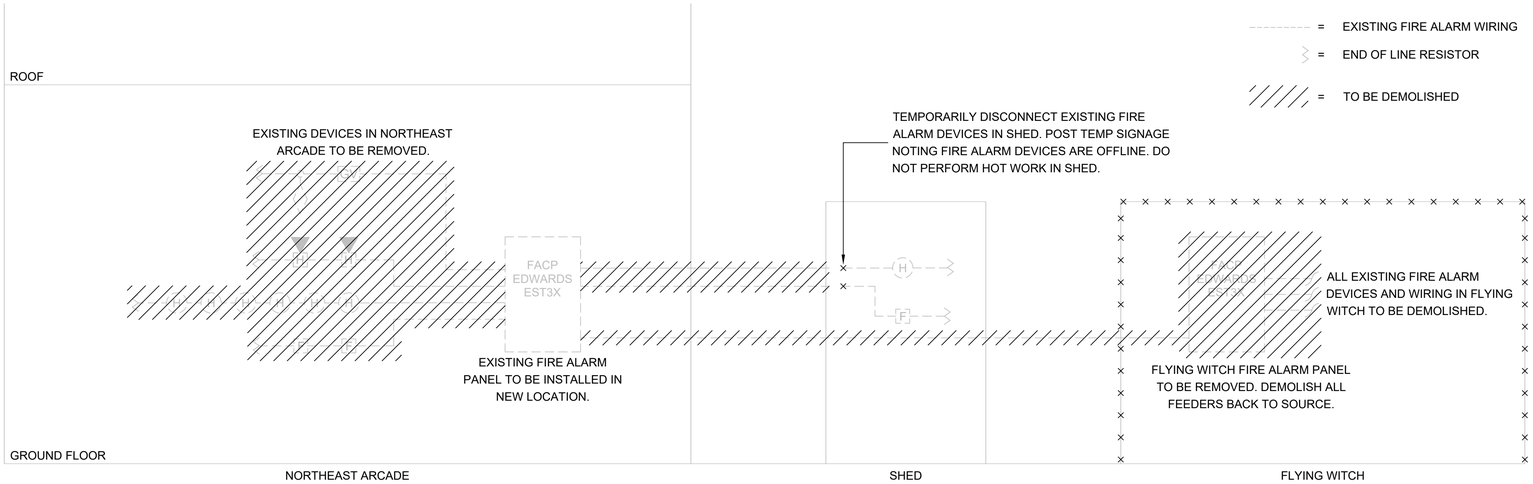


1 FA-81 FIRE ALARM DEMOLITION RISER DIAGRAM
NOT TO SCALE

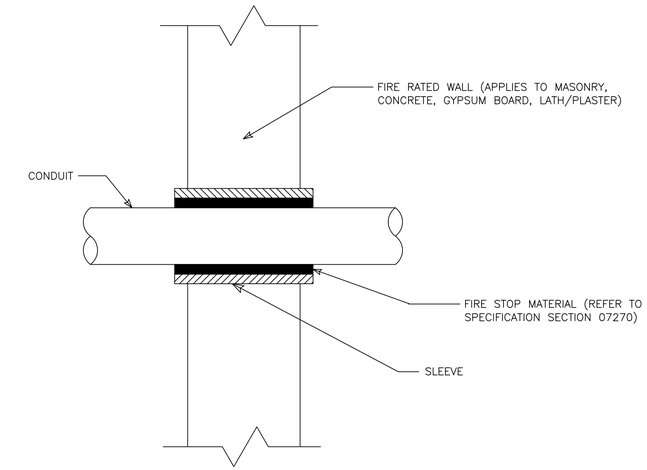


3 FA-81 CONDUIT PENETRATION THRU FIRE RATED WALL
NOT TO SCALE

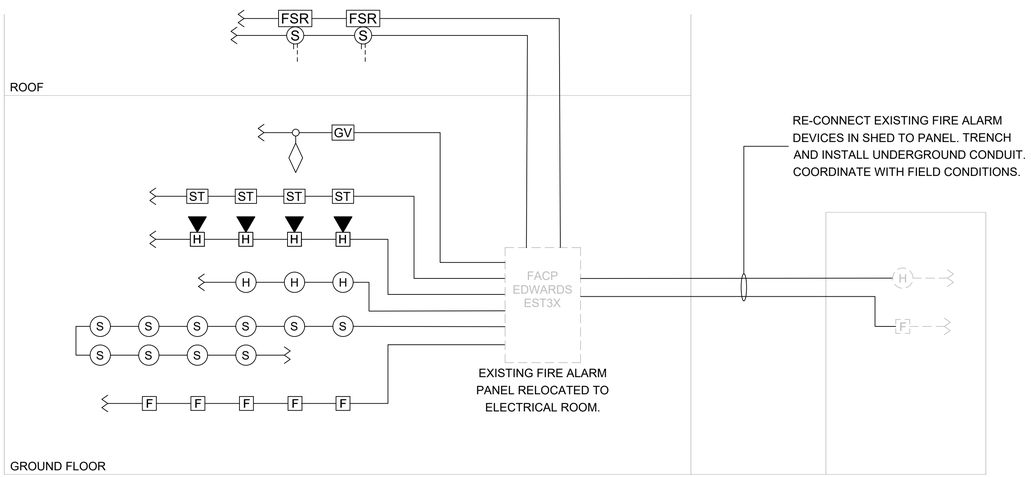


= EXISTING FIRE ALARM WIRING
= NEW FIRE ALARM WIRING
= END OF LINE RESISTOR

NOTES:

1. WIRING SHOWN ON RISER IS DIAGRAMMATICAL. PROVIDE NEW FIRE ALARM CABLE AS REQUIRED AND INSTALL WIRING LOOPS AS BEST SUITED FOR FIELD CONDITIONS.
2. THE BUILDING IS FULLY SPRINKLERED.

2 FA-81 FIRE ALARM NEW CONSTRUCTION RISER DIAGRAM
NOT TO SCALE

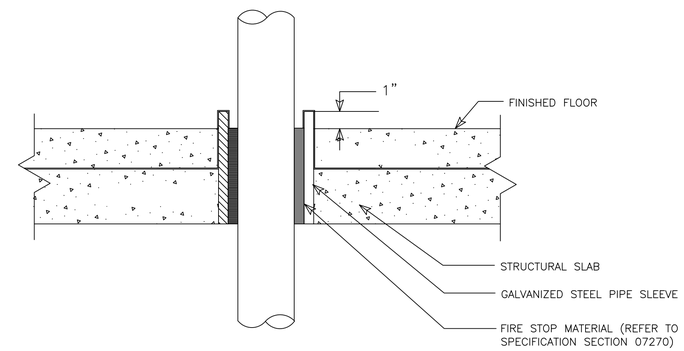


4 FA-81 CONDUIT PENETRATION THRU FLOOR SLAB
NOT TO SCALE

CONSULTANT INFORMATION
LiRo Engineers, Inc.
A LiRo Group Company
Syosset, N.Y. 516-214-8157[T]

CONSULTANT SEAL
STATE OF NEW YORK · FRANK F. ULISSE · No. 090111-1 · LICENSED PROFESSIONAL ENGINEER

| REVISION NUMBER | DATE | MADE BY | APP'D BY | REVISION |
|---|---|---|---|---|
| | | | | |

RECORD DRAWING CERTIFICATION
☐ AS BUILT – CHANGES AS NOTED ☐ AS BUILT – NO CHANGES

CONTRACTOR
NAME
SIGNATURE
TITLE DATE

PROJECT COORDINATOR
NAME
SIGNATURE
TITLE DATE

WESTCHESTER COUNTY, NEW YORK
DEPARTMENT OF PUBLIC WORKS AND TRANSPORTATION
DIVISION OF ENGINEERING

**INFRASTRUCTURE REHABILITATION - PHASE 3**
**PLAYLAND PARK, RYE, NEW YORK**
**NORTH EAST BURGER BARN**
**FIRE ALARM RISER DIAGRAM AND DETAILS**

| | |
|---|---|
| CONTRACT NUMBER | 22-523 |
| SHEET NUMBER | BB-FA-81 |
| DWG NO.: | 91 of 664 |
| SCALE: | As indicated |
| DATE: | 08/23/2022 |
| DPW FILE NUMBER | 1-118-FA-840-0 |
| REV. NO. | 0 |

## GENERAL NOTES:

1. DIMENSIONS INDICATED ON THE DRAWINGS ARE APPROXIMATE AND SUBJECT TO REVISIONS AS PER ACTUAL FIELD CONDITIONS.
2. CONTRACTOR SHALL COMPLY WITH ALL NYSDEC PERMIT REQUIREMENTS AND ANY OTHER STATE, COUNTY, CITY OR TOWN AGENCY HAVING JURISDICTION. REFER TO THE CONTRACT SPECIFICATIONS FOR PERMIT REQUIREMENTS.
3. CONTRACTOR SHALL TAKE ALL PRECAUTIONS TO MAINTAIN UTILITY SERVICE TO AND FROM BUILDINGS AND PARK AREAS.
4. ANY UTILITIES SHOWN ON THE PLANS ARE FOR INFORMATION ONLY AND HAVE BEEN OBTAINED FROM AVAILABLE SOURCES. THE EXISTENCE AND LOCATION OF ANY UTILITIES INDICATED ON THE PLANS ARE NOT GUARANTEED AND SHALL BE INVESTIGATED AND VERIFIED IN THE FIELD BY THE CONTRACTOR BEFORE STARTING WORK. THE CONTRACTOR SHALL HAVE ALL EXISTING UTILITIES FIELD STAKED BEFORE STARTING WORK BY CALLING DIG SAFELY NEW YORK AT 1-800-962-7962. EXCAVATION IN THE VICINITY OF UNDERGROUND UTILITIES SHALL BE DUG BY HAND. THE CONTRACTOR WILL BE HELD RESPONSIBLE FOR ANY DAMAGE TO EXISTING UTILITIES. NO SEPARATE PAYMENT SHALL BE MADE FOR THIS WORK.
5. THE CONTRACTOR WILL BE REQUIRED TO PROVIDE PRIVATE UTILITY MARKOUTS FOR ALL UTILITIES IN THE WORK AREAS. THE CONTRACTOR SHALL SUBMIT THE PROPOSED UTILITY SUB-CONTRACTOR FOR APPROVAL.
6. THE CONTRACTOR SHALL OBTAIN AND HAVE ON THE JOB SITE, AT ALL TIMES, ALL PERMITS AS REQUIRED BY THE STATE, COUNTY, CITY, TOWN/VILLAGE OR ANY OTHER PERMITTING AGENCY. THE CONTRACTOR SHALL BEAR ALL COSTS OF OBTAINING THESE PERMITS.
7. CONTRACTOR SHALL REMOVE ALL DEBRIS AND EXCESS CONSTRUCTION MATERIALS TO THE SATISFACTION OF THE OWNER AND ENGINEER. THE CONTRACTOR SHALL BE RESPONSIBLE FOR THE REMOVAL AND LEGAL DISPOSAL OF ALL MATERIALS RESULTING FROM THE CONTRACT.
8. CONTRACTOR SHALL COORDINATE ALL CONSTRUCTION ACTIVITIES WITH THE OWNER AND ENGINEER TO MINIMIZE INTERRUPTIONS TO NORMAL PARK OPERATIONS.
9. CONTRACTOR SHALL SUBMIT A DETAILED WORK PLAN INCLUDING SEQUENCE OF OPERATIONS PRIOR TO COMMENCING WORK AND SHALL BE SUBJECT TO APPROVAL OF THE OWNER/ENGINEER.
10. THE CONTRACTOR SHALL NOTIFY THE OWNER AND THE ENGINEER A MINIMUM OF SEVENTY-TWO (72) HOURS PRIOR TO THE START OF CONSTRUCTION. IN ADDITION, IF WORK SHOULD BE STOPPED AND RESTARTED FOR ANY REASON, THE CONTRACTOR SHALL GIVE THE ENGINEER A MINIMUM OF SEVENTY-TWO (72) HOURS NOTICE.
11. ITEMS SUSTAINING DAMAGE DURING CONSTRUCTION AS A RESULT OF THE CONTRACTOR'S OPERATIONS SHALL BE REPAIRED AND/OR REPLACED TO THE SATISFACTION AND APPROVAL OF THE OWNER AT THE CONTRACTORS EXPENSE. ANY DAMAGE SHALL BE REPAIRED AT NO ADDITIONAL COST TO THE OWNER.
12. ALL NECESSARY PRECAUTIONS SHALL BE TAKEN TO PRESERVE THE MATERIAL BELOW AND BEYOND THE LINES OF ALL EXCAVATION IN THE SOUNDEST POSSIBLE CONDITION. ANY DAMAGE TO THE WORK DUE TO THE CONTRACTOR'S OPERATIONS SHALL BE REPAIRED AT THE EXPENSE OF AND BY THE CONTRACTOR.
13. NO MATERIALS OF ANY KIND SHALL BE USED UNTIL IT HAS BEEN INSPECTED AND ACCEPTED BY THE ENGINEER; ALL MATERIALS REJECTED SHALL BE IMMEDIATELY REMOVED FROM THE WORK SITE AND SHALL NOT BE OFFERED FOR INSPECTION AGAIN.
14. ANY MATERIALS OR WORKMANSHIP FOUND AT ANY TIME TO BE DEFECTIVE SHALL BE REMEDIED AT ONCE, REGARDLESS OF PREVIOUS INSPECTION, THE INSPECTION AND OBSERVATION OF WORK BY THE ENGINEER IS INTENDED TO AID THE CONTRACTOR IN APPLYING LABOR AND MATERIAL TO AND IN ACCORDANCE WITH THE SPECIFICATION, BUT SUCH INSPECTION SHALL NOT RELEASE THE CONTRACTOR FROM ANY CONTRACT OBLIGATIONS.
15. THE CONTRACTOR SHALL CONDUCT THE WORK IN A SAFE MANNER SO AS TO POSE NO DANGER OR HAZARDS TO PERSONS OR PROPERTY. WHERE NECESSARY, TEMPORARY SHIELDS OR OTHER PROTECTIVE DEVICES MUST BE UTILIZED. THE CONTRACTOR ASSUMES FULL RESPONSIBILITY AND EXPENSE OF ANY AND ALL SAFETY MEASURES. THE USE OF EXPLOSIVES IS STRICTLY PROHIBITED. THE CONTRACTOR SHALL COMPLY WITH ALL OSHA AND NEW YORK STATE DEPARTMENT OF LABOR REQUIREMENTS.
16. RESEED ALL AREAS WHERE WORK OCCURS AND/OR WHERE CONTRACTOR DAMAGES EXISTING GRASS. COMPLY WITH THE SPECIFICATIONS. STAGING AREAS SHALL BE RESTORED TO ORIGINAL CONDITION AND SHALL BE SEEDED FOLLOWING COMPLETION OF ALL PHYSICAL WORK.
17. THE CONTRACTOR SHALL HAVE A COMPETENT REPRESENTATIVE PRESENT WHO SHALL RESPOND TO ANY QUESTIONS OR REQUESTS OF THE ENGINEER IN THE PROSECUTION AND COMPLETION OF THE WORK IN CONFORMITY WITH THIS CONTRACT, AND SHALL HAVE FULL AUTHORITY TO SUPPLY LABOR AND MATERIAL IMMEDIATELY. THE CONTRACTOR SHALL ALSO HAVE A COMPETENT REPRESENTATIVE AVAILABLE TO RECEIVE TELEPHONE MESSAGES AND PROVIDE A REASONABLE REPLY AS SOON AS POSSIBLE, BUT NO LATER THAN 24 HOURS.
18. NEITHER THE OWNER OR ENGINEER SHALL BE RESPONSIBLE FOR THE MEANS AND METHODS CHOSEN BY THE CONTRACTOR TO COMPLETE THE WORK.
19. THE CONTRACTOR SHALL HAVE FULL RESPONSIBILITY FOR SITE SAFETY AND THE SAFETY OF THE CONTRACTOR'S WORK FORCE.
20. BACKFILL AT ALL EXCAVATIONS SHALL BE PLACED IN 6" LIFTS AND SHALL ACHIEVE A COMPACTION NOT LESS THAN 95 PERCENT OF STANDARD PROCTOR MAXIMUM DENSITY. UNDER THE TERMS OF THE CONTRACT, THE CONTRACTOR SHALL PERFORM FIELD TESTS BY AN APPROVED LABORATORY TO ASSURE THIS COMPACTION RATE AT VARYING DEPTHS. THE CONTRACTOR SHALL BEAR ALL COSTS FOR TESTING AND ANY DELAYS THAT RESULT FROM SUCH TESTING.
21. THE CONTRACTOR SHALL ADJUST ALL MANHOLE FRAMES AND COVERS, VALVE COVERS, WATERVALVE BOXES, DRAINAGE INLETS, ETC. AS NECESSARY TO MEET THE SURFACE OF NEW PAVEMENT OR WALKWAY AS REQUIRED TO ALLOW POSITIVE DRAINAGE. NO SEPARATE PAYMENT WILL BE MADE FOR THIS WORK UNLESS OTHERWISE NOTED IN THE CONTRACT DOCUMENTS. THE CONTRACTOR SHALL COORDINATE THIS ACTIVITY WITH THE RELATED UTILITY COMPANIES, IF APPLICABLE. WARPING OF THE PAVEMENT SURFACE TO MEET THESE ITEMS WILL NOT BE PERMITTED.
22. ALL EXISTING SIGNS IN THE CONTRACT AREA ARE TO REMAIN INTACT. SIGNS DAMAGED SHALL BE REPLACED AT THE CONTRACTOR'S EXPENSE. ANY SIGNS THAT REQUIRE RESETTING SHALL BE PLACED IN A FINAL POSITION DETERMINED BY THE OWNER. NO SEPARATE PAYMENT SHALL BE MADE FOR THIS WORK. THE CONTRACTOR SHALL BE HELD RESPONSIBLE FOR SIGNS DAMAGED BY HIS OPERATIONS. THE CONTRACTOR SHALL BE RESPONSIBLE FOR ALL DAMAGES TO BURIED AND OVERHEAD UTILITIES LOCATED ON PUBLIC AND PRIVATE PROPERTY. THE CONTRACTOR SHALL BE RESPONSIBLE FOR ALL DAMAGES TO FACILITIES ON PUBLIC AND PRIVATE PROPERTY, SUCH AS, LANDSCAPING, DRIVEWAYS, CURBS, PAVEMENT, SIDEWALK, ETC.
23. CONTRACTOR IS RESPONSIBLE TO COORDINATE AND VERIFY THE EXTENT OF ALL DEMOLITION WITH THE ENGINEER PRIOR TO PERFORMING THE WORK.
24. CONTRACTOR SHALL RESTORE STAGING AREA BACK TO ITS ORIGINAL CONDITION INCLUDING GRADING, SEEDING ETC. EXISTING TREES, UTILITIES, LIGHT POLES, STONE, SIDEWALK, CURB, ETC. SHALL BE PROTECTED AND REPLACED IF DAMAGED. PROVIDE ELECTRICAL POWER, WATER, TELEPHONE, ETC. AS SPECIFIED FOR THE ENGINEERS TRAILER WHICH SHALL BE LOCATED IN THE STAGING AREA.

## SURVEY NOTES:

1. HORIZONTAL COORDINATES SHOWN HEREON REFER TO THE NORTH AMERICAN DATUM OF 1983 (NAD83), NEW YORK STATE PLANE COORDINATE SYSTEM, NEW YORK EAST ZONE 3101.
2. VERTICAL ELEVATIONS SHOWN HEREON REFER TO THE NORTH AMERICAN VERTICAL DATUM OF 1988 (NAVD88) WHICH IS BASED ON THE UNITED STATES COAST & GEODETIC SURVEY MEAN SEA LEVEL AT SANDY HOOK, NEW JERSEY.
3. LOCATION OF UTILITIES AS SHOWN ARE BASED UPON MAP TITLED "PARTIAL TOPOGRAPHICAL AND UTILITY SURVEY OF RYE PLAYLAND PARK" BY LKB LAST UPDATED SEPTEMBER 8, 2017.
4. LOCATIONS OF UNDERGROUND UTILITIES SHOWN ON THIS SURVEY ARE APPROXIMATE. RLT ENGINEERING, GEOLOGY, AND LAND SURVEYING, P.C., CANNOT GUARANTEE THE LOCATION OF UNDERGROUND UTILITIES AND STRUCTURES. THE STANDARD OF CARE USED BY RLT ENGINEERING, GEOLOGY, AND LAND SURVEYING, P.C. TO LOCATE THE UTILITIES IS REASONABLE AND CONSISTENT WITH THE LOCAL STANDARD OF CARE USED TO LOCATE THE UNDERGROUND UTILITIES. LOCATIONS AND SIZE ARE BASED ON UTILITY MARK-OUTS, AS-BUILT MAPS AND OTHER VISIBLE SURFACE EVIDENCE OBSERVED IN THE COURSE OF THIS SURVEY. PRIOR TO EXCAVATION OR CONSTRUCTION THE LOCATION, SIZE AND TYPE OF ALL UNDERGROUND UTILITY LOCATIONS MUST BE VERIFIED BY THE RESPECTIVE UTILITY COMPANY.
5. THE SUBJECT PROPERTY OF RYE PLAYLAND PARK FALLS WITHIN FEMA FLOOD ZONES AE (EL 12), AE (EL 13), VE (EL 14), VE (EL 15), VE (EL 16), VE (EL 17) AS SHOWN ON THE FEMA FLOOD INSURANCE RATE MAP COMMUNITY PANEL #36119C0358 F EFFECTIVE DATE SEPTEMBER 28, 2007 AND FEMA FLOOD INSURANCE RATE MAP COMMUNITY PANEL #36119C0356 F EFFECTIVE DATE SEPTEMBER 28, 2007. FEMA ELEVATIONS REFER TO NAVD88."

## DEMOLITION NOTES:

1. ALL REQUIRED DEMOLITION PERMITS MUST BE OBTAINED FROM ALL REQUIRED AGENCIES PRIOR TO COMMENCEMENT OF WORK.
2. ANY ASBESTOS REMOVAL MUST BE DONE BY A CERTIFIED ASBESTOS REMOVAL CONTRACTOR.
3. ALL UTILITY COMPANIES MUST BE NOTIFIED A MINIMUM OF 48 HOURS IN ADVANCE OF DEMOLITION.
4. FOR ALL UTILITIES, CONTRACTOR SHALL VERIFY DISCONNECT PRIOR TO DEMOLITION.
5. PROPER FENCING OR PUBLIC PROTECTION DEVICES MUST BE CONSTRUCTED AND MAINTAINED AROUND THE PERIMETER OF THE SITE AT ALL TIMES DURING DEMOLITION PHASE.
6. IT IS THE CONTRACTOR'S RESPONSIBILITY TO CONTROL DUST, DIRT, AND DEBRIS DURING DEMOLITION AND CONSTRUCTION PHASES.
7. IF SUSPICIOUS AND/OR HAZARDOUS MATERIAL IS ENCOUNTERED DURING DEMOLITION / CONSTRUCTION, ALL WORK SHALL STOP AND THE COUNTY DEPARTMENT OF HEALTH AND THE NEW YORK STATE DEPARTMENT OF ENVIRONMENTAL CONSERVATION SHALL BE NOTIFIED IMMEDIATELY. WORK SHALL NOT RESUME UNTIL THE CONTRACTOR HAS OUTLINED APPROPRIATE ACTION FOR DEALING WITH THE WASTE MATERIAL.
8. WHERE EXISTING CURB, GUTTER, SIDEWALK OR WALK IS TO BE REMOVED, IT SHALL BE SAW CUT OR REMOVED AT THE NEAREST JOINT.
9. THE CONTRACTOR SHALL PERFORM DAILY CLEANUP OPERATIONS WHICH INCLUDE SWEEPING OF THE ROADWAYS, REMOVAL OF DEBRIS (CUPS, PAPER BAGS, CANS, ETC.), REMOVAL OF EXCESS CONSTRUCTION MATERIALS, ALL TO THE SATISFACTION OF THE OWNER.
10. THE CONTRACTOR SHALL CONFORM TO ALL STATE AND LOCAL RULES, REGULATIONS AND LAWS WHICH SHALL GOVERN THE HAULING AND DISPOSING OF TREES, SHRUBS, STUMPS, ROOTS, RUBBISH, DEBRIS AND OTHER MATTER.
11. NO TREES , SHRUBS, ROOTS, BRANCHES, WOOD, CONCRETE OR OTHER DEBRIS SHALL BE BURIED IN FILLS, EMBANKMENTS OR STOCK PILES.
12. NO CLEARED MATTER, DEBRIS SHALL BE STORED AT THE CONSTRUCTION SITE.
13. CONTRACTOR SHALL GUARANTEE THAT WORK PERFORMED UNDER THIS CONTRACT WILL NOT PERMANENTLY DAMAGE TREES, SHRUBS, TURF OR PLANTS DESIGNATED TO REMAIN, OR OTHER ADJACENT WORK OR FACILITIES. IF DAMAGE RESULTING FROM CONTRACTOR'S OPERATIONS APPEARS DURING THE PERIOD UP TO 24 MONTHS AFTER COMPLETION OF THE PROJECT, THE CONTRACTOR SHALL REPLACE DAMAGED ITEMS AT HIS EXPENSE.
14. DAMAGE TO ANY EXISTING ITEMS, NOT SHOWN IN CONTRACT DOCUMENTS TO BE REMOVED, SUCH AS PAVEMENT, GRASSED AREAS, UTILITIES, STRUCTURES OR OTHER FACILITIES SHALL BE REPAIRED BY THE CONTRACTOR IMMEDIATELY AT HIS OWN EXPENSE TO THE SATISFACTION OF THE ENGINEER AND OWNER. ALL ASPHALT PAVEMENTS, GRASSED AREAS AND LANDSCAPING THAT ARE DAMAGED OR DISTURBED SHALL BE RESTORED IN ACCORDANCE WITH APPLICABLE SECTIONS ON THE CONTRACT SPECIFICATIONS.
15. EXCEPT AS NOTED BELOW, CONTRACTOR SHALL REMOVE FROM THE SITE AND SATISFACTORILY DISPOSE OF ALL TREES, SHRUBS, ROOTS, BRUSH, MASONRY, RUBBISH, SCRAP, DEBRIS, PAVEMENT, CURBS, FENCES AND MISCELLANEOUS OTHER ITEMS NOT COVERED UNDER OTHER SECTIONS AS SHOWN, SPECIFIED OR OTHERWISE REQUIRED TO PERMIT CONSTRUCTION OF NEW WORK.
16. BURNING OF MATERIAL IS EXPRESSLY FORBIDDEN.
17. TREES AND SHRUBS TO BE SAVED:

A. TREES AND SHRUBS WHICH ARE TO REMAIN SHALL BE PROTECTED BY FENCES, BARRICADES, WRAPPING OR OTHER MEANS OF PROTECTION. EQUIPMENT STORAGE, MATERIAL STOCKPILES, ETC., SHALL NOT BE PERMITTED WITHIN TREE BRANCH SPREAD.

B. PROTECT ALL OTHER TREES AND SHRUBS FROM DEFACEMENT, INJURY AND DESTRUCTION. PRESERVE TREES WITHIN THE CONTRACT LIMITS THAT ARE SO DELINEATED ON THE PLANS OR AS MARKED IN THE FIELD BY THE ENGINEER. ALSO, ALL TO BE SAVED SHALL BE PROTECTED IN ACCORDANCE WITH THE CONTRACT DOCUMENTS.

C. DO NOT CUT ROOTS UNNECESSARILY; HANDWORK OR OTHER METHODS SHALL BE IMPLEMENTED TO PREVENT DAMAGE TO ROOTS WHICH EXTEND INTO GRADING LIMITS OR LIMITS OF EXCAVATION. DISTURB ROOTS AS LITTLE AS POSSIBLE WHEN TUNNELING UNDER TREES. BACKFILLING AROUND TREE ROOTS SHALL BE DONE IMMEDIATELY AFTER COMPLETION OF CONSTRUCTION IN THE VICINITY OF TREES.

D. THE CONTRACTOR SHALL BE RESPONSIBLE FOR THE PROTECTION OF ALL VEGETATION FROM DAMAGE RESULTING FROM EMISSIONS FROM MOTORIZED EQUIPMENT.

E. CONTRACTOR SHALL BE VIGILANT OF ANY OVERHEAD UTILITY LINES WHEN USING AERIAL EQUIPMENT FOR TREE TRIMMING OPERATIONS.

F. DURING WORKING OPERATION, PROTECT THE TRUNK, FOLIAGE, AND ROOT SYSTEM OF ALL TREES TO BE SAVED WITH BOARDS OR OTHER GUARDS AND AS REQUIRED TO PREVENT DAMAGE, INJURY AND DEFACEMENT. DO NOT PILE EXCAVATED MATERIAL ADJACENT TO THE BASE OF ANY TREES. DO NOT ALLOW RUNOFF TO ACCUMULATE AROUND BASE OF TREES. DO NOT FASTEN OR ATTACH ROPES, CABLE OR GUY WIRES TO TREES WITHOUT PERMISSION OF THE ENGINEER. WHEN SUCH PERMISSION IS GRANTED, PROTECT THE TREE BEFORE MAKING FASTENING OR ATTACHMENTS BY PROVIDING BURLAP WRAPPING AND SOFTWOOD CLEATS. THE CONTRACTOR SHALL BE HELD RESPONSIBLE FOR DAMAGE RESULTING FROM THESE ACTIONS. USE OF AXES OR CLIMBING SPURS FOR TRIMMING WILL NOT BE PERMITTED. PROVIDE CLIMBING ROPES DURING TRIMMING.

G. REMOVE SHRUBS TO BE SAVED, TAKING A SUFFICIENT EARTH BALL AT THE ROOTS TO MAINTAIN THE SHRUB. TEMPORARILY REPLANT IF REQUIRED, AND REPLACE AT THE COMPLETION OF CONSTRUCTION IN CONDITION EQUALING THE ORIGINAL.

H. TREE AND SHRUB REPAIR WHERE REQUIRED SHALL BE PERFORMED BY A TREE SURGEON.

I. TREES AND SHRUBS INTENDED TO REMAIN WHICH ARE DAMAGED BEYOND REPAIR BY CONSTRUCTION, SHALL BE REPLACED BY THE CONTRACTOR AT NO EXPENSE TO THE OWNER.

## SITE NOTES:

1. THE CONTRACTOR SHALL PERFORM ALL WORK IN COMPLIANCE WITH TITLE 29 OF FEDERAL REGULATIONS, PART 1926, SAFETY AND HEALTH REGULATIONS FOR CONSTRUCTION(OSHA).
2. HIGHWAY DRAINAGE ALONG ALL ROADS AND PRIVATE DRIVES SHALL BE KEPT CLEAN OF MUD, DEBRIS ETC. AT ALL TIMES.
3. REFER TO ARCHITECTURAL DRAWINGS FOR BUILDING INFORMATION.
4. THE CONTRACTOR SHALL CONSULT THE DESIGN ENGINEER BEFORE DEVIATING FROM THESE PLANS.
5. IN ALL TRENCH EXCAVATIONS, CONTRACTOR MUST LAY THE TRENCH SIDE SLOPES BACK TO A SAFE SLOPE, USE A TRENCH SHIELD OR PROVIDE SHEETING AND BRACING IF REQUIRED.
6. THE CONTRACTOR SHALL TAKE PRECAUTIONS TO MAINTAIN A MINIMUM OF 2' OF COVER OVER ALL EXISTING AND NEW STORM AND SANITARY PIPES DURING CONSTRUCTION.
7. ALL EXISTING SURFACE APPURTENANCES (I.E. WATER VALVES, CATCH BASIN FRAMES AND GRATES, MANHOLE COVERS) WITHIN THE PROJECT LIMITS SHALL BE ADJUSTED TO FINISHED GRADE.
8. UNLESS COVERED BY THE CONTRACT SPECIFICATIONS OR AS NOTED ON THE PLANS, ALL WORK SHALL CONFORM TO THE NEW YORK STATE DEPARTMENT OF TRANSPORTATION STANDARD SPECIFICATIONS DATED JANUARY 1, 2020 AND ANY SUBSEQUENT APPENDICES.

## UTILITY NOTES:

1. APPROXIMATE LOCATION OF KNOWN UTILITY STRUCTURES AND FACILITIES THAT MAY BE ENCOUNTERED WITHIN AND ADJACENT TO THE LIMITS OF WORK ARE SHOWN ON THE PLANS. THE ACCURACY AND COMPLETENESS OF THIS INFORMATION IS NOT GUARANTEED BY THE ENGINEER. THE CONTRACTOR IS ADVISED TO VERIFY IN FIELD ALL THE FACTS CONCERNING THE UTILITY LOCATIONS AND OTHER CONSTRUCTION OBSTACLES PRIOR TO CONSTRUCTION OF ANY DISCREPANCIES WHICH MAY AFFECT PROJECT DESIGN AND/OR SCOPE.
2. ALL ABANDONED WATER LINES SHALL BE CUT AND CAPPED IN ACCORDANCE WITH WESTCHESTER COUNTY REQUIREMENTS.
3. TRENCH DETAILS ARE INTENDED TO PROVIDE INFORMATION REGARDING BACKFILLING MATERIALS AND GENERAL MATERIAL DEPTHS ONLY. THE CONTRACTOR SHALL BE RESPONSIBLE FOR THE MEANS AND METHODS OF CONSTRUCTION AND SHALL PROVIDE APPROPRIATE SAFETY MEASURES, SHEETING AND BRACING AS NECESSARY. SHEETING CONDITIONS ARE TO BE DESIGNED BY A NEW YORK STATE LICENSED PROFESSIONAL ENGINEER AND SUBMITTED TO THE DESIGN ENGINEER FOR APPROVAL. THE DESIGN ENGINEER ASSUMES NO RESPONSIBILITY OR LIABILITY FOR FIELD CONDITIONS, TRENCHING OR BACKFILLING OPERATIONS DURING CONSTRUCTION. THE CONTRACTOR SHALL COMPLY WITH ALL APPLICABLE OSHA STANDARDS AND DETAILS FOR TRENCH EXCAVATION.
4. CONTRACTOR SHALL BE RESPONSIBLE FOR DEWATERING AND PRECLUDING PONDING OF WATER IN ALL AREAS. DEWATERING OPERATIONS SHALL BE IN ACCORDANCE WITH NYSDEC REGULATIONS, THE PROJECT STORMWATER POLLUTION PREVENTION PLAN AND WESTCHESTER COUNTY.
5. THE CONTRACTOR SHALL COMPLY WITH THE LATEST OSHA CONFINED SPACE ENTRY REQUIREMENTS (29 CFR PART 1910).
6. THE CONTRACTOR SHALL COMPLY WITH THE LATEST REVISED OSHA SHEETING REQUIREMENTS (29 CFR PART 1926.650, 651, 652).
7. ALL EXISTING UTILITIES THAT ARE TO REMAIN IN SERVICE AND THAT INTERFERE WITH THE WORK SHALL BE RELOCATED UNLESS OTHERWISE SHOWN.
8. ALL ABANDONED PIPES SHALL BE PLUGGED, REMOVED, CRUSHED OR FILLED WITH A SUITABLE MATERIAL AS DIRECTED BY THE ENGINEERS, ABANDONED PIPES 12" INSIDE DIAMETER AND LARGER MUST BE REMOVED, FILLED OR CRUSHED IN PLACE. SMALLER PIPES SHALL BE PLUGGED AND ABANDONED IN PLACE UNLESS OTHERWISE DIRECTED BY THE ENGINEER.
9. THE CONTRACTOR SHALL CONTACT THE UTILITY COMPANIES TO DETERMINE THEIR SCHEDULE FOR PERFORMING UTILITY RELOCATION AND INSTALLATION WORK. THE CONTRACTOR SHALL SCHEDULE THEIR WORK ACCORDINGLY IN ORDER TO NOT INTERFERE WITH THE WORK OF THE UTILITY COMPANIES.
10. TRENCHES SHALL BE BACKFILLED WITHOUT DELAY. OPEN TRENCHES SHALL BE TEMPORARILY SUPPORTED AND STEEL PLATED WHEN WORK IS NOT IN PROGRESS. CONTRACTOR MUST ENSURE NO TRENCHES ARE LEFT OPEN OVERNIGHT. THE CONTRACTOR IS RESPONSIBLE FOR THE DESIGN AND INSTALLATION OF STEEL PLATES THAT ARE CAPABLE OF SAFELY SUPPORTING THE SUBJECTED LOADS.
11. THE CONTRACTOR SHALL BE RESPONSIBLE FOR PROVIDING TEMPORARY LIGHTING WITHIN THE LIMITS OF CONSTRUCTION AND FOR ALL AREAS WHERE WHERE EXISTING STREET AND AREA LIGHTING SHUT-DOWN IS REQUIRED TO INSTALL NEW LIGHTING AND ELECTRICAL SERVICE.
12. ALL CMP PIPES SHALL FOLLOW NYSDOT SECTION 602-2 AND 707.02, BE HELICAL BITUMINOUS COATED, SHALL HAVE GASKETED AND BANDED JOINTS AND BE OF THE FOLLOWING PIPE GAUGES UNLESS OTHERWISE SPECIFIED.

    10" TO 21" - 14 GAUGE
    24" TO 30" - 12 GAUGE
    30" TO 60" - 10 GAUGE
13. IN INSTANCES WHERE THE STORM SEWER CROSSES THE SANITARY SEWER A CRUSHED STONE ENCASEMENT SHALL BE PROVIDED AROUND THE SANITARY SEWER UP TO THE STORM SEWER-COMPACT WITH APPROVED EQUIPMENT
14. ALL CATCH BASINS AND STORM MANHOLES WITHIN PAVEMENT TO BE CONSTRUCTED TO WITHSTAND H-20 LOADING.
15. ALL EXISTING CATCH BASINS WITHIN WORK LIMITS TO BE CLEANED OF ANY DEBRIS OR SILT.

## GRADING NOTES:

1. REMOVE AND STOCKPILE TOPSOIL AS DIRECTED BY THE CONSTRUCTION MANAGER. REPLACE TOPSOIL TO A MINIMUM 4" DEPTH. ALL DISTURBED AREAS TO BE HYDROSEEDED AS DIRECTED BY THE CONSTRUCTION MANAGER.
2. CONTRACTOR SHALL BE RESPONSIBLE FOR THE MAINTENANCE AND REMOVAL OF TEMPORARY SEDIMENTATION CONTROLS, INCLUDING SILT SINK AND SILT FENCE. EROSION CONTROL MEASURES SHALL NOT BE REMOVED BEFORE VEGETATION HAS OCCURRED COMPLETELY.
3. ALL SILT FENCE TO BE REPLACED WHENEVER THEY BECOME CLOGGED OR INOPERABLE AND SHALL BE REPLACED AS DIRECTED BY THE ENGINEER.
4. THE CONTRACTOR SHALL BE RESPONSIBLE FOR RESTORATION OF TOPSOIL TO ALL DISTURBED AREAS. IT IS THE CONTRACTOR'S RESPONSIBILITY TO MAINTAIN EROSION CONTROL MEASURES AT ALL TIMES.
5. EROSION CONTROL MEASURES WILL BE IMPLEMENTED IN ACCORDANCE WITH THE NEW YORK STATE GUIDELINES FOR URBAN EROSION SEDIMENT CONTROL MANUAL, WESTCHESTER COUNTY HEALTH DEPARTMENT, AND THE CITY OF RYE REQUIREMENTS.
6. ALL INLETS TO THE STORM SEWER SHALL HAVE STONE DROP INLET PROTECTION. THE CONTRACTOR SHALL BE RESPONSIBLE FOR MAINTAINING THE BEST MANAGEMENT PRACTICES (BMP'S) UNTIL GROUND COVER IS ESTABLISHED.
7. SILT FENCE, JUTE MESH, AND/OR EROSION CONTROL BLANKETS WILL BE USED ON STEEP SLOPES AND WHEREVER NECESSARY TO CONTROL EROSION AND SILTATION OF EXISTING DRAINAGE SYSTEMS AS ORDERED BY THE ENGINEER OR SPECIFIED ON PLANS.
8. THE CONTRACTOR SHALL DESIGNATE A MEMBER OF HIS/HER FIRM TO BE RESPONSIBLE TO MONITOR EROSION CONTROL, EROSION CONTROL STRUCTURES, TREE PROTECTION AND PRESERVATION THROUGHOUT CONSTRUCTION.
9. ALL DISTURBED AREAS SHALL BE PROTECTED FROM EROSION EITHER BY MULCH OR TEMPORARY SEEDING WITHIN 2 WEEKS OF DISTURBANCE.

## SOIL EROSION AND SEDIMENT CONTROL NOTES:

1. ALL SOIL EROSION AND SEDIMENT CONTROL PRACTICES TO BE INSTALLED PRIOR TO ANY SOIL DISTURBANCE, OR IN THEIR PROPER SEQUENCE, AND MAINTAINED UNTIL PERMANENT PROTECTION IS ESTABLISHED. CONTRACTOR SHALL COMPLY WITH ALL REQUIREMENTS OF THE STORMWATER POLLUTION PREVENTION PLAN.
2. ANY DISTURBED AREAS THAT WILL NOT RECEIVE PERMANENT RESTORATION WITHIN TEN (10) DAYS AFTER FINAL GRADING, AND NOT SUBJECT TO CONSTRUCTION TRAFFIC, WILL IMMEDIATELY RECEIVE A TEMPORARY COVER. THE DISTURBED AREAS WILL BE MULCHED WITH STRAW, OR EQUIVALENT MATERIAL AT A RATE OF TWO (2) TONS PER ACRE, ACCORDING TO STATE STANDARDS.
3. PERMANENT VEGETATION TO BE SEEDED OR SODDED ON ALL EXPOSED AREAS WITHIN TEN (10) DAYS AFTER FINAL GRADING. MULCH WILL BE USED AS NECESSARY FOR PROTECTION UNTIL SEEDING IS ESTABLISHED.
4. ALL WORK TO BE DONE IN ACCORDANCE WITH THE STANDARDS FOR SOIL EROSION AND SEDIMENT CONTROL IN THE STATE OF NEW YORK.
5. A SUB-BASE COURSE DETAIL WILL BE APPLIED IMMEDIATELY FOLLOWING ROUGH GRADING AND INSTALLATION OF IMPROVEMENTS IN ORDER TO STABILIZE ROADS, DRIVEWAYS PARKING AREAS AND SIDEWALKS. IN AREAS WHERE NO UTILITIES ARE PRESENT, THE SUB-BASE SHALL BE INSTALLED WITHIN 15 DAYS OF THE PRELIMINARY GRADING.
6. IMMEDIATELY FOLLOWING INITIAL DISTURBANCE OR ROUGH GRADING, ALL CRITICAL AREAS SUBJECT TO EROSION (I.E.; STEEP SLOPES AND ROADWAY EMBANKMENTS) WILL RECEIVE A TEMPORARY COVER OF STRAW MULCH OR A SUITABLE EQUIVALENT AT A RATE OF TWO (2) TONS PER ACRE, ACCORDING TO NYS STANDARDS.
7. ANY STEEP SLOPES RECEIVING PIPELINE INSTALLATION WILL BE BACKFILLED AND STABILIZED DAILY, AS THE INSTALLATION PROCEEDS (I.E.; SLOPES GREATER THAN 3:1).
8. IN ACCORDANCE WITH THE STANDARDS FOR PERMANENT VEGETATIVE COVER FOR SOIL STABILIZATION, ANY SOIL HAVING A pH OF 4 OR LESS OR CONTAINING IRON SULFIDES SHALL BE COVERED WITH A MINIMUM OF 12 INCHES OF SOIL HAVING A pH OF 5 OR GREATER PRIOR TO SEEDBED PREPARATION.
9. WESTCHESTER COUNTY AND THE ENGINEER, SHALL BE NOTIFIED 72 HOURS IN ADVANCE OF ANY LAND DISTURBING ACTIVITY.
10. AT THE TIME WHEN THE SITE PREPARATION FOR PERMANENT VEGETATIVE STABILIZATION IS GOING TO BE ACCOMPLISHED, ANY SOIL THAT WILL NOT PROVIDE A SUITABLE ENVIRONMENT TO SUPPORT ADEQUATE VEGETATIVE GROUND COVER, SHALL BE REMOVED OR TREATED IN SUCH A WAY THAT WILL PERMANENTLY ADJUST THE SOIL CONDITIONS AND RENDER IT SUITABLE FOR VEGETATIVE COVER. IF THE REMOVAL OR TREATMENT OF THE SOIL WILL NOT PROVIDE SUITABLE CONDITIONS, NON-VEGETATIVE MEANS OF PERMANENT GROUND STABILIZATION WILL HAVE TO BE EMPLOYED.
11. THE CONTRACTOR SHALL TAKE NECESSARY MEASURES TO MAINTAIN DUST CONTROL. DIRT HAUL ROADS SHALL BE SPRINKLED WITH WATER OR GIVEN A SURFACE OF CRUSHED STONES OR WOOD CHIPS AS REQUIRED. VEHICLES SHALL BE CLEANED, AS NECESSARY, PRIOR TO USING PUBLIC STREETS. PAVED ROADS SHALL BE SPRINKLED WITH WATER.
12. ALL SOIL EROSION AND SEDIMENT CONTROL DEVICES SHALL BE LOCATED IN THE FIELD AS REQUIRED OR AT THE DIRECTION OF THE ENGINEER. THE CONTRACT DRAWING ARE NOT INTENDED TO SHOW THE LOCATION AND DETAILS FOR ALL SUCH DEVICES BUT ARE TO BE USED AS A REASONABLE GUIDE.
13. ANY CHANGES TO THE SOIL AND SEDIMENT CONTROL PLANS WILL REQUIRE THE SUBMISSION OF REVISED SOIL EROSION AND SEDIMENT CONTROL PLANS TO WESTCHESTER COUNTY AND THE ENGINEER. THE REVISED PLANS MUST BE PREPARED BY THE CONTRACTOR AND MUST MEET ALL CURRENT NYS SOIL EROSION AND SEDIMENT CONTROL PRACTICES.
14. CONTRACTOR SHALL OBTAIN ALL REQUIRED SEDIMENT CONTROL PERMITS.
15. UPON COMPLETION OF CONSTRUCTION WORK AND AFTER FINAL GRADING AND WHEN PERMANENT STABILIZATION HAS BEEN ESTABLISHED, STRAW BALES, SILT FENCES AND ALL OTHER SOIL PLAN APPURTENANCES WILL BE REMOVED AND DISPOSED OF BY THE CONTRACTOR, UNLESS ORDERED TO REMAIN BY THE ENGINEER.
16. ALL EXCESS EXCAVATED MATERIAL, EXCEPT FOR TOP SOIL, WILL BE REMOVED FROM THE SITE BY THE CONTRACTOR IN ACCORDANCE WITH THE CONTRACT DOCUMENTS.
17. CONDUIT OUTLETS AND CATCH BASIN INLETS MUST BE PROTECTED PRIOR TO START OF CONSTRUCTION.
18. THE CONTRACTOR SHALL PROVIDE A DETAILED SEQUENCE OF CONSTRUCTION OPERATIONS FOR REVIEW AND SUBMITTAL TO WESTCHESTER COUNTY AND THE ENGINEER.
19. THE CONTRACTOR SHALL MEET ENGINEER ON-SITE TO DEFINE THOSE AREAS WHICH WILL REQUIRE SOIL EROSION AND SEDIMENT CONTROL FACILITIES, DISCUSS THEIR CONSTRUCTION AND THEREAFTER PROVIDE DETAILED PLANS FOR REVIEW OF SUCH FACILITIES BY WESTCHESTER COUNTY AND THE ENGINEER.
20. ALL SOIL EROSION AND SEDIMENT CONTROL PRACTICES SHALL BE IN PLACE WHERE POSSIBLE PRIOR TO, OR IMMEDIATELY FOLLOWING SITE AND ACCESS CLEARING.
21. ALL SOIL EROSION AND SEDIMENT CONTROL PRACTICES SHALL BE LEFT IN PLACE AND MAINTAINED; INCLUDING SILT AND SEDIMENT REMOVAL, UNTIL CONSTRUCTION IS COMPLETED, AREA STABILIZED AND THE ENGINEER SO DIRECTS.
22. CONTRACTOR SHALL CONFINE SOIL DISTURBANCE ACTIVITY TO THE AREAS CONTAINED WITHIN THE "LIMIT OF DISTURBANCE" LINES EXCEPT AS DIRECTED BY THE ENGINEER AND IN ACCORDANCE AND COORDINATION WITH ADJACENT CONTRACTS. SUCH ACTIVITY SHALL SHALL ESSENTIALLY CONSIST OF CLEARING, GRUBBING, GRADING AND CONSTRUCTION IN AREAS DEFINED AS BUILDINGS, PIPELINE, PARKING AREAS, DRIVES AND WALKWAYS OR AS MAY BE REQUIRED DUE TO GRADE CHANGES OR RETAINING WALLS.
23. ALL DEWATERING OPERATIONS MUST DISCHARGE DIRECTLY INTO A SEDIMENT FILTER AREA. SEDIMENT FILTER SHALL BE INSTALLED IN ACCORDANCE WITH THE CONTRACT DOCUMENTS AND THE DETAILS OF DESIGN AND CONSTRUCTION SHALL PREPARED AND SUBMITTED BY THE CONTRACTOR TO THE ENGINEER, AND ALL OTHER PERTINENT AGENCIES FOR REVIEW.
24. SOIL STABILIZATION METHODS SHALL BE UNDERTAKEN COINCIDENTALLY WITH ALL SITE IMPROVEMENTS AND CONTINUE DURING THE CONSTRUCTION ACTIVITY PERIOD.
25. THE LIMITS OF FENCING FOR TREE PROTECTION WILL BE DETERMINED IN THE FIELD PRIOR TO CONSTRUCTION AND WILL INCLUDE THE TREE CANOPY.
26. COMPLY WITH GENERAL PERMIT GP-0-20-001, AS OUTLINED IN THE STORM WATER PREVENTION PLAN (SWPPP).

6/15/2022 4:10:27 PM

CONSULTANT INFORMATION

LiRo Engineers, Inc.
A LiRo Group Company
Mineola, N.Y. 516-746-2350[T]

CONSULTANT SEAL

| REVISION NUMBER | DATE | MADE BY | APP'D BY | REVISION |
|---|---|---|---|---|

RECORD DRAWING CERTIFICATION

☐ AS BUILT - CHANGES AS NOTED ☐ AS BUILT - NO CHANGES

| CONTRACTOR | PROJECT COORDINATOR |
|---|---|
| NAME | NAME |
| SIGNATURE | SIGNATURE |
| TITLE DATE | TITLE DATE |

WESTCHESTER COUNTY, NEW YORK
DEPARTMENT OF PUBLIC WORKS AND TRANSPORTATION
DIVISION OF ENGINEERING

**INFRASTRUCTURE REHABILITATION PHASE 3**
**PLAYLAND PARK, RYE, NEW YORK**
**NORTHEAST BURGER BARN**
**GENERAL NOTES**

| | |
|---|---|
| CONTRACT NUMBER: **22-523** | SHEET NUMBER: **BB-C-01** |
| DWG NO.: 92 of 664 | |
| SCALE: **1"=10'** | |
| DATE: **08/23/2022** | |
| DPW FILE NUMBER: **1-118-C-841-0** | REV. NO. **0** |

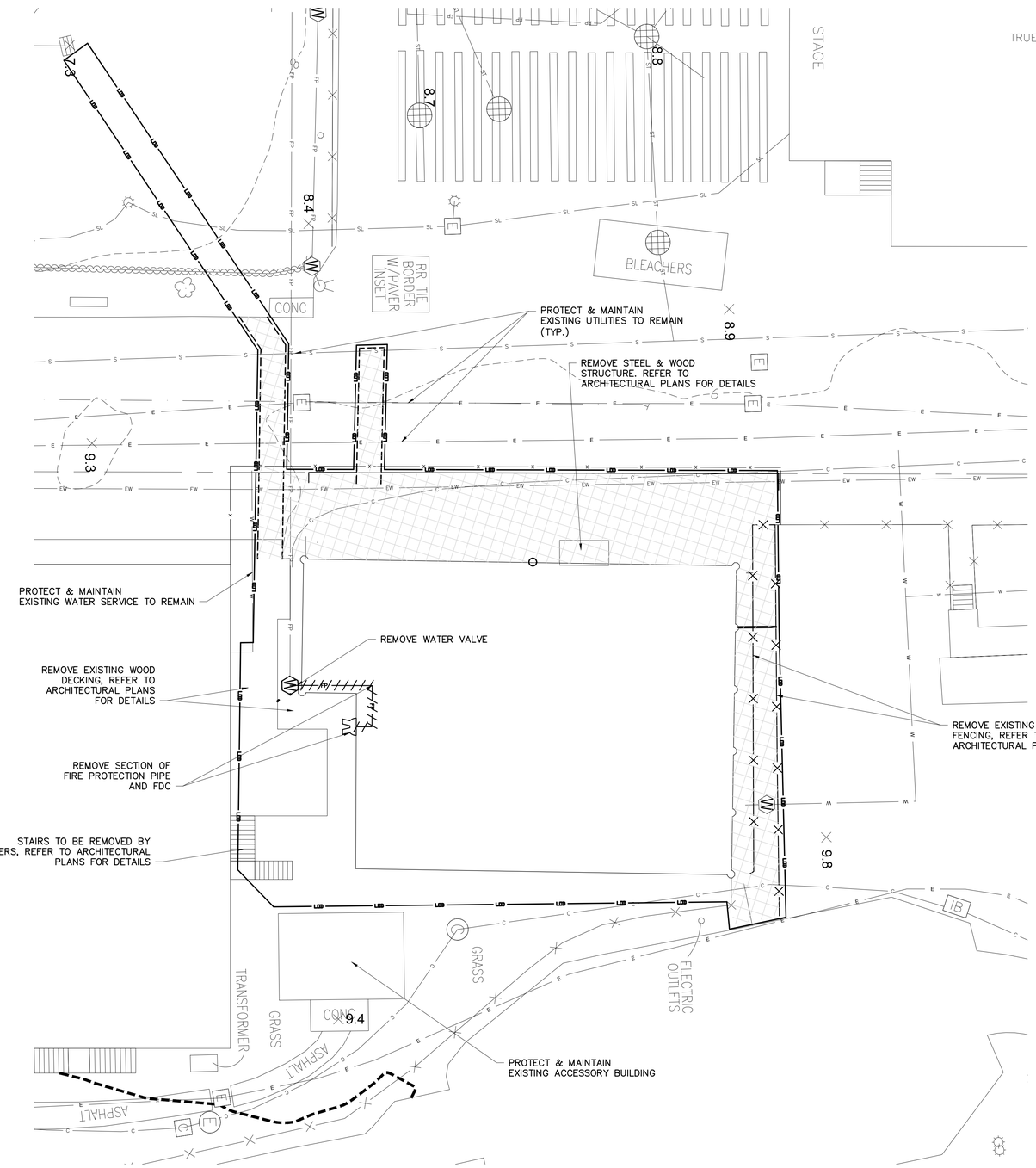


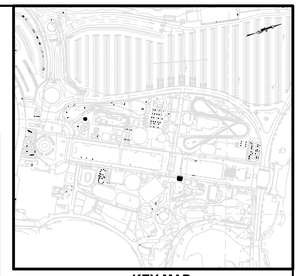

**KEY MAP**
**NOT TO SCALE**

## EXISTING LEGEND

- POST
- UTILITY POLE
- SIGN
- HANDICAP PARKING
- GROUND LIGHT
- LIGHT POLE
- UTILITY POLE WITH LIGHT
- LIGHT POLE (SINGLE LIGHT)
- LIGHT POLE (DOUBLE LIGHT)
- LIGHT POLE (MULTI LIGHT)
- BOAT TIE-OFF CLEAT
- CATCH BASIN
- TRENCH DRAIN
- MAILBOX
- UNKNOWN MANHOLE
- COMMUNICATIONS BOX/HAND HOLE
- ELECTRIC HAND HOLE
- ELECTRIC BOX
- GAS METER
- IRRIGATION BOX
- UNKNOWN UTILITY BOX/HAND HOLE
- COMMUNICATION MANHOLE
- DRAINAGE MANHOLE
- ELECTRIC MANHOLE
- SEWER MANHOLE
- STORM SEWER MANHOLE
- SEWER CLEANOUT
- HYDRANT
- SIAMESE CONNECTION
- UNKNOWN VALVE
- WATER VALVE
- GAS VALVE
- WATER SPIGOT OR FOUNTAIN
- MONITORING WELL
- DECIDUOUS BUSH
- EVERGREEN BUSH
- DECIDUOUS TREE
- EVERGREEN TREE
- STUMP
- HEDGE ROW
- TREELINE
- BRUSHLINE
- RETAINING WALL
- GUIDE RAIL
- STONE WALL
- WATERLINE
- FENCE
- UNDERGROUND COMMUNICATION
- UNDERGROUND PROPANE
- UNDERGROUND ELECTRICAL
- UNDERGROUND STREET LIGHTING
- UNDERGROUND ENVIRONMENTAL WASTEWATER
- UNDERGROUND SEWER
- UNDERGROUND STORM SEWER
- UNDERGROUND WATER
- UNDERGROUND FIRE PROTECTION
- EXISTING MAJOR CONTOUR
- EXISTING MINOR CONTOUR

## PROPOSED LEGEND:

- SAW CUTTING ASPHALT CONCRETE
- LIMITS OF DISTURBANCE
- LIMITS OF PAVEMENT REMOVAL
- AREA OF ASPHALT PAVEMENT REMOVAL (FULL DEPTH & EXCAVATION)
- DRAINAGE STRUCTURE INLET PROTECTION

## NOTES:

1. PAVEMENT REMOVAL, MILLING AND EXCAVATION, MATERIAL SHALL NOT BE STOCKPILED ON SITE.

2. EXISTING GRADES, PIPE LOCATIONS, SIZES, MATERIAL, INVERTS AND OTHER EXISTING CONDITIONS ARE SHOWN ON THE DRAWINGS FROM AVAILABLE AS-BUILT DRAWINGS AND FIELD SURVEY BY OTHERS. IT SHALL BE THE RESPONSIBILITY OF THE CONTRACTOR TO VERIFY ALL EXISTING CONDITIONS.

3. THE CONTRACTOR SHALL TAKE PROPER PRECAUTIONS NOT TO DAMAGE ANY EXISTING SITE CONDITIONS SPECIFICALLY EXCLUDED FROM THE CONTRACT AND WILL BE HELD SOLELY RESPONSIBLE FOR ANY DAMAGE OCCURRING DURING THE COURSE OF THE WORK DURING CONSTRUCTION. THE CONTRACTOR SHALL, AT THEIR OWN EXPENSE, MAKE ALL REPAIRS REQUIRED TO RESTORE ANY DAMAGED AREAS TO ORIGINAL CONDITIONS.

New York 811 — Know what's below. Call before you dig.

0 10 20 30
1"=10' SCALE BAR

6/15/2022 4:10:27 PM

CONSULTANT INFORMATION
LiRo Engineers, Inc.
A LiRo Group Company
Mineola, N.Y. 516-746-2350[T]

CONSULTANT SEAL
STATE OF NEW YORK — KENNETH J. HOLDEN — LICENSE NO. 059134 — PROFESSIONAL ENGINEER

| REVISION NUMBER | DATE | MADE BY | APP'D BY | REVISION |
|---|---|---|---|---|

RECORD DRAWING CERTIFICATION
☐ AS BUILT – CHANGES AS NOTED ☐ AS BUILT – NO CHANGES

CONTRACTOR
NAME
SIGNATURE
TITLE DATE

PROJECT COORDINATOR
NAME
SIGNATURE
TITLE DATE

WESTCHESTER COUNTY, NEW YORK
DEPARTMENT OF PUBLIC WORKS AND TRANSPORTATION
DIVISION OF ENGINEERING

**INFRASTRUCTURE REHABILITATION PHASE 3**
**PLAYLAND PARK, RYE, NEW YORK**
**NORTHEAST BURGER BARN**
**EXISTING CONDITIONS/DEMOLITION PLAN**

| | |
|---|---|
| CONTRACT NUMBER | 22-523 |
| SHEET NUMBER | BB-C-02 |
| DWG NO.: | 93 of 664 |
| SCALE: | 1"=10' |
| DATE: | 08/23/2022 |
| DPW FILE NUMBER | 1-118-C-842-0 |
| REV. NO.: | 0 |

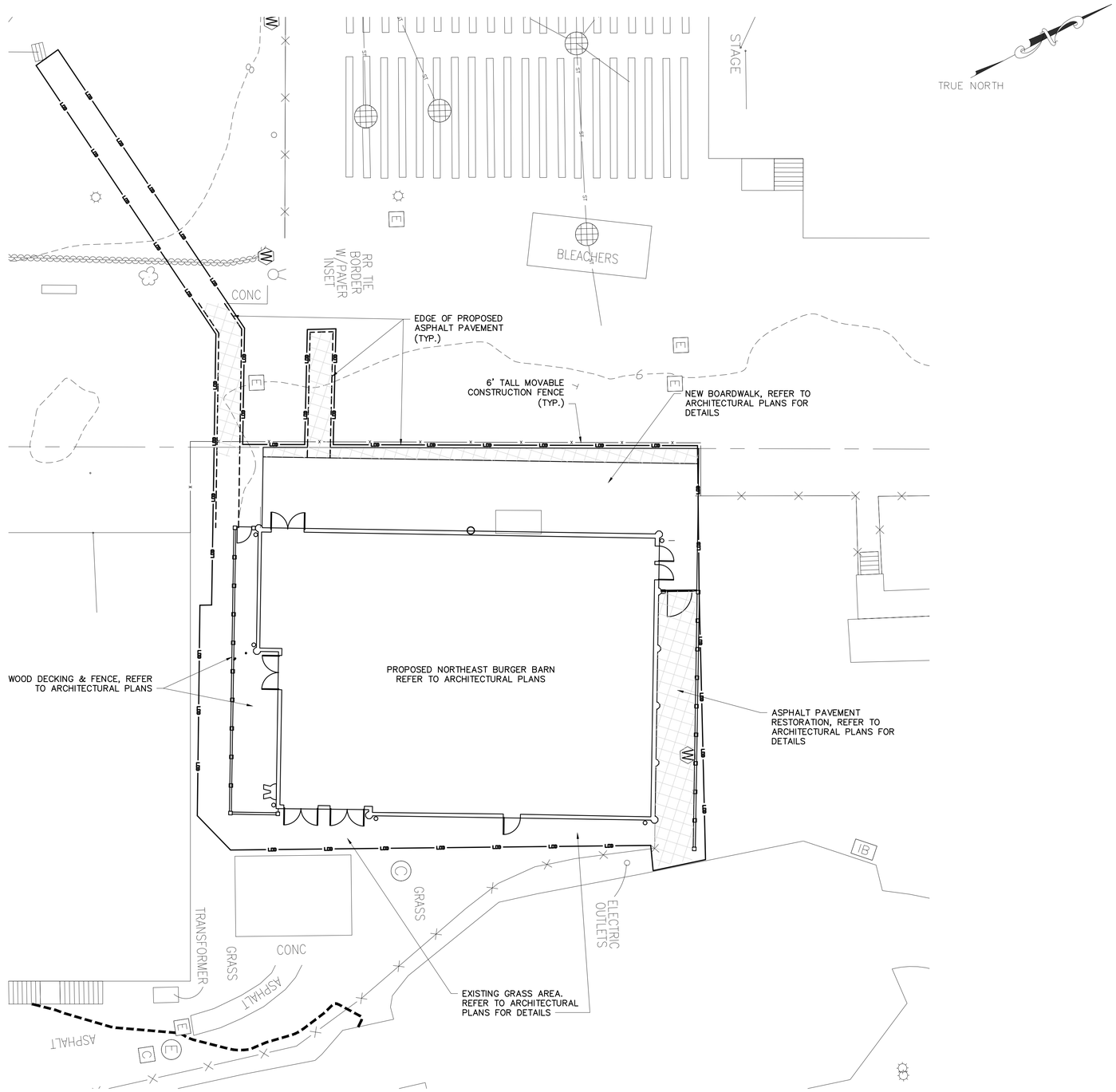


## EXISTING LEGEND

- POST
- UTILITY POLE
- SIGN
- HANDICAP PARKING
- GROUND LIGHT
- LIGHT POLE
- UTILITY POLE WITH LIGHT
- LIGHT POLE (SINGLE LIGHT)
- LIGHT POLE (DOUBLE LIGHT)
- LIGHT POLE (MULTI LIGHT)
- BOAT TIE-OFF CLEAT
- CATCH BASIN
- TRENCH DRAIN
- MAILBOX
- UNKNOWN MANHOLE
- COMMUNICATIONS BOX/HAND HOLE
- ELECTRIC HAND HOLE
- ELECTRIC BOX
- GAS METER
- IRRIGATION BOX
- UNKNOWN UTILITY BOX/HAND HOLE
- COMMUNICATION MANHOLE
- DRAINAGE MANHOLE
- ELECTRIC MANHOLE
- SEWER MANHOLE
- STORM SEWER MANHOLE
- SEWER CLEANOUT
- HYDRANT
- SIAMESE CONNECTION
- UNKNOWN VALVE
- WATER VALVE
- GAS VALVE
- WATER SPIGOT OR FOUNTAIN
- MONITORING WELL
- DECIDUOUS BUSH
- EVERGREEN BUSH
- DECIDUOUS TREE
- EVERGREEN TREE
- STUMP
- HEDGE ROW
- TREELINE
- BRUSHLINE
- RETAINING WALL
- GUIDE RAIL
- STONE WALL
- FENCE

PROPOSED LEGEND:

- MOVABLE CONSTRUCTION FENCE
- SAW CUTTING ASPHALT CONCRETE
- LIMITS OF DISTURBANCE
- LIMITS OF PAVEMENT REMOVAL
- AREA OF FULL DEPTH ASPHALT PAVEMENT
- DRAINAGE STRUCTURE INLET PROTECTION

New York 811 — Know what's below. Call before you dig.

0 10 20 30
1"=10' SCALE BAR

6/15/2022 4:10:27 PM

CONSULTANT INFORMATION

LiRo Engineers, Inc.
A LiRo Group Company
Mineola, N.Y. 516-746-2350[T]

CONSULTANT SEAL

STATE OF NEW YORK — KENNETH J. HOLMSTROM — No. 059134 — LICENSED PROFESSIONAL ENGINEER

| REVISION NUMBER | DATE | MADE BY | APP'D BY | REVISION |
|---|---|---|---|---|

RECORD DRAWING CERTIFICATION

☐ AS BUILT – CHANGES AS NOTED ☐ AS BUILT – NO CHANGES

CONTRACTOR
NAME
SIGNATURE
TITLE DATE

PROJECT COORDINATOR
NAME
SIGNATURE
TITLE DATE

WESTCHESTER COUNTY, NEW YORK
DEPARTMENT OF PUBLIC WORKS AND TRANSPORTATION
DIVISION OF ENGINEERING

**INFRASTRUCTURE REHABILITATION PHASE 3**
**PLAYLAND PARK, RYE, NEW YORK**
**NORTHEAST BURGER BARN**
**SITE CONSTRUCTION PLAN**

| | |
|---|---|
| CONTRACT NUMBER | 22-523 |
| SHEET NUMBER | BB-C-03 |
| DWG NO.: | 94 of 664 |
| SCALE: | 1"=10' |
| DATE: | 08/23/2022 |
| DPW FILE NUMBER | 1-118-C-843-0 |
| REV. NO. | 0 |

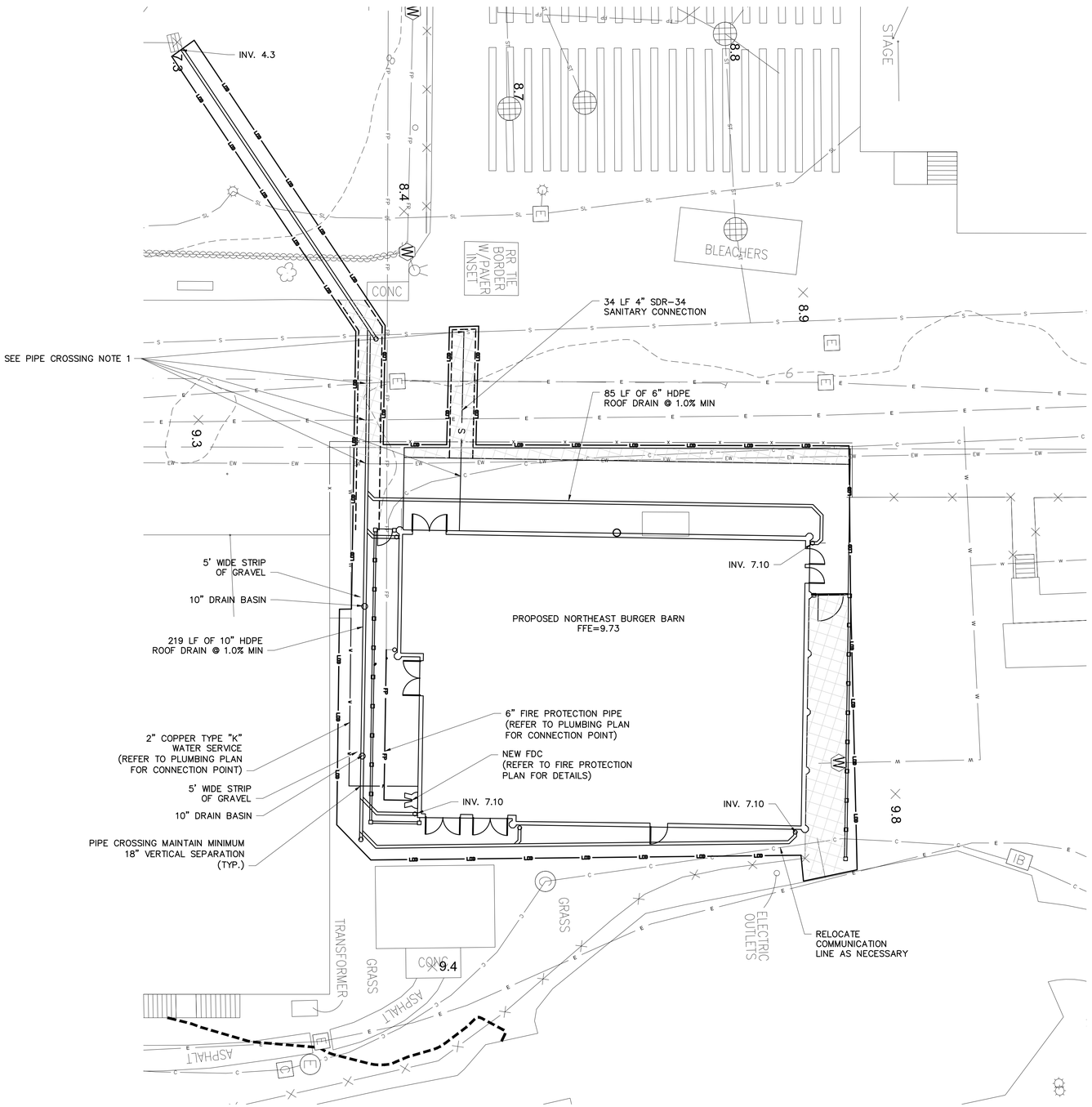


NOTES:
1. CONTRACTOR TO VERIFY DEPTH OF EXISTING UTILITIES PRIOR TO START OF PIPE LAYOUT TO CONFIRM CLEAR AND RECONCILE CROSSINGS.

## EXISTING LEGEND

- POST
- UTILITY POLE
- SIGN
- HANDICAP PARKING
- GROUND LIGHT
- LIGHT POLE
- UTILITY POLE WITH LIGHT
- LIGHT POLE (SINGLE LIGHT)
- LIGHT POLE (DOUBLE LIGHT)
- LIGHT POLE (MULTI LIGHT)
- BOAT TIE-OFF CLEAT
- CATCH BASIN
- TRENCH DRAIN
- MAILBOX
- UNKNOWN MANHOLE
- COMMUNICATIONS BOX/HAND HOLE
- ELECTRIC HAND HOLE
- ELECTRIC BOX
- GAS METER
- IRRIGATION BOX
- UNKNOWN UTILITY BOX/HAND HOLE
- COMMUNICATION MANHOLE
- DRAINAGE MANHOLE
- ELECTRIC MANHOLE
- SEWER MANHOLE
- STORM SEWER MANHOLE
- SEWER CLEANOUT
- HYDRANT
- SIAMESE CONNECTION
- UNKNOWN VALVE
- WATER VALVE
- GAS VALVE
- WATER SPIGOT OR FOUNTAIN
- MONITORING WELL
- DECIDUOUS BUSH
- EVERGREEN BUSH
- DECIDUOUS TREE
- EVERGREEN TREE
- STUMP
- HEDGE ROW
- TREELINE
- BRUSHLINE
- RETAINING WALL
- GUIDE RAIL
- STONE WALL
- WATERLINE
- FENCE
- UNDERGROUND COMMUNICATION
- UNDERGROUND PROPANE
- UNDERGROUND ELECTRICAL
- UNDERGROUND STREET LIGHTING
- UNDERGROUND ENVIRONMENTAL WASTEWATER
- UNDERGROUND SEWER
- UNDERGROUND STORM SEWER
- UNDERGROUND WATER
- UNDERGROUND FIRE PROTECTION

PROPOSED LEGEND:

- SAW CUTTING ASPHALT CONCRETE
- LIMITS OF DISTURBANCE
- LIMITS OF PAVEMENT REMOVAL (MILLING & EXCAVATION)
- PROPOSED WATER LINE
- PROPOSED CATCH BASIN
- PROPOSED STORM PIPE
- PROPOSED SANITARY MANHOLE
- PROPOSED SANITARY PIPE
- PROPOSED UNDERGROUND ELECTRIC

0 10 20 30
1"=10' SCALE BAR

6/15/2022 4:10:27 PM

CONSULTANT INFORMATION
LiRo Engineers, Inc.
A LiRo Group Company
Mineola, N.Y. 516-746-2350[T]

CONSULTANT SEAL
STATE OF NEW YORK · KENNETH J. HOLDER · LICENSED PROFESSIONAL ENGINEER · No. 059134

| REVISION NUMBER | DATE | MADE BY | APP'D BY | REVISION |
|---|---|---|---|---|

RECORD DRAWING CERTIFICATION
☐ AS BUILT – CHANGES AS NOTED ☐ AS BUILT – NO CHANGES

CONTRACTOR
NAME
SIGNATURE
TITLE DATE

PROJECT COORDINATOR
NAME
SIGNATURE
TITLE DATE

WESTCHESTER COUNTY, NEW YORK
DEPARTMENT OF PUBLIC WORKS AND TRANSPORTATION
DIVISION OF ENGINEERING

**INFRASTRUCTURE REHABILITATION PHASE 3**
**PLAYLAND PARK, RYE, NEW YORK**
**NORTHEAST BURGER BARN**
**UTILITY CONSTRUCTION PLAN**

CONTRACT NUMBER **22-523**
SHEET NUMBER **BB-C-04**
DWG NO.: 95 of 664
SCALE: **1"=10'**
DATE: **08/23/2022**
DPW FILE NUMBER **1-118-C-844-0**
REV. NO.: **0**

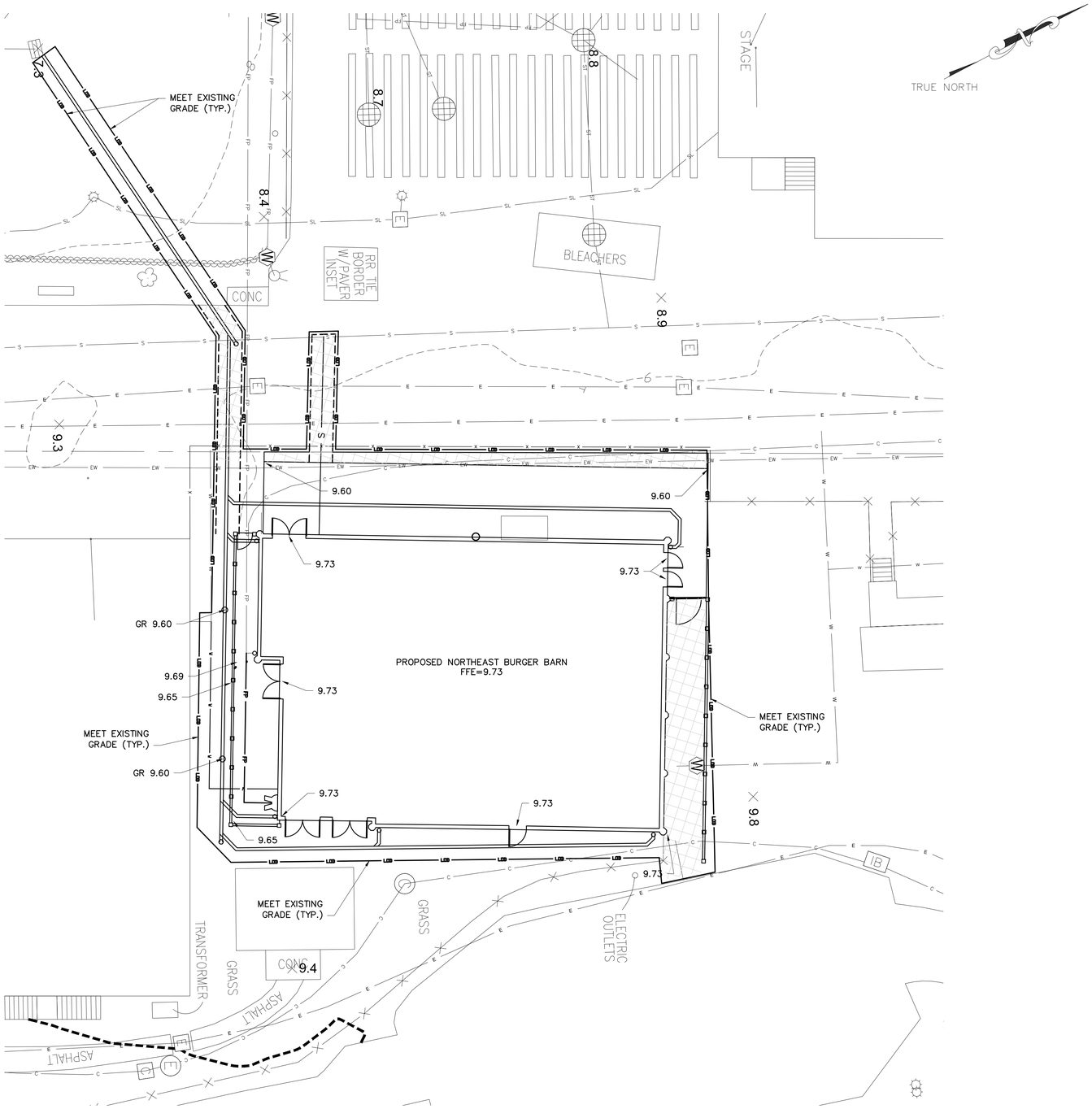


## EXISTING LEGEND

- POST
- UTILITY POLE
- SIGN OR
- HANDICAP PARKING
- GROUND LIGHT
- LIGHT POLE
- UTILITY POLE WITH LIGHT
- LIGHT POLE (SINGLE LIGHT)
- LIGHT POLE (DOUBLE LIGHT)
- LIGHT POLE (MULTI LIGHT)
- BOAT TIE-OFF CLEAT
- CATCH BASIN OR OR
- TRENCH DRAIN
- MAILBOX
- UNKNOWN MANHOLE
- COMMUNICATIONS BOX/HAND HOLE OR
- ELECTRIC HAND HOLE
- ELECTRIC BOX
- GAS METER
- IRRIGATION BOX
- UNKNOWN UTILITY BOX/HAND HOLE
- COMMUNICATION MANHOLE
- DRAINAGE MANHOLE OR
- ELECTRIC MANHOLE
- SEWER MANHOLE OR
- STORM SEWER MANHOLE
- SEWER CLEANOUT
- HYDRANT
- SIAMESE CONNECTION
- UNKNOWN VALVE OR
- WATER VALVE
- GAS VALVE
- WATER SPIGOT OR FOUNTAIN
- MONITORING WELL
- DECIDUOUS BUSH
- EVERGREEN BUSH
- DECIDUOUS TREE
- EVERGREEN TREE
- STUMP
- HEDGE ROW
- TREELINE
- BRUSHLINE
- RETAINING WALL
- GUIDE RAIL
- STONE WALL
- WATERLINE
- FENCE
- UNDERGROUND COMMUNICATION
- UNDERGROUND PROPANE
- UNDERGROUND ELECTRICAL
- UNDERGROUND STREET LIGHTING
- UNDERGROUND ENVIRONMENTAL WASTEWATER
- UNDERGROUND SEWER
- UNDERGROUND STORM SEWER
- W — UNDERGROUND WATER
- UNDERGROUND FIRE PROTECTION

## PROPOSED LEGEND:

- SAW CUTTING ASPHALT CONCRETE
- LOD — LIMITS OF DISTURBANCE
- LIMITS OF PAVEMENT REMOVAL (MILLING & EXCAVATION)
- PROPOSED WATER LINE
- PROPOSED CATCH BASIN
- PROPOSED STORM PIPE
- PROPOSED SANITARY MANHOLE
- PROPOSED SANITARY PIPE
- UGE — PROPOSED UNDERGROUND ELECTRIC

New York 811 — Know what's below. Call before you dig.

0 10 20 30

1"=10' SCALE BAR

6/15/2022 4:10:27 PM

CONSULTANT INFORMATION

**LiRo Engineers, Inc.**
*A LiRo Group Company*
Mineola, N.Y. 516-746-2350[T]

CONSULTANT SEAL

STATE OF NEW YORK — KENNETH J. HOLDEN — LICENSED PROFESSIONAL ENGINEER — 059134

| REVISION NUMBER | DATE | MADE BY | APP'D BY | REVISION |
|---|---|---|---|---|

RECORD DRAWING CERTIFICATION

☐ AS BUILT – CHANGES AS NOTED ☐ AS BUILT – NO CHANGES

CONTRACTOR
NAME
SIGNATURE
TITLE DATE

PROJECT COORDINATOR
NAME
SIGNATURE
TITLE DATE

WESTCHESTER COUNTY, NEW YORK
DEPARTMENT OF PUBLIC WORKS AND TRANSPORTATION
DIVISION OF ENGINEERING

**INFRASTRUCTURE REHABILITATION PHASE 3**
**PLAYLAND PARK, RYE, NEW YORK**
**NORTHEAST BURGER BARN**
**GRADING AND EROSION CONTROL PLAN**

| | |
|---|---|
| CONTRACT NUMBER | 22-523 |
| SHEET NUMBER | BB-C-05 |
| DWG NO.: | 96 of 664 |
| SCALE: | 1"=10' |
| DATE: | 08/23/2022 |
| DPW FILE NUMBER | 1-118-C-845-0 |
| REV. NO. | 0 |

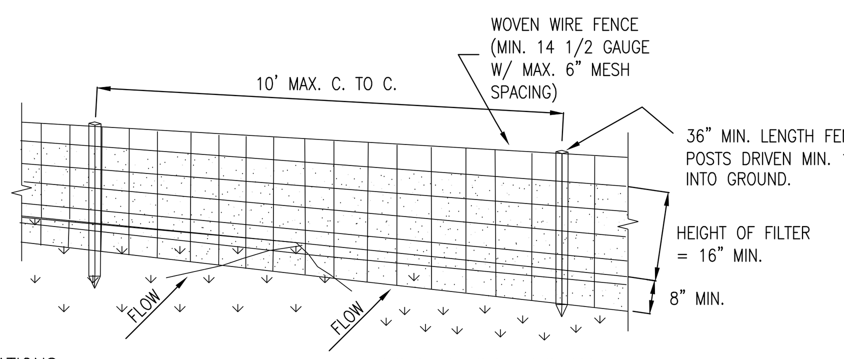


PERSPECTIVE VIEW

CONSTRUCTION SPECIFICATIONS

1. WOVEN WIRE FENCE TO BE FASTENED SECURELY TO FENCE POSTS WITH WIRE TIES OR STAPLES. POSTS SHALL BE STEEL EITHER "T" OR "U" TYPE OR HARDWOOD.
2. FILTER CLOTH TO BE TO BE FASTENED SECURELY TO WOVEN WIRE FENCE WITH TIES SPACED EVERY 24" AT TOP AND MID SECTION. FENCE SHALL BE WOVEN WIRE, 12 1/2 GAUGE, 6" MAXIMUM MESH OPENING.
3. WHEN TWO SECTIONS OF FILTER CLOTH ADJOIN EACH OTHER THEY SHALL BE OVER-LAPPED BY SIX INCHES AND FOLDED. FILTER CLOTH SHALL BE EITHER FILTER X, MIRAFI 100X, STABILINKA T140N, OR APPROVED EQUIVALENT.
4. PREFABRICATED UNITS SHALL BE GEOFAB, ENVIROFENCE, OR APPROVED EQUIVALENT.
5. MAINTENANCE SHALL BE PERFORMED AS NEEDED AND MATERIAL REMOVED WHEN "BULGES" DEVELOP IN THE SILT FENCE.

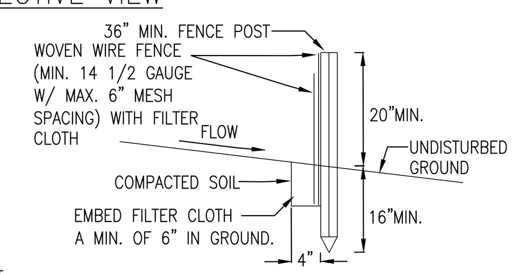


SECTION VIEW

## SILT FENCE INSTALLATION DETAIL
## ITEM NO. 209.13
N.T.S.

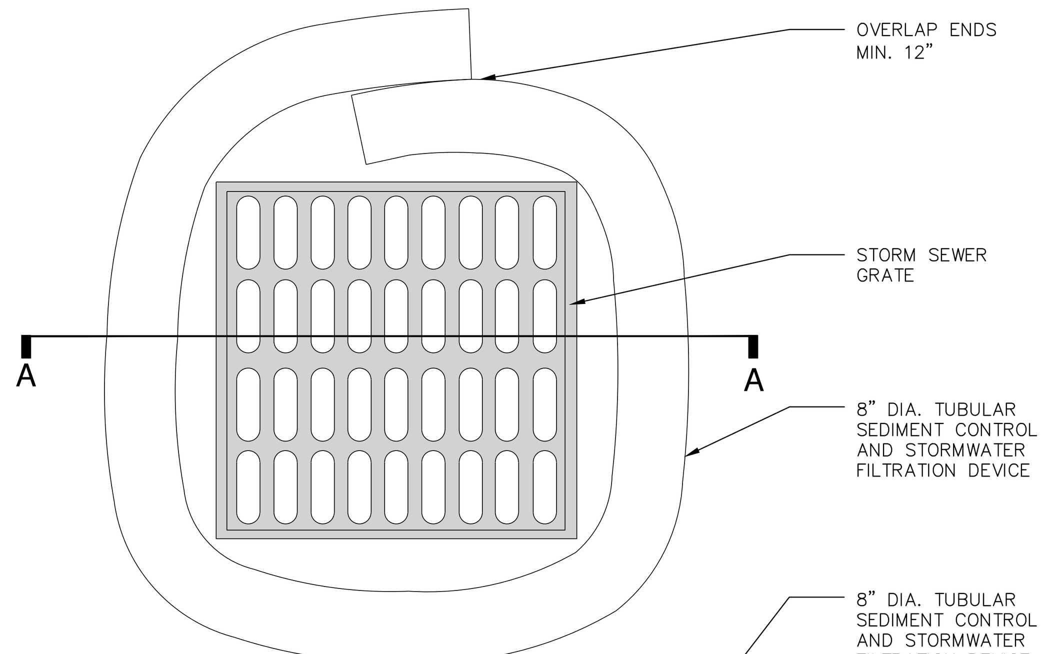


PLAN

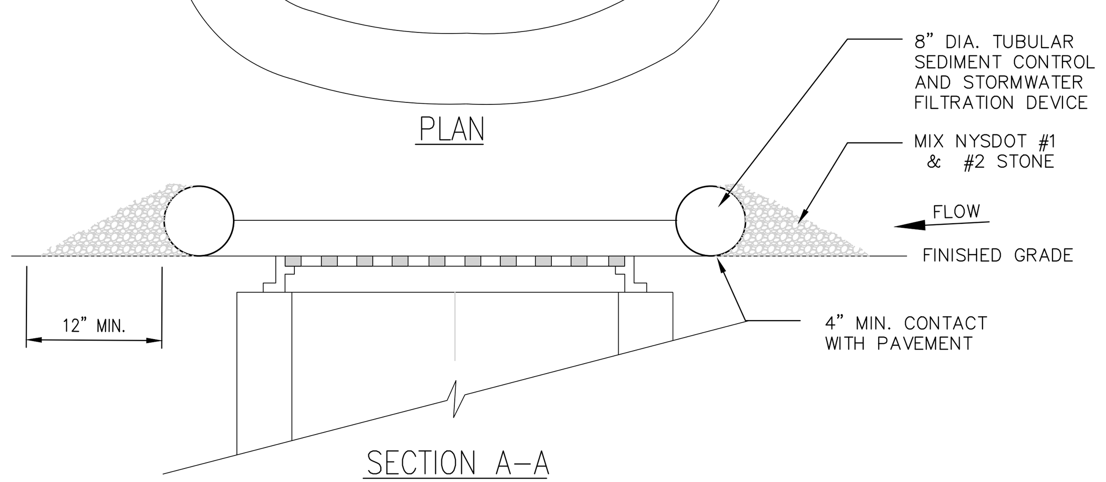


SECTION A–A

NOTES:

1. TUBULAR SEDIMENT CONTROL AND STORMWATER FILTRATION DEVICES SHALL BE FILTREXX FILTERSOXX, OR EQUIVALENT.
2. REPLACE AND DISPOSE OF PER MANUFACTURERS SPECIFICATIONS.
3. THIS PRACTICE INCLUDES SANDBAGS, COMPOST FILTER SOCKS, GEO-TUBES FILLED WITH BALLAST, AND MANUFACTURED SURFACE BARRIERS. PEA GRAVEL CAN ALSO BE USED IN CONJUNCTION WITH THESE PRACTICES TO IMPROVE PERFORMANCE. WHEN INLET IS NOT AT A LOW POINT, AND IS OFF-SET FROM THE PAVEMENT OR GUTTER LINE, PROTECTION SHOULD BE SELECTED AND INSTALLED SO THAT FLOWS ARE NOT DIVERTED AROUND INLET.
4. THE DRAINAGE AREA SHOULD BE LIMITED TO 1 ACRE AT THE DRAINAGE INLET. ALL PRACTICES WILL BE PLACED AT THE INLET PERIMETER OR BEYOND TO MAXIMIZE THE FLOW CAPACITY OF THE INLET. PRACTICES SHALL BE WEIGHTED, BRACED, TIED, OR OTHERWISE ANCHORED TO PREVENT MOVEMENT OR SHIFTING OF LOCATION ON PAVED SURFACES. TRAFFIC SAFETY SHALL BE INTEGRATED WITH THE USE OF THIS PRACTICE. ALL PRACTICES SHOULD BE MARKED WITH TRAFFIC SAFETY CONES AS APPROPRIATE. STRUCTURE HEIGHT SHALL NOT CAUSE FLOODING OR BY-PASS FLOW THAT WOULD CAUSE ADDITIONAL EROSION. THE STRUCTURE SHOULD BE INSPECTED AFTER EVERY STORM EVENT. ANY SEDIMENT SHOULD BE REMOVED AND DISPOSED OF ON THE SITE. ANY BROKEN O DAMAGED COMPONENTS SHOULD BE REPLACED. CHECK ALL MATERIALS FOR PROPER ANCHORING AND SECURE AS NECESSARY.
5. IF USING THE COMPOST FILTER SOCK, THE COMPOST INFILL SHALL BE WELL DECOMPOSED (MATURED AT LEAST 3 MONTHS), WEED-FREE, ORGANIC MATTER. IT SHALL BE AEROBICALLY COMPOSTED, POSSESS NO OBJECTIONABLE ODORS, AND CONTAIN LESS THAN 1%, BY DRY WEIGHT, OF MANMADE FOREIGN MATTER. WHEN USING COMPOST FILTER SOCKS ADJACENT TO SURFACE WATER, THE COMPOST SHOULD HAVE LOW NUTRIENT VALUE.

## DRAINAGE STRUCTURE INLET PROTECTION, TEMPORARY
N.T.S.

## STORM WATER POLLUTION PREVENTION PLAN NOTES:

THE CONTRACTOR SHALL BE RESPONSIBLE FOR IMPLEMENTATION AND ADHERENCE TO THE STORM WATER POLLUTION PREVENTION PLAN (SWPPP) FROM THE COMMENCEMENT OF THE PROJECT TO SITE STABILIZATION.

## POLLUTION PREVENTION MEASURES:

THE CONTRACTOR SHALL TAKE THE FOLLOWING STEPS TO PREVENT LITTER, CHEMICALS AND DEBRIS FROM ENTERING STORM DRAINS AND DISCHARGES.

1. PROPERLY INSTALL AND MAINTAIN EROSION AND SEDIMENT CONTROL DEVICES AS OUTLINED IN THE PROJECT DOCUMENTS AND IN COMPLIANCE WITH THE LATEST EDITION OF THE NEW YORK STATE STANDARDS AND SPECIFICATIONS FOR EROSION AND SEDIMENT CONTROL.
2. PROPERLY CONTAIN AND DISPOSE OF ALL MATERIALS USED ON SITE.
3. CLEAN UP SPILLS IMMEDIATELY TO MINIMIZE SAFETY HAZARD AND PREVENT SPREADING.
4. ROUTINELY INSPECT AND CLEAN OUT CATCH BASINS AND STORM LINES.
5. LABEL ALL STORM INLETS AS "NO DUMPING".
6. CONTROL LITTER BY SWEEPING AND PICKING IT UP DAILY.
7. DO NOT STORE FUEL AND WASTE ON-SITE OR USE SECONDARY CONTAINMENT MEASURES.
8. IF PRACTICAL, USE ALTERNATIVE CLEANING METHODS SUCH AS WIPING DOWN OF VEHICLES AND EQUIPMENT INSTEAD OF HOSING.
9. REMOVE ALL EXCAVATED UNSUITABLE MATERIAL FROM THE SITE AS SOON AS PRACTICABLE.
10. PRACTICE GOOD HOUSEKEEPING AND EDUCATE EMPLOYEES ON POLLUTION PREVENTION MEASURES.

## ON SITE MATERIAL STORAGE:

THE CONTRACTOR MAY HAVE THE FOLLOWING MATERIALS STORED ON-SITE DURING PROJECT CONSTRUCTION. THE LIST MAY NOT BE INCLUSIVE AND WILL VARY DURING THE DIFFERENT STAGES OF THE PROJECT.

1. PRE-CAST CONCRETE MANHOLES, CATCH BASINS AND OUTLET CONTROL STRUCTURE.
2. PVC PIPING AND APPURTENANCES.
3. STOCKPILED SOILS – TOP SOIL, SUB BASE MATERIAL, CUSHION MATERIAL, SELECT GRANULAR MATERIAL, GRAVEL AND CRUSHED STONE.
4. EROSION AND SEDIMENT CONTROL MATERIAL: SILT FENCE, RIP RAP AND SEED.
5. PAVING MATERIALS AND EQUIPMENT
6. SECURITY FENCE AND APPURTENANCES
7. EQUIPMENT REQUIRED TO PERFORM THE WORK.

THE CONTRACTOR SHALL UTILIZE THE POLLUTION PREVENTION MEASURES OUTLINED ABOVE TO PREVENT POLLUTANTS FROM STORED MATERIALS FROM REACHING THE STORM WATER CONVEYANCE DEVICES AND DISCHARGES.

## EROSION AND SEDIMENT CONTROL PRACTICES:

TEMPORARY STORM INLET PROTECTION:
STORM INLET PROTECTION INTERCEPTS SEDIMENT LADEN RUNOFF AND TRAPS SEDIMENT TO PROTECT THE DRAINAGE SYSTEM. STORM INLET PROTECTION SHALL BE PROVIDED AT EACH NEW CATCH BASIN AS IT IS INSTALLED AND AROUND EXISTING CATCH BASINS AS SHOWN.

TEMPORARY SEDIMENT CONTROL – SILT FENCE
SILT FENCE REDUCES RUNOFF VELOCITY AND CAUSES SETTLING OF SEDIMENT. INSTALL SILT FENCE PRIOR TO BEGINNING ANY EXCAVATION OR EARTHWORK ACTIVITIES WHERE SHOWN ON THE DRAWINGS. INSTALL AROUND ANY STOCKPILED SOIL MATERIALS.

TEMPORARY STABILIZED CONSTRUCTION ENTRANCE
THE STABILIZED CONSTRUCTION ENTRANCE IS USED TO REDUCE OR ELIMINATE TRACKING OF SEDIMENT ONTO STREETS AND/OR PUBLIC RIGHT-OF-WAY.

TEMPORARY SEEDING
TEMPORARY SEEDING REDUCES EROSION AND SEDIMENT LOSS FROM THE BARE GROUND. PROVIDE TEMPORARY SEEDING TO PROVIDE TEMPORARY COVER FOR DISTURBED EARTH OR SOIL STOCKPILES HELD FOR LONGER THAN SEVEN (7) DAYS. TEMPORARY SHUT DOWN OF CONSTRUCTION OR WAITING FOR OPTIMAL PLANTING TIME. IN SPRING, SUMMER OR EARLY FALL APPLY RYE GRASS AT A RATE OF 1 LB/ 1,000 SQ. FT. IN LATE FALL APPLY CERTIFIED AROOSTOOK RYE AT 2.5 LBS / 1,000 SQ. FT. OR WOOD FIBER HYDROMULCH AT MANUFACTURE'S RECOMMENDED RATE. HAY OR STRAW SHALL BE ANCHORED.

DUST CONTROL
TEMPORARY AND PERMANENT STABILIZATION MEASURES SUCH AS SEEDING, MULCHING AND INSTALLING EROSION AND SEDIMENT CONTROL BLANKETS WILL PREVENT DUST FROM BLOWING OFF SITE. INSTALL THESE MEASURES AS SOON AS FINAL GRADES ARE REACHED AND ON SOIL STOCKPILES AND DISTURBED AREAS TO BE LEFT FOR LONGER THAN SEVEN (7) DAYS.

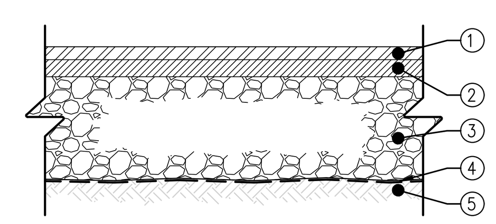


1. 2" TOP COURSE, 12.5 F2 TOP COURSE HMA, 80 SERIES COMPACTION NYSDOT ITEM 402.128204
2. 2" BINDER COURSE, 25 F9 BINDER COURSE HMA, 80 SERIES COMPACTION NYSDOT ITEM 402.258904
3. 4" SUBBASE COURSE, SUBBASE COURSE, TYPE 2 NYSDOT ITEM 304.12
4. GEOTEXTILE SEPARATION NYSDOT ITEM 207.21
5. COMPACTED SUBGRADE

NOTES:

1. COMPACT SUBGRADE TO A MODIFIED PROCTOR DENSITY OF 95%
2. SUBBASE COURSE SHALL HAVE NO MORE THAN (7%) SEVEN PERCENT BY WEIGHT FINER THAN NO. 200 SIEVE.
3. IMPRINTED PATTERN SHOWN IS FOR GRAPHICAL REPRESENTATIONS ONLY. ALL IMPRINTING/PATTERNING LAYOUTS AND POSITIONING SHALL BE APPROVED BY THE PROJECT ENGINEER PRIOR TO ACTUAL CONSTRUCTION.

## ASPHALT PAVEMENT SECTION
N.T.S.

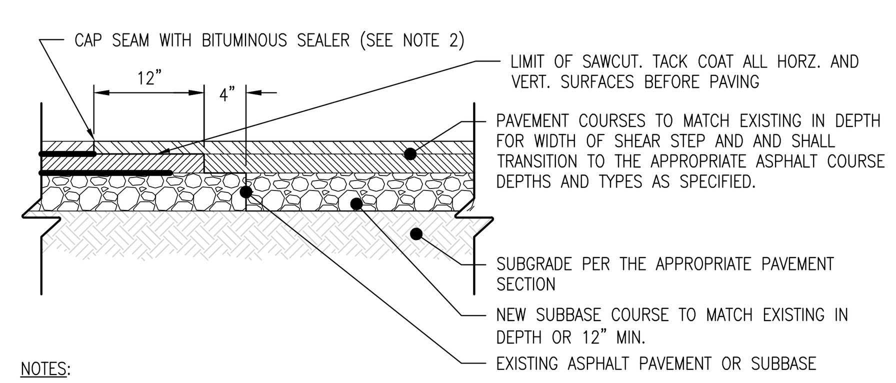


NOTES:

1. EXISTING PAVEMENT SHALL BE SAW CUT TO OBTAIN A STRAIGHT AND NEAT EDGE FOR PAVING. FINAL SAW CUT SHALL BE MADE PRIOR TO PAVING AND AFTER SUBBASE STONE IS PLACED.
2. ADD COAL TAR SEAL COAT WITH UNVULCANIZED RUBBER AT JOINT ALONG SAWCUT SEAM. SEALANT SHALL BE STRUCK OFF FLUSH WITH PAVEMENT SURFACE.
3. DEPTH OF SAWCUT SHALL BE DETERMINED ONCE THE PAVEMENT CROSS SECTION HAS BEEN EXPOSED.

## SHEAR STEP DETAIL
N.T.S.

## PHASING OF EROSION AND SEDIMENT CONTROL PRACTICES:

1. PRIOR TO COMMENCING ANY CONSTRUCTION ACTIVITIES ON THE SITE, THE CONTRACTOR SHALL MEET WITH THE OWNERS REPRESENTATIVE AND DESIGNER TO DISCUSS THE STORM WATER POLLUTION PREVENTION PLAN.
2. PRIOR TO COMMENCING ANY EXCAVATION PROCEDURES, INSTALL SILT FENCE AS SHOWN ON THE PLANS.
3. INSTALL STABILIZED CONSTRUCTION ENTRANCE.
4. AS THE NEW CATCH BASINS ARE INSTALLED, PROVIDE TEMPORARY INLET PROTECTION.
5. AS SOIL MATERIAL IS EXCAVATED OR STOCKPILED, PROVIDE A SILT FENCE ENCLOSURE AROUND THE PILE. IF THE PILE IS TO REMAIN FOR LONGER THAN SEVEN (7) DAYS, TEMPORARILY SEED THE PILE.
6. DO NOT LEAVE DISTURBED AREAS NOT TO BE COVERED BY IMPERVIOUS SURFACE BARE FOR LONGER THAN SEVEN (7) DAYS, ROUGH GRADE THE AREAS AND TEMPORARILY SEED.
7. AFTER FINAL GRADING OF VEGETATED AREAS, PROVIDE PERMANENT SEEDING.
8. UPON FINAL STABILIZATION OF THE SITE, REMOVE ALL TEMPORARY EROSION AND SEDIMENT CONTROL DEVICES. INSPECT ALL PERMANENT EROSION AND SEDIMENT CONTROL AND STORM WATER MANAGEMENT DEVICES. REPLACE ANY FAILING OR UNSATISFACTORY MEASURES. CLEAN ALL STORMWATER CATCH BASINS AND PIPING.

## EROSION AND SEDIMENT CONTROL AND STORMWATER CONTROL DEVICE MAINTENANCE:

CONSTRUCTION DURATION
ALL EROSION AND SEDIMENT CONTROL DEVICES SHALL BE INSPECTED WEEKLY.

1. SILT FENCE SHALL BE REPLACED WHEN TORN, IS BULGING OR NO LONGER MEETING THE INSTALLATION DETAILS.
2. THE STABILIZED CONSTRUCTION ENTRANCE SHALL BE MAINTAINED IN A CONDITION TO PREVENT TRACKING OF SEDIMENT ON TO ROADS AND PUBLIC RIGHTS-OF-WAY. INSPECT TOP DRESSING AND PROVIDE ADDITIONAL AGGREGATE AS NECESSARY.
3. DRAINAGE STRUCTURES AND PIPING SHALL BE CHECKED FOR CLOGGING AND SEDIMENT ACCUMULATION AND CLEANED IF REQUIRED.

PROJECT COMPLETION
AT THE PROJECT COMPLETION AND PRIOR TO PROJECT CLOSE OUT, THE CONTRACTOR SHALL INSPECT ALL PERMANENT EROSION AND CONTROL AND STORMWATER MANAGEMENT PRACTICES.

1. ACCEPTABLE VEGETATION ESTABLISHMENT IN ACCORDANCE WITH SPECIFICATIONS.
2. DRAINAGE STRUCTURES AND PIPING SHALL BE CHECKED FOR CLOGGING AND SEDIMENT ACCUMULATION AND CLEANED IF REQUIRED.

## MAINTENANCE OF PERMANENT STORMWATER MANAGEMENT PRACTICES

1. DRAINAGE STRUCTURES AND PIPING SHALL BE CHECKED FOR CLOGGING AND SEDIMENT ACCUMULATION AND CLEANED IF REQUIRED.

## SITE ASSESSMENT AND INSPECTIONS

COMPLY WILL ALL CONDITIONS INCLUDED IN THE SPDES PERMIT, PART III.D.3 THROUGH PART III.D.5. THE REQUIREMENTS IN THESE SUBSECTIONS OF THE SPDES PERMIT TAKE PRECEDENCE OVER NOTES ON THIS DRAWING AND ON THE EROSION AND SEDIMENT CONTROL PLAN WHERE CONTRADICTIONS BETWEEN THESE DRAWINGS AND THE SPDES PERMIT MAY ARISE.

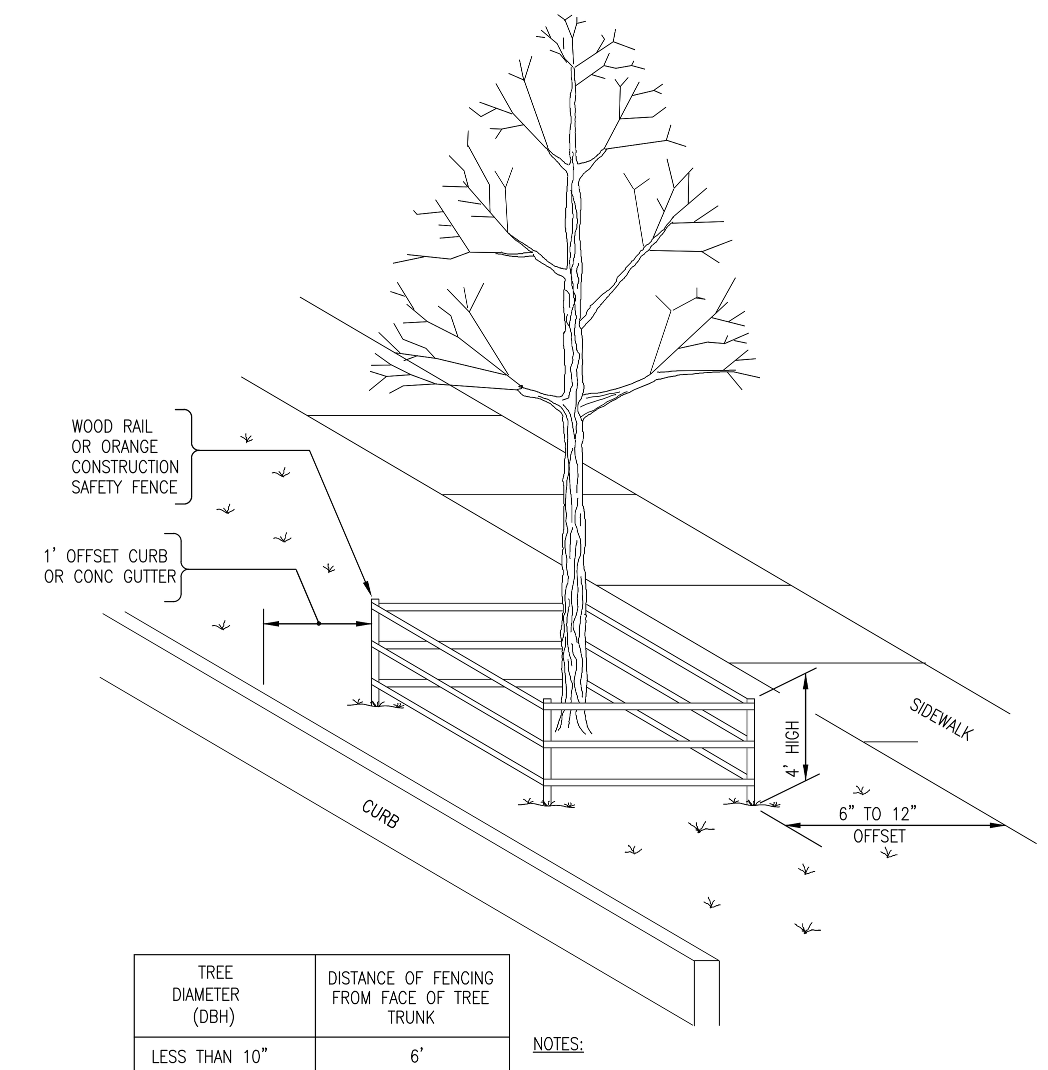


| TREE DIAMETER (DBH) | DISTANCE OF FENCING FROM FACE OF TREE TRUNK |
|---|---|
| LESS THAN 10" | 6' |
| 10" – 14" | 10' |
| 15" – 19" | 12' |
| 20" OR MORE | 15' |

NOTES:

1. ALL TREES WITHIN THE PROJECT LIMITS THAT ARE TO REMAIN, ARE TO RECEIVE THIS TREATMENT.
2. DO NOT LEAVE CONSTRUCTION EQUIPMENT RUNNING (IDLING) UNDER TREE CANOPY.

## TREE PROTECTION SYSTEM 5'–0"
## ITEM NO. 611.21050009
N.T.S.

6/15/2022 4:10:27 PM

CONSULTANT INFORMATION
LiRo Engineers, Inc.
A LiRo Group Company
Mineola, N.Y. 516-746-2350[T]

CONSULTANT SEAL
STATE OF NEW YORK
KENNETH J. HOLMSTROM
No. 059134
LICENSED PROFESSIONAL ENGINEER

| REVISION NUMBER | DATE | MADE BY | APP'D BY | REVISION |
|---|---|---|---|---|

RECORD DRAWING CERTIFICATION
☐ AS BUILT – CHANGES AS NOTED ☐ AS BUILT – NO CHANGES

CONTRACTOR
NAME
SIGNATURE
TITLE DATE

PROJECT COORDINATOR
NAME
SIGNATURE
TITLE DATE

WESTCHESTER COUNTY, NEW YORK
DEPARTMENT OF PUBLIC WORKS AND TRANSPORTATION
DIVISION OF ENGINEERING

**INFRASTRUCTURE REHABILITATION PHASE 3**
**PLAYLAND PARK, RYE, NEW YORK**
**NORTHEAST BURGER BARN**
**CIVIL DETAILS 1**

CONTRACT NUMBER: **22-523**
SHEET NUMBER: **BB-C-06**
DWG NO.: 97 of 664
SCALE: **AS INDICATED**
DATE: **08/23/2022**
DPW FILE NUMBER: **1-118-C-846-0**
REV. NO. **0**

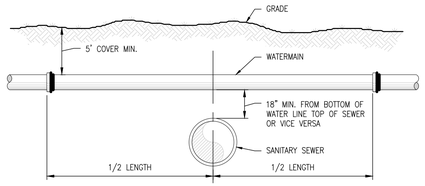


NOTE:

ALL EXCAVATIONS UNDER ANY UTILITY WILL BE BACKFILLED WITH NO. 1 CRUSHED STONE TO A POINT AT LEAST 6" OVER THE TOP OF THE UTILITY.

## TYPICAL WATER LINE – SEWER LINE CROSSING

N.T.S.

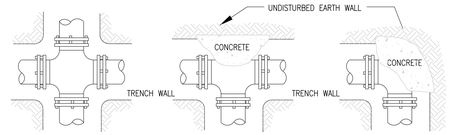


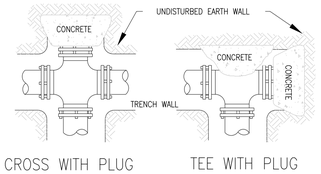


| HORIZONTAL THRUST BLOCKING | | | | | |
|---|---|---|---|---|---|
| (BLOCKING HEIGHT GREATER THAN PIPE O.D.) (BLOCKING WIDTH BETWEEN 1 & 2 TIMES HEIGHT) | | | | | |
| REQUIRED SQ. FT. OF UNDISTURBED EARTH WALL FOR REACTION BACKING | | | | | |
| TYPE OF FITTINGS | | | | | |
| PIPE SIZE | TEE & PLUG | BENDS | | | |
| | | 90° | 45° | 22 1/2° | 11 1/4° |
| 4–6" | 3.2 | 4.5 | 2.5 | 1.3 | 0.7 |
| 8" | 3.2 | 5.6 | 2.5 | 1.3 | 0.7 |
| 12" | 3.2 | 12.75 | 3.7 | 1.3 | 0.7 |

## HORIZONTAL THRUST BLOCKING

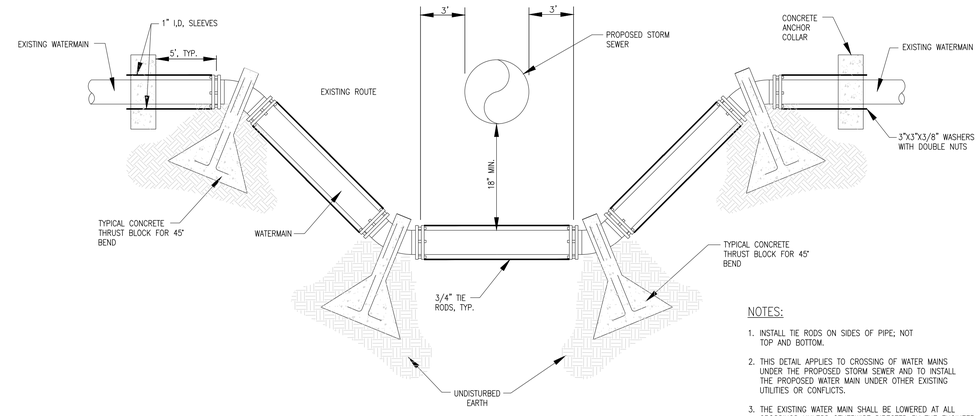


NOTES:

1. INSTALL TIE RODS ON SIDES OF PIPE; NOT TOP AND BOTTOM.
2. THIS DETAIL APPLIES TO CROSSING OF WATER MAINS UNDER THE PROPOSED STORM SEWER AND TO INSTALL THE PROPOSED WATER MAIN UNDER OTHER EXISTING UTILITIES OR CONFLICTS.
3. THE EXISTING WATER MAIN SHALL BE LOWERED AT ALL CROSSINGS UNLESS OTHERWISE DIRECTED BY THE ENGINEER IN THE FIELD.

## TYPICAL WATERMAIN CROSSING DETAIL

N.T.S.

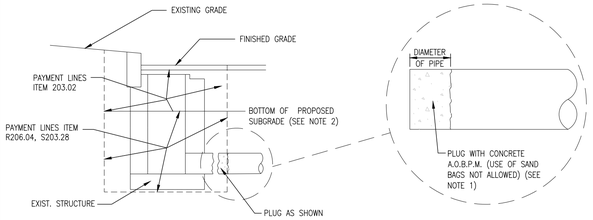


NOTES:

1. THE COST OF PLUGGING EXISTING LATERALS TO BE ABANDONED SHALL BE INCLUDED IN THE PRICE BID FOR TRENCH EXCAVATION IN THE CONTRACT. NO SEPARATE PAYMENT WILL BE MADE FOR THIS WORK.
2. UPPER PAY LIMITS FOR TRENCH AND CULVERT EXCAVATION SHALL BE TOP OF EXISTING SURFACE AT TIME OF EXCAVATION.

## DETAILS FOR PLUGGING ABANDONED DRAINAGE STRUCTURES AND PIPES

N.T.S.

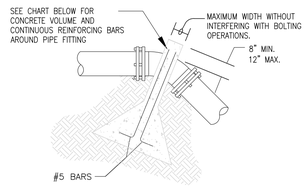


## UPWARD THRUST BLOCKING

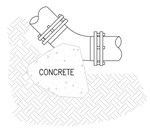


## DOWNWARD THRUST BLOCKING

(SEE HORIZONTAL BLOCKING DETAIL)
(ALL BENDS SIMILAR)

| UPWARD THRUST BLOCKING | | | | | | | | | | | |
|---|---|---|---|---|---|---|---|---|---|---|---|
| (REQUIRED REINFORCING BARS & CUBIC YARDS OF P.C. CONCRETE | | | | | | | | | | | |
| | 90° BEND | | | 45° BEND | | | 22 1/2° BEND | | | 11 1/4° BEND | | |
| PIPE SIZE | CONC. C.Y. | REINF | | CONC. C.Y. | REINF | | CONC. C.Y. | REINF | | CONC. C.Y. | REINF | |
| | | QTY. | SIZE | | QTY. | SIZE | | QTY. | SIZE | | QTY. | SIZE |
| 4–6" | 2.6 | 4 | #5 | 2.1 | 4 | #5 | 1.1 | 4 | #5 | 0.6 | 4 | #5 |
| 8" | 2.9 | 4 | #5 | 2.1 | 4 | #5 | 1.1 | 4 | #5 | 0.6 | 4 | #5 |
| 12" | 6.6 | 4 | #5 | 4.7 | 4 | #5 | 2.5 | 4 | #5 | 1.3 | 4 | #5 |

## VERTICAL THRUST BLOCKING

NOTES:

1. DO NOT COVER BELLS OR FLANGES WITH CONCRETE
2. WRAP ALL FITTINGS WITH VISQUEEN.
3. BACK ALL TEES ACCORDING TO SIZE OF BRANCH.
4. BACKING FUTURE LINE EXTENSIONS SHALL BE SUCH THAT LATER REMOVAL IS POSSIBLE.
5. ALL BENDS WHERE FITTINGS ARE USED, BOTH HORIZONTAL OR VERTICAL SHALL BE BACKED.
6. REACTION BACKING TABLE IS BASED ON 150 P.S.I. AND SOIL BEARING PRESSURE OF 2,000 lb./sq.ft. ADDITIONAL BACKING MAY BE REQUIRED IN SOME AREAS AS DIRECTED BY ENGINEERS.
7. ALL CONCRETE SHALL BE 2500 P.S.I. MIN. .

## THRUST BLOCKING DETAIL

N.T.S.

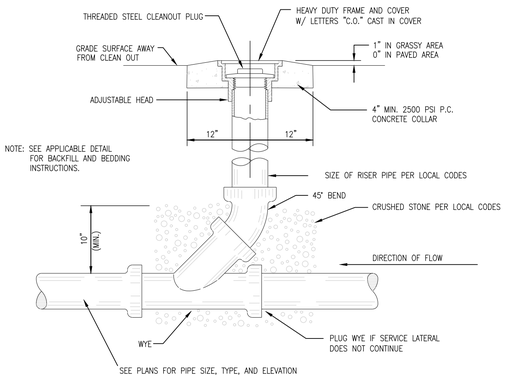


## SEWER CLEAN–OUT

N.T.S.

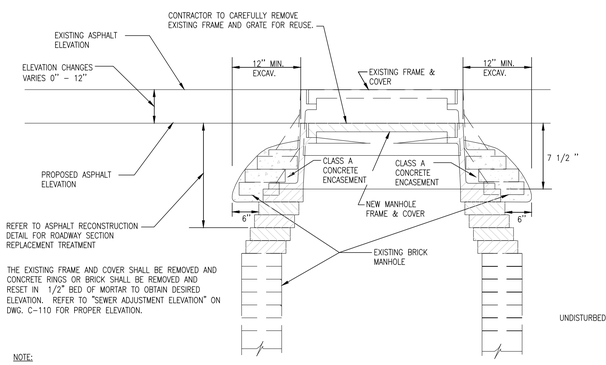


NOTE:

THE LOWER LIMIT OF THE CLASS A CONCRETE ENCASEMENT SHALL BE AT, OR BELOW, THE LOWEST PORTION OF THE BRICK AND MORTAR LEVELING COURSE. ALL BRICK SHALL BE RED, 8,000 PSI BRICK.

ADJUSTMENT AT FLEXIBLE PAVEMENT

## RESETTING EXISTING DRAINAGE FRAMES ON EXISTING DRAINAGE STRUCTURES
## ITEM NO. 604.07210110

N.T.S.

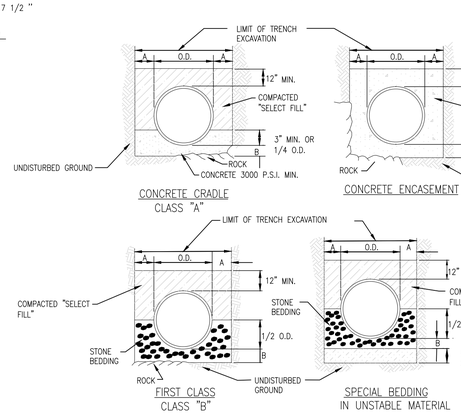


NOTES:

1. SELECT FILL SHALL BE SAND, GRAVEL, AND SIMILAR MATERIAL WHICH SHALL BE FREE FROM CLAY, LOAM, ORGANIC MATERIAL, DEBRIS, FROZEN MATERIAL AND SHALL CONTAIN ONLY SMALL AMOUNTS OF STONE, PEBBLES OR LUMPS OVER ONE INCH IN GREATEST DIMENSION BUT NONE OVER TWO INCHES IN GREATEST DIMENSION, MEETING ASTM IA,IB,OR II.
2. STONE BEDDING SHALL MEAN APPROVED IMPORTED AGGREGATE MEETING THE REQUIREMENTS OF THE NEW YORK STATE DEPARTMENT OF TRANSPORTATION, STANDARD SPECIFICATION, MAY, 2008 EDITION, AS REVISED, SUBSECTION 703–01 "FINE AGGREGATE". PRIMARY SIZE 1 OR A MIXTURE OF PRIMARY SIZES 1 AND 2. OR ASTM CLASS IA,
3. COARSE AGGREGATE SHALL MEAN APPROVED IMPORTED AGGREGATE MEETING THE REQUIREMENTS OF THE NEW YORK STATE DEPARTMENT OF TRANSPORTATION, STANDARD SPECIFICATION, MAT 2008 EDITION, AS REVISED, SUBSECTION 703–02 "COURSE AGGREGATE". PRIMARY SIZE 3 AND/OR 4
4. THIS FIGURE APPLIES TO SANITARY, STORM and COMBINED MAINLINE AND LATERAL PIPE INSTALLATIONS AS WELL AS FORCEMAINS.
5. FIRST CLASS BEDDING SHALL BE USED UNLESS OTHERWISE SHOWN ON THE DRAWINGS OR DIRECTED BY THE ENGINEER.

| PIPE DIA. | DIM. A | DIM. B |
|---|---|---|
| UP TO 18" | 1.0' | 6" |
| 21" TO 36" | 1.5' | 9" |
| OVER 36" | 1.5' | 12" |

## UTILITY BEDDING MATERIAL DETAIL

N.T.S.

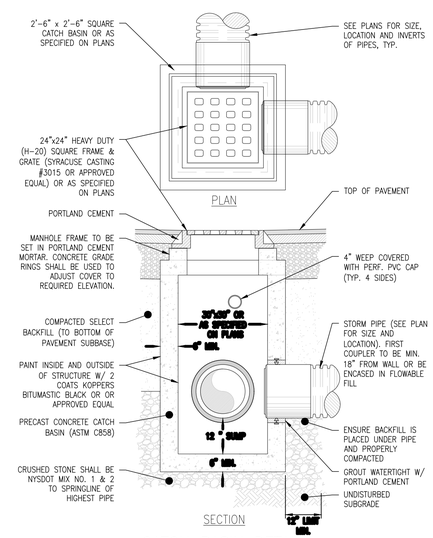


## CATCH BASIN DETAIL

N.T.S.

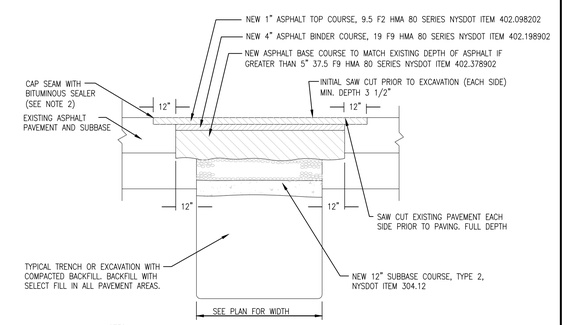


NOTES:

1. EXISTING PAVEMENT SHALL BE SAW CUT TO OBTAIN A STRAIGHT AND NEAT EDGE FOR PAVING. FINAL SAW CUT SHALL BE MADE PRIOR TO PAVING AFTER BACKFILL OF TRENCH TO BOTTOM OF NEW PAVEMENT
2. ALL SEAMS BETWEEN EXISTING AND NEW ASPHALT SURFACES SHALL BE SEALED WITH AN ASPHALT FILLER CORRESPONDING TO THE MATERIAL REQUIREMENTS OF N.Y.S.D.O.T. TABLE 702–5 MATERIAL DESIGNATION 702–3401. COST TO FURNISH AND APPLY THIS MATERIAL SHALL BE INCLUDED IN THE PRICE BID FOR ASPHALT TOP

## PAVEMENT TRENCH RESTORATION DETAIL

N.T.S.

6/15/2022 4:10:27 PM

CONSULTANT INFORMATION

LiRo Engineers, Inc.
A LiRo Group Company
Mineola, N.Y. 516-746-2350[T]

CONSULTANT SEAL

STATE OF NEW YORK · KENNETH J. HOCHSTRASSER · LICENSE NO. 089134 · PROFESSIONAL ENGINEER

| REVISION NUMBER | DATE | MADE BY | APP'D BY | REVISION |
|---|---|---|---|---|

RECORD DRAWING CERTIFICATION

☐ AS BUILT – CHANGES AS NOTED ☐ AS BUILT – NO CHANGES

CONTRACTOR
NAME
SIGNATURE
TITLE DATE

PROJECT COORDINATOR
NAME
SIGNATURE
TITLE DATE

WESTCHESTER COUNTY, NEW YORK
DEPARTMENT OF PUBLIC WORKS AND TRANSPORTATION
DIVISION OF ENGINEERING

**INFRASTRUCTURE REHABILITATION PHASE 3**
**PLAYLAND PARK, RYE, NEW YORK**
**NORTHEAST BURGER BARN**
**CIVIL DETAILS 2**

| | |
|---|---|
| CONTRACT NUMBER | 22-523 |
| SHEET NUMBER | BB-C-07 |
| DWG NO.: | 98 of 664 |
| SCALE: | AS INDICATED |
| DATE: | 08/23/2022 |
| DPW FILE NUMBER | 1-118-C-847-0 |
| REV. NO.: | 0 |

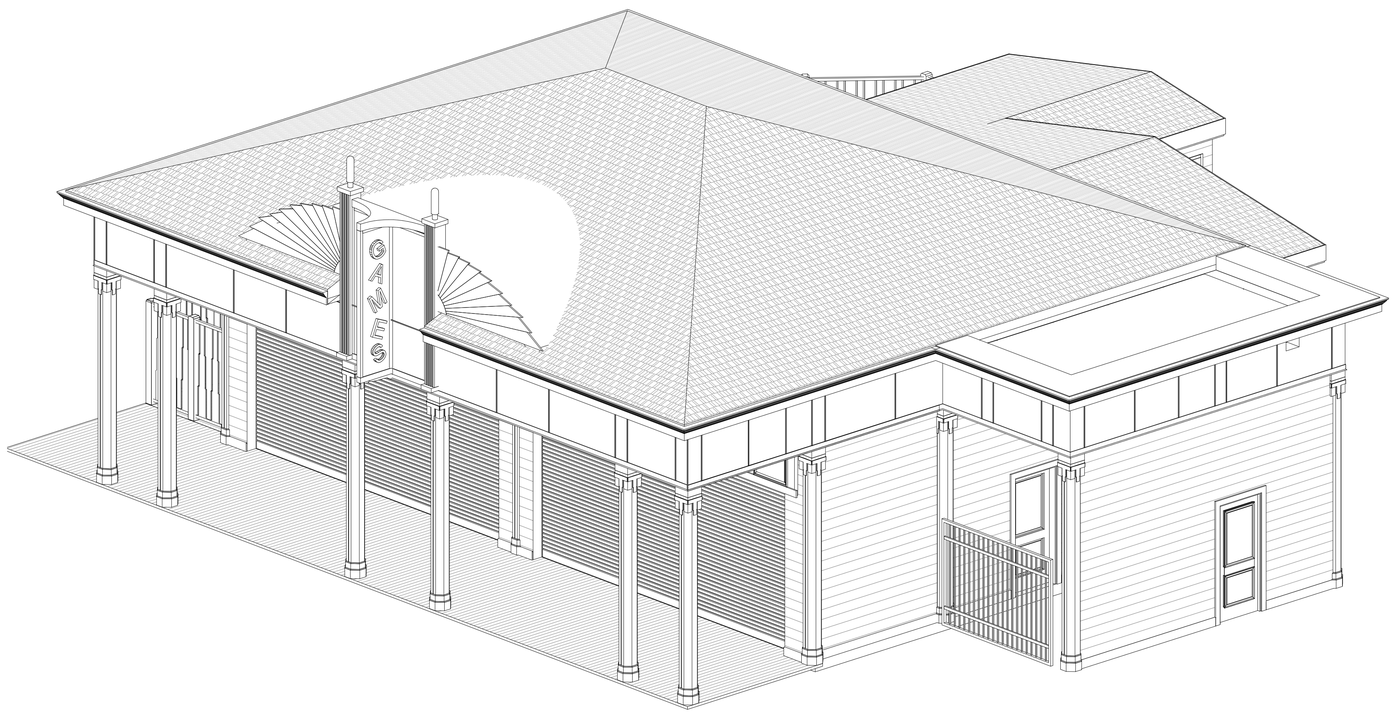


1 CXA - BUILDING AXONOMETRIC

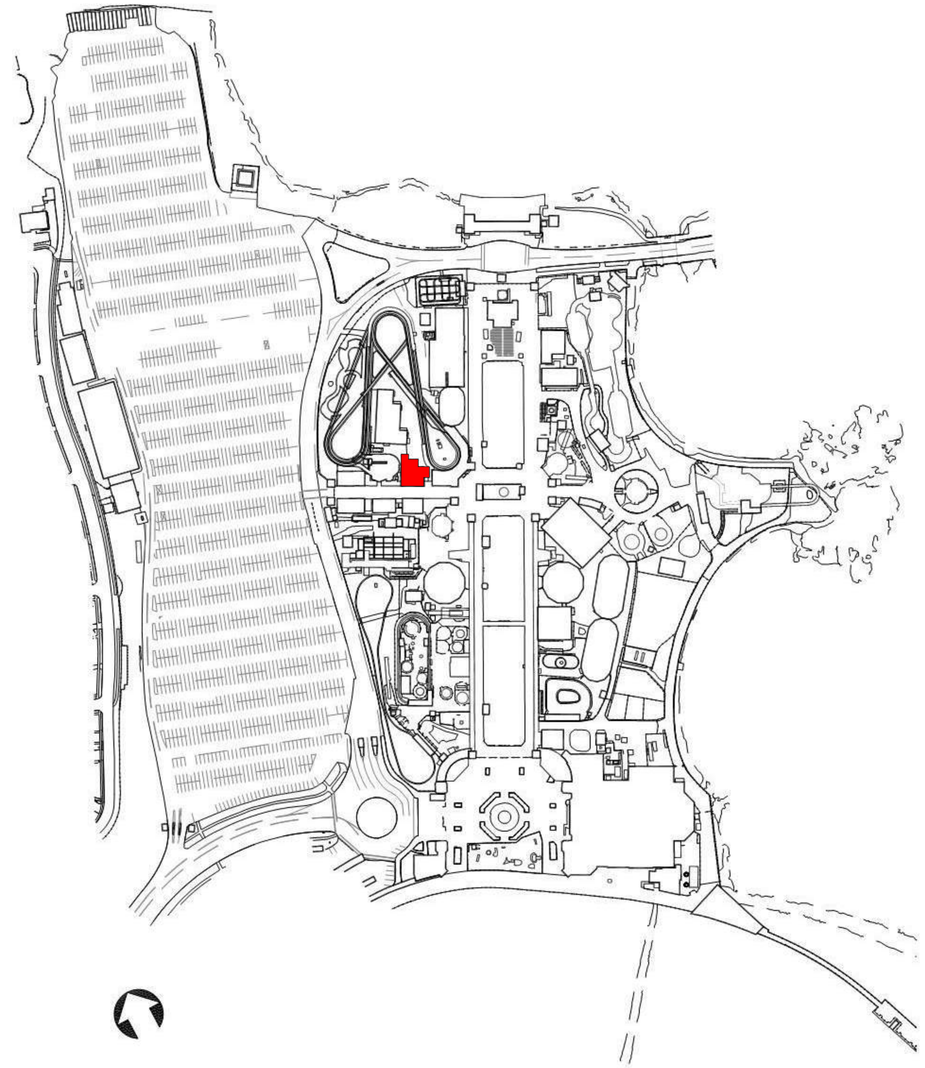

KEY MAP
SCALE: N.T.S.

8/30/2022 4:06:29 PM

CONSULTANT INFORMATION

The LiRo Group
3 Aerial Way, Syosset, New York 11791
(516) 938-5476 www.liro.com

CONSULTANT SEAL

REGISTERED ARCHITECT ROBERT D. YOUNG JR. 023200 STATE OF NEW YORK

| REVISION NUMBER | DATE | MADE BY | APP'D BY | REVISION |
|---|---|---|---|---|

RECORD DRAWING CERTIFICATION

☐ AS BUILT – CHANGES AS NOTED ☐ AS BUILT – NO CHANGES

CONTRACTOR
NAME
SIGNATURE
TITLE DATE

PROJECT COORDINATOR
NAME
SIGNATURE
TITLE DATE

WESTCHESTER COUNTY, NEW YORK
DEPARTMENT OF PUBLIC WORKS AND TRANSPORTATION
DIVISION OF ENGINEERING

**INFRASTRUCTURE REHABILITATION PHASE 3**
**PLAYLAND PARK, RYE, NEW YORK**
**CROSS AXIS BUILDING A**
**BUILDING INTRO**

CONTRACT NUMBER 22-523
SHEET NUMBER **CXA-G-01**
DWG NO.: 99 of 664
SCALE: **12" = 1'-0"**
DATE: **08/23/2022**
DPW FILE NUMBER **1-118-G-848-0**
REV. NO. 0

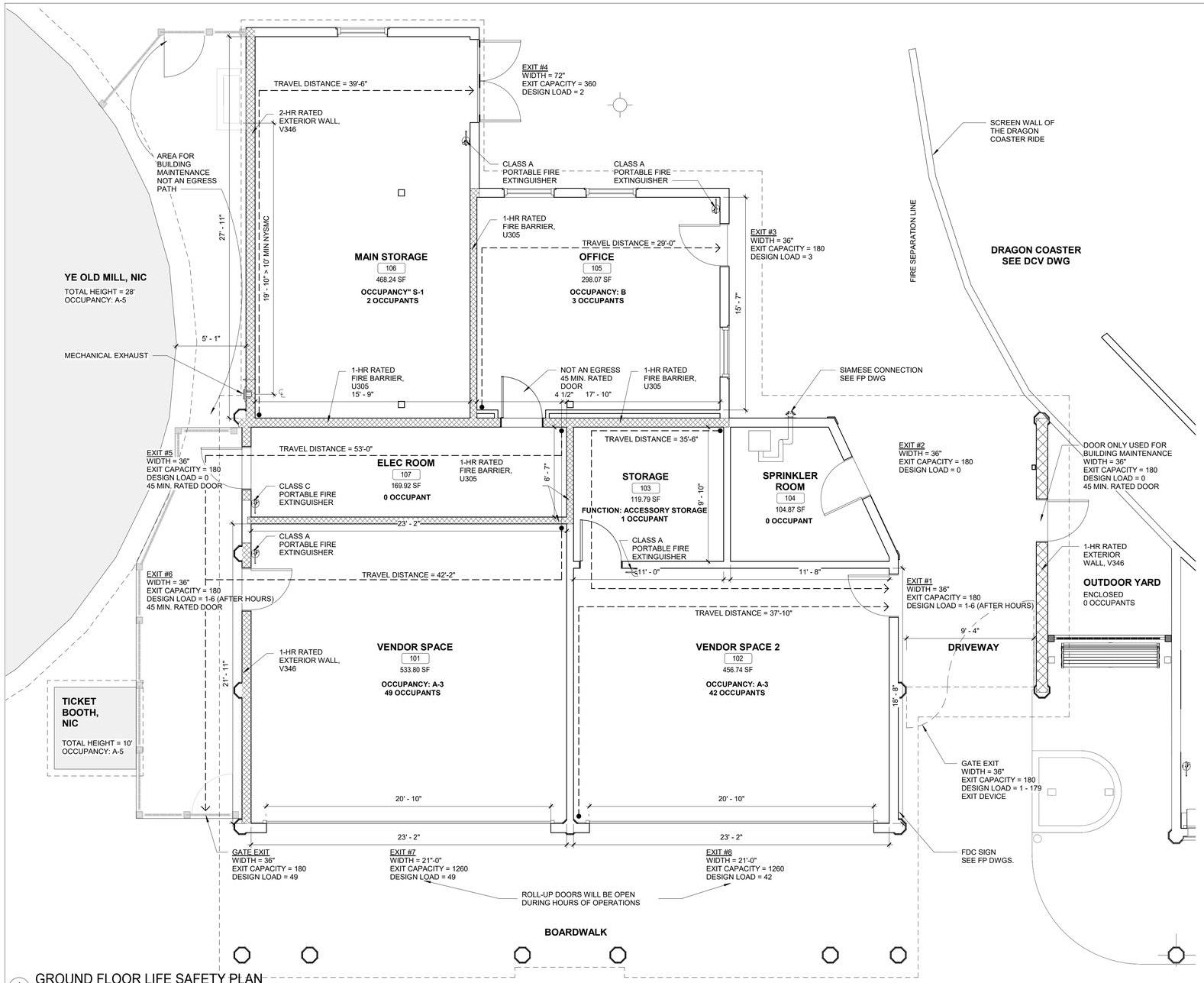


1 GROUND FLOOR LIFE SAFETY PLAN

1/4" = 1'-0"

**CODE ANALYSIS**

2020 Building code of New York State

| Construction Type (Tbl 601) | V B | (Fully Sprinklered) |
|---|---|---|
| | A-3 | Arcade |
| Occupancy Classification | B | Office |
| | S | Storage |
| Number of Stories (Tbl 504.4) | 1 | < 2 (max. allowable) |
| Height (ft) (Tbl 504.3) | 25.1' | < 60 (max. allowable) |
| Building Area (sf) (Tbl 506.2) | 2,170 | < 24,000 (max. allowable) |
| **Required Separation of Occupancies (Hours) (Tbl 508.4)** | **Required** | **Proposed** |
| A - B (automatic sprinkler system) | 1 | 1 |
| A- S-1 (automatic sprinkler system) | 1 | 1 |
| B - S-1 (automatic sprinkler system) | 1 | 1 |
| **Fire-Resistance Rating Requirements (Tbl 601)** | **Required** | **Proposed** |
| Primary Structure Frame | 0 | 0 |
| (including Columns, Girders, Trusses) | | |
| Bearing Walls | | |
| Exterior (Tbl 602) | | |
| Fire separation distance < 10 ft (A, B) | 1 | 1 |
| Fire separation distance < 10 ft (S-1) | 2 | 2 |
| Occupancy Separation | 1 | 1 |
| Interior | 0 | 0 |
| Nonbearing Walls and Partitions | | |
| Exterior (Tbl 602) | | |
| Fire separation distance > = 10 ft | 0 | 0 |
| Interior | 0 | 0 |
| Electrical Room | 1 | 1 |
| Floor Construction | | |
| Including supporting beam and joists | 0 | 0 |
| Roof Construction | | |
| Including supporting beam and joists | 0 | 0 |
| **Allowable Area of Openings (BC 705.8)* See CXA-G-02.1** | **Required** | **Proposed** |
| Fire separation distance 5 > 3 ft (Unprotected, Sprinklered) | 15% | 6% |
| Fire separation distance 10 > 5 ft (Unprotected, Sprinklered) | 25% | 6% |
| Fire separation distance 15 > 10 ft (Unprotected, Sprinklered) | 45% | 24% |
| Fire separation distance 15 ft > 20 ft (Unprotected, Sprinklered) | No limit | |
| **Interior Finishes Class (BC 803)** | | |
| Wall and Ceiling | C | C |
| Floors - Radiant Flux | Class II | Class II |
| **Portable Fire Extinguishers (BC 906)** | | |
| Fire Hazard | Class A, typ. (Class C for Elec. Room) | Class A, typ. (Class C for Elec. Room) |
| Hazard Occupancy | Ordinary | Ordinary |
| Minimum rated single extinguisher | 2-A | Class A |
| Maximum floor area per unit of A | 1,500 sf | 534 sf |
| Maximum floor area for extinguisher | 11,250 sf | 534 sf |
| Maximum distance of travel to extinguisher | 75' | 35' |
| Number of Type 2-A extinguishers required | **Required** | **Provided** |
| First Floor | 2 | 5 |
| **Means of Egress** | | |
| Max. Floor Area Allowances per Occupant (Tbl 1004.5) (sf) | | |
| Gaming Floor | 11 gross | |
| Business Area | 150 gross | |
| Accessory Storage Area | 300 gross | |
| Design Occupant Load | | |
| Vendor #1 (534 sf) | 49 | |
| Vendor #2 (457 sf) | 42 | |
| Elec. Room/Tel/Data (170 sf) | 0 | |
| Sprinkler Room (105 sf) | 0 | |
| Storage (120 sf) | 1 | |
| Office (310 sf) | 3 | |
| Main Storage (469 sf) | 2 | |
| Egress Width per Occupant (BC 1005.3.2) | | |
| Other Egress Components | 0.2 | |
| Egress Width Required (inches) | | |
| Vendor #1 | 9.8 | 72 Provided |
| Vendor #2 | 8.4 | 36 provided |
| Note: Roll-up doors will be open during business hours | | |
| | **Minimum** | **Provided** |
| **Minimum number of Exits** | | |
| Occupant Load : 1 - 500 | 2 | 1* |
| ***Single Exits (BC 1006.3.3[2])** | **Minimum** | **Provided** |
| First Story above or below grade plane (A Occupancy) in compliance with Tbl 1006.2.1. Occupant load < 49 per space | 1 | 1 |
| **Maximum Travel Distance (BC 1017)** | | |
| A Occupancy with Sprinkler System | 250' | 42'-2" |

**APPLICABLE CODES**

NEW YORK STATE BUILDING CODE 2020 (BC)
NEW YORK STATE EXISTING BUILDING CODE 2020 (EBC)
ENERGY CONSERVATION CONSTRUCTION CODE OF NEW YORK STATE (ECCC)
NFPA 13 2013 (NFPA 13)

**HISTORICAL BUILDING REGISTRY**

*PLAYLAND AMUSEMENT PARK* IS A DESIGNATED NATIONAL HISTORIC LANDMARK AND IS LISTED ON THE NATIONAL REGISTER OF HISTORIC PLACES.

THE NATIONAL HISTORIC PLACES REGISTER REFERENCE NUMBER: 80004529_NHL
NATIONAL ARCHIVE IDENTIFIER: 75323175

CROSS AXIS BUILDING A IS A CONTRIBUTING STRUCTURE OF THE LANDMARK AND THEREFORE AN HISTORIC BUILDING UNDER THE 2020 BUILDING CODE AND 2020 EXISTING BUILDING CODE OF NEW YORK STATE

**2020 NYS EXISTING BUILDING CODE**

[NY] EBC 601.1 ALTERATION 3 - WHERE THE WORK AREA EXCEEDS 50% OF THE BUILDING AREA

[NY] EBC 907.1 LEVEL 3 ALTERATIONS TO EXISTING BUILDINGS ARE PERMITTED WITHOUT REQUIRING THE ENTIRE BUILDING TO COMPLY WITH THE ENERGY REQUIREMENTS OF ECCC.

**2020 NYS ENERGY CONSERVATION CODE**

[NY] C501.6 HISTORIC BUILDINGS
PROVISIONS OF THIS CODE RELATING TO THE CONSTRUCTION, REPAIR, ALTERATION, RESTORATION AND MOVEMENT OF STRUCTURES, AND CHANGE OF OCCUPANCY SHALL NOT BE MANDATORY FOR HISTORIC BUILDINGS.

**NEW CONSTRUCTION MIN R-VALUE**

[NY] TABLE C402.1.3/4
CLIMATE ZONE - MARINE 4

| | |
|---|---|
| WOOD FRAME WALLS, ABOVE GROUND | MIN R-20 |
| ATTIC AND OTHER ROOFS | MIN R-38 |
| UNHEATED SLABS | MIN R-10 FOR 24" BELOW |
| OPAQUE SWINGING DOOR | MAX U-0.37 |
| OPERABLE FENESTRATION | MAX U-0.45 |

ADDITION TO MEET PRESCRIPTIVE METHOD C502.2 IN 2020 NYS ECCC

**EXISTING BUILDING CODE**

EBC 302.4 - EXISTING MATERIALS
MATERIALS ALREADY IN USE IN A BUILDING IN COMPLIANCE WITH REQUIREMENTS OR APPROVALS IN EFFECT AT THE TIME OF THEIR ERECTION OR INSTALLATION SHALL BE PERMITTED TO REMAIN IN USE UNLESS DETERMINED BY THE BUILDING OFFICIAL TO BE UNSAFE.

EBC 302.5 - NEW REPLACEMENT MATERIALS
EXCEPT AS OTHERWISE REQUIRED OR PERMITTED BY THIS CODE, MATERIALS PERMITTED BY THE APPLICABLE CODE FOR NEW CONSTRUCTION SHALL BE USED. LIKE MATERIALS SHALL BE PERMITTED FOR REPAIRS AND ALTERATIONS, PROVIDED THAT UNSAFE CONDITIONS ARE NOT CREATED. HAZARDOUS MATERIALS SHALL NOT BE USED WHERE THE CODE FOR NEW CONSTRUCTION WOULD NOT PERMIT THEIR USE IN BUILDINGS OF SIMILAR OCCUPANCY, PURPOSE AND LOCATION.

EBC 305.5 - ADDITIONS
PROVISIONS FOR NEW CONSTRUCTION SHALL APPLY TO ADDITIONS.

EXISTING BUILDING CODE

8/30/2022 4:06:32 PM

CONSULTANT INFORMATION

The LiRo Group
3 Aerial Way, Syosset, New York 11791
(516) 938-5476 www.liro.com

CONSULTANT SEAL

REGISTERED ARCHITECT ROBERT D. YOUNG 023280 STATE OF NEW YORK

| REVISION NUMBER | DATE | MADE BY | APP'D BY | REVISION |
|---|---|---|---|---|

RECORD DRAWING CERTIFICATION

☐ AS BUILT – CHANGES AS NOTED ☐ AS BUILT – NO CHANGES

CONTRACTOR
NAME
SIGNATURE
TITLE DATE

PROJECT COORDINATOR
NAME
SIGNATURE
TITLE DATE

WESTCHESTER COUNTY, NEW YORK
DEPARTMENT OF PUBLIC WORKS AND TRANSPORTATION
DIVISION OF ENGINEERING

**INFRASTRUCTURE REHABILITATION PHASE 3**
**PLAYLAND PARK, RYE, NEW YORK**
**CROSS AXIS BUILDING A**
**CXA - LIFE SAFETY PLANS**

CONTRACT NUMBER 22-523
SHEET NUMBER CXA-G-02
DWG NO.: 100 of 664
SCALE: 1/4" = 1'-0"
DATE: 08/23/2022
DPW FILE NUMBER 1-118-G-849-0
REV. NO. 0

**MAXIMUM AREA OF EXTERIOR WALL OPENINGS**

[NY] TABLE 705.8

EAST ELEVATION 1: 5' TO LESS THAN 10' (UP, S) = 25%
EAST ELEVATION 2: 10' TO LESS THAN 15' (UP, S) = 45%
WEST ELEVATION: 3' TO LESS THAN 5' (UP, S) = 15%

| | TOTAL SF | OPENING SF | PERCENTAGE |
|---|---|---|---|
| EAST ELEVATION 1 | 344 SF | 21 SF | 6% |
| EAST ELEVATION 2 | 163 SF | 39 SF | 24% |
| WEST ELEVATION | 752 SF | 42 SF | 6% |

UP = UNPROTECTED
S = SPRINKLERED

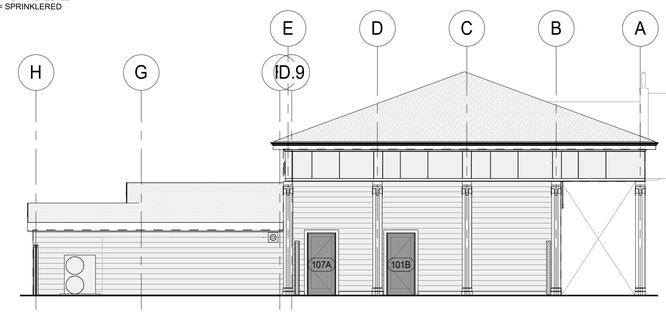


4 BUILDING ELEVATION - WEST OPENING PERCENTAGE
1/8" = 1'-0"

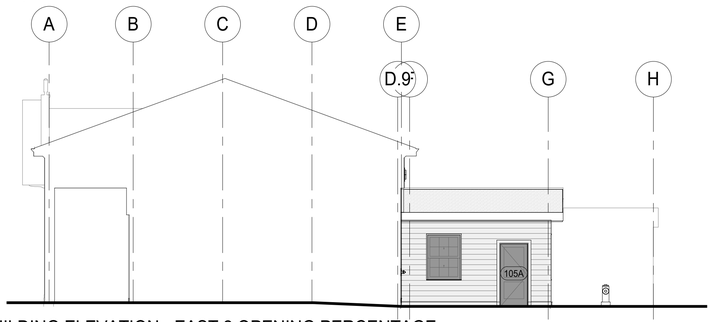


3 BUILDING ELEVATION - EAST 2 OPENING PERCENTAGE
1/8" = 1'-0"

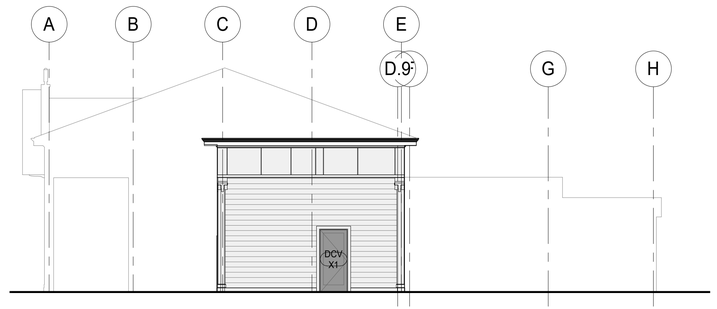


2 BUILDING ELEVATION - EAST 1 OPENING PERCENTAGE
1/8" = 1'-0"

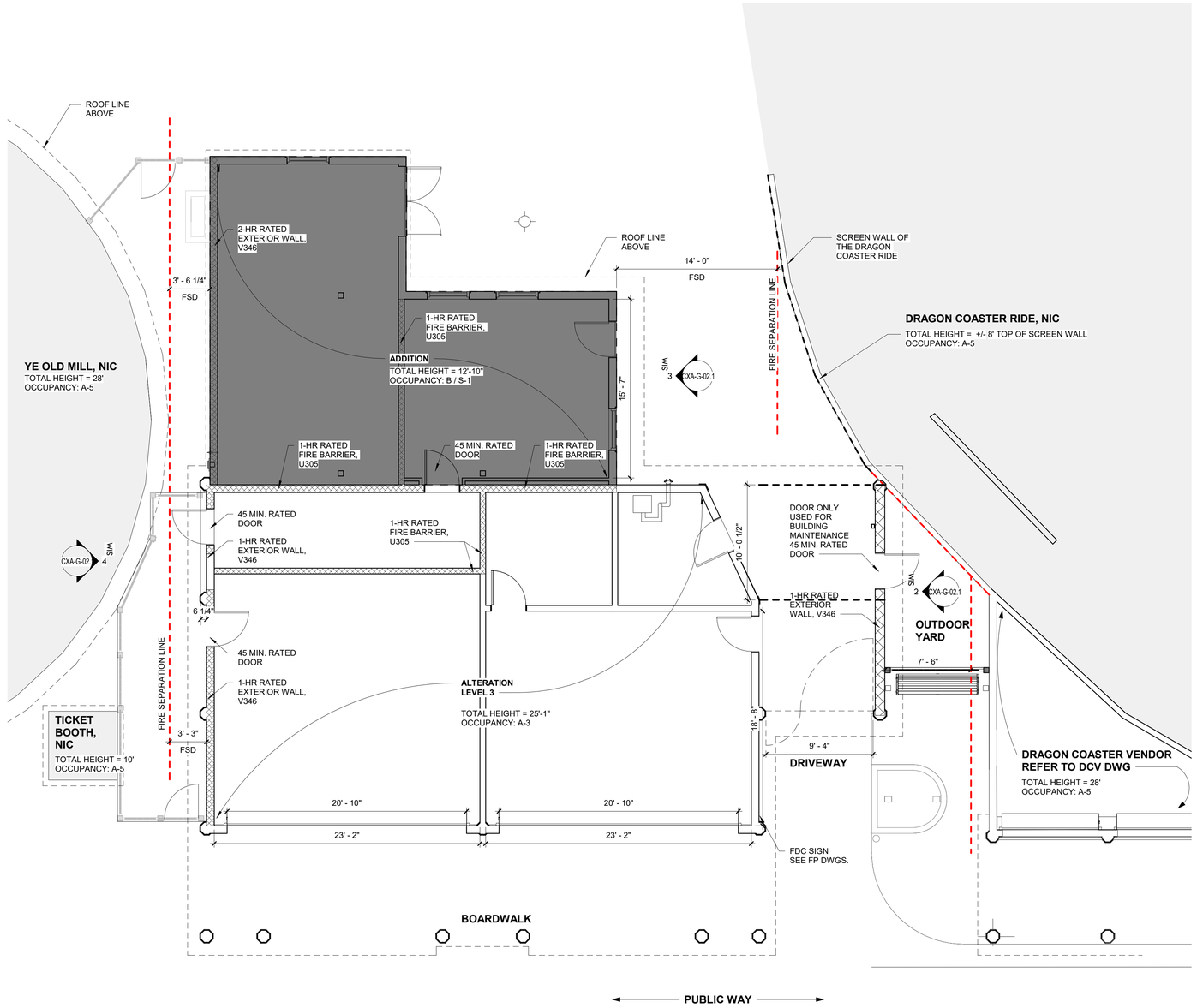


1 GROUND FLOOR FIRE SEPARATION
3/16" = 1'-0"

8/30/2022 4:06:37 PM

CONSULTANT INFORMATION
The LiRo Group
3 Aerial Way, Syosset, New York 11791
(516) 938-5476 www.liro.com

CONSULTANT SEAL
REGISTERED ARCHITECT ROBERT D. YOUNG 023280 STATE OF NEW YORK

| REVISION NUMBER | DATE | MADE BY | APP'D BY | REVISION |
|---|---|---|---|---|

RECORD DRAWING CERTIFICATION
☐ AS BUILT – CHANGES AS NOTED ☐ AS BUILT – NO CHANGES

CONTRACTOR
NAME
SIGNATURE
TITLE DATE

PROJECT COORDINATOR
NAME
SIGNATURE
TITLE DATE

WESTCHESTER COUNTY, NEW YORK
DEPARTMENT OF PUBLIC WORKS AND TRANSPORTATION
DIVISION OF ENGINEERING

**INFRASTRUCTURE REHABILITATION PHASE 3**
**PLAYLAND PARK, RYE, NEW YORK**
**CROSS AXIS BUILDING A**
**CXA - FIRE SEPARATION PLAN**

CONTRACT NUMBER 22-523
SHEET NUMBER CXA-G-02.1
DWG NO.: 101 of 664
SCALE: As indicated
DATE: 08/23/2022
DPW FILE NUMBER 1-118-G-850-0
REV. NO. 0

## GENERAL NOTES

1. PROVIDE PROTECTION FOR EXISTING FEATURES TO REMAIN. PROVIDE PROTECTION PLAN FOR APPROVAL
2. SCHEDULE AND COMPLETE WORK AS REQUIRED TO GIVE THE SITE IMPROVEMENT CONTRACTORS ACCESS TO THEIR JOBSITE

## CONSTRUCTION NOTES

-REPLACE ALL PLANTED MATTER DISTURBED DURING CONSTRUCTION UNLESS STATED OTHERWISE.
-REPAIR ALL DAMAGED PARK PROPERTY INCURRED DURING CONSTRUCTION.
-REPAIR ASPHALT AS REQUIRED

## RESTORATION KEY NOTES

1. EXISTING FENCE TO REMAIN.
2. NEW GRAVEL (PERMEABLE) SURFACE. SEE DETAIL 2/CXA-G-03
3. REPAIR ASPHALT AS REQUIRED
4. NEW CONCRETE PAD. SEE CXA-A-11 FOR DIMENSIONS.

## RESTORATION LEGEND

- ASPHALT REPAIR
- GRAVEL SURFACE IN AREA SHOWN ON 4/CXA-G-03
- EXISTING FENCE TO REMAIN
- NEW CONCRETE PAD. SEE DETAIL 2 & 3 ON THIS SHEET

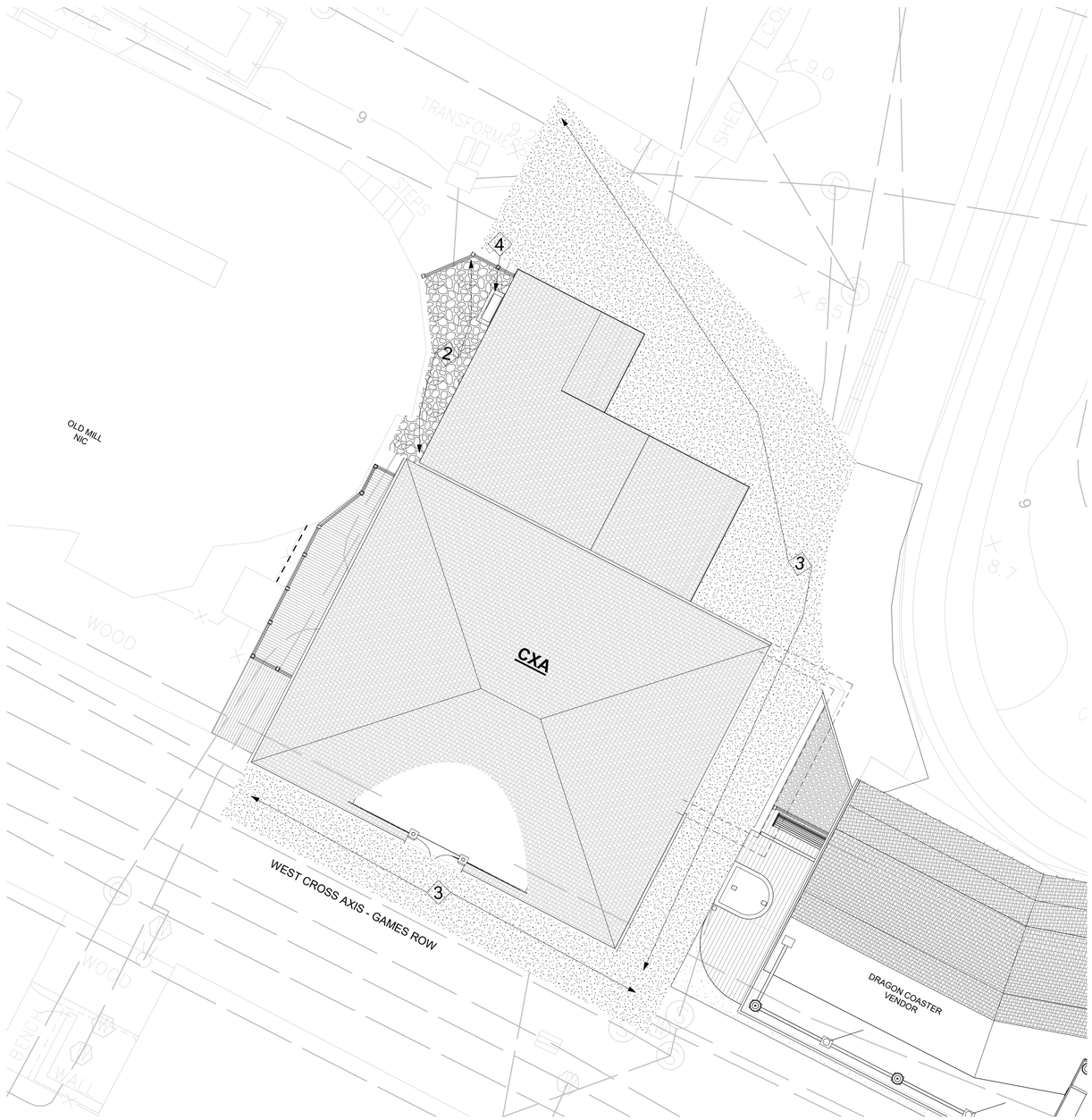


2 CXA Site Restoration
1/8" = 1'-0"

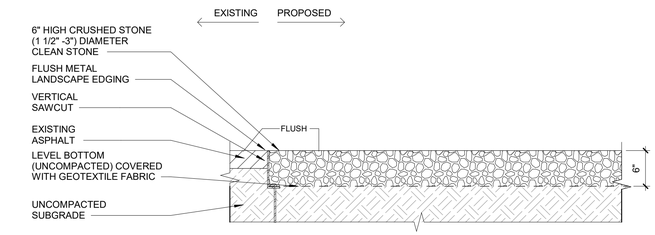


3 GRAVEL SURFACE
1" = 1'-0"

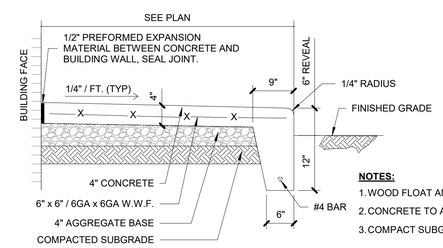


**NOTES:**
1. WOOD FLOAT AND BRUSH FINISH ON ALL SURFACES ABOVE GRADE.
2. CONCRETE TO ACHIEVE 4,000 P.S.I. AT 28 DAYS.
3. COMPACT SUBGRADE TO 95% MAXIMUM DENSITY IN ACCORDANCE W/ ASTM D1557.

1 CONCRETE LANDING WITH STEP- N.T.S.
1" = 1'-0"

N

8/30/2022 4:06:40 PM

CONSULTANT INFORMATION


The LiRo Group
3 Aerial Way, Syosset, New York 11791
(516) 938-5476 www.liro.com


CONSULTANT SEAL

REGISTERED ARCHITECT ROBERT D. YOUNG JR. 023280 STATE OF NEW YORK

| REVISION NUMBER | DATE | MADE BY | APP'D BY | REVISION |
|---|---|---|---|---|
| | | | | |

RECORD DRAWING CERTIFICATION

☐ AS BUILT – CHANGES AS NOTED ☐ AS BUILT – NO CHANGES

CONTRACTOR
NAME
SIGNATURE
TITLE DATE

PROJECT COORDINATOR
NAME
SIGNATURE
TITLE DATE

WESTCHESTER COUNTY, NEW YORK
DEPARTMENT OF PUBLIC WORKS AND TRANSPORTATION
DIVISION OF ENGINEERING

**INFRASTRUCTURE REHABILITATION PHASE 3**
**PLAYLAND PARK, RYE, NEW YORK**
**CROSS AXIS BUILDING A**
**CXA - SITE RESTORATION**

| | |
|---|---|
| CONTRACT NUMBER | 22-523 |
| SHEET NUMBER | CXA-G-03 |
| DWG NO.: | 102 of 664 |
| SCALE: | As indicated |
| DATE: | 08/23/2022 |
| DPW FILE NUMBER | 1-118-G-851-0 |
| REV. NO. | 0 |

# PLAYLAND REHABILITATION & UPGRADES
# CXA- ASBESTOS ABATEMENT
## 1 PLAYLAND PKWY, RYE, NY 10580

**DETAILS:**

1 CXA-H-10 — LARGE PROJECT REMOTE WORKER DECONTAMINATION UNIT
Not To Scale

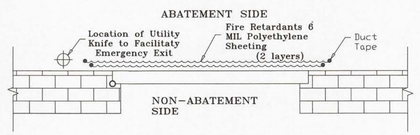


2 CXA-H-10 — TYPICAL SOFT WALL BARRIER AT OPENINGS LESS THAN 32SF
Not To Scale

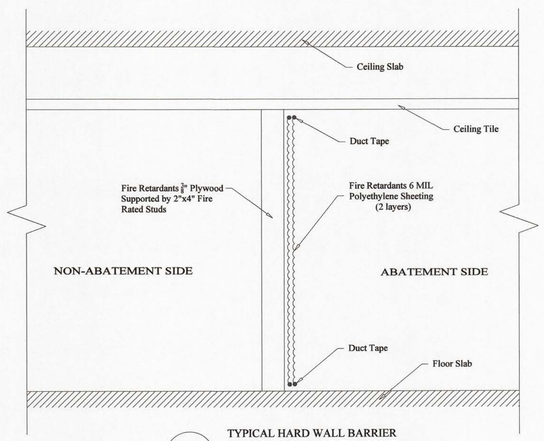


3 CXA-H-10 — TYPICAL HARD WALL BARRIER AT OPENINGS MORE THAN 32SF
Not To Scale

**SCOPE OF WORK TABLE:**

| Work area | Location | Description of Asbestos Materials | Approximate Quantity of ACM | ICR 56 Procedure |
|---|---|---|---|---|
| 1 | CXA Cross Axis Building A (North Games Buildings) Exterior | Transite Siding - Exterior | 900 SF | 56.11.6 |
| 2 | | Transite Siding - Interior | 820 SF | |
| 3 | | Gray 9'x9' Floor Tile | 100 SF | 56.11.7 |

**KEYPLAN:**

**LEGEND:**

- WORK AREA LIMITS
- P/W R # — REMOTE WORKER DECONTAMINATION UNIT
- WC — WASTE HOLDING AREA
- AIRLOCK
- W — TEMPORARY WATER SOURCE
- E — TEMPORARY ELECTRICAL SOURCE

**PROJECT NOTES:**

1. The Contractor shall be aware of all conditions of the Project and is responsible for verifying quantities and locations of all Work to be performed. Failure to do so shall not relieve the Contractor of its obligation to furnish all labor and materials necessary to perform the Work.
2. All Work shall be performed in strict accordance with the Project Documents and all governing codes, rules, and regulations. Where conflicts occur between the Project Documents and applicable codes, rules, and regulations, the more stringent shall apply.
3. All abatement work shall be coordinated with General Contractor work; Abatement may be phased with other contract work.
4. Working hours shall be as required and approved by the Owner. Asbestos abatement activities including, but not limited to, work area preparation, gross removal activities, cleaning activities, waste removal, etc. may need to be performed during 'off-hours' (including nights and weekends). In addition, multiple mobilizations may be required to perform the work identified in this project. The Contractor shall coordinate and schedule all Work with the facility and Owner's representative.
5. The Contractor shall prepare and coordinate with facility representative the posting of appropriate signage at the entranceway that redirects park occupants away from the area of the abatement.
6. The Contractor shall use barrier tape to extend the limits of the active, regulated work areas closed to the public and other non-abatement trades.
7. The Contractor shall be responsible for defining and coordinating the phases of the abatement with the facility and DPW, as well as securing any site specific variances, permits, and any necessary NYS DOL approvals.
8. The asbestos abatement Contractor shall coordinate locations of decontamination units, routes of egress, temporary water and power connections and waste container locations with the Owner and the Facility.
9. The Contractor may need to supply temporary power/water sources if they cannot be provided by facility.
10. The General Contractor shall supply any and all scaffolding for the work area(s) under this contract. Scaffolding structure and maintenance shall be in strict accordance with local, state and federal safety requirements.
11. The Contractor is to protect any and all exposed surfaces not targeted for abatement.
12. The Contractor shall request and receive in writing prior to preceding with any work info from the owner regarding surfaces/materials that require protection.
13. Regular waste generated by the abatement work of this contract shall be stored securely using a closed waste container.

5/3/2022 11:43:22 AM

CONSULTANT INFORMATION
The LiRo Group
3 Aerial Way, Syosset, New York 11791
(516) 938-5476 www.liro.com

CONSULTANT SEAL
STATE OF NEW YORK — PETER JOSEPH GERASI — LICENSED PROFESSIONAL ENGINEER — 070446

| REVISION NUMBER | DATE | MADE BY | APP'D BY | REVISION |
|---|---|---|---|---|

RECORD DRAWING CERTIFICATION
AS BUILT – CHANGES AS NOTED
AS BUILT – NO CHANGES

CONTRACTOR: NAME / SIGNATURE / TITLE / DATE
PROJECT COORDINATOR: NAME / SIGNATURE / TITLE / DATE

WESTCHESTER COUNTY, NEW YORK
DEPARTMENT OF PUBLIC WORKS AND TRANSPORTATION
DIVISION OF ENGINEERING

INFRASTRUCTURE REHABILITATION - PHASE 3
PLAYLAND PARK, RYE, NEW YORK
CROSS AXIS BUILDING A
GENERAL ASBESTOS ABATEMENT NOTES

| | |
|---|---|
| CONTRACT NUMBER | 22-523 |
| SHEET NUMBER | CXA-H-10 |
| DWG NO.: | |
| SCALE: | NOT TO SCALE |
| DATE: | 08/23/2022 |
| DPW FILE NUMBER | 1-118-G-852-0 |
| REV. NO. | 0 |

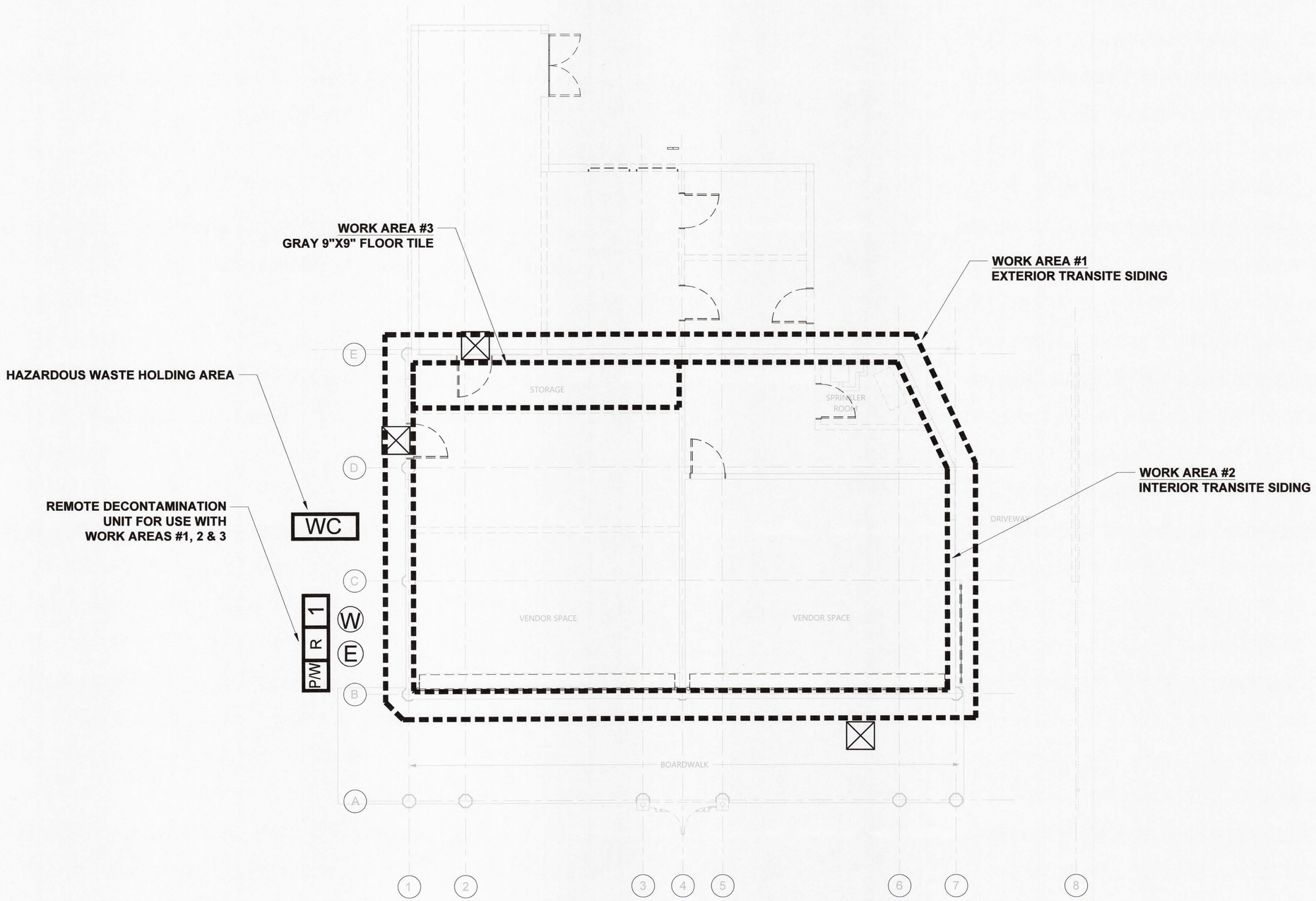


1 GROUND FLOOR - ASBESTOS ABATEMENT PLAN
NTS

5/3/2022 11:43:22 AM

CONSULTANT INFORMATION

The LiRo Group
3 Aerial Way, Syosset, New York 11791
(516) 938-5476 www.liro.com

CONSULTANT SEAL

STATE OF NEW YORK · PETER JOSEPH GERBASI · LICENSED PROFESSIONAL ENGINEER · LICENSE NO. 070446

| REVISION NUMBER | DATE | MADE BY | APP'D BY | REVISION |
|---|---|---|---|---|
| | | | | |

RECORD DRAWING CERTIFICATION

☐ AS BUILT – CHANGES AS NOTED ☐ AS BUILT – NO CHANGES

CONTRACTOR
NAME
SIGNATURE
TITLE DATE

PROJECT COORDINATOR
NAME
SIGNATURE
TITLE DATE

WESTCHESTER COUNTY, NEW YORK
DEPARTMENT OF PUBLIC WORKS AND TRANSPORTATION
DIVISION OF ENGINEERING

**INFRASTRUCTURE REHABILITATION - PHASE 3**
**PLAYLAND PARK, RYE, NEW YORK**
**CROSS AXIS BUILDING A**
**GROUND FLOOR - ASBESTOS ABATEMENT PLAN**

| | |
|---|---|
| CONTRACT NUMBER | 22-523 |
| SHEET NUMBER | CXA-H-11 |
| DWG NO.: | |
| SCALE: | NOT TO SCALE |
| DATE: | 08/23/2022 |
| DPW FILE NUMBER | 1-118-G-853-0 |
| REV. NO. | 0 |

# PLAYLAND REHABILITATION & UPGRADES
# CXA- LEAD REMEDIATION
## 1 PLAYLAND PKWY, RYE, NY 10580

**DETAILS:**

1 CXA-H-20 LARGE PROJECT REMOTE WORKER DECONTAMINATION UNIT
Not To Scale

**SCOPE OF WORK TABLE:**

| Work area | Location | Description | Material | Quantity | Procedure |
|---|---|---|---|---|---|
| 1 | CXA Cross Axis Building A (North Games Buildings) Exterior | South | Fascia Wood Trim | 50 SF | Manual Wet Scraping/Chemical Strip |
| | | | Wood Pilaster | 36 SF | |
| | | | Wood Columns | 150 SF | |
| | | West | Fascia Wood Trim | 240 SF | |
| | | | Wood Pilaster | 24 SF | |
| | | North | Upper Fascia Wood Trim | 50 SF | |
| | | | Wood Pilaster | 60 SF | |
| | | East | Upper Fascia Wood Trim | 30 SF | |
| | | | Wood Pilaster | 24 SF | |
| | | | Lower Fascia Wood Trim | 40 SF | |

**LEGEND:**

- WORK AREA LIMITS
- WS — OSHA HANDWASHING STATION
- HWSA — HAZARDOUS WASTE STORAGE AREA
- AIRLOCK
- W — TEMPORARY WATER SOURCE
- E — TEMPORARY ELECTRICAL SOURCE
- FASCIA WOOD TRIM
- WOOD PILASTER
- WOOD COLUMN

**KEYPLAN:**

**PROJECT NOTES:**

1. All layers of coating shall be considered as LBP and removed down to the substrates. Substrates coated with LBP and targeted for demolition may be removed and disposed of solid structure waste following TCLP testing.
2. Substrates coated with LBP and targeted for refurbish and recoating shall be abated using manual wet scraping or chemical stripping procedures, localized testing of chemical strapping products shall proceed broader use and only after approval by the DPW Environmental Consultant.
3. The abatement contractor shall separate paint chips and contaminated dust/particulate generated by the abatement from other project waste streams including worker personal protective equipment and plastic sheeting. All waste other than lead paint chips and contaminated dust/particulate shall be TCLP tested prior to disposal.
4. Waste generated by the work of this method shall be stored on site in a NYSDEC compliant Hazardous and Waste Storage Area and transported under manifest to the disposal site.
5. The contractor shall prepare a project specific work plan and project specific HASP for the work of this contract.
6. LBP remediation shall be consistent with guidelines from SSPC and work shall comply with the OSHA regulations including using of decontamination units and hand wash stations.
7. The contractor may propose alternate LBP removal procedures however, use of alternate procedures will require approval by DPW Environmental Consultant; the abatement contractor is responsible with maintaining the physical conditions and integrity of the targeted substrates, and the surrounding structures during abatement work.
8. The Contractor shall request and receive in writing prior to preceding with any work info from the owner regarding surfaces/materials that require protection.

5/3/2022 11:43:22 AM

CONSULTANT INFORMATION
The LiRo Group
3 Aerial Way, Syosset, New York 11791
(516) 938-5476 www.liro.com

CONSULTANT SEAL
STATE OF NEW YORK · PETER JOSEPH GERBASI · LICENSED PROFESSIONAL ENGINEER · 070446

| REVISION NUMBER | DATE | MADE BY | APP'D BY | REVISION |
|---|---|---|---|---|

RECORD DRAWING CERTIFICATION
AS BUILT – CHANGES AS NOTED
AS BUILT – NO CHANGES

CONTRACTOR
NAME
SIGNATURE
TITLE DATE

PROJECT COORDINATOR
NAME
SIGNATURE
TITLE DATE

WESTCHESTER COUNTY, NEW YORK
DEPARTMENT OF PUBLIC WORKS AND TRANSPORTATION
DIVISION OF ENGINEERING

INFRASTRUCTURE REHABILITATION - PHASE 3
PLAYLAND PARK, RYE, NEW YORK
CROSS AXIS BUILDING A
GENERAL LEAD REMEDIATION NOTES

CONTRACT NUMBER 22-523
SHEET NUMBER CXA-H-20
DWG NO.:
SCALE: NOT TO SCALE
DATE: 08/23/2022
DPW FILE NUMBER 1-118-G-854-0
REV. NO. 0

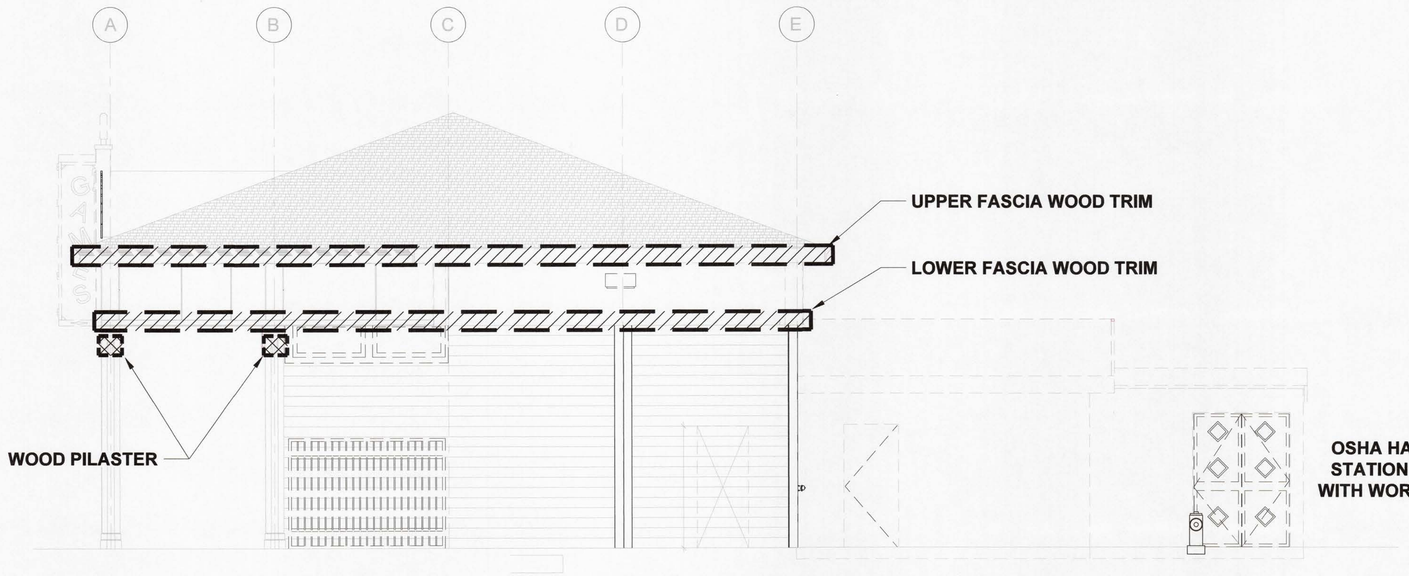


1 EAST ELEVATION - LEAD REMEDIATION PLAN
NTS

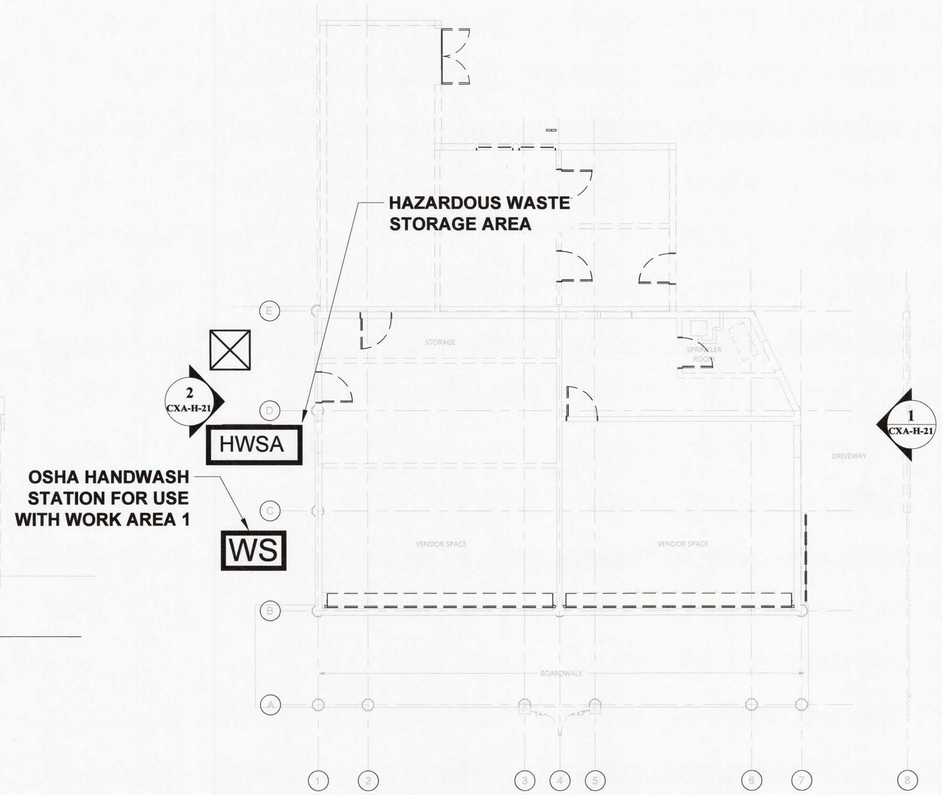


3 GROUND FLOOR - LEAD REMEDIATION PLAN
NTS

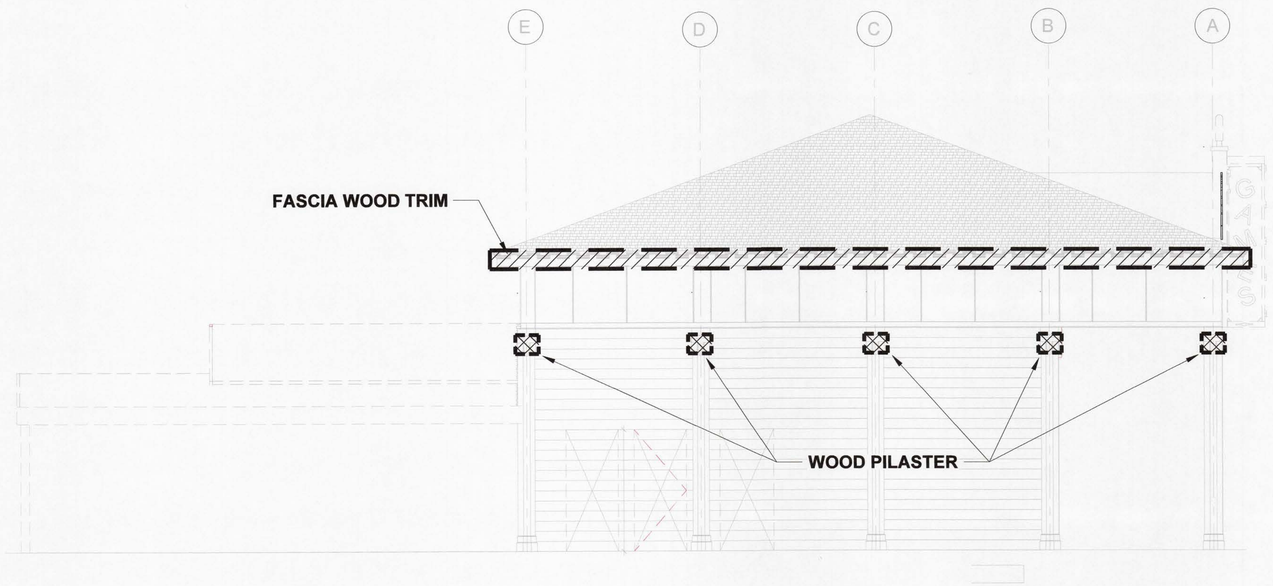


2 WEST ELEVATION - LEAD REMEDIATION PLAN
NTS

5/3/2022 11:43:22 AM

CONSULTANT INFORMATION

The LiRo Group

3 Aerial Way, Syosset, New York 11791
(516) 938-5476 www.liro.com

CONSULTANT SEAL

STATE OF NEW YORK · PETER JOHN GERGASI · 070446 · PROFESSIONAL ENGINEER

| REVISION NUMBER | DATE | MADE BY | APP'D BY | REVISION |
|---|---|---|---|---|
| | | | | |

RECORD DRAWING CERTIFICATION

☐ AS BUILT – CHANGES AS NOTED ☐ AS BUILT – NO CHANGES

CONTRACTOR
NAME
SIGNATURE
TITLE DATE

PROJECT COORDINATOR
NAME
SIGNATURE
TITLE DATE

WESTCHESTER COUNTY, NEW YORK
DEPARTMENT OF PUBLIC WORKS AND TRANSPORTATION
DIVISION OF ENGINEERING

**INFRASTRUCTURE REHABILITATION - PHASE 3**
**PLAYLAND PARK, RYE, NEW YORK**
**CROSS AXIS BUILDING A**
**EAST AND WEST ELEVATION -**
**LEAD REMEDIATION PLAN**

| | |
|---|---|
| CONTRACT NUMBER | 22-523 |
| SHEET NUMBER | CXA-H-21 |
| DWG NO.: | |
| SCALE: | NOT TO SCALE |
| DATE: | 08/23/2022 |
| DPW FILE NUMBER | 1-118-G-855-0 |
| REV. NO. | 0 |

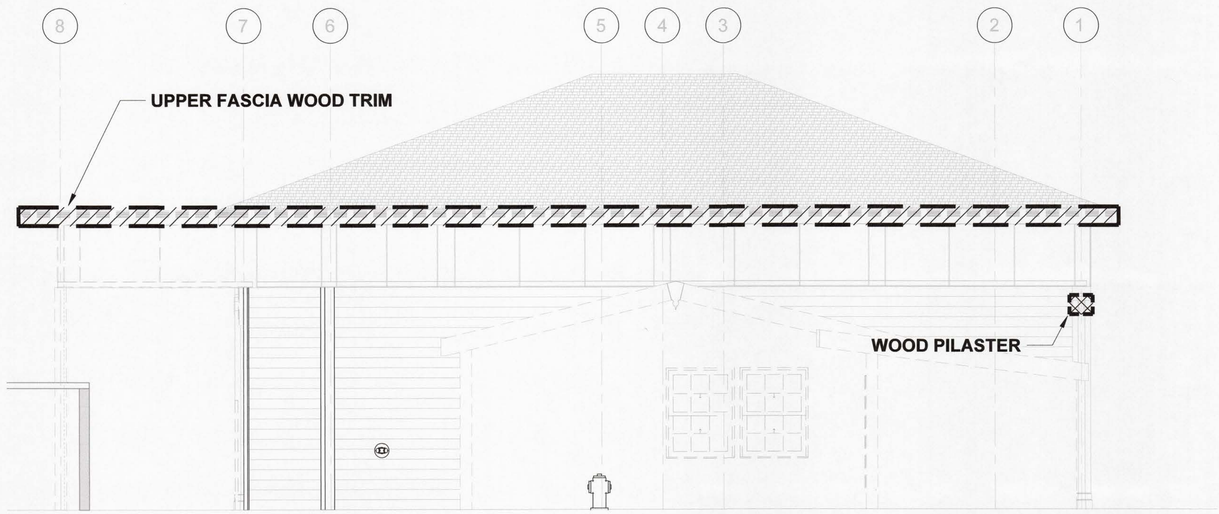


1 NORTH ELEVATION - LEAD REMEDIATION PLAN
NTS

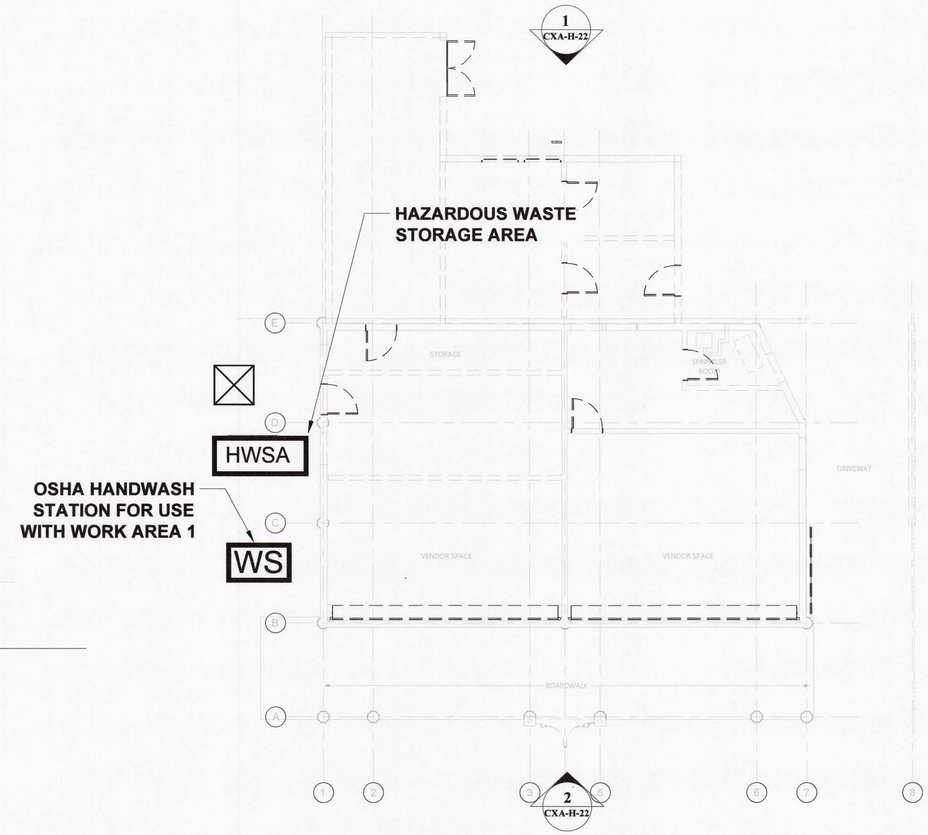


3 GROUND FLOOR - LEAD REMEDIATION PLAN
NTS

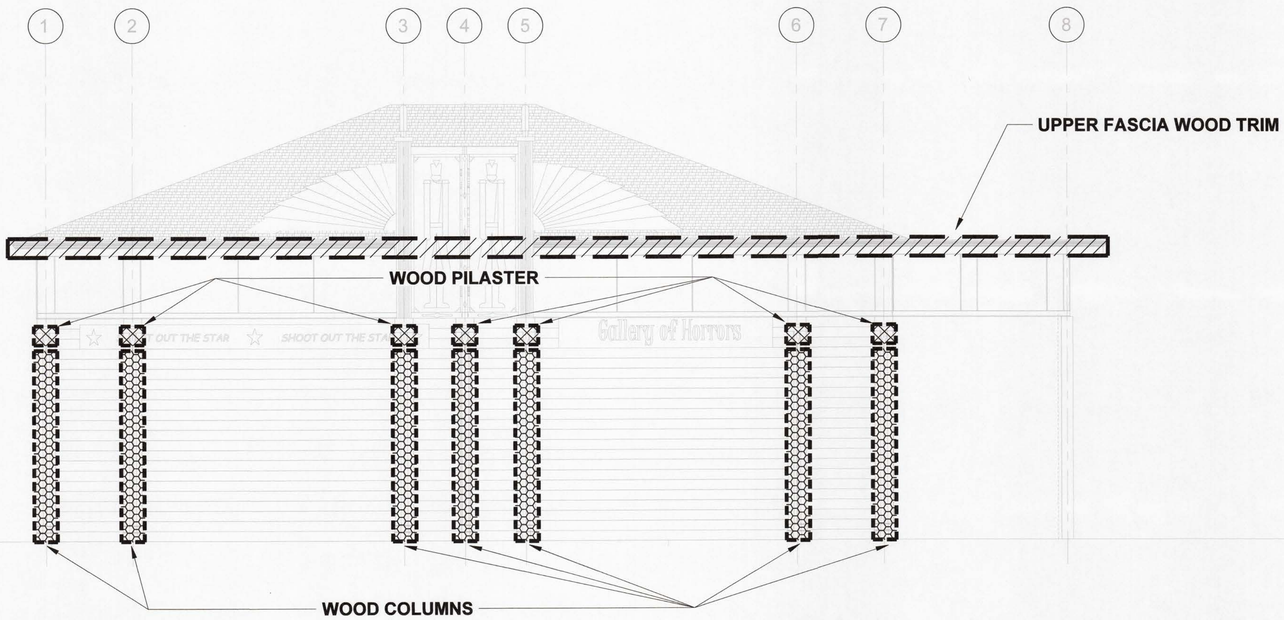


2 SOUTH ELEVATION - LEAD REMEDIATION PLAN
NTS

5/3/2022 11:43:22 AM

CONSULTANT INFORMATION

The LiRo Group
3 Aerial Way, Syosset, New York 11791
(516) 938-5476 www.liro.com

CONSULTANT SEAL

STATE OF NEW YORK · PETER JOSEPH GERBASI · 070446 · LICENSED PROFESSIONAL ENGINEER

| REVISION NUMBER | DATE | MADE BY | APP'D BY | REVISION |
|---|---|---|---|---|
| | | | | |

RECORD DRAWING CERTIFICATION

☐ AS BUILT – CHANGES AS NOTED ☐ AS BUILT – NO CHANGES

CONTRACTOR
NAME
SIGNATURE
TITLE DATE

PROJECT COORDINATOR
NAME
SIGNATURE
TITLE DATE

WESTCHESTER COUNTY, NEW YORK
DEPARTMENT OF PUBLIC WORKS AND TRANSPORTATION
DIVISION OF ENGINEERING

**INFRASTRUCTURE REHABILITATION - PHASE 3**
**PLAYLAND PARK, RYE, NEW YORK**
**CROSS AXIS BUILDING A**
**NORTH AND SOUTH ELEVATION -**
**LEAD REMEDIATION PLAN**

| | |
|---|---|
| CONTRACT NUMBER | 22-523 |
| SHEET NUMBER | CXA-H-81 |
| DWG NO.: | |
| SCALE: | NOT TO SCALE |
| DATE: | 08/23/2022 |
| DPW FILE NUMBER | 1-118-G-856-0 |
| REV. NO. | 0 |

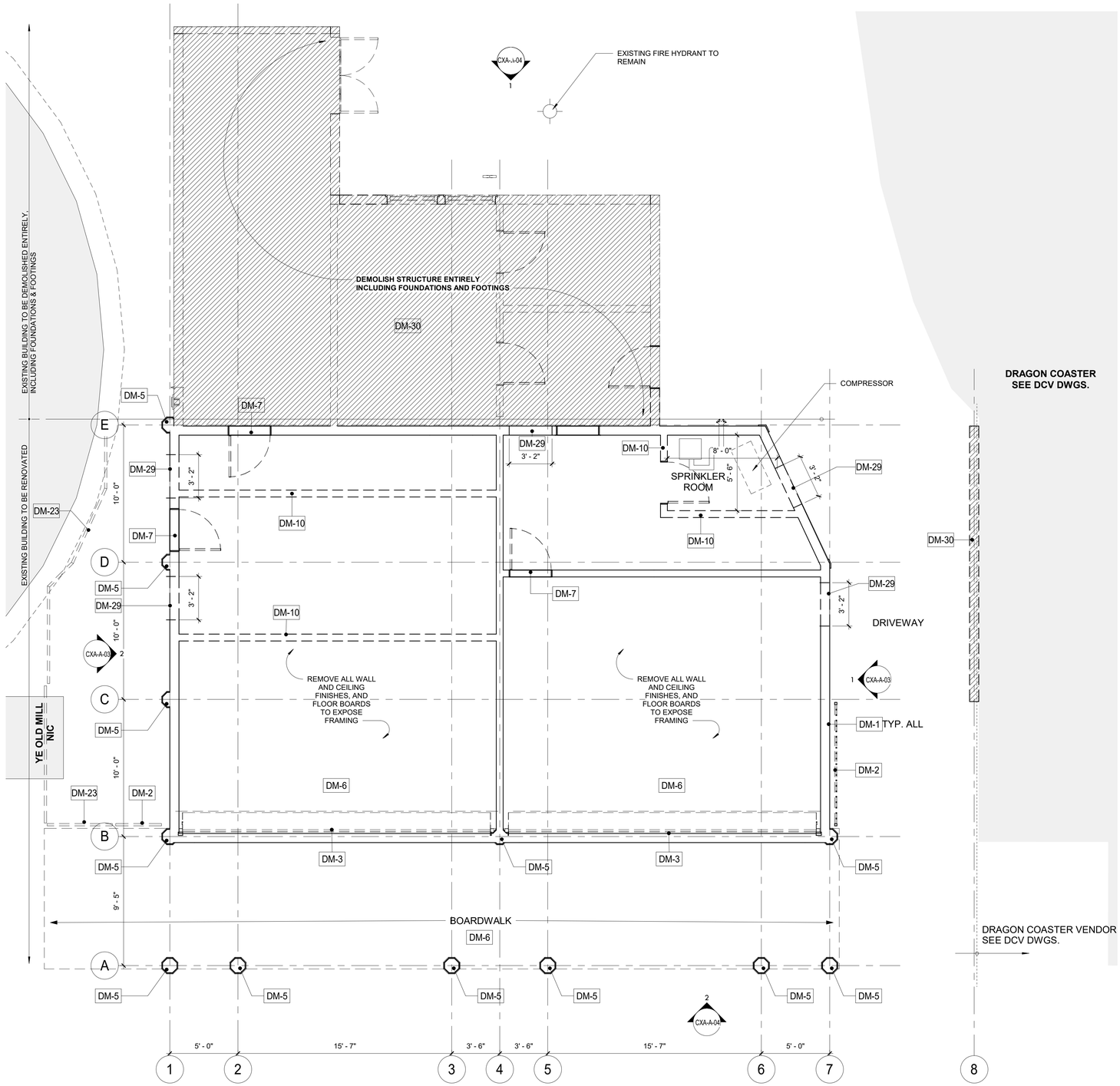


1 DEMOLITION GROUND FLOOR PLAN
1/4" = 1'-0"

## DEMOLITION NOTES:

1. THE GENERAL CONTRACTOR SHALL VISIT THE SITE AND FAMILIARIZE HIM/HERSELF WITH EXISTING CONDITIONS AND REQUIREMENTS OF THE WORK. THE GENERAL CONTRACTOR SHALL FIELD VERIFY EXACT QUANTITIES OF ALL ITEMS TO BE REMOVED.
2. THE CONTRACTOR SHALL PHOTOGRAPH AND DOCUMENT EXISTING HISTORIC DECORATIVE TRIMS INCLUDING SIZES AND PROFILES PRIOR TO ENVIRONMENTAL REMEDIATION WORK START.
3. PRIOR TO DEMOLITION, CONTRACTOR IS REQUIRED TO POSSES AN ASBESTOS -CONTAINMENT MATERIALS (ACM) PERMIT FROM THE DEPARTMENT OF LABOR.
4. ITEMS TO BE REMOVED / DEMOLISHED AS INDICATED ON THE DRAWINGS ARE INTENDED TO SHOW THE GENERAL SCOPE OF THE DEMOLITION WORK. THE DRAWINGS DO NOT REPRESENT IN DETAIL ALL ITEMS OR SITUATIONS THAT MAY BE ENCOUNTERED DURING THE DEMOLITION. IT IS THE CONTRACTOR'S RESPONSIBILITY TO REMOVE, PROTECT, AND MAKE CORRECTIONS AS REQUIRED TO ACHIEVE DRAWING INTENT. THE GENERAL CONTRACTOR SHALL NOTIFY ARCHITECT OF ANY STRUCTURAL NONCONFORMITY TO PLANS AND SPECIFICATIONS.
5. PLAYLAND RESERVES THE RIGHT TO REVIEW ALL MATERIALS DESIGNATED FOR REMOVAL AND TO RETAIN OWNERSHIP OF SUCH MATERIALS. IF PLAYLAND RETAINS ANY MATERIAL THE CONTRACTOR SHALL MAKE ARRANGEMENTS WITH THE PLAYLAND'S SUPERINTENDENT TO HAVE THOSE MATERIALS REMOVED AND STORED OFF SITE AT NO ADDITIONAL COST.
6. DEMOLITION OF THE EXISTING BUILDING SHALL INCLUDE REMOVAL OF THE EXISTING FOUNDATIONS FOR THEIR ENTIRE DEPTH TO ACCOMMODATE INSTALLATION OF NEW FOUNDATIONS.
7. THE CONTRACTOR SHALL USE EXTREME CAUTION IN AREAS OF DEMOLITION WHICH MAY DISTURB EXISTING STRUCTURES. TEMPORARY SHORING, BARRICADES, DUST PARTITIONS, ETC. SHALL BE PROVIDED AS REQUIRED TO PROTECT GENERAL PUBLIC, ALL EXISTING STRUCTURES AND PROPERTY.
8. SEE STRUCTURAL, ELECTRICAL, SPRINKLER, AND PLUMBING DRAWINGS FOR RELATED DEMOLITION WORK.
9. VERIFY LOCATION OF EXISTING STRUCTURES AND SHORE UP ROOF/FLOOR ABOVE AS REQUIRED BEFORE REMOVING WALL.
10. REMOVAL OF ALL CEILINGS AND MOUNTED ITEMS THROUGHOUT THE CONTRACT AREA INCLUDE ANCHORING HARDWARE, AND MISCELLANEOUS FASTENINGS, ETC.
11. WALLS SHALL BE REMOVED AS INDICATED ON DEMOLITION PLANS. ALL UTILITIES IN WALL SHALL BE CUT TO BELOW SLAB OR ABOVE THE CEILING.
12. REMOVE ALL EXISTING ELECTRICAL AND PLUMBING LINES NOT TO BE RE-USED. CAP PLUMBING LINES AS REQUIRED. ELECTRICAL WIRING SHALL BE DISCONNECTED BACK TO THE NEAREST ACTIVE LOCATION. ALL ABANDONED COMMUNICATION CABLES (DATA, TELEPHONE, FIRE ALARM, AND AUDIO/VIDEO CABLES) SHALL BE REMOVED TO SOURCE IF NOT TAGGED FOR FUTURE USE.
13. DEMOLITION PROCEDURES ARE THE SOLE RESPONSIBILITY OF THE GENERAL CONTRACTOR OF THIS CONTRACT. CONTRACTOR TO "CUT OFF" ALL NECESSARY UTILITIES REQUIRED TO OBTAIN DESIRED RESULTS. CONTRACTOR TO OBTAIN "SHUT OFF" APPROVALS FROM PLAYLAND PRIOR TO SCHEDULED DEMOLITION.
14. THE GENERAL CONTRACTOR SHALL PATCH AND REPAIR ALL EXISTING CONSTRUCTION DISTURBED BY THE WORK AND PREPARE FOR NEW FINISH AS SHOWN ON THE FINISH SCHEDULE.
15. THE EXISTING WOOD FLOOR SHALL BE CLEANED TO ALLOW FOR THE APPLICAITON OF NEW FLOOR COATING.
16. THE GENERAL CONTRACTOR SHALL BE RESPONSIBLE FOR THE CLEANING UP AND HAULING AWAY OF ALL TRASH AND DEBRIS ON A REGULAR BASIS DURING THE CONSTRUCTION PERIOD.
17. ALL DEBRIS REMOVED FROM THE SITE SHALL BE DISPOSED OF IN A LEGAL MANNER.
18. EXISTING EXITS SHALL REMAIN FULLY ACCESSIBLE AND UNOBSTRUCTED DURING THE PROGRESS OF THE WORK.

## DEMOLITION LEGEND

| | |
|---|---|
| | INDICATES DEMOLITION |
| DM - # | DEMOLITION KEY NOTES |
| NIC | INDICATES N.I.C. |

## DEMOLITION KEYNOTES

| | |
|---|---|
| DM-1 | REMOVE EXISTING WOOD SIDING. |
| DM-2 | REMOVE EXISTING GATE. |
| DM-3 | REMOVE ROLL DOWN DOOR AND ASSOCIATED HARDWARE. |
| DM-5 | REMOVE COLUMN ENCLOSURES. CAREFULLY REMOVE AT LEAST ONE COLUMN ENCLOSURE TO USE AS REFERENCE IN ORDER TO REPLICATE TRIMS TO MATCH LOCATION, SIZE AND SHAPE AS INDICATED. COORDINATE WITH STRUCTURAL DRAWINGS. |
| DM-6 | REMOVE EXISTING WOOD DECKING. (COORDINATE EXTENT OF REMOVAL REQUIRED TO REPAIR FLOOR JOISTS TO REMAIN AS NEEDED - SEE STRUCTURAL DRAWINGS). |
| DM-7 | REMOVE EXISTING DOOR & FRAME. |
| DM-10 | REMOVE INTERIOR PARTITION. |
| DM-23 | REMOVE EXISTING FENCE. |
| DM-29 | REMOVE SECTION OF EXISTING WALL. PROVIDE HEADER AS REQUIRED TO CREATE A DOOR OPENING. SEE ELEVATIONS FOR EXTENT. |
| DM-30 | EXISTING STRUCTURE TO BE REMOVED IN ITS ENTIRETY. SEE PLANS FOR EXTENT OF REMOVAL. |

8/30/2022 4:05:27 PM

CONSULTANT INFORMATION
The LiRo Group
3 Aerial Way, Syosset, New York 11791
(516) 938-5476 www.liro.com

CONSULTANT SEAL
REGISTERED ARCHITECT ROBERT D. TOWNSEND 023280 STATE OF NEW YORK

| REVISION NUMBER | DATE | MADE BY | APP'D BY | REVISION |
|---|---|---|---|---|

RECORD DRAWING CERTIFICATION
☐ AS BUILT – CHANGES AS NOTED ☐ AS BUILT – NO CHANGES

CONTRACTOR
NAME
SIGNATURE
TITLE DATE

PROJECT COORDINATOR
NAME
SIGNATURE
TITLE DATE

WESTCHESTER COUNTY, NEW YORK
DEPARTMENT OF PUBLIC WORKS AND TRANSPORTATION
DIVISION OF ENGINEERING

INFRASTRUCTURE REHABILITATION PHASE 3
PLAYLAND PARK, RYE, NEW YORK
CROSS AXIS BUILDING A
CXA - GROUND FLOOR DEMOLITION PLAN

| | |
|---|---|
| CONTRACT NUMBER | 22-523 |
| SHEET NUMBER | CXA-A-01 |
| DWG NO.: | 108 of 664 |
| SCALE: | As indicated |
| DATE: | 08/23/2022 |
| DPW FILE NUMBER | 1-118-A-857-0 |
| REV. NO. | 0 |

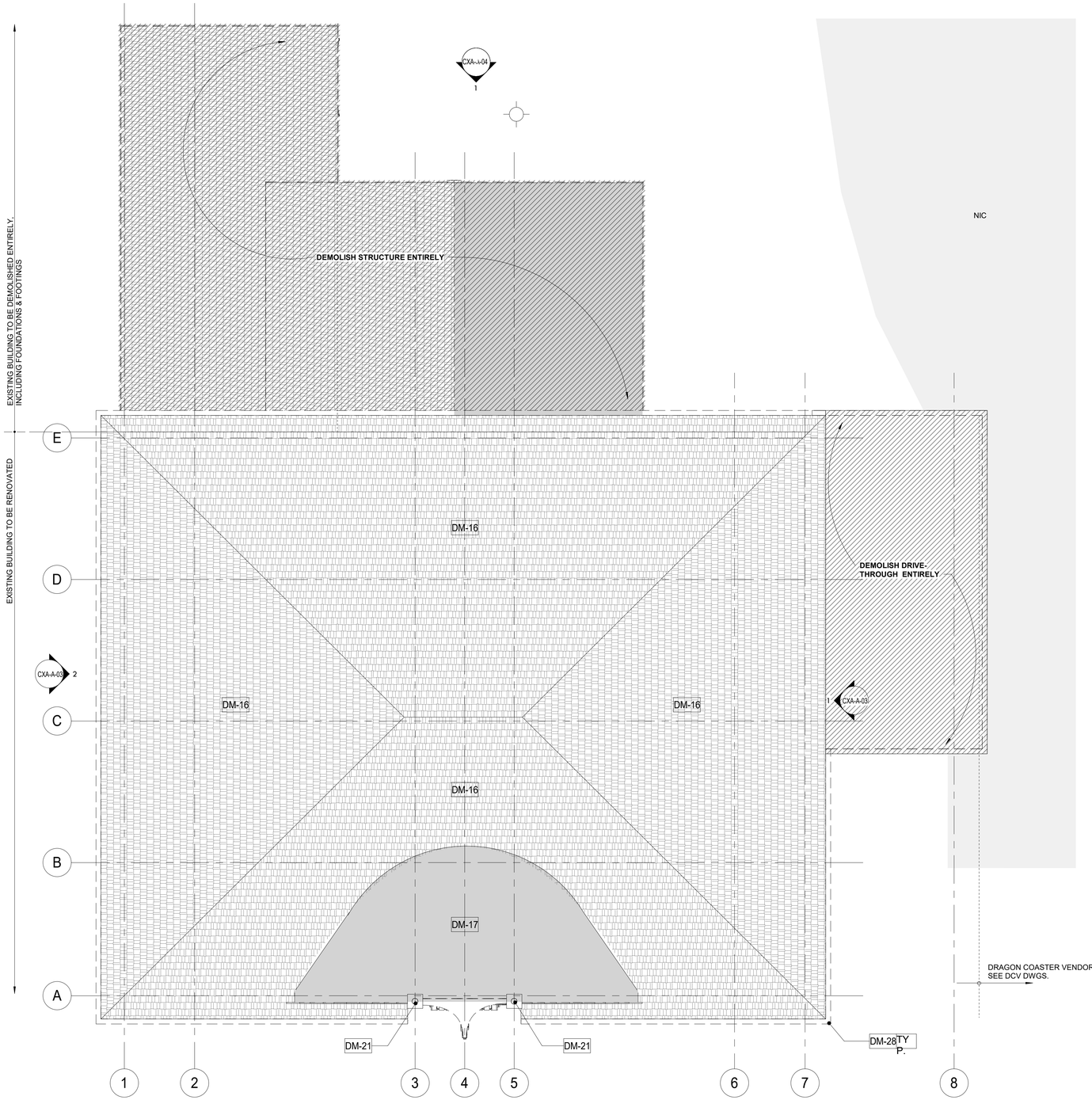


1 DEMOLITION ROOF PLAN
1/4" = 1'-0"

## DEMOLITION NOTES:

1. THE GENERAL CONTRACTOR SHALL VISIT THE SITE AND FAMILIARIZE HIM/HERSELF WITH EXISTING CONDITIONS AND REQUIREMENTS OF THE WORK. THE GENERAL CONTRACTOR SHALL FIELD VERIFY EXACT QUANTITIES OF ALL ITEMS TO BE REMOVED.
2. THE CONTRACTOR SHALL PHOTOGRAPH AND DOCUMENT EXISTING HISTORIC DECORATIVE TRIMS INCLUDING SIZES AND PROFILES PRIOR TO ENVIRONMENTAL REMEDIATION WORK START.
3. PRIOR TO DEMOLITION, CONTRACTOR IS REQUIRED TO POSSES AN ASBESTOS -CONTAINMENT MATERIALS (ACM) PERMIT FROM THE DEPARTMENT OF LABOR.
4. ITEMS TO BE REMOVED / DEMOLISHED AS INDICATED ON THE DRAWINGS ARE INTENDED TO SHOW THE GENERAL SCOPE OF THE DEMOLITION WORK. THE DRAWINGS DO NOT REPRESENT IN DETAIL ALL ITEMS OR SITUATIONS THAT MAY BE ENCOUNTERED DURING THE DEMOLITION. IT IS THE CONTRACTOR'S RESPONSIBILITY TO REMOVE, PROTECT, AND MAKE CORRECTIONS AS REQUIRED TO ACHIEVE DRAWING INTENT. THE GENERAL CONTRACTOR SHALL NOTIFY ARCHITECT OF ANY STRUCTURAL NONCONFORMITY TO PLANS AND SPECIFICATIONS.
5. PLAYLAND RESERVES THE RIGHT TO REVIEW ALL MATERIALS DESIGNATED FOR REMOVAL AND TO RETAIN OWNERSHIP OF SUCH MATERIALS. IF PLAYLAND RETAINS ANY MATERIAL THE CONTRACTOR SHALL MAKE ARRANGEMENTS WITH THE PLAYLAND'S SUPERINTENDENT TO HAVE THOSE MATERIALS REMOVED AND STORED OFF SITE AT NO ADDITIONAL COST.
6. DEMOLITION OF THE EXISTING BUILDING SHALL INCLUDE REMOVAL OF THE EXISTING FOUNDATIONS FOR THEIR ENTIRE DEPTH TO ACCOMMODATE INSTALLATION OF NEW FOUNDATIONS.
7. THE CONTRACTOR SHALL USE EXTREME CAUTION IN AREAS OF DEMOLITION WHICH MAY DISTURB EXISTING STRUCTURES. TEMPORARY SHORING, BARRICADES, DUST PARTITIONS, ETC. SHALL BE PROVIDED AS REQUIRED TO PROTECT GENERAL PUBLIC, ALL EXISTING STRUCTURES AND PROPERTY.
8. SEE STRUCTURAL, ELECTRICAL, SPRINKLER, AND PLUMBING DRAWINGS FOR RELATED DEMOLITION WORK.
9. VERIFY LOCATION OF EXISTING STRUCTURES AND SHORE UP ROOF/FLOOR ABOVE AS REQUIRED BEFORE REMOVING WALL.
10. REMOVAL OF ALL CEILINGS AND MOUNTED ITEMS THROUGHOUT THE CONTRACT AREA INCLUDE ANCHORING HARDWARE, AND MISCELLANEOUS FASTENINGS, ETC.
11. WALLS SHALL BE REMOVED AS INDICATED ON DEMOLITION PLANS. ALL UTILITIES IN WALL SHALL BE CUT TO BELOW SLAB OR ABOVE THE CEILING.
12. REMOVE ALL EXISTING ELECTRICAL AND PLUMBING LINES NOT TO BE RE-USED. CAP PLUMBING LINES AS REQUIRED. ELECTRICAL WIRING SHALL BE DISCONNECTED BACK TO THE NEAREST ACTIVE LOCATION. ALL ABANDONED COMMUNICATION CABLES (DATA, TELEPHONE, FIRE ALARM, AND AUDIO/VIDEO CABLES) SHALL BE REMOVED TO SOURCE IF NOT TAGGED FOR FUTURE USE.
13. DEMOLITION PROCEDURES ARE THE SOLE RESPONSIBILITY OF THE GENERAL CONTRACTOR OF THIS CONTRACT. CONTRACTOR TO "CUT OFF" ALL NECESSARY UTILITIES REQUIRED TO OBTAIN DESIRED RESULTS. CONTRACTOR TO OBTAIN "SHUT OFF" APPROVALS FROM PLAYLAND PRIOR TO SCHEDULED DEMOLITION.
14. THE GENERAL CONTRACTOR SHALL PATCH AND REPAIR ALL EXISTING CONSTRUCTION DISTURBED BY THE WORK AND PREPARE FOR NEW FINISH AS SHOWN ON THE FINISH SCHEDULE.
15. THE EXISTING WOOD FLOOR SHALL BE CLEANED TO ALLOW FOR THE APPLICAITON OF NEW FLOOR COATING.
16. THE GENERAL CONTRACTOR SHALL BE RESPONSIBLE FOR THE CLEANING UP AND HAULING AWAY OF ALL TRASH AND DEBRIS ON A REGULAR BASIS DURING THE CONSTRUCTION PERIOD.
17. ALL DEBRIS REMOVED FROM THE SITE SHALL BE DISPOSED OF IN A LEGAL MANNER.
18. EXISTING EXITS SHALL REMAIN FULLY ACCESSIBLE AND UNOBSTRUCTED DURING THE PROGRESS OF THE WORK

## DEMOLITION LEGEND

INDICATES DEMOLITION

DM - # DEMOLITION KEY NOTES

NIC INDICATES N.I.C.

## DEMOLITION KEYNOTES

| | |
|---|---|
| DM-16 | REMOVE EXISTING ROOFING SHINGLES, UNDERLAYMENT AND ANY ROTTED WOOD SHEATHING. REPLACE DAMAGED SHEATHING TO MATCH EXISTING. COORDINATE WITH A/E. |
| DM-17 | REMOVE EXISTING ROOFING MEMBRANES, UNDERLAYMENT AND ANY ROTTED WOOD SHEATHING. REPLACE EXISTING DAMAGED SHEATHING TO MATCH EXISTING. COORDINATE WITH A/E. |
| DM-21 | CAREFULLY REMOVE FINIAL LIGHTS (H6) FOR REFURBISHMENT AND REINSTALLATION |
| DM-28 | REMOVE EXISTING GUTTER, FASCIA, AND SOFFITS. |

N

* COORDINATE EXTENT OF REMOVAL REQUIRED TO REPAIR FLOOR JOISTS - SEE STRUCTURAL DRAWINGS.

8/30/2022 4:05:29 PM

CONSULTANT INFORMATION

The LiRo Group
3 Aerial Way, Syosset, New York 11791
(516) 938-5476 www.liro.com

CONSULTANT SEAL

REGISTERED ARCHITECT ROBERT D. YOUNG JR. 023280 STATE OF NEW YORK

| REVISION NUMBER | DATE | MADE BY | APP'D BY | REVISION |
|---|---|---|---|---|

RECORD DRAWING CERTIFICATION

☐ AS BUILT – CHANGES AS NOTED ☐ AS BUILT – NO CHANGES

CONTRACTOR
NAME
SIGNATURE
TITLE DATE

PROJECT COORDINATOR
NAME
SIGNATURE
TITLE DATE

WESTCHESTER COUNTY, NEW YORK
DEPARTMENT OF PUBLIC WORKS AND TRANSPORTATION
DIVISION OF ENGINEERING

**INFRASTRUCTURE REHABILITATION PHASE 3**
**PLAYLAND PARK, RYE, NEW YORK**
**CROSS AXIS BUILDING A**
**CXA - ROOF FLOOR DEMOLITION PLAN**

| | |
|---|---|
| CONTRACT NUMBER | 22-523 |
| SHEET NUMBER | CXA-A-02 |
| DWG NO.: | 109 of 664 |
| SCALE: | As indicated |
| DATE: | 08/23/2022 |
| DPW FILE NUMBER | 1-118-A-858-0 |
| REV. NO. | 0 |

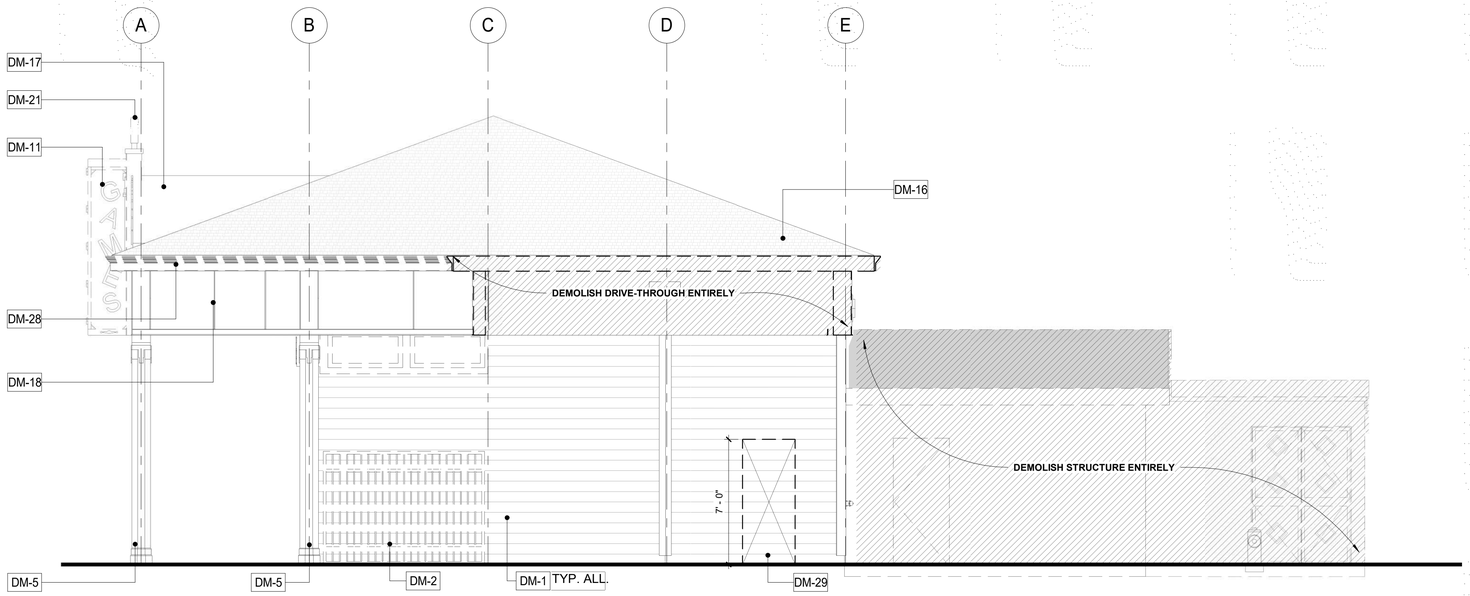


1 DEMOLITION BUILDING ELEVATION - EAST
1/4" = 1'-0"

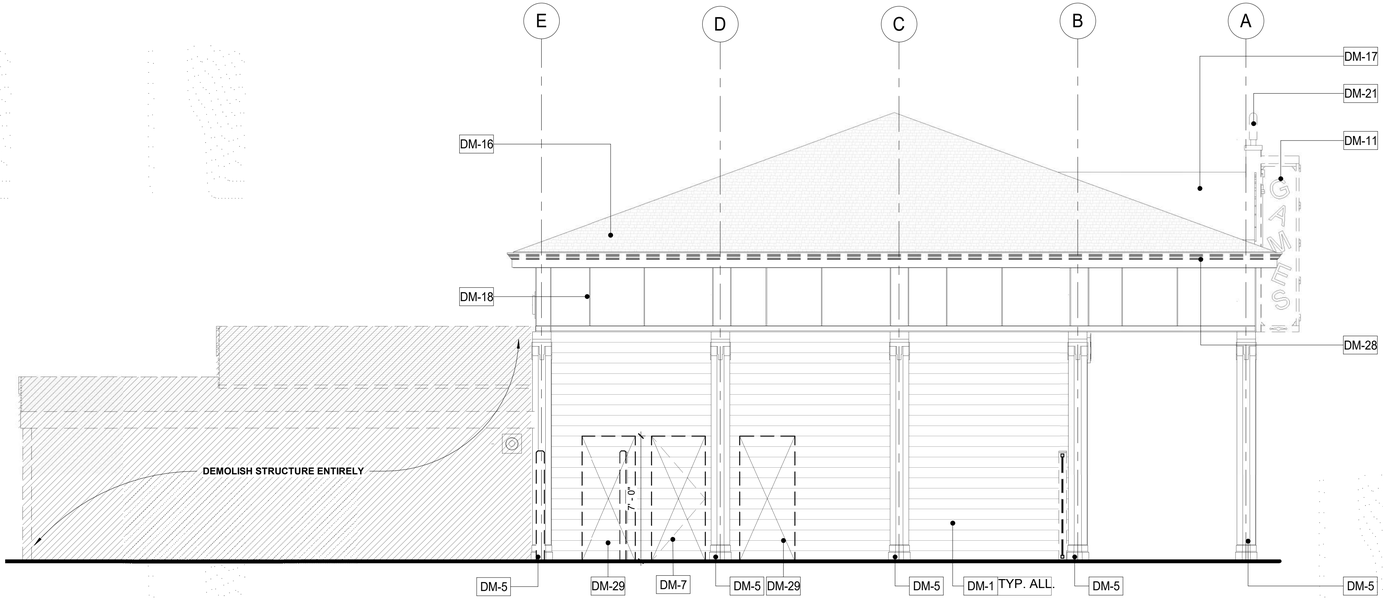


2 DEMOLITION BUILDING ELEVATION - WEST
1/4" = 1'-0"

## DEMOLITION NOTES:

1. THE GENERAL CONTRACTOR SHALL VISIT THE SITE AND FAMILIARIZE HIM/HERSELF WITH EXISTING CONDITIONS AND REQUIREMENTS OF THE WORK. THE GENERAL CONTRACTOR SHALL FIELD VERIFY EXACT QUANTITIES OF ALL ITEMS TO BE REMOVED.
2. THE CONTRACTOR SHALL PHOTOGRAPH AND DOCUMENT EXISTING HISTORIC DECORATIVE TRIMS INCLUDING SIZES AND PROFILES PRIOR TO ENVIRONMENTAL REMEDIATION WORK START.
3. PRIOR TO DEMOLITION, CONTRACTOR IS REQUIRED TO POSSES AN ASBESTOS -CONTAINMENT MATERIALS (ACM) PERMIT FROM THE DEPARTMENT OF LABOR.
4. ITEMS TO BE REMOVED / DEMOLISHED AS INDICATED ON THE DRAWINGS ARE INTENDED TO SHOW THE GENERAL SCOPE OF THE DEMOLITION WORK. THE DRAWINGS DO NOT REPRESENT IN DETAIL ALL ITEMS OR SITUATIONS THAT MAY BE ENCOUNTERED DURING THE DEMOLITION. IT IS THE CONTRACTOR'S RESPONSIBILITY TO REMOVE, PROTECT, AND MAKE CORRECTIONS AS REQUIRED TO ACHIEVE DRAWING INTENT. THE GENERAL CONTRACTOR SHALL NOTIFY ARCHITECT OF ANY STRUCTURAL NONCONFORMITY TO PLANS AND SPECIFICATIONS.
5. PLAYLAND RESERVES THE RIGHT TO REVIEW ALL MATERIALS DESIGNATED FOR REMOVAL AND TO RETAIN OWNERSHIP OF SUCH MATERIALS. IF PLAYLAND RETAINS ANY MATERIAL THE CONTRACTOR SHALL MAKE ARRANGEMENTS WITH THE PLAYLAND'S SUPERINTENDENT TO HAVE THOSE MATERIALS REMOVED AND STORED OFF SITE AT NO ADDITIONAL COST.
6. DEMOLITION OF THE EXISTING BUILDING SHALL INCLUDE REMOVAL OF THE EXISTING FOUNDATIONS FOR THEIR ENTIRE DEPTH TO ACCOMMODATE INSTALLATION OF NEW FOUNDATIONS.
7. THE CONTRACTOR SHALL USE EXTREME CAUTION IN AREAS OF DEMOLITION WHICH MAY DISTURB EXISTING STRUCTURES. TEMPORARY SHORING, BARRICADES, DUST PARTITIONS, ETC. SHALL BE PROVIDED AS REQUIRED TO PROTECT GENERAL PUBLIC, ALL EXISTING STRUCTURES AND PROPERTY.
8. SEE STRUCTURAL, ELECTRICAL, SPRINKLER, AND PLUMBING DRAWINGS FOR RELATED DEMOLITION WORK.
9. VERIFY LOCATION OF EXISTING STRUCTURES AND SHORE UP ROOF/FLOOR ABOVE AS REQUIRED BEFORE REMOVING WALL.
10. REMOVAL OF ALL CEILINGS AND MOUNTED ITEMS THROUGHOUT THE CONTRACT AREA INCLUDE ANCHORING HARDWARE, AND MISCELLANEOUS FASTENINGS, ETC.
11. WALLS SHALL BE REMOVED AS INDICATED ON DEMOLITION PLANS. ALL UTILITIES IN WALL SHALL BE CUT TO BELOW SLAB OR ABOVE THE CEILING.
12. REMOVE ALL EXISTING ELECTRICAL AND PLUMBING LINES NOT TO BE RE-USED. CAP PLUMBING LINES AS REQUIRED. ELECTRICAL WIRING SHALL BE DISCONNECTED BACK TO THE NEAREST ACTIVE LOCATION. ALL ABANDONED COMMUNICATION CABLES (DATA, TELEPHONE, FIRE ALARM, AND AUDIO/VIDEO CABLES) SHALL BE REMOVED TO SOURCE IF NOT TAGGED FOR FUTURE USE.
13. DEMOLITION PROCEDURES ARE THE SOLE RESPONSIBILITY OF THE GENERAL CONTRACTOR OF THIS CONTRACT. CONTRACTOR TO "CUT OFF" ALL NECESSARY UTILITIES REQUIRED TO OBTAIN DESIRED RESULTS. CONTRACTOR TO OBTAIN "SHUT OFF" APPROVALS FROM PLAYLAND PRIOR TO SCHEDULED DEMOLITION.
14. THE GENERAL CONTRACTOR SHALL PATCH AND REPAIR ALL EXISTING CONSTRUCTION DISTURBED BY THE WORK AND PREPARE FOR NEW FINISH AS SHOWN ON THE FINISH SCHEDULE.
15. THE EXISTING WOOD FLOOR SHALL BE CLEANED TO ALLOW FOR THE APPLICAITON OF NEW FLOOR COATING.
16. THE GENERAL CONTRACTOR SHALL BE RESPONSIBLE FOR THE CLEANING UP AND HAULING AWAY OF ALL TRASH AND DEBRIS ON A REGULAR BASIS DURING THE CONSTRUCTION PERIOD.
17. ALL DEBRIS REMOVED FROM THE SITE SHALL BE DISPOSED OF IN A LEGAL MANNER.
18. EXISTING EXITS SHALL REMAIN FULLY ACCESSIBLE AND UNOBSTRUCTED DURING THE PROGRESS OF THE WORK.

## DEMOLITION LEGEND

INDICATES DEMOLITION

DM - # DEMOLITION KEY NOTES

NIC INDICATES N.I.C.

## DEMOLITION KEYNOTES

| | |
|---|---|
| DM-1 | REMOVE EXISTING WOOD SIDING. |
| DM-2 | REMOVE EXISTING GATE. |
| DM-5 | REMOVE COLUMN ENCLOSURES. CAREFULLY REMOVE AT LEAST ONE COLUMN ENCLOSURE TO USE AS REFERENCE IN ORDER TO REPLICATE TRIMS TO MATCH LOCATION, SIZE AND SHAPE AS INDICATED. COORDINATE WITH STRUCTURAL DRAWINGS. |
| DM-7 | REMOVE EXISTING DOOR & FRAME. |
| DM-11 | CAREFULLY REMOVE AND RETURN TO OWNER ALL EXISTING SIGNAGE AND LETTERING. COORDINATE SIGNAGE REMOVAL WITH OWNER PRIOR TO REMOVAL OF ANY SIGNAGE. |
| DM-16 | REMOVE EXISTING ROOFING SHINGLES, UNDERLAYMENT AND ANY ROTTED WOOD SHEATHING. REPLACE DAMAGED SHEATHING TO MATCH EXISTING. COORDINATE WITH A/E. |
| DM-17 | REMOVE EXISTING ROOFING MEMBRANES, UNDERLAYMENT AND ANY ROTTED WOOD SHEATHING. REPLACE EXISTING DAMAGED SHEATHING TO MATCH EXISTING. COORDINATE WITH A/E. |
| DM-18 | REMOVE EXISTING PANELS & TRIMS. |
| DM-21 | CAREFULLY REMOVE FINIAL LIGHTS (H6) FOR REFURBISHMENT AND REINSTALLATION |
| DM-28 | REMOVE EXISTING GUTTER, FASCIA, AND SOFFITS. |
| DM-29 | REMOVE SECTION OF EXISTING WALL. PROVIDE HEADER AS REQUIRED TO CREATE A DOOR OPENING. SEE ELEVATIONS FOR EXTENT. |

8/30/2022 4:05:32 PM

CONSULTANT INFORMATION

The LiRo Group
3 Aerial Way, Syosset, New York 11791
(516) 938-5476 www.liro.com

CONSULTANT SEAL

REGISTERED ARCHITECT ROBERT D. DONOVAN 023229 STATE OF NEW YORK

| REVISION NUMBER | DATE | MADE BY | APP'D BY | REVISION |
|---|---|---|---|---|
| | | | | |

RECORD DRAWING CERTIFICATION

☐ AS BUILT – CHANGES AS NOTED ☐ AS BUILT – NO CHANGES

CONTRACTOR
NAME
SIGNATURE
TITLE DATE

PROJECT COORDINATOR
NAME
SIGNATURE
TITLE DATE

WESTCHESTER COUNTY, NEW YORK
DEPARTMENT OF PUBLIC WORKS AND TRANSPORTATION
DIVISION OF ENGINEERING

**INFRASTRUCTURE REHABILITATION PHASE 3**
**PLAYLAND PARK, RYE, NEW YORK**
**CROSS AXIS BUILDING A**
**CXA - DEMOLITION ELEVATIONS**

| | |
|---|---|
| CONTRACT NUMBER | 22-523 |
| SHEET NUMBER | CXA-A-03 |
| DWG NO.: | 110 of 664 |
| SCALE: | As indicated |
| DATE: | 08/23/2022 |
| DPW FILE NUMBER | 1-118-A-859-0 |
| REV. NO. | 0 |

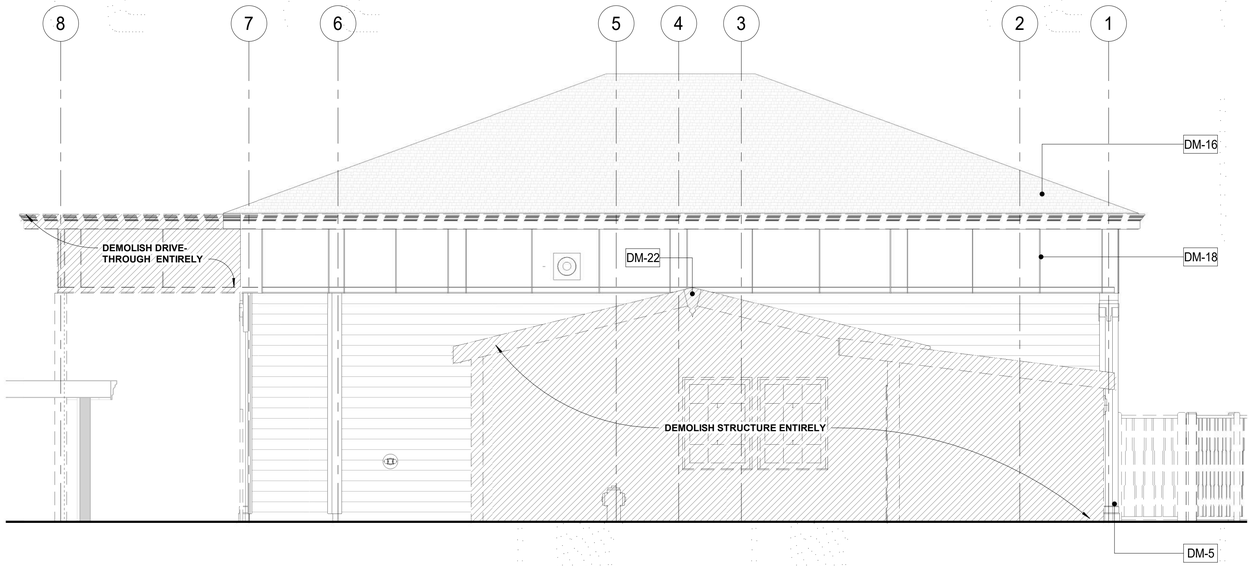


1 DEMOLITION BUILDING ELEVATION - NORTH
1/4" = 1'-0"

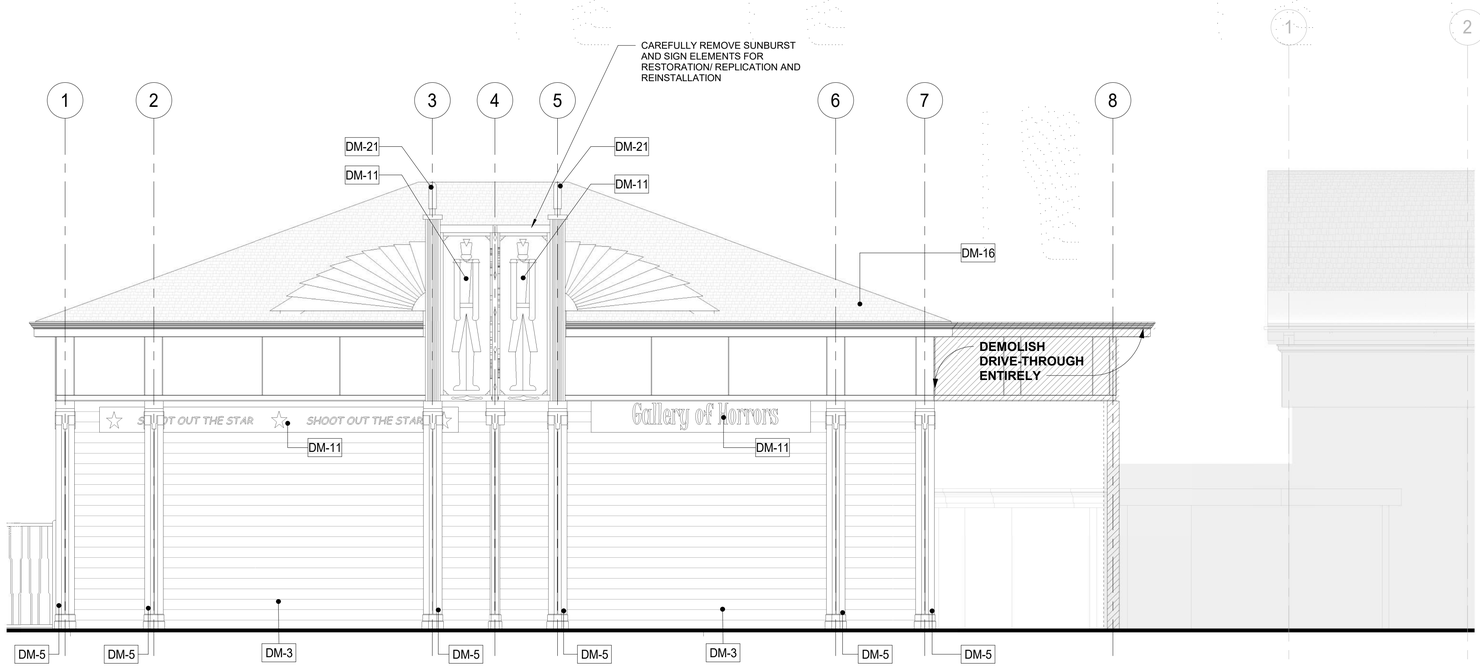


2 DEMOLITION BUILDING ELEVATION - SOUTH
1/4" = 1'-0"

## DEMOLITION NOTES:

1. THE GENERAL CONTRACTOR SHALL VISIT THE SITE AND FAMILIARIZE HIM/HERSELF WITH EXISTING CONDITIONS AND REQUIREMENTS OF THE WORK. THE GENERAL CONTRACTOR SHALL FIELD VERIFY EXACT QUANTITIES OF ALL ITEMS TO BE REMOVED.
2. THE CONTRACTOR SHALL PHOTOGRAPH AND DOCUMENT EXISTING HISTORIC DECORATIVE TRIMS INCLUDING SIZES AND PROFILES PRIOR TO ENVIRONMENTAL REMEDIATION WORK START.
3. PRIOR TO DEMOLITION, CONTRACTOR IS REQUIRED TO POSSES AN ASBESTOS -CONTAINMENT MATERIALS (ACM) PERMIT FROM THE DEPARTMENT OF LABOR.
4. ITEMS TO BE REMOVED / DEMOLISHED AS INDICATED ON THE DRAWINGS ARE INTENDED TO SHOW THE GENERAL SCOPE OF THE DEMOLITION WORK. THE DRAWINGS DO NOT REPRESENT IN DETAIL ALL ITEMS OR SITUATIONS THAT MAY BE ENCOUNTERED DURING THE DEMOLITION. IT IS THE CONTRACTOR'S RESPONSIBILITY TO REMOVE, PROTECT, AND MAKE CORRECTIONS AS REQUIRED TO ACHIEVE DRAWING INTENT. THE GENERAL CONTRACTOR SHALL NOTIFY ARCHITECT OF ANY STRUCTURAL NONCONFORMITY TO PLANS AND SPECIFICATIONS.
5. PLAYLAND RESERVES THE RIGHT TO REVIEW ALL MATERIALS DESIGNATED FOR REMOVAL AND TO RETAIN OWNERSHIP OF SUCH MATERIALS. IF PLAYLAND RETAINS ANY MATERIAL THE CONTRACTOR SHALL MAKE ARRANGEMENTS WITH THE PLAYLAND'S SUPERINTENDENT TO HAVE THOSE MATERIALS REMOVED AND STORED OFF SITE AT NO ADDITIONAL COST.
6. DEMOLITION OF THE EXISTING BUILDING SHALL INCLUDE REMOVAL OF THE EXISTING FOUNDATIONS FOR THEIR ENTIRE DEPTH TO ACCOMMODATE INSTALLATION OF NEW FOUNDATIONS.
7. THE CONTRACTOR SHALL USE EXTREME CAUTION IN AREAS OF DEMOLITION WHICH MAY DISTURB EXISTING STRUCTURES. TEMPORARY SHORING, BARRICADES, DUST PARTITIONS, ETC. SHALL BE PROVIDED AS REQUIRED TO PROTECT GENERAL PUBLIC, ALL EXISTING STRUCTURES AND PROPERTY.
8. SEE STRUCTURAL, ELECTRICAL, SPRINKLER, AND PLUMBING DRAWINGS FOR RELATED DEMOLITION WORK.
9. VERIFY LOCATION OF EXISTING STRUCTURES AND SHORE UP ROOF/FLOOR ABOVE AS REQUIRED BEFORE REMOVING WALL.
10. REMOVAL OF ALL CEILINGS AND MOUNTED ITEMS THROUGHOUT THE CONTRACT AREA INCLUDE ANCHORING HARDWARE, AND MISCELLANEOUS FASTENINGS, ETC.
11. WALLS SHALL BE REMOVED AS INDICATED ON DEMOLITION PLANS. ALL UTILITIES IN WALL SHALL BE CUT TO BELOW SLAB OR ABOVE THE CEILING.
12. REMOVE ALL EXISTING ELECTRICAL AND PLUMBING LINES NOT TO BE RE-USED. CAP PLUMBING LINES AS REQUIRED. ELECTRICAL WIRING SHALL BE DISCONNECTED BACK TO THE NEAREST ACTIVE LOCATION. ALL ABANDONED COMMUNICATION CABLES (DATA, TELEPHONE, FIRE ALARM, AND AUDIO/VIDEO CABLES) SHALL BE REMOVED TO SOURCE IF NOT TAGGED FOR FUTURE USE.
13. DEMOLITION PROCEDURES ARE THE SOLE RESPONSIBILITY OF THE GENERAL CONTRACTOR OF THIS CONTRACT. CONTRACTOR TO "CUT OFF" ALL NECESSARY UTILITIES REQUIRED TO OBTAIN DESIRED RESULTS. CONTRACTOR TO OBTAIN "SHUT OFF" APPROVALS FROM PLAYLAND PRIOR TO SCHEDULED DEMOLITION.
14. THE GENERAL CONTRACTOR SHALL PATCH AND REPAIR ALL EXISTING CONSTRUCTION DISTURBED BY THE WORK AND PREPARE FOR NEW FINISH AS SHOWN ON THE FINISH SCHEDULE.
15. THE EXISTING WOOD FLOOR SHALL BE CLEANED TO ALLOW FOR THE APPLICAITON OF NEW FLOOR COATING.
16. THE GENERAL CONTRACTOR SHALL BE RESPONSIBLE FOR THE CLEANING UP AND HAULING AWAY OF ALL TRASH AND DEBRIS ON A REGULAR BASIS DURING THE CONSTRUCTION PERIOD.
17. ALL DEBRIS REMOVED FROM THE SITE SHALL BE DISPOSED OF IN A LEGAL MANNER.
18. EXISTING EXITS SHALL REMAIN FULLY ACCESSIBLE AND UNOBSTRUCTED DURING THE PROGRESS OF THE WORK.

## DEMOLITION LEGEND

INDICATES DEMOLITION

DM - # DEMOLITION KEY NOTES

NIC INDICATES N.I.C.

## DEMOLITION KEYNOTES

| | |
|---|---|
| DM-3 | REMOVE ROLL DOWN DOOR AND ASSOCIATED HARDWARE. |
| DM-5 | REMOVE COLUMN ENCLOSURES. CAREFULLY REMOVE AT LEAST ONE COLUMN ENCLOSURE TO USE AS REFERENCE IN ORDER TO REPLICATE TRIMS TO MATCH LOCATION, SIZE AND SHAPE AS INDICATED. COORDINATE WITH STRUCTURAL DRAWINGS. |
| DM-11 | CAREFULLY REMOVE AND RETURN TO OWNER ALL EXISTING SIGNAGE AND LETTERING. COORDINATE SIGNAGE REMOVAL WITH OWNER PRIOR TO REMOVAL OF ANY SIGNAGE. |
| DM-16 | REMOVE EXISTING ROOFING SHINGLES, UNDERLAYMENT AND ANY ROTTED WOOD SHEATHING. REPLACE DAMAGED SHEATHING TO MATCH EXISTING. COORDINATE WITH A/E. |
| DM-18 | REMOVE EXISTING PANELS & TRIMS. |
| DM-21 | CAREFULLY REMOVE FINIAL LIGHTS (H6) FOR REFURBISHMENT AND REINSTALLATION |
| DM-22 | EXTERIOR GRADE 3/4" PLYWOOD SHEATHING, AT ALL INDICATED FLAT SURFACES. LOCATE MATERIAL JOINTS TO OCCUR BELOW DOCUMENTED LOCATION OF BATTEN TRIMS. |

8/30/2022 4:05:36 PM

CONSULTANT INFORMATION

The LiRo Group
3 Aerial Way, Syosset, New York 11791
(516) 938-5476 www.liro.com

CONSULTANT SEAL

REGISTERED ARCHITECT ROBERT D. YOUNG JR. 023280 STATE OF NEW YORK

| REVISION NUMBER | DATE | MADE BY | APP'D BY | REVISION |
|---|---|---|---|---|

RECORD DRAWING CERTIFICATION

☐ AS BUILT – CHANGES AS NOTED ☐ AS BUILT – NO CHANGES

CONTRACTOR
NAME
SIGNATURE
TITLE DATE

PROJECT COORDINATOR
NAME
SIGNATURE
TITLE DATE

WESTCHESTER COUNTY, NEW YORK
DEPARTMENT OF PUBLIC WORKS AND TRANSPORTATION
DIVISION OF ENGINEERING

**INFRASTRUCTURE REHABILITATION PHASE 3**
**PLAYLAND PARK, RYE, NEW YORK**
**CROSS AXIS BUILDING A**
**CXA - DEMOLITION ELEVATIONS**

CONTRACT NUMBER 22-523
SHEET NUMBER **CXA-A-04**
DWG NO.: 111 of 664
SCALE: **As indicated**
DATE: **08/23/2022**
DPW FILE NUMBER **1-118-A-860-0**
REV. NO. 0

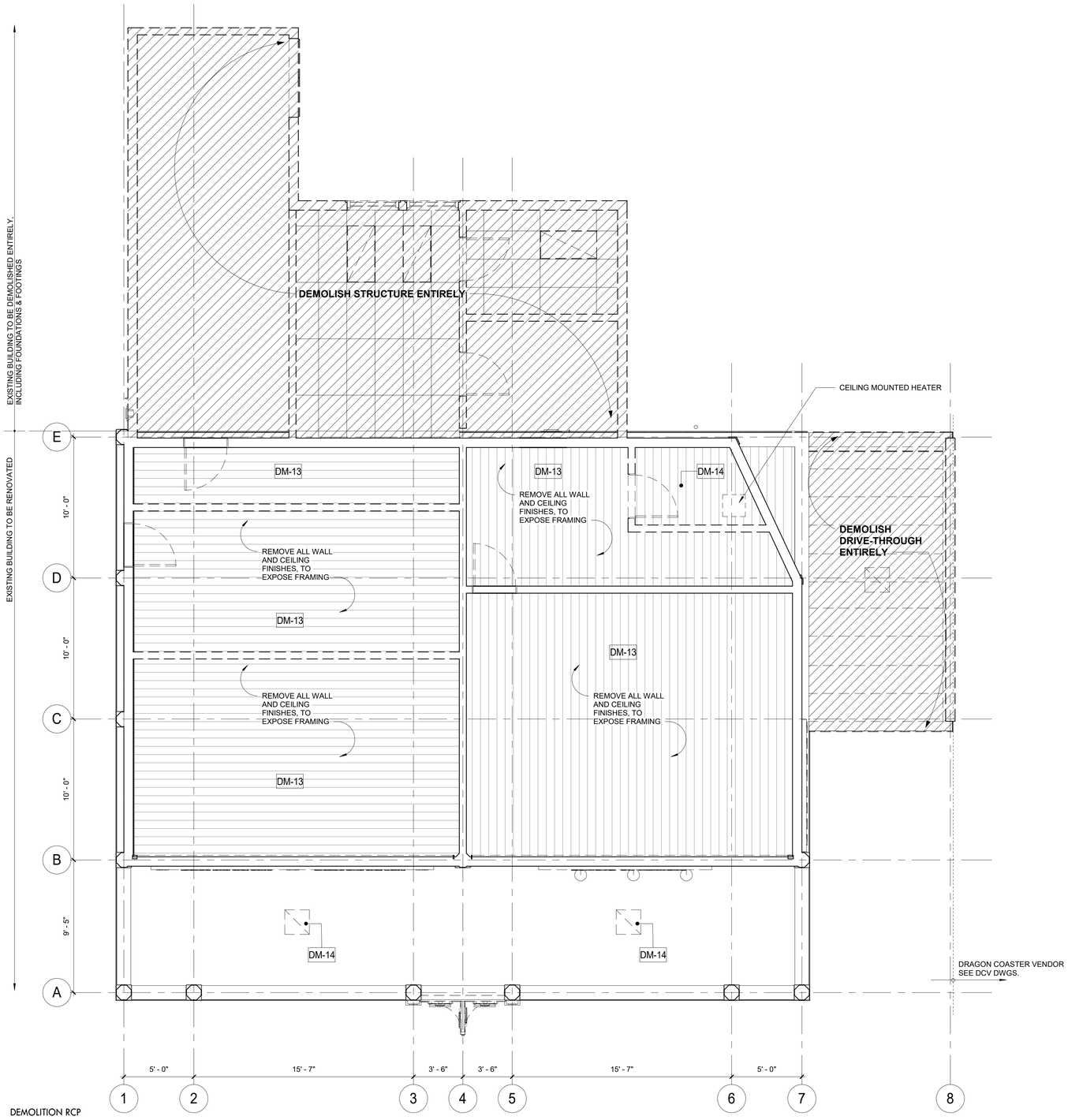


DEMOLITION RCP

## DEMOLITION NOTES:

1. THE GENERAL CONTRACTOR SHALL VISIT THE SITE AND FAMILIARIZE HIM/HERSELF WITH EXISTING CONDITIONS AND REQUIREMENTS OF THE WORK. THE GENERAL CONTRACTOR SHALL FIELD VERIFY EXACT QUANTITIES OF ALL ITEMS TO BE REMOVED.
2. THE CONTRACTOR SHALL PHOTOGRAPH AND DOCUMENT EXISTING HISTORIC DECORATIVE TRIMS INCLUDING SIZES AND PROFILES PRIOR TO ENVIRONMENTAL REMEDIATION WORK START.
3. PRIOR TO DEMOLITION, CONTRACTOR IS REQUIRED TO POSSES AN ASBESTOS -CONTAINMENT MATERIALS (ACM) PERMIT FROM THE DEPARTMENT OF LABOR.
4. ITEMS TO BE REMOVED / DEMOLISHED AS INDICATED ON THE DRAWINGS ARE INTENDED TO SHOW THE GENERAL SCOPE OF THE DEMOLITION WORK. THE DRAWINGS DO NOT REPRESENT IN DETAIL ALL ITEMS OR SITUATIONS THAT MAY BE ENCOUNTERED DURING THE DEMOLITION. IT IS THE CONTRACTOR'S RESPONSIBILITY TO REMOVE, PROTECT, AND MAKE CORRECTIONS AS REQUIRED TO ACHIEVE DRAWING INTENT. THE GENERAL CONTRACTOR SHALL NOTIFY ARCHITECT OF ANY STRUCTURAL NONCONFORMITY TO PLANS AND SPECIFICATIONS.
5. PLAYLAND RESERVES THE RIGHT TO REVIEW ALL MATERIALS DESIGNATED FOR REMOVAL AND TO RETAIN OWNERSHIP OF SUCH MATERIALS. IF PLAYLAND RETAINS ANY MATERIAL THE CONTRACTOR SHALL MAKE ARRANGEMENTS WITH THE PLAYLAND'S SUPERINTENDENT TO HAVE THOSE MATERIALS REMOVED AND STORED OFF SITE AT NO ADDITIONAL COST.
6. DEMOLITION OF THE EXISTING BUILDING SHALL INCLUDE REMOVAL OF THE EXISTING FOUNDATIONS FOR THEIR ENTIRE DEPTH TO ACCOMMODATE INSTALLATION OF NEW FOUNDATIONS.
7. THE CONTRACTOR SHALL USE EXTREME CAUTION IN AREAS OF DEMOLITION WHICH MAY DISTURB EXISTING STRUCTURES. TEMPORARY SHORING, BARRICADES, DUST PARTITIONS, ETC. SHALL BE PROVIDED AS REQUIRED TO PROTECT GENERAL PUBLIC, ALL EXISTING STRUCTURES AND PROPERTY.
8. SEE STRUCTURAL, ELECTRICAL, SPRINKLER, AND PLUMBING DRAWINGS FOR RELATED DEMOLITION WORK.
9. VERIFY LOCATION OF EXISTING STRUCTURES AND SHORE UP ROOF/FLOOR ABOVE AS REQUIRED BEFORE REMOVING WALL.
10. REMOVAL OF ALL CEILINGS AND MOUNTED ITEMS THROUGHOUT THE CONTRACT AREA INCLUDE ANCHORING HARDWARE, AND MISCELLANEOUS FASTENINGS, ETC.
11. WALLS SHALL BE REMOVED AS INDICATED ON DEMOLITION PLANS. ALL UTILITIES IN WALL SHALL BE CUT TO BELOW SLAB OR ABOVE THE CEILING.
12. REMOVE ALL EXISTING ELECTRICAL AND PLUMBING LINES NOT TO BE RE-USED. CAP PLUMBING LINES AS REQUIRED. ELECTRICAL WIRING SHALL BE DISCONNECTED BACK TO THE NEAREST ACTIVE LOCATION. ALL ABANDONED COMMUNICATION CABLES (DATA, TELEPHONE, FIRE ALARM, AND AUDIO/VIDEO CABLES) SHALL BE REMOVED TO SOURCE IF NOT TAGGED FOR FUTURE USE.
13. DEMOLITION PROCEDURES ARE THE SOLE RESPONSIBILITY OF THE GENERAL CONTRACTOR OF THIS CONTRACT. CONTRACTOR TO "CUT OFF" ALL NECESSARY UTILITIES REQUIRED TO OBTAIN DESIRED RESULTS. CONTRACTOR TO OBTAIN "SHUT OFF" APPROVALS FROM PLAYLAND PRIOR TO SCHEDULED DEMOLITION.
14. THE GENERAL CONTRACTOR SHALL PATCH AND REPAIR ALL EXISTING CONSTRUCTION DISTURBED BY THE WORK AND PREPARE FOR NEW FINISH AS SHOWN ON THE FINISH SCHEDULE.
15. THE EXISTING WOOD FLOOR SHALL BE CLEANED TO ALLOW FOR THE APPLICAITON OF NEW FLOOR COATING.
16. THE GENERAL CONTRACTOR SHALL BE RESPONSIBLE FOR THE CLEANING UP AND HAULING AWAY OF ALL TRASH AND DEBRIS ON A REGULAR BASIS DURING THE CONSTRUCTION PERIOD.
17. ALL DEBRIS REMOVED FROM THE SITE SHALL BE DISPOSED OF IN A LEGAL MANNER.
18. EXISTING EXITS SHALL REMAIN FULLY ACCESSIBLE AND UNOBSTRUCTED DURING THE PROGRESS OF THE WORK.

## DEMOLITION LEGEND

| | |
|---|---|
| (hatched) | INDICATES DEMOLITION |
| DM - # | DEMOLITION KEY NOTES |
| NIC | INDICATES N.I.C. |

## DEMOLITION KEYNOTES

| | |
|---|---|
| DM-13 | REMOVE EXISTING CEILING AND ALL ACCESSORIES AND EQUIPMENT. |
| DM-14 | REMOVE EXISTING LIGHTING FIXTURES AND ELECTRICAL WIRING CONNECTED TO THESE FIXTURES. SEE ELECTRICAL FOR DETAILS. |

8/30/2022 4:05:37 PM

CONSULTANT INFORMATION

The LiRo Group

3 Aerial Way, Syosset, New York 11791
(516) 938-5476 www.liro.com

CONSULTANT SEAL

REGISTERED ARCHITECT ROBERT D. YOUNG 023280 STATE OF NEW YORK

| REVISION NUMBER | DATE | MADE BY | APP'D BY | REVISION |
|---|---|---|---|---|

RECORD DRAWING CERTIFICATION

☐ AS BUILT – CHANGES AS NOTED ☐ AS BUILT – NO CHANGES

CONTRACTOR
NAME
SIGNATURE
TITLE DATE

PROJECT COORDINATOR
NAME
SIGNATURE
TITLE DATE

WESTCHESTER COUNTY, NEW YORK
DEPARTMENT OF PUBLIC WORKS AND TRANSPORTATION
DIVISION OF ENGINEERING

**INFRASTRUCTURE REHABILITATION PHASE 3**
**PLAYLAND PARK, RYE, NEW YORK**
**CROSS AXIS BUILDING A**
**CXA - DEMOLITION REFLECTED CEILING PLAN**

| | |
|---|---|
| CONTRACT NUMBER | 22-523 |
| SHEET NUMBER | CXA-A-05 |
| DWG NO.: | 112 of 664 |
| SCALE: | As indicated |
| DATE: | 08/23/2022 |
| DPW FILE NUMBER | 1-118-A-861-0 |
| REV. NO. | 0 |

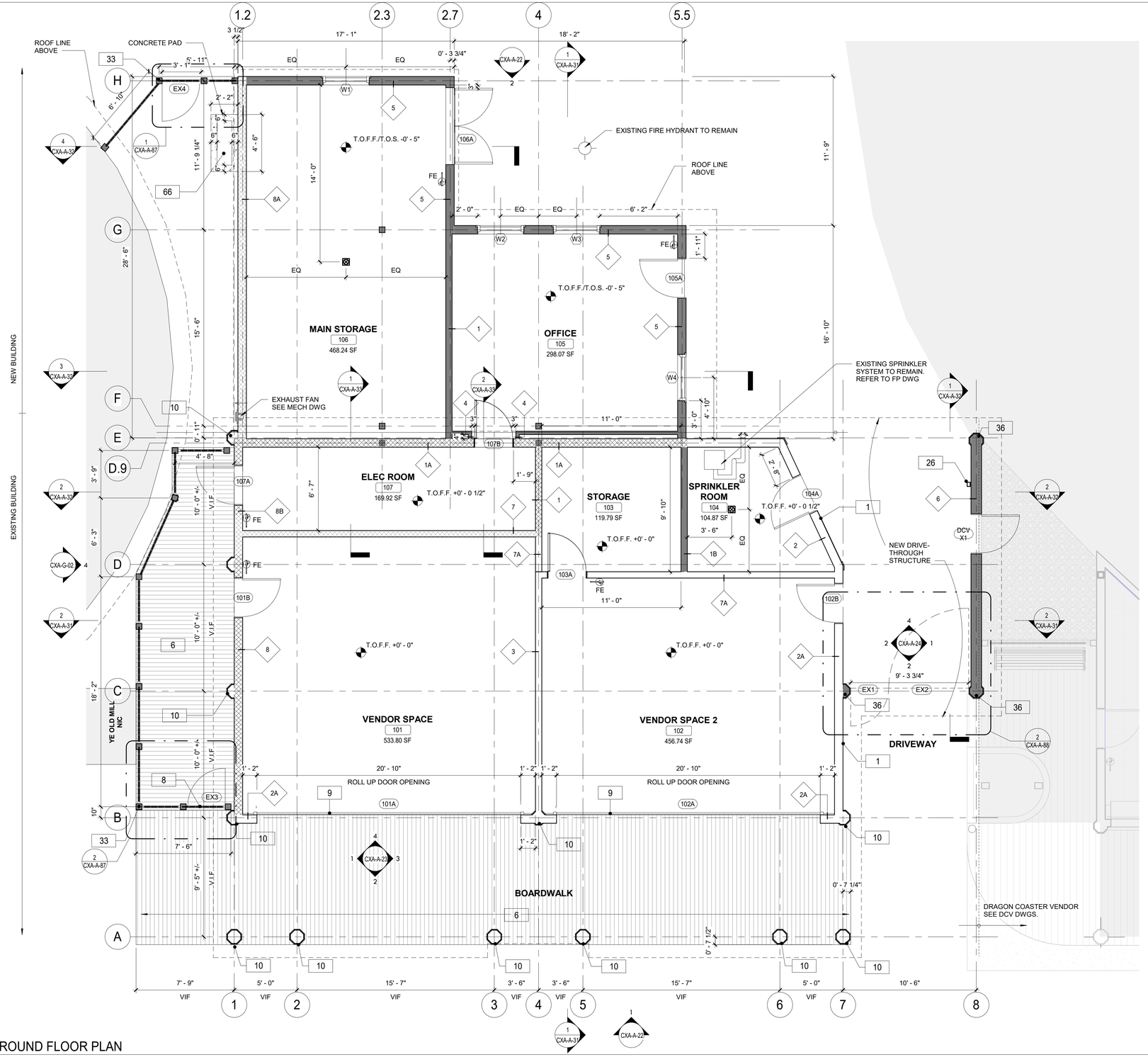


1 GROUND FLOOR PLAN
1/4" = 1'-0"

## FLOOR PLAN NOTES:

1. DIMENSIONS ARE TO FACE OF GYPSUM WALL BOARD, GRID LINES, OR CENTERLINE OF COLUMN. ALL ELEVATIONS ARE NOTED FROM FINISH FLOOR ELEVATIONS.
2. PROVIDE DRYWALL TRIM AT ALL EXPOSED EDGES AND CORNERS.
3. MINIMUM DIMENSION FROM ANY CORNER OR WALL TO FRAMING STUD AT DOOR JAMB OPENING SHALL BE 4" (U.N.O.).
4. PROVIDE FIRE RETARDANT WOOD BLOCKING FOR ANY WALL MOUNTED EQUIPMENT OR ACCESSORIES. COORDINATE ALL BLOCKING REQUIREMENTS NECESSARY WITH OTHER TRADES.
5. THE CONTRACTOR SHALL VERIFY DIMENSIONS OF THE EXISTING SPACE AND OF ANY EXISTING CONSTRUCTION TO REMAIN BY ACTUAL MEASUREMENT BEFORE ANY WORK IS PERFORMED. IF ANY MEASUREMENTS DIFFER FROM DIMENSIONS SHOWN ON PLAN, GC IS TO NOTIFY THE ARCHITECT IMMEDIATELY. THE CONTRACTOR SHALL BE RESPONSIBLE FOR CORRECTING ANY AND ALL DISCREPANCIES FOUND AFTER THE WORK IS PERFORMED, AT NO ADDITIONAL EXPENSE TO THE OWNER.
6. THE GC SHALL PROVIDE CAULK JOINTS WHERE GYP. BD. MEETS THE FLOOR OR ROOF DECK.
7. THE GC SHALL BE RESPONSIBLE FOR COORDINATING WITH OWNER ON ALL WORK TO BE PERFORMED BY THE OWNER. ANY POTENTIAL CONFLICTS OR DELAYS CAUSED BY THE OWNER'S SUBCONTRACTORS MUST BE DOCUMENTED IN WRITING TO THE OWNER BEFORE THE DELAY IS ACTUALLY INCURRED FOR IT TO BE CONSIDERED. OTHERWISE THE GC WILL BE RESPONSIBLE FOR MEETING THE SCHEDULE AS OUTLINED IN THE CONTRACT.
8. THE CONTRACTOR TO VERIFY ALL FINISHED DIMENSIONS. FIELD CONDITIONS ALTERING ANY DIMENSIONS SHOULD BE BROUGHT TO THE ATTENTION OF THE OWNER AND ARCHITECT.
9. THE CONTRACTOR SHALL SUPPLY ALL MATERIAL, LABOR, AND COORDINATION REQUIRED FOR THEINSTALLATION OF ALL OWNER-SUPPLIED ITEMS AS DESCRIBED IN THE DOCUMENTS, U.N.O.
10. THE CONTRACTOR IS RESPONSIBLE FOR ALL FLOOR AND WALL PENETRATIONS FOR ELECTRICAL AND MECHANICAL WORK. ALL SUCH OPENING SHALL BE FRAMED AND REINFORCED.
11. FLOOR SURFACES SHALL BE LEVELED TO ASSURE SMOOTH SURFACE FOR FINISH FLOOR INSTALLATION.
12. THE CONTRACTOR. TO COORDINATE ALL UTILITY STUB-UPS AND LOCATION OF ALL EQUIPMENT PRIOR TO INSTALLING ANY ONE ITEM.
13. PROVIDE PAINTED ACCESS PANELS IN WALLS & CEILING AT CONCEALED ITEMS SUCH AS VALVES, ONTROLS, SWITCHES OR ANY OTHER ITEMS THAT REQUIRES ACCESS. GC O DETERMINE ACCESS ANEL LOCATION W/ ARCHITECT PRIOR TO INSTALLATION.

## PLAN LEGEND:

| | | | |
|---|---|---|---|
| | NEW IPE WOOD DECK | 101 | DOOR TAG |
| | NEW CONSTRUCTION | 1i | WINDOW TAG |
| | 1-HR RATED | FE | FIRE EXTINGUISHER |
| | NOT IN CONTRACT | 1i | WALL TAG |
| ? | KEY NOTES | FD | FLOOR DRAIN |

## CONSTRUCTION KEY NOTES

| | |
|---|---|
| 1 | PROVIDE AND INSTALL NEW 1x8 MILLED YELLOW PINE - TONGUE AND GROOVE - NO BEVEL |
| 6 | INSTALL NEW IPE DECKING. SEE STRUCTURAL FOR DETAILS. |
| 8 | PROVIDE AND INSTALL GATE. SEE DETAILS. |
| 9 | PROVIDE AND INSTALL ROLL DOWN DOOR. SEE DETAILS AND SCHEDULE. |
| 10 | PROVIDE AND INSTALL COLUMN ENCLOSURES. SEE DETAILS. |
| 26 | PROVIDE AND INSTALL ALUMINUM LEADER HEAD, LEADER, AND SPLASH GUARD. |
| 33 | NEW WOOD FENCE. SEE DETAILS. |
| 36 | NEW PILASTER TO MATCH COLUMN ENCLOSURE AS INDICATED |
| 66 | INSTALL NEW MINI SPLIT MECHANICAL UNIT. SEE MECHANICAL DRAWINGS. |

8/30/2022 4:05:41 PM

CONSULTANT INFORMATION

The LiRo Group
3 Aerial Way, Syosset, New York 11791
(516) 938-5476 www.liro.com

CONSULTANT SEAL

REGISTERED ARCHITECT ROBERT D. YOUNG JR. 023280 STATE OF NEW YORK

| REVISION NUMBER | DATE | MADE BY | APP'D BY | REVISION |
|---|---|---|---|---|

RECORD DRAWING CERTIFICATION

☐ AS BUILT – CHANGES AS NOTED ☐ AS BUILT – NO CHANGES

CONTRACTOR
NAME
SIGNATURE
TITLE DATE

PROJECT COORDINATOR
NAME
SIGNATURE
TITLE DATE

WESTCHESTER COUNTY, NEW YORK
DEPARTMENT OF PUBLIC WORKS AND TRANSPORTATION
DIVISION OF ENGINEERING

INFRASTRUCTURE REHABILITATION PHASE 3
PLAYLAND PARK, RYE, NEW YORK
CROSS AXIS BUILDING A
CXA - GROUND FLOOR PLAN

| | |
|---|---|
| CONTRACT NUMBER | 22-523 |
| SHEET NUMBER | CXA-A-11 |
| DWG NO.: | 113 of 664 |
| SCALE: | As indicated |
| DATE: | 08/23/2022 |
| DPW FILE NUMBER | 1-118-A-862-0 |
| REV. NO. | 0 |

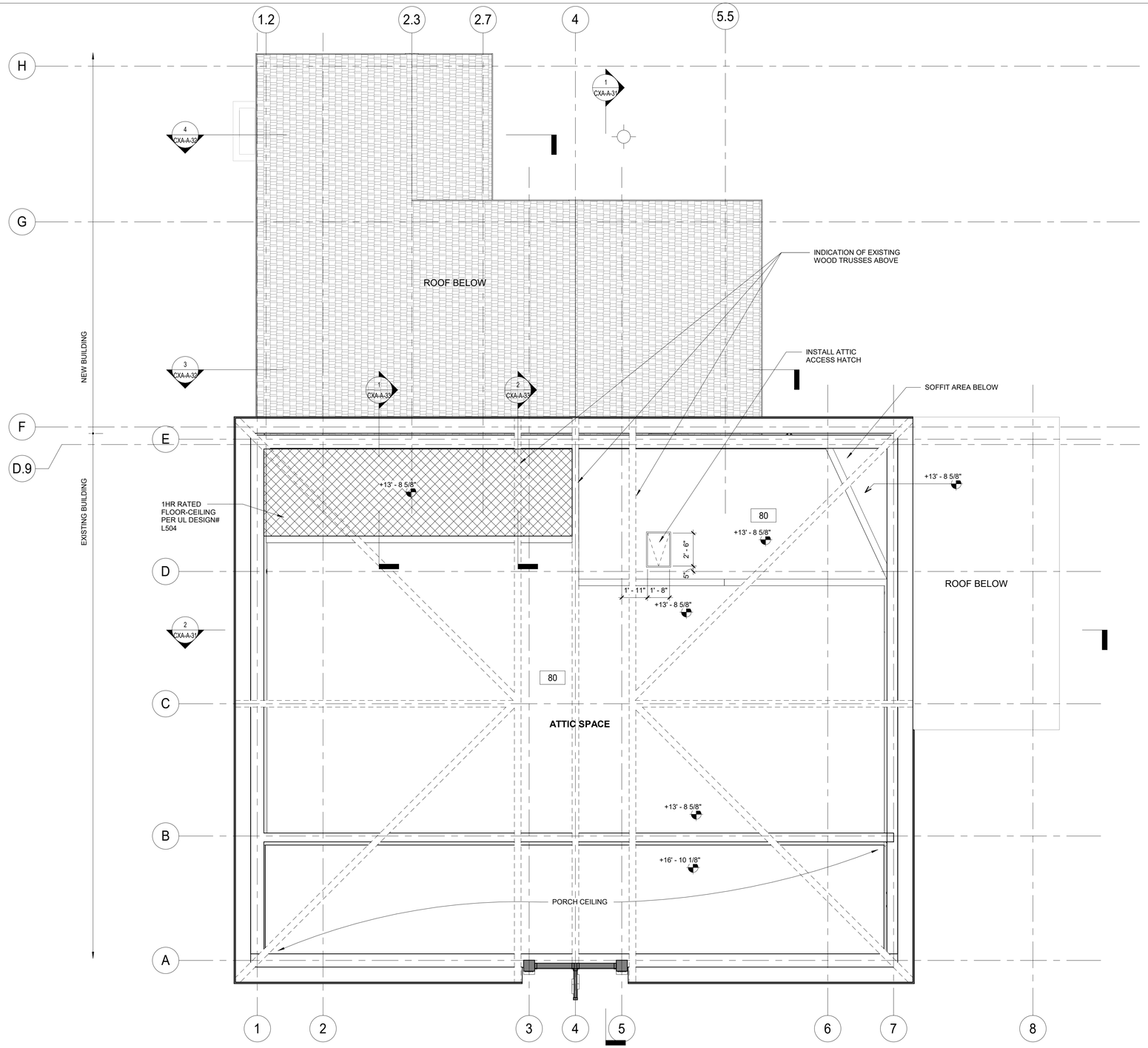


1 ATTIC LEVEL
1/4" = 1'-0"

## FLOOR PLAN NOTES:

1. DIMENSIONS ARE TO FACE OF GYPSUM WALL BOARD, GRID LINES, OR CENTERLINE OF COLUMN. ALL ELEVATIONS ARE NOTED FROM FINISH FLOOR ELEVATIONS.
2. PROVIDE DRYWALL TRIM AT ALL EXPOSED EDGES AND CORNERS.
3. MINIMUM DIMENSION FROM ANY CORNER OR WALL TO FRAMING STUD AT DOOR JAMB OPENING SHALL BE 4" (U.N.O.).
4. PROVIDE FIRE RETARDANT WOOD BLOCKING FOR ANY WALL MOUNTED EQUIPMENT OR ACCESSORIES. COORDINATE ALL BLOCKING REQUIREMENTS NECESSARY WITH OTHER TRADES.
5. THE CONTRACTOR SHALL VERIFY DIMENSIONS OF THE EXISTING SPACE AND OF ANY EXISTING CONSTRUCTION TO REMAIN BY ACTUAL MEASUREMENT BEFORE ANY WORK IS PERFORMED. IF ANY MEASUREMENTS DIFFER FROM DIMENSIONS SHOWN ON PLAN, GC IS TO NOTIFY THE ARCHITECT IMMEDIATELY. THE CONTRACTOR SHALL BE RESPONSIBLE FOR CORRECTING ANY AND ALL DISCREPANCIES FOUND AFTER THE WORK IS PERFORMED, AT NO ADDITIONAL EXPENSE TO THE OWNER.
6. THE GC SHALL PROVIDE CAULK JOINTS WHERE GYP. BD. MEETS THE FLOOR OR ROOF DECK.
7. THE GC SHALL BE RESPONSIBLE FOR COORDINATING WITH OWNER ON ALL WORK TO BE PERFORMED BY THE OWNER. ANY POTENTIAL CONFLICTS OR DELAYS CAUSED BY THE OWNER'S SUBCONTRACTORS MUST BE DOCUMENTED IN WRITING TO THE OWNER BEFORE THE DELAY IS ACTUALLY INCURRED FOR IT TO BE CONSIDERED. OTHERWISE THE GC WILL BE RESPONSIBLE FOR MEETING THE SCHEDULE AS OUTLINED IN THE CONTRACT.
8. THE CONTRACTOR TO VERIFY ALL FINISHED DIMENSIONS. FIELD CONDITIONS ALTERING ANY DIMENSIONS SHOULD BE BROUGHT TO THE ATTENTION OF THE OWNER AND ARCHITECT.
9. THE CONTRACTOR SHALL SUPPLY ALL MATERIAL, LABOR, AND COORDINATION REQUIRED FOR THEINSTALLATION OF ALL OWNER-SUPPLIED ITEMS AS DESCRIBED IN THE DOCUMENTS, U.N.O.
10. THE CONTRACTOR IS RESPONSIBLE FOR ALL FLOOR AND WALL PENETRATIONS FOR ELECTRICAL AND MECHANICAL WORK. ALL SUCH OPENING SHALL BE FRAMED AND REINFORCED.
11. FLOOR SURFACES SHALL BE LEVELED TO ASSURE SMOOTH SURFACE FOR FINISH FLOOR INSTALLATION.
12. THE CONTRACTOR. TO COORDINATE ALL UTILITY STUB-UPS AND LOCATION OF ALL EQUIPMENT PRIOR TO INSTALLING ANY ONE ITEM.
13. PROVIDE PAINTED ACCESS PANELS IN WALLS & CEILING AT CONCEALED ITEMS SUCH AS VALVES, ONTROLS, SWITCHES OR ANY OTHER ITEMS THAT REQUIRES ACCESS. GC O DETERMINE ACCESS ANEL LOCATION W/ ARCHITECT PRIOR TO INSTALLATION.

## PLAN LEGEND:

| | | | |
|---|---|---|---|
| | NEW IPE WOOD DECK | 101 | DOOR TAG |
| | NEW CONSTRUCTION | 1i | WINDOW TAG |
| | 1-HR RATED | FE | FIRE EXTINGUISHER |
| | NOT IN CONTRACT | 1i | WALL TAG |
| ? | KEY NOTES | FD | FLOOR DRAIN |

## CONSTRUCTION KEY NOTES

| | |
|---|---|
| 80 | NEW 3/4" PLYWOOD FLOOR |

8/30/2022 4:05:42 PM

CONSULTANT INFORMATION

The LiRo Group
3 Aerial Way, Syosset, New York 11791
(516) 938-5476 www.liro.com

CONSULTANT SEAL

REGISTERED ARCHITECT ROBERT D. VOLANTE 023280 STATE OF NEW YORK

| REVISION NUMBER | DATE | MADE BY | APP'D BY | REVISION |
|---|---|---|---|---|

RECORD DRAWING CERTIFICATION

☐ AS BUILT – CHANGES AS NOTED ☐ AS BUILT – NO CHANGES

CONTRACTOR
NAME
SIGNATURE
TITLE DATE

PROJECT COORDINATOR
NAME
SIGNATURE
TITLE DATE

WESTCHESTER COUNTY, NEW YORK
DEPARTMENT OF PUBLIC WORKS AND TRANSPORTATION
DIVISION OF ENGINEERING

**INFRASTRUCTURE REHABILITATION PHASE 3**
**PLAYLAND PARK, RYE, NEW YORK**
**CROSS AXIS BUILDING A**
**CXA - ATTIC LEVEL PLAN**

| | |
|---|---|
| CONTRACT NUMBER | 22-523 |
| SHEET NUMBER | CXA-A-12 |
| DWG NO.: | 114 of 664 |
| SCALE: | As indicated |
| DATE: | 08/23/2022 |
| DPW FILE NUMBER | 1-118-A-863-0 |
| REV. NO. | 0 |

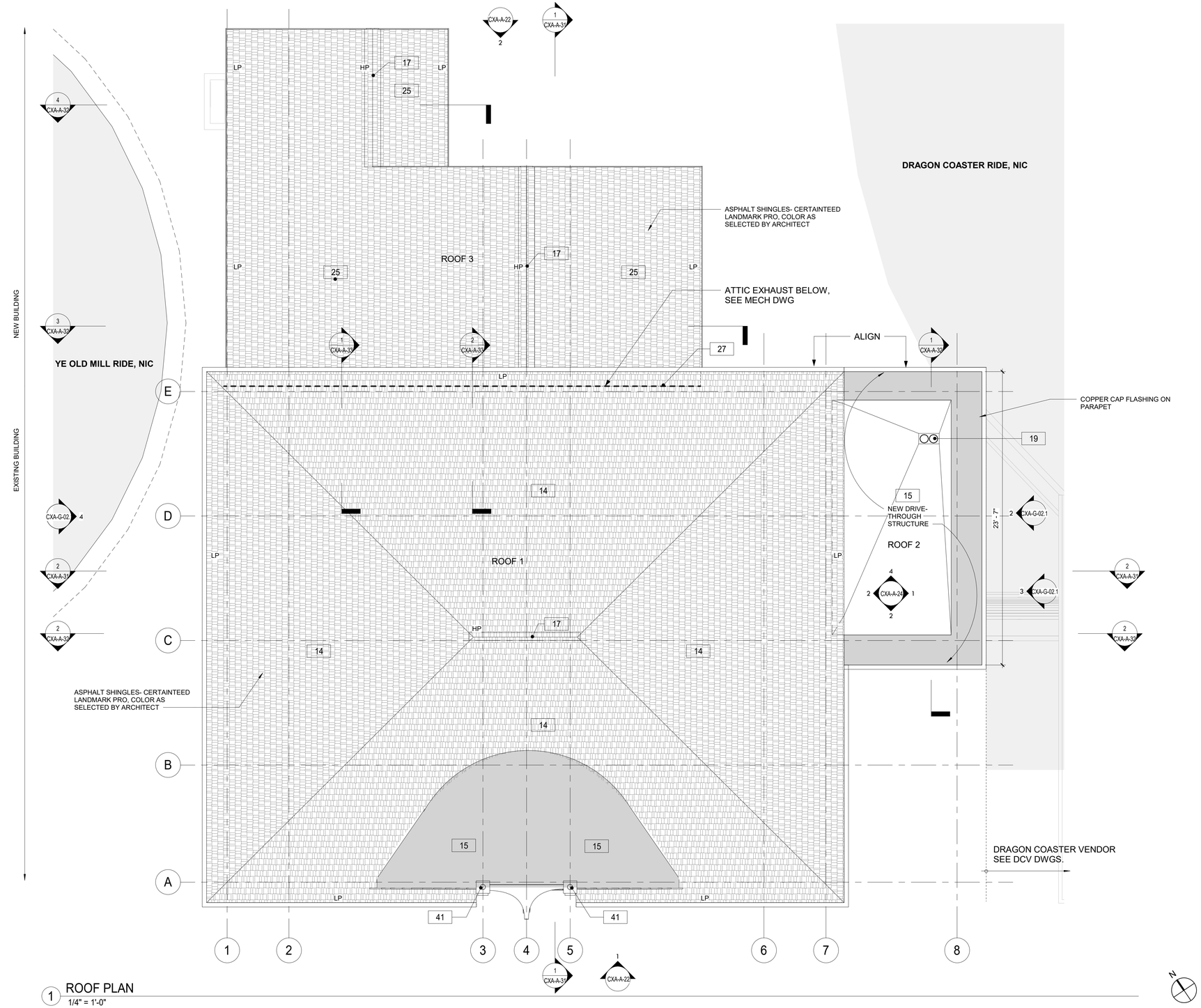


1 ROOF PLAN
1/4" = 1'-0"

## FLOOR PLAN NOTES:

1. DIMENSIONS ARE TO FACE OF GYPSUM WALL BOARD, GRID LINES, OR CENTERLINE OF COLUMN. ALL ELEVATIONS ARE NOTED FROM FINISH FLOOR ELEVATIONS.
2. PROVIDE DRYWALL TRIM AT ALL EXPOSED EDGES AND CORNERS.
3. MINIMUM DIMENSION FROM ANY CORNER OR WALL TO FRAMING STUD AT DOOR JAMB OPENING SHALL BE 4" (U.N.O.).
4. PROVIDE FIRE RETARDANT WOOD BLOCKING FOR ANY WALL MOUNTED EQUIPMENT OR ACCESSORIES. COORDINATE ALL BLOCKING REQUIREMENTS NECESSARY WITH OTHER TRADES.
5. THE CONTRACTOR SHALL VERIFY DIMENSIONS OF THE EXISTING SPACE AND OF ANY EXISTING CONSTRUCTION TO REMAIN BY ACTUAL MEASUREMENT BEFORE ANY WORK IS PERFORMED. IF ANY MEASUREMENTS DIFFER FROM DIMENSIONS SHOWN ON PLAN, GC IS TO NOTIFY THE ARCHITECT IMMEDIATELY. THE CONTRACTOR SHALL BE RESPONSIBLE FOR CORRECTING ANY AND ALL DISCREPANCIES FOUND AFTER THE WORK IS PERFORMED, AT NO ADDITIONAL EXPENSE TO THE OWNER.
6. THE GC SHALL PROVIDE CAULK JOINTS WHERE GYP. BD. MEETS THE FLOOR OR ROOF DECK.
7. THE GC SHALL BE RESPONSIBLE FOR COORDINATING WITH OWNER ON ALL WORK TO BE PERFORMED BY THE OWNER. ANY POTENTIAL CONFLICTS OR DELAYS CAUSED BY THE OWNER'S SUBCONTRACTORS MUST BE DOCUMENTED IN WRITING TO THE OWNER BEFORE THE DELAY IS ACTUALLY INCURRED FOR IT TO BE CONSIDERED. OTHERWISE THE GC WILL BE RESPONSIBLE FOR MEETING THE SCHEDULE AS OUTLINED IN THE CONTRACT.
8. THE CONTRACTOR TO VERIFY ALL FINISHED DIMENSIONS. FIELD CONDITIONS ALTERING ANY DIMENSIONS SHOULD BE BROUGHT TO THE ATTENTION OF THE OWNER AND ARCHITECT.
9. THE CONTRACTOR SHALL SUPPLY ALL MATERIAL, LABOR, AND COORDINATION REQUIRED FOR THEINSTALLATION OF ALL OWNER-SUPPLIED ITEMS AS DESCRIBED IN THE DOCUMENTS, U.N.O.
10. THE CONTRACTOR IS RESPONSIBLE FOR ALL FLOOR AND WALL PENETRATIONS FOR ELECTRICAL AND MECHANICAL WORK. ALL SUCH OPENING SHALL BE FRAMED AND REINFORCED.
11. FLOOR SURFACES SHALL BE LEVELED TO ASSURE SMOOTH SURFACE FOR FINISH FLOOR INSTALLATION.
12. THE CONTRACTOR. TO COORDINATE ALL UTILITY STUB-UPS AND LOCATION OF ALL EQUIPMENT PRIOR TO INSTALLING ANY ONE ITEM.
13. PROVIDE PAINTED ACCESS PANELS IN WALLS & CEILING AT CONCEALED ITEMS SUCH AS VALVES, ONTROLS, SWITCHES OR ANY OTHER ITEMS THAT REQUIRES ACCESS. GC O DETERMINE ACCESS ANEL LOCATION W/ ARCHITECT PRIOR TO INSTALLATION.

## PLAN LEGEND:

| | | | |
|---|---|---|---|
| | NEW IPE WOOD DECK | 101 | DOOR TAG |
| | NEW CONSTRUCTION | 1i | WINDOW TAG |
| | 1-HR RATED | FE | FIRE EXTINGUISHER |
| | NOT IN CONTRACT | 1i | WALL TAG |
| ? | KEY NOTES | FD | FLOOR DRAIN |

## CONSTRUCTION KEY NOTES

| | |
|---|---|
| 14 | PROVIDE NEW ASPHALT SHINGLE ROOFING,UNDERLAYMENT, AND REPLACE IN KIND EXISTING DECKING AS REQUIRED (COORDINATE WITH STRUCTURAL). |
| 15 | PROVIDE AND INSTALL SBS MODIFIED BITUMEN ROOFING AND UNDERLAYMENT. |
| 17 | PROVIDE AND INSTALL RIDGE VENT AT ROOF HIPS. |
| 19 | PROVIDE AND INSTALL ROOF DRAIN. SEE PLUMBING DRAWINGS. |
| 25 | NEW ROOF WITH ASPHALT SHINGLE ROOFING WITH TWO LAYERS OF UNDERLAYMENT, AND SHEATHING. |
| 27 | PROVIDE AND INSTALL STEP FLASHING WHERE SLOPE ROOFS MEET VERTICAL WALLS. |
| 41 | INSTALL REFURBISHED FINIAL LIGHTS (H6). ARCHITECT TO APPROVE FINISH AND ANY NEEDED MODIFICATIONS TO H6 LIGHTS DURING REFURBISHMENT. |

8/30/2022 4:05:44 PM


CONSULTANT INFORMATION
The LiRo Group
3 Aerial Way, Syosset, New York 11791
(516) 938-5476 www.liro.com


CONSULTANT SEAL
REGISTERED ARCHITECT ROBERT D. YOUNG 023280 STATE OF NEW YORK

| REVISION NUMBER | DATE | MADE BY | APP'D BY | REVISION |
|---|---|---|---|---|

RECORD DRAWING CERTIFICATION
☐ AS BUILT – CHANGES AS NOTED ☐ AS BUILT – NO CHANGES

CONTRACTOR
NAME
SIGNATURE
TITLE DATE

PROJECT COORDINATOR
NAME
SIGNATURE
TITLE DATE

WESTCHESTER COUNTY, NEW YORK
DEPARTMENT OF PUBLIC WORKS AND TRANSPORTATION
DIVISION OF ENGINEERING

**INFRASTRUCTURE REHABILITATION PHASE 3**
**PLAYLAND PARK, RYE, NEW YORK**
**CROSS AXIS BUILDING A**
**CXA - ROOF PLAN**

| | |
|---|---|
| CONTRACT NUMBER | 22-523 |
| SHEET NUMBER | CXA-A-13 |
| DWG NO.: | 115 of 664 |
| SCALE: | As indicated |
| DATE: | 08/23/2022 |
| DPW FILE NUMBER | 1-118-A-864-0 |
| REV. NO. | 0 |

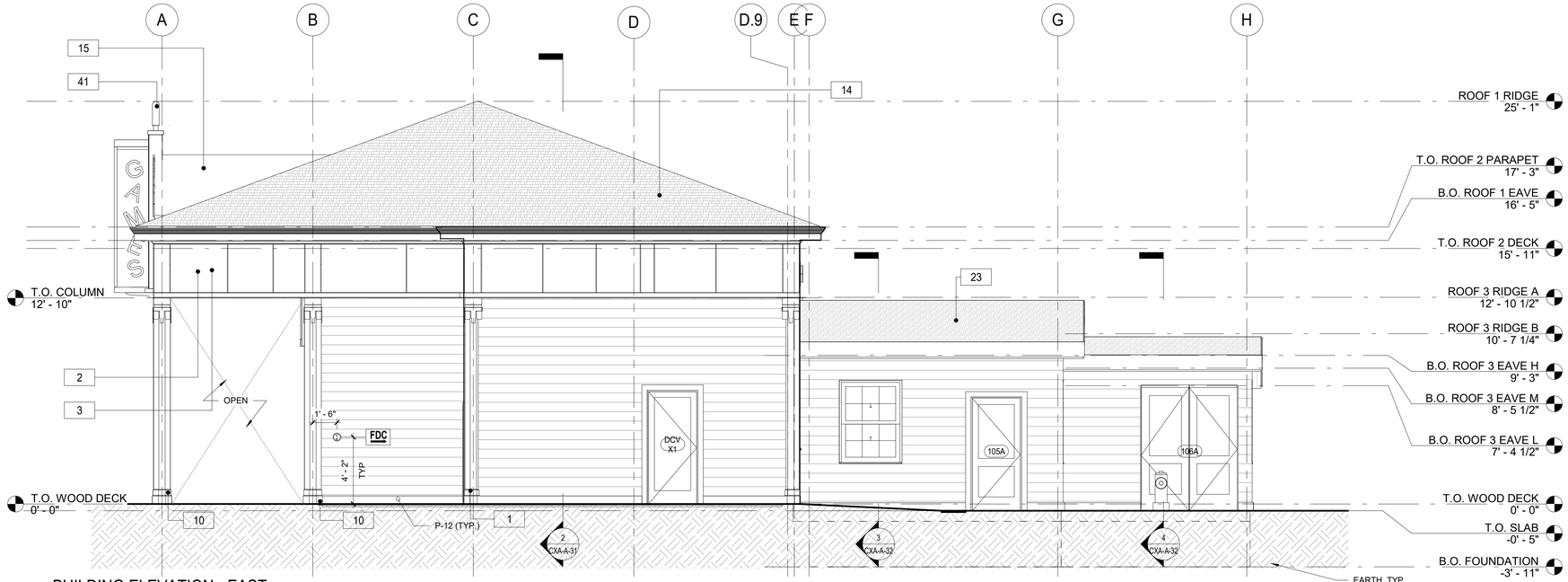


2 BUILDING ELEVATION - EAST
1/4" = 1'-0"

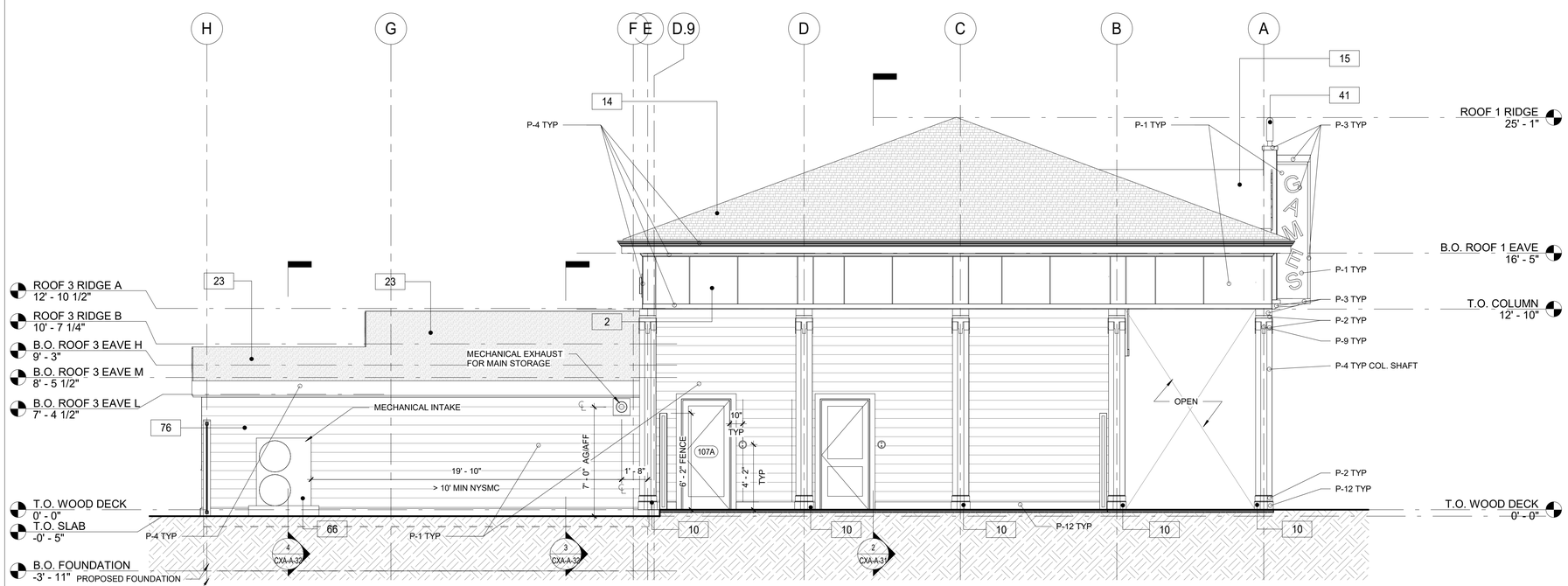


1 BUILDING ELEVATION - WEST
1/4" = 1'-0"

## FLOOR PLAN GENERAL NOTES

1. DIMENSIONS ARE TO FACE OF GYPSUM WALL BOARD, GRID LINES, OR CENTERLINE OF COLUMN. ALL ELEVATIONS ARE NOTED FROM FINISH FLOOR ELEVATIONS.
2. PROVIDE DRYWALL TRIM AT ALL EXPOSED EDGES AND CORNERS.
3. MINIMUM DIMENSION FROM ANY CORNER OR WALL TO FRAMING STUD AT DOOR JAMB OPENING SHALL BE 4" (UNO).
4. PROVIDE METAL BLOCKING FOR ANY WALL MOUNTED EQUIPMENT OR ACCESSORIES. COORDINATE ALL BLOCKING REQUIREMENTS NECESSARY WITH OTHER TRADES.
5. THE GC SHALL VERIFY DIMENSIONS OF THE EXISTING SPACE AND OF ANY EXISTING CONSTRUCTION TO REMAIN BY ACTUAL MEASUREMENT BEFORE ANY WORK IS PERFORMED. IF ANY MEASUREMENTS DIFFER FROM DIMENSIONS SHOWN ON PLAN, GC IS TO NOTIFY THE ARCHITECT IMMEDIATELY. THE GC SHALL BE RESPONSIBLE FOR CORRECTING ANY AND ALL DISCREPANCIES FOUND AFTER THE WORK IS PERFORMED, AT NO ADDITIONAL EXPENSE TO THE OWNER.
6. GC TO VERIFY ALL FINISHED DIMENSIONS. FIELD CONDITIONS ALTERING ANY DIMENSIONS SHOULD BE BROUGHT TO THE ATTENTION OF THE OWNER AND ARCHITECT.
7. THE GC SHALL PROVIDE CAULK JOINTS WHERE GYP. BD. MEETS THE FLOOR OR ROOF DECK.
8. THE GC SHALL BE RESPONSIBLE FOR COORDINATING WITH OWNER ON ALL WORK TO BE PERFORMED BY THE OWNER. ANY POTENTIAL CONFLICTS OR DELAYS CAUSED BY THE OWNER'S SUBCONTRACTORS MUST BE DOCUMENTED IN WRITING TO THE OWNER BEFORE THE DELAY IS ACTUALLY INCURRED FOR IT TO BE CONSIDERED. OTHERWISE THE GC WILL BE RESPONSIBLE FOR MEETING THE SCHEDULE AS OUTLINED IN THE CONTRACT.
9. THE GC SHALL SUPPLY ALL MATERIAL, LABOR, AND COORDINATION REQUIRED FOR THE INSTALLATION OF ALL OWNER-SUPPLIED ITEMS AS DESCRIBED IN THE DOCUMENTS, UNO
10. THE GC IS RESPONSIBLE FOR ALL FLOOR AND WALL PENETRATIONS FOR ELECTRICAL AND MECHANICAL WORK. ALL SUCH OPENING SHALL BE FRAMED AND REINFORCED.
11. FLOOR SURFACES SHALL BE LEVELED TO ASSURE SMOOTH SURFACE FOR FINISH FLOOR INSTALLATION. GC SHALL ALSO PAY SPECIAL ATTENTION THAT ALL WALL SURFACES ARE SMOOTH WHERE MURALS WILL BE DIRECTLY APPLIED TO WALL.
12. GC TO COORDINATE ALL UTILITY STUB-UPS AND LOCATION OF ALL EQUIPMENT PRIOR TO INSTALLING ANY ONE ITEM.
13. REFER TO SHEET CXA-A-83 FOR PARTITION TYPE INFORMATION.
14. PROVIDE PAINTED ACCESS PANELS IN WALLS & CEILING AT CONCEALED ITEMS SUCH AS VALVES, CONTROLS, SWITCHES OR ANY OTHER ITEMS THAT REQUIRES ACCESS. GC TO DETERMINE ACCESS PANEL LOCATION W/ ARCHITECT PRIOR TO INSTALLATION.

## PAINTING SCHEDULE

| KEY | COLOR | MANUFACTURER | REMARKS |
|---|---|---|---|
| P- 1 | MYSTICAL POWERS #901 | BENJAMIN MOORE | |
| P- 2 | HERITAGE RED #HC-181 | BENJAMIN MOORE | |
| P- 3 | NEW YORK STATE OF MIND #805 | BENJAMIN MOORE | |
| P- 4 | LAZY SUNDAY #803 | BENJAMIN MOORE | |
| P- 5 | DEEP JUNGLE #595 | BENJAMIN MOORE | |
| P- 6 | LUCK OF THE IRISH #588 | BENJAMIN MOORE | |
| P- 7 | MAJOLICA GREEN #0013 | SHERWIN WILLIAMS | |
| P- 8 | ANTELOPE CANYON #125 | BENJAMIN MOORE | |
| P- 9 | FORSYTHIA #6907 | SHERWIN WILLIAMS | |
| P- 10 | CAPE BLUE #1642 | BENJAMIN MOORE | |
| P- 11 | WHITE SNOW #9541 | SHERWIN WILLIAMS | |
| P- 12 | TRICORN BLACK #6258 | SHERWIN WILLIAMS | |
| P- 13 | READY MIX WHITE | BENJAMIN MOORE | INTERIOR USE ONLY |
| P- 14 | STUCCO PAINT TO MATCH P-1 | KEIM | |
| P- 15 | VAN DEUSEN BLUE #HC-156 | BENJAMIN MOORE | |
| P- 16 | #RAL9001 | - | TYP. ROLL UP DOOR |
| P- 17 | FLORIDA BEACHES #900 | BENJAMIN MOORE | |
| P- 18 | PIRATES COVE PEACH #903 | BENJAMIN MOORE | |
| P- 19 | JADITE #6459 | SHERWIN WILLIAMS | |
| P- 20 | DECISIVE YELLOW #6902 | SHERWIN WILLIAMS | |

## CONSTRUCTION KEY NOTES

| | |
|---|---|
| 1 | PROVIDE AND INSTALL NEW 1x8 MILLED YELLOW PINE - TONGUE AND GROOVE - NO BEVEL |
| 2 | PROVIDE AND INSTALL EXTERIOR GRADE SIDING WITH BATTENS. |
| 3 | REPLICATE TRIMS TO MATCH DOCUMENTED TRIM, LOCATIONS, SIZE AND SHAPE. FINISH PAINT COLORS AS SCHEDULED. |
| 10 | PROVIDE AND INSTALL COLUMN ENCLOSURES. SEE DETAILS. |
| 14 | PROVIDE NEW ASPHALT SHINGLE ROOFING,UNDERLAYMENT, AND REPLACE IN KIND EXISTING DECKING AS REQUIRED (COORDINATE WITH STRUCTURAL). |
| 15 | PROVIDE AND INSTALL SBS MODIFIED BITUMEN ROOFING AND UNDERLAYMENT. |
| 23 | NEW ROOF WITH BATT INSULATION (R-38 MIN) PACKED BETWEEN JOISTS. PROVIDE AND INSTALL SHINGLES, UNDERLAYMENT SHEATHING AND FLASHING SYSTEM. |
| 41 | INSTALL REFURBISHED FINIAL LIGHTS (H6). ARCHITECT TO APPROVE FINISH AND ANY NEEDED MODIFICATIONS TO H6 LIGHTS DURING REFURBISHMENT. |
| 66 | INSTALL NEW MINI SPLIT MECHANICAL UNIT. SEE MECHANICAL DRAWINGS. |
| 76 | INSTALL NEW EXHAUST SYSTEM. SEE MECHANICAL DRAWINGS. |

8/30/2022 4:05:47 PM

CONSULTANT INFORMATION

The LiRo Group
3 Aerial Way, Syosset, New York 11791
(516) 938-5476 www.liro.com

CONSULTANT SEAL

REGISTERED ARCHITECT ROBERT D. TOWNLEY JR. 023280 STATE OF NEW YORK

| REVISION NUMBER | DATE | MADE BY | APP'D BY | REVISION |
|---|---|---|---|---|

RECORD DRAWING CERTIFICATION

☐ AS BUILT – CHANGES AS NOTED ☐ AS BUILT – NO CHANGES

CONTRACTOR
NAME
SIGNATURE
TITLE DATE

PROJECT COORDINATOR
NAME
SIGNATURE
TITLE DATE

WESTCHESTER COUNTY, NEW YORK
DEPARTMENT OF PUBLIC WORKS AND TRANSPORTATION
DIVISION OF ENGINEERING

**INFRASTRUCTURE REHABILITATION PHASE 3**
**PLAYLAND PARK, RYE, NEW YORK**
**CROSS AXIS BUILDING A**
**CXA - EXTERIOR BUILDING ELEVATIONS**

CONTRACT NUMBER 22-523
SHEET NUMBER **CXA-A-21**
DWG NO.: 116 of 664
SCALE: **As indicated**
DATE: **08/23/2022**
DPW FILE NUMBER **1-118-A-865-0**
REV. NO. 0

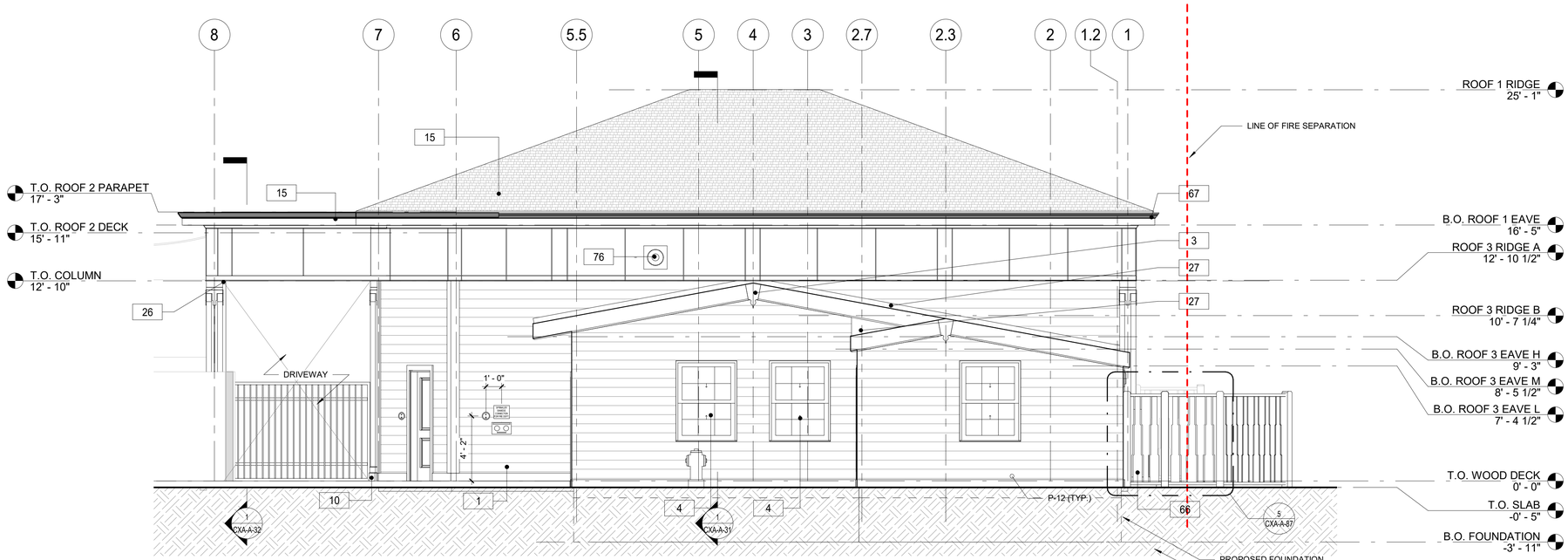


2 BUILDING ELEVATION - NORTH
1/4" = 1'-0"

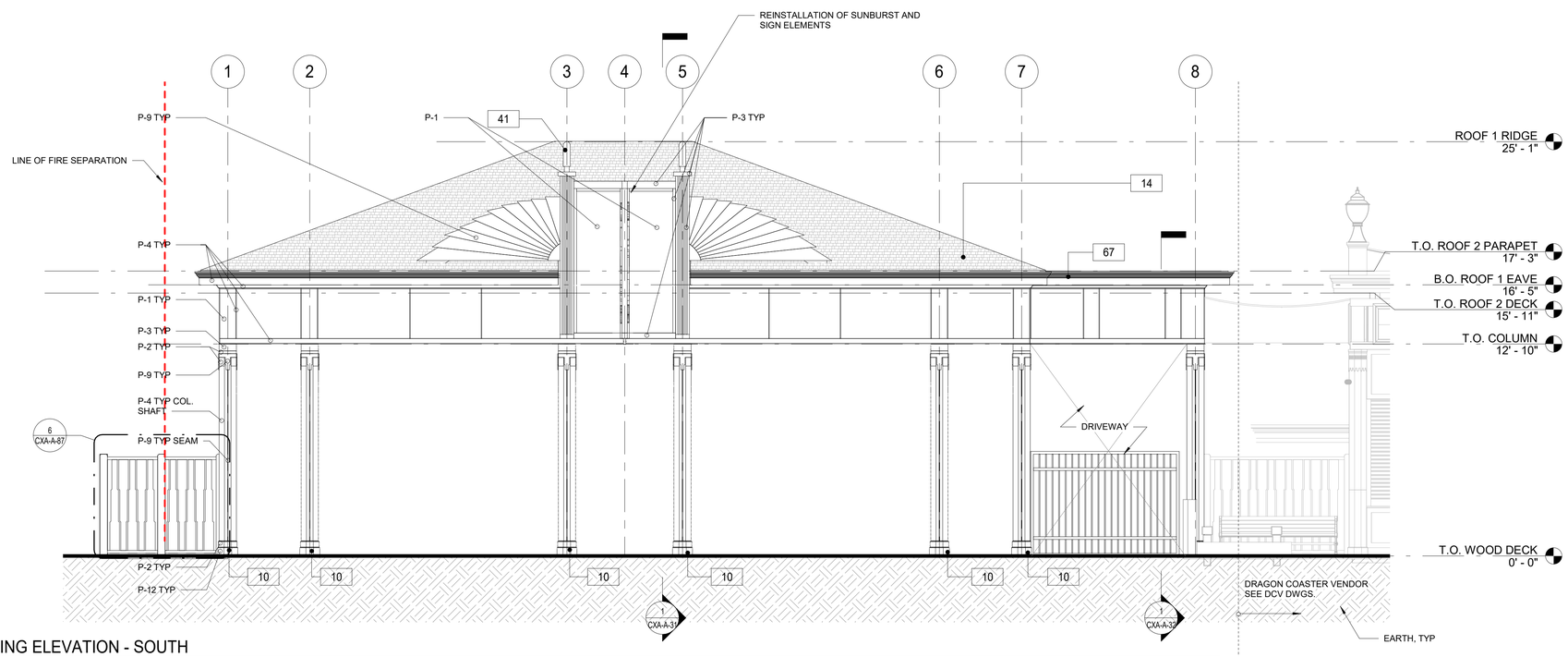


1 BUILDING ELEVATION - SOUTH
1/4" = 1'-0"

## FLOOR PLAN GENERAL NOTES

1. DIMENSIONS ARE TO FACE OF GYPSUM WALL BOARD, GRID LINES, OR CENTERLINE OF COLUMN. ALL ELEVATIONS ARE NOTED FROM FINISH FLOOR ELEVATIONS.
2. PROVIDE DRYWALL TRIM AT ALL EXPOSED EDGES AND CORNERS.
3. MINIMUM DIMENSION FROM ANY CORNER OR WALL TO FRAMING STUD AT DOOR JAMB OPENING SHALL BE 4" (UNO).
4. PROVIDE METAL BLOCKING FOR ANY WALL MOUNTED EQUIPMENT OR ACCESSORIES. COORDINATE ALL BLOCKING REQUIREMENTS NECESSARY WITH OTHER TRADES.
5. THE GC SHALL VERIFY DIMENSIONS OF THE EXISTING SPACE AND OF ANY EXISTING CONSTRUCTION TO REMAIN BY ACTUAL MEASUREMENT BEFORE ANY WORK IS PERFORMED. IF ANY MEASUREMENTS DIFFER FROM DIMENSIONS SHOWN ON PLAN, GC IS TO NOTIFY THE ARCHITECT IMMEDIATELY. THE GC SHALL BE RESPONSIBLE FOR CORRECTING ANY AND ALL DISCREPANCIES FOUND AFTER THE WORK IS PERFORMED, AT NO ADDITIONAL EXPENSE TO THE OWNER.
6. GC TO VERIFY ALL FINISHED DIMENSIONS. FIELD CONDITIONS ALTERING ANY DIMENSIONS SHOULD BE BROUGHT TO THE ATTENTION OF THE OWNER AND ARCHITECT.
7. THE GC SHALL PROVIDE CAULK JOINTS WHERE GYP. BD. MEETS THE FLOOR OR ROOF DECK.
8. THE GC SHALL BE RESPONSIBLE FOR COORDINATING WITH OWNER ON ALL WORK TO BE PERFORMED BY THE OWNER. ANY POTENTIAL CONFLICTS OR DELAYS CAUSED BY THE OWNER'S SUBCONTRACTORS MUST BE DOCUMENTED IN WRITING TO THE OWNER BEFORE THE DELAY IS ACTUALLY INCURRED FOR IT TO BE CONSIDERED. OTHERWISE THE GC WILL BE RESPONSIBLE FOR MEETING THE SCHEDULE AS OUTLINED IN THE CONTRACT.
9. THE GC SHALL SUPPLY ALL MATERIAL, LABOR, AND COORDINATION REQUIRED FOR THE INSTALLATION OF ALL OWNER-SUPPLIED ITEMS AS DESCRIBED IN THE DOCUMENTS, UNO
10. THE GC IS RESPONSIBLE FOR ALL FLOOR AND WALL PENETRATIONS FOR ELECTRICAL AND MECHANICAL WORK. ALL SUCH OPENING SHALL BE FRAMED AND REINFORCED.
11. FLOOR SURFACES SHALL BE LEVELED TO ASSURE SMOOTH SURFACE FOR FINISH FLOOR INSTALLATION. GC SHALL ALSO PAY SPECIAL ATTENTION THAT ALL WALL SURFACES ARE SMOOTH WHERE MURALS WILL BE DIRECTLY APPLIED TO WALL.
12. GC TO COORDINATE ALL UTILITY STUB-UPS AND LOCATION OF ALL EQUIPMENT PRIOR TO INSTALLING ANY ONE ITEM.
13. REFER TO SHEET CXA-A-83 FOR PARTITION TYPE INFORMATION.
14. PROVIDE PAINTED ACCESS PANELS IN WALLS & CEILING AT CONCEALED ITEMS SUCH AS VALVES, CONTROLS, SWITCHES OR ANY OTHER ITEMS THAT REQUIRES ACCESS. GC TO DETERMINE ACCESS PANEL LOCATION W/ ARCHITECT PRIOR TO INSTALLATION.

## PAINTING SCHEDULE

| KEY | COLOR | MANUFACTURER | REMARKS |
|---|---|---|---|
| P- 1 | MYSTICAL POWERS #901 | BENJAMIN MOORE | |
| P- 2 | HERITAGE RED #HC-181 | BENJAMIN MOORE | |
| P- 3 | NEW YORK STATE OF MIND #805 | BENJAMIN MOORE | |
| P- 4 | LAZY SUNDAY #803 | BENJAMIN MOORE | |
| P- 5 | DEEP JUNGLE #595 | BENJAMIN MOORE | |
| P- 6 | LUCK OF THE IRISH #588 | BENJAMIN MOORE | |
| P- 7 | MAJOLICA GREEN #0013 | SHERWIN WILLIAMS | |
| P- 8 | ANTELOPE CANYON #125 | BENJAMIN MOORE | |
| P- 9 | FORSYTHIA #6907 | SHERWIN WILLIAMS | |
| P- 10 | CAPE BLUE #1642 | BENJAMIN MOORE | |
| P- 11 | WHITE SNOW #9541 | SHERWIN WILLIAMS | |
| P- 12 | TRICORN BLACK #6258 | SHERWIN WILLIAMS | |
| P- 13 | READY MIX WHITE | BENJAMIN MOORE | INTERIOR USE ONLY |
| P- 14 | STUCCO PAINT TO MATCH P-1 | KEIM | |
| P- 15 | VAN DEUSEN BLUE #HC-156 | BENJAMIN MOORE | |
| P- 16 | #RAL9001 | - | TYP. ROLL UP DOOR |
| P- 17 | FLORIDA BEACHES #900 | BENJAMIN MOORE | |
| P- 18 | PIRATES COVE PEACH #903 | BENJAMIN MOORE | |
| P- 19 | JADITE #6459 | SHERWIN WILLIAMS | |
| P- 20 | DECISIVE YELLOW #6902 | SHERWIN WILLIAMS | |

## CONSTRUCTION KEY NOTES

| | |
|---|---|
| 1 | PROVIDE AND INSTALL NEW 1x8 MILLED YELLOW PINE - TONGUE AND GROOVE - NO BEVEL |
| 3 | REPLICATE TRIMS TO MATCH DOCUMENTED TRIM, LOCATIONS, SIZE AND SHAPE. FINISH PAINT COLORS AS SCHEDULED. |
| 4 | NEW WINDOWS. SEE WINDOW SCHEDULE. |
| 10 | PROVIDE AND INSTALL COLUMN ENCLOSURES. SEE DETAILS. |
| 14 | PROVIDE NEW ASPHALT SHINGLE ROOFING,UNDERLAYMENT, AND REPLACE IN KIND EXISTING DECKING AS REQUIRED (COORDINATE WITH STRUCTURAL). |
| 15 | PROVIDE AND INSTALL SBS MODIFIED BITUMEN ROOFING AND UNDERLAYMENT. |
| 26 | PROVIDE AND INSTALL ALUMINUM LEADER HEAD, LEADER, AND SPLASH GUARD. |
| 27 | PROVIDE AND INSTALL STEP FLASHING WHERE SLOPE ROOFS MEET VERTICAL WALLS. |
| 41 | INSTALL REFURBISHED FINIAL LIGHTS (H6). ARCHITECT TO APPROVE FINISH AND ANY NEEDED MODIFICATIONS TO H6 LIGHTS DURING REFURBISHMENT. |
| 66 | INSTALL NEW MINI SPLIT MECHANICAL UNIT. SEE MECHANICAL DRAWINGS. |
| 67 | NEW FASCIA BOARD AND SOFFIT. |
| 76 | INSTALL NEW EXHAUST SYSTEM. SEE MECHANICAL DRAWINGS. |

8/30/2022 4:05:50 PM


CONSULTANT INFORMATION
The LiRo Group
3 Aerial Way, Syosset, New York 11791
(516) 938-5476 www.liro.com


CONSULTANT SEAL
REGISTERED ARCHITECT ROBERT D. JOHNSON 023220 STATE OF NEW YORK

| REVISION NUMBER | DATE | MADE BY | APP'D BY | REVISION |
|---|---|---|---|---|
| | | | | |

RECORD DRAWING CERTIFICATION
☐ AS BUILT – CHANGES AS NOTED ☐ AS BUILT – NO CHANGES

CONTRACTOR
NAME
SIGNATURE
TITLE DATE

PROJECT COORDINATOR
NAME
SIGNATURE
TITLE DATE

WESTCHESTER COUNTY, NEW YORK
DEPARTMENT OF PUBLIC WORKS AND TRANSPORTATION
DIVISION OF ENGINEERING

**INFRASTRUCTURE REHABILITATION PHASE 3**
**PLAYLAND PARK, RYE, NEW YORK**
**CROSS AXIS BUILDING A**
**CXA - EXTERIOR BUILDING ELEVATIONS**

| | |
|---|---|
| CONTRACT NUMBER | 22-523 |
| SHEET NUMBER | CXA-A-22 |
| DWG NO.: | 117 of 664 |
| SCALE: | As indicated |
| DATE: | 08/23/2022 |
| DPW FILE NUMBER | 1-118-A-866-0 |
| REV. NO. | 0 |

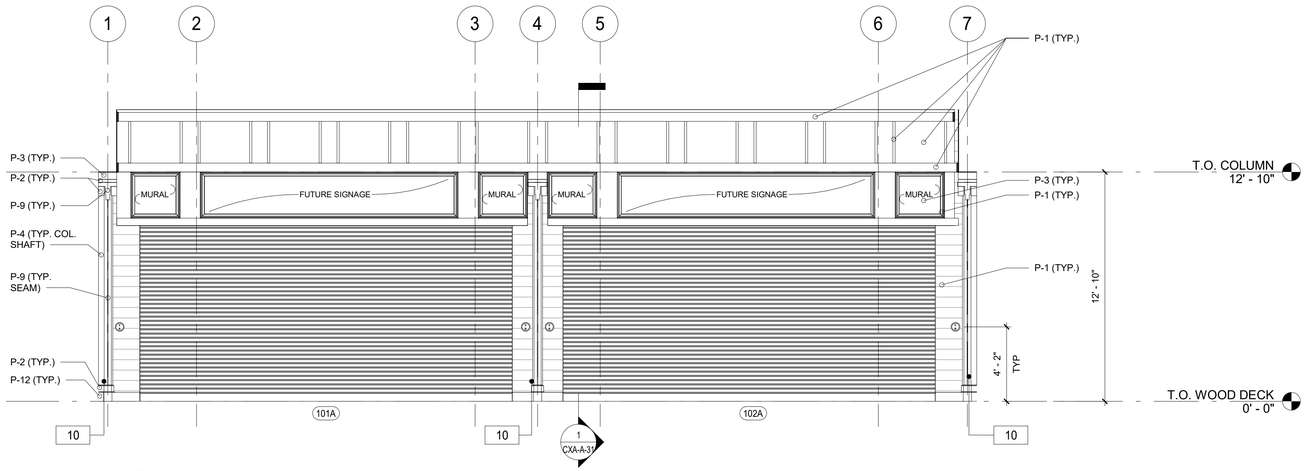


4 PORCH ELEVATION SOUTH
1/4" = 1'-0"

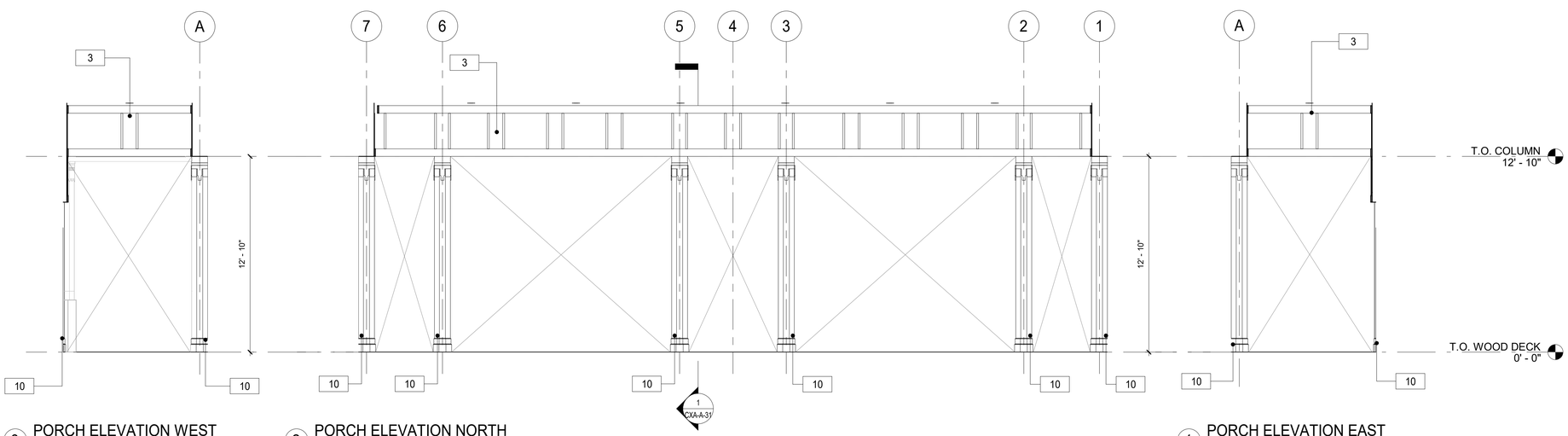


3 PORCH ELEVATION WEST
1/4" = 1'-0"

2 PORCH ELEVATION NORTH
1/4" = 1'-0"

1 PORCH ELEVATION EAST
1/4" = 1'-0"

## FLOOR PLAN GENERAL NOTES

1. DIMENSIONS ARE TO FACE OF GYPSUM WALL BOARD, GRID LINES, OR CENTERLINE OF COLUMN. ALL ELEVATIONS ARE NOTED FROM FINISH FLOOR ELEVATIONS.
2. PROVIDE DRYWALL TRIM AT ALL EXPOSED EDGES AND CORNERS.
3. MINIMUM DIMENSION FROM ANY CORNER OR WALL TO FRAMING STUD AT DOOR JAMB OPENING SHALL BE 4" (UNO).
4. PROVIDE METAL BLOCKING FOR ANY WALL MOUNTED EQUIPMENT OR ACCESSORIES. COORDINATE ALL BLOCKING REQUIREMENTS NECESSARY WITH OTHER TRADES.
5. THE GC SHALL VERIFY DIMENSIONS OF THE EXISTING SPACE AND OF ANY EXISTING CONSTRUCTION TO REMAIN BY ACTUAL MEASUREMENT BEFORE ANY WORK IS PERFORMED. IF ANY MEASUREMENTS DIFFER FROM DIMENSIONS SHOWN ON PLAN, GC IS TO NOTIFY THE ARCHITECT IMMEDIATELY. THE GC SHALL BE RESPONSIBLE FOR CORRECTING ANY AND ALL DISCREPANCIES FOUND AFTER THE WORK IS PERFORMED, AT NO ADDITIONAL EXPENSE TO THE OWNER.
6. GC TO VERIFY ALL FINISHED DIMENSIONS. FIELD CONDITIONS ALTERING ANY DIMENSIONS SHOULD BE BROUGHT TO THE ATTENTION OF THE OWNER AND ARCHITECT.
7. THE GC SHALL PROVIDE CAULK JOINTS WHERE GYP. BD. MEETS THE FLOOR OR ROOF DECK.
8. THE GC SHALL BE RESPONSIBLE FOR COORDINATING WITH OWNER ON ALL WORK TO BE PERFORMED BY THE OWNER. ANY POTENTIAL CONFLICTS OR DELAYS CAUSED BY THE OWNER'S SUBCONTRACTORS MUST BE DOCUMENTED IN WRITING TO THE OWNER BEFORE THE DELAY IS ACTUALLY INCURRED FOR IT TO BE CONSIDERED. OTHERWISE THE GC WILL BE RESPONSIBLE FOR MEETING THE SCHEDULE AS OUTLINED IN THE CONTRACT.
9. THE GC SHALL SUPPLY ALL MATERIAL, LABOR, AND COORDINATION REQUIRED FOR THE INSTALLATION OF ALL OWNER-SUPPLIED ITEMS AS DESCRIBED IN THE DOCUMENTS, UNO
10. THE GC IS RESPONSIBLE FOR ALL FLOOR AND WALL PENETRATIONS FOR ELECTRICAL AND MECHANICAL WORK. ALL SUCH OPENING SHALL BE FRAMED AND REINFORCED.
11. FLOOR SURFACES SHALL BE LEVELED TO ASSURE SMOOTH SURFACE FOR FINISH FLOOR INSTALLATION. GC SHALL ALSO PAY SPECIAL ATTENTION THAT ALL WALL SURFACES ARE SMOOTH WHERE MURALS WILL BE DIRECTLY APPLIED TO WALL.
12. GC TO COORDINATE ALL UTILITY STUB-UPS AND LOCATION OF ALL EQUIPMENT PRIOR TO INSTALLING ANY ONE ITEM.
13. REFER TO SHEET CXA-A-83 FOR PARTITION TYPE INFORMATION.
14. PROVIDE PAINTED ACCESS PANELS IN WALLS & CEILING AT CONCEALED ITEMS SUCH AS VALVES, CONTROLS, SWITCHES OR ANY OTHER ITEMS THAT REQUIRES ACCESS. GC TO DETERMINE ACCESS PANEL LOCATION W/ ARCHITECT PRIOR TO INSTALLATION.

## PAINTING SCHEDULE

| KEY | COLOR | MANUFACTURER | REMARKS |
|---|---|---|---|
| P- 1 | MYSTICAL POWERS #901 | BENJAMIN MOORE | |
| P- 2 | HERITAGE RED #HC-181 | BENJAMIN MOORE | |
| P- 3 | NEW YORK STATE OF MIND #805 | BENJAMIN MOORE | |
| P- 4 | LAZY SUNDAY #803 | BENJAMIN MOORE | |
| P- 5 | DEEP JUNGLE #595 | BENJAMIN MOORE | |
| P- 6 | LUCK OF THE IRISH #588 | BENJAMIN MOORE | |
| P- 7 | MAJOLICA GREEN #0013 | SHERWIN WILLIAMS | |
| P- 8 | ANTELOPE CANYON #125 | BENJAMIN MOORE | |
| P- 9 | FORSYTHIA #6907 | SHERWIN WILLIAMS | |
| P- 10 | CAPE BLUE #1642 | BENJAMIN MOORE | |
| P- 11 | WHITE SNOW #9541 | SHERWIN WILLIAMS | |
| P- 12 | TRICORN BLACK #6258 | SHERWIN WILLIAMS | |
| P- 13 | READY MIX WHITE | BENJAMIN MOORE | INTERIOR USE ONLY |
| P- 14 | STUCCO PAINT TO MATCH P-1 | KEIM | |
| P- 15 | VAN DEUSEN BLUE #HC-156 | BENJAMIN MOORE | |
| P- 16 | #RAL9001 | - | TYP. ROLL UP DOOR |
| P- 17 | FLORIDA BEACHES #900 | BENJAMIN MOORE | |
| P- 18 | PIRATES COVE PEACH #903 | BENJAMIN MOORE | |
| P- 19 | JADITE #6459 | SHERWIN WILLIAMS | |
| P- 20 | DECISIVE YELLOW #6902 | SHERWIN WILLIAMS | |

## CONSTRUCTION KEY NOTES

| | |
|---|---|
| 3 | REPLICATE TRIMS TO MATCH DOCUMENTED TRIM, LOCATIONS, SIZE AND SHAPE. FINISH PAINT COLORS AS SCHEDULED. |
| 10 | PROVIDE AND INSTALL COLUMN ENCLOSURES. SEE DETAILS. |

8/30/2022 4:05:54 PM

CONSULTANT INFORMATION

The LiRo Group
3 Aerial Way, Syosset, New York 11791
(516) 938-5476 www.liro.com

CONSULTANT SEAL

REGISTERED ARCHITECT ROBERT D. JOHNSON 023220 STATE OF NEW YORK

| REVISION NUMBER | DATE | MADE BY | APP'D BY | REVISION |
|---|---|---|---|---|

RECORD DRAWING CERTIFICATION

☐ AS BUILT – CHANGES AS NOTED ☐ AS BUILT – NO CHANGES

CONTRACTOR
NAME
SIGNATURE
TITLE DATE

PROJECT COORDINATOR
NAME
SIGNATURE
TITLE DATE

WESTCHESTER COUNTY, NEW YORK
DEPARTMENT OF PUBLIC WORKS AND TRANSPORTATION
DIVISION OF ENGINEERING

**INFRASTRUCTURE REHABILITATION PHASE 3**
**PLAYLAND PARK, RYE, NEW YORK**
**CROSS AXIS BUILDING A**
**CXA - PORCH BUILDING ELEVATIONS**

CONTRACT NUMBER 22-523
SHEET NUMBER CXA-A-23
DWG NO.: 118 of 664
SCALE: **As indicated**
DATE: **08/23/2022**
DPW FILE NUMBER **1-118-A-867-0**
REV. NO. 0

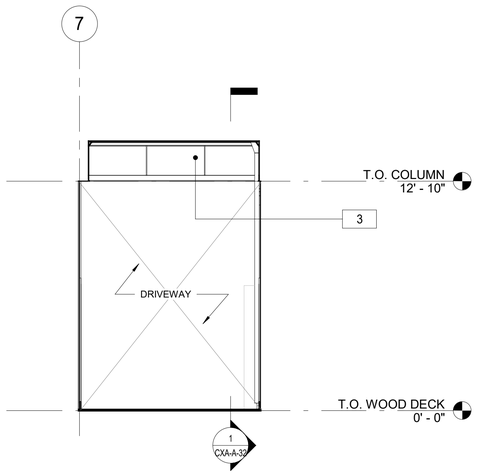


4 DRIVE-THROUGH NORTH ELEVATION
1/4" = 1'-0"

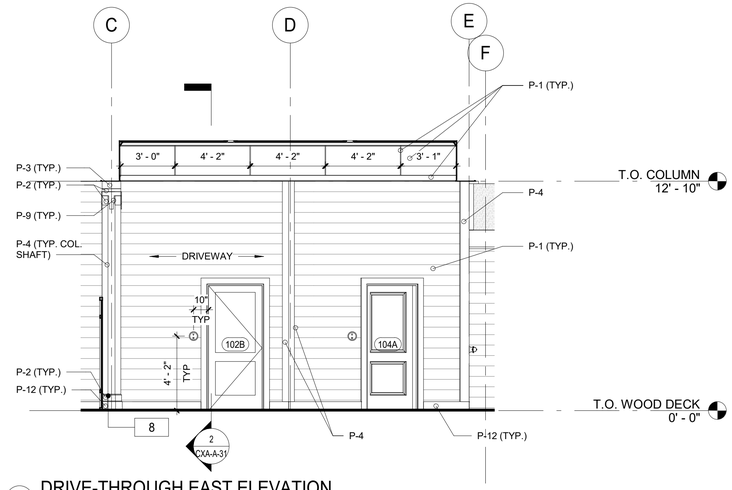


3 DRIVE-THROUGH EAST ELEVATION
1/4" = 1'-0"

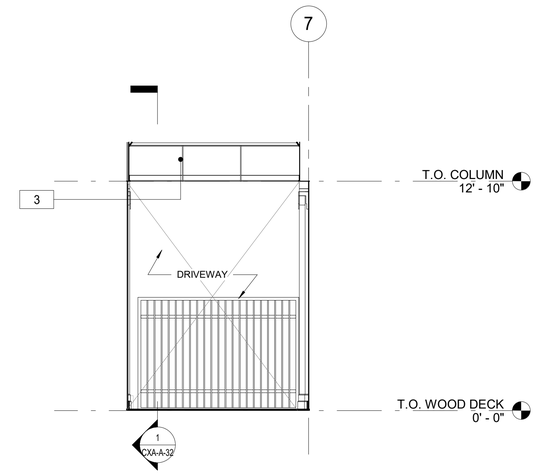


2 DRIVE-THROUGH SOUTH ELEVATION
1/4" = 1'-0"

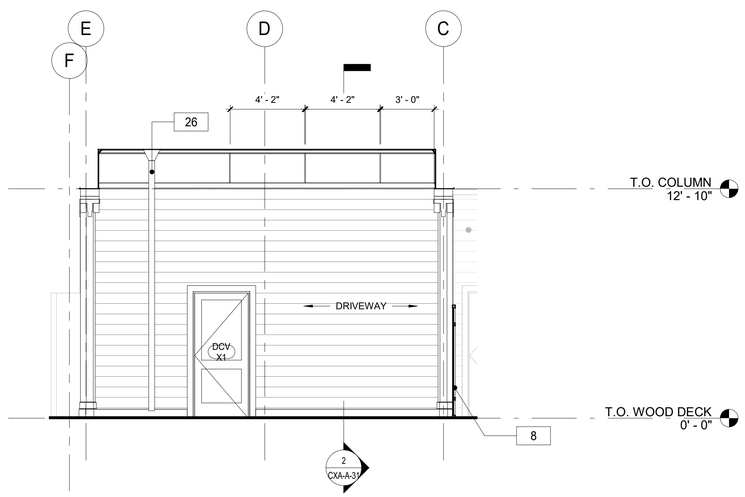


1 DRIVE-THROUGH WEST ELEVATION
1/4" = 1'-0"

## FLOOR PLAN GENERAL NOTES

1. DIMENSIONS ARE TO FACE OF GYPSUM WALL BOARD, GRID LINES, OR CENTERLINE OF COLUMN. ALL ELEVATIONS ARE NOTED FROM FINISH FLOOR ELEVATIONS.
2. PROVIDE DRYWALL TRIM AT ALL EXPOSED EDGES AND CORNERS.
3. MINIMUM DIMENSION FROM ANY CORNER OR WALL TO FRAMING STUD AT DOOR JAMB OPENING SHALL BE 4" (UNO).
4. PROVIDE METAL BLOCKING FOR ANY WALL MOUNTED EQUIPMENT OR ACCESSORIES. COORDINATE ALL BLOCKING REQUIREMENTS NECESSARY WITH OTHER TRADES.
5. THE GC SHALL VERIFY DIMENSIONS OF THE EXISTING SPACE AND OF ANY EXISTING CONSTRUCTION TO REMAIN BY ACTUAL MEASUREMENT BEFORE ANY WORK IS PERFORMED. IF ANY MEASUREMENTS DIFFER FROM DIMENSIONS SHOWN ON PLAN, GC IS TO NOTIFY THE ARCHITECT IMMEDIATELY. THE GC SHALL BE RESPONSIBLE FOR CORRECTING ANY AND ALL DISCREPANCIES FOUND AFTER THE WORK IS PERFORMED, AT NO ADDITIONAL EXPENSE TO THE OWNER.
6. GC TO VERIFY ALL FINISHED DIMENSIONS. FIELD CONDITIONS ALTERING ANY DIMENSIONS SHOULD BE BROUGHT TO THE ATTENTION OF THE OWNER AND ARCHITECT.
7. THE GC SHALL PROVIDE CAULK JOINTS WHERE GYP. BD. MEETS THE FLOOR OR ROOF DECK.
8. THE GC SHALL BE RESPONSIBLE FOR COORDINATING WITH OWNER ON ALL WORK TO BE PERFORMED BY THE OWNER. ANY POTENTIAL CONFLICTS OR DELAYS CAUSED BY THE OWNER'S SUBCONTRACTORS MUST BE DOCUMENTED IN WRITING TO THE OWNER BEFORE THE DELAY IS ACTUALLY INCURRED FOR IT TO BE CONSIDERED. OTHERWISE THE GC WILL BE RESPONSIBLE FOR MEETING THE SCHEDULE AS OUTLINED IN THE CONTRACT.
9. THE GC SHALL SUPPLY ALL MATERIAL, LABOR, AND COORDINATION REQUIRED FOR THE INSTALLATION OF ALL OWNER-SUPPLIED ITEMS AS DESCRIBED IN THE DOCUMENTS, UNO
10. THE GC IS RESPONSIBLE FOR ALL FLOOR AND WALL PENETRATIONS FOR ELECTRICAL AND MECHANICAL WORK. ALL SUCH OPENING SHALL BE FRAMED AND REINFORCED.
11. FLOOR SURFACES SHALL BE LEVELED TO ASSURE SMOOTH SURFACE FOR FINISH FLOOR INSTALLATION. GC SHALL ALSO PAY SPECIAL ATTENTION THAT ALL WALL SURFACES ARE SMOOTH WHERE MURALS WILL BE DIRECTLY APPLIED TO WALL.
12. GC TO COORDINATE ALL UTILITY STUB-UPS AND LOCATION OF ALL EQUIPMENT PRIOR TO INSTALLING ANY ONE ITEM.
13. REFER TO SHEET CXA-A-83 FOR PARTITION TYPE INFORMATION.
14. PROVIDE PAINTED ACCESS PANELS IN WALLS & CEILING AT CONCEALED ITEMS SUCH AS VALVES, CONTROLS, SWITCHES OR ANY OTHER ITEMS THAT REQUIRES ACCESS. GC TO DETERMINE ACCESS PANEL LOCATION W/ ARCHITECT PRIOR TO INSTALLATION.

## PAINTING SCHEDULE

| KEY | COLOR | MANUFACTURER | REMARKS |
|---|---|---|---|
| P- 1 | MYSTICAL POWERS #901 | BENJAMIN MOORE | |
| P- 2 | HERITAGE RED #HC-181 | BENJAMIN MOORE | |
| P- 3 | NEW YORK STATE OF MIND #805 | BENJAMIN MOORE | |
| P- 4 | LAZY SUNDAY #803 | BENJAMIN MOORE | |
| P- 5 | DEEP JUNGLE #595 | BENJAMIN MOORE | |
| P- 6 | LUCK OF THE IRISH #588 | BENJAMIN MOORE | |
| P- 7 | MAJOLICA GREEN #0013 | SHERWIN WILLIAMS | |
| P- 8 | ANTELOPE CANYON #125 | BENJAMIN MOORE | |
| P- 9 | FORSYTHIA #6907 | SHERWIN WILLIAMS | |
| P- 10 | CAPE BLUE #1642 | BENJAMIN MOORE | |
| P- 11 | WHITE SNOW #9541 | SHERWIN WILLIAMS | |
| P- 12 | TRICORN BLACK #6258 | SHERWIN WILLIAMS | |
| P- 13 | READY MIX WHITE | BENJAMIN MOORE | INTERIOR USE ONLY |
| P- 14 | STUCCO PAINT TO MATCH P-1 | KEIM | |
| P- 15 | VAN DEUSEN BLUE #HC-156 | BENJAMIN MOORE | |
| P- 16 | #RAL9001 | - | TYP. ROLL UP DOOR |
| P- 17 | FLORIDA BEACHES #900 | BENJAMIN MOORE | |
| P- 18 | PIRATES COVE PEACH #903 | BENJAMIN MOORE | |
| P- 19 | JADITE #6459 | SHERWIN WILLIAMS | |
| P- 20 | DECISIVE YELLOW #6902 | SHERWIN WILLIAMS | |

## CONSTRUCTION KEY NOTES

| | |
|---|---|
| 3 | REPLICATE TRIMS TO MATCH DOCUMENTED TRIM, LOCATIONS, SIZE AND SHAPE. FINISH PAINT COLORS AS SCHEDULED. |
| 8 | PROVIDE AND INSTALL GATE. SEE DETAILS. |
| 26 | PROVIDE AND INSTALL ALUMINUM LEADER HEAD, LEADER, AND SPLASH GUARD. |

8/30/2022 4:05:57 PM

CONSULTANT INFORMATION

The LiRo Group
3 Aerial Way, Syosset, New York 11791
(516) 938-5476 www.liro.com

CONSULTANT SEAL

REGISTERED ARCHITECT ROBERT D. JOHNSON 023220 STATE OF NEW YORK

| REVISION NUMBER | DATE | MADE BY | APP'D BY | REVISION |
|---|---|---|---|---|

RECORD DRAWING CERTIFICATION

☐ AS BUILT – CHANGES AS NOTED ☐ AS BUILT – NO CHANGES

CONTRACTOR
NAME
SIGNATURE
TITLE DATE

PROJECT COORDINATOR
NAME
SIGNATURE
TITLE DATE

WESTCHESTER COUNTY, NEW YORK
DEPARTMENT OF PUBLIC WORKS AND TRANSPORTATION
DIVISION OF ENGINEERING

**INFRASTRUCTURE REHABILITATION PHASE 3**
**PLAYLAND PARK, RYE, NEW YORK**
**CROSS AXIS BUILDING A**
**CXA - DRIVE-THROUGH ELEVATIONS**

CONTRACT NUMBER 22-523
SHEET NUMBER **CXA-A-24**
DWG NO.: 119 of 664
SCALE: **As indicated**
DATE: **08/23/2022**
DPW FILE NUMBER **1-118-A-868-0**
REV. NO. 0

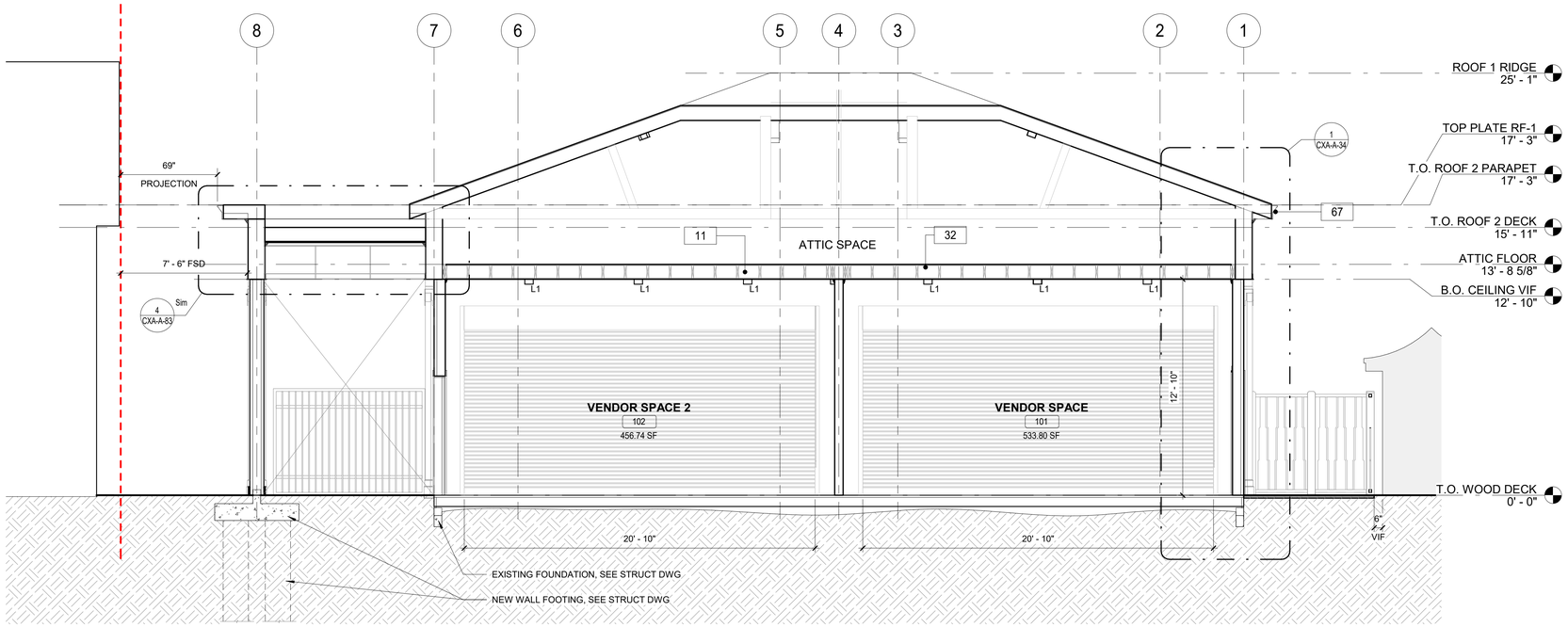


2 BUILDING CROSS SECTION - VENDOR SPACE
1/4" = 1'-0"

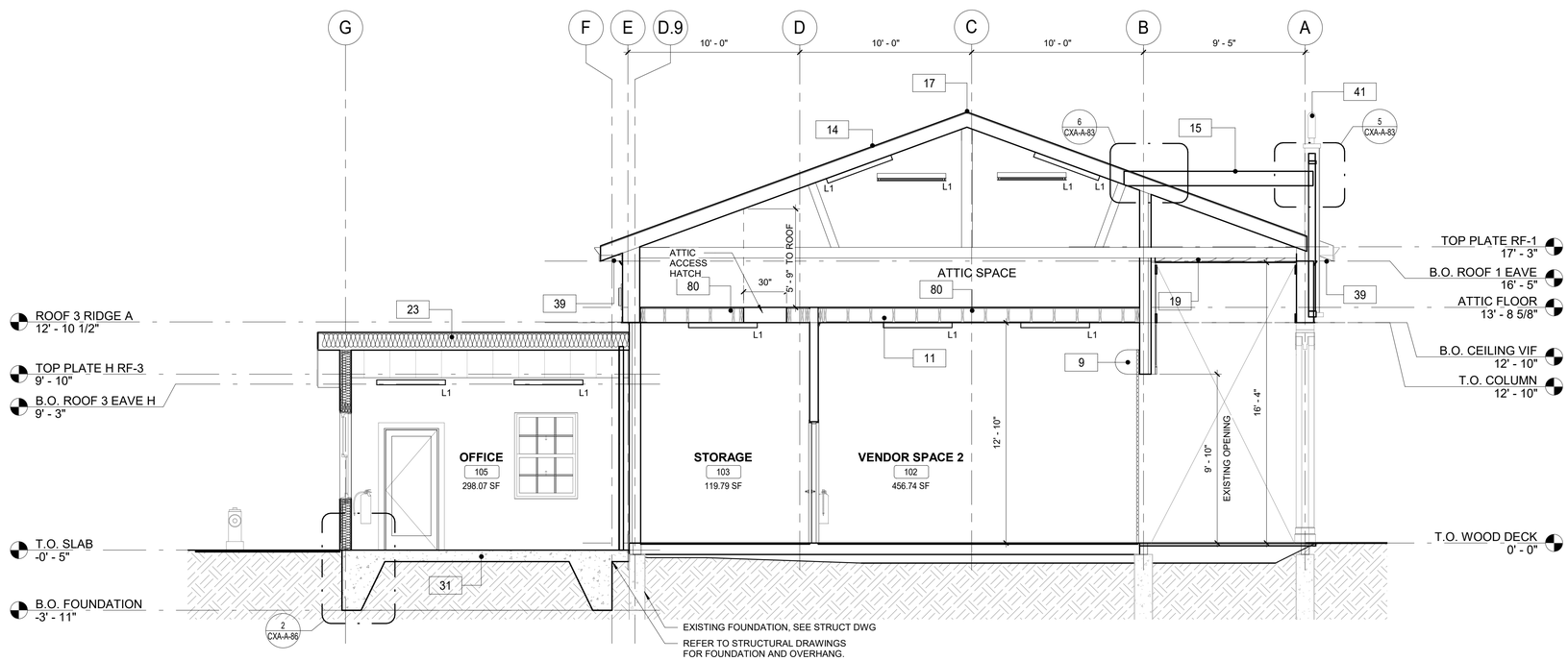


1 BUILDING SECTION 1
1/4" = 1'-0"

## FLOOR PLAN GENERAL NOTES

1. DIMENSIONS ARE TO FACE OF GYPSUM WALL BOARD, GRID LINES, OR CENTERLINE OF COLUMN. ALL ELEVATIONS ARE NOTED FROM FINISH FLOOR ELEVATIONS.
2. PROVIDE DRYWALL TRIM AT ALL EXPOSED EDGES AND CORNERS.
3. MINIMUM DIMENSION FROM ANY CORNER OR WALL TO FRAMING STUD AT DOOR JAMB OPENING SHALL BE 4" (UNO).
4. PROVIDE METAL BLOCKING FOR ANY WALL MOUNTED EQUIPMENT OR ACCESSORIES. COORDINATE ALL BLOCKING REQUIREMENTS NECESSARY WITH OTHER TRADES.
5. THE GC SHALL VERIFY DIMENSIONS OF THE EXISTING SPACE AND OF ANY EXISTING CONSTRUCTION TO REMAIN BY ACTUAL MEASUREMENT BEFORE ANY WORK IS PERFORMED. IF ANY MEASUREMENTS DIFFER FROM DIMENSIONS SHOWN ON PLAN, GC IS TO NOTIFY THE ARCHITECT IMMEDIATELY. THE GC SHALL BE RESPONSIBLE FOR CORRECTING ANY AND ALL DISCREPANCIES FOUND AFTER THE WORK IS PERFORMED, AT NO ADDITIONAL EXPENSE TO THE OWNER.
6. GC TO VERIFY ALL FINISHED DIMENSIONS. FIELD CONDITIONS ALTERING ANY DIMENSIONS SHOULD BE BROUGHT TO THE ATTENTION OF THE OWNER AND ARCHITECT.
7. THE GC SHALL PROVIDE CAULK JOINTS WHERE GYP. BD. MEETS THE FLOOR OR ROOF DECK.
8. THE GC SHALL BE RESPONSIBLE FOR COORDINATING WITH OWNER ON ALL WORK TO BE PERFORMED BY THE OWNER. ANY POTENTIAL CONFLICTS OR DELAYS CAUSED BY THE OWNER'S SUBCONTRACTORS MUST BE DOCUMENTED IN WRITING TO THE OWNER BEFORE THE DELAY IS ACTUALLY INCURRED FOR IT TO BE CONSIDERED. OTHERWISE THE GC WILL BE RESPONSIBLE FOR MEETING THE SCHEDULE AS OUTLINED IN THE CONTRACT.
9. THE GC SHALL SUPPLY ALL MATERIAL, LABOR, AND COORDINATION REQUIRED FOR THE INSTALLATION OF ALL OWNER-SUPPLIED ITEMS AS DESCRIBED IN THE DOCUMENTS, UNO
10. THE GC IS RESPONSIBLE FOR ALL FLOOR AND WALL PENETRATIONS FOR ELECTRICAL AND MECHANICAL WORK. ALL SUCH OPENING SHALL BE FRAMED AND REINFORCED.
11. FLOOR SURFACES SHALL BE LEVELED TO ASSURE SMOOTH SURFACE FOR FINISH FLOOR INSTALLATION. GC SHALL ALSO PAY SPECIAL ATTENTION THAT ALL WALL SURFACES ARE SMOOTH WHERE MURALS WILL BE DIRECTLY APPLIED TO WALL.
12. GC TO COORDINATE ALL UTILITY STUB-UPS AND LOCATION OF ALL EQUIPMENT PRIOR TO INSTALLING ANY ONE ITEM.
13. REFER TO SHEET CXA-A-83 FOR PARTITION TYPE INFORMATION.
14. PROVIDE PAINTED ACCESS PANELS IN WALLS & CEILING AT CONCEALED ITEMS SUCH AS VALVES, CONTROLS, SWITCHES OR ANY OTHER ITEMS THAT REQUIRES ACCESS. GC TO DETERMINE ACCESS PANEL LOCATION W/ ARCHITECT PRIOR TO INSTALLATION.

## CONSTRUCTION KEY NOTES

| | |
|---|---|
| 9 | PROVIDE AND INSTALL ROLL DOWN DOOR. SEE DETAILS AND SCHEDULE. |
| 11 | PROVIDE AND INSTALL T1-11 CEILING. |
| 14 | PROVIDE NEW ASPHALT SHINGLE ROOFING,UNDERLAYMENT, AND REPLACE IN KIND EXISTING DECKING AS REQUIRED (COORDINATE WITH STRUCTURAL). |
| 15 | PROVIDE AND INSTALL SBS MODIFIED BITUMEN ROOFING AND UNDERLAYMENT. |
| 17 | PROVIDE AND INSTALL RIDGE VENT AT ROOF HIPS. |
| 19 | PROVIDE AND INSTALL ROOF DRAIN. SEE PLUMBING DRAWINGS. |
| 23 | NEW ROOF WITH BATT INSULATION (R-38 MIN) PACKED BETWEEN JOISTS. PROVIDE AND INSTALL SHINGLES, UNDERLAYMENT SHEATHING AND FLASHING SYSTEM. |
| 31 | NEW CONCRETE PAD FOUNDATION. SEE STRUCTURAL DRAWINGS. |
| 32 | NEW 3/4" FIRE RETARDENT PLYWOOD FLOOR ABOVE ELECTRICAL ROOM. |
| 39 | NEW SOFFIT WITH RECESSED LIGHTS AS INDICATED ON RCP. |
| 41 | INSTALL REFURBISHED FINIAL LIGHTS (H6). ARCHITECT TO APPROVE FINISH AND ANY NEEDED MODIFICATIONS TO H6 LIGHTS DURING REFURBISHMENT. |
| 67 | NEW FASCIA BOARD AND SOFFIT. |
| 80 | NEW 3/4" PLYWOOD FLOOR |

8/30/2022 4:05:59 PM

CONSULTANT INFORMATION

The LiRo Group
3 Aerial Way, Syosset, New York 11791
(516) 938-5476 www.liro.com

CONSULTANT SEAL

REGISTERED ARCHITECT ROBERT D. YOUNG JR. 023280 STATE OF NEW YORK

| REVISION NUMBER | DATE | MADE BY | APP'D BY | REVISION |
|---|---|---|---|---|

RECORD DRAWING CERTIFICATION

☐ AS BUILT – CHANGES AS NOTED ☐ AS BUILT – NO CHANGES

CONTRACTOR
NAME
SIGNATURE
TITLE DATE

PROJECT COORDINATOR
NAME
SIGNATURE
TITLE DATE

WESTCHESTER COUNTY, NEW YORK
DEPARTMENT OF PUBLIC WORKS AND TRANSPORTATION
DIVISION OF ENGINEERING

INFRASTRUCTURE REHABILITATION PHASE 3
PLAYLAND PARK, RYE, NEW YORK
CROSS AXIS BUILDING A
CXA - BUILDING SECTIONS

CONTRACT NUMBER 22-523
SHEET NUMBER CXA-A-31
DWG NO.: 120 of 664
SCALE: 1/4" = 1'-0"
DATE: 08/23/2022
DPW FILE NUMBER 1-118-A-869-0
REV. NO. 0

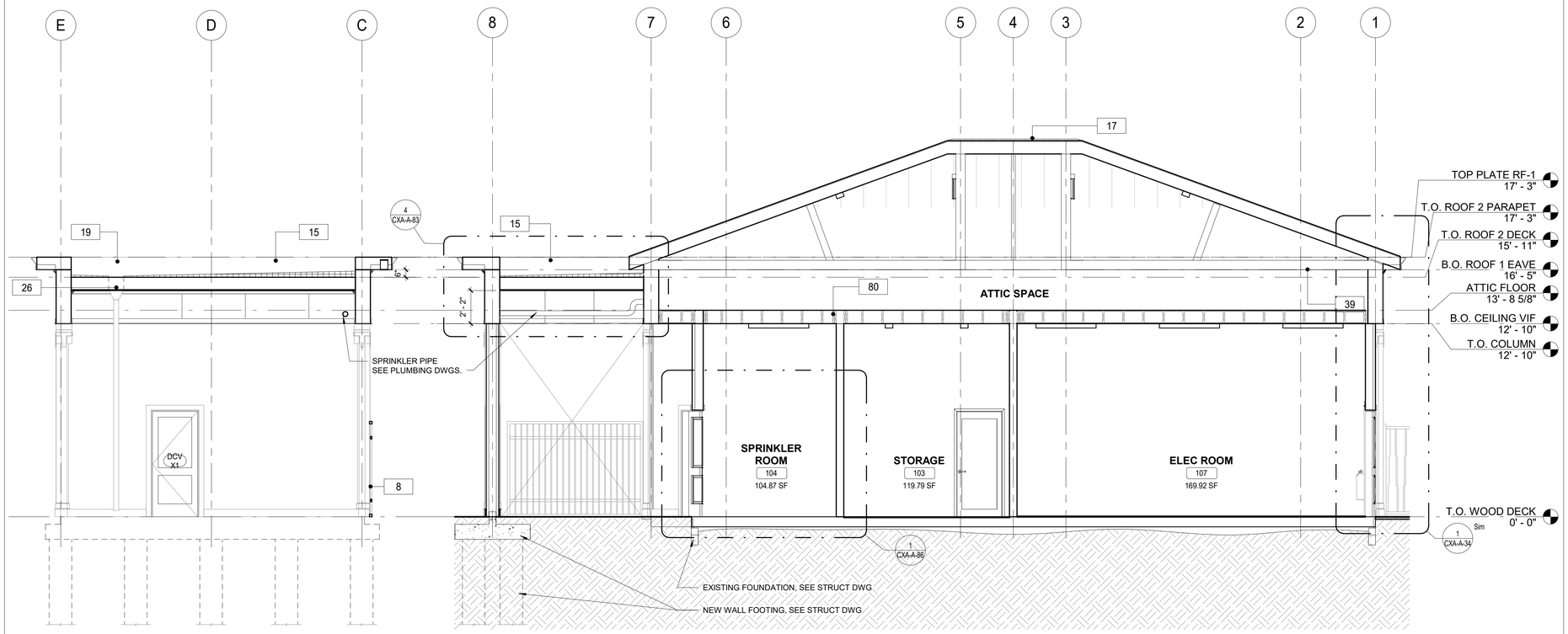


1 DRIVE THROUGH SECTION
1/4" = 1'-0"

2 BUILDING CROSS SECTION - BACK OF HOUSE
1/4" = 1'-0"

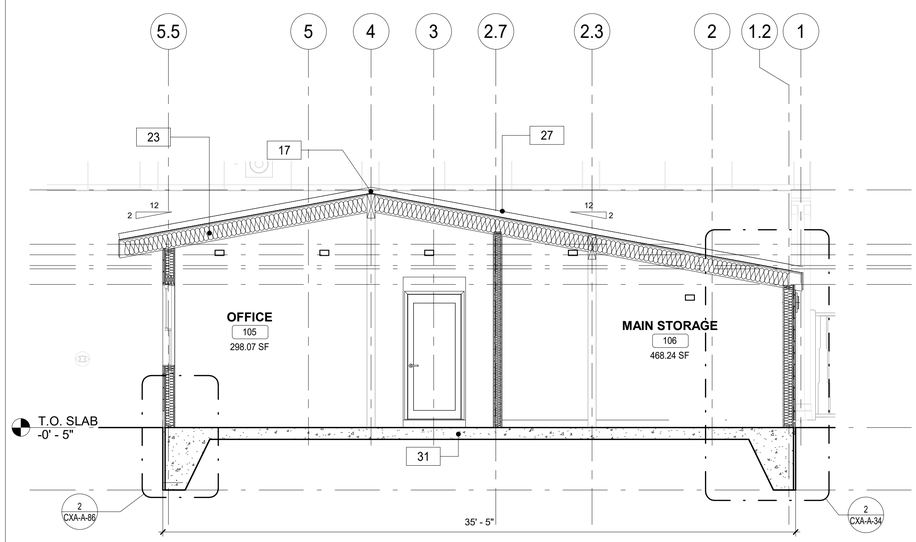


3 BUILDING CROSS SECTION - EMPLOYEE AREA
1/4" = 1'-0"

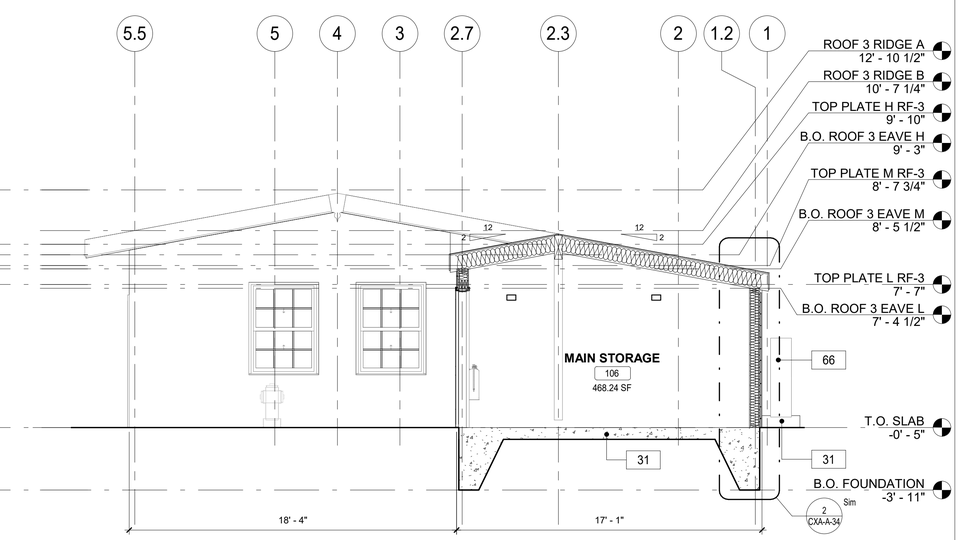


4 BUILDING CROSS SECTION - MAIN STORAGE
1/4" = 1'-0"

## FLOOR PLAN GENERAL NOTES

1. DIMENSIONS ARE TO FACE OF GYPSUM WALL BOARD, GRID LINES, OR CENTERLINE OF COLUMN. ALL ELEVATIONS ARE NOTED FROM FINISH FLOOR ELEVATIONS.
2. PROVIDE DRYWALL TRIM AT ALL EXPOSED EDGES AND CORNERS.
3. MINIMUM DIMENSION FROM ANY CORNER OR WALL TO FRAMING STUD AT DOOR JAMB OPENING SHALL BE 4" (UNO).
4. PROVIDE METAL BLOCKING FOR ANY WALL MOUNTED EQUIPMENT OR ACCESSORIES. COORDINATE ALL BLOCKING REQUIREMENTS NECESSARY WITH OTHER TRADES.
5. THE GC SHALL VERIFY DIMENSIONS OF THE EXISTING SPACE AND OF ANY EXISTING CONSTRUCTION TO REMAIN BY ACTUAL MEASUREMENT BEFORE ANY WORK IS PERFORMED. IF ANY MEASUREMENTS DIFFER FROM DIMENSIONS SHOWN ON PLAN, GC IS TO NOTIFY THE ARCHITECT IMMEDIATELY. THE GC SHALL BE RESPONSIBLE FOR CORRECTING ANY AND ALL DISCREPANCIES FOUND AFTER THE WORK IS PERFORMED, AT NO ADDITIONAL EXPENSE TO THE OWNER.
6. GC TO VERIFY ALL FINISHED DIMENSIONS. FIELD CONDITIONS ALTERING ANY DIMENSIONS SHOULD BE BROUGHT TO THE ATTENTION OF THE OWNER AND ARCHITECT.
7. THE GC SHALL PROVIDE CAULK JOINTS WHERE GYP. BD. MEETS THE FLOOR OR ROOF DECK.
8. THE GC SHALL BE RESPONSIBLE FOR COORDINATING WITH OWNER ON ALL WORK TO BE PERFORMED BY THE OWNER. ANY POTENTIAL CONFLICTS OR DELAYS CAUSED BY THE OWNER'S SUBCONTRACTORS MUST BE DOCUMENTED IN WRITING TO THE OWNER BEFORE THE DELAY IS ACTUALLY INCURRED FOR IT TO BE CONSIDERED. OTHERWISE THE GC WILL BE RESPONSIBLE FOR MEETING THE SCHEDULE AS OUTLINED IN THE CONTRACT.
9. THE GC SHALL SUPPLY ALL MATERIAL, LABOR, AND COORDINATION REQUIRED FOR THE INSTALLATION OF ALL OWNER-SUPPLIED ITEMS AS DESCRIBED IN THE DOCUMENTS, UNO
10. THE GC IS RESPONSIBLE FOR ALL FLOOR AND WALL PENETRATIONS FOR ELECTRICAL AND MECHANICAL WORK. ALL SUCH OPENING SHALL BE FRAMED AND REINFORCED.
11. FLOOR SURFACES SHALL BE LEVELED TO ASSURE SMOOTH SURFACE FOR FINISH FLOOR INSTALLATION. GC SHALL ALSO PAY SPECIAL ATTENTION THAT ALL WALL SURFACES ARE SMOOTH WHERE MURALS WILL BE DIRECTLY APPLIED TO WALL.
12. GC TO COORDINATE ALL UTILITY STUB-UPS AND LOCATION OF ALL EQUIPMENT PRIOR TO INSTALLING ANY ONE ITEM.
13. REFER TO SHEET CXA-A-83 FOR PARTITION TYPE INFORMATION.
14. PROVIDE PAINTED ACCESS PANELS IN WALLS & CEILING AT CONCEALED ITEMS SUCH AS VALVES, CONTROLS, SWITCHES OR ANY OTHER ITEMS THAT REQUIRES ACCESS. GC TO DETERMINE ACCESS PANEL LOCATION W/ ARCHITECT PRIOR TO INSTALLATION.

## CONSTRUCTION KEY NOTES

| | |
|---|---|
| 8 | PROVIDE AND INSTALL GATE. SEE DETAILS. |
| 15 | PROVIDE AND INSTALL SBS MODIFIED BITUMEN ROOFING AND UNDERLAYMENT. |
| 17 | PROVIDE AND INSTALL RIDGE VENT AT ROOF HIPS. |
| 19 | PROVIDE AND INSTALL ROOF DRAIN. SEE PLUMBING DRAWINGS. |
| 23 | NEW ROOF WITH BATT INSULATION (R-38 MIN) PACKED BETWEEN JOISTS. PROVIDE AND INSTALL SHINGLES, UNDERLAYMENT SHEATHING AND FLASHING SYSTEM. |
| 26 | PROVIDE AND INSTALL ALUMINUM LEADER HEAD, LEADER, AND SPLASH GUARD. |
| 27 | PROVIDE AND INSTALL STEP FLASHING WHERE SLOPE ROOFS MEET VERTICAL WALLS. |
| 31 | NEW CONCRETE PAD FOUNDATION. SEE STRUCTURAL DRAWINGS. |
| 39 | NEW SOFFIT WITH RECESSED LIGHTS AS INDICATED ON RCP |
| 66 | INSTALL NEW MINI SPLIT MECHANICAL UNIT. SEE MECHANICAL DRAWINGS. |
| 80 | NEW 3/4" PLYWOOD FLOOR |

8/30/2022 4:06:03 PM

CONSULTANT INFORMATION

The LiRo Group
3 Aerial Way, Syosset, New York 11791
(516) 938-5476 www.liro.com

CONSULTANT SEAL

REGISTERED ARCHITECT ROBERT D. LIROSO JR. 023220 STATE OF NEW YORK

| REVISION NUMBER | DATE | MADE BY | APP'D BY | REVISION |
|---|---|---|---|---|

RECORD DRAWING CERTIFICATION

☐ AS BUILT – CHANGES AS NOTED ☐ AS BUILT – NO CHANGES

CONTRACTOR
NAME
SIGNATURE
TITLE DATE

PROJECT COORDINATOR
NAME
SIGNATURE
TITLE DATE

WESTCHESTER COUNTY, NEW YORK
DEPARTMENT OF PUBLIC WORKS AND TRANSPORTATION
DIVISION OF ENGINEERING

INFRASTRUCTURE REHABILITATION PHASE 3
PLAYLAND PARK, RYE, NEW YORK
CROSS AXIS BUILDING A
CXA - BUILDING SECTIONS

| | |
|---|---|
| CONTRACT NUMBER | 22-523 |
| SHEET NUMBER | CXA-A-32 |
| DWG NO.: | 121 of 664 |
| SCALE: | 1/4" = 1'-0" |
| DATE: | 08/23/2022 |
| DPW FILE NUMBER | 1-118-A-870-0 |
| REV. NO. | 0 |

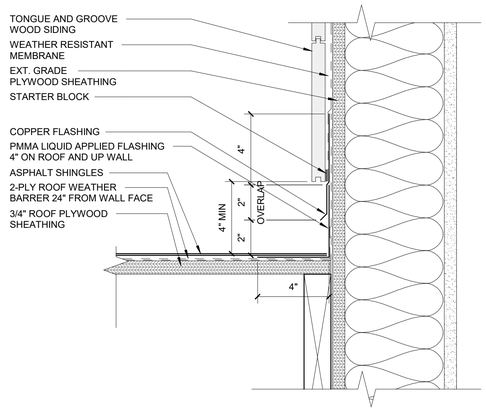


3 NEW ROOF FLASHING DETAIL
3" = 1'-0"

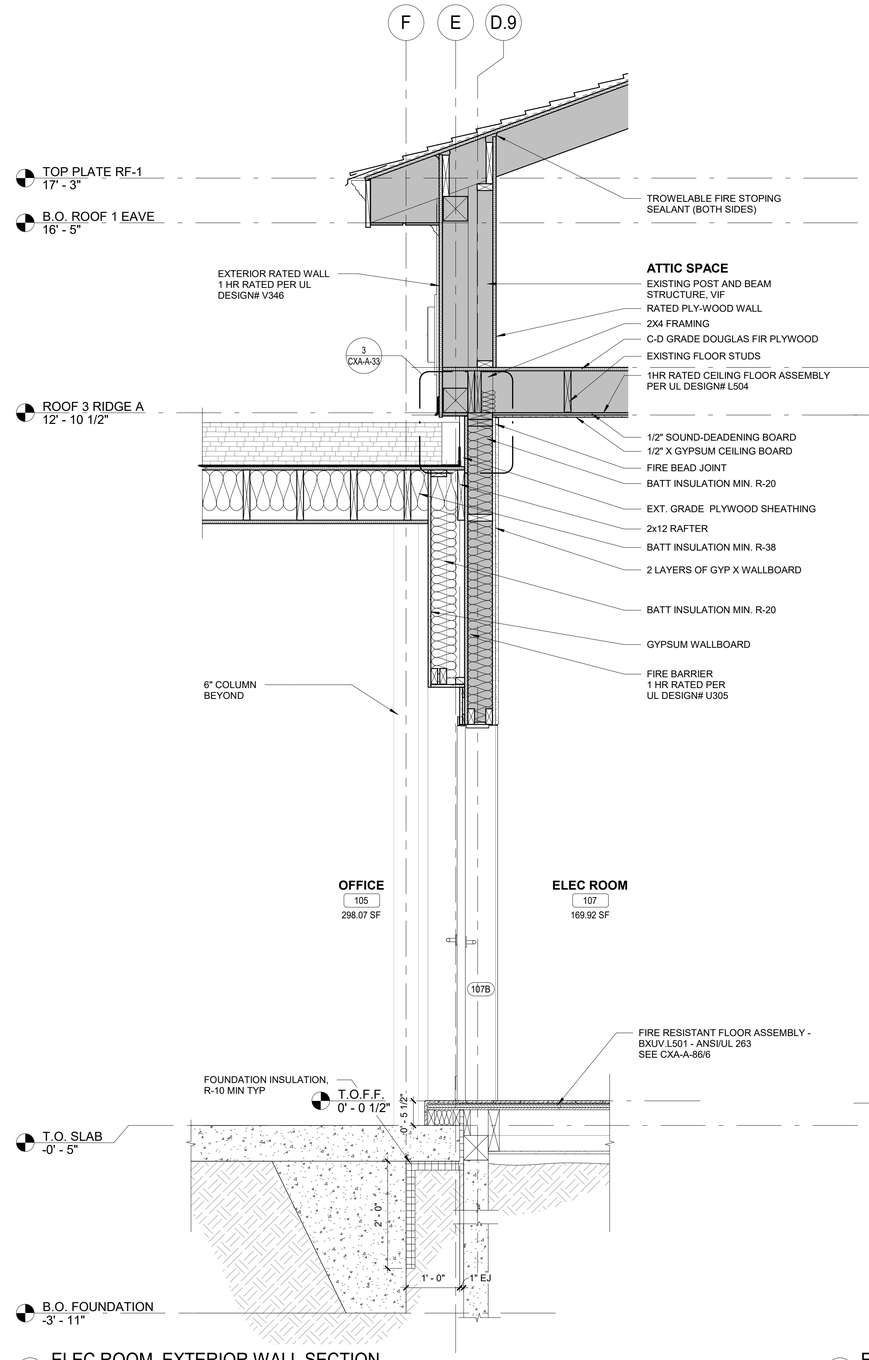


2 ELEC ROOM EXTERIOR WALL SECTION
3/4" = 1'-0"

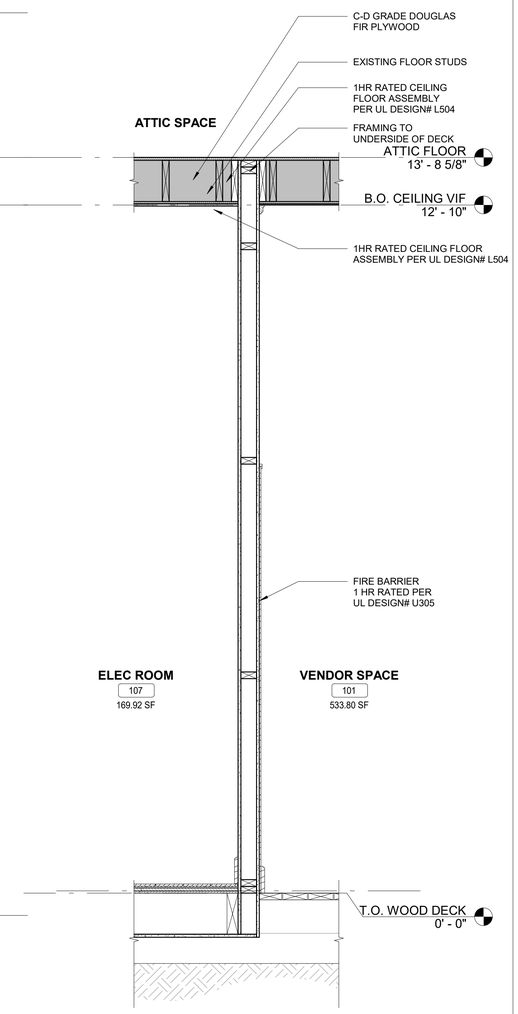


1 ELEC ROOM INT. WALL SECTION
3/4" = 1'-0"

8/30/2022 4:06:04 PM

CONSULTANT INFORMATION
The LiRo Group
3 Aerial Way, Syosset, New York 11791
(516) 938-5476 www.liro.com

CONSULTANT SEAL
REGISTERED ARCHITECT ROBERT D. YOUNG JR. 023290 STATE OF NEW YORK

| REVISION NUMBER | DATE | MADE BY | APP'D BY | REVISION |
|---|---|---|---|---|

RECORD DRAWING CERTIFICATION
AS BUILT – CHANGES AS NOTED
AS BUILT – NO CHANGES

CONTRACTOR
NAME
SIGNATURE
TITLE DATE

PROJECT COORDINATOR
NAME
SIGNATURE
TITLE DATE

WESTCHESTER COUNTY, NEW YORK
DEPARTMENT OF PUBLIC WORKS AND TRANSPORTATION
DIVISION OF ENGINEERING

**INFRASTRUCTURE REHABILITATION PHASE 3**
**PLAYLAND PARK, RYE, NEW YORK**
**CROSS AXIS BUILDING A**
**CXA - ENLARGED SECTIONS**

CONTRACT NUMBER 22-523
SHEET NUMBER CXA-A-33
DWG NO.: 122 of 664
SCALE: As indicated
DATE: 08/23/2022
DPW FILE NUMBER 1-118-A-871-0
REV. NO. 0

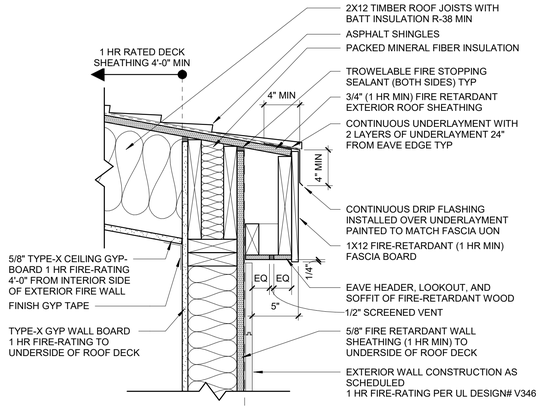


5 RATED ROOF EAVE DETAIL
1 1/2" = 1'-0"

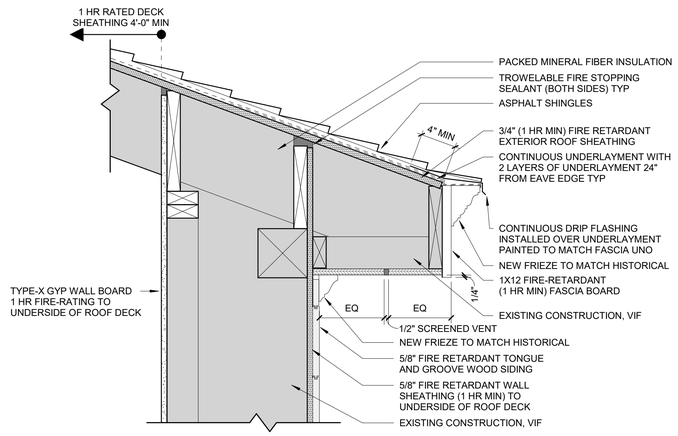


4 EXISTING ROOF EAVE RATED ALTERATION DETAIL
1 1/2" = 1'-0"

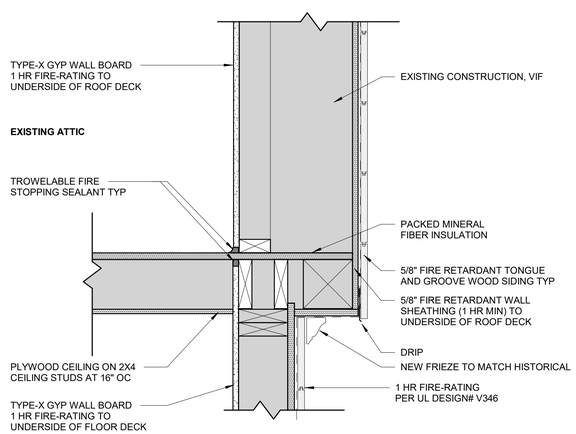


3 EXISTING MID-WALL RATED ALTERATION DETAIL
1 1/2" = 1'-0"

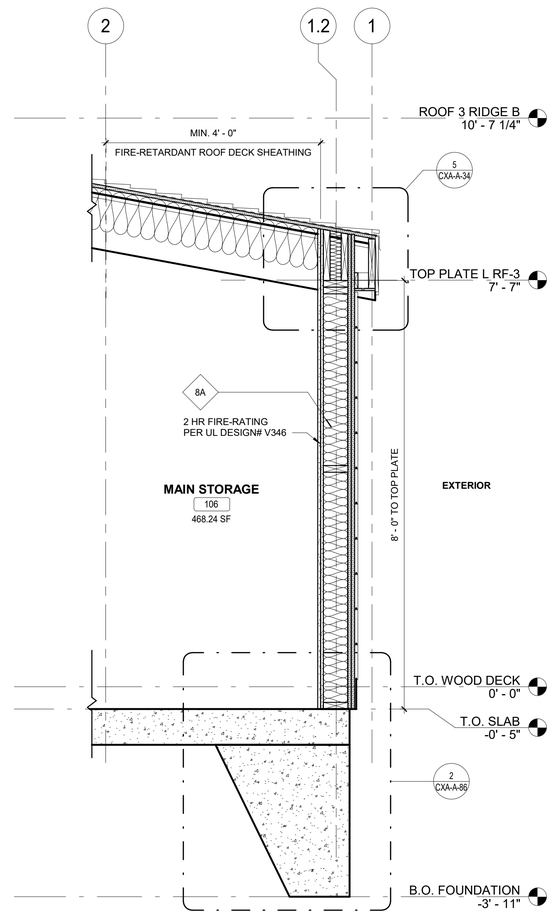


2 CXA - EXTERIOR RATED WALL SECTION
3/4" = 1'-0"

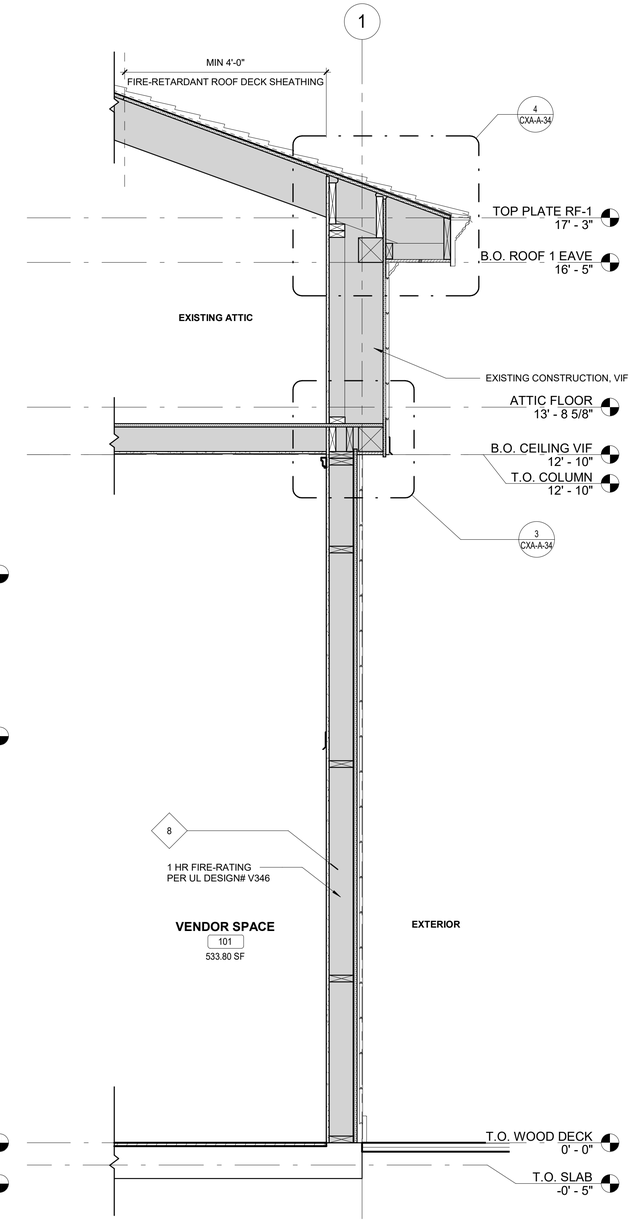


1 CXA - EXTERIOR RATED WALL SECTION
3/4" = 1'-0"

8/30/2022 4:06:05 PM

CONSULTANT INFORMATION
The LiRo Group
3 Aerial Way, Syosset, New York 11791
(516) 938-5476 www.liro.com

CONSULTANT SEAL
REGISTERED ARCHITECT ROBERT D. KONIGSBERG 023280 STATE OF NEW YORK

| REVISION NUMBER | DATE | MADE BY | APP'D BY | REVISION |
|---|---|---|---|---|

RECORD DRAWING CERTIFICATION
☐ AS BUILT – CHANGES AS NOTED ☐ AS BUILT – NO CHANGES

CONTRACTOR
NAME
SIGNATURE
TITLE DATE

PROJECT COORDINATOR
NAME
SIGNATURE
TITLE DATE

WESTCHESTER COUNTY, NEW YORK
DEPARTMENT OF PUBLIC WORKS AND TRANSPORTATION
DIVISION OF ENGINEERING

**INFRASTRUCTURE REHABILITATION PHASE 3**
**PLAYLAND PARK, RYE, NEW YORK**
**CROSS AXIS BUILDING A**
**CXA - WALL ENLARGED SECTONS 2**

| | |
|---|---|
| CONTRACT NUMBER | 22-523 |
| SHEET NUMBER | CXA-A-34 |
| DWG NO.: | 123 of 664 |
| SCALE: | As indicated |
| DATE: | 08/23/2022 |
| DPW FILE NUMBER | 1-118-A-872-0 |
| REV. NO. | 0 |

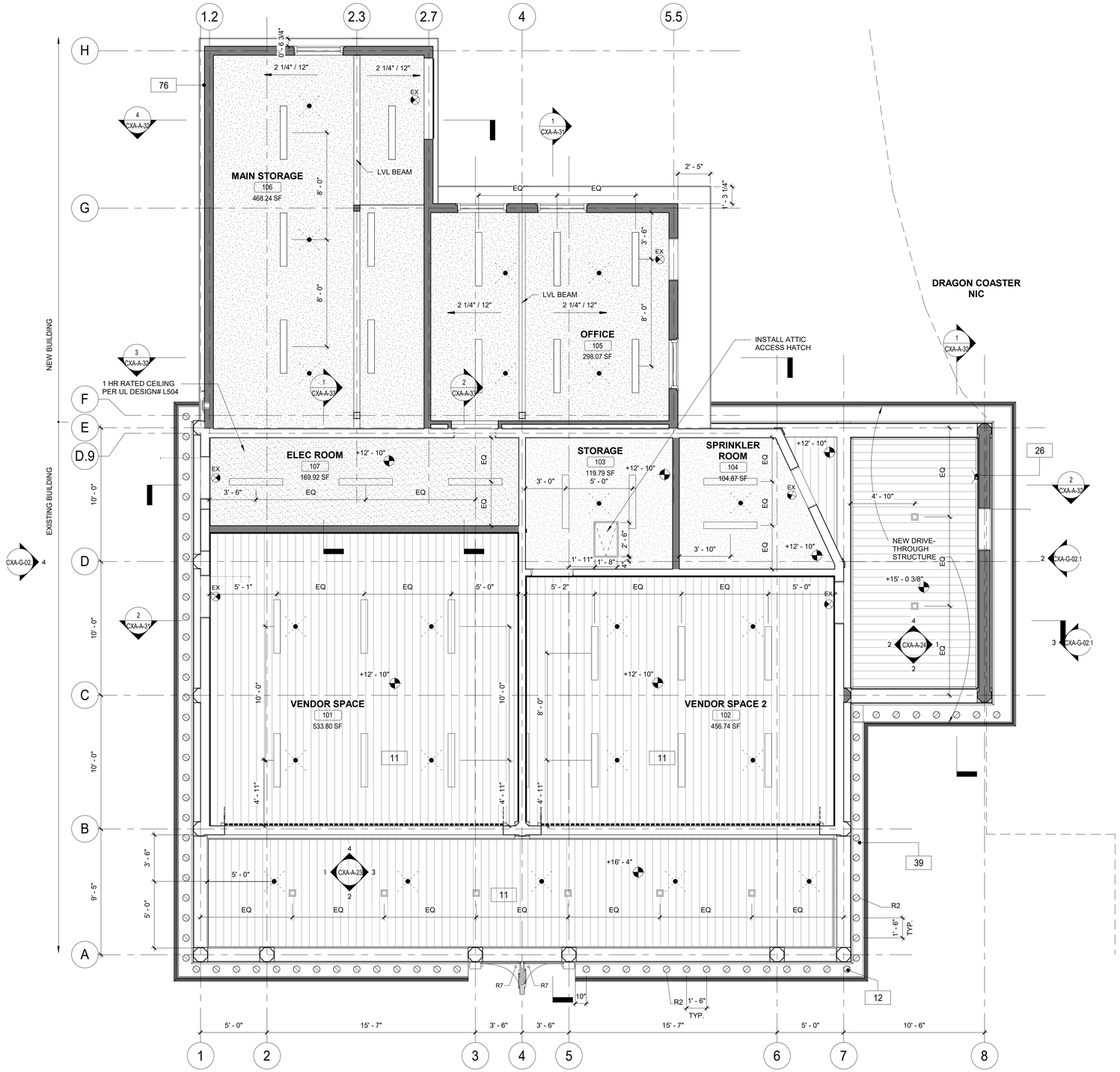


1 RCP - GROUND FLOOR
1/4" = 1'-0"

## GENERAL REFLECTED CEILING PLAN NOTES

1. CONTRACTOR SHALL PROVIDE THE NECESSARY FRAMING OR BRIDGING FOR ALL LIGHT FIXTURES, DIFFUSERS, RETURNS, ETC., AS WELL AS REQUIRED CUTOUTS.
2. CONTRACTOR SHALL NOTIFY THE ARCHITECT OF ANY POSSIBLE INTERFERENCES BEFORE PROCEEDING WITH CEILING INSTALLATION.
3. CEILING CONSTRUCTION SHALL NOT BE CLOSED IN UNTIL THE CONSTRUCTION MANAGER AND AUTHORITIES HAVING JURISDICTION HAVE HAD AN OPPORTUNITY TO INSPECT THE AREA AND ASCERTAIN THAT ALL DUCTWORK, PLUMBING, ELECTRICAL CONDUITS AND LINES HAVE BEEN INSTALLED PROPERLY.
4. FASCIAS OR ANY BREAK IN THE CEILING HEIGHTS CREATED BY THE INSTALLATION AND/OR ALTERATION OF HEATING, VENTILATING, A/C OR MECHANICAL DUCTS, PIPING OR OTHER EQUIPMENT SHALL BE FORMED OF GYPSUM WALLBOARD ON FURRING CHANNELS.
5. THE CEILING PANEL JOINTS SHALL BE ALIGNED PERFECTLY WITH LIGHTING FIXTURES.
6. ALL JOINTS IN THE PANEL SHALL BE SQUARE, LEVEL AND PERFECTLY ALIGNED WITH EACH OTHER AND WITH BUILDING FIXTURES.
7. CONTRACTOR SHALL PROVIDE CUTOUTS AND OTHER SPECIAL PROVISIONS IN ACOUSTICAL WORK AS REQUIRED FOR LIGHTING FIXTURES, REGISTERS, DIFFUSERS AND OTHER INSERTED ITEMS. GENERAL CONSTRUCTION CONTRACTOR SHALL INSTALL ACCESS PANELS IN GYPSUM DRYWALL CEILINGS FOR ACCESS TO AIR CONDITIONING, PLUMBING, TELEPHONE & ELECTRICAL CONTROL EQUIPMENT REQUIRING ACCESS.
8. IN GENERAL, WITHIN EACH AREA, CEILING WORK REQUIREMENTS SHALL BE EXECUTED IN SUCH A MANNER AS TO PROVIDE CONTINUOUS MATCHED AND ALIGNED CEILINGS. THE FINAL CEILING INSTALLATION SHALL BE FREE OF ALL VISUAL DEFECTS.
9. CEILING BOARD OVER VENDOR SPACES SHOULD BE MOISTURE RESISTANT, PRESSURE TREATED WOOD

## RCP LEGEND

- R-2 EXTERIOR RECESSED CAN IN SOFFIT (SEE ELEC. DWGS)
- R-6: 4" SQUARE RECESSED LIGHT FIXTURE (SEE ELEC. DWGS)
- L-1 LINEAR LIGHT (SEE ELEC. DWGS)
- M-2 MARQUEE LIGHTING AT BALUSTRADE
- SPRINKLER (SEE FIRE PROTECTION DWGS)
- SUPPLY DIFFUSER. SEE MECHANICAL DRAWINGS
- EXHAUST GRILL. SEE MECHANICAL DRAWINGS
- EX- EXIT SIGN
- NEW CONSTRUCTION
- T1-11 CEILING BOARD
- GYP. CEILING BOARD
- INDICATES SCOPE NOT IN CONTRACT

## CONSTRUCTION KEY NOTES

| | |
|---|---|
| 11 | PROVIDE AND INSTALL T1-11 CEILING. |
| 12 | PROVIDE DROP CEILING AND ALL HANGERS/ ACCESSORIES. |
| 26 | PROVIDE AND INSTALL ALUMINUM LEADER HEAD, LEADER, AND SPLASH GUARD. |
| 39 | NEW SOFFIT WITH RECESSED LIGHTS AS INDICATED ON RCP |
| 76 | INSTALL NEW EXHAUST SYSTEM. SEE MECHANICAL DRAWINGS. |

8/30/2022 4:06:10 PM

CONSULTANT INFORMATION

The LiRo Group
3 Aerial Way, Syosset, New York 11791
(516) 938-5476 www.liro.com

CONSULTANT SEAL

REGISTERED ARCHITECT ROBERT D. LIROSO JR. 023220 STATE OF NEW YORK

| REVISION NUMBER | DATE | MADE BY | APP'D BY | REVISION |
|---|---|---|---|---|

RECORD DRAWING CERTIFICATION

☐ AS BUILT – CHANGES AS NOTED ☐ AS BUILT – NO CHANGES

CONTRACTOR
NAME
SIGNATURE
TITLE DATE

PROJECT COORDINATOR
NAME
SIGNATURE
TITLE DATE

WESTCHESTER COUNTY, NEW YORK
DEPARTMENT OF PUBLIC WORKS AND TRANSPORTATION
DIVISION OF ENGINEERING

INFRASTRUCTURE REHABILITATION PHASE 3
PLAYLAND PARK, RYE, NEW YORK
CROSS AXIS BUILDING A
CXA - GROUND LEVEL RCP

| | |
|---|---|
| CONTRACT NUMBER | 22-523 |
| SHEET NUMBER | CXA-A-41 |
| DWG NO.: | 124 of 664 |
| SCALE: | As indicated |
| DATE: | 08/23/2022 |
| DPW FILE NUMBER | 1-118-A-873-0 |
| REV. NO. | 0 |

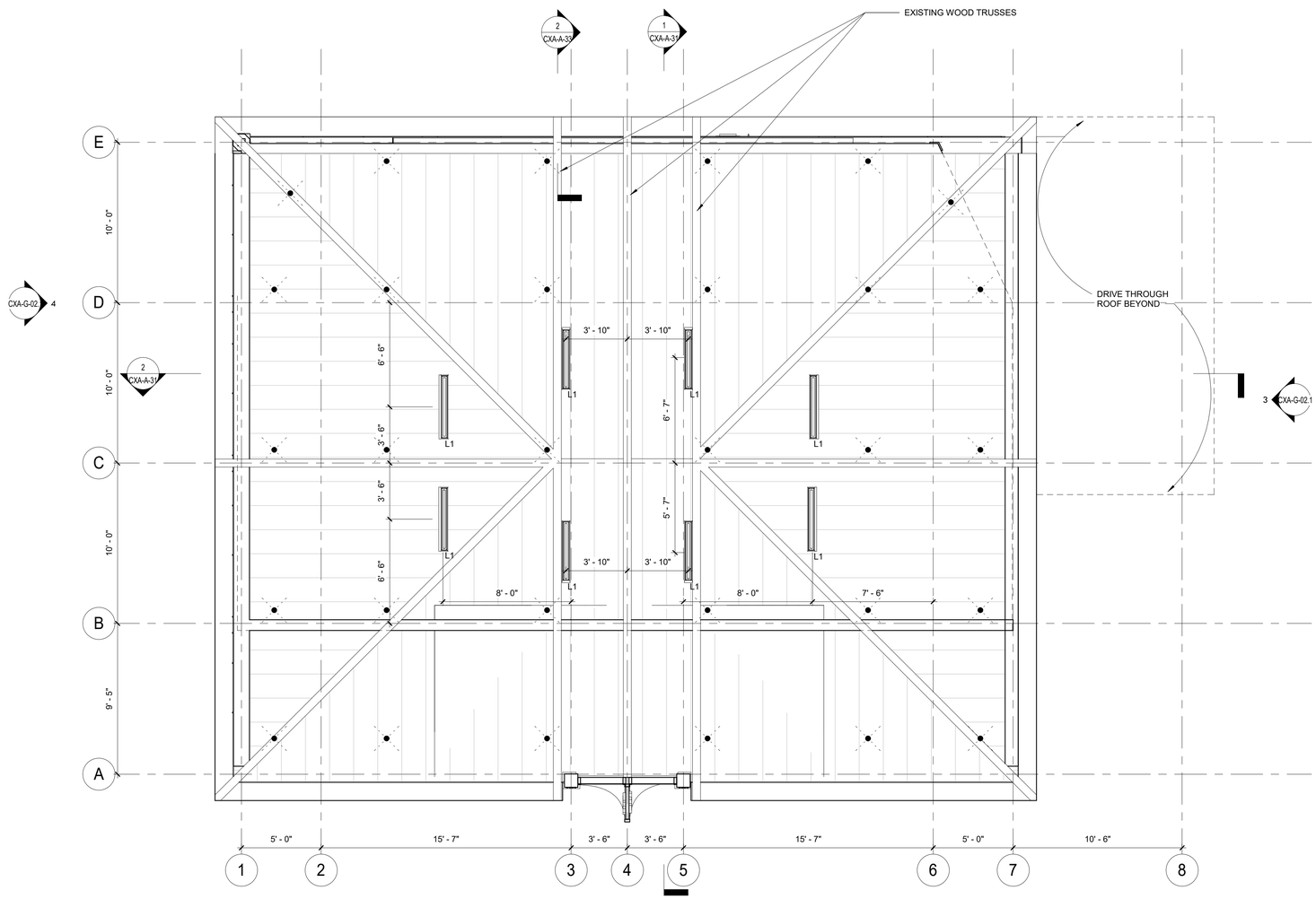


1 ATTIC LEVEL
1/4" = 1'-0"

## GENERAL REFLECTED CEILING PLAN NOTES

1. CONTRACTOR SHALL PROVIDE THE NECESSARY FRAMING OR BRIDGING FOR ALL LIGHT FIXTURES, DIFFUSERS, RETURNS, ETC., AS WELL AS REQUIRED CUTOUTS.
2. CONTRACTOR SHALL NOTIFY THE ARCHITECT OF ANY POSSIBLE INTERFERENCES BEFORE PROCEEDING WITH CEILING INSTALLATION.
3. CEILING CONSTRUCTION SHALL NOT BE CLOSED IN UNTIL THE CONSTRUCTION MANAGER AND AUTHORITIES HAVING JURISDICTION HAVE HAD AN OPPORTUNITY TO INSPECT THE AREA AND ASCERTAIN THAT ALL DUCTWORK, PLUMBING, ELECTRICAL CONDUITS AND LINES HAVE BEEN INSTALLED PROPERLY.
4. FASCIAS OR ANY BREAK IN THE CEILING HEIGHTS CREATED BY THE INSTALLATION AND/OR ALTERATION OF HEATING, VENTILATING, A/C OR MECHANICAL DUCTS, PIPING OR OTHER EQUIPMENT SHALL BE FORMED OF GYPSUM WALLBOARD ON FURRING CHANNELS.
5. THE CEILING PANEL JOINTS SHALL BE ALIGNED PERFECTLY WITH LIGHTING FIXTURES.
6. ALL JOINTS IN THE PANEL SHALL BE SQUARE, LEVEL AND PERFECTLY ALIGNED WITH EACH OTHER AND WITH BUILDING FIXTURES.
7. CONTRACTOR SHALL PROVIDE CUTOUTS AND OTHER SPECIAL PROVISIONS IN ACOUSTICAL WORK AS REQUIRED FOR LIGHTING FIXTURES, REGISTERS, DIFFUSERS AND OTHER INSERTED ITEMS. GENERAL CONSTRUCTION CONTRACTOR SHALL INSTALL ACCESS PANELS IN GYPSUM DRYWALL CEILINGS FOR ACCESS TO AIR CONDITIONING, PLUMBING, TELEPHONE & ELECTRICAL CONTROL EQUIPMENT REQUIRING ACCESS.
8. IN GENERAL, WITHIN EACH AREA, CEILING WORK REQUIREMENTS SHALL BE EXECUTED IN SUCH A MANNER AS TO PROVIDE CONTINUOUS MATCHED AND ALIGNED CEILINGS. THE FINAL CEILING INSTALLATION SHALL BE FREE OF ALL VISUAL DEFECTS.
9. CEILING BOARD OVER VENDOR SPACES SHOULD BE MOISTURE RESISTANT, PRESSURE TREATED WOOD

## RCP LEGEND

- R2 — R-2 EXTERIOR RECESSED CAN IN SOFFIT (SEE ELEC. DWGS)
- R6 — R-6: 4" SQUARE RECESSED LIGHT FIXTURE (SEE ELEC. DWGS)
- L1 — L-1 LINEAR LIGHT (SEE ELEC. DWGS)
- M2 — M-2 MARQUEE LIGHTING AT BALUSTRADE
- SPRINKLER (SEE FIRE PROTECTION DWGS)
- SUPPLY DIFFUSER. SEE MECHANICAL DRAWINGS
- EXHAUST GRILL. SEE MECHANICAL DRAWINGS
- EX — EX- EXIT SIGN
- NEW CONSTRUCTION
- T1-11 CEILING BOARD
- GYP. CEILING BOARD
- INDICATES SCOPE NOT IN CONTRACT

8/30/2022 4:06:10 PM

CONSULTANT INFORMATION

The LiRo Group
3 Aerial Way, Syosset, New York 11791
(516) 938-5476 www.liro.com

CONSULTANT SEAL

REGISTERED ARCHITECT ROBERT D. JOHNSON 023220 STATE OF NEW YORK

| REVISION NUMBER | DATE | MADE BY | APP'D BY | REVISION |
|---|---|---|---|---|

RECORD DRAWING CERTIFICATION

☐ AS BUILT – CHANGES AS NOTED ☐ AS BUILT – NO CHANGES

CONTRACTOR
NAME
SIGNATURE
TITLE DATE

PROJECT COORDINATOR
NAME
SIGNATURE
TITLE DATE

WESTCHESTER COUNTY, NEW YORK
DEPARTMENT OF PUBLIC WORKS AND TRANSPORTATION
DIVISION OF ENGINEERING

**INFRASTRUCTURE REHABILITATION PHASE 3**
**PLAYLAND PARK, RYE, NEW YORK**
**CROSS AXIS BUILDING A**
**CXA - ATTIC LEVEL RCP**

| | |
|---|---|
| CONTRACT NUMBER | 22-523 |
| SHEET NUMBER | CXA-A-42 |
| DWG NO.: | 125 of 664 |
| SCALE: | As indicated |
| DATE: | 08/23/2022 |
| DPW FILE NUMBER | 1-118-A-874-0 |
| REV. NO. | 0 |

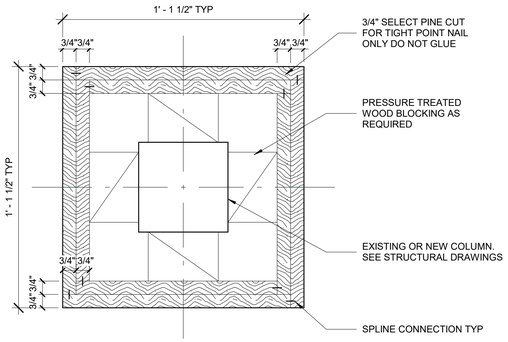


10 COLUMN C CAPITAL 3
3" = 1'-0"

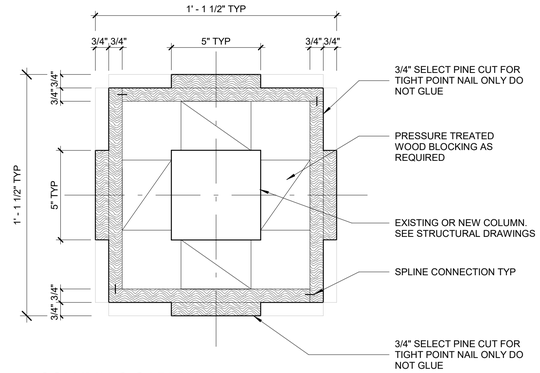


9 COLUMN C CAPITAL 2
3" = 1'-0"

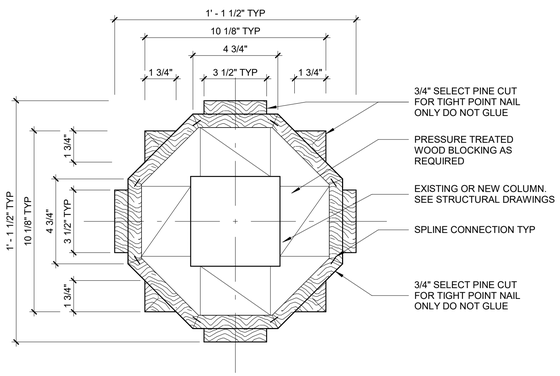


8 COLUMN C CAPITAL 1
3" = 1'-0"

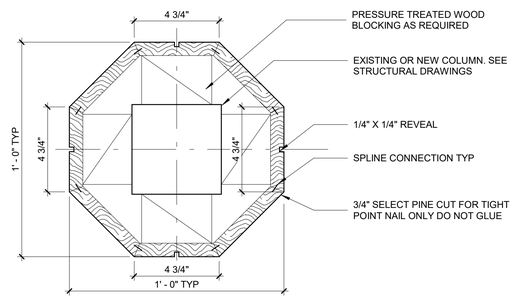


7 COLUMN C SHAFT
3" = 1'-0"

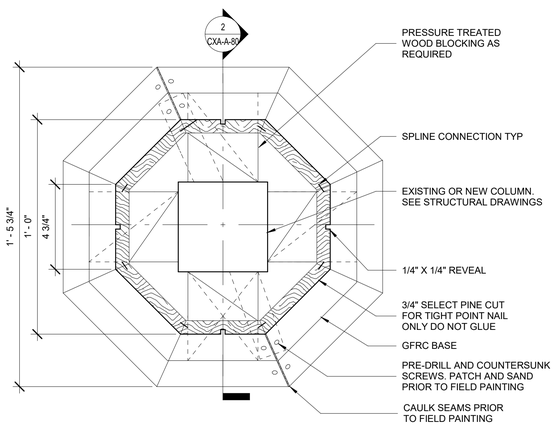


4 COLUMN C BASE PLAN
3" = 1'-0"

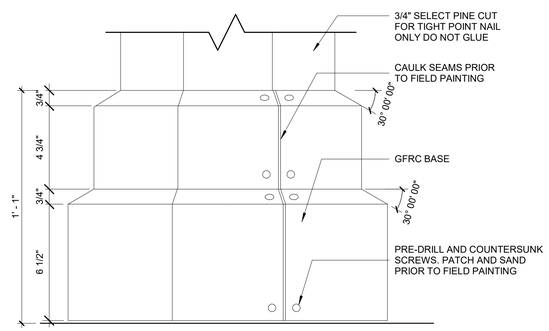


3 COLUMN C ELEVATION- COLUMN BASE
3" = 1'-0"

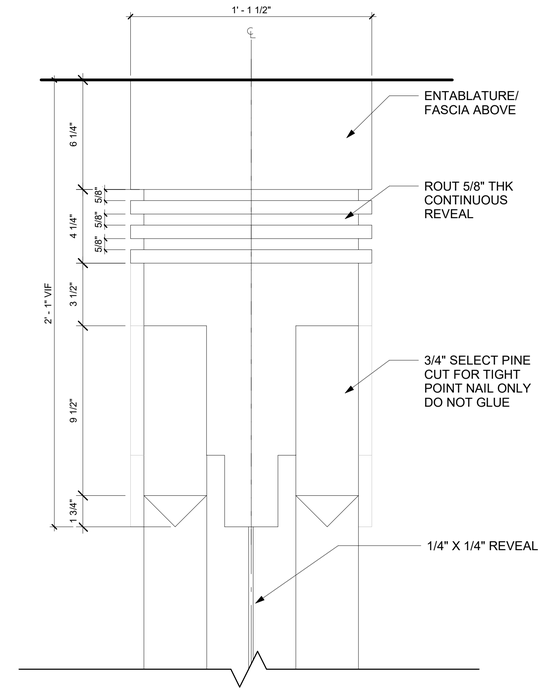


6 COLUMN CAPITAL DETAIL TYPE C
3" = 1'-0"

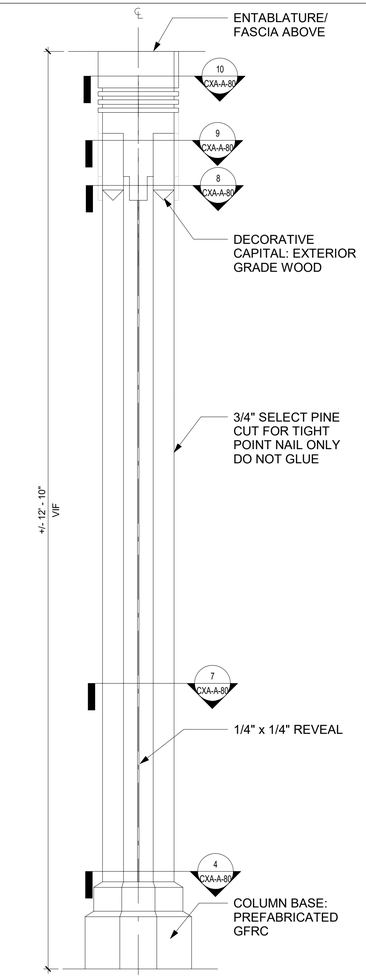


5 COLUMN DETAIL TYPE C
1" = 1'-0"

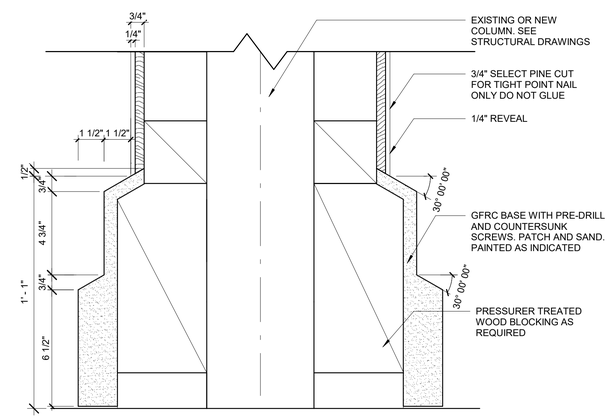


2 COLUMN C SECTION- COLUMN BASE
3" = 1'-0"

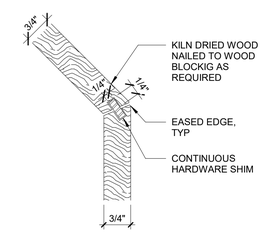


1 SPLINE CONNECTION DETAIL
6" = 1'-0"

NOTES:
1. KILN DRIED WOOD IS TO BE USED FOR COLUMN CLADDINGS.
2. PRESSURE-TREATED WOOD ARE TO BE USED FOR BLOCKING SUBSTRATE AS REQUIRED BY CLADDING INSTALLATIONS.
3. STAINLESS STEEL NAILS FASTENERS ARE TO BE USED FOR CLADDDING, BLOCKING INSTALLATIONS.
4. HARDWOOD IS TO BE USED FOR SPLINE SHIM CLADDIING CONNECTION.
5. SPLICE WOOD CLADDING PANEL OF INDIVIDUAL PIECES WHEN PANEL WIDTH EXCEEDS WIDTH OF WOOD PLANK AVAILABLE
6. **ALL DIMENSIONS TO BE VERIFIED IN FIELD**

8/30/2022 4:06:11 PM

CONSULTANT INFORMATION
The LiRo Group
3 Aerial Way, Syosset, New York 11791
(516) 938-5476 www.liro.com

CONSULTANT SEAL
REGISTERED ARCHITECT ROBERT D. VOLKMUTH 023220 STATE OF NEW YORK

| REVISION NUMBER | DATE | MADE BY | APP'D BY | REVISION |
|---|---|---|---|---|

RECORD DRAWING CERTIFICATION
☐ AS BUILT – CHANGES AS NOTED ☐ AS BUILT – NO CHANGES

CONTRACTOR
NAME
SIGNATURE
TITLE DATE

PROJECT COORDINATOR
NAME
SIGNATURE
TITLE DATE

WESTCHESTER COUNTY, NEW YORK
DEPARTMENT OF PUBLIC WORKS AND TRANSPORTATION
DIVISION OF ENGINEERING

**INFRASTRUCTURE REHABILITATION PHASE 3**
**PLAYLAND PARK, RYE, NEW YORK**
**CROSS AXIS BUILDING A**
**COLUMN DETAILS**

| | |
|---|---|
| CONTRACT NUMBER | 22-523 |
| SHEET NUMBER | **CXA-A-80** |
| DWG NO.: | 126 of 664 |
| SCALE: | **As indicated** |
| DATE: | **08/23/2022** |
| DPW FILE NUMBER | **1-118-A-875-0** |
| REV. NO. | 0 |

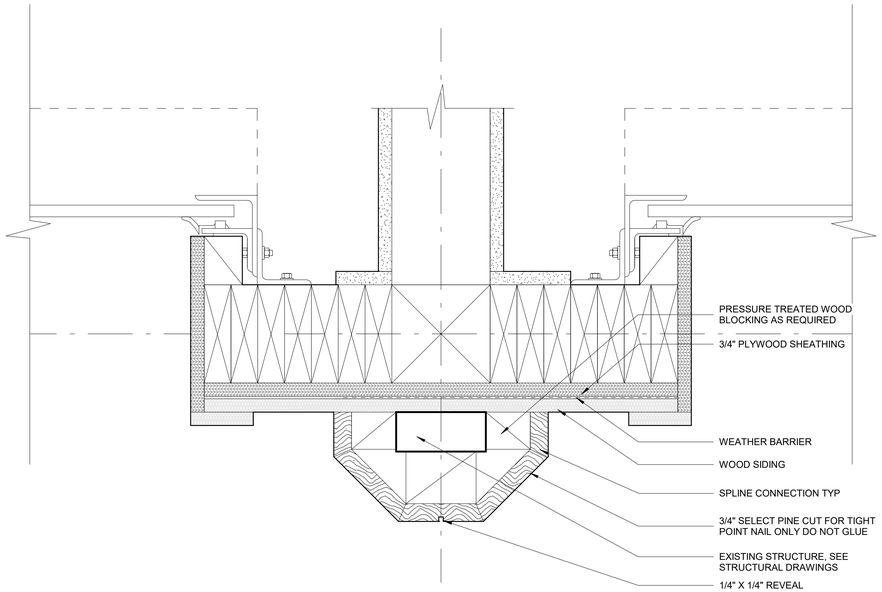


6 EXTERIOR COLUMN BETWEEN ROLL UP DOOR PLAN DETAIL
3" = 1'-0"

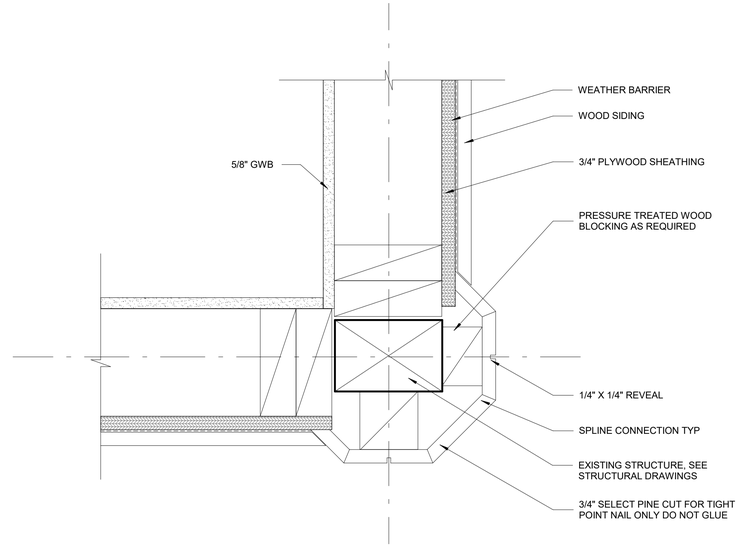


5 EXTERIOR CORNER COLUMN CONNECTION PLAN DETAIL
3" = 1'-0"

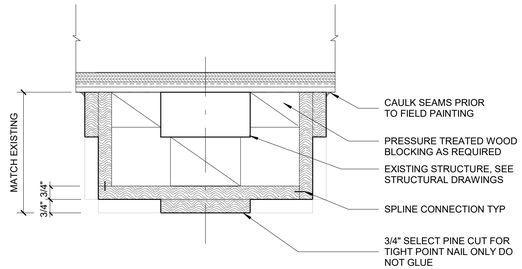


7 PILASTER COLUMN CAPITAL DETAIL
3" = 1'-0"

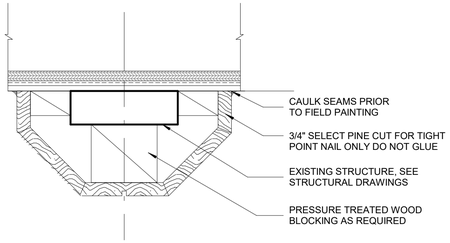


4 PILASTER COLUMN SHAFT DETAIL
3" = 1'-0"

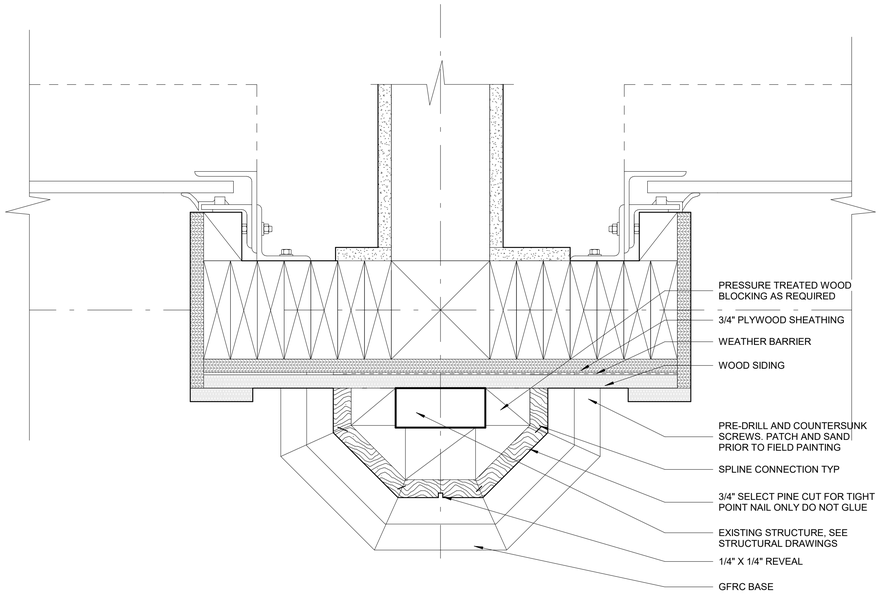


3 EXTERIOR COLUMN BETWEEN ROLL UP DOOR PLAN BASE DETAIL
3" = 1'-0"

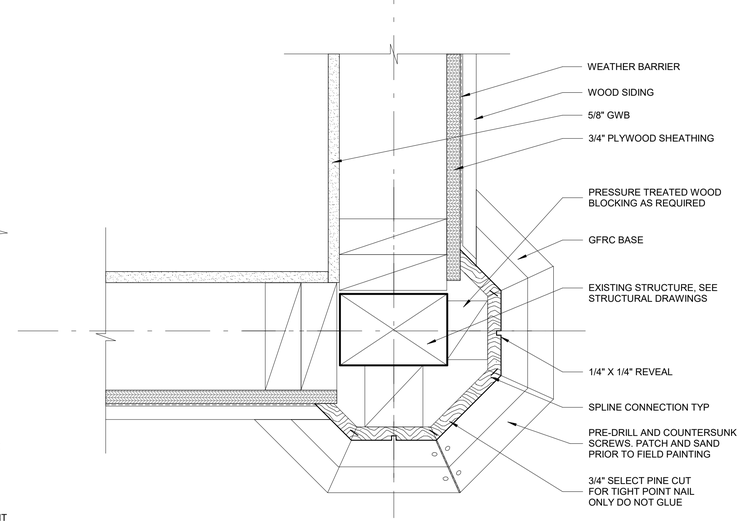


2 EXTERIOR CORNER COLUMN CONNECTION BASE PLAN DETAIL
3" = 1'-0"

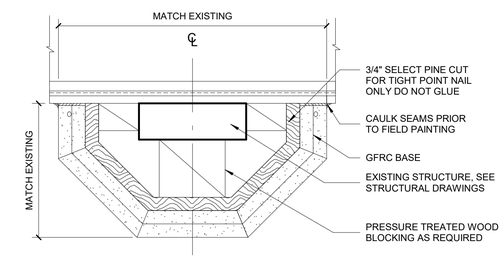


1 PILASTER COLUMN BASE DETAIL
3" = 1'-0"

SHEET NOTES:
1. KILN DRIED WOOD IS TO BE USED FOR COLUMN CLADDINGS.
2. PRESSURE-TREATED WOOD ARE TO BE USED FOR BLOCKING SUBSTRATE AS REQUIRED BY CLADDING INSTALLATIONS.
3. STAINLESS STEEL NAILS FASTENERS ARE TO BE USED FOR CLADDDING, BLOCKING INSTALLATIONS.
4. HARDWOOD IS TO BE USED FOR SPLINE SHIM CLADDIING CONNECTION.
5. SPLICE WOOD CLADDING PANEL OF INDIVIDUAL PIECES WHEN PANEL WIDTH EXCEEDS WIDTH OF WOOD PLANK AVAILABLE
6. ALL DIMENSIONS TO BE VERIFIED IN FIELD

8/30/2022 4:06:12 PM

CONSULTANT INFORMATION
The LiRo Group
3 Aerial Way, Syosset, New York 11791
(516) 938-5476 www.liro.com

CONSULTANT SEAL
REGISTERED ARCHITECT ROBERT D. YOUNG 023280 STATE OF NEW YORK

| REVISION NUMBER | DATE | MADE BY | APP'D BY | REVISION |
|---|---|---|---|---|

RECORD DRAWING CERTIFICATION
☐ AS BUILT – CHANGES AS NOTED ☐ AS BUILT – NO CHANGES

CONTRACTOR
NAME
SIGNATURE
TITLE DATE

PROJECT COORDINATOR
NAME
SIGNATURE
TITLE DATE

WESTCHESTER COUNTY, NEW YORK
DEPARTMENT OF PUBLIC WORKS AND TRANSPORTATION
DIVISION OF ENGINEERING

**INFRASTRUCTURE REHABILITATION PHASE 3**
**PLAYLAND PARK, RYE, NEW YORK**
**CROSS AXIS BUILDING A**
**COLUMN DETAILS 2**

| | |
|---|---|
| CONTRACT NUMBER | 22-523 |
| SHEET NUMBER | CXA-A-81 |
| DWG NO.: | 127 of 664 |
| SCALE: | 3" = 1'-0" |
| DATE: | 08/23/2022 |
| DPW FILE NUMBER | 1-118-A-876-0 |
| REV. NO. | 0 |

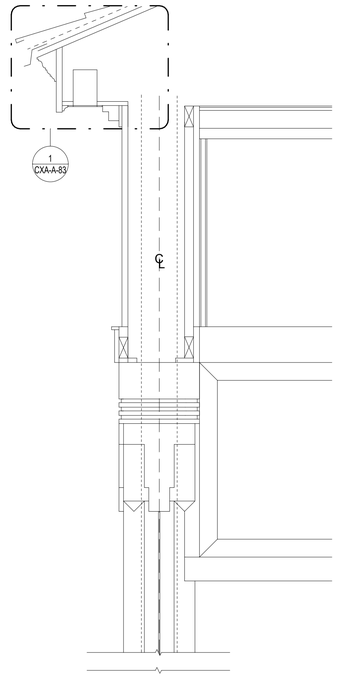


6 ENTABLATURE & PILASTERS DETAILS
1" = 1'-0"

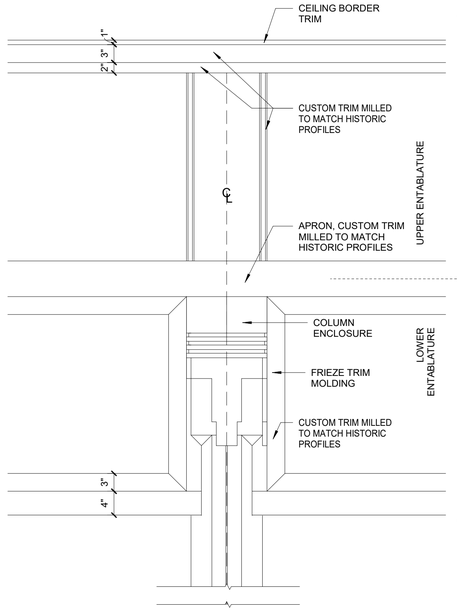


5 ENTABLATURE DTL AT MIDDLE PILASTER
1" = 1'-0"

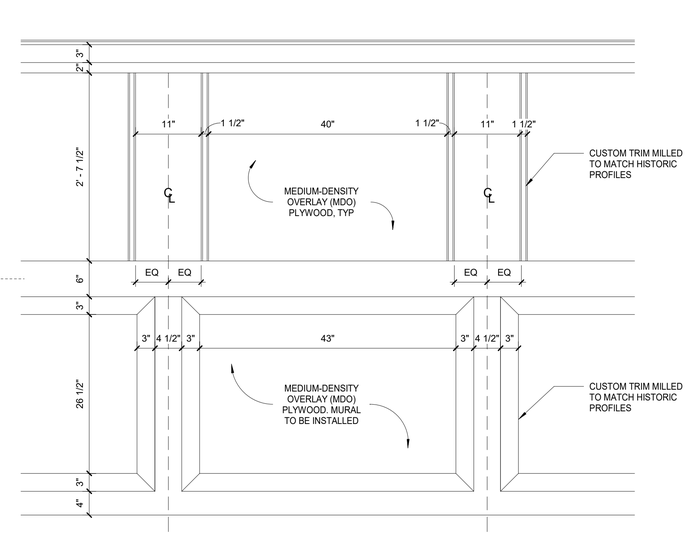


4 ENTABLATURE TYPE 2
1" = 1'-0"

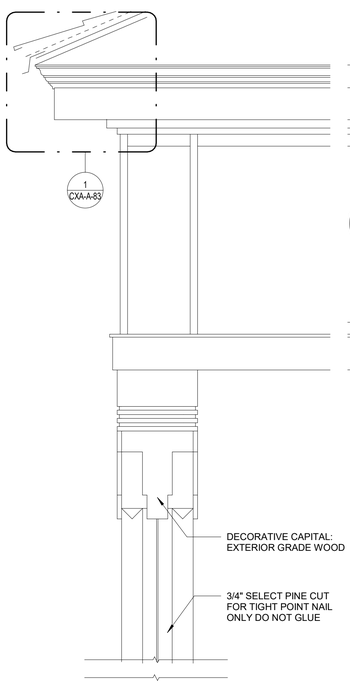


3 ENTABLATURE DETAILS
1" = 1'-0"

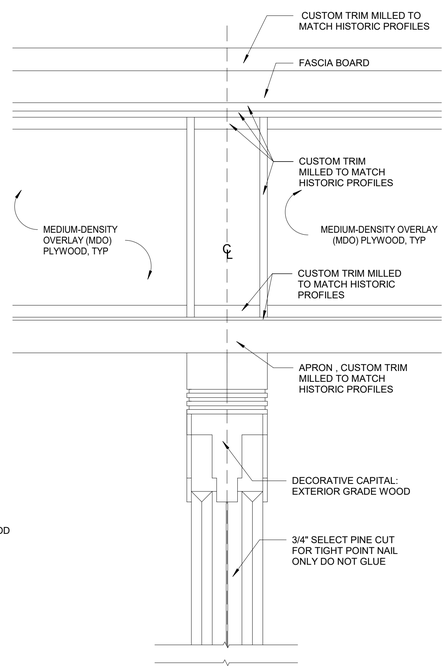


2 ENTABLATURE DTL AT MIDDLE COLUMN
1" = 1'-0"

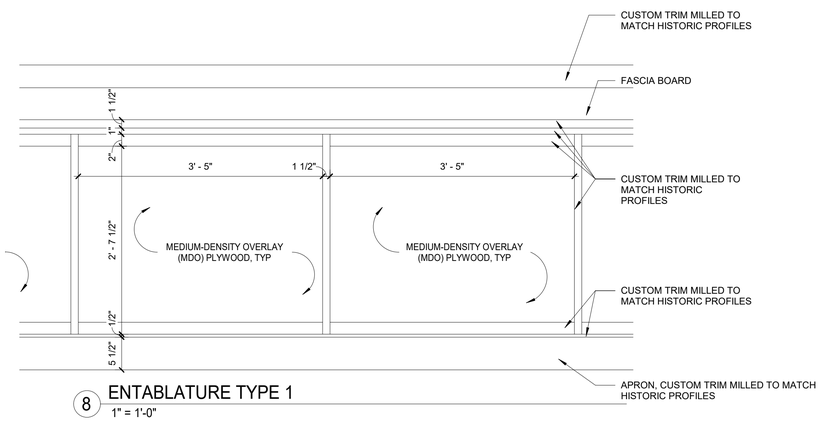


8 ENTABLATURE TYPE 1
1" = 1'-0"

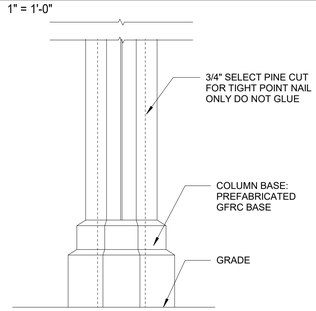


1 COLUMN BASE REPLACEMENT DTL
1" = 1'-0"

8/30/2022 4:06:13 PM

CONSULTANT INFORMATION
The LiRo Group
3 Aerial Way, Syosset, New York 11791
(516) 938-5476 www.liro.com

CONSULTANT SEAL
REGISTERED ARCHITECT ROBERT D. YOUNG JR. 023280 STATE OF NEW YORK

| REVISION NUMBER | DATE | MADE BY | APP'D BY | REVISION |
|---|---|---|---|---|

RECORD DRAWING CERTIFICATION
☐ AS BUILT – CHANGES AS NOTED ☐ AS BUILT – NO CHANGES

CONTRACTOR
NAME
SIGNATURE
TITLE DATE

PROJECT COORDINATOR
NAME
SIGNATURE
TITLE DATE

WESTCHESTER COUNTY, NEW YORK
DEPARTMENT OF PUBLIC WORKS AND TRANSPORTATION
DIVISION OF ENGINEERING

**INFRASTRUCTURE REHABILITATION PHASE 3**
**PLAYLAND PARK, RYE, NEW YORK**
**CROSS AXIS BUILDING A**
**WOOD RESTORATION DETAILS**

CONTRACT NUMBER 22-523
SHEET NUMBER CXA-A-82
DWG NO.: 128 of 664
SCALE: 1" = 1'-0"
DATE: 08/23/2022
DPW FILE NUMBER 1-118-A-877-0
REV. NO. 0

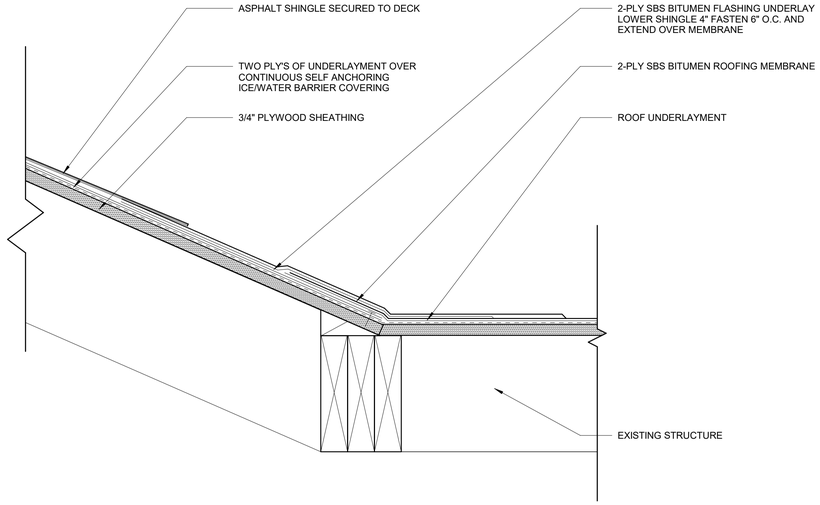


6 TYP ASPHALT TO SBS ROOF CONNECTION
3" = 1'-0"

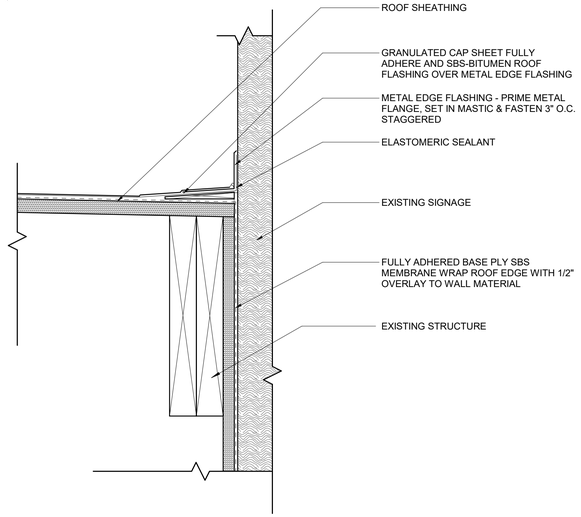


5 SBS ROOF EDGE AT SIGNAGE
3" = 1'-0"

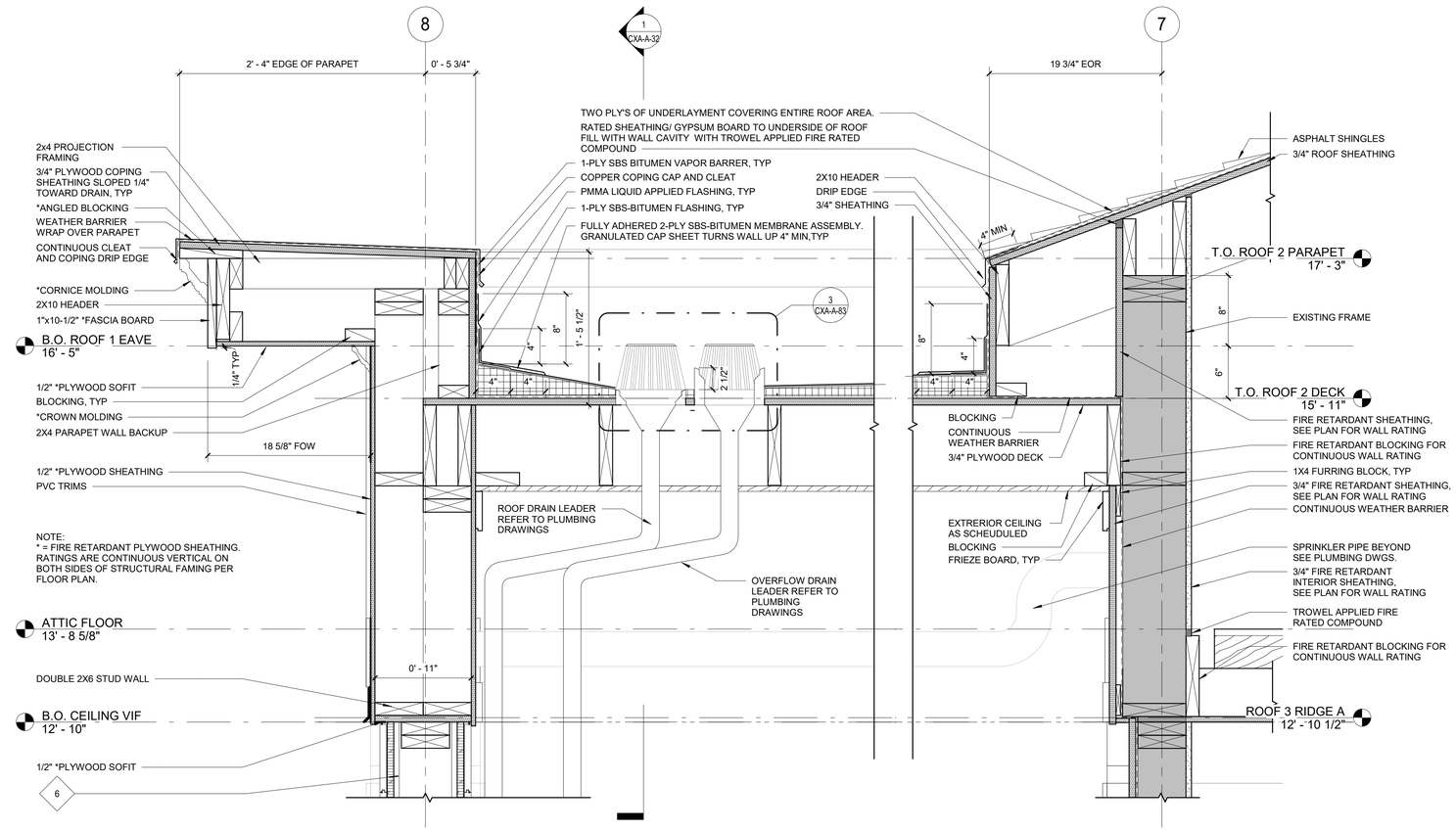


4 DRIVE THROUGH ROOF DETAILS
1 1/2" = 1'-0"

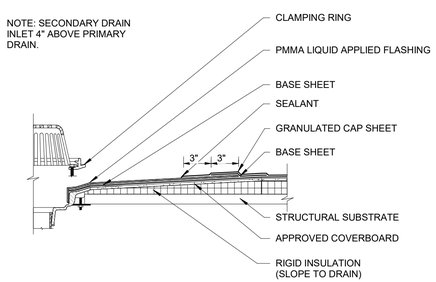


3 TYPICAL ROOF DRAIN DETAIL
1 1/2" = 1'-0"

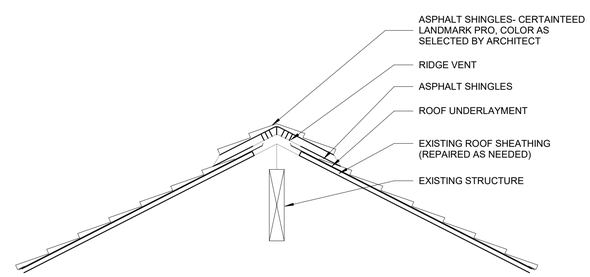


2 RIDGE VENT DETAIL
1" = 1'-0"

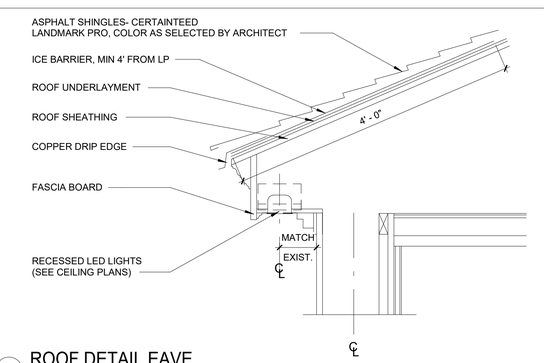


1 ROOF DETAIL EAVE
1" = 1'-0"

8/30/2022 4:06:14 PM

CONSULTANT INFORMATION
The LiRo Group
3 Aerial Way, Syosset, New York 11791
(516) 938-5476 www.liro.com

CONSULTANT SEAL
REGISTERED ARCHITECT ROBERT D. YOUNG JR. 023280 STATE OF NEW YORK

| REVISION NUMBER | DATE | MADE BY | APP'D BY | REVISION |
|---|---|---|---|---|

RECORD DRAWING CERTIFICATION
☐ AS BUILT – CHANGES AS NOTED ☐ AS BUILT – NO CHANGES

CONTRACTOR
NAME
SIGNATURE
TITLE DATE

PROJECT COORDINATOR
NAME
SIGNATURE
TITLE DATE

WESTCHESTER COUNTY, NEW YORK
DEPARTMENT OF PUBLIC WORKS AND TRANSPORTATION
DIVISION OF ENGINEERING

**INFRASTRUCTURE REHABILITATION PHASE 3**
**PLAYLAND PARK, RYE, NEW YORK**
**CROSS AXIS BUILDING A**
**ROOF DETAILS**

| | |
|---|---|
| CONTRACT NUMBER | 22-523 |
| SHEET NUMBER | CXA-A-83 |
| DWG NO.: | 129 of 664 |
| SCALE: | As indicated |
| DATE: | 08/23/2022 |
| DPW FILE NUMBER | 1-118-A-878-0 |
| REV. NO. | 0 |

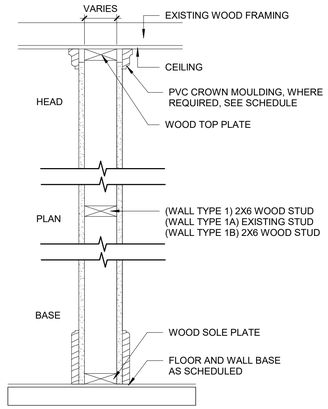


1 **1 HR FIRE RATING - U-305**
1 LAYER 5/8" IMPACT & MOLD-RESISTANT GYP. BD. TO CEILING, ON EACH SIDE

1A **1 HR FIRE RATING - U-305**
1 LAYER 5/8" IMPACT & MOLD-RESISTANT GYP. BD. TO CEILING, ON EACH SIDE. MIN. R-20 BATT INSULATION

1B **NO RATING**
1 LAYER 5/8" IMPACT & MOLD-RESISTANT GYP. BD. TO CEILING, ON EACH SIDE

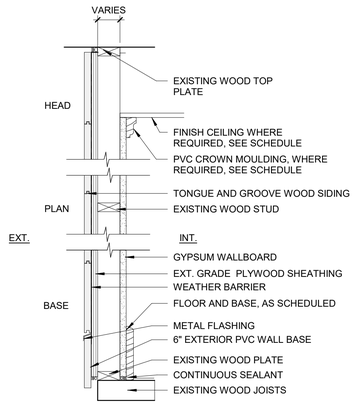


2 **NO RATING**
1 LAYER 5/8" IMPACT & MOLD-RESISTANT GYP. BD. UPTO 8' A.F.F. AND 5/8" MOLD-RESISTANT GYP. BD. TO CEILING ON THE INTERIOR SIDE

2A **NO RATING**
1 LAYER 5/8" IMPACT & MOLD-RESISTANT GYP. BD. AND 5/8" MOLD-RESISTANT GYP. BD. TO CEILING ON THE INTERIOR SIDE. 8' HIGH" BEADBOARD ON INTERIOR SIDE WITH PVC BEADBOARD CAP (NOT SHOWN)

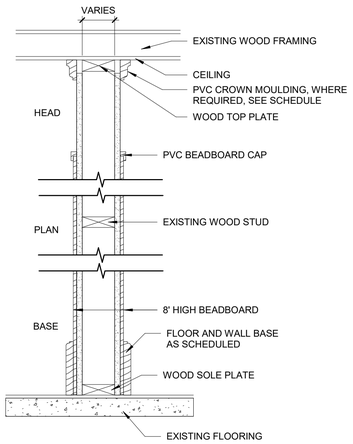


3 **NO RATING**
1 LAYER 5/8" IMPACT & MOLD-RESISTANT GYP. BD. TO CEILING, ON EACH SIDE. 1/4" BEADBOARD ON BOTH SIDE FINISH

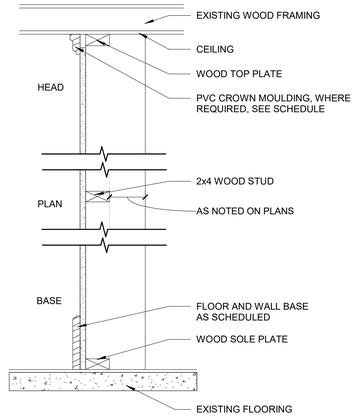


4 **NO RATING**
1 LAYER 5/8" IMPACT & MOLD-RESISTANT GYP. BD. TO CEILING, ON ONE SIDE.

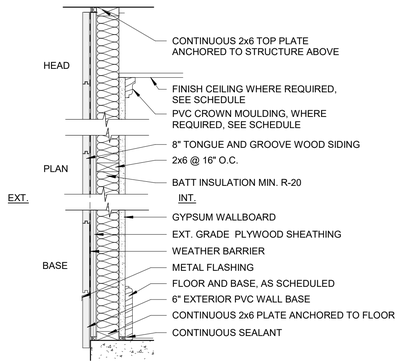


5 **NO RATING**
1 LAYER 5/8" IMPACT & MOLD-RESISTANT GYP. BD. UPTO 8' A.F.F. AND 5/8" MOLD-RESISTANT GYP. BD. TO CEILING ON THE INTERIOR SIDE

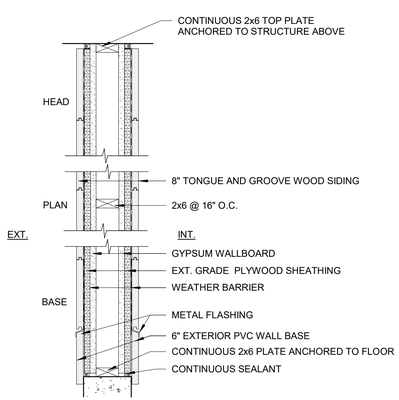


6 **1 HR FIRE RATING- BXUV.V346 - ANSI/UL 263**
1 LAYER 5/8" IMPACT & MOLD-RESISTANT GYP. BD. ON BOTH SIDES

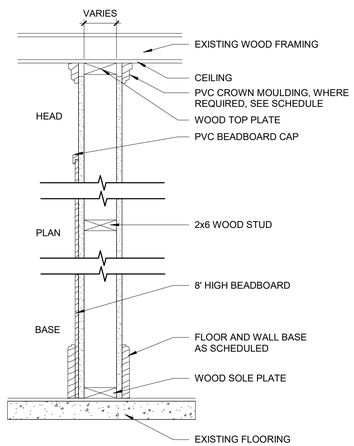


7 **1HR FIRE RATING- U305**
1 LAYER 5/8" IMPACT & MOLD-RESISTANT GYP. BD. TO CEILING, ON EACH SIDE. 8' HIGH" BEADBOARD ON VENDOR SPACE(S) SIDE WITH PVC BEADBOARD CAP

7A **NO RATING**
1 LAYER 5/8" IMPACT & MOLD-RESISTANT GYP. BD. TO CEILING, ON EACH SIDE. 8' HIGH" BEADBOARD ON VENDOR SPACE(S) SIDE WITH PVC BEADBOARD CAP

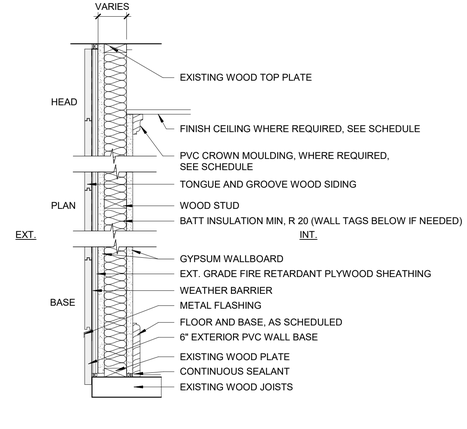


8 **1 HR FIRE RATING- BXUV.V346 - ANSI/UL 263**
8' HIGH BEADBOARD ON INTERIOR SIDE, 1 LAYER 5/8" GWB-X M-BLOC - MOISTURE-RESISTANT, 2X6 WOOD STUD, 1 LAYER 5/8" GWB-X M-BLOC - MOISTURE-RESISTANT, 3/4" FIRE-RETARDANT SHEATING, 1/8" DRAINAGE TYPE BARRIER, WOOD SIDING

8A **2 HR FIRE RATING- BXUV.V346 - ANSI/UL 263**
2 LAYER 5/8" IMPACT & MOLD-RESISTANT GYP. BD. UPTO 8' A.F.F. AND 5/8" MOLD-RESISTANT GYP. BD. TO CEILING ON THE INTERIOR SIDE BATT INSULATION MIN, R 20, TWO LAYERS OF RATED 3/4" SHEATHING ON EXTERIOR SIDE

8B **1 HR FIRE RATING- BXUV.V346 - ANSI/UL 263**
1 LAYER 5/8" GWB-X M-BLOC - MOISTURE-RESISTANT, 2X6 WOOD STUD, 1 LAYER 5/8" GWB-X M-BLOC - MOISTURE-RESISTANT, 3/4" FIRE-RETARDANT SHEATING, 1/8" DRAINAGE TYPE BARRIER, WOOD SIDING

8/30/2022 4:06:15 PM

CONSULTANT INFORMATION
The LiRo Group
3 Aerial Way, Syosset, New York 11791
(516) 938-5476 www.liro.com

CONSULTANT SEAL
REGISTERED ARCHITECT ROBERT D. DONDERO 023229 STATE OF NEW YORK

| REVISION NUMBER | DATE | MADE BY | APP'D BY | REVISION |
|---|---|---|---|---|

RECORD DRAWING CERTIFICATION
☐ AS BUILT – CHANGES AS NOTED ☐ AS BUILT – NO CHANGES

CONTRACTOR
NAME
SIGNATURE
TITLE DATE

PROJECT COORDINATOR
NAME
SIGNATURE
TITLE DATE

WESTCHESTER COUNTY, NEW YORK
DEPARTMENT OF PUBLIC WORKS AND TRANSPORTATION
DIVISION OF ENGINEERING

**INFRASTRUCTURE REHABILITATION PHASE 3**
**PLAYLAND PARK, RYE, NEW YORK**
**CROSS AXIS BUILDING A**
**PARTITION DETAILS**

CONTRACT NUMBER 22-523
SHEET NUMBER **CXA-A-84**
DWG NO.: 130 of 664
SCALE: **1 1/2" = 1'-0"**
DATE: **08/23/2022**
DPW FILE NUMBER **1-118-A-879-0**
REV. NO. 0

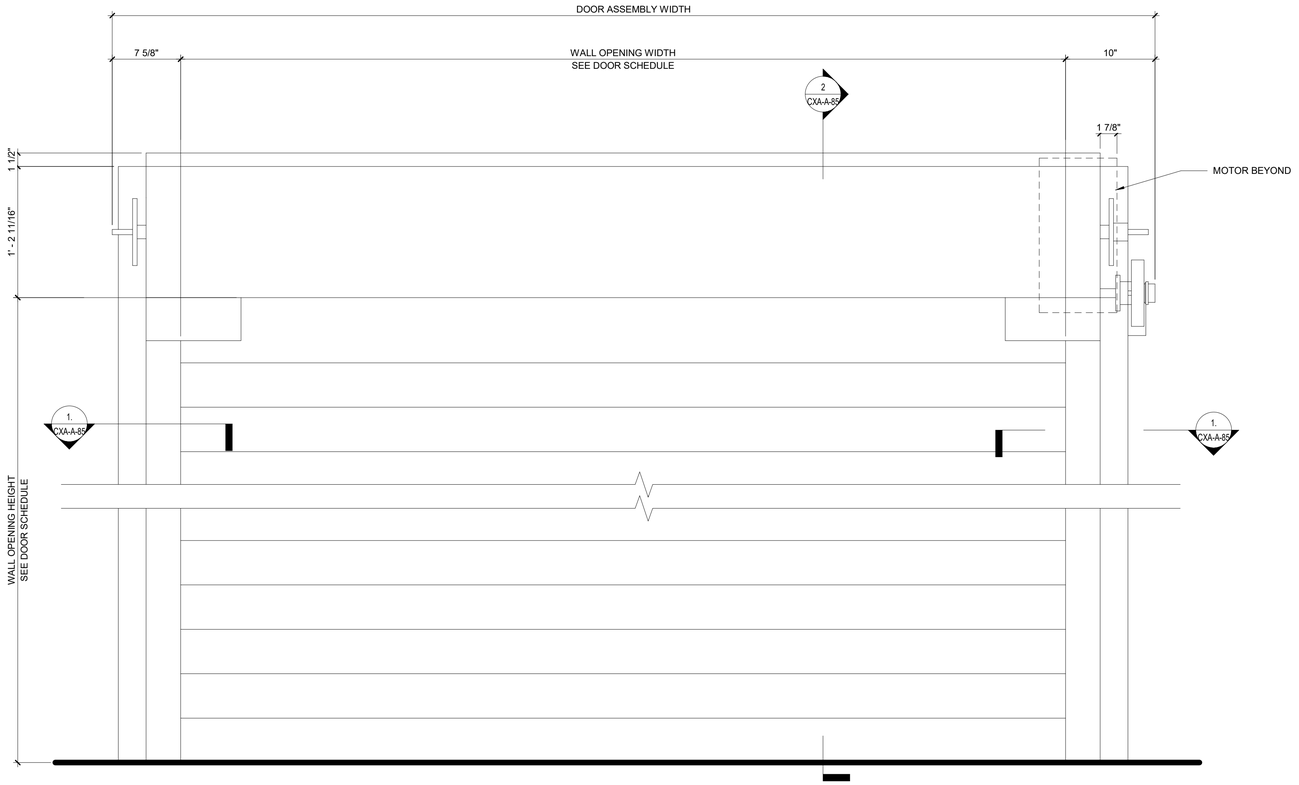


3 ROLL UP DOOR ELEVATION DETAIL
1 1/2" = 1'-0"

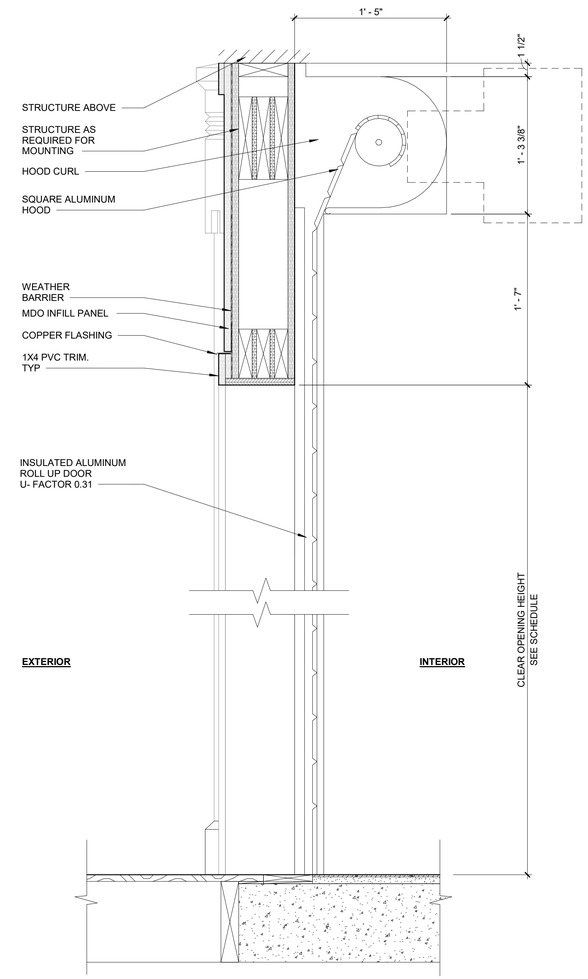


2 ROLL UP DOOR SECTION DETAIL
1 1/2" = 1'-0"

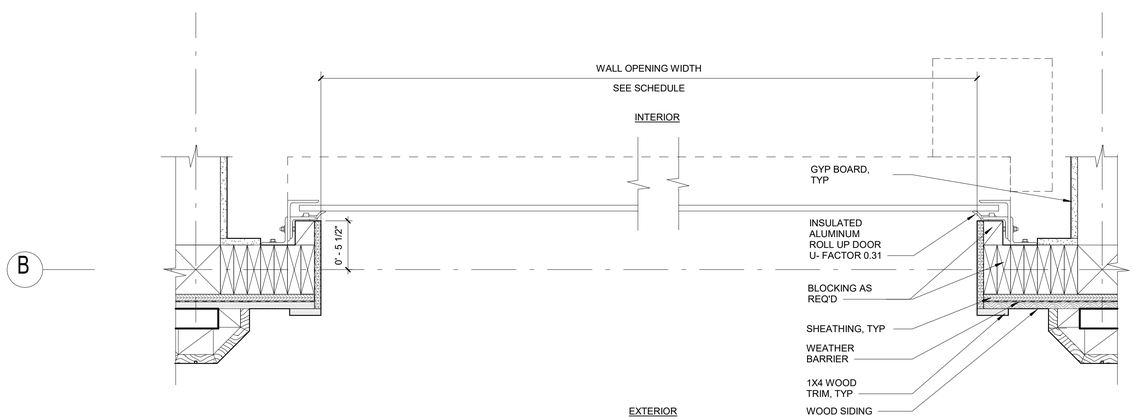


1. ROLL UP DOOR PLAN DETAIL
1 1/2" = 1'-0"

8/30/2022 4:06:15 PM

CONSULTANT INFORMATION

The LiRo Group
3 Aerial Way, Syosset, New York 11791
(516) 938-5476 www.liro.com

CONSULTANT SEAL

REGISTERED ARCHITECT ROBERT D. YOUNG JR. 023280 STATE OF NEW YORK

| REVISION NUMBER | DATE | MADE BY | APP'D BY | REVISION |
|---|---|---|---|---|
| | | | | |

RECORD DRAWING CERTIFICATION

☐ AS BUILT – CHANGES AS NOTED ☐ AS BUILT – NO CHANGES

CONTRACTOR
NAME
SIGNATURE
TITLE DATE

PROJECT COORDINATOR
NAME
SIGNATURE
TITLE DATE

WESTCHESTER COUNTY, NEW YORK
DEPARTMENT OF PUBLIC WORKS AND TRANSPORTATION
DIVISION OF ENGINEERING

**INFRASTRUCTURE REHABILITATION PHASE 3**
**PLAYLAND PARK, RYE, NEW YORK**
**CROSS AXIS BUILDING A**
**OVERHEAD DOOR DETAIL**

| | |
|---|---|
| CONTRACT NUMBER | 22-523 |
| SHEET NUMBER | CXA-A-85 |
| DWG NO.: | 131 of 664 |
| SCALE: | 1 1/2" = 1'-0" |
| DATE: | 08/23/2022 |
| DPW FILE NUMBER | 1-118-A-880-0 |
| REV. NO. | 0 |

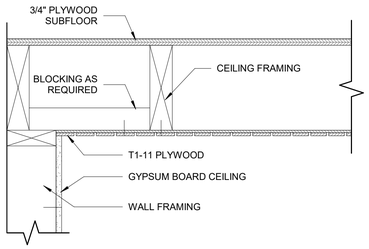


8 T1-11 CEILING FRAMING PARALLEL TO WALL
1 1/2" = 1'-0"

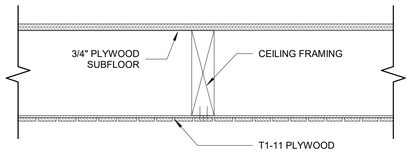


7 T1-11 FRAMING DETAIL
1 1/2" = 1'-0"

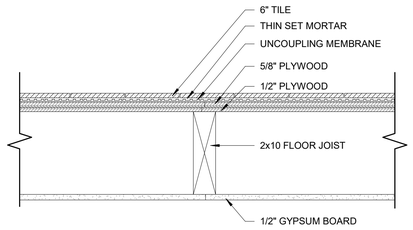


6 1 HOUR NON-COMBUSTILE FLOOR ASSEMBLY - BXUV.L501 - ANSI/UL 263
1 1/2" = 1'-0"

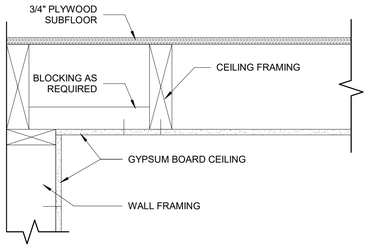


5 GYPSUM CEILING FRAMING PARALLEL TO WALL
1 1/2" = 1'-0"

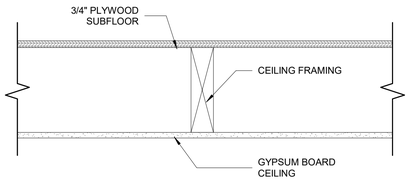


4 GYPSUM CEILING FRAMING
1 1/2" = 1'-0"

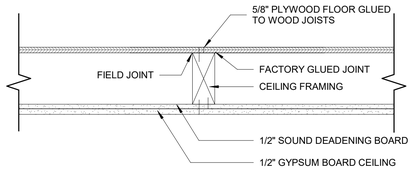


3 1 HOUR NON-COMBUSTILE FLOOR CEILING ASSEMBLY - BXUV.L504 - ANSI/UL 263
1 1/2" = 1'-0"

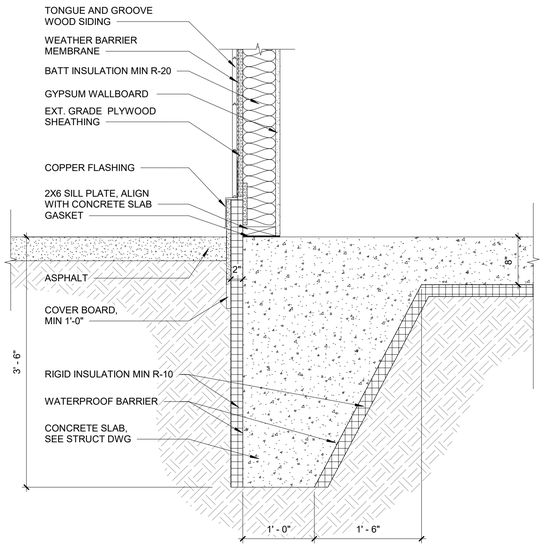


2 NEW BASE CONDITION DETAIL
1" = 1'-0"

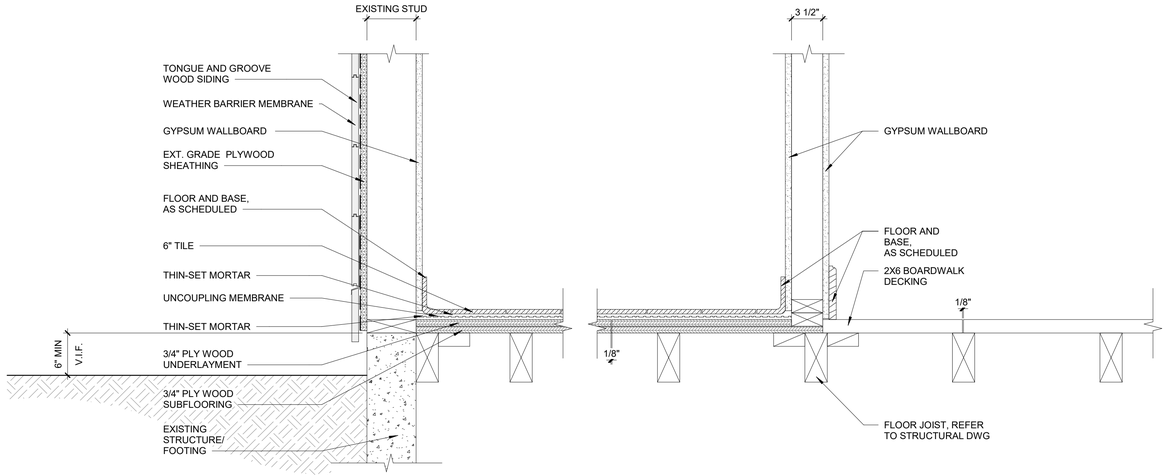


1 SPRINKLER ROOM EXTERIOR WALLS
1 1/2" = 1'-0"

8/30/2022 4:06:16 PM

CONSULTANT INFORMATION
The LiRo Group
3 Aerial Way, Syosset, New York 11791
(516) 938-5476 www.liro.com

CONSULTANT SEAL
REGISTERED ARCHITECT ROBERT D. YOUNG JR. 023290 STATE OF NEW YORK

| REVISION NUMBER | DATE | MADE BY | APP'D BY | REVISION |
|---|---|---|---|---|

RECORD DRAWING CERTIFICATION
☐ AS BUILT – CHANGES AS NOTED ☐ AS BUILT – NO CHANGES

CONTRACTOR
NAME
SIGNATURE
TITLE DATE

PROJECT COORDINATOR
NAME
SIGNATURE
TITLE DATE

WESTCHESTER COUNTY, NEW YORK
DEPARTMENT OF PUBLIC WORKS AND TRANSPORTATION
DIVISION OF ENGINEERING

**INFRASTRUCTURE REHABILITATION PHASE 3**
**PLAYLAND PARK, RYE, NEW YORK**
**CROSS AXIS BUILDING A**
**DETAILS**

CONTRACT NUMBER 22-523
SHEET NUMBER CXA-A-86
DWG NO.: 132 of 664
SCALE: As indicated
DATE: 08/23/2022
DPW FILE NUMBER 1-118-A-881-0
REV. NO. 0

## PAINTING SCHEDULE

| KEY | COLOR | MANUFACTURER | REMARKS |
|---|---|---|---|
| P- 1 | MYSTICAL POWERS #901 | BENJAMIN MOORE | |
| P- 2 | HERITAGE RED #HC-181 | BENJAMIN MOORE | |
| P- 3 | NEW YORK STATE OF MIND #805 | BENJAMIN MOORE | |
| P- 4 | LAZY SUNDAY #803 | BENJAMIN MOORE | |
| P- 5 | DEEP JUNGLE #595 | BENJAMIN MOORE | |
| P- 6 | LUCK OF THE IRISH #588 | BENJAMIN MOORE | |
| P- 7 | MAJOLICA GREEN #0013 | SHERWIN WILLIAMS | |
| P- 8 | ANTELOPE CANYON #125 | BENJAMIN MOORE | |
| P- 9 | FORSYTHIA #6907 | SHERWIN WILLIAMS | |
| P- 10 | CAPE BLUE #1642 | BENJAMIN MOORE | |
| P- 11 | WHITE SNOW #9541 | SHERWIN WILLIAMS | |
| P- 12 | TRICORN BLACK #6258 | SHERWIN WILLIAMS | |
| P- 13 | READY MIX WHITE | BENJAMIN MOORE | INTERIOR USE ONLY |
| P- 14 | STUCCO PAINT TO MATCH P-1 | KEIM | |
| P- 15 | VAN DEUSEN BLUE #HC-156 | BENJAMIN MOORE | |
| P- 16 | #RAL9001 | - | TYP. ROLL UP DOOR |
| P- 17 | FLORIDA BEACHES #900 | BENJAMIN MOORE | |
| P- 18 | PIRATES COVE PEACH #903 | BENJAMIN MOORE | |
| P- 19 | JADITE #6459 | SHERWIN WILLIAMS | |
| P- 20 | DECISIVE YELLOW #6902 | SHERWIN WILLIAMS | |

## FENCE & GATE PAINTING SCHEDULE

| COMPONENTS | COLOR |
|---|---|
| POSTS | P- 7 |
| RAILS | P- 1 |
| BALLUSTER, A | P- 15 |
| BALLUSTER, B | P- 1 |
| GATE FRAME | P- 15 |
| GATE CROSS FRAME | P- 1 |
| HARDWARE | BLACK |

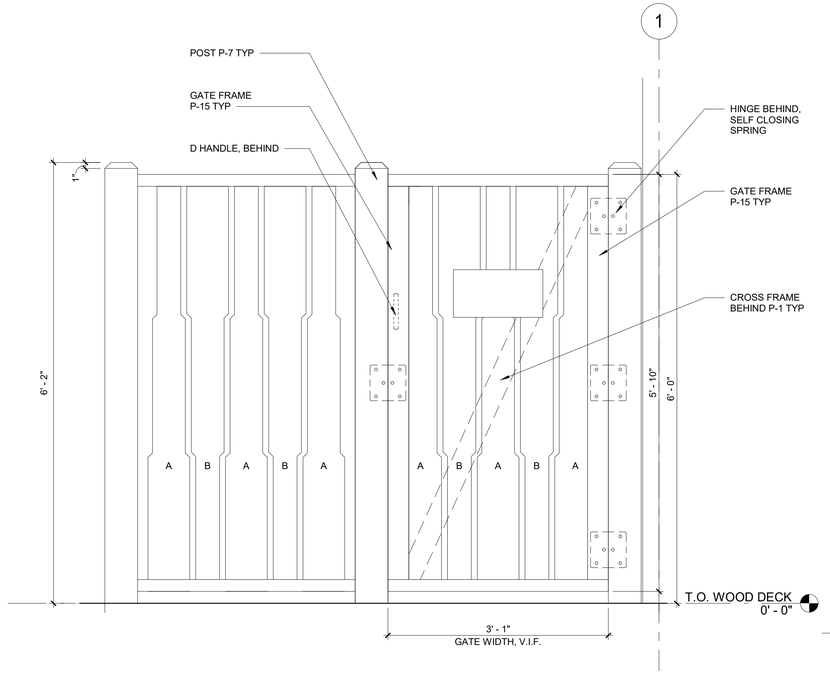


6 GATE ELEVATION
1" = 1'-0"

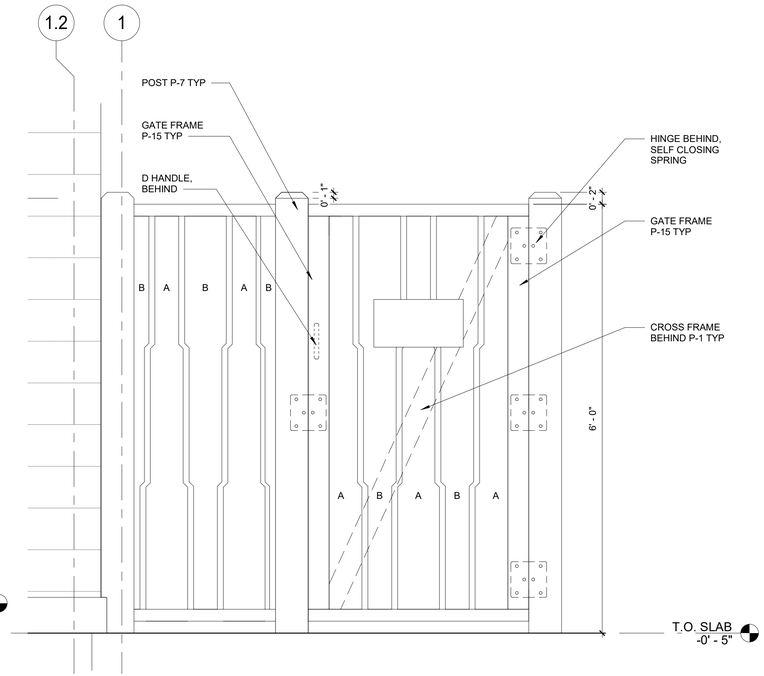


5 GATE ELEVATION DETAIL
1" = 1'-0"

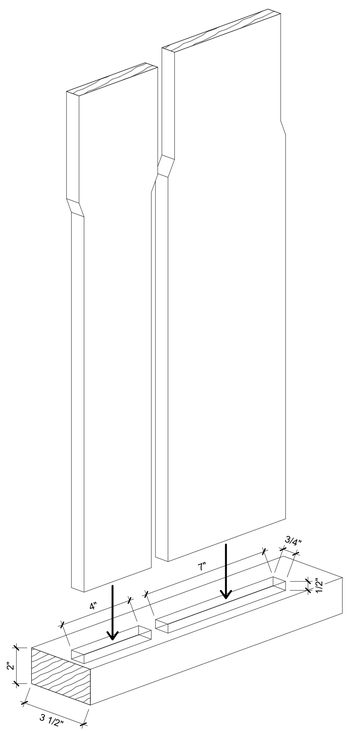


4 RAIL NOTCH DETAIL
3" = 1'-0"

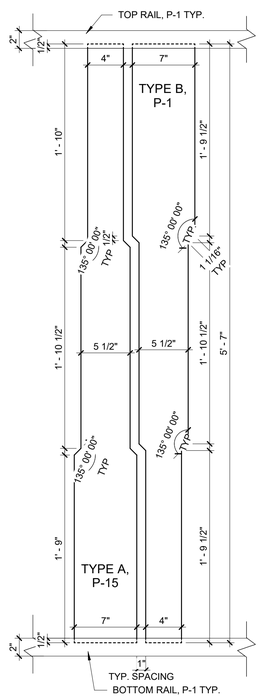


3 TYPICAL FENCE
1 1/2" = 1'-0"

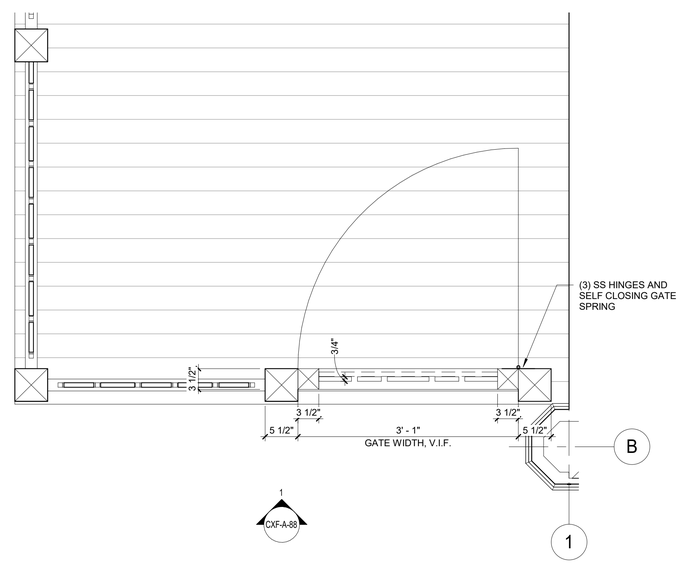


2 GATE PLAN
1" = 1'-0"

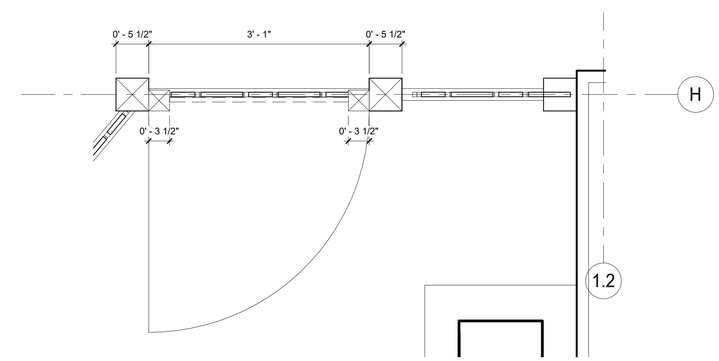


1 MAINTENANCE GATE
1" = 1'-0"

8/30/2022 4:06:19 PM

CONSULTANT INFORMATION
The LiRo Group
3 Aerial Way, Syosset, New York 11791
(516) 938-5476 www.liro.com

CONSULTANT SEAL
REGISTERED ARCHITECT ROBERT D. YOUNG 023280 STATE OF NEW YORK

| REVISION NUMBER | DATE | MADE BY | APP'D BY | REVISION |
|---|---|---|---|---|

RECORD DRAWING CERTIFICATION
☐ AS BUILT – CHANGES AS NOTED ☐ AS BUILT – NO CHANGES

CONTRACTOR
NAME
SIGNATURE
TITLE DATE

PROJECT COORDINATOR
NAME
SIGNATURE
TITLE DATE

WESTCHESTER COUNTY, NEW YORK
DEPARTMENT OF PUBLIC WORKS AND TRANSPORTATION
DIVISION OF ENGINEERING

**INFRASTRUCTURE REHABILITATION PHASE 3**
**PLAYLAND PARK, RYE, NEW YORK**
**CROSS AXIS BUILDING A**
**FENCE AND GATE DETAILS**

| | |
|---|---|
| CONTRACT NUMBER | 22-523 |
| SHEET NUMBER | CXA-A-87 |
| DWG NO.: | 133 of 664 |
| SCALE: | As indicated |
| DATE: | 08/23/2022 |
| DPW FILE NUMBER | 1-118-A-882-0 |
| REV. NO. | 0 |

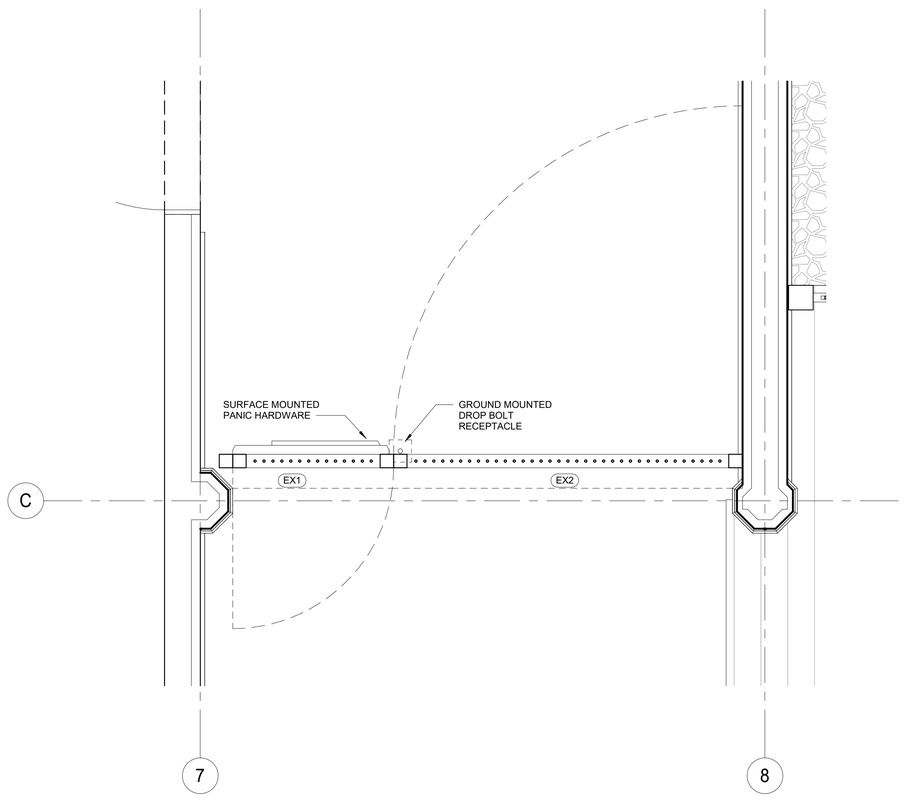


2 DRIVE THROUGH GATE PLAN DETAIL
3/4" = 1'-0"

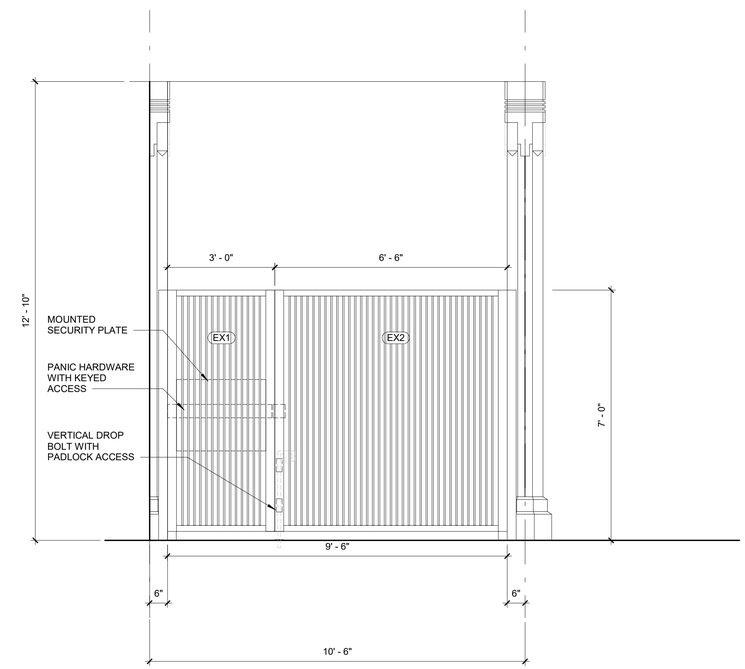


1 DRIVE GATE ELEVATION
1/2" = 1'-0"

8/30/2022 4:06:20 PM

CONSULTANT INFORMATION
The LiRo Group
3 Aerial Way, Syosset, New York 11791
(516) 938-5476 www.liro.com

CONSULTANT SEAL
REGISTERED ARCHITECT ROBERT D. YOUNG JR. 023280 STATE OF NEW YORK

| REVISION NUMBER | DATE | MADE BY | APP'D BY | REVISION |
|---|---|---|---|---|
| | | | | |

RECORD DRAWING CERTIFICATION
☐ AS BUILT – CHANGES AS NOTED ☐ AS BUILT – NO CHANGES

CONTRACTOR
NAME
SIGNATURE
TITLE DATE

PROJECT COORDINATOR
NAME
SIGNATURE
TITLE DATE

WESTCHESTER COUNTY, NEW YORK
DEPARTMENT OF PUBLIC WORKS AND TRANSPORTATION
DIVISION OF ENGINEERING

**INFRASTRUCTURE REHABILITATION PHASE 3**
**PLAYLAND PARK, RYE, NEW YORK**
**CROSS AXIS BUILDING A**
**DRIVE THROUGH GATE DETAILS**

CONTRACT NUMBER 22-523
SHEET NUMBER **CXA-A-88**
DWG NO.: 134 of 664
SCALE: **As indicated**
DATE: **08/23/2022**
DPW FILE NUMBER **1-118-A-883-0**
REV. NO. 0

1 GROUND FLOOR FINISH PLAN
1/4" = 1'-0"

**FINISH LEGEND:**

- ITEMS NOT IN CONTRACT
- QUARRY TILE FLOOR
- TIMBER WOOD DECKING - WD-1
- IPE WOOD DECKING - WD-2

**PAINTING SCHEDULE**

| KEY | COLOR | MANUFACTURER | REMARKS |
|---|---|---|---|
| P- 1 | MYSTICAL POWERS #901 | BENJAMIN MOORE | |
| P- 2 | HERITAGE RED #HC-181 | BENJAMIN MOORE | |
| P- 3 | NEW YORK STATE OF MIND #805 | BENJAMIN MOORE | |
| P- 4 | LAZY SUNDAY #803 | BENJAMIN MOORE | |
| P- 5 | DEEP JUNGLE #595 | BENJAMIN MOORE | |
| P- 6 | LUCK OF THE IRISH #588 | BENJAMIN MOORE | |
| P- 7 | MAJOLICA GREEN #0013 | SHERWIN WILLIAMS | |
| P- 8 | ANTELOPE CANYON #125 | BENJAMIN MOORE | |
| P- 9 | FORSYTHIA #6907 | SHERWIN WILLIAMS | |
| P- 10 | CAPE BLUE #1642 | BENJAMIN MOORE | |
| P- 11 | WHITE SNOW #9541 | SHERWIN WILLIAMS | |
| P- 12 | TRICORN BLACK #6258 | SHERWIN WILLIAMS | |
| P- 13 | READY MIX WHITE | BENJAMIN MOORE | INTERIOR USE ONLY |
| P- 14 | STUCCO PAINT TO MATCH P-1 | KEIM | |
| P- 15 | VAN DEUSEN BLUE #HC-156 | BENJAMIN MOORE | |
| P- 16 | #RAL9001 | - | TYP. ROLL UP DOOR |
| P- 17 | FLORIDA BEACHES #900 | BENJAMIN MOORE | |
| P- 18 | PIRATES COVE PEACH #903 | BENJAMIN MOORE | |
| P- 19 | JADITE #6459 | SHERWIN WILLIAMS | |
| P- 20 | DECISIVE YELLOW #6902 | SHERWIN WILLIAMS | |

**FINISH SCHEDULE**

| ROOM # | ROOM NAME | FLOORS | WALLS | CEILING | DOORS AND TRIM | WALL BASE |
|---|---|---|---|---|---|---|
| 101 | VENDOR SPACE 1 | WD-1 | P-13 | P-13 | SEE DOOR SCHEDULE (CXA-A-92) | WB-1 |
| 102 | VENDOR SPACE 2 | WD-1 | P-13 | P-13 | SEE DOOR SCHEDULE (CXA-A-92) | WB-1 |
| 103 | STORAGE | WD-1 | P-13 | P-13 | SEE DOOR SCHEDULE (CXA-A-92) | WB-1 |
| 104 | SPRINKLER ROOM | T-1 | P-13 | P-13 | SEE DOOR SCHEDULE (CXA-A-92) | WB-2 |
| 105 | OFFICE | C-1 | P-13 | P-13 | SEE DOOR SCHEDULE (CXA-A-92) | WB-1 |
| 106 | MAIN STORAGE | C-1 | P-13 | P-13 | SEE DOOR SCHEDULE (CXA-A-92) | WB-1 |
| 103 | ELEC ROOM | T-1 | P-13 | P-13 | SEE DOOR SCHEDULE (CXA-A-92) | WB-1 |
| - | PORCH AREA | WD-2 | - | P-10 | - | - |
| - | ALLEY AREA | WD-2 | - | - | SEE DOOR SCHEDULE (CXA-A-92) | - |
| - | DRIVE THROUGH AREA | - | - | P-10 | SEE DOOR SCHEDULE (CXA-A-92) | - |

| | |
|---|---|
| PAINT | (FOR PAINT TYPE AND SYSTEMS, SEE SPECIFICATIONS) |
| P-13 | **MFR:** BENJAMIN MOORE - **COLOR:** READY MIX WHITE |
| CEILING | (FOR CEILING DETAILS, SEE CXA-A-85) |
| P-13 | **MFR:** BENJAMIN MOORE - **COLOR:** READY MIX WHITE |
| P-10 | **MFR:** BENJAMIN MOORE - **COLOR:** CAPE BLUE |
| FLOORING | |
| WD-1 | 2X6 WOOD BOARD TO MATCH IN KIND WITH EXISTING FLOOR |
| WD-2 | 2X6 IPE WOOD DECK |
| T-1 | 6X6 QUARRY TILE |
| C-1 | SEALED CONCRETE |
| WALL BASE | (FOR WALL BASE DETAILS, SEE CXE-A-XX) |
| WB-1 | 1 x 6 WOOD BASE |
| WB-2 | QUARRY TILE BASE |
| THRESHOLD | (FOR THRESHOLD DETAILS, SEE CXE-A-92) |
| TR-1 | EXTERIOR DOOR SILL |

8/30/2022 4:06:23 PM

CONSULTANT INFORMATION
The LiRo Group
3 Aerial Way, Syosset, New York 11791
(516) 938-5476 www.liro.com

CONSULTANT SEAL
REGISTERED ARCHITECT ROBERT D. YOUNG JR. 023280 STATE OF NEW YORK

| REVISION NUMBER | DATE | MADE BY | APP'D BY | REVISION |
|---|---|---|---|---|
| | | | | |

RECORD DRAWING CERTIFICATION
☐ AS BUILT – CHANGES AS NOTED ☐ AS BUILT – NO CHANGES

CONTRACTOR
NAME
SIGNATURE
TITLE DATE

PROJECT COORDINATOR
NAME
SIGNATURE
TITLE DATE

WESTCHESTER COUNTY, NEW YORK
DEPARTMENT OF PUBLIC WORKS AND TRANSPORTATION
DIVISION OF ENGINEERING

**INFRASTRUCTURE REHABILITATION PHASE 3**
**PLAYLAND PARK, RYE, NEW YORK**
**CROSS AXIS BUILDING A**
**FINISH PLAN AND FINISH SCHEDULE**

CONTRACT NUMBER 22-523
SHEET NUMBER **CXA-A-91**
DWG NO.: 135 of 664
SCALE: **As indicated**
DATE: **08/23/2022**
DPW FILE NUMBER **1-118-A-884-0**
REV. NO. 0

## DOOR SCHEDULE

| DOOR NUMBER | DOOR TYPE | DOOR WIDTH | DOOR HEIGHT | DOOR THICKNESS | DOOR MATERIAL | DOOR GLASS | DOOR EXTERIOR FINISH | DOOR INTERIOR FINISH | FRAME TYPE | FRAME MATERIAL | FRAME EXTERIOR | FRAME INTERIOR | HDWR SET | REMARKS |
|---|---|---|---|---|---|---|---|---|---|---|---|---|---|---|
| 101A | C | 20' - 10" | 11' - 3" | - | ALUM | NO | PAINT, P-16 | PAINT, P-16 | - | - | - | PAINT, P-16 | 4.0 | MOTOR OPERATED |
| 101B | E | 3' - 0" | 7' - 0" | 1 3/4" | H.M. | NO | PAINT, P-1 | PAINT, P-13 | 1 | HM. | PAINT, P-4 | PAINT, P-13 | 9.0 | STOREFRONT LOCK SET, 45 MIN RATING |
| 102A | C | 20' - 10" | 11' - 3" | - | ALUM | NO | PAINT, P-16 | PAINT, P-16 | - | - | - | PAINT, P-16 | 4.0 | MOTOR OPERATED |
| 102B | B | 3' - 0" | 7' - 0" | 1 3/4" | WOOD | NO | PAINT, P-1 | PAINT, P-13 | 2 | WD. | PAINT, P-4 | PAINT, P-13 | 10.0 | STOREFRONT LOCK SET |
| 103A | A | 3' - 0" | 7' - 0" | 1 3/4" | H.M. | NO | PAINT, P-13 | PAINT, P-13 | 1 | H.M. | PAINT, P-13 | PAINT, P-13 | 7.0 | STOREFRONT LOCK SET |
| 104A | B | 3' - 0" | 7' - 0" | 1 3/4" | WOOD | NO | PAINT, P-1 | PAINT, P-13 | 2 | WD. | PAINT, P-4 | PAINT, P-13 | 9.0 | STOREFRONT LOCK SET |
| 105A | B | 3' - 0" | 7' - 0" | 1 3/4" | WOOD | NO | PAINT, P-1 | PAINT, P-13 | 2 | WD. | PAINT, P-4 | PAINT, P-13 | 13.0 | STOREFRONT LOCK SET |
| 106A | D | 6' - 0" | 7' - 8" | 1 3/4" | H.M. | NO | PAINT, P-1 | PAINT, P-13 | 1 | H.M. | PAINT, P-4 | PAINT, P-13 | 10.0 | STOREFRONT LOCK SET |
| 107A | E | 3' - 0" | 7' - 0" | 1 3/4" | H.M. | NO | PAINT, P-1 | PAINT, P-13 | 1 | HM | PAINT, P-4 | PAINT, P-13 | 11.0 | STOREFRONT LOCK SET, 45 MIN RATING |
| 107B | A | 3' - 0" | 7' - 0" | 1 3/4" | H.M. | NO | PAINT, P-13 | PAINT, P-13 | 1 | H.M. | PAINT, P-13 | PAINT, P-13 | 12.0 | 45 MIN RATING |
| DCV X1 | E | 3' - 0" | 7' - 0" | 1 3/4" | H.M. | NO | PAINT, P-1 | PAINT, P-1 | 1 | HM | PAINT, P-4 | PAINT, P-4 | 9.0 | COORDINATE WITH DRAGON COASTER PLANS, STOREFRONT LOCK SET, 45 MIN RATING |

## GATE SCHEDULE

| DOOR NUMBER | DOOR TYPE | WIDTH | HEIGHT | GATE MATERIAL | FINISH | HDWR SET | REMARKS |
|---|---|---|---|---|---|---|---|
| EX1 | SEE CXA-A-87 | 3'-0" | 7'-0" | STEEL | BLACK | PROVIDE SELF CLOSING HINGES, PANIC HARDWARE WITH LOCKING HANDLE ON OUTSIDE TO BE APPROVED BY ARCHITECT | EXIT DEVICE REQUIRED, SEE DETAILS ON CXA-A-87 |
| EX2 | SEE CXA-A-87 | 6'-6" VIF | 7'-0" | STEEL | BLACK | PROVIDE VERTICAL DROP BAR WITH LOCK | SEE DETAILS ON CXA-A-87 |
| EX3 | SEE CXA-A-86 | 3'-0" | 6'-0" | WOOD | SEE CXA-A-86 | PROVIDE SELF CLOSING HINGES, & D HANDLE TO BE APPROVED BY ARCHITECT | SEE DETAILS ON CXA-A-86 |
| EX4 | SEE CXA-A-86 | 3'-0" | 6'-0" | WOOD | SEE CXA-A-86 | PROVIDE SELF CLOSING HINGES, & D HANDLE TO BE APPROVED BY ARCHITECT | SEE DETAILS ON CXA-A-86 |

## PAINTING SCHEDULE

| KEY | COLOR | MANUFACTURER | REMARKS |
|---|---|---|---|
| P- 1 | MYSTICAL POWERS #901 | BENJAMIN MOORE | |
| P- 2 | HERITAGE RED #HC-181 | BENJAMIN MOORE | |
| P- 3 | NEW YORK STATE OF MIND #805 | BENJAMIN MOORE | |
| P- 4 | LAZY SUNDAY #803 | BENJAMIN MOORE | |
| P- 5 | DEEP JUNGLE #595 | BENJAMIN MOORE | |
| P- 6 | LUCK OF THE IRISH #588 | BENJAMIN MOORE | |
| P- 7 | MAJOLICA GREEN #0013 | SHERWIN WILLIAMS | |
| P- 8 | ANTELOPE CANYON #125 | BENJAMIN MOORE | |
| P- 9 | FORSYTHIA #6907 | SHERWIN WILLIAMS | |
| P- 10 | CAPE BLUE #1642 | BENJAMIN MOORE | |
| P- 11 | WHITE SNOW #9541 | SHERWIN WILLIAMS | |
| P- 12 | TRICORN BLACK #6258 | SHERWIN WILLIAMS | |
| P- 13 | READY MIX WHITE | BENJAMIN MOORE | INTERIOR USE ONLY |
| P- 14 | STUCCO PAINT TO MATCH P-1 | KEIM | |
| P- 15 | VAN DEUSEN BLUE #HC-156 | BENJAMIN MOORE | |
| P- 16 | #RAL9001 | - | TYP. ROLL UP DOOR |
| P- 17 | FLORIDA BEACHES #900 | BENJAMIN MOORE | |
| P- 18 | PIRATES COVE PEACH #903 | BENJAMIN MOORE | |
| P- 19 | JADITE #6459 | SHERWIN WILLIAMS | |
| P- 20 | DECISIVE YELLOW #6902 | SHERWIN WILLIAMS | |

**GENERAL DOOR SCHEDULE NOTES:**

1. REFER TO CXA-A-92 SHEET FOR DOOR SILL & TRANSITION DETAILS. SILL TRANSITION INFORMATION IS INDICATED ON FINISH PLAN UNLESS OTHERWISE NOTED.
2. REFER TO SHEET CXA-A-91 FOR FINISH SCHEDULE AND LEGEND.
3. THE CONTRACTOR SHALL EXAMINE THE DRAWINGS, SCHEDULE AND SPECIFICATIONS AND FURNISH PROPER HARDWARE FOR ALL OPENINGS WHETHER LISTED OR NOT. COMPLETE SHOP DRAWINGS SHALL BE PROVIDED FOR APPROVAL PRIOR TO PURCHASE.
4. ALL EXIT DOORS SHALL BE OPENABLE FROM THE EGRESS SIDE WITHOUT THE USE OF A KEY OR SPECIAL KNOWLEDGE.
5. VERIFY DIMENSIONS OF EXISTING OPENINGS AND DOORS BEFORE ORDERING.
6. THE CONTRACTOR SHALL COORDINATE & VERIFY LOCATION OF RECESSED FLOOR CLOSERS, PIVOTS, ETC. WITH EXISTING FLOOR SLABS AND OTHER FIELD CONDITIONS PRIOR TO ORDERING TO ENSURE PROPER CLEARANCES & DEPTHS ARE ALLOWED.

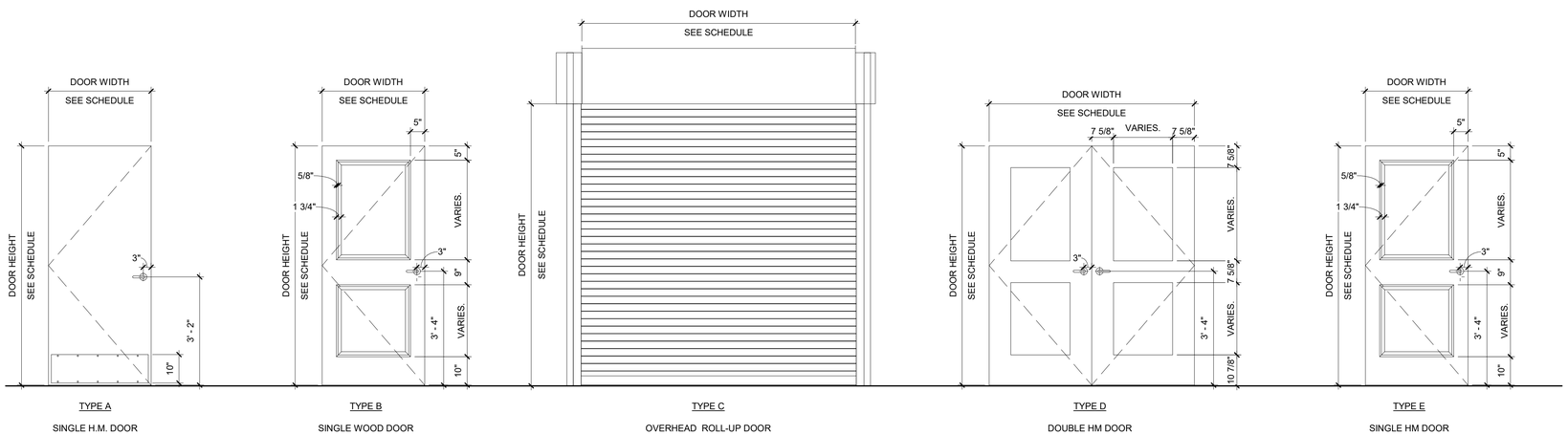


7 DOOR TYPES
1/2" = 1'-0"

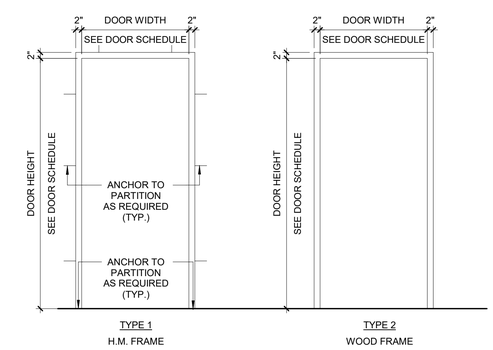


6 DOOR FRAME ELEVATIONS
1/2" = 1'-0"

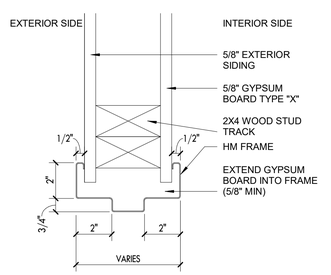


5 DOOR HEAD DETAIL
3" = 1'-0"

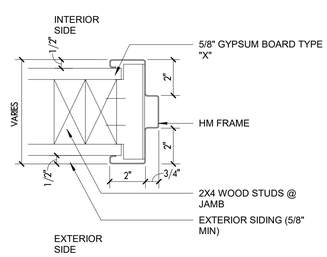


4 DOOR JAMB DETAIL
3" = 1'-0"

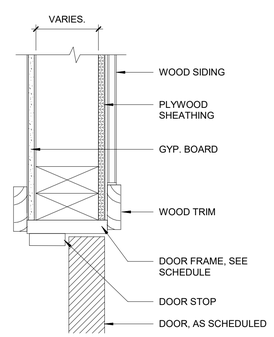


3 DOOR HEAD DETAIL- WOOD DR FR
3" = 1'-0"

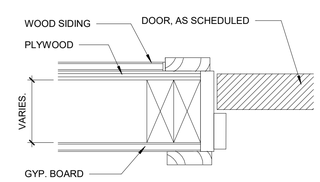


2 DOOR JAMB DETAIL- WOOD DR FR
3" = 1'-0"

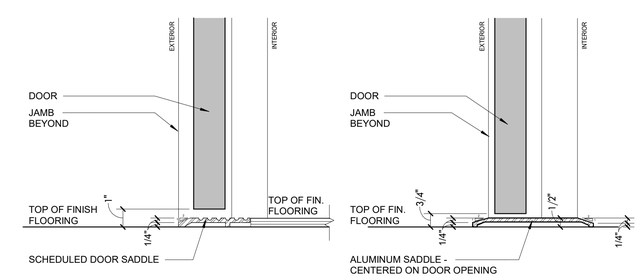


1 DOOR SADDLE
3" = 1'-0"

8/30/2022 4:06:25 PM

CONSULTANT INFORMATION
The LiRo Group
3 Aerial Way, Syosset, New York 11791
(516) 938-5476 www.liro.com

CONSULTANT SEAL
REGISTERED ARCHITECT ROBERT D. YOUNG 023280 STATE OF NEW YORK

| REVISION NUMBER | DATE | MADE BY | APP'D BY | REVISION |
|---|---|---|---|---|

RECORD DRAWING CERTIFICATION
☐ AS BUILT – CHANGES AS NOTED ☐ AS BUILT – NO CHANGES

CONTRACTOR
NAME
SIGNATURE
TITLE DATE

PROJECT COORDINATOR
NAME
SIGNATURE
TITLE DATE

WESTCHESTER COUNTY, NEW YORK
DEPARTMENT OF PUBLIC WORKS AND TRANSPORTATION
DIVISION OF ENGINEERING

**INFRASTRUCTURE REHABILITATION PHASE 3**
**PLAYLAND PARK, RYE, NEW YORK**
**CROSS AXIS BUILDING A**
**DOOR & HARDWARE SCHEDULES & DETAILS**

CONTRACT NUMBER 22-523
SHEET NUMBER CXA-A-92
DWG NO.: 136 of 664
SCALE: As indicated
DATE: 08/23/2022
DPW FILE NUMBER 1-118-A-885-0
REV. NO. 0

## WINDOW SCHEDULE

| WINDOW NUMBER | LEVEL | WINDOW TYPE | WIDTH | HEIGHT | SILL HEIGHT | WINDOW MATERIAL | EXTERIOR TRIM | INTERIOR TRIM | REMARK |
|---|---|---|---|---|---|---|---|---|---|
| W1 | T.O. SLAB | 1 | 3' - 9" | 5' - 1" | 3' - 0" | ALUM. P-12 | WOOD, P-4 | WOOD, P-13 | |
| W2 | T.O. SLAB | 1 | 3' - 9" | 5' - 1" | 3' - 0" | ALUM. P-12 | WOOD, P-4 | WOOD, P-13 | |
| W3 | T.O. SLAB | 1 | 3' - 9" | 5' - 1" | 3' - 0" | ALUM. P-12 | WOOD, P-4 | WOOD, P-13 | |
| W4 | T.O. SLAB | 1 | 3' - 9" | 5' - 1" | 3' - 0" | ALUM. P-12 | WOOD, P-4 | WOOD, P-13 | |

## PAINTING SCHEDULE

| KEY | COLOR | MANUFACTURER | REMARKS |
|---|---|---|---|
| P- 1 | MYSTICAL POWERS #901 | BENJAMIN MOORE | |
| P- 2 | HERITAGE RED #HC-181 | BENJAMIN MOORE | |
| P- 3 | NEW YORK STATE OF MIND #805 | BENJAMIN MOORE | |
| P- 4 | LAZY SUNDAY #803 | BENJAMIN MOORE | |
| P- 5 | DEEP JUNGLE #595 | BENJAMIN MOORE | |
| P- 6 | LUCK OF THE IRISH #588 | BENJAMIN MOORE | |
| P- 7 | MAJOLICA GREEN #0013 | SHERWIN WILLIAMS | |
| P- 8 | ANTELOPE CANYON #125 | BENJAMIN MOORE | |
| P- 9 | FORSYTHIA #6907 | SHERWIN WILLIAMS | |
| P- 10 | CAPE BLUE #1642 | BENJAMIN MOORE | |
| P- 11 | WHITE SNOW #9541 | SHERWIN WILLIAMS | |
| P- 12 | TRICORN BLACK #6258 | SHERWIN WILLIAMS | |
| P- 13 | READY MIX WHITE | BENJAMIN MOORE | INTERIOR USE ONLY |
| P- 14 | STUCCO PAINT TO MATCH P-1 | KEIM | |
| P- 15 | VAN DEUSEN BLUE #HC-156 | BENJAMIN MOORE | |
| P- 16 | #RAL9001 | - | TYP. ROLL UP DOOR |
| P- 17 | FLORIDA BEACHES #900 | BENJAMIN MOORE | |
| P- 18 | PIRATES COVE PEACH #903 | BENJAMIN MOORE | |
| P- 19 | JADITE #6459 | SHERWIN WILLIAMS | |
| P- 20 | DECISIVE YELLOW #6902 | SHERWIN WILLIAMS | |

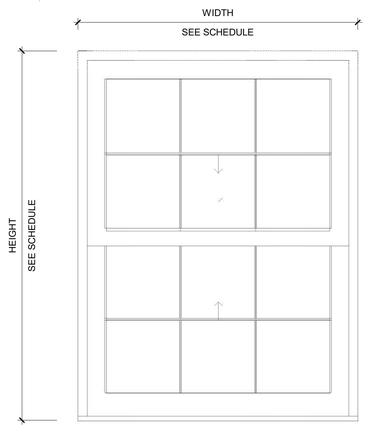


4 WINDOW TYPE 1, DOUBLE HUNG
1" = 1'-0"

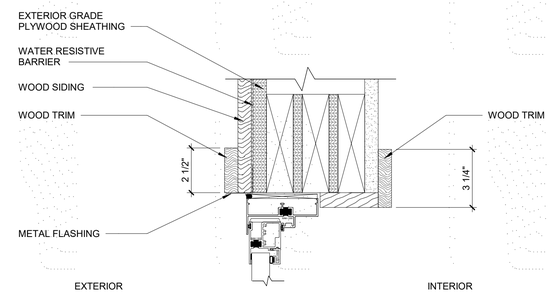


5 DOUBLE HUNG WINDOW HEAD DETAIL
3" = 1'-0"

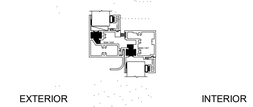


3 DOUBLE HUNG WINDOW DETAIL
3" = 1'-0"

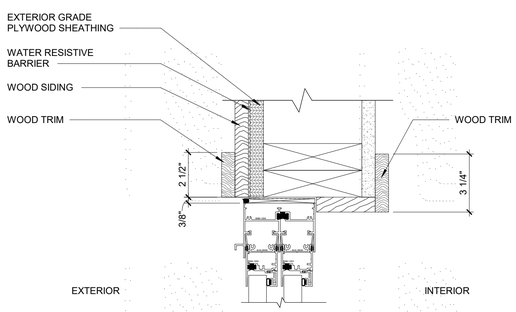


2 DOUBLE HUNG JAMB DETAIL
3" = 1'-0"

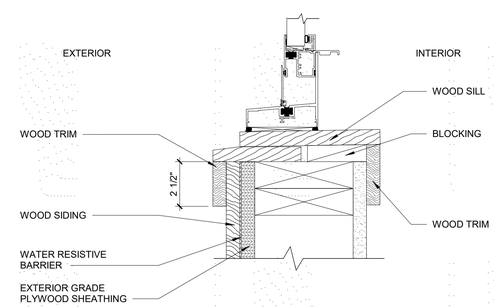


1 DOUBLE HUNG WINDOW SILL DETAIL
3" = 1'-0"

8/30/2022 4:06:27 PM

CONSULTANT INFORMATION
The LiRo Group
3 Aerial Way, Syosset, New York 11791
(516) 938-5476 www.liro.com

CONSULTANT SEAL
REGISTERED ARCHITECT ROBERT D. CORNIGLIA 023220 STATE OF NEW YORK

| REVISION NUMBER | DATE | MADE BY | APP'D BY | REVISION |
|---|---|---|---|---|

RECORD DRAWING CERTIFICATION
☐ AS BUILT – CHANGES AS NOTED ☐ AS BUILT – NO CHANGES

CONTRACTOR
NAME
SIGNATURE
TITLE DATE

PROJECT COORDINATOR
NAME
SIGNATURE
TITLE DATE

WESTCHESTER COUNTY, NEW YORK
DEPARTMENT OF PUBLIC WORKS AND TRANSPORTATION
DIVISION OF ENGINEERING

**INFRASTRUCTURE REHABILITATION PHASE 3**
**PLAYLAND PARK, RYE, NEW YORK**
**CROSS AXIS BUILDING A**
**WINDOW SCHEDULE**

CONTRACT NUMBER 22-523
SHEET NUMBER **CXA-A-93**
DWG NO.: 137 of 664
SCALE: **As indicated**
DATE: **08/23/2022**
DPW FILE NUMBER **1-118-A-886-0**
REV. NO. 0

## SIGNAGE GENERAL NOTES

1. ALL PANEL SIGNAGE SHALL BE WALL MOUNTED AT 48" MIN AND 60" MAX ABOVE THE ADJACENT FINISHED FLOOR MEASURED FROM THE BASELINE OF THE CHARACTERS AND IN COMPLIANCE WITH THE LATEST ADOPTED VERSION OF ICC/ANSI-A117.1 REQUIREMENTS.
2. SIGNAGE SHOWN HERE MAY NOT BE INCLUSIVE OF ALL TYPES OF SIGNAGE REQUIRED FOR THIS PROJECT. REFER TO DRAWINGS AND SPECIFICATIONS FOR ALL ADDITIONAL SIGNAGE REQUIREMENTS NOT SHOWN HERE.
3. MOUNT SIGN SO THAT A PERSON CAN APPROACH WITHIN 3" AND AVOID DOOR SWING AND PROTRUDING OBJECTS
4. SIGNS SHALL BE LOCATED ON THE WALL ADJACENT TO THE LATCH SIDE OF DOOR, UON.

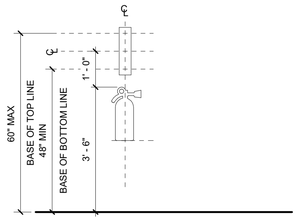


11 FIRE EXTINGUISHER SIGN LOCATION ELEVATION
1/2" = 1'-0"

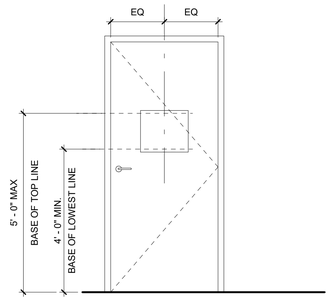


10 SIGN LOCATION ELEVATION - TYPICAL DOOR CONDITION 2
1/2" = 1'-0"

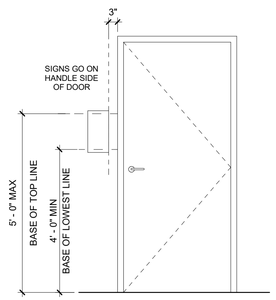


9 SIGN LOCATION ELEVATION - TYPICAL DOOR CONDITION
1/2" = 1'-0"

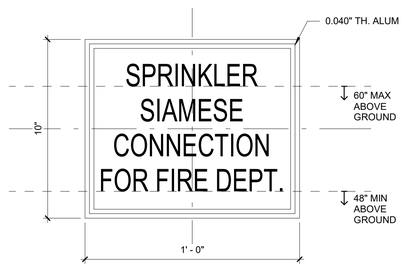


8 TYPE X-6 SIAMESE CONNECTION SIGNAGE
3" = 1'-0"

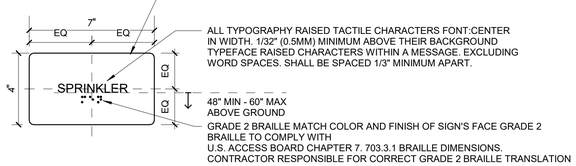


7 TYPE A-2- SPRINKLER ROOM ID. SIGN
3" = 1'-0"

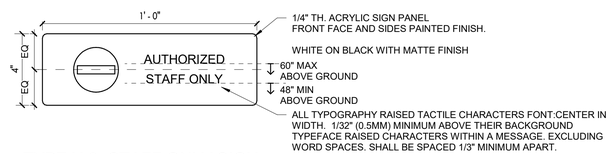


6 TYPE X-3- STAFF ONLY SIGN
3" = 1'-0"

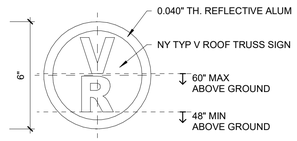


5 TYPE X-4 TRUSS SIGNAGE CLASS VR
3" = 1'-0"

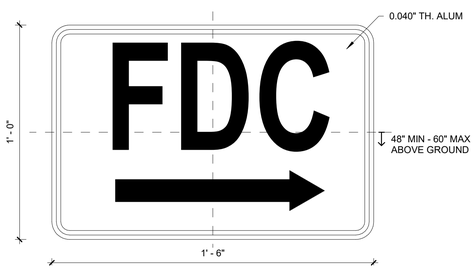


4 TYPE X-5 FDC SIGNAGE
3" = 1'-0"

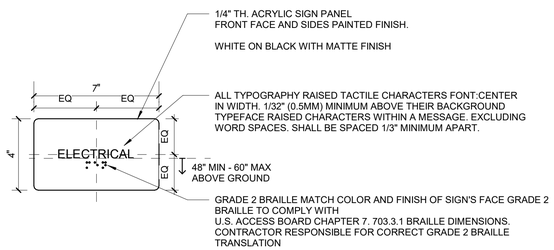


3 TYPE A-3 ELECTRICAL ROOM ID. SIGN
3" = 1'-0"

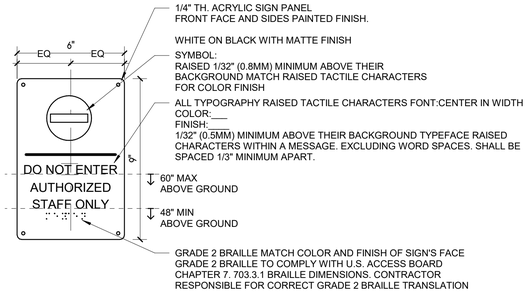


2 TYPE X-2- STAFF ONLY. SIGN
3" = 1'-0"

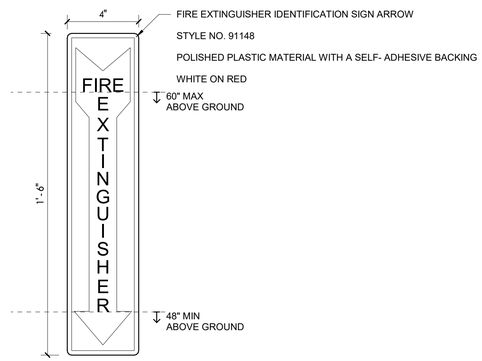


1 TYPE X-1- FIRE EXTINGUISHER. SIGN
3" = 1'-0"

8/30/2022 4:06:27 PM

CONSULTANT INFORMATION

The LiRo Group
3 Aerial Way, Syosset, New York 11791
(516) 938-5476 www.liro.com

CONSULTANT SEAL

REGISTERED ARCHITECT ROBERT D. VOGNILD 023280 STATE OF NEW YORK

| REVISION NUMBER | DATE | MADE BY | APP'D BY | REVISION |
|---|---|---|---|---|
| | | | | |

RECORD DRAWING CERTIFICATION

☐ AS BUILT – CHANGES AS NOTED ☐ AS BUILT – NO CHANGES

CONTRACTOR
NAME
SIGNATURE
TITLE DATE

PROJECT COORDINATOR
NAME
SIGNATURE
TITLE DATE

WESTCHESTER COUNTY, NEW YORK
DEPARTMENT OF PUBLIC WORKS AND TRANSPORTATION
DIVISION OF ENGINEERING

**INFRASTRUCTURE REHABILITATION PHASE 3**
**PLAYLAND PARK, RYE, NEW YORK**
**CROSS AXIS BUILDING A**
**SIGNAGE TYPES AND DETAILS**

| | |
|---|---|
| CONTRACT NUMBER | 22-523 |
| SHEET NUMBER | CXA-A-94 |
| DWG NO.: | 138 of 664 |
| SCALE: | As indicated |
| DATE: | 08/23/2022 |
| DPW FILE NUMBER | 1-118-A-887-0 |
| REV. NO. | 0 |

# STRUCTURAL NOTES

## GENERAL

G-1 THESE NOTES ARE GENERAL AND SUPPLEMENTAL TO THE SPECIFICATIONS. THESE NOTES APPLY TO THE ENTIRE PROJECT UNLESS MODIFIED OR NOTED OTHERWISE IN THE CONTRACT DOCUMENTS.

G-2 STANDARD DETAILS, SHOWN ON DRAWINGS CXA-S-14 THRU CXA-S-17 SHALL BE USED WHEN REFERRED TO OR WHEN NO MORE RESTRICTIVE OR DIFFERENT DETAILS ARE SHOWN ON THE DRAWINGS.

G-3 DESIGN WAS IN ACCORDANCE WITH AND CONSTRUCTION SHALL COMPLY WITH THE PROVISIONS OF THE NEW YORK STATE BUILDING CODE (2020 NYSBC). THE DESIGN LOADS AND OTHER DESIGN VALUES GIVEN BELOW WERE USED FOR DESIGN OF STRUCTURES UON ON THE DRAWINGS.

G-4 DESIGN LOADS FOR NEW ELEMENTS:
LIVE LOADS:
NORTH GAMES BUILDING::
FLOOR: 60 PSF
SNOW LOADS:

| | |
|---|---|
| GROUND SNOW LOAD, | Pg = 30 PSF |
| ROOF SNOW LOAD, | Pf= 21 PSF |
| SNOW EXPOSURE FACTOR, | Ce = 0.9 |
| SNOW LOAD IMPORTANCE FACTOR, | I = 1.1 |
| THERMAL FACTOR, | Ct = 1.0 |

WIND DESIGN:

| | |
|---|---|
| BASIC WIND SPEED, | V = 126 MPH |
| BUILDING CATEGORY: | II |
| WIND EXPOSURE CATEGORY: | D |
| INTERNAL PRESSURE COEFFICIENT, | GCpi = ±0.18 |

SEISMIC DESIGN:
SPECTRAL RESPONSE COEFFICIENTS:

| | |
|---|---|
| SDS = | 0.296 |
| SD1 = | 0.096 |
| SITE CLASS: | B |
| SEISMIC DESIGN CATEGORY: | C |
| SEISMIC IMPORTANCE FACTOR: | I = 1.25 |

BASIC SEISMIC FORCE RESISTING SYSTEM IS AS SHOWN ON DRAWINGS
DESIGN BASE SHEAR, V = AS SHOWN ON DRAWINGS
ANALYSIS PROCEDURE IS EQUIVALENT LATERAL FORCE METHOD, UON.
RESPONSE MODIFICATION FACTOR, R:
CROSS AXIS BUILDING A: R = 1 1/2

LOADS INDICATED ABOVE REFLECT DESIGN LOADS FOR ANY NEW OR REHABILITATED STRUCTURAL ELEMENTS. THEY SHOULD NOT BE TAKEN AS DESIGN LOADS FOR THE STRUCTURE AS A WHOLE.

G-5 ALL DIMENSIONS INDICATED (*) ARE TO BE VERIFIED EITHER BY FIELD MEASUREMENTS FOR EXISTING STRUCTURES OR BY SHOP DRAWINGS FOR EQUIPMENT FURNISHED. STRUCTURAL DIMENSIONS NOT SHOWN BUT CONTROLLED BY OR RELATED TO EQUIPMENT SHALL BE VERIFIED BY THE CONTRACTOR WITH THE MANUFACTURER PRIOR TO CONSTRUCTION.

G-6 STRUCTURAL DRAWINGS SHALL BE USED IN COORDINATION WITH THE DRAWINGS OF ALL OTHER DISCIPLINES AND MANUFACTURER'S SHOP DRAWINGS.

G-7 IF A CONFLICT IS FOUND BETWEEN DIFFERENT PORTIONS OF THE CONTRACT DOCUMENTS, THE CONTRACTOR SHALL NOTIFY THE ENGINEER IMMEDIATELY. CONTINUED CONSTRUCTION OF THE AREA IN CONFLICT SHALL BE AT THE CONTRACTOR'S OWN RISK UNTIL THE CONFLICT IS RESOLVED BY THE ENGINEER.

G-8 WHENEVER ONE MEMBER IS FASTENED TO ANOTHER WITH FASTENINGS (BOLTS, WELDS, ETC.) SET AT A UNIFORM SPACING, THERE SHALL BE A MINIMUM OF TWO FASTENINGS PER PIECE CONNECTED AND THE FIRST AND LAST FASTENINGS SHALL BE LOCATED NOT TO EXCEED 0.25 OF FASTENER SPACING FROM EACH END.

G-9 STRUCTURES HAVE BEEN DESIGNED FOR OPERATIONAL LOADS ON THE COMPLETED STRUCTURE. DURING CONSTRUCTION, THE STRUCTURES SHALL BE PROTECTED BY BRACING AND TEMPORARY SUPPORTS WHEREVER EXCESSIVE CONSTRUCTION LOADS MAY OCCUR. OVERSTRESSING OF ANY STRUCTURAL ELEMENT IS PROHIBITED.

G-10 NO BACKFILL SHALL BE PLACED AGAINST ANY WALL UNLESS ALL SUPPORTING ELEMENTS OF THE STRUCTURE HAVE BEEN CONSTRUCTED AND HAVE REACHED THE SPECIFIED MINIMUM CONCRETE STRENGTH.

G-11 THE CONTRACTOR IS RESPONSIBLE FOR VERIFYING ALL EXISTING INFORMATION IN THE FIELD AS REQUIRED FOR NEW WORK.

## FOUNDATIONS

F-1 DESIGN ASSUMPTIONS:
A) ALLOWABLE BEARING PRESSURE: 1. SOUND ROCK – 8 TSF, 2. OVERBURDEN – 1 TSF.
B) GROUNDWATER: EXISTING GROUNDWATER ELEVATIONS VARY ACROSS SITE.

F-2 GRAVITY UNDER DRAINS SHALL BE PROVIDED TO PERMANENTLY LOWER GROUNDWATER.

F-3 CONCRETE GENERAL NOTES APPLY TO FOUNDATIONS.

F-4 MINIMUM DEPTH FROM ADJACENT FINISHED GRADE TO BOTTOM OF FOUNDATION, 4'-0"

F-5 FOUNDATIONS BEARING ON ROCK SHALL BE CONSTRUCTED SUCH THAT ROCK SURFACE IS LEVEL, UNLESS APPROVED BY ENGINEER.

F-6 COMPACTED SELECT GRANULAR FILL 12 INCHES THICK MINIMUM, SHALL BE PLACED BELOW ALL CONCRETE FOUNDATIONS UNLESS DIRECTLY BEARING ON SOUND ROCK.

## STRUCTURAL METALS

S-1 DETAIL, FABRICATE, AND ERECT STRUCTURAL STEEL IN ACCORDANCE WITH AISC SPECIFICATION FOR STRUCTURAL STEEL BUILDINGS, ALLOWABLE STRESS DESIGN AND LRFD DESIGN (LRFD MANUAL OF STEEL CONSTRUCTION, CURRENT EDITION).

S-2 STEEL MATERIAL:
A) STRUCTURAL TUBING, ASTM A 500, GRADE B.
B) STRUCTURAL PIPE, ASTM A 53, GRADE B.
C) PLATES AND ANGLES, ASTM A 36 UNO.
D) STRUCTURAL W SHAPES, ASTM A 992 (MIN. YIELD STRENGTH OF 50 KSI).
E) STRUCTURAL S, M, & H SHAPES ASTM A572 GRADE 50.

S-3 PROVIDE MIN 3/4" DIAMETER ASTM A 325 HIGH STRENGTH BOLTS WITH FULLY TIGHTENED TYPE N CONNECTIONS FOR STRUCTURAL STEEL UON.

S-4 PROVIDE TYPICAL STEEL BEAM CONNECTIONS FOR A CAPACITY NOT LESS THAN THE TOTAL UNIFORM LOAD CAPACITY TABULATED IN THE AISC TABLES FOR ALLOWABLE LOADS OF BEAMS UNLESS NOTED OTHERWISE.

S-5 CAST IN PLACE ANCHOR BOLTS FOR STRUCTURAL STEEL SHALL CONFORM TO ASTM A307 UON.

S-6 DO NOT PAINT STEEL SURFACES WHICH ARE TO BE WELDED OR ARE TO BE ENCASED IN CONCRETE.

S-7 STAINLESS STEEL SHALL BE TYPE 316 FOR BOLTED CONSTRUCTIONS AND 316L FOR WELDED CONSTRUCTIONS.

S-8 ALUMINUM SHALL BE ALLOY 6061-T6.

S-9 ALL GROOVE AND BUTT WELDS SHALL BE FULL PENETRATION.

S-10 FILLET WELD SIZES SHALL BE THE MINIMUM SIZE REQUIRED BY AISC CODE FOR PLATE SIZES TO BE CONNECTED AND SHALL BE APPLIED TO THE ENTIRE JOINT CONTACT LENGTH, BUT NOT LESS THAN 3/16".

S-11 DETAIL, FABRICATE, AND ERECT ALUMINUM IN ACCORDANCE WITH THE ALUMINUM ASSOCIATION CONSTRUCTION MANUAL CURRENT EDITION.

S-12 ALL BOLTS, ANCHOR BOLTS, AND CONCRETE ANCHORS CONNECTING ALUMINUM SHALL BE TYPE 316 STAINLESS STEEL UON.

S-13 ALUMINUM SHALL BE ISOLATED FROM CONTACT WITH CONCRETE OR DISSIMILAR METALS.

## EXCAVATION

E-1 CONTRACTOR SHALL PERFORM ALL EXCAVATION IN ACCORDANCE WITH STATE, LOCAL AND FEDERAL REQUIREMENTS INCLUDING OSHA BRACING AND EXCAVATION REQUIREMENTS.

E-2 TEMPORARY SHEETING AND BRACING IS NOT SHOWN ON CONTRACT DRAWINGS. ALL EXCAVATIONS WITH A POTENTIAL FOR CAVE-IN SHALL BE PROVIDED WITH EXCAVATION PROTECTION SYSTEMS IN ACCORDANCE WITH OSHA 1926. SLOPING AND BENCHING WHICH WILL ENCROACH ON AREAS SLATED TO REMAIN ACCESSIBLE OR THAT MAY ENCROACH ON EXISTING FOOTINGS AND STRUCTURES SHALL NOT BE PERMITTED.

E-3 CONTRACTOR SHALL ENGAGE THE SERVICES OF A LICENSED PROFESSIONAL ENGINEER REGISTERED IN THE STATE OF NEW YORK TO DESIGN ALL TEMPORARY SHEETING AND BRACING AND RELATED APPURTENANCES. CONTRACTOR TO SUBMIT SUCH PLANS TO ENGINEER FOR INFORMATION.

E-4 CONTRACTOR SHALL BE RESPONSIBLE FOR DEWATERING OF OPEN EXCAVATIONS.

E-5 ALL EXCAVATED MATERIALS SHALL BE REMOVED FROM SITE TO A FACILITY AS REQUIRED BY STATE, LOCAL FEDERAL LAW.

## TIMBER

T-1 ALL WOOD FRAMING MEMBERS INCLUDING, BUT NOT LIMITED TO, WALL STUDS AND JOISTS, ARE INTENDED TO ACT AS A SYSTEM AS DETAILED IN THE STRUCTURAL DRAWINGS AND ONCE CONSTRUCTION IS COMPLETE. IT IS THE RESPONSIBILITY OF THE CONTRACTOR TO ENSURE SAFETY AND STABILITY OF WOOD FRAMING SYSTEMS (I.E. TEMPORARY BRACING IF REQUIRED) DURING CONSRTUCTION AS A RESULT OF CONSTRUCTION METHODS AND SEQUENCES.

T-2 ALL TIMBER BELOW FLOOR DECKING SHALL BE PRESSURE-TREATED SOUTHERN PINE LUMBER.

T-3 STORAGE OF ALL LUMBER AND TIMBER ON SITE SHALL BE KEPT OFF GROUND, UNDER COVER AND PROTECTED FROM DAMAGE.

T-4 ALL DIMENSIONAL LUMBER SHALL BE CERTIFIED BY THE SUPPLIER IN WRITING TO BE KILN DRIED.

T-5 STRUCTURE SHALL NOT BE ENCLOSED UNLESS LUMBER MOISTURE CONTENT HAS BEEN VERIFIED TO BE AT OR BELOW 15%. ANY SIGNS OF MOLD SHALL BE REMOVED AND TREATED IN ACCORDANCE WITH PROJECT SPECIFICATIONS OR INDUSTRY STANDARDS.

T-6 ALL LUMBER IN CONTACT WITH THE GROUND OR CONCRETE SHALL BE PRESSURE TREATED.

T-7 FASTENERS FOR PRESERVATIVE TREATED AND FIRE RETARDANT TREATED WOOD SHALL BE OF HOT DIPPED ZINC COATED GALVANIZED STEEL OR STAINLESS STEEL AND SHALL FOLLOW CURRENT SIMPSON GUIDELINES BASED ON WEATHER EXPOSURE. WHERE STAINLESS STEEL CONNECTORS OR HOT DIPPED GALVANIZED CONNECTORS ARE SPECIFIED IN THE DRAWINGS, STAINLESS STEEL OR HOT DIPPED GALVANIZED FASTENERS SHALL BE USED TO MATCH CONNECTOR TYPE.

T-8 ALL PLATES AND LEDGERS SHALL BE FASTENED WITH A MINIMUM (3) ANCHORS PER PIECE UNLESS NOTED OTHERWISE.

T-9 ALL METAL HARDWARE AND FRAMING ACCESSORIES SHALL BE MANUFACTURED BY SIMPSON STRONG-TIE COMPANY. ALL ITEMS SHALL BE INSTALLED PER THE SIMPSON'S INSTALLATION REQUIREMENTS. ALL NAIL HOLES SHALL BE FILLED WITH THE RECOMMENDED FASTENER UNLESS NOTED OTHERWISE ON THE DRAWING.

T-10 HOLES FOR BOLTS SHALL BE DRILLED WITH A BIT OF THE SAME NOMIMAL DIAMETER AS THE BOLT + 1/16". LEAD HOLES FOR LAG SCREWS SHALL BE BORED PER NDS 11.1.3.

T-11 ALL BOLTS, CARRIAGE BOLTS, LAG SCREWS, EXPANSION BOLTS AND EPOXY BOLTS SHALL BE INSTALLED WITH STANDARD CUT WASHERS UNDER THE BOLT HEAD AND NUTS THAT BEAR DIRECTLY ON THE WOOD. ALL NUTS SHALL BE TIGHTENED AT THE TIME OF INSTALLATION AND RE-TIGHTENED IF NECESSARY, DUE TO WOOD SHRINKAGE, PRIOR TO CLOSE OUT OR COMPLETION OF THE PROJECT. BOLTS AND LAG SCREWS SHALL CONFORM TO ANSI/ASME STANDARD B18.2.1. WOOD SCREWS SHALL CONFORM TO B18.6.1. ALL BOLTS SHALL CONFORM TO ASTM A307 GRADE A UNLESS NOTED OTHERWISE.

T-12 CUTTING AND NOTCHING OF SAWN LUMBER RAFTERS AND STUDS SHALL BE IN CONFORMANCE WITH THE FOLLOWING CRITERIA:

A. JOISTS NOTCHES AT THE ENDS OF JOISTS SHALL NOT EXCEED 1/5 OF THE JOIST DEPTH. HOLES IN JOISTS SHALL NOT BE WITHIN 2½ INCHES OF THE TOP OR BOTTOM OF THE JOIST, AND THE DIAMETER OF ANY SUCH HOLE SHALL NOT EXCEED 1/4 THE DEPTH OF THE JOIST. NOTCHES IN THE TOP OR BOTTOM OF THE JOISTS SHALL NOT EXCEED 1/6 THE DEPTH AND SHALL NOT BE LOCATED IN THE MIDDLE OF THE THIRD SPAN.

B. RAFTERS NOTCHES AT THE ENDS OF RAFTERS OR CEILING JOISTS SHALL NOT EXCEED 1/5 OF THE DEPTH. NOTCHES IN THE TOP OR BOTTOM OF THE RAFTER OR CEILING JOIST SHALL NOT EXCEED 1/6 THE DEPTH AND SHALL NOT BE LOCATED IN THE MIDDLE 1/3 OF THE SPAN. EXCEPT THAT A NOTCH NOT EXCEEDING 1/3 OF THE DEPTH IS PERMITTED IN THE TOP OF THE RAFTERS OR CEILING JOIST NOT FURTHER FROM THE FACE OF THE SUPPORT THAN THE DEPTH OF THE MEMBER. HOLES BORED IN RAFTERS OR CEILING JOISTS SHALL NOT BE WITHIN 2½" INCHES OF THE TOP AND BOTTOM AND THEIR DIAMETER SHALL NOT EXCEED 1/4 THE DEPTH OF THE MEMBER.

C. WALL STUDS A MAXIMUM OF 2¼" DIAMETER NEATLY BORED HOLE MAY BE PLACED IN THE CENTER OF ALL BEARING 2x6 STUDS WITH NO ADDITIONAL REINFORCEMENT REQUIRED.

## SPECIAL INSPECTIONS – CROSS AXIS BUILDING A

S-1 SPECIAL INSPECTION SHALL COMPLY WITH SPECIFICATIONS.

S-2 SPECIAL INSPECTION WILL BE PERFORMED IN ACCORDANCE WITH CHAPTER 17 OF THE NYS BUILDING CODE.

S-3 SPECIAL INSPECTION WILL BE PERFORMED ON THE FOLLOWING STRUCTURAL SYSTEMS:

A) STRUCTURAL STEEL CONSTRUCTION (1705.5).

B) WOOD CONSTRUCTION (1705.4).

C) CONCRETE CONSTRUCTION (1705.3).

D) SOILS (1705.6).

E) WIND RESISTANCE (1705.11).

F) SEISMIC RESISTANCE (1705.11).

## CONCRETE (EXCEPT PRECAST)

C-1 CONCRETE STRENGTH CLASSES (28-DAY COMPRESSIVE STRENGTH):
CLASS A (5000 PSI) STRUCTURES, REINFORCED DUCT BANKS, AND PIPE ENCASEMENT. FOR CONCRETE WALLS GREATER THAN 2 FEET THICK FOLLOW ACI RECOMMENDATIONS FOR MASS CONCRETE.
CLASS D (2500 PSI) SIDEWALKS, CURBS AND GUTTERS, CONCRETE FILL, THRUST BLOCKS, UNREINFORCED DUCT BANKS AND PIPE ENCASEMENT, FENCE POST EMBEDMENT.

C-2 REINFORCEMENT: ASTM A615, GRADE 60, OR ASTM A706, GRADE 60 WHERE REINFORCEMENT IS TO BE WELDED.

C-3 CONCRETE COVER FOR REINFORCING:
A) SURFACES CAST AGAINST SUBGRADE 3" MIN.
B) FORMED SURFACES IN CONTACT WITH SOIL OR LIQUID 2" MIN.
C) SURFACES NOT IN CONTACT WITH WEATHER, SOIL, OR LIQUID 1 1/2" MIN.

C-4 CONSTRUCTION JOINTS & CONTROL JOINTS SHALL BE LOCATED AS SHOWN ON THE DRAWINGS. WHERE NOT SHOWN, CONSTRUCTION JOINTS SHALL BE LOCATED AT NO MORE THAN 30 FEET ON CENTER. JOINT LOCATIONS SHALL BE AS APPROVED BY THE ENGINEER.

C-5 EQUIPMENT SUPPORTS, ANCHORAGES, OPENINGS, RECESSES AND REVEALS NOT SHOWN ON THE STRUCTURAL DRAWINGS BUT REQUIRED BY OTHER DISCIPLINES, SHALL BE PROVIDED FOR PRIOR TO PLACING CONCRETE.

C-6 SPLICES SHALL BE CLASS 'B' CONFORMING TO THE PROVISIONS OF ACI 318 UNLESS NOTED OTHERWISE.

C-7 AT ALL TYPICAL CURBS, EQUIPMENT PADS, AND PIPE SUPPORT PIERS, REINFORCING DOWELS SHOWN MAY BE REPLACED WITH MATCHING DOWELS SET IN EPOXY IN DRILLED HOLES AS SPECIFIED. DOWELS LOCATED CLOSER THAN 3" FROM ANY EDGE OF CONCRETE SHALL NOT BE REPLACED WITH DRILLED DOWELS.

C-8 DRILLED EPOXY DOWELS (WHERE DOWELS ARE SHOWN TO BE PLACED INTO HARDENED CONCRETE):
A) THE HOLE DIAMETER SHALL BE NO LARGER THAN 1/8" GREATER THAN THE DIAMETER OF THE REINFORCING BAR AT THE DEFORMATIONS.
B) THE DEPTH OF EMBEDMENT SHALL BE 12 BAR DIAMETERS, UNLESS SHOWN OTHERWISE.
C) ADJUST THE DOWEL LOCATIONS AS NEEDED TO AVOID DRILLING THROUGH ANY REINFORCING BARS.IF THE DOWEL LOCATION NEEDS TO BE MODIFIED, CONTACT THE ENGINEER.

C-9 SLABS WITH SLOPING SURFACES SHALL HAVE THE INDICATED SLAB THICKNESS MAINTAINED AS THE MINIMUM. SLAB BOTTOMS CAN EITHER SLOPE WITH THE TOP SURFACE OR BE LEVEL. REINFORCEMENT IN SLABS WITH SLOPING SURFACES SHALL BE PLACED AT THE REQUIRED CLEARANCE FROM THE SLAB SURFACE.

C-10 SLOPES SHOWN ON SLAB SURFACES BY FLOW ARROWS SHALL BE 1.0 PERCENT UNLESS NOTED OTHERWISE.

C-11 WHERE HORIZONTAL CONSTRUCTION JOINTS, LOCATED ABOVE THE FOUNDATION SLAB, EXTEND BEYOND WHERE NEEDED, THEY SHALL BE TERMINATED AT A VERTICAL CONSTRUCTION JOINT APPROVED BY THE ENGINEER.

C-12 DOWELS, ANCHOR BOLTS, PIPES, WATERSTOPS AND OTHER EMBEDDED ITEMS SHALL BE HELD SECURELY IN POSITION WHILE CONCRETE IS BEING PLACED.

C-13 CONDUITS AND OTHER SIMILAR ITEMS EMBEDDED IN OR PENETRATING THROUGH CONCRETE SHALL BE SPACED ON CENTER NOT LESS THAN 3 TIMES THEIR OUTSIDE DIMENSION, BUT NOT LESS THAN 2 1/2" CLEAR IN CLASS 45F CONCRETE OR 2" CLEAR IN CLASS 45 CONCRETE. SUCH ITEMS SHALL NOT EXCEED 1/3 OF THE MEMBER THICKNESS.

C-14 REINFORCING BARS AND ACCESSORIES SHALL NOT BE IN CONTACT WITH ANY METAL PIPE, PIPE FLANGE, METAL CONDUIT, OR OTHER METAL PARTS EMBEDDED IN CONCRETE. A MINIMUM CLEARANCE OF 2 INCHES SHALL BE PROVIDED.

C-15 ALL JOINTS WHICH ARE IN MEMBERS IN CONTACT WITH LIQUID OR BELOW GRADE SHALL HAVE A WATERSTOP. CONSTRUCTION JOINTS SHALL HAVE A 6" PVC FLATSTRIP WATERSTOP. EXPANSION JOINTS SHALL HAVE A 9" PVC CENTERBULB WATERSTOP.

C-16 IN VERTICAL JOINTS, WATERSTOP SHALL STOP NO LESS THAN 18" ABOVE THE MAXIMUM WATER SURFACE OR 18" ABOVE GRADE, WHICHEVER IS HIGHER.

C-17 AT JOINT INTERSECTIONS, WATERSTOPS SHALL BE CONNECTED SO AS TO FORM A COMPLETE SEAL USING CONNECTION PIECES AS NEEDED.

C-18 ALL EXPOSED CORNERS SHALL HAVE A 3/4" CHAMFER OR A 1/2" RADIUS TOOLED CORNER.

## DEMOLITION

LEGEND

EXISTING REINFORCED CONCRETE WALL OR STRUCTURE TO BE DEMOLISHED

SAW CUT LINE – FULL DEPTH UNLESS NOTED OTHERWISE

D-1 CONTRACTOR IS ALERTED THAT LIMITS OF DEMOLITION SHOWN IS APPROXIMATE. ACTUAL LIMITS SHALL BETHE MINIMUM REQUIRED FOR NEW STRUCTURE. CONTRACTOR TO CO-ORDINATE AND SUBMIT DEMOLITION PROCEDURE PER SPECIFICATIONS.

D-2 ALL ITEMS SHOWN ARE EXISTING TO REMAIN UNLESS NOTED OTHERWISE.

D-3 FOR ADDITIONAL DEMOLITION REQUIREMENTS SEE SPECIFICATIONS (024116).

D-4 ALL EXISTING CONCRETE TO BE DEMOLISHED IS STEEL REINFORCED UNLESS NOTED OTHERWISE. REINFORCING STEEL NOT SHOWN FOR CLARITY.

D-5 FOR ADDITIONAL DEMOLITION NOT SHOWN, SEE G, A, M, E, H, AND P DRAWINGS.

Drawing Name: G:\SavinAutocad\2060\25-Playland-Mega-3\S\CXAS-1001.dwg
Rev#: Projectname: 211001F02 Comments: ----
Printed by: BKnittle Date: 15 August 2022 11:36 AM Designed by: ----
Xrefs: [TB_24X36_WestchesterCo_3.dwg] [TSG-SVLOGO.dwg] [BCR-A-04.dwg] [BCRE-101.dwg]

CONSULTANT INFORMATION
Savin Engineers, P.C.

CONSULTANT SEAL

| REVISION NUMBER | DATE | MADE BY | APP'D BY | REVISION |
|---|---|---|---|---|

RECORD DRAWING CERTIFICATION
☐ AS BUILT – CHANGES AS NOTED ☐ AS BUILT – NO CHANGES

CONTRACTOR
NAME ____
SIGNATURE ____
TITLE ____ DATE ____

PROJECT COORDINATOR
NAME ____
SIGNATURE ____
TITLE ____ DATE ____

WESTCHESTER COUNTY, NEW YORK
DEPARTMENT OF PUBLIC WORKS AND TRANSPORTATION
DIVISION OF ENGINEERING

**INFRASTRUCTURE REHABILITATION - PHASE 3**
**PLAYLAND PARK, RYE, NEW YORK**
**CROSS AXIS BUILDING A**
**STRUCTURAL NOTES**

CONTRACT NUMBER **22-523**
SHEET NUMBER **CXA-S-01**
DWG NO.:
SCALE: **AS SHOWN**
DATE: **8/23/ 2022**
DPW FILE NUMBER **1-118-S-888-0**
REV. NO. **0**

# STRUCTURAL ABBREVIATIONS

| | |
|---|---|
| AB | ANCHOR BOLT |
| ADDL | ADDITIONAL |
| ADH | ADHESIVE |
| ADJ | ADJUSTABLE/ADJACENT |
| AFF | ABOVE FINISHED FLOOR |
| AGG | AGGREGATE |
| AL | ALUMINUM |
| ALT | ALTERNATE |
| APPROX | APPROXIMATE |
| ARCH | ARCHITECTURAL |
| AVG | AVERAGE |
| B | BORING |
| BLDG | BUILDING |
| BM | BEAM/BENCH MARK |
| BOF | BOTTOM OF FOOTING |
| BOS | BOTTOM OF STEEL |
| BOT | BOTTOM |
| BRG | BEARING |
| BT | BOLT |
| C | CHANNEL |
| C TO C | CENTER TO CENTER |
| CANT | CANTILEVER |
| CJ | CONSTRUCTION JOINT |
| CL | CENTER LINE |
| CLR | CLEAR |
| CMU | CONCRETE MASONRY UNIT |
| CO | CLEAN OUT |
| COL | COLUMN |
| CONC | CONCRETE |
| CONST | CONSTRUCTION |
| CONT | CONTINUOUS |
| CONTR | CONTRACTOR |
| CP | CONCRETE PLANK |
| CLJ | CONTROL JOINT |
| CTR | CENTER |
| CY | CUBIC YARD |
| DET | DETAIL |
| DIA (ø) | DIAMETER |
| DIAG | DIAGONAL |
| DIM | DIMENSION |
| DIST | DISTANCE |
| DN | DOWN |
| DO | DITTO |
| DP | DEEP |
| DWG | DRAWING |
| DWL | DOWEL |
| E | EAST |
| EA | EACH |
| EF | EACH FACE |
| EL | ELEVATION |
| ELEV | ELEVATOR |
| ENGR | ENGINEER |
| EMB | EMBEDMENT |
| ENCL | ENCLOSURE |
| ENT | ENTRANCE |
| EQ | EQUAL |
| EQPT | EQUIPMENT |
| EW | EACH WAY |
| EXIST | EXISTING |
| EXP | EXPANSION |
| EXP JT | EXPANSION JOINT |
| EXT | EXTERIOR |
| FAB | FABRICATE |
| FD | FLOOR DRAIN |
| FDN | FOUNDATION |
| FFL | FINISH FLOOR |
| FIN | FINISH |
| FLR | FLOOR |
| FT | FEET |
| FTG | FOOTING |
| F&C | FRAME&COVER |
| F&G | FRAME&GRATE |

| | |
|---|---|
| GA | GAUGE |
| GALV | GALVANIZE |
| GB | GRADE BEAM |
| GR | GRADE |
| GRTG | GRATING |
| HGT | HEIGHT |
| HORZ | HORIZONTAL |
| HP | HIGH POINT |
| HSS | HOLLOW STRUCTURAL STEEL |
| ID | INSIDE DIAMETER |
| IF | INSIDE FACE |
| IN | INCH |
| INCL | INCLUDE |
| INT | INTERIOR |
| INV | INVERT |
| J | JOIST |
| JB | JUNCTION BOX |
| JCT | JUNCTION |
| JT | JOINT |
| L | LENGTH/ANGLE |
| LF | LINEAR FEET |
| LG | LONG |
| LL | LIVE LOAD |
| LLH | LONG LEG HORIZONTAL |
| LLV | LONG LEG VERTICAL |
| LOC | LOCATION |
| LP | LOW POINT |
| LVR | LOUVER |
| LWL | LOW WATER LEVEL |
| MAS | MASONRY |
| MATL | MATERIAL |
| MAX | MAXIMUM |
| MECH | MECHANICAL |
| MET | METAL |
| MFR | MANUFACTURER |
| MG | MILLION GALLONS |
| MGD | MILLION GALLONS PER DAY |
| MH | MANHOLE |
| MIN | MINIMUM |
| MISC | MISCELLANEOUS |
| MO | MASONRY OPENING |
| MOD | MODIFY/MODIFIED |
| MTD | MOUNTED |
| N | NORTH |
| NA | NOT APPLICABLE |
| NIC | NOT IN CONTRACT |
| NO | NUMBER |
| NOM | NOMINAL |
| NTS | NOT TO SCALE |
| OC | ON CENTER |
| OD | OUTSIDE DIAMETER |
| OF | OUTSIDE FACE |
| OPNG | OPENING |
| OPP | OPPOSITE |
| OT | OPEN TRUSS |
| OVHD | OVERHEAD |
| PAR | PARALLEL |
| PC | POINT OF CURVE/PIECE |
| PCO | PILE CUT OFF |
| PI | POINT OF INTERSECTION |
| PL | PLATE/PROPERTY LINE |
| PREFAB | PREFABRICATED |
| PSF | POUNDS PER SQUARE FOOT |
| PSI | POUNDS PER SQUARE INCH |
| PT | POINT OF TANGENCY |
| PTN | PARTITION |
| PVMT | PAVEMENT |
| QTY | QUANTITY |

| | |
|---|---|
| R | RISER |
| RAD | RADIUS |
| RCP | REINFORCED CONCRETE PIPE |
| RD | ROOF DRAIN |
| REINF | REINFORCEMENT |
| RECT | RECTANGULAR |
| REM | REMOVE |
| REQD | REQUIRED |
| RF | ROOF |
| RO | ROUGH OPENING |
| S | SOUTH |
| SCHED | SCHEDULE |
| SECT | SECTION |
| SF | SQUARE FEET |
| SHT | SHEET |
| SIM | SIMILAR |
| SJ | STEEL JOIST |
| SPEC | SPECIFICATION |
| SQ | SQUARE |
| SS | STAINLESS STEEL |
| STA | STATION |
| STD | STANDARD |
| STR | STAIR |
| STIF | STIFFENER |
| STIR | STIRRUP |
| STL | STEEL |
| STRUC | STRUCTURAL |
| SUB | SUBSTITUTE |
| SYM | SYMMETRICAL |
| T | TREAD |
| T&B | TOP AND BOTTOM |
| T&G | TOUNGE AND GROOVE |
| TAN | TANGENT |
| TEMP | TEMPERATURE |
| THK | THICK |
| TOC | TOP OF CURB/CONCRETE |
| TOD | TOP OF DECK |
| TOF | TOP OF FOOTING |
| TOM | TOP OF MASONRY/MANHOLE |
| TOS | TOP OF SLAB/STEEL |
| TOW | TOP OF WALL |
| TYP | TYPICAL |
| UNO | UNLESS NOTED OTHERWISE |
| VERT | VERTICAL |
| W | WEST/WIDTH/WIDE FLANGE |
| W/ | WITH |
| W/O | WITHOUT |
| WL | WATER LEVEL |
| WP | WATERPROOF/WALL PIPE |
| WPT | WALL PENETRATING TYPE |
| WS | WATER SURFACE |
| WT | WEIGHT |
| WWF | WELDED WIRE FABRIC |
| YD | YARD |
| YR | YEAR |

# SYMBOLS

- UNDISTURBED EARTH
- COMPACTED BACKFILL
- SELECT GRANULAR FILL MATERIAL
- CONCRETE BLOCK
- BRICK
- FINISHED WOOD
- CONCRETE
- ROUGH WOOD
- RIGID INSULATION
- REINFORCED STEEL IN CONCRETE
- WELDED WIRE FABRIC
- BLANKET INSULATION
- STEEL
- DENOTES MOMENT CONNECTION

CONSULTANT INFORMATION

Savin Engineers, P.C.

CONSULTANT SEAL

STATE OF NEW YORK — LICENSED PROFESSIONAL ENGINEER — No. 065362

| REVISION NUMBER | DATE | MADE BY | APP'D BY | REVISION |
|---|---|---|---|---|
| | | | | |

RECORD DRAWING CERTIFICATION

☐ AS BUILT – CHANGES AS NOTED ☐ AS BUILT – NO CHANGES

CONTRACTOR
NAME
SIGNATURE
TITLE DATE

PROJECT COORDINATOR
NAME
SIGNATURE
TITLE DATE

WESTCHESTER COUNTY, NEW YORK
DEPARTMENT OF PUBLIC WORKS AND TRANSPORTATION
DIVISION OF ENGINEERING

**INFRASTRUCTURE REHABILITATION - PHASE 3**
**PLAYLAND PARK, RYE, NEW YORK**
**CROSS AXIS BUILDING A**
**STRUCTURAL ABBREVIATIONS AND SYMBOLS**

| | |
|---|---|
| CONTRACT NUMBER | 22-523 |
| SHEET NUMBER | CXA-S-02 |
| DWG NO.: | |
| SCALE: | AS SHOWN |
| DATE: | 8/23/ 2022 |
| DPW FILE NUMBER | 1-118-S-889-0 |
| REV. NO. | 0 |



Drawing Name: G:\SavinAutocad\2060\25-Playland-Mega-3\S\CXAS-1002.dwg
Rev#: Projectname: ---- Comments: All inquiries regarding this drawing(s) or project should be made to NYC Environmental Protection, Bureau of Engineering Design and Construction.
Printed by: ---- Date: 8/24/2022 11:36 AM Designed by: ----

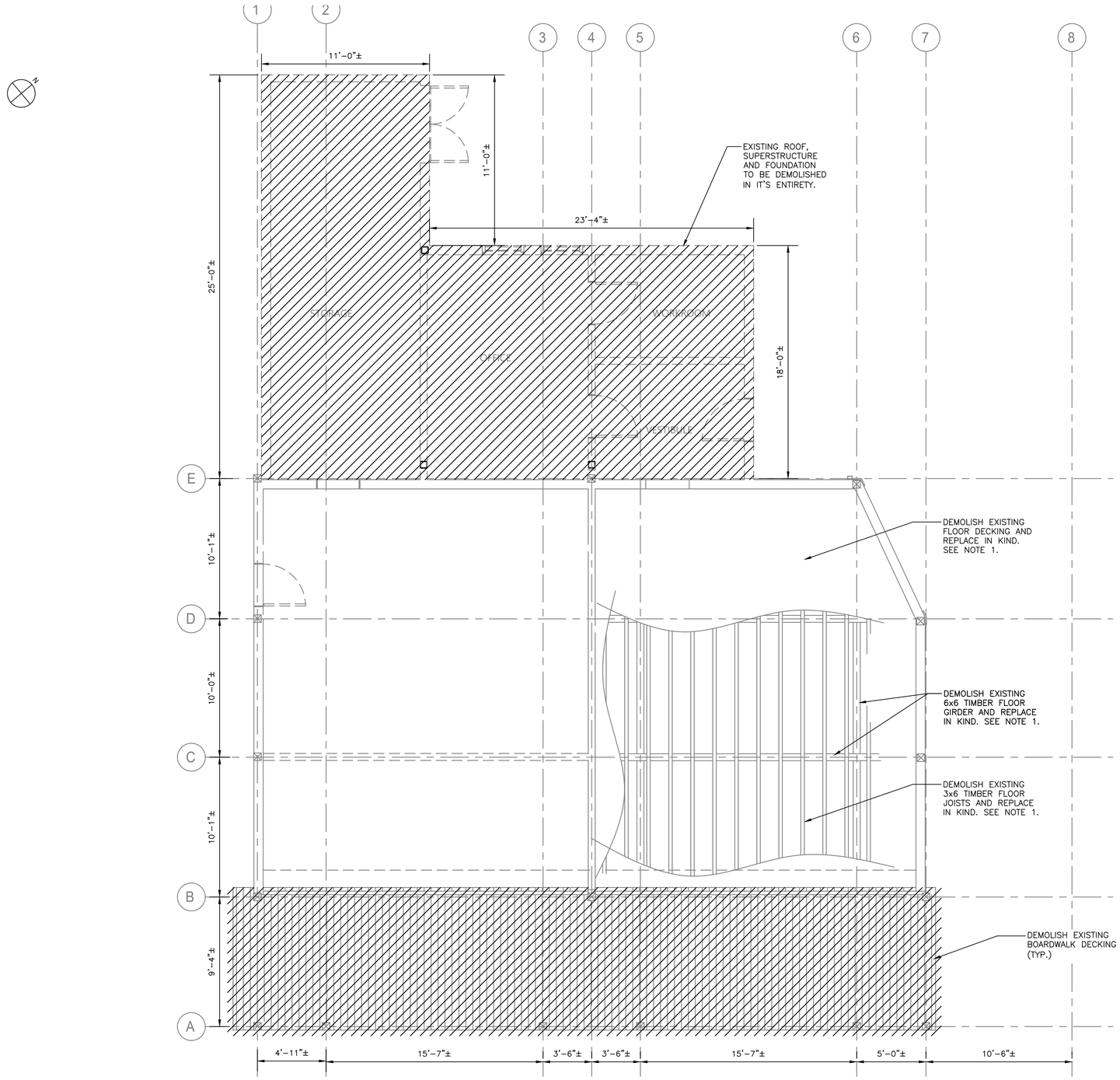


DEMOLITION – GROUND FLOOR PLAN
1/4"=1'-0"

NOTES:

1. REHABILITATION OF THE CROSS AXIS BUILDING A INCLUDES VARIOUS ELEMENTS SLATED FOR REMOVAL AND REPLACEMENT IN-KIND FOR DETERIORATED MEMBERS. CONTRACTOR IS TO ALERT THE ENGINEER 6 WEEKS PRIOR TO START OF REHABILITATION WORK TO PERFORM FIELD INSPECTION OF THE REPAIR ITEMS IDENTIFIED BELOW. UPON COMPLETION OF THE FIELD INSPECTION WORK, THE ENGINEER WILL PROVIDE TO THE CONTRACTOR IN WRITING THE DEFINED LIMITS OF REPLACEMENT WORK. REHABILITATION WORK FOR VARIOUS ELEMENTS SHALL BE PERFORMED PER DETAILS AND SEQUENCES AS OUTLINED ON DRAWINGS, CXA-S-03, CXA-S-04, CXA-S-05, CXA-S-06, CXA-S-07, CXA-S-08 AND CXA-S-09. FOR THE PURPOSES OF BIDDING, CONTRACTOR SHALL INCLUDE IN THEIR BID THE QUANTITIES FOR EACH ELEMENT AS MENTIONED BELOW.

| STRUCTURAL ELEMENTS TO BE REPAIRED/REPLACED | QUANTITY | UNITS | REMARKS |
|---|---|---|---|
| 6"x6" TIMBER FLOOR GIRDERS | 10 | EA | APPROXIMATELY 10 FT LONG EACH |
| 3"x6" TIMBER FLOOR JOISTS | 50 | EA | APPROXIMATELY 20 FT LONG EACH |
| 1"x6" TIMBER FLOOR DECKING | 1450 | SF | |

NOTE THAT FLOOR GIRDERS AND FLOOR JOIST LOCATIONS MAY BE ANYWHERE WITHIN THE LIMITS OF THE EXISTING FLOOR DECKING. COSTS FOR REMOVAL AND REINSTALLATION OF EXISTING FLOOR DECKING IN ORDER TO ACCESS GIRDERS AND JOISTS SHALL BE DEEMED INCLUDED IN THE CONTRACTOR BID. EXECUTIONS OF THE ABOVE REHABILITATING WORK SHALL BE COORDINATED WITH OVERALL CONSTRUCTION SEQUENCE AND PHASING. SEE SPECIFICATION.

FOR TYPICAL DETAIL OF FLOOR/GIRDER FRAMING AND CONNECTIONS, SEE DRAWING CXA-S-12.

0 4' 8'
SCALE: 1/4" = 1'-0"

Drawing Name: \\se-fs-01\Environmental\2060.25 – Playland Rehabilitation\04 – Design\MEGA
CONTRACT #3\Drawings\CADD\S\CXAS-1003.dwg
Projectname: 211001F02 Comments: ----
Printed by: ######## Date: 26 August 2022 10:14 AM Designed by: ----

CONSULTANT INFORMATION
Savin Engineers, P.C.

CONSULTANT SEAL

| REVISION NUMBER | DATE | MADE BY | APP'D BY | REVISION |
|---|---|---|---|---|

RECORD DRAWING CERTIFICATION
☐ AS BUILT – CHANGES AS NOTED ☐ AS BUILT – NO CHANGES

CONTRACTOR
NAME
SIGNATURE
TITLE DATE

PROJECT COORDINATOR
NAME
SIGNATURE
TITLE DATE

WESTCHESTER COUNTY, NEW YORK
DEPARTMENT OF PUBLIC WORKS AND TRANSPORTATION
DIVISION OF ENGINEERING

INFRASTRUCTURE REHABILITATION - PHASE 3
PLAYLAND PARK, RYE, NEW YORK
CROSS AXIS BUILDING A
DEMOLITION - GROUND FLOOR PLAN

CONTRACT NUMBER 22-523
SHEET NUMBER CXA-S-03
DWG NO.: 141 of 664
SCALE: AS SHOWN
DATE: 8/23/2022
DPW FILE NUMBER 1-118-S-890-0
REV. NO. 0

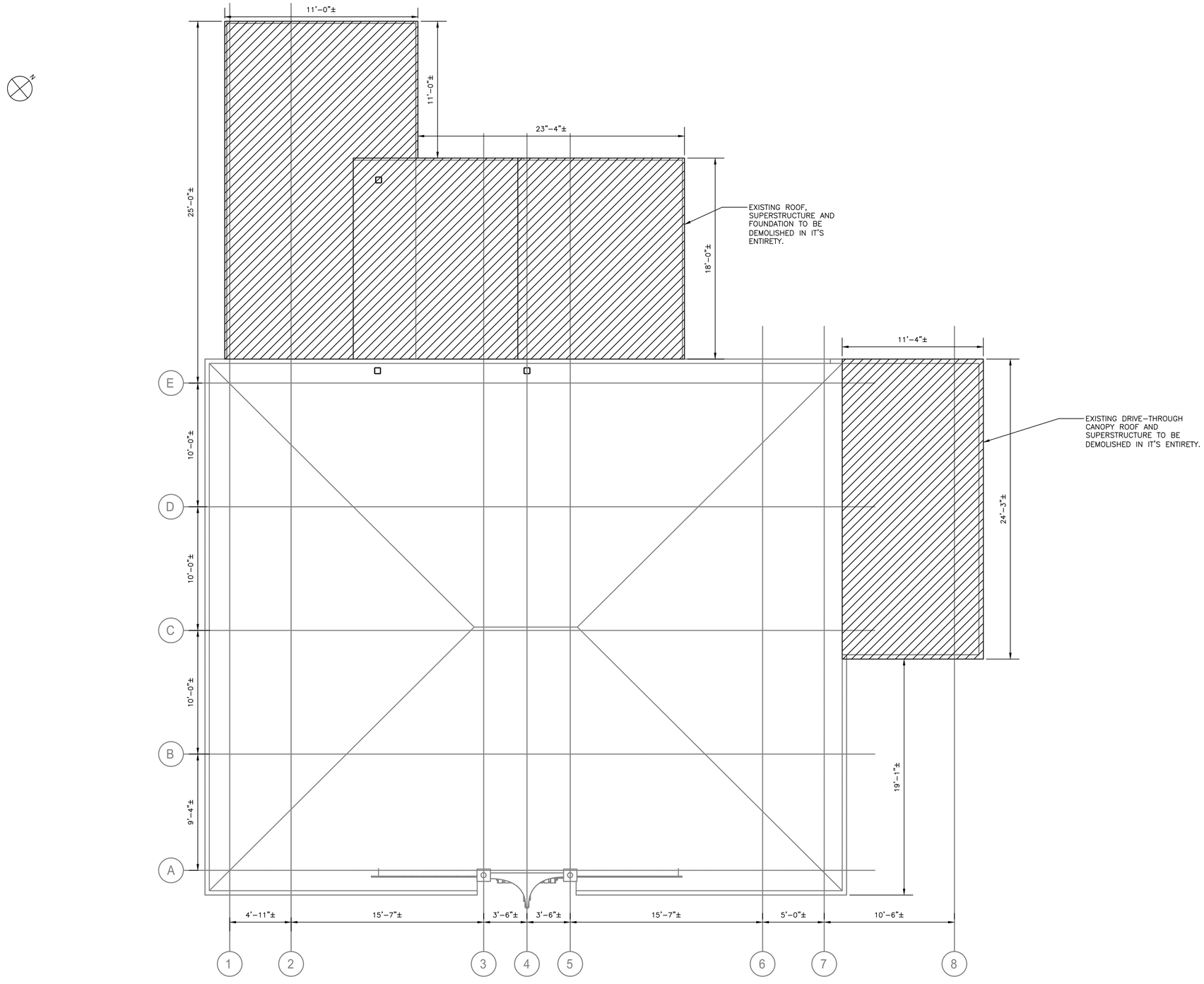


DEMOLITION – ROOF PLAN
1/4"=1'-0"

0 4' 8'
SCALE: 1/4" = 1'-0"

Drawing Name: G:\SavinAutocad\2060\25-Playland-Mega-3\S\CXAS-1004.dwg
Rev#: Projectname: 211001F02 Comments: ----
Printed by: BKnittle Date: 15 August 2022 11:36 AM Designed by: ----
Xrefs: [TB_24X36_WestchesterCo_3.dwg] [TSG-SVLOGO.dwg] [CXA-S-1001.dwg] [CXA-A-02.dwg]

CONSULTANT INFORMATION
Savin Engineers, P.C.

CONSULTANT SEAL

| REVISION NUMBER | DATE | MADE BY | APP'D BY | REVISION |
|---|---|---|---|---|

RECORD DRAWING CERTIFICATION
AS BUILT – CHANGES AS NOTED
AS BUILT – NO CHANGES

CONTRACTOR
NAME
SIGNATURE
TITLE DATE

PROJECT COORDINATOR
NAME
SIGNATURE
TITLE DATE

WESTCHESTER COUNTY, NEW YORK
DEPARTMENT OF PUBLIC WORKS AND TRANSPORTATION
DIVISION OF ENGINEERING

**INFRASTRUCTURE REHABILITATION - PHASE 3**
**PLAYLAND PARK, RYE, NEW YORK**
**CROSS AXIS BUILDING A**
**DEMOLITION - ROOF PLAN**

| | |
|---|---|
| CONTRACT NUMBER | 22-523 |
| SHEET NUMBER | CXA-S-04 |
| DWG NO.: | |
| SCALE: | AS SHOWN |
| DATE: | 8/23/ 2022 |
| DPW FILE NUMBER | 1-118-S-891-0 |
| REV. NO. | 0 |

NOTES:

1. CONTRACTOR SHALL SUBMIT A COLUMN REPAIR SEQUENCE OF CONSTRUCTION TO ENGINEER FOR REVIEW. THE FOLLOWING SHALL BE THE MINIMUM REQUIRED.
2. TEMPORARY SHORING AT EACH COLUMN LOCATION SHALL HAVE A MINIMUM 10-TON CAPACITY.
3. COLUMN REPAIR SHALL BE LIMITED TO MAXIMUM 2 COLUMNS AT A TIME. COLUMNS UNDER REPAIR MUST NOT BE ADJACENT TO EACH OTHER.
4. ALL HARDWARE SHALL BE TYPE 316 STAINLESS STEEL, UNLESS OTHERWISE NOTED.
5. SUPPORT OF EXCAVATION SYSTEM SHALL BE DESIGNED BY A NYS LICENSED PROFESSIONAL ENGINEER HAVING KNOWLEDGE IN THIS DISCIPLINE. DRAWINGS SHALL BE SUBMITTED TO WESTCHESTER COUNTY BUILDING AND CODE ENFORCEMENT DIVISION FOR REVIEW PRIOR TO COMMENCEMENT OF WORK. SEE SPECIFICATION 31 41 00 FOR ADDITIONAL REQUIREMENTS.

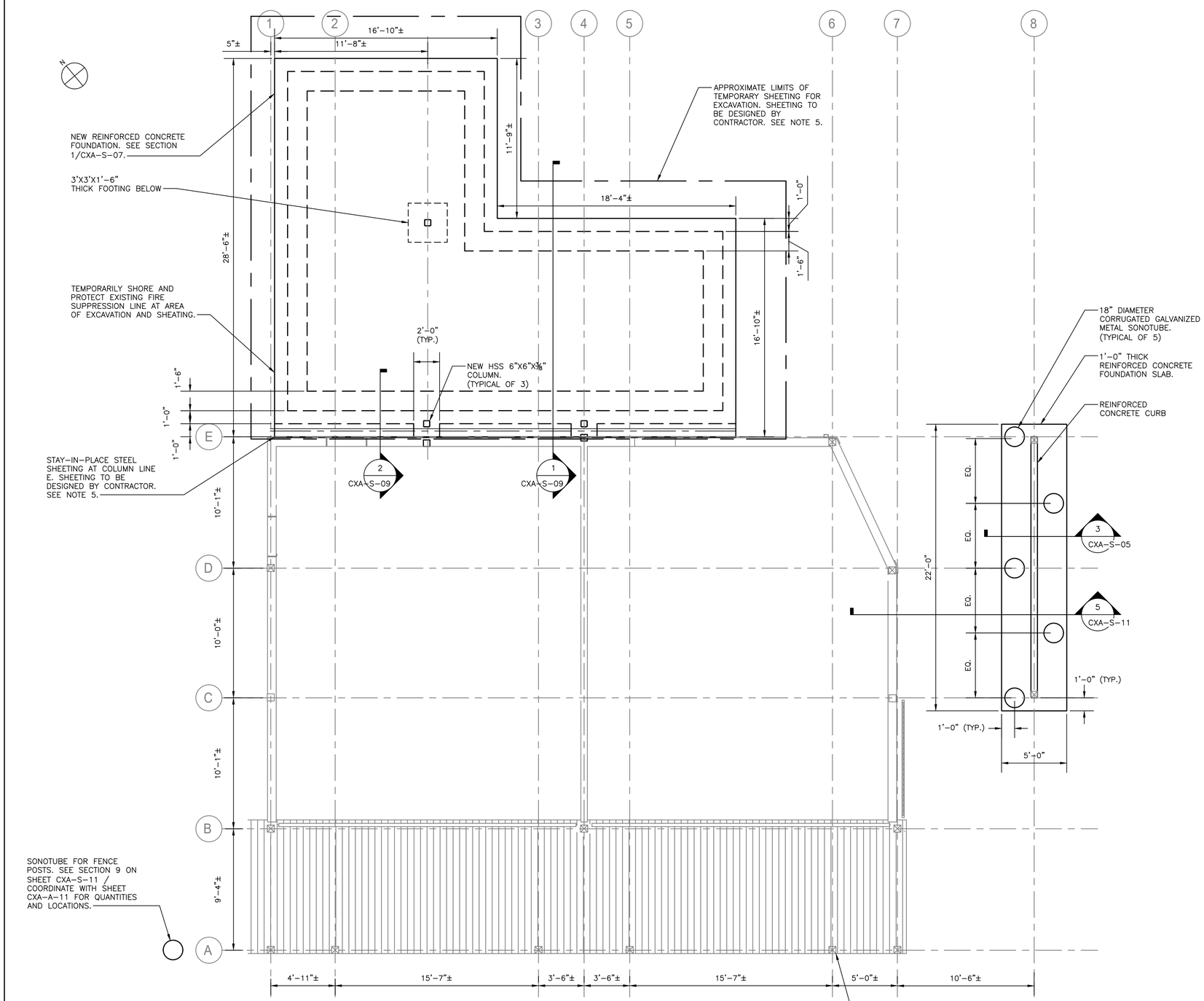


FOUNDATION PLAN
1/4"=1'-0"

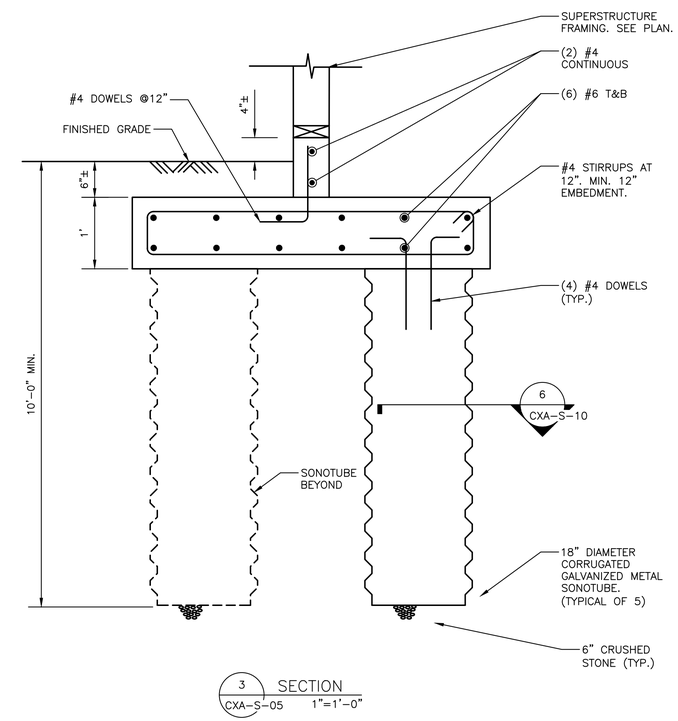


3 SECTION
CXA-S-05 1"=1'-0"

SCALE: 1" = 1'-0"

SCALE: 1/4" = 1'-0"

Drawing Name: \\se-fs-01\Environmental\2060.25 - Playland Rehabilitation\04 - Design\MEGA
CONTRACT #3\Drawings\CADD\S\CXAS-1005.dwg
Projectname: 211001F02 Comments: ----
Printed by: ######## Date: 26 August 2022 10:00 AM Designed by: ----

CONSULTANT INFORMATION

Savin Engineers, P.C.

CONSULTANT SEAL

| REVISION NUMBER | DATE | MADE BY | APP'D BY | REVISION |
|---|---|---|---|---|

RECORD DRAWING CERTIFICATION

☐ AS BUILT - CHANGES AS NOTED ☐ AS BUILT - NO CHANGES

CONTRACTOR
NAME
SIGNATURE
TITLE DATE

PROJECT COORDINATOR
NAME
SIGNATURE
TITLE DATE

WESTCHESTER COUNTY, NEW YORK
DEPARTMENT OF PUBLIC WORKS AND TRANSPORTATION
DIVISION OF ENGINEERING

INFRASTRUCTURE REHABILITATION - PHASE 3
PLAYLAND PARK, RYE, NEW YORK
CROSS AXIS BUILDING A
FOUNDATION PLAN

| | |
|---|---|
| CONTRACT NUMBER | 22-523 |
| SHEET NUMBER | CXA-S-05 |
| DWG NO.: | 143 of 664 |
| SCALE: | AS SHOWN |
| DATE: | 8/23/2022 |
| DPW FILE NUMBER | 1-118-S-892-0 |
| REV. NO. | 0 |

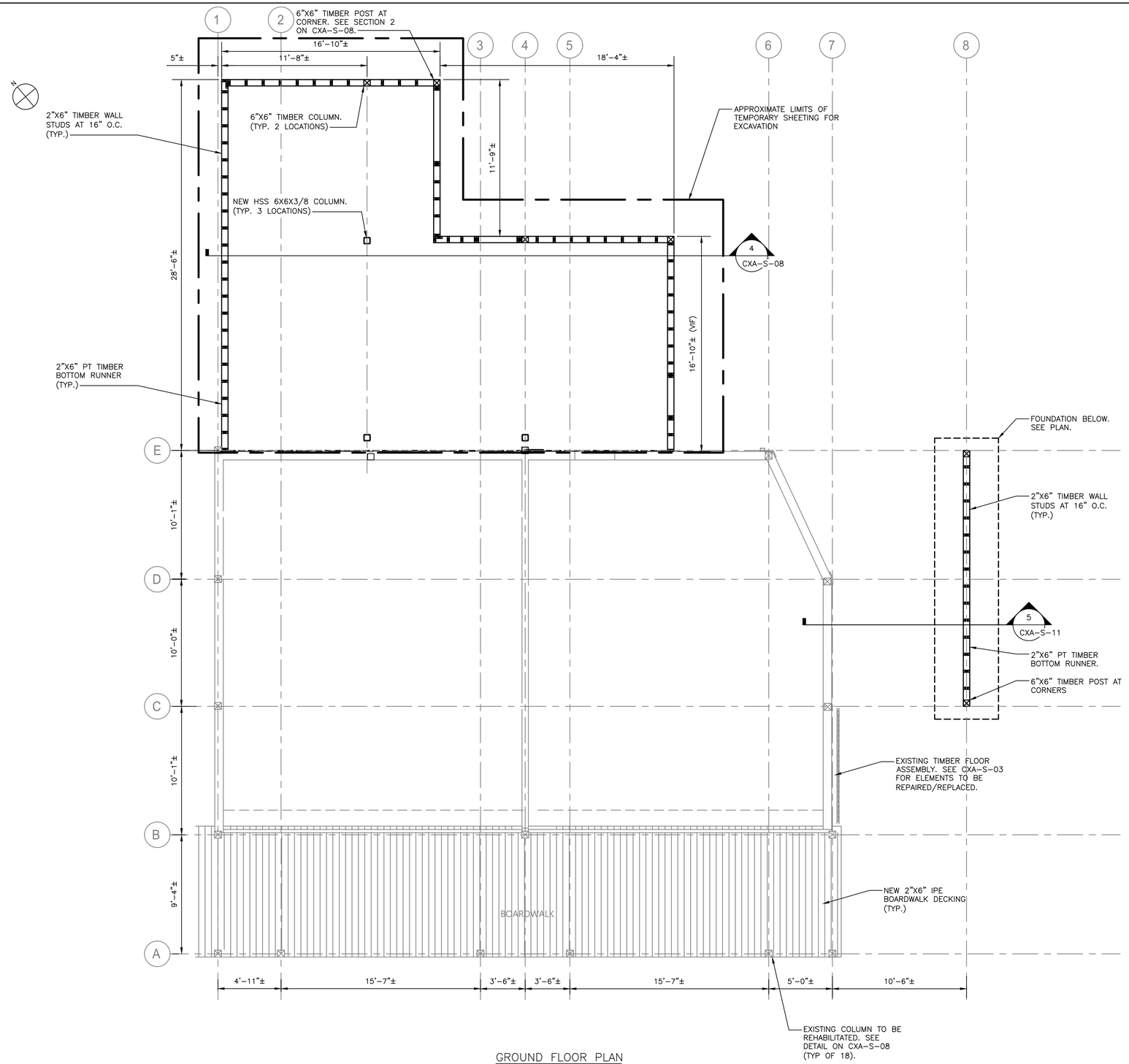


GROUND FLOOR PLAN
1/4"=1'-0"

NOTES:

1. FOR STRUCTURAL NOTES, SEE DRAWING CXA-S-01.
2. FOR STRUCTURAL NOTES AND ABBREVIATIONS, SEE DRAWINGS CXA-S-02.
3. CONTRACTOR IS ALERTED OF HIGH WATER TABLE AND SHALL INCLUDE IN THEIR BID, ALL COSTS ASSOCIATED WITH DEWATERING.
4. SEE CIVIL DRAWINGS FOR SURFACE RESTORATION.
5. COORDINATE INTERIOR WALL LAYOUTS AND OPENINGS WITH ARCHITECTURAL DRAWINGS.

0 4' 8'
SCALE: 1/4" = 1'-0"

CONSULTANT INFORMATION

Savin Engineers, P.C.

CONSULTANT SEAL

| REVISION NUMBER | DATE | MADE BY | APP'D BY | REVISION |
|---|---|---|---|---|

RECORD DRAWING CERTIFICATION

☐ AS BUILT – CHANGES AS NOTED ☐ AS BUILT – NO CHANGES

CONTRACTOR
NAME
SIGNATURE
TITLE DATE

PROJECT COORDINATOR
NAME
SIGNATURE
TITLE DATE

WESTCHESTER COUNTY, NEW YORK
DEPARTMENT OF PUBLIC WORKS AND TRANSPORTATION
DIVISION OF ENGINEERING

**INFRASTRUCTURE REHABILITATION - PHASE 3**
**PLAYLAND PARK, RYE, NEW YORK**
**CROSS AXIS BUILDING A**
**GROUND FLOOR PLAN**

| | |
|---|---|
| CONTRACT NUMBER | 22-523 |
| SHEET NUMBER | CXA-S-06 |
| DWG NO.: | |
| SCALE: | AS SHOWN |
| DATE: | 8/23/ 2022 |
| DPW FILE NUMBER | 1-118-S-893-0 |
| REV. NO. | 0 |

144 of 664

Drawing Name: G:\SavinAutocad\2060\25-Playland-Mega-3\S\CXAS-1006.dwg
Reref: Projectname: 211001F02 Comments: ----
Printed by: BKnittle Date: 15 August 2022 11:37 AM Designed by: ----
Xrefs: [TB_24X36_WestchesterCo_3.dwg] [TSG-SVL060.dwg] [CXA-S-1002.dwg] [CXA-S-Underground.dwg] [CXA-A-01.dwg

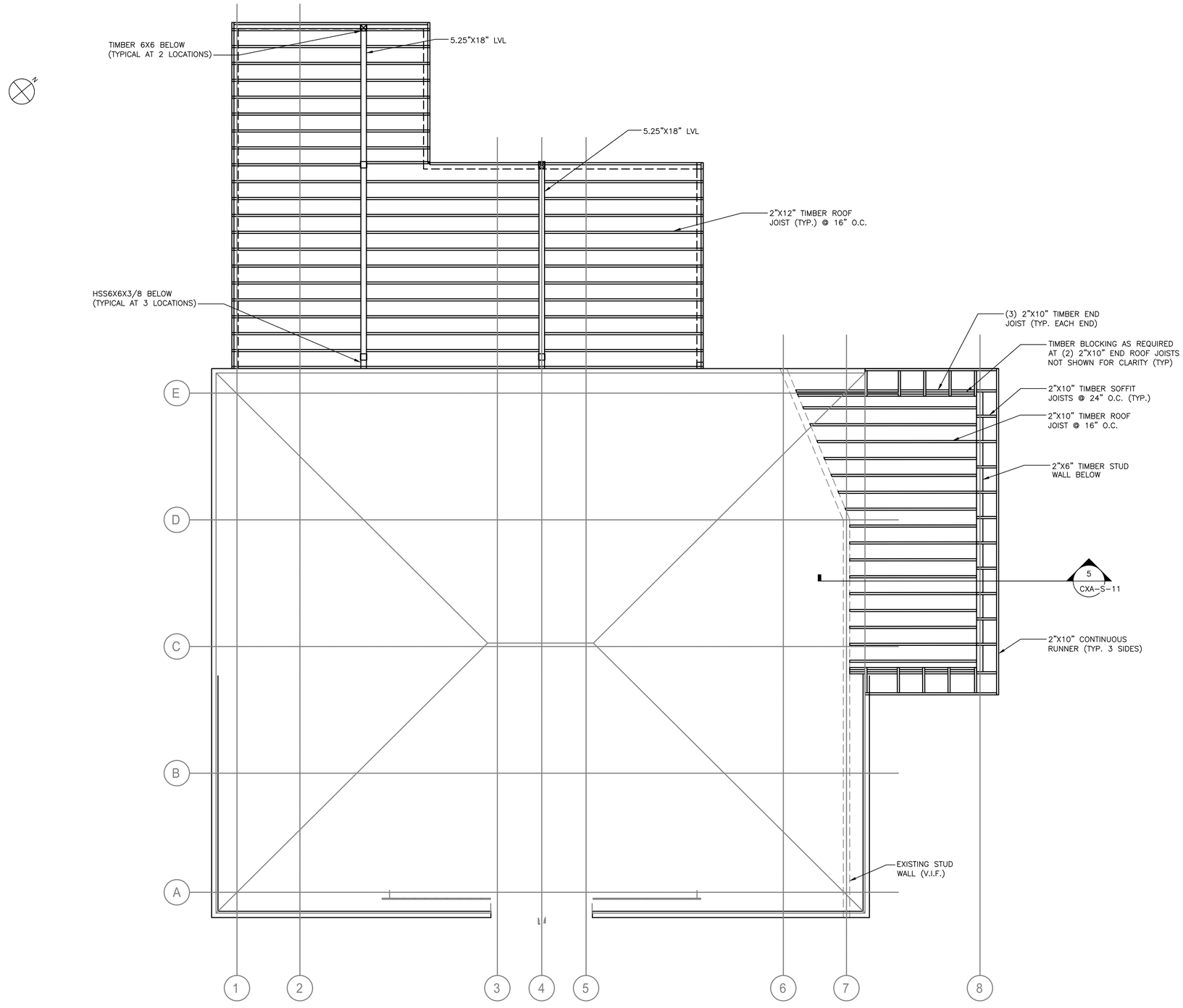


ROOF PLAN
1/4"=1'-0"

0 4' 8'
SCALE: 1/4" = 1'-0"

Drawing Name: G:\SavinAutocad\2060\25-Playland-Mega-3\S\CXAS-1007.dwg
Rev#: Projectname: 211001F02 Comments: ----
Printed by: BKnittle Date: 15 August 2022 11:38 AM Designed by: ----
Xrefs: [TB_24X36_WestchesterCo_3.dwg] [TSG-SVLOGO.dwg] [CXA-S-1004.dwg] [CXA-A-02.dwg]

CONSULTANT INFORMATION

Savin Engineers, P.C.

CONSULTANT SEAL

| REVISION NUMBER | DATE | MADE BY | APP'D BY | REVISION |
|---|---|---|---|---|

RECORD DRAWING CERTIFICATION

☐ AS BUILT – CHANGES AS NOTED ☐ AS BUILT – NO CHANGES

CONTRACTOR
NAME
SIGNATURE
TITLE DATE

PROJECT COORDINATOR
NAME
SIGNATURE
TITLE DATE

WESTCHESTER COUNTY, NEW YORK
DEPARTMENT OF PUBLIC WORKS AND TRANSPORTATION
DIVISION OF ENGINEERING

**INFRASTRUCTURE REHABILITATION - PHASE 3**
**PLAYLAND PARK, RYE, NEW YORK**
**CROSS AXIS BUILDING A**
**ROOF PLAN**

| | |
|---|---|
| CONTRACT NUMBER | 22-523 |
| SHEET NUMBER | CXA-S-07 |
| DWG NO.: | |
| SCALE: | AS SHOWN |
| DATE: | 8/23/ 2022 |
| DPW FILE NUMBER | 1-118-S-894-0 |
| REV. NO. | 0 |

145 of 664

NOTES:

1. INTERMEDIATE STUD FRAMING NOT SHOWN FOR CLARITY. SEE GROUND FLOOR PLAN AND TYPICAL DETAILS. SEE A DRAWINGS FOR OPENING SIZES AND LOCATIONS.
2. SEE TYPICAL DETAILS FOR FRAMING HARDWARE ON CXA–S–11.

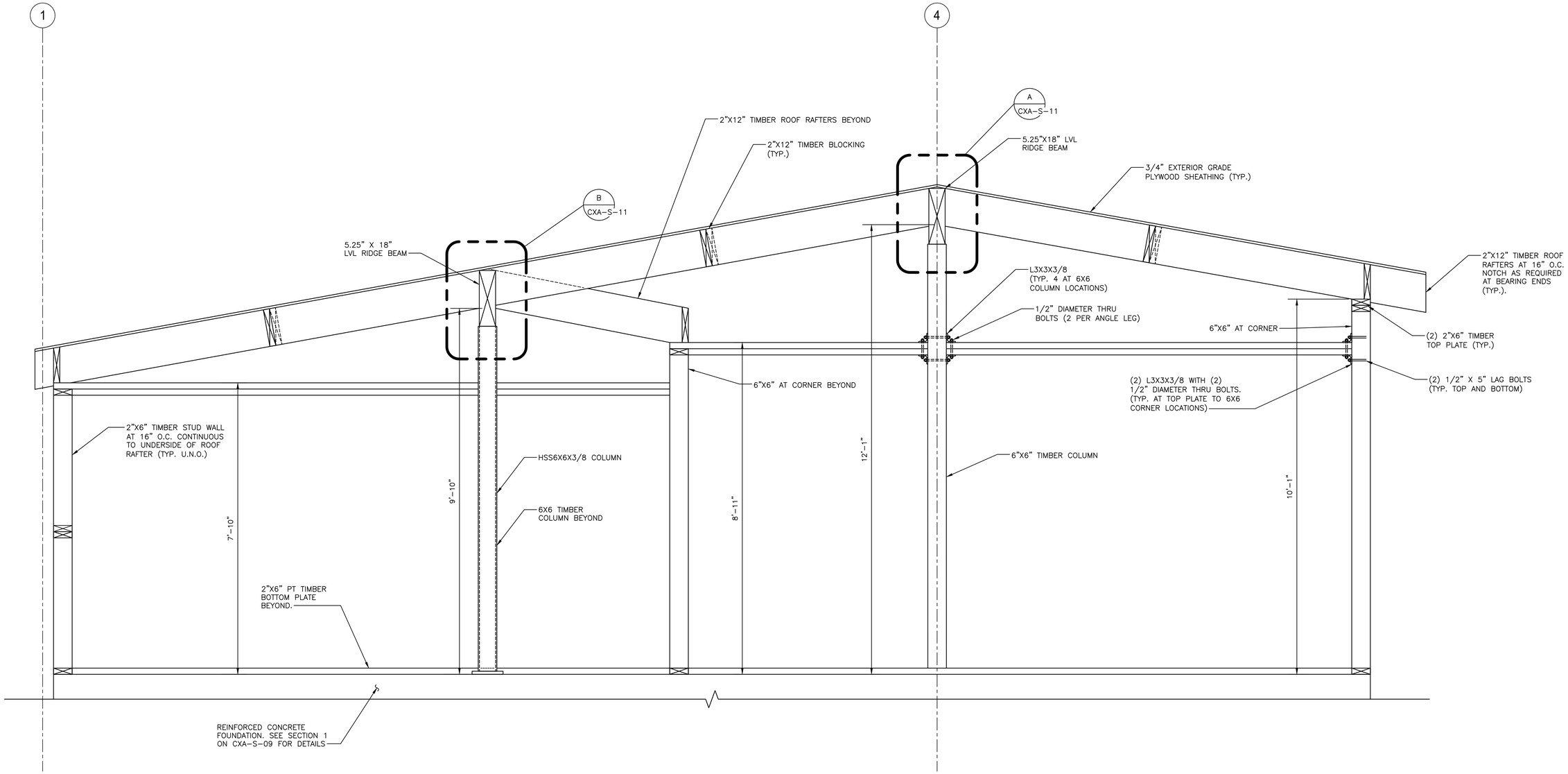


4 SECTION
CXA–S–06 3/4"=1'–0"

0 1' 2'
SCALE: 3/4" = 1'–0"

Drawing Name: \\se-fs-01\Environmental\2060.25 – Playland Rehabilitation\04 – Design\MEGA
CONTRACT #3\Drawings\CADD\S\CXAS-1008.dwg
Projectname: 211001F02 Comments: ----
Printed by: ######## Date: 26 August 2022 12:54 PM Designed by: ----

CONSULTANT INFORMATION
Savin Engineers, P.C.

CONSULTANT SEAL
STATE OF NEW YORK · LICENSED PROFESSIONAL ENGINEER · No. 085364

| REVISION NUMBER | DATE | MADE BY | APP'D BY | REVISION |
|---|---|---|---|---|

RECORD DRAWING CERTIFICATION
☐ AS BUILT – CHANGES AS NOTED ☐ AS BUILT – NO CHANGES

CONTRACTOR
NAME
SIGNATURE
TITLE DATE

PROJECT COORDINATOR
NAME
SIGNATURE
TITLE DATE

WESTCHESTER COUNTY, NEW YORK
DEPARTMENT OF PUBLIC WORKS AND TRANSPORTATION
DIVISION OF ENGINEERING

**INFRASTRUCTURE REHABILITATION - PHASE 3**
**PLAYLAND PARK, RYE, NEW YORK**
**CROSS AXIS BUILDING A**
**SECTION**

| | |
|---|---|
| CONTRACT NUMBER | 22-523 |
| SHEET NUMBER | CXA-S-08 |
| DWG NO.: | 146 of 664 |
| SCALE: | AS SHOWN |
| DATE: | 8/23/2022 |
| DPW FILE NUMBER | 1-118-S-895-0 |
| REV. NO. | 0 |

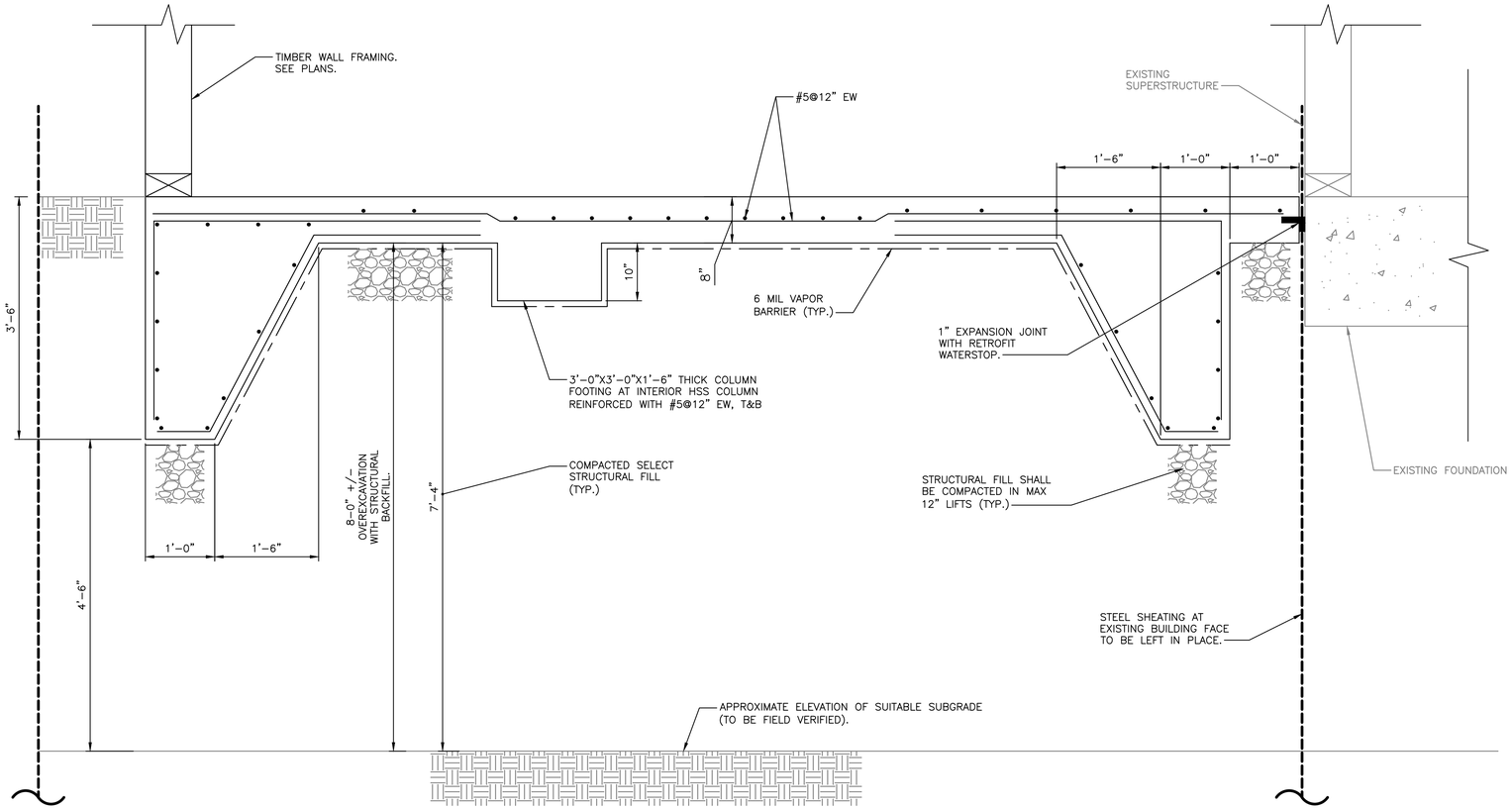


1 SECTION
CXA-S-05 1"=1'-0"

0 1' 2'
SCALE: 1" = 1'-0"

NOTES:

1. FOR STRUCTURAL NOTES, SEE DRAWING CXA-S-01.
2. FOR STRUCTURAL NOTES AND ABBREVIATIONS, SEE DRAWINGS CXA-S-02.
3. CONTRACTOR IS ALERTED OF HIGH WATER TABLE AND SHALL INCLUDE IN THEIR BID, ALL COSTS ASSOCIATED WITH DEWATERING.
4. SEE CIVIL DRAWINGS FOR SURFACE RESTORATION.

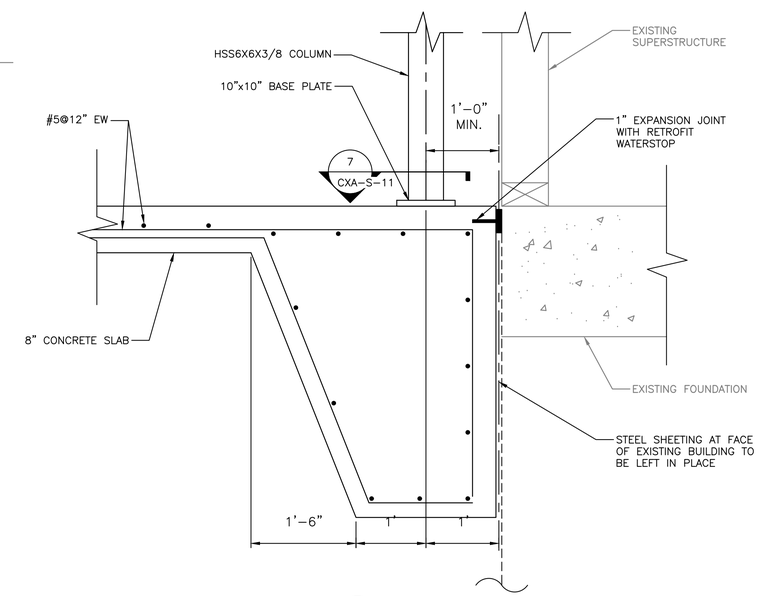


2 SECTION
CXA-S-05 1"=1'-0"

0 1' 2'
SCALE: 1" = 1'-0"

BASIC DEVELOPMENT LENGTH AND SPLICE LENGTH

FOR BARS IN TENSION

fy = 60,000 psi fc = 4000 psi OR GREATER, NORMAL WEIGHT CONCRETE

| BASIC DEVELOPMENT LENGTH ** l d | | | | BAR SIZE | CLASS B SPLICE LENGTH ** 1.3 x l d | | | |
|---|---|---|---|---|---|---|---|---|
| CLEAR SPACING > 3" | | CLEAR SPACING < 3" | | | CLEAR SPACING > 3" | | CLEAR SPACING < 3" | |
| BASIC | TOP * | BASIC | TOP * | | BASIC | TOP * | BASIC | TOP * |
| 1'-0" | 1'-4" | 1'-9" | 2'-2" | #3 | 1'-4" | 1'-9" | 2'-2" | 2'-11" |
| 1'-4" | 1'-8" | 2'-2" | 2'-9" | #4 | 1'-8" | 2'-2" | 2'-9" | 3'-7" |
| 1'-8" | 2'-2" | 2'-10" | 3'-7" | #5 | 2'-2" | 2'-10" | 3'-7" | 4'-8" |
| 2'-0" | 2'-6" | 3'-3" | 4'-2" | #6 | 2'-6" | 3'-3" | 4'-2" | 5'-5" |
| 3'-6" | 4'-7" | 5'-11" | 7'-7" | #7 | 4'-7" | 5'-11" | 7'-7" | 9'-11" |
| 4'-0" | 5'-2" | 6'-9" | 8'-8" | #8 | 5'-2" | 6'-9" | 8'-8" | 11'-4" |
| 4'-6" | 5'-10" | 7'-7" | 9'-10" | #9 | 5'-10" | 7'-7" | 9'-9" | 12'-9" |
| 5'-0" | 6'-5" | 8'-6" | 11'-10" | #10 | 6'-5" | 8'-6" | 11'-0" | 13'-7" |
| 5'-7" | 7'-4" | 9'-5" | 12'-6" | #11 | 7'-4" | 9'-5" | 12'-6" | 14'-9" |

NOTES:

* TOP REINFORCEMENT IS HORIZONTAL REINFORCEMENT SO PLACED THAT MORE THAN 12 INCHES OF FRESH CONCRETE IS CAST IN THE MEMBER BELOW THE REINFORCEMENT

** LENGTHS SHOWN IN CHART SHALL BE MODIFIED WHERE REQUIRED TO CONFORM TO THE PROVISIONS OF ACI 318, SECTION 12.2

*** UNCOATED REINFORCEMENT

DEVELOPMENT LENGTH OF STANDARD HOOKS

FOR BARS IN TENSION

fy = 60,000 psi fc = 4000 psi OR GREATER, NORMAL WEIGHT CONCRETE

| BAR SIZE | DEVELOPMENT LENGTH, l dh | |
|---|---|---|
| | BASIC | W/CONC. COVER * |
| #3 | 8" | 6" |
| #4 | 10" | 7" |
| #5 | 1'-0" | 9" |
| #6 | 1'-3" | 11" |
| #7 | 1'-5" | 1'-0" |
| #8 | 1'-7" | 1'-2" |
| #9 | 1'-10" | 1'-4" |
| #10 | 2'-1" | 1'-6" |
| #11 | 2'-3" | 1'-7" |

NOTES:

* SIDE COVER NORMAL TO PLANE OF HOOK AT LEAST 2 1/2"; AND FOR 90° HOOK, END COVER BEYOND OUTSIDE END OF HOOK AT LEAST 2".

** UNCOATED REINFORCEMENT

CONSULTANT INFORMATION

Savin Engineers, P.C.

CONSULTANT SEAL

STATE OF NEW YORK
LICENSED PROFESSIONAL ENGINEER
No. 085365

| REVISION NUMBER | DATE | MADE BY | APP'D BY | REVISION |
|---|---|---|---|---|
| | | | | |

RECORD DRAWING CERTIFICATION

☐ AS BUILT – CHANGES AS NOTED ☐ AS BUILT – NO CHANGES

CONTRACTOR
NAME
SIGNATURE
TITLE DATE

PROJECT COORDINATOR
NAME
SIGNATURE
TITLE DATE

WESTCHESTER COUNTY, NEW YORK
DEPARTMENT OF PUBLIC WORKS AND TRANSPORTATION
DIVISION OF ENGINEERING

INFRASTRUCTURE REHABILITATION - PHASE 3
PLAYLAND PARK, RYE, NEW YORK
CROSS AXIS BUILDING A
SECTIONS

| | |
|---|---|
| CONTRACT NUMBER | 22-523 |
| SHEET NUMBER | CXA-S-09 |
| DWG NO.: | |
| SCALE: | AS SHOWN |
| DATE: | 8/23/ 2022 |
| DPW FILE NUMBER | 1-118-S-896-0 |
| REV. NO. | 0 |



Drawing Name: G:\SavinAutocad\2060\25-Playland-Mega-3\S\CXAS-1009.dwg
Ref#: Projectname: ---- Comments: ----
Printed by: BKnittle Date: 15 August 2022 11:38 AM Designed by: ----
Xrefs: [TSC-SVLOGO.dwg] [TB_24X36_WestchesterCo_3.dwg

NOTES:

CONTRACTOR SHALL SUBMIT A COLUMN REPAIR SEQUENCE OF CONSTRUCTION TO ENGINEER FOR REVIEW. THE FOLLOWING SHALL BE THE MINIMUM REQUIRED.

1. TEMPORARY SHORING AT EACH COLUMN LOCATION SHALL HAVE A MINIMUM 10-TON CAPACITY.
2. COLUMN REPAIR SHALL BE LIMITED TO MAXIMUM 2 COLUMNS AT A TIME. COLUMNS UNDER REPAIR MUST NOT BE ADJACENT TO EACH OTHER.
3. ALL HARDWARE SHALL BE TYPE 316 STAINLESS STEEL, UNLESS OTHERWISE NOTED.

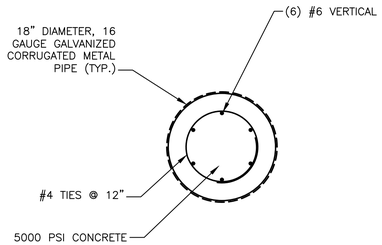


6 SECTION
CXA-S-05 SCALE: N.T.S.

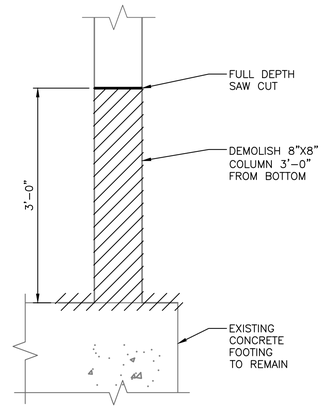


DEMOLITION
SCALE: N.T.S.

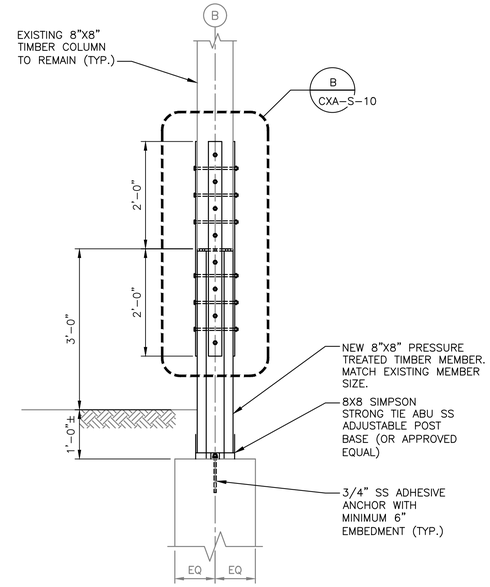


SECTION
SCALE: 3/4 = 1'-0"

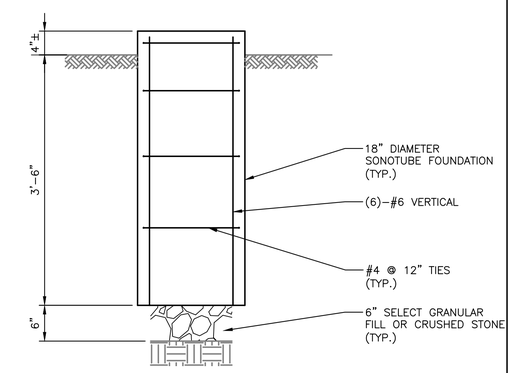


9 TYPICAL BOARDWALK SONOTUBE SECTION
CXA-S-05 1" = 1'-0"

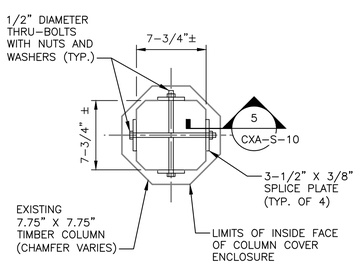


2 SECTION
CXA-S-10 SCALE: N.T.S.

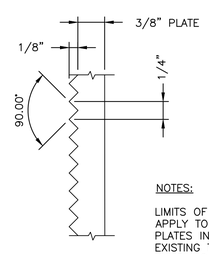


NOTES:

LIMITS OF KNURLING SHALL APPLY TO FACE OF ALL SPLICE PLATES IN CONTACT WITH EXISTING TIMBER COLUMN. KNURLING SHALL RUN AXIALLY AND HORIZONTALLY.

5 SECTION
CXA-S-10 SCALE: N.T.S.

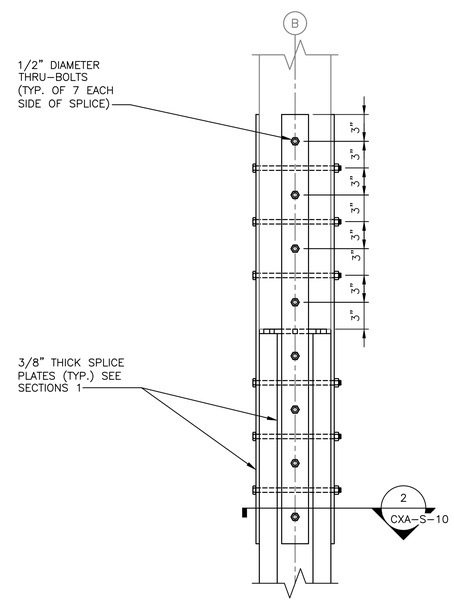


B DETAIL
CXA-S-10 SCALE: 1 1/2 = 1'-0"

SCALE: 1" = 1'-0"
SCALE: 3/4" = 1'-0"
SCALE: 1 1/2" = 1'-0"

Savin Engineers, P.C.

CONSULTANT SEAL

| REVISION NUMBER | DATE | MADE BY | APP'D BY | REVISION |
|---|---|---|---|---|

RECORD DRAWING CERTIFICATION
☐ AS BUILT – CHANGES AS NOTED ☐ AS BUILT – NO CHANGES

CONTRACTOR: NAME / SIGNATURE / TITLE / DATE
PROJECT COORDINATOR: NAME / SIGNATURE / TITLE / DATE

WESTCHESTER COUNTY, NEW YORK
DEPARTMENT OF PUBLIC WORKS AND TRANSPORTATION
DIVISION OF ENGINEERING

**INFRASTRUCTURE REHABILITATION - PHASE 3**
**PLAYLAND PARK, RYE, NEW YORK**
**CROSS AXIS BUILDING A**
**SECTIONS AND DETAILS**

| | |
|---|---|
| CONTRACT NUMBER | 22-523 |
| SHEET NUMBER | CXA-S-10 |
| DWG NO.: | 148 of 664 |
| SCALE: | AS SHOWN |
| DATE: | 8/23/2022 |
| DPW FILE NUMBER | 1-118-S-897-0 |
| REV. NO. | 0 |

Drawing Name: \\se-fs-01\Environmental\2060.25 - Playland Rehabilitation\04 - Design\MEGA CONTRACT #3\Drawings\CADD\S\CXAS-1010.dwg
Projectname: ---- Comments: ----
Printed by: ######## Date: 26 August 2022 10:17:27 AM Designed by: ----

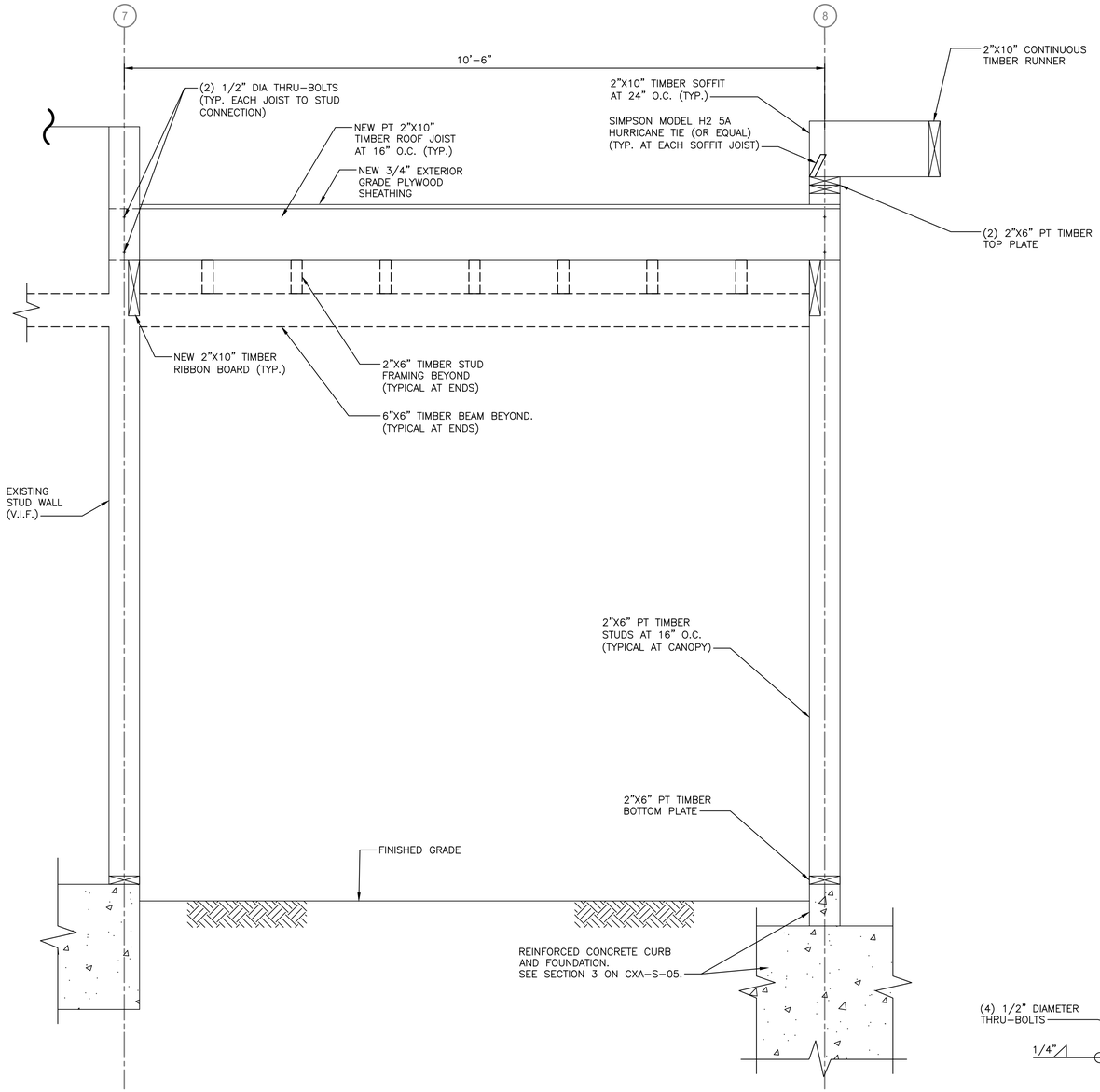


5 SECTION
CXA-S-07 1"=1'-0"

0 1' 2'
SCALE: 1" = 1'-0"

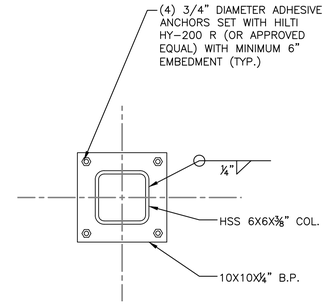


7 SECTION
CXA-S-09 SCALE: N.T.S.

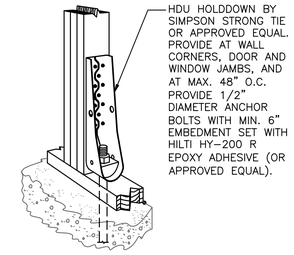


- HOLD DOWN/TENSION TIE
SCALE: N.T.S.

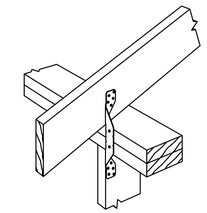

SIMPSON STRONG TIE H2 (OR APPROVED EQUAL). TYPICAL AT EACH RAFTER.

- HURRICANE TIE
SCALE: N.T.S.

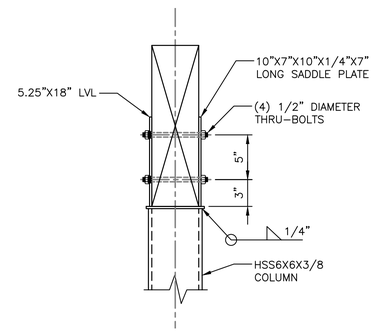


B DETAIL
CXA-S-08 SCALE: 1 1/2" = 1'-0"

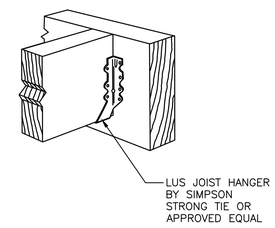


- FACE MOUNTED JOIST HANGER
SCALE: N.T.S.

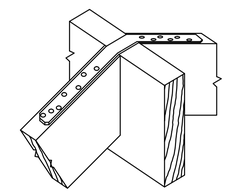

SIMPSON STRONG TIE (OR APPROVED EQUAL) AT EACH RAFTER. ATTACH DIRECTLY TO RAFTER

- RIDGE STRAPPING
SCALE: N.T.S.

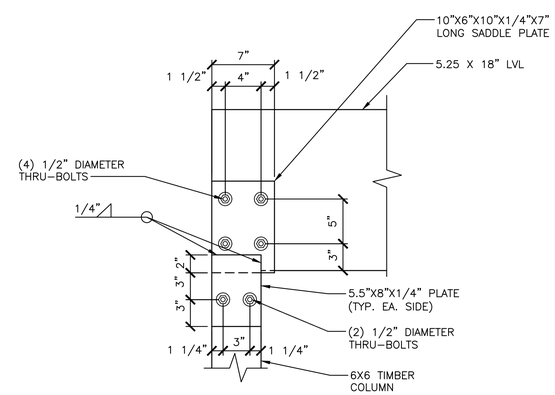


2 SECTION
CXA-S-11 SCALE: 1 1/2" = 1'-0"

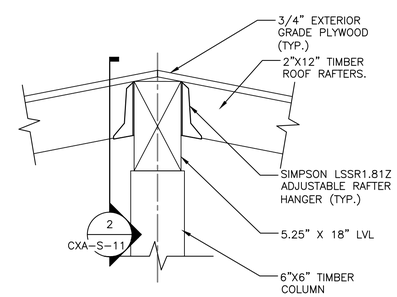


A DETAIL
CXA-S-08 SCALE: N.T.S.

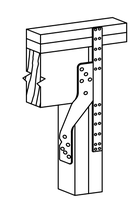

SIMPSON STRONG TIE H6 (OR APPROVED EQUAL) TYPICAL AT ALL EXTERIOR HEADER LOCATIONS.

- HEADER TO JACK STUD CONNECTION
SCALE: N.T.S.

CONSULTANT INFORMATION

Savin Engineers, P.C.

CONSULTANT SEAL

| REVISION NUMBER | DATE | MADE BY | APP'D BY | REVISION |
|---|---|---|---|---|

RECORD DRAWING CERTIFICATION

☐ AS BUILT – CHANGES AS NOTED ☐ AS BUILT – NO CHANGES

CONTRACTOR
NAME
SIGNATURE
TITLE DATE

PROJECT COORDINATOR
NAME
SIGNATURE
TITLE DATE

WESTCHESTER COUNTY, NEW YORK
DEPARTMENT OF PUBLIC WORKS AND TRANSPORTATION
DIVISION OF ENGINEERING

**INFRASTRUCTURE REHABILITATION - PHASE 3**
**PLAYLAND PARK, RYE, NEW YORK**
**CROSS AXIS BUILDING A**
**SECTIONS**

| | |
|---|---|
| CONTRACT NUMBER | 22-523 |
| SHEET NUMBER | CXA-S-11 |
| DWG NO.: | 149 of 664 |
| SCALE: | AS SHOWN |
| DATE: | 8/23/2022 |
| DPW FILE NUMBER | 1-118-S-898-0 |
| REV. NO.: | 0 |

Drawing Name: \\se-fs-01\Environmental\2060.25 - Playland Rehabilitation\04 - Design\MECA
CONTRACT #3\Drawings\CADD\S\CXAS-1011.dwg
Projectname: ---- Comments: ----
~~Printed by: ### ### ### Date: 26 August 2022 10:11 AM Designed by: ---~~

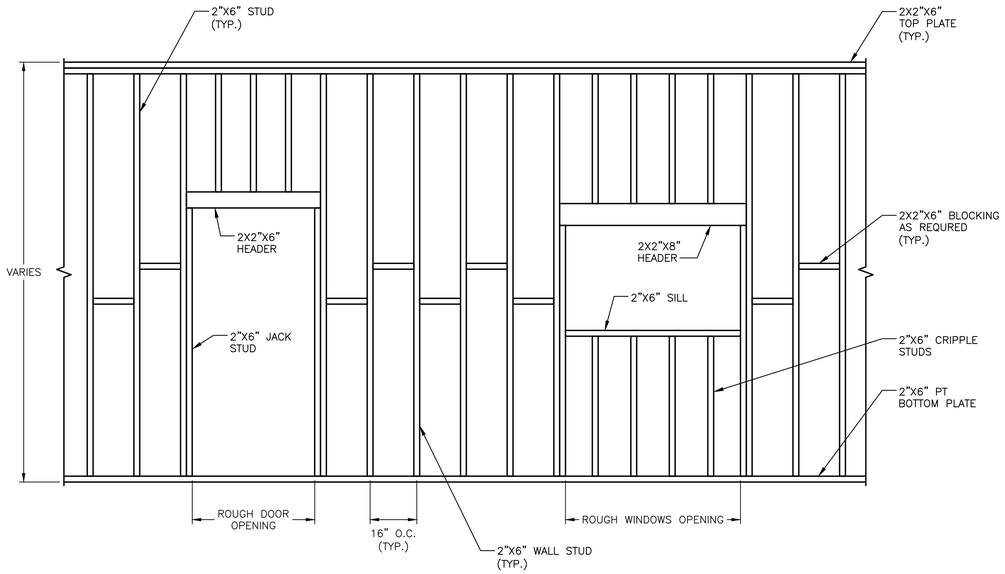


DETAIL WALL ELEVATION

SCALE: N.T.S.

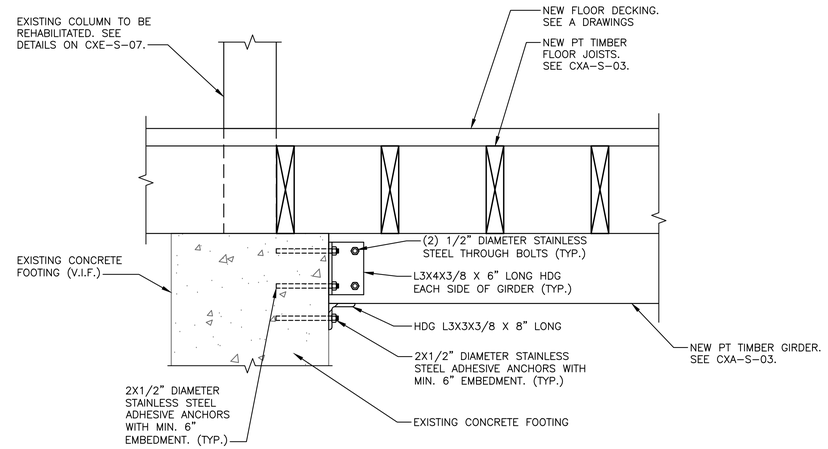


SECTION

SCALE: N.T.S.

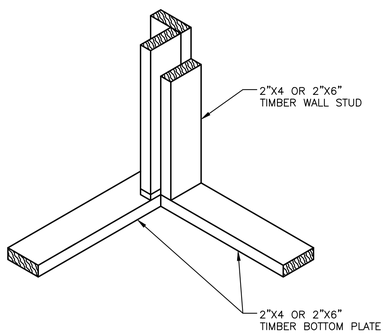


TYPICAL STUDS AT CORNERS DETAIL

SCALE: N.T.S.

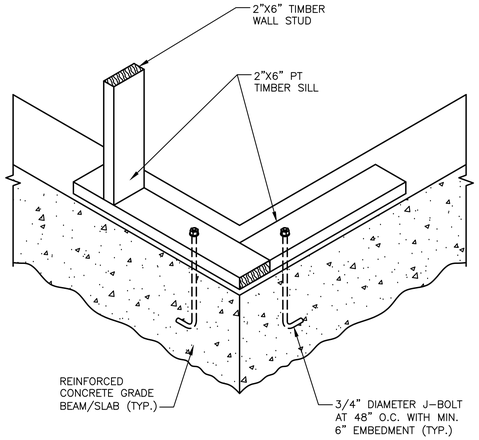


TYPICAL FLOOR FRAMING DETAIL

SCALE: N.T.S.

Drawing Name: G:\SavinAutocad\2060\25-Playland-Mega-3\S\CXAS-1012.dwg
Projectname: ---- Comments: ----
Printed by: BKnittle Date: 15 August 2022 11:40 AM Designed by: ----
Xrefs: [TSC-SVL060.dwg] [TB_24X36_WestchesterCo_3.dwg] [K-A-16.dwg] [CXA-A-12.dwg]

CONSULTANT INFORMATION

Savin Engineers, P.C.

CONSULTANT SEAL

STATE OF NEW YORK · LICENSED PROFESSIONAL ENGINEER · No. 065364

| REVISION NUMBER | DATE | MADE BY | APP'D BY | REVISION |
|---|---|---|---|---|

RECORD DRAWING CERTIFICATION

☐ AS BUILT – CHANGES AS NOTED ☐ AS BUILT – NO CHANGES

CONTRACTOR

NAME
SIGNATURE
TITLE DATE

PROJECT COORDINATOR

NAME
SIGNATURE
TITLE DATE

WESTCHESTER COUNTY, NEW YORK
DEPARTMENT OF PUBLIC WORKS AND TRANSPORTATION
DIVISION OF ENGINEERING

**INFRASTRUCTURE REHABILITATION - PHASE 3**
**PLAYLAND PARK, RYE, NEW YORK**
**CROSS AXIS BUILDING A**
**SECTIONS**

| CONTRACT NUMBER | SHEET NUMBER |
|---|---|
| 22-523 | CXA-S-12 |

DWG NO.:
SCALE: AS SHOWN
DATE: 8/23/ 2022
DPW FILE NUMBER 1-118-S-899-0 REV. NO. 0

# FIRE PROTECTION SAFETY NOTES:

1. SPECIAL PRECAUTION SHALL BE TAKEN BY THE CONTRACTOR SO THAT EQUIPMENT OF THIS APPLICATION AND ITS INSTALLATION WILL NOT AFFECT THE FOLLOWING: EGRESS TO AND FROM THE BUILDING. FIRE SAFETY OR CREATE A FIRE HAZARD. STRUCTURAL SAFETY OF THE BUILDING. ACCUMULATION OF DUST AND DEBRIS. (THE CONTRACTOR SHALL LEAVE THE SITE BROOM CLEANED EACH DAY.)

# FIRE PROTECTION GENERAL NOTES:

1. DIMENSIONS, LOCATIONS AND SIZES INDICATED ON THE PLANS AND THE ELEVATION ARE APPROXIMATE AND SHALL BE VERIFIED BY FIELD INSPECTION BY THE CONTRACTOR.

2. SOME EXISTING PIPE AND EQUIPMENT IS SHOWN FOR CLARIFICATION OF THIS CONTRACT, BUT MUST BE PROTECTED BY THE CONTRACTOR.

3. NO WORK SHALL BE INITIATED UNTIL A WORK PERMIT IS OBTAINED BY THE CONTRACTOR AND A SAFETY PLAN IS SUBMITTED AND IS APPROVED.

4. CONTRACTOR IS RESPONSIBLE FOR OBTAINING ALL PERMITS, EQUIPMENT USE PERMITS, ALL INSPECTION APPROVALS, AND LETTER OF COMPLETION FROM THE DEPARTMENT OF BUILDINGS FOR WORK UNDER THIS CONTRACT AS APPLICABLE.

5. ANY EXISTING MATERIALS, PIPING, ETC., NOT INDICATED FOR DEMOLITION WHICH ARE REMOVED BY THE CONTRACTOR IN ORDER TO INSTALL NEW WORK SHALL BE REINSTALLED BY THE CONTRACTOR. IF EXISTING WORK IS DAMAGED IT SHALL BE REPLACED AT THE CONTRACTOR'S EXPENSE. ALL SURFACES OR FINISHES THAT ARE DAMAGED OR OTHERWISE AFFECTED BY WORK OF THIS CONTRACT SHALL BE PATCHED, REPAIRED, PAINTED OR REPLACED TO MATCH THE PRE-EXISTING CONDITION AND THE NEW WORK.

6. CONTRACTOR MAY PROPOSE ALTERNATE ROUTING IN DIFFICULT AREAS WHERE REPLACEMENT IN KIND IS NOT PRACTICAL. ANY AND ALL ALTERNATE ROUTING IS SUBJECT TO PRIOR REVIEW AND APPROVAL BY THE ENGINEER.

7. A FIRE WATCH SHALL BE PROVIDED WHEN SPRINKLER COVERAGE IS IMPACTED TO MAINTAIN BUILDING OPERATIONS OR AS REQUIRED.

# FIRE PROTECTION SYMBOL LIST

| | |
|---|---|
| — — — — — FS DRY— — | NEW DRY SPRINKLER PIPING |
| — — — — — DRY(E) — | EXISTING TO REMAIN DRY SPRINKLER PIPING |
| ○ | NEW UPRIGHT SPRINKLER HEAD |
| ○ | EXISTING UPRIGHT SPRINKLER HEAD |
| ● | NEW CONCEALED PENDENT SPRINKLER HEAD-ORDINARY TEMPERATURE |
| | SPRINKLER DRY PIPE VALVE |
| | FIRE HOSE CABINET |
| | SIAMESE CONNECTION |
| | CHECK VALVE |
| | CHECK VALVE W/ ALARM |
| | WATER MOTOR ALARM BELL |
| ⊗ | PIPE RISER |
| | PIPE DROP |
| | PIPE UP |
| | POINT OF CONNECTION |
| | POINT OF DISCONNECTION |
| | PREACTION 6" BELL |
| | SOLENOID VALVE |
| | OS & Y VALVE |
| # | REVISION SYMBOL |
| F# | REFER TO SUPPLEMENTAL FIGURE INDICATED BY NUMBER (I.E. F2 REFERS TO FIGURE 2) |
| XXX / X | EQUIPMENT TAG / EQUIPMENT NUMBER |
| X / X-XXX | DETAIL TAG/ CALL OUT TAG / FIRE PROTECTION SHEET NUMBER |

# SHOP DWGS/EQUIPMENT SUBMITTALS

THE CONTRACTOR MUST SUBMIT ANY EQUIPMENT ALTERNATES 2 WEEKS PRIOR TO BIDS DUE FOR REVIEW AND COMMENTS. ALTERNATES MUST BE ACCEPTED BY LIRO ENGINEERS, INC., THE ARCHITECT, AND THE OWNER PRIOR TO INCLUSION IN BID. THE CONTRACTOR IS RESPONSIBLE TO COORDINATE EQUIPMENT ALTERNATES WITH OTHER TRADES AND MAKE ADJUSTMENTS TO THE MECHANICAL SYSTEMS, AS REQUIRED, TO ACCOMMODATE THESE NEW ALTERNATES.

THE CONTRACTOR IS RESPONSIBLE TO SUBMIT ALL OF THE FOLLOWING ITEMS FOR REVIEW/APPROVAL BY NO MORE THAN 3 WEEKS AFTER THE CONTRACTOR'S CONTRACT/BID HAS BEEN AWARDED. ALL SUBMITTALS MUST BE SENT TOGETHER AS A **SINGLE PACKAGE** WITH MANUFACTURER'S SPECIFIC MODELS AND SPECIFICATIONS OUTLINED TO MATCH THE SCHEDULED REQUIREMENTS. EACH SUBMITTAL MUST BE LABELED WITH THE UNIT DESIGNATION USED WITHIN THIS DRAWING SET. IF THE SUBMITTAL PACKAGE IS FOUND TO BE INCOMPLETE UPON RECEIPT, THE PACKAGE WILL BE HELD AND WILL NOT BE REVIEWED UNTIL THE REMAINDER OF THE PACKAGE IS RECEIVED. SIX (6) HARD COPIES OF THE SUBMITTAL PACKAGE MUST BE SENT TO LIRO ENGINEERS, INC. DIGITAL SHOP DRAWING SUBMISSIONS ARE ACCEPTABLE.

# SCOPE OF WORK:

1. THE INSTALLATION OF NEW DRY FS EQUIPMENT.

2. PROPOSED FIRE SPRINKLER HEAD LOCATIONS AND PIPING ARE AS NOTED ON PLANS. EXACT PIPING FROM THE FIRE SPRINKLER MAIN TO ALL HEADS IS TO BE COORDINATED AND HYDRAULICALLY CALCULATED BY THE F.S.C. & SUBMITTED TO THE ENGINEER FOR APPROVAL.

NOTE: THIS SCOPE OF WORK DESCRIPTION IS PROVIDED TO GIVE AN OVERALL "MACRO" DESCRIPTION OF THIS PROJECT. F.S.C. IS RESPONSIBLE TO REVIEW ALL ENGINEERING AND ARCHITECTURAL DRAWINGS AND VISIT THE SITE IF NEEDED, PRIOR TO SUBMISSION OF BID.

**SPRINKLER HEAD SCHEDULE**

| | MANUFACTURER | MODEL | DESCRIPTION | K-FACTOR | QUANTITY |
|---|---|---|---|---|---|
| ○ | RELIABLE | F1FR | DRY ORDINARY UPRIGHT SPRINKLE HEAD | 5.6 | 54 |

**ABBREVIATION**

| | |
|---|---|
| ACV | ALARM CHECK VALVE |
| B.O.P. | BOTTOM OF PIPE |
| (E) | EXISTING TO REMAIN |
| F.S.C. | FIRE SPRINKLER CONTRACTOR |
| P.C | PLUMBING CONTRACTOR |
| TYP | TYPICAL |
| W/ | WITH |
| NYS | NEW YORK STATE |
| U/P | UNDERGROUND PIPING |
| W | WATER |

**DRAWING NOTATIONS**

| | |
|---|---|
| | DRAWING NOTE TAB |
| | RISER DESIGNATION |
| | POINT OF CONNECTION |
| | POINT OF DISCONNECTION |

# DESIGN CRITERIA

1. AREA OF APPLICATION = 1950 SQ. FT

2. OCCUPANCY CLASSIFICATION = ORDINARY HAZARD GROUP 2

3. MAXIMUM COVERAGE PER SPRINKLER HEAD = 130 SQ. FT

4. DESIGN DENSITY = 0.20 GPM/SQ. FT

5. NUMBER OF SPRINKLER HEADS WITHIN AREA OF APPLICATION = 26

6. "K" FACTOR OF SPRINKLER HEADS = 5.6

7. DESIGN CRITERIA REQUIREMENTS BASED ON:
   - 2020 BUILDING CODE OF NEW YORK STATE
   - 2016 NFPA 13

# ORDINARY HAZARD PIPE SCHEDULE

| STEEL | | COPPER | |
|---|---|---|---|
| 1IN. | 2 SPRINKLERS | 1IN. | 2 SPRINKLERS |
| 1 1/4 IN. | 3 SPRINKLERS | 1 1/4 IN. | 3 SPRINKLERS |
| 1 1/2IN. | 5 SPRINKLERS | 1 1/2IN. | 5 SPRINKLERS |
| 2 IN. | 10 SPRINKLERS | 2 IN. | 12 SPRINKLERS |
| 2 1/2 IN. | 20 SPRINKLERS | 2 1/2 IN. | 25 SPRINKLERS |
| 3 IN. | 40 SPRINKLERS | 3 IN. | 45 SPRINKLERS |
| 3 1/2 IN. | 65 SPRINKLERS | 3 1/2 IN. | 75 SPRINKLERS |
| 4 IN. | 100 SPRINKLERS | 4 IN. | 115 SPRINKLERS |
| 5 IN. | 160 SPRINKLERS | 5 IN. | 180 SPRINKLERS |
| 6 IN. | 275 SPRINKLERS | 6 IN. | 300 SPRINKLERS |
| 8 IN. | SEE SECTION 8.2 | 8 IN. | SEE SECTION 8.2 |

FOR SI UNITS, 1 IN. = 25.4 MM.

# MAX DISTANCE BETWEEN HANGERS (FT.-IN.)

NOMINAL PIPE SIZE (IN.)

| | 3/4 | 1 | 1 1/4 | 1 1/2 | 2 | 2 1/2 | 3 | 3 1/2 | 4 | 5 | 6 | 8 |
|---|---|---|---|---|---|---|---|---|---|---|---|---|
| STEEL PIPE EXCEPT THREADED LIGHTWALL | N/A | 12-0 | 12-0 | 15-0 | 15-0 | 15-0 | 15-0 | 15-0 | 15-0 | 15-0 | 15-0 | 15-0 |
| THREADED LIGHTWALL STEEL PIPE | N/A | 12-0 | 12-0 | 12-0 | 12-0 | 12-0 | 12-0 | N/A | N/A | N/A | N/A | N/A |
| COPPER TUBE | 8-0 | 8-0 | 10-0 | 10-0 | 12-0 | 12-0 | 12-0 | 15-0 | 15-0 | 15-0 | 15-0 | 15-0 |

# CODE REFERENCE

2020 NEW YORK STATE BUILDING CODE
2016 NFPA 13

# FIRE PROTECTION NOTES

1. THE DRAWINGS SHOW THE LAYOUT OF THE SYSTEM AND INDICATE THE APPROXIMATE LOCATIONS OF EQUIPMENT AND PIPING. CONTRACTOR IS CAUTIONED NOT TO SCALE THE DRAWINGS. THE PIPING SHALL BE RUN APPROXIMATELY IN THE AREAS AS INDICATED ON THE DRAWINGS, [HOWEVER, TO THE ARRANGEMENT OF THE PIPING SYSTEMS AS MAY BE REFERENCED WITH WORK OF OTHER TRADES]. CONTRACTOR SHALL REVIEW AND COORDINATE WITH STRUCTURAL, ELECTRICAL AND MECHANICAL DRAWINGS. PARTITIONS, STRUCTURAL MEMBERS, ETC. ARE DESIGNED TO BE FURRED OR CLOSED IN AND TO INCLUDE ROUGH-IN PIPING. CONTRACTOR SHALL FURNISH ALL OFFSETS, ADDITIONAL FITTINGS, ETC. WHETHER SHOWN ON DRAWINGS OR NOT, AS REQUIRED TO MEET INSTALLATION CONDITIONS.

2. CONTRACTOR IS TO COMPLY WITH LATEST NFPA AND N.Y.S. CODES, AND COORDINATE HIS WORK WITH OTHER TRADES AND MAKE NECESSARY ADJUSTMENTS.

3. CONTRACTOR IS TO PREPARE SHOP DRAWINGS FOR ENGINEERS REVIEW AFTER MAKING A COMPLETE FIELD SURVEY.

4. CONTRACTOR IS TO REPORT ANY CONDITION REQUIRING CHANGES FROM PLANS TO ENGINEER PRIOR TO STARTING WORK.

5. BRANCH LINES AND MAINS (1 1/2" OR LESS) - SCHEDULE 40 FM APPROVED

6. BRANCH LINES AND MAINS (2" OR LARGER) - THINWALL (THICKNESS LESS THEN SCHEDULE 40 MORE THEN SCHEDULE 10 & FM APPROVED)

7. CONTRACTOR IS TO PERFORM A HYDROSTATIC TEST FOR 2 HRS. @ 200 PSI WITH NO LEAKAGE AND PROVIDE A TEST CERTIFICATE TO ENGINEER

8. CONTRACTOR IS TO EMPLOY EXPERIENCED WORKMEN WHO ARE TO FAMILIARIZE THEMSELVES WITH THE BUILDING AND OBSERVE SAFETY REQUIREMENTS.

9. CONTRACTOR TO ADJUST HEAD LOCATION TO COORDINATE WITH LIGHTS, DUCTS, ETC.

10. PERMIT FROM LOCAL AUTHORITY, TO BE OBTAINED BY CONTRACTOR.

11. ALL WORK TO BE APPROVED BY OWNERS ENGINEER, STATE AUTHORITIES HAVING JURISDICTION AND MUNICIPAL FIRE, PLUMBING, BUILDING AND WATER DEPARTMENTS.

12. U.L. AND/OR FM APPROVED EQUIPMENT TO BE USED.

13. WORK TO BE IN ACCORDANCE WITH MUNICIPAL WATER DEPT. RULES
.
14. SYSTEM IS TO BE MAINTAINED AND TESTED BY THE OWNER OR HIS AGENT IN ACCORDANCE WITH APPLICABLE LOCAL AND STATE CODES AND IN CONFORMANCE WITH NFPA 13A, LATEST EDITION.

15. IF BUILDING OCCUPANCY OR CONSTRUCTION CHANGES, THE SPRINKLER SYSTEM IS TO BE UPDATED ACCORDINGLY BY THE OWNER OR HIS AGENT.

16. CONTRACTOR IS TO NEATLY CUT AND PATCH IN A FIRST CLASS WORKMANLIKE MANNER, ALL HOLES AND PENETRATIONS IN WALLS, CEILINGS, FLOORS, PARTITIONS, ETC.

17. THE ENGINEER IS NOT RETAINED FOR SUPERVISION.

18. THE INSTALLATION OF THIS SYSTEM WILL REQUIRE THE CLOSING OF ONE OR MORE FIRE PROTECTION CONTROL VALVES. THESE VALVE CLOSURES SHOULD BE CLOSELY COORDINATED WITH THE OWNERS WHO SHOULD CONTACT THE LOCAL FIRE DEPARTMENT, INSURANCE INTERESTS, ETC. PRIOR TO VALVE CLOSURES.

19. ACTUAL DESIGN DENSITY MAY EXCEED STANDARDS, HOWEVER, IT IS A MINIMUM TO BE USED BY THE CONTRACTOR.

20. ALL ALARMS RELATING TO THE SPRINKLER SYSTEM SHOULD BE ACTIVATED UPON PLACING THE SPRINKLER SYSTEM IN SERVICE.

21. THE INSTALLATION COMPONENTS, SIZING, SPACING, MATERIALS LOCATION CLEARANCES, POSITION AND TYPE OF SYSTEM SHALL CONFORM TO NFPA 13 AND NYS UNIFORM FIRE PREVENTION BUILDING CODE LATEST EDITION.

22. SPRINKLERS SHALL BE PROTECTED AGAINST FREEZING AND INJURY AS PER NFPA CODE.

23. INSPECTION AND TESTS OF SPRINKLER SYSTEM SHALL BE CONDUCTED AS SPECIFIED IN NFPA CODE.

24. WATER SUPPLY TEST PIPES AND GAUGES SHALL BE PROVIDED AS SPECIFIED IN CHAPTER 2-9 OF NPPA 13.

25. PIPING SPECIFICATIONS, PIPE SCHEDULES, SYSTEM TEST PIPES, PROTECTION AGAINST CORROSION, DAMAGE FITTINGS, VALVES, HANGERS, SPRINKLERS, GUARDS AND SHIELDS SHALL BE IN ACCORDANCE WITH CHAPTER 3 AND CHAPTER 8 OF NFPA 13, LATEST EDITION. PIPING SHALL BE PAINTED TO PREVENT CORROSION.

26. STOCK OF EXTRA SPRINKLERS WILL BE FURNISHED AS PER CHAPTER 3 OF NFPA 13 (REQUIRED FOR EACH TEMPERATURE RATING).

27. SPRINKLER ALARMS WILL BE IN ACCORDANCE WITH NFPA 13.

28. SPACING, LOCATION AND POSITION OF SPRINKLERS SHALL BE IN ACCORDANCE WITH CHAPTER 4 OF NFPA 13.

29. ALL PIPING PASSING THROUGH WALLS SHALL COMPLY WITH NFPA FOR FIRE PROOFING.

30. DISTANCE OF SPRINKLERS FROM HEAT SOURCES SHALL BE IN ACCORDANCE WITH TABLE 3-16.6.3 OF NFPA 13.

31. PROVIDE WATER SUPPLY LETTER WITH FLOW TEST DATA.

32. ALL PIPES PASSING THROUGH FOUNDATION WALLS TO BE PROTECTED.

33. ALL VALVES SHALL BE IDENTIFIED AS REQUIRED BY NFPA 13.

34. DRAINAGE TO CONFORM TO CHAPTER 3-11 OF NFPA 13.

35. A ONE PIECE REDUCING FITTING OF GOOD DESIGN SHOULD BE USED WHEREVER A CHANGE IS MADE IN THE SIZE OF PIPE AS PER SECTION 3-12.2.7 OF NFPA 13.

36. ALL VALVES ON CONNECTIONS TO WATER SUPPLIES AND IN SUPPLY TO SPRINKLERS SHALL BE APPROVED O.S. &Y. OR APPROVED INDICATOR TYPE WITH TAMPER SWITCHES.

37. DRAIN VALVES AND TEST VALVES SHALL BE APPROVED TYPE AS PER SECTION 3-14.1.2 OF NFPA 13.

38. HANGERS SHALL BE OF A TYPE APPROVED FOR USE WITH THE PIPE OR TUBE INVOLVED, SPRINKLER PIPING SHOULD BE SUPPORTED BY ADJUSTABLE HANGERS PER NFPA 13, SECTION 3-15.

39. PROVISIONS SHOULD BE MADE TO FACILITATE FLUSHING SYSTEM PIPING BY PROVIDING FLUSHING CONNECTIONS CONSISTING OF A CAPPED NIPPLE 4" LONG ON THE END OF THE CROSS MAIN, AS PER SECTION 3- 8.2 OF NFPA 13.

40. SPRINKLER SHALL BE AN APPROVED TYPE AS PER SECTION 3-16 OF NFPA 13.

41. TEMPERATURE RATING SHALL COMPLY WITH SEC. 3-16.6 OF NFPA 13.

42. CLEARANCES BETWEEN SPRINKLERS AND STORAGE OR PARTITIONS AS PER NFPA 13, SECTION 4-2.5

43. SPACING AND LOCATION OF SPRINKLER SHALL COMPLY WITH CHAPTER 4 NFPA 13.

44. CONTRACTOR TO COORDINATE HIS WORK WITH OTHER TRADES.

45. ONLY EXPERIENCED SPRINKLER MECHANICS TO WORK ON THE SYSTEM.

46. ALL PIPING TO BE A MINIMUM OF 1" UNLESS OTHERWISE NOTED.

47. PROVIDE SHOP DRAWINGS WITH HYDRAULIC CALCULATIONS FOR REVIEW TO LOCAL FIRE MARSHALL AND INSURANCE UNDERWRITER AND ENGINEER FOR APPROVAL PRIOR TO INSTALLATION.

48. ALL FIRE PROTECTION EQUIPMENT SHALL BE INSTALLED PER MANUFACTURER'S REQUIREMENTS/SPECIFICATIONS.

49. ALL FIRE PROTECTION EQUIPMENT SHALL BE MOUNTED ON MINIMUM 6" HIGH CONCRETE PAD UNLESS OTHERWISE NOTED (PAVER AND CINDER BLOCK IS NOT ACCEPTABLE).

50. PERMIT IS REQUIRED PRIOR TO INSTALLATION, TO INCLUDE SIGNED AND SEALED SHOP DRAWINGS, HYDRAULIC CALCULATION, SHOP DRAWINGS, MANUFACTURERS INFORMATION ON HEADS AND APPLIANCES, COMPLIANCE WITH NFPA 13 AND SECTION 903 2020 NYSBC/FC.

# FIRE PROTECTION DRAWING LIST

| SHEET NO. | SHEET NAME | REVISON NO. | REVISION DATE |
|---|---|---|---|
| CXA-FP-01 | FIRE PROTECTION NOTES, SYMBOLS, ABBREVIATIONS, AND DRAWING LIST | 0 | - |
| CXA-FP-11 | FIRE PROTECTION FIRST FLOOR DEMOLITION RCP | 0 | - |
| CXA-FP-21 | FIRE PROTECTION FIRST FLOOR AND ATTIC CONSTRUCTION RCP | 0 | - |
| CXA-FP-81 | FIRE PROTECTION DETAILS | 0 | - |


CONSULTANT INFORMATION

LiRo Engineers, Inc.
A LiRo Group Company
Syosset, N.Y. 516-214-8157[T]


CONSULTANT SEAL

STATE OF NEW YORK · FRANK F. ULRICH · No. 0901111 · LICENSED PROFESSIONAL ENGINEER

| REVISION NUMBER | DATE | MADE BY | APP'D BY | REVISION |
|---|---|---|---|---|
| | | | | |

RECORD DRAWING CERTIFICATION

☐ AS BUILT – CHANGES AS NOTED ☐ AS BUILT – NO CHANGES

CONTRACTOR
NAME
SIGNATURE
TITLE DATE

PROJECT COORDINATOR
NAME
SIGNATURE
TITLE DATE

WESTCHESTER COUNTY, NEW YORK
DEPARTMENT OF PUBLIC WORKS AND TRANSPORTATION
DIVISION OF ENGINEERING

**INFRASTRUCTURE REHABILITATION - PHASE 3**
**PLAYLAND PARK, RYE, NEW YORK**
**CROSS AXIS BUILDING A**
**FIRE PROTECTION NOTES, SYMBOLS, ABBREVIATIONS & DWG LIST**

| | |
|---|---|
| CONTRACT NUMBER | 22-523 |
| SHEET NUMBER | CXA-FP-01 |
| DWG NO.: | 151 of 664 |
| SCALE: | AS INDICATED |
| DATE: | 08/23/2022 |
| DPW FILE NUMBER | 1-118-FP-900-0 |
| REV. NO. | 0 |

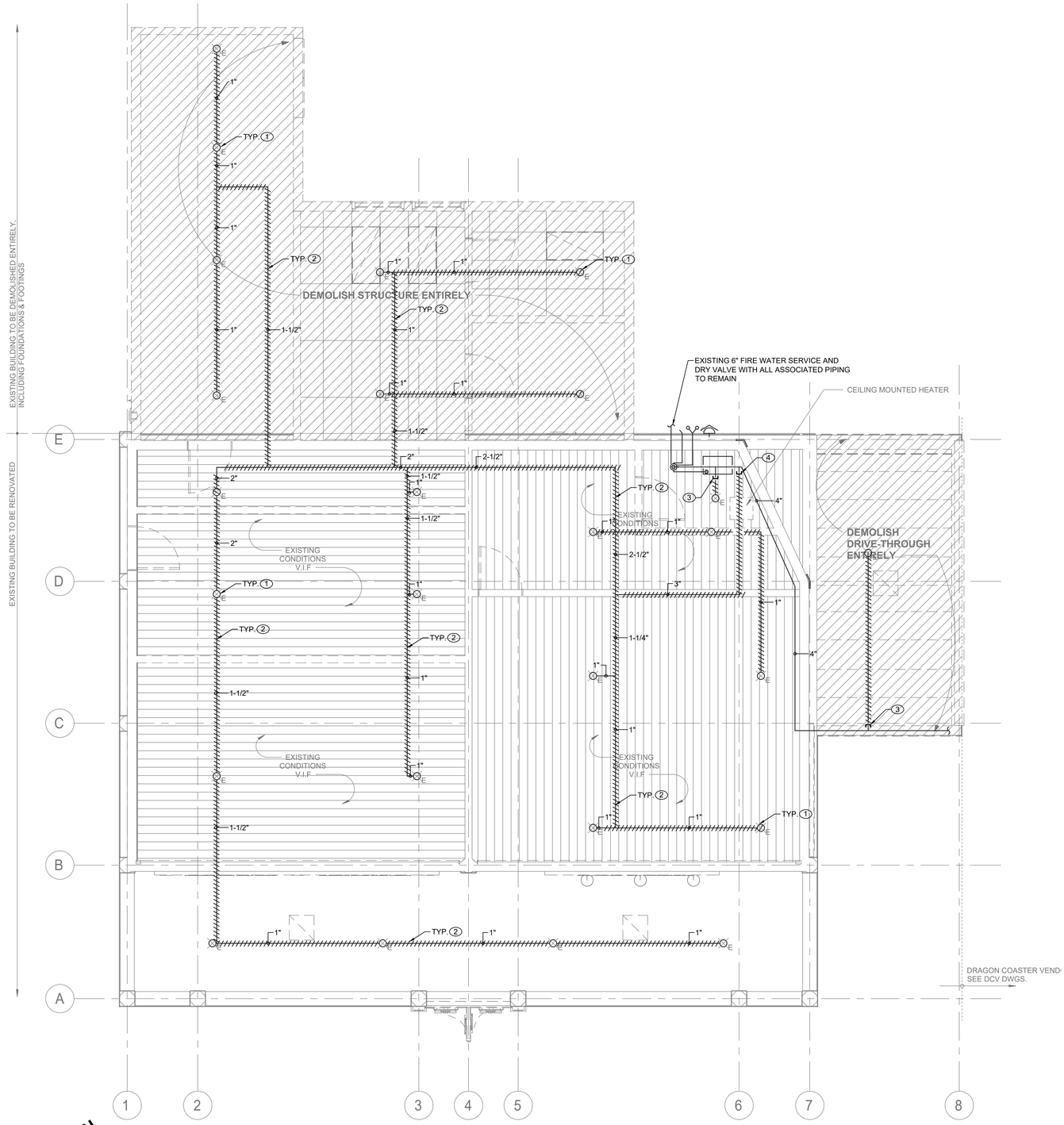


N

## FIRE PROTECTION FIRST FLOOR DEMOLITION RCP

SCALE: 1/4" = 1'-0

## SPRINKLER DEMOLITION NOTES:

1. DEMOLISH ALL EXISTING SPRINKLER HEADS WITHIN THE CXA BUILDING.
2. DEMOLISH ALL EXISTING DRY SPRINKLER PIPING WITHIN THE CXA BUILDING INCLUDING ATTIC SPACE. FIRE SERVICE PIPING, DISTRIBUTION PIPING TO DRAGON COASTER VENDORS AND ACCESSORIES TO REMAIN
3. CUT AND TEMPORARY CAP EXISTING 1" DRY SPRINKLER PIPE FOR FUTURE CONNECTION.
4. CUT AND TEMPORARY CAP EXISTING DRY SPRINKLER PIPE SERVING SPRINKLERS WITHIN CXA BUILDING FOR FUTURE CONNECTION.

## GENERAL NOTES:

1. COORDINATE WITH FACILITY PRIOR TO SHUTDOWN OF FIRE PROTECTION SYSTEM FOR ANY DEMOLITION AND CONSTRUCTION WORK.

2. CONTRACTOR SHALL PROVIDE FIRE WATCH AS NEEDED FOR THE OLD MILL AND RESTROOMS WHILE SPRINKLER COVERAGE IS IMPACTED.

3. CONTRACTOR TO COORDINATE WITH FACILITY WHEN WORKING AROUND OR ABOVE THE RIDE COMPONENTS, AND PROVIDE ALL NECESSARY MEASURES TO PROTECT THESE COMPONENTS PER THE REQUIREMENTS OF THE FACILITY.

CONSULTANT INFORMATION

LiRo Engineers, Inc.
A LiRo Group Company
Syosset, N.Y. 516-214-8157[T]

CONSULTANT SEAL

STATE OF NEW YORK · FRANK F. ULIBARRI · No. 090111 · LICENSED PROFESSIONAL ENGINEER

| REVISION NUMBER | DATE | MADE BY | APP'D BY | REVISION |
|---|---|---|---|---|

RECORD DRAWING CERTIFICATION

☐ AS BUILT – CHANGES AS NOTED ☐ AS BUILT – NO CHANGES

CONTRACTOR
NAME
SIGNATURE
TITLE DATE

PROJECT COORDINATOR
NAME
SIGNATURE
TITLE DATE

WESTCHESTER COUNTY, NEW YORK
DEPARTMENT OF PUBLIC WORKS AND TRANSPORTATION
DIVISION OF ENGINEERING

**INFRASTRUCTURE REHABILITATION - PHASE 3**
**PLAYLAND PARK, RYE, NEW YORK**
**CROSS AXIS BUILDING A**
**FIRE PROTECTION FIRST FLOOR DEMOLITION RCP**

| | |
|---|---|
| CONTRACT NUMBER | 22-523 |
| SHEET NUMBER | CXA-FP-11 |
| DWG NO.: | 152 of 664 |
| SCALE: | AS INDICATED |
| DATE: | 08/23/2022 |
| DPW FILE NUMBER | 1-118-FP-901-0 |
| REV. NO. | 0 |

## FIRE PROTECTION CONSTRUCTION NOTES:

1. RECONNECT EXISTING 1" DRY SPRINKLER PIPE WITH NEW.
2. RECONNECT EXISTING DRY SPRINKLER SYSTEM WITH NEW 4"PIPE SERVING SPRINKLERS WITHIN CXA BUILDING.

## GENERAL NOTES:

1. ALL DISTRIBUTION PIPING, SHALL BE PAINTED AS DIRECTED BY ARCHITECT. REFER TO SPECIFICATION FOR PAINT TYPE AND APPLICATION PROCEDURE.
2. COORDINATE WITH FACILITY PRIOR TO SHUTDOWN OF FIRE PROTECTION SYSTEM FOR ANY DEMOLITION AND CONSTRUCTION WORK.
3. CONTRACTOR SHALL PROVIDE FIRE WATCH AS NEEDED FOR ALL AFFECTED BUILDINGS WHILE SPRINKLER COVERAGE IS IMPACTED.
4. CONTRACTOR TO COORDINATE WITH FACILITY WHEN WORKING AROUND OR ABOVE THE RIDE COMPONENTS, AND PROVIDE ALL NECESSARY MEASURES TO PROTECT THESE COMPONENTS PER THE REQUIREMENTS OF THE FACILITY.
5. UPON COMPLETION, SYSTEM SHALL BE TESTED FOR PROPER OPERATION.

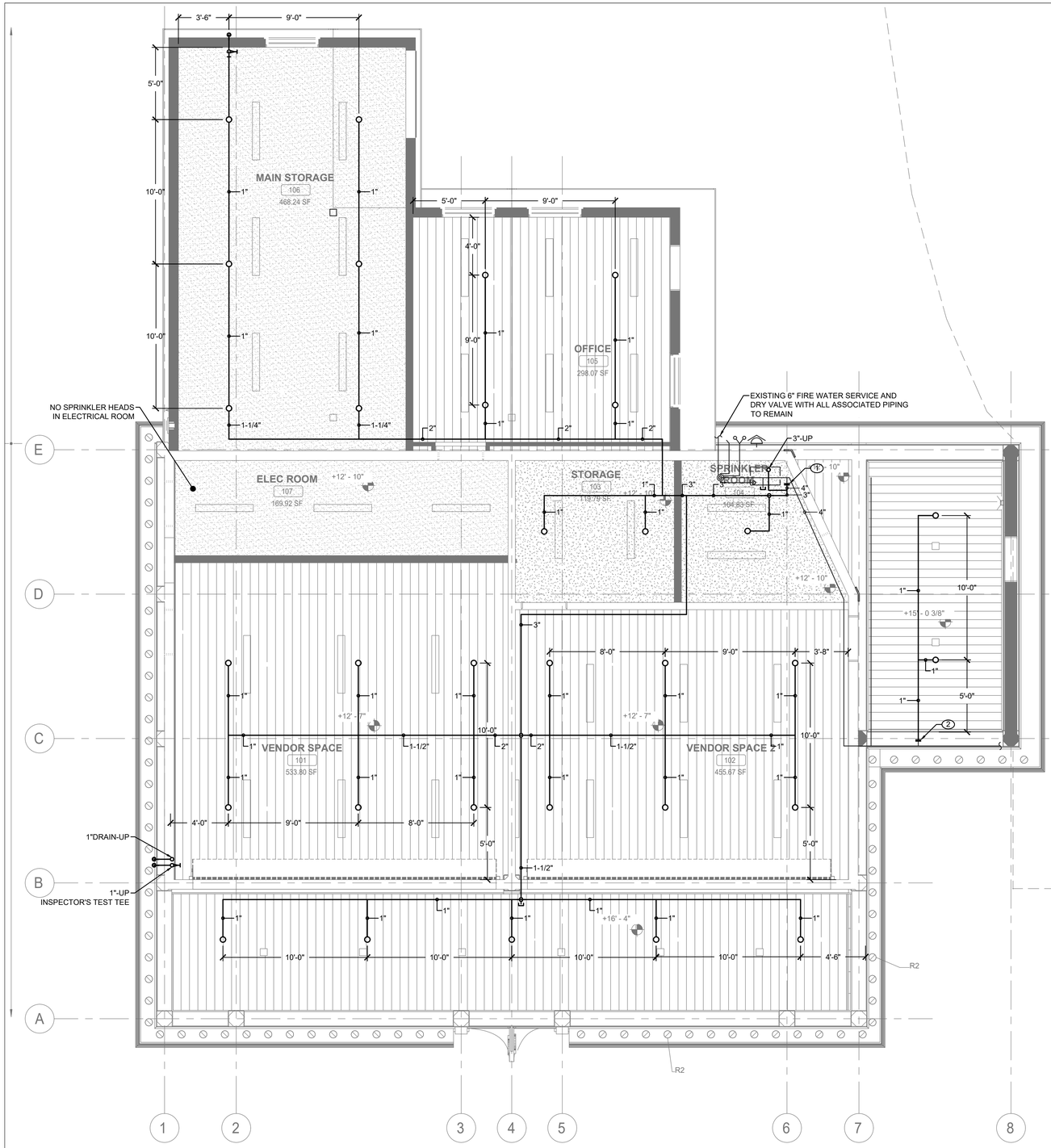


N

## FIRE PROTECTION FIRST FLOOR CONSTRUCTION RCP

SCALE: 1/4" = 1'-0

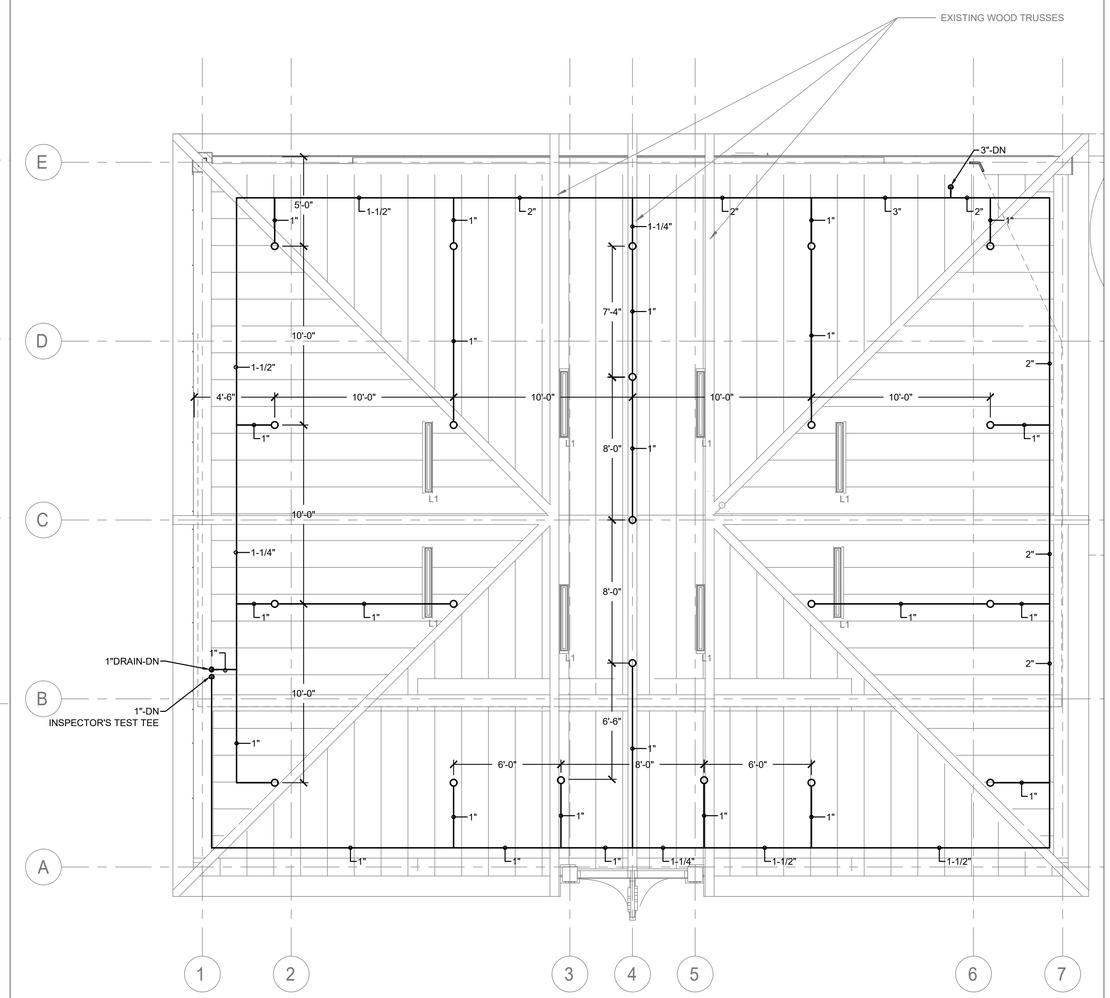


N

## FIRE PROTECTION ATTIC CONSTRUCTION RCP

SCALE: 1/4" = 1'-0

CONSULTANT INFORMATION

LiRo Engineers, Inc.
A LiRo Group Company
Syosset, N.Y. 516-214-8157[T]

CONSULTANT SEAL

STATE OF NEW YORK · FRANK F. ULLISE · No. 090111-1 · LICENSED PROFESSIONAL ENGINEER

| REVISION NUMBER | DATE | MADE BY | APP'D BY | REVISION |
|---|---|---|---|---|
| | | | | |

RECORD DRAWING CERTIFICATION

☐ AS BUILT – CHANGES AS NOTED ☐ AS BUILT – NO CHANGES

CONTRACTOR
NAME
SIGNATURE
TITLE DATE

PROJECT COORDINATOR
NAME
SIGNATURE
TITLE DATE

WESTCHESTER COUNTY, NEW YORK
DEPARTMENT OF PUBLIC WORKS AND TRANSPORTATION
DIVISION OF ENGINEERING

**INFRASTRUCTURE REHABILITATION - PHASE 3**
**PLAYLAND PARK, RYE, NEW YORK**
**CROSS AXIS BUILDING A**
**FIRE PROTECTION FIRST FLOOR AND ATTIC CONSTRUCTION RCP**

| | |
|---|---|
| CONTRACT NUMBER | 22-523 |
| SHEET NUMBER | CXA-FP-21 |
| DWG NO.: | 153 of 664 |
| SCALE: | AS INDICATED |
| DATE: | 08/23/2022 |
| DPW FILE NUMBER | 1-118-FP-902-0 |
| REV. NO. | 0 |

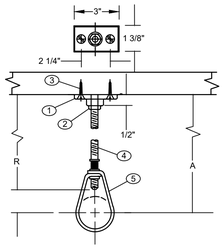


COMPONENTS

1. CLIP (CEILING FLANGE)
2. HEX NUT
3. WOOD SCREW
4. HANGER ROD
5. ADJUSTABLE HANGER RING

NFPA REQUIREMENTS / LIMITATIONS

1. NFPA 13 PERMITS THE USE OF 2 SCREW CEILING FLANGES ONLY
2. HAVING DIMENSIONS NOT LESS THAN THOSE OF NO. 18 X 1 1/2" WOOD SCREWS. DRIVE SCREWS AND NAILS ARE NOT ACCEPTABLE FASTENERS AND WOOD SCREWS ARE NOT TO BE DRIVEN.
3. FOR PIPE SIZES UP TO 2" AND IT CALLS FOR THE USE OF SCREWS

DESIGN DATA FOR CLIP HANGERS

| NOMINAL PIPE SIZE | MINIMUM A DIMENSION | HANGER TAKEOUT | ROD DIAMETER | FASTENERS | |
|---|---|---|---|---|---|
| | INCHES | INCHES | INCHES | QTY | ITEMS |
| 1/2 | 3 3/4 | -1 1/4 | 3/8 | 1<br>2<br>1 | 3/8" CEILING FLANGE (CLIP)<br>NO. 18 X 1 1/2" FLAT HEAD WOOD SCREWS<br>3/8" HEX NUT |
| 3/4 | 3 3/4 | -1 1/4 | " | | SEE ABOVE |
| 1 | 3 3/4 | -1 1/4 | " | | " " |
| 1 1/4 | 4 | -1 1/2 | " | | " " |
| 1 1/2 | 4 | -1 1/2 | " | | " " |
| 2 | 4 1/4 | -1 3/4 | " | | " " |

1 FP-81 **PIPE HANGER DETAIL**
SCALE: NOT TO SCALE

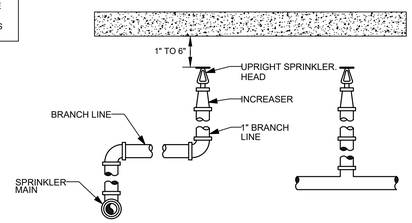


2 FP-81 **UPRIGHT SPRINKLER DETAIL**
SCALE: NOT TO SCALE

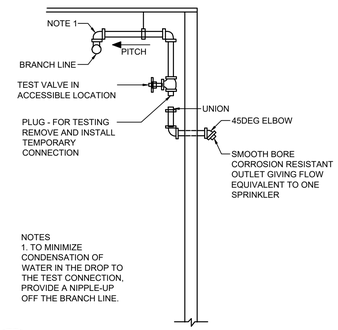


NOTES
1. TO MINIMIZE CONDENSATION OF WATER IN THE DROP TO THE TEST CONNECTION, PROVIDE A NIPPLE-UP OFF THE BRANCH LINE.

3 FP-81 **DRY PIPE TEST CONNECTION**
SCALE: NOT TO SCALE

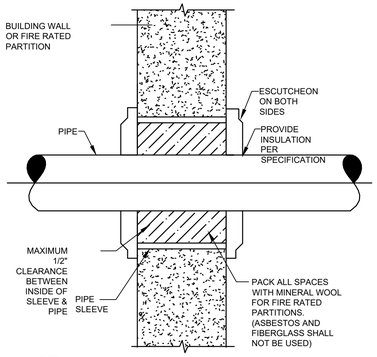


4 FP-81 **PIPE PENETRATION**
SCALE: NOT TO SCALE

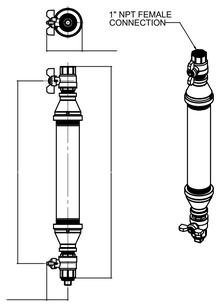


5 FP-81 **DRY SYSTEM AUXILIARY DRAIN**
SCALE: NOT TO SCALE

CONSULTANT INFORMATION

**LiRo Engineers, Inc.**
*A LiRo Group Company*
Syosset, N.Y. 516-214-8157[T]

CONSULTANT SEAL

STATE OF NEW YORK · FRANK F. ULISSE · No. 090111-1 · LICENSED PROFESSIONAL ENGINEER

| REVISION NUMBER | DATE | MADE BY | APP'D BY | REVISION |
|---|---|---|---|---|
| | | | | |

RECORD DRAWING CERTIFICATION

☐ AS BUILT – CHANGES AS NOTED ☐ AS BUILT – NO CHANGES

CONTRACTOR
NAME
SIGNATURE
TITLE DATE

PROJECT COORDINATOR
NAME
SIGNATURE
TITLE DATE

WESTCHESTER COUNTY, NEW YORK
DEPARTMENT OF PUBLIC WORKS AND TRANSPORTATION
DIVISION OF ENGINEERING

**INFRASTRUCTURE REHABILITATION - PHASE 3**
**PLAYLAND PARK, RYE, NEW YORK**
**CROSS AXIS BUILDING A**
**FIRE PROTECTION DETAILS**

CONTRACT NUMBER 22-523
SHEET NUMBER **CXA-FP-81**
DWG NO.: 154 of 664
SCALE: **AS INDICATED**
DATE: 08/23/2022
DPW FILE NUMBER **1-118-FP-903-0**
REV. NO. 0

# PLUMBING SYMBOL LIST

| IDENTIFIER | DESCRIPTION |
|---|---|
| CW | DOMESTIC COLD WATER |
| W | WASTE PIPING (ABOVE SLAB) |
| W | WASTE PIPING (UNDER SLAB) |
| S | SANITARY PIPING (ABOVE SLAB) |
| S | SANITARY PIPING (UNDER SLAB) |
| V | SANITARY VENT PIPING |
| | FIELD CONNECT |
| | FIELD DISCONNECT |
| F# | REFER TO SUPPLEMENTAL FIGURE INDICATED BY NUMBER (I.E. F2 REFERS TO FIGURE 2) |
| XXX / XX | EQUIPMENT TAG / EQUIPMENT NUMBER |
| XXX / X-XXX | DETAIL TAG/CALL OUT TAG / PLUMBING SHEET NUMBER |

# PIPING ELEMENTS/VALVING

- BACKFLOW PREVENTER (DOUBLE CHECK VALVE ASSEMBLY)
- BALL VALVE
- CAP ON END OF PIPE
- CLEANOUT
- FD — FLOOR DRAIN
- GATE VALVE
- HB — HOSE BIBB
- VALVE IN VALVE BOX
- PIPE DROPPING DOWN
- PIPE RISING UP
- TEE OUTLET DOWN
- TEE OUTLET UP
- VALVE IN RISE OR DROP
- NFHB — NON FREEZE HOSE BIBB IN BOX W/VACUUM BREAKER

# SCOPE OF WORK

PLUMBING SCOPE OF WORK INCLUDES, BUT IS NOT LIMITED TO:

1. REMOVAL OF EXISTING WATER SERVICE.

2. THE INSTALLATION OF NEW PLUMBING FIXTURES AND ALL ASSOCIATED PIPING AND ACCESSORIES.

3. THE INSTALLATION OF NEW SANITARY AND DOMESTIC WATER SERVICES.

NOTE- THIS SCOPE OF WORK DESCRIPTION IS PROVIDED TO GIVE AN OVERALL "MACRO" DESCRIPTION OF THIS PROJECT. P.C. IS RESPONSIBLE TO REVIEW ALL ENGINEERING & ARCHITECTURAL DRAWINGS & VISIT THE SITE IF NEEDED, PRIOR TO SUBMISSION OF BID.

# CODE REFERENCE

2020 NEW YORK STATE BUILDING CODE
2020 NEW YORK STATE MECHANICAL CODE
2020 NEW YORK STATE PLUMBING CODE
2020 NEW YORK STATE ENERGY CONSERVATION CODE

# SECTION 704
# DRAINAGE PIPING INSTALLATION

**704.1 SLOPE OF HORIZONTAL DRAINAGE PIPING.**

HORIZONTAL DRAINAGE PIPING SHALL BE INSTALLED IN UNIFORM ALIGNMENT AT UNIFORM SLOPES. THE MINIMUM SLOPE OF HORIZONTAL DRAINAGE PIPE SHALL BE IN ACCORDANCE WITH TABLE 704.1.

**TABLE 704.1**
**SLOPE OF HORIZONTAL DRAINAGE PIPE**

| SIZE (INCHES) | MINIMUM SLOPE (INCH PER FOOT) |
|---|---|
| 2 1/2 OR LESS | 1/4 |
| 3 TO 6 | 1/8 |
| 8 OR LARGER | 1/16 |

# LEED NOTES

1. ALL ADHESIVES, SEALANTS, PAINTS & COATINGS APPLIED TO THE INTERIOR OF THE BUILDING (WITHIN THE WEATHER PROOFING SYSTEM, INCLUDING WALL CAVITIES) MUST NOT EXCEED THE LEED VOC LIMITS. PROVIDE A VOC SUBMITTAL AND MSDS FOR ALL ADHESIVES, SEALANTS, PAINTS AND COATINGS TO BE APPLIED.

# PLUMBING GENERAL NOTES:

1. ALL PLUMBING WORK UNDER THIS CONTRACT SHALL CONFORM TO THE LATEST EDITION OF THE PLUMBING CODE OF NEW YORK STATE (PC-NYS), THE NEW YORK STATE ENERGY CODE, AND THE REQUIREMENTS OF THE UTILITY AND THE LOCAL WATER COMPANY.
2. ALL MATERIALS SHALL BE NEW UNLESS NOTED OTHERWISE.
3. THE PLUMBING CONTRACTOR SHALL ASSUME RESPONSIBILITY FOR ALL LABOR AND MATERIALS SUPPLIED AND INSTALLED UNDER THIS CONTRACT AND SHALL GUARANTEE THE WORK PERFORMED UNDER THIS CONTRACT FOR A PERIOD OF ONE (1) YEAR FROM THE DATE OF ACCEPTANCE OF THIS WORK.
4. PLUMBING CONTRACTOR SHALL CONSULT WITH, COOPERATE AND COORDINATE WITH THE GENERAL CONTRACTOR, MECHANICAL CONTRACTOR, SPRINKLER CONTRACTOR, ELECTRICAL CONTRACTOR, ETC. IN ORDER TO MINIMIZE INTERFERENCES BETWEEN TRADES DURING PERFORMANCE OF THIS WORK.
5. THE PLUMBING CONTRACTOR SHALL PREPARE AND FILE ALL REQUIRED PLANS AND PERMITS WITH THE LOCAL AUTHORITIES. PC SHALL PAY THE FILING FEES AS REQUIRED. PC SHALL OBTAIN ALL APPROVALS AND SHALL PAY FOR ALL WORK PERMITS, INSPECTIONS AND SIGN-OFFS AS REQUIRED TO EXECUTE THIS WORK IN A MANNER IN CONFORMANCE WITH THE CODES AND AUTHORITIES HAVING JURISDICTION.
6. THE PLUMBING CONTRACTOR SHALL PERFORM ALL TESTS AND ARRANGE FOR ALL INSPECTIONS FOR WORK UNDER HIS CONTRACT AS REQUIRED BY LAW AND SHALL SUPPLY ALL CERTIFICATES OF INSURANCE AS REQUIRED BY THE LAW AND THE OWNER. REFER TO SECTION 107 (INSPECTIONS) OF THE PC-NYS.
7. THE PLUMBING CONTRACTOR SHALL MAKE ALL FINAL CONNECTIONS TO ALL PLUMBING EQUIPMENT REGARDLESS WHETHER ILLUSTRATED HEREIN WITHOUT ANY ADDITIONAL COSTS TO THE OWNER.
8. PLUMBING CONTRACTOR SHALL VISIT THE SITE & BECOME FAMILIAR WITH THE EXISTING CONDITIONS, INCLUDING THE SIZE OF CONNECTIONS, ROUGHING DIMENSIONS, ETC. BEFORE SUBMITTING A QUOTATION FOR THE WORK.
9. PLUMBING CONTRACTOR SHALL PERFORM ALL CUTTING, EXCAVATION, BACKFILLING, ROUGH & FINISH PATCHING AS PER THE SPECIFICATIONS AS REQUIRED FOR THE INSTALLATION OF THE WORK, UNLESS NOTED OTHERWISE.
10. ALL CONNECTIONS TO NEW AND/OR EXISTING EQUIPMENT SHALL BE SIZED AND INSTALLED IN ACCORDANCE WITH THE MANUFACTURER'S INSTRUCTIONS.
11. IT IS THE INTENT OF THIS CONTRACT THAT THE COMPLETED WORK BE FULLY OPERATIONAL.
12. ALL PIPE HANGERS AND SUPPORTS SHALL BE INSTALLED AT INTERVALS AND BE FABRICATED OF MATERIALS AS REQUIRED BY THE PC-NYS.
13. ALL NEW PLUMBING FIXTURES SHALL BE INSTALLED WITH ANGLE STOP VALVES IN THE SUPPLY LINES SERVING THE FIXTURE.
14. ALL NEW EXPOSED WATER AND WASTE PIPING SERVING THE FIXTURES SHALL BE CHROME PLATED AND SHALL HAVE CHROME PLATED ESCUTCHEONS RIGIDLY ATTACHED TO THE PIPING AT THE POINT OF WALL OR FLOOR PENETRATIONS.
15. PLUMBING CONTRACTOR SHALL SUBMIT SHOP DRAWINGS FOR ALL NEW PLUMBING FIXTURES AND EQUIPMENT TO BE SUPPLIED AND INSTALLED UNDER THIS CONTRACT FOR APPROVAL BEFORE INSTALLATION OF SAME.
16. WATERPROOF PIPE SLEEVES SHALL BE INSTALLED AT ALL PENETRATIONS THROUGH EXTERIOR WALLS. PIPE SLEEVES SHALL BE INSTALLED AT ALL WALL PENETRATIONS THROUGH INTERIOR WALLS AND FLOORS.
17. WATER HAMMER ELIMINATORS (APPROVED - FIELD FABRICATED OR MANUFACTURED) SHALL BE INSTALLED AT ALL RUN OUTS IN HOT AND/OR COLD WATER LINES SERVING TOILET ROOMS AND OTHER AREAS WHICH INCORPORATE "RAPID - ACTION" VALVES SUCH AS FLUSHOMETERS, SOLENOID VALVES, ETC.
18. ALL PIPING SHALL BE TESTED AT A MINIMUM PRESSURE OF 1-1/2 TIMES THE MAXIMUM OPERATING PRESSURE UNLESS OTHERWISE NOTED ON THE DOCUMENTS OR THE PLUMBING CODE AND IN ACCORDANCE WITH THE UTILITY REQUIREMENTS.
19. ALL REMOVALS PERFORMED UNDER THIS CONTRACT SHALL INCLUDE REMOVAL OF ALL DEBRIS AND DISPOSAL AT AN APPROPRIATE SITE.
20. ALL LAVATORIES DESIGNED FOR USE BY PERSONS CONFINED TO WHEELCHAIRS SHALL HAVE THE HOT & COLD WATER SERVICES, AS WELL AS THE TRAP, RECESSED & INSULATED IN ACCORDANCE WITH ADA REQUIREMENTS.
21. REFER TO THE ARCHITECTURAL PLANS FOR ALL STRUCTURAL DIMENSIONS.
22. ALL WORK TO BE COORDINATED WITH OTHER TRADES.
23. ALL PIPING PENETRATIONS TO BE SEALED AROUND WITH "NELSON" FIRE SEAL.
24. ALL WATER SERVICE PIPING WITHIN THE BUILDING IS TO BE INSULATED IN ACCORDANCE WITH ALL NEW YORK STATE PLUMBING CODE (NYS-PC) AND NYS ENERGY CODES.
25. ALL PLUMBING FIXTURES TO BE INSTALLED AS PER FACTORY RECOMMENDATIONS.
26. ALL PLUMBING FIXTURES TO BE TRAPPED, VENTED AND PROVIDED WITH AIR SHOCKS WHEN REQUIRED.
27. PLUMBING FIXTURES SHALL COMPLY WITH "WATER CONSERVATION" REQUIREMENT AS DETAILED IN THE NYS-PC.
28. GC IS RESPONSIBLE TO SUBMIT APPLICATION AND TAP FEES TO LOCAL WATER AUTHORITY AND HAVE OWNER FILL OUT APPLICATION UPON COMPLETION OF PLUMBING ROUGH-IN INSPECTION.
29. ALL WATER AND HORIZONTAL STORM DRAIN PIPING INCLUDING ROOF DRAIN BODY SHALL BE INSULATED.
30. FLOOR DRAINS AND FLOOR CLEAN-OUTS SHALL BE SET LEVEL WITH FINISHED FLOORS.
31. ALL PIPE DIMENSIONS ARE INSIDE CLEAR.
32. ALL PLUMBING FIXTURES TO HAVE ISOLATION VALVES.
33. P.C. IS RESPONSIBLE TO ADJUST HOT WATER HEATER (WH) TEMPERATURE TO ENSURE A TEMPERATURE RANGE OF 110°F TO 120°F AT THE INDIVIDUAL FIXTURE OUTPUT. P.C. MUST ENSURE A TEMPERATURE OF 120° F MAXIMUM AT THE FIXTURES TO PREVENT SCALDING.
34. BUILDING DOMESTIC WATER DEMAND & SIZING IS CALCULATED FROM NYS-PC SECTION 603, 604 & APPENDIX E.
35. BUILDING SANITARY DEMAND & SIZING IS CALCULATED FROM NYS-PC SECTIONS 709 AND 710.
36. ALL DFU CALCULATIONS ARE BASED OFF OF TABLE 709.1 OF THE NYS-PC.
37. ALL SANITARY WATER PIPING SHALL BE PITCHED IN ACCORDANCE WITH NYS-PC SECTION 704 BASED ON TABLE 704.1 SLOPE OF HORIZONTAL DRAINAGE PIPE.
38. ALL VENT SIZING IS BASED OFF OF SECTION 916 OF THE NYS PLUMBING CODE.
39. ALL PLUMBING EQUIPMENT SHALL BE INSTALLED PER MANUFACTURER'S REQUIREMENTS/SPECIFICATIONS.

# ABBREVIATIONS:

| | |
|---|---|
| AD | ACCESS DOOR |
| BFP | BACKFLOW PREVENTER |
| CO | CLEAN OUT |
| CW | COLD WATER |
| DCV | DOUBLE CHECK VALVE |
| DFU | DRAINAGE FIXTURE UNIT |
| DPCO | DECK PLATE CLEAN OUT |
| FC | FIELD CONNECT |
| FD | FLOOR DRAIN |
| FFD | FUNNEL FLOOR DRAIN |
| FU | FIXTURE UNIT |
| HW | HOT WATER |
| HWR | HOT WATER RETURN |
| IAW | IN ACCORDANCE WITH |
| IWFD | INDIRECT WASTE FUNNEL DRAIN |
| LAV | LAVATORY |
| JS | JANITOR'S SINK |
| NC | NORMALLY CLOSED |
| NO | NORMALLY OPEN |
| NYS-PC | NEW YORK STATE PLUMBING CODE |
| RD | ROOF DRAIN |
| S | SANITARY |
| SD | STORM DRAIN |
| TMV | THERMOSTATIC MIXING VALVE |
| U.O.N. | UNLESS OTHERWISE NOTED |
| UR | URINAL |
| V | VENT |
| WC | WATER CLOSET |
| PC | PLUMBING CONTRACTOR |
| MC | MECHANICAL CONTRACTOR |
| TYP. | TYPICAL |
| VIF | VERIFY IN FIELD |
| WCO | WALL CLEAN OUT |
| WFU | WATER FIXTURE UNITS |
| (N) | NEW |
| (E) | EXISTING |
| (D) | DEMO |

THE ABBREVIATIONS ARE SHOWN FOR GENERAL REFERENCE ONLY. THE PRESENCE OF AN ABBREVIATION ON THIS LIST DOES NOT IMPLY ITS USE ON THIS PROJECT. REFER TO DRAWINGS FOR SPECIFIC ABBREVIATIONS USED.

# FLOOR DRAIN SCHEDULE

| TAG | TYPE | MANUFACTURER | MODEL | SERVICE |
|---|---|---|---|---|
| FD-1 | ADJUSTABLE | ZURN | FD-2320-R5 | ALL SPACES |

NOTES:
1. PROVIDE THE FOLLOWING FOR FD-1; CHORME PLATED STRAINER ASSEMBLY, 6" NICKEL HEAD ASSEMBLY, AND VANDAL PROOF.
2. PROVIDE BARRIER-TYPE TRAP SEAL PROTECTION DEVICE ZURN Z1072 OR APPROVED EQUAL.

# CLEANOUT SCHEDULE

| TAG | TYPE | MANUFACTURER | MODEL |
|---|---|---|---|
| CO | ADJUSTABLE DECK PLATE CLEAN OUT | WATTS | CO-1200-R |

# DOUBLE CHECK VALVE SCHEDULE

| TAG | MANUFACTURER | MODEL | LOCATION | SIZE (IN) | PRESSURE DROP (PSI) |
|---|---|---|---|---|---|
| DCV-1 | WATTS | LF007M1QT-S | SPRINKLER ROOM | 2 | 6 |

NOTES:
1. PROVIDE STRAINER FOR DOUBLE CHECK VALVE.
2. LEAD FREE

# WALL HYDRANT SCHEDULE

| TAG | TYPE | MANUFACTURER | MODEL |
|---|---|---|---|
| NFHB | WALL HYDRANT | ZURN | Z1320XL |

# PLUMBING DRAWING LIST

| SHEET NO. | SHEET NAME | REVISON NO. | REVISION DATE |
|---|---|---|---|
| CXA-P-01 | PLUMBING NOTES, SYMBOLS, ABBREVIATIONS AND DRAWING LIST | 0 | - |
| CXA-P-21 | PLUMBING FIRST FLOOR CONSTRUCTION PLAN | 0 | - |
| CXA-P-81 | PLUMBING DETAILS | 0 | - |

CONSULTANT INFORMATION

LiRo Engineers, Inc.
*A LiRo Group Company*
Syosset, N.Y. 516-214-8157[T]

CONSULTANT SEAL

STATE OF NEW YORK · FRANK F. ULISSE · No. 095111-1 · LICENSED PROFESSIONAL ENGINEER

| REVISION NUMBER | DATE | MADE BY | APP'D BY | REVISION |
|---|---|---|---|---|
| | | | | |

RECORD DRAWING CERTIFICATION

☐ AS BUILT – CHANGES AS NOTED ☐ AS BUILT – NO CHANGES

CONTRACTOR
NAME
SIGNATURE
TITLE DATE

PROJECT COORDINATOR
NAME
SIGNATURE
TITLE DATE

WESTCHESTER COUNTY, NEW YORK
DEPARTMENT OF PUBLIC WORKS AND TRANSPORTATION
DIVISION OF ENGINEERING

**INFRASTRUCTURE REHABILITATION - PHASE 3**
**PLAYLAND PARK, RYE, NEW YORK**
**CROSS AXIS BUILDING A**
**PLUMBING NOTES, SYMBOLS, ABBREVIATIONS AND DRAWING LIST**

CONTRACT NUMBER 22-523
SHEET NUMBER **CXA-P-01**
DWG NO.: 155 of 664
SCALE: **AS INDICATED**
DATE: 08/23/2022
DPW FILE NUMBER **1-118-P-904-0**
REV. NO. 0

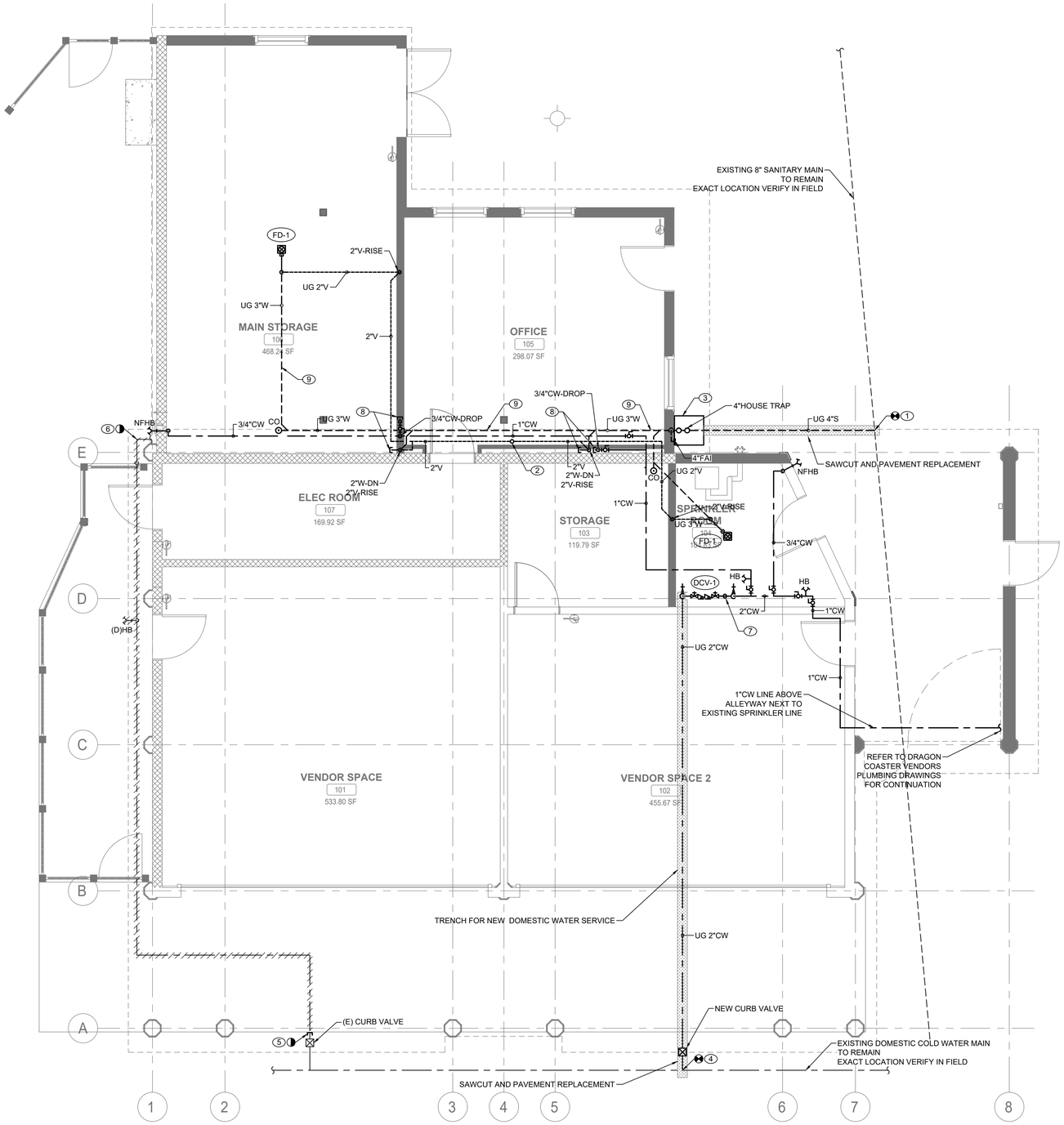


1 / P-21 **PLUMBING FIRST FLOOR CONSTRUCTION PLAN**
SCALE: 1/4" = 1'-0

## PLUMBING CONSTRUCTION NOTES:

1. CONNECT NEW 4" SANITARY SERVICE TO EXISTING SEWER MAIN LOCATED AT CROSS-AXIS ALLEY WEST. CONTRACTOR TO VERIFY THE INVERT, SIZE, AND MATERIAL OF THE EXISTING SEWER PIPING TO FACILITATE NEW SANITARY SERVICE CONNECTION.
2. PROVIDE NEW 4" VENT THRU ROOF.
3. PROVIDE NEW 4"HOUSE TRAP IN PIT. PROVIDE ACCESS DOOR FOR MAINTENANCE. PROVIDE 4" FRESH AIR INTAKE THRU EXTERIOR WALL. TERMINATE VENT WITH INSECT SCREEN. HOUSE TRAP SHALL BE PROTECTED FROM FREEZING.
4. CONNECT NEW 2" DOMESTIC COLD WATER SERVICE TO EXISTING WATER MAIN LOCATED AT CROSS-AXIS ALLEY WEST. PROVIDE CURB VALVE WITH VALVE BOX.
5. CUT AND PERMANENTLY CAP EXISTING WATER SERVICE BELOW GROUND. ABANDON IN PLACE EXISTING WATER SERVICE PIPING, REMOVE PORTIONS OF PIPING THAT EXPOSED OR IN CONFLICT WITH NEW CONSTRUCTION.
6. REMOVE EXISTING WATER LINE UP TO PLUMBING FIXTURES LOCATED WITHIN DRAGON COASTER VENDOR SPACE.
7. PROVIDE A COMPRESSED AIR CONNECTION FOR WINTERIZING.
8. PROVIDE 2"W AND 3/4"CW STUB-UP FOR FUTURE SINK WITHIN NEW WALL. CONNECTION SHALL BE ACCESSIBLE AFTER CONSTRUCTION.
9. COORDINATE LOCATION OF NEW UNDERGROUND PIPING WITH STRUCTURAL ELEMENTS. PROVIDE REQUIRED SLEEVES AND SUPPORTS.

## GENERAL NOTES:

1. COORDINATE WITH FACILITY PRIOR TO SHUTDOWN OF WATER DISTRIBUTION SYSTEM FOR ANY DEMOLITION AND CONSTRUCTION WORK.
2. PROVIDE DRAIN VALVES AT BOTTOM FOR EACH BRANCH. PROVIDE ACCESS PANELS TO ALL VALVES ABOVE CEILING AND BEHIND WALLS.
3. INSTALL NEW WATER PIPING WITH PROPER SLOPES TO AVOID WATER TRAPS DURING WINTER SEASON.
4. CONTRACTOR TO COORDINATE WITH FACILITY WHEN WORKING AROUND OR ABOVE THE RIDE COMPONENTS, AND PROVIDE ALL NECESSARY MEASURES TO PROTECT THESE COMPONENTS PER THE REQUIREMENTS OF THE FACILITY.
5. UPON COMPLETION, SYSTEM SHALL BE TESTED FOR PROPER OPERATION.
6. SEWER CROSSING WATER MAINS, CONDUITS, OR OTHER UTILITY SHALL BE MINIMUM 18" CLEARANCE BETWEEN THE OUTSIDE OF THE UTILITY AND OUTSIDE OF THE SEWER. THE CROSSINGS SHALL BE ARRANGED SO THAT THE SEWER JOINTS WILL BE EQUIDISTANT AND AS FAR AS POSSIBLE FROM THE WATER MAIN JOINTS.

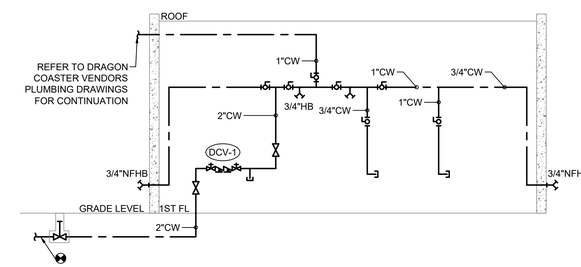


2 / P-21 **DOMESTIC WATER RISER DIAGRAM**
SCALE: NOT TO SCALE

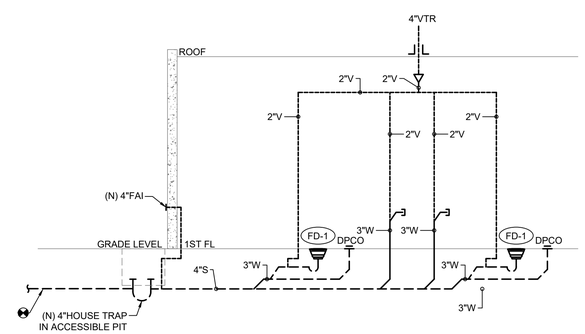


3 / P-21 **SANITARY RISER DIAGRAM**
SCALE: NOT TO SCALE

CONSULTANT INFORMATION

LiRo Engineers, Inc.
*A LiRo Group Company*
Syosset, N.Y. 516-214-8157[T]

CONSULTANT SEAL

STATE OF NEW YORK · FRANK F. ULISSE · No. 095111-1 · LICENSED PROFESSIONAL ENGINEER

| REVISION NUMBER | DATE | MADE BY | APP'D BY | REVISION |
|---|---|---|---|---|
| | | | | |

RECORD DRAWING CERTIFICATION

☐ AS BUILT – CHANGES AS NOTED ☐ AS BUILT – NO CHANGES

CONTRACTOR
NAME
SIGNATURE
TITLE DATE

PROJECT COORDINATOR
NAME
SIGNATURE
TITLE DATE

WESTCHESTER COUNTY, NEW YORK
DEPARTMENT OF PUBLIC WORKS AND TRANSPORTATION
DIVISION OF ENGINEERING

**INFRASTRUCTURE REHABILITATION - PHASE 3**
**PLAYLAND PARK, RYE, NEW YORK**
**CROSS AXIS BUILDING A**
**PLUMBING FIRST FLOOR CONSTRUCTION PLAN**

| | |
|---|---|
| CONTRACT NUMBER | 22-523 |
| SHEET NUMBER | CXA-P-21 |
| DWG NO.: | 156 of 664 |
| SCALE: | AS INDICATED |
| DATE: | 08/23/2022 |
| DPW FILE NUMBER | 1-118-P-905-0 |
| REV. NO. | 0 |

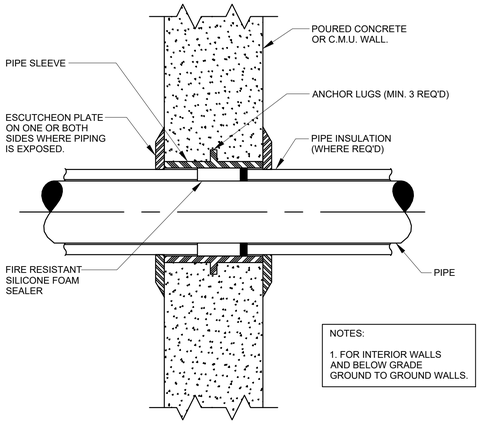


## 1 / P-81 PIPE SLEEVE THROUGH WALL DETAIL

SCALE: NOT TO SCALE

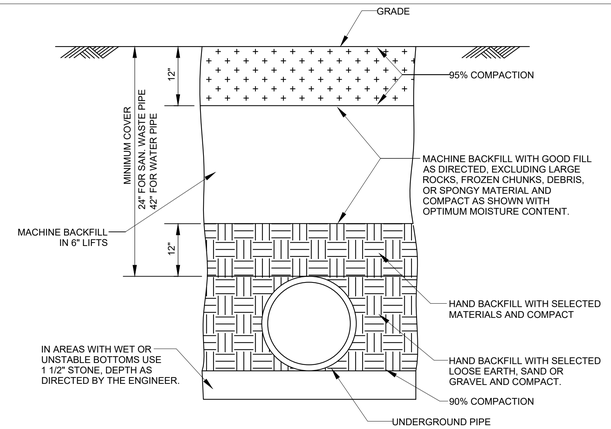


## 2 / P-81 PIPE TRENCH DETAIL

SCALE: NOT TO SCALE

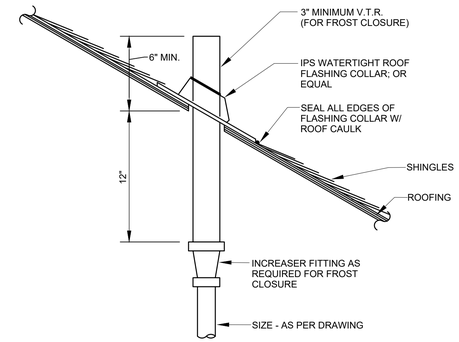


## 3 / P-81 PLUMBING VENT THROUGH PITCHED ROOF DETAIL

SCALE: NOT TO SCALE

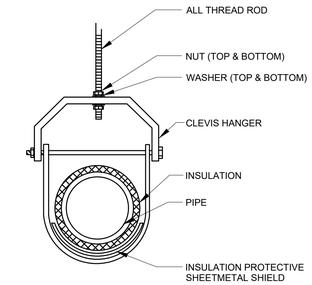


## 4 / P-81 TYPICAL CLEVIS HANGER DETAIL

SCALE: NOT TO SCALE

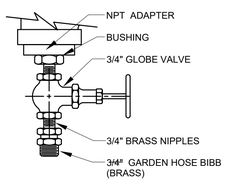


## 5 / P-81 DRAIN VALVE DETAIL

SCALE: NOT TO SCALE

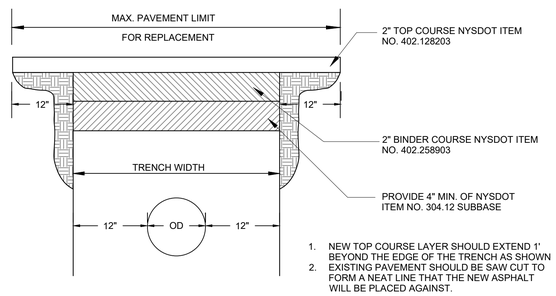


## 6 / P-81 ASPHALTIC MACADAM PAVEMENT REPLACEMENT

SCALE: NOT TO SCALE

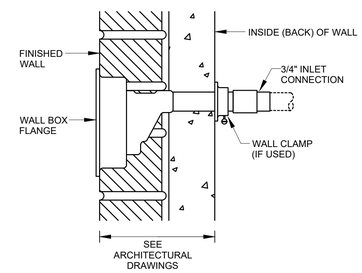


## 7 / P-81 FREEZE PROOF WALL HYDRANT

SCALE: NOT TO SCALE

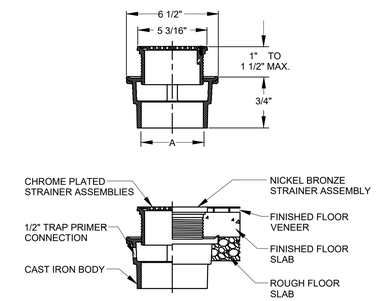


## 8 / P-81 FLOOR DRAIN DETAIL

SCALE: NOT TO SCALE

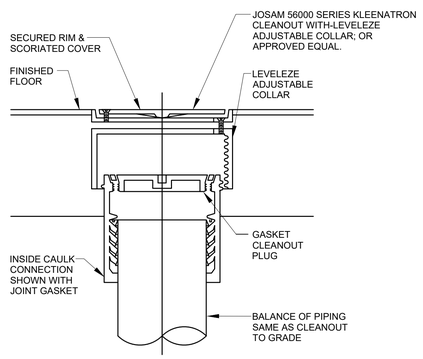


## 9 / P-81 FLOOR CLEANOUT DETAIL

SCALE: NOT TO SCALE

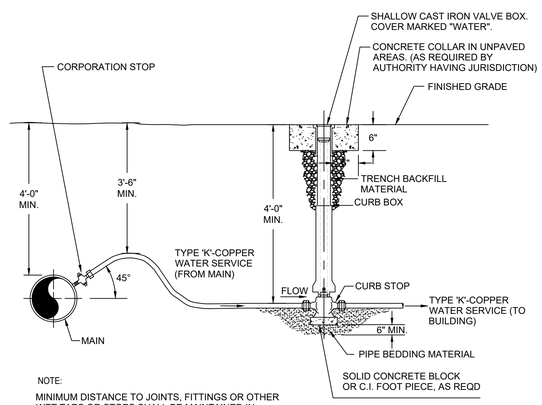


## 10 / P-81 COPPER WATER SERVICE AND CURB STOP

SCALE: NOT TO SCALE

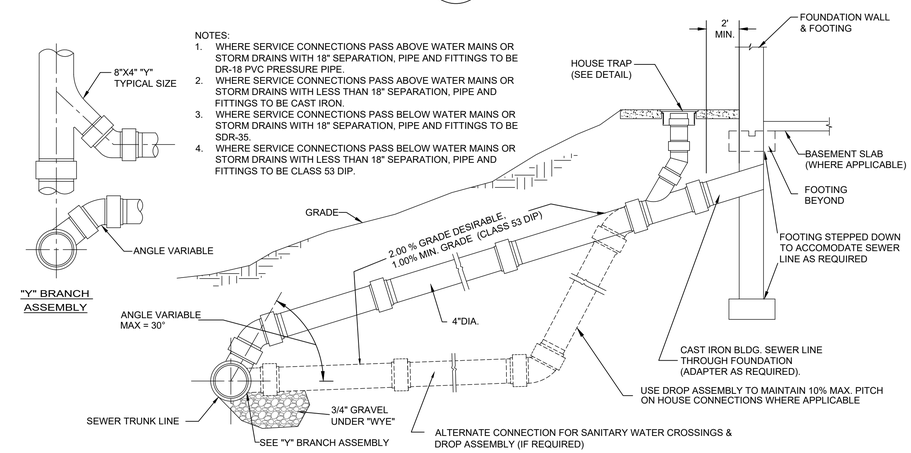


## 11 / P-81 SEWER SERVICE CONNECTION/ DROP ASSEMBLY

SCALE: NOT TO SCALE

CONSULTANT INFORMATION

LiRo Engineers, Inc.
A LiRo Group Company
Syosset, N.Y. 516-214-8157[T]

CONSULTANT SEAL

STATE OF NEW YORK · FRANK F. LILIOSE · No. 090111-1 · LICENSED PROFESSIONAL ENGINEER

| REVISION NUMBER | DATE | MADE BY | APP'D BY | REVISION |
|---|---|---|---|---|
| | | | | |

RECORD DRAWING CERTIFICATION

☐ AS BUILT – CHANGES AS NOTED ☐ AS BUILT – NO CHANGES

CONTRACTOR: NAME ____ SIGNATURE ____ TITLE ____ DATE ____

PROJECT COORDINATOR: NAME ____ SIGNATURE ____ TITLE ____ DATE ____

WESTCHESTER COUNTY, NEW YORK
DEPARTMENT OF PUBLIC WORKS AND TRANSPORTATION
DIVISION OF ENGINEERING

**INFRASTRUCTURE REHABILITATION PHASE 3**
**PLAYLAND PARK, RYE, NEW YORK**
**CROSS AXIS BUILDING A**
**PLUMBING DETAILS**

| | |
|---|---|
| CONTRACT NUMBER | 22-523 |
| SHEET NUMBER | CXA-P-81 |
| DWG NO.: | 157 of 664 |
| SCALE: | AS INDICATED |
| DATE: | 08/23/2022 |
| DPW FILE NUMBER | 1-118-P-906-0 |
| REV. NO. | 0 |

# MECHANICAL GENERAL NOTES

1. ALL WORK AND MATERIALS SHALL BE PURCHASED AND INSTALLED IN ACCORDANCE WITH ALL NATIONAL & NEW YORK STATE CODES AND REGULATIONS (AS WELL AS ALL APPLICABLE LOCAL CODES & REGULATIONS). THE CONTRACTOR SHALL BE RESPONSIBLE TO ENSURE THAT ALL HVAC WORK IS PROVIDED AND INSTALLED IN STRICT ACCORDANCE WITH SEISMIC REQUIREMENTS.
2. DO NOT SCALE FROM THESE DRAWINGS.
3. THE EXACT MOUNTING HEIGHTS AND LOCATIONS OF ALL HVAC EQUIPMENT SHALL BE FIELD VERIFIED AND COORDINATED WITH ALL OTHER MECHANICAL, ELECTRICAL, PLUMBING, FIRE SPRINKLER, ARCHITECTURAL AND STRUCTURAL SYSTEMS. DURING SHOP DRAWINGS SUBMISSIONS, SHOW ALL MOUNTING HEIGHTS OF DUCTWORK, UNITS, ETC.
4. VERIFY ALL EQUIPMENT VOLTAGES WITH THE ELECTRICAL DESIGN PRIOR TO ORDERING EQUIPMENT.
5. PROVIDE PHASE LOSS PROTECTION FOR ALL POLY-PHASE MOTOR DEVICES.
6. DUCTWORK SHALL BE CONSTRUCTED OF GALVANIZED SHEET STEEL IN STRICT COMPLIANCE WITH THE LATEST EDITION OF THE ASHRAE, NFPA, AND SMACNA GUIDE RECOMMENDATIONS. ALL DUCTS TO HAVE PITTSBURGH TYPE LOCK FOR LONGITUDINAL SEAMS AND DRIVE SLIP / "S" SLIP FOR TRANSVERSE JOINTS. "DUCT-MATE" JOINT SYSTEM IS ACCEPTABLE IN LIEU OF PRIOR SEAM SYSTEMS. SIZES AS SHOWN INDICATE INSIDE CLEAR DIMENSIONS OF THE AIR PASSAGE. DUCTWORK SHALL BE FULLY INSULATED AS PER APPLICABLE CODES AND WRITTEN SPECIFICATIONS.
7. DUCT SIZES MUST BE VERIFIED FOR CLEARANCES AT THE JOB SITE PRIOR TO FABRICATION. DIMENSIONS MAY BE CHANGED TO ACCOMMODATE CONSTRUCTION AS LONG AS EFFECTIVE CROSS-SECTIONAL AREA IS MAINTAINED. DUCT TRANSITIONS SHALL BE CONSTRUCTED WITH A SLOPE OF 1" TO 4". ALL DEVIATIONS FROM ORIGINAL CONTRACT DRAWINGS SHALL BE REVIEWED BY ENGINEER DURING THE SHOP DRAWING PROCESS.
8. PROVIDE MANUAL BALANCING DAMPERS AS REQUIRED TO PROPERLY BALANCE EACH INDIVIDUAL AIR DISTRIBUTION SYSTEM. IF THE LOCATION OF THE BALANCING DAMPER IS NOT DEFINED ON THE DRAWINGS, THE FOLLOWING MINIMUMS STANDARDS SHALL GOVERN. ALL SUPPLY, RETURN, AND EXHAUST MAIN BRANCHES FROM TRUNKS, EACH SPLIT AND ALL SUB- BRANCHES FROM MAIN SHALL INCORPORATE BALANCING DAMPERS.
9. PROVIDE FLEXIBLE CONNECTORS AT ALL DUCT CONNECTIONS TO VIBRATING EQUIPMENT. THESE CONNECTORS SHALL BE INSTALLED IN CLOSE PROXIMITY TO SUCH EQUIPMENT.
10. PROVIDE FIRE DAMPERS WITH RATED ACCESS DOORS AT ALL DUCT PENETRATIONS THROUGH FIRE RATED WALLS, SMOKE AND FIRE STOPPING, SHAFT, FLOORS, RATED CEILINGS AND PARTITIONS AS REQUIRED TO MAINTAIN ARCHITECTURAL FIRE RATINGS. REFER TO THE ARCHITECTURAL PLANS AND SPECIFICATIONS FOR LOCATIONS AND FIRE RATING REQUIREMENTS. CONTRACTOR MUST FULLY REVIEW ALL ARCHITECTURAL AND ENGINEERING DRAWINGS AND VISIT THE SITE PRIOR TO SUBMITTING THE BID. NO EXTRAS WILL BE ALLOWED.
11. ALL ACCESS DOORS REQUIRED IN GENERAL CONSTRUCTION ARE TO BE PROVIDED AND INSTALLED BY THE CONTRACTOR. IT IS THE RESPONSIBILITY OF THE CONTRACTOR TO IDENTIFY SIZE, TYPE AND LOCATION OF SUCH DOORS FOR PROPER ACCESS TO ALL CONCEALED HVAC EQUIPMENT, VALVES AND OTHER RELATED EQUIPMENT. THE CONTRACTOR SHALL IDENTIFY THESE REQUIREMENTS ON A COORDINATED SHOP DRAWING PRIOR TO SYSTEM FABRICATION AND INSTALLATION.
12. ALL CEILING MOUNTED EQUIPMENT MUST BE SUPPORTED DIRECTLY FROM BUILDING STRUCTURE WITH COMBINATION SPRING AND NEOPRENE-IN-SHEAR HANGERS AND ROD. PROVIDE SUPPLEMENTARY STEEL AS REQUIRED TO ADEQUATELY SUPPORT THE LOAD.
13. THE CONTRACTOR MUST CONTRACT AN INDEPENDENT NEBB CERTIFIED AIR BALANCING & TESTING COMPANY TO PERFORM THE AIR BALANCING WORK AND ASSOCIATED SYSTEM AIR BALANCING REPORT. ALL WORK SHALL BE PERFORMED IN STRICT COMPLIANCE WITH ALL APPLICABLE CODES, REGULATIONS, PLANS AND WRITTEN SPECIFICATIONS. SUBMIT THE FINAL AIR BALANCE REPORT TO THE ENGINEER FOR REVIEW AND APPROVAL PRIOR TO SUBSTANTIAL COMPLETION OF THE PROJECT, AS DETERMINED BY THE AND OWNER/CLIENT. THE AIR BALANCE REPORT MUST INCLUDE ALL SUPPLY, RETURN, & EXHAUST AIR TERMINALS, FRESH AIR (OUTSIDE AIR) INTAKE AND VENTILATION EXHAUST CFM RATES FOR ALL UNITS. ALSO INCLUDE ACTUAL SUPPLY & RETURN AIR VELOCITY & STATIC PRESSURE READINGS ALONG WITH ALL MOTOR AMPERAGES FOR ALL UNITS.
14. THE CONTRACTOR IS TO INCLUDE IN THEIR BID ALL LOW VOLTAGE CONTROL WIRING, THERMOSTATS, RELAYS, TRANSFORMERS, STARTERS ETC FOR A COMPLETE OPERATING CONTROL SYSTEM AS DESCRIBED IN THE SEQUENCE OF OPERATIONS, THE CONTRACTOR IS ALSO RESPONSIBLE FOR LINE VOLTAGE CONTROL FOR EXHAUST FANS CONTROLLED FROM LIGHT SWITCH AND THERMOSTATS. ALL CONTROL WIRING IN THE AREAS THAT DO NOT HAVE DROPPED CEILINGS THE CONTRACTOR MUST PROVIDE ALL CONTROL WIRING CONDUIT. IN AREAS OF DROPPED CEILING PLENUM RATED CONTROL WIRING CAN BE RUN EXPOSED ABOVE CEILING.
15. ALL MECHANICAL EQUIPMENT SHALL BE INSTALLED PER MANUFACTURER'S REQUIREMENTS/SPECIFICATIONS.

# CODE REFERENCE

2020 NEW YORK STATE BUILDING CODE
2020 NEW YORK STATE MECHANICAL CODE
2020 NEW YORK STATE ENERGY CONSERVATION CODE

# MECHANICAL DEMOLITION NOTES

1. CONTRACTOR SHALL BE RESPONSIBLE FOR DEMOLITION OF MECHANICAL EQUIPMENT AND MATERIAL RELATING TO THEIR RESPECTIVE TRADE.

2. THE CONTRACTOR SHALL REMOVE, RELOCATE, REPLACE, ADJUST, ADAPT AND MODIFY EXISTING EQUIPMENT AND/OR SYSTEMS AS REQUIRED WHEN SUCH WORK IS UNCOVERED AND FOUND TO INTERFERE WITH COMPLETION OF WORK IN THIS CONTRACT OR OTHER CONTRACT WORK.

3. EXECUTE THE DEMOLITION IN CAREFUL AND ORDERLY MANNER WITH THE LEAST POSSIBLE DISTURBANCE TO THE PUBLIC, EGRESS OR THE FUNCTIONING OF THE EXISTING BUILDING.

4. TAKE NECESSARY PRECAUTIONS TO PREVENT DUST AND DIRT FROM RISING BY WETTING DEMOLISHED DEBRIS. EXCESSIVE USE OF WATER WILL NOT BE PERMITTED.

5. PRIOR TO DEMOLITION, CONTRACTOR SHALL REVIEW WITH OWNER ALL MATERIALS TO BE REMOVED, SHOULD THE OWNER WANT TO KEEP ANY MATERIALS THE CONTRACTOR SHALL REMOVE AND DELIVER THE PARTS TO THE OWNER ON THE SITE WHERE SO DIRECTED. OTHERWISE ALL DEMOLISHED OR REMOVED MATERIALS SHALL BECOME THE PROPERTY OF THE CONTRACTOR AND SHALL BE REMOVED FROM THE SITE AND BE DISPOSED OF IN A LEGAL MANNER.

6. DEMOLITION SHALL INCLUDE REMOVAL OF ALL PARTS AND PIECES IN THEIR ENTIRETY BACK TO POINTS INDICATED OR IF NOT INDICATED BACK TO THEIR POINT OF SOURCE.

7. WHERE CONDITIONS PROHIBIT TOTAL REMOVAL OF THE WORK, THE REMAINING PORTION SHALL BE CUT FLUSH WITH THE SURROUNDING SURFACE AND BE CAPPED, PLUGGED OR SEALED AND THE SURROUNDING SURFACE SHALL BE REFINISHED IN AN APPROVED MANNER.

9. DO NOT REMOVE EXISTING STRUCTURAL WORK. DO NOT REMOVE OPERATIONAL ELEMENTS AND SAFETY-RELATED COMPONENTS IN A MANNER RESULTING IN A REDUCTION OF CAPACITIES TO PERFORM IN THE MANNER INTENDED OR RESULTING IN DECREASED OPERATIONAL LIFE, INCREASED MAINTENANCE, OR DECREASED SAFETY.

10. REMOVALS, DISCONNECTIONS, AND RELOCATIONS SHALL BE PERFORMED BY WORKMEN SKILLED IN THE TRADE INVOLVED AND SHALL BE EMPLOYED BY A CONTRACTOR LICENSED IN THE TRADE INVOLVED. ALL WORK SHALL BE DONE IN ACCORDANCE WITH ACCEPTED TRADE PRACTICES.

11. PROVIDE ADEQUATE TEMPORARY SUPPORT FOR WORK TO REMAIN, TO PREVENT FAILURE. DO NOT ENDANGER OTHER WORK.

12. PROTECTION: PROVIDE ADEQUATE PROTECTION WHERE REQUIRED FOR THE PRESENT BUILDING AND ITS CONTENTS. TEMPORARY DUSTPROOF BARRIERS AND BARRICADES SHALL BE ERECTED WHERE REQUIRED FOR PROTECTION OF PERSONNEL, PROTECTION FROM DUST AND DIRT, FOR SECURITY, FIRE AND WEATHER PROTECTIVE REASONS.

13. CONTRACTOR SHALL TAKE EVERY PRECAUTION AGAINST FIRE BY EMPLOYING FIRE DEPARTMENT TYPE HOSES AND PORTABLE FIRE EXTINGUISHERS AS REQUIRED BY OSHA AND/OR THE OWNER'S INSURANCE UNDERWRITER.

14. BEFORE STARTING DEMOLITION OPERATIONS, PROVIDE THE NECESSARY PROTECTIVE DEVICES, WHERE REQUIRED, AND IN STRICT ACCORDANCE WITH OSHA RULES AND REGULATIONS.

14. USE TEMPORARY ENCLOSURES, OR OTHER SUITABLE METHODS TO LIMIT DUST AND DIRT RISING AND SCATTERING TO LOWEST PRACTICAL LEVEL. COMPLY WITH GOVERNING REGULATIONS PERTAINING TO ENVIRONMENTAL PROTECTION.

15. FIELD VERIFY DEMOLITION REQUIREMENTS AND EXISTING CONDITIONS. DEMOLITION NOTES ARE INDICATED IN NOTE FORM.

16. CONTRACTOR SHALL ESTABLISH A PATH OF TRAVEL AND TIME SCHEDULE FOR THE REMOVAL OF ALL DEBRIS AND WASTE, AND HAVE THIS APPROVED BY OWNER. CONTRACTOR IS TO ENSURE THAT ALL CORRIDORS AND PUBLIC AREAS BE KEPT FREE OF OBSTRUCTIONS, DEBRIS, AND ARE TO BE BROOM SWEPT CLEAN AT ALL TIMES.

17. CONTRACTOR SHALL VISIT THE SITE AND BECOME INFORMED AS TO THE CONDITION OF THE PREMISES AND THE EXTENT AND CHARACTER OF WORK REQUIRED. NO ADDITIONAL COMPENSATION WILL BE APPROVED DUE TO FIELD CONDITIONS.

# NYSECC ENERGY COMPLIANCE STATEMENT:

PER SECTION C101.7 OF THE 2020 NYSECC HISTORIC BUILDINGS ARE EXEMPT FROM THE REQUIREMENTS OF THE ENERGY CODE.

# HVAC SYMBOL LIST

| IDENTIFIER | DESCRIPTION |
|---|---|
| | NEW DUCTWORK OR PIPING |
| | EXISTING DUCTWORK OR PIPING TO BE REMOVED |
| | EXISTING DUCTWORK OR PIPING TO REMAIN |
| 24X12 / 24X12 | DOUBLE-LINE AND SINGLE-LINE RECTANGULAR DUCT, FIRST NUMBER INDICATES SIDE IN VIEW IN INCHES, SECOND NUMBER INDICATES SIDE IN DEPTH IN INCHES |
| | FLEXIBLE DUCTWORK |
| | REGULAR SUPPLY AIR DUCT (UP AND DOWN) |
| | REGULAR RETURN AIR DUCT (UP AND DOWN) |
| | REGULAR EXHAUST AIR DUCT (UP AND DOWN) |
| | REGULAR OUTSIDE AIR DUCT (UP AND DOWN) |
| VD | VOLUME DAMPER |
| BD | BACKDRAFT DAMPER |
| FD | FIRE DAMPER |
| | MOTORIZED DAMPER |
| XXX / XX | EQUIPMENT TAG<br>EQUIPMENT NUMBER |
| XXX / X-XXX | DETAIL TAG/CALL OUT TAG<br>MECHANICAL SHEET NUMBER |
| T | THERMOSTAT |
| | EXHAUST GRILLE |
| F# | REFER TO SUPPLEMENTAL FIGURE INDICATED BY NUMBER (I.E. F2 REFERS TO FIGURE 2) |

# HVAC ABBREVIATIONS

| IDENTIFIER | DESCRIPTION |
|---|---|
| AC | DIRECT EXPANSION AIR CONDITION UNIT |
| CFM | CUBIC FEET PER MINUTE |
| COND | CONDENSATE |
| CU | CONDENSING UNIT |
| CUH | CABINET UNIT HEATER |
| DB | DRY BULB |
| DN | DOWN |
| EA | EXHAUST AIR |
| EF | EXHAUST FAN |
| EG | EXHAUST GRILLE |
| EUH | ELECTRIC UNIT HEATER |
| EER | ENERGY EFFICIENCY RATIO |
| EG | EXHAUST GRILLE |
| FAI | FRESH AIR INTAKE |
| FD | FIRE DAMPER |
| GC | GENERAL CONTRACTOR |
| MBH | THOUSAND BTU PER HOUR |
| PC | PLUMBING CONTRACTOR |
| RG | RETURN GRILLE |
| RGL | REFRIGERANT GAS LINE |
| RLL | REFRIGERANT LIQUID LINE |
| RTU | ROOFTOP UNIT |
| SA | SUPPLY AIR |
| SD | SUPPLY DIFFUSER |
| TYP. | TYPICAL |
| VIF | VERIFY IN FIELD |

# SCOPE OF WORK

DEMOLITION

1. REMOVE TWO (2) EXISTING WINDOW AC UNITS AS INDICATED.
2. REMOVE ONE (1) ELECTRIC UNIT HEATER AND ASSOCIATED SUPPORTS, WIRING AND ACCESSORIES.

CONSTRUCTION

1. PROVIDE ONE (1) NEW OUTDOOR SPLIT CONDENSER AIR CONDITIONER UNIT ON CONCRETE PAD AS INDICATED.
2. PROVIDE TWO (2) NEW WALL MOUNTED INDOOR UNITS AS INDICATED.
3. PROVIDE TWO (2) NEW EXHAUST FANS AND ASSOCIATED LOUVERS AS INDICATED.
4. PROVIDE ONE (1) NEW WALL MOUNTED ELECTRIC UNIT HEATER AS INDICATED.

# MECHANICAL DRAWING LIST

| SHEET NO. | SHEET NAME | REVISON NO. | REVISION DATE |
|---|---|---|---|
| CXA-M-01 | MECHANICAL NOTES, SYMBOLS & LEGENDS | 0 | - |
| CXA-M-11 | MECHANICAL 1ST FLOOR DEMOLITION PLAN | 0 | - |
| CXA-M-21 | MECHANICAL 1ST FLOOR CONSTRUCTION PLAN | 0 | - |
| CXA-M-61 | MECHANICAL SCHEDULES | 0 | - |
| CXA-M-81 | MECHANICAL DETAILS | 0 | - |
| CXA-M-91 | MECHANICAL CONTROLS | 0 | - |

# NATURAL VENTILATION SCHEDULE

| SPACE DETAILS | | | DESIGN | | | |
|---|---|---|---|---|---|---|
| ROOM | AREA (SF) | 4% FLOOR AREA (SF) | WINDOW FREE AREA (SF) | DOOR AREA (SF) | TOTAL OPENABLE AREA (SF) | NOTES |
| 105 OFFICE | 310 | 12 | 25 | 21 | 46 | 1,2 |
| 107 MAIN STORAGE | 468 | 19 | 8 | 42 | 50 | 1,2 |

NOTES:
1. NEW YORK STATE MECHANICAL CODE.
2. NATURAL VENTILATION OF AN OCCUPIED SPACE SHALL BE THROUGH WINDOWS, DOORS, LOUVERS, AND OTHER OPENINGS TO THE OUTDOORS. THE MINIMUM OPENABLE AREA TO THE OUTDOORS SHALL BE 4 PERCENT OF THE FLOOR AREA BEING VENTILATED.

# TABLE 1: ENERGY CODE ANALYSIS TABLE FOR MECHANICAL SYSTEMS

**(PER 2020 NYS ENERGY CODE)**

| ITEM DESCRIPTION | | | PROPOSED VALUE | MINIMUM EFFECIENCY | CODE PRECRIBED VALUE AND CITATION | CITATION | SUPPORTING DOCUMENTATION |
|---|---|---|---|---|---|---|---|
| | UNIT TAG | EQUIPMENT TYPE | | | | | |
| HVAC EQUIPMENT PERFORMANCE | AC-1, AC-2, CU-1 | SPLIT SYSTEM HEAT PUMP | HSPF = 12.0<br>SEER=22.0 | HSPF = 8.2<br>SEER=14.0 | MINIMUM EFFICIENCY REQUIREMENTS: ELECTRICALLY OPERATED UNITARY AIR CONDITIONERS AND CONDENSING UNITS < 65,000 Btu/hb | C403.2.3(1) | MECHANICAL SCHEDULES |
| HVAC SYSTEM CONTROLS | ALL HEATING COOLING EQUIPMENT | THERMOSTATIC CONTROLS | DIGITAL THERMOSTATS | - | THERMOSTATIC CONTROLS FOR HVAC SYSTEM | C403.2.6 | MECHANICAL SCHEDULES AND PLANS |
| SHUTOFF DAMPERS | | | GRAVITY/BACKDRAFT DAMPERS PROVIDED IN LIEU OF MOTORIZED DAMPER MOTORIZED DAMPERS PER EXCEPTIONS 1 AND 3 | - | BACDRAFT DAMPER INSTALLED AT EXHAUST OPENINGS | C403.7.7 | MECHANICAL SCHEDULES AND PLANS |
| DUCT LEAKAGE | | | SMACNA HVAC DUCT LEAKAGE TEST | - | SMACNA HVAC DUCT LEAKAGE TEST | PER C403 | MECHANICAL DWGS. & SPECS |

# TABLE 2: ENERGY CODE COMPLIANCE INSPECTIONS FOR MECHANICAL SYSTEMS

**(IIB - MECHANICAL AND SERVICE WATER HEATING INSPECTIONS)**

| | INSPECTION TEST | FREQUENCY | REFERENCE STANDARDS | INSPECTION DESCRIPTION | ECC CITATION |
|---|---|---|---|---|---|
| IIB2 | SHUT-OFF DAMPERS | AS REQUIRED DURING INSTALLATION | APPROVED CONSTRUCTION DOCUMENTS | DAMPERS FOR STAIR AND ELEVATOR SHAFT VENTS AND OTHER OUTDOOR AIR INTAKES AND EXHAUST OPENINGS INTEGRAL TO THE BUILDING ENVELOPE SHALL BE VISUALLY INSPECTED TO VERIFY THAT SUCH DAMPERS, EXCEPT WHERE PERMITTED TO BE GRAVITY DAMPERS, COMPLY WITH APPROVED CONSTRUCTION DRAWINGS. MANUFACTURER'S LITERATURE SHALL BE REVIEWED TO VERIFY THAT THE PRODUCT HAS BEEN TESTED AND FOUND TO MEET THE STANDARD. | NYSECC C403.2.4.4, OR ASHRAE 90.1-6.4.3.4 |
| IIB3 | HVAC AND SERVICE WATER HEATING EQUIPMENT | PRIOR TO FINAL MECHANICAL AND CONSTRUCTION INSPECTION | APPROVED CONSTRUCTION DOCUMENTS | EQUIPMENT SIZING, EFFICIENCIES AND OTHER PERFORMANCE FACTORS OF ALL MAJOR EQUIPMENT UNITS, AS DETERMINED BY THE APPLICANT OF RECORD, AND NO LESS THAN 15% OF MINOR EQUIPMENT UNITS, SHALL BE VERIFIED BY VISUAL INSPECTION AND, WHERE NECESSARY, REVIEW OF MANUFACTURER'S DATA. POOL HEATERS AND COVERS SHALL BE VERIFIED BY VISUAL INSPECTION | NYSECC C403.2, C404.2, C404.7, C406.2 |
| IIB4 | HVAC AND SERVICE WATER HEATING SYSTEM CONTROLS | AFTER INSTALLATION AND PRIOR TO FINAL ELECTRICAL AND CONSTRUCTION INSPECTION, EXCEPT THAT FOR CONTROLS WITH SEASONALLY DEPENDENT FUNCTIONALITY, SUCH TESTING SHALL BE PERFORMED BEFORE SIGN-OFF FOR ISSUANCE OF A FINAL CERTIFICATE OF OCCUPANCY | APPROVED CONSTRUCTION DOCUMENTS INCLUDING CONTROL SYSTEM NARRATIVES | NO LESS THAN 20% OF EACH TYPE OF REQUIRED CONTROLS AND ECONOMIZERS SHALL BE VERIFIED BY VISUAL INSPECTION AND TESTED FOR FUNCTIONALITY AND PROPER OPERATION. SUCH CONTROLS SHALL INCLUDE, BUT ARE NOT LIMITED TO, THERMOSTATIC AND ECONOMIZER CONTROLS | NYSECC C403.2.4, C403.2.5.1, C403.2.11, C403.3, C403.4, C404.3, C404.6, C404.7 |
| IIB6 | HVAC DUCT LEAKAGE TESTING | PRIOR TO CLOSING CEILINGS AND WALLS AND PRIOR TO FINAL CONSTRUCTION INSPECTION | APPROVED CONSTRUCTION DOCUMENTS; NYC MECHANICAL CODE | WHERE THE AIR HANDLER AND/OR SOME DUCTWORK IS IN UNCONDITIONED SPACE, DUCT-LEAKAGE TESTING SHALL BE PERFORMED EITHER AFTER ROUGH-IN OR POST-CONSTRUCTION TO ENSURE COMPLIANCE WITH ECC R403.3.3 AND R403.3.4. NOT LESS THAN 20% OF SUCH DUCTWORK SHALL BE TESTED | NYSECC C403 |


CONSULTANT INFORMATION

LiRo Engineers, Inc.
*A LiRo Group Company*
Syosset, N.Y. 516-214-8157[T]

CONSULTANT SEAL


| REVISION NUMBER | DATE | MADE BY | APP'D BY | REVISION |
|---|---|---|---|---|

RECORD DRAWING CERTIFICATION

☐ AS BUILT – CHANGES AS NOTED ☐ AS BUILT – NO CHANGES

| CONTRACTOR | PROJECT COORDINATOR |
|---|---|
| NAME | NAME |
| SIGNATURE | SIGNATURE |
| TITLE DATE | TITLE DATE |

WESTCHESTER COUNTY, NEW YORK
DEPARTMENT OF PUBLIC WORKS AND TRANSPORTATION
DIVISION OF ENGINEERING

**INFRASTRUCTURE REHABILITATION - PHASE 3**
**PLAYLAND PARK, RYE, NEW YORK**
**CROSS AXIS BUILDING A**
**MECHANICAL NOTES, SYMBOLS AND LEGENDS**

CONTRACT NUMBER: 22-523
SHEET NUMBER: **CXA-M-01**
DWG NO.: 158 of 664
SCALE: **AS INDICATED**
DATE: 08/23/2022
DPW FILE NUMBER: **1-118-M-907-0**
REV. NO. 0

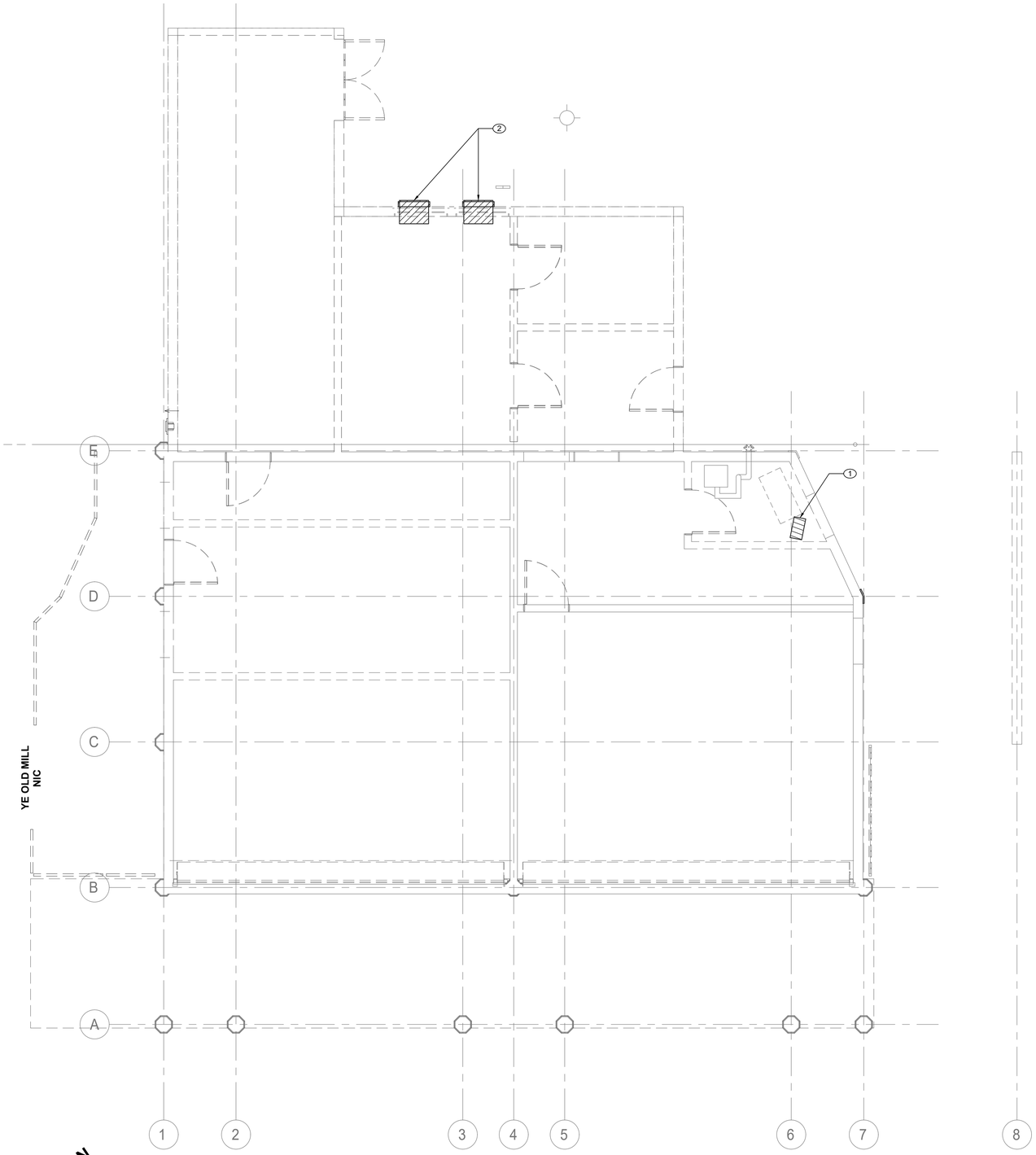


## MECHANICAL FIRST FLOOR DEMOLITION PLAN

SCALE: 1/4" = 1'-0

## GENERAL NOTES:

1. RETURN REMOVED EXISTING EQUIPMENT TO OWNER IF IT IS IN WORKING CONDITION.
2. CONTRACTOR TO COORDINATE WITH FACILITY WHEN WORKING AROUND OR ABOVE THE RIDE COMPONENTS, AND PROVIDE ALL NECESSARY MEASURES TO PROTECT THESE COMPONENTS PER THE REQUIREMENTS OF THE FACILITY.

## MECHANICAL DEMOLITION NOTES:

1. DEMOLISH EXISTING ELECTRIC UNIT HEATERS AND ASSOCIATED SUPPORTS, WIRING AND ACCESSORIES. COORDINATE REMOVAL OF ELECTRICAL POWER AND WIRING WITH ELECTRICAL CONTRACTOR.
2. REMOVE EXISTING WINDOW AC UNIT. IF NO LONGER IN WORKING CONDITION, DISPOSAL SHALL BE IN ACCORDANCE WITH EPA REQUIREMENTS.

CONSULTANT INFORMATION

LiRo Engineers, Inc.
A LiRo Group Company
Syosset, N.Y. 516-214-8157[T]

CONSULTANT SEAL

STATE OF NEW YORK · FRANK F. ULISSE · No. 090111-1 · LICENSED PROFESSIONAL ENGINEER

| REVISION NUMBER | DATE | MADE BY | APP'D BY | REVISION |
|---|---|---|---|---|
| | | | | |

RECORD DRAWING CERTIFICATION

☐ AS BUILT – CHANGES AS NOTED ☐ AS BUILT – NO CHANGES

CONTRACTOR
NAME
SIGNATURE
TITLE DATE

PROJECT COORDINATOR
NAME
SIGNATURE
TITLE DATE

WESTCHESTER COUNTY, NEW YORK
DEPARTMENT OF PUBLIC WORKS AND TRANSPORTATION
DIVISION OF ENGINEERING

INFRASTRUCTURE REHABILITATION - PHASE 3
PLAYLAND PARK, RYE, NEW YORK
CROSS AXIS BUILDING A
MECHANICAL FIRST FLOOR DEMOLITION PLAN

| | |
|---|---|
| CONTRACT NUMBER | 22-523 |
| SHEET NUMBER | CXA-M-11 |
| DWG NO.: | 159 of 664 |
| SCALE: | AS INDICATED |
| DATE: | 08/23/2022 |
| DPW FILE NUMBER | 1-118-M-908-0 |
| REV. NO. | 0 |

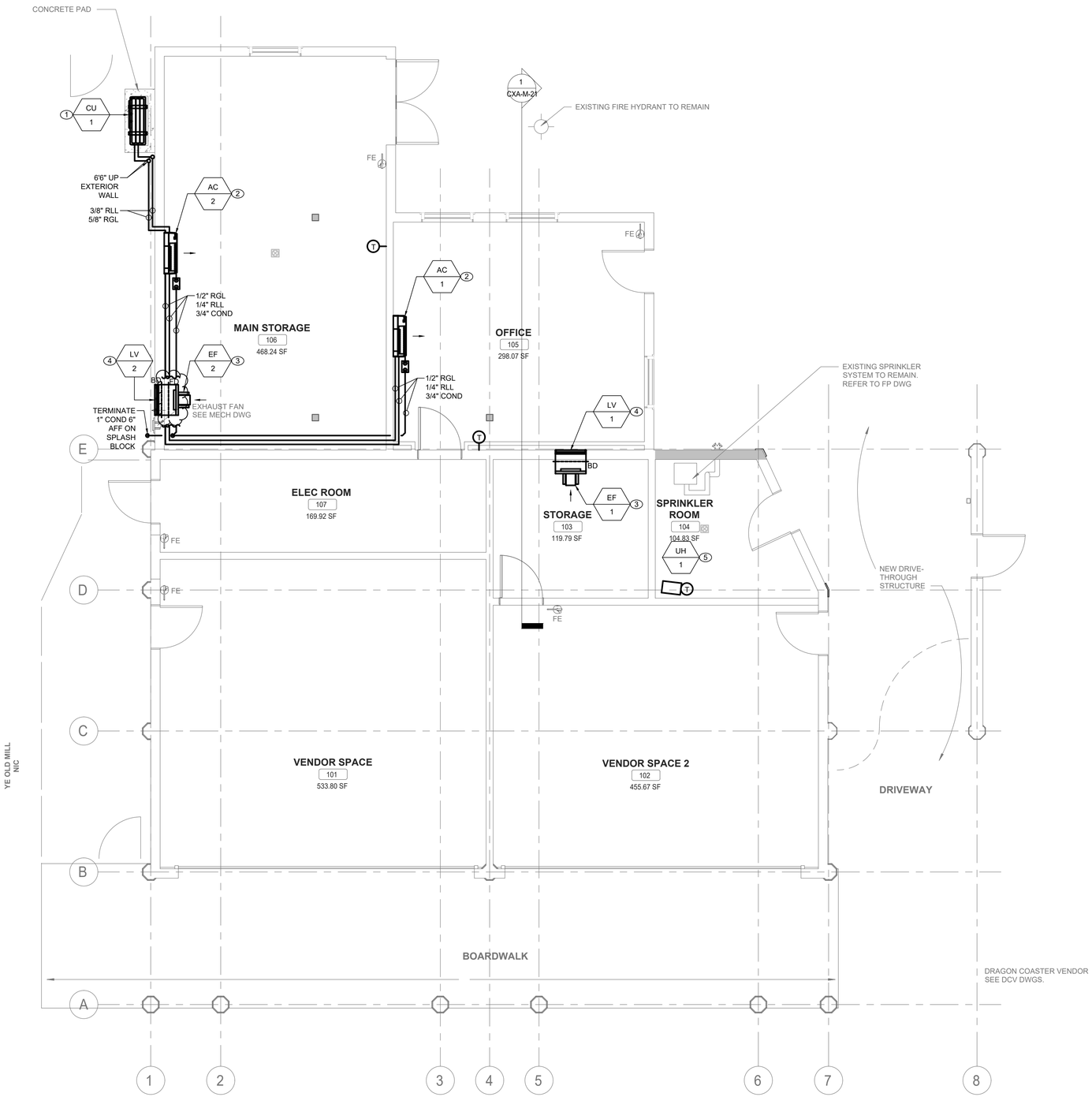


## MECHANICAL FIRST FLOOR CONSTRUCTION PLAN

SCALE: 1/4" = 1'-0

## GENERAL NOTES:

1. CONTRACTOR TO COORDINATE WITH FACILITY WHEN WORKING AROUND OR ABOVE THE RIDE COMPONENTS, AND PROVIDE ALL NECESSARY MEASURES TO PROTECT THESE COMPONENTS PER THE REQUIREMENTS OF THE FACILITY.
2. UPON COMPLETION, SYSTEM SHALL BE TESTED FOR PROPER OPERATION.

## MECHANICAL CONSTRUCTION NOTES:

1. PROVIDE NEW OUTDOOR SPLIT CONDENSER AIR CONDITIONER UNIT AS SHOWN WITH A MINIMUM CLEARANCE OF 8" FROM EXTERIOR WALL ON CONCRETE PAD TO BE COORDINATED WITH AND INSTALLED BY GC. COORDINATE ELECTRICAL POWER AND WIRING WITH ELECTRICAL CONTRACTOR. COORDINATE LOCATION OF WALL MOUNTED DISCONNECT SWITCH WITH ELECTRICAL CONTRACTOR.
2. PROVIDE NEW WALL MOUNTED INDOOR UNITS AS INDICATED WITH CONDENSATE LIFT PUMPS. INSTALL AC-1 AND AC-2 AT 6'10" AFF TO CENTER. COORDINATE ELECTRICAL POWER AND WIRING WITH ELECTRICAL CONTRACTOR.
3. PROVIDE NEW EXHAUST FAN AS SCHEDULED. COORDINATE ELECTRICAL POWER AND WIRING WITH ELECTRICAL CONTRACTOR. INSTALL EF-1 AT 14'6" AFF TO CENTER AND EF-2 6'2" AFF TO CENTER .
4. PROVIDE NEW RAIN RESISTANT LOUVER AS SCHEDULED. ALIGN CENTER OF LOUVER WITH CENTER OF EXHAUST FAN. REFER TO INSTALLATION DETAIL ON CXA-M-81.
5. PROVIDE NEW ELECTRIC WALL MOUNTED UNIT HEATER. COORDINATE INSTALL HEIGHT IN FIELD.

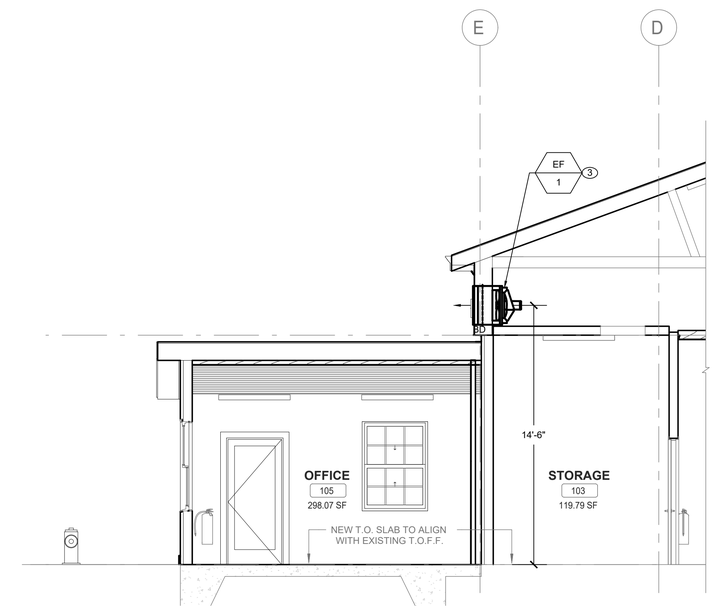


## 1 INTERIOR SECTION - SOUTHEAST

SCALE: 1/4" = 1'-0

CONSULTANT INFORMATION

LiRo Engineers, Inc.
A LiRo Group Company
Syosset, N.Y. 516-214-8157[T]

CONSULTANT SEAL

STATE OF NEW YORK · FRANK F. ULIASSE · No. 090111-1 · LICENSED PROFESSIONAL ENGINEER

| REVISION NUMBER | DATE | MADE BY | APP'D BY | REVISION |
|---|---|---|---|---|

RECORD DRAWING CERTIFICATION

☐ AS BUILT – CHANGES AS NOTED ☐ AS BUILT – NO CHANGES

CONTRACTOR: NAME / SIGNATURE / TITLE / DATE

PROJECT COORDINATOR: NAME / SIGNATURE / TITLE / DATE

WESTCHESTER COUNTY, NEW YORK
DEPARTMENT OF PUBLIC WORKS AND TRANSPORTATION
DIVISION OF ENGINEERING

INFRASTRUCTURE REHABILITATION - PHASE 3
PLAYLAND PARK, RYE, NEW YORK
CROSS AXIS BUILDING A
MECHANICAL FIRST FLOOR CONSTRUCTION PLAN

| | |
|---|---|
| CONTRACT NUMBER | 22-523 |
| SHEET NUMBER | CXA-M-21 |
| DWG NO.: | 160 of 664 |
| SCALE: | AS INDICATED |
| DATE: | 08/23/2022 |
| DPW FILE NUMBER | 1-118-M-909-0 |
| REV. NO. | 0 |

# DUCTLESS SPLIT SYSTEM HEAT PUMP SCHEDULE

| UNIT TAG (INDOOR) | ASSOCIATED OUTDOOR UNIT | MANUFACTURER | MODEL | LOCATION/SERVICE | REFRIGERANT | SUPPLY FAN | COOLING | | HEATING | | ELECTRICAL | | | WEIGHT | NOTES |
|---|---|---|---|---|---|---|---|---|---|---|---|---|---|---|---|
| | | | | | | CFM | TOTAL/SENS. (MBH) | EAT DB/WB | MBH | EAT/LAT DB | V.-PH.-CY. | MCA | MOCP | | |
| AC-1 | CU-1 | MITSUBISHI | PKFY-P18NLMU-E | 105 OFFICE | R410A | 438 | 18.0/20.0 | 80/67 | 20.0 | 70/90 | 208-1-60 | 0.24 | 15 | 28.4 | 1,2,3,4 |
| AC-2 | CU-1 | MITSUBISHI | PKFY-P18NLMU-E | 107 MAIN STORAGE | R410A | 438 | 18.0/20.0 | 80/67 | 20.0 | 70/90 | 208-1-60 | 0.24 | 15 | 28.4 | 1,2,3,4 |

NOTES:
1. UNIT CAPACITY INDICATED AS SIZING CRITERIA.
2. PROVIDE UNIT WITH WIRED WALL MOUNTED THERMOSTAT.
3. PROVIDE ALL INDOOR UNIT WITH CONDENSATE PUMP.
4. INSTALL AND SIZE REFRIGERANT PIPING PER MANUFACTURER'S SPECIFICATIONS

# DUCTLESS SPLIT SYSTEM HEAT PUMP CONDENSING UNIT SCHEDULE

| UNIT TAG (OUTDOOR) | MANUFACTURER | MODEL | NOMINAL COOLING (BTU/HR) | NOMINAL HEATING (BTU/HR) | SERVICE | SEER | COP | V.-PH.-CY. | MCA | MOCP | WEIGHT | NOTES |
|---|---|---|---|---|---|---|---|---|---|---|---|---|
| CU-1 | MITSUBISHI | PUMY-P36NKMU3-BS | 36000 | 42000 | OFFICE & MAIN STORAGE | 22.3 | 4 | 208-1-60 | 29.0 | 44.0 | 271.0 | 1,2,3 |

NOTES:
1. UNIT CAPACITY INDICATED AS SIZING CRITERIA.
2. INSTALL UNIT ON CONCRETE PAD.
3. PROVIDE MINIMUM CLEARANCE OF 8" FROM EXTERIOR WALL, AND 40" FROM CONDENSER FAN DISCHARGE.

# FAN SCHEDULE

| TAG | MANUFACTURER | MODEL | LOCATION | SERVICE | TYPE | DRIVE | AIR FLOW (CFM) | TSP (IN. WG) | ELECTRICAL | | | | OPERATING WEIGHT (±LBS) | DIMENSIONS DxH (IN) | NOTES |
|---|---|---|---|---|---|---|---|---|---|---|---|---|---|---|---|
| | | | | | | | | | HP | BHP | RPM | V-PH-HZ | | | |
| EF-1 | GREENHECK | AER-20-03-0600-VG | 103 STORAGE | STORAGE & ATTIC | AXIAL | DIRECT | 50 | 0.09 | 0.25 | 0.01 | 512 | 115-1-60 | 60 | 26X26 | 1,3,4,5 |
| EF-2 | GREENHECK | AER-20-03-0600-VG | 107 MAIN STORAGE | MAIN STORAGE | AXIAL | DIRECT | 50 | 0.09 | 0.25 | 0.01 | 512 | 115-1-60 | 60 | 26X26 | 1-5 |

NOTES:
1. PROVIDE ALL CONTACTS, RELAYS, AND DEVICES NECESSARY FOR BMS CONTROL OF FANS PER SEQUENCE OF OPERATIONS.
2. PROVIDE EF-2 WITH MANUAL WALL MOUNT SWITCH. REFER TO CONTROLS
3. PROVIDE THERMAL OVERLOAD FOR ALL SINGLE PHASE MOTORS.
4. PROVIDE SALT WATER RESISTANT HI-PRO POLYESTER COATING FOR ALL FANS.
5. FAN SHALL BE FURNISHED WITH NON FUSED DISCONNECT.

# ELECTRIC UNIT HEATER SCHEDULE

| TAG | MANUFACTURER | MODEL | SERVICE | TYPE | KW | AMPS | V-PH-HZ | NOTES |
|---|---|---|---|---|---|---|---|---|
| UH-1 | TRANE | UHEC-031A0C0 | 105 SPRINKLER ROOM | WALL HUNG | 3.3 | 15.9 | 208-1-60 | 1 |

NOTES:
1. PROVIDE UNIT MOUNTED 2 STAGE THERMOSTAT.

# LOUVER SCHEDULE

| TAG | MANUFACTURER | MODEL | SERVICE | LOCATION | MATERIAL | FINISH TYPE | WIDTH (INCH) | HEIGHT (INCH) | PRESSURE DROP (IN. WG) | MINIMUM FREE AREA (SQUARE FEET) | NOTES |
|---|---|---|---|---|---|---|---|---|---|---|---|
| LV-1 | GREENHECK | ESD-635 | EXHAUST | 103 STORAGE | ALUMINUM | BAKED ENAMEL | 26 | 26 | 0.01 | 1.96 | 1 |
| LV-2 | GREENHECK | ESD-635 | EXHAUST | 107 MAIN STORAGE | ALUMINUM | BAKED ENAMEL | 26 | 26 | 0.01 | 1.96 | 1 |

NOTES:
1. PROVIDE WITH ALUMINUM BIRD SCREEN AND BACKDRAFT DAMPERS.

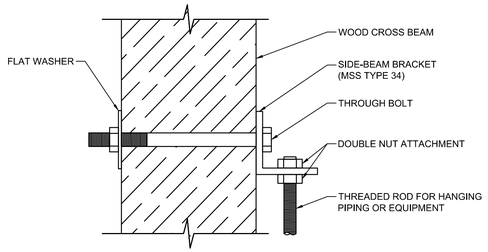


## 1 / M-81 MECHANICAL ANCHORING DETAIL

SCALE: NOT TO SCALE

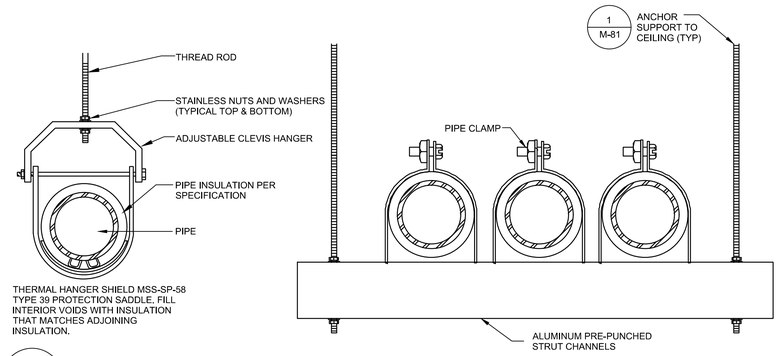


## 2 / M-81 MECHANICAL PIPE HANGER DETAIL

SCALE: NOT TO SCALE

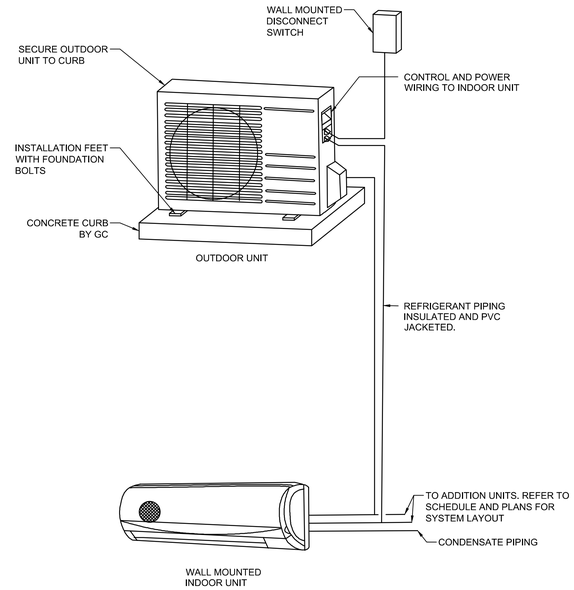


## 6 / M-81 MECHANICAL SPLIT PIPING DETAIL

SCALE: NOT TO SCALE

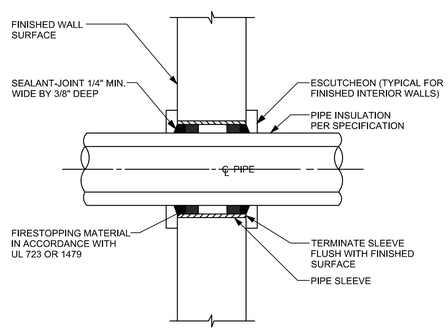


## 3 / M-81 WALL SLEEVED PENETRATION DETAIL

SCALE: NOT TO SCALE

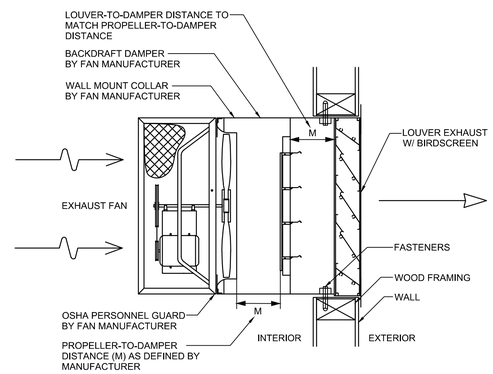


## 4 / M-81 PROPELLER FAN DETAIL

SCALE: NOT TO SCALE

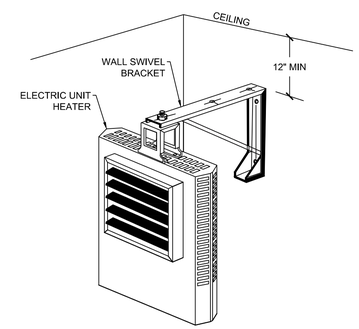


## 5 / M-81 MECHANICAL WALL MOUNTED ELECTRIC UNIT HEATER DETAIL

SCALE: NOT TO SCALE

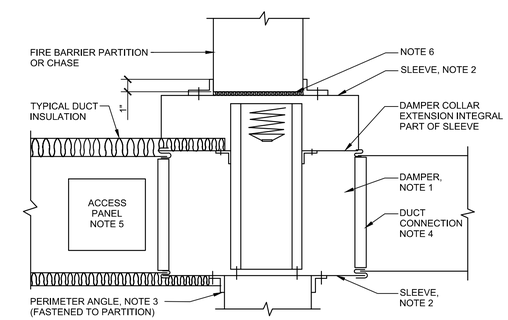


NOTE:

1. A VERTICAL DAMPER IS SHOWN. HORIZONTAL DAMPER INSTALLATION, IS SIMILAR. FOLLOW DAMPER MANUFACTURER'S INSTRUCTIONS, INCLUDING FASTENER OPTIONS AND GAGES FOR SLEEVE AND PERIMETER ANGLES. FIRE DAMPERS MUST BE INSTALLED IN THE PARTITION OR FLOOR AND NOT OUTSIDE THE PENETRATION.
2. GALVANIZED SLEEVE: GAGE NOT LESS THAN CONNECTING DUCT. FASTEN SLEEVE TO DAMPER FRAME AND TO PERIMETER ANGLES.
3. PERIMETER ANGLES: GALVANIZED STEEL, NOT LESS THAN 1 1/2"x1 1/2", 14 GAGE, TO PROVIDE 1" MINIMUM OVERLAP OF OPENING ON ALL 4 SIDES.
4. BREAKAWAY DUCT CONNECTION: CONTRACTOR'S OPTION OF TYPES SHOWN IN SMACNA.
5. ACCESS PANELS: SIZE AND LOCATION TO PERMIT SERVICING THE FUSIBLE LINK OR LINKS.
6. PROVIDE 1/4" TO 1/2" CLEARANCE ON HEIGHT AND WIDTH. FILL OPEN SPACE WITH ROCK WOOL FIRESTOP FIBER.
7. ALL DUCT WORK RISERS WHICH ARE RUN EXPOSED, SUCH AS THRU ATTIC FLOORS AND MECHANICAL ROOM FLOORS, SHALL BE PROVIDED WITH 3" HIGH CONCRETE CURB AROUND OPENING FOR DUCT.
8. INSTALL FIRE DAMPERS I ACCORDANCE WITH UL 555.

## 7 / M-81 FIRE DAMPER INSTALLATION

SCALE: NOT TO SCALE

CONSULTANT INFORMATION

LiRo Engineers, Inc.
*A LiRo Group Company*
Syosset, N.Y. 516-214-8157[T]

CONSULTANT SEAL

STATE OF NEW YORK · FRANK F. ULISSE · No. 089111-1 · LICENSED PROFESSIONAL ENGINEER

| REVISION NUMBER | DATE | MADE BY | APP'D BY | REVISION |
|---|---|---|---|---|
| | | | | |

RECORD DRAWING CERTIFICATION

☐ AS BUILT – CHANGES AS NOTED ☐ AS BUILT – NO CHANGES

CONTRACTOR: NAME ____ SIGNATURE ____ TITLE ____ DATE ____

PROJECT COORDINATOR: NAME ____ SIGNATURE ____ TITLE ____ DATE ____

WESTCHESTER COUNTY, NEW YORK
DEPARTMENT OF PUBLIC WORKS AND TRANSPORTATION
DIVISION OF ENGINEERING

**INFRASTRUCTURE REHABILITATION - PHASE 3**
**PLAYLAND PARK, RYE, NEW YORK**
**CROSS AXIS BUILDING**
**MECHANICAL DETAILS**

| | |
|---|---|
| CONTRACT NUMBER | 22-523 |
| SHEET NUMBER | CXA-M-81 |
| DWG NO.: | 162 of 664 |
| SCALE: | AS INDICATED |
| DATE: | 08/23/2022 |
| DPW FILE NUMBER | 1-118-M-911-0 |
| REV. NO. | 0 |

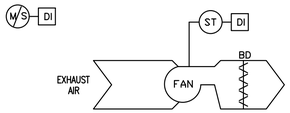


EXHAUST FAN - CONSTANT SPEED - SEQUENCE OF OPERATIONS:

GENERAL: EACH EXHAUST FAN CONSISTS OF FAN, BACKDRAFT DAMPER, AND EC MOTOR CONTROLLER

EXHAUST FAN TO BE LOCALLY CONTROLLED FROM SWITCH MOUNTED ADJACENT TO FAN.

1. OCCUPIED MODE:
   a. THE EXHAUST FAN SHALL RUN AT A CONSTANT VOLUME WHEN SWITCHED ON.
3. UNOCCUPIED MODE:
   a. THE EXHAUST FAN SHALL BE OFF WHEN SWITCHED OFF.

## 1 / M-91 EXHAUST FAN - CONSTANT SPEED
SCALE: NOT TO SCALE

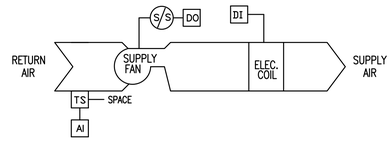


UNIT HEATER - ELECTRIC - SEQUENCE OF OPERATIONS:

1. ON DROP IN SPACE TEMPERATURE BELOW OCCUPIED HEATING SETPOINT, CYCLE THE FAN ON AND MODULATE (2 STAGE) ELECTRIC COIL TO MAINTAIN SPACE OCCUPIED SETPOINT, FAN SHALL HAVE DELAYED SHUT OFF AFTER VALVE CLOSES. USE 5 DEG. F (ADJUSTABLE) DEADBAND TO MINIMIZE SHORT CYCLING.

## 2 / M-91 UNIT HEATER ELECTRIC
SCALE: NOT TO SCALE

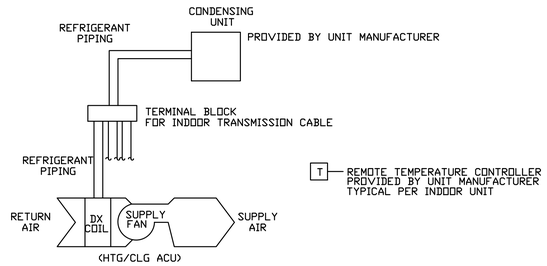


MULTIPLE DUCTLESS SPLIT SYSTEMS - HEATING AND COOLING - SEQUENCE OF OPERATIONS:

1. UNITS SHALL BE CONTROLLED WITH UNIT PROVIDED THERMOSTATS AND CONNECTED TO CONTROLLER.
2. GENERATE AN ALARM AT CONTROLLER WHEN THE TEMPERATURE GOES ABOVE OR BELOW ROOM TEMPERATURE RANGE (ADJUSTABLE).

## 3 / M-91 MULTIPLE DUCTLESS SPLIT SYSTEM
SCALE: NOT TO SCALE

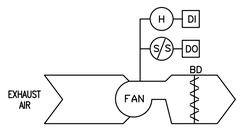


EXHAUST FAN - CONSTANT SPEED - SEQUENCE OF OPERATIONS:

GENERAL: EACH EXHAUST FAN CONSISTS OF FAN, BACKDRAFT DAMPER, AND EC MOTOR CONTROLLER

1. OCCUPIED MODE:
   a. THE EXHAUST FAN SHALL RUN WHEN THE RELATIVE HUMIDITY IN THE SPACE SERVED EXCEEDS 60 PERCENT.
3. UNOCCUPIED MODE:
   a. THE EXHAUST FAN SHALL RUN WHEN THE RELATIVE HUMIDITY IN THE SPACE SERVED EXCEEDS 60 PERCENT.
4. WARM-UP MODE:
   a. THE EXHAUST FAN SHALL RUN WHEN THE RELATIVE HUMIDITY IN THE SPACE SERVED EXCEEDS 60 PERCENT.

## 4 / M-91 ATTIC EXHAUST FAN - CONSTANT SPEED
SCALE: NOT TO SCALE

PANELBOARD: EXISTING PANEL - SHORT THE STARS — LOCATION: NORTH GAMES (CXA) - VENDOR SPACE
NEMA RATING: 1 — POLES: 3 — MOUNTING: SURFACE
AMP BUS RATING: 150 — AMP MAIN BREAKER: 100 — KA SHORT CIRCUIT RATING: 42
VOLTS: 208Y/120 — 3 PHASE, 4 WIRE — ELECTRONIC GRADE: NO

| CIRCUIT NO | DESCRIPTION | LOAD KVA PHASE A | PHASE B | PHASE C | BREAKER AMPS POLES | NOTES | CIRCUIT NO | DESCRIPTION | LOAD KVA PHASE A | PHASE B | PHASE C | BREAKER AMPS POLES | NOTES |
|---|---|---|---|---|---|---|---|---|---|---|---|---|---|
| 1 | | | | | | | 2 | LIGHTS | | | | 15/1 | |
| 3 | COMPRESSOR | | | | 20/3 | | 4 | FRONT LIGHTS | | | | 20/1 | |
| 5 | | | | | | | 6 | FRONT DOOR | | | | 20/1 | |
| 7 | SPARE | | | | 15/1 | | 8 | BENCH OUTLET | | | | 15/1 | |
| 9 | | | | | 20/1 | | 10 | | | | | | |
| 11 | BLANK | | | | | | 12 | BLANK | | | | | |
| | TOTAL PHASE KVA THIS SIDE | 0 | 0 | 0 | | | | TOTAL PHASE KVA THIS SIDE | 0 | 0 | 0 | | |
| | | | | | | | | TOTAL KVA PER PHASE | 0 | 0 | 0 | | |
| | | | | | | | | TOTAL THREE PHASE KVA | | 0 | | | |

NOTES:
1
2
3
4

NOTES CONT.:
5
6
7
8

PANELBOARD: EXISTING - VESTIBULE 1 — LOCATION: NORTH GAMES (CXA) - VESTIBULE
NEMA RATING: 1 — POLES: 3 — MOUNTING: SURFACE
AMP BUS RATING: 150 — XXX AMP MAIN BREAKER — KA SHORT CIRCUIT RATING: 42
VOLTS: 208Y/120 — 3 PHASE, 4 WIRE — ELECTRONIC GRADE: NO

| CIRCUIT NO | DESCRIPTION | LOAD KVA PHASE A | PHASE B | PHASE C | BREAKER AMPS POLES | NOTES | CIRCUIT NO | DESCRIPTION | LOAD KVA PHASE A | PHASE B | PHASE C | BREAKER AMPS POLES | NOTES |
|---|---|---|---|---|---|---|---|---|---|---|---|---|---|
| 1 | BLANK | | | | | | 2 | GLENN'S OFFICE - A.C. | | | | 20/1 | |
| 3 | BLANK | | | | | | 4 | GLENN'S OFFICE - A.C. | | | | 20/1 | |
| 5 | BLANK | | | | | | 6 | OFFICE - BASEBOARD HEATING | | | | 20/2 | |
| 7 | FRONT GAME LIGHTS | | | | 15/1 | | 8 | | | | | | |
| 9 | BACK STORAGE LIGHTS | | | | 20/1 | | 10 | | | | | | |
| 11 | OUTLET THROUGH FLOOR | | | | 20/1 | | 12 | ICE IN BACK | | | | 20/2 | |
| 13 | STORAGE ROOM OUTLETS | | | | 20/1 | | 14 | DOOR BUZZER | | | | 15/1 | |
| 15 | BACK ROOM OUTLETS, ALLEY LIGHTS | | | | 20/1 | | 16 | WATER HEATER | | | | 20/2 | |
| 17 | CAT GAME OUTLETS | | | | 20/1 | | 18 | | | | | | |
| 19 | SIDE PANEL OUTLET FEEDS SPRINKLER | | | | | | 20 | KITCHENETTE OUTLET | | | | 20/1 | |
| 21 | BACK ROOM LIGHTS | | | | 15/1 | | 22 | QUAD OUTLET DESK | | | | 20/1 | |
| 23 | OUTSIDE | | | | | | 24 | BACK OFFICE OUTLET | | | | 20/1 | |
| 25 | HEATER IN COMPRESSOR ROOM | | | | 30/2 | | 26 | OUTLET UNDER OFFICE WINDOW | | | | 20/1 | |
| 27 | | | | | | | 28 | OUTLET FRONT DOOR | | | | 15/1 | |
| 29 | SPARE | | | | 15/1 | | 30 | OFFICE LIGHTS | | | | 15/1 | |
| | TOTAL PHASE KVA THIS SIDE | 0 | 0 | 0 | | | | TOTAL PHASE KVA THIS SIDE | 0 | 0 | 0 | | |
| | | | | | | | | TOTAL KVA PER PHASE | 0 | 0 | 0 | | |
| | | | | | | | | TOTAL THREE PHASE KVA | | 0 | | | |

NOTES:
1
2
3
4

NOTES CONT.:
5
6
7
8

PANELBOARD: EXISTING - VESTIBULE PANEL 2 — LOCATION: NORTH GAMES (CXA) - VESTIBULE
NEMA RATING: XX — POLES: 3 — MOUNTING: SURFACE
AMP BUS RATING: XX — M.L.O. AMP MAIN BREAKER — KA SHORT CIRCUIT RATING: 42
VOLTS: 208Y/120 — 3 PHASE, 4 WIRE — ELECTRONIC GRADE: NO

| CIRCUIT NO | DESCRIPTION | LOAD KVA PHASE A | PHASE B | PHASE C | BREAKER AMPS POLES | NOTES | CIRCUIT NO | DESCRIPTION | LOAD KVA PHASE A | PHASE B | PHASE C | BREAKER AMPS POLES | NOTES |
|---|---|---|---|---|---|---|---|---|---|---|---|---|---|
| 1 | OUTLET | | | | 20/1 | | 2 | LIGHTS AND OUTLET | | | | 20/1 | |
| 3 | COMPRESSOR | | | | 20/2 | | 4 | SPRINKLER ALARM | | | | 20/1 | |
| 5 | | | | | | | 6 | BLANK | | | | | |
| 7 | BLANK | | | | | | 8 | BLANK | | | | | |
| | TOTAL PHASE KVA THIS SIDE | 0 | 0 | 0 | | | | TOTAL PHASE KVA THIS SIDE | 0 | 0 | 0 | | |
| | | | | | | | | TOTAL KVA PER PHASE | 0 | 0 | 0 | | |
| | | | | | | | | TOTAL THREE PHASE KVA | | 0 | | | |

NOTES:
1
2
3
4

NOTES CONT.:
5
6
7
8

NOTES:

1. FOR ADDITIONAL NOTES, ABBREVIATIONS AND SYMBOLS, SEE DRAWING GE-E-01.
2. CONTRACTOR IS ADVISED, SCHEDULES FOR PP-TW5 AND TW5-RP NOT SHOWN.

KEY NOTES:

1. EXISTING INCOMING SERVICE (CONDUIT AND WIRE) AND 200 AMP FUSED DISCONNECT SWITCH (FUSED AT 175 AMPS) SHALL REMAIN, BE REUSED AND PROTECTED DURING CONSTRUCTION
2. ALL PANELS AND ASSOCIATED CONDUIT AND WIRE LOCATED ON THE "LOAD" SIDE OF EXISTING SWITCH SHALL BE DISCONNECTED AND REMOVED. CONTRACTOR IS ADVISED THAT NOT ALL PANELS ARE SHOWN (TOTAL OF 5 TO BE REMOVED). SEE DEMOLITION DRAWING CXA-E-02 FOR ADDITIONAL INFORMATION.
3. INCOMING FROM QUAD #3 ELECTRICAL ROOM.
4. OUTGOING TO TOWER #5.
5. EXISTING 200 AMP PANEL AND ASSOCIATED RELAY PANEL TO BE DISCONNECTED, REMOVED AND RELOCATED TO NEW ELECTRICAL ROOM. EXISTING CONDUIT AND WIRE SHALL BE INTERCEPTED (JUNCTION BOXES) SPLICED AND EXTENDED TO NEW ELECTRICAL ROOM AS WELL. SEE DRAWINGS CXA-E-04 AND CXA-E-05 FOR ADDITIONAL INFORMATION.

208Y/120 VOLT POWER FROM PAD-MOUNTED ELECTRICAL EQUIPMENT LOCATED NEAR NORTH CORNER OF BUILDING

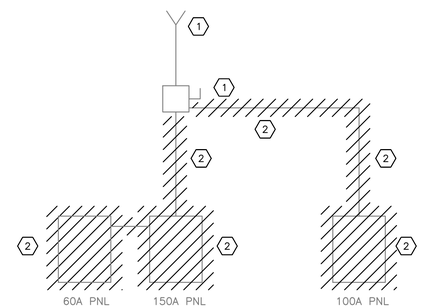


ONE LINE DIAGRAM – DEMOLITION – SERVICE 1
N.T.S.

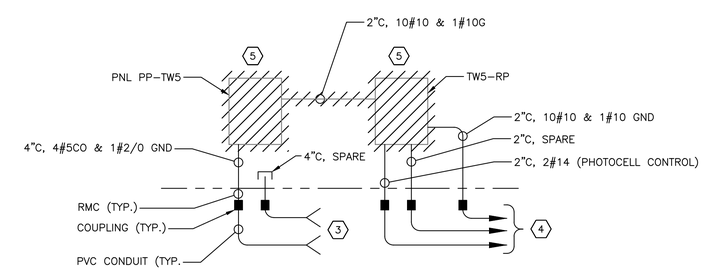


ONE LINE DIAGRAM – DEMOLITION – SERVICE 2
N.T.S.

Drawing Name: G:\SavinAutocad\2060\25-Playland-Mega-3\E\CXAE-1001.dwg
Projectname: 211001F02 Comments: ----
Reref:
Printed by: MGadby Date: 26 August 2022 3:32 PM Designed by: ----
Xrefs: [TB_24X36_WestchesterCo_3.dwg] [TSG-SVL060.dwg] [BCR-A-04.dwg] [BCRE-101.dwg]

CONSULTANT INFORMATION
Savin Engineers, P.C.

CONSULTANT SEAL
STATE OF NEW YORK — STEVEN A. MARINO — 083631 — LICENSED PROFESSIONAL ENGINEER

| REVISION NUMBER | DATE | MADE BY | APP'D BY | REVISION |
|---|---|---|---|---|

RECORD DRAWING CERTIFICATION
☐ AS BUILT – CHANGES AS NOTED ☐ AS BUILT – NO CHANGES

CONTRACTOR: NAME / SIGNATURE / TITLE / DATE
PROJECT COORDINATOR: NAME / SIGNATURE / TITLE / DATE

WESTCHESTER COUNTY, NEW YORK
DEPARTMENT OF PUBLIC WORKS AND TRANSPORTATION
DIVISION OF ENGINEERING

**INFRASTRUCTURE REHABILITATION - PHASE 3**
**PLAYLAND PARK, RYE, NEW YORK**
**CROSS AXIS BUILDING A**
**ONE LINE DIAGRAM - DEMOLITION**

| | |
|---|---|
| CONTRACT NUMBER 22-523 | SHEET NUMBER CXA-E-01 |
| DWG NO.: | 164 of 664 |
| SCALE: AS SHOWN | |
| DATE: 8/23/2022 | |
| DPW FILE NUMBER 1-118-E-913-0 | REV. NO. 0 |

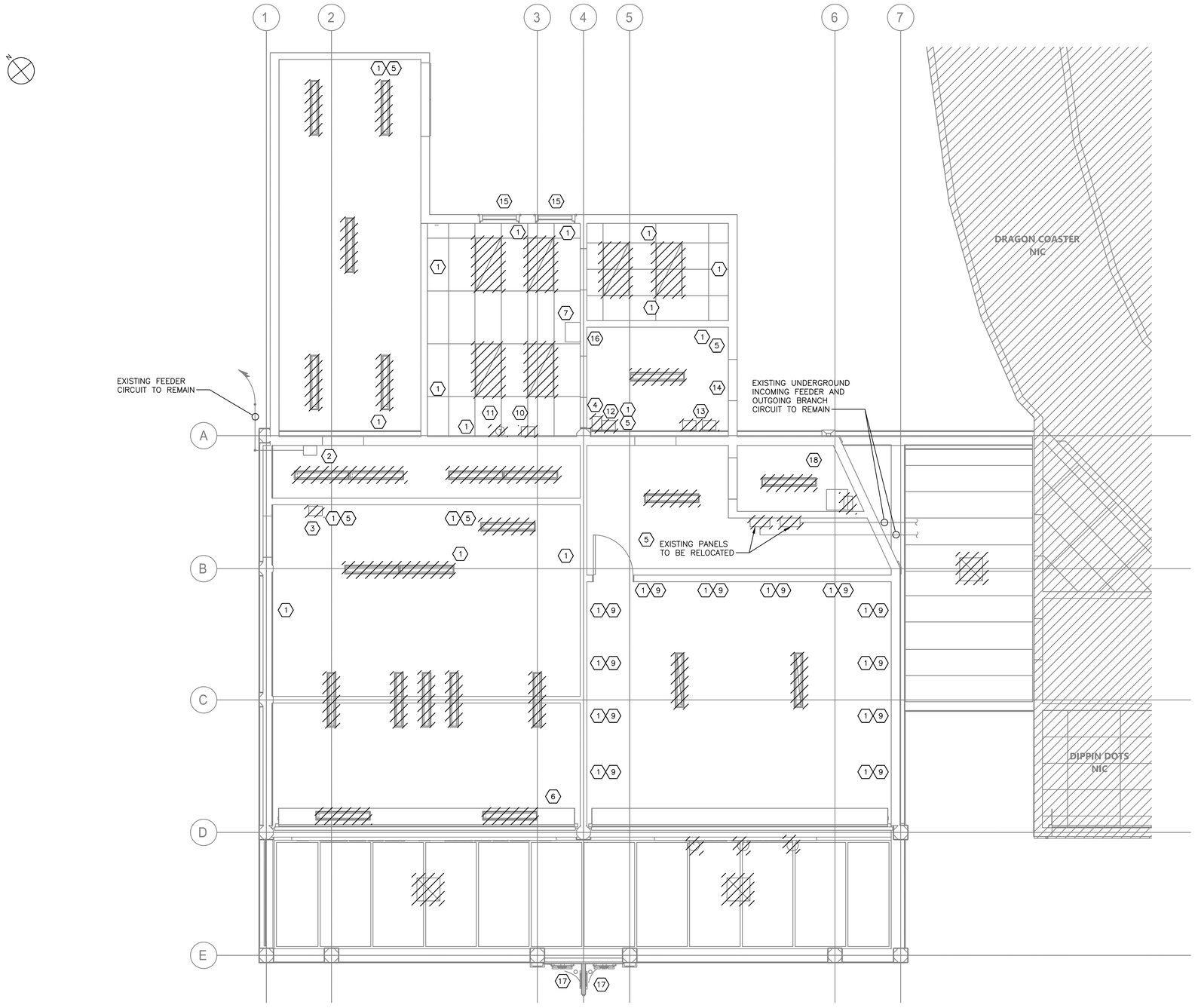


GROUND FLOOR POWER AND LIGHTING PLAN – DEMOLITION

1/4"=1'-0"

NOTES:

1. FOR ADDITIONAL NOTES, ABBREVIATIONS AND SYMBOLS, SEE DRAWING GE-E-01.
2. ALL REMOVED EQUIPMENT SHALL BE RETURNED TO OWNER UPON REQUEST. OTHERWISE ALL REMOVED MATERIAL SHALL BE LEGALLY DISPOSED OF.
3. DISCONNECT AND REMOVE ALL ELECTRICAL EQUIPMENT, LIGHTING, POWER, CONDUIT AND WIRE BACK TO SOURCE. REMOVE ALL PANELBOARDS. COMPLETE ELECTRICAL GUT UNLESS NOTED OTHERWISE. CONTRACTOR IS ADVISED, THE STRUCTURE NORTH COLUMN LINE A WILL BE DEMOLISHED IN ITS ENTIRETY.
4. ALL EXISTING CABLE AND CONDUIT SHALL BE DOCUMENTED PRIOR TO REMOVAL.
5. CONTRACTOR SHALL DISCONNECT AND REMOVE ALL EXISTING FLUORESCENT LIGHTING FIXTURES.
6. DISCONNECT AND REMOVE ALL EXTERIOR LIGHTING, ALL EXPOSED CONDUIT, WIRE, ETC.
7. CONTRACTOR SHALL DEMOLISH ALL EXISTING JUNCTION BOXES AND ASSOCIATED CONDUITS, WIRES, AND APPURTENANCES. FOR BIDDING PURPOSES, ASSUME 2000 FEET 1"C, 3#12 & 1#12 GND.
8. DISPOSITION OF EXISTING CCTV/DATA/COMMUNICATIONS CABINET SHALL BE BY OTHERS. THIS INCLUDES BOTH INCOMING AND OUTGOING CONDUIT AND CABLES.
9. SEE DRAWING CXA-E-01 FOR PANEL SCHEDULE DEMOLITION.
10. WALLS WITH DATA PORT ARRAY TO BE REMOVED BY OTHERS.
11. LOCATION OF MOTOR FOR ROLL UP DOOR. CONTRACTOR SHALL DISCONNECT AND REMOVE THE MOTOR, AND ALL ASSOCIATED CONDUIT AND WIRE BACK TO SOURCE.
12. LOCATION OF HANDPUNCH BIOMETRIC TIME CLOCK. CONTRACTOR SHALL DISCONNECT THE TIME CLOCK AND RETURN TO OWNER. CONTRACTOR SHALL DISCONNECT AND REMOVE ALL ASSOCIATED CONDUIT AND WIRE BACK TO SOURCE.
13. LOCATION OF SPRINKLER ROOM UNIT HEATER. EQUIPMENT REMOVED BY OTHERS. CONTRACTOR SHALL DISCONNECT AND REMOVE ALL ASSOCIATED CONDUIT AND WIRE.
14. LOCATION OF EXISTING 200AMP DISCONNECT SWITCH TO REMAIN AND BE REUSED. REFER TO KEYNOTE 1 AND 2 ON DRAWING CXA-E-01.

| DEMOLITION LEGEND ⬡ | |
|---|---|
| 1 | RECEPTACLE |
| 2 | 200A HEAVY DUTY DISCONNECT SWITCH (SEE NOTE 14) |
| 3 | 12 CKT PANEL (100A) "SHOOT THE STARS" |
| 4 | 8 CKT PANEL "VESTIBULE 2" |
| 5 | LIGHT SWITCH |
| 6 | ROLL-UP DOOR MOTOR (SEE NOTE II) |
| 7 | COMMUNICATIONS HUB (SEE NOTE 8) |
| 8 | GENERAL DUTY SAFETY SWITCH |
| 9 | DATA PORTS (SEE NOTE 10) |
| 10 | UNIT HEATER |
| 11 | UNIT HEATER THERMOSTAT |
| 12 | 30 CKT PANEL (150A) "VESTIBULE 1" |
| 13 | 4 CKT PUSHMATIC PANEL & ASSOCIATED 30A DISC SW |
| 14 | EXIT SIGN AND EMERGENCY LIGHT |
| 15 | THROUGH-WALL AIR CONDITIONING UNIT – DISCONNECT AND REMOVE POWER |
| 16 | HANDPUNCH TIME CLOCK (SEE NOTE 12) |
| 17 | (2) 2" CAN-STYLE FIXTURES RECESSED IN "GAMES" SIGNAGE SOFFIT. |
| 18 | SPRINKLER ROOM UNIT HEATER (SEE NOTE 13) |

0 4' 8'

SCALE: 1/4" = 1'-0"

CONSULTANT INFORMATION

Savin Engineers, P.C.

CONSULTANT SEAL

STATE OF NEW YORK · STEVEN A. MARTINO · 083631 · LICENSED PROFESSIONAL ENGINEER

| REVISION NUMBER | DATE | MADE BY | APP'D BY | REVISION |
|---|---|---|---|---|
| | | | | |

RECORD DRAWING CERTIFICATION

☐ AS BUILT – CHANGES AS NOTED ☐ AS BUILT – NO CHANGES

CONTRACTOR: NAME ____ SIGNATURE ____ TITLE ____ DATE ____

PROJECT COORDINATOR: NAME ____ SIGNATURE ____ TITLE ____ DATE ____

WESTCHESTER COUNTY, NEW YORK
DEPARTMENT OF PUBLIC WORKS AND TRANSPORTATION
DIVISION OF ENGINEERING

**INFRASTRUCTURE REHABILITATION - PHASE 3**
**PLAYLAND PARK, RYE, NEW YORK**
**CROSS AXIS BUILDING A**
**GROUND FLOOR DEMOLITION PLAN**

| CONTRACT NUMBER | SHEET NUMBER |
|---|---|
| 22-523 | CXA-E-02 |

DWG NO.: 185-7664

SCALE: AS SHOWN

DATE: 8/23/2022

DPW FILE NUMBER 1-118-E-914-0 REV. NO. 0

Drawing Name: G:\SavinAutocad\2060\25-Playland-Mega-3\E\CXAE-1002.dwg
Projectname: 211001F02 Comments: ----
Printed by: MGadby Date: 26 August 2022 3:32 PM Designed by: ----
Xrefs: [TB_24X36_WestchesterCo_3.dwg] [TSG-SVL000.dwg] [CXA-A-02-E.dwg] [CXA-E-1003.dwg]

NOTES:

1. FOR ADDITIONAL NOTES, ABBREVIATIONS AND SYMBOLS, SEE DRAWING GE–E–01.
2. FOR PANEL SCHEDULES, SEE DRAWING CXA–E–09.

KEY NOTES:

1. LOCATION OF DISTRIBUTION POWER TO EXISTING 200 AMP SWITCH (FUSED AT 175 AMP). EXISTING FEEDER CIRCUIT RUNS UNDERGROUND TO BUILDING, ENTERS ON WEST SIDE.
2. LOCATION OF INCOMING UNDERGROUND FEEDER AND OUTGOING DISTRIBUTION CIRCUITS TO TOWER 5.

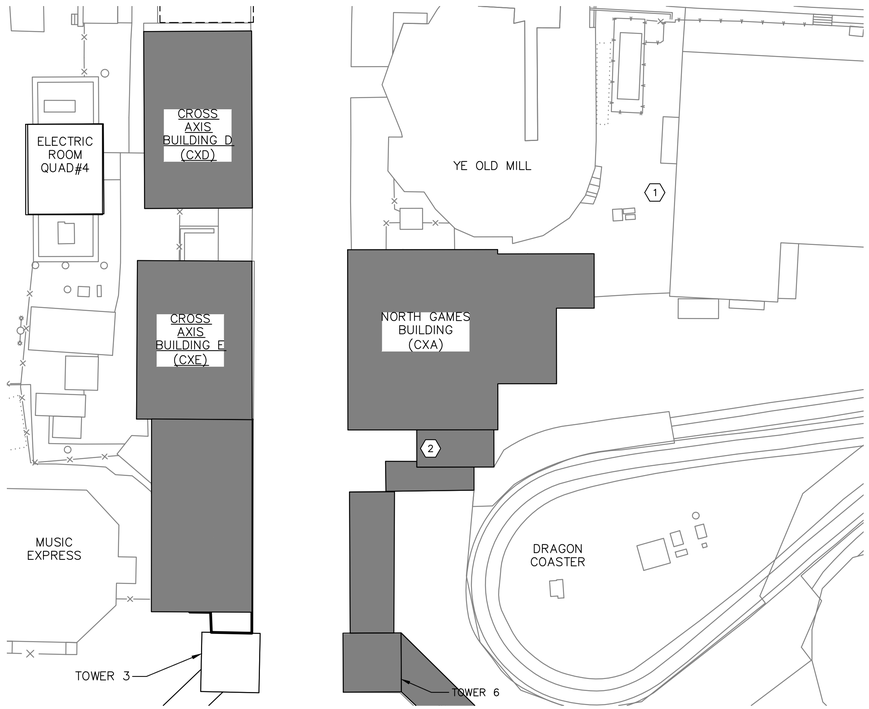


A CXA–E–03 PARTIAL SITE PLAN
SCALE: 1" = 20"

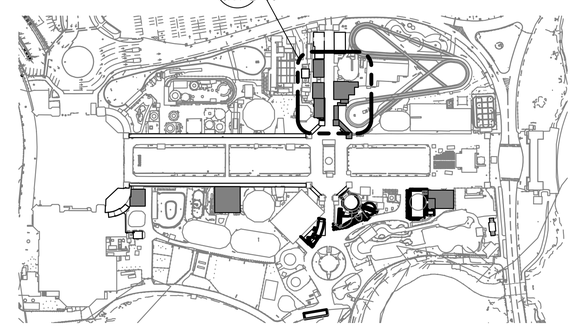


1 KEY PLAN
SCALE: 1" = 200'

0 20' 40'
SCALE: 1" = 20'–0"

0 200' 400'
SCALE: 1" = 200'–0"

Drawing Name: G:\SavinAutocad\2060\25-Playland-Mega-3\EV\CXAE-1008.dwg
Projectname: ---- Comments: ----
Printed by: MGoaby Date: 26 August 2022 3:33 PM Designed by: ----
Reref:
Xrefs: [TB_24X36_WestchesterCo_3.dwg] [TSG-SVLOGO.dwg] [TWS-SP0001.dwg] [TWC-SP0001.dwg] [COL-A-01.dwg] [CXA-E-1007.dwg]

CONSULTANT INFORMATION

Savin Engineers, P.C.

CONSULTANT SEAL

STATE OF NEW YORK · STEVEN A. MARTINO · 083631 · LICENSED PROFESSIONAL ENGINEER

| REVISION NUMBER | DATE | MADE BY | APP'D BY | REVISION |
|---|---|---|---|---|
| | | | | |

RECORD DRAWING CERTIFICATION

☐ AS BUILT – CHANGES AS NOTED ☐ AS BUILT – NO CHANGES

CONTRACTOR
NAME
SIGNATURE
TITLE DATE

PROJECT COORDINATOR
NAME
SIGNATURE
TITLE DATE

WESTCHESTER COUNTY, NEW YORK
DEPARTMENT OF PUBLIC WORKS AND TRANSPORTATION
DIVISION OF ENGINEERING

**INFRASTRUCTURE REHABILITATION - PHASE 3**
**PLAYLAND PARK, RYE, NEW YORK**
**CROSS AXIS BUILDING A**
**SITE DUCTBANK PLAN**

| | |
|---|---|
| CONTRACT NUMBER | 22-523 |
| SHEET NUMBER | CXA-E-03 |
| DWG NO.: | 166 of 664 |
| SCALE: | AS SHOWN |
| DATE: | 8/23/2022 |
| DPW FILE NUMBER | 1-118-E-915-0 |
| REV. NO. | 0 |

NOTES:

1. FOR ADDITIONAL NOTES, ABBREVIATIONS AND SYMBOLS, SEE DRAWING GE–E–01.
2. SEE DRAWING CXA–E–09 FOR PANEL AND LIGHTING CONTROL SCHEDULES.

KEY NOTES:

1. EXISTING INCOMING SERVICE TO BE REUSED. CONTRACTOR SHALL TRACE OUT FEEDER CIRCUIT BACK TO SOURCE. EXISTING CONDUIT RUN TO SOURCE BELOW GRADE SHALL BE REUSED. CONTRACTOR SHALL EXTEND CONDUIT AS NECESSARY FOR NEW EQUIPMENT.
2. EXISTING FUSED SWITCH TO REMAIN AND BE REUSED (FUSED AT 175 AMPS).
3. NEW PANEL CXA–PP1. PANEL SHALL BE 208Y/120 VOLT, 3–PHASE, 4 WIRE WITH 225 AMP MAINS AND 175 AMP MAIN CIRCUIT BREAKER.
4. NEW RELAY PANEL CXA–RP.
5. DISCONNECT EXISTING WIRES AND CABLE FROM EXISTING PANELS AND PULL BACK SLACK TO LOCAL HANDHOLE. THIS IS TO ALLOW FOR CONDUIT EXTENSIONS OF EXISTING CONDUIT TO NEW SPLICE BOXES.
6. NEW SPLICE BOX FOR TOWER 5 LIGHTING AND CONTROL REQUIREMENTS.
7. NEW SPLICE BOX FOR INCOMING POWER CABLES.
8. RELOCATED PANEL PP–TW5.
9. RELOCATED RELAY PANEL TW5–RP.

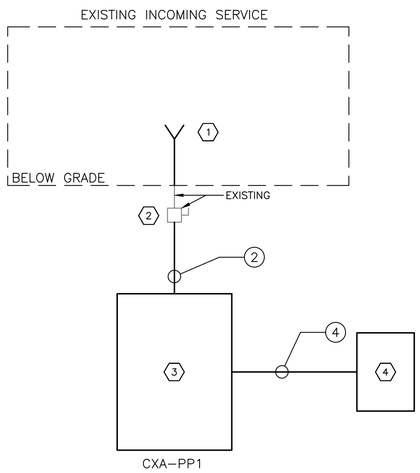


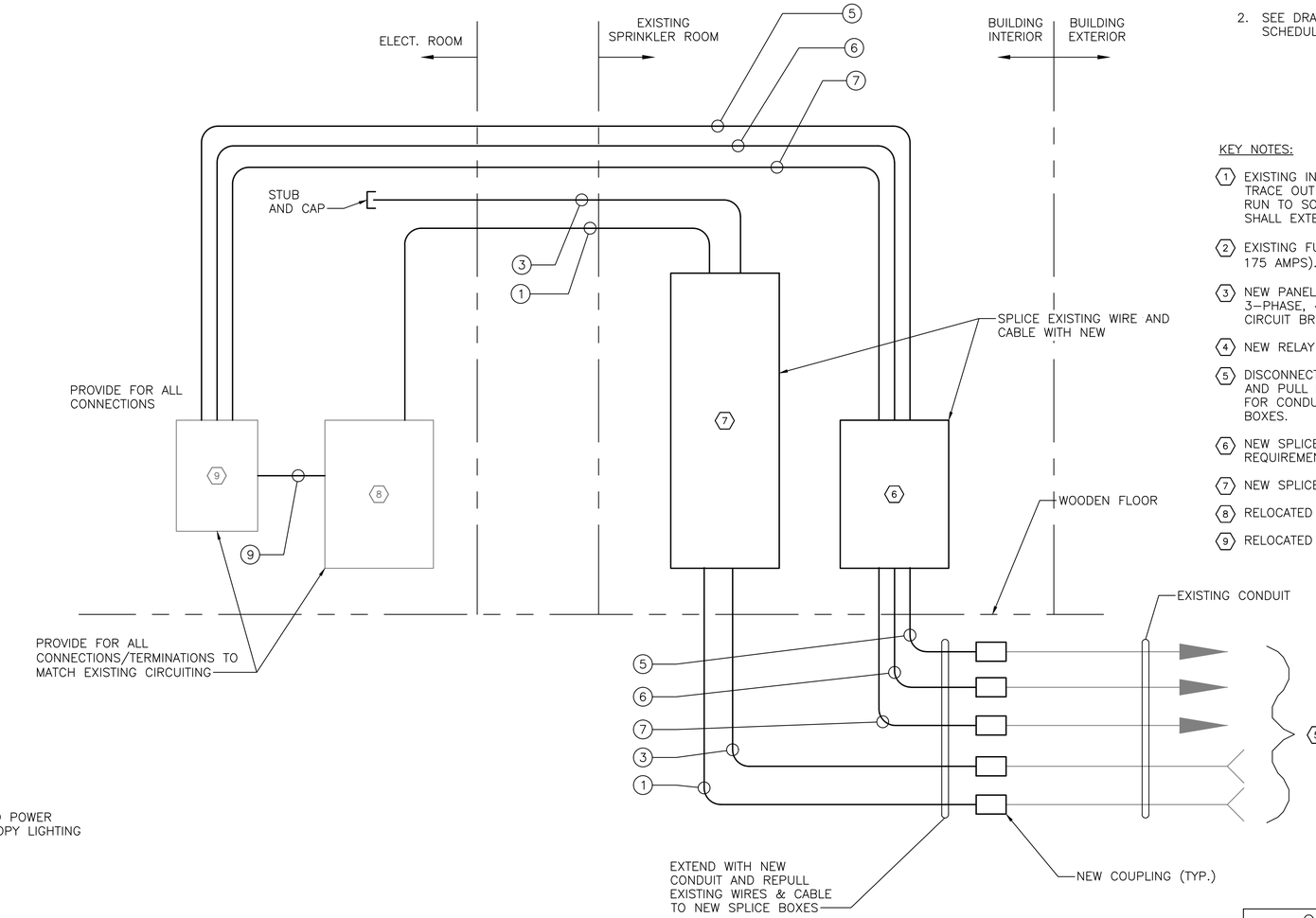


EXTENSION OF EXISTING PANELS

N.T.S.

NOTE:

NEW PANEL CXA–PP1 SHALL BE USED FOR LIGHTING AND POWER REQUIREMENTS FOR VENDOR SPACES 101 AND 102, CANOPY LIGHTING AND EXTERIOR COVE LIGHTING.

CABLE AND CONDUIT

| NO. | DESCRIPTION |
|---|---|
| 1 | 4"C, 4#–500KCMIL & 1#2/0 GND |
| 2 | 2"C, 4#2/0 & 1#6 GND |
| 3 | 4"C, SPARE WITH PULL ROPE |
| 4 | 3/4"C, 8#10 & 1#12 GND |
| 5 | 2"C, 3#10 (PHOTOCELL) |
| 6 | 2"C, SPARE WITH PULL ROPE |
| 7 | 2"C, 16#10 & 8#10 GNDS |
| 8 | 1"C, 3#10 (PHOTOCELL) |
| 9 | 2"C, 2#12, 16#10 & 9#10 GNDS |

CONSULTANT INFORMATION

Savin Engineers, P.C.

CONSULTANT SEAL

STATE OF NEW YORK · STEVEN A. MARINO · 083631 · LICENSED PROFESSIONAL ENGINEER

| REVISION NUMBER | DATE | MADE BY | APP'D BY | REVISION |
|---|---|---|---|---|

RECORD DRAWING CERTIFICATION

☐ AS BUILT – CHANGES AS NOTED ☐ AS BUILT – NO CHANGES

CONTRACTOR: NAME / SIGNATURE / TITLE / DATE

PROJECT COORDINATOR: NAME / SIGNATURE / TITLE / DATE

WESTCHESTER COUNTY, NEW YORK
DEPARTMENT OF PUBLIC WORKS AND TRANSPORTATION
DIVISION OF ENGINEERING

**INFRASTRUCTURE REHABILITATION - PHASE 3**
**PLAYLAND PARK, RYE, NEW YORK**
**CROSS AXIS BUILDING A**
**ONE LINE DIAGRAMS**

| | |
|---|---|
| CONTRACT NUMBER | 22-523 |
| SHEET NUMBER | CXA-E-04 |
| DWG NO.: | |
| SCALE: | AS SHOWN |
| DATE: | 8/23/2022 |
| DPW FILE NUMBER | 1-118-E-916-0 |
| REV. NO. | 0 |



Drawing Name: G:\SavinAutocad\2060\25-Playland-Mega-3\E\CXAE-1009.dwg
Reref: Projectname: 211001F02 Comments: ----
Printed by: MGodby Date: 31 August 2022 11:20 AM Designed by: ----
Xrefs: [TB_24X36_WestchesterCo_3.dwg] [TSC-SVLOGO.dwg] [BCR-A-04.dwg] [BCRE-101.dwg

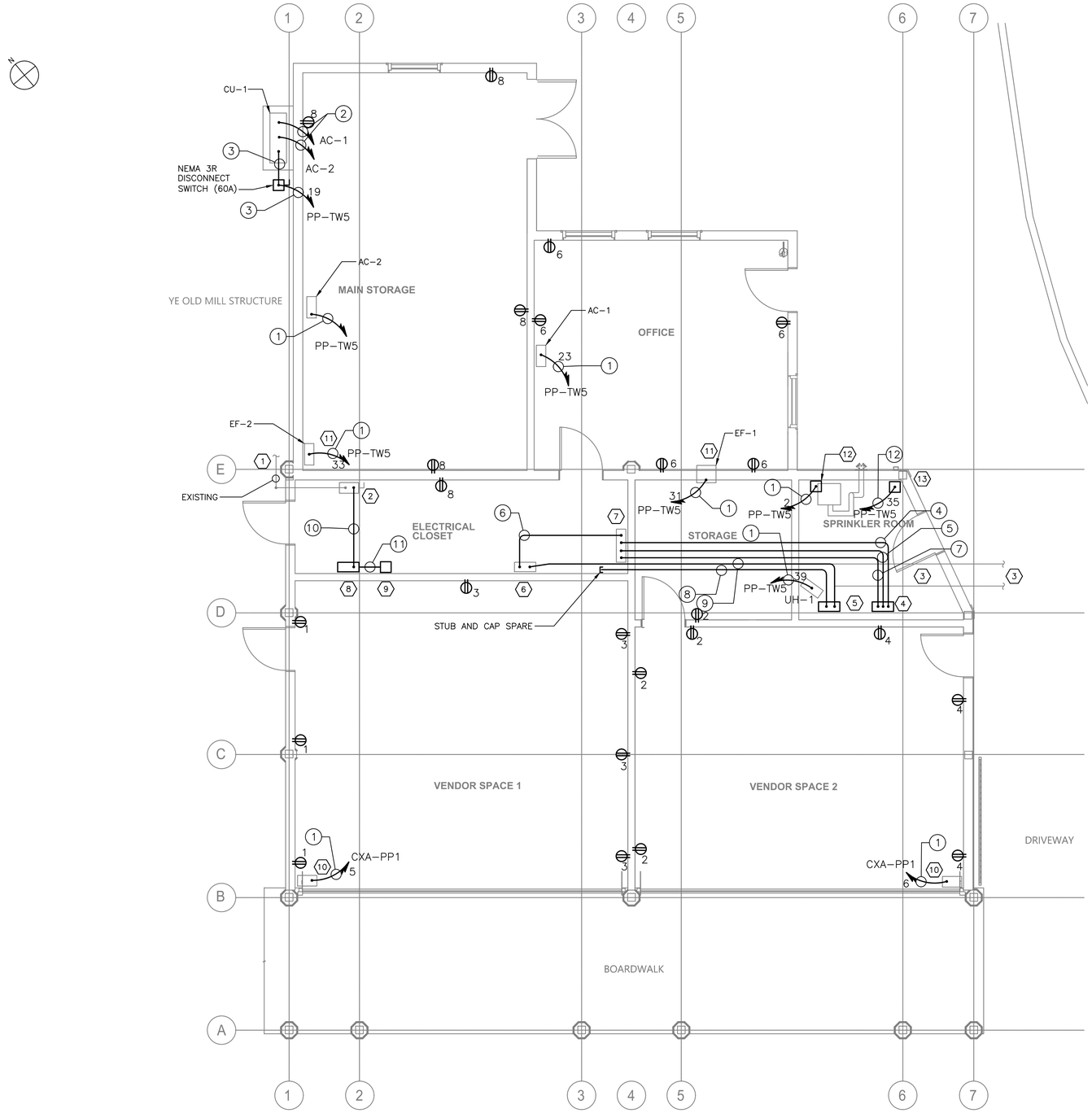


GROUND FLOOR POWER PLAN
1/4"=1'-0"

NOTES:

1. FOR ADDITIONAL NOTES, ABBREVIATIONS AND SYMBOLS, SEE DRAWING GE-E-01.
2. NUMBER DESIGNATORS NEXT TO RECEPTACLES INDICATE CIRCUIT NUMBERS.
3. FOR ADDITIONAL INFORMATION OF HVAC EQUIPMENT, FANS AND UNIT HEATER SEE MECHANICAL DRAWINGS.
4. CONTRACTOR IS ADVISED THERE MAY BE ADDITIONAL CIRCUITS NEEDED FOR EQUIPMENT LOCATED IN THE BUILDING. ASSUME 3 ADDITIONAL 120 VOLT CIRCUITS WILL BE NEEDED WITH 200 FEET OF 3/4"C, 2#12 & 1 #12 GND.

KEY NOTES:

1. APPROXIMATE LOCATION OF INCOMING EXISTING ELECTRICAL SERVICE TO BE REUSED.
2. 200 AMP DISCONNECT SWITCH (FUSED AT 175 AMPS). TO BE REUSED.
3. LOCATION OF UNDERGROUND SERVICE AND TOWER 5 LIGHTING CONTROL CIRCUITS. CONDUIT LOCATED UNDER FLOOR BOARDS SHALL BE INTERCEPTED AND REROUTED TO NEW JUNCTION/SPLICE BOXES. CONTRACTOR SHALL REUSE EXISTING WIRING. SEE DRAWING CXA-E-04 FOR ADDITIONAL INFORMATION.
4. INTERCEPT SPLICE BOX FOR TOWER 5 LIGHTING CIRCUITS AND PHOTOCELL CONTROL. SPLICE NEW WIRES AND EXTEND CONDUIT TO NEW LOCATION OF RELAY PANEL TW5-RP. APPROXIMATE SIZE 16"X16", NEMA 1 ENCLOSURE (WALL MOUNTED).
5. INCOMING POWER INTERCEPT SPLICE BOX. EXISTING UNDER FLOOR LOCATED CONDUIT (4"C, 4#500 & 1#2/0 GND) AND SPARE TO BE REROUTED TO SPLICE BOX LOCATION. REUSE EXISTING CABLE TO NEW SPLICE BOX. SPLICE NEW CABLE AND EXTEND CONDUIT TO NEW LOCATION OF PANEL PP-TW-5. APPROXIMATE SIZE 32" HIGH X 18" WIDE, NEMA 1 ENCLOSURE (WALL MOUNTED).
6. RELOCATED PANEL PP-TW-5.
7. RELOCATED RELAY PANEL TW5-RP.
8. NEW 208Y/120 VOLT, 3 PHASE, 4 WIRE PANEL (CXD-PP1) WITH 225 AMP MAINS AND 175 AMP MAIN CIRCUIT BREAKER.
9. NEW LIGHTING CONTROL RELAY PANEL CXA-RP. SEE DRAWING CXA-E-09 FOR ADDITIONAL INFORMATION.
10. ROLL-UP DOOR MOTOR. PROVIDE 30 AMP, 2-POLE DISCONNECT SWITCH, NEMA 12 ENCLOSURE.
11. EXHAUST FANS EF-1 AND EF-2. PROVIDE 2-POLE DISCONNECT SWITCH EACH FAN.
12. EXISTING SPRINKLER ALARM TO BE REPOWERED.
13. EXISTING AIR COMPRESSOR TO BE REPOWERED.

CONDUIT AND WIRE LEGEND

| NO. | DESCRIPTION |
|---|---|
| 1 | 3/4"C, 2#12 & 1#12 GND |
| 2 | 3/4"C, BLANK CONDUIT FOR CONTROL |
| 3 | 3/4"C. 2#8 & 1#10 GND |
| 4 | 1"C, 3#10 (PHOTOCELL) |
| 5 | 2"C, SPARE WITH PULL ROPE |
| 6 | 2"C, 2#12, 16#10 & 9#10 GNDS |
| 7 | 2"C, 16#10 & 8#10 GNDS |
| 8 | 4"C, SPARE WITH PULL ROPE |
| 9 | 4"C, 4-500KCMIL & 1#2/0 GND |
| 10 | 2"C, 4#2/0 & 1#6 GND |
| 11 | 1 1/4"C, 14#10 & 7#10 GNDS |
| 12 | 3/4"C, 2#10 & 1#10 GND |

CONSULTANT INFORMATION
Savin Engineers, P.C.

CONSULTANT SEAL
STATE OF NEW YORK · STEVEN A. MARTINO · 083631 · LICENSED PROFESSIONAL ENGINEER

| REVISION NUMBER | DATE | MADE BY | APP'D BY | REVISION |
|---|---|---|---|---|

RECORD DRAWING CERTIFICATION
☐ AS BUILT - CHANGES AS NOTED ☐ AS BUILT - NO CHANGES

CONTRACTOR
NAME
SIGNATURE
TITLE DATE

PROJECT COORDINATOR
NAME
SIGNATURE
TITLE DATE

WESTCHESTER COUNTY, NEW YORK
DEPARTMENT OF PUBLIC WORKS AND TRANSPORTATION
DIVISION OF ENGINEERING

INFRASTRUCTURE REHABILITATION - PHASE 3
PLAYLAND PARK, RYE, NEW YORK
CROSS AXIS BUILDING A
GROUND FLOOR POWER PLAN

CONTRACT NUMBER 22-523
SHEET NUMBER CXA-E-05
DWG NO.:
SCALE: AS SHOWN
DATE: 8/23/2022
DPW FILE NUMBER 1-118-E-917-0
REV. NO. 0



Drawing Name: G:\SavinAutocad\2060\25-Playland-Mega-3\E\CXAE-1005.dwg
Projectname: 211001F02 Comments: ----
Rev#:
Printed by: MGadby Date: 31 August 2022 11:42 AM Designed by: ----
Xrefs: [TB_24X36_WestchesterCo_3.dwg] [TSG-SVL000.dwg] [CXA-A-11.dwg] [CXA-E-1002.dwg]

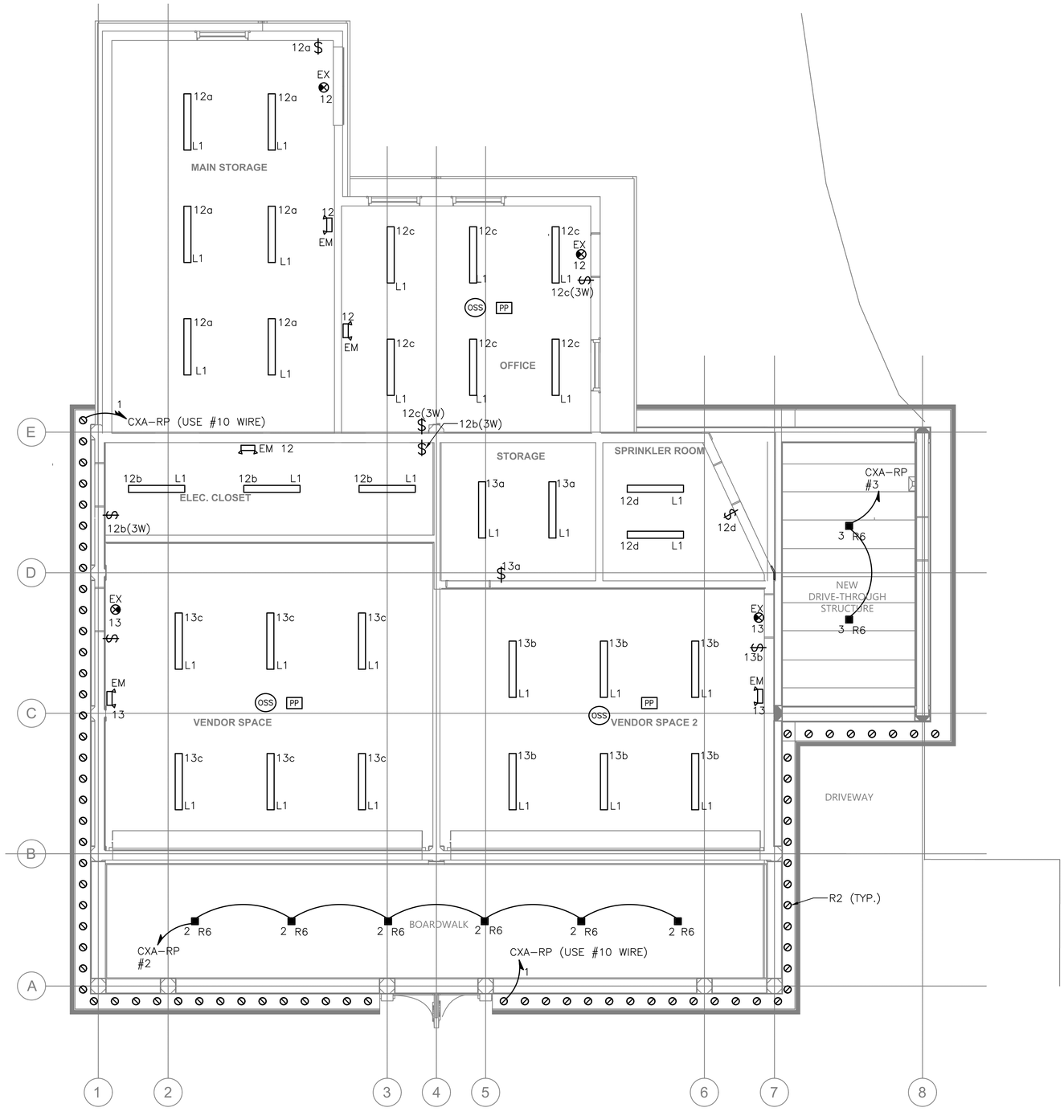


GROUND FLOOR LIGHTING PLAN
1/4"=1'-0"

NOTES:

1. FOR ADDITIONAL NOTES, ABBREVIATIONS, AND SYMBOLS, SEE DRAWING GE-E-01.
2. EXIT SIGNS SHALL BE WIRED TO THE UN-SWITCHED LEG OF THE DESIGNATED CIRCUIT.
3. EMERGENCY FIXTURES SHALL BE WIRED TO THE UN-SWITCHED LEG OF THE DESIGNATED CIRCUIT.
4. NUMBER DESIGNATORS NEXT TO FIXTURES AND/OR CONTROLS INDICATE CIRCUIT NUMBERS. CONTRACTOR IS ADVISED, THE LIGHTING IS POWERED AS FOLLOWS:
   A. ALL INTERIOR LIGHTING IN MAIN STORAGE OFFICE, ELECTRICAL CLOSET AND SPRINKLER ROOM SHALL BE CIRCUITED VIA PANEL PP-TW5
   B. ALL REMAINING INTERIOR LIGHTING SHALL BE CIRCUITED VIA PANEL CXA-PP.
   C. ALL EXTERIOR LIGHTING SHALL BE CIRCUITED FROM RELAY PANEL CXA-RP.
5. CONTRACTOR SHALL CIRCUIT ALL INTERIOR LIGHTING FIXTURES WITH 3/4" CONDUIT AND 2#12 & 1#12GND WIRE, UNLESS NOTED OTHERWISE. FIXTURES WITH SAME CIRCUIT NUMBER SHALL BE DAISY-CHAINED BACK TO ASSOCIATED POWERSOURCE. (SEE NOTE 4).
6. CONTRACTOR SHALL CIRCUIT ALL EXTERIOR LIGHTING FIXTURES WITH ¾" CONDUIT AND 2#12 & 1#12GND WIRE, UNLESS NOTED OTHERWISE. FIXTURES WITH SAME CIRCUIT NUMBER SHALL BE DAISY-CHAINED BACK TO RELAY PANEL CXA-RP.
7. LETTER DESIGNATORS NEXT TO FIXTURES AND/OR CONTROLS INDICATE CONTROL CIRCUITING.
8. POWER PACKS SHALL BE MOUNTED ABOVE FINISHED CEILING.
9. LIGHTING CONTROL ZONES ARE SEGREGATED BY AREA POWER-PACKS AS SHOWN ON THE DRAWING.
10. ALL LIGHTING CONTROL COMPONENTS SHALL BE FROM A SINGLE MANUFACTURER, AND MUST BE FROM THE SAME MANUFACTURER FOR ALL BUILDINGS WITHIN THIS CONTRACT AND AS EXISTING. EQUIPMENT INCLUDES BUT NOT LIMITED TO OCCUPANCY SENSORS, RELAY/POWER PACKS, SWITCHES, RELAY PANELS, PHOTOSENSORS, ETC.
11. LIGHTING CONTROLS SELECTED SHALL HAVE THE CAPABILITY TO BE CONNECTED TO A MASTER HEAD-END SYSTEM (FUTURE CONTRACT).
12. REFER TO GE-E-03 FOR LIGHTING FIXTURE AND LIGHTING CONTROL SCHEDULES. REFER TO CXA-E-09 FOR PANEL SCHEDULES.
13. REFER TO DT-E-01 FOR INTERIOR LIGHTING CONTROL WIRING (INCLUDING BUT NOT LIMITED TO ETHERNET AND LOW VOLTAGE WIRING).

0 4' 8'
SCALE: 1/4" = 1'-0"

CONSULTANT INFORMATION
Savin Engineers, P.C.

CONSULTANT SEAL
STATE OF NEW YORK · STEVEN A. MARTINO · 083631 · LICENSED PROFESSIONAL ENGINEER

| REVISION NUMBER | DATE | MADE BY | APP'D BY | REVISION |
|---|---|---|---|---|
| | | | | |

RECORD DRAWING CERTIFICATION
☐ AS BUILT - CHANGES AS NOTED ☐ AS BUILT - NO CHANGES

CONTRACTOR
NAME
SIGNATURE
TITLE DATE

PROJECT COORDINATOR
NAME
SIGNATURE
TITLE DATE

WESTCHESTER COUNTY, NEW YORK
DEPARTMENT OF PUBLIC WORKS AND TRANSPORTATION
DIVISION OF ENGINEERING

INFRASTRUCTURE REHABILITATION - PHASE 3
PLAYLAND PARK, RYE, NEW YORK
CROSS AXIS BUILDING A
GROUND FLOOR LIGHTING PLAN

| CONTRACT NUMBER | SHEET NUMBER |
|---|---|
| 22-523 | CXA-E-06 |

DWG NO.:
SCALE: AS SHOWN
DATE: 8/23/2022
DPW FILE NUMBER 1-118-E-918-0 REV. NO. 0



Drawing Name: G:\SavinAutocad\2060\25-Playland-Mega-3\E\CXAE-1006.dwg
Projectname: 211001F02 Comments: ----
Printed by: MGodby Date: 26 August 2022 3:34 PM Designed by: ----
Reef: Xrefs: [TB_24X36_WestchesterCo_3.dwg] [TSG-SVL000.dwg] [CXA-A-41.dwg] [CXA-E-1001.dwg]

NOTES:

1. FOR ADDITIONAL NOTES, ABBREVIATIONS AND SYMBOLS, SEE DRAWING GE-E-01.
2. MOUNT ATTIC LIGHT SWITCH AT TOP OF ATTIC ACCESS HATCH.

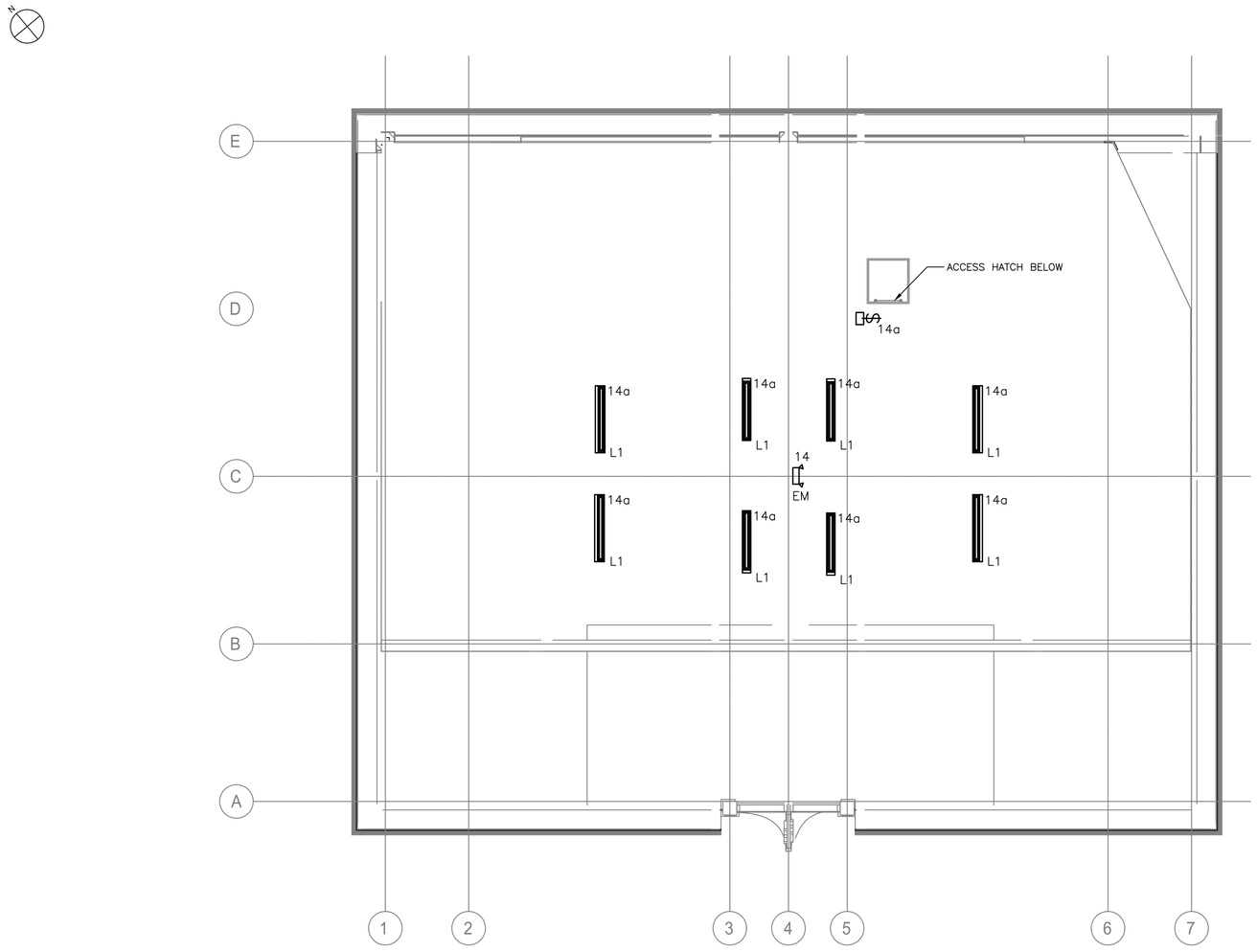


ATTIC LEVEL LIGHTING PLAN
1/4"=1'-0"

SCALE: 1/4" = 1'-0"

CONSULTANT INFORMATION

Savin Engineers, P.C.

CONSULTANT SEAL

STATE OF NEW YORK · STEVEN A. MARTINO · 083631 · LICENSED PROFESSIONAL ENGINEER

| REVISION NUMBER | DATE | MADE BY | APP'D BY | REVISION |
|---|---|---|---|---|

RECORD DRAWING CERTIFICATION

☐ AS BUILT – CHANGES AS NOTED ☐ AS BUILT – NO CHANGES

CONTRACTOR: NAME / SIGNATURE / TITLE / DATE

PROJECT COORDINATOR: NAME / SIGNATURE / TITLE / DATE

WESTCHESTER COUNTY, NEW YORK
DEPARTMENT OF PUBLIC WORKS AND TRANSPORTATION
DIVISION OF ENGINEERING

**INFRASTRUCTURE REHABILITATION - PHASE 3**
**PLAYLAND PARK, RYE, NEW YORK**
**CROSS AXIS BUILDING A**
**ATTIC LEVEL POWER AND LIGHTING PLAN**

| | |
|---|---|
| CONTRACT NUMBER | 22-523 |
| SHEET NUMBER | CXA-E-07 |
| DWG NO.: | |
| SCALE: | AS SHOWN |
| DATE: | 8/23/2022 |
| DPW FILE NUMBER | 1-118-E-919-0 |
| REV. NO. | 0 |



Drawing Name: G:\SavinAutocad\2060\25-Playland-Mega-3\E\CXAE-1010.dwg
Projectname: 211001F02 Comments: ----
Printed by: MGadby Date: 26 August 2022 3:34 PM Designed by: ----
Xrefs: [TB_24X36_WestchesterCo_3.dwg] [TSG-SVLOGO.dwg] [CXA-A-42.dwg] [CXA-E-1005.dwg]

NOTES:

1. FOR ADDITIONAL NOTES, ABBREVIATIONS AND SYMBOLS, SEE DRAWING GE–E–01.
2. HISTORIC FINAL LIGHTS TO BE REFURBISHED AND REINSTALLED UNDER THIS CONTRACT. CONTRACTOR SHALL REINSTALL THESE UNITS. REFER TO ARCHITECTURAL DRAWINGS FOR MORE INFORMATION.

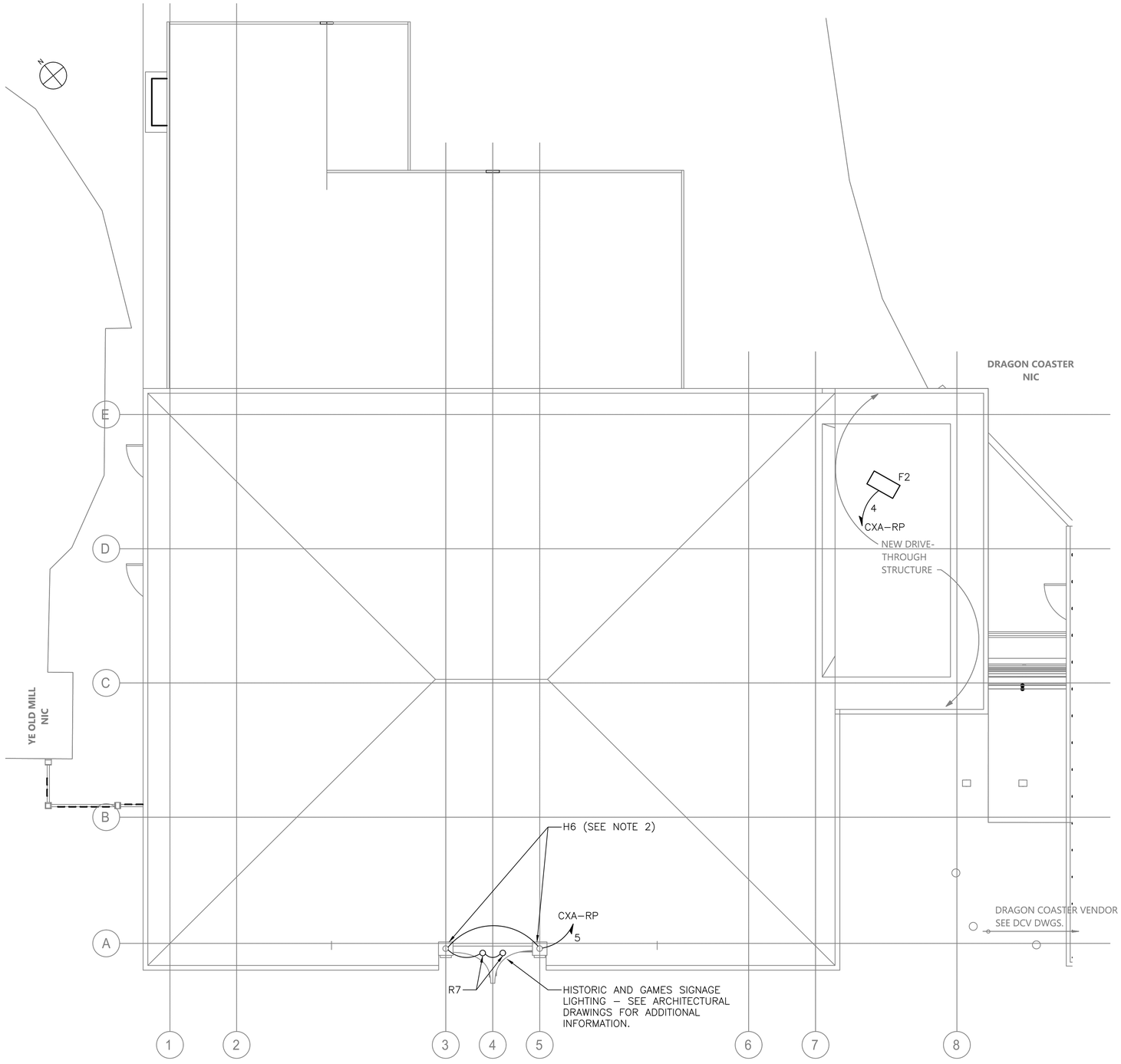


ROOF LIGHTING PLAN
1/4"=1'–0"

0 4' 8'
SCALE: 1/4" = 1'–0"

Drawing Name: G:\SavinAutocad\2060\25–Playland–Mega–3\E\CXAE–1012.dwg
Rev#: Projectname: 211001F02 Comments: ----
Printed by: MGodby Date: 26 August 2022 3:34 PM Designed by: ----
Xrefs: [TB_24X36_WestchesterCo_3.dwg] [TSG–SVL000.dwg] [CXA–A–13.dwg] [CXA–E–1006.dwg]

CONSULTANT INFORMATION

Savin Engineers, P.C.

CONSULTANT SEAL

STATE OF NEW YORK · STEVEN A. MARTINO · 083631 · LICENSED PROFESSIONAL ENGINEER

| REVISION NUMBER | DATE | MADE BY | APP'D BY | REVISION |
|---|---|---|---|---|
| | | | | |

RECORD DRAWING CERTIFICATION

☐ AS BUILT – CHANGES AS NOTED ☐ AS BUILT – NO CHANGES

CONTRACTOR
NAME
SIGNATURE
TITLE DATE

PROJECT COORDINATOR
NAME
SIGNATURE
TITLE DATE

WESTCHESTER COUNTY, NEW YORK
DEPARTMENT OF PUBLIC WORKS AND TRANSPORTATION
DIVISION OF ENGINEERING

**INFRASTRUCTURE REHABILITATION - PHASE 3**
**PLAYLAND PARK, RYE, NEW YORK**
**CROSS AXIS BUILDING A**
**ROOF LIGHTING AND LIGHTNING PROTECTION PLAN**

| | |
|---|---|
| CONTRACT NUMBER | 22-523 |
| SHEET NUMBER | CXA-E-08 |
| DWG. NO.: | |
| SCALE: | AS SHOWN |
| DATE: | 8/23/2022 |
| DPW FILE NUMBER | 1-118-E-920-0 |
| REV. NO. | 0 |

**PANELBOARD:** EXISTING PANEL PP-TW5 — **LOCATION:** ELECTRICAL ROOM (RELOCATED)

1 **NEMA RATING** — 3 **POLES** — **MOUNTING:** SURFACE

200 **AMP BUS RATING** — 200 **AMP MAIN BREAKER** — 42 **KA SHORT CIRCUIT RATING**

208Y/120 **VOLTS** — 3 **PHASE** 4 **WIRE** — **ELECTRONIC GRADE :** NO

| CIRCUIT NO. | DESCRIPTION | LOAD KVA PHASE A | LOAD KVA PHASE B | LOAD KVA PHASE C | BREAKER AMPS / POLES | NOTES | CIRCUIT NO. | DESCRIPTION | LOAD KVA PHASE A | LOAD KVA PHASE B | LOAD KVA PHASE C | BREAKER AMPS / POLES | NOTES |
|---|---|---|---|---|---|---|---|---|---|---|---|---|---|
| 1 | POWER TO TW5-RP (120V) | 0.2 | | | 20/1 | | 2 | SPRINKLER ALARM (EXIST.) | | | | 20/1 | |
| 3 | TW5-RP | | 0.1 | | 20/1 | | 4 | FIRE ALARM 120V POWER | | | | 20/1 | |
| 5 | TW5-RP | | | 0.1 | 20/1 | | 6 | OFFICE RECEPTACLES | | | | 20/1 | |
| 7 | TW5-RP | 0.1 | | | 20/1 | | 8 | MAIN STORAGE RECEPTACLES | | | | 20/1 | |
| 9 | TW5-RP | | 0.1 | | 20/1 | | 10 | COM CONTROL CABINET | | | | 20/1 | |
| 11 | TW5-RP | | | 0.1 | 20/1 | | 12 | LIGHTING (NORTH HALF) | | | | 20/1 | |
| 13 | TW5-RP | 0.2 | | | 20/1 | | 14 | ATTIC LIGHTING | | | | 20/1 | |
| 15 | TW5-RP | | 0.2 | | 20/1 | | 16 | SPRINKLER RM RECEPTACLE (EXIST.) | | | | 20/1 | |
| 17 | TW5-RP | | | 0.2 | 20/1 | | 18 | SPARE | | | - | 20/1 | |
| 19 | CU-1 | 2.6 | | | 40/2 | | 20 | SPARE | - | | | 20/1 | |
| 21 | | | 2.6 | | | | 22 | SPARE | | - | | 20/1 | |
| 23 | AC-1 | | | 0.2 | 15/2 | | 24 | SPARE | | | - | 20/1 | |
| 25 | | 0.2 | | | | | 26 | SPACE | | | | | |
| 27 | AC-2 | | 0.2 | | 15/2 | | 28 | SPACE | | | | | |
| 29 | | | | 0.2 | | | 30 | SPACE | | | | | |
| 31 | EF-1 | 0.1 | | | 15/1 | | 32 | SPACE | | | | | |
| 33 | EF-2 | | 0.1 | | 15/1 | | 34 | SPACE | | | | | |
| 35 | AIR COMPRESSOR (EXIST.) | | | 1 | 25/2 | | 36 | SPACE | | | | | |
| 37 | | 1 | | | | | 38 | SPACE | | | | | |
| 39 | UH-1 | | 1.65 | | 20/2 | | 40 | SPACE | | | | | |
| 41 | | | | 1.65 | | | 42 | SPACE | | | | | |
| | **TOTAL PHASE KVA THIS SIDE** | 4.4 | 4.95 | 3.45 | | | | **TOTAL PHASE KVA THIS SIDE** | 0 | 0 | 0 | | |
| | | | | | | | | **TOTAL KVA PER PHASE** | 4.4 | 4.95 | 3.45 | | |
| | | | | | | | | **TOTAL THREE PHASE KVA** | 12.8 | | | | |

NOTES:
1.
2.
3.
4.

NOTES CONT.:
5.
6.
7.
8.

**PANELBOARD:** CXA-PP1 — **LOCATION:** ELECTRICAL ROOM

1 **NEMA RATING** — 3 **POLES** — **MOUNTING:** SURFACE

225 **AMP BUS RATING** — 175 **AMP MAIN BREAKER** — 42 **KA SHORT CIRCUIT RATING**

208Y/120 **VOLTS** — 3 **PHASE** 4 **WIRE** — **ELECTRONIC GRADE :** NO

| CIRCUIT NO. | DESCRIPTION | LOAD KVA PHASE A | LOAD KVA PHASE B | LOAD KVA PHASE C | BREAKER AMPS / POLES | NOTES | CIRCUIT NO. | DESCRIPTION | LOAD KVA PHASE A | LOAD KVA PHASE B | LOAD KVA PHASE C | BREAKER AMPS / POLES | NOTES |
|---|---|---|---|---|---|---|---|---|---|---|---|---|---|
| 1 | VENDOR SPACE 1 RECEPT. | 0.5 | | | 20/1 | | 2 | VENDOR SPACE 2 RECEPT. | 0.5 | | | 20/1 | |
| 3 | VENDOR SPACE 1 RECEPT. | | 0.5 | | 20/1 | | 4 | VENDOR SPACE 2 RECEPT. | | 0.5 | | 20/1 | |
| 5 | ROLL-UP DOOR | | | 1 | 20/1 | | 6 | ROLL-UP DOOR | | | 1 | 20/1 | |
| 7 | SPARE | - | | | 20/1 | | 8 | SPARE | - | | | 20/1 | |
| 9 | SPARE | | - | | 20/1 | | 10 | SPARE | | - | | 20/1 | |
| 11 | SPARE | | | - | 20/1 | | 12 | POWER TO CXA-RP (120V) | | | 0.5 | 20/1 | |
| 13 | VENDOR SPACE LTG | 0.2 | | | 20/1 | | 14 | CXA-RP | 0.5 | | | 20/1 | |
| 15 | SPARE | | - | | 20/1 | | 16 | CXA-RP | | 0.5 | | 20/1 | |
| 17 | SPARE | | | - | 20/1 | | 18 | CXA-RP | | | 0.5 | 20/1 | |
| 19 | SPACE | | | | | | 20 | CXA-RP | 0.5 | | | 20/1 | |
| 21 | SPACE | | | | | | 22 | CXA-RP | | 0.5 | | 20/1 | |
| 23 | SPACE | | | | | | 24 | CXA-RP - SPARE | | | | 20/1 | |
| 25 | SPACE | | | | | | 26 | SPARE | | | | 20/1 | |
| 27 | SPACE | | | | | | 28 | SPACE | | | | | |
| 29 | SPACE | | | | | | 30 | SPACE | | | | | |
| 31 | SPACE | | | | | | 32 | SPACE | | | | | |
| 33 | SPACE | | | | | | 34 | SPACE | | | | | |
| 35 | SPACE | | | | | | 36 | SPACE | | | | | |
| 37 | SPACE | | | | | | 38 | SPACE | | | | | |
| 39 | SPACE | | | | | | 40 | SPACE | | | | | |
| 41 | SPACE | | | | | | 42 | SPACE | | | | | |
| | **TOTAL PHASE KVA THIS SIDE** | 0.7 | 0.5 | 1 | | | | **TOTAL PHASE KVA THIS SIDE** | 1.5 | 1.5 | 2 | | |
| | | | | | | | | **TOTAL KVA PER PHASE** | 2.2 | 2 | 3 | | |
| | | | | | | | | **TOTAL THREE PHASE KVA** | 7.2 | | | | |

NOTES:
1.
2.
3.
4.

NOTES CONT.:
5.
6.
7.
8.

NOTES:

1. FOR ADDITIONAL NOTES, ABBREVIATIONS AND SYMBOLS, SEE DRAWING GE-E-01.

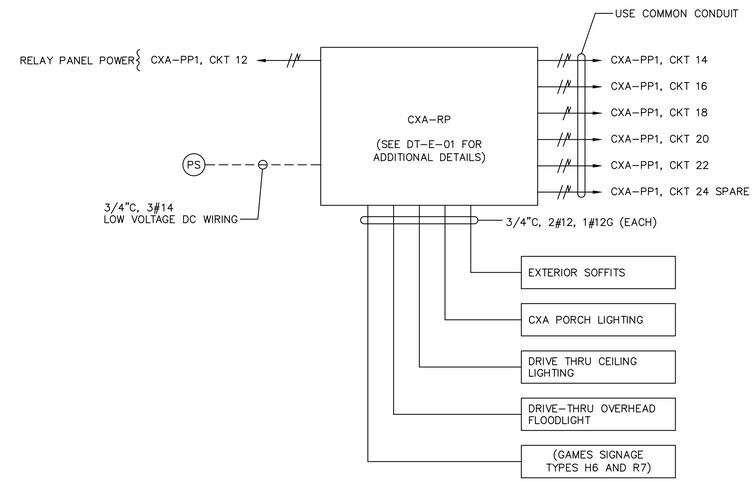


CXA – EXTERIOR LIGHTING WIRING DETAIL

| CXA-RP | LOCATION: CXA ELECTRICAL CLOSET | |
|---|---|---|
| CKT NO | DESCRIPTION | NOTES |
| 1 | EXTERIOR SOFFITS | |
| 2 | CXA PORCH LIGHTING | |
| 3 | DRIVE THRU CEILING LIGHTING | |
| 4 | DRIVE THRU OVERHEAD FLOODLIGHT | |
| 5 | GAMES SIGNAGE | |
| 6 | SPARE | |
| 7 | SPARE | |
| 8 | SPARE | |

LIGHTING CONTROL LEGEND

| SYMBOL | DESCRIPTION |
|---|---|
| OSS | OCCUPANCY / VACANCY SENSOR – SMALL MOTION, DUAL TECHNOLOGY (PASSIVE INFRARED/MICROPHONICS) ACUITY BRANDS, nLIGHT SYSTEM CATALOG NUMBER: nCM-PDT-9-RJB OR APPROVED EQUAL |
| PP 12 | POWER / RELAY PACK – 120V RATED SELF CONTROLLED RELAY SWITCH, EQUIPPED WITH RJ45, PLENUM RATED, CONFIGURATIVE RELAY LOGIC ACUITY BRANDS, nLIGHT SYSTEM CATALOG NUMBER: nPP16-D-EFP-SA OR APPROVED EQUAL. |
| $ | 120V RATED LIGHTING SINGLE POLE SWITCH |
| RP | RELAY TIME CONTROL PANEL PROGRAMMABLE ZONE CONTROL PANEL UP TO 1 ADDRESS PER RELAY/DIMMING OUTPUT EQUIPPED WITH 0-10V DIMMING OUTPUT PER RELAY CATALOG NUMBER: ARP INTENCO8NLT-16SR-MVOLT-1VB-HLK-S-DTC OR APPROVED EQUAL |
| PS | ANALOG PHOTOCELL – PHOTOSENSOR SUITABLE FOR OUTDOOR APPLICATIONS. CATALOG NUMBER: LSA-APS-OL OR APPROVED EQUAL |
| n POD | RELAY TIME CONTROL PANEL PROGRAMMABLE ZONE CONTROL PANEL UP TO 1 ADDRESS PER RELAY/DIMMING OUTPUT EQUIPPED WITH 0-10V DIMMING OUTPUT PER RELAY CATALOG NUMBER: LSA-APS-OL OR APPROVED EQUAL |

CONSULTANT INFORMATION

Savin Engineers, P.C.

CONSULTANT SEAL

STATE OF NEW YORK · STEVEN A. MARINO · 083631 · LICENSED PROFESSIONAL ENGINEER

| REVISION NUMBER | DATE | MADE BY | APP'D BY | REVISION |
|---|---|---|---|---|

RECORD DRAWING CERTIFICATION

☐ AS BUILT – CHANGES AS NOTED ☐ AS BUILT – NO CHANGES

CONTRACTOR: NAME / SIGNATURE / TITLE / DATE

PROJECT COORDINATOR: NAME / SIGNATURE / TITLE / DATE

WESTCHESTER COUNTY, NEW YORK
DEPARTMENT OF PUBLIC WORKS AND TRANSPORTATION
DIVISION OF ENGINEERING

**INFRASTRUCTURE REHABILITATION - PHASE 3**
**PLAYLAND PARK, RYE, NEW YORK**
**CROSS AXIS BUILDING A**
**PANEL SCHEDULES**

| | |
|---|---|
| CONTRACT NUMBER | 22-523 |
| SHEET NUMBER | CXA-E-09 |
| DWG NO.: | |
| SCALE: | AS SHOWN |
| DATE: | 8/23/2022 |
| DPW FILE NUMBER | 1-118-E-921-0 |
| REV. NO. | 0 |



Drawing Name: G:\Savin\Autocad\2060\25-Playland-Mega-3\E\CXAE-1004.dwg
Projectname: 211001F02 Comments: ----
Printed by: MGodby Date: 31 August 2022 11:22 AM Designed by: ----
Reqf: [TB_24X36_WestchesterCo_3.dwg] [TSG-SVLOGO.dwg] [BCR-A-04.dwg] [BCRE-101.dwg]
Xrefs:

# FIRE ALARM GENERAL NOTES:

1. THE FIRE ALARM AND SMOKE DETECTION SYSTEM SHALL BE INSTALLED IN COMPLIANCE WITH THE NATIONAL FIRE PREVENTION CODE (NFPA 72 - 2016), NATIONAL LIFE SAFETY CODE (NFPA 101 - 2018), NATIONAL ELECTRICAL CODE (NFPA 70 - 2017), 2020 NEW YORK STATE BUILDING CODE, AND ALL LOCAL MUNICIPAL CODES HAVING JURISDICTION.
2. THE FIRE ALARM AND SMOKE DETECTION SYSTEM SHALL BE MAINTAINED AND TESTED IN COMPLIANCE WITH NFPA 72.
3. A CONTINUOUS FIRE WATCH SHALL BE PROVIDED IF THERE IS FIRE SYSTEM IMPAIRMENT.
4. ALL FIRE ALARM STROBES SHALL BE SYNCHRONIZED AND SHALL REMAIN FLASHING AFTER SYSTEM SILENCE FUNCTION.
5. CONTRACTOR TO UPDATE ALL NECESSARY CORRESPONDING FIRE ALARM SIGNALS WHEN PERFORMING ANY MODIFICATION TO THE BUILDING, WHERE APPLICABLE, MAKE SURE THE SAME UPDATES ARE COORDINATED AND TRANSMITTED TO THE CENTRAL STATION.
6. HORNS WILL SOUND A TEMPORAL 3-SIGNALING RHYTHM PER NFPA 72.
7. EXACT PLACEMENT OF DEVICES TO BE VERIFIED IN FIELD.
8. ALL SMOKE DETECTORS SHALL BE INSTALLED A MINIMUM OF 36" FROM ANY HVAC SUPPLY OR RETURN REGISTER.
9. FIRE ALARM WIRING SHALL BE INSTALLED IN A MINIMUM OF 3/4" RIGID GALVANIZED CONDUIT OR BY NEW YORK STATE BUILDING CODE APPROVED WIRING METHODS.
10. WALL MOUNTED HORNS AND VISUAL FIRE ALARMS (STROBES) SHALL BE MOUNTED NOT LESS THAN 6'-8" AND NOT GREATER THAN 8'-0" A.F.F. WHERE LOCAL CONDITIONS ARE TOO LOW TO PERMIT THE REQUIRED MINIMUM INSTALLATION HEIGHT, INSTALL THE STROBES AT 6" BELOW THE CEILING.
11. MANUAL PULL STATIONS SHALL BE MOUNTED AT 4'-0" A.F.F. AND SHALL BE INSTALLED WITHIN 5'-0" OF EXIT DOOR.
12. WIRING SHALL BE INSTALLED IN ACCORDANCE WITH NFPA 70 AND AS RECOMMENDED BY THE MANUFACTURER OF THE FIRE ALARM SYSTEM.
13. ALL EQUIPMENT AND COMPONENTS SHALL BE NEW AND SHALL BE TESTED AND LISTED BY A NATIONALLY RECOGNIZED APPROVALS AGENCY.
14. ALL EQUIPMENT SHALL BE ATTACHED TO WALLS AND CEILING/FLOOR ASSEMBLIES AND SHALL BE HELD FIRMLY IN PLACE. FASTENERS AND SUPPORTS SHALL BE ADEQUATE TO SUPPORT REQUIRED LOAD.
15. ALL FIELD WIRING SHALL BE ELECTRICALLY SUPERVISED FOR OPEN CIRCUIT AND GROUND FAULTS.
16. ALL BOXES AND CABINETS SHALL BE UL LISTED FOR THEIR USE AND PURPOSE.
17. DIALER OR ALARM COMMUNICATOR TRANSMITTER SHALL TRANSMIT ALL POINTS AS THEY ARE REPORTED TO THE HOST PANEL.
18. ALL DEVICES SHALL BE COMPATIBLE WITH EXISTING SYSTEM (EST3 BY EDWARDS). FIRE ALARM PRODUCTS SHALL BE APPROVED BY THE ENGINEER OR OWNER.
19. ALL PENETRATIONS SHALL BE FIRE PROOFED AS REQUIRED.

# FIRE ALARM CONSTRUCTION NOTES:

1. ELECTRICIAN SHALL COORDINATE WITH THE FIRE ALARM VENDOR TO PRODUCE A SEPARATE FIXED PRICE TO PERFORM THE SCOPE OF WORK CONTAINED ON THESE DRAWINGS IN CONNECTION WITH THE FIRE ALARM SYSTEM. THESE DRAWINGS ARE PROVIDED FOR BID PURPOSES ONLY AND TO ILLUSTRATE THE SCOPE OF WORK INTENT OF THIS PROJECT.
2. ELECTRICIAN SHALL OBTAIN SEPARATE PERMIT FOR FIRE ALARM PRIOR TO INSTALLATION.
3. PRIOR TO SUBMISSION OF THE FIRE ALARM SYSTEM BID, THE FIRE ALARM VENDOR IS RESPONSIBLE TO REVIEW ALL DRAWINGS (I.E., MECHANICAL/HVAC, ELECTRICAL, PLUMBING, FIRE SPRINKLER, AND ARCHITECTURAL). UPON SUBMISSION OF THE FIRE ALARM BID, THE FIRE ALARM VENDOR CERTIFIES THAT ALL DRAWINGS HAVE BEEN REVIEWED, THE SITE HAS BEEN VISITED/INSPECTED (IF APPLICABLE), AND THAT ALL LOCAL FIRE DEPARTMENT REQUIRED ITEMS ARE FULLY UNDERSTOOD AND INCLUDED IN THE BID PRICE (NO CHANGE ORDERS ALLOWED).
4. FIRE ALARM VENDOR MUST ADHERE TO NFPA 72, NFPA 101, AND ALL LOCAL CODES AND AUTHORITIES HAVING JURISDICTION. THE ENTIRE SYSTEM MUST BE DESIGNED IN ACCORDANCE WITH THESE AUTHORITIES HAVING JURISDICTION.
5. FIRE ALARM VENDOR SHALL INCLUDE THE COST OF THE ENGINEERING FEE, PROGRAMMING CHARGE, NEW EQUIPMENT, CONNECTION & TESTING, TROUBLESHOOTING, ATTENDANCE AT THE FIRE ALARM INSPECTION, ETC. AS PART OF THE TOTAL PRICE.
6. FIRE ALARM VENDOR MUST SUBMIT APPROVED, SIGNED AND SEALED DESIGN/BUILD DRAWINGS TO THE ENGINEER AND OWNER, INCLUDING: FIRE ALARM RISER DIAGRAM, LAYOUT, EQUIPMENT LIST, SPECIFICATIONS PRIOR TO START OF INSTALLATION. INSTALLATION OF THE NEW FIRE ALARM SYSTEM SHALL NOT PROCEED PRIOR TO WRITTEN APPROVAL BY THE ENGINEER.
7. FIRE ALARM VENDOR SHALL SUBMIT SHOP DRAWINGS IN COMPLIANCE WITH NFPA 72, 2020 NEW YORK STATE BUILDING CODE, AND 2020 NEW YORK STATE FIRE CODE SECTION 907.1.1.
8. ALL FIRE ALARM CABLES AND WIRING MUST BE PLENUM RETURN RATED CABLES.

# SCOPE OF WORK:

1. DEMOLISH EXISTING FIRE ALARM DEVICES AND ASSOCIATED WIRING BACK TO SOURCE.
2. PROVIDE NEW FIRE ALARM SYSTEM WITH SUBPANEL AS PER DRAWINGS. COORDINATE LOCATION WITH FIELD CONDITIONS AND ARCHITECT. PROVIDE ALL NECESSARY WIRING, CONNECTIONS, CONDUIT, AND FITTINGS.
3. PROVIDE NEW FIRE ALARM DEVICES AS PER DRAWINGS. PROVIDE ALL NECESSARY WIRING, CONNECTIONS, CONDUIT, AND FITTINGS.
4. CONNECT FIRE ALARM DEVICES AND SIGNAL TO NEW FIRE ALARM SUBPANEL. CONNECT SUBPANEL TO CENTRAL FIRE ALARM CONTROL PANEL IN MAIN ADMINISTRATION BUILDING VIA QUAD 4. PROVIDE ALL REQUIRED PROGRAMMING.
5. NEW FIRE ALARM SYSTEM SHALL BE INSPECTED BY A THIRD PARTY INSPECTION AGENCY CERTIFIED BY WESTCHESTER COUNTY. ELECTRICIAN SHALL INCLUDE INSPECTION IN BASE BID SCOPE AND COORDINATE WITH INSPECTION AGENCY TO CERTIFY THE SYSTEM.
6. ELECTRICIAN SHALL COORDINATE WITH THE FIRE ALARM VENDOR (OPEN SYSTEMS METRO) TO RE-PROGRAM AND TEST THE CENTRAL FIRE ALARM SYSTEM IN THE PLAYLAND MAIN ADMINISTRATION BUILDING FOLLOWING THE INSTALLATION OF NEW SYSTEM AND DEVICES.
7. ELECTRICIAN SHALL COORDINATE WITH THE FIRE ALARM CENTRAL MONITORING PROVIDER (STATEWIDE MONITORING) TO TEST AND VERIFY CENTRAL MONITORING OF PARKWIDE SYSTEM FOLLOWING THE INSTALLATION OF NEW SYSTEM AND DEVICES.

# FIRE ALARM SYSTEM RISER NOTES:

1. LOCATION OF DEVICES AND EQUIPMENT ARE APPROXIMATE. FINAL LOCATIONS MUST BE DETERMINED ACCORDING TO THE SITE CONDITIONS.
2. VISUAL FIRE ALARMS (STROBES) SHALL HAVE MINIMUM 5'-0" CLEARANCE FROM ANY OBSTRUCTIONS, SHALL BE FIELD ADJUSTABLE, AND SHALL BE RATED AT 75 CANDELA MINIMUM, UNLESS OTHERWISE NOTED. ALL STROBES SHALL BE SYNCHRONIZED AT LINE OF SIGHT.
3. WALL MOUNTED HORNS AND VISUAL FIRE ALARMS (STROBES) SHALL BE MOUNTED NOT LESS THAN 6'-8" AND NOT GREATER THAN 8'-0" A.F.F. WHERE LOCAL CONDITIONS ARE TOO LOW TO PERMIT THE REQUIRED MINIMUM INSTALLATION HEIGHT, INSTALL THE STROBES AT 6" BELOW THE CEILING.
4. MANUAL PULL STATIONS SHALL BE MOUNTED AT 4'-0" A.F.F. AND SHALL BE INSTALLED WITHIN 5'-0" OF EXIT DOOR.
5. FUSE CUT OUT BOX SHALL COMPLY WITH THE NATIONAL ELECTRICAL CODE AND HAVE A REMOVABLE SOLID COPPER NEUTRAL BAR.
6. ALL CONDUITS AND CONTROL PANELS SHALL BE GROUNDED TO BUILDING STEEL/GROUND GRID WITH A MINIMUM #8 CONDUCTOR.
7. RISER DIAGRAM ON THIS DRAWING IS FOR DESIGN PURPOSE ONLY. FIRE ALARM CONTRACTOR SHALL PROVIDE A COMPLETE RISER DIAGRAM WITH ACTUAL FIELD WIRING REQUIRED.
8. EACH FIRE ALARM INITIATING AND INDICATING CIRCUIT SHALL BE ELECTRICALLY SUPERVISED.
9. EACH VISUAL FIRE ALARM CIRCUIT SHALL CONTAIN AT LEAST 20% SPARE CAPACITY.
10. ALL CONTROL PANELS, FUSE CUTOUTS, TROUBLE BELLS, ALARM BELLS AND SILENCE SWITCHES SHALL BE PROPERLY LABELED WITH MINIMUM 1/4" HIGH LETTERS.
11. WIRING FOR AUDIBLE AND VISUAL ALARM NOTIFICATION DEVICES SHALL BE ARRANGED SO THAT A LOSS OF A PORTION OF THE WIRING ON A FLOOR WILL NOT RENDER MORE THAN 60% OF THE DEVICES OF EACH TYPE INOPERATIVE, AND THE DEVICES SHALL BE SO CONNECTED TO THE CIRCUITRY (i.e., BY MEANS OF ALTERNATE CIRCUITS) AS TO MAINTAIN AT LEAST PARTIAL AUDIBILITY/VISIBILITY THROUGHOUT THE ENTIRE FLOOR.
12. THE FIRE ALARM CONTROL PANEL SHALL BE PROVIDED WITH A KEY SWITCH. DURING DAILY TESTS, THE KEY SWITCH SHALL BE USED TO BYPASS THE CIRCUITS THAT CONTROL DAMPERS AND FAN SHUTDOWN.
13. THE DAMPERS AND FAN BYPASS FUNCTION SHALL BE AUTOMATICALLY RESTORED TO BE NORMAL UN-SHUNTED CONDITION WITHIN FORTY-FIVE MINUTES, IF NOT DONE SO MANUALLY BEFORE FORTY-FIVE MINUTES.
14. PERFORM FIRE ALARM SYSTEM TESTING PER THE 2020 NEW YORK STATE FIRE CODE AND NFPA 72.

# FIRE ALARM LEGEND:

| SYMBOL | DESCRIPTION |
|---|---|
| FA | FIRE ALARM SUB PANEL |
| S | SMOKE DETECTOR |
| H | HEAT DETECTOR |
| F | MANUAL FIRE ALARM PULL STATION |
| # H | FIRE ALARM WALL MOUNTED HORN/STROBE<br># = CANDELA RATING |
| ST # | WALL MOUNTED STROBE<br># = CANDELA RATING |
| | FLOW SWITCH CONNECTED TO FIRE ALARM SYSTEM |
| GV | SPRINKLER VALVE TAMPER SWITCH CONNECTED TO FIRE ALARM SYSTEM |
| M | FIRE ALARM MONITORING RELAY |
| FSR | FIRE ALARM INTERFACE RELAY FOR HVAC FAN SHUTDOWN |

# FIRE ALARM ABBREVIATIONS:

| | |
|---|---|
| E | EXISTING TO REMAIN |
| ER | EXISTING TO BE RELOCATED |
| EL | EXISTING AS SHOWN IN NEW LOCATION |
| FACP | FIRE ALARM CONTROL PANEL |
| FCO | FUSED CUT OUT |
| FCU | FIRE ALARM CONTROL UNIT |
| FP | FIRE PROTECTION |
| N | NEW |
| RTU | ROOFTOP UNIT |
| SP | SPRINKLER |
| WP | WEATHERPROOF |
| X | EXISTING TO BE DEMOLISHED |

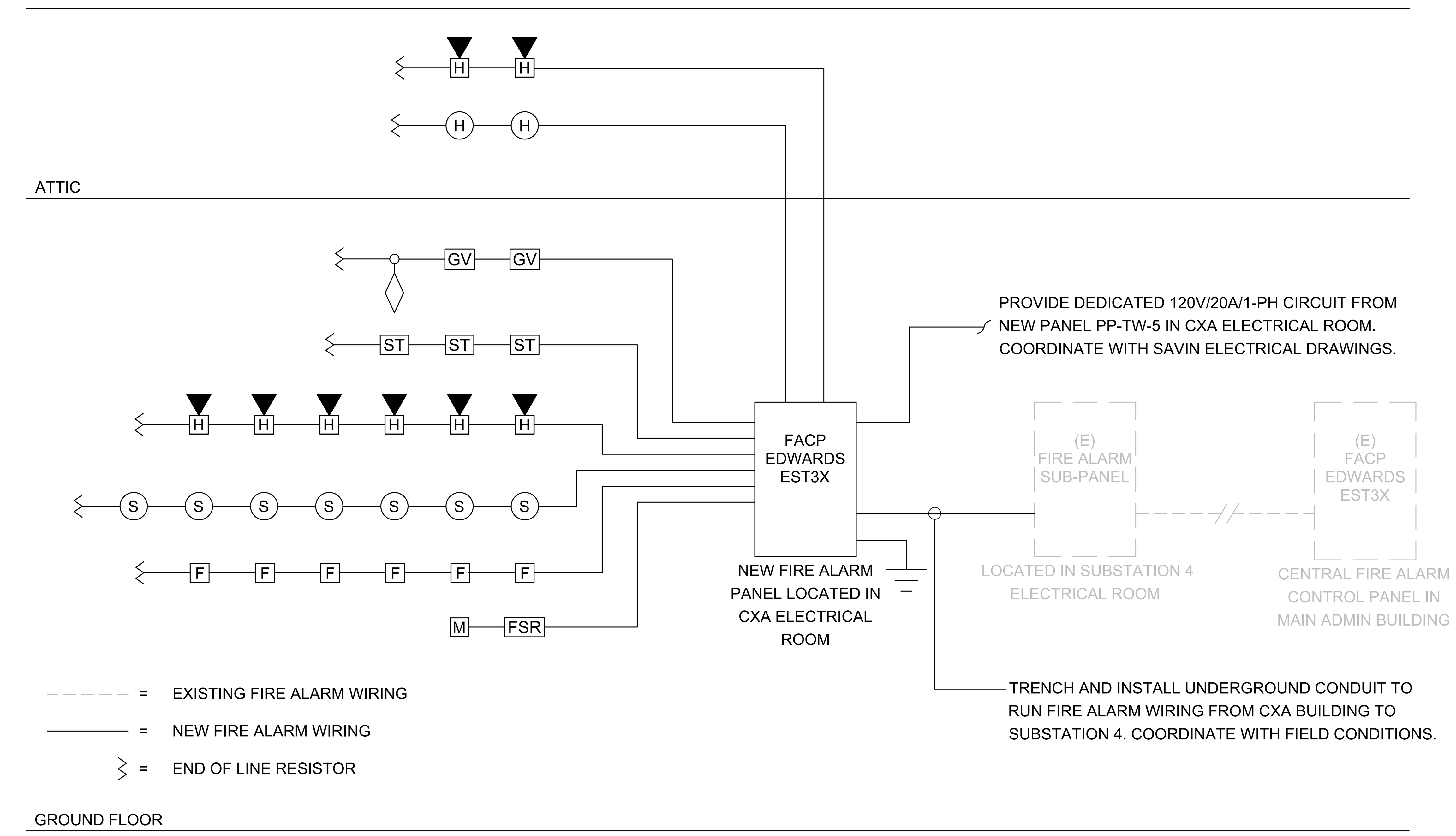


NOTES:
1. WIRING SHOWN ON RISER IS DIAGRAMMATICAL. PROVIDE NEW FIRE ALARM CABLE AS REQUIRED AND INSTALL WIRING LOOPS AS BEST SUITED FOR FIELD CONDITIONS.
2. THE BUILDING IS FULLY SPRINKLERED.

## 1 FIRE ALARM RISER DIAGRAM
SCALE: NOT TO SCALE

| | | SYSTEM OUTPUTS | | | | | | | | | | | | | | | | | |
|---|---|---|---|---|---|---|---|---|---|---|---|---|---|---|---|---|---|---|---|
| | | Control Unit Annunciation | | | | | | Notification | | | | | | | | | Supp. | | |
| | | ACTUATE COMMON ALARM SIGNAL | ACTUATE AUDIBLE ALARM SIGNAL | INDICATE COMMON SUPERVISORY STATUS | ACTUATE AUDIBLE SUPERVISORY SIGNAL | INDICATE COMMON TROBLE SIGNAL | ACTUATE AUDIBLE COMMON TROUBLE SIGNAL | ACTIVATE HORNS AND STROBES THROUGHOUT THE PROTECTED AREA | DISPLAY/PRINT CHANGE OF STATUS | TRANSMIT AUTOMATIC ALARM SIGNAL TO SUPERVISING STATION | TRANSMIT MANUAL ALARM SIGNAL TO SUPERVISING STATION | TRANSMIT WATERFLOW ALARM SIGNAL TO SUPERVISING STATION | TRANSMIT SUPERVISORY SIGNAL TO SUPERVISING STATION | TRANSMIT CO ALARM SIGNAL TO SUPERVISING STATION | TRANSMIT TROUBLE SIGNAL TO SUPERVISING STATION | ACTIVATE TEMPORAL 4 SIGNAL ON ACTIVATED CO DETECTOR SOUNDER BASES | SHUT DOWN CO PRODUCING EQUIPMENT | SHUT DOWN FANS/AIR HANDLING UNITS | AUTOMATIC SHUTOFF OF EXHAUST FAN |
| | EVENT | A | B | C | D | E | F | G | H | I | J | K | L | M | N | O | P | Q | S |
| 1 | ACTIVATION OF MANUAL PULL STATION | X | X | | | | | X | X | | X | | | | | | | | |
| 2 | ACTIVATION OF SMOKE DETECTOR | X | X | | | | | X | X | X | | | | | | | | X | |
| 3 | ACTIVATION OF DUCT MOUNTED SMOKE DETECTOR | X | X | | | | | X | X | X | | | | | | | | X | |
| 4 | ACTIVATION OF HEAT DETECTOR | X | X | | | | | X | X | X | | | | | | | | X | |
| 5 | WATERFLOW SWITCH FOR FIRE SPRINKLER SYSTEM | X | X | | | | | X | X | | | X | | | | | | X | |
| 6 | ACTIVATION OF CARBON MONOXIDE DETECTOR | | | X | X | | | X | X | | | | | X | | X | X | | |
| 7 | SPRINKLER VALVE (TAMPER SWITCH) | | | X | X | | | | X | | | | X | | | | | | |
| 8 | FIRE ALARM LOSS OF PRIMARY/SECONDARY POWER | | | | | X | X | | X | | | | | | X | | | | |
| 9 | FIRE ALARM SYSTEM WIRING FAILURE | | | | | X | X | | X | | | | | | X | | | | |
| 10 | FIRE DAMPER (MONITORING RELAY) | | | X | X | | | | | | | | X | | | | | | X |

## 2 FIRE ALARM SEQUENCE OF OPERATIONS MATRIX
SCALE: NOT TO SCALE

CONSULTANT INFORMATION

LiRo Engineers, Inc.
*A LiRo Group Company*
Syosset, N.Y. 516-214-8157[T]

CONSULTANT SEAL

| REVISION NUMBER | DATE | MADE BY | APP'D BY | REVISION |
|---|---|---|---|---|

RECORD DRAWING CERTIFICATION
AS BUILT – CHANGES AS NOTED
AS BUILT – NO CHANGES

CONTRACTOR
NAME
SIGNATURE
TITLE DATE

PROJECT COORDINATOR
NAME
SIGNATURE
TITLE DATE

WESTCHESTER COUNTY, NEW YORK
DEPARTMENT OF PUBLIC WORKS AND TRANSPORTATION
DIVISION OF ENGINEERING

**INFRASTRUCTURE REHABILITATION - PHASE 3**
**PLAYLAND PARK, RYE, NEW YORK**
**CROSS AXIS BUILDING A**
**FIRE ALARM NOTES, SYMBOLS, LEGEND, AND RISER DIAGRAM**

CONTRACT NUMBER 22-523
SHEET NUMBER **CXA-FA-01**
DWG NO.: 173 of 664
SCALE: **As indicated**
DATE: 08/23/2022
DPW FILE NUMBER **1-118-FA-922-0**
REV. NO. 0

## FIRE ALARM DEMOLITION NOTES:

1. NO EXISTING FIRE ALARM DEVICES WERE NOTED DURING BUILDING SURVEY WITHIN THE INDICATED AREA. ANY ABANDONED DEVICES OR WIRING DISCOVERED DURING THE COURSE OF DEMOLITION SHALL BE REMOVED.
2. EXISTING TAMPER AND WATER FLOW SWITCHES AT EXISTING SPRINKLER VALVE ASSEMBLY TO BE DISCONNECTED AND REMOVED. DEMOLISH ALL WIRING BACK TO ORIGINATING FIRE ALARM CONTROL PANEL.

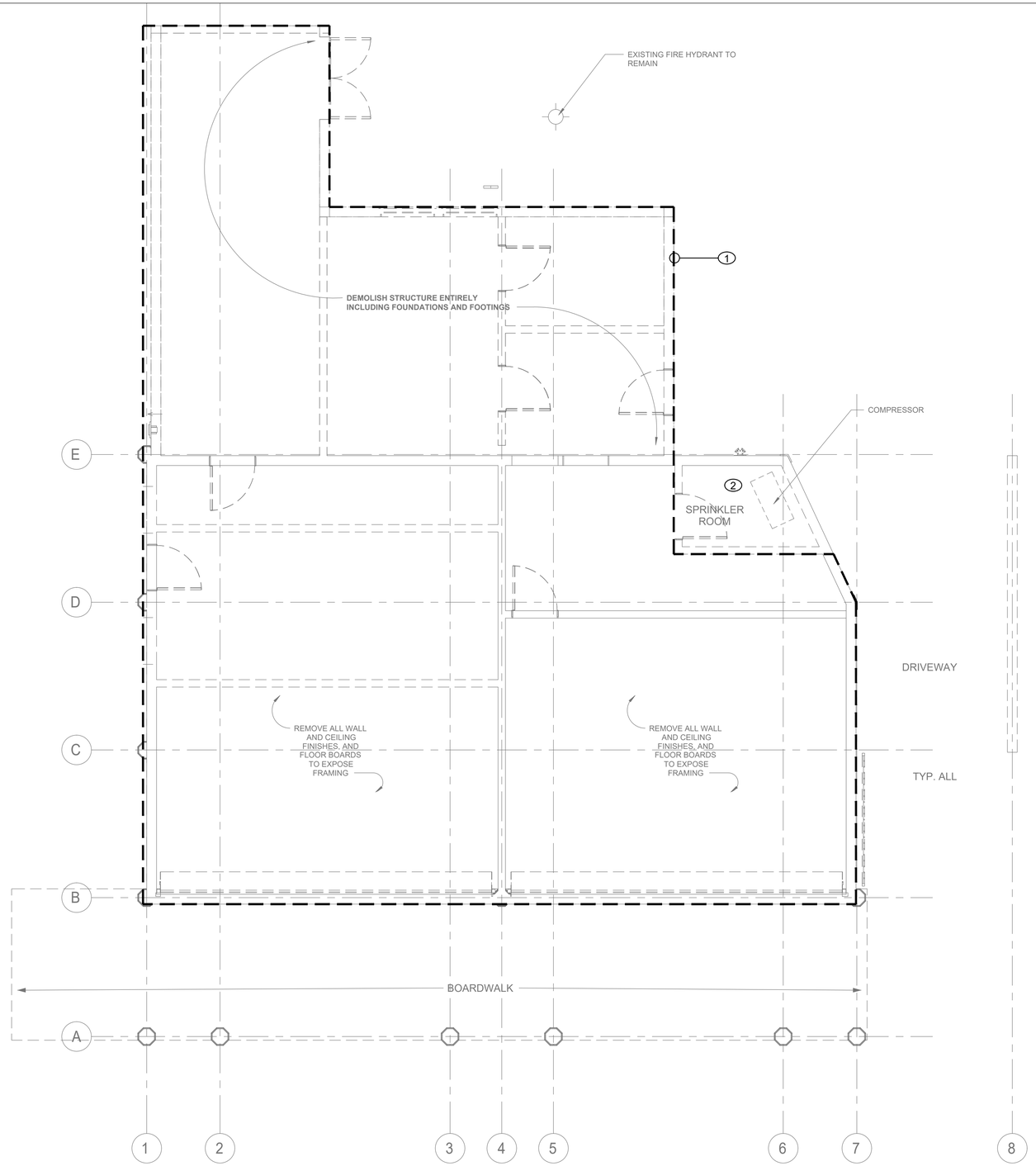


## 1 FIRE ALARM FIRST FLOOR DEMOLITION PLAN

SCALE: 1/4" = 1'-0"

CONSULTANT INFORMATION

LiRo Engineers, Inc.
*A LiRo Group Company*
Syosset, N.Y. 516-214-8157[T]

CONSULTANT SEAL

STATE OF NEW YORK · FRANK F. ULISSE · No. 090111-1 · LICENSED PROFESSIONAL ENGINEER

| REVISION NUMBER | DATE | MADE BY | APP'D BY | REVISION |
|---|---|---|---|---|
| | | | | |

RECORD DRAWING CERTIFICATION

☐ AS BUILT – CHANGES AS NOTED ☐ AS BUILT – NO CHANGES

CONTRACTOR
NAME
SIGNATURE
TITLE DATE

PROJECT COORDINATOR
NAME
SIGNATURE
TITLE DATE

WESTCHESTER COUNTY, NEW YORK
DEPARTMENT OF PUBLIC WORKS AND TRANSPORTATION
DIVISION OF ENGINEERING

**INFRASTRUCTURE REHABILITATION - PHASE 3**
**PLAYLAND PARK, RYE, NEW YORK**
**CROSS AXIS BUILDING A**
**FIRE ALARM FIRST FLOOR DEMOLITION PLAN**

| | |
|---|---|
| CONTRACT NUMBER | 22-523 |
| SHEET NUMBER | CXA-FA-11 |
| DWG NO.: | 174 of 664 |
| SCALE: | As indicated |
| DATE: | 08/23/2022 |
| DPW FILE NUMBER | 1-118-FA-923-0 |
| REV. NO. | 0 |

## FIRE ALARM DEMOLITION NOTES:

1. NO EXISTING FIRE ALARM DEVICES WERE NOTED DURING BUILDING SURVEY. ANY ABANDONED DEVICES OR WIRING DISCOVERED DURING THE COURSE OF DEMOLITION SHALL BE REMOVED.

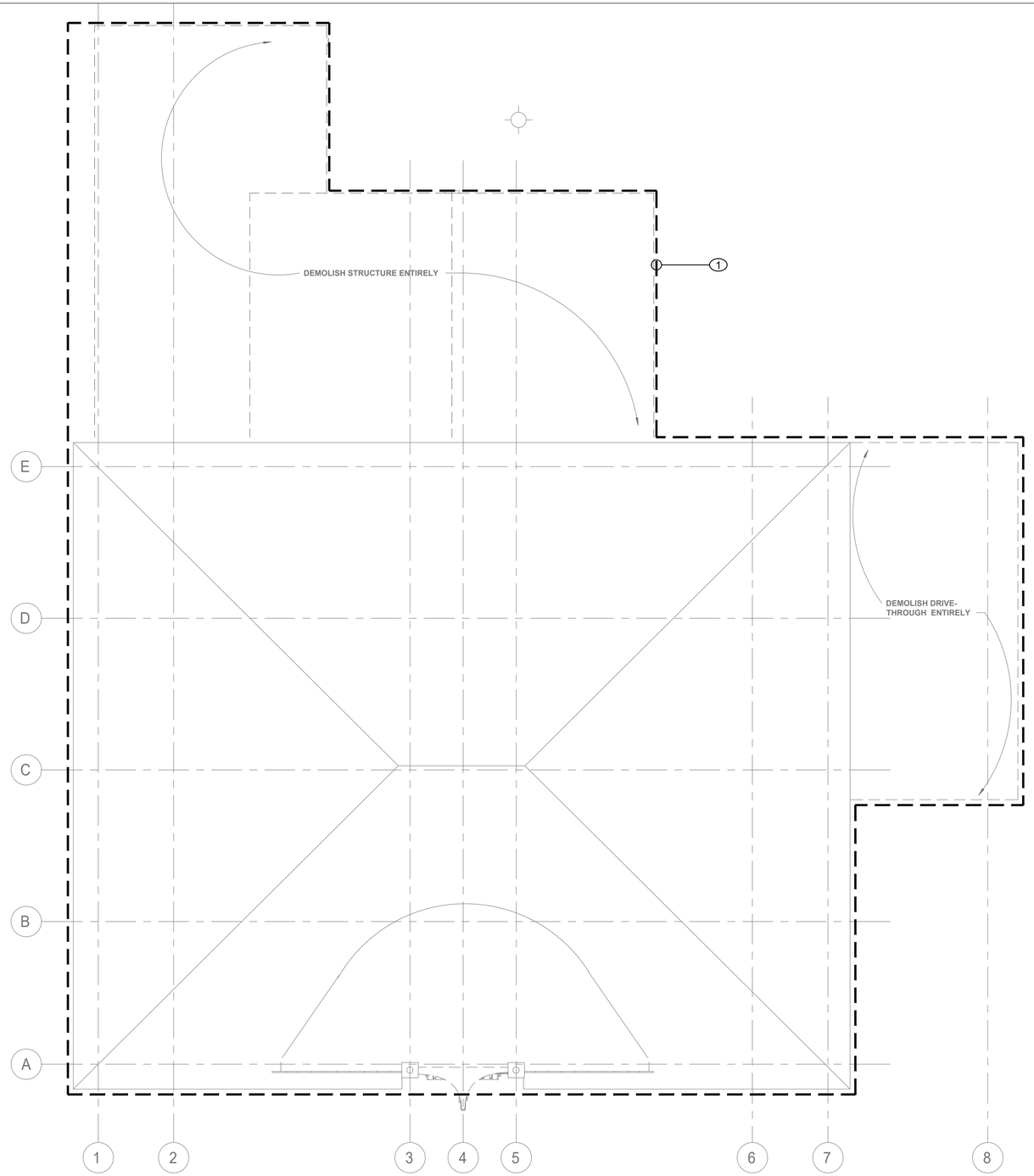


## 1 FIRE ALARM ATTIC DEMOLITION PLAN

SCALE: 1/4" = 1'-0"

CONSULTANT INFORMATION

LiRo Engineers, Inc.
*A LiRo Group Company*
Syosset, N.Y. 516-214-8157[T]

CONSULTANT SEAL

STATE OF NEW YORK · FRANK F. ULIASSE · No. 090111 · LICENSED PROFESSIONAL ENGINEER

| REVISION NUMBER | DATE | MADE BY | APP'D BY | REVISION |
|---|---|---|---|---|
| | | | | |

RECORD DRAWING CERTIFICATION

☐ AS BUILT – CHANGES AS NOTED ☐ AS BUILT – NO CHANGES

CONTRACTOR
NAME
SIGNATURE
TITLE DATE

PROJECT COORDINATOR
NAME
SIGNATURE
TITLE DATE

WESTCHESTER COUNTY, NEW YORK
DEPARTMENT OF PUBLIC WORKS AND TRANSPORTATION
DIVISION OF ENGINEERING

**INFRASTRUCTURE REHABILITATION - PHASE 3**
**PLAYLAND PARK, RYE, NEW YORK**
**CROSS AXIS BUILDING A**
**FIRE ALARM ATTIC DEMOLITION PLAN**

| | |
|---|---|
| CONTRACT NUMBER | 22-523 |
| SHEET NUMBER | CXA-FA-12 |
| DWG NO.: | 175 of 664 |
| SCALE: | As indicated |
| DATE: | 08/23/2022 |
| DPW FILE NUMBER | 1-118-FA-924-0 |
| REV. NO. | 0 |

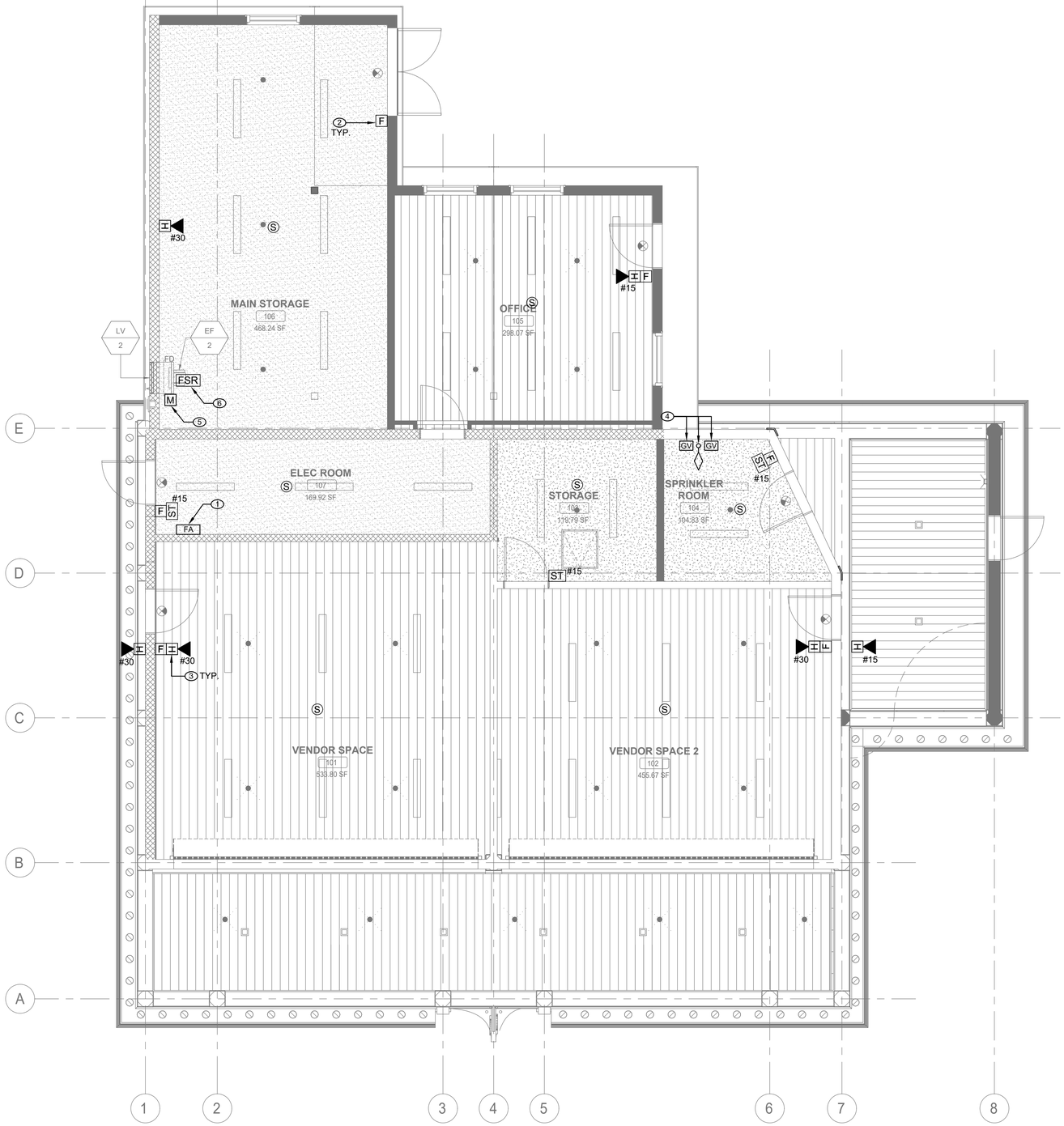


## 1 FIRE ALARM FIRST FLOOR CONSTRUCTION PLAN

SCALE: 1/4" = 1'-0"

## FIRE ALARM CONSTRUCTION NOTES:

1. INSTALL NEW FIRE ALARM CONTROL PANEL TO SERVE CXA BUILDING AND DRAGON COASTER VENDOR SPACES. EDWARDS EST 3X-SFS1R OR APPROVED EQUAL, PER PARK STANDARDS OR AS SPECIFIED BY WITH PARKWIDE FIRE ALARM SYSTEM VENDOR (EST). NEW PANEL SHALL BE CONNECTED TO PARKWIDE SYSTEM AND TESTED IN COORDINATION WITH SYSTEM VENDOR.
2. NEW MANUAL PULL STATIONS SHALL BE INSTALLED AT 4'-0" ABOVE FINISHED FLOOR AT EACH BUILDING EXIT (MAX. DISTANCE OF 5'-0" FROM EXIT).
3. FIRE ALARM STROBES AND HORN STROBES SHALL BE FIELD ADJUSTABLE AND SET CANDELA RATING INDICATED ON PLAN. FIRE ALARM STROBES AND HORN STROBES SHALL BE INSTALLED AT 7'-4" ABOVE FINISHED FLOOR UNLESS OTHERWISE NOTED.
4. PROVIDE TAMPER AND WATERFLOW SWITCHES FOR NEW SPRINKLER VALVE ASSEMBLIES AND CONNECT TO EXISTING FIRE ALARM SYSTEM. COORDINATE LOCATION AND QUANTITY WITH FIRE PROTECTION DRAWINGS AND SPRINKLER SYSTEM INSTALLER.
5. INSTALL FIRE ALARM MONITORING RELAY MODULES AT NEW FIRE DAMPER. MONITORING MODULES SHALL TRANSMIT SIGNAL TO FIRE ALARM CONTROL PANEL IN EVENT OF FIRE DAMPER CLOSURE BY FUSIBLE LINK.
6. PROVIDE FAN SHUTDOWN RELAYS FOR EXHAUST FAN, INTERLOCK WITH ASSOCIATED FIRE DAMPER. EXHAUST FANS SHALL AUTOMATICALLY SHUT OFF IN EVENT OF FIRE DAMPER CLOSURE BY FUSIBLE LINK. PROVIDE WIRING AND PROGRAMMING FOR UNIT SHUTDOWN.

## FIRE ALARM GENERAL NOTES:

1. REFER TO DRAWING FA-001.00 FOR SYMBOLS, ABBREVIATIONS, AND NOTES. LAYOUT OF FIRE ALARM DEVICES ON THIS PLAN IS DIAGRAMMATIC; EXACT LOCATIONS OF DEVICES AND CONDUIT SHALL BE COORDINATED WITH FIELD CONDITIONS, ARCHITECTURAL REQUIREMENTS, AND MANUFACTURER RECOMMENDATIONS.
2. ALL DEVICES AND EQUIPMENT SHOWN ON THIS PLAN ARE NEW, UNLESS OTHERWISE NOTED.
3. INSTALL NEW FIRE ALARM SYSTEM IN STRICT ACCORDANCE WITH NFPA-72 AND NFPA-90A REQUIREMENTS.
4. CONTRACTOR SHALL INSTALL NEW FIRE ALARM SYSTEM AS INDICATED AND PROVIDE ALL NECESSARY WIRING, CONDUIT, AND APPARATUSES.
5. ALL VISUAL NOTIFICATION DEVICES IN THE SAME SPACE SHALL BE SYNCHRONIZED IN ACCORDANCE WITH NFPA-72.
6. COORDINATE INSTALLATION WITH FIRE ALARM SYSTEM VENDOR AND MANUFACTURER REQUIREMENTS.
7. COORDINATE FIRE ALARM DEVICES WITH ARCHITECTURAL FINISHES. CONCEAL CONDUIT IN FINISHED WALLS AND FLUSH MOUNT DEVICES WHERE POSSIBLE.
8. CONTRACTOR SHALL TEST THE FIRE ALARM SYSTEM AFTER COMPLETION OF INSTALLATION. FIRE ALARM SYSTEM SHALL BE TESTED AND VERIFIED TO BE WORKING PROPERLY PRIOR TO INSPECTION BY THE AUTHORITY HAVING JURISDICTION.
9. FOLLOWING INSTALLATION, CONTRACTOR SHALL PATCH, PAINT, AND RESTORE ALL WALLS AND CEILINGS TO MATCH EXISTING OR DESIRED NEW CONDITION.
10. FIRESTOP ALL FIRE-RATED FLOOR OR WALL PENETRATIONS TO MAINTAIN ORIGINAL FIRE RATING TO FULL DEPTH OF OPENING.
11. CONTRACTOR SHALL PROVIDE SLEEVE FOR CONDUIT PENETRATIONS THROUGH WALL AND CEILING FLOORS.

CONSULTANT INFORMATION

LiRo Engineers, Inc.
*A LiRo Group Company*
Syosset, N.Y. 516-214-8157[T]

CONSULTANT SEAL

STATE OF NEW YORK · FRANK F. ULISSE · No. 090111-1 · LICENSED PROFESSIONAL ENGINEER

| REVISION NUMBER | DATE | MADE BY | APP'D BY | REVISION |
|---|---|---|---|---|
| | | | | |

RECORD DRAWING CERTIFICATION

☐ AS BUILT – CHANGES AS NOTED ☐ AS BUILT – NO CHANGES

CONTRACTOR: NAME / SIGNATURE / TITLE / DATE

PROJECT COORDINATOR: NAME / SIGNATURE / TITLE / DATE

WESTCHESTER COUNTY, NEW YORK
DEPARTMENT OF PUBLIC WORKS AND TRANSPORTATION
DIVISION OF ENGINEERING

**INFRASTRUCTURE REHABILITATION - PHASE 3**
**PLAYLAND PARK, RYE, NEW YORK**
**CROSS AXIS BUILDING A**
**FIRE ALARM FIRST FLOOR PLAN**

| | |
|---|---|
| CONTRACT NUMBER | 22-523 |
| SHEET NUMBER | CXA-FA-21 |
| DWG NO.: | 176 of 664 |
| SCALE: | As indicated |
| DATE: | 08/23/2022 |
| DPW FILE NUMBER | 1-118-FA-925-0 |
| REV. NO. | 0 |

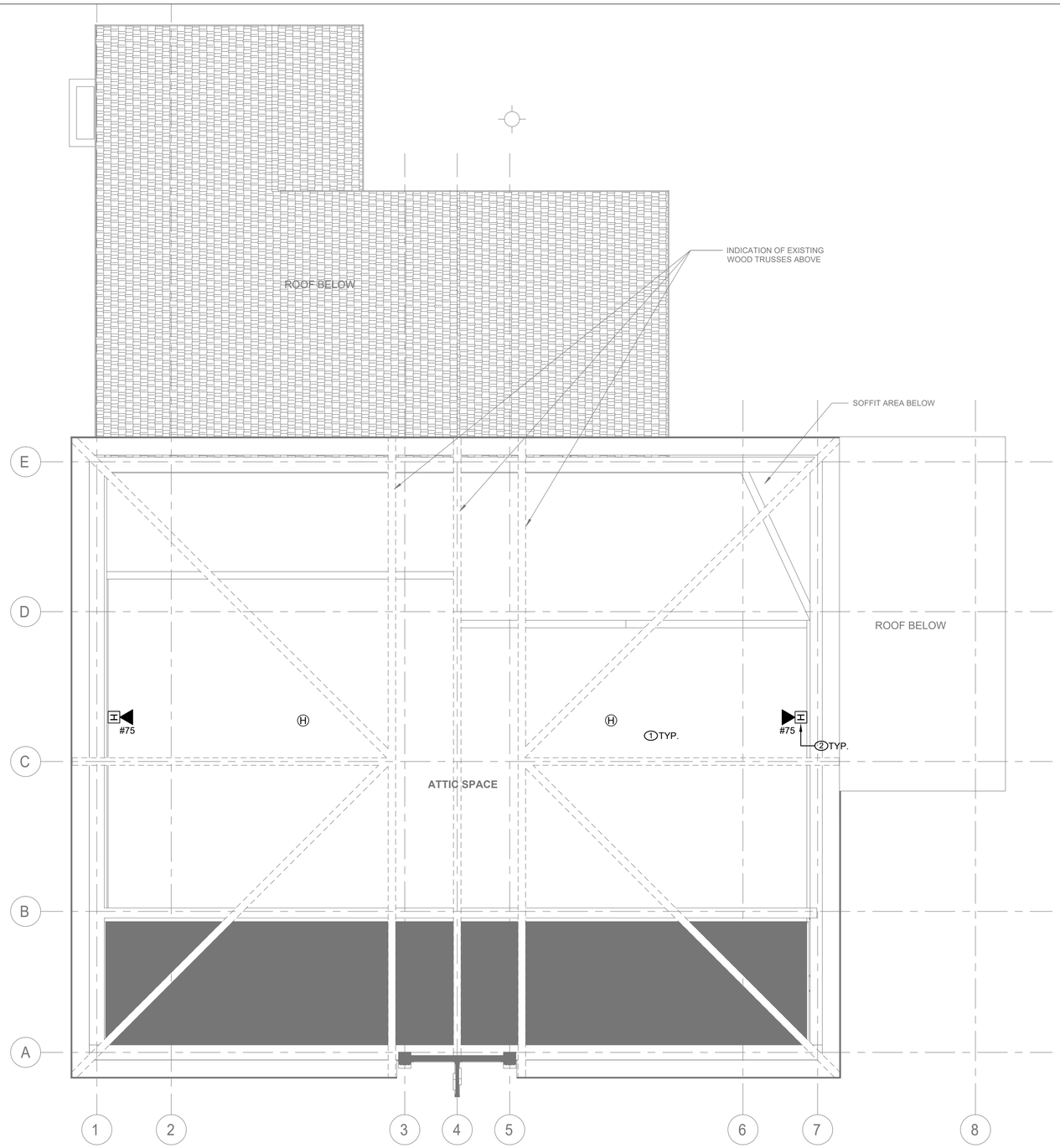


## 1 FIRE ALARM ATTIC CONSTRUCTION PLAN

SCALE: 1/4" = 1'-0"

## FIRE ALARM CONSTRUCTION NOTES:

1. CONNECT NEW FIRE ALARM DEVICES TO PANEL IN CXA ELECTRICAL ROOM.
2. FIRE HORN STROBES SHALL BE FIELD ADJUSTABLE AND SET CANDELA RATING INDICATED ON PLAN. FIRE ALARM HORN STROBES SHALL BE INSTALLED AT 7'-4" ABOVE FINISHED FLOOR UNLESS OTHERWISE NOTED.

## FIRE ALARM GENERAL NOTES:

1. REFER TO DRAWING FA-001.00 FOR SYMBOLS, ABBREVIATIONS, AND NOTES. LAYOUT OF FIRE ALARM DEVICES ON THIS PLAN IS DIAGRAMMATIC; EXACT LOCATIONS OF DEVICES AND CONDUIT SHALL BE COORDINATED WITH FIELD CONDITIONS, ARCHITECTURAL REQUIREMENTS, AND MANUFACTURER RECOMMENDATIONS.
2. ALL DEVICES AND EQUIPMENT SHOWN ON THIS PLAN ARE NEW, UNLESS OTHERWISE NOTED.
3. INSTALL NEW FIRE ALARM SYSTEM IN STRICT ACCORDANCE WITH NFPA-72 AND NFPA-90A REQUIREMENTS.
4. CONTRACTOR SHALL INSTALL NEW FIRE ALARM SYSTEM AS INDICATED AND PROVIDE ALL NECESSARY WIRING, CONDUIT, AND APPARATUSES.
5. ALL VISUAL NOTIFICATION DEVICES IN THE SAME SPACE SHALL BE SYNCHRONIZED IN ACCORDANCE WITH NFPA-72.
6. COORDINATE INSTALLATION WITH FIRE ALARM SYSTEM VENDOR AND MANUFACTURER REQUIREMENTS.
7. COORDINATE FIRE ALARM DEVICES WITH ARCHITECTURAL FINISHES. CONCEAL CONDUIT IN FINISHED WALLS AND FLUSH MOUNT DEVICES WHERE POSSIBLE.
8. CONTRACTOR SHALL TEST THE FIRE ALARM SYSTEM AFTER COMPLETION OF INSTALLATION. FIRE ALARM SYSTEM SHALL BE TESTED AND VERIFIED TO BE WORKING PROPERLY PRIOR TO INSPECTION BY THE AUTHORITY HAVING JURISDICTION.
9. FOLLOWING INSTALLATION, CONTRACTOR SHALL PATCH, PAINT, AND RESTORE ALL WALLS AND CEILINGS TO MATCH EXISTING OR DESIRED NEW CONDITION.
10. FIRESTOP ALL FIRE-RATED FLOOR OR WALL PENETRATIONS TO MAINTAIN ORIGINAL FIRE RATING TO FULL DEPTH OF OPENING.
11. CONTRACTOR SHALL PROVIDE SLEEVE FOR CONDUIT PENETRATIONS THROUGH WALL AND CEILING FLOORS.

CONSULTANT INFORMATION

LiRo Engineers, Inc.
A LiRo Group Company
Syosset, N.Y. 516-214-8157[T]

CONSULTANT SEAL

STATE OF NEW YORK · FRANK F. ULISSE · No. 090111-1 · LICENSED PROFESSIONAL ENGINEER

| REVISION NUMBER | DATE | MADE BY | APP'D BY | REVISION |
|---|---|---|---|---|
| | | | | |

RECORD DRAWING CERTIFICATION

☐ AS BUILT – CHANGES AS NOTED ☐ AS BUILT – NO CHANGES

CONTRACTOR: NAME / SIGNATURE / TITLE / DATE

PROJECT COORDINATOR: NAME / SIGNATURE / TITLE / DATE

WESTCHESTER COUNTY, NEW YORK
DEPARTMENT OF PUBLIC WORKS AND TRANSPORTATION
DIVISION OF ENGINEERING

**INFRASTRUCTURE REHABILITATION - PHASE 3**
**PLAYLAND PARK, RYE, NEW YORK**
**CROSS AXIS BUILDING A**
**FIRE ALARM ATTIC PLAN**

| | |
|---|---|
| CONTRACT NUMBER | 22-523 |
| SHEET NUMBER | CXA-FA-22 |
| DWG NO.: | 177 of 664 |
| SCALE: | As indicated |
| DATE: | 08/23/2022 |
| DPW FILE NUMBER | 1-118-FA-926-0 |
| REV. NO. | 0 |

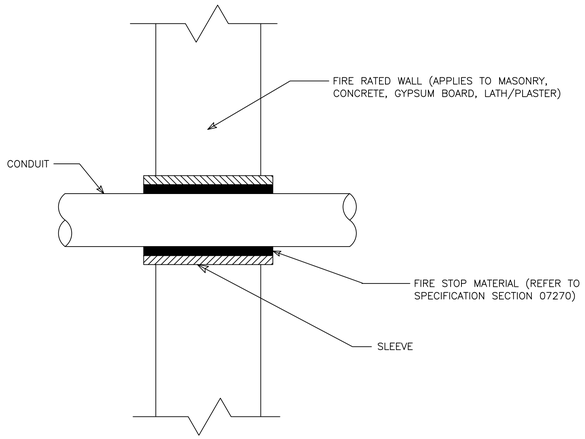


1 FA-81 CONDUIT PENETRATION THRU FIRE RATED WALL
NOT TO SCALE

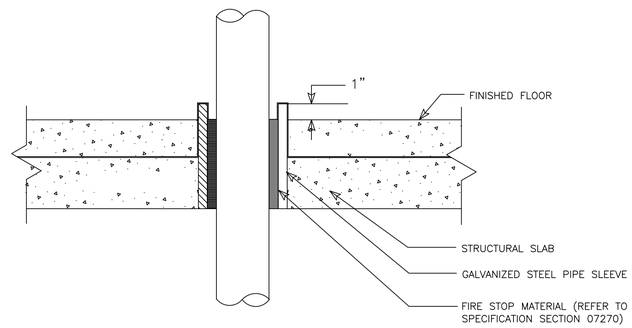


2 FA-81 CONDUIT PENETRATION THRU FLOOR SLAB
NOT TO SCALE

CONSULTANT INFORMATION

LiRo Engineers, Inc.
A LiRo Group Company
Syosset, N.Y. 516-214-8157[T]

CONSULTANT SEAL

STATE OF NEW YORK · FRANK F. ULISSE · No. 090111-1 · LICENSED PROFESSIONAL ENGINEER

| REVISION NUMBER | DATE | MADE BY | APP'D BY | REVISION |
|---|---|---|---|---|

RECORD DRAWING CERTIFICATION

☐ AS BUILT – CHANGES AS NOTED ☐ AS BUILT – NO CHANGES

CONTRACTOR
NAME
SIGNATURE
TITLE DATE

PROJECT COORDINATOR
NAME
SIGNATURE
TITLE DATE

WESTCHESTER COUNTY, NEW YORK
DEPARTMENT OF PUBLIC WORKS AND TRANSPORTATION
DIVISION OF ENGINEERING

**INFRASTRUCTURE REHABILITATION - PHASE 3**
**PLAYLAND PARK, RYE, NEW YORK**
**CROSS AXIS BUILDING A**
**FIRE ALARM DETAILS**

CONTRACT NUMBER 22-523
SHEET NUMBER **CXA-FA-81**
DWG NO.: 178 of 664
SCALE: **As indicated**
DATE: 08/23/2022
DPW FILE NUMBER **1-118-FA-927-0**
REV. NO. 0

## GENERAL NOTES:

1. DIMENSIONS INDICATED ON THE DRAWINGS ARE APPROXIMATE AND SUBJECT TO REVISIONS AS PER ACTUAL FIELD CONDITIONS.
2. CONTRACTOR SHALL COMPLY WITH ALL NYSDEC PERMIT REQUIREMENTS AND ANY OTHER STATE, COUNTY, CITY OR TOWN AGENCY HAVING JURISDICTION. REFER TO THE CONTRACT SPECIFICATIONS FOR PERMIT REQUIREMENTS.
3. CONTRACTOR SHALL TAKE ALL PRECAUTIONS TO MAINTAIN UTILITY SERVICE TO AND FROM BUILDINGS AND PARK AREAS.
4. ANY UTILITIES SHOWN ON THE PLANS ARE FOR INFORMATION ONLY AND HAVE BEEN OBTAINED FROM AVAILABLE SOURCES. THE EXISTENCE AND LOCATION OF ANY UTILITIES INDICATED ON THE PLANS ARE NOT GUARANTEED AND SHALL BE INVESTIGATED AND VERIFIED IN THE FIELD BY THE CONTRACTOR BEFORE STARTING WORK. THE CONTRACTOR SHALL HAVE ALL EXISTING UTILITIES FIELD STAKED BEFORE STARTING WORK BY CALLING DIG SAFELY NEW YORK AT 1-800-962-7962. EXCAVATION IN THE VICINITY OF UNDERGROUND UTILITIES SHALL BE DUG BY HAND. THE CONTRACTOR WILL BE HELD RESPONSIBLE FOR ANY DAMAGE TO EXISTING UTILITIES. NO SEPARATE PAYMENT SHALL BE MADE FOR THIS WORK.
5. THE CONTRACTOR WILL BE REQUIRED TO PROVIDE PRIVATE UTILITY MARKOUTS FOR ALL UTILITIES IN THE WORK AREAS. THE CONTRACTOR SHALL SUBMIT THE PROPOSED UTILITY SUB-CONTRACTOR FOR APPROVAL.
6. THE CONTRACTOR SHALL OBTAIN AND HAVE ON THE JOB SITE, AT ALL TIMES, ALL PERMITS AS REQUIRED BY THE STATE, COUNTY, CITY, TOWN/VILLAGE OR ANY OTHER PERMITTING AGENCY. THE CONTRACTOR SHALL BEAR ALL COSTS OF OBTAINING THESE PERMITS.
7. CONTRACTOR SHALL REMOVE ALL DEBRIS AND EXCESS CONSTRUCTION MATERIALS TO THE SATISFACTION OF THE OWNER AND ENGINEER. THE CONTRACTOR SHALL BE RESPONSIBLE FOR THE REMOVAL AND LEGAL DISPOSAL OF ALL MATERIALS RESULTING FROM THE CONTRACT.
8. CONTRACTOR SHALL COORDINATE ALL CONSTRUCTION ACTIVITIES WITH THE OWNER AND ENGINEER TO MINIMIZE INTERRUPTIONS TO NORMAL PARK OPERATIONS.
9. CONTRACTOR SHALL SUBMIT A DETAILED WORK PLAN INCLUDING SEQUENCE OF OPERATIONS PRIOR TO COMMENCING WORK AND SHALL BE SUBJECT TO APPROVAL OF THE OWNER/ENGINEER.
10. THE CONTRACTOR SHALL NOTIFY THE OWNER AND THE ENGINEER A MINIMUM OF SEVENTY-TWO (72) HOURS PRIOR TO THE START OF CONSTRUCTION. IN ADDITION, IF WORK SHOULD BE STOPPED AND RESTARTED FOR ANY REASON, THE CONTRACTOR SHALL GIVE THE ENGINEER A MINIMUM OF SEVENTY-TWO (72) HOURS NOTICE.
11. ITEMS SUSTAINING DAMAGE DURING CONSTRUCTION AS A RESULT OF THE CONTRACTOR'S OPERATIONS SHALL BE REPAIRED AND/OR REPLACED TO THE SATISFACTION AND APPROVAL OF THE OWNER AT THE CONTRACTORS EXPENSE. ANY DAMAGE SHALL BE REPAIRED AT NO ADDITIONAL COST TO THE OWNER.
12. ALL NECESSARY PRECAUTIONS SHALL BE TAKEN TO PRESERVE THE MATERIAL BELOW AND BEYOND THE LINES OF ALL EXCAVATION IN THE SOUNDEST POSSIBLE CONDITION. ANY DAMAGE TO THE WORK DUE TO THE CONTRACTOR'S OPERATIONS SHALL BE REPAIRED AT THE EXPENSE OF AND BY THE CONTRACTOR.
13. NO MATERIALS OF ANY KIND SHALL BE USED UNTIL IT HAS BEEN INSPECTED AND ACCEPTED BY THE ENGINEER; ALL MATERIALS REJECTED SHALL BE IMMEDIATELY REMOVED FROM THE WORK SITE AND SHALL NOT BE OFFERED FOR INSPECTION AGAIN.
14. ANY MATERIALS OR WORKMANSHIP FOUND AT ANY TIME TO BE DEFECTIVE SHALL BE REMEDIED AT ONCE, REGARDLESS OF PREVIOUS INSPECTION, THE INSPECTION AND OBSERVATION OF WORK BY THE ENGINEER IS INTENDED TO AID THE CONTRACTOR IN APPLYING LABOR AND MATERIAL TO AND IN ACCORDANCE WITH THE SPECIFICATION, BUT SUCH INSPECTION SHALL NOT RELEASE THE CONTRACTOR FROM ANY CONTRACT OBLIGATIONS.
15. THE CONTRACTOR SHALL CONDUCT THE WORK IN A SAFE MANNER SO AS TO POSE NO DANGER OR HAZARDS TO PERSONS OR PROPERTY. WHERE NECESSARY, TEMPORARY SHIELDS OR OTHER PROTECTIVE DEVICES MUST BE UTILIZED. THE CONTRACTOR ASSUMES FULL RESPONSIBILITY AND EXPENSE OF ANY AND ALL SAFETY MEASURES. THE USE OF EXPLOSIVES IS STRICTLY PROHIBITED. THE CONTRACTOR SHALL COMPLY WITH ALL OSHA AND NEW YORK STATE DEPARTMENT OF LABOR REQUIREMENTS.
16. RESEED ALL AREAS WHERE WORK OCCURS AND/OR WHERE CONTRACTOR DAMAGES EXISTING GRASS. COMPLY WITH THE SPECIFICATIONS. STAGING AREAS SHALL BE RESTORED TO ORIGINAL CONDITION AND SHALL BE SEEDED FOLLOWING COMPLETION OF ALL PHYSICAL WORK.
17. THE CONTRACTOR SHALL HAVE A COMPETENT REPRESENTATIVE PRESENT WHO SHALL RESPOND TO ANY QUESTIONS OR REQUESTS OF THE ENGINEER IN THE PROSECUTION AND COMPLETION OF THE WORK IN CONFORMITY WITH THIS CONTRACT, AND SHALL HAVE FULL AUTHORITY TO SUPPLY LABOR AND MATERIAL IMMEDIATELY. THE CONTRACTOR SHALL ALSO HAVE A COMPETENT REPRESENTATIVE AVAILABLE TO RECEIVE TELEPHONE MESSAGES AND PROVIDE A REASONABLE REPLY AS SOON AS POSSIBLE, BUT NO LATER THAN 24 HOURS.
18. NEITHER THE OWNER OR ENGINEER SHALL BE RESPONSIBLE FOR THE MEANS AND METHODS CHOSEN BY THE CONTRACTOR TO COMPLETE THE WORK.
19. THE CONTRACTOR SHALL HAVE FULL RESPONSIBILITY FOR SITE SAFETY AND THE SAFETY OF THE CONTRACTOR'S WORK FORCE.
20. BACKFILL AT ALL EXCAVATIONS SHALL BE PLACED IN 6" LIFTS AND SHALL ACHIEVE A COMPACTION NOT LESS THAN 95 PERCENT OF STANDARD PROCTOR MAXIMUM DENSITY. UNDER THE TERMS OF THE CONTRACT, THE CONTRACTOR SHALL PERFORM FIELD TESTS BY AN APPROVED LABORATORY TO ASSURE THIS COMPACTION RATE AT VARYING DEPTHS. THE CONTRACTOR SHALL BEAR ALL COSTS FOR TESTING AND ANY DELAYS THAT RESULT FROM SUCH TESTING.
21. THE CONTRACTOR SHALL ADJUST ALL MANHOLE FRAMES AND COVERS, VALVE COVERS, WATERVALVE BOXES, DRAINAGE INLETS, ETC. AS NECESSARY TO MEET THE SURFACE OF NEW PAVEMENT OR WALKWAY AS REQUIRED TO ALLOW POSITIVE DRAINAGE. NO SEPARATE PAYMENT WILL BE MADE FOR THIS WORK UNLESS OTHERWISE NOTED IN THE CONTRACT DOCUMENTS. THE CONTRACTOR SHALL COORDINATE THIS ACTIVITY WITH THE RELATED UTILITY COMPANIES, IF APPLICABLE. WARPING OF THE PAVEMENT SURFACE TO MEET THESE ITEMS WILL NOT BE PERMITTED.
22. ALL EXISTING SIGNS IN THE CONTRACT AREA ARE TO REMAIN INTACT. SIGNS DAMAGED SHALL BE REPLACED AT THE CONTRACTOR'S EXPENSE. ANY SIGNS THAT REQUIRE RESETTING SHALL BE PLACED IN A FINAL POSITION DETERMINED BY THE OWNER. NO SEPARATE PAYMENT SHALL BE MADE FOR THIS WORK. THE CONTRACTOR SHALL BE HELD RESPONSIBLE FOR SIGNS DAMAGED BY HIS OPERATIONS. THE CONTRACTOR SHALL BE RESPONSIBLE FOR ALL DAMAGES TO BURIED AND OVERHEAD UTILITIES LOCATED ON PUBLIC AND PRIVATE PROPERTY. THE CONTRACTOR SHALL BE RESPONSIBLE FOR ALL DAMAGES TO FACILITIES ON PUBLIC AND PRIVATE PROPERTY, SUCH AS, LANDSCAPING, DRIVEWAYS, CURBS, PAVEMENT, SIDEWALK, ETC.
23. CONTRACTOR IS RESPONSIBLE TO COORDINATE AND VERIFY THE EXTENT OF ALL DEMOLITION WITH THE ENGINEER PRIOR TO PERFORMING THE WORK.
24. CONTRACTOR SHALL RESTORE STAGING AREA BACK TO ITS ORIGINAL CONDITION INCLUDING GRADING, SEEDING ETC. EXISTING TREES, UTILITIES, LIGHT POLES, STONE, SIDEWALK, CURB, ETC. SHALL BE PROTECTED AND REPLACED IF DAMAGED. PROVIDE ELECTRICAL POWER, WATER, TELEPHONE, ETC. AS SPECIFIED FOR THE ENGINEERS TRAILER WHICH SHALL BE LOCATED IN THE STAGING AREA.

## SURVEY NOTES:

1. HORIZONTAL COORDINATES SHOWN HEREON REFER TO THE NORTH AMERICAN DATUM OF 1983 (NAD83), NEW YORK STATE PLANE COORDINATE SYSTEM, NEW YORK EAST ZONE 3101.
2. VERTICAL ELEVATIONS SHOWN HEREON REFER TO THE NORTH AMERICAN VERTICAL DATUM OF 1988 (NAVD88) WHICH IS BASED ON THE UNITED STATES COAST & GEODETIC SURVEY MEAN SEA LEVEL AT SANDY HOOK, NEW JERSEY.
3. LOCATION OF UTILITIES AS SHOWN ARE BASED UPON MAP TITLED "PARTIAL TOPOGRAPHICAL AND UTILITY SURVEY OF RYE PLAYLAND PARK" BY LKB LAST UPDATED SEPTEMBER 8, 2017.
4. LOCATIONS OF UNDERGROUND UTILITIES SHOWN ON THIS SURVEY ARE APPROXIMATE. RLT ENGINEERING, GEOLOGY, AND LAND SURVEYING, P.C., CANNOT GUARANTEE THE LOCATION OF UNDERGROUND UTILITIES AND STRUCTURES. THE STANDARD OF CARE USED BY RLT ENGINEERING, GEOLOGY, AND LAND SURVEYING, P.C. TO LOCATE THE UTILITIES IS REASONABLE AND CONSISTENT WITH THE LOCAL STANDARD OF CARE USED TO LOCATE THE UNDERGROUND UTILITIES. LOCATIONS AND SIZE ARE BASED ON UTILITY MARK-OUTS, AS-BUILT MAPS AND OTHER VISIBLE SURFACE EVIDENCE OBSERVED IN THE COURSE OF THIS SURVEY. PRIOR TO EXCAVATION OR CONSTRUCTION THE LOCATION, SIZE AND TYPE OF ALL UNDERGROUND UTILITY LOCATIONS MUST BE VERIFIED BY THE RESPECTIVE UTILITY COMPANY.
5. THE SUBJECT PROPERTY OF RYE PLAYLAND PARK FALLS WITHIN FEMA FLOOD ZONES AE (EL 12), AE (EL 13), VE (EL 14), VE (EL 15), VE (EL 16), VE (EL 17) AS SHOWN ON THE FEMA FLOOD INSURANCE RATE MAP COMMUNITY PANEL #36119C0358 F EFFECTIVE DATE SEPTEMBER 28, 2007 AND FEMA FLOOD INSURANCE RATE MAP COMMUNITY PANEL #36119C0356 F EFFECTIVE DATE SEPTEMBER 28, 2007. FEMA ELEVATIONS REFER TO NAVD88."

## DEMOLITION NOTES:

1. ALL REQUIRED DEMOLITION PERMITS MUST BE OBTAINED FROM ALL REQUIRED AGENCIES PRIOR TO COMMENCEMENT OF WORK.
2. ANY ASBESTOS REMOVAL MUST BE DONE BY A CERTIFIED ASBESTOS REMOVAL CONTRACTOR.
3. ALL UTILITY COMPANIES MUST BE NOTIFIED A MINIMUM OF 48 HOURS IN ADVANCE OF DEMOLITION.
4. FOR ALL UTILITIES, CONTRACTOR SHALL VERIFY DISCONNECT PRIOR TO DEMOLITION.
5. PROPER FENCING OR PUBLIC PROTECTION DEVICES MUST BE CONSTRUCTED AND MAINTAINED AROUND THE PERIMETER OF THE SITE AT ALL TIMES DURING DEMOLITION PHASE.
6. IT IS THE CONTRACTOR'S RESPONSIBILITY TO CONTROL DUST, DIRT, AND DEBRIS DURING DEMOLITION AND CONSTRUCTION PHASES.
7. IF SUSPICIOUS AND/OR HAZARDOUS MATERIAL IS ENCOUNTERED DURING DEMOLITION / CONSTRUCTION, ALL WORK SHALL STOP AND THE COUNTY DEPARTMENT OF HEALTH AND THE NEW YORK STATE DEPARTMENT OF ENVIRONMENTAL CONSERVATION SHALL BE NOTIFIED IMMEDIATELY. WORK SHALL NOT RESUME UNTIL THE CONTRACTOR HAS OUTLINED APPROPRIATE ACTION FOR DEALING WITH THE WASTE MATERIAL.
8. WHERE EXISTING CURB, GUTTER, SIDEWALK OR WALK IS TO BE REMOVED, IT SHALL BE SAW CUT OR REMOVED AT THE NEAREST JOINT.
9. THE CONTRACTOR SHALL PERFORM DAILY CLEANUP OPERATIONS WHICH INCLUDE SWEEPING OF THE ROADWAYS, REMOVAL OF DEBRIS (CUPS, PAPER BAGS, CANS, ETC.), REMOVAL OF EXCESS CONSTRUCTION MATERIALS, ALL TO THE SATISFACTION OF THE OWNER.
10. THE CONTRACTOR SHALL CONFORM TO ALL STATE AND LOCAL RULES, REGULATIONS AND LAWS WHICH SHALL GOVERN THE HAULING AND DISPOSING OF TREES, SHRUBS, STUMPS, ROOTS, RUBBISH, DEBRIS AND OTHER MATTER.
11. NO TREES , SHRUBS, ROOTS, BRANCHES, WOOD, CONCRETE OR OTHER DEBRIS SHALL BE BURIED IN FILLS, EMBANKMENTS OR STOCK PILES.
12. NO CLEARED MATTER, DEBRIS SHALL BE STORED AT THE CONSTRUCTION SITE.
13. CONTRACTOR SHALL GUARANTEE THAT WORK PERFORMED UNDER THIS CONTRACT WILL NOT PERMANENTLY DAMAGE TREES, SHRUBS, TURF OR PLANTS DESIGNATED TO REMAIN, OR OTHER ADJACENT WORK OR FACILITIES. IF DAMAGE RESULTING FROM CONTRACTOR'S OPERATIONS APPEARS DURING THE PERIOD UP TO 24 MONTHS AFTER COMPLETION OF THE PROJECT, THE CONTRACTOR SHALL REPLACE DAMAGED ITEMS AT HIS EXPENSE.
14. DAMAGE TO ANY EXISTING ITEMS, NOT SHOWN IN CONTRACT DOCUMENTS TO BE REMOVED, SUCH AS PAVEMENT, GRASSED AREAS, UTILITIES, STRUCTURES OR OTHER FACILITIES SHALL BE REPAIRED BY THE CONTRACTOR IMMEDIATELY AT HIS OWN EXPENSE TO THE SATISFACTION OF THE ENGINEER AND OWNER. ALL ASPHALT PAVEMENTS, GRASSED AREAS AND LANDSCAPING THAT ARE DAMAGED OR DISTURBED SHALL BE RESTORED IN ACCORDANCE WITH APPLICABLE SECTIONS ON THE CONTRACT SPECIFICATIONS.
15. EXCEPT AS NOTED BELOW, CONTRACTOR SHALL REMOVE FROM THE SITE AND SATISFACTORILY DISPOSE OF ALL TREES, SHRUBS, ROOTS, BRUSH, MASONRY, RUBBISH, SCRAP, DEBRIS, PAVEMENT, CURBS, FENCES AND MISCELLANEOUS OTHER ITEMS NOT COVERED UNDER OTHER SECTIONS AS SHOWN, SPECIFIED OR OTHERWISE REQUIRED TO PERMIT CONSTRUCTION OF NEW WORK.
16. BURNING OF MATERIAL IS EXPRESSLY FORBIDDEN.
17. TREES AND SHRUBS TO BE SAVED:

A. TREES AND SHRUBS WHICH ARE TO REMAIN SHALL BE PROTECTED BY FENCES, BARRICADES, WRAPPING OR OTHER MEANS OF PROTECTION. EQUIPMENT STORAGE, MATERIAL STOCKPILES, ETC., SHALL NOT BE PERMITTED WITHIN TREE BRANCH SPREAD.

B. PROTECT ALL OTHER TREES AND SHRUBS FROM DEFACEMENT, INJURY AND DESTRUCTION. PRESERVE TREES WITHIN THE CONTRACT LIMITS THAT ARE SO DELINEATED ON THE PLANS OR AS MARKED IN THE FIELD BY THE ENGINEER. ALSO, ALL TO BE SAVED SHALL BE PROTECTED IN ACCORDANCE WITH THE CONTRACT DOCUMENTS.

C. DO NOT CUT ROOTS UNNECESSARILY; HANDWORK OR OTHER METHODS SHALL BE IMPLEMENTED TO PREVENT DAMAGE TO ROOTS WHICH EXTEND INTO GRADING LIMITS OR LIMITS OF EXCAVATION. DISTURB ROOTS AS LITTLE AS POSSIBLE WHEN TUNNELING UNDER TREES. BACKFILLING AROUND TREE ROOTS SHALL BE DONE IMMEDIATELY AFTER COMPLETION OF CONSTRUCTION IN THE VICINITY OF TREES.

D. THE CONTRACTOR SHALL BE RESPONSIBLE FOR THE PROTECTION OF ALL VEGETATION FROM DAMAGE RESULTING FROM EMISSIONS FROM MOTORIZED EQUIPMENT.

E. CONTRACTOR SHALL BE VIGILANT OF ANY OVERHEAD UTILITY LINES WHEN USING AERIAL EQUIPMENT FOR TREE TRIMMING OPERATIONS.

F. DURING WORKING OPERATION, PROTECT THE TRUNK, FOLIAGE, AND ROOT SYSTEM OF ALL TREES TO BE SAVED WITH BOARDS OR OTHER GUARDS AND AS REQUIRED TO PREVENT DAMAGE, INJURY AND DEFACEMENT. DO NOT PILE EXCAVATED MATERIAL ADJACENT TO THE BASE OF ANY TREES. DO NOT ALLOW RUNOFF TO ACCUMULATE AROUND BASE OF TREES. DO NOT FASTEN OR ATTACH ROPES, CABLE OR GUY WIRES TO TREES WITHOUT PERMISSION OF THE ENGINEER. WHEN SUCH PERMISSION IS GRANTED, PROTECT THE TREE BEFORE MAKING FASTENING OR ATTACHMENTS BY PROVIDING BURLAP WRAPPING AND SOFTWOOD CLEATS. THE CONTRACTOR SHALL BE HELD RESPONSIBLE FOR DAMAGE RESULTING FROM THESE ACTIONS. USE OF AXES OR CLIMBING SPURS FOR TRIMMING WILL NOT BE PERMITTED. PROVIDE CLIMBING ROPES DURING TRIMMING.

G. REMOVE SHRUBS TO BE SAVED, TAKING A SUFFICIENT EARTH BALL AT THE ROOTS TO MAINTAIN THE SHRUB. TEMPORARILY REPLANT IF REQUIRED, AND REPLACE AT THE COMPLETION OF CONSTRUCTION IN CONDITION EQUALING THE ORIGINAL.

H. TREE AND SHRUB REPAIR WHERE REQUIRED SHALL BE PERFORMED BY A TREE SURGEON.

I. TREES AND SHRUBS INTENDED TO REMAIN WHICH ARE DAMAGED BEYOND REPAIR BY CONSTRUCTION, SHALL BE REPLACED BY THE CONTRACTOR AT NO EXPENSE TO THE OWNER.

## SITE NOTES:

1. THE CONTRACTOR SHALL PERFORM ALL WORK IN COMPLIANCE WITH TITLE 29 OF FEDERAL REGULATIONS, PART 1926, SAFETY AND HEALTH REGULATIONS FOR CONSTRUCTION(OSHA).
2. HIGHWAY DRAINAGE ALONG ALL ROADS AND PRIVATE DRIVES SHALL BE KEPT CLEAN OF MUD, DEBRIS ETC. AT ALL TIMES.
3. REFER TO ARCHITECTURAL DRAWINGS FOR BUILDING INFORMATION.
4. THE CONTRACTOR SHALL CONSULT THE DESIGN ENGINEER BEFORE DEVIATING FROM THESE PLANS.
5. IN ALL TRENCH EXCAVATIONS, CONTRACTOR MUST LAY THE TRENCH SIDE SLOPES BACK TO A SAFE SLOPE, USE A TRENCH SHIELD OR PROVIDE SHEETING AND BRACING IF REQUIRED.
6. THE CONTRACTOR SHALL TAKE PRECAUTIONS TO MAINTAIN A MINIMUM OF 2' OF COVER OVER ALL EXISTING AND NEW STORM AND SANITARY PIPES DURING CONSTRUCTION.
7. ALL EXISTING SURFACE APPURTENANCES (I.E. WATER VALVES, CATCH BASIN FRAMES AND GRATES, MANHOLE COVERS) WITHIN THE PROJECT LIMITS SHALL BE ADJUSTED TO FINISHED GRADE.
8. UNLESS COVERED BY THE CONTRACT SPECIFICATIONS OR AS NOTED ON THE PLANS, ALL WORK SHALL CONFORM TO THE NEW YORK STATE DEPARTMENT OF TRANSPORTATION STANDARD SPECIFICATIONS DATED JANUARY 1, 2020 AND ANY SUBSEQUENT APPENDICES.

## UTILITY NOTES:

1. APPROXIMATE LOCATION OF KNOWN UTILITY STRUCTURES AND FACILITIES THAT MAY BE ENCOUNTERED WITHIN AND ADJACENT TO THE LIMITS OF WORK ARE SHOWN ON THE PLANS. THE ACCURACY AND COMPLETENESS OF THIS INFORMATION IS NOT GUARANTEED BY THE ENGINEER. THE CONTRACTOR IS ADVISED TO VERIFY IN FIELD ALL THE FACTS CONCERNING THE UTILITY LOCATIONS AND OTHER CONSTRUCTION OBSTACLES PRIOR TO CONSTRUCTION OF ANY DISCREPANCIES WHICH MAY AFFECT PROJECT DESIGN AND/OR SCOPE.
2. ALL ABANDONED WATER LINES SHALL BE CUT AND CAPPED IN ACCORDANCE WITH WESTCHESTER COUNTY REQUIREMENTS.
3. TRENCH DETAILS ARE INTENDED TO PROVIDE INFORMATION REGARDING BACKFILLING MATERIALS AND GENERAL MATERIAL DEPTHS ONLY. THE CONTRACTOR SHALL BE RESPONSIBLE FOR THE MEANS AND METHODS OF CONSTRUCTION AND SHALL PROVIDE APPROPRIATE SAFETY MEASURES, SHEETING AND BRACING AS NECESSARY. SHEETING CONDITIONS ARE TO BE DESIGNED BY A NEW YORK STATE LICENSED PROFESSIONAL ENGINEER AND SUBMITTED TO THE DESIGN ENGINEER FOR APPROVAL. THE DESIGN ENGINEER ASSUMES NO RESPONSIBILITY OR LIABILITY FOR FIELD CONDITIONS, TRENCHING OR BACKFILLING OPERATIONS DURING CONSTRUCTION. THE CONTRACTOR SHALL COMPLY WITH ALL APPLICABLE OSHA STANDARDS AND DETAILS FOR TRENCH EXCAVATION.
4. CONTRACTOR SHALL BE RESPONSIBLE FOR DEWATERING AND PRECLUDING PONDING OF WATER IN ALL AREAS. DEWATERING OPERATIONS SHALL BE IN ACCORDANCE WITH NYSDEC REGULATIONS, THE PROJECT STORMWATER POLLUTION PREVENTION PLAN AND WESTCHESTER COUNTY.
5. THE CONTRACTOR SHALL COMPLY WITH THE LATEST OSHA CONFINED SPACE ENTRY REQUIREMENTS (29 CFR PART 1910).
6. THE CONTRACTOR SHALL COMPLY WITH THE LATEST REVISED OSHA SHEETING REQUIREMENTS (29 CFR PART 1926.650, 651, 652).
7. ALL EXISTING UTILITIES THAT ARE TO REMAIN IN SERVICE AND THAT INTERFERE WITH THE WORK SHALL BE RELOCATED UNLESS OTHERWISE SHOWN.
8. ALL ABANDONED PIPES SHALL BE PLUGGED, REMOVED, CRUSHED OR FILLED WITH A SUITABLE MATERIAL AS DIRECTED BY THE ENGINEERS, ABANDONED PIPES 12" INSIDE DIAMETER AND LARGER MUST BE REMOVED, FILLED OR CRUSHED IN PLACE. SMALLER PIPES SHALL BE PLUGGED AND ABANDONED IN PLACE UNLESS OTHERWISE DIRECTED BY THE ENGINEER.
9. THE CONTRACTOR SHALL CONTACT THE UTILITY COMPANIES TO DETERMINE THEIR SCHEDULE FOR PERFORMING UTILITY RELOCATION AND INSTALLATION WORK. THE CONTRACTOR SHALL SCHEDULE THEIR WORK ACCORDINGLY IN ORDER TO NOT INTERFERE WITH THE WORK OF THE UTILITY COMPANIES.
10. TRENCHES SHALL BE BACKFILLED WITHOUT DELAY. OPEN TRENCHES SHALL BE TEMPORARILY SUPPORTED AND STEEL PLATED WHEN WORK IS NOT IN PROGRESS. CONTRACTOR MUST ENSURE NO TRENCHES ARE LEFT OPEN OVERNIGHT. THE CONTRACTOR IS RESPONSIBLE FOR THE DESIGN AND INSTALLATION OF STEEL PLATES THAT ARE CAPABLE OF SAFELY SUPPORTING THE SUBJECTED LOADS.
11. THE CONTRACTOR SHALL BE RESPONSIBLE FOR PROVIDING TEMPORARY LIGHTING WITHIN THE LIMITS OF CONSTRUCTION AND FOR ALL AREAS WHERE WHERE EXISTING STREET AND AREA LIGHTING SHUT-DOWN IS REQUIRED TO INSTALL NEW LIGHTING AND ELECTRICAL SERVICE.
12. ALL CMP PIPES SHALL FOLLOW NYSDOT SECTION 602-2 AND 707.02, BE HELICAL BITUMINOUS COATED, SHALL HAVE GASKETED AND BANDED JOINTS AND BE OF THE FOLLOWING PIPE GAUGES UNLESS OTHERWISE SPECIFIED.

   10" TO 21" - 14 GAUGE
   24" TO 30" - 12 GAUGE
   30" TO 60" - 10 GAUGE

13. IN INSTANCES WHERE THE STORM SEWER CROSSES THE SANITARY SEWER A CRUSHED STONE ENCASEMENT SHALL BE PROVIDED AROUND THE SANITARY SEWER UP TO THE STORM SEWER-COMPACT WITH APPROVED EQUIPMENT
14. ALL CATCH BASINS AND STORM MANHOLES WITHIN PAVEMENT TO BE CONSTRUCTED TO WITHSTAND H-20 LOADING.
15. ALL EXISTING CATCH BASINS WITHIN WORK LIMITS TO BE CLEANED OF ANY DEBRIS OR SILT.

## GRADING NOTES:

1. REMOVE AND STOCKPILE TOPSOIL AS DIRECTED BY THE CONSTRUCTION MANAGER. REPLACE TOPSOIL TO A MINIMUM 4" DEPTH. ALL DISTURBED AREAS TO BE HYDROSEEDED AS DIRECTED BY THE CONSTRUCTION MANAGER.
2. CONTRACTOR SHALL BE RESPONSIBLE FOR THE MAINTENANCE AND REMOVAL OF TEMPORARY SEDIMENTATION CONTROLS, INCLUDING SILT SINK AND SILT FENCE. EROSION CONTROL MEASURES SHALL NOT BE REMOVED BEFORE VEGETATION HAS OCCURRED COMPLETELY.
3. ALL SILT FENCE TO BE REPLACED WHENEVER THEY BECOME CLOGGED OR INOPERABLE AND SHALL BE REPLACED AS DIRECTED BY THE ENGINEER.
4. THE CONTRACTOR SHALL BE RESPONSIBLE FOR RESTORATION OF TOPSOIL TO ALL DISTURBED AREAS. IT IS THE CONTRACTOR'S RESPONSIBILITY TO MAINTAIN EROSION CONTROL MEASURES AT ALL TIMES.
5. EROSION CONTROL MEASURES WILL BE IMPLEMENTED IN ACCORDANCE WITH THE NEW YORK STATE GUIDELINES FOR URBAN EROSION SEDIMENT CONTROL MANUAL, WESTCHESTER COUNTY HEALTH DEPARTMENT, AND THE CITY OF RYE REQUIREMENTS.
6. ALL INLETS TO THE STORM SEWER SHALL HAVE STONE DROP INLET PROTECTION. THE CONTRACTOR SHALL BE RESPONSIBLE FOR MAINTAINING THE BEST MANAGEMENT PRACTICES (BMP'S) UNTIL GROUND COVER IS ESTABLISHED.
7. SILT FENCE, JUTE MESH, AND/OR EROSION CONTROL BLANKETS WILL BE USED ON STEEP SLOPES AND WHEREVER NECESSARY TO CONTROL EROSION AND SILTATION OF EXISTING DRAINAGE SYSTEMS AS ORDERED BY THE ENGINEER OR SPECIFIED ON PLANS.
8. THE CONTRACTOR SHALL DESIGNATE A MEMBER OF HIS/HER FIRM TO BE RESPONSIBLE TO MONITOR EROSION CONTROL, EROSION CONTROL STRUCTURES, TREE PROTECTION AND PRESERVATION THROUGHOUT CONSTRUCTION.
9. ALL DISTURBED AREAS SHALL BE PROTECTED FROM EROSION EITHER BY MULCH OR TEMPORARY SEEDING WITHIN 2 WEEKS OF DISTURBANCE.

## SOIL EROSION AND SEDIMENT CONTROL NOTES:

1. ALL SOIL EROSION AND SEDIMENT CONTROL PRACTICES TO BE INSTALLED PRIOR TO ANY SOIL DISTURBANCE, OR IN THEIR PROPER SEQUENCE, AND MAINTAINED UNTIL PERMANENT PROTECTION IS ESTABLISHED. CONTRACTOR SHALL COMPLY WITH ALL REQUIREMENTS OF THE STORMWATER POLLUTION PREVENTION PLAN.
2. ANY DISTURBED AREAS THAT WILL NOT RECEIVE PERMANENT RESTORATION WITHIN TEN (10) DAYS AFTER FINAL GRADING, AND NOT SUBJECT TO CONSTRUCTION TRAFFIC, WILL IMMEDIATELY RECEIVE A TEMPORARY COVER. THE DISTURBED AREAS WILL BE MULCHED WITH STRAW, OR EQUIVALENT MATERIAL AT A RATE OF TWO (2) TONS PER ACRE, ACCORDING TO STATE STANDARDS.
3. PERMANENT VEGETATION TO BE SEEDED OR SODDED ON ALL EXPOSED AREAS WITHIN TEN (10) DAYS AFTER FINAL GRADING. MULCH WILL BE USED AS NECESSARY FOR PROTECTION UNTIL SEEDING IS ESTABLISHED.
4. ALL WORK TO BE DONE IN ACCORDANCE WITH THE STANDARDS FOR SOIL EROSION AND SEDIMENT CONTROL IN THE STATE OF NEW YORK.
5. A SUB-BASE COURSE DETAIL WILL BE APPLIED IMMEDIATELY FOLLOWING ROUGH GRADING AND INSTALLATION OF IMPROVEMENTS IN ORDER TO STABILIZE ROADS, DRIVEWAYS PARKING AREAS AND SIDEWALKS. IN AREAS WHERE NO UTILITIES ARE PRESENT, THE SUB-BASE SHALL BE INSTALLED WITHIN 15 DAYS OF THE PRELIMINARY GRADING.
6. IMMEDIATELY FOLLOWING INITIAL DISTURBANCE OR ROUGH GRADING, ALL CRITICAL AREAS SUBJECT TO EROSION (I.E.; STEEP SLOPES AND ROADWAY EMBANKMENTS) WILL RECEIVE A TEMPORARY COVER OF STRAW MULCH OR A SUITABLE EQUIVALENT AT A RATE OF TWO (2) TONS PER ACRE, ACCORDING TO NYS STANDARDS.
7. ANY STEEP SLOPES RECEIVING PIPELINE INSTALLATION WILL BE BACKFILLED AND STABILIZED DAILY, AS THE INSTALLATION PROCEEDS (I.E.; SLOPES GREATER THAN 3:1).
8. IN ACCORDANCE WITH THE STANDARDS FOR PERMANENT VEGETATIVE COVER FOR SOIL STABILIZATION, ANY SOIL HAVING A pH OF 4 OR LESS OR CONTAINING IRON SULFIDES SHALL BE COVERED WITH A MINIMUM OF 12 INCHES OF SOIL HAVING A pH OF 5 OR GREATER PRIOR TO SEEDBED PREPARATION.
9. WESTCHESTER COUNTY AND THE ENGINEER, SHALL BE NOTIFIED 72 HOURS IN ADVANCE OF ANY LAND DISTURBING ACTIVITY.
10. AT THE TIME WHEN THE SITE PREPARATION FOR PERMANENT VEGETATIVE STABILIZATION IS GOING TO BE ACCOMPLISHED, ANY SOIL THAT WILL NOT PROVIDE A SUITABLE ENVIRONMENT TO SUPPORT ADEQUATE VEGETATIVE GROUND COVER, SHALL BE REMOVED OR TREATED IN SUCH A WAY THAT WILL PERMANENTLY ADJUST THE SOIL CONDITIONS AND RENDER IT SUITABLE FOR VEGETATIVE COVER. IF THE REMOVAL OR TREATMENT OF THE SOIL WILL NOT PROVIDE SUITABLE CONDITIONS, NON-VEGETATIVE MEANS OF PERMANENT GROUND STABILIZATION WILL HAVE TO BE EMPLOYED.
11. THE CONTRACTOR SHALL TAKE NECESSARY MEASURES TO MAINTAIN DUST CONTROL. DIRT HAUL ROADS SHALL BE SPRINKLED WITH WATER OR GIVEN A SURFACE OF CRUSHED STONES OR WOOD CHIPS AS REQUIRED. VEHICLES SHALL BE CLEANED, AS NECESSARY, PRIOR TO USING PUBLIC STREETS. PAVED ROADS SHALL BE SPRINKLED WITH WATER.
12. ALL SOIL EROSION AND SEDIMENT CONTROL DEVICES SHALL BE LOCATED IN THE FIELD AS REQUIRED OR AT THE DIRECTION OF THE ENGINEER. THE CONTRACT DRAWING ARE NOT INTENDED TO SHOW THE LOCATION AND DETAILS FOR ALL SUCH DEVICES BUT ARE TO BE USED AS A REASONABLE GUIDE.
13. ANY CHANGES TO THE SOIL AND SEDIMENT CONTROL PLANS WILL REQUIRE THE SUBMISSION OF REVISED SOIL EROSION AND SEDIMENT CONTROL PLANS TO WESTCHESTER COUNTY AND THE ENGINEER. THE REVISED PLANS MUST BE PREPARED BY THE CONTRACTOR AND MUST MEET ALL CURRENT NYS SOIL EROSION AND SEDIMENT CONTROL PRACTICES.
14. CONTRACTOR SHALL OBTAIN ALL REQUIRED SEDIMENT CONTROL PERMITS.
15. UPON COMPLETION OF CONSTRUCTION WORK AND AFTER FINAL GRADING AND WHEN PERMANENT STABILIZATION HAS BEEN ESTABLISHED, STRAW BALES, SILT FENCES AND ALL OTHER SOIL PLAN APPURTENANCES WILL BE REMOVED AND DISPOSED OF BY THE CONTRACTOR, UNLESS ORDERED TO REMAIN BY THE ENGINEER.
16. ALL EXCESS EXCAVATED MATERIAL, EXCEPT FOR TOP SOIL, WILL BE REMOVED FROM THE SITE BY THE CONTRACTOR IN ACCORDANCE WITH THE CONTRACT DOCUMENTS.
17. CONDUIT OUTLETS AND CATCH BASIN INLETS MUST BE PROTECTED PRIOR TO START OF CONSTRUCTION.
18. THE CONTRACTOR SHALL PROVIDE A DETAILED SEQUENCE OF CONSTRUCTION OPERATIONS FOR REVIEW AND SUBMITTAL TO WESTCHESTER COUNTY AND THE ENGINEER.
19. THE CONTRACTOR SHALL MEET ENGINEER ON-SITE TO DEFINE THOSE AREAS WHICH WILL REQUIRE SOIL EROSION AND SEDIMENT CONTROL FACILITIES, DISCUSS THEIR CONSTRUCTION AND THEREAFTER PROVIDE DETAILED PLANS FOR REVIEW OF SUCH FACILITIES BY WESTCHESTER COUNTY AND THE ENGINEER.
20. ALL SOIL EROSION AND SEDIMENT CONTROL PRACTICES SHALL BE IN PLACE WHERE POSSIBLE PRIOR TO, OR IMMEDIATELY FOLLOWING SITE AND ACCESS CLEARING.
21. ALL SOIL EROSION AND SEDIMENT CONTROL PRACTICES SHALL BE LEFT IN PLACE AND MAINTAINED; INCLUDING SILT AND SEDIMENT REMOVAL, UNTIL CONSTRUCTION IS COMPLETED, AREA STABILIZED AND THE ENGINEER SO DIRECTS.
22. CONTRACTOR SHALL CONFINE SOIL DISTURBANCE ACTIVITY TO THE AREAS CONTAINED WITHIN THE "LIMIT OF DISTURBANCE" LINES EXCEPT AS DIRECTED BY THE ENGINEER AND IN ACCORDANCE AND COORDINATION WITH ADJACENT CONTRACTS. SUCH ACTIVITY SHALL SHALL ESSENTIALLY CONSIST OF CLEARING, GRUBBING, GRADING AND CONSTRUCTION IN AREAS DEFINED AS BUILDINGS, PIPELINE, PARKING AREAS, DRIVES AND WALKWAYS OR AS MAY BE REQUIRED DUE TO GRADE CHANGES OR RETAINING WALLS.
23. ALL DEWATERING OPERATIONS MUST DISCHARGE DIRECTLY INTO A SEDIMENT FILTER AREA. SEDIMENT FILTER SHALL BE INSTALLED IN ACCORDANCE WITH THE CONTRACT DOCUMENTS AND THE DETAILS OF DESIGN AND CONSTRUCTION SHALL PREPARED AND SUBMITTED BY THE CONTRACTOR TO THE ENGINEER, AND ALL OTHER PERTINENT AGENCIES FOR REVIEW.
24. SOIL STABILIZATION METHODS SHALL BE UNDERTAKEN COINCIDENTALLY WITH ALL SITE IMPROVEMENTS AND CONTINUE DURING THE CONSTRUCTION ACTIVITY PERIOD.
25. THE LIMITS OF FENCING FOR TREE PROTECTION WILL BE DETERMINED IN THE FIELD PRIOR TO CONSTRUCTION AND WILL INCLUDE THE TREE CANOPY.
26. COMPLY WITH GENERAL PERMIT GP-0-20-001, AS OUTLINED IN THE STORM WATER PREVENTION PLAN (SWPPP).

6/15/2022 4:10:27 PM

CONSULTANT INFORMATION

LiRo Engineers, Inc.
*A LiRo Group Company*
Mineola, N.Y. 516-746-2350[T]

CONSULTANT SEAL

STATE OF NEW YORK · KENNETH J. HOLMSTROM · LICENSED PROFESSIONAL ENGINEER · No. 059134

| REVISION NUMBER | DATE | MADE BY | APP'D BY | REVISION |
|---|---|---|---|---|

RECORD DRAWING CERTIFICATION

☐ AS BUILT - CHANGES AS NOTED ☐ AS BUILT - NO CHANGES

| CONTRACTOR | PROJECT COORDINATOR |
|---|---|
| NAME | NAME |
| SIGNATURE | SIGNATURE |
| TITLE DATE | TITLE DATE |

WESTCHESTER COUNTY, NEW YORK
DEPARTMENT OF PUBLIC WORKS AND TRANSPORTATION
DIVISION OF ENGINEERING

**INFRASTRUCTURE REHABILITATION PHASE 3**
**PLAYLAND PARK, RYE, NEW YORK**
**CROSS AXIS BUILDING A**
**GENERAL NOTES**

| | |
|---|---|
| CONTRACT NUMBER: **22-523** | SHEET NUMBER: **CXA-C-01** |
| DWG NO.: 179 of 664 | |
| SCALE: **1"=10'** | |
| DATE: **08/23/2022** | |
| DPW FILE NUMBER: **1-118-C-928-0** | REV. NO. **0** |

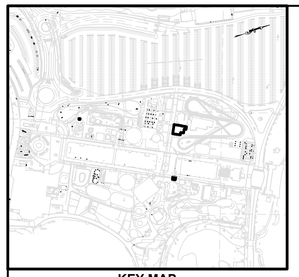

KEY MAP
NOT TO SCALE

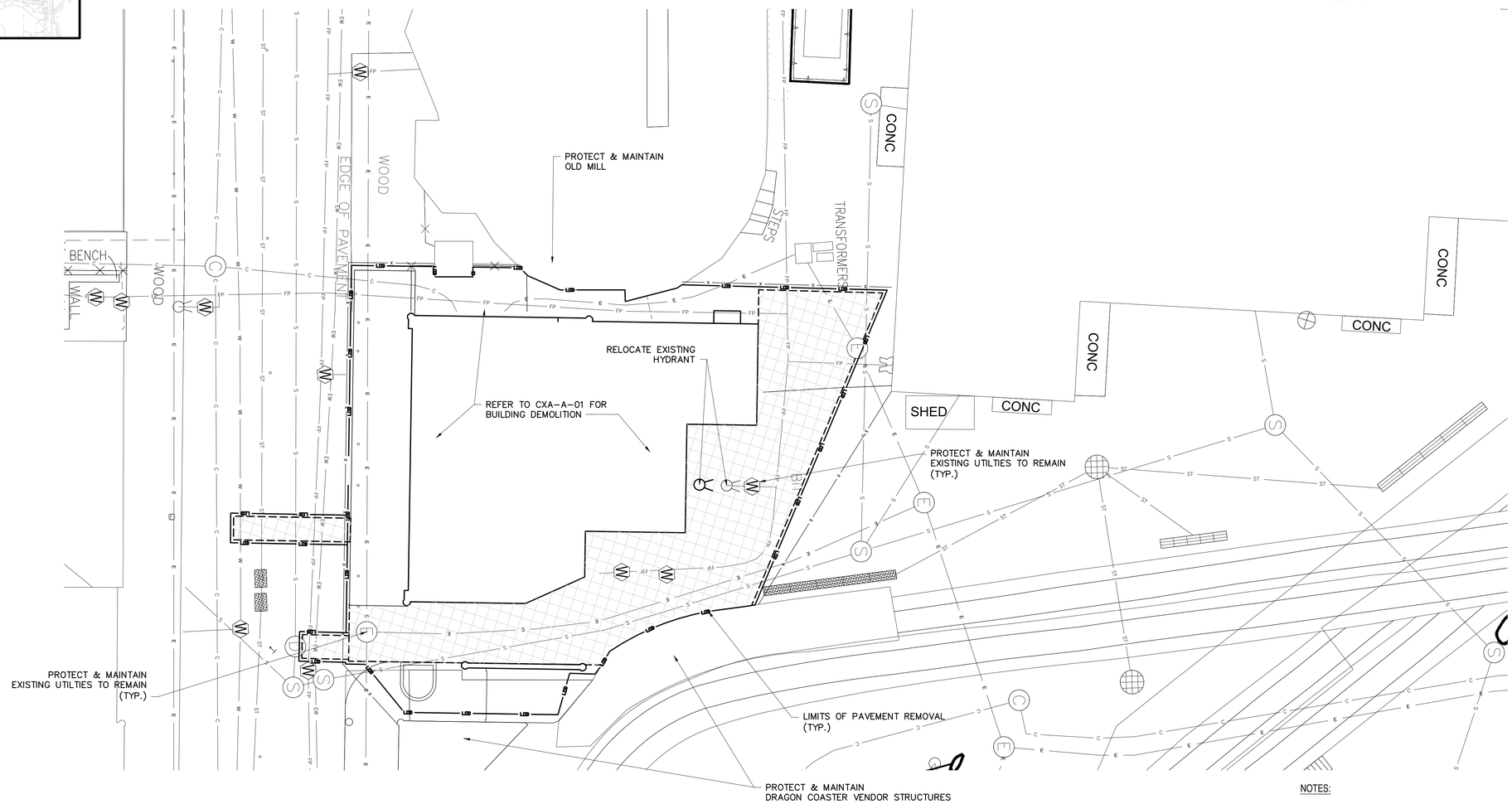


## EXISTING LEGEND

- POST
- UTILITY POLE
- SIGN
- HANDICAP PARKING
- GROUND LIGHT
- LIGHT POLE
- UTILITY POLE WITH LIGHT
- LIGHT POLE (SINGLE LIGHT)
- LIGHT POLE (DOUBLE LIGHT)
- LIGHT POLE (MULTI LIGHT)
- BOAT TIE-OFF CLEAT
- CATCH BASIN
- TRENCH DRAIN
- MAILBOX
- UNKNOWN MANHOLE
- COMMUNICATIONS BOX/HAND HOLE
- ELECTRIC HAND HOLE
- ELECTRIC BOX
- GAS METER
- IRRIGATION BOX
- UNKNOWN UTILITY BOX/HAND HOLE
- COMMUNICATION MANHOLE
- DRAINAGE MANHOLE
- ELECTRIC MANHOLE
- SEWER MANHOLE
- STORM SEWER MANHOLE
- SEWER CLEANOUT
- HYDRANT
- SIAMESE CONNECTION
- UNKNOWN VALVE
- WATER VALVE
- GAS VALVE
- WATER SPIGOT OR FOUNTAIN
- MONITORING WELL
- DECIDUOUS BUSH
- EVERGREEN BUSH
- DECIDUOUS TREE
- EVERGREEN TREE
- STUMP
- HEDGE ROW
- TREELINE
- BRUSHLINE
- RETAINING WALL
- GUIDE RAIL
- STONE WALL
- WATERLINE
- FENCE
- UNDERGROUND COMMUNICATION
- UNDERGROUND PROPANE
- UNDERGROUND ELECTRICAL
- UNDERGROUND STREET LIGHTING
- UNDERGROUND ENVIRONMENTAL WASTEWATER
- UNDERGROUND SEWER
- UNDERGROUND STORM SEWER
- UNDERGROUND WATER
- UNDERGROUND FIRE PROTECTION
- EXISTING MAJOR CONTOUR
- EXISTING MINOR CONTOUR

PROPOSED LEGEND:

- SAW CUTTING ASPHALT CONCRETE
- LIMITS OF DISTURBANCE
- LIMITS OF PAVEMENT REMOVAL (MILLING & EXCAVATION)
- AREA OF ASPHALT PAVEMENT REMOVAL (FULL DEPTH & EXCAVATION)
- DRAINAGE STRUCTURE INLET PROTECTION

NOTES:

1. PAVEMENT REMOVAL, MILLING AND EXCAVATION, MATERIAL SHALL NOT BE STOCKPILED ON SITE.
2. EXISTING GRADES, PIPE LOCATIONS, SIZES, MATERIAL, INVERTS AND OTHER EXISTING CONDITIONS ARE SHOWN ON THE DRAWINGS FROM AVAILABLE AS-BUILT DRAWINGS AND FIELD SURVEY BY OTHERS. IT SHALL BE THE RESPONSIBILITY OF THE CONTRACTOR TO VERIFY ALL EXISTING CONDITIONS.
3. THE CONTRACTOR SHALL TAKE PROPER PRECAUTIONS NOT TO DAMAGE ANY EXISTING SITE CONDITIONS SPECIFICALLY EXCLUDED FROM THE CONTRACT AND WILL BE HELD SOLELY RESPONSIBLE FOR ANY DAMAGE OCCURRING DURING THE COURSE OF THE WORK DURING CONSTRUCTION. THE CONTRACTOR SHALL, AT THEIR OWN EXPENSE, MAKE ALL REPAIRS REQUIRED TO RESTORE ANY DAMAGED AREAS TO ORIGINAL CONDITIONS.

New York 811 — Know what's below. Call before you dig.

0 10 20 30
1"=10' SCALE BAR

6/15/2022 4:10:27 PM

CONSULTANT INFORMATION
LiRo Engineers, Inc.
A LiRo Group Company
Mineola, N.Y. 516-746-2350[T]

CONSULTANT SEAL
STATE OF NEW YORK — KENNETH J. HOLT — LICENSED PROFESSIONAL ENGINEER — No. 059134

| REVISION NUMBER | DATE | MADE BY | APP'D BY | REVISION |
|---|---|---|---|---|

RECORD DRAWING CERTIFICATION
☐ AS BUILT – CHANGES AS NOTED ☐ AS BUILT – NO CHANGES

CONTRACTOR
NAME
SIGNATURE
TITLE DATE

PROJECT COORDINATOR
NAME
SIGNATURE
TITLE DATE

WESTCHESTER COUNTY, NEW YORK
DEPARTMENT OF PUBLIC WORKS AND TRANSPORTATION
DIVISION OF ENGINEERING

**INFRASTRUCTURE REHABILITATION PHASE 3**
**PLAYLAND PARK, RYE, NEW YORK**
**CROSS AXIS BUILDING A**
**EXISTING CONDITIONS/DEMOLITION PLAN**

| | |
|---|---|
| CONTRACT NUMBER | 22-523 |
| SHEET NUMBER | CXA-C-02 |
| DWG NO.: | 180 of 664 |
| SCALE: | 1"=10' |
| DATE: | 08/23/2022 |
| DPW FILE NUMBER: | 1-118-C-929-0 |
| REV. NO.: | 0 |

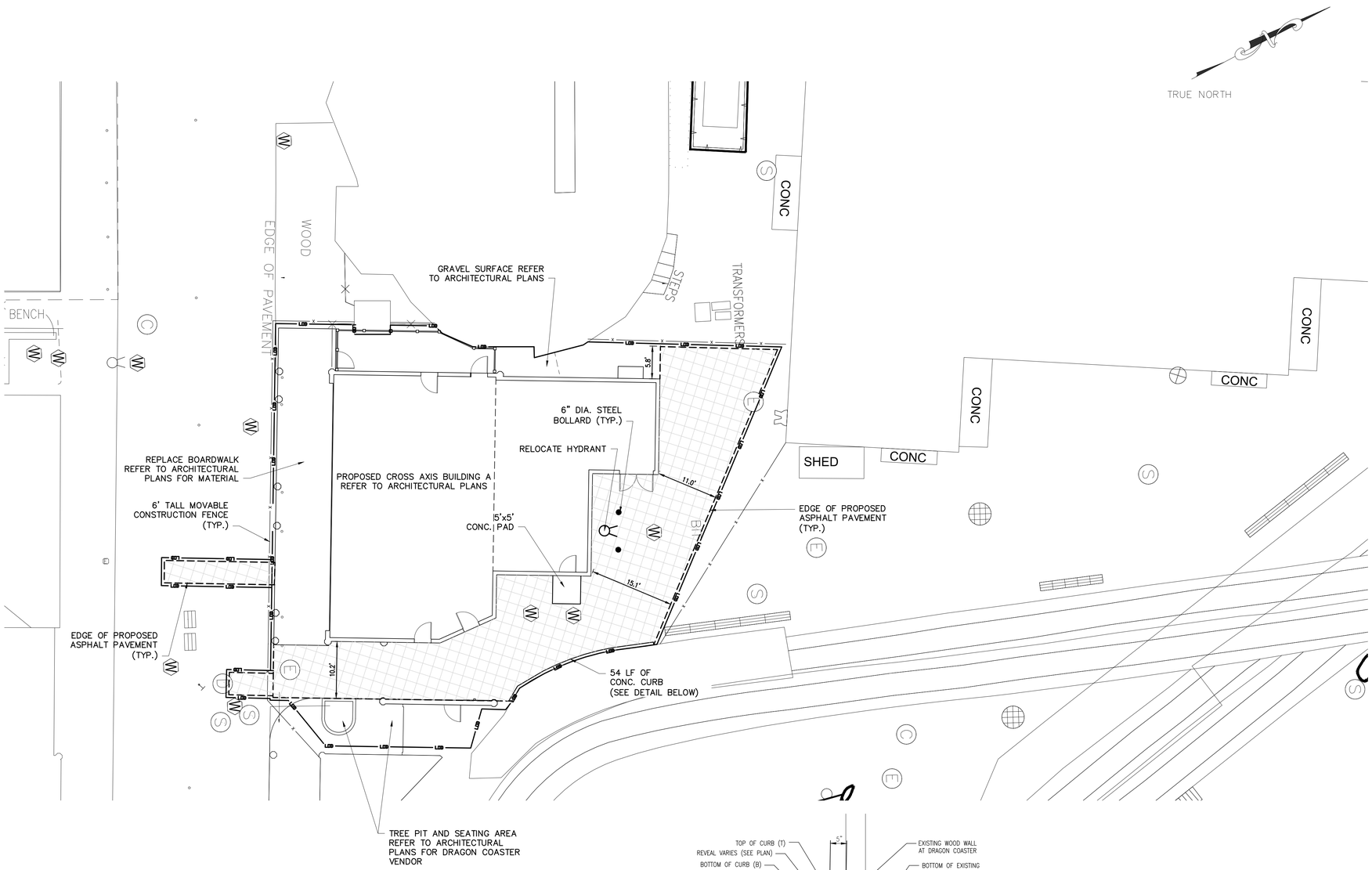


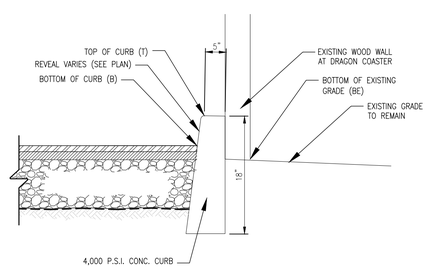


CONCRETE CURB DETAIL

N.T.S.

## EXISTING LEGEND

- POST
- UTILITY POLE
- OR SIGN
- HANDICAP PARKING
- GROUND LIGHT
- LIGHT POLE
- UTILITY POLE WITH LIGHT
- LIGHT POLE (SINGLE LIGHT)
- LIGHT POLE (DOUBLE LIGHT)
- LIGHT POLE (MULTI LIGHT)
- BOAT TIE-OFF CLEAT
- OR OR CATCH BASIN
- TRENCH DRAIN
- MAILBOX
- UNKNOWN MANHOLE
- C OR C COMMUNICATIONS BOX/HAND HOLE
- E ELECTRIC HAND HOLE
- EB ELECTRIC BOX
- GM GAS METER
- IB IRRIGATION BOX
- U UNKNOWN UTILITY BOX/HAND HOLE
- C COMMUNICATION MANHOLE
- D OR D DRAINAGE MANHOLE
- E ELECTRIC MANHOLE
- S OR S SEWER MANHOLE
- ST STORM SEWER MANHOLE
- SEWER CLEANOUT
- HYDRANT
- SIAMESE CONNECTION
- V OR V UNKNOWN VALVE
- W WATER VALVE
- G GAS VALVE
- WS WATER SPIGOT OR FOUNTAIN
- MONITORING WELL
- DECIDUOUS BUSH
- EVERGREEN BUSH
- DECIDUOUS TREE
- EVERGREEN TREE
- STUMP
- HEDGE ROW
- TREELINE
- BRUSHLINE
- RETAINING WALL
- GUIDE RAIL
- STONE WALL
- FENCE

PROPOSED LEGEND:

- MOVABLE CONSTRUCTION FENCE
- SAW CUTTING ASPHALT CONCRETE
- LIMITS OF DISTURBANCE
- LIMITS OF PAVEMENT REMOVAL
- AREA OF FULL DEPTH ASPHALT PAVEMENT
- DRAINAGE STRUCTURE INLET PROTECTION

New York 811 Know what's below. Call before you dig.

0 10 20 30

1"=10' SCALE BAR

6/15/2022 4:10:27 PM

CONSULTANT INFORMATION

LiRo Engineers, Inc.
A LiRo Group Company
Mineola, N.Y. 516-746-2350[T]

CONSULTANT SEAL

STATE OF NEW YORK · KENNETH J. HOLMSTROM · LICENSED PROFESSIONAL ENGINEER · No. 059134

| REVISION NUMBER | DATE | MADE BY | APP'D BY | REVISION |
|---|---|---|---|---|

RECORD DRAWING CERTIFICATION

☐ AS BUILT – CHANGES AS NOTED ☐ AS BUILT – NO CHANGES

CONTRACTOR
NAME
SIGNATURE
TITLE DATE

PROJECT COORDINATOR
NAME
SIGNATURE
TITLE DATE

WESTCHESTER COUNTY, NEW YORK
DEPARTMENT OF PUBLIC WORKS AND TRANSPORTATION
DIVISION OF ENGINEERING

**INFRASTRUCTURE REHABILITATION PHASE 3**
**PLAYLAND PARK, RYE, NEW YORK**
**CROSS AXIS BUILDING A**
**SITE CONSTRUCTION PLAN**

| | |
|---|---|
| CONTRACT NUMBER | 22-523 |
| SHEET NUMBER | CXA-C-03 |
| DWG NO.: | 181 of 664 |
| SCALE: | 1"=10' |
| DATE: | 08/23/2022 |
| DPW FILE NUMBER | 1-118-C-930-0 |
| REV. NO. | 0 |

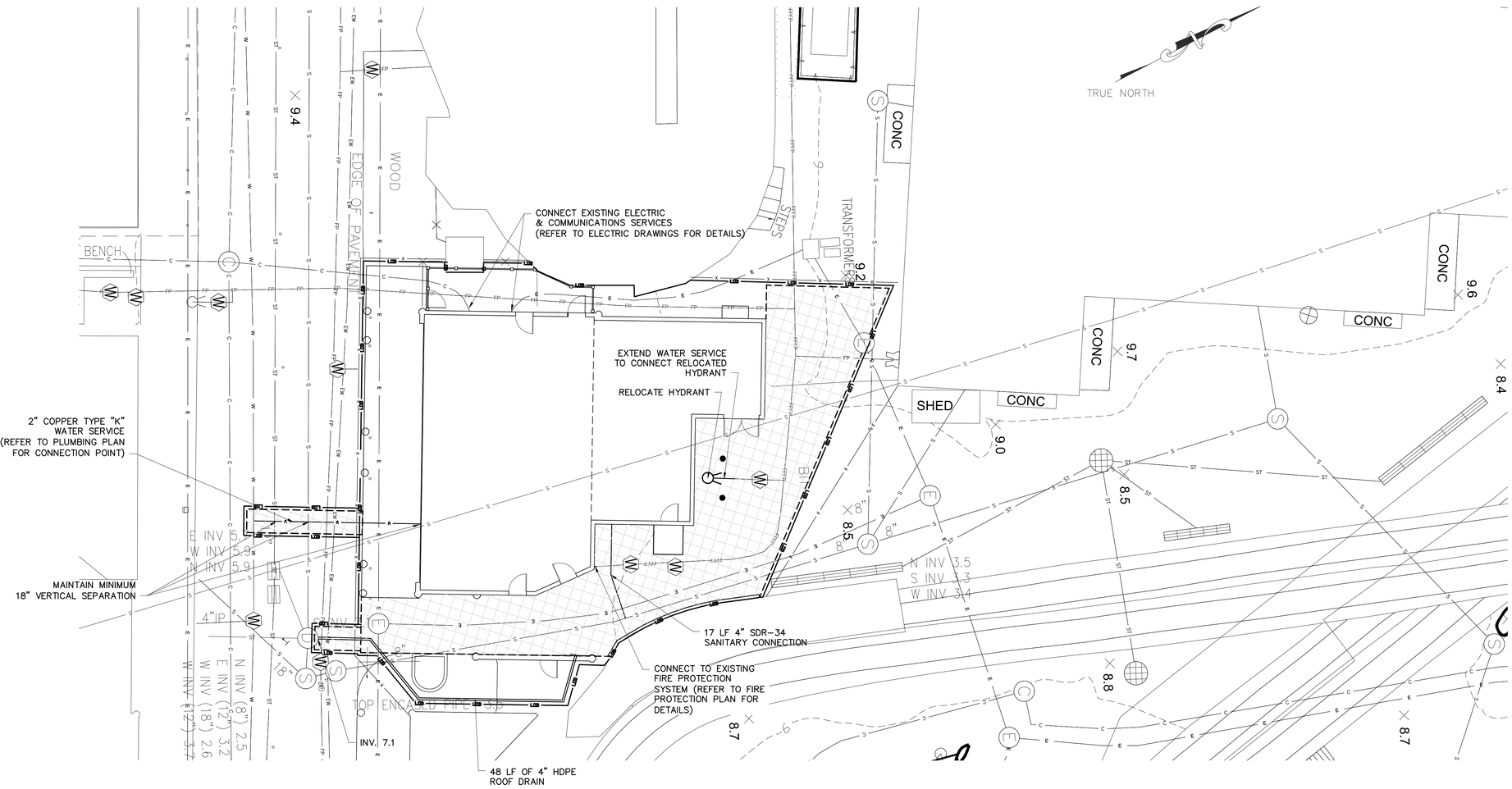


## EXISTING LEGEND

- POST
- UTILITY POLE
- SIGN
- HANDICAP PARKING
- GROUND LIGHT
- LIGHT POLE
- UTILITY POLE WITH LIGHT
- LIGHT POLE (SINGLE LIGHT)
- LIGHT POLE (DOUBLE LIGHT)
- LIGHT POLE (MULTI LIGHT)
- BOAT TIE-OFF CLEAT
- CATCH BASIN
- TRENCH DRAIN
- MAILBOX
- UNKNOWN MANHOLE
- COMMUNICATIONS BOX/HAND HOLE
- ELECTRIC HAND HOLE
- ELECTRIC BOX
- GAS METER
- IRRIGATION BOX
- UNKNOWN UTILITY BOX/HAND HOLE
- COMMUNICATION MANHOLE
- DRAINAGE MANHOLE
- ELECTRIC MANHOLE
- SEWER MANHOLE
- STORM SEWER MANHOLE
- SEWER CLEANOUT
- HYDRANT
- SIAMESE CONNECTION
- UNKNOWN VALVE
- WATER VALVE
- GAS VALVE
- WATER SPIGOT OR FOUNTAIN
- MONITORING WELL
- DECIDUOUS BUSH
- EVERGREEN BUSH
- DECIDUOUS TREE
- EVERGREEN TREE
- STUMP
- HEDGE ROW
- TREELINE
- BRUSHLINE
- RETAINING WALL
- GUIDE RAIL
- STONE WALL
- WATERLINE
- FENCE
- UNDERGROUND COMMUNICATION
- UNDERGROUND PROPANE
- UNDERGROUND ELECTRICAL
- UNDERGROUND STREET LIGHTING
- UNDERGROUND ENVIRONMENTAL WASTEWATER
- UNDERGROUND SEWER
- UNDERGROUND STORM SEWER
- UNDERGROUND WATER
- UNDERGROUND FIRE PROTECTION

## PROPOSED LEGEND:

- SAW CUTTING ASPHALT CONCRETE
- LIMITS OF DISTURBANCE
- LIMITS OF PAVEMENT REMOVAL (MILLING & EXCAVATION)
- PROPOSED WATER LINE
- PROPOSED CATCH BASIN
- PROPOSED STORM PIPE
- PROPOSED SANITARY MANHOLE
- PROPOSED SANITARY PIPE
- PROPOSED UNDERGROUND ELECTRIC

0 10 20 30
1"=10' SCALE BAR

6/15/2022 4:10:27 PM

CONSULTANT INFORMATION
LiRo Engineers, Inc.
A LiRo Group Company
Mineola, N.Y. 516-746-2350[T]

CONSULTANT SEAL
STATE OF NEW YORK · KENNETH J. HOCHBERG · LICENSED PROFESSIONAL ENGINEER · NO. 059134

| REVISION NUMBER | DATE | MADE BY | APP'D BY | REVISION |
|---|---|---|---|---|

RECORD DRAWING CERTIFICATION
☐ AS BUILT – CHANGES AS NOTED ☐ AS BUILT – NO CHANGES

CONTRACTOR
NAME
SIGNATURE
TITLE DATE

PROJECT COORDINATOR
NAME
SIGNATURE
TITLE DATE

WESTCHESTER COUNTY, NEW YORK
DEPARTMENT OF PUBLIC WORKS AND TRANSPORTATION
DIVISION OF ENGINEERING

**INFRASTRUCTURE REHABILITATION PHASE 3**
**PLAYLAND PARK, RYE, NEW YORK**
**CROSS AXIS BUILDING A**
**UTILITY CONSTRUCTION PLAN**

| | |
|---|---|
| CONTRACT NUMBER: 22-523 | SHEET NUMBER: CXA-C-04 |
| DWG. NO.: 182 of 664 | |
| SCALE: 1"=10' | |
| DATE: 08/23/2022 | |
| DPW FILE NUMBER: 1-118-C-931-0 | REV. NO.: 0 |

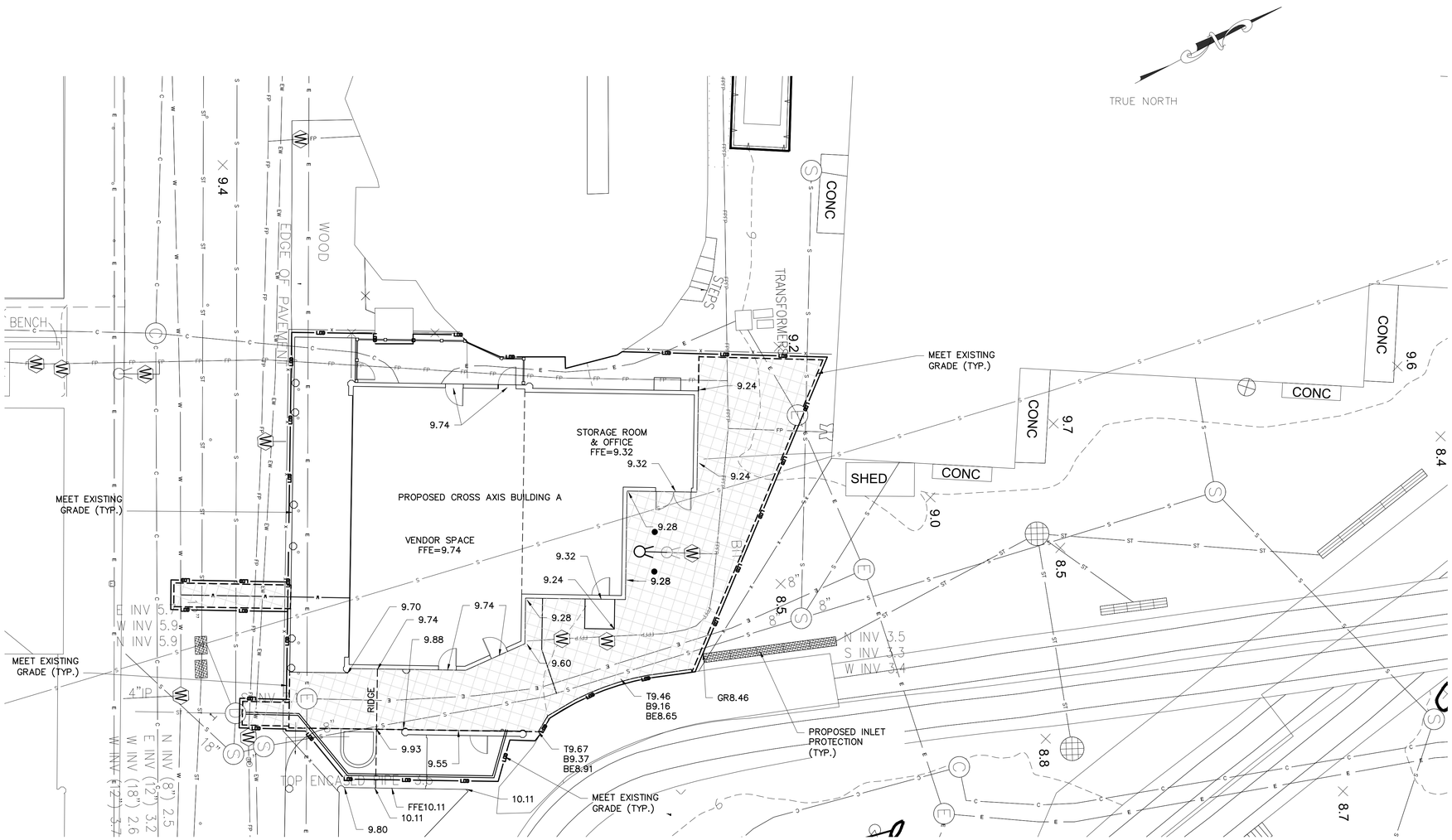


## EXISTING LEGEND

- POST
- UTILITY POLE
- SIGN
- HANDICAP PARKING
- GROUND LIGHT
- LIGHT POLE
- UTILITY POLE WITH LIGHT
- LIGHT POLE (SINGLE LIGHT)
- LIGHT POLE (DOUBLE LIGHT)
- LIGHT POLE (MULTI LIGHT)
- BOAT TIE-OFF CLEAT
- CATCH BASIN
- TRENCH DRAIN
- MAILBOX
- UNKNOWN MANHOLE
- COMMUNICATIONS BOX/HAND HOLE
- ELECTRIC HAND HOLE
- ELECTRIC BOX
- GAS METER
- IRRIGATION BOX
- UNKNOWN UTILITY BOX/HAND HOLE
- COMMUNICATION MANHOLE
- DRAINAGE MANHOLE
- ELECTRIC MANHOLE
- SEWER MANHOLE
- STORM SEWER MANHOLE
- SEWER CLEANOUT
- HYDRANT
- SIAMESE CONNECTION
- UNKNOWN VALVE
- WATER VALVE
- GAS VALVE
- WATER SPIGOT OR FOUNTAIN
- MONITORING WELL
- DECIDUOUS BUSH
- EVERGREEN BUSH
- DECIDUOUS TREE
- EVERGREEN TREE
- STUMP
- HEDGE ROW
- TREELINE
- BRUSHLINE
- RETAINING WALL
- GUIDE RAIL
- STONE WALL
- WATERLINE
- FENCE
- UNDERGROUND COMMUNICATION
- UNDERGROUND PROPANE
- UNDERGROUND ELECTRICAL
- UNDERGROUND STREET LIGHTING
- UNDERGROUND ENVIRONMENTAL WASTEWATER
- UNDERGROUND SEWER
- UNDERGROUND STORM SEWER
- UNDERGROUND WATER
- UNDERGROUND FIRE PROTECTION
- X 415.50 — EXISTING SPOT ELEVATION
- TG=415.50 — EXISTING TOP OF GRATE ELEVATION

## PROPOSED LEGEND:

- LOD — LIMITS OF DISTURBANCE
- 415 — PROPOSED MAJOR CONTOUR
- 414 — PROPOSED MINOR CONTOUR
- 9.66 — PROPOSED SPOT ELEVATION
- PROPOSED INLET PROTECTION
- T9.46 — PROPOSED TOP OF CURB
- B9.16 — PROPOSED BOTTOM OF CURB
- BE8.65 — PROPOSED ELEVATION BEHIND CURB

New York 811 — Know what's below. Call before you dig.

0 10 20 30
1'=10' SCALE BAR

6/15/2022 4:10:27 PM

CONSULTANT INFORMATION

LiRo Engineers, Inc.
A LiRo Group Company
Mineola, N.Y. 516-746-2350[T]

CONSULTANT SEAL

STATE OF NEW YORK — KENNETH J. HOLDEN — LICENSED PROFESSIONAL ENGINEER — No. 059134

| REVISION NUMBER | DATE | MADE BY | APP'D BY | REVISION |
|---|---|---|---|---|
| | | | | |

RECORD DRAWING CERTIFICATION

☐ AS BUILT – CHANGES AS NOTED ☐ AS BUILT – NO CHANGES

CONTRACTOR
NAME
SIGNATURE
TITLE DATE

PROJECT COORDINATOR
NAME
SIGNATURE
TITLE DATE

WESTCHESTER COUNTY, NEW YORK
DEPARTMENT OF PUBLIC WORKS AND TRANSPORTATION
DIVISION OF ENGINEERING

**INFRASTRUCTURE REHABILITATION PHASE 3**
**PLAYLAND PARK, RYE, NEW YORK**
**CROSS AXIS BUILDING A**
**GRADING AND EROSION CONTROL PLAN**

| | |
|---|---|
| CONTRACT NUMBER | 22-523 |
| SHEET NUMBER | CXA-C-05 |
| DWG NO.: | 183 of 664 |
| SCALE: | 1"=10' |
| DATE: | 08/23/2022 |
| DPW FILE NUMBER: | 1-118-C-932-0 |
| REV. NO.: | 0 |

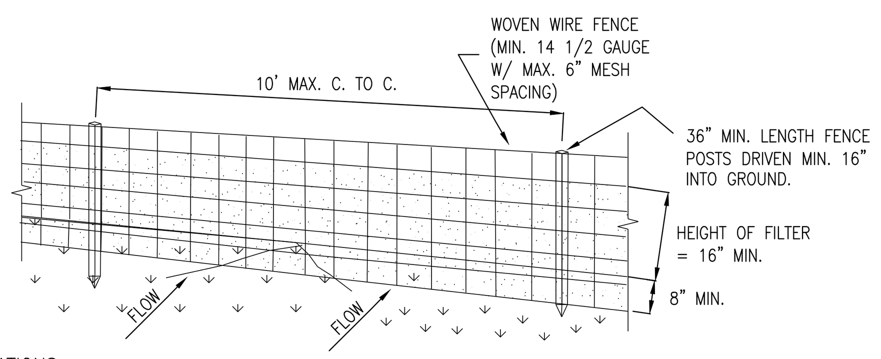


PERSPECTIVE VIEW

CONSTRUCTION SPECIFICATIONS

1. WOVEN WIRE FENCE TO BE FASTENED SECURELY TO FENCE POSTS WITH WIRE TIES OR STAPLES. POSTS SHALL BE STEEL EITHER "T" OR "U" TYPE OR HARDWOOD.
2. FILTER CLOTH TO BE TO BE FASTENED SECURELY TO WOVEN WIRE FENCE WITH TIES SPACED EVERY 24" AT TOP AND MID SECTION. FENCE SHALL BE WOVEN WIRE, 12 1/2 GAUGE, 6" MAXIMUM MESH OPENING.
3. WHEN TWO SECTIONS OF FILTER CLOTH ADJOIN EACH OTHER THEY SHALL BE OVER-LAPPED BY SIX INCHES AND FOLDED. FILTER CLOTH SHALL BE EITHER FILTER X, MIRAFI 100X, STABILINKA T140N, OR APPROVED EQUIVALENT.
4. PREFABRICATED UNITS SHALL BE GEOFAB, ENVIROFENCE, OR APPROVED EQUIVALENT.
5. MAINTENANCE SHALL BE PERFORMED AS NEEDED AND MATERIAL REMOVED WHEN "BULGES" DEVELOP IN THE SILT FENCE.

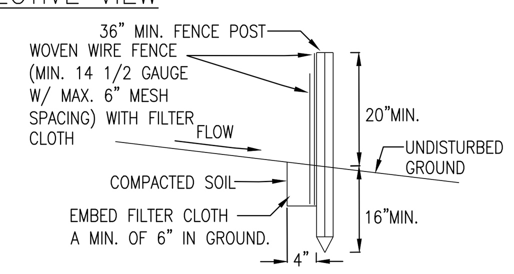


SECTION VIEW

## SILT FENCE INSTALLATION DETAIL
## ITEM NO. 209.13

N.T.S.

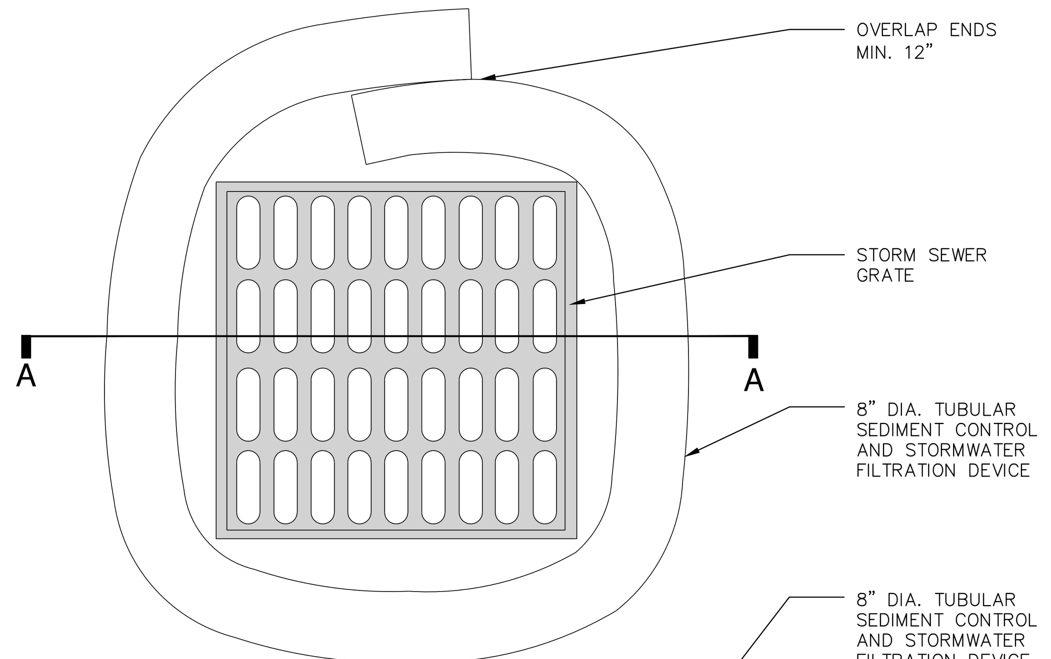


PLAN

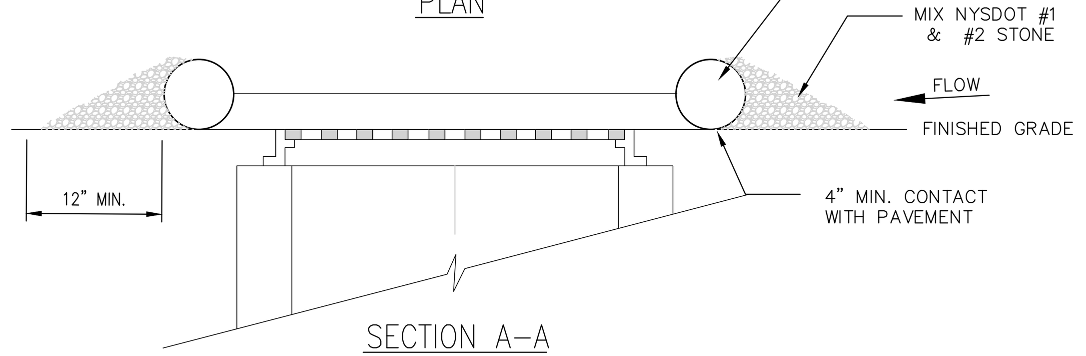


SECTION A-A

NOTES:

1. TUBULAR SEDIMENT CONTROL AND STORMWATER FILTRATION DEVICES SHALL BE FILTREXX FILTERSOXX, OR EQUIVALENT.
2. REPLACE AND DISPOSE OF PER MANUFACTURERS SPECIFICATIONS.
3. THIS PRACTICE INCLUDES SANDBAGS, COMPOST FILTER SOCKS, GEO-TUBES FILLED WITH BALLAST, AND MANUFACTURED SURFACE BARRIERS. PEA GRAVEL CAN ALSO BE USED IN CONJUNCTION WITH THESE PRACTICES TO IMPROVE PERFORMANCE. WHEN INLET IS NOT AT A LOW POINT, AND IS OFF-SET FROM THE PAVEMENT OR GUTTER LINE, PROTECTION SHOULD BE SELECTED AND INSTALLED SO THAT FLOWS ARE NOT DIVERTED AROUND INLET.
4. THE DRAINAGE AREA SHOULD BE LIMITED TO 1 ACRE AT THE DRAINAGE INLET. ALL PRACTICES WILL BE PLACED AT THE INLET PERIMETER OR BEYOND TO MAXIMIZE THE FLOW CAPACITY OF THE INLET. PRACTICES SHALL BE WEIGHTED, BRACED, TIED, OR OTHERWISE ANCHORED TO PREVENT MOVEMENT OR SHIFTING OF LOCATION ON PAVED SURFACES. TRAFFIC SAFETY SHALL BE INTEGRATED WITH THE USE OF THIS PRACTICE. ALL PRACTICES SHOULD BE MARKED WITH TRAFFIC SAFETY CONES AS APPROPRIATE. STRUCTURE HEIGHT SHALL NOT CAUSE FLOODING OR BY-PASS FLOW THAT WOULD CAUSE ADDITIONAL EROSION. THE STRUCTURE SHOULD BE INSPECTED AFTER EVERY STORM EVENT. ANY SEDIMENT SHOULD BE REMOVED AND DISPOSED OF ON THE SITE. ANY BROKEN O DAMAGED COMPONENTS SHOULD BE REPLACED. CHECK ALL MATERIALS FOR PROPER ANCHORING AND SECURE AS NECESSARY.
5. IF USING THE COMPOST FILTER SOCK, THE COMPOST INFILL SHALL BE WELL DECOMPOSED (MATURED AT LEAST 3 MONTHS), WEED-FREE, ORGANIC MATTER. IT SHALL BE AEROBICALLY COMPOSTED, POSSESS NO OBJECTIONABLE ODORS, AND CONTAIN LESS THAN 1%, BY DRY WEIGHT, OF MANMADE FOREIGN MATTER. WHEN USING COMPOST FILTER SOCKS ADJACENT TO SURFACE WATER, THE COMPOST SHOULD HAVE LOW NUTRIENT VALUE.

## DRAINAGE STRUCTURE INLET PROTECTION, TEMPORARY

N.T.S.

## STORM WATER POLLUTION PREVENTION PLAN NOTES:

THE CONTRACTOR SHALL BE RESPONSIBLE FOR IMPLEMENTATION AND ADHERENCE TO THE STORM WATER POLLUTION PREVENTION PLAN (SWPPP) FROM THE COMMENCEMENT OF THE PROJECT TO SITE STABILIZATION.

## POLLUTION PREVENTION MEASURES:

THE CONTRACTOR SHALL TAKE THE FOLLOWING STEPS TO PREVENT LITTER, CHEMICALS AND DEBRIS FROM ENTERING STORM DRAINS AND DISCHARGES.

1. PROPERLY INSTALL AND MAINTAIN EROSION AND SEDIMENT CONTROL DEVICES AS OUTLINED IN THE PROJECT DOCUMENTS AND IN COMPLIANCE WITH THE LATEST EDITION OF THE NEW YORK STATE STANDARDS AND SPECIFICATIONS FOR EROSION AND SEDIMENT CONTROL.
2. PROPERLY CONTAIN AND DISPOSE OF ALL MATERIALS USED ON SITE.
3. CLEAN UP SPILLS IMMEDIATELY TO MINIMIZE SAFETY HAZARD AND PREVENT SPREADING.
4. ROUTINELY INSPECT AND CLEAN OUT CATCH BASINS AND STORM LINES.
5. LABEL ALL STORM INLETS AS "NO DUMPING".
6. CONTROL LITTER BY SWEEPING AND PICKING IT UP DAILY.
7. DO NOT STORE FUEL AND WASTE ON-SITE OR USE SECONDARY CONTAINMENT MEASURES.
8. IF PRACTICAL, USE ALTERNATIVE CLEANING METHODS SUCH AS WIPING DOWN OF VEHICLES AND EQUIPMENT INSTEAD OF HOSING.
9. REMOVE ALL EXCAVATED UNSUITABLE MATERIAL FROM THE SITE AS SOON AS PRACTICABLE.
10. PRACTICE GOOD HOUSEKEEPING AND EDUCATE EMPLOYEES ON POLLUTION PREVENTION MEASURES.

## ON SITE MATERIAL STORAGE:

THE CONTRACTOR MAY HAVE THE FOLLOWING MATERIALS STORED ON-SITE DURING PROJECT CONSTRUCTION. THE LIST MAY NOT BE INCLUSIVE AND WILL VARY DURING THE DIFFERENT STAGES OF THE PROJECT.

1. PRE-CAST CONCRETE MANHOLES, CATCH BASINS AND OUTLET CONTROL STRUCTURE.
2. PVC PIPING AND APPURTENANCES.
3. STOCKPILED SOILS – TOP SOIL, SUB BASE MATERIAL, CUSHION MATERIAL, SELECT GRANULAR MATERIAL, GRAVEL AND CRUSHED STONE.
4. EROSION AND SEDIMENT CONTROL MATERIAL: SILT FENCE, RIP RAP AND SEED.
5. PAVING MATERIALS AND EQUIPMENT
6. SECURITY FENCE AND APPURTENANCES
7. EQUIPMENT REQUIRED TO PERFORM THE WORK.

THE CONTRACTOR SHALL UTILIZE THE POLLUTION PREVENTION MEASURES OUTLINED ABOVE TO PREVENT POLLUTANTS FROM STORED MATERIALS FROM REACHING THE STORM WATER CONVEYANCE DEVICES AND DISCHARGES.

## EROSION AND SEDIMENT CONTROL PRACTICES:

TEMPORARY STORM INLET PROTECTION:
STORM INLET PROTECTION INTERCEPTS SEDIMENT LADEN RUNOFF AND TRAPS SEDIMENT TO PROTECT THE DRAINAGE SYSTEM. STORM INLET PROTECTION SHALL BE PROVIDED AT EACH NEW CATCH BASIN AS IT IS INSTALLED AND AROUND EXISTING CATCH BASINS AS SHOWN.

TEMPORARY SEDIMENT CONTROL – SILT FENCE
SILT FENCE REDUCES RUNOFF VELOCITY AND CAUSES SETTLING OF SEDIMENT. INSTALL SILT FENCE PRIOR TO BEGINNING ANY EXCAVATION OR EARTHWORK ACTIVITIES WHERE SHOWN ON THE DRAWINGS. INSTALL AROUND ANY STOCKPILED SOIL MATERIALS.

TEMPORARY STABILIZED CONSTRUCTION ENTRANCE
THE STABILIZED CONSTRUCTION ENTRANCE IS USED TO REDUCE OR ELIMINATE TRACKING OF SEDIMENT ONTO STREETS AND/OR PUBLIC RIGHT-OF-WAY.

TEMPORARY SEEDING
TEMPORARY SEEDING REDUCES EROSION AND SEDIMENT LOSS FROM THE BARE GROUND. PROVIDE TEMPORARY SEEDING TO PROVIDE TEMPORARY COVER FOR DISTURBED EARTH OR SOIL STOCKPILES HELD FOR LONGER THAN SEVEN (7) DAYS. TEMPORARY SHUT DOWN OF CONSTRUCTION OR WAITING FOR OPTIMAL PLANTING TIME. IN SPRING, SUMMER OR EARLY FALL APPLY RYE GRASS AT A RATE OF 1 LB/ 1,000 SQ. FT. IN LATE FALL APPLY CERTIFIED AROOSTOOK RYE AT 2.5 LBS / 1,000 SQ. FT. OR WOOD FIBER HYDROMULCH AT MANUFACTURE'S RECOMMENDED RATE. HAY OR STRAW SHALL BE ANCHORED.

DUST CONTROL
TEMPORARY AND PERMANENT STABILIZATION MEASURES SUCH AS SEEDING, MULCHING AND INSTALLING EROSION AND SEDIMENT CONTROL BLANKETS WILL PREVENT DUST FROM BLOWING OFF SITE. INSTALL THESE MEASURES AS SOON AS FINAL GRADES ARE REACHED AND ON SOIL STOCKPILES AND DISTURBED AREAS TO BE LEFT FOR LONGER THAN SEVEN (7) DAYS.

## PHASING OF EROSION AND SEDIMENT CONTROL PRACTICES:

1. PRIOR TO COMMENCING ANY CONSTRUCTION ACTIVITIES ON THE SITE, THE CONTRACTOR SHALL MEET WITH THE OWNERS REPRESENTATIVE AND DESIGNER TO DISCUSS THE STORM WATER POLLUTION PREVENTION PLAN.
2. PRIOR TO COMMENCING ANY EXCAVATION PROCEDURES, INSTALL SILT FENCE AS SHOWN ON THE PLANS.
3. INSTALL STABILIZED CONSTRUCTION ENTRANCE.
4. AS THE NEW CATCH BASINS ARE INSTALLED, PROVIDE TEMPORARY INLET PROTECTION.
5. AS SOIL MATERIAL IS EXCAVATED OR STOCKPILED, PROVIDE A SILT FENCE ENCLOSURE AROUND THE PILE. IF THE PILE IS TO REMAIN FOR LONGER THAN SEVEN (7) DAYS, TEMPORARILY SEED THE PILE.
6. DO NOT LEAVE DISTURBED AREAS NOT TO BE COVERED BY IMPERVIOUS SURFACE BARE FOR LONGER THAN SEVEN (7) DAYS, ROUGH GRADE THE AREAS AND TEMPORARILY SEED.
7. AFTER FINAL GRADING OF VEGETATED AREAS, PROVIDE PERMANENT SEEDING.
8. UPON FINAL STABILIZATION OF THE SITE, REMOVE ALL TEMPORARY EROSION AND SEDIMENT CONTROL DEVICES. INSPECT ALL PERMANENT EROSION AND SEDIMENT CONTROL AND STORM WATER MANAGEMENT DEVICES. REPLACE ANY FAILING OR UNSATISFACTORY MEASURES. CLEAN ALL STORMWATER CATCH BASINS AND PIPING.

## EROSION AND SEDIMENT CONTROL AND STORMWATER CONTROL DEVICE MAINTENANCE:

CONSTRUCTION DURATION
ALL EROSION AND SEDIMENT CONTROL DEVICES SHALL BE INSPECTED WEEKLY.

1. SILT FENCE SHALL BE REPLACED WHEN TORN, IS BULGING OR NO LONGER MEETING THE INSTALLATION DETAILS.
2. THE STABILIZED CONSTRUCTION ENTRANCE SHALL BE MAINTAINED IN A CONDITION TO PREVENT TRACKING OF SEDIMENT ON TO ROADS AND PUBLIC RIGHTS-OF-WAY. INSPECT TOP DRESSING AND PROVIDE ADDITIONAL AGGREGATE AS NECESSARY.
3. DRAINAGE STRUCTURES AND PIPING SHALL BE CHECKED FOR CLOGGING AND SEDIMENT ACCUMULATION AND CLEANED IF REQUIRED.

PROJECT COMPLETION
AT THE PROJECT COMPLETION AND PRIOR TO PROJECT CLOSE OUT, THE CONTRACTOR SHALL INSPECT ALL PERMANENT EROSION AND CONTROL AND STORMWATER MANAGEMENT PRACTICES.

1. ACCEPTABLE VEGETATION ESTABLISHMENT IN ACCORDANCE WITH SPECIFICATIONS.
2. DRAINAGE STRUCTURES AND PIPING SHALL BE CHECKED FOR CLOGGING AND SEDIMENT ACCUMULATION AND CLEANED IF REQUIRED.

## MAINTENANCE OF PERMANENT STORMWATER MANAGEMENT PRACTICES

1. DRAINAGE STRUCTURES AND PIPING SHALL BE CHECKED FOR CLOGGING AND SEDIMENT ACCUMULATION AND CLEANED IF REQUIRED.

## SITE ASSESSMENT AND INSPECTIONS

COMPLY WILL ALL CONDITIONS INCLUDED IN THE SPDES PERMIT, PART III.D.3 THROUGH PART III.D.5. THE REQUIREMENTS IN THESE SUBSECTIONS OF THE SPDES PERMIT TAKE PRECEDENCE OVER NOTES ON THIS DRAWING AND ON THE EROSION AND SEDIMENT CONTROL PLAN WHERE CONTRADICTIONS BETWEEN THESE DRAWINGS AND THE SPDES PERMIT MAY ARISE.

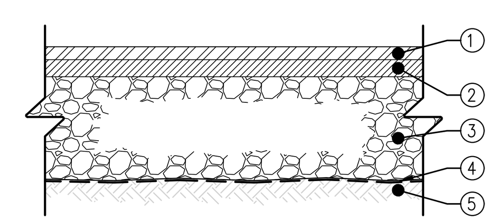


(1) 2" TOP COURSE, 12.5 F2 TOP COURSE HMA, 80 SERIES COMPACTION NYSDOT ITEM 402.128204
(2) 2" BINDER COURSE, 25 F9 BINDER COURSE HMA, 80 SERIES COMPACTION NYSDOT ITEM 402.258904
(3) 4" SUBBASE COURSE, SUBBASE COURSE, TYPE 2 NYSDOT ITEM 304.12
(4) GEOTEXTILE SEPARATION NYSDOT ITEM 207.21
(5) COMPACTED SUBGRADE

NOTES:

1. COMPACT SUBGRADE TO A MODIFIED PROCTOR DENSITY OF 95%
2. SUBBASE COURSE SHALL HAVE NO MORE THAN (7%) SEVEN PERCENT BY WEIGHT FINER THAN NO. 200 SIEVE.
3. IMPRINTED PATTERN SHOWN IS FOR GRAPHICAL REPRESENTATIONS ONLY. ALL IMPRINTING/PATTERNING LAYOUTS AND POSITIONING SHALL BE APPROVED BY THE PROJECT ENGINEER PRIOR TO ACTUAL CONSTRUCTION.

## ASPHALT PAVEMENT SECTION

N.T.S.

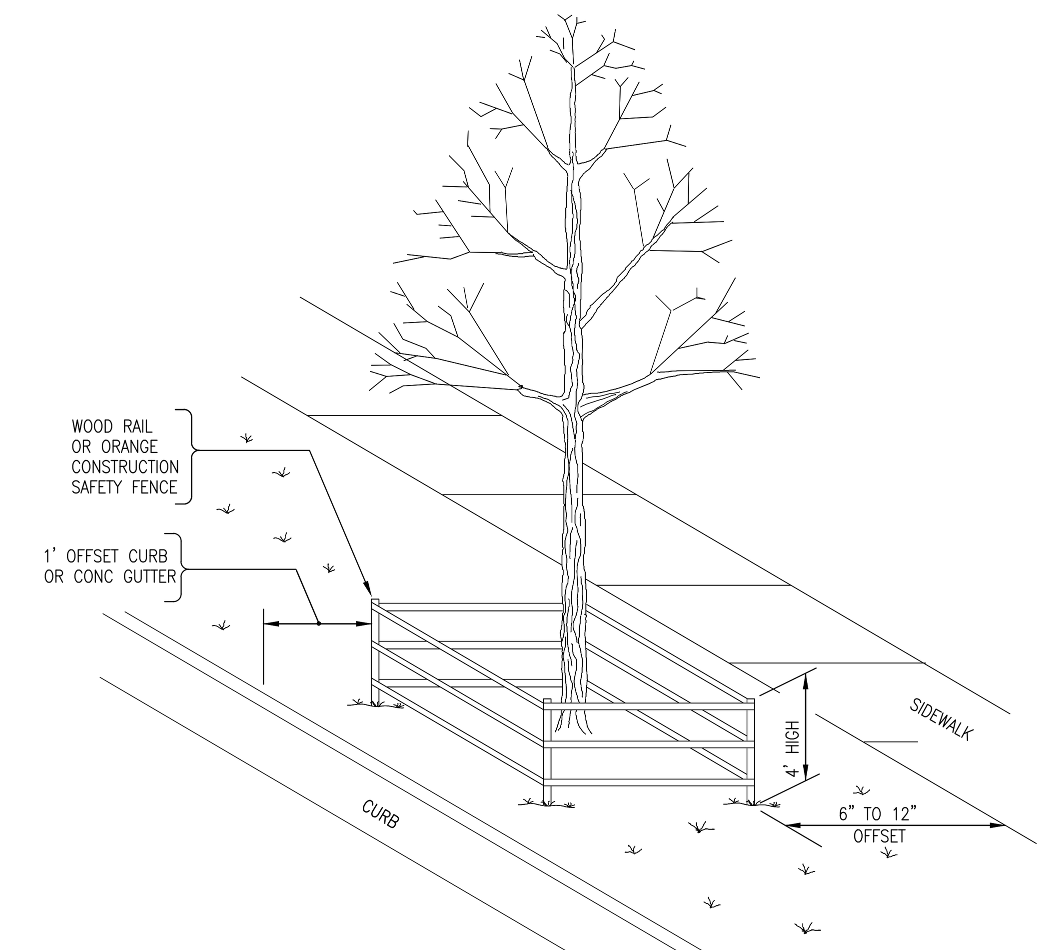


| TREE DIAMETER (DBH) | DISTANCE OF FENCING FROM FACE OF TREE TRUNK |
|---|---|
| LESS THAN 10" | 6' |
| 10" – 14" | 10' |
| 15" – 19" | 12' |
| 20" OR MORE | 15' |

NOTES:

1. ALL TREES WITHIN THE PROJECT LIMITS THAT ARE TO REMAIN, ARE TO RECEIVE THIS TREATMENT.
2. DO NOT LEAVE CONSTRUCTION EQUIPMENT RUNNING (IDLING) UNDER TREE CANOPY.

## TREE PROTECTION SYSTEM 5'-0"
## ITEM NO. 611.21050009

N.T.S.

6/15/2022 4:10:27 PM

CONSULTANT INFORMATION
LiRo Engineers, Inc.
A LiRo Group Company
Mineola, N.Y. 516-746-2350[T]

CONSULTANT SEAL
STATE OF NEW YORK · KENNETH J. HOLMSTROM · LICENSED PROFESSIONAL ENGINEER · No. 059134

| REVISION NUMBER | DATE | MADE BY | APP'D BY | REVISION |
|---|---|---|---|---|

RECORD DRAWING CERTIFICATION
☐ AS BUILT – CHANGES AS NOTED ☐ AS BUILT – NO CHANGES

CONTRACTOR
NAME ______
SIGNATURE ______
TITLE ______ DATE ______

PROJECT COORDINATOR
NAME ______
SIGNATURE ______
TITLE ______ DATE ______

WESTCHESTER COUNTY, NEW YORK
DEPARTMENT OF PUBLIC WORKS AND TRANSPORTATION
DIVISION OF ENGINEERING

**INFRASTRUCTURE REHABILITATION PHASE 3**
**PLAYLAND PARK, RYE, NEW YORK**
**CROSS AXIS BUILDING A**
**CIVIL DETAILS 1**

CONTRACT NUMBER: **22-523**
SHEET NUMBER: **CXA-C-06**
DWG NO.: 184 of 664
SCALE: **1"=10'**
DATE: **08/23/2022**
DPW FILE NUMBER: **1-118-C-933-0**
REV. NO. **0**

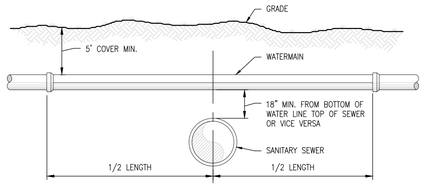


NOTE:

ALL EXCAVATIONS UNDER ANY UTILITY WILL BE BACKFILLED WITH NO. 1 CRUSHED STONE TO A POINT AT LEAST 6" OVER THE TOP OF THE UTILITY.

## TYPICAL WATER LINE – SEWER LINE CROSSING

N.T.S.

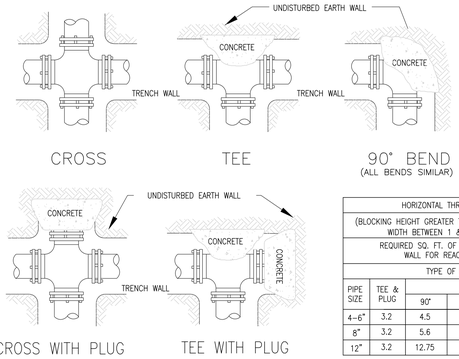


| HORIZONTAL THRUST BLOCKING | | | | | |
|---|---|---|---|---|---|
| (BLOCKING HEIGHT GREATER THAN PIPE O.D.) (BLOCKING WIDTH BETWEEN 1 & 2 TIMES HEIGHT) | | | | | |
| REQUIRED SQ. FT. OF UNDISTURBED EARTH WALL FOR REACTION BACKING | | | | | |
| TYPE OF FITTINGS | | | | | |
| PIPE SIZE | TEE & PLUG | BENDS | | | |
| | | 90° | 45° | 22 1/2° | 11 1/4° |
| 4–6" | 3.2 | 4.5 | 2.5 | 1.3 | 0.7 |
| 8" | 3.2 | 5.6 | 2.5 | 1.3 | 0.7 |
| 12" | 3.2 | 12.75 | 3.7 | 1.3 | 0.7 |

## HORIZONTAL THRUST BLOCKING

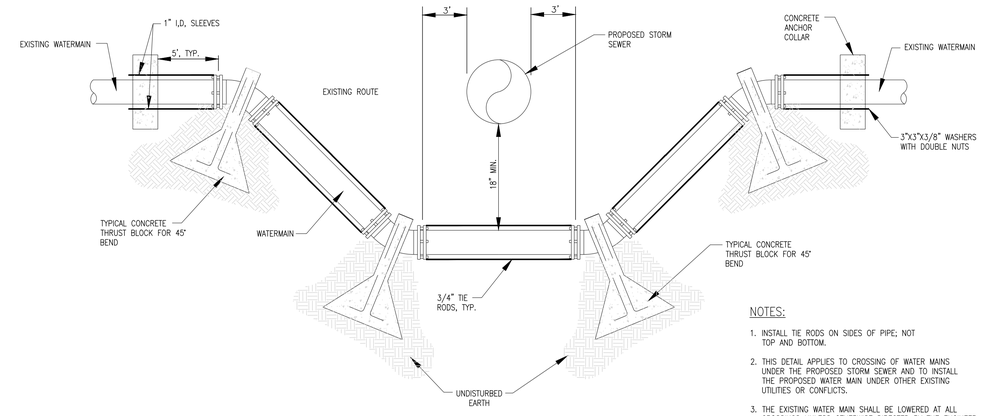


NOTES:

1. INSTALL TIE RODS ON SIDES OF PIPE; NOT TOP AND BOTTOM.
2. THIS DETAIL APPLIES TO CROSSING OF WATER MAINS UNDER THE PROPOSED STORM SEWER AND TO INSTALL THE PROPOSED WATER MAIN UNDER OTHER EXISTING UTILITIES OR CONFLICTS.
3. THE EXISTING WATER MAIN SHALL BE LOWERED AT ALL CROSSINGS UNLESS OTHERWISE DIRECTED BY THE ENGINEER IN THE FIELD.

## TYPICAL WATERMAIN CROSSING DETAIL

N.T.S.

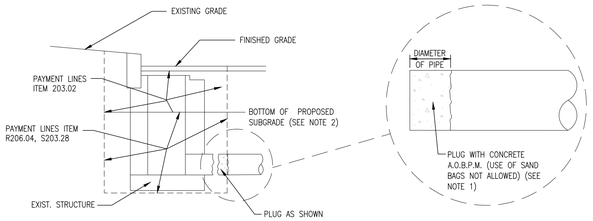


NOTES:

1. THE COST OF PLUGGING EXISTING LATERALS TO BE ABANDONED SHALL BE INCLUDED IN THE PRICE BID FOR TRENCH EXCAVATION IN THE CONTRACT. NO SEPARATE PAYMENT WILL BE MADE FOR THIS WORK.
2. UPPER PAY LIMITS FOR TRENCH AND CULVERT EXCAVATION SHALL BE TOP OF EXISTING SURFACE AT TIME OF EXCAVATION.

## DETAILS FOR PLUGGING ABANDONED DRAINAGE STRUCTURES AND PIPES

N.T.S.

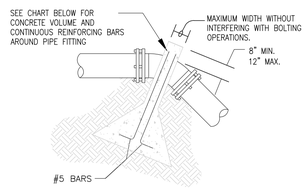


## UPWARD THRUST BLOCKING

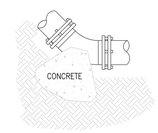


## DOWNWARD THRUST BLOCKING

(SEE HORIZONTAL BLOCKING DETAIL)
(ALL BENDS SIMILAR)

| UPWARD THRUST BLOCKING | | | | | | | | | | | |
|---|---|---|---|---|---|---|---|---|---|---|---|
| (REQUIRED REINFORCING BARS & CUBIC YARDS OF P.C. CONCRETE | | | | | | | | | | | |
| | 90° BEND | | | 45° BEND | | | 22 1/2° BEND | | | 11 1/4° BEND | | |
| PIPE SIZE | CONC. C.Y. | REINF | | CONC. C.Y. | REINF | | CONC. C.Y. | REINF | | CONC. C.Y. | REINF | |
| | | QTY. | SIZE | | QTY. | SIZE | | QTY. | SIZE | | QTY. | SIZE |
| 4–6" | 2.6 | 4 | #5 | 2.1 | 4 | #5 | 1.1 | 4 | #5 | 0.6 | 4 | #5 |
| 8" | 2.9 | 4 | #5 | 2.1 | 4 | #5 | 1.1 | 4 | #5 | 0.6 | 4 | #5 |
| 12" | 6.6 | 4 | #5 | 4.7 | 4 | #5 | 2.5 | 4 | #5 | 1.3 | 4 | #5 |

## VERTICAL THRUST BLOCKING

NOTES:

1. DO NOT COVER BELLS OR FLANGES WITH CONCRETE
2. WRAP ALL FITTINGS WITH VISQUEEN.
3. BACK ALL TEES ACCORDING TO SIZE OF BRANCH.
4. BACKING FUTURE LINE EXTENSIONS SHALL BE SUCH THAT LATER REMOVAL IS POSSIBLE.
5. ALL BENDS WHERE FITTINGS ARE USED, BOTH HORIZONTAL OR VERTICAL SHALL BE BACKED.
6. REACTION BACKING TABLE IS BASED ON 150 P.S.I. AND SOIL BEARING PRESSURE OF 2,000 lb./sq.ft. ADDITIONAL BACKING MAY BE REQUIRED IN SOME AREAS AS DIRECTED BY ENGINEERS.
7. ALL CONCRETE SHALL BE 2500 P.S.I. MIN. .

## THRUST BLOCKING DETAIL

N.T.S.

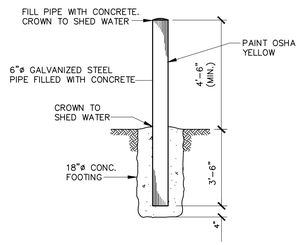


NOTES:

1. CONCRETE TO ACHIEVE 4000 PSI STRENGTH AT 28 DAYS.
2. ALL BOLLARDS TO BE INSTALLED CLEAN NEAT MANOR IN STRAIGHT LINE, VERTICAL AND TOP TO BE AT SAME ELEVATION.

## STEEL BOLLARD

N.T.S.

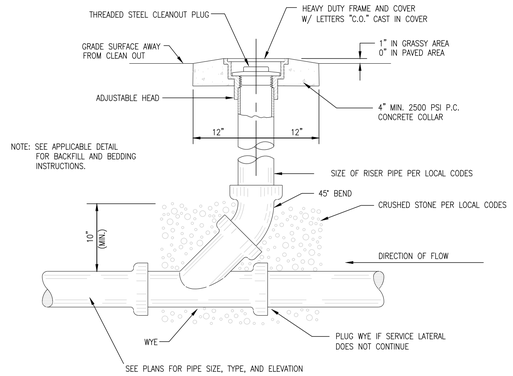


## SEWER CLEAN–OUT

N.T.S.

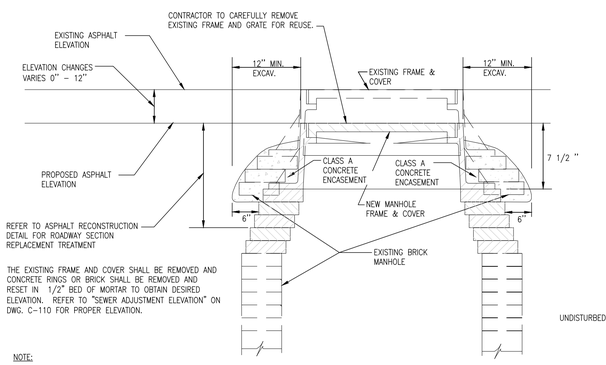


NOTE:

THE LOWER LIMIT OF THE CLASS A CONCRETE ENCASEMENT SHALL BE AT, OR BELOW, THE LOWEST PORTION OF THE BRICK AND MORTAR LEVELING COURSE. ALL BRICK SHALL BE RED, 8,000 PSI BRICK.

ADJUSTMENT AT FLEXIBLE PAVEMENT

## RESETTING EXISTING DRAINAGE FRAMES ON EXISTING DRAINAGE STRUCTURES
## ITEM NO. 604.07210110

N.T.S.

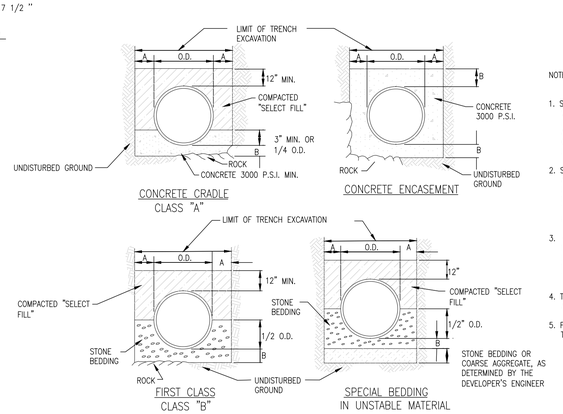


NOTES:

1. SELECT FILL SHALL BE SAND, GRAVEL, AND SIMILAR MATERIAL WHICH SHALL BE FREE FROM CLAY, LOAM, ORGANIC MATERIAL, DEBRIS, FROZEN MATERIAL AND SHALL CONTAIN ONLY SMALL AMOUNTS OF STONE, PEBBLES OR LUMPS OVER ONE INCH IN GREATEST DIMENSION BUT NONE OVER TWO INCHES IN GREATEST DIMENSION, MEETING ASTM IA,IB,OR II.
2. STONE BEDDING SHALL MEAN APPROVED IMPORTED AGGREGATE MEETING THE REQUIREMENTS OF THE NEW YORK STATE DEPARTMENT OF TRANSPORTATION, STANDARD SPECIFICATION, MAY, 2008 EDITION, AS REVISED, SUBSECTION 703–01 "FINE AGGREGATE". PRIMARY SIZE 1 OR A MIXTURE OF PRIMARY SIZES 1 AND 2. OR ASTM CLASS IA,
3. COARSE AGGREGATE SHALL MEAN APPROVED IMPORTED AGGREGATE MEETING THE REQUIREMENTS OF THE NEW YORK STATE DEPARTMENT OF TRANSPORTATION, STANDARD SPECIFICATION, MAT 2008 EDITION, AS REVISED, SUBSECTION 703–02 "COURSE AGGREGATE". PRIMARY SIZE 3 AND/OR 4
4. THIS FIGURE APPLIES TO SANITARY, STORM and COMBINED MAINLINE AND LATERAL PIPE INSTALLATIONS AS WELL AS FORCEMAINS.
5. FIRST CLASS BEDDING SHALL BE USED UNLESS OTHERWISE SHOWN ON THE DRAWINGS OR DIRECTED BY THE ENGINEER.

| PIPE DIA. | DIM. A | DIM. B |
|---|---|---|
| UP TO 18" | 1.0' | 6" |
| 21" TO 36" | 1.5' | 9" |
| OVER 36" | 1.5' | 12" |

## UTILITY BEDDING MATERIAL DETAIL

N.T.S.

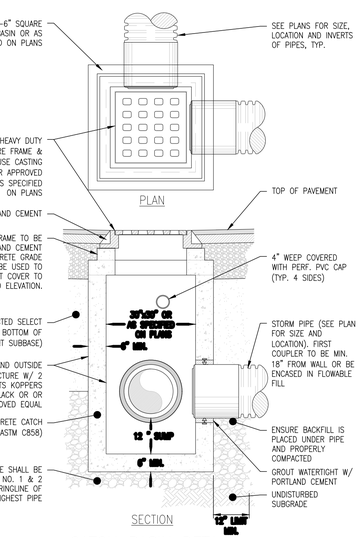


## CATCH BASIN DETAIL

N.T.S.

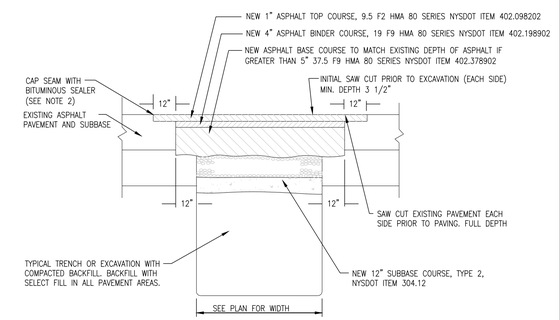


NOTES:

1. EXISTING PAVEMENT SHALL BE SAW CUT TO OBTAIN A STRAIGHT AND NEAT EDGE FOR PAVING. FINAL SAW CUT SHALL BE MADE PRIOR TO PAVING AFTER BACKFILL OF TRENCH TO BOTTOM OF NEW PAVEMENT
2. ALL SEAMS BETWEEN EXISTING AND NEW ASPHALT SURFACES SHALL BE SEALED WITH AN ASPHALT FILLER CORRESPONDING TO THE MATERIAL REQUIREMENTS OF N.Y.S.D.O.T. TABLE 702–5 MATERIAL DESIGNATION 702–3401. COST TO FURNISH AND APPLY THIS MATERIAL SHALL BE INCLUDED IN THE PRICE BID FOR ASPHALT TOP

## PAVEMENT TRENCH RESTORATION DETAIL

N.T.S.

6/15/2022 4:10:27 PM

CONSULTANT INFORMATION

LiRo Engineers, Inc.
A LiRo Group Company
Mineola, N.Y. 516-746-2350[T]

CONSULTANT SEAL

STATE OF NEW YORK · KENNETH J. HOCHBERG · LICENSED PROFESSIONAL ENGINEER · No. 099134

| REVISION NUMBER | DATE | MADE BY | APP'D BY | REVISION |
|---|---|---|---|---|

RECORD DRAWING CERTIFICATION

☐ AS BUILT – CHANGES AS NOTED ☐ AS BUILT – NO CHANGES

CONTRACTOR
NAME
SIGNATURE
TITLE DATE

PROJECT COORDINATOR
NAME
SIGNATURE
TITLE DATE

WESTCHESTER COUNTY, NEW YORK
DEPARTMENT OF PUBLIC WORKS AND TRANSPORTATION
DIVISION OF ENGINEERING

INFRASTRUCTURE REHABILITATION PHASE 3
PLAYLAND PARK, RYE, NEW YORK
CROSS AXIS BUILDING A
CIVIL DETAILS 2

| | |
|---|---|
| CONTRACT NUMBER | 22-523 |
| SHEET NUMBER | CXA-C-07 |
| DWG NO.: | 185 of 664 |
| SCALE: | AS NOTED |
| DATE: | 08/23/2022 |
| DPW FILE NUMBER | 1-118-C-934-0 |
| REV. NO.: | 0 |

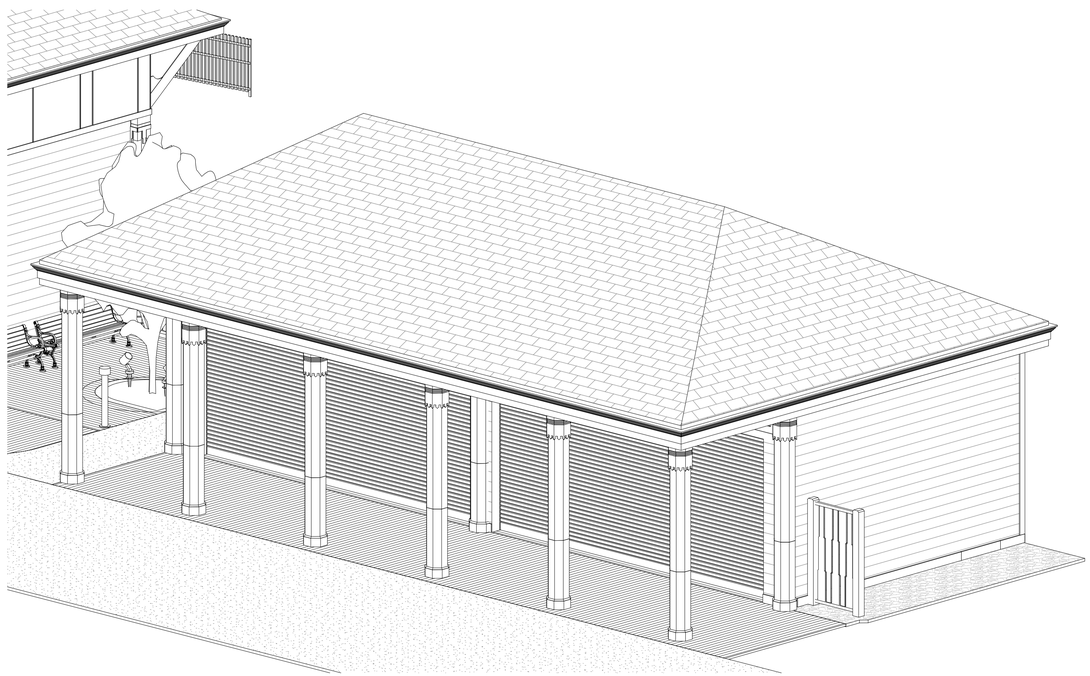

1 CXD - BUILDING AXONOMETRIC

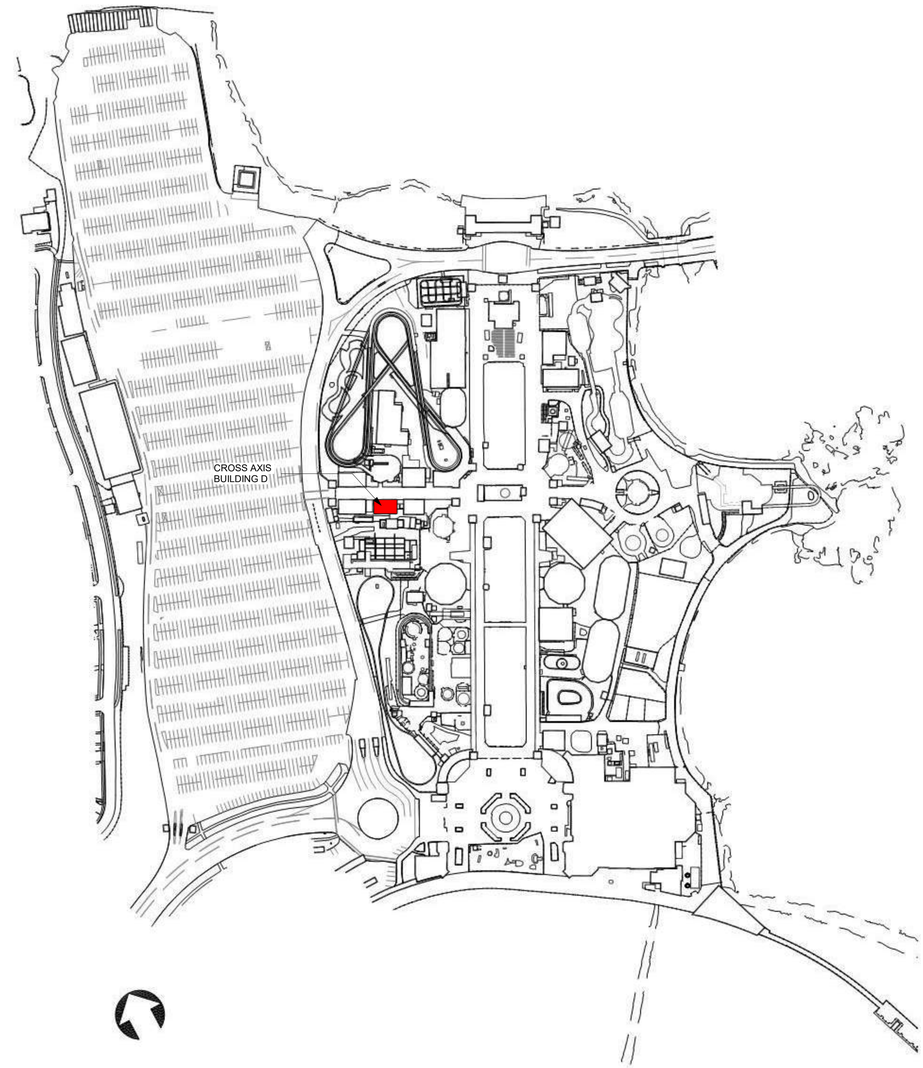


KEY MAP
SCALE: N.T.S.

8/30/2022 4:15:56 PM

CONSULTANT INFORMATION

The LiRo Group

3 Aerial Way, Syosset, New York 11791
(516) 938-5476 www.liro.com

CONSULTANT SEAL

REGISTERED ARCHITECT
ROBERT D. YOUNG JR.
023290
STATE OF NEW YORK

| REVISION NUMBER | DATE | MADE BY | APP'D BY | REVISION |
|---|---|---|---|---|

RECORD DRAWING CERTIFICATION

☐ AS BUILT – CHANGES AS NOTED ☐ AS BUILT – NO CHANGES

CONTRACTOR
NAME
SIGNATURE
TITLE DATE

PROJECT COORDINATOR
NAME
SIGNATURE
TITLE DATE

WESTCHESTER COUNTY, NEW YORK
DEPARTMENT OF PUBLIC WORKS AND TRANSPORTATION
DIVISION OF ENGINEERING

**INFRASTRUCTURE REHABILITATION PHASE 3**
**PLAYLAND PARK, RYE, NEW YORK**
**CROSS AXIS BUILDING D**
**BUILDING INTRO**

CONTRACT NUMBER 22-523
SHEET NUMBER **CXD-G-01**
DWG NO.: 186 of 664
SCALE: **12" = 1'-0"**
DATE: **08/23/2022**
DPW FILE NUMBER **1-118-G-935-0**
REV. NO. 0

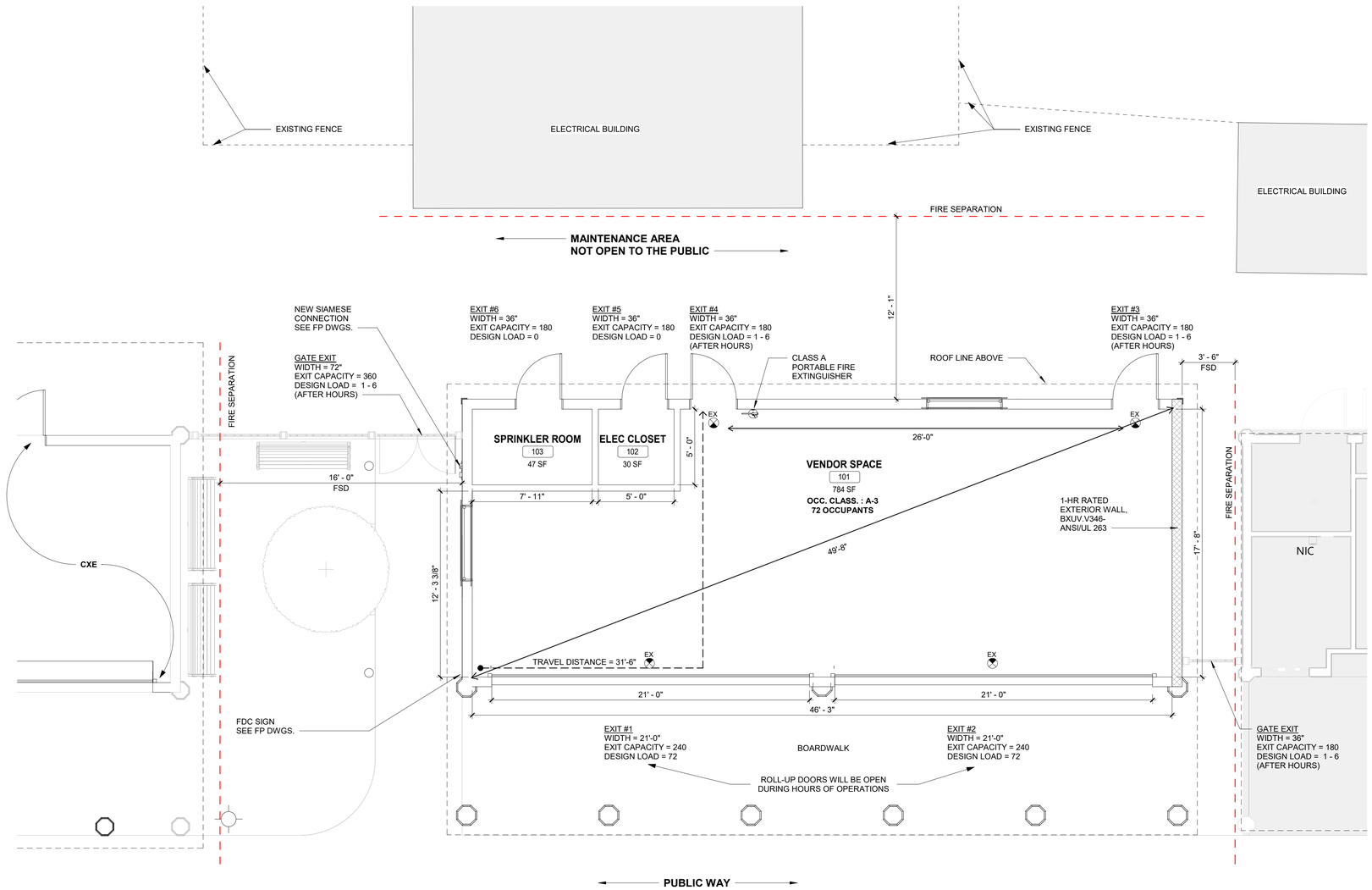


1 GROUND LIFE SAFETY PLAN CXD
1/4" = 1'-0"

| 2020 Building Code of New York State | | |
|---|---|---|
| Construction Type (Tbl 601) | V B | (Fully Sprinklered) |
| Occupancy Classification | A-3 | Arcade |
| Number of Stories (Tbl 504.4) | 1 | < 2 (max. allowable) |
| Height (ft) (Tbl 504.3) | 20.5' | < 60 (max. allowable) |
| Building Area (sf) (Tbl 506.2) | 860 | < 24,000 (max. allowable) |
| **Fire-Resistance Rating Requirements (Tbl 601)** | **Required** | **Proposed** |
| Primary Structure Frame | 0 | 0 |
| (including Columns, Girders, Trusses) | | |
| Bearing Walls | | |
| Exterior (Tbl 602) | | |
| Fire separation distance > = 10 ft | 0 | 0 |
| Interior | 0 | 0 |
| Nonbearing Walls and Partitions | | |
| Exterior (Tbl 602) | | |
| Fire separation distance < 5 ft | 1 | 1 |
| Fire separation distance > = 10 ft | 0 | 0 |
| Interior | 0 | 0 |
| Floor Construction | | |
| Including supporting beam and joists | 0 | 0 |
| Roof Construction | | |
| Including supporting beam and joists | 0 | 0 |
| **Allowable Area of Openings (BC 705.8)** | | |
| Fire separation distance 5 > 3 ft (Unprotected, Sprinklered) | 15% | 0% |
| Fire separation distance 10 > 5 ft (Unprotected, Sprinklered) | 25% | N/A |
| Fire separation distance 15 > 10 ft (Unprotected, Sprinklered) | 45% | 18% |
| Fire separation distance 15 ft > 20 ft (Unprotected, Sprinklered) | No limit | |
| Wall and Ceiling | C | C |
| Floors - Radiant Flux | Class II | Class II |
| **Interior Finishes Class (BC 803)** | | |
| Wall and Ceiling | C | C |
| Floors - Radiant Flux | Class II | Class II |
| **Portable Fire Extinguishers (BC 906)** | | |
| Fire Hazard | Class A | Class A |
| Hazard Occupancy | Ordinary | Ordinary |
| Minimum rated single extinguisher | 2-A | Class A |
| Maximum floor area per unit of A | 1,500 sf | 784 sf |
| Maximum floor area for extinguisher | 11,250 sf | 784 sf |
| Maximum distance of travel to extinguisher | 75' | 35' |
| Number of Type 2-A extinguishers required | **Required** | **Provided** |
| First Floor | 1 | 1 |
| **Means of Egress** | | |
| Max. Floor Area Allowances per Occupant (Tbl 1004.1.2) (sf) | | |
| Amusement arcades | 11 | |
| Occupant Load | | |
| Vendor (784 sf) | 72 | |
| Elec. Room (30 sf) | 0 | |
| Sprinkler Room (47 sf) | 0 | |
| Egress Width per Occupant (BC 1005) | | |
| Other Egress Components | 0.15 | |
| Egress Width Required (inches) | | |
| Vendor Space | 10.8 | 36 provided |
| Note: Roll-up doors will be open during business hours | | |
| **Minimum number of Exits** | **Minimum** | **Provided** |
| Occupant Load : 1 - 500 | 2 | 4 |
| Diagonal Distance (ft) | | 49.67 |
| **Exit Configuration** | | |
| Distance between two exits > = 1/2 of the diagonal dimension (BC 1007.1.1) (ft) | 24.84 | 26 |
| **Maximum Common Path of Egress Travel (Tbl 1006.2.1)** | **Permitted** | **Proposed** |
| A Occupancy with Sprinkler System | 75' | 0' |
| **Maximum Travel Distance (BC 1017)** | | |
| A Occupancy with Sprinkler System | 250' | 13' |

**APPLICABLE CODES**

NEW YORK STATE BUILDING CODE 2020 (BC)
NEW YORK STATE EXISTING BUILDING CODE 2020 (EBC)
ENERGY CONSERVATION CONSTRUCTION CODE OF NEW YORK STATE (ECCC)
NFPA 13 2013 (NFPA 13)

**HISTORICAL BUILDING REGISTRY**

*PLAYLAND AMUSEMENT PARK* IS A DESIGNATED NATIONAL HISTORIC LANDMARK AND IS LISTED ON THE NATIONAL REGISTER OF HISTORIC PLACES.

THE NATIONAL HISTORIC PLACES REGISTER REFERENCE NUMBER: 80004529_NHL
NATIONAL ARCHIVE IDENTIFIER: 75323175

CROSS AXIS BUILDING D IS A CONTRIBUTING STRUCTURE OF THE LANDMARK AND THEREFORE AN HISTORIC BUILDING UNDER THE 2020 BUILDING CODE AND 2020 EXISTING BUILDING CODE OF NEW YORK STATE

**EXISTING BUILDING CODE**

EBC 302.4 - EXISTING MATERIALS
MATERIALS ALREADY IN USE IN A BUILDING IN COMPLIANCE WITH REQUIREMENTS OR APPROVALS IN EFFECT AT THE TIME OF THEIR ERECTION OR INSTALLATION SHALL BE PERMITTED TO REMAIN IN USE UNLESS DETERMINED BY THE BUILDING OFFICIAL TO BE UNSAFE.

EBC 302.5 - NEW REPLACEMENT MATERIALS
EXCEPT AS OTHERWISE REQUIRED OR PERMITTED BY THIS CODE, MATERIALS PERMITTED BY THE APPLICABLE CODE FOR NEW CONSTRUCTION SHALL BE USED. LIKE MATERIALS SHALL BE PERMITTED FOR REPAIRS AND ALTERATIONS, PROVIDED THAT UNSAFE CONDITIONS ARE NOT CREATED. HAZARDOUS MATERIALS SHALL NOT BE USED WHERE THE CODE FOR NEW CONSTRUCTION WOULD NOT PERMIT THEIR USE IN BUILDINGS OF SIMILAR OCCUPANCY, PURPOSE AND LOCATION.

EBC 305.5 - ADDITIONS
PROVISIONS FOR NEW CONSTRUCTION SHALL APPLY TO ADDITIONS.

**2020 NYS EXISTING BUILDING CODE**

[NY] EBC 601.1 ALTERATION 3 - WHERE THE WORK AREA EXCEEDS 50% OF THE BUILDING AREA

[NY] EBC 907.1 LEVEL 3 ALTERATIONS TO EXISTING BUILDINGS ARE PERMITTED WITHOUT REQUIRING THE ENTIRE BUILDING TO COMPLY WITH THE ENERGY REQUIREMENTS OF ECCC.

8/30/2022 4:15:58 PM

CONSULTANT INFORMATION
The LiRo Group
3 Aerial Way, Syosset, New York 11791
(516) 938-5476 www.liro.com

CONSULTANT SEAL
REGISTERED ARCHITECT ROBERT D. DONOVAN 023220 STATE OF NEW YORK

| REVISION NUMBER | DATE | MADE BY | APP'D BY | REVISION |
|---|---|---|---|---|

RECORD DRAWING CERTIFICATION
☐ AS BUILT – CHANGES AS NOTED ☐ AS BUILT – NO CHANGES

CONTRACTOR
NAME
SIGNATURE
TITLE DATE

PROJECT COORDINATOR
NAME
SIGNATURE
TITLE DATE

WESTCHESTER COUNTY, NEW YORK
DEPARTMENT OF PUBLIC WORKS AND TRANSPORTATION
DIVISION OF ENGINEERING

**INFRASTRUCTURE REHABILITATION PHASE 3**
**PLAYLAND PARK, RYE, NEW YORK**
**CROSS AXIS BUILDING D**
**CXD - LIFE SAFETY PLANS**

CONTRACT NUMBER 22-523
SHEET NUMBER CXD-G-02
DWG NO.: 187 of 664
SCALE: 1/4" = 1'-0"
DATE: 08/23/2022
DPW FILE NUMBER 1-118-G-936-0
REV. NO. 0

## SHEET NOTES

-PROVIDE PROTECTION FOR EXISTING FEATURES TO REMAIN. PROVIDE PROTECTION PLAN FOR APPROVAL

-SCHEDULE AND COMPLETE WORK AS REQUIRED TO GIVE THE SITE IMPROVEMENT CONTRACTORS ACCESS TO THEIR JOBSITE

## CONSTRUCTION NOTES

-REPLACE ALL PLANTED MATTER DISTURBED DURING CONSTRUCTION UNLESS STATED OTHERWISE.
-REPAIR ALL DAMAGED PARK PROPERTY INCURRED DURING CONSTRUCTION.
-REPAIR ASPHALT AS REQUIRED
-REPAIR SOD AS REQUIRED

## RESTORATION KEY NOTES

1. NEW GRAVEL (PERMEABLE) SURFACE. SEE DETAIL 3 ON SHEET
2. REPAIR ASPHALT AS REQUIRED

## RESTORATION LEGEND

ASPHALT REPAIR

GRAVEL SURFACE IN AREA SHOWN ON 3/CXE-G-3

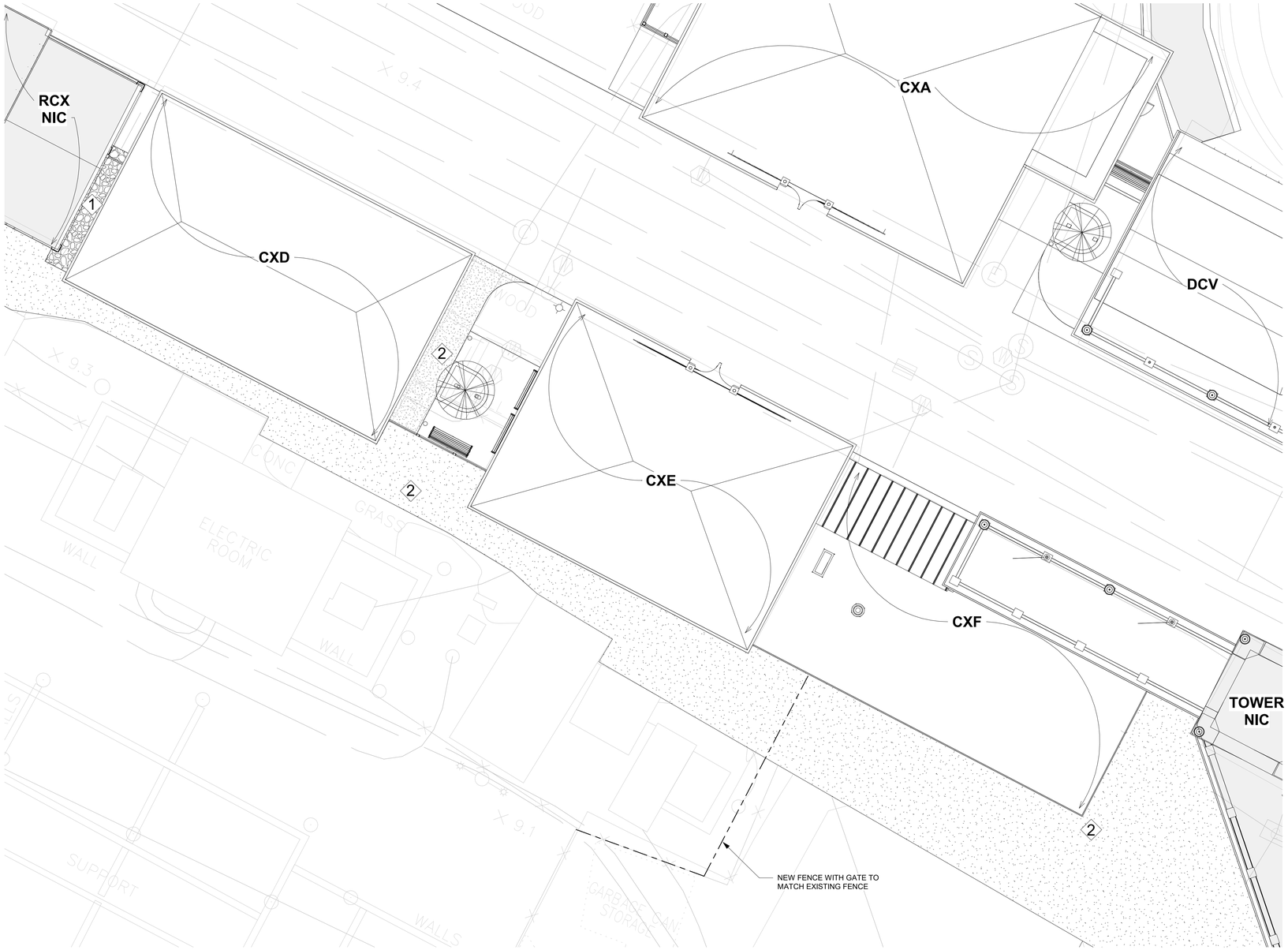


2 SITE RESTORATION PLAN
1/8" = 1'-0"

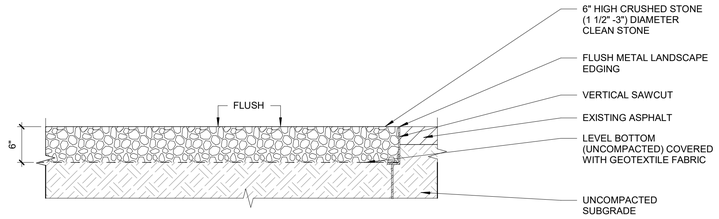


1 GRAVEL SURFACE
1" = 1'-0"

8/30/2022 4:16:07 PM

CONSULTANT INFORMATION

The LiRo Group
3 Aerial Way, Syosset, New York 11791
(516) 938-5476 www.liro.com

CONSULTANT SEAL

REGISTERED ARCHITECT ROBERT D. YOUNG JR. 023220 STATE OF NEW YORK

| REVISION NUMBER | DATE | MADE BY | APP'D BY | REVISION |
|---|---|---|---|---|
| | | | | |

RECORD DRAWING CERTIFICATION

☐ AS BUILT – CHANGES AS NOTED ☐ AS BUILT – NO CHANGES

CONTRACTOR
NAME
SIGNATURE
TITLE DATE

PROJECT COORDINATOR
NAME
SIGNATURE
TITLE DATE

WESTCHESTER COUNTY, NEW YORK
DEPARTMENT OF PUBLIC WORKS AND TRANSPORTATION
DIVISION OF ENGINEERING

**INFRASTRUCTURE REHABILITATION PHASE 3**
**PLAYLAND PARK, RYE, NEW YORK**
**CXD - CXE - CXF**
**CXE - SITE RESTORATION**

| | |
|---|---|
| CONTRACT NUMBER | 22-523 |
| SHEET NUMBER | CXD-G-03 |
| DWG NO.: | 188 of 664 |
| SCALE: | As indicated |
| DATE: | 08/23/2022 |
| DPW FILE NUMBER | 1-118-G-937-0 |
| REV. NO. | 0 |

# PLAYLAND REHABILITATION & UPGRADES
# CXD- ASBESTOS ABATEMENT
## 1 PLAYLAND PKWY, RYE, NY 10580

**DETAILS:**

1 CXD-H-10 LARGE PROJECT REMOTE WORKER DECONTAMINATION UNIT
Not To Scale

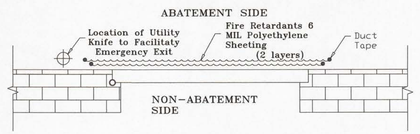


2 CXD-H-10 TYPICAL SOFT WALL BARRIER AT OPENINGS LESS THAN 32SF
Not To Scale

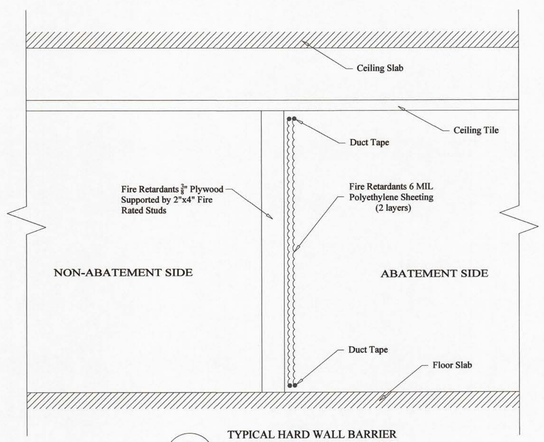


3 CXD-H-10 TYPICAL HARD WALL BARRIER AT OPENINGS MORE THAN 32SF
Not To Scale

**SCOPE OF WORK TABLE:**

| Work area | Location | Description of Asbestos Materials | Approximate Quantity of ACM | ICR 56 Procedure |
|---|---|---|---|---|
| 1 | CXD Cross Axis Building D (South Games Buildings) | Fascia Board | 1700 SF | 56.11.6 |
| 2 | | Exterior Column Caulking | 600 SF | |

**KEYPLAN:**

**LEGEND:**

| | |
|---|---|
| — — — | WORK AREA LIMITS |
| P/W R # | REMOTE WORKER DECONTAMINATION UNIT |
| WC | WASTE HOLDING AREA |
| ☒ | AIRLOCK |
| Ⓦ | TEMPORARY WATER SOURCE |
| Ⓔ | TEMPORARY ELECTRICAL SOURCE |

**PROJECT NOTES:**

1. The Contractor shall be aware of all conditions of the Project and is responsible for verifying quantities and locations of all Work to be performed. Failure to do so shall not relieve the Contractor of its obligation to furnish all labor and materials necessary to perform the Work.
2. All Work shall be performed in strict accordance with the Project Documents and all governing codes, rules, and regulations. Where conflicts occur between the Project Documents and applicable codes, rules, and regulations, the more stringent shall apply.
3. All abatement work shall be coordinated with General Contractor work; Abatement may be phased with other contract work.
4. Working hours shall be as required and approved by the Owner. Asbestos abatement activities including, but not limited to, work area preparation, gross removal activities, cleaning activities, waste removal, etc. may need to be performed during 'off-hours' (including nights and weekends). In addition, multiple mobilizations may be required to perform the work identified in this project. The Contractor shall coordinate and schedule all Work with the facility and Owner's representative.
5. The Contractor shall prepare and coordinate with facility representative the posting of appropriate signage at the entranceway that redirects park occupants away from the area of the abatement.
6. The Contractor shall use barrier tape to extend the limits of the active, regulated work areas closed to the public and other non-abatement trades.
7. The Contractor shall be responsible for defining and coordinating the phases of the abatement with the facility and DPW, as well as securing any site specific variances, permits, and any necessary NYS DOL approvals.
8. The asbestos abatement Contractor shall coordinate locations of decontamination units, routes of egress, temporary water and power connections and waste container locations with the Owner and the Facility.
9. The Contractor may need to supply temporary power/water sources if they cannot be provided by facility.
10. The General Contractor shall supply any and all scaffolding for the work area(s) under this contract. Scaffolding structure and maintenance shall be in strict accordance with local, state and federal safety requirements.
11. The Contractor is to protect any and all exposed surfaces not targeted for abatement.
12. The Contractor shall request and receive in writing prior to preceding with any work info from the owner regarding surfaces/materials that require protection.
13. Regular waste generated by the abatement work of this contract shall be stored securely using a closed waste container.

5/3/2022 11:43:22 AM

CONSULTANT INFORMATION
The LiRo Group
3 Aerial Way, Syosset, New York 11791
(516) 938-5476 www.liro.com

CONSULTANT SEAL
STATE OF NEW YORK · PETER JOSEPH BERBASI · No. 070446 · LICENSED PROFESSIONAL ENGINEER

| REVISION NUMBER | DATE | MADE BY | APP'D BY | REVISION |
|---|---|---|---|---|

RECORD DRAWING CERTIFICATION
☐ AS BUILT – CHANGES AS NOTED ☐ AS BUILT – NO CHANGES

CONTRACTOR
NAME
SIGNATURE
TITLE DATE

PROJECT COORDINATOR
NAME
SIGNATURE
TITLE DATE

WESTCHESTER COUNTY, NEW YORK
DEPARTMENT OF PUBLIC WORKS AND TRANSPORTATION
DIVISION OF ENGINEERING

INFRASTRUCTURE REHABILITATION - PHASE 3
PLAYLAND PARK, RYE, NEW YORK
CROSS AXIS BUILDING D
GROUND FLOOR - ASBESTOS ABATEMENT PLAN

CONTRACT NUMBER 22-523
SHEET NUMBER CXD-H-10
DWG NO.:
SCALE: NOT TO SCALE
DATE: 08/23/2022
DPW FILE NUMBER 1-118-G-938-0
REV. NO. 0

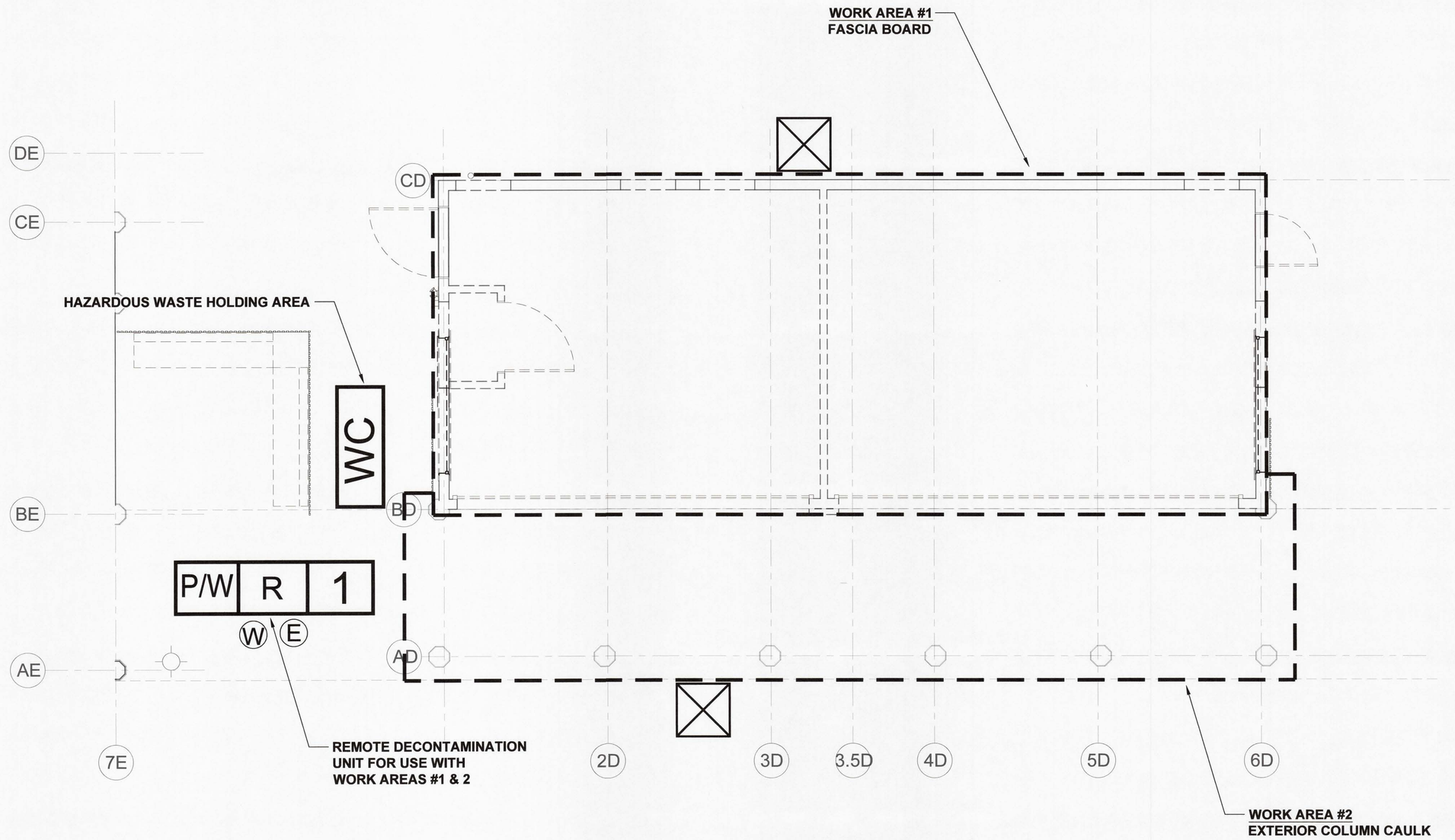


1 GROUND FLOOR - ASBESTOS ABATEMENT PLAN
NTS

5/3/2022 11:43:22 AM

CONSULTANT INFORMATION
The LiRo Group
3 Aerial Way, Syosset, New York 11791
(516) 938-5476 www.liro.com

CONSULTANT SEAL
STATE OF NEW YORK
PETER JOSEPH GERBASI
No. 070446
LICENSED PROFESSIONAL ENGINEER

| REVISION NUMBER | DATE | MADE BY | APP'D BY | REVISION |
|---|---|---|---|---|

RECORD DRAWING CERTIFICATION
AS BUILT – CHANGES AS NOTED
AS BUILT – NO CHANGES

CONTRACTOR
NAME
SIGNATURE
TITLE DATE

PROJECT COORDINATOR
NAME
SIGNATURE
TITLE DATE

WESTCHESTER COUNTY, NEW YORK
DEPARTMENT OF PUBLIC WORKS AND TRANSPORTATION
DIVISION OF ENGINEERING

INFRASTRUCTURE REHABILITATION - PHASE 3
PLAYLAND PARK, RYE, NEW YORK
CROSS AXIS BUILDING D
GROUND FLOOR - ASBESTOS ABATEMENT PLAN

CONTRACT NUMBER 22-523
SHEET NUMBER CXD-H-11
DWG NO.:
SCALE: NOT TO SCALE
DATE: 08/23/2022
DPW FILE NUMBER 1-118-G-939-0
REV. NO. 0

# PLAYLAND REHABILITATION & UPGRADES
# CXD - LEAD REMEDIATION
## 1 PLAYLAND PKWY, RYE, NY 10580

**DETAILS:**

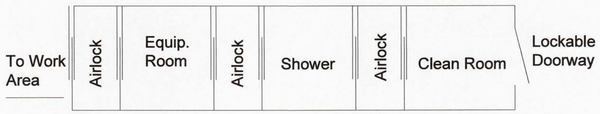


1 CXD-H-20 LARGE PROJECT REMOTE WORKER DECONTAMINATION UNIT
Not To Scale

**SCOPE OF WORK TABLE:**

| Work area | Location | Description | Material | Quantity | Procedure |
|---|---|---|---|---|---|
| 1 | Exterior | Entire Building | Painted Surfaces | 800 SF | Manual Wet Scraping/Chemical Strip |

**LEGEND:**

- WORK AREA LIMITS
- WS — OSHA HANDWASHING STATION
- HWSA — HAZARDOUS WASTE STORAGE AREA
- AIRLOCK
- W — TEMPORARY WATER SOURCE
- E — TEMPORARY ELECTRICAL SOURCE
- EXTERIOR PAINTED SURFACES

**KEYPLAN:**

**PROJECT NOTES:**

1. All layers of coating shall be considered as LBP and removed down to the substrates. Substrates coated with LBP and targeted for demolition may be removed and disposed of solid structure waste following TCLP testing.
2. Substrates coated with LBP and targeted for refurbish and recoating shall be abated using manual wet scraping or chemical stripping procedures, localized testing of chemical strapping products shall proceed broader use and only after approval by the DPW Environmental Consultant.
3. The abatement contractor shall separate paint chips and contaminated dust/particulate generated by the abatement from other project waste streams including worker personal protective equipment and plastic sheeting. All waste other than lead paint chips and contaminated dust/particulate shall be TCLP tested prior to disposal.
4. Waste generated by the work of this method shall be stored on site in a NYSDEC compliant Hazardous and Waste Storage Area and transported under manifest to the disposal site.
5. The contractor shall prepare a project specific work plan and project specific HASP for the work of this contract.
6. LBP remediation shall be consistent with guidelines from SSPC and work shall comply with the OSHA regulations including using of decontamination units and hand wash stations.
7. The contractor may propose alternate LBP removal procedures however, use of alternate procedures will require approval by DPW Environmental Consultant; the abatement contractor is responsible with maintaining the physical conditions and integrity of the targeted substrates, and the surrounding structures during abatement work.
8. The Contractor shall request and receive in writing prior to preceding with any work info from the owner regarding surfaces/materials that require protection.

5/3/2022 11:43:22 AM

CONSULTANT INFORMATION
The LiRo Group
3 Aerial Way, Syosset, New York 11791
(516) 938-5476 www.liro.com

CONSULTANT SEAL
STATE OF NEW YORK · PETER JOSEPH GERBASI · No. 070446 · LICENSED PROFESSIONAL ENGINEER

| REVISION NUMBER | DATE | MADE BY | APP'D BY | REVISION |
|---|---|---|---|---|

RECORD DRAWING CERTIFICATION
AS BUILT – CHANGES AS NOTED
AS BUILT – NO CHANGES

CONTRACTOR
NAME
SIGNATURE
TITLE DATE

PROJECT COORDINATOR
NAME
SIGNATURE
TITLE DATE

WESTCHESTER COUNTY, NEW YORK
DEPARTMENT OF PUBLIC WORKS AND TRANSPORTATION
DIVISION OF ENGINEERING

INFRASTRUCTURE REHABILITATION - PHASE 3
PLAYLAND PARK, RYE, NEW YORK
CROSS AXIS BUILDING D
GENERAL LEAD REMEDIATION NOTES

CONTRACT NUMBER 22-523
SHEET NUMBER CXD-H-20
DWG NO.:
SCALE: NOT TO SCALE
DATE: 08/23/2022
DPW FILE NUMBER 1-118-G-940-0
REV. NO. 0

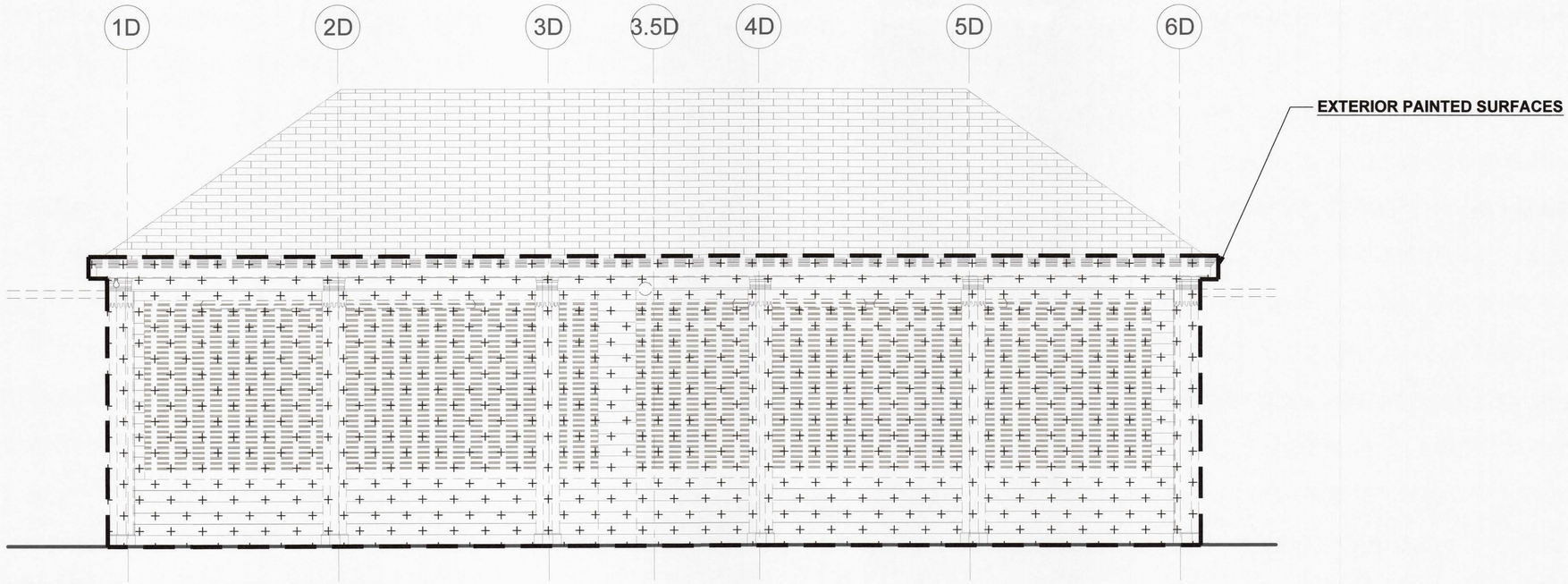


1 NORTH ELEVATION - LEAD REMEDIATION PLAN
NTS

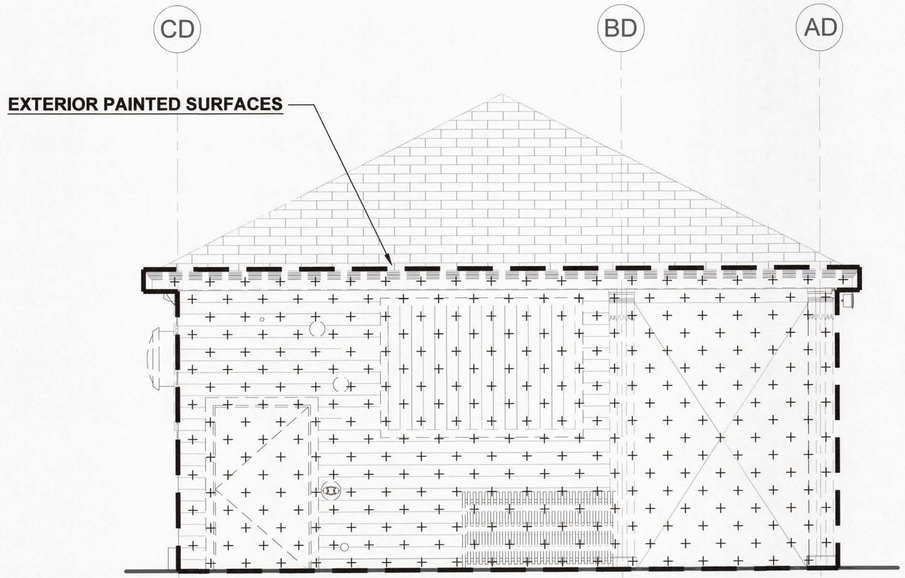


2 EAST ELEVATION - LEAD REMEDIATION PLAN
NTS

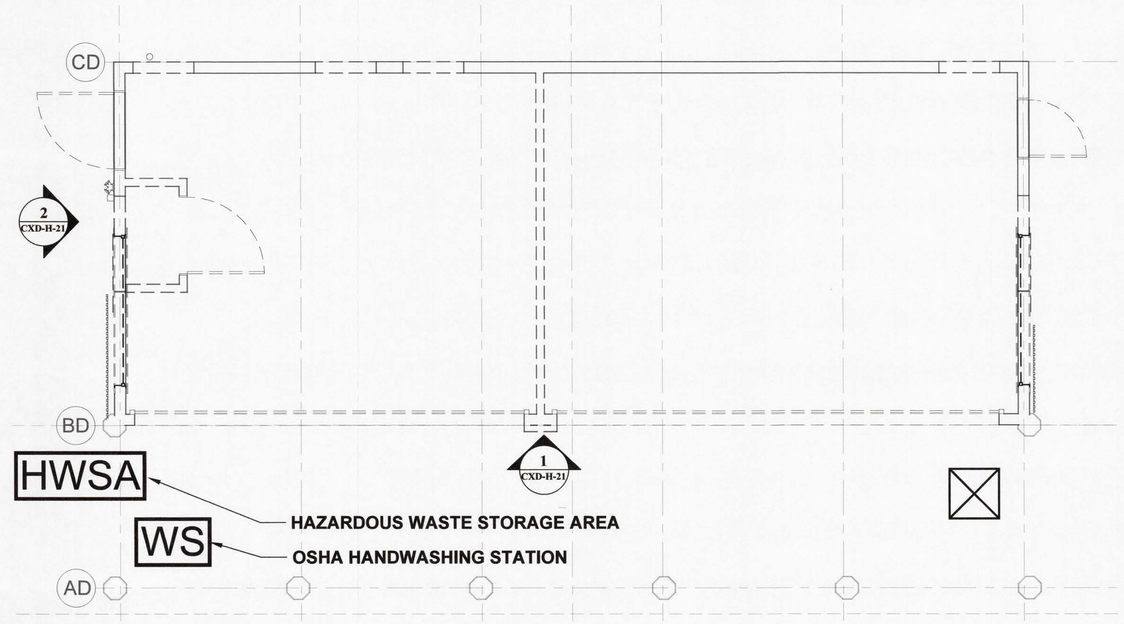


3 GROUND FLOOR - LEAD REMEDIATION PLAN
NTS

5/3/2022 11:43:22 AM

CONSULTANT INFORMATION
The LiRo Group
3 Aerial Way, Syosset, New York 11791
(516) 938-5476 www.liro.com

CONSULTANT SEAL
STATE OF NEW YORK · PETER JOSEPH TERRASI · No. 070446 · LICENSED PROFESSIONAL ENGINEER

| REVISION NUMBER | DATE | MADE BY | APP'D BY | REVISION |
|---|---|---|---|---|
| | | | | |

RECORD DRAWING CERTIFICATION
☐ AS BUILT – CHANGES AS NOTED ☐ AS BUILT – NO CHANGES

CONTRACTOR
NAME
SIGNATURE
TITLE DATE

PROJECT COORDINATOR
NAME
SIGNATURE
TITLE DATE

WESTCHESTER COUNTY, NEW YORK
DEPARTMENT OF PUBLIC WORKS AND TRANSPORTATION
DIVISION OF ENGINEERING

**INFRASTRUCTURE REHABILITATION - PHASE 3**
**PLAYLAND PARK, RYE, NEW YORK**
**CROSS AXIS BUILDING D**
**NORTH AND EAST ELEVATIONS -**
**LEAD REMEDIATION PLAN**

| | |
|---|---|
| CONTRACT NUMBER | 22-523 |
| SHEET NUMBER | CXD-H-21 |
| DWG NO.: | |
| SCALE: | NOT TO SCALE |
| DATE: | 08/23/2022 |
| DPW FILE NUMBER | 1-118-G-941-0 |
| REV. NO. | 0 |

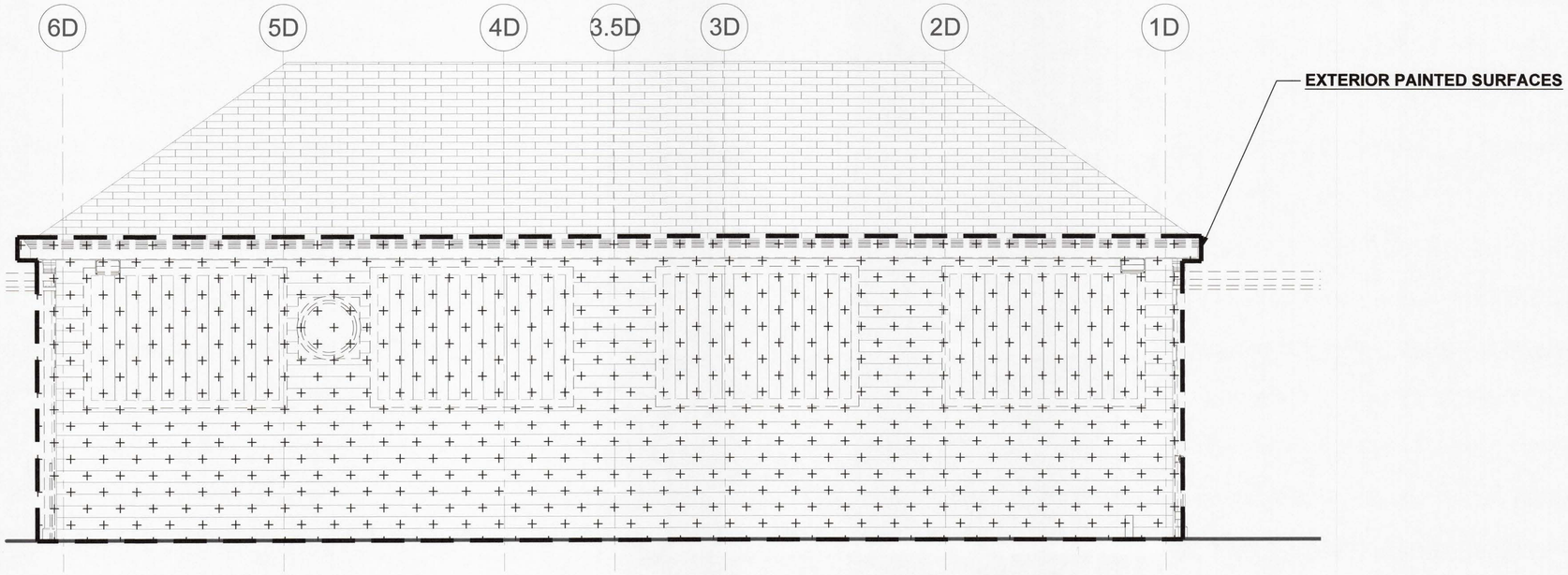


1 SOUTH ELEVATION - LEAD REMEDIATION PLAN
NTS

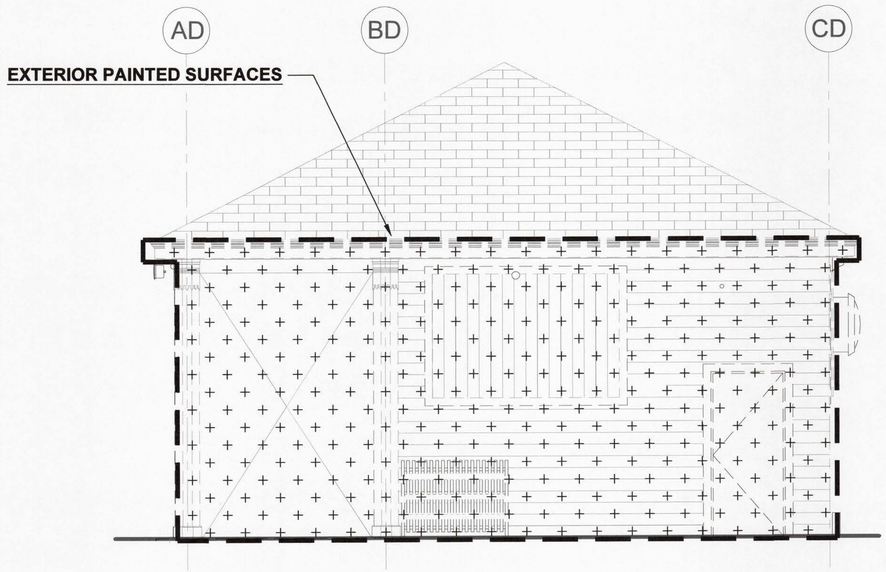


2 WEST ELEVATION - LEAD REMEDIATION PLAN
NTS

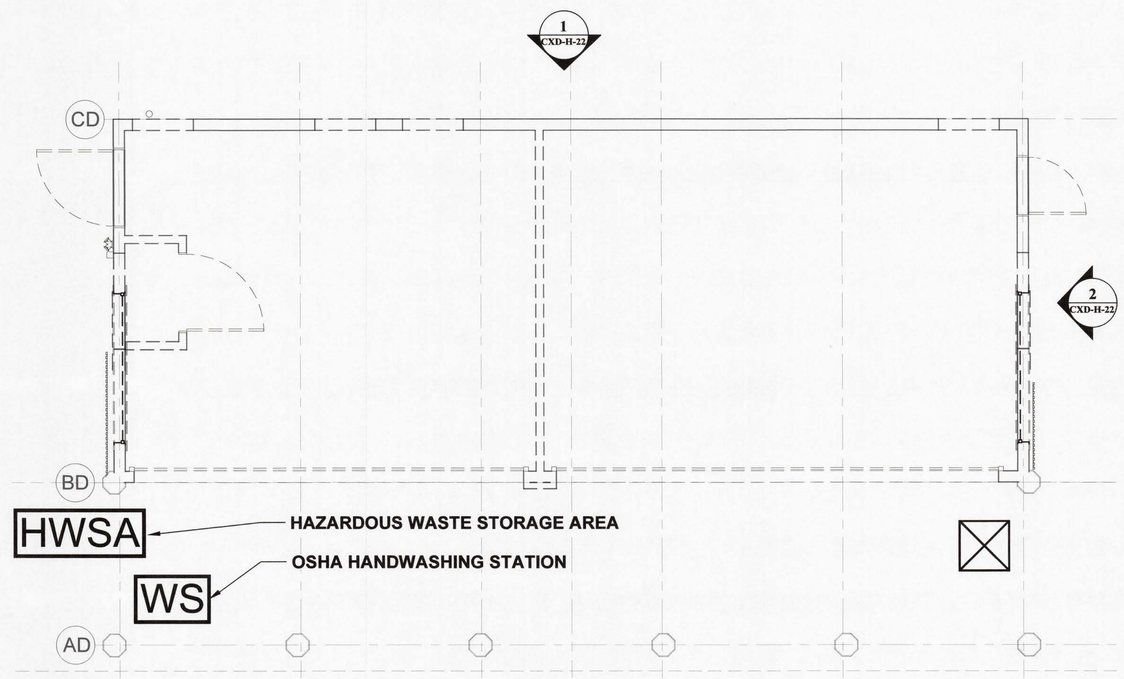


3 GROUND FLOOR - LEAD REMEDIATION PLAN
NTS

5/3/2022 11:43:22 AM

CONSULTANT INFORMATION
The LiRo Group
3 Aerial Way, Syosset, New York 11791
(516) 938-5476 www.liro.com

CONSULTANT SEAL
STATE OF NEW YORK
JOSEPH A. BERBASI
No. 070446
LICENSED PROFESSIONAL ENGINEER

| REVISION NUMBER | DATE | MADE BY | APP'D BY | REVISION |
|---|---|---|---|---|

RECORD DRAWING CERTIFICATION
☐ AS BUILT – CHANGES AS NOTED ☐ AS BUILT – NO CHANGES

CONTRACTOR
NAME
SIGNATURE
TITLE DATE

PROJECT COORDINATOR
NAME
SIGNATURE
TITLE DATE

WESTCHESTER COUNTY, NEW YORK
DEPARTMENT OF PUBLIC WORKS AND TRANSPORTATION
DIVISION OF ENGINEERING

**INFRASTRUCTURE REHABILITATION - PHASE 3**
**PLAYLAND PARK, RYE, NEW YORK**
**CROSS AXIS BUILDING D**
**SOUTH AND WEST ELEVATIONS -**
**LEAD REMEDIATION PLAN**

| | |
|---|---|
| CONTRACT NUMBER | 22-523 |
| SHEET NUMBER | CXD-H-22 |
| DWG NO.: | |
| SCALE: | NOT TO SCALE |
| DATE: | 08/23/2022 |
| DPW FILE NUMBER | 1-118-G-942-0 |
| REV. NO. | 0 |

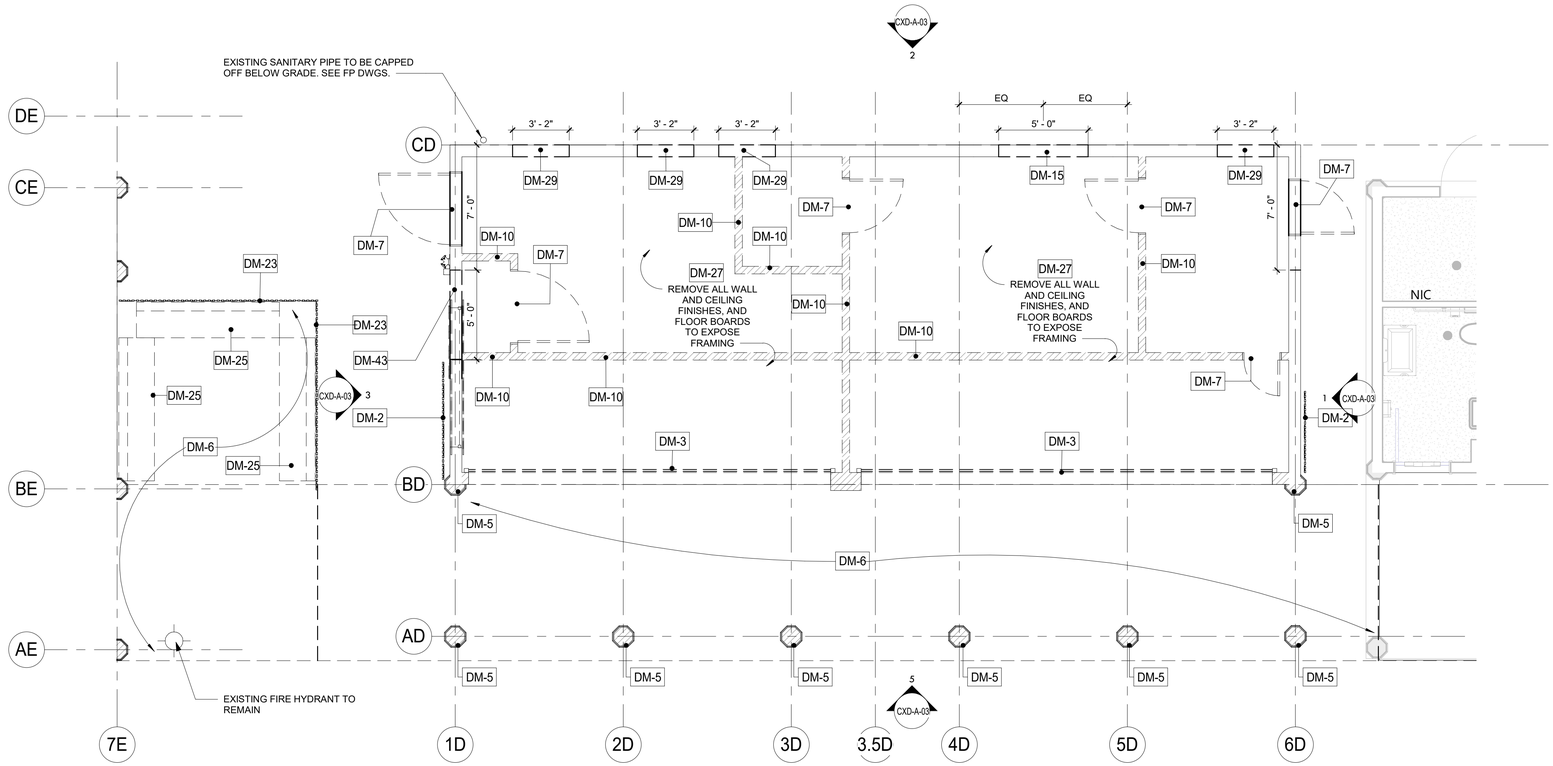


1 GROUND FLOOR DEMOLITION PLAN CXD
1/4" = 1'-0"

## DEMOLITION LEGEND

- INDICATES DEMOLITION
- DM - # — DEMOLITION KEY NOTES
- SHINGLES TO BE REMOVED
- NIC — INDICATES N.I.C.

## DEMOLITION NOTES:

1. THE GENERAL CONTRACTOR SHALL VISIT THE SITE AND FAMILIARIZE HIM/HERSELF WITH EXISTING CONDITIONS AND REQUIREMENTS OF THE WORK. THE GENERAL CONTRACTOR SHALL FIELD VERIFY EXACT QUANTITIES OF ALL ITEMS TO BE REMOVED.
2. THE CONTRACTOR SHALL PHOTOGRAPH AND DOCUMENT EXISTING HISTORIC DECORATIVE TRIMS INCLUDING SIZES AND PROFILES PRIOR TO ENVIRONMENTAL REMEDIATION WORK START.
3. ITEMS TO BE REMOVED / DEMOLISHED AS INDICATED ON THE DRAWINGS ARE INTENDED TO SHOW THE GENERAL SCOPE OF THE DEMOLITION WORK. THE DRAWINGS DO NOT REPRESENT IN DETAIL ALL ITEMS OR SITUATIONS THAT MAY BE ENCOUNTERED DURING THE DEMOLITION. IT IS THE CONTRACTOR'S RESPONSIBILITY TO REMOVE, PROTECT, AND MAKE CORRECTIONS AS REQUIRED TO ACHIEVE DRAWING INTENT. THE GENERAL CONTRACTOR SHALL NOTIFY ARCHITECT OF ANY STRUCTURAL NONCONFORMITY TO PLANS AND SPECIFICATIONS.
4. PLAYLAND RESERVES THE RIGHT TO REVIEW ALL MATERIALS DESIGNATED FOR REMOVAL AND TO RETAIN OWNERSHIP OF SUCH MATERIALS. IF PLAYLAND RETAINS ANY MATERIAL THE CONTRACTOR SHALL MAKE ARRANGEMENTS WITH THE PLAYLAND'S SUPERINTENDENT TO HAVE THOSE MATERIALS REMOVED AND STORED OFF SITE AT NO ADDITIONAL COST.
5. DEMOLITION OF THE EXISTING BUILDING SHALL INCLUDE REMOVAL OF THE EXISTING FOUNDATIONS FOR THEIR ENTIRE DEPTH TO ACCOMMODATE INSTALLATION OF NEW FOUNDATIONS.
6. THE CONTRACTOR SHALL USE EXTREME CAUTION IN AREAS OF DEMOLITION WHICH MAY DISTURB EXISTING STRUCTURES. TEMPORARY SHORING, BARRICADES, DUST PARTITIONS, ETC. SHALL BE PROVIDED AS REQUIRED TO PROTECT ALL EXISTING STRUCTURES AND PROPERTY.
7. SEE STRUCTURAL, ELECTRICAL, SPRINKLER, AND PLUMBING DRAWINGS FOR RELATED DEMOLITION WORK.
8. VERIFY LOCATION OF EXISTING STRUCTURES AND SHORE UP ROOF/FLOOR ABOVE AS REQUIRED BEFORE REMOVING WALL.
9. REMOVAL OF ALL CEILINGS AND MOUNTED ITEMS THROUGHOUT THE CONTRACT AREA INCLUDE ANCHORING HARDWARE, AND MISCELLANEOUS FASTENINGS, ETC.
10. WALLS SHALL BE REMOVED AS INDICATED ON DEMOLITION PLANS. ALL UTILITIES IN WALL SHALL BE CUT TO BELOW SLAB OR ABOVE THE CEILING.
11. REMOVE ALL EXISTING ELECTRICAL AND PLUMBING LINES NOT TO BE RE-USED. CAP PLUMBING LINES AS REQUIRED. ELECTRICAL WIRING SHALL BE DISCONNECTED BACK TO THE NEAREST ACTIVE LOCATION. ALL ABANDONED COMMUNICATION CABLES (DATA, TELEPHONE, FIRE ALARM, AND AUDIO/VIDEO CABLES) SHALL BE REMOVED TO SOURCE IF NOT TAGGED FOR FUTURE USE.
12. DEMOLITION PROCEDURES ARE THE SOLE RESPONSIBILITY OF THE GENERAL CONTRACTOR OF THIS CONTRACT. CONTRACTOR TO "CUT OFF" ALL NECESSARY UTILITIES REQUIRED TO OBTAIN DESIRED RESULTS. CONTRACTOR TO OBTAIN "SHUT OFF" APPROVALS FROM PLAYLAND PRIOR TO SCHEDULED DEMOLITION.
13. THE GENERAL CONTRACTOR SHALL PATCH AND REPAIR ALL EXISTING CONSTRUCTION DISTURBED BY THE WORK AND PREPARE FOR NEW FINISH AS SHOWN ON THE INTERIOR ELEVATIONS.
14. THE EXISTING WOOD FLOOR SHALL BE CLEANED TO ALLOW FOR THE APPLICATION OF NEW FLOOR COATING.
15. THE GENERAL CONTRACTOR SHALL BE RESPONSIBLE FOR THE CLEANING UP AND HAULING AWAY OF ALL TRASH AND DEBRIS ON A REGULAR BASIS DURING THE CONSTRUCTION PERIOD.
16. ALL DEBRIS REMOVED FROM THE SITE SHALL BE DISPOSED OF IN A LEGAL MANNER.
17. EXISTING EXITS SHALL REMAIN FULLY ACCESSIBLE AND UNOBSTRUCTED DURING THE PROGRESS OF THE WORK.

## DEMO KEYNOTES

| | |
|---|---|
| DM-2 | REMOVE EXISTING GATE. |
| DM-3 | REMOVE ROLL DOWN DOOR AND ASSOCIATED HARDWARE. |
| DM-5 | REMOVE COLUMN ENCLOSURES. CAREFULLY REMOVE AT LEAST ONE COLUMN ENCLOSURE TO USE AS REFERENCE IN ORDER TO REPLICATE TRIMS TO MATCH LOCATION, SIZE AND SHAPE AS INDICATED. COORDINATE WITH STRUCTURAL DRAWINGS. |
| DM-6 | REMOVE EXISTING WOOD DECKING. (COORDINATE EXTENT OF REMOVAL REQUIRED TO REPAIR FLOOR JOISTS TO REMAIN AS NEEDED - SEE STRUCTURAL DRAWINGS). |
| DM-7 | REMOVE EXISTING DOOR & FRAME. |
| DM-10 | REMOVE INTERIOR PARTITION. |
| DM-15 | REMOVE EXISTING WINDOWS WALL INFILL. |
| DM-23 | REMOVE EXISTING FENCE. |
| DM-25 | REMOVE EXISTING BENCHES. |
| DM-27 | REMOVE EXISTING FLOORING. |
| DM-29 | REMOVE SECTION OF EXISTING WALL. PROVIDE HEADER AS REQUIRED TO CREATE A DOOR OPENING. SEE ELEVATIONS FOR EXTENT. |
| DM-43 | REMOVE SECTION OF EXISTING WALL. PROVIDE HEADER AND SILL AS REQUIRED TO CREATE A WINDOW OPENING. SEE ELEVATIONS. |

8/30/2022 4:15:01 PM

CONSULTANT INFORMATION
The LiRo Group
3 Aerial Way, Syosset, New York 11791
(516) 938-5476 www.liro.com

CONSULTANT SEAL
REGISTERED ARCHITECT ROBERT D. JOHNSON 023220 STATE OF NEW YORK

| REVISION NUMBER | DATE | MADE BY | APP'D BY | REVISION |
|---|---|---|---|---|

RECORD DRAWING CERTIFICATION
☐ AS BUILT – CHANGES AS NOTED ☐ AS BUILT – NO CHANGES

CONTRACTOR
NAME
SIGNATURE
TITLE DATE

PROJECT COORDINATOR
NAME
SIGNATURE
TITLE DATE

WESTCHESTER COUNTY, NEW YORK
DEPARTMENT OF PUBLIC WORKS AND TRANSPORTATION
DIVISION OF ENGINEERING

INFRASTRUCTURE REHABILITATION PHASE 3
PLAYLAND PARK, RYE, NEW YORK
CROSS AXIS BUILDING D
CXD - GROUND FLOOR DEMOLITION PLAN

| | |
|---|---|
| CONTRACT NUMBER | 22-523 |
| SHEET NUMBER | CXD-A-01 |
| DWG NO.: | 194 of 664 |
| SCALE: | As indicated |
| DATE: | 08/23/2022 |
| DPW FILE NUMBER | 1-118-A-943-0 |
| REV. NO. | 0 |

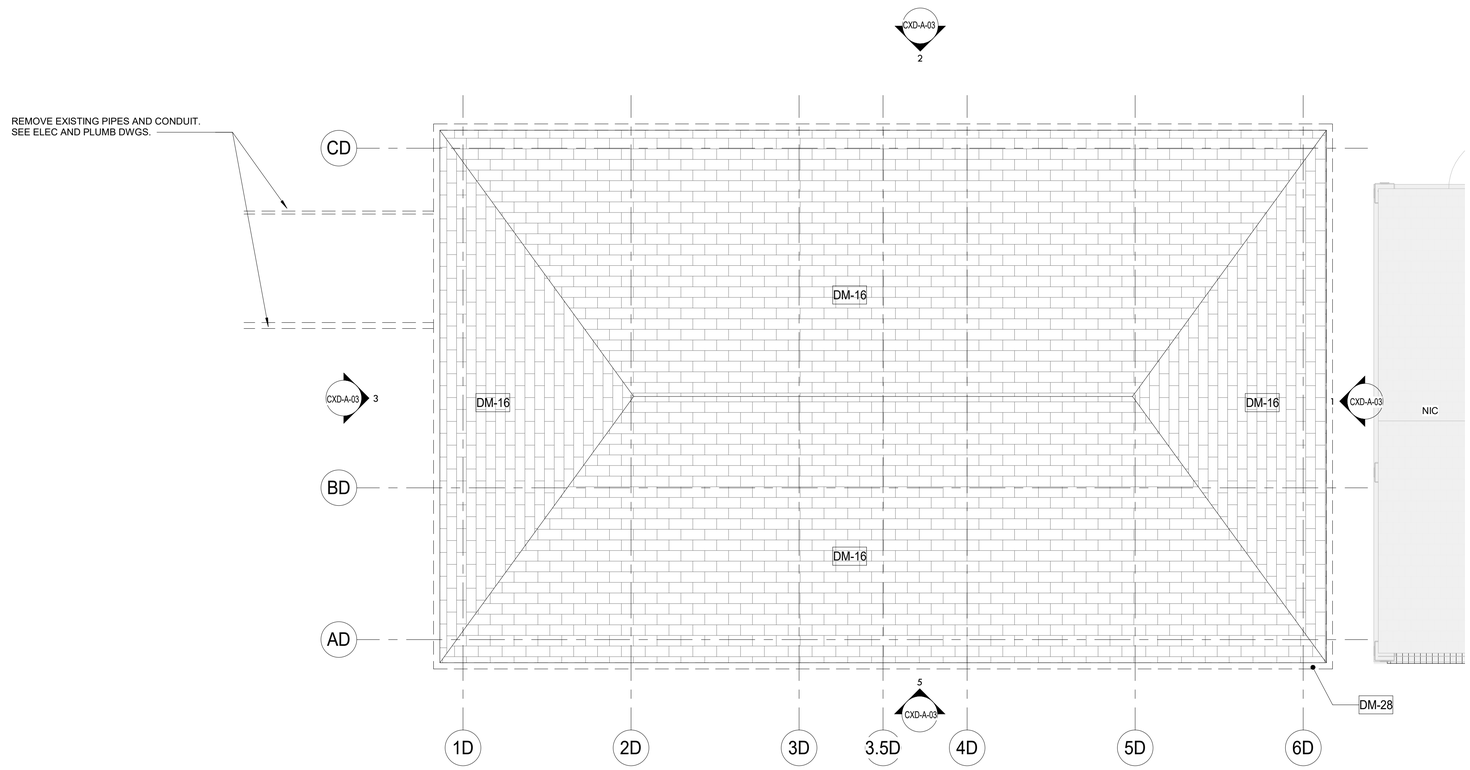


1 ROOF PLAN DEMOLITION CXD
1/4" = 1'-0"

## DEMOLITION LEGEND

- INDICATES DEMOLITION
- DM - # — DEMOLITION KEY NOTES
- SHINGLES TO BE REMOVED
- NIC — INDICATES N.I.C.

## DEMOLITION NOTES:

1. THE GENERAL CONTRACTOR SHALL VISIT THE SITE AND FAMILIARIZE HIM/HERSELF WITH EXISTING CONDITIONS AND REQUIREMENTS OF THE WORK. THE GENERAL CONTRACTOR SHALL FIELD VERIFY EXACT QUANTITIES OF ALL ITEMS TO BE REMOVED.
2. THE CONTRACTOR SHALL PHOTOGRAPH AND DOCUMENT EXISTING HISTORIC DECORATIVE TRIMS INCLUDING SIZES AND PROFILES PRIOR TO ENVIRONMENTAL REMEDIATION WORK START.
3. ITEMS TO BE REMOVED / DEMOLISHED AS INDICATED ON THE DRAWINGS ARE INTENDED TO SHOW THE GENERAL SCOPE OF THE DEMOLITION WORK. THE DRAWINGS DO NOT REPRESENT IN DETAIL ALL ITEMS OR SITUATIONS THAT MAY BE ENCOUNTERED DURING THE DEMOLITION. IT IS THE CONTRACTOR'S RESPONSIBILITY TO REMOVE, PROTECT, AND MAKE CORRECTIONS AS REQUIRED TO ACHIEVE DRAWING INTENT. THE GENERAL CONTRACTOR SHALL NOTIFY ARCHITECT OF ANY STRUCTURAL NONCONFORMITY TO PLANS AND SPECIFICATIONS.
4. PLAYLAND RESERVES THE RIGHT TO REVIEW ALL MATERIALS DESIGNATED FOR REMOVAL AND TO RETAIN OWNERSHIP OF SUCH MATERIALS. IF PLAYLAND RETAINS ANY MATERIAL THE CONTRACTOR SHALL MAKE ARRANGEMENTS WITH THE PLAYLAND'S SUPERINTENDENT TO HAVE THOSE MATERIALS REMOVED AND STORED OFF SITE AT NO ADDITIONAL COST.
5. DEMOLITION OF THE EXISTING BUILDING SHALL INCLUDE REMOVAL OF THE EXISTING FOUNDATIONS FOR THEIR ENTIRE DEPTH TO ACCOMMODATE INSTALLATION OF NEW FOUNDATIONS.
6. THE CONTRACTOR SHALL USE EXTREME CAUTION IN AREAS OF DEMOLITION WHICH MAY DISTURB EXISTING STRUCTURES. TEMPORARY SHORING, BARRICADES, DUST PARTITIONS, ETC. SHALL BE PROVIDED AS REQUIRED TO PROTECT ALL EXISTING STRUCTURES AND PROPERTY.
7. SEE STRUCTURAL, ELECTRICAL, SPRINKLER, AND PLUMBING DRAWINGS FOR RELATED DEMOLITION WORK.
8. VERIFY LOCATION OF EXISTING STRUCTURES AND SHORE UP ROOF/FLOOR ABOVE AS REQUIRED BEFORE REMOVING WALL.
9. REMOVAL OF ALL CEILINGS AND MOUNTED ITEMS THROUGHOUT THE CONTRACT AREA INCLUDE ANCHORING HARDWARE, AND MISCELLANEOUS FASTENINGS, ETC.
10. WALLS SHALL BE REMOVED AS INDICATED ON DEMOLITION PLANS. ALL UTILITIES IN WALL SHALL BE CUT TO BELOW SLAB OR ABOVE THE CEILING.
11. REMOVE ALL EXISTING ELECTRICAL AND PLUMBING LINES NOT TO BE RE-USED. CAP PLUMBING LINES AS REQUIRED. ELECTRICAL WIRING SHALL BE DISCONNECTED BACK TO THE NEAREST ACTIVE LOCATION. ALL ABANDONED COMMUNICATION CABLES (DATA, TELEPHONE, FIRE ALARM, AND AUDIO/VIDEO CABLES) SHALL BE REMOVED TO SOURCE IF NOT TAGGED FOR FUTURE USE.
12. DEMOLITION PROCEDURES ARE THE SOLE RESPONSIBILITY OF THE GENERAL CONTRACTOR OF THIS CONTRACT. CONTRACTOR TO "CUT OFF" ALL NECESSARY UTILITIES REQUIRED TO OBTAIN DESIRED RESULTS. CONTRACTOR TO OBTAIN "SHUT OFF" APPROVALS FROM PLAYLAND PRIOR TO SCHEDULED DEMOLITION.
13. THE GENERAL CONTRACTOR SHALL PATCH AND REPAIR ALL EXISTING CONSTRUCTION DISTURBED BY THE WORK AND PREPARE FOR NEW FINISH AS SHOWN ON THE INTERIOR ELEVATIONS.
14. THE EXISTING WOOD FLOOR SHALL BE CLEANED TO ALLOW FOR THE APPLICATION OF NEW FLOOR COATING.
15. THE GENERAL CONTRACTOR SHALL BE RESPONSIBLE FOR THE CLEANING UP AND HAULING AWAY OF ALL TRASH AND DEBRIS ON A REGULAR BASIS DURING THE CONSTRUCTION PERIOD.
16. ALL DEBRIS REMOVED FROM THE SITE SHALL BE DISPOSED OF IN A LEGAL MANNER.
17. EXISTING EXITS SHALL REMAIN FULLY ACCESSIBLE AND UNOBSTRUCTED DURING THE PROGRESS OF THE WORK.

## CONSTRUCTION KEYNOTES

| | |
|---|---|
| DM-16 | REMOVE EXISTING ROOFING SHINGLES, UNDERLAYMENT AND ANY ROTTED WOOD SHEATHING. REPLACE DAMAGED SHEATHING TO MATCH EXISTING. COORDINATE WITH A/E. |
| DM-28 | REMOVE EXISTING GUTTER, FASCIA, AND SOFFITS. |

8/30/2022 4:15:02 PM

CONSULTANT INFORMATION
The LiRo Group
3 Aerial Way, Syosset, New York 11791
(516) 938-5476 www.liro.com

CONSULTANT SEAL
REGISTERED ARCHITECT ROBERT D. TOMASETTI 033290 STATE OF NEW YORK

| REVISION NUMBER | DATE | MADE BY | APP'D BY | REVISION |
|---|---|---|---|---|

RECORD DRAWING CERTIFICATION
☐ AS BUILT – CHANGES AS NOTED ☐ AS BUILT – NO CHANGES

CONTRACTOR
NAME
SIGNATURE
TITLE DATE

PROJECT COORDINATOR
NAME
SIGNATURE
TITLE DATE

WESTCHESTER COUNTY, NEW YORK
DEPARTMENT OF PUBLIC WORKS AND TRANSPORTATION
DIVISION OF ENGINEERING

**INFRASTRUCTURE REHABILITATION PHASE 3**
**PLAYLAND PARK, RYE, NEW YORK**
**CROSS AXIS BUILDING D**
**CXD - ROOF DEMOLITION PLAN**

| | |
|---|---|
| CONTRACT NUMBER | 22-523 |
| SHEET NUMBER | CXD-A-02 |
| DWG NO.: | 195 of 664 |
| SCALE: | As indicated |
| DATE: | 08/23/2022 |
| DPW FILE NUMBER | 1-118-A-944-0 |
| REV. NO. | 0 |

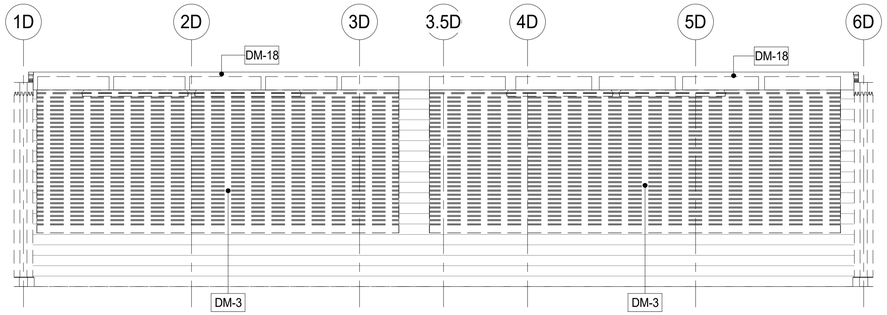


5 CXD - PORCH NORTH ELEVATION
1/4" = 1'-0"

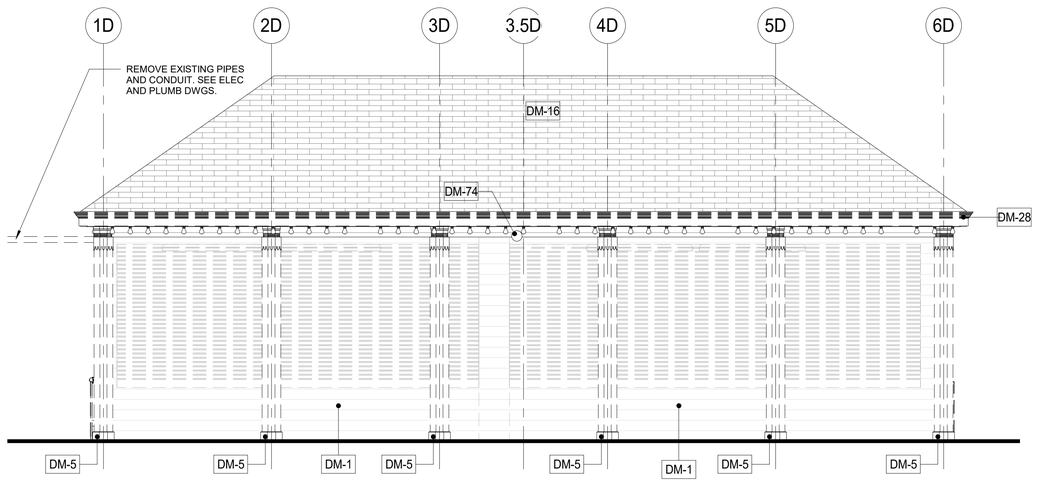


4 CXD - DEMOLITION ELEVATION - NORTH
1/4" = 1'-0"

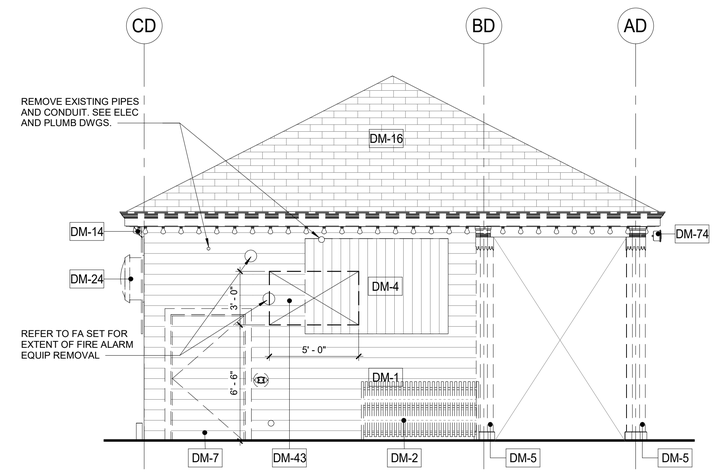


3 CXD - DEMOLITION ELEVATION - EAST
1/4" = 1'-0"

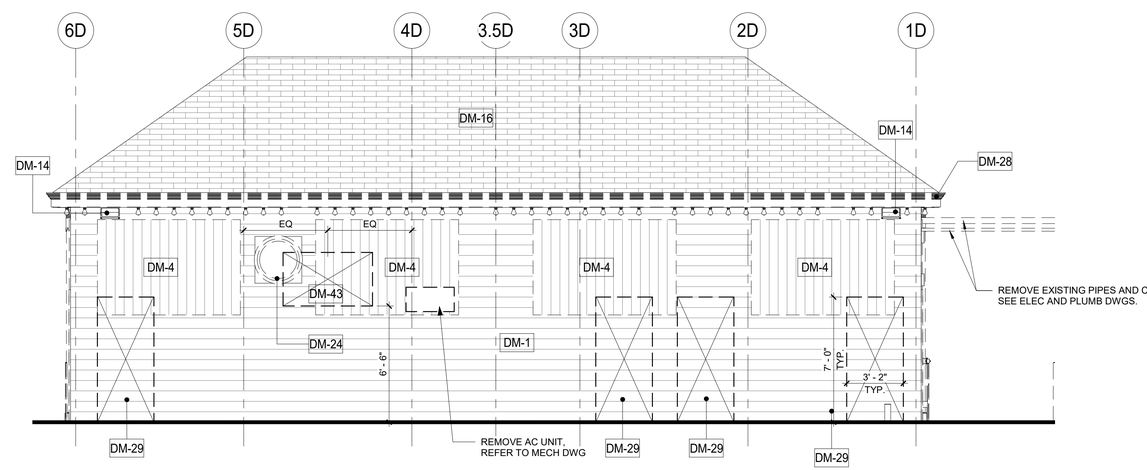


2 CXD - DEMOLITION ELEVATION - SOUTH
1/4" = 1'-0"

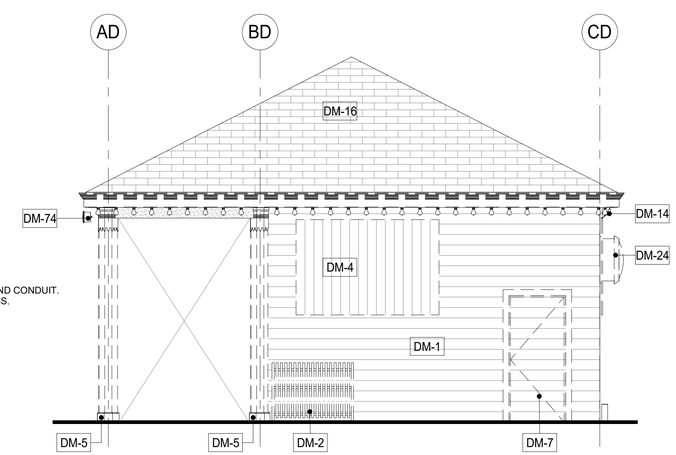


1 CXD - DEMOLITION ELEVATION - WEST
1/4" = 1'-0"

## DEMOLITION LEGEND

- INDICATES DEMOLITION
- DM - # — DEMOLITION KEY NOTES
- SHINGLES TO BE REMOVED
- NIC — INDICATES N.I.C.

## DEMOLITION NOTES:

1. THE GENERAL CONTRACTOR SHALL VISIT THE SITE AND FAMILIARIZE HIM/HERSELF WITH EXISTING CONDITIONS AND REQUIREMENTS OF THE WORK. THE GENERAL CONTRACTOR SHALL FIELD VERIFY EXACT QUANTITIES OF ALL ITEMS TO BE REMOVED.
2. THE CONTRACTOR SHALL PHOTOGRAPH AND DOCUMENT EXISTING HISTORIC DECORATIVE TRIMS INCLUDING SIZES AND PROFILES PRIOR TO ENVIRONMENTAL REMEDIATION WORK START.
3. ITEMS TO BE REMOVED / DEMOLISHED AS INDICATED ON THE DRAWINGS ARE INTENDED TO SHOW THE GENERAL SCOPE OF THE DEMOLITION WORK. THE DRAWINGS DO NOT REPRESENT IN DETAIL ALL ITEMS OR SITUATIONS THAT MAY BE ENCOUNTERED DURING THE DEMOLITION. IT IS THE CONTRACTOR'S RESPONSIBILITY TO REMOVE, PROTECT, AND MAKE CORRECTIONS AS REQUIRED TO ACHIEVE DRAWING INTENT. THE GENERAL CONTRACTOR SHALL NOTIFY ARCHITECT OF ANY STRUCTURAL NONCONFORMITY TO PLANS AND SPECIFICATIONS.
4. PLAYLAND RESERVES THE RIGHT TO REVIEW ALL MATERIALS DESIGNATED FOR REMOVAL AND TO RETAIN OWNERSHIP OF SUCH MATERIALS. IF PLAYLAND RETAINS ANY MATERIAL THE CONTRACTOR SHALL MAKE ARRANGEMENTS WITH THE PLAYLAND'S SUPERINTENDENT TO HAVE THOSE MATERIALS REMOVED AND STORED OFF SITE AT NO ADDITIONAL COST.
5. DEMOLITION OF THE EXISTING BUILDING SHALL INCLUDE REMOVAL OF THE EXISTING FOUNDATIONS FOR THEIR ENTIRE DEPTH TO ACCOMMODATE INSTALLATION OF NEW FOUNDATIONS.
6. THE CONTRACTOR SHALL USE EXTREME CAUTION IN AREAS OF DEMOLITION WHICH MAY DISTURB EXISTING STRUCTURES. TEMPORARY SHORING, BARRICADES, DUST PARTITIONS, ETC. SHALL BE PROVIDED AS REQUIRED TO PROTECT ALL EXISTING STRUCTURES AND PROPERTY.
7. SEE STRUCTURAL, ELECTRICAL, SPRINKLER, AND PLUMBING DRAWINGS FOR RELATED DEMOLITION WORK.
8. VERIFY LOCATION OF EXISTING STRUCTURES AND SHORE UP ROOF/FLOOR ABOVE AS REQUIRED BEFORE REMOVING WALL.
9. REMOVAL OF ALL CEILINGS AND MOUNTED ITEMS THROUGHOUT THE CONTRACT AREA INCLUDE ANCHORING HARDWARE, AND MISCELLANEOUS FASTENINGS, ETC.
10. WALLS SHALL BE REMOVED AS INDICATED ON DEMOLITION PLANS. ALL UTILITIES IN WALL SHALL BE CUT TO BELOW SLAB OR ABOVE THE CEILING.
11. REMOVE ALL EXISTING ELECTRICAL AND PLUMBING LINES NOT TO BE RE-USED. CAP PLUMBING LINES AS REQUIRED. ELECTRICAL WIRING SHALL BE DISCONNECTED BACK TO THE NEAREST ACTIVE LOCATION. ALL ABANDONED COMMUNICATION CABLES (DATA, TELEPHONE, FIRE ALARM, AND AUDIO/VIDEO CABLES) SHALL BE REMOVED TO SOURCE IF NOT TAGGED FOR FUTURE USE.
12. DEMOLITION PROCEDURES ARE THE SOLE RESPONSIBILITY OF THE GENERAL CONTRACTOR OF THIS CONTRACT. CONTRACTOR TO "CUT OFF" ALL NECESSARY UTILITIES REQUIRED TO OBTAIN DESIRED RESULTS. CONTRACTOR TO OBTAIN "SHUT OFF" APPROVALS FROM PLAYLAND PRIOR TO SCHEDULED DEMOLITION.
13. THE GENERAL CONTRACTOR SHALL PATCH AND REPAIR ALL EXISTING CONSTRUCTION DISTURBED BY THE WORK AND PREPARE FOR NEW FINISH AS SHOWN ON THE INTERIOR ELEVATIONS.
14. THE EXISTING WOOD FLOOR SHALL BE CLEANED TO ALLOW FOR THE APPLICATION OF NEW FLOOR COATING.
15. THE GENERAL CONTRACTOR SHALL BE RESPONSIBLE FOR THE CLEANING UP AND HAULING AWAY OF ALL TRASH AND DEBRIS ON A REGULAR BASIS DURING THE CONSTRUCTION PERIOD.
16. ALL DEBRIS REMOVED FROM THE SITE SHALL BE DISPOSED OF IN A LEGAL MANNER.
17. EXISTING EXITS SHALL REMAIN FULLY ACCESSIBLE AND UNOBSTRUCTED DURING THE PROGRESS OF THE WORK.

## DEMO KEYNOTES

| | |
|---|---|
| DM-1 | REMOVE EXISTING WOOD SIDING. |
| DM-2 | REMOVE EXISTING GATE. |
| DM-3 | REMOVE ROLL DOWN DOOR AND ASSOCIATED HARDWARE. |
| DM-4 | REMOVE EXISTING WINDOW & FRAME. |
| DM-5 | REMOVE COLUMN ENCLOSURES. CAREFULLY REMOVE AT LEAST ONE COLUMN ENCLOSURE TO USE AS REFERENCE IN ORDER TO REPLICATE TRIMS TO MATCH LOCATION, SIZE AND SHAPE AS INDICATED. COORDINATE WITH STRUCTURAL DRAWINGS. |
| DM-7 | REMOVE EXISTING DOOR & FRAME. |
| DM-14 | REMOVE EXISTING LIGHTING FIXTURES AND ELECTRICAL WIRING CONNECTED TO THESE FIXTURES. SEE ELECTRICAL FOR DETAILS. |
| DM-16 | REMOVE EXISTING ROOFING SHINGLES, UNDERLAYMENT AND ANY ROTTED WOOD SHEATHING. REPLACE DAMAGED SHEATHING TO MATCH EXISTING. COORDINATE WITH A/E. |
| DM-18 | REMOVE EXISTING PANELS & TRIMS. |
| DM-24 | REMOVE EXISTING EXHAUST. SEE MECHANICAL DRAWINGS. |
| DM-28 | REMOVE EXISTING GUTTER, FASCIA, AND SOFFITS. |
| DM-29 | REMOVE SECTION OF EXISTING WALL. PROVIDE HEADER AS REQUIRED TO CREATE A DOOR OPENING. SEE ELEVATIONS FOR EXTENT. |
| DM-43 | REMOVE SECTION OF EXISTING WALL. PROVIDE HEADER AND SILL AS REQUIRED TO CREATE A WINDOW OPENING. SEE ELEVATIONS. |
| DM-74 | REMOVE SPEAKER AND ASSOCIATED HARDWARE AND ELECTRICAL WIRES. COORDINATE WITH ELEC. DRAWINGS. |

8/30/2022 4:15:07 PM


CONSULTANT INFORMATION
The LiRo Group
3 Aerial Way, Syosset, New York 11791
(516) 938-5476 www.liro.com


CONSULTANT SEAL
REGISTERED ARCHITECT ROBERT D. TOMASZEWSKI 023280 STATE OF NEW YORK

| REVISION NUMBER | DATE | MADE BY | APP'D BY | REVISION |
|---|---|---|---|---|

RECORD DRAWING CERTIFICATION
☐ AS BUILT – CHANGES AS NOTED ☐ AS BUILT – NO CHANGES

CONTRACTOR
NAME
SIGNATURE
TITLE DATE

PROJECT COORDINATOR
NAME
SIGNATURE
TITLE DATE

WESTCHESTER COUNTY, NEW YORK
DEPARTMENT OF PUBLIC WORKS AND TRANSPORTATION
DIVISION OF ENGINEERING

**INFRASTRUCTURE REHABILITATION PHASE 3**
**PLAYLAND PARK, RYE, NEW YORK**
**CROSS AXIS BUILDING D**
**CXD - EXTERIOR BUILDING ELEVATIONS**

| | |
|---|---|
| CONTRACT NUMBER | 22-523 |
| SHEET NUMBER | CXD-A-03 |
| DWG NO.: | 196 of 664 |
| SCALE: | As indicated |
| DATE: | 08/23/2022 |
| DPW FILE NUMBER | 1-118-A-945-0 |
| REV. NO. | 0 |

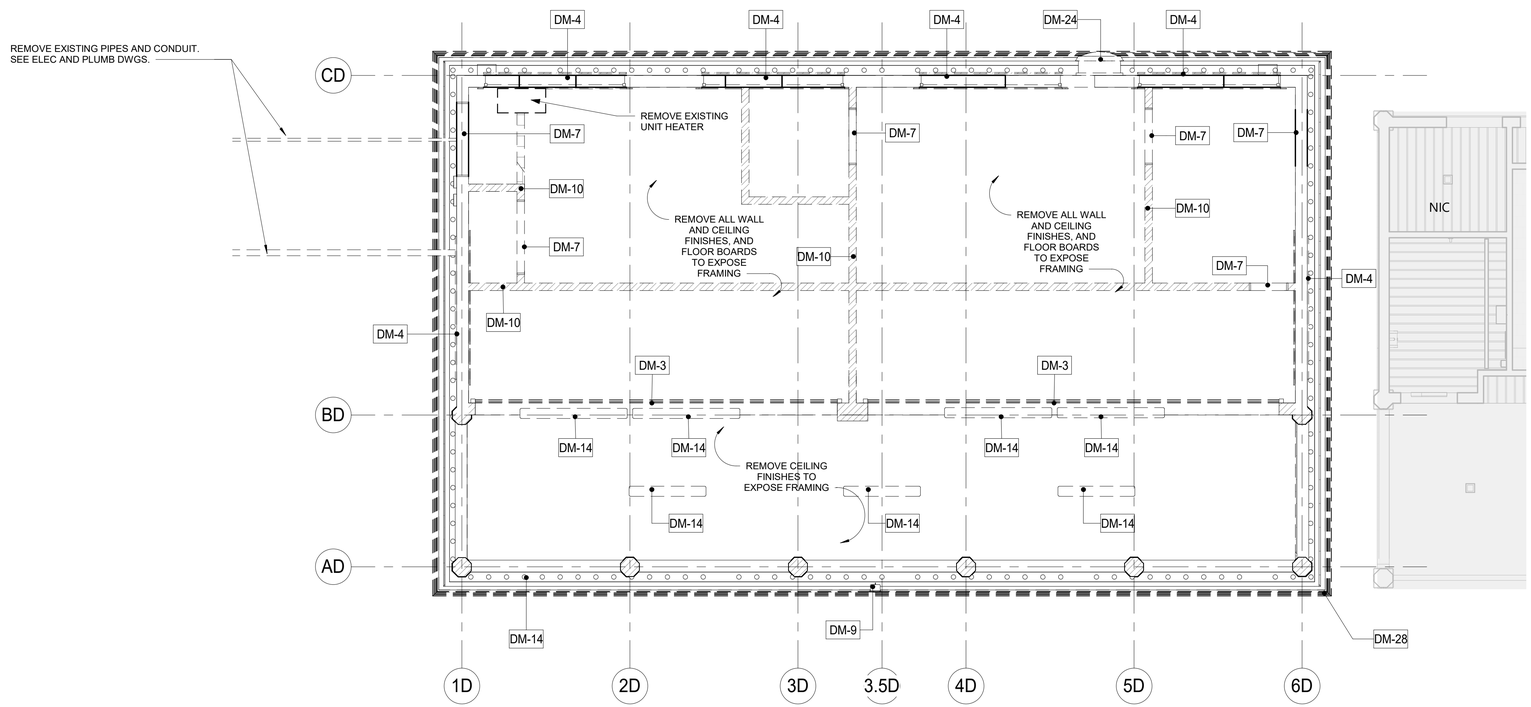


1 CXD - DEMO RCP
1/4" = 1'-0"

## DEMOLITION LEGEND

INDICATES DEMOLITION

DM - # DEMOLITION KEY NOTES

SHINGLES TO BE REMOVED

NIC INDICATES N.I.C.

## DEMOLITION NOTES:

1. THE GENERAL CONTRACTOR SHALL VISIT THE SITE AND FAMILIARIZE HIM/HERSELF WITH EXISTING CONDITIONS AND REQUIREMENTS OF THE WORK. THE GENERAL CONTRACTOR SHALL FIELD VERIFY EXACT QUANTITIES OF ALL ITEMS TO BE REMOVED.
2. THE CONTRACTOR SHALL PHOTOGRAPH AND DOCUMENT EXISTING HISTORIC DECORATIVE TRIMS INCLUDING SIZES AND PROFILES PRIOR TO ENVIRONMENTAL REMEDIATION WORK START.
3. ITEMS TO BE REMOVED / DEMOLISHED AS INDICATED ON THE DRAWINGS ARE INTENDED TO SHOW THE GENERAL SCOPE OF THE DEMOLITION WORK. THE DRAWINGS DO NOT REPRESENT IN DETAIL ALL ITEMS OR SITUATIONS THAT MAY BE ENCOUNTERED DURING THE DEMOLITION. IT IS THE CONTRACTOR'S RESPONSIBILITY TO REMOVE, PROTECT, AND MAKE CORRECTIONS AS REQUIRED TO ACHIEVE DRAWING INTENT. THE GENERAL CONTRACTOR SHALL NOTIFY ARCHITECT OF ANY STRUCTURAL NONCONFORMITY TO PLANS AND SPECIFICATIONS.
4. PLAYLAND RESERVES THE RIGHT TO REVIEW ALL MATERIALS DESIGNATED FOR REMOVAL AND TO RETAIN OWNERSHIP OF SUCH MATERIALS. IF PLAYLAND RETAINS ANY MATERIAL THE CONTRACTOR SHALL MAKE ARRANGEMENTS WITH THE PLAYLAND'S SUPERINTENDENT TO HAVE THOSE MATERIALS REMOVED AND STORED OFF SITE AT NO ADDITIONAL COST.
5. DEMOLITION OF THE EXISTING BUILDING SHALL INCLUDE REMOVAL OF THE EXISTING FOUNDATIONS FOR THEIR ENTIRE DEPTH TO ACCOMMODATE INSTALLATION OF NEW FOUNDATIONS.
6. THE CONTRACTOR SHALL USE EXTREME CAUTION IN AREAS OF DEMOLITION WHICH MAY DISTURB EXISTING STRUCTURES. TEMPORARY SHORING, BARRICADES, DUST PARTITIONS, ETC. SHALL BE PROVIDED AS REQUIRED TO PROTECT ALL EXISTING STRUCTURES AND PROPERTY.
7. SEE STRUCTURAL, ELECTRICAL, SPRINKLER, AND PLUMBING DRAWINGS FOR RELATED DEMOLITION WORK.
8. VERIFY LOCATION OF EXISTING STRUCTURES AND SHORE UP ROOF/FLOOR ABOVE AS REQUIRED BEFORE REMOVING WALL.
9. REMOVAL OF ALL CEILINGS AND MOUNTED ITEMS THROUGHOUT THE CONTRACT AREA INCLUDE ANCHORING HARDWARE, AND MISCELLANEOUS FASTENINGS, ETC.
10. WALLS SHALL BE REMOVED AS INDICATED ON DEMOLITION PLANS. ALL UTILITIES IN WALL SHALL BE CUT TO BELOW SLAB OR ABOVE THE CEILING.
11. REMOVE ALL EXISTING ELECTRICAL AND PLUMBING LINES NOT TO BE RE-USED. CAP PLUMBING LINES AS REQUIRED. ELECTRICAL WIRING SHALL BE DISCONNECTED BACK TO THE NEAREST ACTIVE LOCATION. ALL ABANDONED COMMUNICATION CABLES (DATA, TELEPHONE, FIRE ALARM, AND AUDIO/VIDEO CABLES) SHALL BE REMOVED TO SOURCE IF NOT TAGGED FOR FUTURE USE.
12. DEMOLITION PROCEDURES ARE THE SOLE RESPONSIBILITY OF THE GENERAL CONTRACTOR OF THIS CONTRACT. CONTRACTOR TO "CUT OFF" ALL NECESSARY UTILITIES REQUIRED TO OBTAIN DESIRED RESULTS. CONTRACTOR TO OBTAIN "SHUT OFF" APPROVALS FROM PLAYLAND PRIOR TO SCHEDULED DEMOLITION.
13. THE GENERAL CONTRACTOR SHALL PATCH AND REPAIR ALL EXISTING CONSTRUCTION DISTURBED BY THE WORK AND PREPARE FOR NEW FINISH AS SHOWN ON THE INTERIOR ELEVATIONS.
14. THE EXISTING WOOD FLOOR SHALL BE CLEANED TO ALLOW FOR THE APPLICATION OF NEW FLOOR COATING.
15. THE GENERAL CONTRACTOR SHALL BE RESPONSIBLE FOR THE CLEANING UP AND HAULING AWAY OF ALL TRASH AND DEBRIS ON A REGULAR BASIS DURING THE CONSTRUCTION PERIOD.
16. ALL DEBRIS REMOVED FROM THE SITE SHALL BE DISPOSED OF IN A LEGAL MANNER.
17. EXISTING EXITS SHALL REMAIN FULLY ACCESSIBLE AND UNOBSTRUCTED DURING THE PROGRESS OF THE WORK.

## DEMO KEYNOTES

| | |
|---|---|
| DM-3 | REMOVE ROLL DOWN DOOR AND ASSOCIATED HARDWARE. |
| DM-4 | REMOVE EXISTING WINDOW & FRAME. |
| DM-7 | REMOVE EXISTING DOOR & FRAME. |
| DM-9 | CONTRACTOR TO REMOVE ANY REMAINING EQUIPMENT AND BUILDING CONTENT. CONTENT MAY INCLUDE BUT NOT LIMITED TO REFRIGERATOR, STORAGE, RACKS, AC UNITS, GAMES ETC. |
| DM-10 | REMOVE INTERIOR PARTITION. |
| DM-14 | REMOVE EXISTING LIGHTING FIXTURES AND ELECTRICAL WIRING CONNECTED TO THESE FIXTURES. SEE ELECTRICAL FOR DETAILS. |
| DM-24 | REMOVE EXISTING EXHAUST. SEE MECHANICAL DRAWINGS. |
| DM-28 | REMOVE EXISTING GUTTER, FASCIA, AND SOFFITS. |

8/30/2022 4:15:16 PM

CONSULTANT INFORMATION
The LiRo Group
3 Aerial Way, Syosset, New York 11791
(516) 938-5476 www.liro.com

CONSULTANT SEAL
REGISTERED ARCHITECT ROBERT D. VONNOLA 023280 STATE OF NEW YORK

| REVISION NUMBER | DATE | MADE BY | APP'D BY | REVISION |
|---|---|---|---|---|

RECORD DRAWING CERTIFICATION
☐ AS BUILT – CHANGES AS NOTED ☐ AS BUILT – NO CHANGES

CONTRACTOR
NAME
SIGNATURE
TITLE DATE

PROJECT COORDINATOR
NAME
SIGNATURE
TITLE DATE

WESTCHESTER COUNTY, NEW YORK
DEPARTMENT OF PUBLIC WORKS AND TRANSPORTATION
DIVISION OF ENGINEERING

**INFRASTRUCTURE REHABILITATION PHASE 3**
**PLAYLAND PARK, RYE, NEW YORK**
**CROSS AXIS BUILDING D**
**CXD - RCP DEMO PLAN**

CONTRACT NUMBER 22-523
SHEET NUMBER **CXD-A-04**
DWG NO.: 197 of 664
SCALE: **As indicated**
DATE: **08/23/2022**
DPW FILE NUMBER **1-118-A-946-0**
REV. NO. 0

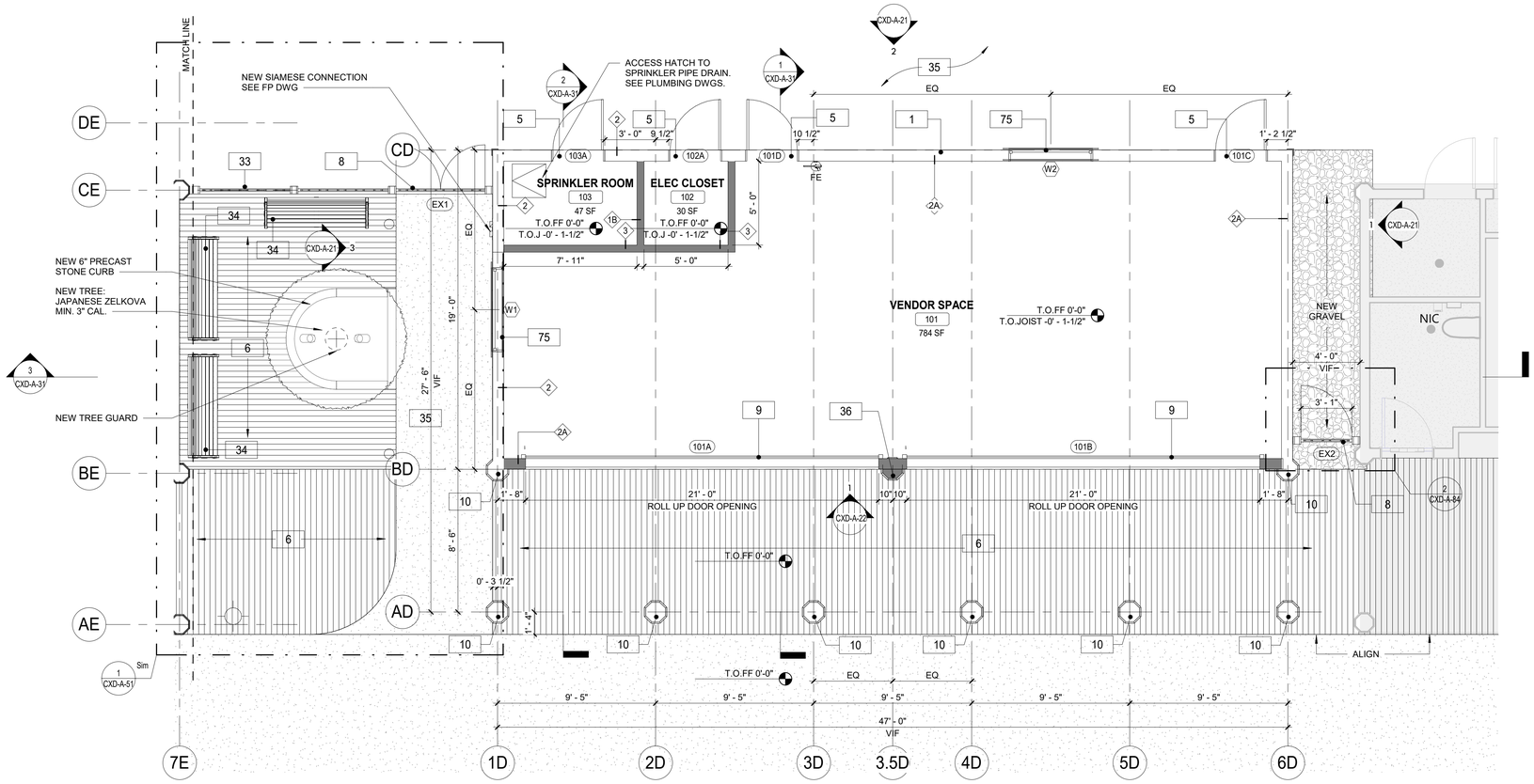


1 GROUND FLOOR PLAN CXD
1/4" = 1'-0"

## PLAN LEGEND:

| | | | |
|---|---|---|---|
| | NEW IPE WOOD DECK | 101 | DOOR TAG |
| | NEW CONSTRUCTION | 1i | WINDOW TAG |
| NIC | NOT IN CONTRACT | FE | FIRE EXTINGUISHER |
| # | KEY NOTES | FD | FLOOR DRAIN |
| 1i | WALL TAG | | |

## FLOOR PLAN NOTES:

1. DIMENSIONS ARE TO FACE OF GYPSUM WALL BOARD, GRID LINES, OR CENTERLINE OF COLUMN. ALL ELEVATIONS ARE NOTED FROM FINISH FLOOR ELEVATIONS.
2. PROVIDE DRYWALL TRIM AT ALL EXPOSED EDGES AND CORNERS.
3. MINIMUM DIMENSION FROM ANY CORNER OR WALL TO FRAMING STUD AT DOOR JAMB OPENING SHALL BE 4" U.N.O.
4. PROVIDE FIRE RETARDANT WOOD BLOCKING FOR ANY WALL MOUNTED EQUIPMENT OR ACCESSORIES. COORDINATE ALL BLOCKING REQUIREMENTS NECESSARY WITH OTHER TRADES.
5. THE CONTRACTOR SHALL VERIFY DIMENSIONS OF THE EXISTING SPACE AND OF ANY EXISTING CONSTRUCTION TO REMAIN BY ACTUAL MEASUREMENT BEFORE ANY WORK IS PERFORMED. IF ANY MEASUREMENTS DIFFER FROM DIMENSIONS SHOWN ON PLAN, GC IS TO NOTIFY THE ARCHITECT IMMEDIATELY. THE CONTRACTOR SHALL BE RESPONSIBLE FOR CORRECTING ANY AND ALL DISCREPANCIES FOUND AFTER THE WORK IS PERFORMED, AT NO ADDITIONAL EXPENSE TO THE OWNER.
6. THE GC SHALL PROVIDE CAULK JOINTS WHERE GYP BD MEETS THE FLOOR OR ROOF DECK.
7. THE GC SHALL BE RESPONSIBLE FOR COORDINATING WITH OWNER ON ALL WORK TO BE PERFORMED BY THE OWNER. ANY POTENTIAL CONFLICTS OR DELAYS CAUSED BY THE OWNER'S SUBCONTRACTORS MUST BE DOCUMENTED IN WRITING TO THE OWNER BEFORE THE DELAY IS ACTUALLY INCURRED FOR IT TO BE CONSIDERED. OTHERWISE THE GC WILL BE RESPONSIBLE FOR MEETING THE SCHEDULE AS OUTLINED IN THE CONTRACT.
8. THE CONTRACTOR TO VERIFY ALL FINISHED DIMENSIONS. FIELD CONDITIONS ALTERING ANY DIMENSIONS SHOULD BE BROUGHT TO THE ATTENTION OF THE OWNER AND ARCHITECT.
9. THE CONTRACTOR SHALL SUPPLY ALL MATERIAL, LABOR, AND COORDINATION REQUIRED FOR THEINSTALLATION OF ALL OWNER-SUPPLIED ITEMS AS DESCRIBED IN THE DOCUMENTS, U.N.O.
10. THE CONTRACTOR IS RESPONSIBLE FOR ALL FLOOR AND WALL PENETRATIONS FOR ELECTRICAL AND MECHANICAL WORK. ALL SUCH OPENING SHALL BE FRAMED AND REINFORCED.
11. FLOOR SURFACES SHALL BE LEVELED TO ASSURE SMOOTH SURFACE FOR FINISH FLOOR INSTALLATION.
12. THE CONTRACTOR. TO COORDINATE ALL UTILITY STUB-UPS AND LOCATION OF ALL EQUIPMENT PRIOR TO INSTALLING ANY ONE ITEM.
13. PROVIDE PAINTED ACCESS PANELS IN WALLS & CEILING AT CONCEALED ITEMS SUCH AS VALVES, ONTROLS, SWITCHES OR ANY OTHER ITEMS THAT REQUIRES ACCESS. GC O DETERMINE ACCESS ANEL LOCATION W/ ARCHITECT PRIOR TO INSTALLATION.

## CONSTRUCTION KEYNOTES

| | |
|---|---|
| 1 | PROVIDE AND INSTALL NEW 1x8 MILLED YELLOW PINE - TONGUE AND GROOVE - NO BEVEL |
| 5 | PROVIDE AND INSTALL DOOR INCLUDING FRAME, SILL, LINTEL AND ANY ASSOCIATE HARDWARE. SEE DOOR SCHEDULE. |
| 6 | INSTALL NEW IPE DECKING. SEE STRUCTURAL FOR DETAILS. |
| 8 | PROVIDE AND INSTALL GATE. SEE DETAILS. |
| 9 | PROVIDE AND INSTALL ROLL DOWN DOOR. SEE DETAILS AND SCHEDULE. |
| 10 | PROVIDE AND INSTALL COLUMN ENCLOSURES. SEE DETAILS. |
| 33 | NEW WOOD FENCE. SEE DETAILS. CXD-A-84 |
| 34 | PROVIDE NEW BENCH. |
| 35 | NEW ASPHALT PAVING. SEE CIVIL DRAWINGS. |
| 36 | NEW PILASTER TO MATCH COLUMN ENCLOSURE AS INDICATED |
| 75 | REINSTALL SALVAGED WINDOWS FROM CXF (SEE CXF-A-01). |

8/30/2022 4:15:20 PM

CONSULTANT INFORMATION
The LiRo Group
3 Aerial Way, Syosset, New York 11791
(516) 938-5476 www.liro.com

CONSULTANT SEAL
REGISTERED ARCHITECT ROBERT D. YOUNG JR. 023280 STATE OF NEW YORK

| REVISION NUMBER | DATE | MADE BY | APP'D BY | REVISION |
|---|---|---|---|---|

RECORD DRAWING CERTIFICATION
☐ AS BUILT – CHANGES AS NOTED ☐ AS BUILT – NO CHANGES

CONTRACTOR
NAME
SIGNATURE
TITLE DATE

PROJECT COORDINATOR
NAME
SIGNATURE
TITLE DATE

WESTCHESTER COUNTY, NEW YORK
DEPARTMENT OF PUBLIC WORKS AND TRANSPORTATION
DIVISION OF ENGINEERING

**INFRASTRUCTURE REHABILITATION PHASE 3**
**PLAYLAND PARK, RYE, NEW YORK**
**CROSS AXIS BUILDING D**
**CXD - GROUND FLOOR PLAN**

| | |
|---|---|
| CONTRACT NUMBER | 22-523 |
| SHEET NUMBER | CXD-A-11 |
| DWG NO.: | 198 of 664 |
| SCALE: | As indicated |
| DATE: | 08/23/2022 |
| DPW FILE NUMBER | 1-118-A-947-0 |
| REV. NO. | 0 |

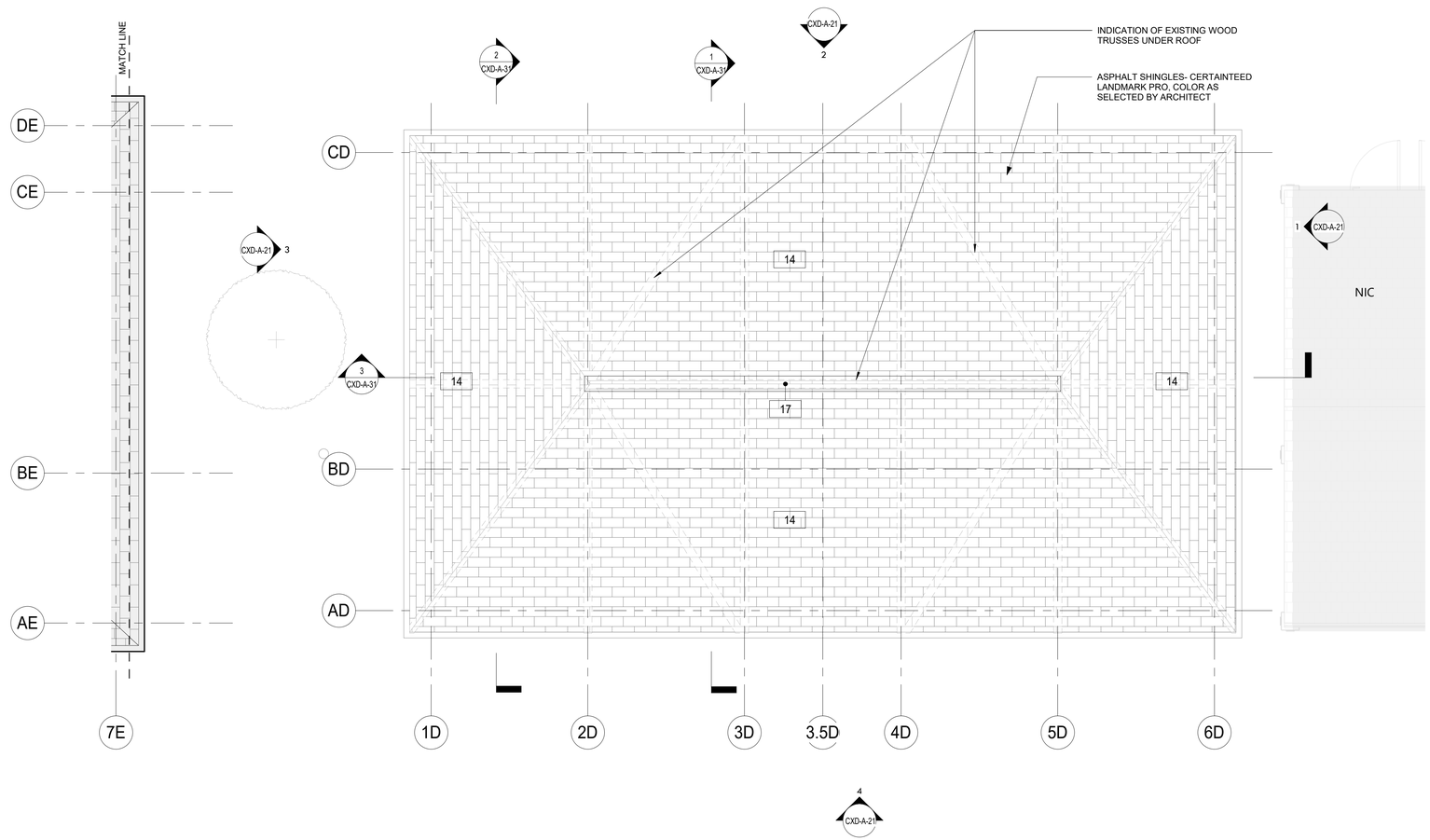


1 ROOF PLAN CXD
1/4" = 1'-0"

## PLAN LEGEND:

| | | | |
|---|---|---|---|
| | NEW IPE WOOD DECK | 101 | DOOR TAG |
| | NEW CONSTRUCTION | 1i | WINDOW TAG |
| NIC | NOT IN CONTRACT | FE | FIRE EXTINGUISHER |
| # | KEY NOTES | FD | FLOOR DRAIN |
| 1i | WALL TAG | | |

## FLOOR PLAN NOTES:

1. DIMENSIONS ARE TO FACE OF GYPSUM WALL BOARD, GRID LINES, OR CENTERLINE OF COLUMN. ALL ELEVATIONS ARE NOTED FROM FINISH FLOOR ELEVATIONS.
2. PROVIDE DRYWALL TRIM AT ALL EXPOSED EDGES AND CORNERS.
3. MINIMUM DIMENSION FROM ANY CORNER OR WALL TO FRAMING STUD AT DOOR JAMB OPENING SHALL BE 4" U.N.O.
4. PROVIDE FIRE RETARDANT WOOD BLOCKING FOR ANY WALL MOUNTED EQUIPMENT OR ACCESSORIES. COORDINATE ALL BLOCKING REQUIREMENTS NECESSARY WITH OTHER TRADES.
5. THE CONTRACTOR SHALL VERIFY DIMENSIONS OF THE EXISTING SPACE AND OF ANY EXISTING CONSTRUCTION TO REMAIN BY ACTUAL MEASUREMENT BEFORE ANY WORK IS PERFORMED. IF ANY MEASUREMENTS DIFFER FROM DIMENSIONS SHOWN ON PLAN, GC IS TO NOTIFY THE ARCHITECT IMMEDIATELY. THE CONTRACTOR SHALL BE RESPONSIBLE FOR CORRECTING ANY AND ALL DISCREPANCIES FOUND AFTER THE WORK IS PERFORMED, AT NO ADDITIONAL EXPENSE TO THE OWNER.
6. THE GC SHALL PROVIDE CAULK JOINTS WHERE GYP BD MEETS THE FLOOR OR ROOF DECK.
7. THE GC SHALL BE RESPONSIBLE FOR COORDINATING WITH OWNER ON ALL WORK TO BE PERFORMED BY THE OWNER. ANY POTENTIAL CONFLICTS OR DELAYS CAUSED BY THE OWNER'S SUBCONTRACTORS MUST BE DOCUMENTED IN WRITING TO THE OWNER BEFORE THE DELAY IS ACTUALLY INCURRED FOR IT TO BE CONSIDERED. OTHERWISE THE GC WILL BE RESPONSIBLE FOR MEETING THE SCHEDULE AS OUTLINED IN THE CONTRACT.
8. THE CONTRACTOR TO VERIFY ALL FINISHED DIMENSIONS. FIELD CONDITIONS ALTERING ANY DIMENSIONS SHOULD BE BROUGHT TO THE ATTENTION OF THE OWNER AND ARCHITECT.
9. THE CONTRACTOR SHALL SUPPLY ALL MATERIAL, LABOR, AND COORDINATION REQUIRED FOR THEINSTALLATION OF ALL OWNER-SUPPLIED ITEMS AS DESCRIBED IN THE DOCUMENTS, U.N.O.
10. THE CONTRACTOR IS RESPONSIBLE FOR ALL FLOOR AND WALL PENETRATIONS FOR ELECTRICAL AND MECHANICAL WORK. ALL SUCH OPENING SHALL BE FRAMED AND REINFORCED.
11. FLOOR SURFACES SHALL BE LEVELED TO ASSURE SMOOTH SURFACE FOR FINISH FLOOR INSTALLATION.
12. THE CONTRACTOR. TO COORDINATE ALL UTILITY STUB-UPS AND LOCATION OF ALL EQUIPMENT PRIOR TO INSTALLING ANY ONE ITEM.
13. PROVIDE PAINTED ACCESS PANELS IN WALLS & CEILING AT CONCEALED ITEMS SUCH AS VALVES, ONTROLS, SWITCHES OR ANY OTHER ITEMS THAT REQUIRES ACCESS. GC O DETERMINE ACCESS ANEL LOCATION W/ ARCHITECT PRIOR TO INSTALLATION.

**CONSTRUCTION KEYNOTES**

8/30/2022 4:15:22 PM

CONSULTANT INFORMATION

The LiRo Group
3 Aerial Way, Syosset, New York 11791
(516) 938-5476 www.liro.com

CONSULTANT SEAL

REGISTERED ARCHITECT ROBERT D. YOUNG JR. 023280 STATE OF NEW YORK

| REVISION NUMBER | DATE | MADE BY | APP'D BY | REVISION |
|---|---|---|---|---|
| | | | | |

RECORD DRAWING CERTIFICATION

☐ AS BUILT – CHANGES AS NOTED ☐ AS BUILT – NO CHANGES

CONTRACTOR
NAME
SIGNATURE
TITLE DATE

PROJECT COORDINATOR
NAME
SIGNATURE
TITLE DATE

WESTCHESTER COUNTY, NEW YORK
DEPARTMENT OF PUBLIC WORKS AND TRANSPORTATION
DIVISION OF ENGINEERING

**INFRASTRUCTURE REHABILITATION PHASE 3**
**PLAYLAND PARK, RYE, NEW YORK**
**CROSS AXIS BUILDING D**
**CXD - ROOF PLAN**

| | |
|---|---|
| CONTRACT NUMBER | 22-523 |
| SHEET NUMBER | CXD-A-12 |
| DWG NO.: | 199 of 664 |
| SCALE: | As indicated |
| DATE: | 08/23/2022 |
| DPW FILE NUMBER | 1-118-A-948-0 |
| REV. NO. | 0 |

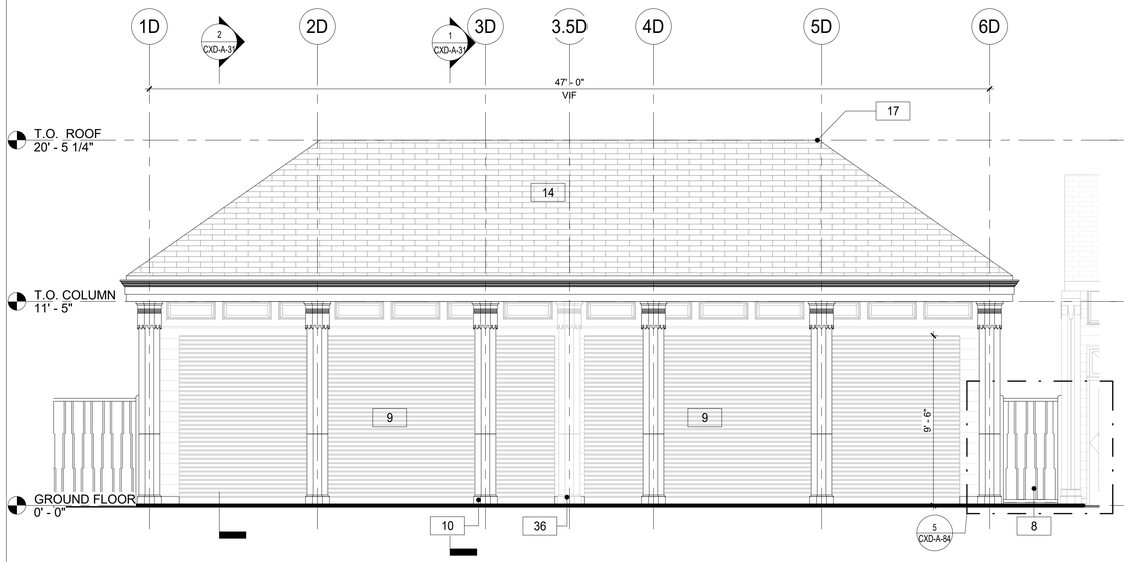


4 CXD- BUILDING ELEVATION - NORTH
1/4" = 1'-0"

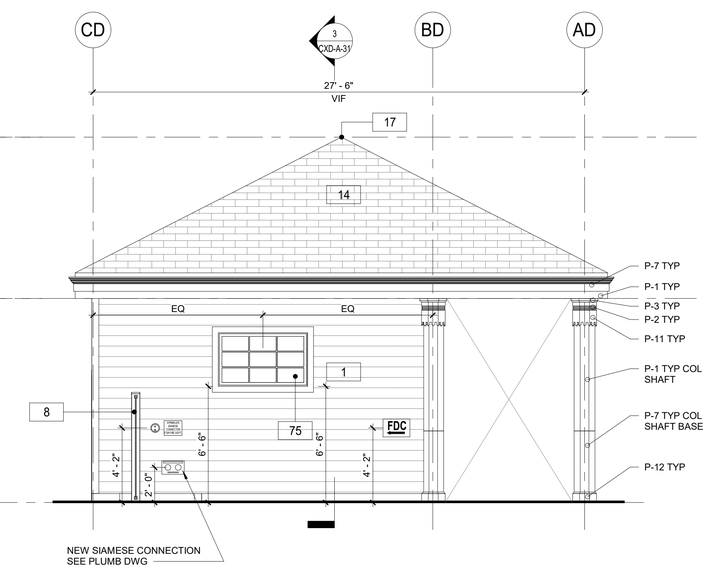


3 CXD - BUILDING ELEVATION - EAST
1/4" = 1'-0"

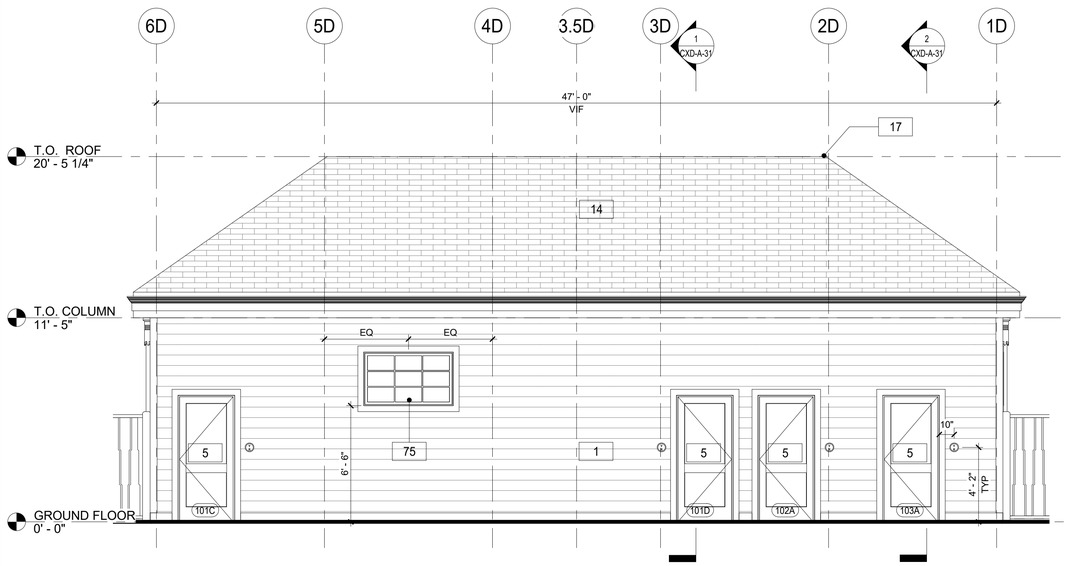


2 CXD - BUILDING ELEVATION - SOUTH
1/4" = 1'-0"

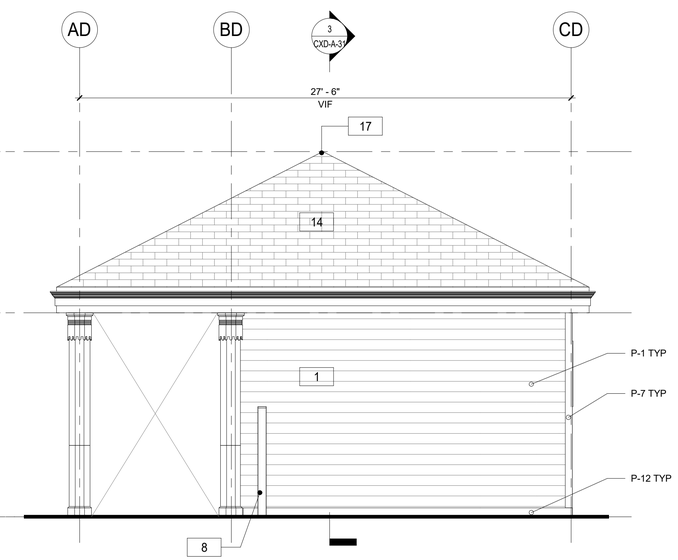


1 CXD - BUILDING ELEVATION - WEST
1/4" = 1'-0"

## FLOOR PLAN GENERAL NOTES

1. DIMENSIONS ARE TO FACE OF GYPSUM WALL BOARD, GRID LINES, OR CENTERLINE OF COLUMN. ALL ELEVATIONS ARE NOTED FROM FINISH FLOOR ELEVATIONS.
2. PROVIDE DRYWALL TRIM AT ALL EXPOSED EDGES AND CORNERS.
3. MINIMUM DIMENSION FROM ANY CORNER OR WALL TO FRAMING STUD AT DOOR JAMB OPENING SHALL BE 4" (U.N.O.).
4. PROVIDE METAL BLOCKING FOR ANY WALL MOUNTED EQUIPMENT OR ACCESSORIES. COORDINATE ALL BLOCKING REQUIREMENTS NECESSARY WITH OTHER TRADES.
5. THE GC SHALL VERIFY DIMENSIONS OF THE EXISTING SPACE AND OF ANY EXISTING CONSTRUCTION TO REMAIN BY ACTUAL MEASUREMENT BEFORE ANY WORK IS PERFORMED. IF ANY MEASUREMENTS DIFFER FROM DIMENSIONS SHOWN ON PLAN, GC IS TO NOTIFY THE ARCHITECT IMMEDIATELY. THE GC SHALL BE RESPONSIBLE FOR CORRECTING ANY AND ALL DISCREPANCIES FOUND AFTER THE WORK IS PERFORMED, AT NO ADDITIONAL EXPENSE TO THE OWNER.
6. GC TO VERIFY ALL FINISHED DIMENSIONS. FIELD CONDITIONS ALTERING ANY DIMENSIONS SHOULD BE BROUGHT TO THE ATTENTION OF THE OWNER AND ARCHITECT.
7. THE GC SHALL PROVIDE CAULK JOINTS WHERE GYP. BD. MEETS THE FLOOR OR ROOF DECK.
8. THE GC SHALL BE RESPONSIBLE FOR COORDINATING WITH OWNER ON ALL WORK TO BE PERFORMED BY THE OWNER. ANY POTENTIAL CONFLICTS OR DELAYS CAUSED BY THE OWNER'S SUBCONTRACTORS MUST BE DOCUMENTED IN WRITING TO THE OWNER BEFORE THE DELAY IS ACTUALLY INCURRED FOR IT TO BE CONSIDERED. OTHERWISE THE GC WILL BE RESPONSIBLE FOR MEETING THE SCHEDULE AS OUTLINED IN THE CONTRACT.
9. THE GC SHALL SUPPLY ALL MATERIAL, LABOR, AND COORDINATION REQUIRED FOR THE INSTALLATION OF ALL OWNER-SUPPLIED ITEMS AS DESCRIBED IN THE DOCUMENTS, U.N.O.
10. THE GC IS RESPONSIBLE FOR ALL FLOOR AND WALL PENETRATIONS FOR ELECTRICAL AND MECHANICAL WORK. ALL SUCH OPENING SHALL BE FRAMED AND REINFORCED.
11. FLOOR SURFACES SHALL BE LEVELED TO ASSURE SMOOTH SURFACE FOR FINISH FLOOR INSTALLATION. GC SHALL ALSO PAY SPECIAL ATTENTION THAT ALL WALL SURFACES ARE SMOOTH WHERE MURALS WILL BE DIRECTLY APPLIED TO WALL.
12. GC TO COORDINATE ALL UTILITY STUB-UPS AND LOCATION OF ALL EQUIPMENT PRIOR TO INSTALLING ANY ONE ITEM.
13. REFER TO SHEET CXD-A-80 FOR PARTITION TYPE INFORMATION.
14. PROVIDE PAINTED ACCESS PANELS IN WALLS & CEILING AT CONCEALED ITEMS SUCH AS VALVES, CONTROLS, SWITCHES OR ANY OTHER ITEMS THAT REQUIRES ACCESS. GC TO DETERMINE ACCESS PANEL LOCATION W/ ARCHITECT PRIOR TO INSTALLATION.

## PAINTING SCHEDULE

| KEY | COLOR | MANUFACTURER | REMARKS |
|---|---|---|---|
| P- 1 | MYSTICAL POWERS #901 | BENJAMIN MOORE | |
| P- 2 | HERITAGE RED #HC-181 | BENJAMIN MOORE | |
| P- 3 | NEW YORK STATE OF MIND #805 | BENJAMIN MOORE | |
| P- 4 | LAZY SUNDAY #803 | BENJAMIN MOORE | |
| P- 5 | DEEP JUNGLE #595 | BENJAMIN MOORE | |
| P- 6 | LUCK OF THE IRISH #588 | BENJAMIN MOORE | |
| P- 7 | MAJOLICA GREEN #0013 | SHERWIN WILLIAMS | |
| P- 8 | ANTELOPE CANYON #125 | BENJAMIN MOORE | |
| P- 9 | FORSYTHIA #6907 | SHERWIN WILLIAMS | |
| P- 10 | CAPE BLUE #1642 | BENJAMIN MOORE | |
| P- 11 | WHITE SNOW #9541 | SHERWIN WILLIAMS | |
| P- 12 | TRICORN BLACK #6258 | SHERWIN WILLIAMS | |
| P- 13 | READY MIX WHITE | BENJAMIN MOORE | INTERIOR USE ONLY |
| P- 14 | STUCCO PAINT TO MATCH P-1 | KEIM | |
| P- 15 | VAN DEUSEN BLUE #HC-156 | BENJAMIN MOORE | |
| P- 16 | #RAL9001 | - | TYP. ROLL UP DOOR |
| P- 17 | FLORIDA BEACHES #900 | BENJAMIN MOORE | |
| P- 18 | PIRATES COVE PEACH #903 | BENJAMIN MOORE | |
| P- 19 | JADITE #6459 | SHERWIN WILLIAMS | |
| P- 20 | DECISIVE YELLOW #6902 | SHERWIN WILLIAMS | |

## CONSTRUCTION KEYNOTES

| | |
|---|---|
| 1 | PROVIDE AND INSTALL NEW 1x8 MILLED YELLOW PINE - TONGUE AND GROOVE - NO BEVEL |
| 5 | PROVIDE AND INSTALL DOOR INCLUDING FRAME, SILL, LINTEL AND ANY ASSOCIATE HARDWARE. SEE DOOR SCHEDULE. |
| 8 | PROVIDE AND INSTALL GATE. SEE DETAILS. |
| 9 | PROVIDE AND INSTALL ROLL DOWN DOOR. SEE DETAILS AND SCHEDULE. |
| 10 | PROVIDE AND INSTALL COLUMN ENCLOSURES. SEE DETAILS. |
| 14 | PROVIDE NEW ASPHALT SHINGLE ROOFING,UNDERLAYMENT, AND REPLACE IN KIND EXISTING DECKING AS REQUIRED (COORDINATE WITH STRUCTURAL). |
| 17 | PROVIDE AND INSTALL RIDGE VENT AT ROOF HIPS. |
| 36 | NEW PILASTER TO MATCH COLUMN ENCLOSURE AS INDICATED |
| 75 | REINSTALL SALVAGED WINDOWS FROM CXF (SEE CXF-A-01). |

8/30/2022 4:15:25 PM

CONSULTANT INFORMATION
The LiRo Group
3 Aerial Way, Syosset, New York 11791
(516) 938-5476 www.liro.com

CONSULTANT SEAL
REGISTERED ARCHITECT ROBERT D. YOUNG, JR. 023280 STATE OF NEW YORK

| REVISION NUMBER | DATE | MADE BY | APP'D BY | REVISION |
|---|---|---|---|---|

RECORD DRAWING CERTIFICATION
☐ AS BUILT – CHANGES AS NOTED ☐ AS BUILT – NO CHANGES

CONTRACTOR
NAME
SIGNATURE
TITLE DATE

PROJECT COORDINATOR
NAME
SIGNATURE
TITLE DATE

WESTCHESTER COUNTY, NEW YORK
DEPARTMENT OF PUBLIC WORKS AND TRANSPORTATION
DIVISION OF ENGINEERING

**INFRASTRUCTURE REHABILITATION PHASE 3**
**PLAYLAND PARK, RYE, NEW YORK**
**CROSS AXIS BUILDING D**
**CXD - EXTERIOR BUILDING ELEVATIONS**

CONTRACT NUMBER 22-523
SHEET NUMBER **CXD-A-21**
DWG NO.: 200 of 664
SCALE: **As indicated**
DATE: **08/23/2022**
DPW FILE NUMBER **1-118-A-949-0**
REV. NO. 0

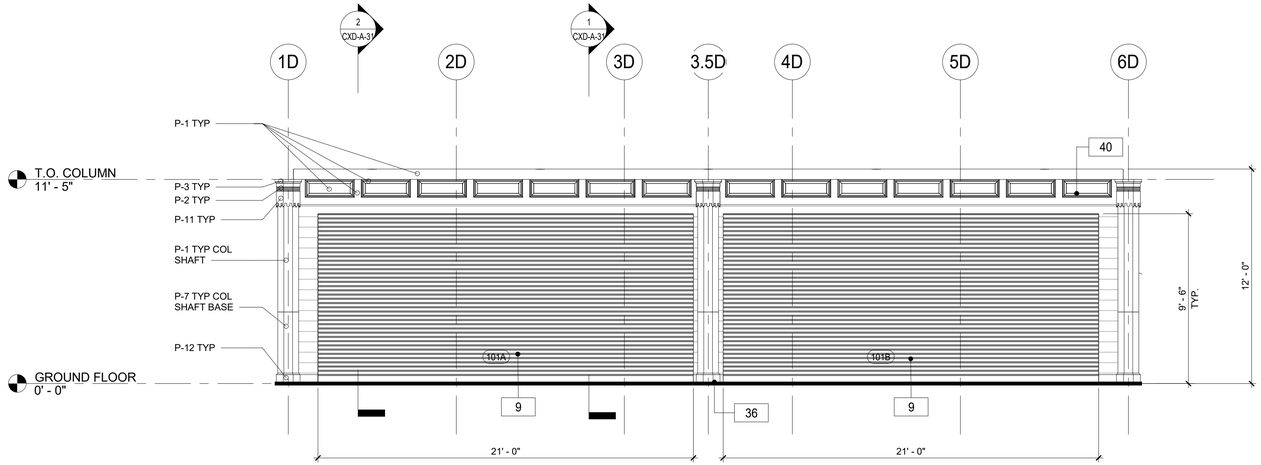


1 CXD - PORCH ELEVATION - SOUTH

1/4" = 1'-0"

## FLOOR PLAN GENERAL NOTES

1. DIMENSIONS ARE TO FACE OF GYPSUM WALL BOARD, GRID LINES, OR CENTERLINE OF COLUMN. ALL ELEVATIONS ARE NOTED FROM FINISH FLOOR ELEVATIONS.
2. PROVIDE DRYWALL TRIM AT ALL EXPOSED EDGES AND CORNERS.
3. MINIMUM DIMENSION FROM ANY CORNER OR WALL TO FRAMING STUD AT DOOR JAMB OPENING SHALL BE 4" (U.N.O.).
4. PROVIDE METAL BLOCKING FOR ANY WALL MOUNTED EQUIPMENT OR ACCESSORIES. COORDINATE ALL BLOCKING REQUIREMENTS NECESSARY WITH OTHER TRADES.
5. THE GC SHALL VERIFY DIMENSIONS OF THE EXISTING SPACE AND OF ANY EXISTING CONSTRUCTION TO REMAIN BY ACTUAL MEASUREMENT BEFORE ANY WORK IS PERFORMED. IF ANY MEASUREMENTS DIFFER FROM DIMENSIONS SHOWN ON PLAN, GC IS TO NOTIFY THE ARCHITECT IMMEDIATELY. THE GC SHALL BE RESPONSIBLE FOR CORRECTING ANY AND ALL DISCREPANCIES FOUND AFTER THE WORK IS PERFORMED, AT NO ADDITIONAL EXPENSE TO THE OWNER.
6. GC TO VERIFY ALL FINISHED DIMENSIONS. FIELD CONDITIONS ALTERING ANY DIMENSIONS SHOULD BE BROUGHT TO THE ATTENTION OF THE OWNER AND ARCHITECT.
7. THE GC SHALL PROVIDE CAULK JOINTS WHERE GYP. BD. MEETS THE FLOOR OR ROOF DECK.
8. THE GC SHALL BE RESPONSIBLE FOR COORDINATING WITH OWNER ON ALL WORK TO BE PERFORMED BY THE OWNER. ANY POTENTIAL CONFLICTS OR DELAYS CAUSED BY THE OWNER'S SUBCONTRACTORS MUST BE DOCUMENTED IN WRITING TO THE OWNER BEFORE THE DELAY IS ACTUALLY INCURRED FOR IT TO BE CONSIDERED. OTHERWISE THE GC WILL BE RESPONSIBLE FOR MEETING THE SCHEDULE AS OUTLINED IN THE CONTRACT.
9. THE GC SHALL SUPPLY ALL MATERIAL, LABOR, AND COORDINATION REQUIRED FOR THE INSTALLATION OF ALL OWNER-SUPPLIED ITEMS AS DESCRIBED IN THE DOCUMENTS, U.N.O.
10. THE GC IS RESPONSIBLE FOR ALL FLOOR AND WALL PENETRATIONS FOR ELECTRICAL AND MECHANICAL WORK. ALL SUCH OPENING SHALL BE FRAMED AND REINFORCED.
11. FLOOR SURFACES SHALL BE LEVELED TO ASSURE SMOOTH SURFACE FOR FINISH FLOOR INSTALLATION. GC SHALL ALSO PAY SPECIAL ATTENTION THAT ALL WALL SURFACES ARE SMOOTH WHERE MURALS WILL BE DIRECTLY APPLIED TO WALL.
12. GC TO COORDINATE ALL UTILITY STUB-UPS AND LOCATION OF ALL EQUIPMENT PRIOR TO INSTALLING ANY ONE ITEM.
13. REFER TO SHEET CXD-A-80 FOR PARTITION TYPE INFORMATION.
14. PROVIDE PAINTED ACCESS PANELS IN WALLS & CEILING AT CONCEALED ITEMS SUCH AS VALVES, CONTROLS, SWITCHES OR ANY OTHER ITEMS THAT REQUIRES ACCESS. GC TO DETERMINE ACCESS PANEL LOCATION W/ ARCHITECT PRIOR TO INSTALLATION.

## PAINTING SCHEDULE

| KEY | COLOR | MANUFACTURER | REMARKS |
|---|---|---|---|
| P- 1 | MYSTICAL POWERS #901 | BENJAMIN MOORE | |
| P- 2 | HERITAGE RED #HC-181 | BENJAMIN MOORE | |
| P- 3 | NEW YORK STATE OF MIND #805 | BENJAMIN MOORE | |
| P- 4 | LAZY SUNDAY #803 | BENJAMIN MOORE | |
| P- 5 | DEEP JUNGLE #595 | BENJAMIN MOORE | |
| P- 6 | LUCK OF THE IRISH #588 | BENJAMIN MOORE | |
| P- 7 | MAJOLICA GREEN #0013 | SHERWIN WILLIAMS | |
| P- 8 | ANTELOPE CANYON #125 | BENJAMIN MOORE | |
| P- 9 | FORSYTHIA #6907 | SHERWIN WILLIAMS | |
| P- 10 | CAPE BLUE #1642 | BENJAMIN MOORE | |
| P- 11 | WHITE SNOW #9541 | SHERWIN WILLIAMS | |
| P- 12 | TRICORN BLACK #6258 | SHERWIN WILLIAMS | |
| P- 13 | READY MIX WHITE | BENJAMIN MOORE | INTERIOR USE ONLY |
| P- 14 | STUCCO PAINT TO MATCH P-1 | KEIM | |
| P- 15 | VAN DEUSEN BLUE #HC-156 | BENJAMIN MOORE | |
| P- 16 | #RAL9001 | - | TYP. ROLL UP DOOR |
| P- 17 | FLORIDA BEACHES #900 | BENJAMIN MOORE | |
| P- 18 | PIRATES COVE PEACH #903 | BENJAMIN MOORE | |
| P- 19 | JADITE #6459 | SHERWIN WILLIAMS | |
| P- 20 | DECISIVE YELLOW #6902 | SHERWIN WILLIAMS | |

## CONSTRUCTION KEYNOTES

| | |
|---|---|
| 9 | PROVIDE AND INSTALL ROLL DOWN DOOR. SEE DETAILS AND SCHEDULE. |
| 36 | NEW PILASTER TO MATCH COLUMN ENCLOSURE AS INDICATED |
| 40 | NEW WOOD DETAIL PANELS ON EXTERIOR WALL |

8/30/2022 4:15:26 PM

CONSULTANT INFORMATION
The LiRo Group
3 Aerial Way, Syosset, New York 11791
(516) 938-5476 www.liro.com

CONSULTANT SEAL
REGISTERED ARCHITECT ROBERT D. DONDERO JR. 023220 STATE OF NEW YORK

| REVISION NUMBER | DATE | MADE BY | APP'D BY | REVISION |
|---|---|---|---|---|

RECORD DRAWING CERTIFICATION

☐ AS BUILT – CHANGES AS NOTED ☐ AS BUILT – NO CHANGES

CONTRACTOR
NAME
SIGNATURE
TITLE DATE

PROJECT COORDINATOR
NAME
SIGNATURE
TITLE DATE

WESTCHESTER COUNTY, NEW YORK
DEPARTMENT OF PUBLIC WORKS AND TRANSPORTATION
DIVISION OF ENGINEERING

**INFRASTRUCTURE REHABILITATION PHASE 3**
**PLAYLAND PARK, RYE, NEW YORK**
**CROSS AXIS BUILDING D**
**CXD - EXTERIOR BUILDING PORCH ELEVATIONS**

CONTRACT NUMBER 22-523
SHEET NUMBER **CXD-A-22**
DWG NO.: 201 of 664
SCALE: **As indicated**
DATE: **08/23/2022**
DPW FILE NUMBER **1-118-A-950-0**
REV. NO. 0

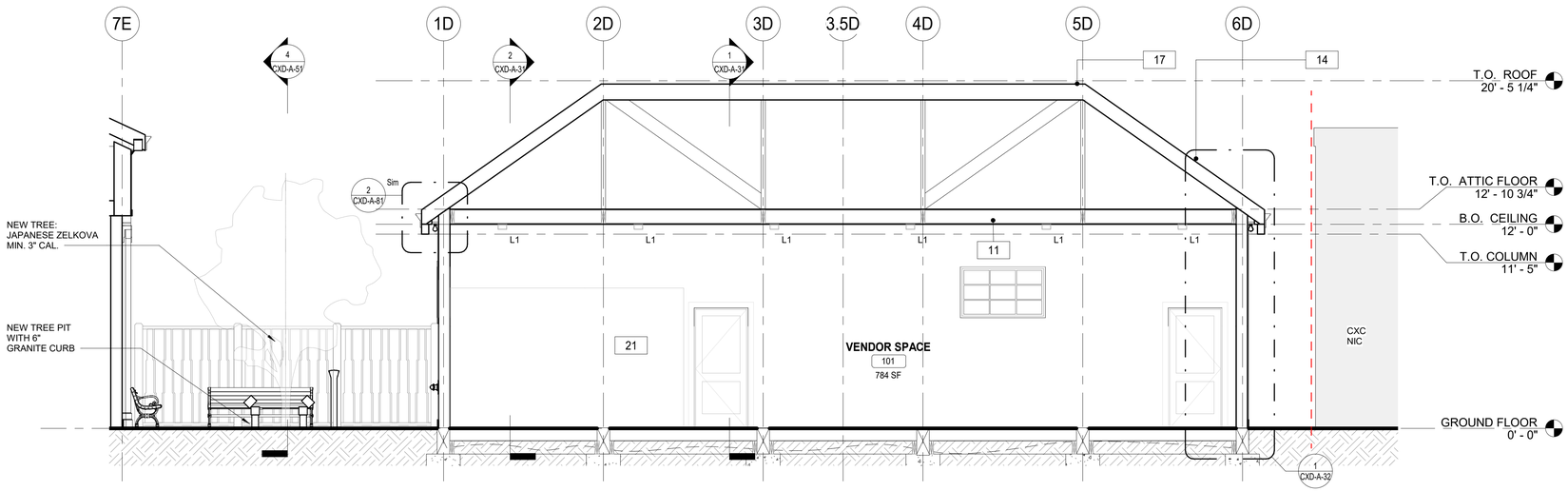


3 CXD - SECTION
1/4" = 1'-0"

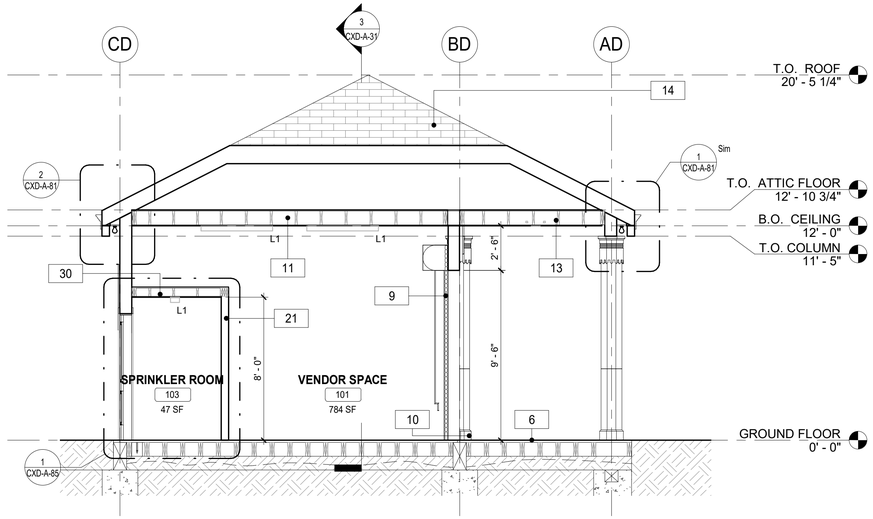


2 CXD - CROSS SECTION 2
1/4" = 1'-0"

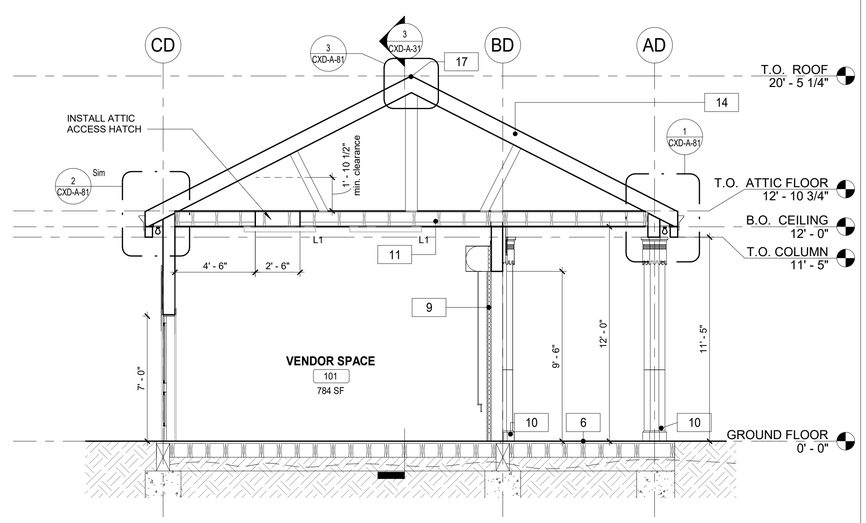


1 CXD - CROSS SECTION 1
1/4" = 1'-0"

## FLOOR PLAN GENERAL NOTES

1. DIMENSIONS ARE TO FACE OF GYPSUM WALL BOARD, GRID LINES, OR CENTERLINE OF COLUMN. ALL ELEVATIONS ARE NOTED FROM FINISH FLOOR ELEVATIONS.
2. PROVIDE DRYWALL TRIM AT ALL EXPOSED EDGES AND CORNERS.
3. MINIMUM DIMENSION FROM ANY CORNER OR WALL TO FRAMING STUD AT DOOR JAMB OPENING SHALL BE 4" (U.N.O.).
4. PROVIDE METAL BLOCKING FOR ANY WALL MOUNTED EQUIPMENT OR ACCESSORIES. COORDINATE ALL BLOCKING REQUIREMENTS NECESSARY WITH OTHER TRADES.
5. THE GC SHALL VERIFY DIMENSIONS OF THE EXISTING SPACE AND OF ANY EXISTING CONSTRUCTION TO REMAIN BY ACTUAL MEASUREMENT BEFORE ANY WORK IS PERFORMED. IF ANY MEASUREMENTS DIFFER FROM DIMENSIONS SHOWN ON PLAN, GC IS TO NOTIFY THE ARCHITECT IMMEDIATELY. THE GC SHALL BE RESPONSIBLE FOR CORRECTING ANY AND ALL DISCREPANCIES FOUND AFTER THE WORK IS PERFORMED, AT NO ADDITIONAL EXPENSE TO THE OWNER.
6. GC TO VERIFY ALL FINISHED DIMENSIONS. FIELD CONDITIONS ALTERING ANY DIMENSIONS SHOULD BE BROUGHT TO THE ATTENTION OF THE OWNER AND ARCHITECT.
7. THE GC SHALL PROVIDE CAULK JOINTS WHERE GYP. BD. MEETS THE FLOOR OR ROOF DECK.
8. THE GC SHALL BE RESPONSIBLE FOR COORDINATING WITH OWNER ON ALL WORK TO BE PERFORMED BY THE OWNER. ANY POTENTIAL CONFLICTS OR DELAYS CAUSED BY THE OWNER'S SUBCONTRACTORS MUST BE DOCUMENTED IN WRITING TO THE OWNER BEFORE THE DELAY IS ACTUALLY INCURRED FOR IT TO BE CONSIDERED. OTHERWISE THE GC WILL BE RESPONSIBLE FOR MEETING THE SCHEDULE AS OUTLINED IN THE CONTRACT.
9. THE GC SHALL SUPPLY ALL MATERIAL, LABOR, AND COORDINATION REQUIRED FOR THE INSTALLATION OF ALL OWNER-SUPPLIED ITEMS AS DESCRIBED IN THE DOCUMENTS, U.N.O.
10. THE GC IS RESPONSIBLE FOR ALL FLOOR AND WALL PENETRATIONS FOR ELECTRICAL AND MECHANICAL WORK. ALL SUCH OPENING SHALL BE FRAMED AND REINFORCED.
11. FLOOR SURFACES SHALL BE LEVELED TO ASSURE SMOOTH SURFACE FOR FINISH FLOOR INSTALLATION. GC SHALL ALSO PAY SPECIAL ATTENTION THAT ALL WALL SURFACES ARE SMOOTH WHERE MURALS WILL BE DIRECTLY APPLIED TO WALL.
12. GC TO COORDINATE ALL UTILITY STUB-UPS AND LOCATION OF ALL EQUIPMENT PRIOR TO INSTALLING ANY ONE ITEM.
13. REFER TO SHEET CXD-A-80 FOR PARTITION TYPE INFORMATION.
14. PROVIDE PAINTED ACCESS PANELS IN WALLS & CEILING AT CONCEALED ITEMS SUCH AS VALVES, CONTROLS, SWITCHES OR ANY OTHER ITEMS THAT REQUIRES ACCESS. GC TO DETERMINE ACCESS PANEL LOCATION W/ ARCHITECT PRIOR TO INSTALLATION.

## CONSTRUCTION KEYNOTES

| | |
|---|---|
| 6 | INSTALL NEW IPE DECKING. SEE STRUCTURAL FOR DETAILS. |
| 9 | PROVIDE AND INSTALL ROLL DOWN DOOR. SEE DETAILS AND SCHEDULE. |
| 10 | PROVIDE AND INSTALL COLUMN ENCLOSURES. SEE DETAILS. |
| 11 | PROVIDE AND INSTALL T1-11 CEILING. |
| 13 | PROVIDE CONCRETE SLAB. REFER TO STRUCTURAL DRAWINGS. |
| 14 | PROVIDE NEW ASPHALT SHINGLE ROOFING,UNDERLAYMENT, AND REPLACE IN KIND EXISTING DECKING AS REQUIRED (COORDINATE WITH STRUCTURAL). |
| 17 | PROVIDE AND INSTALL RIDGE VENT AT ROOF HIPS. |
| 21 | NEW INTERIOR WALL. SEE WALL SCHEDULE. |
| 30 | NEW 2x6 WOOD FLOOR. |

8/30/2022 4:15:32 PM

CONSULTANT INFORMATION
The LiRo Group
3 Aerial Way, Syosset, New York 11791
(516) 938-5476 www.liro.com

CONSULTANT SEAL
REGISTERED ARCHITECT ROBERT D. YOUNG JR. 023280 STATE OF NEW YORK

| REVISION NUMBER | DATE | MADE BY | APP'D BY | REVISION |
|---|---|---|---|---|

RECORD DRAWING CERTIFICATION
☐ AS BUILT – CHANGES AS NOTED ☐ AS BUILT – NO CHANGES

CONTRACTOR
NAME
SIGNATURE
TITLE DATE

PROJECT COORDINATOR
NAME
SIGNATURE
TITLE DATE

WESTCHESTER COUNTY, NEW YORK
DEPARTMENT OF PUBLIC WORKS AND TRANSPORTATION
DIVISION OF ENGINEERING

INFRASTRUCTURE REHABILITATION PHASE 3
PLAYLAND PARK, RYE, NEW YORK
CROSS AXIS BUILDING D
CXD - BUILDING SECTIONS

CONTRACT NUMBER 22-523
SHEET NUMBER CXD-A-31
DWG NO.: 202 of 664
SCALE: 1/4" = 1'-0"
DATE: 08/23/2022
DPW FILE NUMBER 1-118-A-951-0
REV. NO. 0

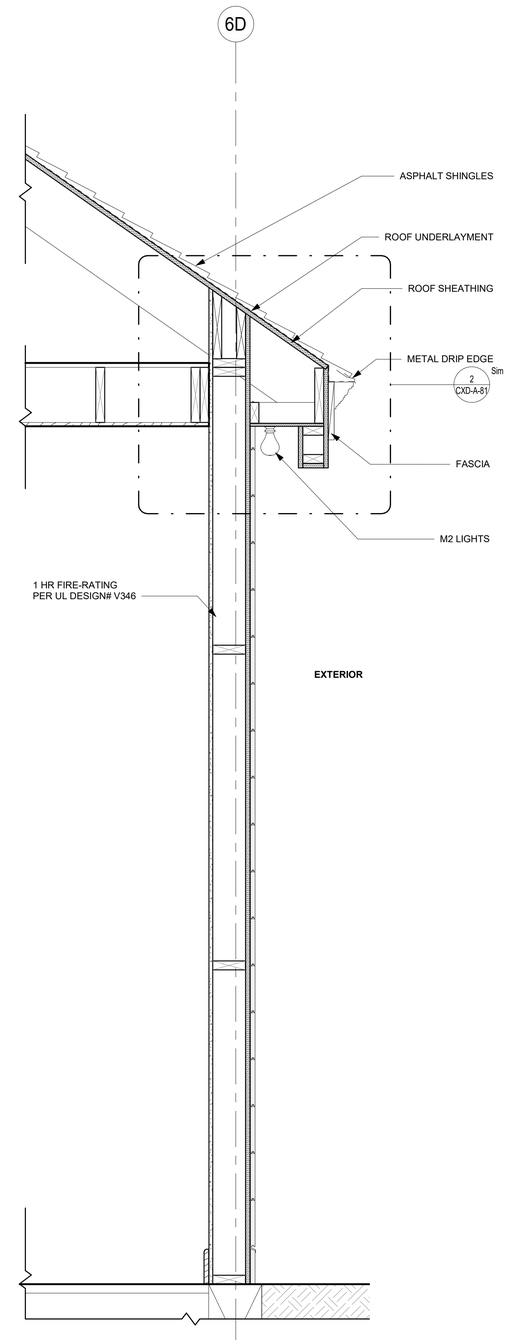


1 CXD - WALL SECTION
1" = 1'-0"

8/30/2022 4:15:32 PM

CONSULTANT INFORMATION

The LiRo Group
3 Aerial Way, Syosset, New York 11791
(516) 938-5476 www.liro.com

CONSULTANT SEAL

REGISTERED ARCHITECT ROBERT D. YOUNG JR. 023280 STATE OF NEW YORK

| REVISION NUMBER | DATE | MADE BY | APP'D BY | REVISION |
|---|---|---|---|---|
| | | | | |

RECORD DRAWING CERTIFICATION

☐ AS BUILT – CHANGES AS NOTED ☐ AS BUILT – NO CHANGES

CONTRACTOR
NAME
SIGNATURE
TITLE DATE

PROJECT COORDINATOR
NAME
SIGNATURE
TITLE DATE

WESTCHESTER COUNTY, NEW YORK
DEPARTMENT OF PUBLIC WORKS AND TRANSPORTATION
DIVISION OF ENGINEERING

**INFRASTRUCTURE REHABILITATION PHASE 3**
**PLAYLAND PARK, RYE, NEW YORK**
**CROSS AXIS BUILDING D**
**CXD - ENLARGED SECTION**

| | |
|---|---|
| CONTRACT NUMBER | 22-523 |
| SHEET NUMBER | CXD-A-32 |
| DWG NO.: | 203 of 664 |
| SCALE: | 1" = 1'-0" |
| DATE: | 08/23/2022 |
| DPW FILE NUMBER | 1-118-A-952-0 |
| REV. NO. | 0 |

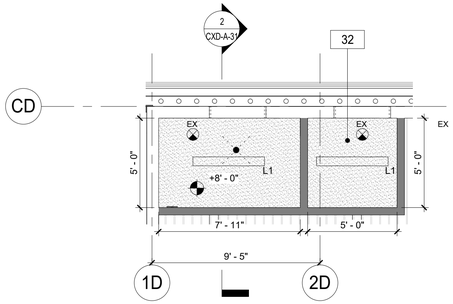


2 CXD - GROUND FLOOR UTILITIES RCP
1/4" = 1'-0"

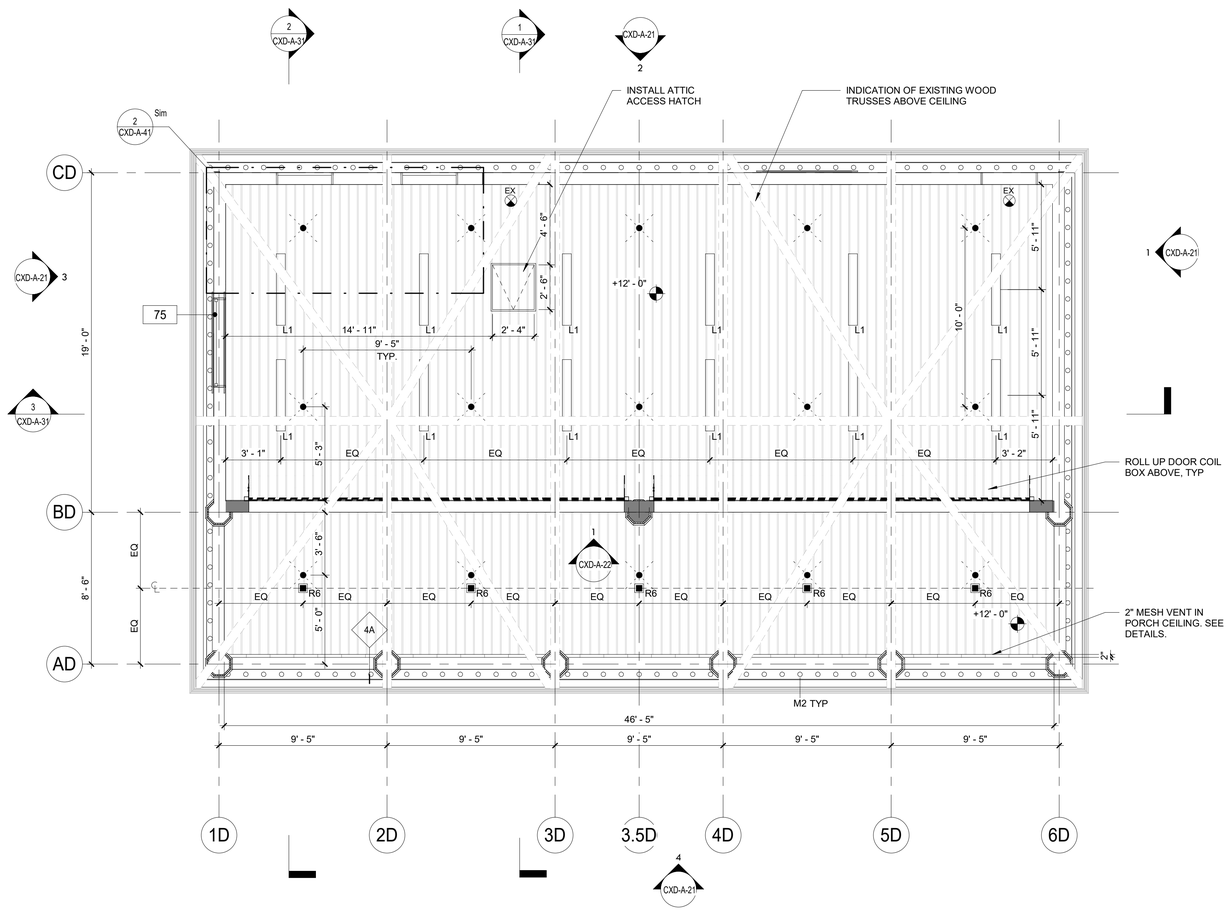


1 CXD - GROUND FLOOR RCP
1/4" = 1'-0"

## RCP LEGEND

- R2 — R-2 EXTERIOR RECESSED CAN IN SOFFIT (SEE ELEC. DWGS)
- R6 — R-6: 4" SQUARE RECESSED LIGHT FIXTURE (SEE ELEC. DWGS)
- L1 — L-1 LINEAR LIGHT (SEE ELEC. DWGS)
- M2 — M-2 MARQUEE LIGHTING AT BALUSTRADE
- SPRINKLER (SEE FIRE PROTECTION DWGS)
- SUPPLY DIFFUSER. SEE MECHANICAL DRAWINGS
- EXHAUST GRILL. SEE MECHANICAL DRAWINGS
- EX — EX- EXIT SIGN
- NEW CONSTRUCTION
- T1-11 CEILING BOARD
- GYP. BOARD CEILING
- INDICATES SCOPE NOT IN CONTRACT

## GENERAL REFLECTED CEILING PLAN NOTES

1. CONTRACTOR SHALL PROVIDE THE NECESSARY FRAMING OR BRIDGING FOR ALL LIGHT FIXTURES, DIFFUSERS, RETURNS, ETC., AS WELL AS REQUIRED CUTOUTS.
2. CONTRACTOR SHALL NOTIFY THE ARCHITECT OF ANY POSSIBLE INTERFERENCES BEFORE PROCEEDING WITH CEILING INSTALLATION.
3. CEILING CONSTRUCTION SHALL NOT BE CLOSED IN UNTIL THE CONSTRUCTION MANAGER AND AUTHORITIES HAVING JURISDICTION HAVE HAD AN OPPORTUNITY TO INSPECT THE AREA AND ASCERTAIN THAT ALL DUCTWORK, PLUMBING, ELECTRICAL CONDUITS AND LINES HAVE BEEN INSTALLED PROPERLY.
4. FASCIAS OR ANY BREAK IN THE CEILING HEIGHTS CREATED BY THE INSTALLATION AND/OR ALTERATION OF HEATING, VENTILATING, A/C OR MECHANICAL DUCTS, PIPING OR OTHER EQUIPMENT SHALL BE FORMED OF GYPSUM WALLBOARD ON FURRING CHANNELS.
5. THE CEILING PANEL JOINTS SHALL BE ALIGNED PERFECTLY WITH LIGHTING FIXTURES.
6. ALL JOINTS IN THE PANEL SHALL BE SQUARE, LEVEL AND PERFECTLY ALIGNED WITH EACH OTHER AND WITH BUILDING FIXTURES.
7. CONTRACTOR SHALL PROVIDE CUTOUTS AND OTHER SPECIAL PROVISIONS IN ACOUSTICAL WORK AS REQUIRED FOR LIGHTING FIXTURES, REGISTERS, DIFFUSERS AND OTHER INSERTED ITEMS. GENERAL CONSTRUCTION CONTRACTOR SHALL INSTALL ACCESS PANELS IN GYPSUM DRYWALL CEILINGS FOR ACCESS TO AIR CONDITIONING, PLUMBING, TELEPHONE & ELECTRICAL CONTROL EQUIPMENT REQUIRING ACCESS.
8. IN GENERAL, WITHIN EACH AREA, CEILING WORK REQUIREMENTS SHALL BE EXECUTED IN SUCH A MANNER AS TO PROVIDE CONTINUOUS MATCHED AND ALIGNED CEILINGS. THE FINAL CEILING INSTALLATION SHALL BE FREE OF ALL VISUAL DEFECTS.

## CONSTRUCTION KEYNOTES

| | |
|---|---|
| 32 | NEW 3/4" FIRE RETARDENT PLYWOOD FLOOR ABOVE ELECTRICAL ROOM. |
| 75 | REINSTALL SALVAGED WINDOWS FROM CXF (SEE CXF-A-01). |

8/30/2022 4:15:36 PM

CONSULTANT INFORMATION
The LiRo Group
3 Aerial Way, Syosset, New York 11791
(516) 938-5476 www.liro.com

CONSULTANT SEAL
REGISTERED ARCHITECT ROBERT D. YOUNG JR. 023280 STATE OF NEW YORK

| REVISION NUMBER | DATE | MADE BY | APP'D BY | REVISION |
|---|---|---|---|---|

RECORD DRAWING CERTIFICATION
☐ AS BUILT – CHANGES AS NOTED ☐ AS BUILT – NO CHANGES

CONTRACTOR
NAME
SIGNATURE
TITLE DATE

PROJECT COORDINATOR
NAME
SIGNATURE
TITLE DATE

WESTCHESTER COUNTY, NEW YORK
DEPARTMENT OF PUBLIC WORKS AND TRANSPORTATION
DIVISION OF ENGINEERING

INFRASTRUCTURE REHABILITATION PHASE 3
PLAYLAND PARK, RYE, NEW YORK
CROSS AXIS BUILDING D
CXD - GROUND FLOOR REFLECTED CEILING PLAN

CONTRACT NUMBER 22-523
SHEET NUMBER CXD-A-41
DWG NO.: 204 of 664
SCALE: As indicated
DATE: 08/23/2022
DPW FILE NUMBER 1-118-A-953-0
REV. NO. 0

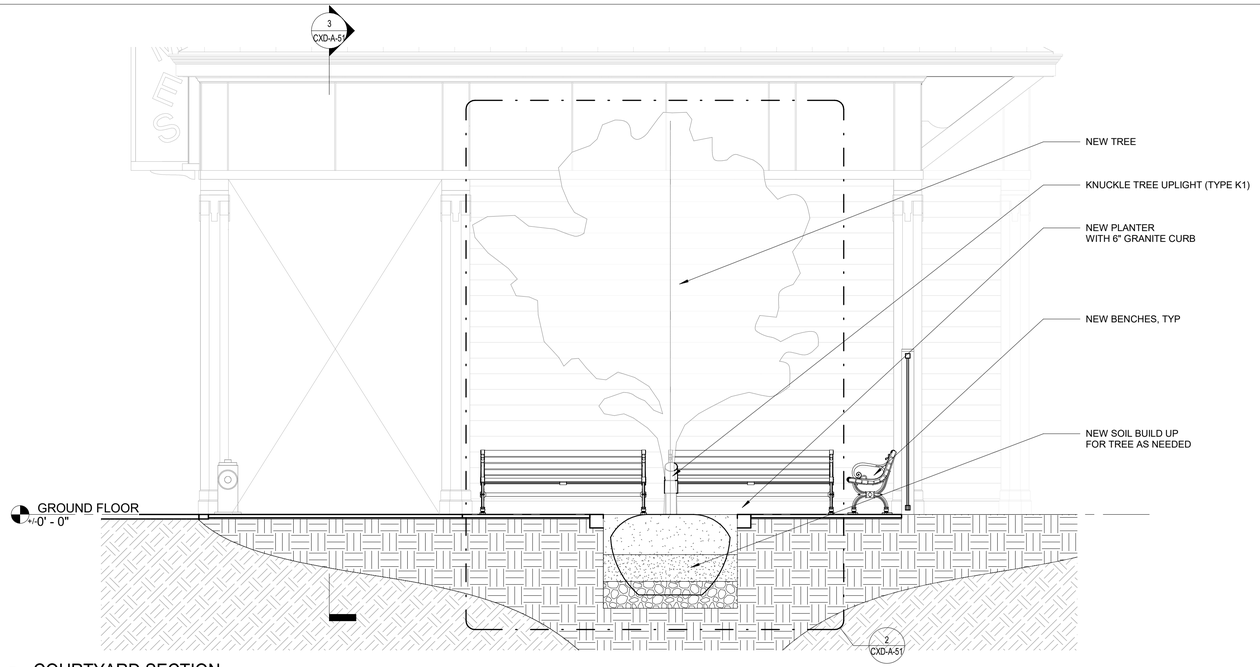


4 COURTYARD SECTION
3/8" = 1'-0"

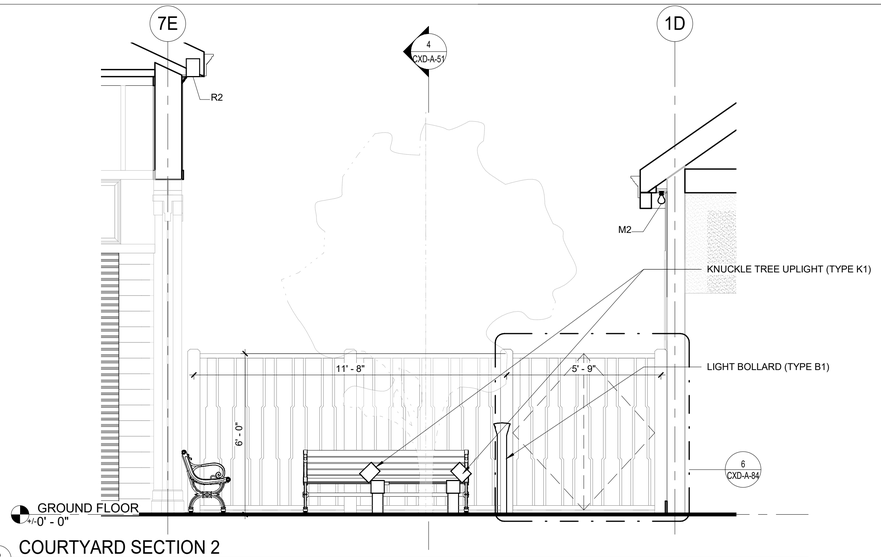


3 COURTYARD SECTION 2
3/8" = 1'-0"

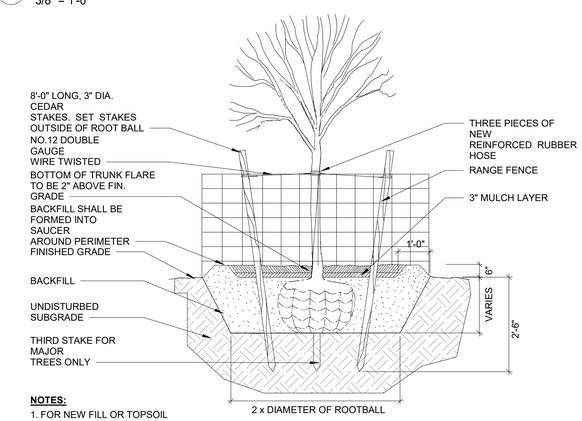


SECTION

**NOTES:**

1. FOR NEW FILL OR TOPSOIL AREAS: ROTOTILL/CULTIVATE SOILS TO A DEPTH EQUAL TO THE DEPTH OF ROOT BALL AND TWO (2) TIMES THE DIAMETER OF THE ROOT BALL.
2. REMOVE ALL WIRE, PLASTIC, TAGS OR OTHER SYNTHETIC MATERIAL FROM TREE PRIOR TO PLANTING.

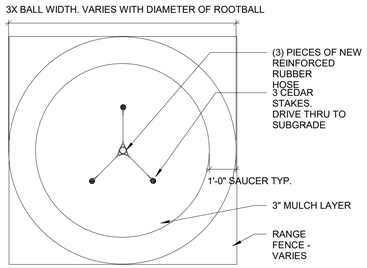


PLAN

2 TYPICAL TREE PLANTING DETAIL
3/8" = 1'-0"

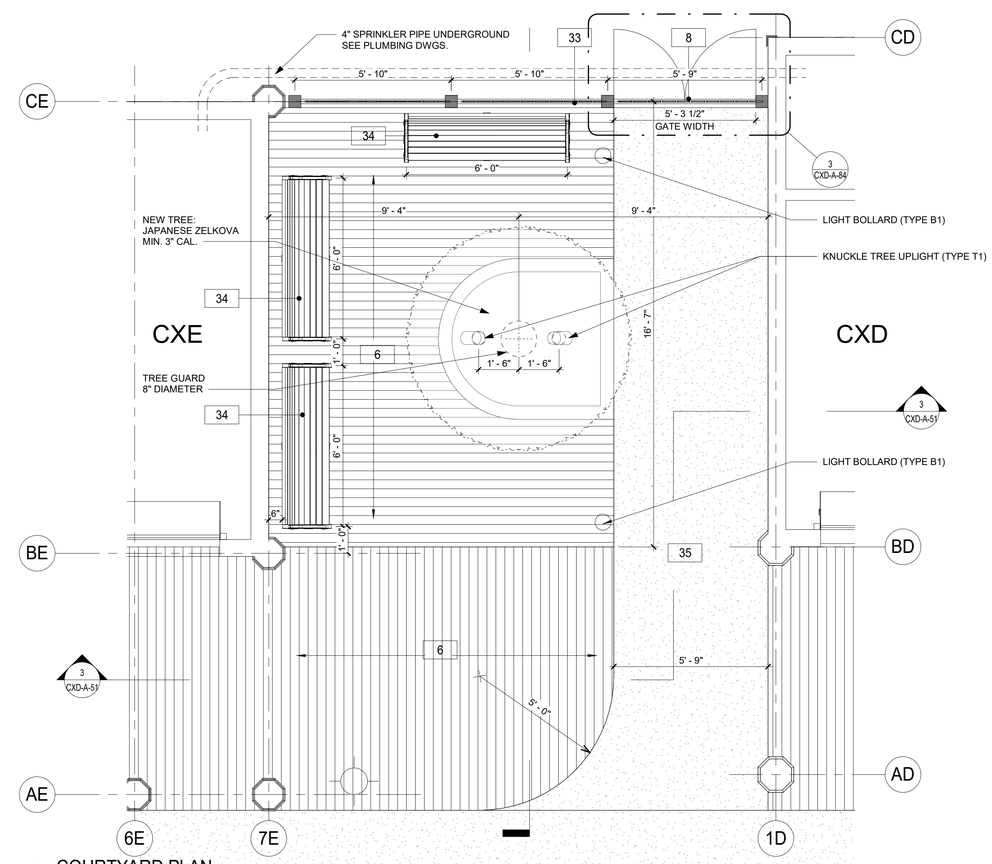


1 COURTYARD PLAN
3/8" = 1'-0"

8/30/2022 4:15:40 PM

CONSULTANT INFORMATION

The LiRo Group
3 Aerial Way, Syosset, New York 11791
(516) 938-5476 www.liro.com

CONSULTANT SEAL

REGISTERED ARCHITECT ROBERT D. YOUNG JR. 023280 STATE OF NEW YORK

| REVISION NUMBER | DATE | MADE BY | APP'D BY | REVISION |
|---|---|---|---|---|
| | | | | |

RECORD DRAWING CERTIFICATION

☐ AS BUILT – CHANGES AS NOTED ☐ AS BUILT – NO CHANGES

CONTRACTOR
NAME
SIGNATURE
TITLE DATE

PROJECT COORDINATOR
NAME
SIGNATURE
TITLE DATE

WESTCHESTER COUNTY, NEW YORK
DEPARTMENT OF PUBLIC WORKS AND TRANSPORTATION
DIVISION OF ENGINEERING

**INFRASTRUCTURE REHABILITATION PHASE 3**
**PLAYLAND PARK, RYE, NEW YORK**
**CROSS AXIS BUILDING D**
**COURTYARD PLANS**

| CONTRACT NUMBER | SHEET NUMBER |
|---|---|
| 22-523 | CXD-A-51 |

DWG NO.: 205 of 664
SCALE: 3/8" = 1'-0"
DATE: 08/23/2022
DPW FILE NUMBER 1-118-A-954-0 REV. NO. 0

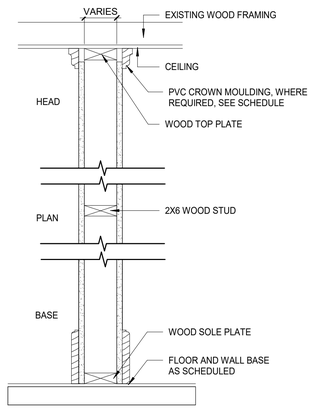


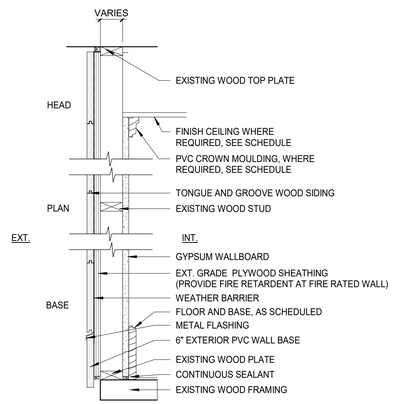


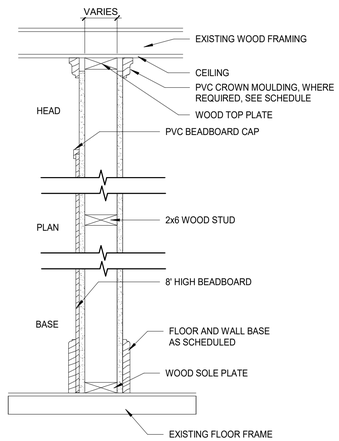


1B **NO RATING**

1 LAYER 5/8" IMPACT & MOLD-RESISTANT GYP. BD. TO CEILING, ON EACH SIDE

2 **NO RATING**

1 LAYER 5/8" IMPACT & MOLD-RESISTANT GYP. BD. UPTO 8' A.F.F. AND 5/8" MOLD-RESISTANT GYP. BD. TO CEILING ON THE INTERIOR SIDE

2A **1HR FIRE RATING- BXUV.V346-ANSI/UL 263**

1 LAYER 5/8" GWB-X M-BLOC - MOISTURE-RESISTANT, 2X6 WOOD STUD , 1 LAYER 5/8" GWB-X M-BLOC - MOISTURE-RESISTANT, 3/4" FIRE-RETARDANT SHEATING, 1/8" DRAINAGE TYPE BARRIER, WOOD SIDING

3 **NO RATING**

1 LAYER 5/8" IMPACT & MOLD-RESISTANT GYP. BD. TO CEILING, ON EACH SIDE. 8' HIGH* BEADBOARD ON VENDOR SPACE(S) SIDE WITH PVC BEADBOARD CAP

8/30/2022 4:15:40 PM

CONSULTANT INFORMATION

The LiRo Group

3 Aerial Way, Syosset, New York 11791
(516) 938-5476 www.liro.com

CONSULTANT SEAL

REGISTERED ARCHITECT ROBERT D. JOHNSON 023220 STATE OF NEW YORK

| REVISION NUMBER | DATE | MADE BY | APP'D BY | REVISION |
|---|---|---|---|---|
| | | | | |

RECORD DRAWING CERTIFICATION

☐ AS BUILT – CHANGES AS NOTED ☐ AS BUILT – NO CHANGES

CONTRACTOR
NAME
SIGNATURE
TITLE DATE

PROJECT COORDINATOR
NAME
SIGNATURE
TITLE DATE

WESTCHESTER COUNTY, NEW YORK
DEPARTMENT OF PUBLIC WORKS AND TRANSPORTATION
DIVISION OF ENGINEERING

**INFRASTRUCTURE REHABILITATION PHASE 3**
**PLAYLAND PARK, RYE, NEW YORK**
**CXD - CXE - CXF**
**PARTITION TYPE DETAILS**

CONTRACT NUMBER 22-523
SHEET NUMBER **CXD-A-80**
DWG NO.: 206 of 664
SCALE: **1 1/2" = 1'-0"**
DATE: **08/23/2022**
DPW FILE NUMBER **1-118-A-955-0**
REV. NO. 0

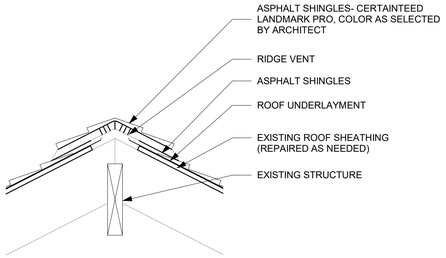


3 RIDGE VENT DETAIL
1" = 1'-0"

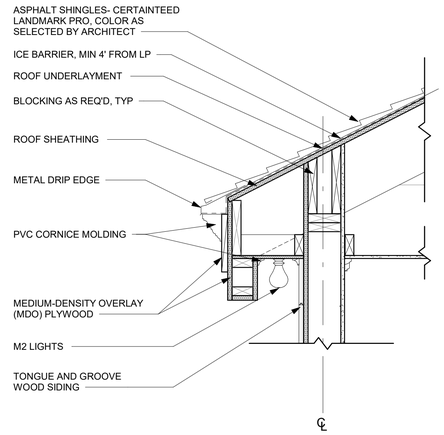


2 CXD - MARQUEE SOFFIT DETAIL
1" = 1'-0"

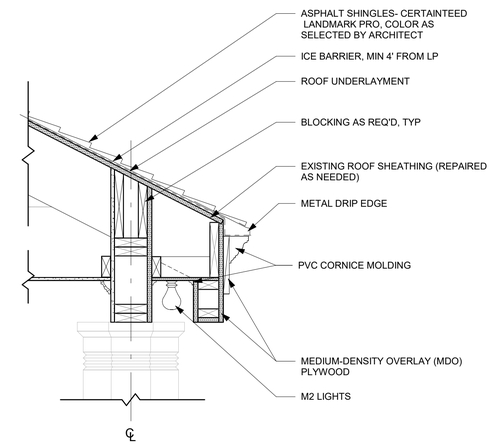


1 CXD - PORCH MARQUEE SOFFIT DETAIL
1" = 1'-0"

8/30/2022 4:15:41 PM

CONSULTANT INFORMATION

The LiRo Group
3 Aerial Way, Syosset, New York 11791
(516) 938-5476 www.liro.com

CONSULTANT SEAL

REGISTERED ARCHITECT ROBERT D. YOUNG JR. 023290 STATE OF NEW YORK

| REVISION NUMBER | DATE | MADE BY | APP'D BY | REVISION |
|---|---|---|---|---|

RECORD DRAWING CERTIFICATION
☐ AS BUILT – CHANGES AS NOTED ☐ AS BUILT – NO CHANGES

CONTRACTOR
NAME
SIGNATURE
TITLE DATE

PROJECT COORDINATOR
NAME
SIGNATURE
TITLE DATE

WESTCHESTER COUNTY, NEW YORK
DEPARTMENT OF PUBLIC WORKS AND TRANSPORTATION
DIVISION OF ENGINEERING

**INFRASTRUCTURE REHABILITATION PHASE 3**
**PLAYLAND PARK, RYE, NEW YORK**
**CROSS AXIS BUILDING D**
**ROOF DETAILS**

CONTRACT NUMBER 22-523
SHEET NUMBER **CXD-A-81**
DWG NO.: 207 of 664
SCALE: **1" = 1'-0"**
DATE: **08/23/2022**
DPW FILE NUMBER **1-118-A-956-0**
REV. NO. 0

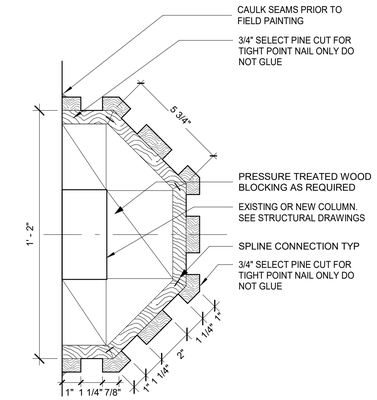


14 HALF COLUMN B CAPITAL PLAN
3" = 1'-0"

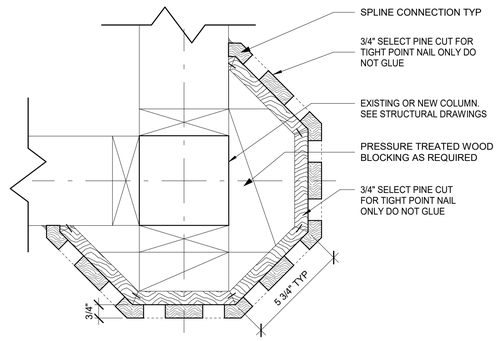


13 TYPE B - 3/4 COLUMN CAPITAL PLAN
3" = 1'-0"

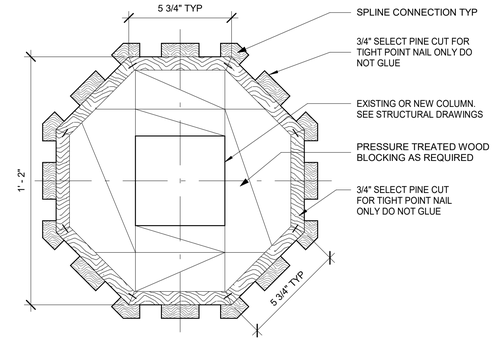


12 COLUMN B CAPITAL PLAN
3" = 1'-0"

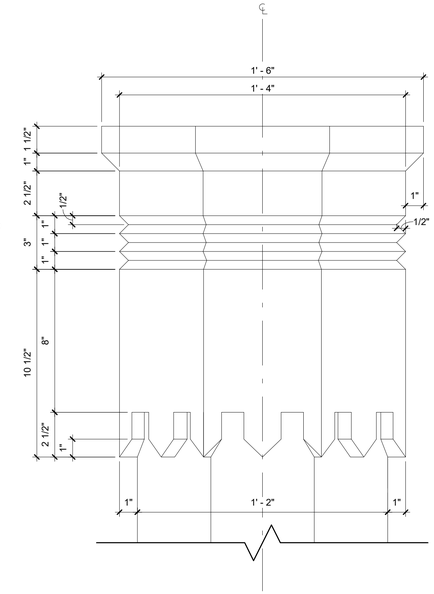


11 COLUMN CAPITAL DETAIL TYPE B
3" = 1'-0"

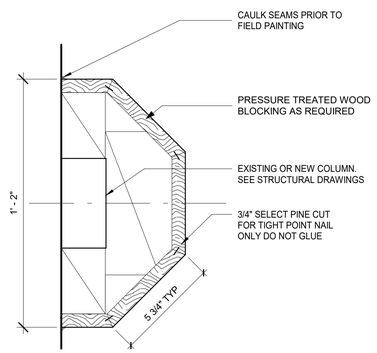


10 HALF COLUMN B SHAFT PLAN
3" = 1'-0"

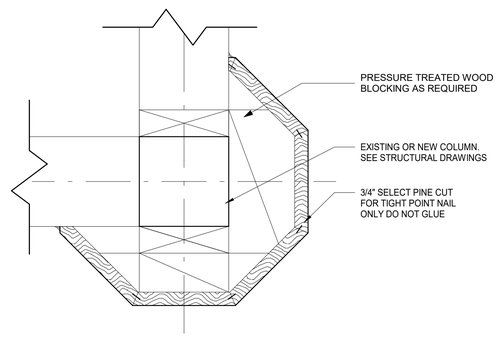


9 TYPE B - 3/4 COLUMN SHAFT PLAN
3" = 1'-0"

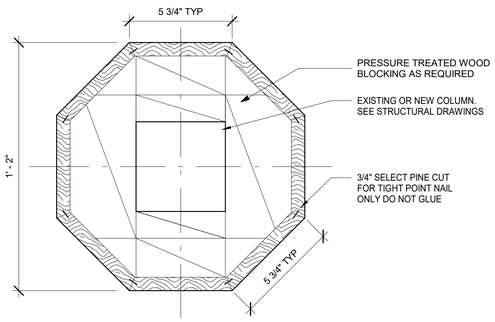


8 COLUMN B SHAFT PLAN
3" = 1'-0"

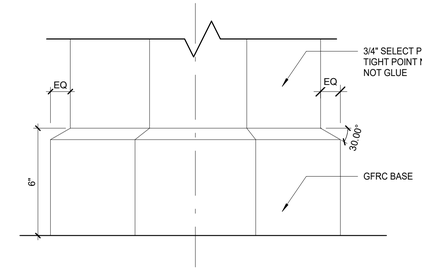


7 COLUMN B ELEVATION- FULL COLUMN BASE
3" = 1'-0"

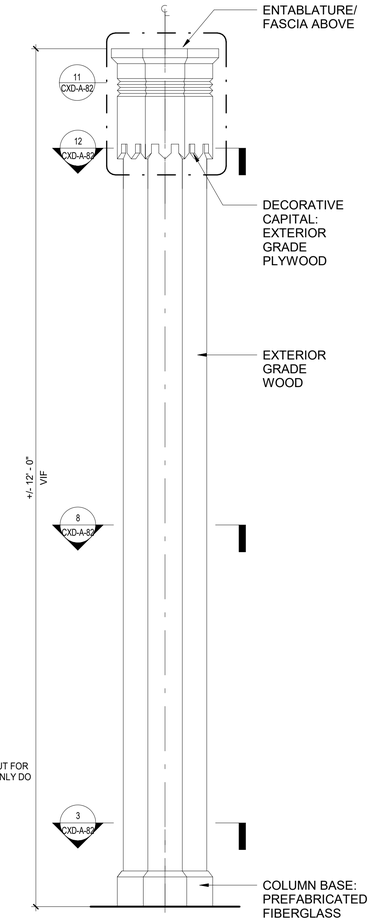


6 TYPE B - ELEVATION DETAIL
1" = 1'-0"

**NOTE:** GC TO CONFIRM HEIGHT OF COLUMNS

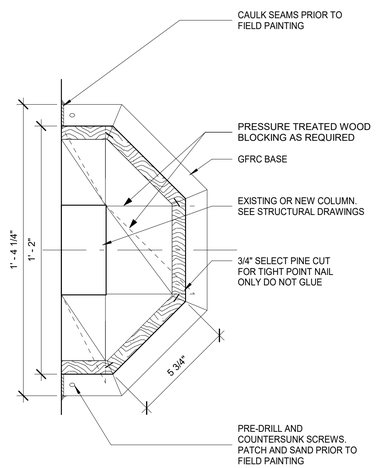


5 HALF COLUMN B BASE PLAN
3" = 1'-0"

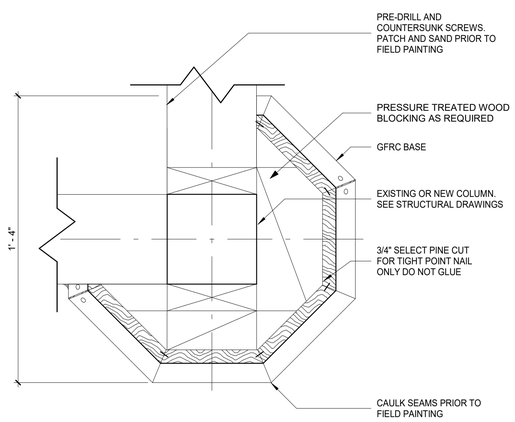


4 TYPE B - 3/4 COLUMN BASE PLAN
3" = 1'-0"

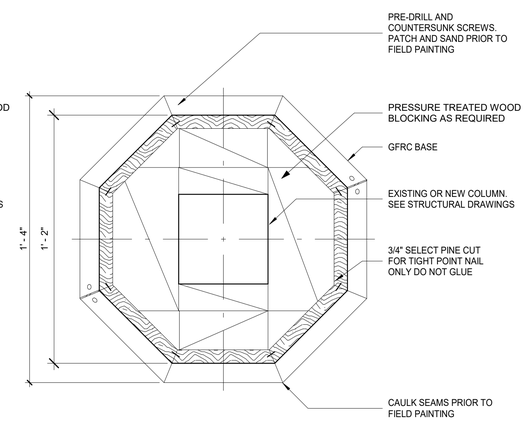


3 COLUMN B BASE PLAN
3" = 1'-0"

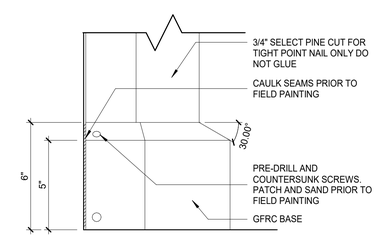


2 COLUMN B ELEVATION- HALF COLUMN BASE
3" = 1'-0"

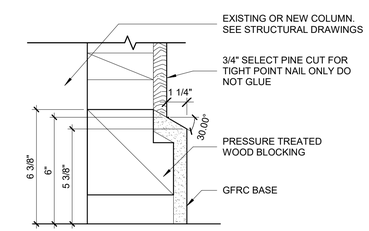


1 COLUMN B SECTION AT COLUMN BASE
3" = 1'-0"

8/30/2022 4:15:43 PM

CONSULTANT INFORMATION

The LiRo Group
3 Aerial Way, Syosset, New York 11791
(516) 938-5476 www.liro.com

CONSULTANT SEAL

REGISTERED ARCHITECT ROBERT D. KONIGSBERG 023280 STATE OF NEW YORK

| REVISION NUMBER | DATE | MADE BY | APP'D BY | REVISION |
|---|---|---|---|---|

RECORD DRAWING CERTIFICATION

☐ AS BUILT – CHANGES AS NOTED ☐ AS BUILT – NO CHANGES

CONTRACTOR
NAME
SIGNATURE
TITLE DATE

PROJECT COORDINATOR
NAME
SIGNATURE
TITLE DATE

WESTCHESTER COUNTY, NEW YORK
DEPARTMENT OF PUBLIC WORKS AND TRANSPORTATION
DIVISION OF ENGINEERING

**INFRASTRUCTURE REHABILITATION PHASE 3**
**PLAYLAND PARK, RYE, NEW YORK**
**CXD - CXE - CXF**
**CXD COLUMN DETAILS**

| | |
|---|---|
| CONTRACT NUMBER | 22-523 |
| SHEET NUMBER | CXD-A-82 |
| DWG NO.: | 208 of 664 |
| SCALE: | As indicated |
| DATE: | 08/23/2022 |
| DPW FILE NUMBER | 1-118-A-957-0 |
| REV. NO. | 0 |

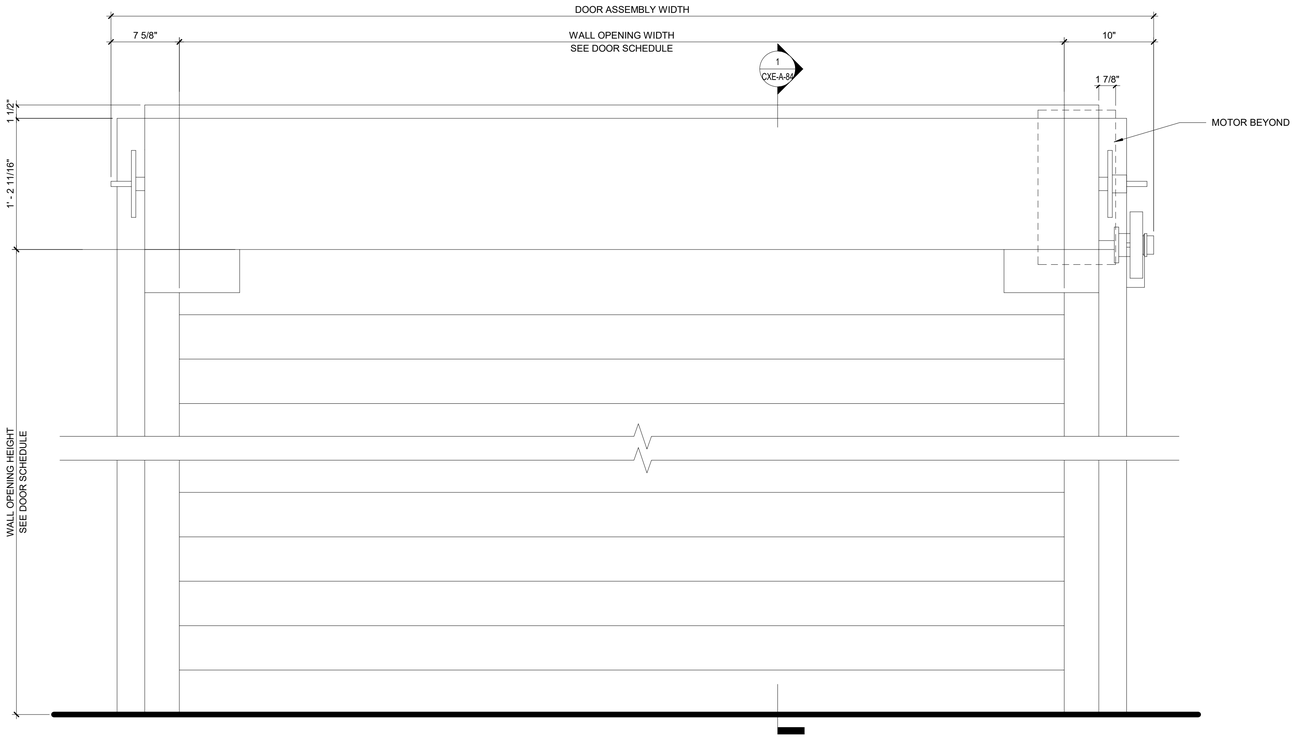


3 CXD ROLL UP DOOR ELEVATION DETAIL
1 1/2" = 1'-0"

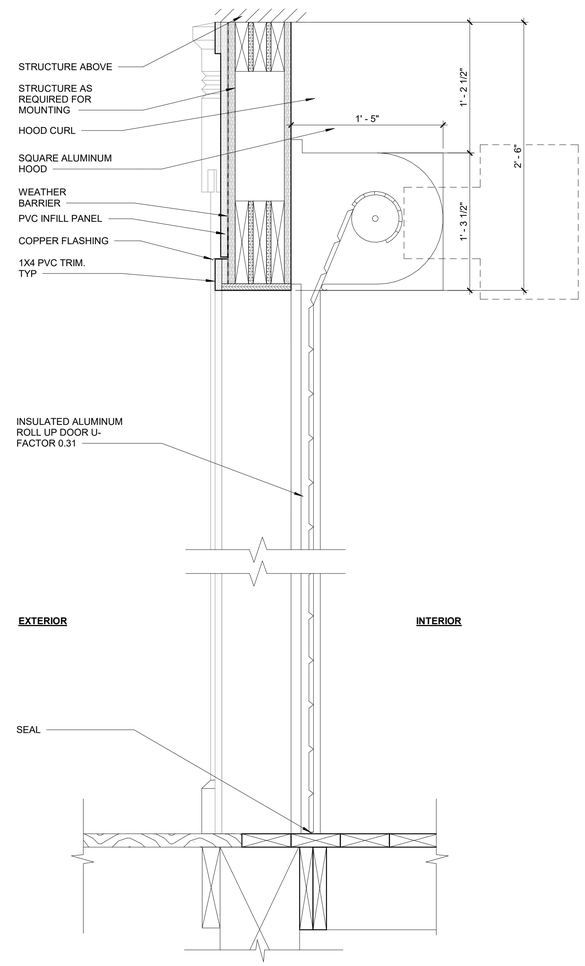


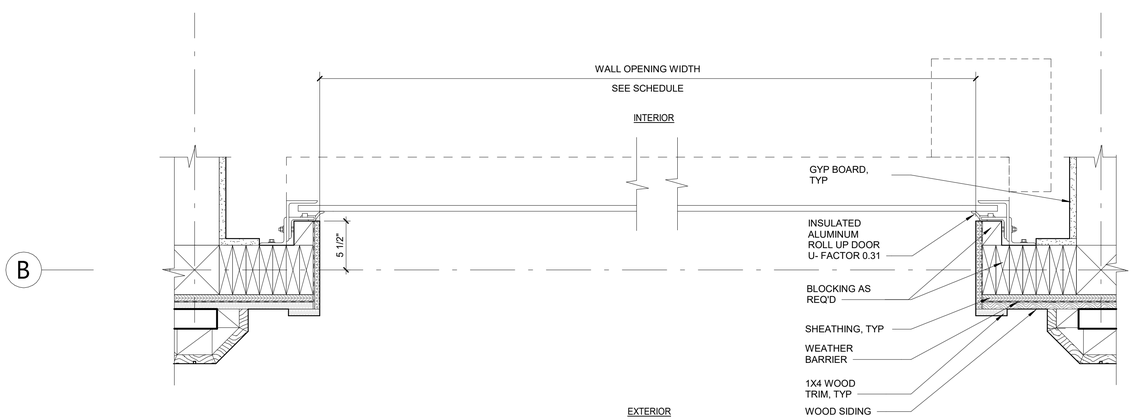


2 CXD ROLL UP DOOR PLAN DETAIL
1 1/2" = 1'-0"

1 CXD ROLL UP DOOR SECTION DETAIL
1 1/2" = 1'-0"

8/30/2022 4:15:44 PM

CONSULTANT INFORMATION
The LiRo Group
3 Aerial Way, Syosset, New York 11791
(516) 938-5476 www.liro.com

CONSULTANT SEAL
REGISTERED ARCHITECT ROBERT D. YOUNG 023280 STATE OF NEW YORK

| REVISION NUMBER | DATE | MADE BY | APP'D BY | REVISION |
|---|---|---|---|---|

RECORD DRAWING CERTIFICATION
☐ AS BUILT – CHANGES AS NOTED ☐ AS BUILT – NO CHANGES

CONTRACTOR
NAME
SIGNATURE
TITLE DATE

PROJECT COORDINATOR
NAME
SIGNATURE
TITLE DATE

WESTCHESTER COUNTY, NEW YORK
DEPARTMENT OF PUBLIC WORKS AND TRANSPORTATION
DIVISION OF ENGINEERING

**INFRASTRUCTURE REHABILITATION PHASE 3**
**PLAYLAND PARK, RYE, NEW YORK**
**CROSS AXIS BUILDING D**
**ROLL UP DOOR DETAILS**

| | |
|---|---|
| CONTRACT NUMBER | 22-523 |
| SHEET NUMBER | CXD-A-83 |
| DWG NO.: | 209 of 664 |
| SCALE: | 1 1/2" = 1'-0" |
| DATE: | 08/23/2022 |
| DPW FILE NUMBER | 1-118-A-958-0 |
| REV. NO. | 0 |

## FENCE & GATE PAINTING SCHEDULE

| COMPONENTS | COLOR |
|---|---|
| POSTS | P- 7 |
| RAILS | P- 1 |
| BALLUSTER, A | P- 15 |
| BALLUSTER, B | P- 1 |
| GATE FRAME | P- 15 |
| GATE CROSS FRAME | P- 1 |
| HARDWARE | BLACK |

## PAINTING SCHEDULE

| KEY | COLOR | MANUFACTURER | REMARKS |
|---|---|---|---|
| P- 1 | MYSTICAL POWERS #901 | BENJAMIN MOORE | |
| P- 2 | HERITAGE RED #HC-181 | BENJAMIN MOORE | |
| P- 3 | NEW YORK STATE OF MIND #805 | BENJAMIN MOORE | |
| P- 4 | LAZY SUNDAY #803 | BENJAMIN MOORE | |
| P- 5 | DEEP JUNGLE #595 | BENJAMIN MOORE | |
| P- 6 | LUCK OF THE IRISH #588 | BENJAMIN MOORE | |
| P- 7 | MAJOLICA GREEN #0013 | SHERWIN WILLIAMS | |
| P- 8 | ANTELOPE CANYON #125 | BENJAMIN MOORE | |
| P- 9 | FORSYTHIA #6907 | SHERWIN WILLIAMS | |
| P- 10 | CAPE BLUE #1642 | BENJAMIN MOORE | |
| P- 11 | WHITE SNOW #9541 | SHERWIN WILLIAMS | |
| P- 12 | TRICORN BLACK #6258 | SHERWIN WILLIAMS | |
| P- 13 | READY MIX WHITE | BENJAMIN MOORE | INTERIOR USE ONLY |
| P- 14 | STUCCO PAINT TO MATCH P-1 | KEIM | |
| P- 15 | VAN DEUSEN BLUE #HC-156 | BENJAMIN MOORE | |
| P- 16 | #RAL9001 | - | TYP. ROLL UP DOOR |
| P- 17 | FLORIDA BEACHES #900 | BENJAMIN MOORE | |
| P- 18 | PIRATES COVE PEACH #903 | BENJAMIN MOORE | |
| P- 19 | JADITE #6459 | SHERWIN WILLIAMS | |
| P- 20 | DECISIVE YELLOW #6902 | SHERWIN WILLIAMS | |

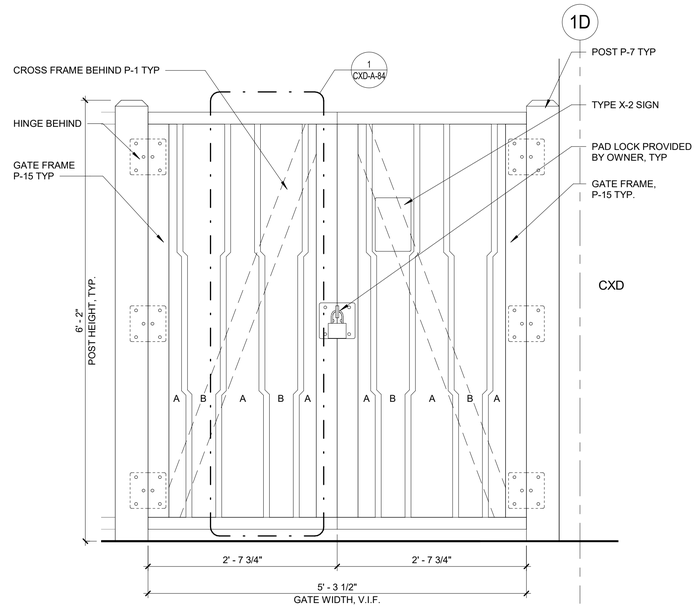


6 COURTYARD GATE ELEVATION (EX1)
1" = 1'-0"

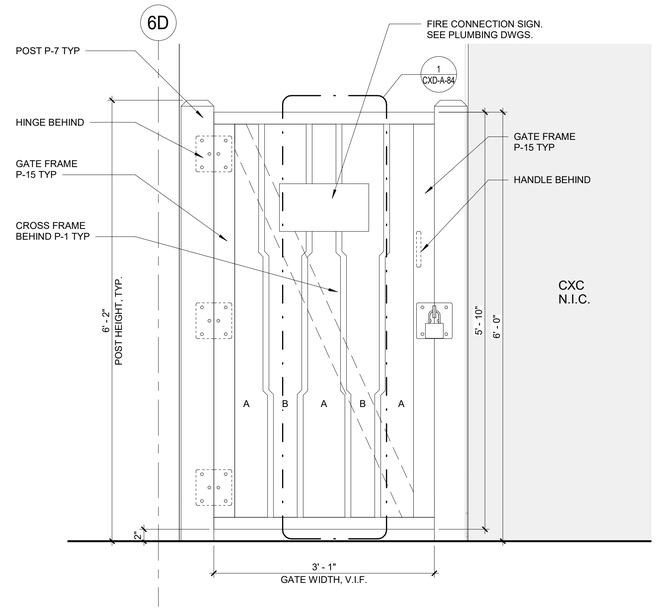


5 CXD GATE ELEVATION (EX2)
1" = 1'-0"

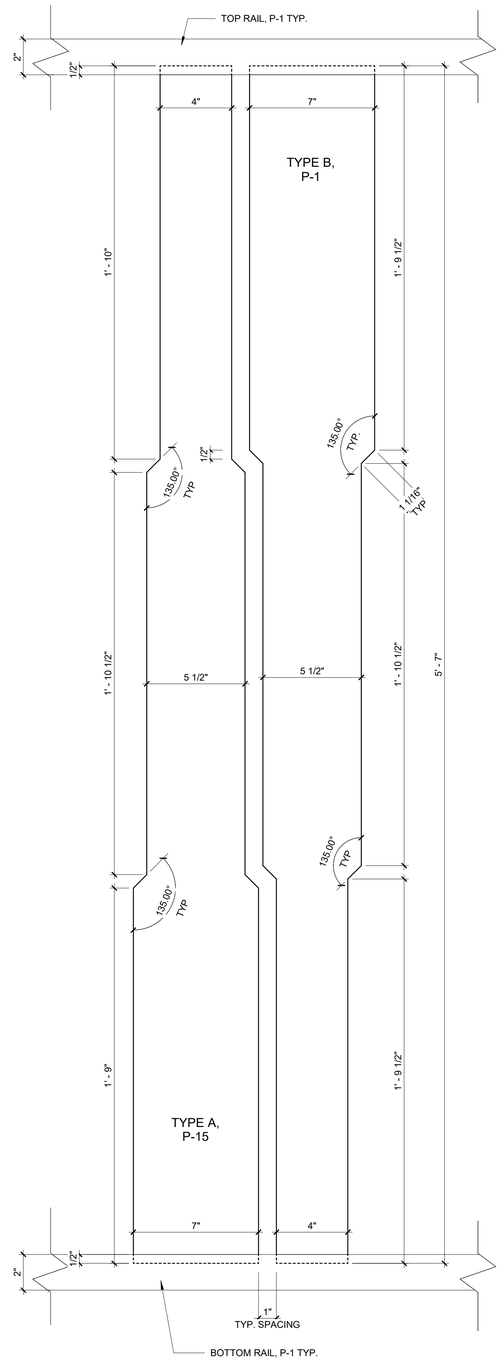


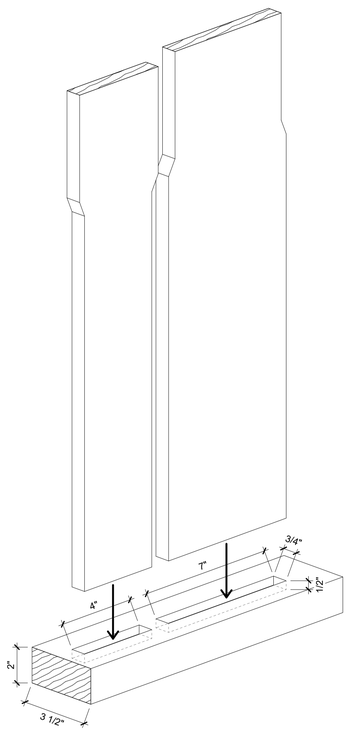


4 RAIL NOTCH DETAIL
3" = 1'-0"

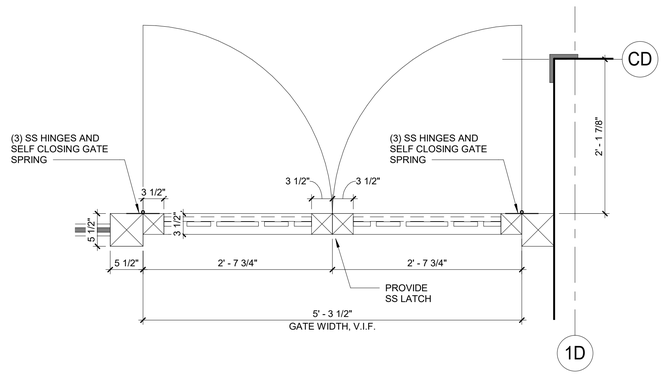


3 COURTYARD GATE PLAN (EX1)
1" = 1'-0"

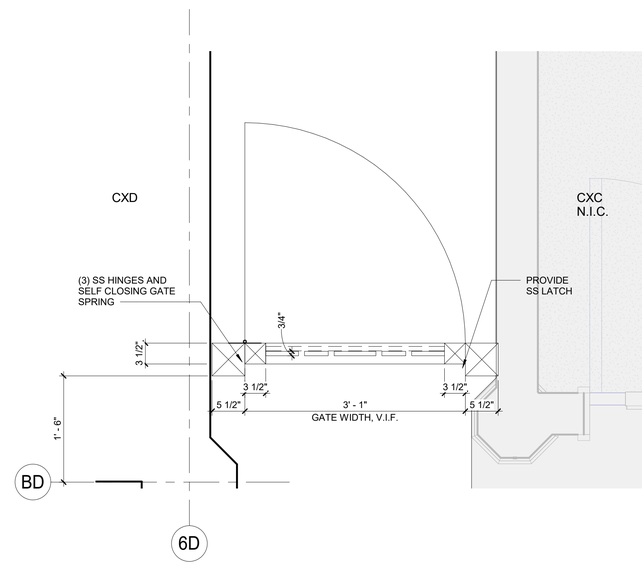


2 CXD GATE PLAN (EX2)
1" = 1'-0"

1 TYPICAL FENCE
3" = 1'-0"

8/30/2022 4:15:46 PM

CONSULTANT INFORMATION

The LiRo Group
3 Aerial Way, Syosset, New York 11791
(516) 938-5476 www.liro.com

CONSULTANT SEAL
REGISTERED ARCHITECT ROBERT D. YOUNG JR. 023280 STATE OF NEW YORK

| REVISION NUMBER | DATE | MADE BY | APP'D BY | REVISION |
|---|---|---|---|---|
| | | | | |

RECORD DRAWING CERTIFICATION
☐ AS BUILT – CHANGES AS NOTED ☐ AS BUILT – NO CHANGES

CONTRACTOR
NAME
SIGNATURE
TITLE DATE

PROJECT COORDINATOR
NAME
SIGNATURE
TITLE DATE

WESTCHESTER COUNTY, NEW YORK
DEPARTMENT OF PUBLIC WORKS AND TRANSPORTATION
DIVISION OF ENGINEERING

**INFRASTRUCTURE REHABILITATION PHASE 3**
**PLAYLAND PARK, RYE, NEW YORK**
**CROSS AXIS BUILDING D**
**FENCE AND GATE DETAILS**

CONTRACT NUMBER 22-523
SHEET NUMBER **CXD-A-84**
DWG NO.: 210 of 664
SCALE: **As indicated**
DATE: **08/23/2022**
DPW FILE NUMBER **1-118-A-959-0**
REV. NO. 0

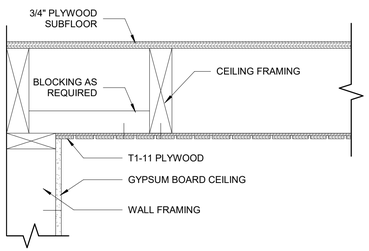


5 T1-11 FRAMING PARALLEL TO WALL
1 1/2" = 1'-0"

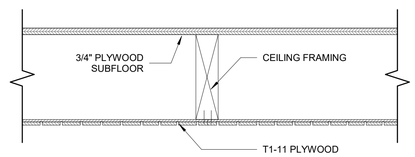


4 T1- 11 FRAMING DETAIL
1 1/2" = 1'-0"

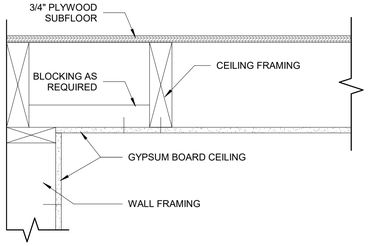


3 GYPSUM CEILING FRAMING PARALLEL TO WALL
1 1/2" = 1'-0"

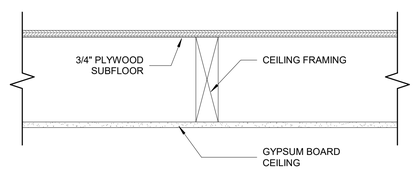


2 GYPSUM CEILING FRAMING DETAIL
1 1/2" = 1'-0"

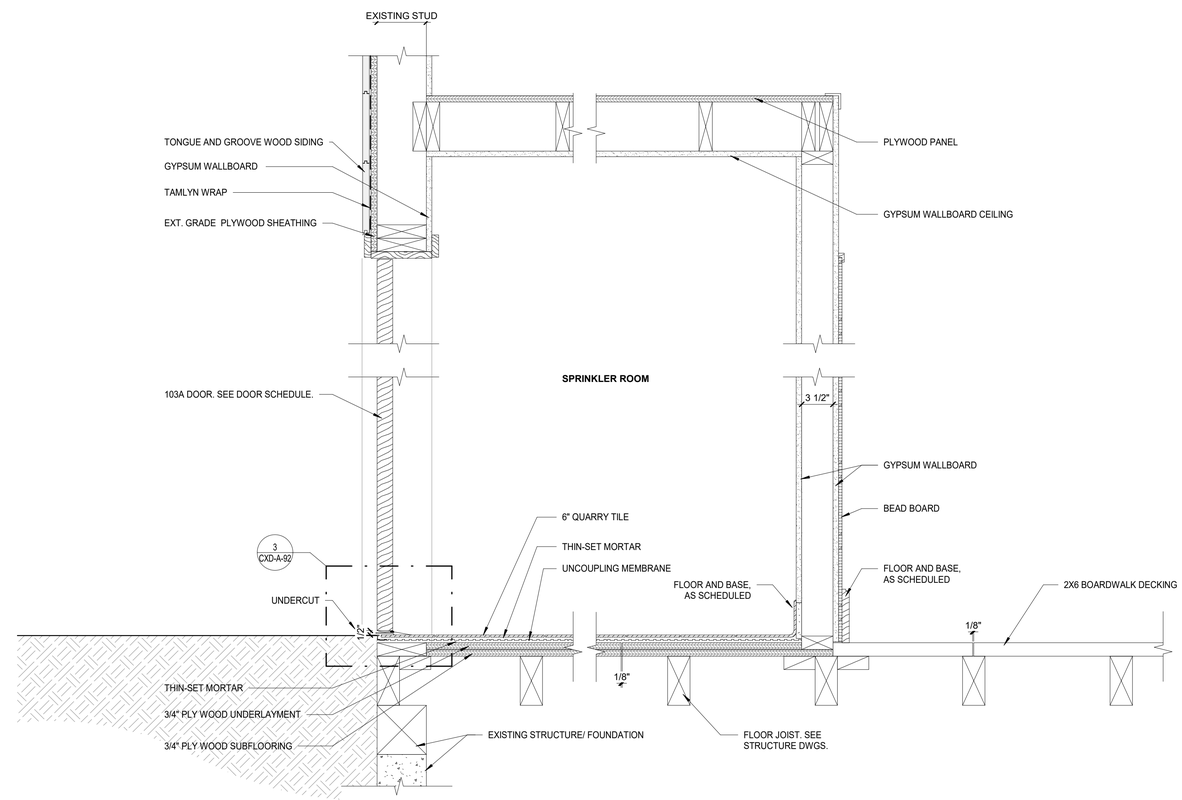


1 SPRINKLER ROOM DETAIL
1 1/2" = 1'-0"

8/30/2022 4:15:47 PM

CONSULTANT INFORMATION
The LiRo Group
3 Aerial Way, Syosset, New York 11791
(516) 938-5476 www.liro.com

CONSULTANT SEAL
REGISTERED ARCHITECT ROBERT D. YOUNG JR. 023290 STATE OF NEW YORK

| REVISION NUMBER | DATE | MADE BY | APP'D BY | REVISION |
|---|---|---|---|---|

RECORD DRAWING CERTIFICATION
☐ AS BUILT – CHANGES AS NOTED ☐ AS BUILT – NO CHANGES

CONTRACTOR
NAME
SIGNATURE
TITLE DATE

PROJECT COORDINATOR
NAME
SIGNATURE
TITLE DATE

WESTCHESTER COUNTY, NEW YORK
DEPARTMENT OF PUBLIC WORKS AND TRANSPORTATION
DIVISION OF ENGINEERING

**INFRASTRUCTURE REHABILITATION PHASE 3**
**PLAYLAND PARK, RYE, NEW YORK**
**CROSS AXIS BUILDING D**
**DETAILS**

CONTRACT NUMBER 22-523
SHEET NUMBER CXD-A-85
DWG NO.: 211 of 664
SCALE: 1 1/2" = 1'-0"
DATE: 08/23/2022
DPW FILE NUMBER 1-118-A-960-0
REV. NO. 0

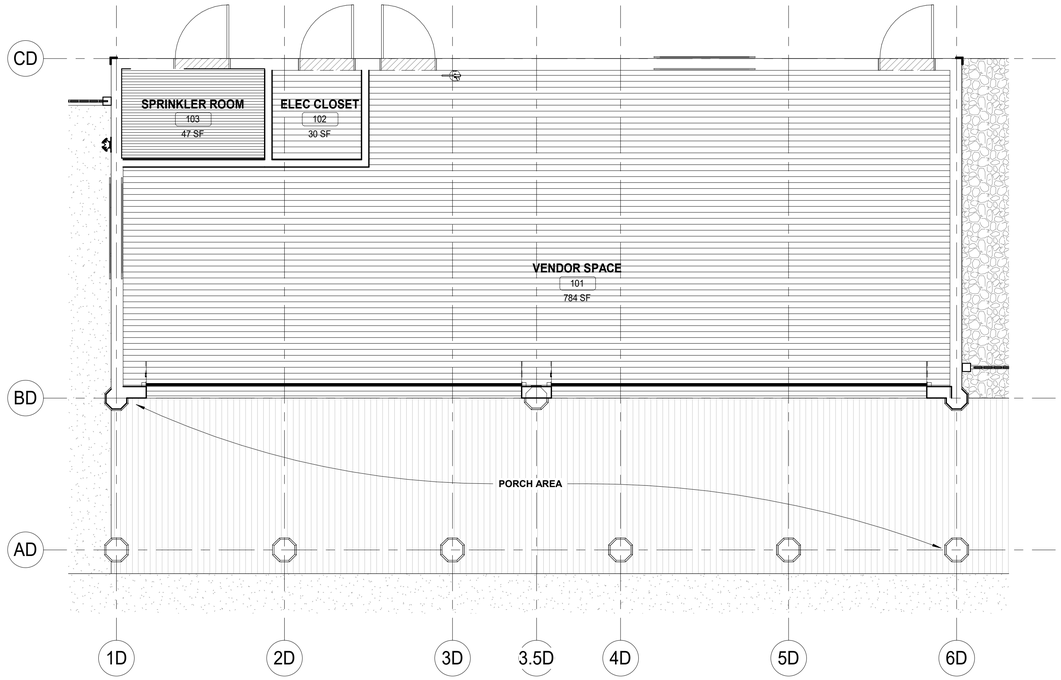


1 CXD FINISH PLAN
1/4" = 1'-0"

## FINISH LEGEND:

| | |
|---|---|
| NIC | ITEMS NOT IN CONTRACT |
| | TILE FLOORING |
| | TIMBER WOOD DECKING |
| | QUARRY TILE FLOORING |

## FINISH PLAN NOTES:

1. INDICATES TYPICAL FINISHES WITHIN ROOM, U.O.N. SEE SHEET CXB-A-65 FOR MATERIAL AND COLOR SCHEDULE.
2. ALL FLOORING COVERING MATERIALS TO BE INSTALLED PER MANUFACTURER'S STANDARD DETAILS AND SPECIFICATIONS. VERIFY WITH MANUFACTURER PRIOR INSTALLATION.
3. THE G.C. IS RESPONSIBLE FOR PROVIDING A SMOOTH LEVEL FLOOR SURFACE THAT MEETS MANUFACTURERS INSTALLATION SPECIFICATIONS PRIOR TO THE INSTALLATION OF ALL FLOORING MATERIALS.
4. THE FLOORING SUB-CONTRACTOR IS RESPONSIBLE FOR VERIFYING THAT THE CONDITION OF THE BASE FLOOR MEETS THE INSTALLATION SPECIFICATIONS PRIOR TO THE INSTALLATION OF THE NEW FLOORING MATERIAL.
5. ALL MATERIAL TRANSITIONS AN DOOR THRESHOLDS TO TAKE PLACE AT DOOR CENTERLINE U.N.O.
6. ALL DIMENSIONS ARE TO CENTERLINE OF TRANSITION BETWEEN FLOORING MATERIALS OR FINISH COLOR OF SAME MATERIAL. PLANS DO NOT SHOW ALL TILES OF SAME MATERIALS. CONTRACTOR TO START TILES AT POINT AS INDICATED ON PLANS.
7. THE GENERAL CONTRACTOR SHALL BE RESPONSIBLE FOR PROPER PREPARATION OF ALL NEW AND EXISTING SURFACES IN A SATISFACTORY MANNER TO RECEIVE NEW FINISHES. THIS INCLUDES THE DEMOLITION AND REMOVAL OF NECESSARY ITEMS. TOUCH- UP AND/ OR REFINISH OF SURFACES DAMAGED BY SUBSEQUENT WORK SHALL BE PERFORMED IN CONFORMANCE WITH THE MANUFACTURER'S RECOMMENDED INSTALLATION METHODS.
8. ALL SURFACES WHICH ARE TO RECEIVE A PAINT FINISH SHALL BE PRIMED AND FINISHED IN ACCORDANCE WITH THE WRITTEN SPECIFICATIONS.
9. ALL JOINTS IN GYPSUM BOARD WALLS SHALL BE FINISHED WITH PAPER TAPE 2" WIDE AND THREE COATS OF VINYL, DRY OR PREMIXED JOINT COMPOUND. ALL OUTSIDE CORNERS SHALL BE FINISHED WITH METAL CORNER BEADS, TAPED AND SPACKLED. ALL AREAS TO BE PAINTED SHALL BE SANDED SMOOTH. JUST PRIOR TO THE APPLICATION OF THE FIRST COAT OF PAINT, WIPE SANDED SURFACES WITH A DAMP CLOTH IN ORDER TO LAY FLAT ANY NAP WHICH MAY HAVE FORMED IN SANDING.
10. THE PAINT CONTRACTOR SHALL REMOVE ALL HARDWARE, SWITCH COVERS, ETC. PRIOR TO PAINTING AND BE RESPONSIBLE FOR THE REINSTALLATION AFTER PAINTING IS COMPLETED.
11. FINISH FLOORING INSTALLATION SHALL BE IN CONFORMANCE WITH THE MANUFACTURER'S RECOMMENDED INSTALLATION GUIDELINES. COORDINATE THE INSTALLATION WITH OTHER TRADES, SUCH AS ELECTRICAL.
12. ALL JOINTS BETWEEN MATERIALS TO BE TIGHT AND CONSTRUCTED IN A NEAT WORKMANLIKE MANNER.
13. ALL FINISHES SHALL BE TOUCHED UP TO CORRECT ANY IMPERFECTIONS AFTER INSTALLATION. FIXTURE CONTRACTOR SHALL PROVIDE TO THE GENERAL CONTRACTOR ALL MATERIALS FOR TOUCH UP WORK.
14. THE INTENT OF THE FINISH SPECIFICATIONS IS TO PROVIDE A SATISFACTORY FINISH TO ALL PARTS OF THE WORK. COVER ALL SURFACES THOROUGHLY. IF THE SPECIFIED NUMBER OF COATS DOES NOT ACCOMPLISH THE INTENT, THE GENERAL CONTRACTOR SHALL BE RESPONSIBLE FOR THE APPLICATION OF ADDITIONAL COATS OF THE SPECIFIED MATERIAL TO GIVE SATISFACTORY COVERAGE, AT NO ADDITIONAL COST TO OWNER.
15. CLEAN ALL GLASS SURFACES WITH LIQUID GLASS CLEANER AT PROJECT COMPLETION.
16. REFERENCE SPECIFICATIONS FOR COMPLETE FINISH DOCUMENTATION AND MANUFACTURER INSTALLATION AND MAINTENANCE DOCUMENTATION.

## FINISH SCHEDULE

| ROOM # | ROOM NAME | FLOORS | WALLS | CEILING | DOORS AND TRIM | WALL BASE |
|---|---|---|---|---|---|---|
| 101 | VENDOR SPACE | WD-1 | P-13 | P-13 | SEE DOOR SCHEDULE (CXD-A-92) | WB-1 |
| 102 | ELECTRICAL ROOM | WD-1 | P-13 | P-13 | SEE DOOR SCHEDULE (CXD-A-92) | WB-1 |
| 103 | SPRINKLER ROOM | T-1 | P-13 | P-13 | SEE DOOR SCHEDULE (CXD-A-92) | WB-2 |
| - | PORCH AREA | WD-2 | - | P-10 | - | - |

| | |
|---|---|
| PAINT | (FOR PAINT TYPE AND SYSTEMS, SEE SPECIFICATIONS) |
| P-13 | **MFR:** BENJAMIN MOORE - **COLOR:** READY MIX WHITE |
| CEILING | (FOR CEILING DETAILS, SEE AR-A-XX) |
| P-13 | **MFR:** BENJAMIN MOORE - **COLOR:** READY MIX WHITE |
| P-10 | **MFR:** BENJAMIN MOORE - **COLOR:** CAPE BLUE |
| FLOORING | |
| WD-1 | 2X6 WOOD BOARD TO MATCH IN KIND WITH EXISTING FLOOR |
| WD-2 | IPE WOOD DECK |
| T-1 | 4X4 TILE FLOORING |
| WALL BASE | (FOR WALL BASE DETAILS, SEE CXD-A-XX) |
| WB-1 | 1 x 6 WOOD BASE |
| WB-2 | TILE BASE TBD |
| THRESHOLD | (FOR THRESHOLD DETAILS, SEE CXD-A-92) |
| TR-1 | EXTERIOR DOOR SILL |

## PAINTING SCHEDULE

| KEY | COLOR | MANUFACTURER | REMARKS |
|---|---|---|---|
| P- 1 | MYSTICAL POWERS #901 | BENJAMIN MOORE | |
| P- 2 | HERITAGE RED #HC-181 | BENJAMIN MOORE | |
| P- 3 | NEW YORK STATE OF MIND #805 | BENJAMIN MOORE | |
| P- 4 | LAZY SUNDAY #803 | BENJAMIN MOORE | |
| P- 5 | DEEP JUNGLE #595 | BENJAMIN MOORE | |
| P- 6 | LUCK OF THE IRISH #588 | BENJAMIN MOORE | |
| P- 7 | MAJOLICA GREEN #0013 | SHERWIN WILLIAMS | |
| P- 8 | ANTELOPE CANYON #125 | BENJAMIN MOORE | |
| P- 9 | FORSYTHIA #6907 | SHERWIN WILLIAMS | |
| P- 10 | CAPE BLUE #1642 | BENJAMIN MOORE | |
| P- 11 | WHITE SNOW #9541 | SHERWIN WILLIAMS | |
| P- 12 | TRICORN BLACK #6258 | SHERWIN WILLIAMS | |
| P- 13 | READY MIX WHITE | BENJAMIN MOORE | INTERIOR USE ONLY |
| P- 14 | STUCCO PAINT TO MATCH P-1 | KEIM | |
| P- 15 | VAN DEUSEN BLUE #HC-156 | BENJAMIN MOORE | |
| P- 16 | #RAL9001 | - | TYP. ROLL UP DOOR |
| P- 17 | FLORIDA BEACHES #900 | BENJAMIN MOORE | |
| P- 18 | PIRATES COVE PEACH #903 | BENJAMIN MOORE | |
| P- 19 | JADITE #6459 | SHERWIN WILLIAMS | |
| P- 20 | DECISIVE YELLOW #6902 | SHERWIN WILLIAMS | |

8/30/2022 4:15:49 PM

CONSULTANT INFORMATION
The LiRo Group
3 Aerial Way, Syosset, New York 11791
(516) 938-5476 www.liro.com

CONSULTANT SEAL
REGISTERED ARCHITECT ROBERT D. LIROLA JR. 023220 STATE OF NEW YORK

| REVISION NUMBER | DATE | MADE BY | APP'D BY | REVISION |
|---|---|---|---|---|

RECORD DRAWING CERTIFICATION
☐ AS BUILT – CHANGES AS NOTED ☐ AS BUILT – NO CHANGES

CONTRACTOR
NAME
SIGNATURE
TITLE DATE

PROJECT COORDINATOR
NAME
SIGNATURE
TITLE DATE

WESTCHESTER COUNTY, NEW YORK
DEPARTMENT OF PUBLIC WORKS AND TRANSPORTATION
DIVISION OF ENGINEERING

**INFRASTRUCTURE REHABILITATION PHASE 3**
**PLAYLAND PARK, RYE, NEW YORK**
**CROSS AXIS BUILDING D**
**CXD FINISH PLAN AND FINISH SCHEDULE**

CONTRACT NUMBER 22-523
SHEET NUMBER **CXD-A-91**
DWG NO.: 212 of 664
SCALE: **As indicated**
DATE: **08/23/2022**
DPW FILE NUMBER **1-118-A-961-0**
REV. NO. 0

## DOOR SCHEDULE - CXD

| Building | Door Number | DOOR TYPE | WIDTH | HEIGHT | DOOR THICKNESS | DOOR MATERIAL | GLASS | EXTERIOR FINISH | INTERIOR FINISH | FRAME TYPE | MATERIAL | EXTERIOR | INTERIOR | HDWR SET | REMARKS |
|---|---|---|---|---|---|---|---|---|---|---|---|---|---|---|---|
| | | DOOR | | | DOOR | | | DOOR | | FRAME | | | | | |
| CXD | 101A | C | 21' - 0" | 9' - 6" | | ALUM | NO | PAINT, P-16 | PAINT, P-16 | - | - | - | - | 4.0 | |
| CXD | 101B | C | 21' - 0" | 9' - 6" | | ALUM | NO | PAINT, P-16 | PAINT, P-16 | - | - | - | - | 4.0 | |
| CXD | 101C | B | 3' - 0" | 7' - 0" | 1 3/4" | WOOD | NO | PAINT, P-1 | PAINT, P-13 | 2 | WD. | PAINT, P-7 | PAINT, P-13 | 9.0 | EXIT DEVICE REQUIRED, LOCK REQUIRED. TYPE X-3 SIGN ON DOOR |
| CXD | 101D | B | 3' - 0" | 7' - 0" | 1 3/4" | WOOD | NO | PAINT, P-1 | PAINT, P-13 | 2 | WD. | PAINT, P-7 | PAINT, P-13 | 9.0 | EXIT DEVICE REQUIRED, LOCK REQUIRED. TYPE X-3 SIGN ON DOOR |
| CXD | 102A | B | 3' - 0" | 7' - 0" | 1 3/4" | WOOD | NO | PAINT, P-1 | PAINT, P-13 | 2 | WD. | PAINT, P-7 | PAINT, P-13 | 11.0 | STOREFRONT LOCK SET. TYPE A-3 SIGN ON DOOR |
| CXD | 103A | B | 3' - 0" | 7' - 0" | 1 3/4" | WOOD | NO | PAINT, P-1 | PAINT, P-13 | 2 | WD. | PAINT, P-7 | PAINT, P-13 | 9.0 | STOREFRONT LOCK SET. TYPE A-2 SIGN ON DOOR |

**NOTE:** GC TO CONFIRM DOOR SIZES IN FIELD PRIOR TO ORDERING

## GATE SCHEDULE

| DOOR NUMBER | DOOR TYPE | WIDTH | HEIGHT | GATE MATERIAL | FINISH | HDWR SET | REMARKS |
|---|---|---|---|---|---|---|---|
| EX1 | SEE CXD-A-84 | 3'-1" VIF | 6'-0" | WOOD | SEE CXD-A-84 | PROVIDE SELF CLOSING HINGES, & D HANDLE TO BE APPROVED BY ARCHITECT | SEE DETAILS ON CXD-A-84 |
| EX2 | SEE CXD-A-84 | (2) 2'-7 3/4" VIF | 6'-0" | WOOD | SEE CXD-A-84 | PROVIDE SELF CLOSING HINGES, & D HANDLE TO BE APPROVED BY ARCHITECT | SEE DETAILS ON CXD-A-84 |

**GENERAL DOOR SCHEDULE NOTES:**

1. REFER TO CXD-A-92 SHEET FOR DOOR SILL & TRANSITION DETAILS. SILL TRANSITION INFORMATION IS INDICATED ON FINISH PLAN UNLESS OTHERWISE NOTED.
2. REFER TO SHEET CXD-A-91 FOR FINISH SCHEDULE AND LEGEND.
3. THE CONTRACTOR SHALL EXAMINE THE DRAWINGS, SCHEDULE AND SPECIFICATIONS AND FURNISH PROPER HARDWARE FOR ALL OPENINGS WHETHER LISTED OR NOT. COMPLETE SHOP DRAWINGS SHALL BE PROVIDED FOR APPROVAL PRIOR TO PURCHASE.
4. ALL EXIT DOORS SHALL BE OPENABLE FROM THE EGRESS SIDE WITHOUT THE USE OF A KEY OR SPECIAL KNOWLEDGE.
5. VERIFY DIMENSIONS OF EXISTING OPENINGS AND DOORS BEFORE ORDERING.
6. THE CONTRACTOR SHALL COORDINATE & VERIFY LOCATION OF RECESSED FLOOR CLOSERS, PIVOTS, ETC. WITH EXISTING FLOOR SLABS AND OTHER FIELD CONDITIONS PRIOR TO ORDERING TO ENSURE PROPER CLEARANCES & DEPTHS ARE ALLOWED.

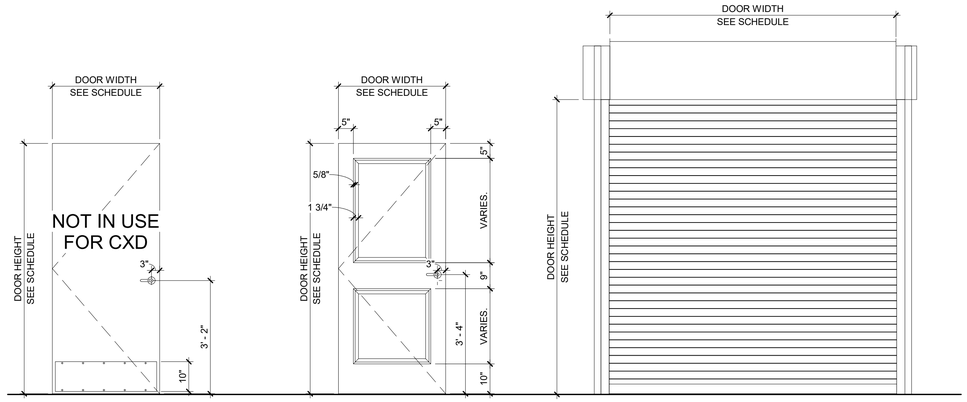


TYPE A
SINGLE H.M. DOOR
NOT IN USE FOR CXD

TYPE B
SINGLE WOOD DOOR

TYPE C
OVERHEAD ROLL-UP DOOR

6 DOOR TYPES
1/2" = 1'-0"

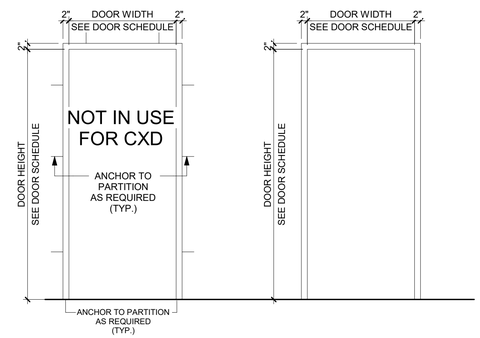


TYPE 1
H.M. FRAME
NOT IN USE FOR CXD

TYPE 2
WOOD FRAME

5 DOOR FRAME TYPES
1/2" = 1'-0"

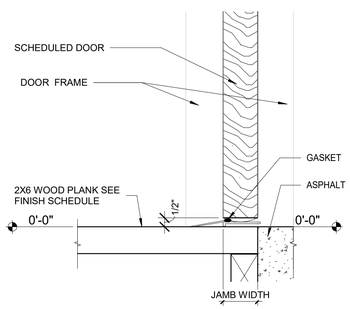


4 WOOD PLANK TO ASPHALT TRANSITION
3" = 1'-0"

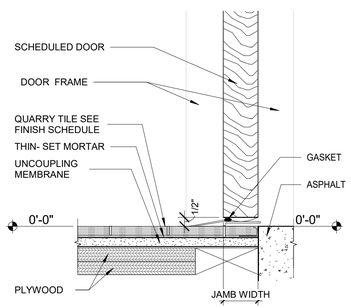


3 QUARRY TILE TO ASPHALT TRANSITION
3" = 1'-0"

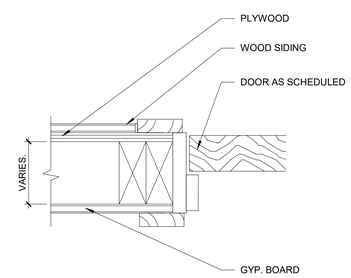


2 WOOD DOOR JAMB DETAIL
3" = 1'-0"

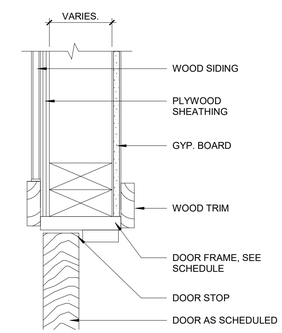


1 WOOD DOOR HEAD DETAIL
3" = 1'-0"

8/30/2022 4:15:52 PM

CONSULTANT INFORMATION
The LiRo Group
3 Aerial Way, Syosset, New York 11791
(516) 938-5476 www.liro.com

CONSULTANT SEAL
REGISTERED ARCHITECT ROBERT D. JOHNSON 023220 STATE OF NEW YORK

| REVISION NUMBER | DATE | MADE BY | APP'D BY | REVISION |
|---|---|---|---|---|

RECORD DRAWING CERTIFICATION
☐ AS BUILT – CHANGES AS NOTED ☐ AS BUILT – NO CHANGES

CONTRACTOR
NAME
SIGNATURE
TITLE DATE

PROJECT COORDINATOR
NAME
SIGNATURE
TITLE DATE

WESTCHESTER COUNTY, NEW YORK
DEPARTMENT OF PUBLIC WORKS AND TRANSPORTATION
DIVISION OF ENGINEERING

**INFRASTRUCTURE REHABILITATION PHASE 3**
**PLAYLAND PARK, RYE, NEW YORK**
**CROSS AXIS BUILDING D**
**DOOR SCHEDULE AND DOOR DETAILS**

CONTRACT NUMBER 22-523
SHEET NUMBER **CXD-A-92**
DWG NO.: 213 of 664
SCALE: **As indicated**
DATE: **08/23/2022**
DPW FILE NUMBER **1-118-A-962-0**
REV. NO. 0

## WINDOW SCHEDULE - CXD

| BUILDING | MARK | LEVEL | WINDOW TYPE | WIDTH | HEIGHT | SILL HEIGHT | WINDOW MATERIAL | EXTERIOR TRIM | INTERIOR TRIM | REMARKS |
|---|---|---|---|---|---|---|---|---|---|---|
| CXD | W1 | GROUND FLOOR | 2 | VIF | VIF | 6' - 6" | FIBER GLASS, BLACK | WOOD, P-7 | WOOD, P-13 | SALVAGED FROM CXF DEMO (SEE CXF-A-01). V.I.F. WINDOW DIMENSIONS. |
| CXD | W2 | GROUND FLOOR | 2 | VIF | VIF | 6' - 6" | FIBER GLASS, BLACK | WOOD, P-7 | WOOD, P-13 | SALVAGED FROM CXF DEMO (SEE CXF-A-01). V.I.F. WINDOW DIMENSIONS. |

## PAINTING SCHEDULE

| KEY | COLOR | MANUFACTURER | REMARKS |
|---|---|---|---|
| P- 1 | MYSTICAL POWERS #901 | BENJAMIN MOORE | |
| P- 2 | HERITAGE RED #HC-181 | BENJAMIN MOORE | |
| P- 3 | NEW YORK STATE OF MIND #805 | BENJAMIN MOORE | |
| P- 4 | LAZY SUNDAY #803 | BENJAMIN MOORE | |
| P- 5 | DEEP JUNGLE #595 | BENJAMIN MOORE | |
| P- 6 | LUCK OF THE IRISH #588 | BENJAMIN MOORE | |
| P- 7 | MAJOLICA GREEN #0013 | SHERWIN WILLIAMS | |
| P- 8 | ANTELOPE CANYON #125 | BENJAMIN MOORE | |
| P- 9 | FORSYTHIA #6907 | SHERWIN WILLIAMS | |
| P- 10 | CAPE BLUE #1642 | BENJAMIN MOORE | |
| P- 11 | WHITE SNOW #9541 | SHERWIN WILLIAMS | |
| P- 12 | TRICORN BLACK #6258 | SHERWIN WILLIAMS | |
| P- 13 | READY MIX WHITE | BENJAMIN MOORE | INTERIOR USE ONLY |
| P- 14 | STUCCO PAINT TO MATCH P-1 | KEIM | |
| P- 15 | VAN DEUSEN BLUE #HC-156 | BENJAMIN MOORE | |
| P- 16 | #RAL9001 | - | TYP. ROLL UP DOOR |
| P- 17 | FLORIDA BEACHES #900 | BENJAMIN MOORE | |
| P- 18 | PIRATES COVE PEACH #903 | BENJAMIN MOORE | |
| P- 19 | JADITE #6459 | SHERWIN WILLIAMS | |
| P- 20 | DECISIVE YELLOW #6902 | SHERWIN WILLIAMS | |

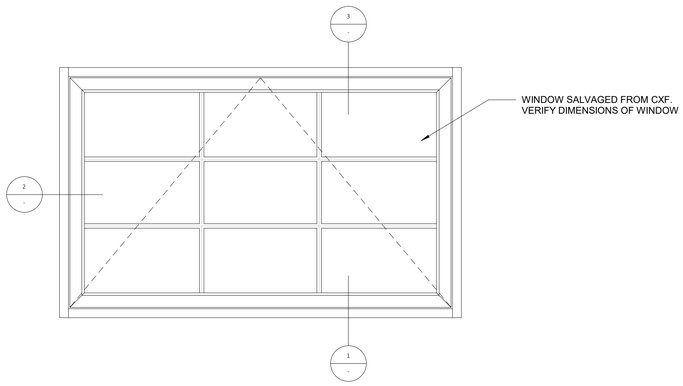


4 WINDOW TYPE A
1 1/2" = 1'-0"

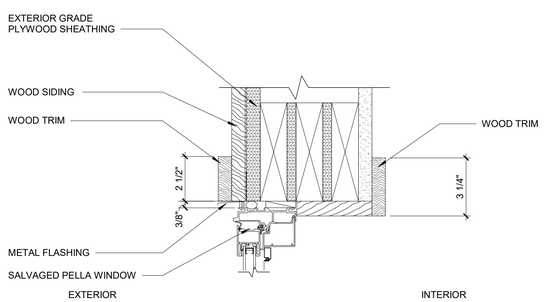


3 AWNING WINDOW HEAD DEATIL
3" = 1'-0"

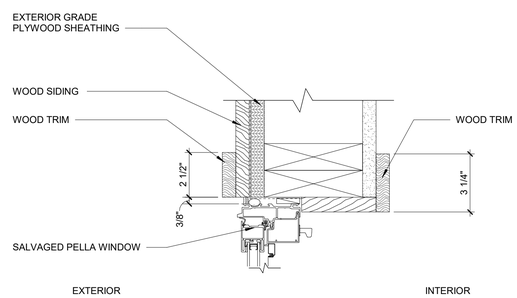


2 AWNING WINDOW JAMB DETAIL
3" = 1'-0"

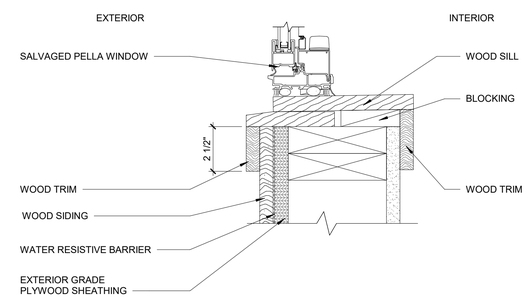


1 AWNING WINDOW SILL DETAIL
3" = 1'-0"

8/30/2022 4:15:54 PM

CONSULTANT INFORMATION
The LiRo Group
3 Aerial Way, Syosset, New York 11791
(516) 938-5476 www.liro.com

CONSULTANT SEAL
REGISTERED ARCHITECT ROBERT D. LIROSO JR. 023220 STATE OF NEW YORK

| REVISION NUMBER | DATE | MADE BY | APP'D BY | REVISION |
|---|---|---|---|---|

RECORD DRAWING CERTIFICATION
☐ AS BUILT – CHANGES AS NOTED ☐ AS BUILT – NO CHANGES

CONTRACTOR
NAME
SIGNATURE
TITLE DATE

PROJECT COORDINATOR
NAME
SIGNATURE
TITLE DATE

WESTCHESTER COUNTY, NEW YORK
DEPARTMENT OF PUBLIC WORKS AND TRANSPORTATION
DIVISION OF ENGINEERING

**INFRASTRUCTURE REHABILITATION PHASE 3**
**PLAYLAND PARK, RYE, NEW YORK**
**CROSS AXIS BUILDING D**
**WINDOW SCHEDULE AND WINDOW DETAILS**

CONTRACT NUMBER 22-523
SHEET NUMBER **CXD-A-93**
DWG NO.: 214 of 664
SCALE: **As indicated**
DATE: **08/23/2022**
DPW FILE NUMBER **1-118-A-963-0**
REV. NO. 0

**SIGNAGE GENERAL NOTES**

1. ALL PANEL SIGNAGE SHALL BE WALL MOUNTED AT 48" MIN AND 60" MAX ABOVE THE ADJACENT FINISHED FLOOR MEASURED FROM THE BASELINE OF THE CHARACTERS AND IN COMPLIANCE WITH THE LATEST ADOPTED VERSION OF ICC/ANSI-A117.1 REQUIREMENTS.
2. SIGNAGE SHOWN HERE MAY NOT BE INCLUSIVE OF ALL TYPES OF SIGNAGE REQUIRED FOR THIS PROJECT. REFER TO DRAWINGS AND SPECIFICATIONS FOR ALL ADDITIONAL SIGNAGE REQUIREMENTS NOT SHOWN HERE.
3. MOUNT SIGN SO THAT A PERSON CAN APPROACH WITHIN 3" AND AVOID DOOR SWING AND PROTRUDING OBJECTS
4. SIGNS SHALL BE LOCATED ON THE WALL ADJACENT TO THE LATCH SIDE OF DOOR, UON.

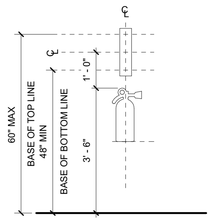


11 FIRE EXTINGUISHER SIGN LOCATION ELEVATION
1/2" = 1'-0"

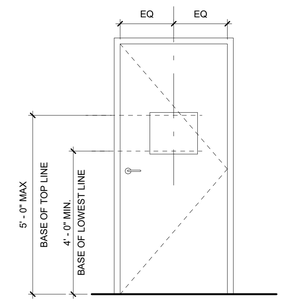


10 SIGN LOCATION ELEVATION - TYPICAL DOOR CONDITION 2
1/2" = 1'-0"

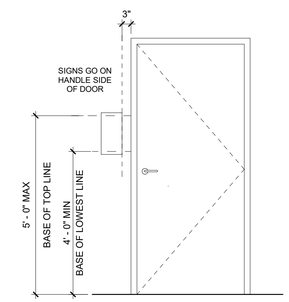


9 SIGN LOCATION ELEVATION - TYPICAL DOOR CONDITION
1/2" = 1'-0"

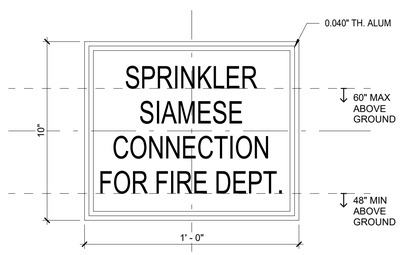


8 TYPE X-6 SIAMESE CONNECTION SIGNAGE
3" = 1'-0"

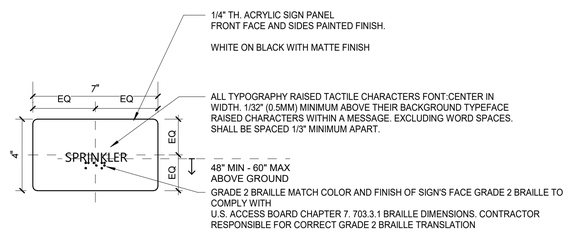


7 TYPE A-2- SPRINKLER ROOM ID. SIGN
3" = 1'-0"

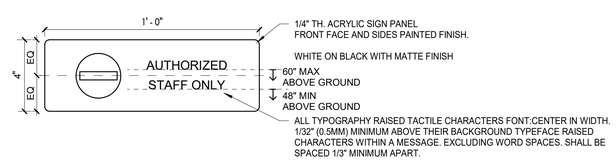


6 TYPE X-3- STAFF ONLY SIGN
3" = 1'-0"

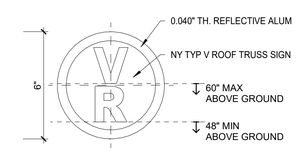


5 TYPE X-4 TRUSS SIGNAGE CLASS VR
3" = 1'-0"

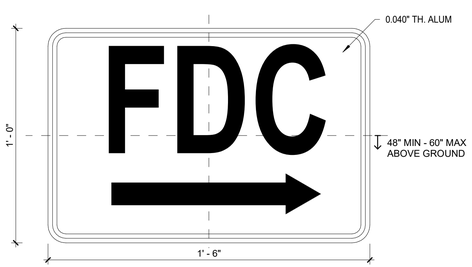


4 TYPE X-5 FDC SIGNAGE
3" = 1'-0"

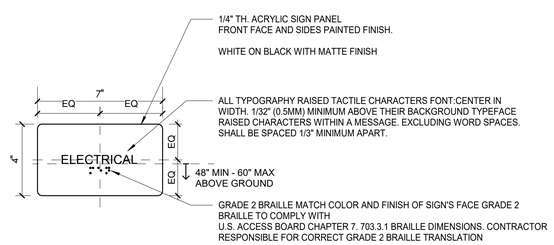


3 TYPE A-3 ELECTRICAL ROOM ID. SIGN
3" = 1'-0"

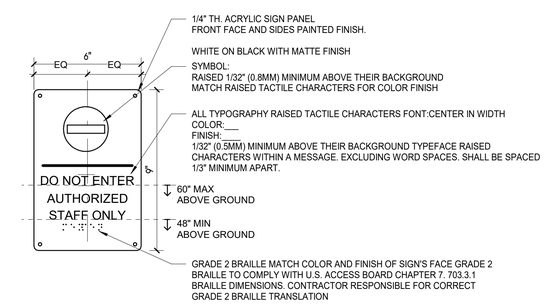


2 TYPE X-2- STAFF ONLY. SIGN
3" = 1'-0"

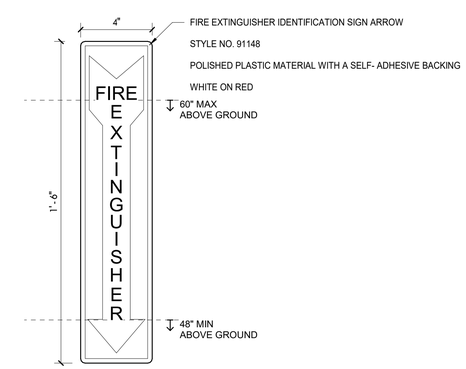


1 TYPE X-1- FIRE EXTINGUISHER. SIGN
3" = 1'-0"

8/30/2022 4:15:55 PM

CONSULTANT INFORMATION

The LiRo Group
3 Aerial Way, Syosset, New York 11791
(516) 938-5476 www.liro.com

CONSULTANT SEAL

REGISTERED ARCHITECT ROBERT D. YOUNG JR. 023280 STATE OF NEW YORK

| REVISION NUMBER | DATE | MADE BY | APP'D BY | REVISION |
|---|---|---|---|---|

RECORD DRAWING CERTIFICATION

☐ AS BUILT – CHANGES AS NOTED ☐ AS BUILT – NO CHANGES

CONTRACTOR
NAME
SIGNATURE
TITLE DATE

PROJECT COORDINATOR
NAME
SIGNATURE
TITLE DATE

WESTCHESTER COUNTY, NEW YORK
DEPARTMENT OF PUBLIC WORKS AND TRANSPORTATION
DIVISION OF ENGINEERING

**INFRASTRUCTURE REHABILITATION PHASE 3**
**PLAYLAND PARK, RYE, NEW YORK**
**CXD - CXE - CXF**
**SIGNAGE TYPES AND DETAILS**

| | |
|---|---|
| CONTRACT NUMBER | 22-523 |
| SHEET NUMBER | CXD-A-94 |
| DWG NO.: | 215 of 664 |
| SCALE: | As indicated |
| DATE: | 08/23/2022 |
| DPW FILE NUMBER | 1-118-A-964-0 |
| REV. NO. | 0 |

# STRUCTURAL NOTES

## GENERAL

G-1 THESE NOTES ARE GENERAL AND SUPPLEMENTAL TO THE SPECIFICATIONS. THESE NOTES APPLY TO THE ENTIRE PROJECT UNLESS MODIFIED OR NOTED OTHERWISE IN THE CONTRACT DOCUMENTS.

G-2 STANDARD DETAILS, SHOWN ON DRAWINGS CXD-S-07 SHALL BE USED WHEN REFERRED TO OR WHEN NO MORE RESTRICTIVE OR DIFFERENT DETAILS ARE SHOWN ON THE DRAWINGS.

G-3 DESIGN WAS IN ACCORDANCE WITH AND CONSTRUCTION SHALL COMPLY WITH THE PROVISIONS OF THE NEW YORK STATE BUILDING CODE (NYSBC). THE DESIGN LOADS AND OTHER DESIGN VALUES GIVEN BELOW WERE USED FOR DESIGN OF STRUCTURES UON ON THE DRAWINGS.

G-4 DESIGN LOADS FOR NEW ELEMENTS:
LIVE LOADS:
CROSS AXIS BUILDING:
BUILDING D:
FLOOR: 60 PSF

SNOW LOADS:

| | |
|---|---|
| GROUND SNOW LOAD, | Pg = 30 PSF |
| ROOF SNOW LOAD, | Pf= 21 PSF |
| SNOW EXPOSURE FACTOR, | Ce = 0.9 |
| SNOW LOAD IMPORTANCE FACTOR, | I = 1.1 |
| THERMAL FACTOR, | Ct = 1.0 |

WIND DESIGN:

| | |
|---|---|
| BASIC WIND SPEED, | V = 126 MPH |
| BUILDING CATEGORY: | II |
| WIND EXPOSURE CATEGORY: | D |
| INTERNAL PRESSURE COEFFICIENT, | GCpi = ±0.18 |

SEISMIC DESIGN:

| | |
|---|---|
| SPECTRAL RESPONSE COEFFICIENTS: | |
| SDS = | 0.296 |
| SD1 = | 0.096 |
| SITE CLASS: | B |
| SEISMIC DESIGN CATEGORY: | C |
| SEISMIC IMPORTANCE FACTOR: | I = 1.25 |

BASIC SEISMIC FORCE RESISTING SYSTEM IS AS SHOWN ON DRAWINGS
DESIGN BASE SHEAR, V = AS SHOWN ON DRAWINGS
ANALYSIS PROCEDURE IS EQUIVALENT LATERAL FORCE METHOD, UON.
RESPONSE MODIFICATION FACTOR, R:
CROSS AXIS BUILDING D: R = 7

LOADS INDICATED ABOVE REFLECT DESIGN LOADS FOR ANY NEW OR REHABILITATED STRUCTURAL ELEMENTS. THEY SHOULD NOT BE TAKEN AS DESIGN LOADS FOR THE STRUCTURE AS A WHOLE.

G-5 ALL DIMENSIONS INDICATED (*) ARE TO BE VERIFIED EITHER BY FIELD MEASUREMENTS FOR EXISTING STRUCTURES OR BY SHOP DRAWINGS FOR EQUIPMENT FURNISHED. STRUCTURAL DIMENSIONS NOT SHOWN BUT CONTROLLED BY OR RELATED TO EQUIPMENT SHALL BE VERIFIED BY THE CONTRACTOR WITH THE MANUFACTURER PRIOR TO CONSTRUCTION.

G-6 STRUCTURAL DRAWINGS SHALL BE USED IN COORDINATION WITH THE DRAWINGS OF ALL OTHER DISCIPLINES AND MANUFACTURER'S SHOP DRAWINGS.

G-7 IF A CONFLICT IS FOUND BETWEEN DIFFERENT PORTIONS OF THE CONTRACT DOCUMENTS, THE CONTRACTOR SHALL NOTIFY THE ENGINEER IMMEDIATELY. CONTINUED CONSTRUCTION OF THE AREA IN CONFLICT SHALL BE AT THE CONTRACTOR'S OWN RISK UNTIL THE CONFLICT IS RESOLVED BY THE ENGINEER.

G-8 WHENEVER ONE MEMBER IS FASTENED TO ANOTHER WITH FASTENINGS (BOLTS, WELDS, ETC.) SET AT A UNIFORM SPACING, THERE SHALL BE A MINIMUM OF TWO FASTENINGS PER PIECE CONNECTED AND THE FIRST AND LAST FASTENINGS SHALL BE LOCATED NOT TO EXCEED 0.25 OF FASTENER SPACING FROM EACH END.

G-9 STRUCTURES HAVE BEEN DESIGNED FOR OPERATIONAL LOADS ON THE COMPLETED STRUCTURE. DURING CONSTRUCTION, THE STRUCTURES SHALL BE PROTECTED BY BRACING AND TEMPORARY SUPPORTS WHEREVER EXCESSIVE CONSTRUCTION LOADS MAY OCCUR. OVERSTRESSING OF ANY STRUCTURAL ELEMENT IS PROHIBITED.

G-10 NO BACKFILL SHALL BE PLACED AGAINST ANY WALL UNLESS ALL SUPPORTING ELEMENTS OF THE STRUCTURE HAVE BEEN CONSTRUCTED AND HAVE REACHED THE SPECIFIED MINIMUM CONCRETE STRENGTH.

G-11 THE CONTRACTOR IS RESPONSIBLE FOR VERIFYING ALL EXISTING INFORMATION IN THE FIELD AS REQUIRED FOR NEW WORK.

## FOUNDATIONS

F-1 DESIGN ASSUMPTIONS:
A) ALLOWABLE BEARING PRESSURE: 1. SOUND ROCK – 8 TSF, 2. OVERBURDEN – 1 TSF.
B) GROUNDWATER: EXISTING GROUNDWATER ELEVATIONS VARY ACROSS SITE.

F-2 GRAVITY UNDER DRAINS SHALL BE PROVIDED TO PERMANENTLY LOWER GROUNDWATER.

F-3 CONCRETE GENERAL NOTES APPLY TO FOUNDATIONS.

F-4 MINIMUM DEPTH FROM ADJACENT FINISHED GRADE TO BOTTOM OF FOUNDATION, 4'-0"

F-5 FOUNDATIONS BEARING ON ROCK SHALL BE CONSTRUCTED SUCH THAT ROCK SURFACE IS LEVEL, UNLESS APPROVED BY ENGINEER.

F-6 COMPACTED SELECT GRANULAR FILL 12 INCHES THICK MINIMUM, SHALL BE PLACED BELOW ALL CONCRETE FOUNDATIONS UNLESS DIRECTLY BEARING ON SOUND ROCK.

## STRUCTURAL METALS

S-1 DETAIL, FABRICATE, AND ERECT STRUCTURAL STEEL IN ACCORDANCE WITH AISC SPECIFICATION FOR STRUCTURAL STEEL BUILDINGS, ALLOWABLE STRESS DESIGN AND LRFD DESIGN (LRFD MANUAL OF STEEL CONSTRUCTION, CURRENT EDITION).

S-2 STEEL MATERIAL:
A) STRUCTURAL TUBING, ASTM A 500, GRADE B.
B) STRUCTURAL PIPE, ASTM A 53, GRADE B.
C) PLATES AND ANGLES, ASTM A 36 UNO.
D) STRUCTURAL W SHAPES, ASTM A 992 (MIN. YIELD STRENGTH OF 50 KSI).
E) STRUCTURAL S, M, & H SHAPES ASTM A572 GRADE 50.

S-3 PROVIDE MIN 3/4" DIAMETER ASTM A 325 HIGH STRENGTH BOLTS WITH FULLY TIGHTENED TYPE N CONNECTIONS FOR STRUCTURAL STEEL UON.

S-4 PROVIDE TYPICAL STEEL BEAM CONNECTIONS FOR A CAPACITY NOT LESS THAN THE TOTAL UNIFORM LOAD CAPACITY TABULATED IN THE AISC TABLES FOR ALLOWABLE LOADS OF BEAMS UNLESS NOTED OTHERWISE.

S-5 CAST IN PLACE ANCHOR BOLTS FOR STRUCTURAL STEEL SHALL CONFORM TO ASTM A307 UON.

S-6 DO NOT PAINT STEEL SURFACES WHICH ARE TO BE WELDED OR ARE TO BE ENCASED IN CONCRETE.

S-7 STAINLESS STEEL SHALL BE TYPE 316 FOR BOLTED CONSTRUCTIONS AND 316L FOR WELDED CONSTRUCTIONS.

S-8 ALUMINUM SHALL BE ALLOY 6061-T6.

S-9 ALL GROOVE AND BUTT WELDS SHALL BE FULL PENETRATION.

S-10 FILLET WELD SIZES SHALL BE THE MINIMUM SIZE REQUIRED BY AISC CODE FOR PLATE SIZES TO BE CONNECTED AND SHALL BE APPLIED TO THE ENTIRE JOINT CONTACT LENGTH, BUT NOT LESS THAN 3/16".

S-11 DETAIL, FABRICATE, AND ERECT ALUMINUM IN ACCORDANCE WITH THE ALUMINUM ASSOCIATION CONSTRUCTION MANUAL CURRENT EDITION.

S-12 ALL BOLTS, ANCHOR BOLTS, AND CONCRETE ANCHORS CONNECTING ALUMINUM SHALL BE TYPE 316 STAINLESS STEEL UON.

S-13 ALUMINUM SHALL BE ISOLATED FROM CONTACT WITH CONCRETE OR DISSIMILAR METALS.

## EXCAVATION

E-1 CONTRACTOR SHALL PERFORM ALL EXCAVATION IN ACCORDANCE WITH STATE, LOCAL AND FEDERAL REQUIREMENTS INCLUDING OSHA BRACING AND EXCAVATION REQUIREMENTS.

E-2 TEMPORARY SHEETING AND BRACING IS NOT SHOWN ON CONTRACT DRAWINGS. ALL EXCAVATIONS WITH A POTENTIAL FOR CAVE-IN SHALL BE PROVIDED WITH EXCAVATION PROTECTION SYSTEMS IN ACCORDANCE WITH OSHA 1926. SLOPING AND BENCHING WHICH WILL ENCROACH ON AREAS SLATED TO REMAIN ACCESSIBLE OR THAT MAY ENCROACH ON EXISTING FOOTINGS AND STRUCTURES SHALL NOT BE PERMITTED.

E-3 CONTRACTOR SHALL ENGAGE THE SERVICES OF A LICENSED PROFESSIONAL ENGINEER REGISTERED IN THE STATE OF NEW YORK TO DESIGN ALL TEMPORARY SHEETING AND BRACING AND RELATED APPURTENANCES. CONTRACTOR TO SUBMIT SUCH PLANS TO ENGINEER FOR INFORMATION.

E-4 CONTRACTOR SHALL BE RESPONSIBLE FOR DEWATERING OF OPEN EXCAVATIONS.

E-5 ALL EXCAVATED MATERIALS SHALL BE REMOVED FROM SITE TO A FACILITY AS REQUIRED BY STATE, LOCAL FEDERAL LAW.

## MASONRY

M-1 CONCRETE MASONRY UNITS SHALL CONFORM TO ASTM C90. THE TOTAL MASONRY ASSEMBLAGE SHALL HAVE A COMPRESSIVE STRENGTH EQUAL TO 1500 PSI AT 28 DAYS.

M-2 MASONRY MORTAR SHALL CONFORM TO ASTM C270, TYPE S.

M-3 ALL BOND BEAMS AND ANY BLOCK CELLS CONTAINING EMBEDMENTS, REINFORCING STEEL, ANCHORS, ETC., SHALL BE FILLED WITH GROUT FILL MEETING THE REQUIREMENTS OF ASTM C476.

M-4 BOND BEAM REINF. SHALL BE CONTINUOUS AT CORNERS AND INTERSECTIONS.

## TIMBER

T-1 ALL WOOD FRAMING MEMBERS INCLUDING, BUT NOT LIMITED TO, WALL STUDS AND JOISTS, ARE INTENDED TO ACT AS A SYSTEM AS DETAILED IN THE STRUCTURAL DRAWINGS AND ONCE CONSTRUCTION IS COMPLETE. IT IS THE RESPONSIBILITY OF THE CONTRACTOR TO ENSURE SAFETY AND STABILITY OF WOOD FRAMING SYSTEMS (I.E. TEMPORARY BRACING IF REQUIRED) DURING CONSRTUCTION AS A RESULT OF CONSTRUCTION METHODS AND SEQUENCES.

T-2 ALL TIMBER BELOW FLOOR DECKING SHALL BE PRESSURE-TREATED SOUTHERN PINE LUMBER.

T-3 STORAGE OF ALL LUMBER AND TIMBER ON SITE SHALL BE KEPT OFF GROUND, UNDER COVER AND PROTECTED FROM DAMAGE.

T-4 ALL DIMENSIONAL LUMBER SHALL BE CERTIFIED BY THE SUPPLIER IN WRITING TO BE KILN DRIED.

T-5 STRUCTURE SHALL NOT BE ENCLOSED UNLESS LUMBER MOISTURE CONTENT HAS BEEN VERIFIED TO BE AT OR BELOW 15%. ANY SIGNS OF MOLD SHALL BE REMOVED AND TREATED IN ACCORDANCE WITH PROJECT SPECIFICATIONS OR INDUSTRY STANDARDS.

T-6 ALL LUMBER IN CONTACT WITH THE GROUND OR CONCRETE SHALL BE PRESSURE TREATED.

T-7 FASTENERS FOR PRESERVATIVE TREATED AND FIRE RETARDANT TREATED WOOD SHALL BE OF HOT DIPPED ZINC COATED GALVANIZED STEEL OR STAINLESS STEEL AND SHALL FOLLOW CURRENT SIMPSON GUIDELINES BASED ON WEATHER EXPOSURE. WHERE STAINLESS STEEL CONNECTORS OR HOT DIPPED GALVANIZED CONNECTORS ARE SPECIFIED IN THE DRAWINGS, STAINLESS STEEL OR HOT DIPPED GALVANIZED FASTENERS SHALL BE USED TO MATCH CONNECTOR TYPE.

T-8 ALL PLATES AND LEDGERS SHALL BE FASTENED WITH A MINIMUM (3) ANCHORS PER PIECE UNLESS NOTED OTHERWISE.

T-9 ALL METAL HARDWARE AND FRAMING ACCESSORIES SHALL BE MANUFACTURED BY SIMPSON STRONG-TIE COMPANY. ALL ITEMS SHALL BE INSTALLED PER THE SIMPSON'S INSTALLATION REQUIREMENTS. ALL NAIL HOLES SHALL BE FILLED WITH THE RECOMMENDED FASTENER UNLESS NOTED OTHERWISE ON THE DRAWING.

T-10 HOLES FOR BOLTS SHALL BE DRILLED WITH A BIT OF THE SAME NOMIMAL DIAMETER AS THE BOLT + 1/16". LEAD HOLES FOR LAG SCREWS SHALL BE BORED PER NDS 11.1.3.

T-11 ALL BOLTS, CARRIAGE BOLTS, LAG SCREWS, EXPANSION BOLTS AND EPOXY BOLTS SHALL BE INSTALLED WITH STANDARD CUT WASHERS UNDER THE BOLT HEAD AND NUTS THAT BEAR DIRECTLY ON THE WOOD. ALL NUTS SHALL BE TIGHTENED AT THE TIME OF INSTALLATION AND RE-TIGHTENED IF NECESSARY, DUE TO WOOD SHRINKAGE, PRIOR TO CLOSE OUT OR COMPLETION OF THE PROJECT. BOLTS AND LAG SCREWS SHALL CONFORM TO ANSI/ASME STANDARD B18.2.1. WOOD SCREWS SHALL CONFORM TO B18.6.1. ALL BOLTS SHALL CONFORM TO ASTM A307 GRADE A UNLESS NOTED OTHERWISE.

T-12 CUTTING AND NOTCHING OF SAWN LUMBER RAFTERS AND STUDS SHALL BE IN CONFORMANCE WITH THE FOLLOWING CRITERIA:

A. JOISTS NOTCHES AT THE ENDS OF JOISTS SHALL NOT EXCEED 1/5 OF THE JOIST DEPTH. HOLES IN JOISTS SHALL NOT BE WITHIN 2½ INCHES OF THE TOP OR BOTTOM OF THE JOIST, AND THE DIAMETER OF ANY SUCH HOLE SHALL NOT EXCEED 1/4 THE DEPTH OF THE JOIST. NOTCHES IN THE TOP OR BOTTOM OF THE JOISTS SHALL NOT EXCEED 1/6 THE DEPTH AND SHALL NOT BE LOCATED IN THE MIDDLE OF THE THIRD SPAN.

B. RAFTERS NOTCHES AT THE ENDS OF RAFTERS OR CEILING JOISTS SHALL NOT EXCEED 1/5 OF THE DEPTH. NOTCHES IN THE TOP OR BOTTOM OF THE RAFTER OR CEILING JOIST SHALL NOT EXCEED 1/6 THE DEPTH AND SHALL NOT BE LOCATED IN THE MIDDLE 1/3 OF THE SPAN. EXCEPT THAT A NOTCH NOT EXCEEDING 1/3 OF THE DEPTH IS PERMITTED IN THE TOP OF THE RAFTERS OR CEILING JOIST NOT FURTHER FROM THE FACE OF THE SUPPORT THAN THE DEPTH OF THE MEMBER. HOLES BORED IN RAFTERS OR CEILING JOISTS SHALL NOT BE WITHIN 2½" INCHES OF THE TOP AND BOTTOM AND THEIR DIAMETER SHALL NOT EXCEED 1/4 THE DEPTH OF THE MEMBER.

C. WALL STUDS A MAXIMUM OF 2¼" DIAMETER NEATLY BORED HOLE MAY BE PLACED IN THE CENTER OF ALL BEARING 2x6 STUDS WITH NO ADDITIONAL REINFORCEMENT REQUIRED.

## SPECIAL INSPECTIONS – CROSS AXIS BUILDING D

S-1 SPECIAL INSPECTION SHALL COMPLY WITH SPECIFICATIONS.

S-2 SPECIAL INSPECTION WILL BE PERFORMED IN ACCORDANCE WITH CHAPTER 17 OF THE NYS BUILDING CODE.

S-3 SPECIAL INSPECTION WILL BE PERFORMED ON THE FOLLOWING STRUCTURAL SYSTEMS:
A) WOOD CONSTRUCTION (1705.4).
B) CONCRETE CONSTRUCTION (1705.3).

## DEMOLITION

LEGEND

EXISTING REINFORCED CONCRETE WALL OR STRUCTURE TO BE DEMOLISHED

SAW CUT LINE – FULL DEPTH UNLESS NOTED OTHERWISE

D-1 CONTRACTOR IS ALERTED THAT LIMITS OF DEMOLITION SHOWN IS APPROXIMATE. ACTUAL LIMITS SHALL BETHE MINIMUM REQUIRED FOR NEW STRUCTURE. CONTRACTOR TO CO-ORDINATE AND SUBMIT DEMOLITION PROCEDURE PER SPECIFICATIONS.

D-2 ALL ITEMS SHOWN ARE EXISTING TO REMAIN UNLESS NOTED OTHERWISE.

D-3 FOR ADDITIONAL DEMOLITION REQUIREMENTS SEE SPECIFICATIONS (024116).

D-4 ALL EXISTING CONCRETE TO BE DEMOLISHED IS STEEL REINFORCED UNLESS NOTED OTHERWISE. REINFORCING STEEL NOT SHOWN FOR CLARITY.

D-5 FOR ADDITIONAL DEMOLITION NOT SHOWN, SEE G, A, M, E, H, AND P DRAWINGS.

Drawing Name: G:\SavinAutocad\2060\25-Playland-Mega-3\S\CXDS-1001.dwg
Rev#: Projectname: 211001F02 Comments: ----
Printed by: BKnittle Date: 15 August 2022 10:44 AM Designed by: ----
Xrefs: [TB_24X36_WestchesterCo_3.dwg] [TSG-SVLOGO.dwg] [BCR-A-04.dwg] [BCRE-101.dwg]

CONSULTANT INFORMATION
Savin Engineers, P.C.

CONSULTANT SEAL
STATE OF NEW YORK · LICENSED PROFESSIONAL ENGINEER · No. 065364

| REVISION NUMBER | DATE | MADE BY | APP'D BY | REVISION |
|---|---|---|---|---|

RECORD DRAWING CERTIFICATION
☐ AS BUILT – CHANGES AS NOTED ☐ AS BUILT – NO CHANGES

CONTRACTOR
NAME
SIGNATURE
TITLE DATE

PROJECT COORDINATOR
NAME
SIGNATURE
TITLE DATE

WESTCHESTER COUNTY, NEW YORK
DEPARTMENT OF PUBLIC WORKS AND TRANSPORTATION
DIVISION OF ENGINEERING

INFRASTRUCTURE REHABILITATION - PHASE 3
PLAYLAND PARK, RYE, NEW YORK
CROSS AXIS BUILDING D
STRUCTURAL NOTES

CONTRACT NUMBER: 22-523
SHEET NUMBER: CXD-S-01
DWG NO.:
SCALE: AS SHOWN

DATE: 8/23/ 2022
DPW FILE NUMBER: 1-118-S-965-0
REV. NO. 0

## STRUCTURAL ABBREVIATIONS

| | |
|---|---|
| AB | ANCHOR BOLT |
| ADDL | ADDITIONAL |
| ADH | ADHESIVE |
| ADJ | ADJUSTABLE/ADJACENT |
| AFF | ABOVE FINISHED FLOOR |
| AGG | AGGREGATE |
| AL | ALUMINUM |
| ALT | ALTERNATE |
| APPROX | APPROXIMATE |
| ARCH | ARCHITECTURAL |
| AVG | AVERAGE |
| B | BORING |
| BLDG | BUILDING |
| BM | BEAM/BENCH MARK |
| BOF | BOTTOM OF FOOTING |
| BOS | BOTTOM OF STEEL |
| BOT | BOTTOM |
| BRG | BEARING |
| BT | BOLT |
| C | CHANNEL |
| C TO C | CENTER TO CENTER |
| CANT | CANTILEVER |
| CJ | CONSTRUCTION JOINT |
| CL | CENTER LINE |
| CLR | CLEAR |
| CMU | CONCRETE MASONRY UNIT |
| CO | CLEAN OUT |
| COL | COLUMN |
| CONC | CONCRETE |
| CONST | CONSTRUCTION |
| CONT | CONTINUOUS |
| CONTR | CONTRACTOR |
| CP | CONCRETE PLANK |
| CLJ | CONTROL JOINT |
| CTR | CENTER |
| CY | CUBIC YARD |
| DET | DETAIL |
| DIA (ø) | DIAMETER |
| DIAG | DIAGONAL |
| DIM | DIMENSION |
| DIST | DISTANCE |
| DN | DOWN |
| DO | DITTO |
| DP | DEEP |
| DWG | DRAWING |
| DWL | DOWEL |
| E | EAST |
| EA | EACH |
| EF | EACH FACE |
| EL | ELEVATION |
| ELEV | ELEVATOR |
| ENGR | ENGINEER |
| EMB | EMBEDMENT |
| ENCL | ENCLOSURE |
| ENT | ENTRANCE |
| EQ | EQUAL |
| EQPT | EQUIPMENT |
| EW | EACH WAY |
| EXIST | EXISTING |
| EXP | EXPANSION |
| EXP JT | EXPANSION JOINT |
| EXT | EXTERIOR |
| FAB | FABRICATE |
| FD | FLOOR DRAIN |
| FDN | FOUNDATION |
| FFL | FINISH FLOOR |
| FIN | FINISH |
| FLR | FLOOR |
| FT | FEET |
| FTG | FOOTING |
| F&C | FRAME&COVER |
| F&G | FRAME&GRATE |

| | |
|---|---|
| GA | GAUGE |
| GALV | GALVANIZE |
| GB | GRADE BEAM |
| GR | GRADE |
| GRTG | GRATING |
| HGT | HEIGHT |
| HORZ | HORIZONTAL |
| HP | HIGH POINT |
| HSS | HOLLOW STRUCTURAL STEEL |
| ID | INSIDE DIAMETER |
| IF | INSIDE FACE |
| IN | INCH |
| INCL | INCLUDE |
| INT | INTERIOR |
| INV | INVERT |
| J | JOIST |
| JB | JUNCTION BOX |
| JCT | JUNCTION |
| JT | JOINT |
| L | LENGTH/ANGLE |
| LF | LINEAR FEET |
| LG | LONG |
| LL | LIVE LOAD |
| LLH | LONG LEG HORIZONTAL |
| LLV | LONG LEG VERTICAL |
| LOC | LOCATION |
| LP | LOW POINT |
| LVR | LOUVER |
| LWL | LOW WATER LEVEL |
| MAS | MASONRY |
| MATL | MATERIAL |
| MAX | MAXIMUM |
| MECH | MECHANICAL |
| MET | METAL |
| MFR | MANUFACTURER |
| MG | MILLION GALLONS |
| MGD | MILLION GALLONS PER DAY |
| MH | MANHOLE |
| MIN | MINIMUM |
| MISC | MISCELLANEOUS |
| MO | MASONRY OPENING |
| MOD | MODIFY/MODIFIED |
| MTD | MOUNTED |
| N | NORTH |
| NA | NOT APPLICABLE |
| NIC | NOT IN CONTRACT |
| NO | NUMBER |
| NOM | NOMINAL |
| NTS | NOT TO SCALE |
| OC | ON CENTER |
| OD | OUTSIDE DIAMETER |
| OF | OUTSIDE FACE |
| OPNG | OPENING |
| OPP | OPPOSITE |
| OT | OPEN TRUSS |
| OVHD | OVERHEAD |
| PAR | PARALLEL |
| PC | POINT OF CURVE/PIECE |
| PCO | PILE CUT OFF |
| PI | POINT OF INTERSECTION |
| PL | PLATE/PROPERTY LINE |
| PREFAB | PREFABRICATED |
| PSF | POUNDS PER SQUARE FOOT |
| PSI | POUNDS PER SQUARE INCH |
| PT | POINT OF TANGENCY |
| PTN | PARTITION |
| PVMT | PAVEMENT |
| QTY | QUANTITY |

| | |
|---|---|
| R | RISER |
| RAD | RADIUS |
| RCP | REINFORCED CONCRETE PIPE |
| RD | ROOF DRAIN |
| REINF | REINFORCEMENT |
| RECT | RECTANGULAR |
| REM | REMOVE |
| REQD | REQUIRED |
| RF | ROOF |
| RO | ROUGH OPENING |
| S | SOUTH |
| SCHED | SCHEDULE |
| SECT | SECTION |
| SF | SQUARE FEET |
| SHT | SHEET |
| SIM | SIMILAR |
| SJ | STEEL JOIST |
| SPEC | SPECIFICATION |
| SQ | SQUARE |
| SS | STAINLESS STEEL |
| STA | STATION |
| STD | STANDARD |
| STR | STAIR |
| STIF | STIFFENER |
| STIR | STIRRUP |
| STL | STEEL |
| STRUC | STRUCTURAL |
| SUB | SUBSTITUTE |
| SYM | SYMMETRICAL |
| T | TREAD |
| T&B | TOP AND BOTTOM |
| T&G | TOUNGE AND GROOVE |
| TAN | TANGENT |
| TEMP | TEMPERATURE |
| THK | THICK |
| TOC | TOP OF CURB/CONCRETE |
| TOD | TOP OF DECK |
| TOF | TOP OF FOOTING |
| TOM | TOP OF MASONRY/MANHOLE |
| TOS | TOP OF SLAB/STEEL |
| TOW | TOP OF WALL |
| TYP | TYPICAL |
| UNO | UNLESS NOTED OTHERWISE |
| VERT | VERTICAL |
| W | WEST/WIDTH/WIDE FLANGE |
| W/ | WITH |
| W/O | WITHOUT |
| WL | WATER LEVEL |
| WP | WATERPROOF/WALL PIPE |
| WPT | WALL PENETRATING TYPE |
| WS | WATER SURFACE |
| WT | WEIGHT |
| WWF | WELDED WIRE FABRIC |
| YD | YARD |
| YR | YEAR |

## SYMBOLS

- UNDISTURBED EARTH
- COMPACTED BACKFILL
- SELECT GRANULAR FILL MATERIAL
- CONCRETE BLOCK
- BRICK
- FINISHED WOOD
- CONCRETE
- ROUGH WOOD
- RIGID INSULATION
- REINFORCED STEEL IN CONCRETE
- WELDED WIRE FABRIC
- BLANKET INSULATION
- STEEL
- DENOTES MOMENT CONNECTION

Drawing Name: G:\SavinAutocad\2060\25-Playland-Mega-3\S\CXDS-1002.dwg
Rev#: Projectname: ---- Comments: All inquiries regarding this drawing(s) or project should be made to NYC Environmental Protection, Bureau of Engineering Design and Construction.
Printed by: ---- Date: 8/23/2022 10:44 AM Designed by: ----

CONSULTANT INFORMATION

Savin Engineers, P.C.

CONSULTANT SEAL

STATE OF NEW YORK — LICENSED PROFESSIONAL ENGINEER — No. 065362

| REVISION NUMBER | DATE | MADE BY | APP'D BY | REVISION |
|---|---|---|---|---|

RECORD DRAWING CERTIFICATION

☐ AS BUILT – CHANGES AS NOTED ☐ AS BUILT – NO CHANGES

CONTRACTOR
NAME
SIGNATURE
TITLE DATE

PROJECT COORDINATOR
NAME
SIGNATURE
TITLE DATE

WESTCHESTER COUNTY, NEW YORK
DEPARTMENT OF PUBLIC WORKS AND TRANSPORTATION
DIVISION OF ENGINEERING

**INFRASTRUCTURE REHABILITATION - PHASE 3**
**PLAYLAND PARK, RYE, NEW YORK**
**CROSS AXIS BUILDING D**
**STRUCTURAL ABBREVIATIONS AND SYMBOLS**

| | |
|---|---|
| CONTRACT NUMBER | 22-523 |
| SHEET NUMBER | CXD-S-02 |
| DWG NO.: | |
| SCALE: | AS SHOWN |
| DATE: | 8/23/ 2022 |
| DPW FILE NUMBER | 1-118-S-966-0 |
| REV. NO. | 0 |

NOTES:

1. FOR STRUCTURAL NOTES, SEE DRAWING CXD-S-01.
2. FOR STRUCTURAL ABBREVIATIONS AND SYMBOLS, SEE DRAWING CXD-S-01.

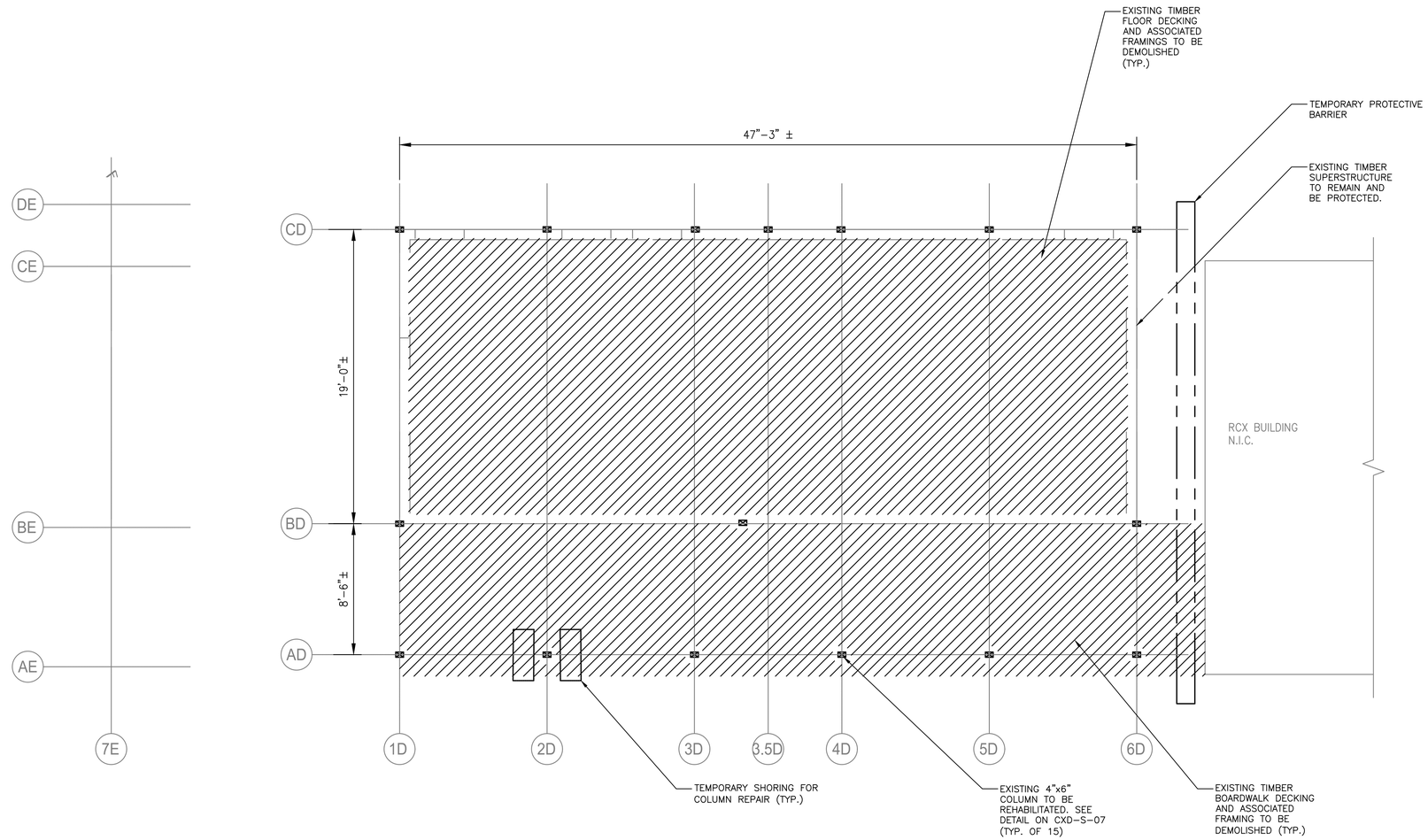


DEMOLITION – GROUND FLOOR PLAN
SCALE: 1/4" = 1'-0"

0 4' 8'
SCALE: 1/4" = 1'-0"

Drawing Name: G:\SavinAutocad\2060\25-Playland-Mega-3\S\CXDS-1003.dwg
Rev#: Projectname: 211001F02 Comments: ----
Printed by: BKnittle Date: 15 August 2022 10:44 AM Designed by: ----
Xrefs: [TB_24X36_WestchesterCo_3.dwg] [TSG-SVLOGO.dwg] [CXD-A-01.dwg] [CXD-S-1002.dwg] [CXD-A-02.dwg]

CONSULTANT INFORMATION
Savin Engineers, P.C.

CONSULTANT SEAL

| REVISION NUMBER | DATE | MADE BY | APP'D BY | REVISION |
|---|---|---|---|---|

RECORD DRAWING CERTIFICATION
AS BUILT – CHANGES AS NOTED
AS BUILT – NO CHANGES

CONTRACTOR
NAME
SIGNATURE
TITLE DATE

PROJECT COORDINATOR
NAME
SIGNATURE
TITLE DATE

WESTCHESTER COUNTY, NEW YORK
DEPARTMENT OF PUBLIC WORKS AND TRANSPORTATION
DIVISION OF ENGINEERING

**INFRASTRUCTURE REHABILITATION - PHASE 3**
**PLAYLAND PARK, RYE, NEW YORK**
**CROSS AXIS BUILDING D**
**DEMOLITION - GROUND FLOOR PLAN**

CONTRACT NUMBER: 22-523
SHEET NUMBER: CXD-S-03
DWG NO.:
SCALE: AS SHOWN
DATE: 8/23/ 2022
DPW FILE NUMBER: 1-118-S-967-0
REV. NO.: 0

NOTES:

1. REHABILITATION OF CROSS AXIS BUILDING D INCLUDES VARIOUS ELEMENTS SLATED FOR REMOVAL AND REPLACEMENT IN-KIND FOR DETERIORATED MEMBERS. CONTRACTOR IS TO ALERT THE ENGINEER 6 WEEKS PRIOR TO START OF REHABILITATION WORK TO PERFORM FIELD INSPECTION OF THE REPAIR ITEMS IDENTIFIED BELOW. UPON COMPLETION OF THE FIELD INSPECTION WORK, THE ENGINEER WILL PROVIDE TO THE CONTRACTOR IN WRITING THE DEFINED LIMITS OF REPLACEMENT WORK. REHABILITATION WORK FOR VARIOUS ELEMENTS SHALL BE PERFORMED PER DETAILS AND SEQUENCES AS OUTLINED ON DRAWINGS, CXD-S-03, CXD-S-04, CXD-S-05, CXD-S-06, AND CXD-S-07. FOR THE PURPOSES OF BIDDING, CONTRACTOR SHALL INCLUDE IN THEIR BID THE QUANTITIES FOR EACH ELEMENT AS MENTIONED BELOW.

| STRUCTURAL ELEMENTS TO BE REPAIRED/REPLACED | QUANTITY | UNITS | REMARKS |
|---|---|---|---|
| 1"x4" TIMBER BATTEN MEMBERS | 25 | EA | APPROXIMATELY 10 FT EACH |
| 1"x6" TIMBER ROOF DECKING | 500 | SF | |

NOTE THAT BATTEN MEMBER AND ROOF DECKING LOCATIONS MAY BE ANYWHERE WITHIN THE LIMITS OF THE ROOF.
EXECUTIONS OF THE ABOVE REHABILITATING WORK SHALL BE COORDINATED WITH OVERALL CONSTRUCTION SEQUENCE AND PHASING. SEE SPECIFICATION.

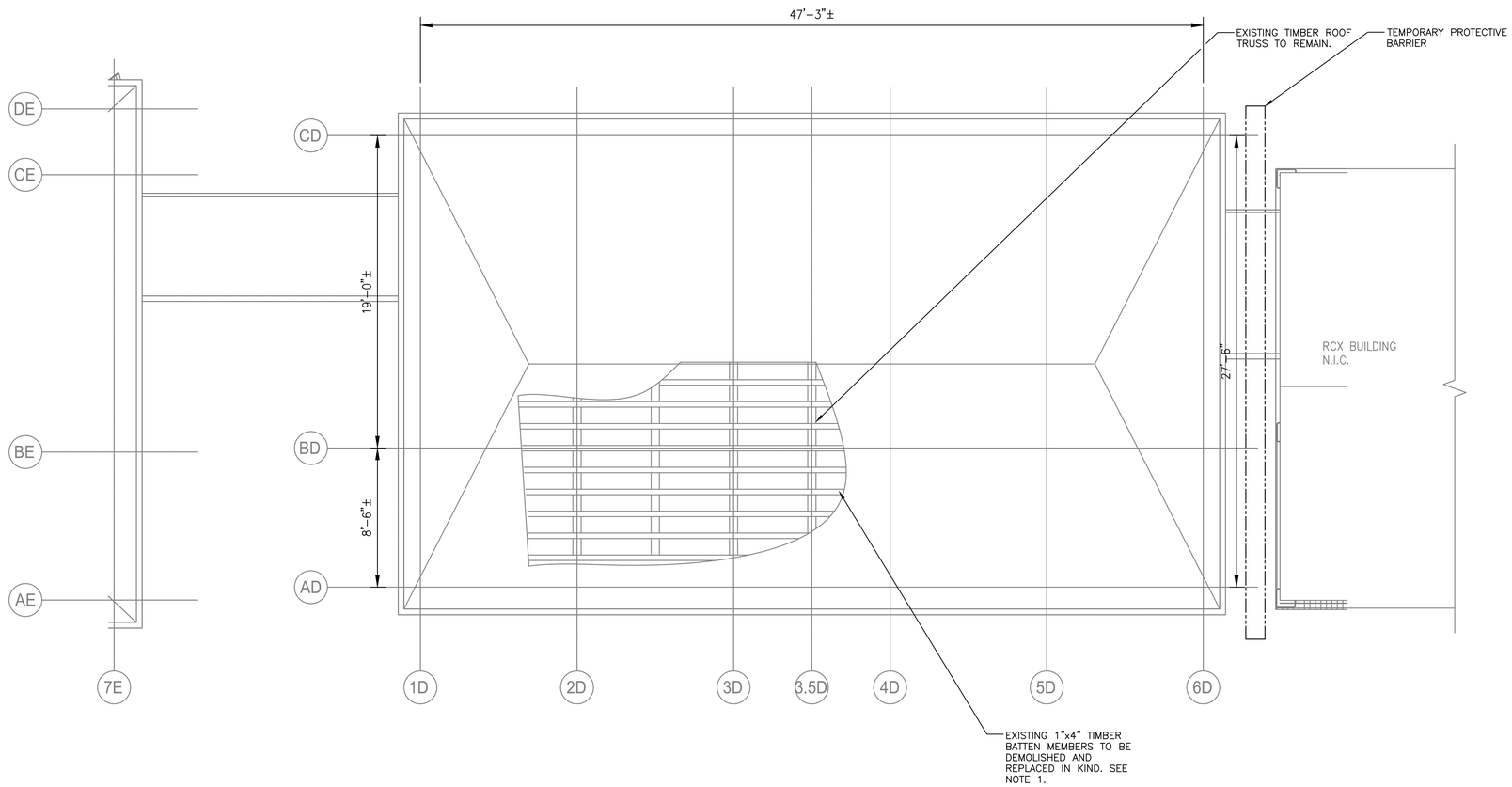


DEMOLITION – ROOF PLAN
SCALE: 1/4" = 1'-0"

0 4' 8'
SCALE: 1/4" = 1'-0"

Drawing Name: G:\SavinAutocad\2060\25-Playland-Mega-3\S\CXDS-1005.dwg
Rev#: Projectname: 211001F02 Comments: ----
Printed by: BKnittle Date: 15 August 2022 10:44 AM Designed by: ----
Xrefs: [TB_24X36_WestchesterCo_3.dwg] [TSG-SVLOGO.dwg] [CXD-S-1002.dwg] [CXD-A-02.dwg]

CONSULTANT INFORMATION
Savin Engineers, P.C.

CONSULTANT SEAL

| REVISION NUMBER | DATE | MADE BY | APP'D BY | REVISION |
|---|---|---|---|---|

RECORD DRAWING CERTIFICATION
☐ AS BUILT – CHANGES AS NOTED ☐ AS BUILT – NO CHANGES

CONTRACTOR
NAME
SIGNATURE
TITLE DATE

PROJECT COORDINATOR
NAME
SIGNATURE
TITLE DATE

WESTCHESTER COUNTY, NEW YORK
DEPARTMENT OF PUBLIC WORKS AND TRANSPORTATION
DIVISION OF ENGINEERING

**INFRASTRUCTURE REHABILITATION - PHASE 3**
**PLAYLAND PARK, RYE, NEW YORK**
**CROSS AXIS BUILDING D**
**DEMOLITION - ROOF PLAN**

CONTRACT NUMBER: 22-523
SHEET NUMBER: CXD-S-04
DWG NO.:
SCALE: AS SHOWN
DATE: 8/23/ 2022
DPW FILE NUMBER: 1-118-S-968-0
REV. NO.: 0

NOTES:

1. FOR STRUCTURAL NOTES, SEE DRAWING CXD–S–01.
2. FOR STRUCTURAL ABBREVIATIONS AND SYMBOLS, SEE DRAWING CXD–S–02.
3. EXISTING FOOTINGS ARE SHOWN FOR REFERENCE ONLY. CONTRACTOR SHALL VERIFY IN FIELD SIZE AND LOCATION.

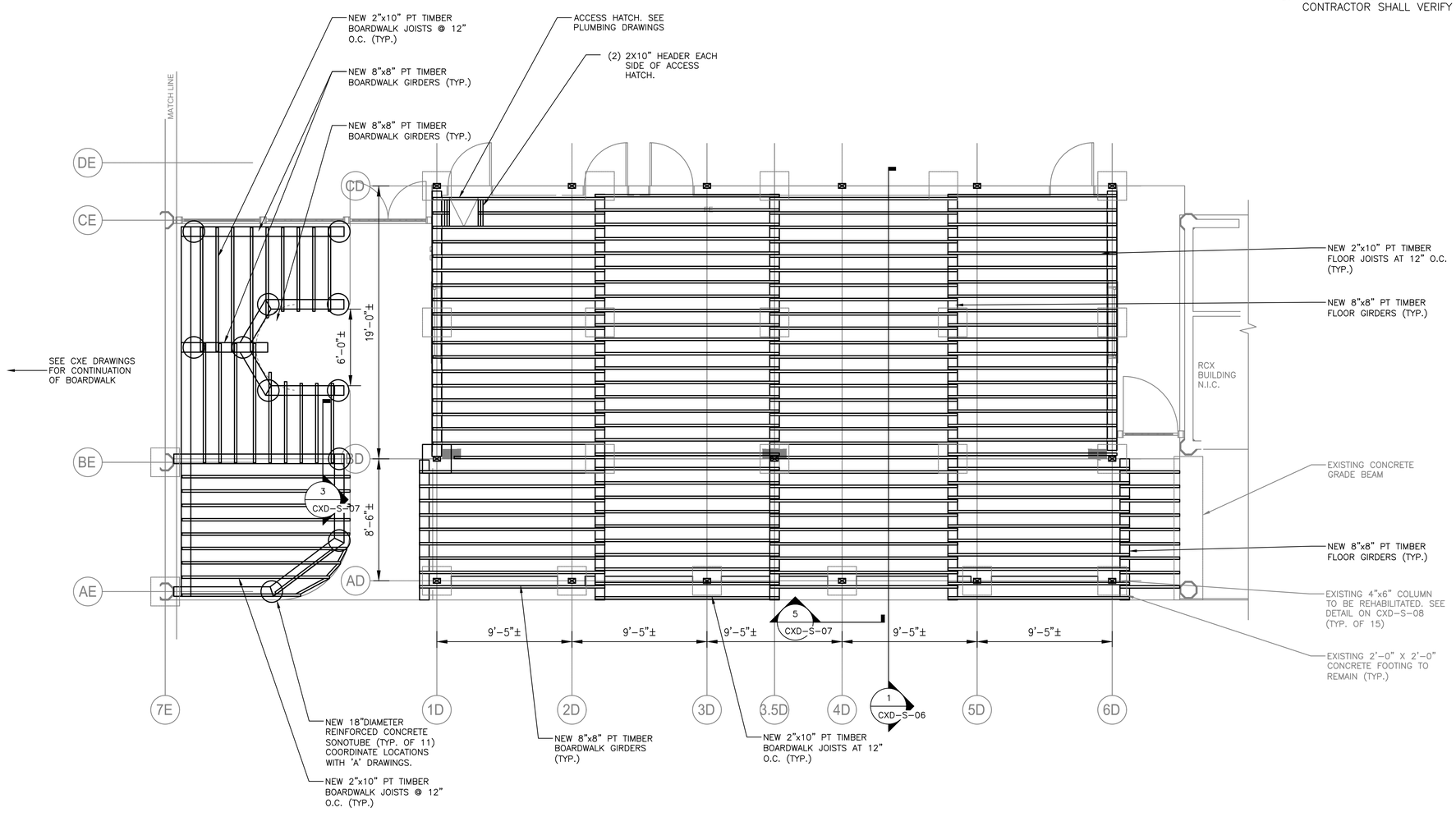


GROUND FLOOR PLAN
SCALE: 1/4" = 1'–0"

0 4' 8'
SCALE: 1/4" = 1'–0"

Drawing Name: G:\SavinAutocad\2060\25-Playland-Mega-3\S\CXDS-1009.dwg
Rev#: Projectname: 211001F02 Comments: ----
Printed by: BKnittle Date: 15 August 2022 10:44 AM Designed by: ----
Xrefs: [TB_24X36_WestchesterCo_3.dwg] [TSG-SVLOGO.dwg] [CXD-A-11.dwg] [CXD-S-1003.dwg]

CONSULTANT INFORMATION

Savin Engineers, P.C.

CONSULTANT SEAL

STATE OF NEW YORK · MICHAEL J. JESSEA · 081 JESSEA · LICENSED PROFESSIONAL ENGINEER

| REVISION NUMBER | DATE | MADE BY | APP'D BY | REVISION |
|---|---|---|---|---|

RECORD DRAWING CERTIFICATION

☐ AS BUILT – CHANGES AS NOTED ☐ AS BUILT – NO CHANGES

CONTRACTOR
NAME
SIGNATURE
TITLE DATE

PROJECT COORDINATOR
NAME
SIGNATURE
TITLE DATE

WESTCHESTER COUNTY, NEW YORK
DEPARTMENT OF PUBLIC WORKS AND TRANSPORTATION
DIVISION OF ENGINEERING

**INFRASTRUCTURE REHABILITATION - PHASE 3**
**PLAYLAND PARK, RYE, NEW YORK**
**CROSS AXIS BUILDING D**
**GROUND FLOOR PLAN**

| | |
|---|---|
| CONTRACT NUMBER | 22-523 |
| SHEET NUMBER | CXD-S-05 |
| DWG NO.: | 22047664 |
| SCALE: | AS SHOWN |
| DATE: | 8/23/ 2022 |
| DPW FILE NUMBER | 1-118-S-969-0 |
| REV. NO. | 0 |

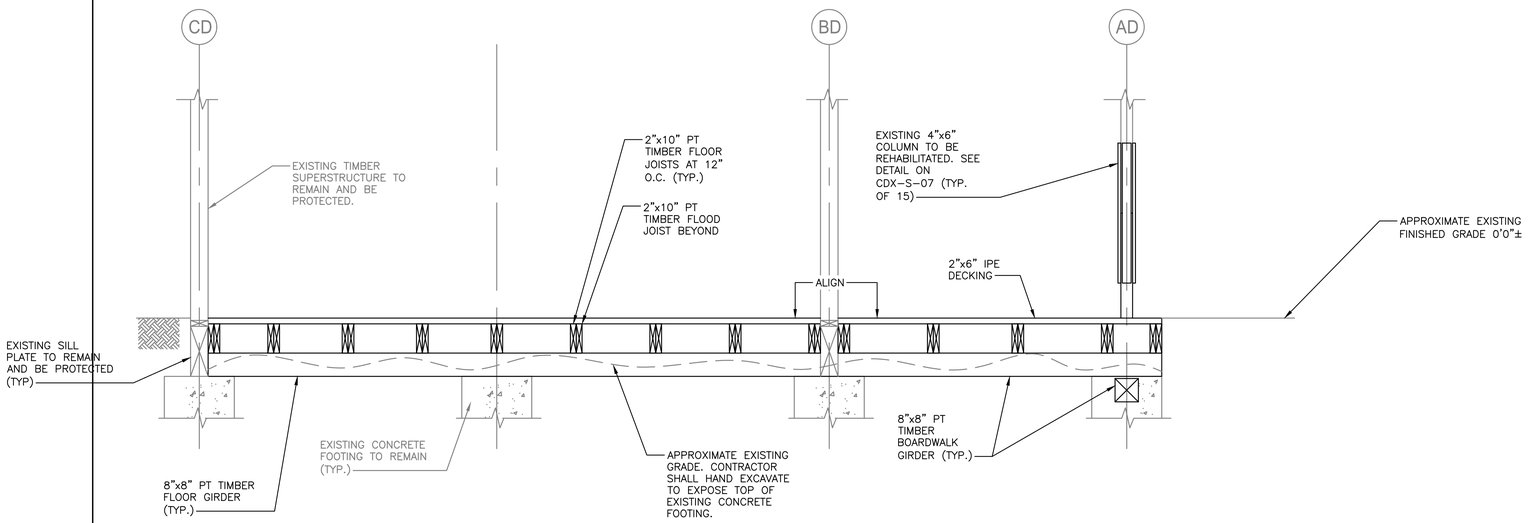


1 SECTION
CXD-S-05 SCALE: 1/2"=1'-0"

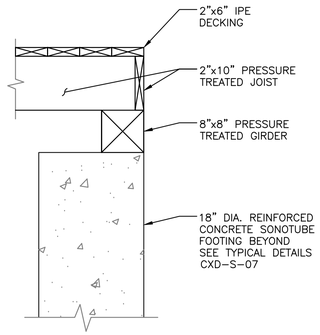


2 SECTION
CXD-S-06 SCALE: 1" = 1'-0"

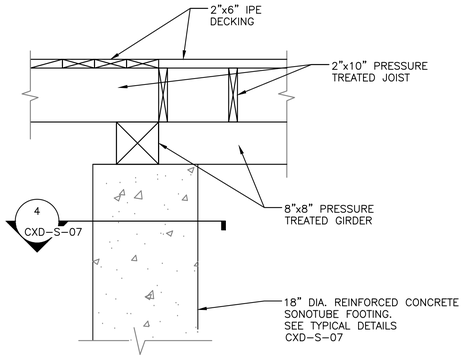


3 SECTION
CXD-S-06 SCALE: 1" = 60'

BASIC DEVELOPMENT LENGTH AND SPLICE LENGTH

FOR BARS IN TENSION

fy = 60,000 psi  fc = 4000 psi OR GREATER, NORMAL WEIGHT CONCRETE

| BASIC DEVELOPMENT LENGTH ** l d | | | | BAR SIZE | CLASS B SPLICE LENGTH ** 1.3 x l d | | | |
|---|---|---|---|---|---|---|---|---|
| CLEAR SPACING > 3" | | CLEAR SPACING < 3" | | | CLEAR SPACING > 3" | | CLEAR SPACING < 3" | |
| BASIC | TOP * | BASIC | TOP * | | BASIC | TOP * | BASIC | TOP * |
| 1'-0" | 1'-4" | 1'-9" | 2'-2" | #3 | 1'-4" | 1'-9" | 2'-2" | 2'-11" |
| 1'-4" | 1'-8" | 2'-2" | 2'-9" | #4 | 1'-8" | 2'-2" | 2'-9" | 3'-7" |
| 1'-8" | 2'-2" | 2'-10" | 3'-7" | #5 | 2'-2" | 2'-10" | 3'-7" | 4'-8" |
| 2'-0" | 2'-6" | 3'-3" | 4'-2" | #6 | 2'-6" | 3'-3" | 4'-2" | 5'-5" |
| 3'-6" | 4'-7" | 5'-11" | 7'-7" | #7 | 4'-7" | 5'-11" | 7'-7" | 9'-11" |
| 4'-0" | 5'-2" | 6'-9" | 8'-8" | #8 | 5'-2" | 6'-9" | 8'-8" | 11'-4" |
| 4'-6" | 5'-10" | 7'-7" | 9'-10" | #9 | 5'-10" | 7'-7" | 9'-9" | 12'-9" |
| 5'-0" | 6'-5" | 8'-6" | 11'-10" | #10 | 6'-5" | 8'-6" | 11'-0" | 13'-7" |
| 5'-7" | 7'-4" | 9'-5" | 12'-6" | #11 | 7'-4" | 9'-5" | 12'-6" | 14'-9" |

NOTES:

* TOP REINFORCEMENT IS HORIZONTAL REINFORCEMENT SO PLACED THAT MORE THAN 12 INCHES OF FRESH CONCRETE IS CAST IN THE MEMBER BELOW THE REINFORCEMENT

** LENGTHS SHOWN IN CHART SHALL BE MODIFIED WHERE REQUIRED TO CONFORM TO THE PROVISIONS OF ACI 318, SECTION 12.2

*** UNCOATED REINFORCEMENT

DEVELOPMENT LENGTH OF STANDARD HOOKS

FOR BARS IN TENSION

fy = 60,000 psi  fc = 4000 psi OR GREATER, NORMAL WEIGHT CONCRETE

| BAR SIZE | DEVELOPMENT LENGTH, l dh | |
|---|---|---|
| | BASIC | W/CONC. COVER * |
| #3 | 8" | 6" |
| #4 | 10" | 7" |
| #5 | 1'-0" | 9" |
| #6 | 1'-3" | 11" |
| #7 | 1'-5" | 1'-0" |
| #8 | 1'-7" | 1'-2" |
| #9 | 1'-10" | 1'-4" |
| #10 | 2'-1" | 1'-6" |
| #11 | 2'-3" | 1'-7" |

NOTES:

* SIDE COVER NORMAL TO PLANE OF HOOK AT LEAST 2 1/2"; AND FOR 90° HOOK, END COVER BEYOND OUTSIDE END OF HOOK AT LEAST 2".

** UNCOATED REINFORCEMENT

0 2' 4'
SCALE: 1/2" = 1'-0"

0 1' 2'
SCALE: 1" = 1'-0"

Drawing Name: G:\SavinAutocad\2060\25-Playland-Mega-3\S\CXDS-1007.dwg
Rev#: Projectname: ---- Comments: All inquiries regarding this drawing(s) or project should be made to NYC Environmental Protection, Bureau of Engineering Design and Construction.
Printed by: ---- Date: 8/23/2022 10:45 AM Designed by: ----

CONSULTANT INFORMATION
Savin Engineers, P.C.

CONSULTANT SEAL
STATE OF NEW YORK
MICHAEL C. SAVIN
NO. 065362
LICENSED PROFESSIONAL ENGINEER

| REVISION NUMBER | DATE | MADE BY | APP'D BY | REVISION |
|---|---|---|---|---|

RECORD DRAWING CERTIFICATION
☐ AS BUILT – CHANGES AS NOTED  ☐ AS BUILT – NO CHANGES

CONTRACTOR
NAME
SIGNATURE
TITLE  DATE

PROJECT COORDINATOR
NAME
SIGNATURE
TITLE  DATE

WESTCHESTER COUNTY, NEW YORK
DEPARTMENT OF PUBLIC WORKS AND TRANSPORTATION
DIVISION OF ENGINEERING

**INFRASTRUCTURE REHABILITATION - PHASE 3**
**PLAYLAND PARK, RYE, NEW YORK**
**CROSS AXIS BUILDING D**
**SECTIONS**

CONTRACT NUMBER **22-523**
SHEET NUMBER **CXD-S-06**
DWG NO.:
SCALE: **AS SHOWN**
DATE: **8/23/ 2022**
DPW FILE NUMBER **1-118-S-970-0**
REV. NO. **0**

## NOTES:

CONTRACTOR SHALL SUBMIT A COLUMN REPAIR SEQUENCE OF CONSTRUCTION TO ENGINEER FOR REVIEW. THE FOLLOWING SHALL BE THE MINIMUM REQUIRED.

1. TEMPORARY SHORING AT EACH COLUMN LOCATION SHALL HAVE A MINIMUM 10-TON CAPACITY.
2. COLUMN REPAIR SHALL BE LIMITED TO MAXIMUM 2 COLUMNS AT A TIME. COLUMNS UNDER REPAIR MUST NOT BE ADJACENT TO EACH OTHER.
3. ALL HARDWARE SHALL BE TYPE 316 STAINLESS STEEL, UNLESS OTHERWISE NOTED.

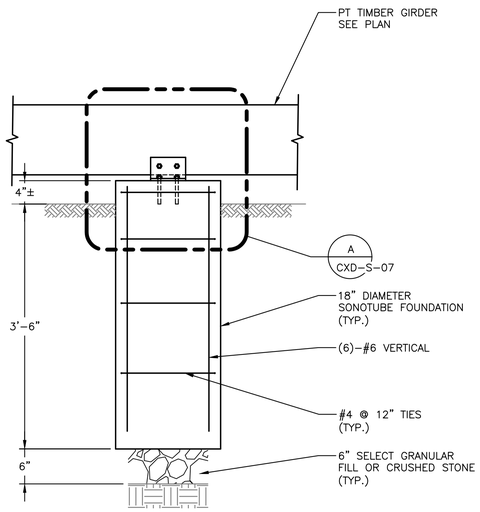


3 TYPICAL BOARDWALK SONOTUBE SECTION
CXD-S-05 1" = 1'-0"

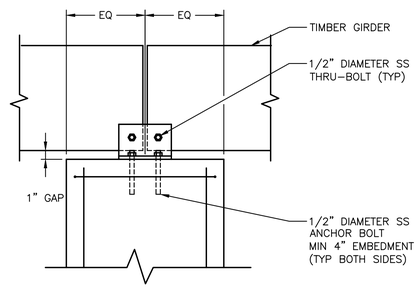


A DETAIL
CXD-S-07 1/2" = 1'-0"

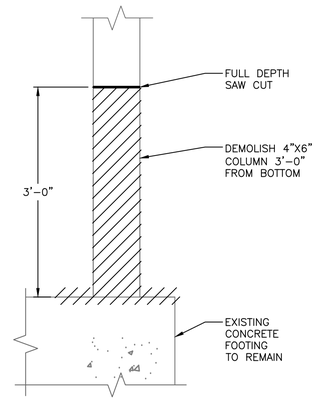


DEMOLITION
N.T.S.

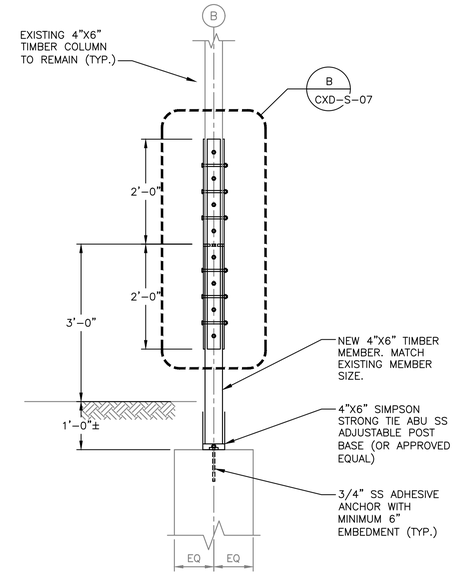


SECTION
SCALE: 3/4 = 1'-0"

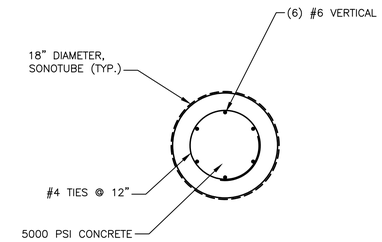


4 SECTION
CXD-S-06 SCALE: 1" = 1'-0"

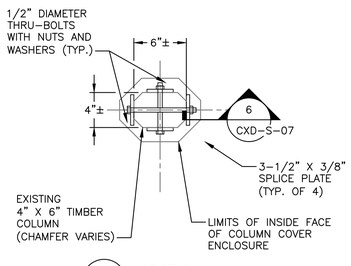


2 SECTION
CXD-S-07 SCALE: 1 1/2 = 1'-0"

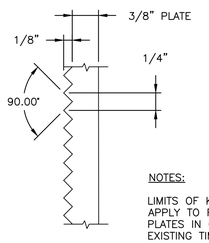


NOTES:

LIMITS OF KNURLING SHALL APPLY TO FACE OF ALL SPLICE PLATES IN CONTACT WITH EXISTING TIMBER COLUMN. KNURLING SHALL RUN AXIALLY AND HORIZONTALLY.

6 SECTION
CXD-S-07 SCALE: N.T.S.

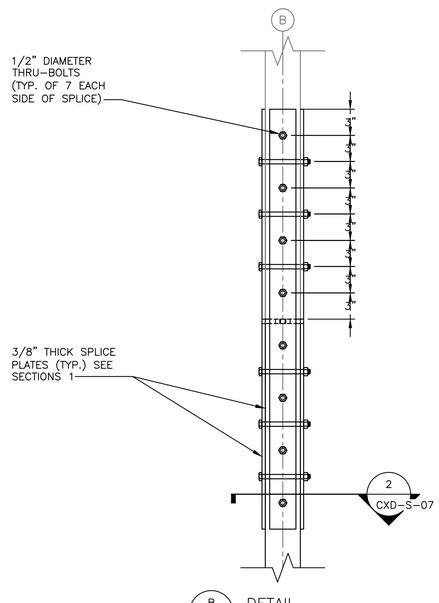


B DETAIL
CXD-S-07 SCALE: 1 1/2 = 1'-0"

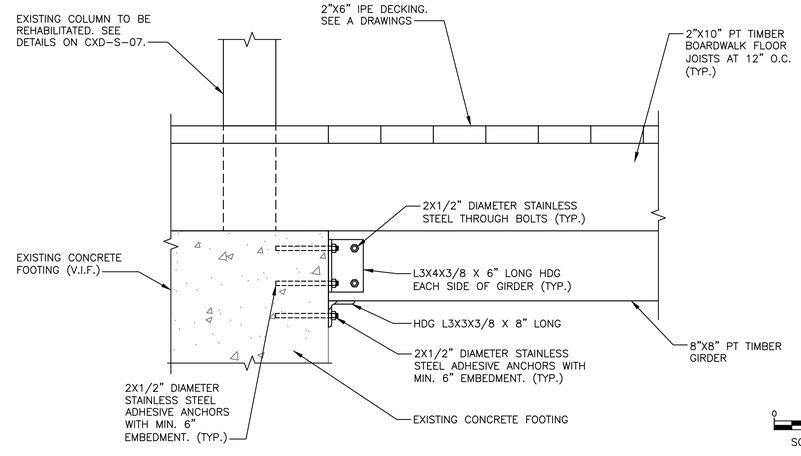


5 SECTION
CXD-S-05 N.T.S.

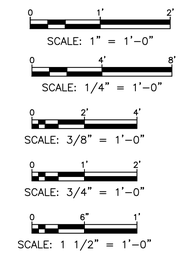


CONSULTANT INFORMATION

Savin Engineers, P.C.

CONSULTANT SEAL

STATE OF NEW YORK · LICENSED PROFESSIONAL ENGINEER · No. 085854

| REVISION NUMBER | DATE | MADE BY | APP'D BY | REVISION |
|---|---|---|---|---|
| | | | | |

RECORD DRAWING CERTIFICATION

☐ AS BUILT – CHANGES AS NOTED ☐ AS BUILT – NO CHANGES

CONTRACTOR
NAME
SIGNATURE
TITLE DATE

PROJECT COORDINATOR
NAME
SIGNATURE
TITLE DATE

WESTCHESTER COUNTY, NEW YORK
DEPARTMENT OF PUBLIC WORKS AND TRANSPORTATION
DIVISION OF ENGINEERING

**INFRASTRUCTURE REHABILITATION - PHASE 3**
**PLAYLAND PARK, RYE, NEW YORK**

**CROSS AXIS BUILDING D**
**SECTIONS AND DETAILS**

| CONTRACT NUMBER | SHEET NUMBER |
|---|---|
| 22-523 | CXD-S-07 |

DWG NO.: 222-7664
SCALE: AS SHOWN
DATE: 8/23/ 2022
DPW FILE NUMBER 1-118-S-971-0
REV. NO. 0

Drawing Name: G:\SavinAutocad\2060\25-Playland-Mega-3\S\CXDS-1008.dwg
Projectname: ---- Comments: ----
Printed by: BKnittle Date: 15 August 2022 10:45 AM Designed by: ----
Reref: [TSG-SVLOGO.dwg] [TB_24X36_WestchesterCo_3.dwg] [CXD-DET-1.dwg]
Xrefs:

# FIRE PROTECTION SAFETY NOTES:

1. SPECIAL PRECAUTION SHALL BE TAKEN BY THE CONTRACTOR SO THAT EQUIPMENT OF THIS APPLICATION AND ITS INSTALLATION WILL NOT AFFECT THE FOLLOWING: EGRESS TO AND FROM THE BUILDING. FIRE SAFETY OR CREATE A FIRE HAZARD. STRUCTURAL SAFETY OF THE BUILDING. ACCUMULATION OF DUST AND DEBRIS. (THE CONTRACTOR SHALL LEAVE THE SITE BROOM CLEANED EACH DAY.)

# FIRE PROTECTION GENERAL NOTES:

1. DIMENSIONS, LOCATIONS AND SIZES INDICATED ON THE PLANS AND THE ELEVATION ARE APPROXIMATE AND SHALL BE VERIFIED BY FIELD INSPECTION BY THE CONTRACTOR.

2. SOME EXISTING PIPE AND EQUIPMENT IS SHOWN FOR CLARIFICATION OF THIS CONTRACT, BUT MUST BE PROTECTED BY THE CONTRACTOR.

3. NO WORK SHALL BE INITIATED UNTIL A WORK PERMIT IS OBTAINED BY THE CONTRACTOR AND A SAFETY PLAN IS SUBMITTED AND IS APPROVED.

4. CONTRACTOR IS RESPONSIBLE FOR OBTAINING ALL PERMITS, EQUIPMENT USE PERMITS, ALL INSPECTION APPROVALS, AND LETTER OF COMPLETION FROM THE DEPARTMENT OF BUILDINGS FOR WORK UNDER THIS CONTRACT AS APPLICABLE.

5. ANY EXISTING MATERIALS, PIPING, ETC., NOT INDICATED FOR DEMOLITION WHICH ARE REMOVED BY THE CONTRACTOR IN ORDER TO INSTALL NEW WORK SHALL BE REINSTALLED BY THE CONTRACTOR. IF EXISTING WORK IS DAMAGED IT SHALL BE REPLACED AT THE CONTRACTOR'S EXPENSE. ALL SURFACES OR FINISHES THAT ARE DAMAGED OR OTHERWISE AFFECTED BY WORK OF THIS CONTRACT SHALL BE PATCHED, REPAIRED, PAINTED OR REPLACED TO MATCH THE PRE-EXISTING CONDITION AND THE NEW WORK.

6. CONTRACTOR MAY PROPOSE ALTERNATE ROUTING IN DIFFICULT AREAS WHERE REPLACEMENT IN KIND IS NOT PRACTICAL. ANY AND ALL ALTERNATE ROUTING IS SUBJECT TO PRIOR REVIEW AND APPROVAL BY THE ENGINEER.

7. A FIRE WATCH SHALL BE PROVIDED WHEN SPRINKLER COVERAGE IS IMPACTED TO MAINTAIN BUILDING OPERATIONS OR AS REQUIRED.

# FIRE PROTECTION SYMBOL LIST

| | |
|---|---|
| — — — — — FS DRY— — | NEW DRY SPRINKLER PIPING |
| — — — — — DRY(E) — | EXISTING TO REMAIN DRY SPRINKLER PIPING |
| ○ | NEW UPRIGHT SPRINKLER HEAD |
| ○ | EXISTING UPRIGHT SPRINKLER HEAD |
| ● | NEW CONCEALED PENDENT SPRINKLER HEAD-ORDINARY TEMPERATURE |
| | SPRINKLER DRY PIPE VALVE |
| | FIRE HOSE CABINET |
| | SIAMESE CONNECTION |
| | CHECK VALVE |
| | CHECK VALVE W/ ALARM |
| | WATER MOTOR ALARM BELL |
| ⊗ | PIPE RISER |
| | PIPE DROP |
| | PIPE UP |
| | POINT OF CONNECTION |
| | POINT OF DISCONNECTION |
| | PREACTION 6" BELL |
| | SOLENOID VALVE |
| | OS & Y VALVE |
| # | REVISION SYMBOL |
| F# | REFER TO SUPPLEMENTAL FIGURE INDICATED BY NUMBER (I.E. F2 REFERS TO FIGURE 2) |
| XXX / X | EQUIPMENT TAG / EQUIPMENT NUMBER |
| X / X-XXX | DETAIL TAG/ CALL OUT TAG / FIRE PROTECTION SHEET NUMBER |

# SHOP DWGS/EQUIPMENT SUBMITTALS

THE CONTRACTOR MUST SUBMIT ANY EQUIPMENT ALTERNATES 2 WEEKS PRIOR TO BIDS DUE FOR REVIEW AND COMMENTS. ALTERNATES MUST BE ACCEPTED BY LIRO ENGINEERS, INC., THE ARCHITECT, AND THE OWNER PRIOR TO INCLUSION IN BID. THE CONTRACTOR IS RESPONSIBLE TO COORDINATE EQUIPMENT ALTERNATES WITH OTHER TRADES AND MAKE ADJUSTMENTS TO THE MECHANICAL SYSTEMS, AS REQUIRED, TO ACCOMMODATE THESE NEW ALTERNATES.

THE CONTRACTOR IS RESPONSIBLE TO SUBMIT ALL OF THE FOLLOWING ITEMS FOR REVIEW/APPROVAL BY NO MORE THAN 3 WEEKS AFTER THE CONTRACTOR'S CONTRACT/BID HAS BEEN AWARDED. ALL SUBMITTALS MUST BE SENT TOGETHER AS A **SINGLE PACKAGE** WITH MANUFACTURER'S SPECIFIC MODELS AND SPECIFICATIONS OUTLINED TO MATCH THE SCHEDULED REQUIREMENTS. EACH SUBMITTAL MUST BE LABELED WITH THE UNIT DESIGNATION USED WITHIN THIS DRAWING SET. IF THE SUBMITTAL PACKAGE IS FOUND TO BE INCOMPLETE UPON RECEIPT, THE PACKAGE WILL BE HELD AND WILL NOT BE REVIEWED UNTIL THE REMAINDER OF THE PACKAGE IS RECEIVED. SIX (6) HARD COPIES OF THE SUBMITTAL PACKAGE MUST BE SENT TO LIRO ENGINEERS, INC. DIGITAL SHOP DRAWING SUBMISSIONS ARE ACCEPTABLE.

# SCOPE OF WORK:

1. THE INSTALLATION OF NEW DRY FS EQUIPMENT.

2. PROPOSED FIRE SPRINKLER HEAD LOCATIONS AND PIPING ARE AS NOTED ON PLANS. EXACT PIPING FROM THE FIRE SPRINKLER MAIN TO ALL HEADS IS TO BE COORDINATED AND HYDRAULICALLY CALCULATED BY THE F.S.C. & SUBMITTED TO THE ENGINEER FOR APPROVAL.

NOTE: THIS SCOPE OF WORK DESCRIPTION IS PROVIDED TO GIVE AN OVERALL "MACRO" DESCRIPTION OF THIS PROJECT. F.S.C. IS RESPONSIBLE TO REVIEW ALL ENGINEERING AND ARCHITECTURAL DRAWINGS AND VISIT THE SITE IF NEEDED, PRIOR TO SUBMISSION OF BID.

## SPRINKLER HEAD SCHEDULE

| | MANUFACTURER | MODEL | DESCRIPTION | K-FACTOR | QUANTITY |
|---|---|---|---|---|---|
| ○ | RELIABLE | F1FR | DRY ORDINARY UPRIGHT SPRINKLE HEAD | 5.6 | 31 |

## ABBREVIATION

| | |
|---|---|
| ACV | ALARM CHECK VALVE |
| B.O.P. | BOTTOM OF PIPE |
| (E) | EXISTING TO REMAIN |
| F.S.C. | FIRE SPRINKLER CONTRACTOR |
| P.C | PLUMBING CONTRACTOR |
| TYP | TYPICAL |
| W/ | WITH |
| NYS | NEW YORK STATE |
| U/P | UNDERGROUND PIPING |
| W | WATER |

## DRAWING NOTATIONS

| | |
|---|---|
| | DRAWING NOTE TAB |
| | RISER DESIGNATION |
| | POINT OF CONNECTION |
| | POINT OF DISCONNECTION |

# DESIGN CRITERIA

1. AREA OF APPLICATION = 1950 SQ. FT

2. OCCUPANCY CLASSIFICATION = ORDINARY HAZARD GROUP 2

3. MAXIMUM COVERAGE PER SPRINKLER HEAD = 130 SQ. FT

4. DESIGN DENSITY = 0.20 GPM/SQ. FT

5. NUMBER OF SPRINKLER HEADS WITHIN AREA OF APPLICATION = 26

6. "K" FACTOR OF SPRINKLER HEADS = 5.6

7. DESIGN CRITERIA REQUIREMENTS BASED ON:
   - 2020 BUILDING CODE OF NEW YORK STATE
   - 2016 NFPA 13

# ORDINARY HAZARD PIPE SCHEDULE

| STEEL | | COPPER | |
|---|---|---|---|
| 1IN. | 2 SPRINKLERS | 1IN. | 2 SPRINKLERS |
| 1 1/4 IN. | 3 SPRINKLERS | 1 1/4 IN. | 3 SPRINKLERS |
| 1 1/2IN. | 5 SPRINKLERS | 1 1/2IN. | 5 SPRINKLERS |
| 2 IN. | 10 SPRINKLERS | 2 IN. | 12 SPRINKLERS |
| 2 1/2 IN. | 20 SPRINKLERS | 2 1/2 IN. | 25 SPRINKLERS |
| 3 IN. | 40 SPRINKLERS | 3 IN. | 45 SPRINKLERS |
| 3 1/2 IN. | 65 SPRINKLERS | 3 1/2 IN. | 75 SPRINKLERS |
| 4 IN. | 100 SPRINKLERS | 4 IN. | 115 SPRINKLERS |
| 5 IN. | 160 SPRINKLERS | 5 IN. | 180 SPRINKLERS |
| 6 IN. | 275 SPRINKLERS | 6 IN. | 300 SPRINKLERS |
| 8 IN. | SEE SECTION 8.2 | 8 IN. | SEE SECTION 8.2 |

FOR SI UNITS, 1 IN. = 25.4 MM.

# MAX DISTANCE BETWEEN HANGERS (FT.-IN.)

| | NOMINAL PIPE SIZE (IN.) | | | | | | | | | | | |
|---|---|---|---|---|---|---|---|---|---|---|---|---|
| | 3/4 | 1 | 1 1/4 | 1 1/2 | 2 | 2 1/2 | 3 | 3 1/2 | 4 | 5 | 6 | 8 |
| STEEL PIPE EXCEPT THREADED LIGHTWALL | N/A | 12-0 | 12-0 | 15-0 | 15-0 | 15-0 | 15-0 | 15-0 | 15-0 | 15-0 | 15-0 | 15-0 |
| THREADED LIGHTWALL STEEL PIPE | N/A | 12-0 | 12-0 | 12-0 | 12-0 | 12-0 | 12-0 | N/A | N/A | N/A | N/A | N/A |
| COPPER TUBE | 8-0 | 8-0 | 10-0 | 10-0 | 12-0 | 12-0 | 12-0 | 15-0 | 15-0 | 15-0 | 15-0 | 15-0 |

# CODE REFERENCE

2020 NEW YORK STATE BUILDING CODE
2016 NFPA 13

# FIRE PROTECTION NOTES

1. THE DRAWINGS SHOW THE LAYOUT OF THE SYSTEM AND INDICATE THE APPROXIMATE LOCATIONS OF EQUIPMENT AND PIPING. CONTRACTOR IS CAUTIONED NOT TO SCALE THE DRAWINGS. THE PIPING SHALL BE RUN APPROXIMATELY IN THE AREAS AS INDICATED ON THE DRAWINGS, [HOWEVER, TO THE ARRANGEMENT OF THE PIPING SYSTEMS AS MAY BE REFERENCED WITH WORK OF OTHER TRADES]. CONTRACTOR SHALL REVIEW AND COORDINATE WITH STRUCTURAL, ELECTRICAL AND MECHANICAL DRAWINGS. PARTITIONS, STRUCTURAL MEMBERS, ETC. ARE DESIGNED TO BE FURRED OR CLOSED IN AND TO INCLUDE ROUGH-IN PIPING. CONTRACTOR SHALL FURNISH ALL OFFSETS, ADDITIONAL FITTINGS, ETC. WHETHER SHOWN ON DRAWINGS OR NOT, AS REQUIRED TO MEET INSTALLATION CONDITIONS.

2. CONTRACTOR IS TO COMPLY WITH LATEST NFPA AND N.Y.S. CODES, AND COORDINATE HIS WORK WITH OTHER TRADES AND MAKE NECESSARY ADJUSTMENTS.

3. CONTRACTOR IS TO PREPARE SHOP DRAWINGS FOR ENGINEERS REVIEW AFTER MAKING A COMPLETE FIELD SURVEY.

4. CONTRACTOR IS TO REPORT ANY CONDITION REQUIRING CHANGES FROM PLANS TO ENGINEER PRIOR TO STARTING WORK.

5. BRANCH LINES AND MAINS (1 1/2" OR LESS) - SCHEDULE 40 FM APPROVED

6. BRANCH LINES AND MAINS (2" OR LARGER) - THINWALL (THICKNESS LESS THEN SCHEDULE 40 MORE THEN SCHEDULE 10 & FM APPROVED)

7. CONTRACTOR IS TO PERFORM A HYDROSTATIC TEST FOR 2 HRS. @ 200 PSI WITH NO LEAKAGE AND PROVIDE A TEST CERTIFICATE TO ENGINEER

8. CONTRACTOR IS TO EMPLOY EXPERIENCED WORKMEN WHO ARE TO FAMILIARIZE THEMSELVES WITH THE BUILDING AND OBSERVE SAFETY REQUIREMENTS.

9. CONTRACTOR TO ADJUST HEAD LOCATION TO COORDINATE WITH LIGHTS, DUCTS, ETC.

10. PERMIT FROM LOCAL AUTHORITY, TO BE OBTAINED BY CONTRACTOR.

11. ALL WORK TO BE APPROVED BY OWNERS ENGINEER, STATE AUTHORITIES HAVING JURISDICTION AND MUNICIPAL FIRE, PLUMBING, BUILDING AND WATER DEPARTMENTS.

12. U.L. AND/OR FM APPROVED EQUIPMENT TO BE USED.

13. WORK TO BE IN ACCORDANCE WITH MUNICIPAL WATER DEPT. RULES

14. SYSTEM IS TO BE MAINTAINED AND TESTED BY THE OWNER OR HIS AGENT IN ACCORDANCE WITH APPLICABLE LOCAL AND STATE CODES AND IN CONFORMANCE WITH NFPA 13A, LATEST EDITION.

15. IF BUILDING OCCUPANCY OR CONSTRUCTION CHANGES, THE SPRINKLER SYSTEM IS TO BE UPDATED ACCORDINGLY BY THE OWNER OR HIS AGENT.

16. CONTRACTOR IS TO NEATLY CUT AND PATCH IN A FIRST CLASS WORKMANLIKE MANNER, ALL HOLES AND PENETRATIONS IN WALLS, CEILINGS, FLOORS, PARTITIONS, ETC.

17. THE ENGINEER IS NOT RETAINED FOR SUPERVISION.

18. THE INSTALLATION OF THIS SYSTEM WILL REQUIRE THE CLOSING OF ONE OR MORE FIRE PROTECTION CONTROL VALVES. THESE VALVE CLOSURES SHOULD BE CLOSELY COORDINATED WITH THE OWNERS WHO SHOULD CONTACT THE LOCAL FIRE DEPARTMENT, INSURANCE INTERESTS, ETC. PRIOR TO VALVE CLOSURES.

19. ACTUAL DESIGN DENSITY MAY EXCEED STANDARDS, HOWEVER, IT IS A MINIMUM TO BE USED BY THE CONTRACTOR.

20. ALL ALARMS RELATING TO THE SPRINKLER SYSTEM SHOULD BE ACTIVATED UPON PLACING THE SPRINKLER SYSTEM IN SERVICE.

21. THE INSTALLATION COMPONENTS, SIZING, SPACING, MATERIALS LOCATION CLEARANCES, POSITION AND TYPE OF SYSTEM SHALL CONFORM TO NFPA 13 AND NYS UNIFORM FIRE PREVENTION BUILDING CODE LATEST EDITION.

22. SPRINKLERS SHALL BE PROTECTED AGAINST FREEZING AND INJURY AS PER NFPA CODE.

23. INSPECTION AND TESTS OF SPRINKLER SYSTEM SHALL BE CONDUCTED AS SPECIFIED IN NFPA CODE.

24. WATER SUPPLY TEST PIPES AND GAUGES SHALL BE PROVIDED AS SPECIFIED IN CHAPTER 2-9 OF NPPA 13.

25. PIPING SPECIFICATIONS, PIPE SCHEDULES, SYSTEM TEST PIPES, PROTECTION AGAINST CORROSION, DAMAGE FITTINGS, VALVES, HANGERS, SPRINKLERS, GUARDS AND SHIELDS SHALL BE IN ACCORDANCE WITH CHAPTER 3 AND CHAPTER 8 OF NFPA 13, LATEST EDITION. PIPING SHALL BE PAINTED TO PREVENT CORROSION.

26. STOCK OF EXTRA SPRINKLERS WILL BE FURNISHED AS PER CHAPTER 3 OF NFPA 13 (REQUIRED FOR EACH TEMPERATURE RATING).

27. SPRINKLER ALARMS WILL BE IN ACCORDANCE WITH NFPA 13.

28. SPACING, LOCATION AND POSITION OF SPRINKLERS SHALL BE IN ACCORDANCE WITH CHAPTER 4 OF NFPA 13.

29. ALL PIPING PASSING THROUGH WALLS SHALL COMPLY WITH NFPA FOR FIRE PROOFING.

30. DISTANCE OF SPRINKLERS FROM HEAT SOURCES SHALL BE IN ACCORDANCE WITH TABLE 3-16.6.3 OF NFPA 13.

31. PROVIDE WATER SUPPLY LETTER WITH FLOW TEST DATA.

32. ALL PIPES PASSING THROUGH FOUNDATION WALLS TO BE PROTECTED.

33. ALL VALVES SHALL BE IDENTIFIED AS REQUIRED BY NFPA 13.

34. DRAINAGE TO CONFORM TO CHAPTER 3-11 OF NFPA 13.

35. A ONE PIECE REDUCING FITTING OF GOOD DESIGN SHOULD BE USED WHEREVER A CHANGE IS MADE IN THE SIZE OF PIPE AS PER SECTION 3-12.2.7 OF NFPA 13.

36. ALL VALVES ON CONNECTIONS TO WATER SUPPLIES AND IN SUPPLY TO SPRINKLERS SHALL BE APPROVED O.S. &Y. OR APPROVED INDICATOR TYPE WITH TAMPER SWITCHES.

37. DRAIN VALVES AND TEST VALVES SHALL BE APPROVED TYPE AS PER SECTION 3-14.1.2 OF NFPA 13.

38. HANGERS SHALL BE OF A TYPE APPROVED FOR USE WITH THE PIPE OR TUBE INVOLVED, SPRINKLER PIPING SHOULD BE SUPPORTED BY ADJUSTABLE HANGERS PER NFPA 13, SECTION 3-15.

39. PROVISIONS SHOULD BE MADE TO FACILITATE FLUSHING SYSTEM PIPING BY PROVIDING FLUSHING CONNECTIONS CONSISTING OF A CAPPED NIPPLE 4" LONG ON THE END OF THE CROSS MAIN, AS PER SECTION 3- 8.2 OF NFPA 13.

40. SPRINKLER SHALL BE AN APPROVED TYPE AS PER SECTION 3-16 OF NFPA 13.

41. TEMPERATURE RATING SHALL COMPLY WITH SEC. 3-16.6 OF NFPA 13.

42. CLEARANCES BETWEEN SPRINKLERS AND STORAGE OR PARTITIONS AS PER NFPA 13, SECTION 4-2.5

43. SPACING AND LOCATION OF SPRINKLER SHALL COMPLY WITH CHAPTER 4 NFPA 13.

44. CONTRACTOR TO COORDINATE HIS WORK WITH OTHER TRADES.

45. ONLY EXPERIENCED SPRINKLER MECHANICS TO WORK ON THE SYSTEM.

46. ALL PIPING TO BE A MINIMUM OF 1" UNLESS OTHERWISE NOTED.

47. PROVIDE SHOP DRAWINGS WITH HYDRAULIC CALCULATIONS FOR REVIEW TO LOCAL FIRE MARSHALL AND INSURANCE UNDERWRITER AND ENGINEER FOR APPROVAL PRIOR TO INSTALLATION.

48. ALL FIRE PROTECTION EQUIPMENT SHALL BE INSTALLED PER MANUFACTURER'S REQUIREMENTS/SPECIFICATIONS.

49. ALL FIRE PROTECTION EQUIPMENT SHALL BE MOUNTED ON MINIMUM 6" HIGH CONCRETE PAD UNLESS OTHERWISE NOTED (PAVER AND CINDER BLOCK IS NOT ACCEPTABLE).

50. PERMIT IS REQUIRED PRIOR TO INSTALLATION, TO INCLUDE SIGNED AND SEALED SHOP DRAWINGS, HYDRAULIC CALCULATION, SHOP DRAWINGS, MANUFACTURERS INFORMATION ON HEADS AND APPLIANCES, COMPLIANCE WITH NFPA 13 AND SECTION 903 2020 NYSBC/FC.

# DRY SYSTEM COMPRESSOR SCHEDULE

| TAG | MANUFACTURER | MODEL | SERVICE | LOCATION | AVERAGE CFM | V.P.H.HZ | HP | RECOMMENDED WIRE SIZE | DIMENSION (L"xW"xH") | WEIGHT (LBS) | NOTES |
|---|---|---|---|---|---|---|---|---|---|---|---|
| DC-1 | GENERAL AIR PRODUCT | LT20033A | DRY SYSTEM | SPRINKLER ROOM | 2.43 | 230.1.60 | 1/3 | 12 | 33x13x28 | 115 | 1,2,3 |

## NOTES:

1. MOUNTING BRACKET.
2. PROVIDE AIR MAINTENANCE DEVICE (RELIABLE MODEL AMD-1)
3. PROVIDE WITH A 10 GALLON GENERAL AIR TANK
4. UL LISTED PRESSURE SWITCH. SET FOR 20 PSI ON AND 25 PSI OFF. REFER TO MANUFACTURER'S RECOMMENDATIONS FOR PROPER AIR PRESSURE.

# DRY PIPE VALVE SCHEDULE

| MANUFACTURER | MODEL | SERVICE | LOCATION | SIZE (INCH) |
|---|---|---|---|---|
| RELIABLE | D | DRY SYSTEM | SPRINKLER EQUIP. ROOM | 4 |

## NOTES:

1. FACTORY PREASSEMBLED TRIM - BASIC
2. PROVIDE WITH RELIABLE B1 ACCELERATOR. INSTALL AS PER MANUFACTURER'S RECOMMENDATIONS

# FIRE PROTECTION DRAWING LIST

| SHEET NO. | SHEET NAME | REVISON NO. | REVISION DATE |
|---|---|---|---|
| CXD-FP-01 | FIRE PROTECTION NOTES, SYMBOLS, ABBREVIATIONS, AND DRAWING LIST | 0 | - |
| CXD-FP-11 | FIRE PROTECTION GROUND FLOOR AND ATTIC DEMOLITION PLAN | 0 | - |
| CXD-FP-21 | FIRE PROTECTION GROUND FLOOR AND ATTIC CONSTRUCTION RCP | 0 | - |
| CXD-FP-81 | FIRE PROTECTION DETAILS | 0 | - |


CONSULTANT INFORMATION

LiRo Engineers, Inc.
A LiRo Group Company
Syosset, N.Y. 516-214-8157[T]

CONSULTANT SEAL

STATE OF NEW YORK · FRANK F. ULLISE · No. 0901111 · LICENSED PROFESSIONAL ENGINEER


| REVISION NUMBER | DATE | MADE BY | APP'D BY | REVISION |
|---|---|---|---|---|
| | | | | |

RECORD DRAWING CERTIFICATION

☐ AS BUILT – CHANGES AS NOTED ☐ AS BUILT – NO CHANGES

CONTRACTOR: NAME / SIGNATURE / TITLE / DATE

PROJECT COORDINATOR: NAME / SIGNATURE / TITLE / DATE

WESTCHESTER COUNTY, NEW YORK
DEPARTMENT OF PUBLIC WORKS AND TRANSPORTATION
DIVISION OF ENGINEERING

**INFRASTRUCTURE REHABILITATION - PHASE 3**
**PLAYLAND PARK, RYE, NEW YORK**
**CROSS AXIS BUILDING D**
**FIRE PROTECTION NOTES, SYMBOLS, ABBREVIATIONS & DWG LIST**

| | |
|---|---|
| CONTRACT NUMBER | 22-523 |
| SHEET NUMBER | CXD-FP-01 |
| DWG NO.: | 223 of 664 |
| SCALE: | AS INDICATED |
| DATE: | 08/23/2022 |
| DPW FILE NUMBER | 1-118-FP-972-0 |
| REV. NO. | 0 |

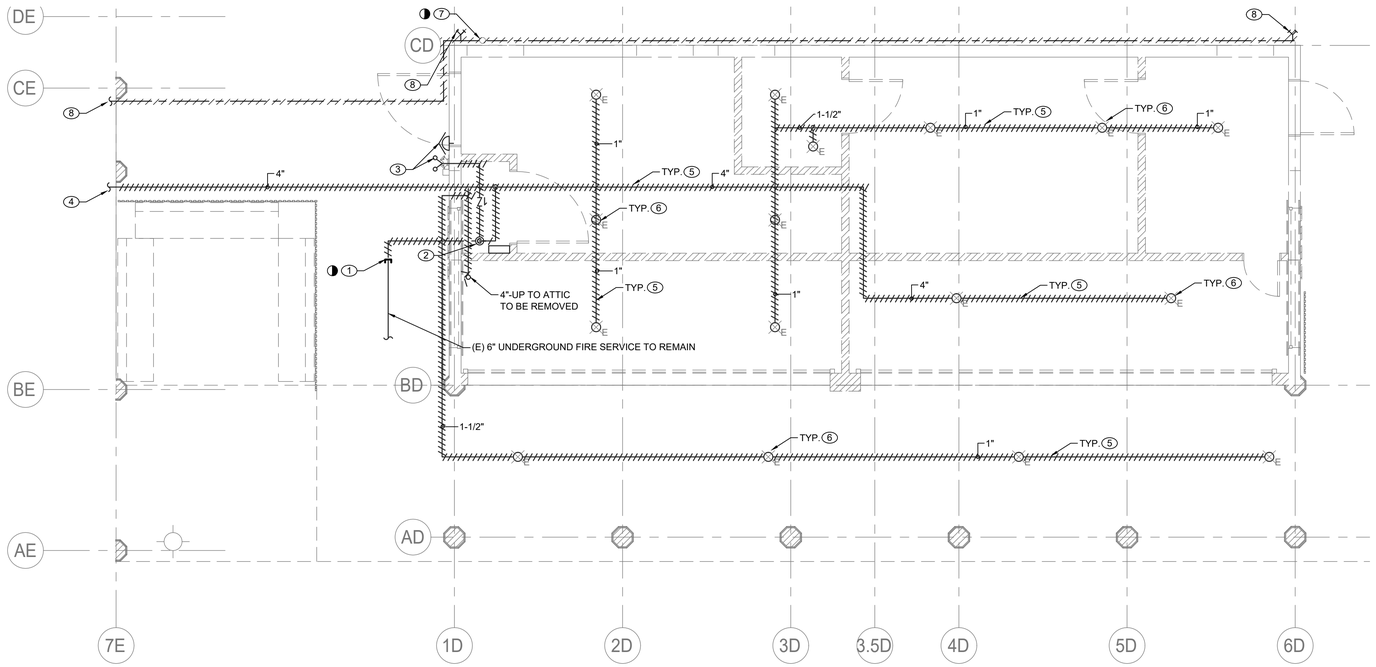


## FIRE PROTECTION GROUND FLOOR DEMOLITION PLAN

SCALE: 1/4" = 1'-0

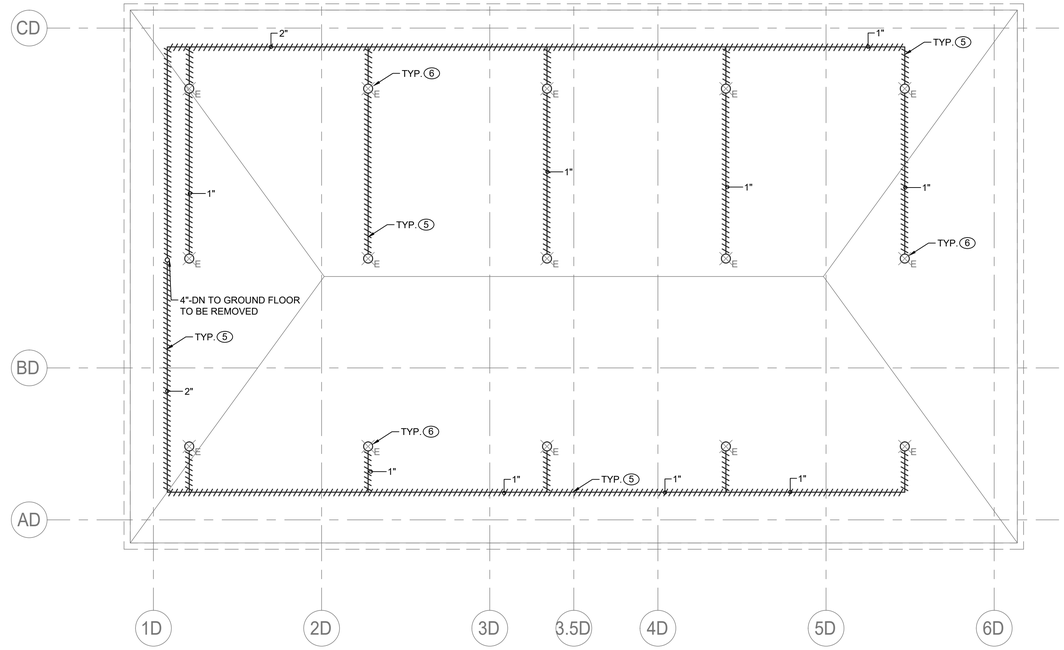


## FIRE PROTECTION ATTIC DEMOLITION PLAN

SCALE: 1/4" = 1'-0

## SPRINKLER DEMOLITION NOTES:

1. CUT AND TEMPORARY CAP UNDERGROUND EXISTING 6" FIRE SERVICE FOR FUTURE CONNECTION BETWEEN CXD AND CXE BUILDINGS.
2. REMOVE EXISTING 4" SERVICE, VALVES, DRY VALVE, COMPRESSOR AND ALL ASSOCIATED PIPING.
3. REMOVE EXISTING FDC, ALARM BELLS AND DRAIN PIPING.
4. REMOVE SPRINKLER PIPING WITHIN CXE BUILDING. REFER TO CXE FIRE PROTECTION DRAWINGS FOR CONTINUATION.
5. DEMOLISH ALL EXISTING DRY SPRINKLER PIPING WITHIN THE CXD BUILDING INCLUDING ATTIC SPACE.
6. DEMOLISH ALL EXISTING SPRINKLER HEADS WITHIN THE CXD BUILDING.
7. CUT AND PERMANENTLY CAP EXISTING 4" DRAINAGE PIPING 1 FEET BELOW FINISHED SURFACE.
8. REMOVE EXISTING 1/2" COLD WATER PIPING INCLUDING HOSE BIBS ON EXTERIOR OF CXD AND CXE BUILDINGS.

## GENERAL NOTES:

1. COORDINATE WITH FACILITY PRIOR TO SHUTDOWN OF FIRE PROTECTION SYSTEM FOR ANY DEMOLITION AND CONSTRUCTION WORK.
2. CONTRACTOR SHALL PROVIDE FIRE WATCH AS NEEDED FOR THE DEPENDENT BUILDINGS BY THE DEMOLITION AND CONSTRUCTION WORK WHILE SPRINKLER COVERAGE IS IMPACTED.
3. CONTRACTOR TO COORDINATE WITH FACILITY WHEN WORKING AROUND OR ABOVE THE RIDE COMPONENTS, AND PROVIDE ALL NECESSARY MEASURES TO PROTECT THESE COMPONENTS PER THE REQUIREMENTS OF THE FACILITY.

CONSULTANT INFORMATION

LiRo Engineers, Inc.
A LiRo Group Company
Syosset, N.Y. 516-214-8157[T]

CONSULTANT SEAL

STATE OF NEW YORK · FRANK F. ULISSE · No. 090111-1 · LICENSED PROFESSIONAL ENGINEER

| REVISION NUMBER | DATE | MADE BY | APP'D BY | REVISION |
|---|---|---|---|---|

RECORD DRAWING CERTIFICATION

☐ AS BUILT – CHANGES AS NOTED ☐ AS BUILT – NO CHANGES

CONTRACTOR
NAME
SIGNATURE
TITLE DATE

PROJECT COORDINATOR
NAME
SIGNATURE
TITLE DATE

WESTCHESTER COUNTY, NEW YORK
DEPARTMENT OF PUBLIC WORKS AND TRANSPORTATION
DIVISION OF ENGINEERING

INFRASTRUCTURE REHABILITATION - PHASE 3
PLAYLAND PARK, RYE, NEW YORK
CROSS AXIS BUILDING D
FIRE PROTECTION GROUND FLOOR AND ATTIC DEMOLITION PLAN

| | |
|---|---|
| CONTRACT NUMBER | 22-523 |
| SHEET NUMBER | CXD-FP-11 |
| DWG NO.: | 224 of 664 |
| SCALE: | AS INDICATED |
| DATE: | 08/23/2022 |
| DPW FILE NUMBER | 1-118-FP-973-0 |
| REV. NO. | 0 |

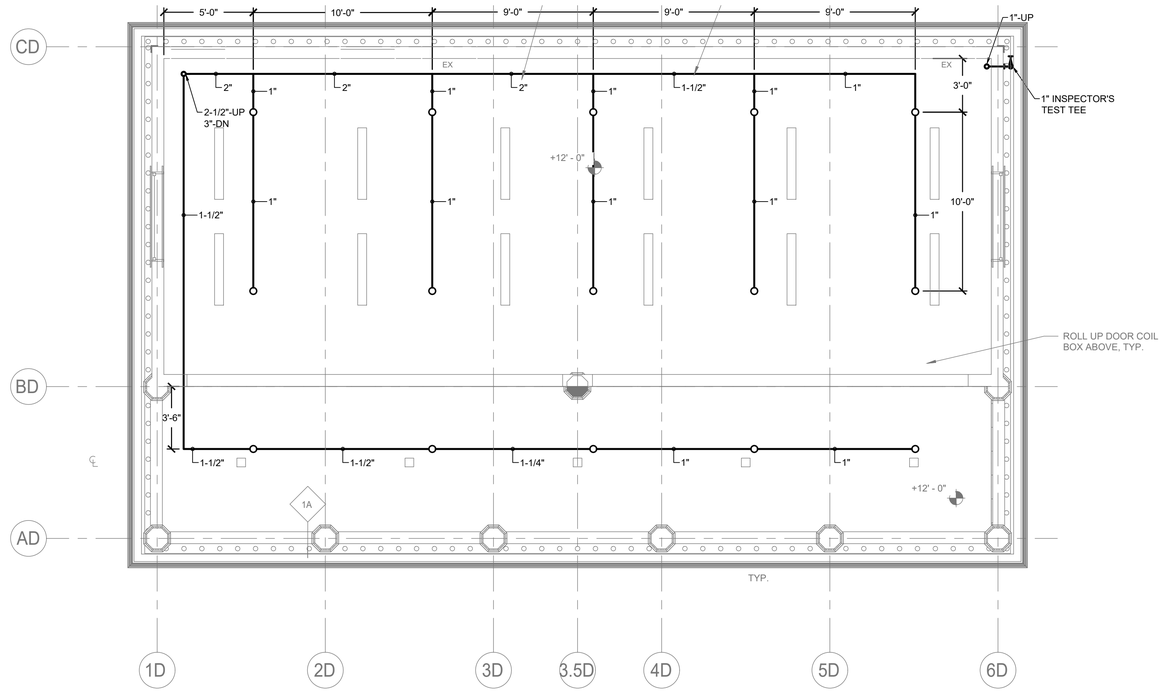


## FIRE PROTECTION GROUND FLOOR CONSTRUCTION RCP

SCALE: 1/4" = 1'-0

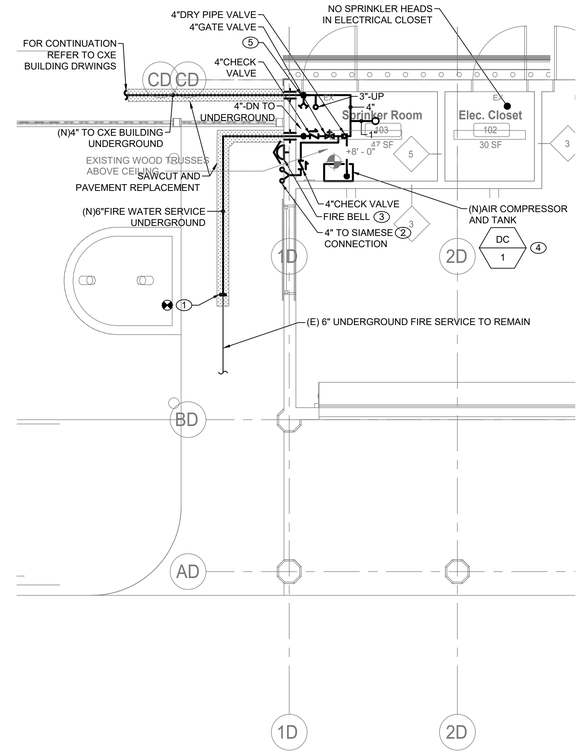


## FIRE PROTECTION SPRINKLER ROOM AND ELECTRICAL CLOSET CONSTRUCTION PLAN

SCALE: 1/4" = 1'-0

## FIRE PROTECTION CONSTRUCTION NOTES:

1. RECONNECT NEW 6" FIRE SERVICE TO EXISTING BETWEEN CXD AND CXE BUILDINGS.
2. INSTALL NEW SIGNAGE AND NEW FLUSH SIAMESE CONNECTION. SUCH SIGN SHALL HAVE THE LETTERS "FDC" AT LEAST 6 INCHES (152 MM) HIGH AND AN ARROW TO INDICATE THE LOCATION OF THE SIAMESE CONNECTION. SIGN SHALL BE LOCATED IN FRONT OF THE BUILDING AND POINTING IN THE DIRECTION OF THE SIAMESE CONNECTION. SIGN SHALL BE SUBJECT TO THE APPROVAL OF THE FIRE CODE OFFICIAL.
3. INSTALL NEW FIRE BELL AND CONNECT TO ALARM SYSTEM.
4. INSTALL NEW AIR COMPRESSOR AND AIR PIPING. AIR COMPRESSOR SHALL BE INSTALLED ON A CONCRETE PAD. LOCATION OF THE NEW AIR COMPRESSOR AND TANK SHALL BE LOCATED IN THE FIELD. PROVIDE A SHUT OFF VALVE ON THE PIPING FROM THE AIR COMPRESSOR.
5. PROVIDE ACCESSIBLE FOR MAINTENANCE CONCRETE PIT WITH WATERTIGHT COVER AND DRAIN VALVE ON THE LOWEST POINT OF THE PIPE FOR CXE BUILDING. REFER TO ARCHITECTURAL DRAWINGS FOR MORE DETAILS.

## GENERAL NOTES:

1. ALL DISTRIBUTION PIPING, SHALL BE PAINTED AS DIRECTED BY ARCHITECT. REFER TO SPECIFICATION FOR PAINT TYPE AND APPLICATION PROCEDURE.
2. COORDINATE WITH FACILITY PRIOR TO SHUTDOWN OF FIRE PROTECTION SYSTEM FOR ANY DEMOLITION AND CONSTRUCTION WORK.
3. CONTRACTOR SHALL PROVIDE FIRE WATCH AS NEEDED FOR ALL AFFECTED BUILDINGS WHILE SPRINKLER COVERAGE IS IMPACTED.
4. CONTRACTOR TO COORDINATE WITH FACILITY WHEN WORKING AROUND OR ABOVE THE RIDE COMPONENTS, AND PROVIDE ALL NECESSARY MEASURES TO PROTECT THESE COMPONENTS PER THE REQUIREMENTS OF THE FACILITY.
5. UPON COMPLETION, SYSTEM SHALL BE TESTED FOR PROPER OPERATION.

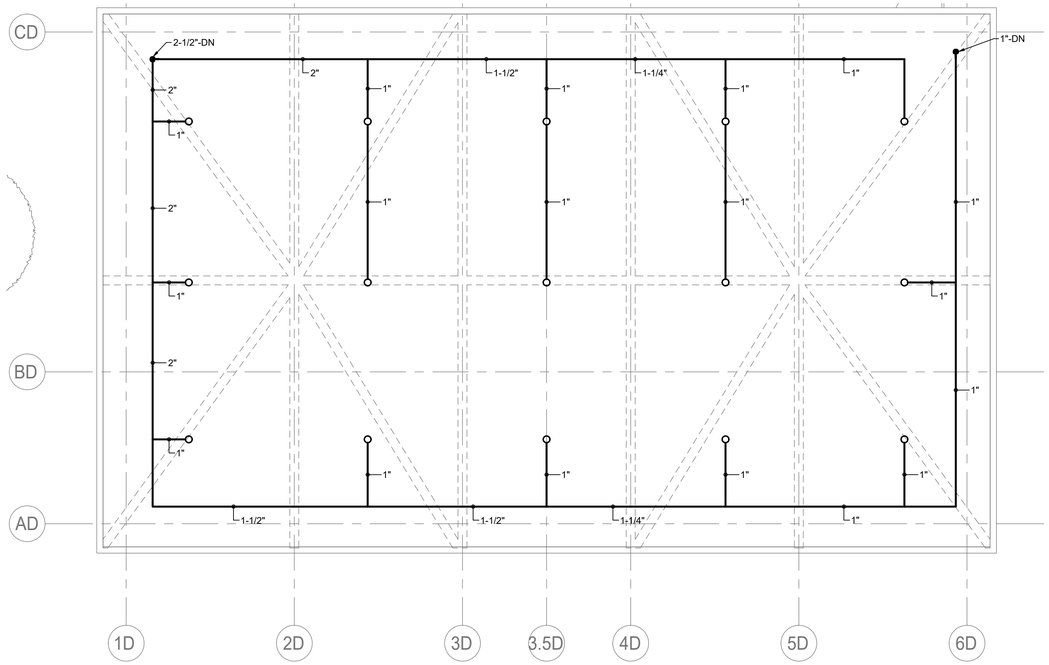


## FIRE PROTECTION ATTIC CONSTRUCTION RCP

SCALE: 1/4" = 1'-0

CONSULTANT INFORMATION

LiRo Engineers, Inc.
A LiRo Group Company
Syosset, N.Y. 516-214-8157[T]

CONSULTANT SEAL

STATE OF NEW YORK · FRANK F. ULISSE · No. 090111-1 · LICENSED PROFESSIONAL ENGINEER

| REVISION NUMBER | DATE | MADE BY | APP'D BY | REVISION |
|---|---|---|---|---|

RECORD DRAWING CERTIFICATION

☐ AS BUILT – CHANGES AS NOTED ☐ AS BUILT – NO CHANGES

CONTRACTOR
NAME
SIGNATURE
TITLE DATE

PROJECT COORDINATOR
NAME
SIGNATURE
TITLE DATE

WESTCHESTER COUNTY, NEW YORK
DEPARTMENT OF PUBLIC WORKS AND TRANSPORTATION
DIVISION OF ENGINEERING

INFRASTRUCTURE REHABILITATION - PHASE 3
PLAYLAND PARK, RYE, NEW YORK
CROSS AXIS BUILDING D
FIRE PROTECTION GROUND FL. AND ATTIC CONSTRUCTION RCP

| | |
|---|---|
| CONTRACT NUMBER | 22-523 |
| SHEET NUMBER | CXD-FP-21 |
| DWG NO.: | 225 of 664 |
| SCALE: | AS INDICATED |
| DATE: | 08/23/2022 |
| DPW FILE NUMBER | 1-118-FP-974-0 |
| REV. NO. | 0 |

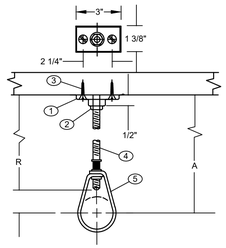


COMPONENTS

1. CLIP (CEILING FLANGE)
2. HEX NUT
3. WOOD SCREW
4. HANGER ROD
5. ADJUSTABLE HANGER RING

NFPA REQUIREMENTS / LIMITATIONS

1. NFPA 13 PERMITS THE USE OF 2 SCREW CEILING FLANGES ONLY
2. HAVING DIMENSIONS NOT LESS THAN THOSE OF NO. 18 X 1 1/2" WOOD SCREWS. DRIVE SCREWS AND NAILS ARE NOT ACCEPTABLE FASTENERS AND WOOD SCREWS ARE NOT TO BE DRIVEN.
3. FOR PIPE SIZES UP TO 2" AND IT CALLS FOR THE USE OF SCREWS

DESIGN DATA FOR CLIP HANGERS

| NOMINAL PIPE SIZE | MINIMUM A DIMENSION | HANGER TAKEOUT | ROD DIAMETER | FASTENERS | |
|---|---|---|---|---|---|
| | INCHES | INCHES | INCHES | QTY | ITEMS |
| 1/2 | 3 3/4 | -1 1/4 | 3/8 | 1<br>2<br>1 | 3/8" CEILING FLANGE (CLIP)<br>NO. 18 X 1 1/2" FLAT HEAD WOOD SCREWS<br>3/8" HEX NUT |
| 3/4 | 3 3/4 | -1 1/4 | " | | SEE ABOVE |
| 1 | 3 3/4 | -1 1/4 | " | | " " |
| 1 1/4 | 4 | -1 1/2 | " | | " " |
| 1 1/2 | 4 | -1 1/2 | " | | " " |
| 2 | 4 1/4 | -1 3/4 | " | | " " |

## 1 FP-81 PIPE HANGER DETAIL

SCALE: NOT TO SCALE

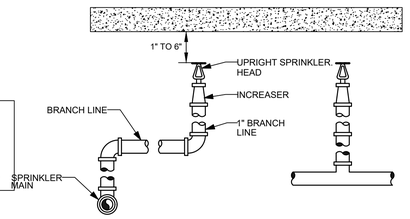


## 2 FP-81 UPRIGHT SPRINKLER DETAIL

SCALE: NOT TO SCALE

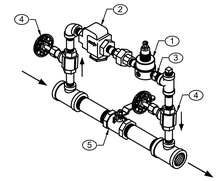


TRIMS:
1. REGULATOR, 5-100 PSI
2. STRAINER, 1/4" NPT, 90
3. CHECK VALVE, 1/4"
4. GLOBE VALVE, 1/4"
5. BALL VALVE, 3/4"

NOTES:
1. PROVIDE PRESSURE GAUGE UPSTREAM AND DOWNSTREAM OF AIR MAINTENANCE DEVICE.
2. PROVIDE RELIEF VALVE DOWNSTREAM OF AIR MAINTENANCE DEVICE, AND IT SHALL BE SET TO RELIEF PRESSURE NO LESS THAN 10 PSI IN EXCESS OF SYSTEM AIR PRESSURE PROVIDED.

## 3 FP-81 AIR MAINTENANCE DEVICE DETAIL

SCALE: NOT TO SCALE

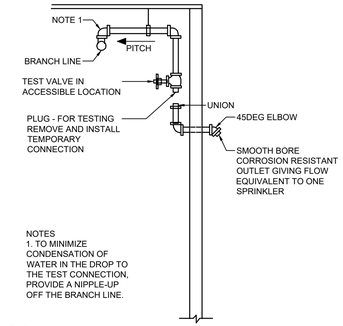


NOTES
1. TO MINIMIZE CONDENSATION OF WATER IN THE DROP TO THE TEST CONNECTION, PROVIDE A NIPPLE-UP OFF THE BRANCH LINE.

## 4 FP-81 DRY PIPE TEST CONNECTION

SCALE: NOT TO SCALE

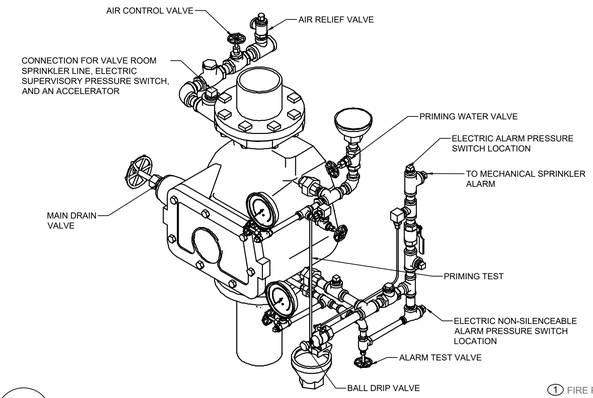


## 5 FP-81 DRY VALVE DETAIL

SCALE: NOT TO SCALE

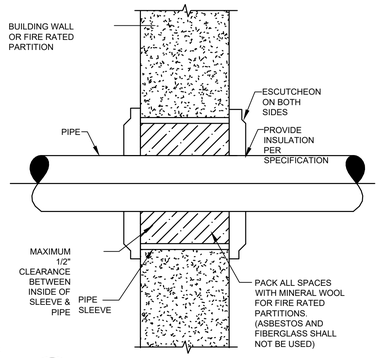


## 6 FP-81 PIPE PENETRATION

SCALE: NOT TO SCALE

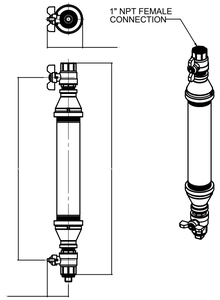


## 7 FP-81 DRY SYSTEM AUXILIARY DRAIN

SCALE: NOT TO SCALE

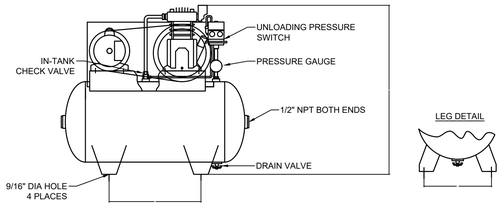


## 8 FP-81 DRY SYSTEM COMPRESSOR

SCALE: NOT TO SCALE

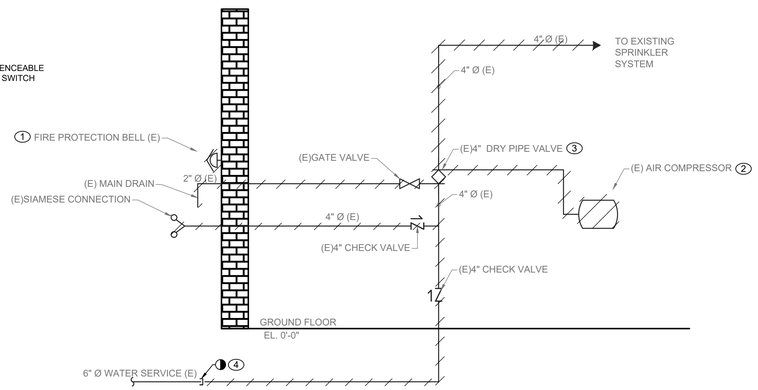


## 9 FP-81 SPRINKLER ROOM RISER - DEMOLITION

SCALE: NOT TO SCALE

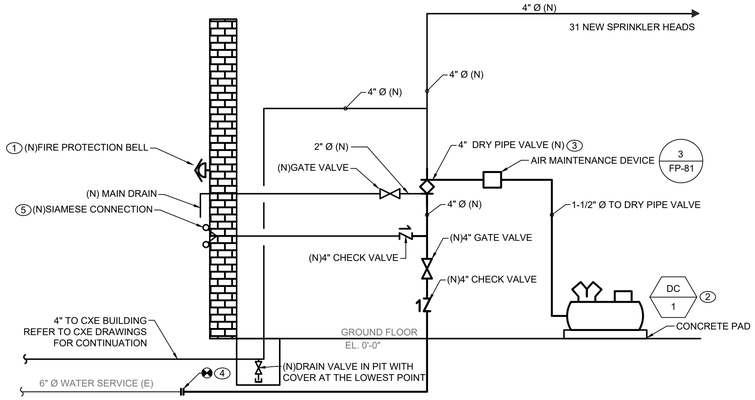


## 10 FP-81 SPRINKLER ROOM RISER - CONSTRUCTION

SCALE: NOT TO SCALE

## SPRINKLER DEMOLITION NOTES:

1. DISCONNECT FROM FIRE ALARM SYSTEM & DEMOLISH EXISTING FIRE BELL.
2. DEMOLISH EXISTING AIR COMPRESSOR AND ASSOCIATED AIR PIPING.
3. DEMOLISH EXISTING 4" DRY VALVE. DISCONNECT EXISTING FIRE ALARM DEVICES FOR FUTURE CONNECTION.
4. CUT AND TEMPORARILY CAP EXISTING 6" FIRE SERVICE FOR FUTURE CONNECTION BEHIND BUILDING LINE.

## SPRINKLER CONSTRUCTION NOTES:

1. INSTALL NEW FIRE BELL AND RECONNECT TO EXISTING ALARM SYSTEM. FIRE BELL SHALL BE LOCATED IN THE SAME LOCATION OF THE CURRENTLY INSTALLED AND CONNECTED FIRE BELL.
2. INSTALL NEW AIR COMPRESSOR AND AIR PIPING. AIR COMPRESSOR SHALL BE INSTALLED ON A CONCRETE PAD. LOCATION OF THE NEW AIR COMPRESSOR AND TANK SHALL BE LOCATED IN THE FIELD. PROVIDE A SHUT OFF VALVE ON THE PIPING FROM THE AIR COMPRESSOR.
3. INSTALL NEW 4" DRY VALVE. RECONNECT FIRE ALARM DEVICES TO EXISTING SYSTEM.
4. RECONNECT EXISTING 6" FIRE SERVICE TO NEW UNDERGROUND BEHIND BUILDING LINE.
5. INSTALL NEW SIGNAGE AND NEW SIAMESE CONNECTION. SUCH SIGN SHALL HAVE THE LETTERS "FDC" AT LEAST 6 INCHES (152 MM) HIGH AND AN ARROW TO INDICATE THE LOCATION OF THE SIAMESE CONNECTION. SIGN SHALL BE LOCATED IN FRONT OF THE GAMES ROW NORTH BATHROOM AND POINTING IN THE DIRECTION OF THE SIAMESE CONNECTION. SIGN SHALL BE SUBJECT TO THE APPROVAL OF THE FIRE CODE OFFICIAL.

## GENERAL NOTES:

2. ALL DISTRIBUTION PIPING, INCLUDING PIPING NOT BEING REPLACED, SHALL BE (RE)PAINTED. REFER TO SPECIFICATION FOR PAINT TYPE AND APPLICATION PROCEDURE.
3. COORDINATE WITH FACILITY PRIOR TO SHUTDOWN OF FIRE PROTECTION SYSTEM FOR ANY DEMOLITION AND CONSTRUCTION WORK.
4. CONTRACTOR SHALL PROVIDE FIRE WATCH AS NEEDED FOR THE BUILDING WHILE SPRINKLER COVERAGE IS IMPACTED.
5. UPON COMPLETION OF NEW EQUIPMENT, SYSTEM SHALL BE TESTED FOR PROPER OPERATION.
6. CONTRACTOR TO COORDINATE WITH FACILITY WHEN WORKING AROUND OR ABOVE THE RIDE COMPONENTS, AND PROVIDE ALL NECESSARY MEASURES TO PROTECT THESE COMPONENTS PER THE REQUIREMENTS OF THE FACILITY.


CONSULTANT INFORMATION

LiRo Engineers, Inc.
A LiRo Group Company
Syosset, N.Y. 516-214-8157[T]

CONSULTANT SEAL

STATE OF NEW YORK · FRANK F. ULLISE · No. 090111 · LICENSED PROFESSIONAL ENGINEER


| REVISION NUMBER | DATE | MADE BY | APP'D BY | REVISION |
|---|---|---|---|---|
| | | | | |

RECORD DRAWING CERTIFICATION

☐ AS BUILT – CHANGES AS NOTED ☐ AS BUILT – NO CHANGES

CONTRACTOR: NAME / SIGNATURE / TITLE / DATE

PROJECT COORDINATOR: NAME / SIGNATURE / TITLE / DATE

WESTCHESTER COUNTY, NEW YORK
DEPARTMENT OF PUBLIC WORKS AND TRANSPORTATION
DIVISION OF ENGINEERING

**INFRASTRUCTURE REHABILITATION - PHASE 3**
**PLAYLAND PARK, RYE, NEW YORK**
**CROSS AXIS BUILDING D**
**FIRE PROTECTION DETAILS**

| | |
|---|---|
| CONTRACT NUMBER | 22-523 |
| SHEET NUMBER | CXD-FP-81 |
| DWG NO.: | 226 of 664 |
| SCALE: | AS INDICATED |
| DATE: | 08/23/2022 |
| DPW FILE NUMBER | 1-118-FP-975-0 |
| REV. NO. | 0 |

# MECHANICAL GENERAL NOTES

1. ALL WORK AND MATERIALS SHALL BE PURCHASED AND INSTALLED IN ACCORDANCE WITH ALL NATIONAL & NEW YORK STATE CODES AND REGULATIONS (AS WELL AS ALL APPLICABLE LOCAL CODES & REGULATIONS). THE CONTRACTOR SHALL BE RESPONSIBLE TO ENSURE THAT ALL HVAC WORK IS PROVIDED AND INSTALLED IN STRICT ACCORDANCE WITH SEISMIC REQUIREMENTS.
2. DO NOT SCALE FROM THESE DRAWINGS.
3. THE EXACT MOUNTING HEIGHTS AND LOCATIONS OF ALL HVAC EQUIPMENT SHALL BE FIELD VERIFIED AND COORDINATED WITH ALL OTHER MECHANICAL, ELECTRICAL, PLUMBING, FIRE SPRINKLER, ARCHITECTURAL AND STRUCTURAL SYSTEMS. DURING SHOP DRAWINGS SUBMISSIONS, SHOW ALL MOUNTING HEIGHTS OF DUCTWORK, UNITS, ETC.
4. VERIFY ALL EQUIPMENT VOLTAGES WITH THE ELECTRICAL DESIGN PRIOR TO ORDERING EQUIPMENT.
5. PROVIDE PHASE LOSS PROTECTION FOR ALL POLY-PHASE MOTOR DEVICES.
6. DUCTWORK SHALL BE CONSTRUCTED OF GALVANIZED SHEET STEEL IN STRICT COMPLIANCE WITH THE LATEST EDITION OF THE ASHRAE, NFPA, AND SMACNA GUIDE RECOMMENDATIONS. ALL DUCTS TO HAVE PITTSBURGH TYPE LOCK FOR LONGITUDINAL SEAMS AND DRIVE SLIP / "S" SLIP FOR TRANSVERSE JOINTS. "DUCT-MATE" JOINT SYSTEM IS ACCEPTABLE IN LIEU OF PRIOR SEAM SYSTEMS. SIZES AS SHOWN INDICATE INSIDE CLEAR DIMENSIONS OF THE AIR PASSAGE. DUCTWORK SHALL BE FULLY INSULATED AS PER APPLICABLE CODES AND WRITTEN SPECIFICATIONS.
7. DUCT SIZES MUST BE VERIFIED FOR CLEARANCES AT THE JOB SITE PRIOR TO FABRICATION. DIMENSIONS MAY BE CHANGED TO ACCOMMODATE CONSTRUCTION AS LONG AS EFFECTIVE CROSS-SECTIONAL AREA IS MAINTAINED. DUCT TRANSITIONS SHALL BE CONSTRUCTED WITH A SLOPE OF 1" TO 4". ALL DEVIATIONS FROM ORIGINAL CONTRACT DRAWINGS SHALL BE REVIEWED BY ENGINEER DURING THE SHOP DRAWING PROCESS.
8. PROVIDE MANUAL BALANCING DAMPERS AS REQUIRED TO PROPERLY BALANCE EACH INDIVIDUAL AIR DISTRIBUTION SYSTEM. IF THE LOCATION OF THE BALANCING DAMPER IS NOT DEFINED ON THE DRAWINGS, THE FOLLOWING MINIMUMS STANDARDS SHALL GOVERN. ALL SUPPLY, RETURN, AND EXHAUST MAIN BRANCHES FROM TRUNKS, EACH SPLIT AND ALL SUB- BRANCHES FROM MAIN SHALL INCORPORATE BALANCING DAMPERS.
9. PROVIDE FLEXIBLE CONNECTORS AT ALL DUCT CONNECTIONS TO VIBRATING EQUIPMENT. THESE CONNECTORS SHALL BE INSTALLED IN CLOSE PROXIMITY TO SUCH EQUIPMENT.
10. PROVIDE FIRE DAMPERS WITH RATED ACCESS DOORS AT ALL DUCT PENETRATIONS THROUGH FIRE RATED WALLS, SMOKE AND FIRE STOPPING, SHAFT, FLOORS, RATED CEILINGS AND PARTITIONS AS REQUIRED TO MAINTAIN ARCHITECTURAL FIRE RATINGS. REFER TO THE ARCHITECTURAL PLANS AND SPECIFICATIONS FOR LOCATIONS AND FIRE RATING REQUIREMENTS. CONTRACTOR MUST FULLY REVIEW ALL ARCHITECTURAL AND ENGINEERING DRAWINGS AND VISIT THE SITE PRIOR TO SUBMITTING THE BID. NO EXTRAS WILL BE ALLOWED.
11. ALL ACCESS DOORS REQUIRED IN GENERAL CONSTRUCTION ARE TO BE PROVIDED AND INSTALLED BY THE CONTRACTOR. IT IS THE RESPONSIBILITY OF THE CONTRACTOR TO IDENTIFY SIZE, TYPE AND LOCATION OF SUCH DOORS FOR PROPER ACCESS TO ALL CONCEALED HVAC EQUIPMENT, VALVES AND OTHER RELATED EQUIPMENT. THE CONTRACTOR SHALL IDENTIFY THESE REQUIREMENTS ON A COORDINATED SHOP DRAWING PRIOR TO SYSTEM FABRICATION AND INSTALLATION.
12. ALL CEILING MOUNTED EQUIPMENT MUST BE SUPPORTED DIRECTLY FROM BUILDING STRUCTURE WITH COMBINATION SPRING AND NEOPRENE-IN-SHEAR HANGERS AND ROD. PROVIDE SUPPLEMENTARY STEEL AS REQUIRED TO ADEQUATELY SUPPORT THE LOAD.
13. THE CONTRACTOR MUST CONTRACT AN INDEPENDENT NEBB CERTIFIED AIR BALANCING & TESTING COMPANY TO PERFORM THE AIR BALANCING WORK AND ASSOCIATED SYSTEM AIR BALANCING REPORT. ALL WORK SHALL BE PERFORMED IN STRICT COMPLIANCE WITH ALL APPLICABLE CODES, REGULATIONS, PLANS AND WRITTEN SPECIFICATIONS. SUBMIT THE FINAL AIR BALANCE REPORT TO THE ENGINEER FOR REVIEW AND APPROVAL PRIOR TO SUBSTANTIAL COMPLETION OF THE PROJECT, AS DETERMINED BY THE AND OWNER/CLIENT. THE AIR BALANCE REPORT MUST INCLUDE ALL SUPPLY, RETURN, & EXHAUST AIR TERMINALS, FRESH AIR (OUTSIDE AIR) INTAKE AND VENTILATION EXHAUST CFM RATES FOR ALL UNITS. ALSO INCLUDE ACTUAL SUPPLY & RETURN AIR VELOCITY & STATIC PRESSURE READINGS ALONG WITH ALL MOTOR AMPERAGES FOR ALL UNITS.
14. THE CONTRACTOR IS TO INCLUDE IN THEIR BID ALL LOW VOLTAGE CONTROL WIRING, THERMOSTATS, RELAYS, TRANSFORMERS, STARTERS ETC FOR A COMPLETE OPERATING CONTROL SYSTEM AS DESCRIBED IN THE SEQUENCE OF OPERATIONS. THE CONTRACTOR IS ALSO RESPONSIBLE FOR LINE VOLTAGE CONTROL FOR EXHAUST FANS CONTROLLED FROM LIGHT SWITCH AND THERMOSTATS. ALL CONTROL WIRING IN THE AREAS THAT DO NOT HAVE DROPPED CEILINGS THE CONTRACTOR MUST PROVIDE ALL CONTROL WIRING CONDUIT. IN AREAS OF DROPPED CEILING PLENUM RATED CONTROL WIRING CAN BE RUN EXPOSED ABOVE CEILING.
15. ALL MECHANICAL EQUIPMENT SHALL BE INSTALLED PER MANUFACTURER'S REQUIREMENTS/SPECIFICATIONS.

# CODE REFERENCE

2020 NEW YORK STATE BUILDING CODE
2020 NEW YORK STATE MECHANICAL CODE
2020 NEW YORK STATE ENERGY CONSERVATION CODE

# MECHANICAL DEMOLITION NOTES

1. CONTRACTOR SHALL BE RESPONSIBLE FOR DEMOLITION OF MECHANICAL EQUIPMENT AND MATERIAL RELATING TO THEIR RESPECTIVE TRADE.

2. THE CONTRACTOR SHALL REMOVE, RELOCATE, REPLACE, ADJUST, ADAPT AND MODIFY EXISTING EQUIPMENT AND/OR SYSTEMS AS REQUIRED WHEN SUCH WORK IS UNCOVERED AND FOUND TO INTERFERE WITH COMPLETION OF WORK IN THIS CONTRACT OR OTHER CONTRACT WORK.

3. EXECUTE THE DEMOLITION IN CAREFUL AND ORDERLY MANNER WITH THE LEAST POSSIBLE DISTURBANCE TO THE PUBLIC, EGRESS OR THE FUNCTIONING OF THE EXISTING BUILDING.

4. TAKE NECESSARY PRECAUTIONS TO PREVENT DUST AND DIRT FROM RISING BY WETTING DEMOLISHED DEBRIS. EXCESSIVE USE OF WATER WILL NOT BE PERMITTED.

5. PRIOR TO DEMOLITION, CONTRACTOR SHALL REVIEW WITH OWNER ALL MATERIALS TO BE REMOVED, SHOULD THE OWNER WANT TO KEEP ANY MATERIALS THE CONTRACTOR SHALL REMOVE AND DELIVER THE PARTS TO THE OWNER ON THE SITE WHERE SO DIRECTED. OTHERWISE ALL DEMOLISHED OR REMOVED MATERIALS SHALL BECOME THE PROPERTY OF THE CONTRACTOR AND SHALL BE REMOVED FROM THE SITE AND BE DISPOSED OF IN A LEGAL MANNER.

6. DEMOLITION SHALL INCLUDE REMOVAL OF ALL PARTS AND PIECES IN THEIR ENTIRETY BACK TO POINTS INDICATED OR IF NOT INDICATED BACK TO THEIR POINT OF SOURCE.

7. WHERE CONDITIONS PROHIBIT TOTAL REMOVAL OF THE WORK, THE REMAINING PORTION SHALL BE CUT FLUSH WITH THE SURROUNDING SURFACE AND BE CAPPED, PLUGGED OR SEALED AND THE SURROUNDING SURFACE SHALL BE REFINISHED IN AN APPROVED MANNER.

9. DO NOT REMOVE EXISTING STRUCTURAL WORK. DO NOT REMOVE OPERATIONAL ELEMENTS AND SAFETY-RELATED COMPONENTS IN A MANNER RESULTING IN A REDUCTION OF CAPACITIES TO PERFORM IN THE MANNER INTENDED OR RESULTING IN DECREASED OPERATIONAL LIFE, INCREASED MAINTENANCE, OR DECREASED SAFETY.

10. REMOVALS, DISCONNECTIONS, AND RELOCATIONS SHALL BE PERFORMED BY WORKMEN SKILLED IN THE TRADE INVOLVED AND SHALL BE EMPLOYED BY A CONTRACTOR LICENSED IN THE TRADE INVOLVED. ALL WORK SHALL BE DONE IN ACCORDANCE WITH ACCEPTED TRADE PRACTICES.

11. PROVIDE ADEQUATE TEMPORARY SUPPORT FOR WORK TO REMAIN, TO PREVENT FAILURE. DO NOT ENDANGER OTHER WORK.

12. PROTECTION: PROVIDE ADEQUATE PROTECTION WHERE REQUIRED FOR THE PRESENT BUILDING AND ITS CONTENTS. TEMPORARY DUSTPROOF BARRIERS AND BARRICADES SHALL BE ERECTED WHERE REQUIRED FOR PROTECTION OF PERSONNEL, PROTECTION FROM DUST AND DIRT, FOR SECURITY, FIRE AND WEATHER PROTECTIVE REASONS.

13. CONTRACTOR SHALL TAKE EVERY PRECAUTION AGAINST FIRE BY EMPLOYING FIRE DEPARTMENT TYPE HOSES AND PORTABLE FIRE EXTINGUISHERS AS REQUIRED BY OSHA AND/OR THE OWNER'S INSURANCE UNDERWRITER.

14. BEFORE STARTING DEMOLITION OPERATIONS, PROVIDE THE NECESSARY PROTECTIVE DEVICES, WHERE REQUIRED, AND IN STRICT ACCORDANCE WITH OSHA RULES AND REGULATIONS.

14. USE TEMPORARY ENCLOSURES, OR OTHER SUITABLE METHODS TO LIMIT DUST AND DIRT RISING AND SCATTERING TO LOWEST PRACTICAL LEVEL. COMPLY WITH GOVERNING REGULATIONS PERTAINING TO ENVIRONMENTAL PROTECTION.

15. FIELD VERIFY DEMOLITION REQUIREMENTS AND EXISTING CONDITIONS. DEMOLITION NOTES ARE INDICATED IN NOTE FORM.

16. CONTRACTOR SHALL ESTABLISH A PATH OF TRAVEL AND TIME SCHEDULE FOR THE REMOVAL OF ALL DEBRIS AND WASTE, AND HAVE THIS APPROVED BY OWNER. CONTRACTOR IS TO ENSURE THAT ALL CORRIDORS AND PUBLIC AREAS BE KEPT FREE OF OBSTRUCTIONS, DEBRIS, AND ARE TO BE BROOM SWEPT CLEAN AT ALL TIMES.

17. CONTRACTOR SHALL VISIT THE SITE AND BECOME INFORMED AS TO THE CONDITION OF THE PREMISES AND THE EXTENT AND CHARACTER OF WORK REQUIRED. NO ADDITIONAL COMPENSATION WILL BE APPROVED DUE TO FIELD CONDITIONS.

# NYSECC ENERGY COMPLIANCE STATEMENT:

PER SECTION C101.7 OF THE 2020 NYSECC HISTORIC BUILDINGS ARE EXEMPT FROM THE REQUIREMENTS OF THE ENERGY CODE.

# HVAC SYMBOL LIST

| IDENTIFIER | DESCRIPTION |
|---|---|
| | NEW DUCTWORK OR PIPING |
| | EXISTING DUCTWORK OR PIPING TO BE REMOVED |
| | EXISTING DUCTWORK OR PIPING TO REMAIN |
| 24X12 / 24X12 | DOUBLE-LINE AND SINGLE-LINE RECTANGULAR DUCT, FIRST NUMBER INDICATES SIDE IN VIEW IN INCHES, SECOND NUMBER INDICATES SIDE IN DEPTH IN INCHES |
| | FLEXIBLE DUCTWORK |
| | REGULAR SUPPLY AIR DUCT (UP AND DOWN) |
| | REGULAR RETURN AIR DUCT (UP AND DOWN) |
| | REGULAR EXHAUST AIR DUCT (UP AND DOWN) |
| | REGULAR OUTSIDE AIR DUCT (UP AND DOWN) |
| VD | VOLUME DAMPER |
| BD | BACKDRAFT DAMPER |
| S | MOTOR OPERATED DAMPER |
| XXX / XX | EQUIPMENT TAG EQUIPMENT NUMBER |
| XXX / X-XXX | DETAIL TAG/CALL OUT TAG MECHANICAL SHEET NUMBER |
| T | THERMOSTAT |
| | EXHAUST GRILLE |
| F# | REFER TO SUPPLEMENTAL FIGURE INDICATED BY NUMBER (I.E. F2 REFERS TO FIGURE 2) |

# HVAC ABBREVIATIONS

| IDENTIFIER | DESCRIPTION |
|---|---|
| AC | DIRECT EXPANSION AIR CONDITION UNIT |
| CFM | CUBIC FEET PER MINUTE |
| COND | CONDENSATE |
| CU | CONDENSING UNIT |
| CUH | CABINET UNIT HEATER |
| DB | DRY BULB |
| DN | DOWN |
| EA | EXHAUST AIR |
| EF | EXHAUST FAN |
| EG | EXHAUST GRILLE |
| EUH | ELECTRIC UNIT HEATER |
| EER | ENERGY EFFICIENCY RATIO |
| EG | EXHAUST GRILLE |
| FAI | FRESH AIR INTAKE |
| GC | GENERAL CONTRACTOR |
| MBH | THOUSAND BTU PER HOUR |
| PC | PLUMBING CONTRACTOR |
| RG | RETURN GRILLE |
| RTU | ROOFTOP UNIT |
| SA | SUPPLY AIR |
| SD | SUPPLY DIFFUSER |
| TYP. | TYPICAL |
| VIF | VERIFY IN FIELD |

# SCOPE OF WORK

DEMOLITION

1. REMOVE ONE (1) EXISTING THRU WALL AC UNIT AS INDICATED.
2. REMOVE ONE (1) EXISTING WALL MOUNTED PROPELLER FAN AS INDICATED.
3. REMOVE ONE (1) EXISTING ELECTRIC UNIT HEATERS AND ASSOCIATED SUPPORTS, WIRING AND ACCESSORIES.

CONSTRUCTION

1. PROVIDE ONE (1) NEW WALL MOUNTED ELECTRIC UNIT HEATERS AS INDICATED.

# MECHANICAL DRAWING LIST

| SHEET NO. | SHEET NAME | REVISON NO. | REVISION DATE |
|---|---|---|---|
| CXD-M-01 | MECHANICAL NOTES, SYMBOLS, & LEGENDS | 0 | - |
| CXD-M-11 | MECHANICAL 1ST FLOOR DEMOLITION PLAN | 0 | - |
| CXD-M-21 | MECHANICAL 1ST FLOOR CONSTRUCTION PLAN | 0 | - |
| CXD-M-61 | MECHANICAL SCHEDULES, DETAILS AND CONTROLS | 0 | - |

# TABLE 1: ENERGY CODE ANALYSIS TABLE FOR MECHANICAL SYSTEMS

(PER 2020 NYS ENERGY CODE)

| ITEM DESCRIPTION | | | PROPOSED VALUE | MINIMUM EFFECIENCY | CODE PRECRIBED VALUE AND CITATION | CITATION | SUPPORTING DOCUMENTATION |
|---|---|---|---|---|---|---|---|
| | UNIT TAG | EQUIPMENT TYPE | | | | | |
| HVAC SYSTEM CONTROLS | ALL HEATING COOLING EQUIPMENT | THERMOSTATIC CONTROLS | DIGITAL THERMOSTATS | - | THERMOSTATIC CONTROLS FOR HVAC SYSTEM | C403.2.6 | MECHANICAL SCHEDULES AND PLANS |

# TABLE 2: ENERGY CODE COMPLIANCE INSPECTIONS FOR MECHANICAL SYSTEMS

(IIB - MECHANICAL AND SERVICE WATER HEATING INSPECTIONS)

| | INSPECTION TEST | FREQUENCY | REFERENCE STANDARDS | INSPECTION DESCRIPTION | ECC CITATION |
|---|---|---|---|---|---|
| IIB3 | HVAC AND SERVICE WATER HEATING EQUIPMENT | PRIOR TO FINAL MECHANICAL AND CONSTRUCTION INSPECTION | APPROVED CONSTRUCTION DOCUMENTS | EQUIPMENT SIZING, EFFICIENCIES AND OTHER PERFORMANCE FACTORS OF ALL MAJOR EQUIPMENT UNITS, AS DETERMINED BY THE APPLICANT OF RECORD, AND NO LESS THAN 15% OF MINOR EQUIPMENT UNITS, SHALL BE VERIFIED BY VISUAL INSPECTION AND, WHERE NECESSARY, REVIEW OF MANUFACTURER'S DATA. POOL HEATERS AND COVERS SHALL BE VERIFIED BY VISUAL INSPECTION | NYSECC C403.2, C404.2, C404.7, C406.2 |
| IIB4 | HVAC AND SERVICE WATER HEATING SYSTEM CONTROLS | AFTER INSTALLATION AND PRIOR TO FINAL ELECTRICAL AND CONSTRUCTION INSPECTION, EXCEPT THAT FOR CONTROLS WITH SEASONALLY DEPENDENT FUNCTIONALITY, SUCH TESTING SHALL BE PERFORMED BEFORE SIGN-OFF FOR ISSUANCE OF A FINAL CERTIFICATE OF OCCUPANCY | APPROVED CONSTRUCTION DOCUMENTS INCLUDING CONTROL SYSTEM NARRATIVES | NO LESS THAN 20% OF EACH TYPE OF REQUIRED CONTROLS AND ECONOMIZERS SHALL BE VERIFIED BY VISUAL INSPECTION AND TESTED FOR FUNCTIONALITY AND PROPER OPERATION. SUCH CONTROLS SHALL INCLUDE, BUT ARE NOT LIMITED TO, THERMOSTATIC AND ECONOMIZER CONTROLS | NYSECC C403.2.4, C403.2.5.1, C403.2.11, C403.3, C403.4, C404.3, C404.6, C404.7 |

CONSULTANT INFORMATION

LiRo Engineers, Inc.
A LiRo Group Company
Syosset, N.Y. 516-214-8157[T]

CONSULTANT SEAL

STATE OF NEW YORK · FRANK F. ULISSE · No. 090111-1 · LICENSED PROFESSIONAL ENGINEER

| REVISION NUMBER | DATE | MADE BY | APP'D BY | REVISION |
|---|---|---|---|---|
| | | | | |

RECORD DRAWING CERTIFICATION

☐ AS BUILT – CHANGES AS NOTED ☐ AS BUILT – NO CHANGES

CONTRACTOR
NAME
SIGNATURE
TITLE DATE

PROJECT COORDINATOR
NAME
SIGNATURE
TITLE DATE

WESTCHESTER COUNTY, NEW YORK
DEPARTMENT OF PUBLIC WORKS AND TRANSPORTATION
DIVISION OF ENGINEERING

INFRASTRUCTURE REHABILITATION - PHASE 3
PLAYLAND PARK, RYE, NEW YORK
CROSS AXIS BUILDING D
MECHANICAL NOTES, SYMBOLS AND LEGENDS

| | |
|---|---|
| CONTRACT NUMBER | 22-523 |
| SHEET NUMBER | CXD-M-01 |
| DWG NO.: | 227 of 664 |
| SCALE: | AS INDICATED |
| DATE: | 08/23/2022 |
| DPW FILE NUMBER | 1-118-M-976-0 |
| REV. NO. | 0 |

## GENERAL NOTES:

1. RETURN REMOVED EXISTING EQUIPMENT TO OWNER IF IT IS IN WORKING CONDITION.
2. CONTRACTOR TO COORDINATE WITH FACILITY WHEN WORKING AROUND OR ABOVE THE RIDE COMPONENTS, AND PROVIDE ALL NECESSARY MEASURES TO PROTECT THESE COMPONENTS PER THE REQUIREMENTS OF THE FACILITY.

## MECHANICAL DEMOLITION NOTES:

1. DEMOLISH EXISTING ELECTRIC UNIT HEATERS AND ASSOCIATED SUPPORTS, WIRING AND ACCESSORIES. COORDINATE REMOVAL OF ELECTRICAL POWER AND WIRING WITH ELECTRICAL CONTRACTOR.
2. DEMOLISH EXISTING WALL MOUNTED PROPELLER FAN. COORDINATE REMOVAL OF ELECTRICAL POWER AND WIRING WITH ELECTRICAL CONTRACTOR.COORDINATE WITH GC TO SEAL EXISTING WALL PENETRATION.
3. REMOVE EXISTING THRU WALL AC UNIT. IF NO LONGER IN WORKING CONDITION, DISPOSAL SHALL BE IN ACCORDANCE WITH EPA REQUIREMENTS. COORDINATE WITH GC TO SEAL EXISTING WALL PENETRATION.

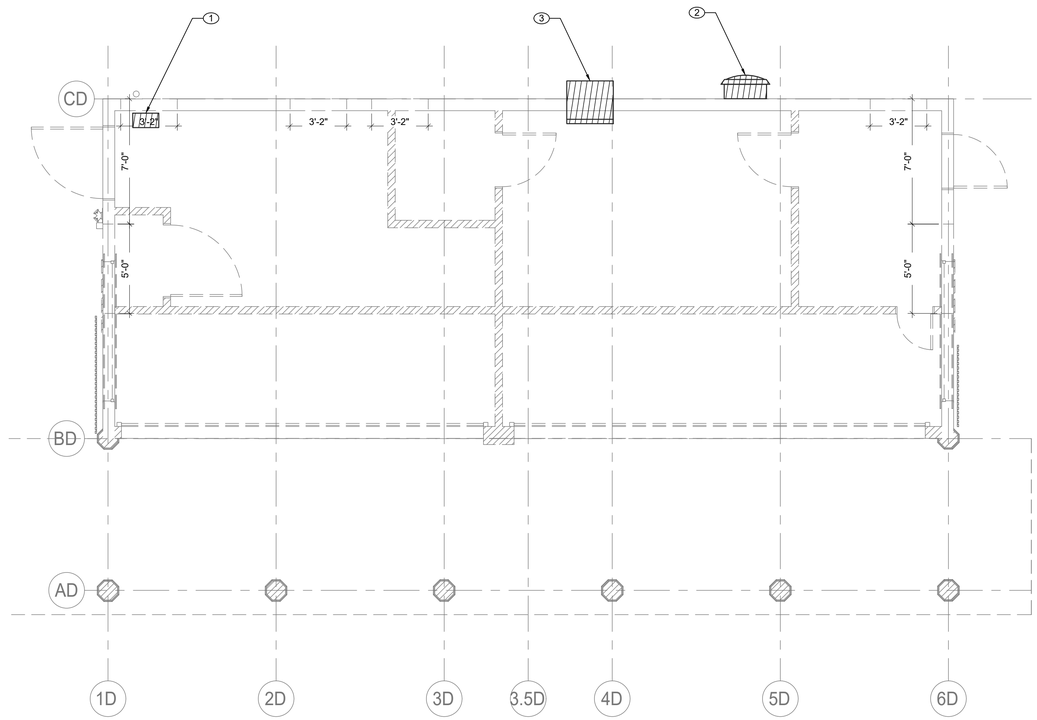


## MECHANICAL FIRST FLOOR DEMOLITION PLAN

SCALE: 1/4" = 1'-0

N

CONSULTANT INFORMATION

LiRo Engineers, Inc.
A LiRo Group Company
Syosset, N.Y. 516-214-8157[T]

CONSULTANT SEAL

STATE OF NEW YORK · FRANK F. ULISSE · No. 090111-1 · LICENSED PROFESSIONAL ENGINEER

| REVISION NUMBER | DATE | MADE BY | APP'D BY | REVISION |
|---|---|---|---|---|

RECORD DRAWING CERTIFICATION

☐ AS BUILT – CHANGES AS NOTED ☐ AS BUILT – NO CHANGES

CONTRACTOR
NAME
SIGNATURE
TITLE DATE

PROJECT COORDINATOR
NAME
SIGNATURE
TITLE DATE

WESTCHESTER COUNTY, NEW YORK
DEPARTMENT OF PUBLIC WORKS AND TRANSPORTATION
DIVISION OF ENGINEERING

INFRASTRUCTURE REHABILITATION - PHASE 3
PLAYLAND PARK, RYE, NEW YORK
CROSS AXIS BUILDING D
MECHANICAL FIRST FLOOR DEMOLITION

CONTRACT NUMBER 22-523
SHEET NUMBER CXD-M-11
DWG NO.: 228 of 664
SCALE: AS INDICATED
DATE: 08/23/2022
DPW FILE NUMBER 1-118-M-977-0
REV. NO. 0

## GENERAL NOTES:

1. CONTRACTOR TO COORDINATE WITH FACILITY WHEN WORKING AROUND OR ABOVE THE RIDE COMPONENTS, AND PROVIDE ALL NECESSARY MEASURES TO PROTECT THESE COMPONENTS PER THE REQUIREMENTS OF THE FACILITY.
2. UPON COMPLETION, SYSTEM SHALL BE TESTED FOR PROPER OPERATION.

## MECHANICAL CONSTRUCTION NOTES:

(1) PROVIDE NEW ELECTRIC WALL MOUNTED UNIT HEATER. COORDINATE INSTALL HEIGHT IN FIELD.

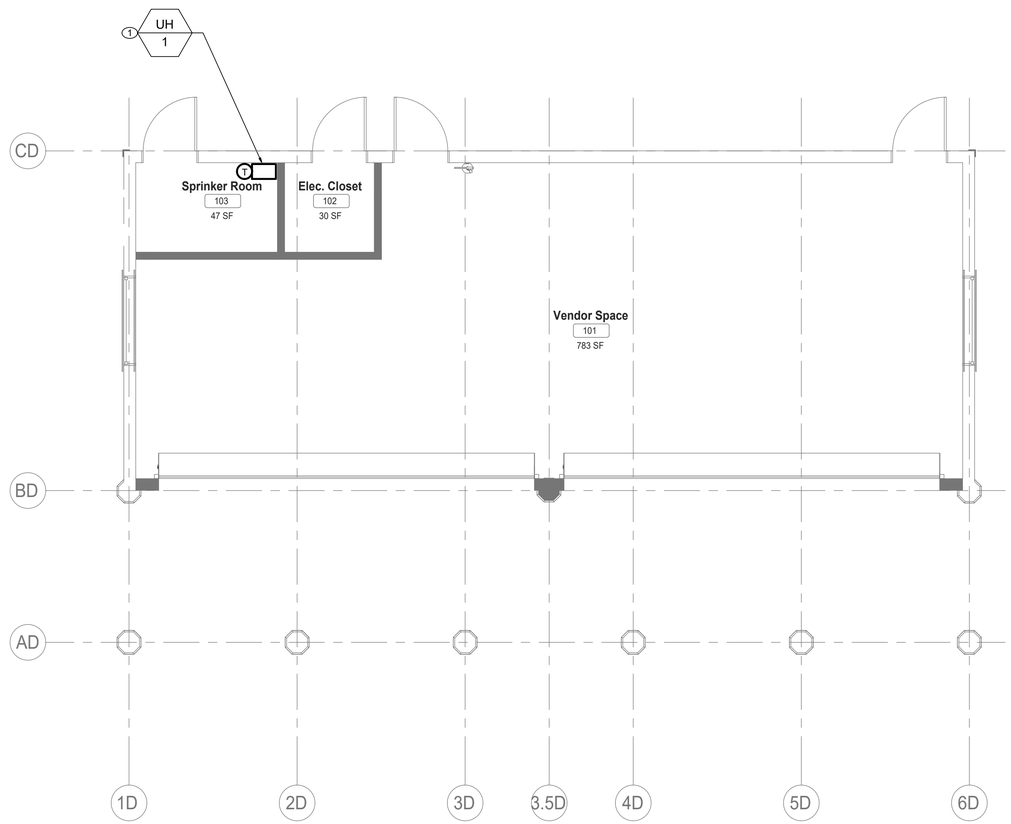


## MECHANICAL FIRST FLOOR CONSTRUCTION PLAN

SCALE: 1/4" = 1'-0

N

| CONSULTANT INFORMATION | CONSULTANT SEAL | REVISION NUMBER | DATE | MADE BY | APP'D BY | REVISION |
|---|---|---|---|---|---|---|
| LiRo Engineers, Inc. *A LiRo Group Company* Syosset, N.Y. 516-214-8157[T] | STATE OF NEW YORK FRANK F. ULLISSE No. 090111-1 LICENSED PROFESSIONAL ENGINEER | | | | | |

RECORD DRAWING CERTIFICATION

☐ AS BUILT – CHANGES AS NOTED ☐ AS BUILT – NO CHANGES

CONTRACTOR: NAME ____ SIGNATURE ____ TITLE ____ DATE ____

PROJECT COORDINATOR: NAME ____ SIGNATURE ____ TITLE ____ DATE ____

WESTCHESTER COUNTY, NEW YORK
DEPARTMENT OF PUBLIC WORKS AND TRANSPORTATION
DIVISION OF ENGINEERING

**INFRASTRUCTURE REHABILITATION - PHASE 3**
**PLAYLAND PARK, RYE, NEW YORK**
**CROSS AXIS BUILDING D**
**MECHANICAL FIRST FLOOR CONSTRUCTION PLAN**

| | |
|---|---|
| CONTRACT NUMBER | 22-523 |
| SHEET NUMBER | CXD-M-21 |
| DWG NO.: | 229 of 664 |
| SCALE: | AS INDICATED |
| DATE: | 08/23/2022 |
| DPW FILE NUMBER | 1-118-M-978-0 |
| REV. NO. | 0 |

## ELECTRIC UNIT HEATER SCHEDULE

| TAG | MANUFACTURER | MODEL | SERVICE | TYPE | KW | AMPS | V-PH-HZ |
|---|---|---|---|---|---|---|---|
| UH-1 | TRANE | UHEC-031A0C0 | 103 SPRINKLER ROOM | WALL HUNG | 3.3 | 15.9 | 208-1-60 |

NOTES:

1. PROVIDE UNIT MOUNTED 2-STAGE THERMOSTAT, REFER TO CONTROLS

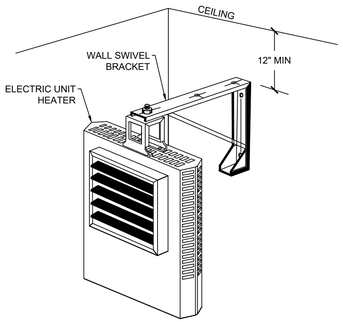


1 M-61 **MECHANICAL WALL MOUNTED ELECTRIC UNIT HEATER DETAIL**
SCALE: NOT TO SCALE

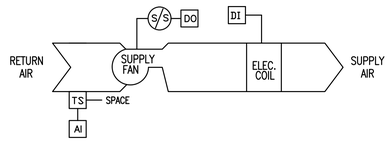


UNIT HEATER - ELECTRIC - SEQUENCE OF OPERATIONS:

1. ON DROP IN SPACE TEMPERATURE BELOW OCCUPIED HEATING SETPOINT, CYCLE THE FAN ON AND MODULATE (2 STAGE) ELECTRIC COIL TO MAINTAIN SPACE OCCUPIED SETPOINT, FAN SHALL HAVE DELAYED SHUT OFF AFTER VALVE CLOSES. USE 5 DEG. F (ADJUSTABLE) DEADBAND TO MINIMIZE SHORT CYCLING.

2 M-61 **UNIT HEATER - ELECTRIC**
SCALE: NOT TO SCALE

CONSULTANT INFORMATION

LiRo Engineers, Inc.
*A LiRo Group Company*
Syosset, N.Y. 516-214-8157[T]

CONSULTANT SEAL

STATE OF NEW YORK · FRANK F. ULLOSE · No. 090111-1 · LICENSED PROFESSIONAL ENGINEER

| REVISION NUMBER | DATE | MADE BY | APP'D BY | REVISION |
|---|---|---|---|---|
| | | | | |

RECORD DRAWING CERTIFICATION

☐ AS BUILT – CHANGES AS NOTED ☐ AS BUILT – NO CHANGES

CONTRACTOR
NAME
SIGNATURE
TITLE DATE

PROJECT COORDINATOR
NAME
SIGNATURE
TITLE DATE

WESTCHESTER COUNTY, NEW YORK
DEPARTMENT OF PUBLIC WORKS AND TRANSPORTATION
DIVISION OF ENGINEERING

**INFRASTRUCTURE REHABILITATION - PHASE 3**
**PLAYLAND PARK, RYE, NEW YORK**
**CROSS AXIS BUILDING D**
**MECHANICAL SCHEDULE, DETAILS AND CONTROLS**

CONTRACT NUMBER 22-523
SHEET NUMBER **CXD-M-61**
DWG NO.: 230 of 664
SCALE: **AS INDICATED**
DATE: 08/23/2022
DPW FILE NUMBER **1-118-M-979-0**
REV. NO. 0

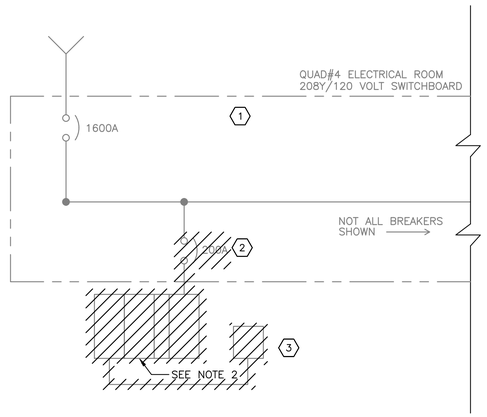


NOTES:

1. FOR ADDITIONAL NOTES, ABBREVIATIONS, AND SYMBOLS, SEE DRAWING GE–E–01.
2. THERE IS AN ARRAY OF POOR CONDITION POWER PANELS LOCATED IN THE REAR OF BUILDING CXE. THESE PANELS POWER BOTH CXD AND CXE BUILDINGS. CONTRACTOR SHALL DISCONNECT AND REMOVE THE PANEL ARRAY IN ITS ENTIRETY. SEE DWG. CXE–E–01 FOR ADDITIONAL INFORMATION.

KEY NOTES:

1. EXISTING 208Y/120 VOLT DISTRIBUTION BOARD LOCATED IN QUAD #4 ELECTRICAL ROOM.
2. CONTRACTOR SHALL DISCONNECT AND REMOVE EXISTING 200A CIRCUIT BREAKER. KEEP CIRCUIT BREAKER FOR FUTURE USE.
3. DISCONNECT AND REMOVE EXISTING BUILDING MOUNTED OFFICE PANEL NO. 1.

## ONE LINE DIAGRAM – DEMOLITION

N.T.S.

PANELBOARD: EXISTING OFFICE PANEL 1 — LOCATION: CXD–REAR OFFICE ELECTRICAL CABINET
NEMA RATING: 1 — POLES: 3
MOUNTING: SURFACE
XXX AMP BUS RATING — XXX AMP MAIN BREAKER — 42 KA SHORT CIRCUIT RATING
208Y/120 VOLTS — 3 PHASE — 4 WIRE — ELECTRONIC GRADE: NO

| CIRCUIT NO | DESCRIPTION | LOAD KVA PHASE A | LOAD KVA PHASE B | LOAD KVA PHASE C | BREAKER AMPS POLES | NOTE | CIRCUIT NO | DESCRIPTION | LOAD KVA PHASE A | LOAD KVA PHASE B | LOAD KVA PHASE C | BREAKER AMPS POLES | NOTE |
|---|---|---|---|---|---|---|---|---|---|---|---|---|---|
| 1 | TRAILER | | | | | | 2 | AIR CONDITIONING UNIT (230V) - LEAVE | | | | 20/2 | |
| 3 | | | | | | | 4 | ON | | | | | |
| 5 | MWWD - WATER GAME LIGHTS & | | | | 20/1 | | 6 | ICAN | | | | | |
| 7 | SPRINKLER BMOUCHECKS - LEAVE ON | | | | | | 8 | BILLIGHTS | | | | | |
| 9 | CLOSET | | | | 20/1 | | 10 | OFFICE LIGHTS | | | | 20/1 | |
| 11 | CHR PUMP OUTSIDE FRONT | | | | 20/1 | | 12 | WR POWER | | | | 20/1 | |
| 13 | RADIOLOX - LEAVE ON | | | | | | 14 | SPRINKLER - LEAVE ON | | | | 20/1 | |
| 15 | AIR PUMP | | | | | | 16 | MWWD DOOR | | | | 20/1 | |
| 17 | BLANK | | | | | | 18 | COMPUTER | | | | | |
| | TOTAL PHASE KVA THIS SIDE | 0 | 0 | 0 | | | | TOTAL PHASE KVA THIS SIDE | 0 | 0 | 0 | | |
| | | | | | | | | TOTAL KVA PER PHASE | 0 | 0 | 0 | | |
| | | | | | | | | TOTAL THREE PHASE KVA | | 0 | | | |

NOTES:
1.
2.
3.
4.

NOTES CONT:
5.
6.
7.
8.

Drawing Name: G:\SavinAutocad\2060\25–Playland–Mega–3\E\CXDE–1001.dwg
Reref: Projectname: 211001F02 Comments: ----
Printed by: MGodby Date: 29 August 2022 7:52 AM Designed by: ----
Xrefs: [TB_24X36_WestchesterCo_3.dwg] [TSC–SVL060.dwg] [BCR–A–04.dwg] [BCRE–101.dwg]

CONSULTANT INFORMATION: Savin Engineers, P.C.

CONSULTANT SEAL: STATE OF NEW YORK — STEVEN A. MARINO — 083631 — LICENSED PROFESSIONAL ENGINEER

| REVISION NUMBER | DATE | MADE BY | APP'D BY | REVISION |
|---|---|---|---|---|

RECORD DRAWING CERTIFICATION: ☐ AS BUILT – CHANGES AS NOTED ☐ AS BUILT – NO CHANGES

CONTRACTOR: NAME / SIGNATURE / TITLE / DATE

PROJECT COORDINATOR: NAME / SIGNATURE / TITLE / DATE

WESTCHESTER COUNTY, NEW YORK
DEPARTMENT OF PUBLIC WORKS AND TRANSPORTATION
DIVISION OF ENGINEERING

**INFRASTRUCTURE REHABILITATION - PHASE 3**
**PLAYLAND PARK, RYE, NEW YORK**
**CROSS AXIS BUILDING D**
**ONE LINE DIAGRAM - DEMOLITION**

| | |
|---|---|
| CONTRACT NUMBER | 22-523 |
| SHEET NUMBER | CXD-E-01 |
| DWG NO.: | |
| SCALE: | AS SHOWN |
| DATE: | 8/23/2022 |
| DPW FILE NUMBER | 1-118-E-980-0 |
| REV. NO. | 0 |

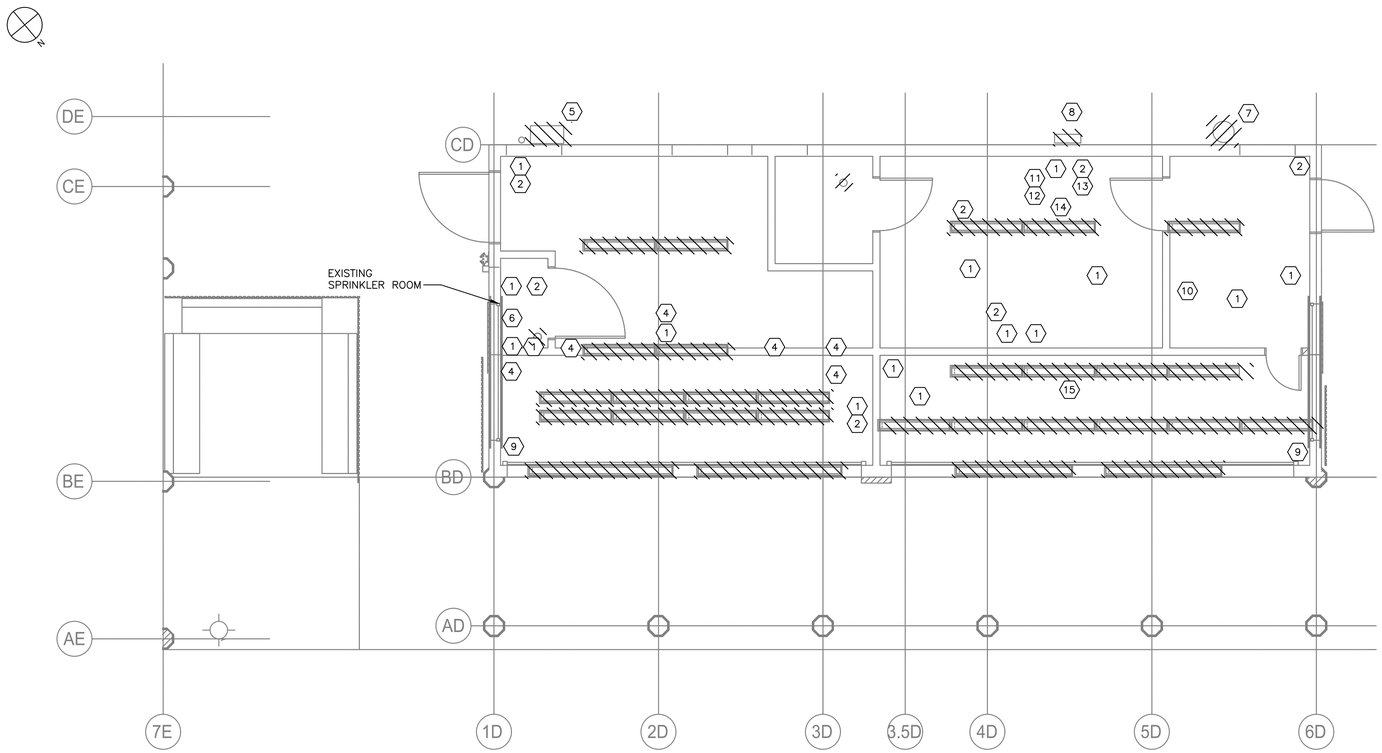


B GROUND FLOOR DEMOLITION PLAN (CXD)
1/4" = 1'-0"

NOTES:

1. FOR ADDITIONAL NOTES, ABBREVIATIONS, AND SYMBOLS, SEE DRAWING GE-E-01.
2. ALL REMOVED EQUIPMENT SHALL BE RETURNED TO OWNER UPON REQUEST. OTHERWISE ALL REMOVED MATERIAL SHALL BE LEGALLY DISPOSED OF.
3. DISCONNECT AND REMOVE ALL ELECTRICAL EQUIPMENT, LIGHTING, POWER, CONDUIT AND WIRE BACK TO SOURCE. REMOVE ALL PANELBOARDS. COMPLETE ELECTRICAL GUT UNLESS NOTED OTHERWISE.
4. ALL EXISTING CABLE AND CONDUIT SHALL BE DOCUMENTED PRIOR TO REMOVAL.
5. DISCONNECT AND REMOVE ALL EXTERIOR LIGHTING, ALL EXPOSED CONDUIT, JUNCTION BOXES, WIRE ETC.
6. CONTRACTOR SHALL DEMOLISH ALL EXISTING JUNCTION BOXES AND ALL ASSOCIATED CONDUITS, WIRES AND APPURTENANCES. FOR BIDDING PURPOSES ASSUME 500 FEET 1"C, 3#12 & 1#12 GND.
7. DISPOSITION OF EXISTING CCTV/DATA/COMMUNICATIONS CABINET SHALL BE BY OTHERS. THIS INCLUDES BOTH INCOMING AND OUTGOING CONDUIT AND CABLES.
8. FOR PANEL SCHEDULE DEMOLITION, SEE DRAWING CXD-E-01.
9. EXISTING, UNUSED EMPLOYEE PUNCH TIME CLOCK. CONTRACTOR SHALL DISCONNECT AND REMOVE PUNCH BOX. RETURN PUNCH CLOCK TO OWNER.
10. GAME SIGN WITH LIGHTS. CONTRACTOR SHALL DISCONNECT AND REMOVE LIGHTING FIXTURES AND ALL ASSOCIATED CONDUIT AND CABLE BACK TO SOURCE.
11. OLD, EXISTING ELECTRONIC GAME CONTROLS TO BE DISCONNECTED AND REMOVED. RETURN CONTROLLER TO OWNER.
12. SWITCH IS CONNECTED TO PANELBOARD "CR-AX3" LOCATED IN THE CXE BUILDING.

| DEMOLITION LEGEND ⬡ | |
|---|---|
| 1 | RECEPTACLE |
| 2 | LIGHT SWITCH |
| 3 | EXISTING PANEL |
| 4 | GAMES – CONTROL ELECTRONICS (SEE NOTE 11) |
| 5 | FLOODLIGHT |
| 6 | SPRINKLER ROOM UNIT HEATER (REMOVED BY OTHERS) – DISCONNECT POWER |
| 7 | EXHAUST FAN (REMOVED BY OTHERS) DISCONNECT POWER |
| 8 | AIR CONDITIONING UNIT (REMOVED BY OTHERS) – DISCONNECT POWER |
| 9 | ROLL-UP DOOR MOTOR |
| 10 | EXISTING EMPLOYEE PUNCH TIME CLOCK (SEE NOTE 9) |
| 11 | 18 CKT PANEL "OFFICE PANEL 1" |
| 12 | MAIN DISCONNECT SWITCH (SEE NOTE 12) |
| 13 | GENERAL DUTY DISCONNECT SWITCH |
| 14 | EXHAUST FAN DISCONNECT SWITCH |
| 15 | GAMES SIGN W/ LIGHTS (SEE NOTE 10) |

0 4' 8'
SCALE: 1/4" = 1'-0"

CONSULTANT INFORMATION
Savin Engineers, P.C.

CONSULTANT SEAL
STATE OF NEW YORK · STEVEN A. MARTINO · 083631 · LICENSED PROFESSIONAL ENGINEER

| REVISION NUMBER | DATE | MADE BY | APP'D BY | REVISION |
|---|---|---|---|---|

RECORD DRAWING CERTIFICATION
☐ AS BUILT – CHANGES AS NOTED ☐ AS BUILT – NO CHANGES

CONTRACTOR
NAME
SIGNATURE
TITLE DATE

PROJECT COORDINATOR
NAME
SIGNATURE
TITLE DATE

WESTCHESTER COUNTY, NEW YORK
DEPARTMENT OF PUBLIC WORKS AND TRANSPORTATION
DIVISION OF ENGINEERING

**INFRASTRUCTURE REHABILITATION - PHASE 3**
**PLAYLAND PARK, RYE, NEW YORK**
**CROSS AXIS BUILDING D**
**GROUND FLOOR DEMOLITION - POWER AND LIGHTING PLAN**

| | |
|---|---|
| CONTRACT NUMBER | 22-523 |
| SHEET NUMBER | CXD-E-02 |
| DWG NO.: | 232 of 664 |
| SCALE: | AS SHOWN |
| DATE: | 8/23/2022 |
| DPW FILE NUMBER | 1-118-E-981-0 |
| REV. NO. | 0 |

Drawing Name: G:\SavinAutocad\2060\25-Playland-Mega-3\E\CXEE-1003.dwg
Projectname: 211001F02 Comments: ----
Printed by: MGoaby Date: 29 August 2022 7:52 AM Designed by: ----
Reref: [TB_24X36_WestchesterCo_3.dwg] [TSG-SVL000.dwg] [CXD-A-01.dwg] [CXD-E-1001.dwg]
Xrefs:

NOTES:

1. FOR ADDITIONAL NOTES, ABBREVIATIONS AND SYMBOLS, SEE DRAWING GE–E–01.
2. CONTRACTOR TO SUPPLY NEW 150 AMP POWER NEW BUILDING CXD. MODIFY EXISTING 208Y/120V TO SWITCHBOARD TO ACCEPT 150 AMP CIRCUIT BREAKER. SEE DRAWING CXD–E–04 FOR ADDITIONAL INFORMATION.
3. FOR PANEL SCHEDULES, SEE DRAWING CXD–E–07.

KEY NOTES:

1. NEW UNDERGROUND DUCT BANK. BE ADVISED LARGE QUANTITY OF BURIED CONDUIT IN THIS AREA. EXTREME CARE SHALL BE TAKEN DURING EXCAVATION FOR NEW RUN.
2. IN QUAD #4 ELECTRICAL ROOM ROUTE ONE NEW 2 1/2" CONDIUT TO 208Y/120 VOLT SWITCHBOARD. ASSUME 20 FEET. STUB AND CAP SPARE 2" CONDUIT.

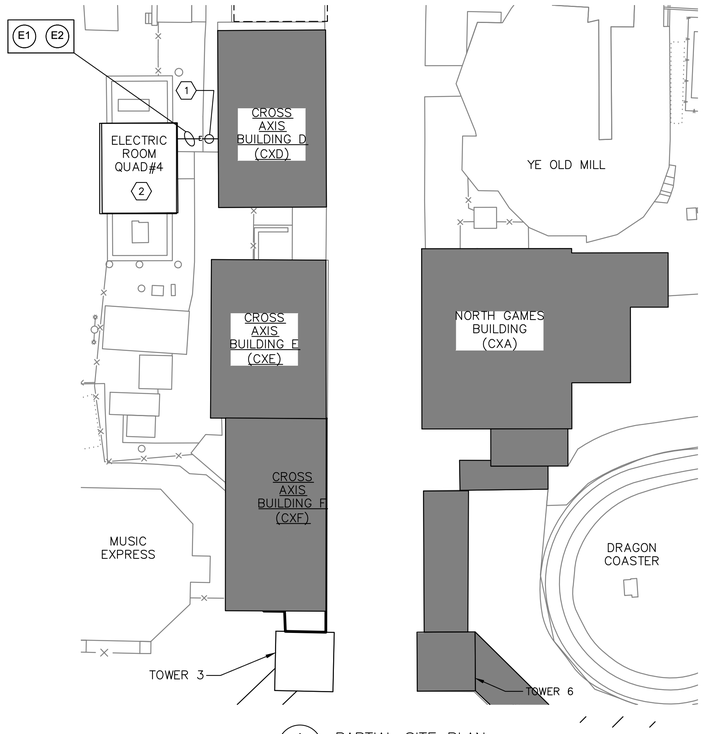


A CXD–E–03 PARTIAL SITE PLAN
SCALE: 1" = 20"

| DUCTBANK SCHEDULE | | | | | |
|---|---|---|---|---|---|
| NAME | FROM | TO | CONDUIT SIZE | CABLE | REMARKS |
| E1 | QUAD #4 208Y/120 VOLT SWITCHBOARD | CXD-PP-1 | 2 1/2"C | 4-#2/0 & 1 #6 GND | |
| E2 | QUAD #4 ELECTRICAL ROOM | CXD ELEC. ROOM | 2"C | W/ PULL ROPE | SPARE |

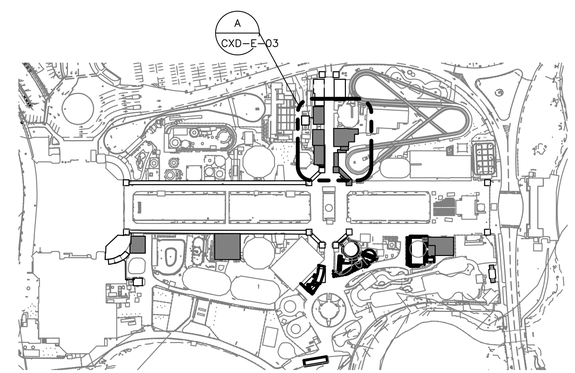


1 KEY PLAN
SCALE: 1" = 200'

0 20' 40'
SCALE: 1" = 20'–0"
0 200' 400'
SCALE: 1" = 200'–0"

Drawing Name: G:\SavinAutocad\2060\25-Playland-Mega-3\E\CXDE-1002.dwg
Projectname: ---- Comments: ----
Printed by: MGoaby Date: 29 August 2022 7:53 AM Designed by: ----
Reref:
Xrefs: [TB_24X36_WestchesterCo_3.dwg] [TSG-SVL000.dwg] [TWS-SP0001.dwg] [TWC-SP0001.dwg] [COL-A-01.dwg] [CXD-E-1002.dwg]

CONSULTANT INFORMATION
Savin Engineers, P.C.

CONSULTANT SEAL
STATE OF NEW YORK · STEVEN A. MARTINO · 083631 · LICENSED PROFESSIONAL ENGINEER

| REVISION NUMBER | DATE | MADE BY | APP'D BY | REVISION |
|---|---|---|---|---|

RECORD DRAWING CERTIFICATION
☐ AS BUILT – CHANGES AS NOTED ☐ AS BUILT – NO CHANGES

CONTRACTOR
NAME
SIGNATURE
TITLE DATE

PROJECT COORDINATOR
NAME
SIGNATURE
TITLE DATE

WESTCHESTER COUNTY, NEW YORK
DEPARTMENT OF PUBLIC WORKS AND TRANSPORTATION
DIVISION OF ENGINEERING

**INFRASTRUCTURE REHABILITATION - PHASE 3**
**PLAYLAND PARK, RYE, NEW YORK**
**CROSS AXIS BUILDING D**
**SITE DUCTBANK PLAN**

| | |
|---|---|
| CONTRACT NUMBER | 22-523 |
| SHEET NUMBER | CXD-E-03 |
| DWG NO.: | |
| SCALE: | AS SHOWN |
| DATE: | 8/23/2022 |
| DPW FILE NUMBER | 1-118-E-982-0 |
| REV. NO. | 0 |

NOTES:

1. FOR ADDITIONAL NOTES, ABBREVIATIONS AND SYMBOLS, SEE DRAWING GE–E–01.
2. FOR PANEL SCHEDULES, SEE DRAWING CXD–E–07.

KEY NOTES:

(1) INCOMING FEEDER.

(2) CONTRACTOR SHALL PROVIDE NEW 150 AMP CIRCUIT BREAKER. MODIFY PANEL AS NECESSARY. EXISTING SWITCHBOARD BREAKER SHALL MATCH EXISTING TYPE.

(3) PROVIDE NEW 208Y/120 VOLT PANELBOARD WITH 225 AMP MAINS AND 150 AMP MAIN CIRCUIT BREAKER.

(4) NEW RELAY LIGHTING PANEL CXD–RP FOR EXTERIOR LIGHTING CONTROL.

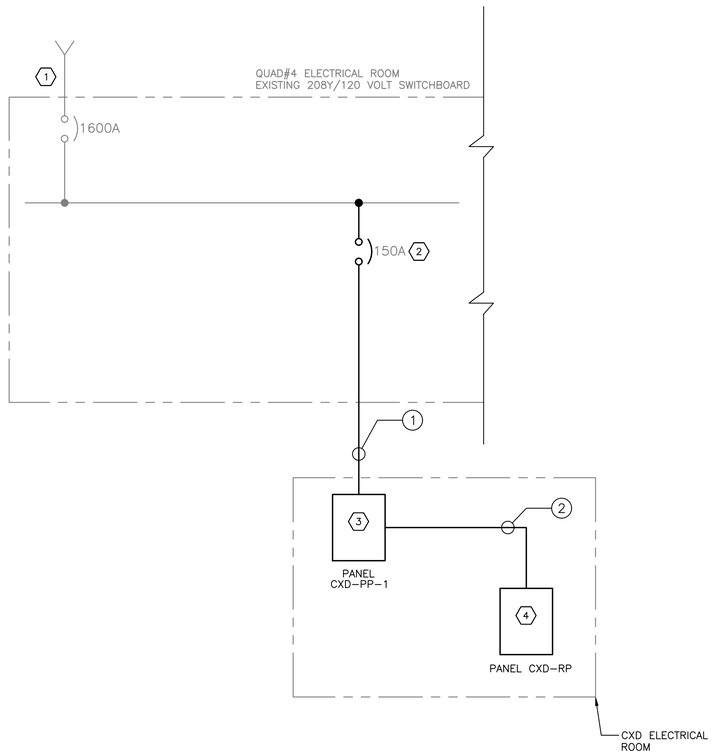


ONE LINE DIAGRAM
N.T.S.

| CONDUIT AND WIRE LEGEND | |
|---|---|
| NO. | DESCRIPTION |
| 1 | 2 1/2"C, 4#2/0 & 1#6 GND |
| 2 | 1"C, 8#12 & 1#12 GND |

Drawing Name: G:\SavinAutocad\2060\25–Playland–Mega–3\E\CXDE–1003.dwg
Projectname: 211001F02 Comments: ----
Printed by: MGadby Date: 29 August 2022 7:53 AM Designed by: ----
Xrefs: [TB_24X36_WestchesterCo_3.dwg] [TSG–SVLOGO.dwg] [BCR–A–04.dwg] [BCRE–101.dwg]

CONSULTANT INFORMATION

Savin Engineers, P.C.

CONSULTANT SEAL

STATE OF NEW YORK · STEVEN A. MARTINO · 083631 · LICENSED PROFESSIONAL ENGINEER

| REVISION NUMBER | DATE | MADE BY | APP'D BY | REVISION |
|---|---|---|---|---|
| | | | | |

RECORD DRAWING CERTIFICATION

☐ AS BUILT – CHANGES AS NOTED ☐ AS BUILT – NO CHANGES

CONTRACTOR
NAME
SIGNATURE
TITLE DATE

PROJECT COORDINATOR
NAME
SIGNATURE
TITLE DATE

WESTCHESTER COUNTY, NEW YORK
DEPARTMENT OF PUBLIC WORKS AND TRANSPORTATION
DIVISION OF ENGINEERING

**INFRASTRUCTURE REHABILITATION - PHASE 3**
**PLAYLAND PARK, RYE, NEW YORK**
**CROSS AXIS BUILDING D**
**ONE LINE DIAGRAM**

| | |
|---|---|
| CONTRACT NUMBER | 22-523 |
| SHEET NUMBER | CXD-E-04 |
| DWG NO.: | 224 of 664 |
| SCALE: | AS SHOWN |
| DATE: | 8/23/2022 |
| DPW FILE NUMBER | 1-118-E-983-0 |
| REV. NO. | 0 |

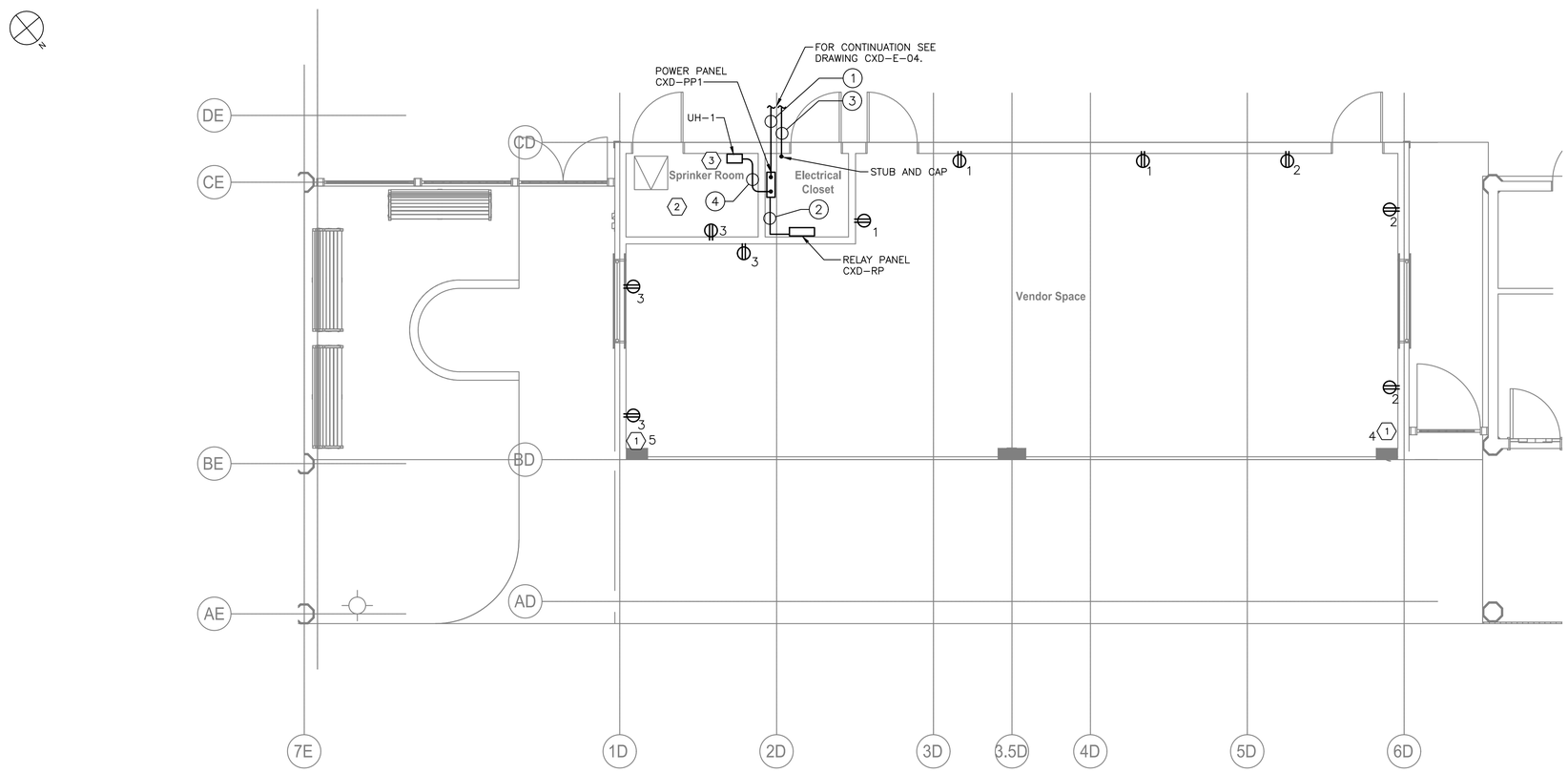


GROUND FLOOR POWER PLAN (CXD)
1/4" = 1'-0"

NOTES:

1. FOR ADDITIONAL NOTES, ABBREVIATIONS AND SYMBOLS, SEE DRAWING GE-E-01.
2. ALL RECEPTACLES DESIGNATORS ARE POWERED VIA PANEL CXD-PP-1, UNLESS OTHERWISE NOTED.
3. ALL CIRCUITS SHOWN ON THE DRAWING BUT NOT SPECIFICALLY CALLED OUT ON THE CABLE AND CONDUIT SCHEDULE SHALL BE 3/4" CONDUIT, 2#12 & 1#12 GND.
4. FOR PANEL SCHEDULES SEE DRAWING CXD-E-07.

KEY NOTES:

(1) APPROXIMATE LOCATION OF MOTOR FOR NEW GROUND ROLL-UP DOOR. CONTRACTOR SHALL CONFIRM MOTOR LOCATION IN THE FIELD PRIOR TO INSTALLATION. CONTRACTOR SHALL CIRCUIT MOTOR FROM PANEL CXD-PP-1. NUMBER DESIGNATORS INDICATE CIRCUIT NUMBERS. CONTRACTOR SHALL PROVIDE 30 AMP, 2-POLE DISCONNECT SWITCH AT ROLL-UP DOOR MOTOR LOCATION.

(2) CONTRACTOR SHALL PROVIDE 2 CIRCUITS FOR EQUIPMENT POWER IN SPRINKLER ROOM. CIRCUITS 6 AND 8 ARE RESERVED FOR THIS. COORDINATE WITH PLUMBING INSTALLER FOR ELECTRICAL POWER NEEDS.

(3) PROVIDE AND INSTALL A 2-POLE, 30A DISCONNECT SWITCH FOR UH-1.

CONDUIT AND WIRE LEGEND

| NO. | DESCRIPTION |
|---|---|
| 1 | 2 1/2"C, 4#2/0 & 1#6 GND |
| 2 | 1"C, 8#12 & 1#12 GND |
| 3 | 2"C, SPARE WITH PULL ROPE |
| 4 | 3/4"C, 2#12 & 1#12 GND |

0 4' 8'
SCALE: 1/4" = 1'-0"

Drawing Name: G:\SavinAutocad\2060\25-Playland-Mega-3\E\CXDE-1006.dwg
Projectname: 211001F02 Comments: ----
Printed by: MGodby Date: 31 August 2022 11:28 AM Designed by: ----
Xrefs: [TB_24X36_WestchesterCo_3.dwg] [TSG-SVL000.dwg] [CXD-E-1003.dwg] [CXD-A-11.dwg]

CONSULTANT INFORMATION
Savin Engineers, P.C.

CONSULTANT SEAL
STATE OF NEW YORK · STEVEN A. MARTINEZ · 083631 · LICENSED PROFESSIONAL ENGINEER

| REVISION NUMBER | DATE | MADE BY | APP'D BY | REVISION |
|---|---|---|---|---|

RECORD DRAWING CERTIFICATION
☐ AS BUILT - CHANGES AS NOTED ☐ AS BUILT - NO CHANGES

CONTRACTOR
NAME
SIGNATURE
TITLE DATE

PROJECT COORDINATOR
NAME
SIGNATURE
TITLE DATE

WESTCHESTER COUNTY, NEW YORK
DEPARTMENT OF PUBLIC WORKS AND TRANSPORTATION
DIVISION OF ENGINEERING

INFRASTRUCTURE REHABILITATION - PHASE 3
PLAYLAND PARK, RYE, NEW YORK
CROSS AXIS BUILDING D
GROUND FLOOR - POWER PLAN

| | |
|---|---|
| CONTRACT NUMBER | 22-523 |
| SHEET NUMBER | CXD-E-05 |
| DWG NO.: | |
| SCALE: | AS SHOWN |
| DATE: | 8/23/2022 |
| DPW FILE NUMBER | 1-118-E-984-0 |
| REV. NO. | 0 |

225 of 664

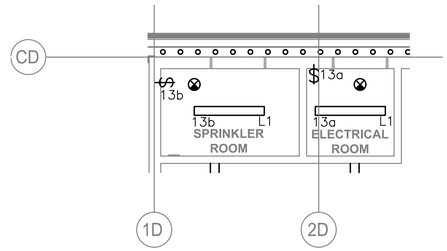


A / CXD-E-06 GROUND FLOOR UTILITIES LIGHTING PLAN (CXD)
SCALE: 1/4" = 1'-0"

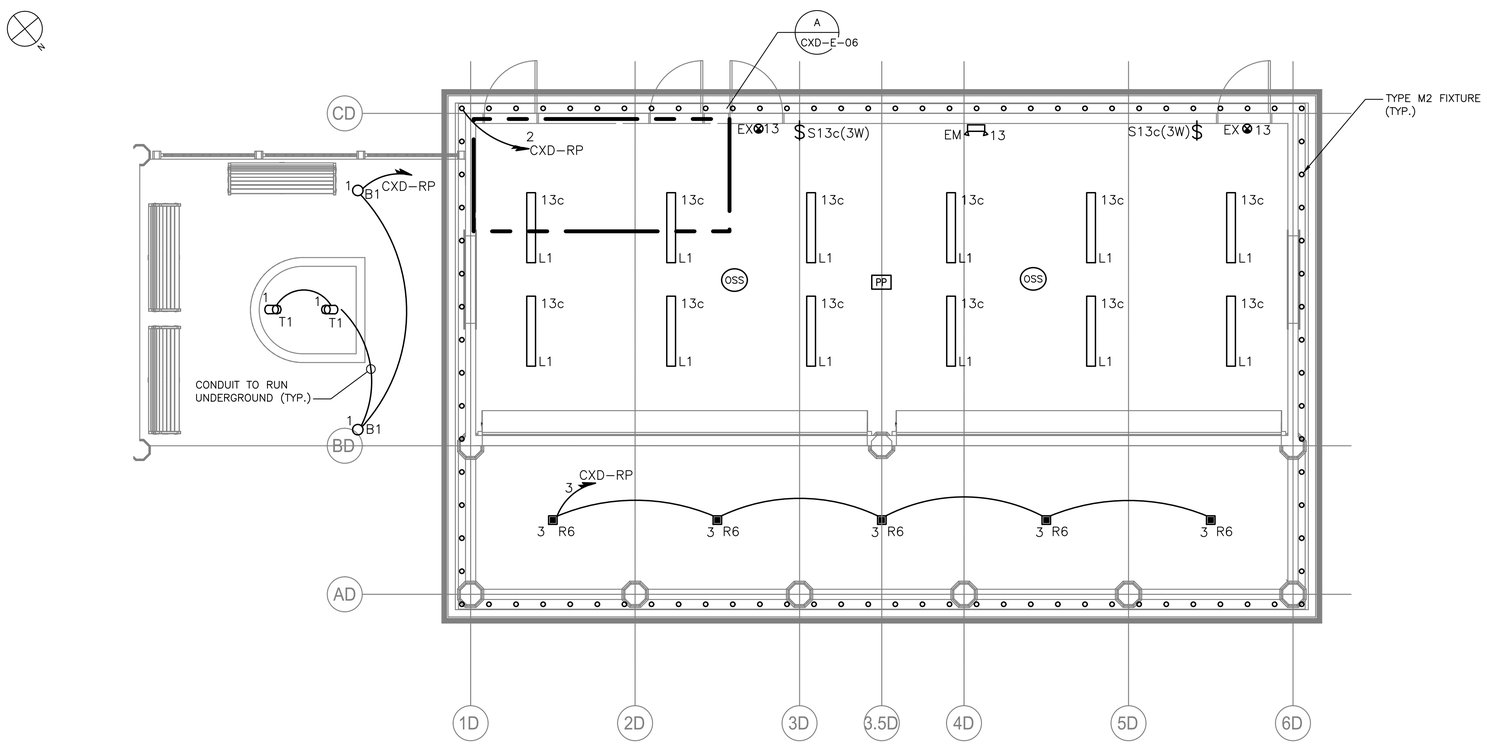


GROUND FLOOR LIGHTING PLAN (CXD)
SCALE: 1/4" = 1'-0"

NOTES:

1. FOR ADDITIONAL NOTES, ABBREVIATIONS AND SYMBOLS, SEE DRAWING GE-E-01.
2. ALL INTERIOR LIGHTING IS POWERED VIA PANEL CXD-PP-1. CONTRACTOR SHALL CIRCUIT LIGHTING FIXTURES WITH 3/4" CONDUIT WITH 2#12 & 1#12 GND, UNLESS NOTED OTHERWISE.
3. EXIT SIGNS AND EMERGENCY LIGHTING UNITS SHALL BE WIRED TO AN UN-SWITCHED LEG OF THE DESIGNATED CIRCUIT.
4. ALL EXTERIOR LIGHTING SHALL BE CIRCUITED VIA RELAY PANEL CXD-RP. CONTRACTOR SHALL CIRCUIT LIGHTING WITH 3/4"C, 2#12 & 1#12 GND, UNLESS OTHERWISE NOTED.
5. RELAY PANEL CXD-RP SHALL BE EQUIPPED WITH BOTH A BUILT-IN TIME CLOCK AND A PHOTOSENSOR CONTROL. MOUNT PHOTO SENSOR IN NORTHEAST CORNER OF BUILDING.
6. FOR LIGHTING AND RELAY PANEL SCHEDULE, REFER TO DRAWING CXD-E-07.
7. ALL LIGHTING CONTROL COMPONENTS SHALL BE FROM A SINGLE MANUFACTURER, AND MUST BE FROM THE SAME MANUFACTURER FOR ALL BUILDINGS WITHIN THE CONTRACT AND AS PROVIDED ELSEWHERE AT THE PLAYLAND FACILITY.
8. LIGHTING CONTROLS SELECTED SHALL HAVE THE CAPABILITY TO BE CONNECTED TO A MASTER HEAD-END SYSTEM (FUTURE CONTRACT).
9. FOR EXTERIOR LIGHTING CONTROL WIRING INFORMATION, SEE EXTERIOR WIRING DETAIL SHOWN ON DRAWING CXD-E-07.
10. FOR LIGHTING FIXTURE SCHEDULE, SEE DRAWING GE-E-03.

0 4' 8'
SCALE: 1/4" = 1'-0"

CONSULTANT INFORMATION
Savin Engineers, P.C.

CONSULTANT SEAL
STATE OF NEW YORK · STEVEN A. MARTINO · 083631 · LICENSED PROFESSIONAL ENGINEER

| REVISION NUMBER | DATE | MADE BY | APP'D BY | REVISION |
|---|---|---|---|---|
| | | | | |

RECORD DRAWING CERTIFICATION
☐ AS BUILT – CHANGES AS NOTED ☐ AS BUILT – NO CHANGES

CONTRACTOR
NAME
SIGNATURE
TITLE DATE

PROJECT COORDINATOR
NAME
SIGNATURE
TITLE DATE

WESTCHESTER COUNTY, NEW YORK
DEPARTMENT OF PUBLIC WORKS AND TRANSPORTATION
DIVISION OF ENGINEERING

INFRASTRUCTURE REHABILITATION - PHASE 3
PLAYLAND PARK, RYE, NEW YORK
CROSS AXIS BUILDING D
GROUND FLOOR - LIGHTING PLAN

| | |
|---|---|
| CONTRACT NUMBER | 22-523 |
| SHEET NUMBER | CXD-E-06 |
| DWG NO.: | |
| SCALE: | AS SHOWN |
| DATE: | 8/23/2022 |
| DPW FILE NUMBER | 1-118-E-985-0 |
| REV. NO. | 0 |



Drawing Name: G:\SavinAutocad\2060\25-Playland-Mega-3\E\CXDE-1004.dwg
Projectname: 211001F02 Comments: ----
Printed by: MGodby Date: 29 August 2022 7:53 AM Designed by: ----
Xrefs: [TB_24X36_WestchesterCo_3.dwg] [TSG-SVL060.dwg] [CXD-A-41.dwg] [CXD-E-1007.dwg]

**PANELBOARD:** CXD-PP1 **LOCATION:** CXD ELECTRICAL CLOSET

1 **NEMA RATING** 3 **POLES** **MOUNTING:** SURFACE

200 **AMP BUS RATING** 150 **AMP MAIN BREAKER** 42 **KA SHORT CIRCUIT RATING**

208Y/120 **VOLTS** 3 **PHASE** 4 **WIRE** **ELECTRONIC GRADE :** NO

| CIRCUIT NO. | DESCRIPTION | LOAD KVA PHASE A | LOAD KVA PHASE B | LOAD KVA PHASE C | BREAKER AMPS / POLES | NOTES | CIRCUIT NO. | DESCRIPTION | LOAD KVA PHASE A | LOAD KVA PHASE B | LOAD KVA PHASE C | BREAKER AMPS / POLES | NOTES |
|---|---|---|---|---|---|---|---|---|---|---|---|---|---|
| 1 | RECEPTACLES | 0.2 | | | 20/1 | | 2 | RECEPTACLES | 0.2 | | | 20/1 | |
| 3 | RECEPTACLES | | 0.2 | | 20/1 | | 4 | ROLL-UP DOOR | | 1.2 | | 20/1 | |
| 5 | ROLL-UP DOOR | | | 1.2 | 20/1 | | 6 | SPRINKLER ROOM POWER | | | 0.2 | 20/1 | 1 |
| 7 | SPARE | - | | | 20/1 | | 8 | SPRINKLER ROOM POWER | 0.2 | | | 20/1 | 1 |
| 9 | SPARE | | - | | 20/1 | | 10 | UNIT HEATER UH-1 | | 1.65 | | 15/2 | |
| 11 | SPARE | | | - | 20/1 | | 12 | | | | 1.65 | | |
| 13 | LIGHTING | 0.6 | | | 20/1 | | 14 | TREE AND BOLLARD LTG. | 0.2 | | | 20/1 | 2 |
| 15 | RELAY PANEL 120V PWR. | | 0.2 | | 20/1 | | 16 | SOFFIT LTG. | | 0.2 | | 20/1 | 2 |
| 17 | SPARE | | | - | 20/1 | | 18 | PORCH LTG. | | | 0.2 | 20/1 | 2 |
| 19 | SPACE | | | | | | 20 | SPACE | | | | | |
| 21 | SPACE | | | | | | 22 | SPACE | | | | | |
| 23 | SPACE | | | | | | 24 | SPACE | | | | | |
| 25 | SPACE | | | | | | 26 | SPACE | | | | | |
| 27 | SPACE | | | | | | 28 | SPACE | | | | | |
| 29 | SPACE | | | | | | 30 | SPACE | | | | | |
| | **TOTAL PHASE KVA THIS SIDE** | 0.8 | 0.4 | 1.2 | | | | **TOTAL PHASE KVA THIS SIDE** | 0.6 | 3.05 | 2.05 | | |
| | | | | | | | | **TOTAL KVA PER PHASE** | 1.4 | 3.45 | 3.25 | | |
| | | | | | | | | **TOTAL THREE PHASE KVA** | 8.1 | | | | |

NOTES:
1. SEE KEY NOTE 2 ON DRAWING CXD-E-05 FOR ADDITIONAL INFORMATION
2. CIRCUIT VIA RELAY PANEL CXD-RP
3.
4.

NOTES CONT.:
5.
6.
7.
8.

NOTES:

1. FOR ADDITIONAL NOTES, ABBREVIATIONS AND SYMBOLS, SEE DRAWING GE-E-01.

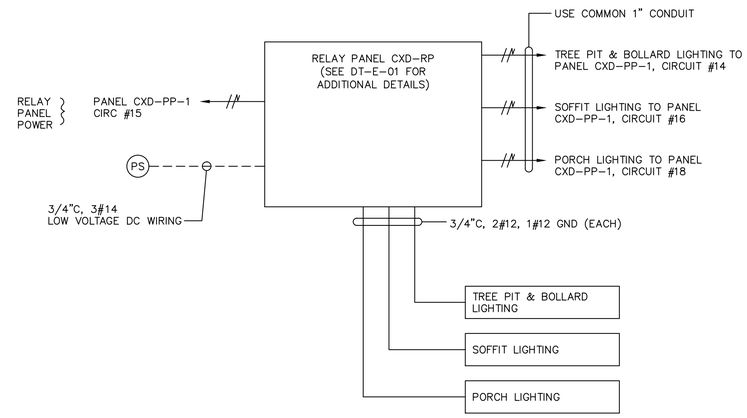


2 CXD-E-07 EXTERIOR CXD BUILDING WIRING DETAIL

| CXD-RP | LOCATION: CXD ELECTRICAL ROOM | |
|---|---|---|
| CKT NO | DESCRIPTION | NOTES |
| 1 | TREE PIT AND BOLLARD LIGHTING | |
| 2 | SOFFIT LIGHTING | |
| 3 | PORCH LIGHTING | |
| 4 | SPARE | |
| 5 | SPARE | |
| 6 | SPARE | |
| 7 | SPARE | |
| 8 | SPARE | |

LIGHTING CONTROL LEGEND

| SYMBOL | DESCRIPTION |
|---|---|
| OSS | OCCUPANCY / VACANCY SENSOR – SMALL MOTION, DUAL TECHNOLOGY (PASSIVE INFRARED/MICROPHONICS) ACUITY BRANDS, nLIGHT SYSTEM CATALOG NUMBER: nCM-PDT-9-RJB OR APPROVED EQUAL |
| PP 12 | POWER / RELAY PACK – 120V RATED SELF CONTROLLED RELAY SWITCH, EQUIPPED WITH RJ45, PLENUM RATED, CONFIGURATIVE RELAY LOGIC ACUITY BRANDS, nLIGHT SYSTEM CATALOG NUMBER: nPP16-D-EFP-SA OR APPROVED EQUAL. |
| $ | 120V RATED LIGHTING SINGLE POLE SWITCH |
| RP | RELAY TIME CONTROL PANEL PROGRAMMABLE ZONE CONTROL PANEL UP TO 1 ADDRESS PER RELAY/DIMMING OUTPUT EQUIPPED WITH 0-10V DIMMING OUTPUT PER RELAY CATALOG NUMBER: ARP INTENCO8NLT-16SR-MVOLT-1VB-HLK-S-DTC OR APPROVED EQUAL |
| PS | ANALOG PHOTOCELL – PHOTOSENSOR SUITABLE FOR OUTDOOR APPLICATIONS. CATALOG NUMBER: LSA-APS-OL OR APPROVED EQUAL |
| P POD | RELAY TIME CONTROL PANEL PROGRAMMABLE ZONE CONTROL PANEL UP TO 1 ADDRESS PER RELAY/DIMMING OUTPUT EQUIPPED WITH 0-10V DIMMING OUTPUT PER RELAY CATALOG NUMBER: LSA-APS-OL OR APPROVED EQUAL |

Drawing Name: G:\SavinAutocad\2060\25-Playland-Mega-3\E\CXDE-1009.dwg
Proj.name: 211001F02 Comments: ----
Printed by: MGadby Date: 31 August 2022 11:33 AM Designed by: ----
Xrefs: [TB_24X36_WestchesterCo_3.dwg] [TSG-SVLOGO.dwg] [BCR-A-04.dwg] [BCRE-101.dwg]

CONSULTANT INFORMATION

Savin Engineers, P.C.

CONSULTANT SEAL

STATE OF NEW YORK · STEVEN A. MARTINO · 083631 · LICENSED PROFESSIONAL ENGINEER

| REVISION NUMBER | DATE | MADE BY | APP'D BY | REVISION |
|---|---|---|---|---|

RECORD DRAWING CERTIFICATION

☐ AS BUILT – CHANGES AS NOTED ☐ AS BUILT – NO CHANGES

CONTRACTOR: NAME / SIGNATURE / TITLE / DATE

PROJECT COORDINATOR: NAME / SIGNATURE / TITLE / DATE

WESTCHESTER COUNTY, NEW YORK
DEPARTMENT OF PUBLIC WORKS AND TRANSPORTATION
DIVISION OF ENGINEERING

**INFRASTRUCTURE REHABILITATION - PHASE 3**
**PLAYLAND PARK, RYE, NEW YORK**
**CROSS AXIS BUILDING D**
**PANEL SCHEDULES**

| | |
|---|---|
| CONTRACT NUMBER | 22-523 |
| SHEET NUMBER | CXD-E-07 |
| DWG NO.: | 237 of 664 |
| SCALE: | AS SHOWN |
| DATE: | 8/23/2022 |
| DPW FILE NUMBER | 1-118-E-986-0 |
| REV. NO. | 0 |

# FIRE ALARM GENERAL NOTES:

1. THE FIRE ALARM AND SMOKE DETECTION SYSTEM SHALL BE INSTALLED IN COMPLIANCE WITH THE NATIONAL FIRE PREVENTION CODE (NFPA 72 - 2016), NATIONAL LIFE SAFETY CODE (NFPA 101 - 2018), NATIONAL ELECTRICAL CODE (NFPA 70 - 2017), 2020 NEW YORK STATE BUILDING CODE, AND ALL LOCAL MUNICIPAL CODES HAVING JURISDICTION.
2. THE FIRE ALARM AND SMOKE DETECTION SYSTEM SHALL BE MAINTAINED AND TESTED IN COMPLIANCE WITH NFPA 72.
3. A CONTINUOUS FIRE WATCH SHALL BE PROVIDED IF THERE IS FIRE SYSTEM IMPAIRMENT.
4. ALL FIRE ALARM STROBES SHALL BE SYNCHRONIZED AND SHALL REMAIN FLASHING AFTER SYSTEM SILENCE FUNCTION.
5. CONTRACTOR TO UPDATE ALL NECESSARY CORRESPONDING FIRE ALARM SIGNALS WHEN PERFORMING ANY MODIFICATION TO THE BUILDING, WHERE APPLICABLE, MAKE SURE THE SAME UPDATES ARE COORDINATED AND TRANSMITTED TO THE CENTRAL STATION.
6. HORNS WILL SOUND A TEMPORAL 3-SIGNALING RHYTHM PER NFPA 72.
7. EXACT PLACEMENT OF DEVICES TO BE VERIFIED IN FIELD.
8. ALL SMOKE DETECTORS SHALL BE INSTALLED A MINIMUM OF 36" FROM ANY HVAC SUPPLY OR RETURN REGISTER.
9. FIRE ALARM WIRING SHALL BE INSTALLED IN A MINIMUM OF 3/4" RIGID GALVANIZED CONDUIT OR BY NEW YORK STATE BUILDING CODE APPROVED WIRING METHODS.
10. WALL MOUNTED HORNS AND VISUAL FIRE ALARMS (STROBES) SHALL BE MOUNTED NOT LESS THAN 6'-8" AND NOT GREATER THAN 8'-0" A.F.F. WHERE LOCAL CONDITIONS ARE TOO LOW TO PERMIT THE REQUIRED MINIMUM INSTALLATION HEIGHT, INSTALL THE STROBES AT 6" BELOW THE CEILING.
11. MANUAL PULL STATIONS SHALL BE MOUNTED AT 4'-0" A.F.F. AND SHALL BE INSTALLED WITHIN 5'-0" OF EXIT DOOR.
12. WIRING SHALL BE INSTALLED IN ACCORDANCE WITH NFPA 70 AND AS RECOMMENDED BY THE MANUFACTURER OF THE FIRE ALARM SYSTEM.
13. ALL EQUIPMENT AND COMPONENTS SHALL BE NEW AND SHALL BE TESTED AND LISTED BY A NATIONALLY RECOGNIZED APPROVALS AGENCY.
14. ALL EQUIPMENT SHALL BE ATTACHED TO WALLS AND CEILING/FLOOR ASSEMBLIES AND SHALL BE HELD FIRMLY IN PLACE. FASTENERS AND SUPPORTS SHALL BE ADEQUATE TO SUPPORT REQUIRED LOAD.
15. ALL FIELD WIRING SHALL BE ELECTRICALLY SUPERVISED FOR OPEN CIRCUIT AND GROUND FAULTS.
16. ALL BOXES AND CABINETS SHALL BE UL LISTED FOR THEIR USE AND PURPOSE.
17. DIALER OR ALARM COMMUNICATOR TRANSMITTER SHALL TRANSMIT ALL POINTS AS THEY ARE REPORTED TO THE HOST PANEL.
18. ALL DEVICES SHALL BE COMPATIBLE WITH EXISTING SYSTEM (EST3 BY EDWARDS). FIRE ALARM PRODUCTS SHALL BE APPROVED BY THE ENGINEER OR OWNER.
19. ALL PENETRATIONS SHALL BE FIRE PROOFED AS REQUIRED.

# FIRE ALARM CONSTRUCTION NOTES:

1. ELECTRICIAN SHALL COORDINATE WITH THE FIRE ALARM VENDOR TO PRODUCE A SEPARATE FIXED PRICE TO PERFORM THE SCOPE OF WORK CONTAINED ON THESE DRAWINGS IN CONNECTION WITH THE FIRE ALARM SYSTEM. THESE DRAWINGS ARE PROVIDED FOR BID PURPOSES ONLY AND TO ILLUSTRATE THE SCOPE OF WORK INTENT OF THIS PROJECT.
2. ELECTRICIAN SHALL OBTAIN SEPARATE PERMIT FOR FIRE ALARM PRIOR TO INSTALLATION.
3. PRIOR TO SUBMISSION OF THE FIRE ALARM SYSTEM BID, THE FIRE ALARM VENDOR IS RESPONSIBLE TO REVIEW ALL DRAWINGS (I.E., MECHANICAL/HVAC, ELECTRICAL, PLUMBING, FIRE SPRINKLER, AND ARCHITECTURAL). UPON SUBMISSION OF THE FIRE ALARM BID, THE FIRE ALARM VENDOR CERTIFIES THAT ALL DRAWINGS HAVE BEEN REVIEWED, THE SITE HAS BEEN VISITED/INSPECTED (IF APPLICABLE), AND THAT ALL LOCAL FIRE DEPARTMENT REQUIRED ITEMS ARE FULLY UNDERSTOOD AND INCLUDED IN THE BID PRICE (NO CHANGE ORDERS ALLOWED).
4. FIRE ALARM VENDOR MUST ADHERE TO NFPA 72, NFPA 101, AND ALL LOCAL CODES AND AUTHORITIES HAVING JURISDICTION. THE ENTIRE SYSTEM MUST BE DESIGNED IN ACCORDANCE WITH THESE AUTHORITIES HAVING JURISDICTION.
5. FIRE ALARM VENDOR SHALL INCLUDE THE COST OF THE ENGINEERING FEE, PROGRAMMING CHARGE, NEW EQUIPMENT, CONNECTION & TESTING, TROUBLESHOOTING, ATTENDANCE AT THE FIRE ALARM INSPECTION, ETC. AS PART OF THE TOTAL PRICE.
6. FIRE ALARM VENDOR MUST SUBMIT APPROVED, SIGNED AND SEALED DESIGN/BUILD DRAWINGS TO THE ENGINEER AND OWNER, INCLUDING: FIRE ALARM RISER DIAGRAM, LAYOUT, EQUIPMENT LIST, SPECIFICATIONS PRIOR TO START OF INSTALLATION. INSTALLATION OF THE NEW FIRE ALARM SYSTEM SHALL NOT PROCEED PRIOR TO WRITTEN APPROVAL BY THE ENGINEER.
7. FIRE ALARM VENDOR SHALL SUBMIT SHOP DRAWINGS IN COMPLIANCE WITH NFPA 72, 2020 NEW YORK STATE BUILDING CODE, AND 2020 NEW YORK STATE FIRE CODE SECTION 907.1.1.
8. ALL FIRE ALARM CABLES AND WIRING MUST BE PLENUM RETURN RATED CABLES.

# SCOPE OF WORK:

1. DEMOLISH EXISTING FIRE ALARM DEVICES AND ASSOCIATED WIRING BACK TO SOURCE.
2. INSTALL NEW FIRE ALARM DEVICES AS PER DRAWINGS. PROVIDE ALL NECESSARY WIRING, CONNECTIONS, CONDUIT, AND FITTINGS.
3. NEW FIRE ALARM DEVICES AND SIGNAL WIRING SHALL BE CONNECTED TO THE EXISTING "QUAD 4" FIRE ALARM PANEL.
4. NEW FIRE ALARM SYSTEM SHALL BE INSPECTED BY A THIRD PARTY INSPECTION AGENCY CERTIFIED BY WESTCHESTER COUNTY. ELECTRICIAN SHALL INCLUDE INSPECTION IN BASE BID SCOPE AND COORDINATE WITH INSPECTION AGENCY TO CERTIFY THE SYSTEM.
5. ELECTRICIAN SHALL COORDINATE WITH THE FIRE ALARM VENDOR (OPEN SYSTEMS METRO) TO RE-PROGRAM AND TEST THE CENTRAL FIRE ALARM SYSTEM IN THE PLAYLAND MAIN ADMINISTRATION BUILDING FOLLOWING THE INSTALLATION OF NEW SYSTEM AND DEVICES.
6. ELECTRICIAN SHALL COORDINATE WITH THE FIRE ALARM CENTRAL MONITORING PROVIDER (STATEWIDE MONITORING) TO TEST AND VERIFY CENTRAL MONITORING OF PARKWIDE SYSTEM FOLLOWING THE INSTALLATION OF NEW SYSTEM AND DEVICES.

# FIRE ALARM SYSTEM RISER NOTES:

1. LOCATION OF DEVICES AND EQUIPMENT ARE APPROXIMATE. FINAL LOCATIONS MUST BE DETERMINED ACCORDING TO THE SITE CONDITIONS.
2. VISUAL FIRE ALARMS (STROBES) SHALL HAVE MINIMUM 5'-0" CLEARANCE FROM ANY OBSTRUCTIONS, SHALL BE FIELD ADJUSTABLE, AND SHALL BE RATED AT 75 CANDELA MINIMUM, UNLESS OTHERWISE NOTED. ALL STROBES SHALL BE SYNCHRONIZED AT LINE OF SIGHT.
3. WALL MOUNTED HORNS AND VISUAL FIRE ALARMS (STROBES) SHALL BE MOUNTED NOT LESS THAN 6'-8" AND NOT GREATER THAN 8'-0" A.F.F. WHERE LOCAL CONDITIONS ARE TOO LOW TO PERMIT THE REQUIRED MINIMUM INSTALLATION HEIGHT, INSTALL THE STROBES AT 6" BELOW THE CEILING.
4. MANUAL PULL STATIONS SHALL BE MOUNTED AT 4'-0" A.F.F. AND SHALL BE INSTALLED WITHIN 5'-0" OF EXIT DOOR.
5. FUSE CUT OUT BOX SHALL COMPLY WITH THE NATIONAL ELECTRICAL CODE AND HAVE A REMOVABLE SOLID COPPER NEUTRAL BAR.
6. ALL CONDUITS AND CONTROL PANELS SHALL BE GROUNDED TO BUILDING STEEL/GROUND GRID WITH A MINIMUM #8 CONDUCTOR.
7. RISER DIAGRAM ON THIS DRAWING IS FOR DESIGN PURPOSE ONLY. FIRE ALARM CONTRACTOR SHALL PROVIDE A COMPLETE RISER DIAGRAM WITH ACTUAL FIELD WIRING REQUIRED.
8. EACH FIRE ALARM INITIATING AND INDICATING CIRCUIT SHALL BE ELECTRICALLY SUPERVISED.
9. EACH VISUAL FIRE ALARM CIRCUIT SHALL CONTAIN AT LEAST 20% SPARE CAPACITY.
10. ALL CONTROL PANELS, FUSE CUTOUTS, TROUBLE BELLS, ALARM BELLS AND SILENCE SWITCHES SHALL BE PROPERLY LABELED WITH MINIMUM 1/4" HIGH LETTERS.
11. WIRING FOR AUDIBLE AND VISUAL ALARM NOTIFICATION DEVICES SHALL BE ARRANGED SO THAT A LOSS OF A PORTION OF THE WIRING ON A FLOOR WILL NOT RENDER MORE THAN 60% OF THE DEVICES OF EACH TYPE INOPERATIVE, AND THE DEVICES SHALL BE SO CONNECTED TO THE CIRCUITRY (i.e., BY MEANS OF ALTERNATE CIRCUITS) AS TO MAINTAIN AT LEAST PARTIAL AUDIBILITY/VISIBILITY THROUGHOUT THE ENTIRE FLOOR.
12. THE FIRE ALARM CONTROL PANEL SHALL BE PROVIDED WITH A KEY SWITCH. DURING DAILY TESTS, THE KEY SWITCH SHALL BE USED TO BYPASS THE CIRCUITS THAT CONTROL DAMPERS AND FAN SHUTDOWN.
13. THE DAMPERS AND FAN BYPASS FUNCTION SHALL BE AUTOMATICALLY RESTORED TO BE NORMAL UN-SHUNTED CONDITION WITHIN FORTY-FIVE MINUTES, IF NOT DONE SO MANUALLY BEFORE FORTY-FIVE MINUTES.
14. PERFORM FIRE ALARM SYSTEM TESTING PER THE 2020 NEW YORK STATE FIRE CODE AND NFPA 72.

# FIRE ALARM LEGEND:

| SYMBOL | DESCRIPTION |
|---|---|
| FA | FIRE ALARM SUB PANEL |
| S | SMOKE DETECTOR |
| H | HEAT DETECTOR |
| F | MANUAL FIRE ALARM PULL STATION |
| # H | FIRE ALARM WALL MOUNTED HORN/STROBE<br># = CANDELA RATING |
| FCO | FUSED CUT OUT SWITCH/FUSED LOCKABLE DISCONNECT SWITCH |
| ST # | WALL MOUNTED STROBE<br># = CANDELA RATING |
| | FLOW SWITCH CONNECTED TO FIRE ALARM SYSTEM |
| GV | SPRINKLER VALVE TAMPER SWITCH CONNECTED TO FIRE ALARM SYSTEM |
| S | DUCT MOUNTED SMOKE DETECTOR |
| FSR | FIRE ALARM INTERFACE RELAY FOR HVAC FAN SHUTDOWN |

# FIRE ALARM ABBREVIATIONS:

| | |
|---|---|
| E | EXISTING TO REMAIN |
| ER | EXISTING TO BE RELOCATED |
| EL | EXISTING AS SHOWN IN NEW LOCATION |
| FACP | FIRE ALARM CONTROL PANEL |
| FCO | FUSED CUT OUT |
| FCU | FIRE ALARM CONTROL UNIT |
| FP | FIRE PROTECTION |
| N | NEW |
| RTU | ROOFTOP UNIT |
| SP | SPRINKLER |
| WP | WEATHERPROOF |
| X | EXISTING TO BE DEMOLISHED |

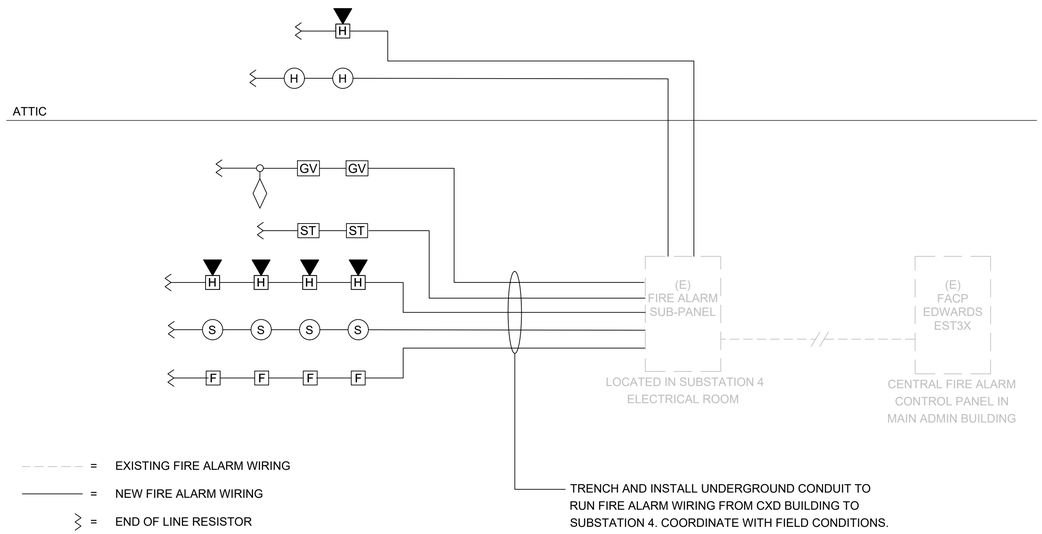


NOTES:
1. WIRING SHOWN ON RISER IS DIAGRAMMATICAL. PROVIDE NEW FIRE ALARM CABLE AS REQUIRED AND INSTALL WIRING LOOPS AS BEST SUITED FOR FIELD CONDITIONS.
2. THE BUILDING IS FULLY SPRINKLERED.

## 1 FIRE ALARM RISER DIAGRAM
SCALE: NOT TO SCALE

| | | SYSTEM OUTPUTS | | | | | | | | | | | | | | | | |
|---|---|---|---|---|---|---|---|---|---|---|---|---|---|---|---|---|---|---|
| | | Control Unit Annunciation | | | | | | Notification | | | | | | | | | Supp. | |
| | EVENT | A<br>ACTUATE COMMON ALARM SIGNAL | B<br>ACTUATE AUDIBLE ALARM SIGNAL | C<br>INDICATE COMMON SUPERVISORY STATUS | D<br>ACTUATE AUDIBLE SUPERVISORY SIGNAL | E<br>INDICATE COMMON TROBLE SIGNAL | F<br>ACTUATE AUDIBLE COMMON TROUBLE SIGNAL | G<br>ACTIVATE HORNS AND STROBES THROUGHOUT THE PROTECTED AREA | H<br>DISPLAY/PRINT CHANGE OF STATUS | I<br>TRANSMIT AUTOMATIC ALARM SIGNAL TO SUPERVISING STATION | J<br>TRANSMIT MANUAL ALARM SIGNAL TO SUPERVISING STATION | K<br>TRANSMIT WATERFLOW ALARM SIGNAL TO SUPERVISING STATION | L<br>TRANSMIT SUPERVISORY SIGNAL TO SUPERVISING STATION | M<br>TRANSMIT CO ALARM SIGNAL TO SUPERVISING STATION | N<br>TRANSMIT TROUBLE SIGNAL TO SUPERVISING STATION | O<br>ACTIVATE TEMPORAL 4 SIGNAL ON ACTIVATED CO DETECTOR SOUNDER BASES | P<br>SHUT DOWN CO PRODUCING EQUIPMENT | Q<br>SHUT DOWN FANS/AIR HANDLING UNITS |
| 1 | ACTIVATION OF MANUAL PULL STATION | X | X | | | | | X | X | | X | | | | | | | |
| 2 | ACTIVATION OF SMOKE DETECTOR | X | X | | | | | X | X | X | | | | | | | | X |
| 3 | ACTIVATION OF DUCT MOUNTED SMOKE DETECTOR | X | X | | | | | X | X | X | | | | | | | | X |
| 4 | ACTIVATION OF HEAT DETECTOR | X | X | | | | | X | X | X | | | | | | | | X |
| 5 | WATERFLOW SWITCH FOR FIRE SPRINKLER SYSTEM | X | X | | | | | X | X | | | X | | | | | | X |
| 6 | ACTIVATION OF CARBON MONOXIDE DETECTOR | | | X | X | | | X | X | | | | | X | | X | X | |
| 7 | SPRINKLER VALVE (TAMPER SWITCH) | | | X | X | | | | X | | | | X | | | | | |
| 8 | FIRE ALARM LOSS OF PRIMARY/SECONDARY POWER | | | | | X | X | | X | | | | | | X | | | |
| 9 | FIRE ALARM SYSTEM WIRING FAILURE | | | | | X | X | | X | | | | | | X | | | |

## 2 FIRE ALARM SEQUENCE OF OPERATIONS MATRIX
SCALE: NOT TO SCALE

## FIRE ALARM DEMOLITION NOTES:

1. NO EXISTING FIRE ALARM DEVICES WERE NOTED DURING BUILDING SURVEY. ANY ABANDONED DEVICES OR WIRING DISCOVERED DURING THE COURSE OF DEMOLITION SHALL BE REMOVED.

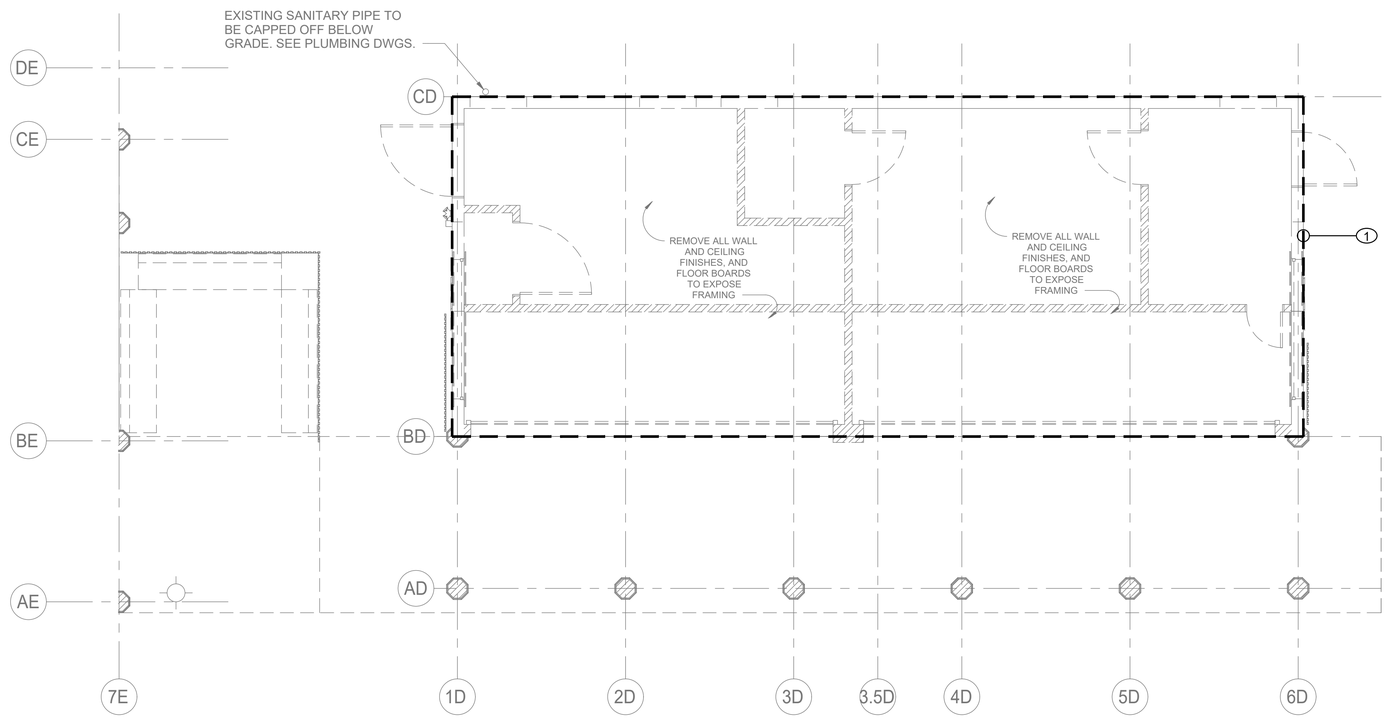


## 1 FIRE ALARM FIRST FLOOR DEMOLITION PLAN

SCALE: 1/4" = 1'-0"

CONSULTANT INFORMATION

LiRo Engineers, Inc.
*A LiRo Group Company*
Syosset, N.Y. 516-214-8157[T]

CONSULTANT SEAL

STATE OF NEW YORK · FRANK F. ULISSE · No. 090111 · LICENSED PROFESSIONAL ENGINEER

| REVISION NUMBER | DATE | MADE BY | APP'D BY | REVISION |
|---|---|---|---|---|

RECORD DRAWING CERTIFICATION

☐ AS BUILT – CHANGES AS NOTED ☐ AS BUILT – NO CHANGES

CONTRACTOR
NAME
SIGNATURE
TITLE DATE

PROJECT COORDINATOR
NAME
SIGNATURE
TITLE DATE

WESTCHESTER COUNTY, NEW YORK
DEPARTMENT OF PUBLIC WORKS AND TRANSPORTATION
DIVISION OF ENGINEERING

**INFRASTRUCTURE REHABILITATION - PHASE 3**
**PLAYLAND PARK, RYE, NEW YORK**
**CROSS AXIS BUILDING D**
**FIRE ALARM FIRST FLOOR DEMOLITION PLAN**

| | |
|---|---|
| CONTRACT NUMBER | 22-523 |
| SHEET NUMBER | CXD-FA-11 |
| DWG NO.: | 239 of 664 |
| SCALE: | As indicated |
| DATE: | 08/23/2022 |
| DPW FILE NUMBER | 1-118-FA-988-0 |
| REV. NO. | 0 |

## FIRE ALARM DEMOLITION NOTES:

1. NO EXISTING FIRE ALARM DEVICES WERE NOTED DURING BUILDING SURVEY. ANY ABANDONED DEVICES OR WIRING DISCOVERED DURING THE COURSE OF DEMOLITION SHALL BE REMOVED.

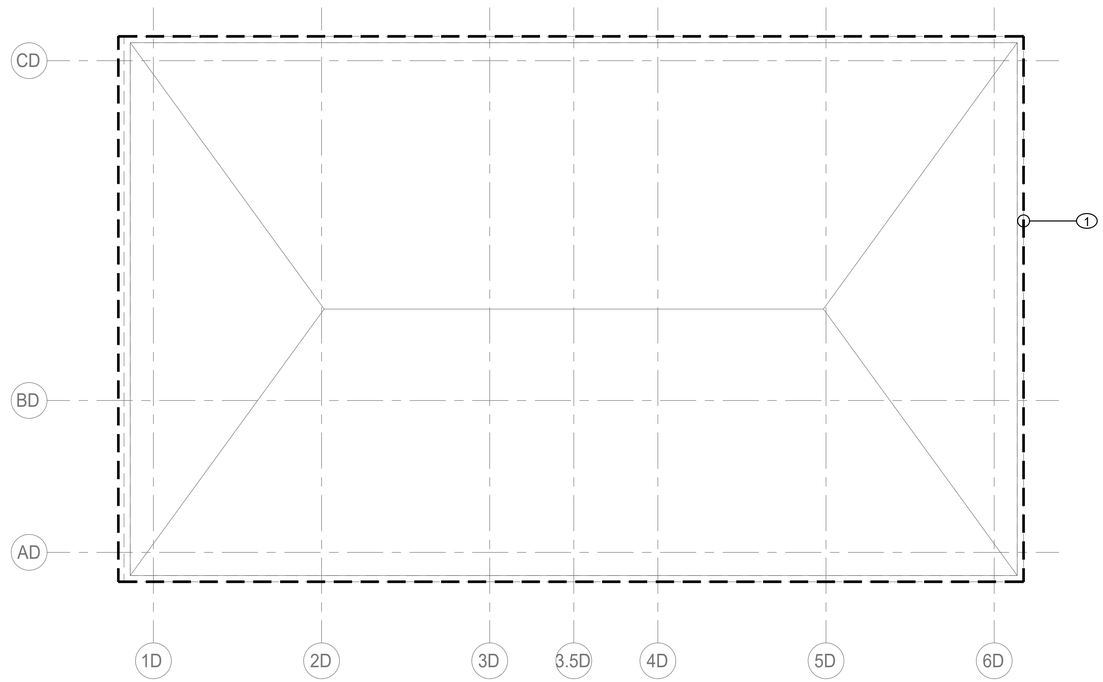


## 1 FIRE ALARM ATTIC DEMOLITION PLAN

SCALE: 1/4" = 1'-0"

CONSULTANT INFORMATION

LiRo Engineers, Inc.
*A LiRo Group Company*
Syosset, N.Y. 516-214-8157[T]

CONSULTANT SEAL

STATE OF NEW YORK · FRANK F. ULISSE · No. 090111-1 · LICENSED PROFESSIONAL ENGINEER

| REVISION NUMBER | DATE | MADE BY | APP'D BY | REVISION |
|---|---|---|---|---|
| | | | | |

RECORD DRAWING CERTIFICATION

☐ AS BUILT – CHANGES AS NOTED ☐ AS BUILT – NO CHANGES

CONTRACTOR
NAME
SIGNATURE
TITLE DATE

PROJECT COORDINATOR
NAME
SIGNATURE
TITLE DATE

WESTCHESTER COUNTY, NEW YORK
DEPARTMENT OF PUBLIC WORKS AND TRANSPORTATION
DIVISION OF ENGINEERING

**INFRASTRUCTURE REHABILITATION - PHASE 3**
**PLAYLAND PARK, RYE, NEW YORK**
**CROSS AXIS BUILDING D**
**FIRE ALARM ATTIC DEMOLITION PLAN**

| | |
|---|---|
| CONTRACT NUMBER | 22-523 |
| SHEET NUMBER | CXD-FA-12 |
| DWG NO.: | 240 of 664 |
| SCALE: | As indicated |
| DATE: | 08/23/2022 |
| DPW FILE NUMBER | 1-118-FA-989-0 |
| REV. NO. | 0 |

## FIRE ALARM CONSTRUCTION NOTES:

1. CONNECT NEW FIRE ALARM DEVICES TO EXISTING FIRE ALARM CONTROL PANEL IN SUBSTATION 4 ELECTRICAL ROOM.
2. NEW MANUAL PULL STATIONS SHALL BE INSTALLED AT 4'-0" ABOVE FINISHED FLOOR AT EACH BUILDING EXIT (MAX. DISTANCE OF 5'-0" FROM EXIT).
3. FIRE ALARM STROBES AND HORN STROBES SHALL BE FIELD ADJUSTABLE AND SET CANDELA RATING INDICATED ON PLAN. FIRE ALARM STROBES AND HORN STROBES SHALL BE INSTALLED AT 7'-4" ABOVE FINISHED FLOOR UNLESS OTHERWISE NOTED.
4. PROVIDE TAMPER AND WATERFLOW SWITCHES FOR NEW SPRINKLER VALVE ASSEMBLIES AND CONNECT TO EXISTING FIRE ALARM SYSTEM. COORDINATE LOCATION AND QUANTITY WITH FIRE PROTECTION DRAWINGS AND SPRINKLER SYSTEM INSTALLER.

## FIRE ALARM GENERAL NOTES:

1. REFER TO DRAWING FA-001.00 FOR SYMBOLS, ABBREVIATIONS, AND NOTES. LAYOUT OF FIRE ALARM DEVICES ON THIS PLAN IS DIAGRAMMATIC; EXACT LOCATIONS OF DEVICES AND CONDUIT SHALL BE COORDINATED WITH FIELD CONDITIONS, ARCHITECTURAL REQUIREMENTS, AND MANUFACTURER RECOMMENDATIONS.
2. ALL DEVICES AND EQUIPMENT SHOWN ON THIS PLAN ARE NEW, UNLESS OTHERWISE NOTED.
3. INSTALL NEW FIRE ALARM SYSTEM IN STRICT ACCORDANCE WITH NFPA-72 AND NFPA-90A REQUIREMENTS.
4. CONTRACTOR SHALL INSTALL NEW FIRE ALARM SYSTEM AS INDICATED AND PROVIDE ALL NECESSARY WIRING, CONDUIT, AND APPARATUSES.
5. ALL VISUAL NOTIFICATION DEVICES IN THE SAME SPACE SHALL BE SYNCHRONIZED IN ACCORDANCE WITH NFPA-72.
6. COORDINATE INSTALLATION WITH FIRE ALARM SYSTEM VENDOR AND MANUFACTURER REQUIREMENTS.
7. COORDINATE FIRE ALARM DEVICES WITH ARCHITECTURAL FINISHES. CONCEAL CONDUIT IN FINISHED WALLS AND FLUSH MOUNT DEVICES WHERE POSSIBLE.
8. CONTRACTOR SHALL TEST THE FIRE ALARM SYSTEM AFTER COMPLETION OF INSTALLATION. FIRE ALARM SYSTEM SHALL BE TESTED AND VERIFIED TO BE WORKING PROPERLY PRIOR TO INSPECTION BY THE AUTHORITY HAVING JURISDICTION.
9. FOLLOWING INSTALLATION, CONTRACTOR SHALL PATCH, PAINT, AND RESTORE ALL WALLS AND CEILINGS TO MATCH EXISTING OR DESIRED NEW CONDITION.
10. FIRESTOP ALL FIRE-RATED FLOOR OR WALL PENETRATIONS TO MAINTAIN ORIGINAL FIRE RATING TO FULL DEPTH OF OPENING.
11. CONTRACTOR SHALL PROVIDE SLEEVE FOR CONDUIT PENETRATIONS THROUGH WALL AND CEILING FLOORS.

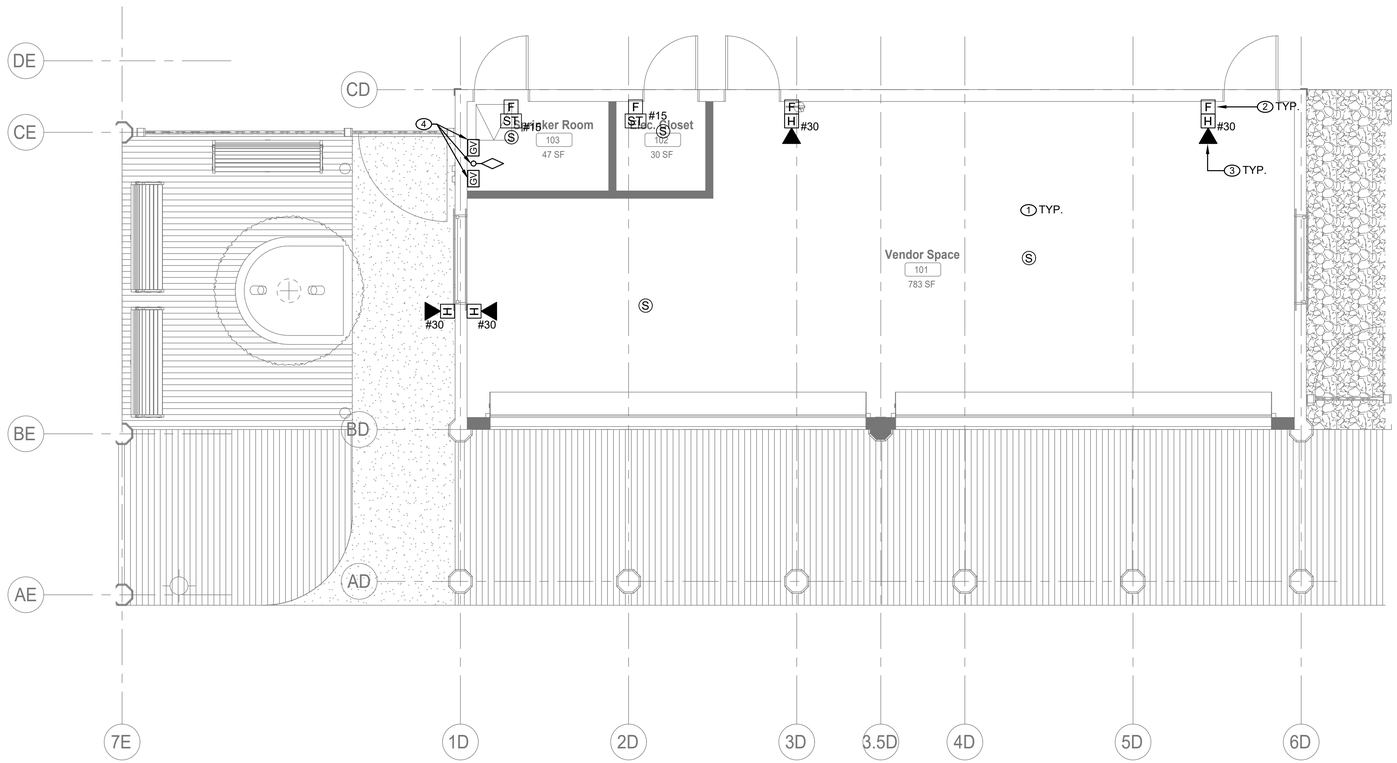


## 1 FIRE ALARM FIRST FLOOR CONSTRUCTION PLAN

SCALE: 1/4" = 1'-0"

| CONSULTANT INFORMATION | CONSULTANT SEAL | REVISION NUMBER | DATE | MADE BY | APP'D BY | REVISION |
|---|---|---|---|---|---|---|
| LiRo Engineers, Inc. A LiRo Group Company Syosset, N.Y. 516-214-8157[T] | STATE OF NEW YORK FRANK F. ULISSE No. 090111-1 LICENSED PROFESSIONAL ENGINEER | | | | | |

RECORD DRAWING CERTIFICATION

☐ AS BUILT – CHANGES AS NOTED ☐ AS BUILT – NO CHANGES

| CONTRACTOR | PROJECT COORDINATOR |
|---|---|
| NAME | NAME |
| SIGNATURE | SIGNATURE |
| TITLE DATE | TITLE DATE |

WESTCHESTER COUNTY, NEW YORK
DEPARTMENT OF PUBLIC WORKS AND TRANSPORTATION
DIVISION OF ENGINEERING

**INFRASTRUCTURE REHABILITATION - PHASE 3**
**PLAYLAND PARK, RYE, NEW YORK**
**CROSS AXIS BUILDING D**
**FIRE ALARM FIRST FLOOR PLAN**

| | |
|---|---|
| CONTRACT NUMBER | 22-523 |
| SHEET NUMBER | CXD-FA-21 |
| DWG NO.: | 241 of 664 |
| SCALE: | As indicated |
| DATE: | 08/23/2022 |
| DPW FILE NUMBER | 1-118-FA-990-0 |
| REV. NO. | 0 |

## FIRE ALARM CONSTRUCTION NOTES:

1. CONNECT NEW FIRE ALARM DEVICES TO EXISTING FIRE ALARM CONTROL PANEL IN SUBSTATION 4 ELECTRICAL ROOM.
2. FIRE ALARM STROBES AND HORN STROBES SHALL BE FIELD ADJUSTABLE AND SET CANDELA RATING INDICATED ON PLAN. FIRE ALARM STROBES AND HORN STROBES SHALL BE INSTALLED AT 7'-4" ABOVE FINISHED FLOOR UNLESS OTHERWISE NOTED.

## FIRE ALARM GENERAL NOTES:

1. REFER TO DRAWING FA-001.00 FOR SYMBOLS, ABBREVIATIONS, AND NOTES. LAYOUT OF FIRE ALARM DEVICES ON THIS PLAN IS DIAGRAMMATIC; EXACT LOCATIONS OF DEVICES AND CONDUIT SHALL BE COORDINATED WITH FIELD CONDITIONS, ARCHITECTURAL REQUIREMENTS, AND MANUFACTURER RECOMMENDATIONS.
2. ALL DEVICES AND EQUIPMENT SHOWN ON THIS PLAN ARE NEW, UNLESS OTHERWISE NOTED.
3. INSTALL NEW FIRE ALARM SYSTEM IN STRICT ACCORDANCE WITH NFPA-72 AND NFPA-90A REQUIREMENTS.
4. CONTRACTOR SHALL INSTALL NEW FIRE ALARM SYSTEM AS INDICATED AND PROVIDE ALL NECESSARY WIRING, CONDUIT, AND APPARATUSES.
5. ALL VISUAL NOTIFICATION DEVICES IN THE SAME SPACE SHALL BE SYNCHRONIZED IN ACCORDANCE WITH NFPA-72.
6. COORDINATE INSTALLATION WITH FIRE ALARM SYSTEM VENDOR AND MANUFACTURER REQUIREMENTS.
7. COORDINATE FIRE ALARM DEVICES WITH ARCHITECTURAL FINISHES. CONCEAL CONDUIT IN FINISHED WALLS AND FLUSH MOUNT DEVICES WHERE POSSIBLE.
8. CONTRACTOR SHALL TEST THE FIRE ALARM SYSTEM AFTER COMPLETION OF INSTALLATION. FIRE ALARM SYSTEM SHALL BE TESTED AND VERIFIED TO BE WORKING PROPERLY PRIOR TO INSPECTION BY THE AUTHORITY HAVING JURISDICTION.
9. FOLLOWING INSTALLATION, CONTRACTOR SHALL PATCH, PAINT, AND RESTORE ALL WALLS AND CEILINGS TO MATCH EXISTING OR DESIRED NEW CONDITION.
10. FIRESTOP ALL FIRE-RATED FLOOR OR WALL PENETRATIONS TO MAINTAIN ORIGINAL FIRE RATING TO FULL DEPTH OF OPENING.
11. CONTRACTOR SHALL PROVIDE SLEEVE FOR CONDUIT PENETRATIONS THROUGH WALL AND CEILING FLOORS.

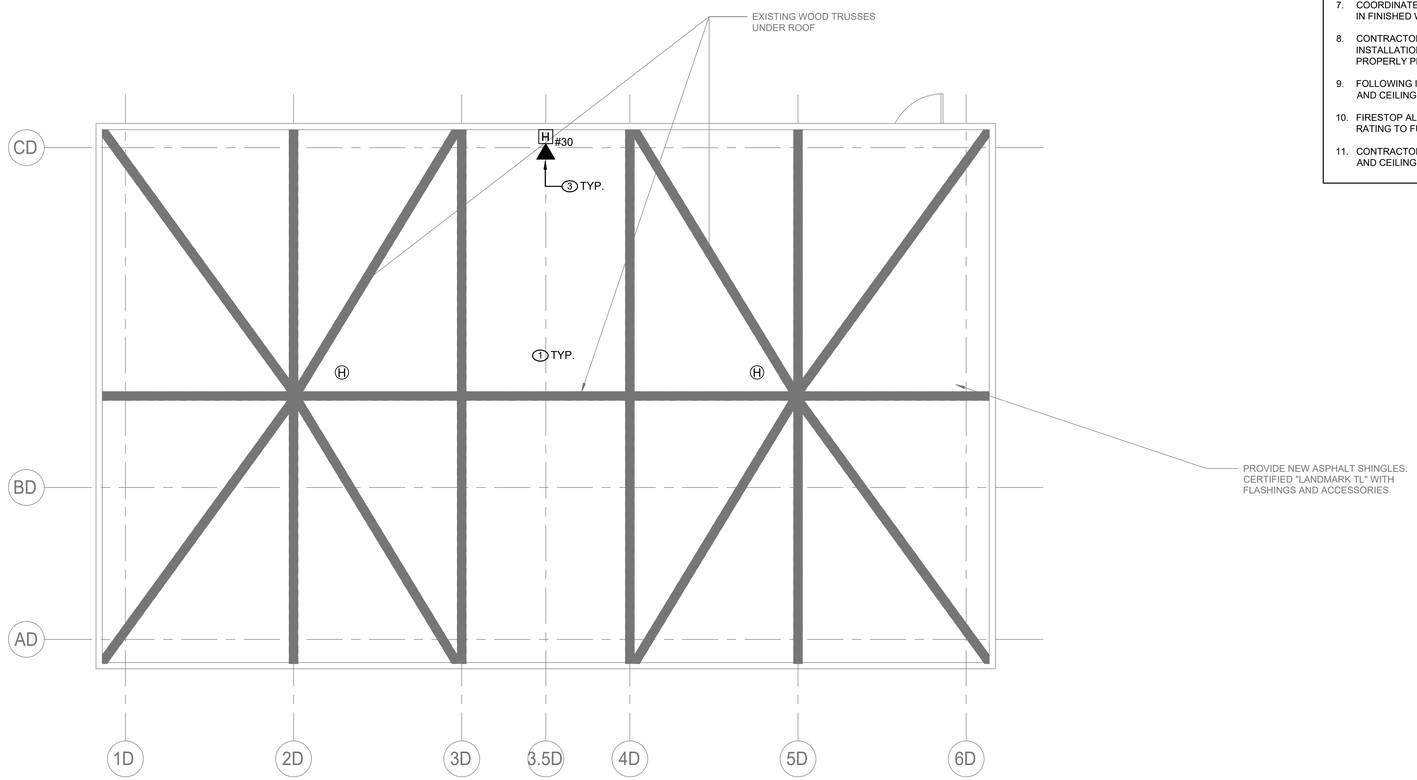


## 1 FIRE ALARM ATTIC CONSTRUCTION PLAN

SCALE: 1/4" = 1'-0"

CONSULTANT INFORMATION

LiRo Engineers, Inc.
*A LiRo Group Company*
Syosset, N.Y. 516-214-8157[T]

CONSULTANT SEAL

STATE OF NEW YORK · FRANK F. ULISSE · No. 090111 · LICENSED PROFESSIONAL ENGINEER

| REVISION NUMBER | DATE | MADE BY | APP'D BY | REVISION |
|---|---|---|---|---|

RECORD DRAWING CERTIFICATION

☐ AS BUILT – CHANGES AS NOTED ☐ AS BUILT – NO CHANGES

CONTRACTOR: NAME / SIGNATURE / TITLE / DATE

PROJECT COORDINATOR: NAME / SIGNATURE / TITLE / DATE

WESTCHESTER COUNTY, NEW YORK
DEPARTMENT OF PUBLIC WORKS AND TRANSPORTATION
DIVISION OF ENGINEERING

**INFRASTRUCTURE REHABILITATION - PHASE 3**
**PLAYLAND PARK, RYE, NEW YORK**
**CROSS AXIS BUILDING D**
**FIRE ALARM ATTIC PLAN**

| | |
|---|---|
| CONTRACT NUMBER | 22-523 |
| SHEET NUMBER | CXD-FA-22 |
| DWG NO.: | 242 of 664 |
| SCALE: | As indicated |
| DATE: | 08/23/2022 |
| DPW FILE NUMBER | 1-118-FA-991-0 |
| REV. NO. | 0 |

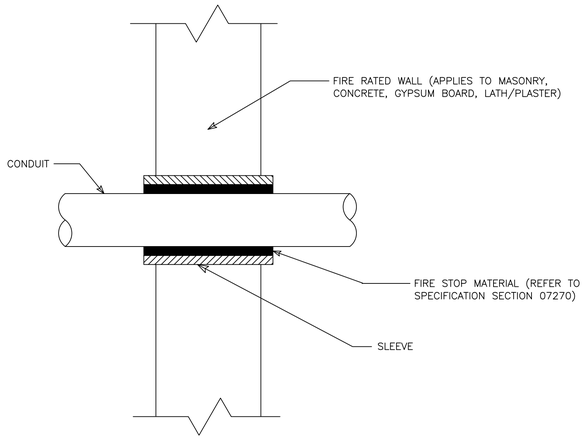


1 / FA-81 CONDUIT PENETRATION THRU FIRE RATED WALL
NOT TO SCALE

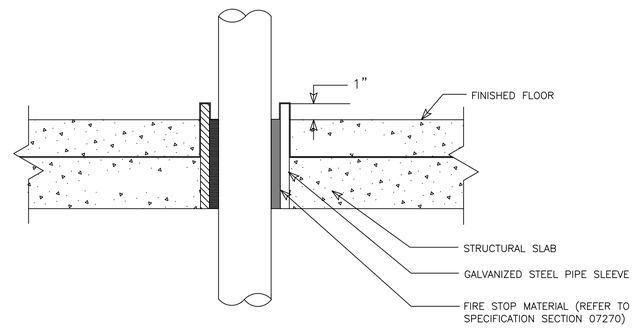


2 / FA-81 CONDUIT PENETRATION THRU FLOOR SLAB
NOT TO SCALE

CONSULTANT INFORMATION

LiRo Engineers, Inc.
*A LiRo Group Company*
Syosset, N.Y. 516-214-8157[T]

CONSULTANT SEAL

STATE OF NEW YORK · FRANK F. ULISSE · No. 090111-1 · LICENSED PROFESSIONAL ENGINEER

| REVISION NUMBER | DATE | MADE BY | APP'D BY | REVISION |
|---|---|---|---|---|
| | | | | |

RECORD DRAWING CERTIFICATION

☐ AS BUILT – CHANGES AS NOTED ☐ AS BUILT – NO CHANGES

CONTRACTOR
NAME
SIGNATURE
TITLE DATE

PROJECT COORDINATOR
NAME
SIGNATURE
TITLE DATE

WESTCHESTER COUNTY, NEW YORK
DEPARTMENT OF PUBLIC WORKS AND TRANSPORTATION
DIVISION OF ENGINEERING

**INFRASTRUCTURE REHABILITATION - PHASE 3**
**PLAYLAND PARK, RYE, NEW YORK**
**CROSS AXIS BUILDING D**
**FIRE ALARM DETAILS**

CONTRACT NUMBER 22-523
SHEET NUMBER **CXD-FA-81**
DWG NO.: 243 of 664
SCALE: **As indicated**
DATE: 08/23/2022
DPW FILE NUMBER **1-118-FA-992-0**
REV. NO. 0

## GENERAL NOTES:

1. DIMENSIONS INDICATED ON THE DRAWINGS ARE APPROXIMATE AND SUBJECT TO REVISIONS AS PER ACTUAL FIELD CONDITIONS.
2. CONTRACTOR SHALL COMPLY WITH ALL NYSDEC PERMIT REQUIREMENTS AND ANY OTHER STATE, COUNTY, CITY OR TOWN AGENCY HAVING JURISDICTION. REFER TO THE CONTRACT SPECIFICATIONS FOR PERMIT REQUIREMENTS.
3. CONTRACTOR SHALL TAKE ALL PRECAUTIONS TO MAINTAIN UTILITY SERVICE TO AND FROM BUILDINGS AND PARK AREAS.
4. ANY UTILITIES SHOWN ON THE PLANS ARE FOR INFORMATION ONLY AND HAVE BEEN OBTAINED FROM AVAILABLE SOURCES. THE EXISTENCE AND LOCATION OF ANY UTILITIES INDICATED ON THE PLANS ARE NOT GUARANTEED AND SHALL BE INVESTIGATED AND VERIFIED IN THE FIELD BY THE CONTRACTOR BEFORE STARTING WORK. THE CONTRACTOR SHALL HAVE ALL EXISTING UTILITIES FIELD STAKED BEFORE STARTING WORK BY CALLING DIG SAFELY NEW YORK AT 1-800-962-7962. EXCAVATION IN THE VICINITY OF UNDERGROUND UTILITIES SHALL BE DUG BY HAND. THE CONTRACTOR WILL BE HELD RESPONSIBLE FOR ANY DAMAGE TO EXISTING UTILITIES. NO SEPARATE PAYMENT SHALL BE MADE FOR THIS WORK.
5. THE CONTRACTOR WILL BE REQUIRED TO PROVIDE PRIVATE UTILITY MARKOUTS FOR ALL UTILITIES IN THE WORK AREAS. THE CONTRACTOR SHALL SUBMIT THE PROPOSED UTILITY SUB-CONTRACTOR FOR APPROVAL.
6. THE CONTRACTOR SHALL OBTAIN AND HAVE ON THE JOB SITE, AT ALL TIMES, ALL PERMITS AS REQUIRED BY THE STATE, COUNTY, CITY, TOWN/VILLAGE OR ANY OTHER PERMITTING AGENCY. THE CONTRACTOR SHALL BEAR ALL COSTS OF OBTAINING THESE PERMITS.
7. CONTRACTOR SHALL REMOVE ALL DEBRIS AND EXCESS CONSTRUCTION MATERIALS TO THE SATISFACTION OF THE OWNER AND ENGINEER. THE CONTRACTOR SHALL BE RESPONSIBLE FOR THE REMOVAL AND LEGAL DISPOSAL OF ALL MATERIALS RESULTING FROM THE CONTRACT.
8. CONTRACTOR SHALL COORDINATE ALL CONSTRUCTION ACTIVITIES WITH THE OWNER AND ENGINEER TO MINIMIZE INTERRUPTIONS TO NORMAL PARK OPERATIONS.
9. CONTRACTOR SHALL SUBMIT A DETAILED WORK PLAN INCLUDING SEQUENCE OF OPERATIONS PRIOR TO COMMENCING WORK AND SHALL BE SUBJECT TO APPROVAL OF THE OWNER/ENGINEER.
10. THE CONTRACTOR SHALL NOTIFY THE OWNER AND THE ENGINEER A MINIMUM OF SEVENTY-TWO (72) HOURS PRIOR TO THE START OF CONSTRUCTION. IN ADDITION, IF WORK SHOULD BE STOPPED AND RESTARTED FOR ANY REASON, THE CONTRACTOR SHALL GIVE THE ENGINEER A MINIMUM OF SEVENTY-TWO (72) HOURS NOTICE.
11. ITEMS SUSTAINING DAMAGE DURING CONSTRUCTION AS A RESULT OF THE CONTRACTOR'S OPERATIONS SHALL BE REPAIRED AND/OR REPLACED TO THE SATISFACTION AND APPROVAL OF THE OWNER AT THE CONTRACTORS EXPENSE. ANY DAMAGE SHALL BE REPAIRED AT NO ADDITIONAL COST TO THE OWNER.
12. ALL NECESSARY PRECAUTIONS SHALL BE TAKEN TO PRESERVE THE MATERIAL BELOW AND BEYOND THE LINES OF ALL EXCAVATION IN THE SOUNDEST POSSIBLE CONDITION. ANY DAMAGE TO THE WORK DUE TO THE CONTRACTOR'S OPERATIONS SHALL BE REPAIRED AT THE EXPENSE OF AND BY THE CONTRACTOR.
13. NO MATERIALS OF ANY KIND SHALL BE USED UNTIL IT HAS BEEN INSPECTED AND ACCEPTED BY THE ENGINEER; ALL MATERIALS REJECTED SHALL BE IMMEDIATELY REMOVED FROM THE WORK SITE AND SHALL NOT BE OFFERED FOR INSPECTION AGAIN.
14. ANY MATERIALS OR WORKMANSHIP FOUND AT ANY TIME TO BE DEFECTIVE SHALL BE REMEDIED AT ONCE, REGARDLESS OF PREVIOUS INSPECTION, THE INSPECTION AND OBSERVATION OF WORK BY THE ENGINEER IS INTENDED TO AID THE CONTRACTOR IN APPLYING LABOR AND MATERIAL TO AND IN ACCORDANCE WITH THE SPECIFICATION, BUT SUCH INSPECTION SHALL NOT RELEASE THE CONTRACTOR FROM ANY CONTRACT OBLIGATIONS.
15. THE CONTRACTOR SHALL CONDUCT THE WORK IN A SAFE MANNER SO AS TO POSE NO DANGER OR HAZARDS TO PERSONS OR PROPERTY. WHERE NECESSARY, TEMPORARY SHIELDS OR OTHER PROTECTIVE DEVICES MUST BE UTILIZED. THE CONTRACTOR ASSUMES FULL RESPONSIBILITY AND EXPENSE OF ANY AND ALL SAFETY MEASURES. THE USE OF EXPLOSIVES IS STRICTLY PROHIBITED. THE CONTRACTOR SHALL COMPLY WITH ALL OSHA AND NEW YORK STATE DEPARTMENT OF LABOR REQUIREMENTS.
16. RESEED ALL AREAS WHERE WORK OCCURS AND/OR WHERE CONTRACTOR DAMAGES EXISTING GRASS. COMPLY WITH THE SPECIFICATIONS. STAGING AREAS SHALL BE RESTORED TO ORIGINAL CONDITION AND SHALL BE SEEDED FOLLOWING COMPLETION OF ALL PHYSICAL WORK.
17. THE CONTRACTOR SHALL HAVE A COMPETENT REPRESENTATIVE PRESENT WHO SHALL RESPOND TO ANY QUESTIONS OR REQUESTS OF THE ENGINEER IN THE PROSECUTION AND COMPLETION OF THE WORK IN CONFORMITY WITH THIS CONTRACT, AND SHALL HAVE FULL AUTHORITY TO SUPPLY LABOR AND MATERIAL IMMEDIATELY. THE CONTRACTOR SHALL ALSO HAVE A COMPETENT REPRESENTATIVE AVAILABLE TO RECEIVE TELEPHONE MESSAGES AND PROVIDE A REASONABLE REPLY AS SOON AS POSSIBLE, BUT NO LATER THAN 24 HOURS.
18. NEITHER THE OWNER OR ENGINEER SHALL BE RESPONSIBLE FOR THE MEANS AND METHODS CHOSEN BY THE CONTRACTOR TO COMPLETE THE WORK.
19. THE CONTRACTOR SHALL HAVE FULL RESPONSIBILITY FOR SITE SAFETY AND THE SAFETY OF THE CONTRACTOR'S WORK FORCE.
20. BACKFILL AT ALL EXCAVATIONS SHALL BE PLACED IN 6" LIFTS AND SHALL ACHIEVE A COMPACTION NOT LESS THAN 95 PERCENT OF STANDARD PROCTOR MAXIMUM DENSITY. UNDER THE TERMS OF THE CONTRACT, THE CONTRACTOR SHALL PERFORM FIELD TESTS BY AN APPROVED LABORATORY TO ASSURE THIS COMPACTION RATE AT VARYING DEPTHS. THE CONTRACTOR SHALL BEAR ALL COSTS FOR TESTING AND ANY DELAYS THAT RESULT FROM SUCH TESTING.
21. THE CONTRACTOR SHALL ADJUST ALL MANHOLE FRAMES AND COVERS, VALVE COVERS, WATERVALVE BOXES, DRAINAGE INLETS, ETC. AS NECESSARY TO MEET THE SURFACE OF NEW PAVEMENT OR WALKWAY AS REQUIRED TO ALLOW POSITIVE DRAINAGE. NO SEPARATE PAYMENT WILL BE MADE FOR THIS WORK UNLESS OTHERWISE NOTED IN THE CONTRACT DOCUMENTS. THE CONTRACTOR SHALL COORDINATE THIS ACTIVITY WITH THE RELATED UTILITY COMPANIES, IF APPLICABLE. WARPING OF THE PAVEMENT SURFACE TO MEET THESE ITEMS WILL NOT BE PERMITTED.
22. ALL EXISTING SIGNS IN THE CONTRACT AREA ARE TO REMAIN INTACT. SIGNS DAMAGED SHALL BE REPLACED AT THE CONTRACTOR'S EXPENSE. ANY SIGNS THAT REQUIRE RESETTING SHALL BE PLACED IN A FINAL POSITION DETERMINED BY THE OWNER. NO SEPARATE PAYMENT SHALL BE MADE FOR THIS WORK. THE CONTRACTOR SHALL BE HELD RESPONSIBLE FOR SIGNS DAMAGED BY HIS OPERATIONS. THE CONTRACTOR SHALL BE RESPONSIBLE FOR ALL DAMAGES TO BURIED AND OVERHEAD UTILITIES LOCATED ON PUBLIC AND PRIVATE PROPERTY. THE CONTRACTOR SHALL BE RESPONSIBLE FOR ALL DAMAGES TO FACILITIES ON PUBLIC AND PRIVATE PROPERTY, SUCH AS, LANDSCAPING, DRIVEWAYS, CURBS, PAVEMENT, SIDEWALK, ETC.
23. CONTRACTOR IS RESPONSIBLE TO COORDINATE AND VERIFY THE EXTENT OF ALL DEMOLITION WITH THE ENGINEER PRIOR TO PERFORMING THE WORK.
24. CONTRACTOR SHALL RESTORE STAGING AREA BACK TO ITS ORIGINAL CONDITION INCLUDING GRADING, SEEDING ETC. EXISTING TREES, UTILITIES, LIGHT POLES, STONE, SIDEWALK, CURB, ETC. SHALL BE PROTECTED AND REPLACED IF DAMAGED. PROVIDE ELECTRICAL POWER, WATER, TELEPHONE, ETC. AS SPECIFIED FOR THE ENGINEERS TRAILER WHICH SHALL BE LOCATED IN THE STAGING AREA.

## SURVEY NOTES:

1. HORIZONTAL COORDINATES SHOWN HEREON REFER TO THE NORTH AMERICAN DATUM OF 1983 (NAD83), NEW YORK STATE PLANE COORDINATE SYSTEM, NEW YORK EAST ZONE 3101.
2. VERTICAL ELEVATIONS SHOWN HEREON REFER TO THE NORTH AMERICAN VERTICAL DATUM OF 1988 (NAVD88) WHICH IS BASED ON THE UNITED STATES COAST & GEODETIC SURVEY MEAN SEA LEVEL AT SANDY HOOK, NEW JERSEY.
3. LOCATION OF UTILITIES AS SHOWN ARE BASED UPON MAP TITLED "PARTIAL TOPOGRAPHICAL AND UTILITY SURVEY OF RYE PLAYLAND PARK" BY LKB LAST UPDATED SEPTEMBER 8, 2017.
4. LOCATIONS OF UNDERGROUND UTILITIES SHOWN ON THIS SURVEY ARE APPROXIMATE. RLT ENGINEERING, GEOLOGY, AND LAND SURVEYING, P.C., CANNOT GUARANTEE THE LOCATION OF UNDERGROUND UTILITIES AND STRUCTURES. THE STANDARD OF CARE USED BY RLT ENGINEERING, GEOLOGY, AND LAND SURVEYING, P.C. TO LOCATE THE UTILITIES IS REASONABLE AND CONSISTENT WITH THE LOCAL STANDARD OF CARE USED TO LOCATE THE UNDERGROUND UTILITIES. LOCATIONS AND SIZE ARE BASED ON UTILITY MARK-OUTS, AS-BUILT MAPS AND OTHER VISIBLE SURFACE EVIDENCE OBSERVED IN THE COURSE OF THIS SURVEY. PRIOR TO EXCAVATION OR CONSTRUCTION THE LOCATION, SIZE AND TYPE OF ALL UNDERGROUND UTILITY LOCATIONS MUST BE VERIFIED BY THE RESPECTIVE UTILITY COMPANY.
5. THE SUBJECT PROPERTY OF RYE PLAYLAND PARK FALLS WITHIN FEMA FLOOD ZONES AE (EL 12), AE (EL 13), VE (EL 14), VE (EL 15), VE (EL 16), VE (EL 17) AS SHOWN ON THE FEMA FLOOD INSURANCE RATE MAP COMMUNITY PANEL #36119C0358 F EFFECTIVE DATE SEPTEMBER 28, 2007 AND FEMA FLOOD INSURANCE RATE MAP COMMUNITY PANEL #36119C0356 F EFFECTIVE DATE SEPTEMBER 28, 2007. FEMA ELEVATIONS REFER TO NAVD88."

## DEMOLITION NOTES:

1. ALL REQUIRED DEMOLITION PERMITS MUST BE OBTAINED FROM ALL REQUIRED AGENCIES PRIOR TO COMMENCEMENT OF WORK.
2. ANY ASBESTOS REMOVAL MUST BE DONE BY A CERTIFIED ASBESTOS REMOVAL CONTRACTOR.
3. ALL UTILITY COMPANIES MUST BE NOTIFIED A MINIMUM OF 48 HOURS IN ADVANCE OF DEMOLITION.
4. FOR ALL UTILITIES, CONTRACTOR SHALL VERIFY DISCONNECT PRIOR TO DEMOLITION.
5. PROPER FENCING OR PUBLIC PROTECTION DEVICES MUST BE CONSTRUCTED AND MAINTAINED AROUND THE PERIMETER OF THE SITE AT ALL TIMES DURING DEMOLITION PHASE.
6. IT IS THE CONTRACTOR'S RESPONSIBILITY TO CONTROL DUST, DIRT, AND DEBRIS DURING DEMOLITION AND CONSTRUCTION PHASES.
7. IF SUSPICIOUS AND/OR HAZARDOUS MATERIAL IS ENCOUNTERED DURING DEMOLITION / CONSTRUCTION, ALL WORK SHALL STOP AND THE COUNTY DEPARTMENT OF HEALTH AND THE NEW YORK STATE DEPARTMENT OF ENVIRONMENTAL CONSERVATION SHALL BE NOTIFIED IMMEDIATELY. WORK SHALL NOT RESUME UNTIL THE CONTRACTOR HAS OUTLINED APPROPRIATE ACTION FOR DEALING WITH THE WASTE MATERIAL.
8. WHERE EXISTING CURB, GUTTER, SIDEWALK OR WALK IS TO BE REMOVED, IT SHALL BE SAW CUT OR REMOVED AT THE NEAREST JOINT.
9. THE CONTRACTOR SHALL PERFORM DAILY CLEANUP OPERATIONS WHICH INCLUDE SWEEPING OF THE ROADWAYS, REMOVAL OF DEBRIS (CUPS, PAPER BAGS, CANS, ETC.), REMOVAL OF EXCESS CONSTRUCTION MATERIALS, ALL TO THE SATISFACTION OF THE OWNER.
10. THE CONTRACTOR SHALL CONFORM TO ALL STATE AND LOCAL RULES, REGULATIONS AND LAWS WHICH SHALL GOVERN THE HAULING AND DISPOSING OF TREES, SHRUBS, STUMPS, ROOTS, RUBBISH, DEBRIS AND OTHER MATTER.
11. NO TREES , SHRUBS, ROOTS, BRANCHES, WOOD, CONCRETE OR OTHER DEBRIS SHALL BE BURIED IN FILLS, EMBANKMENTS OR STOCK PILES.
12. NO CLEARED MATTER, DEBRIS SHALL BE STORED AT THE CONSTRUCTION SITE.
13. CONTRACTOR SHALL GUARANTEE THAT WORK PERFORMED UNDER THIS CONTRACT WILL NOT PERMANENTLY DAMAGE TREES, SHRUBS, TURF OR PLANTS DESIGNATED TO REMAIN, OR OTHER ADJACENT WORK OR FACILITIES. IF DAMAGE RESULTING FROM CONTRACTOR'S OPERATIONS APPEARS DURING THE PERIOD UP TO 24 MONTHS AFTER COMPLETION OF THE PROJECT, THE CONTRACTOR SHALL REPLACE DAMAGED ITEMS AT HIS EXPENSE.
14. DAMAGE TO ANY EXISTING ITEMS, NOT SHOWN IN CONTRACT DOCUMENTS TO BE REMOVED, SUCH AS PAVEMENT, GRASSED AREAS, UTILITIES, STRUCTURES OR OTHER FACILITIES SHALL BE REPAIRED BY THE CONTRACTOR IMMEDIATELY AT HIS OWN EXPENSE TO THE SATISFACTION OF THE ENGINEER AND OWNER. ALL ASPHALT PAVEMENTS, GRASSED AREAS AND LANDSCAPING THAT ARE DAMAGED OR DISTURBED SHALL BE RESTORED IN ACCORDANCE WITH APPLICABLE SECTIONS ON THE CONTRACT SPECIFICATIONS.
15. EXCEPT AS NOTED BELOW, CONTRACTOR SHALL REMOVE FROM THE SITE AND SATISFACTORILY DISPOSE OF ALL TREES, SHRUBS, ROOTS, BRUSH, MASONRY, RUBBISH, SCRAP, DEBRIS, PAVEMENT, CURBS, FENCES AND MISCELLANEOUS OTHER ITEMS NOT COVERED UNDER OTHER SECTIONS AS SHOWN, SPECIFIED OR OTHERWISE REQUIRED TO PERMIT CONSTRUCTION OF NEW WORK.
16. BURNING OF MATERIAL IS EXPRESSLY FORBIDDEN.
17. TREES AND SHRUBS TO BE SAVED:

A. TREES AND SHRUBS WHICH ARE TO REMAIN SHALL BE PROTECTED BY FENCES, BARRICADES, WRAPPING OR OTHER MEANS OF PROTECTION. EQUIPMENT STORAGE, MATERIAL STOCKPILES, ETC., SHALL NOT BE PERMITTED WITHIN TREE BRANCH SPREAD.

B. PROTECT ALL OTHER TREES AND SHRUBS FROM DEFACEMENT, INJURY AND DESTRUCTION. PRESERVE TREES WITHIN THE CONTRACT LIMITS THAT ARE SO DELINEATED ON THE PLANS OR AS MARKED IN THE FIELD BY THE ENGINEER. ALSO, ALL TO BE SAVED SHALL BE PROTECTED IN ACCORDANCE WITH THE CONTRACT DOCUMENTS.

C. DO NOT CUT ROOTS UNNECESSARILY; HANDWORK OR OTHER METHODS SHALL BE IMPLEMENTED TO PREVENT DAMAGE TO ROOTS WHICH EXTEND INTO GRADING LIMITS OR LIMITS OF EXCAVATION. DISTURB ROOTS AS LITTLE AS POSSIBLE WHEN TUNNELING UNDER TREES. BACKFILLING AROUND TREE ROOTS SHALL BE DONE IMMEDIATELY AFTER COMPLETION OF CONSTRUCTION IN THE VICINITY OF TREES.

D. THE CONTRACTOR SHALL BE RESPONSIBLE FOR THE PROTECTION OF ALL VEGETATION FROM DAMAGE RESULTING FROM EMISSIONS FROM MOTORIZED EQUIPMENT.

E. CONTRACTOR SHALL BE VIGILANT OF ANY OVERHEAD UTILITY LINES WHEN USING AERIAL EQUIPMENT FOR TREE TRIMMING OPERATIONS.

F. DURING WORKING OPERATION, PROTECT THE TRUNK, FOLIAGE, AND ROOT SYSTEM OF ALL TREES TO BE SAVED WITH BOARDS OR OTHER GUARDS AND AS REQUIRED TO PREVENT DAMAGE, INJURY AND DEFACEMENT. DO NOT PILE EXCAVATED MATERIAL ADJACENT TO THE BASE OF ANY TREES. DO NOT ALLOW RUNOFF TO ACCUMULATE AROUND BASE OF TREES. DO NOT FASTEN OR ATTACH ROPES, CABLE OR GUY WIRES TO TREES WITHOUT PERMISSION OF THE ENGINEER. WHEN SUCH PERMISSION IS GRANTED, PROTECT THE TREE BEFORE MAKING FASTENING OR ATTACHMENTS BY PROVIDING BURLAP WRAPPING AND SOFTWOOD CLEATS. THE CONTRACTOR SHALL BE HELD RESPONSIBLE FOR DAMAGE RESULTING FROM THESE ACTIONS. USE OF AXES OR CLIMBING SPURS FOR TRIMMING WILL NOT BE PERMITTED. PROVIDE CLIMBING ROPES DURING TRIMMING.

G. REMOVE SHRUBS TO BE SAVED, TAKING A SUFFICIENT EARTH BALL AT THE ROOTS TO MAINTAIN THE SHRUB. TEMPORARILY REPLANT IF REQUIRED, AND REPLACE AT THE COMPLETION OF CONSTRUCTION IN CONDITION EQUALING THE ORIGINAL.

H. TREE AND SHRUB REPAIR WHERE REQUIRED SHALL BE PERFORMED BY A TREE SURGEON.

I. TREES AND SHRUBS INTENDED TO REMAIN WHICH ARE DAMAGED BEYOND REPAIR BY CONSTRUCTION, SHALL BE REPLACED BY THE CONTRACTOR AT NO EXPENSE TO THE OWNER.

## SITE NOTES:

1. THE CONTRACTOR SHALL PERFORM ALL WORK IN COMPLIANCE WITH TITLE 29 OF FEDERAL REGULATIONS, PART 1926, SAFETY AND HEALTH REGULATIONS FOR CONSTRUCTION(OSHA).
2. HIGHWAY DRAINAGE ALONG ALL ROADS AND PRIVATE DRIVES SHALL BE KEPT CLEAN OF MUD, DEBRIS ETC. AT ALL TIMES.
3. REFER TO ARCHITECTURAL DRAWINGS FOR BUILDING INFORMATION.
4. THE CONTRACTOR SHALL CONSULT THE DESIGN ENGINEER BEFORE DEVIATING FROM THESE PLANS.
5. IN ALL TRENCH EXCAVATIONS, CONTRACTOR MUST LAY THE TRENCH SIDE SLOPES BACK TO A SAFE SLOPE, USE A TRENCH SHIELD OR PROVIDE SHEETING AND BRACING IF REQUIRED.
6. THE CONTRACTOR SHALL TAKE PRECAUTIONS TO MAINTAIN A MINIMUM OF 2' OF COVER OVER ALL EXISTING AND NEW STORM AND SANITARY PIPES DURING CONSTRUCTION.
7. ALL EXISTING SURFACE APPURTENANCES (I.E. WATER VALVES, CATCH BASIN FRAMES AND GRATES, MANHOLE COVERS) WITHIN THE PROJECT LIMITS SHALL BE ADJUSTED TO FINISHED GRADE.
8. UNLESS COVERED BY THE CONTRACT SPECIFICATIONS OR AS NOTED ON THE PLANS, ALL WORK SHALL CONFORM TO THE NEW YORK STATE DEPARTMENT OF TRANSPORTATION STANDARD SPECIFICATIONS DATED JANUARY 1, 2020 AND ANY SUBSEQUENT APPENDICES.

## UTILITY NOTES:

1. APPROXIMATE LOCATION OF KNOWN UTILITY STRUCTURES AND FACILITIES THAT MAY BE ENCOUNTERED WITHIN AND ADJACENT TO THE LIMITS OF WORK ARE SHOWN ON THE PLANS. THE ACCURACY AND COMPLETENESS OF THIS INFORMATION IS NOT GUARANTEED BY THE ENGINEER. THE CONTRACTOR IS ADVISED TO VERIFY IN FIELD ALL THE FACTS CONCERNING THE UTILITY LOCATIONS AND OTHER CONSTRUCTION OBSTACLES PRIOR TO CONSTRUCTION OF ANY DISCREPANCIES WHICH MAY AFFECT PROJECT DESIGN AND/OR SCOPE.
2. ALL ABANDONED WATER LINES SHALL BE CUT AND CAPPED IN ACCORDANCE WITH WESTCHESTER COUNTY REQUIREMENTS.
3. TRENCH DETAILS ARE INTENDED TO PROVIDE INFORMATION REGARDING BACKFILLING MATERIALS AND GENERAL MATERIAL DEPTHS ONLY. THE CONTRACTOR SHALL BE RESPONSIBLE FOR THE MEANS AND METHODS OF CONSTRUCTION AND SHALL PROVIDE APPROPRIATE SAFETY MEASURES, SHEETING AND BRACING AS NECESSARY. SHEETING CONDITIONS ARE TO BE DESIGNED BY A NEW YORK STATE LICENSED PROFESSIONAL ENGINEER AND SUBMITTED TO THE DESIGN ENGINEER FOR APPROVAL. THE DESIGN ENGINEER ASSUMES NO RESPONSIBILITY OR LIABILITY FOR FIELD CONDITIONS, TRENCHING OR BACKFILLING OPERATIONS DURING CONSTRUCTION. THE CONTRACTOR SHALL COMPLY WITH ALL APPLICABLE OSHA STANDARDS AND DETAILS FOR TRENCH EXCAVATION.
4. CONTRACTOR SHALL BE RESPONSIBLE FOR DEWATERING AND PRECLUDING PONDING OF WATER IN ALL AREAS. DEWATERING OPERATIONS SHALL BE IN ACCORDANCE WITH NYSDEC REGULATIONS, THE PROJECT STORMWATER POLLUTION PREVENTION PLAN AND WESTCHESTER COUNTY.
5. THE CONTRACTOR SHALL COMPLY WITH THE LATEST OSHA CONFINED SPACE ENTRY REQUIREMENTS (29 CFR PART 1910).
6. THE CONTRACTOR SHALL COMPLY WITH THE LATEST REVISED OSHA SHEETING REQUIREMENTS (29 CFR PART 1926.650, 651, 652).
7. ALL EXISTING UTILITIES THAT ARE TO REMAIN IN SERVICE AND THAT INTERFERE WITH THE WORK SHALL BE RELOCATED UNLESS OTHERWISE SHOWN.
8. ALL ABANDONED PIPES SHALL BE PLUGGED, REMOVED, CRUSHED OR FILLED WITH A SUITABLE MATERIAL AS DIRECTED BY THE ENGINEERS, ABANDONED PIPES 12" INSIDE DIAMETER AND LARGER MUST BE REMOVED, FILLED OR CRUSHED IN PLACE. SMALLER PIPES SHALL BE PLUGGED AND ABANDONED IN PLACE UNLESS OTHERWISE DIRECTED BY THE ENGINEER.
9. THE CONTRACTOR SHALL CONTACT THE UTILITY COMPANIES TO DETERMINE THEIR SCHEDULE FOR PERFORMING UTILITY RELOCATION AND INSTALLATION WORK. THE CONTRACTOR SHALL SCHEDULE THEIR WORK ACCORDINGLY IN ORDER TO NOT INTERFERE WITH THE WORK OF THE UTILITY COMPANIES.
10. TRENCHES SHALL BE BACKFILLED WITHOUT DELAY. OPEN TRENCHES SHALL BE TEMPORARILY SUPPORTED AND STEEL PLATED WHEN WORK IS NOT IN PROGRESS. CONTRACTOR MUST ENSURE NO TRENCHES ARE LEFT OPEN OVERNIGHT. THE CONTRACTOR IS RESPONSIBLE FOR THE DESIGN AND INSTALLATION OF STEEL PLATES THAT ARE CAPABLE OF SAFELY SUPPORTING THE SUBJECTED LOADS.
11. THE CONTRACTOR SHALL BE RESPONSIBLE FOR PROVIDING TEMPORARY LIGHTING WITHIN THE LIMITS OF CONSTRUCTION AND FOR ALL AREAS WHERE WHERE EXISTING STREET AND AREA LIGHTING SHUT-DOWN IS REQUIRED TO INSTALL NEW LIGHTING AND ELECTRICAL SERVICE.
12. ALL CMP PIPES SHALL FOLLOW NYSDOT SECTION 602-2 AND 707.02, BE HELICAL BITUMINOUS COATED, SHALL HAVE GASKETED AND BANDED JOINTS AND BE OF THE FOLLOWING PIPE GAUGES UNLESS OTHERWISE SPECIFIED.

   10" TO 21" - 14 GAUGE
   24" TO 30" - 12 GAUGE
   30" TO 60" - 10 GAUGE
13. IN INSTANCES WHERE THE STORM SEWER CROSSES THE SANITARY SEWER A CRUSHED STONE ENCASEMENT SHALL BE PROVIDED AROUND THE SANITARY SEWER UP TO THE STORM SEWER-COMPACT WITH APPROVED EQUIPMENT
14. ALL CATCH BASINS AND STORM MANHOLES WITHIN PAVEMENT TO BE CONSTRUCTED TO WITHSTAND H-20 LOADING.
15. ALL EXISTING CATCH BASINS WITHIN WORK LIMITS TO BE CLEANED OF ANY DEBRIS OR SILT.

## GRADING NOTES:

1. REMOVE AND STOCKPILE TOPSOIL AS DIRECTED BY THE CONSTRUCTION MANAGER. REPLACE TOPSOIL TO A MINIMUM 4" DEPTH. ALL DISTURBED AREAS TO BE HYDROSEEDED AS DIRECTED BY THE CONSTRUCTION MANAGER.
2. CONTRACTOR SHALL BE RESPONSIBLE FOR THE MAINTENANCE AND REMOVAL OF TEMPORARY SEDIMENTATION CONTROLS, INCLUDING SILT SINK AND SILT FENCE. EROSION CONTROL MEASURES SHALL NOT BE REMOVED BEFORE VEGETATION HAS OCCURRED COMPLETELY.
3. ALL SILT FENCE TO BE REPLACED WHENEVER THEY BECOME CLOGGED OR INOPERABLE AND SHALL BE REPLACED AS DIRECTED BY THE ENGINEER.
4. THE CONTRACTOR SHALL BE RESPONSIBLE FOR RESTORATION OF TOPSOIL TO ALL DISTURBED AREAS. IT IS THE CONTRACTOR'S RESPONSIBILITY TO MAINTAIN EROSION CONTROL MEASURES AT ALL TIMES.
5. EROSION CONTROL MEASURES WILL BE IMPLEMENTED IN ACCORDANCE WITH THE NEW YORK STATE GUIDELINES FOR URBAN EROSION SEDIMENT CONTROL MANUAL, WESTCHESTER COUNTY HEALTH DEPARTMENT, AND THE CITY OF RYE REQUIREMENTS.
6. ALL INLETS TO THE STORM SEWER SHALL HAVE STONE DROP INLET PROTECTION. THE CONTRACTOR SHALL BE RESPONSIBLE FOR MAINTAINING THE BEST MANAGEMENT PRACTICES (BMP'S) UNTIL GROUND COVER IS ESTABLISHED.
7. SILT FENCE, JUTE MESH, AND/OR EROSION CONTROL BLANKETS WILL BE USED ON STEEP SLOPES AND WHEREVER NECESSARY TO CONTROL EROSION AND SILTATION OF EXISTING DRAINAGE SYSTEMS AS ORDERED BY THE ENGINEER OR SPECIFIED ON PLANS.
8. THE CONTRACTOR SHALL DESIGNATE A MEMBER OF HIS/HER FIRM TO BE RESPONSIBLE TO MONITOR EROSION CONTROL, EROSION CONTROL STRUCTURES, TREE PROTECTION AND PRESERVATION THROUGHOUT CONSTRUCTION.
9. ALL DISTURBED AREAS SHALL BE PROTECTED FROM EROSION EITHER BY MULCH OR TEMPORARY SEEDING WITHIN 2 WEEKS OF DISTURBANCE.

## SOIL EROSION AND SEDIMENT CONTROL NOTES:

1. ALL SOIL EROSION AND SEDIMENT CONTROL PRACTICES TO BE INSTALLED PRIOR TO ANY SOIL DISTURBANCE, OR IN THEIR PROPER SEQUENCE, AND MAINTAINED UNTIL PERMANENT PROTECTION IS ESTABLISHED. CONTRACTOR SHALL COMPLY WITH ALL REQUIREMENTS OF THE STORMWATER POLLUTION PREVENTION PLAN.
2. ANY DISTURBED AREAS THAT WILL NOT RECEIVE PERMANENT RESTORATION WITHIN TEN (10) DAYS AFTER FINAL GRADING, AND NOT SUBJECT TO CONSTRUCTION TRAFFIC, WILL IMMEDIATELY RECEIVE A TEMPORARY COVER. THE DISTURBED AREAS WILL BE MULCHED WITH STRAW, OR EQUIVALENT MATERIAL AT A RATE OF TWO (2) TONS PER ACRE, ACCORDING TO STATE STANDARDS.
3. PERMANENT VEGETATION TO BE SEEDED OR SODDED ON ALL EXPOSED AREAS WITHIN TEN (10) DAYS AFTER FINAL GRADING. MULCH WILL BE USED AS NECESSARY FOR PROTECTION UNTIL SEEDING IS ESTABLISHED.
4. ALL WORK TO BE DONE IN ACCORDANCE WITH THE STANDARDS FOR SOIL EROSION AND SEDIMENT CONTROL IN THE STATE OF NEW YORK.
5. A SUB-BASE COURSE DETAIL WILL BE APPLIED IMMEDIATELY FOLLOWING ROUGH GRADING AND INSTALLATION OF IMPROVEMENTS IN ORDER TO STABILIZE ROADS, DRIVEWAYS PARKING AREAS AND SIDEWALKS. IN AREAS WHERE NO UTILITIES ARE PRESENT, THE SUB-BASE SHALL BE INSTALLED WITHIN 15 DAYS OF THE PRELIMINARY GRADING.
6. IMMEDIATELY FOLLOWING INITIAL DISTURBANCE OR ROUGH GRADING, ALL CRITICAL AREAS SUBJECT TO EROSION (I.E.; STEEP SLOPES AND ROADWAY EMBANKMENTS) WILL RECEIVE A TEMPORARY COVER OF STRAW MULCH OR A SUITABLE EQUIVALENT AT A RATE OF TWO (2) TONS PER ACRE, ACCORDING TO NYS STANDARDS.
7. ANY STEEP SLOPES RECEIVING PIPELINE INSTALLATION WILL BE BACKFILLED AND STABILIZED DAILY, AS THE INSTALLATION PROCEEDS (I.E.; SLOPES GREATER THAN 3:1).
8. IN ACCORDANCE WITH THE STANDARDS FOR PERMANENT VEGETATIVE COVER FOR SOIL STABILIZATION, ANY SOIL HAVING A pH OF 4 OR LESS OR CONTAINING IRON SULFIDES SHALL BE COVERED WITH A MINIMUM OF 12 INCHES OF SOIL HAVING A pH OF 5 OR GREATER PRIOR TO SEEDBED PREPARATION.
9. WESTCHESTER COUNTY AND THE ENGINEER, SHALL BE NOTIFIED 72 HOURS IN ADVANCE OF ANY LAND DISTURBING ACTIVITY.
10. AT THE TIME WHEN THE SITE PREPARATION FOR PERMANENT VEGETATIVE STABILIZATION IS GOING TO BE ACCOMPLISHED, ANY SOIL THAT WILL NOT PROVIDE A SUITABLE ENVIRONMENT TO SUPPORT ADEQUATE VEGETATIVE GROUND COVER, SHALL BE REMOVED OR TREATED IN SUCH A WAY THAT WILL PERMANENTLY ADJUST THE SOIL CONDITIONS AND RENDER IT SUITABLE FOR VEGETATIVE COVER. IF THE REMOVAL OR TREATMENT OF THE SOIL WILL NOT PROVIDE SUITABLE CONDITIONS, NON-VEGETATIVE MEANS OF PERMANENT GROUND STABILIZATION WILL HAVE TO BE EMPLOYED.
11. THE CONTRACTOR SHALL TAKE NECESSARY MEASURES TO MAINTAIN DUST CONTROL. DIRT HAUL ROADS SHALL BE SPRINKLED WITH WATER OR GIVEN A SURFACE OF CRUSHED STONES OR WOOD CHIPS AS REQUIRED. VEHICLES SHALL BE CLEANED, AS NECESSARY, PRIOR TO USING PUBLIC STREETS. PAVED ROADS SHALL BE SPRINKLED WITH WATER.
12. ALL SOIL EROSION AND SEDIMENT CONTROL DEVICES SHALL BE LOCATED IN THE FIELD AS REQUIRED OR AT THE DIRECTION OF THE ENGINEER. THE CONTRACT DRAWING ARE NOT INTENDED TO SHOW THE LOCATION AND DETAILS FOR ALL SUCH DEVICES BUT ARE TO BE USED AS A REASONABLE GUIDE.
13. ANY CHANGES TO THE SOIL AND SEDIMENT CONTROL PLANS WILL REQUIRE THE SUBMISSION OF REVISED SOIL EROSION AND SEDIMENT CONTROL PLANS TO WESTCHESTER COUNTY AND THE ENGINEER. THE REVISED PLANS MUST BE PREPARED BY THE CONTRACTOR AND MUST MEET ALL CURRENT NYS SOIL EROSION AND SEDIMENT CONTROL PRACTICES.
14. CONTRACTOR SHALL OBTAIN ALL REQUIRED SEDIMENT CONTROL PERMITS.
15. UPON COMPLETION OF CONSTRUCTION WORK AND AFTER FINAL GRADING AND WHEN PERMANENT STABILIZATION HAS BEEN ESTABLISHED, STRAW BALES, SILT FENCES AND ALL OTHER SOIL PLAN APPURTENANCES WILL BE REMOVED AND DISPOSED OF BY THE CONTRACTOR, UNLESS ORDERED TO REMAIN BY THE ENGINEER.
16. ALL EXCESS EXCAVATED MATERIAL, EXCEPT FOR TOP SOIL, WILL BE REMOVED FROM THE SITE BY THE CONTRACTOR IN ACCORDANCE WITH THE CONTRACT DOCUMENTS.
17. CONDUIT OUTLETS AND CATCH BASIN INLETS MUST BE PROTECTED PRIOR TO START OF CONSTRUCTION.
18. THE CONTRACTOR SHALL PROVIDE A DETAILED SEQUENCE OF CONSTRUCTION OPERATIONS FOR REVIEW AND SUBMITTAL TO WESTCHESTER COUNTY AND THE ENGINEER.
19. THE CONTRACTOR SHALL MEET ENGINEER ON-SITE TO DEFINE THOSE AREAS WHICH WILL REQUIRE SOIL EROSION AND SEDIMENT CONTROL FACILITIES, DISCUSS THEIR CONSTRUCTION AND THEREAFTER PROVIDE DETAILED PLANS FOR REVIEW OF SUCH FACILITIES BY WESTCHESTER COUNTY AND THE ENGINEER.
20. ALL SOIL EROSION AND SEDIMENT CONTROL PRACTICES SHALL BE IN PLACE WHERE POSSIBLE PRIOR TO, OR IMMEDIATELY FOLLOWING SITE AND ACCESS CLEARING.
21. ALL SOIL EROSION AND SEDIMENT CONTROL PRACTICES SHALL BE LEFT IN PLACE AND MAINTAINED; INCLUDING SILT AND SEDIMENT REMOVAL, UNTIL CONSTRUCTION IS COMPLETED, AREA STABILIZED AND THE ENGINEER SO DIRECTS.
22. CONTRACTOR SHALL CONFINE SOIL DISTURBANCE ACTIVITY TO THE AREAS CONTAINED WITHIN THE "LIMIT OF DISTURBANCE" LINES EXCEPT AS DIRECTED BY THE ENGINEER AND IN ACCORDANCE AND COORDINATION WITH ADJACENT CONTRACTS. SUCH ACTIVITY SHALL SHALL ESSENTIALLY CONSIST OF CLEARING, GRUBBING, GRADING AND CONSTRUCTION IN AREAS DEFINED AS BUILDINGS, PIPELINE, PARKING AREAS, DRIVES AND WALKWAYS OR AS MAY BE REQUIRED DUE TO GRADE CHANGES OR RETAINING WALLS.
23. ALL DEWATERING OPERATIONS MUST DISCHARGE DIRECTLY INTO A SEDIMENT FILTER AREA. SEDIMENT FILTER SHALL BE INSTALLED IN ACCORDANCE WITH THE CONTRACT DOCUMENTS AND THE DETAILS OF DESIGN AND CONSTRUCTION SHALL PREPARED AND SUBMITTED BY THE CONTRACTOR TO THE ENGINEER, AND ALL OTHER PERTINENT AGENCIES FOR REVIEW.
24. SOIL STABILIZATION METHODS SHALL BE UNDERTAKEN COINCIDENTALLY WITH ALL SITE IMPROVEMENTS AND CONTINUE DURING THE CONSTRUCTION ACTIVITY PERIOD.
25. THE LIMITS OF FENCING FOR TREE PROTECTION WILL BE DETERMINED IN THE FIELD PRIOR TO CONSTRUCTION AND WILL INCLUDE THE TREE CANOPY.
26. COMPLY WITH GENERAL PERMIT GP-0-20-001, AS OUTLINED IN THE STORM WATER PREVENTION PLAN (SWPPP).

6/15/2022 4:10:27 PM

CONSULTANT INFORMATION
LiRo Engineers, Inc.
A LiRo Group Company
Mineola, N.Y. 516-746-2350[T]

CONSULTANT SEAL
STATE OF NEW YORK · KENNETH J. HOLMSTROM · LICENSED PROFESSIONAL ENGINEER · No. 059134

| REVISION NUMBER | DATE | MADE BY | APP'D BY | REVISION |
|---|---|---|---|---|

RECORD DRAWING CERTIFICATION
☐ AS BUILT - CHANGES AS NOTED ☐ AS BUILT - NO CHANGES

CONTRACTOR
NAME ______
SIGNATURE ______
TITLE ______ DATE ______

PROJECT COORDINATOR
NAME ______
SIGNATURE ______
TITLE ______ DATE ______

WESTCHESTER COUNTY, NEW YORK
DEPARTMENT OF PUBLIC WORKS AND TRANSPORTATION
DIVISION OF ENGINEERING

**INFRASTRUCTURE REHABILITATION PHASE 3**
**PLAYLAND PARK, RYE, NEW YORK**
**CROSS AXIS BUILDING D**
**GENERAL NOTES**

| | |
|---|---|
| CONTRACT NUMBER: **22-523** | SHEET NUMBER: **CXD-C-01** |
| DWG NO.: 244 of 664 | |
| SCALE: **-** | |
| DATE: **08/23/2022** | |
| DPW FILE NUMBER: **1-118-C-993-0** | REV. NO. **0** |

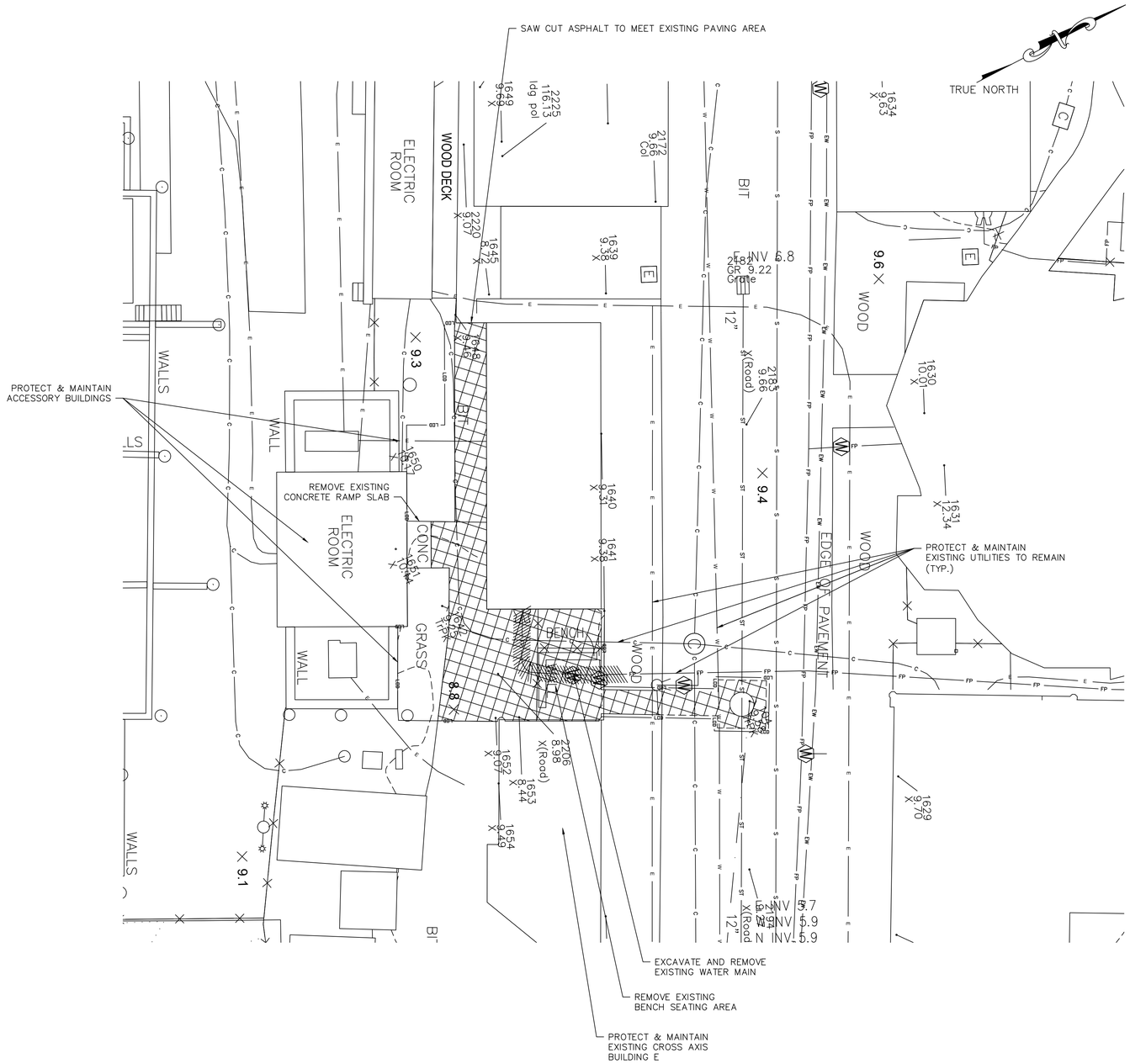


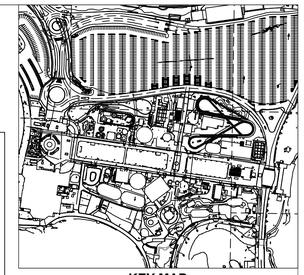

**KEY MAP**

NOT TO SCALE

## EXISTING LEGEND

- POST
- UTILITY POLE
- SIGN
- HANDICAP PARKING
- GROUND LIGHT
- LIGHT POLE
- UTILITY POLE WITH LIGHT
- LIGHT POLE (SINGLE LIGHT)
- LIGHT POLE (DOUBLE LIGHT)
- LIGHT POLE (MULTI LIGHT)
- BOAT TIE-OFF CLEAT
- CATCH BASIN
- TRENCH DRAIN
- MAILBOX
- UNKNOWN MANHOLE
- COMMUNICATIONS BOX/HAND HOLE
- ELECTRIC HAND HOLE
- ELECTRIC BOX
- GAS METER
- IRRIGATION BOX
- UNKNOWN UTILITY BOX/HAND HOLE
- COMMUNICATION MANHOLE
- DRAINAGE MANHOLE
- ELECTRIC MANHOLE
- SEWER MANHOLE
- STORM SEWER MANHOLE
- SEWER CLEANOUT
- HYDRANT
- SIAMESE CONNECTION
- UNKNOWN VALVE
- WATER VALVE
- GAS VALVE
- WATER SPIGOT OR FOUNTAIN
- MONITORING WELL
- DECIDUOUS BUSH
- EVERGREEN BUSH
- DECIDUOUS TREE
- EVERGREEN TREE
- STUMP
- HEDGE ROW
- TREELINE
- BRUSHLINE
- RETAINING WALL
- GUIDE RAIL
- STONE WALL
- WATERLINE
- FENCE
- UNDERGROUND COMMUNICATION
- UNDERGROUND PROPANE
- UNDERGROUND ELECTRICAL
- UNDERGROUND STREET LIGHTING
- UNDERGROUND ENVIRONMENTAL WASTEWATER
- UNDERGROUND SEWER
- UNDERGROUND STORM SEWER
- UNDERGROUND WATER
- UNDERGROUND FIRE PROTECTION
- EXISTING MAJOR CONTOUR
- EXISTING MINOR CONTOUR

PROPOSED LEGEND:

- SAW CUTTING ASPHALT CONCRETE
- LIMITS OF DISTURBANCE
- LIMITS OF PAVEMENT REMOVAL
- AREA OF ASPHALT PAVEMENT REMOVAL (FULL DEPTH & EXCAVATION)
- DRAINAGE STRUCTURE INLET PROTECTION
- PIPE REMOVAL

NOTES:

1. PAVEMENT REMOVAL, MILLING AND EXCAVATION, MATERIAL SHALL NOT BE STOCKPILED ON SITE.

2. EXISTING GRADES, PIPE LOCATIONS, SIZES, MATERIAL, INVERTS AND OTHER EXISTING CONDITIONS ARE SHOWN ON THE DRAWINGS FROM AVAILABLE AS-BUILT DRAWINGS AND FIELD SURVEY BY OTHERS. IT SHALL BE THE RESPONSIBILITY OF THE CONTRACTOR TO VERIFY ALL EXISTING CONDITIONS.

3. THE CONTRACTOR SHALL TAKE PROPER PRECAUTIONS NOT TO DAMAGE ANY EXISTING SITE CONDITIONS SPECIFICALLY EXCLUDED FROM THE CONTRACT AND WILL BE HELD SOLELY RESPONSIBLE FOR ANY DAMAGE OCCURRING DURING THE COURSE OF THE WORK DURING CONSTRUCTION. THE CONTRACTOR SHALL, AT THEIR OWN EXPENSE, MAKE ALL REPAIRS REQUIRED TO RESTORE ANY DAMAGED AREAS TO ORIGINAL CONDITIONS.

New York 811 — Know what's below. Call before you dig.

0 10 20 30

1'=10' SCALE BAR

6/15/2022 4:10:27 PM

CONSULTANT INFORMATION

LiRo Engineers, Inc.
A LiRo Group Company
Mineola, N.Y. 516-746-2350[T]

CONSULTANT SEAL

STATE OF NEW YORK · KENNETH J. HOUSEMAN · LICENSE NO. 059134 · LICENSED PROFESSIONAL ENGINEER

| REVISION NUMBER | DATE | MADE BY | APP'D BY | REVISION |
|---|---|---|---|---|
| | | | | |

RECORD DRAWING CERTIFICATION

☐ AS BUILT – CHANGES AS NOTED ☐ AS BUILT – NO CHANGES

CONTRACTOR: NAME / SIGNATURE / TITLE / DATE

PROJECT COORDINATOR: NAME / SIGNATURE / TITLE / DATE

WESTCHESTER COUNTY, NEW YORK
DEPARTMENT OF PUBLIC WORKS AND TRANSPORTATION
DIVISION OF ENGINEERING

**INFRASTRUCTURE REHABILITATION PHASE 3**
**PLAYLAND PARK, RYE, NEW YORK**
**CROSS AXIS BUILDING D**
**EXISTING CONDITIONS/DEMOLITION PLAN**

| | |
|---|---|
| CONTRACT NUMBER | 22-523 |
| SHEET NUMBER | CXD-C-02 |
| DWG NO.: | 245 of 664 |
| SCALE: | 1"=10' |
| DATE: | 08/23/2022 |
| DPW FILE NUMBER | 1-118-C-994-0 |
| REV. NO. | 0 |

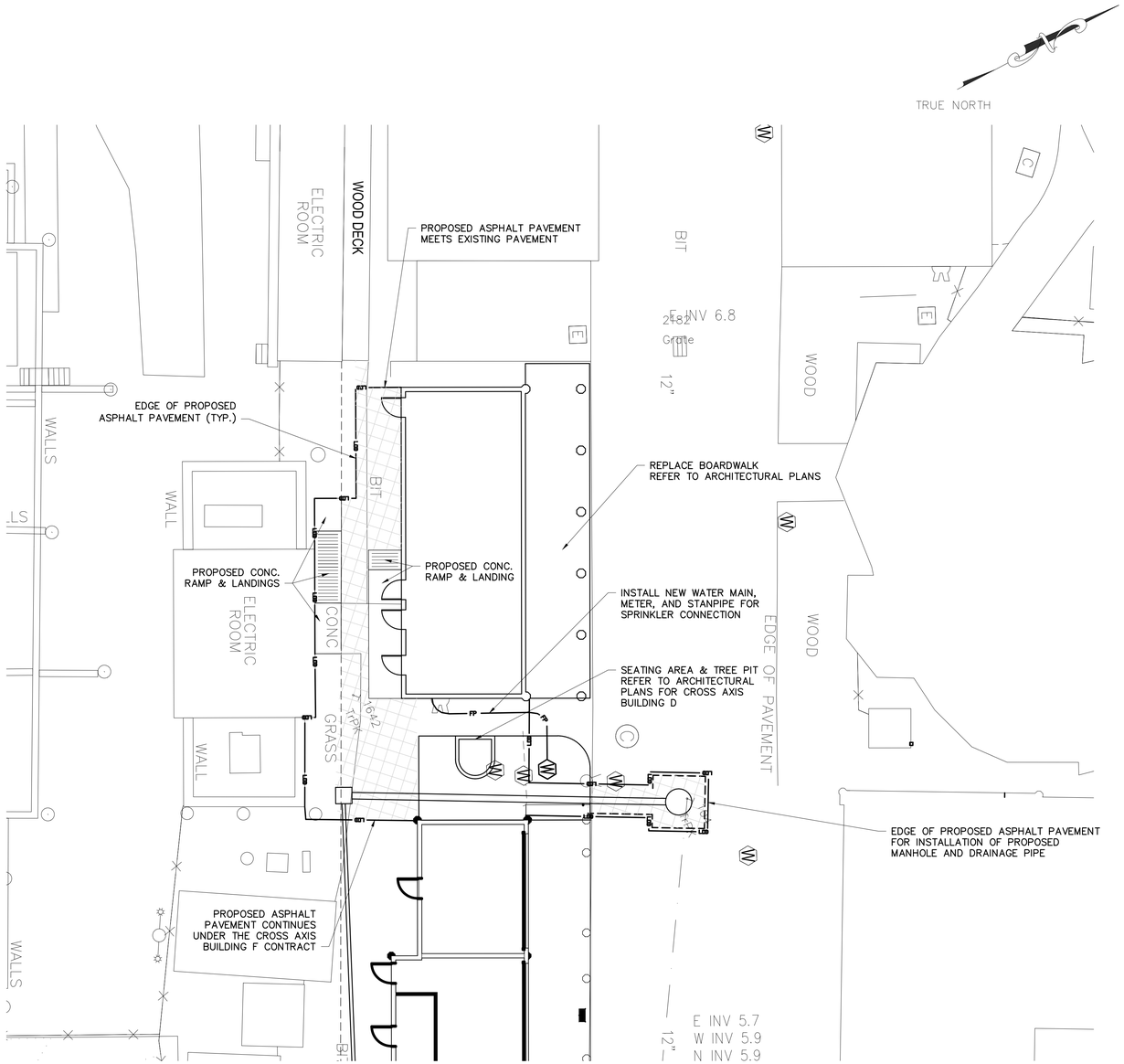


## EXISTING LEGEND

- POST
- UTILITY POLE
- SIGN
- HANDICAP PARKING
- GROUND LIGHT
- LIGHT POLE
- UTILITY POLE WITH LIGHT
- LIGHT POLE (SINGLE LIGHT)
- LIGHT POLE (DOUBLE LIGHT)
- LIGHT POLE (MULTI LIGHT)
- BOAT TIE-OFF CLEAT
- CATCH BASIN
- TRENCH DRAIN
- MAILBOX
- UNKNOWN MANHOLE
- COMMUNICATIONS BOX/HAND HOLE
- ELECTRIC HAND HOLE
- ELECTRIC BOX
- GAS METER
- IRRIGATION BOX
- UNKNOWN UTILITY BOX/HAND HOLE
- COMMUNICATION MANHOLE
- DRAINAGE MANHOLE
- ELECTRIC MANHOLE
- SEWER MANHOLE
- STORM SEWER MANHOLE
- SEWER CLEANOUT
- HYDRANT
- SIAMESE CONNECTION
- UNKNOWN VALVE
- WATER VALVE
- GAS VALVE
- WATER SPIGOT OR FOUNTAIN
- MONITORING WELL
- DECIDUOUS BUSH
- EVERGREEN BUSH
- DECIDUOUS TREE
- EVERGREEN TREE
- STUMP
- HEDGE ROW
- TREELINE
- BRUSHLINE
- RETAINING WALL
- GUIDE RAIL
- STONE WALL
- FENCE

## PROPOSED LEGEND:

- MOVABLE CONSTRUCTION FENCE
- SAW CUTTING ASPHALT CONCRETE
- LIMITS OF DISTURBANCE
- LIMITS OF PAVEMENT REMOVAL
- AREA OF FULL DEPTH ASPHALT PAVEMENT
- DRAINAGE STRUCTURE INLET PROTECTION

0 10 20 30

1'=10' SCALE BAR

6/15/2022 4:10:27 PM

CONSULTANT INFORMATION

LiRo Engineers, Inc.
A LiRo Group Company
Mineola, N.Y. 516-746-2350[T]

CONSULTANT SEAL

STATE OF NEW YORK · KENNETH J. HOCHUL · LICENSED PROFESSIONAL ENGINEER · 059134

| REVISION NUMBER | DATE | MADE BY | APP'D BY | REVISION |
|---|---|---|---|---|

RECORD DRAWING CERTIFICATION

☐ AS BUILT – CHANGES AS NOTED ☐ AS BUILT – NO CHANGES

CONTRACTOR
NAME
SIGNATURE
TITLE DATE

PROJECT COORDINATOR
NAME
SIGNATURE
TITLE DATE

WESTCHESTER COUNTY, NEW YORK
DEPARTMENT OF PUBLIC WORKS AND TRANSPORTATION
DIVISION OF ENGINEERING

**INFRASTRUCTURE REHABILITATION PHASE 3**
**PLAYLAND PARK, RYE, NEW YORK**
**CROSS AXIS BUILDING D**
**SITE CONSTRUCTION PLAN**

| | |
|---|---|
| CONTRACT NUMBER | 22-523 |
| SHEET NUMBER | CXD-C-03 |
| DWG NO.: | 246 of 664 |
| SCALE: | 1"=10' |
| DATE: | 08/23/2022 |
| DPW FILE NUMBER | 1-118-C-995-0 |
| REV. NO. | 0 |

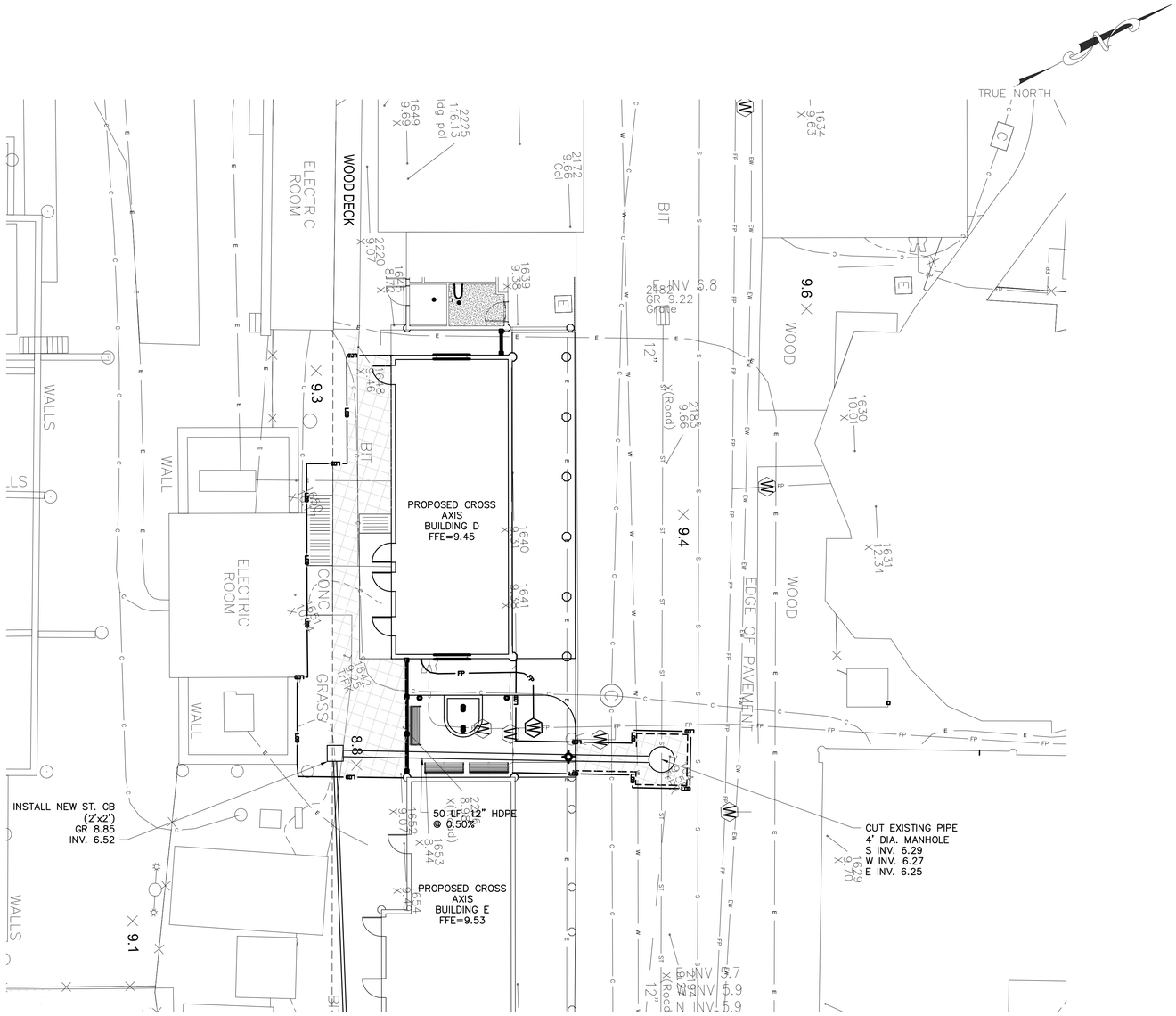


NOTE:
NO WATER AND SEWER SUPPLY NEEDED FOR THIS BUILDING. SEE FIRE PROTECTION PLAN FOR DETAILS

## EXISTING LEGEND

- POST
- UTILITY POLE
- SIGN
- HANDICAP PARKING
- GROUND LIGHT
- LIGHT POLE
- UTILITY POLE WITH LIGHT
- LIGHT POLE (SINGLE LIGHT)
- LIGHT POLE (DOUBLE LIGHT)
- LIGHT POLE (MULTI LIGHT)
- BOAT TIE-OFF CLEAT
- CATCH BASIN
- TRENCH DRAIN
- MAILBOX
- UNKNOWN MANHOLE
- COMMUNICATIONS BOX/HAND HOLE
- ELECTRIC HAND HOLE
- ELECTRIC BOX
- GAS METER
- IRRIGATION BOX
- UNKNOWN UTILITY BOX/HAND HOLE
- COMMUNICATION MANHOLE
- DRAINAGE MANHOLE
- ELECTRIC MANHOLE
- SEWER MANHOLE
- STORM SEWER MANHOLE
- SEWER CLEANOUT
- HYDRANT
- SIAMESE CONNECTION
- UNKNOWN VALVE
- WATER VALVE
- GAS VALVE
- WATER SPIGOT OR FOUNTAIN
- MONITORING WELL
- DECIDUOUS BUSH
- EVERGREEN BUSH
- DECIDUOUS TREE
- EVERGREEN TREE
- STUMP
- HEDGE ROW
- TREELINE
- BRUSHLINE
- RETAINING WALL
- GUIDE RAIL
- STONE WALL
- WATERLINE
- FENCE
- UNDERGROUND COMMUNICATION
- UNDERGROUND PROPANE
- UNDERGROUND ELECTRICAL
- UNDERGROUND STREET LIGHTING
- UNDERGROUND ENVIRONMENTAL WASTEWATER
- UNDERGROUND SEWER
- UNDERGROUND STORM SEWER
- UNDERGROUND WATER
- UNDERGROUND FIRE PROTECTION

PROPOSED LEGEND:

- SAW CUTTING ASPHALT CONCRETE
- LIMITS OF DISTURBANCE
- LIMITS OF PAVEMENT REMOVAL (MILLING & EXCAVATION)
- PROPOSED WATER LINE
- PROPOSED CATCH BASIN
- PROPOSED STORM PIPE
- PROPOSED SANITARY MANHOLE
- PROPOSED SANITARY PIPE
- PROPOSED UNDERGROUND ELECTRIC

New York 811 Know what's below. Call before you dig.

0 10 20 30
1"=10' SCALE BAR

6/15/2022 4:10:27 PM

CONSULTANT INFORMATION
LiRo Engineers, Inc.
A LiRo Group Company
Mineola, N.Y. 516-746-2350[T]

CONSULTANT SEAL
STATE OF NEW YORK · KENNETH J. HOLLISTROM · No. 059134 · LICENSED PROFESSIONAL ENGINEER

| REVISION NUMBER | DATE | MADE BY | APP'D BY | REVISION |
|---|---|---|---|---|

RECORD DRAWING CERTIFICATION
AS BUILT – CHANGES AS NOTED
AS BUILT – NO CHANGES

CONTRACTOR
NAME
SIGNATURE
TITLE DATE

PROJECT COORDINATOR
NAME
SIGNATURE
TITLE DATE

WESTCHESTER COUNTY, NEW YORK
DEPARTMENT OF PUBLIC WORKS AND TRANSPORTATION
DIVISION OF ENGINEERING

**INFRASTRUCTURE REHABILITATION PHASE 3**
**PLAYLAND PARK, RYE, NEW YORK**
**CROSS AXIS BUILDING D**
**UTILITY CONSTRUCTION PLAN**

| | |
|---|---|
| CONTRACT NUMBER | 22-523 |
| SHEET NUMBER | CXD-C-04 |
| DWG NO.: | 247 of 664 |
| SCALE: | 1"=10' |
| DATE: | 08/23/2022 |
| DPW FILE NUMBER | 1-118-C-996-0 |
| REV. NO. | 0 |

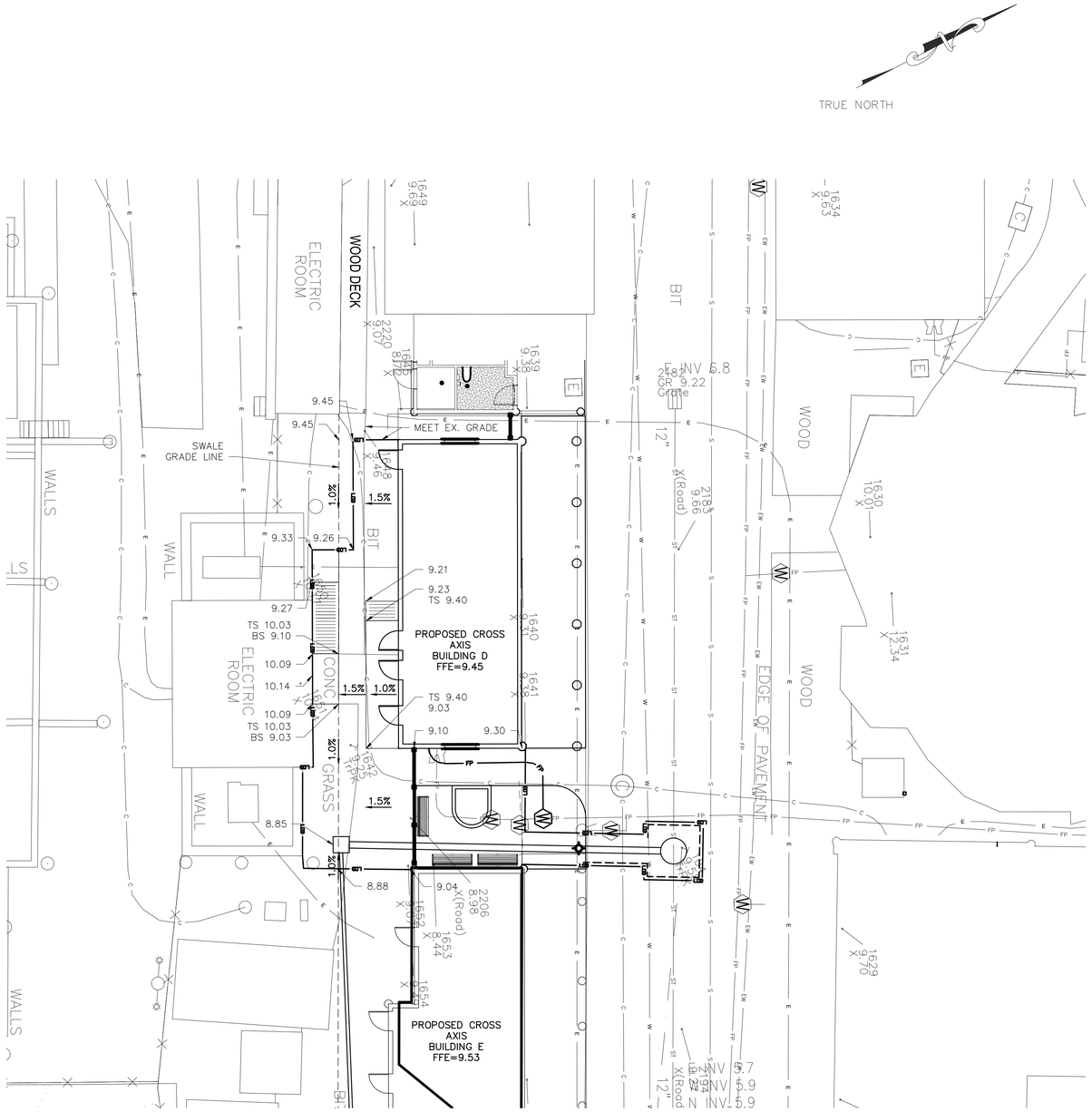


## EXISTING LEGEND

- POST
- UTILITY POLE
- SIGN
- HANDICAP PARKING
- GROUND LIGHT
- LIGHT POLE
- UTILITY POLE WITH LIGHT
- LIGHT POLE (SINGLE LIGHT)
- LIGHT POLE (DOUBLE LIGHT)
- LIGHT POLE (MULTI LIGHT)
- BOAT TIE-OFF CLEAT
- CATCH BASIN
- TRENCH DRAIN
- MAILBOX
- UNKNOWN MANHOLE
- COMMUNICATIONS BOX/HAND HOLE
- ELECTRIC HAND HOLE
- ELECTRIC BOX
- GAS METER
- IRRIGATION BOX
- UNKNOWN UTILITY BOX/HAND HOLE
- COMMUNICATION MANHOLE
- DRAINAGE MANHOLE
- ELECTRIC MANHOLE
- SEWER MANHOLE
- STORM SEWER MANHOLE
- SEWER CLEANOUT
- HYDRANT
- SIAMESE CONNECTION
- UNKNOWN VALVE
- WATER VALVE
- GAS VALVE
- WATER SPIGOT OR FOUNTAIN
- MONITORING WELL
- DECIDUOUS BUSH
- EVERGREEN BUSH
- DECIDUOUS TREE
- EVERGREEN TREE
- STUMP
- HEDGE ROW
- TREELINE
- BRUSHLINE
- RETAINING WALL
- GUIDE RAIL
- STONE WALL
- WATERLINE
- FENCE
- UNDERGROUND COMMUNICATION
- UNDERGROUND PROPANE
- UNDERGROUND ELECTRICAL
- UNDERGROUND STREET LIGHTING
- UNDERGROUND ENVIRONMENTAL WASTEWATER
- UNDERGROUND SEWER
- UNDERGROUND STORM SEWER
- UNDERGROUND WATER
- UNDERGROUND FIRE PROTECTION
- X 415.50 — EXISTING SPOT ELEVATION
- TG=415.50 — EXISTING TOP OF GRATE ELEVATION

## PROPOSED LEGEND:

- SAW CUTTING ASPHALT CONCRETE
- LOD — LIMITS OF DISTURBANCE
- 415 — PROPOSED MAJOR CONTOUR
- 414 — PROPOSED MINOR CONTOUR
- 9.30 — PROPOSED SPOT ELEVATION
- BS9.30 — PROPOSED BOTTOM SWALE
- TS9.30 — TOP OF SLAB
- PROPOSED INLET PROTECTION

0 10 20 30
1'=10' SCALE BAR

6/15/2022 4:10:27 PM

CONSULTANT INFORMATION

**LiRo Engineers, Inc.**
*A LiRo Group Company*
Mineola, N.Y. 516-746-2350[T]

CONSULTANT SEAL

STATE OF NEW YORK · KENNETH J. HOLDEN · LICENSED PROFESSIONAL ENGINEER · 059134

| REVISION NUMBER | DATE | MADE BY | APP'D BY | REVISION |
|---|---|---|---|---|

RECORD DRAWING CERTIFICATION

☐ AS BUILT – CHANGES AS NOTED ☐ AS BUILT – NO CHANGES

CONTRACTOR
NAME
SIGNATURE
TITLE DATE

PROJECT COORDINATOR
NAME
SIGNATURE
TITLE DATE

WESTCHESTER COUNTY, NEW YORK
DEPARTMENT OF PUBLIC WORKS AND TRANSPORTATION
DIVISION OF ENGINEERING

**INFRASTRUCTURE REHABILITATION PHASE 3**
**PLAYLAND PARK, RYE, NEW YORK**
**CROSS AXIS BUILDING D**
**GRADING AND EROSION CONTROL PLAN**

| | |
|---|---|
| CONTRACT NUMBER | 22-523 |
| SHEET NUMBER | CXD-C-05 |
| DWG NO.: | 248 of 664 |
| SCALE: | 1"=10' |
| DATE: | 08/23/2022 |
| DPW FILE NUMBER | 1-118-C-997-0 |
| REV. NO.: | 0 |

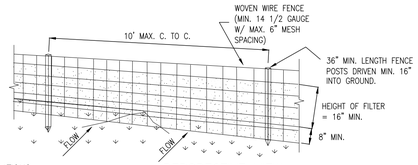


PERSPECTIVE VIEW

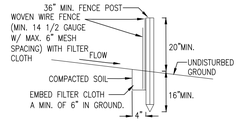


SECTION VIEW

CONSTRUCTION SPECIFICATIONS

1. WOVEN WIRE FENCE TO BE FASTENED SECURELY TO FENCE POSTS WITH WIRE TIES OR STAPLES. POSTS SHALL BE STEEL EITHER "T" OR "U" TYPE OR HARDWOOD.
2. FILTER CLOTH TO BE TO BE FASTENED SECURELY TO WOVEN WIRE FENCE WITH TIES SPACED EVERY 24" AT TOP AND MID SECTION. FENCE SHALL BE WOVEN WIRE, 12 1/2 GAUGE, 6" MAXIMUM MESH OPENING.
3. WHEN TWO SECTIONS OF FILTER CLOTH ADJOIN EACH OTHER THEY SHALL BE OVER-LAPPED BY SIX INCHES AND FOLDED. FILTER CLOTH SHALL BE EITHER FILTER X, MIRAFI 100X, STABILINKA T140N, OR APPROVED EQUIVALENT.
4. PREFABRICATED UNITS SHALL BE GEOFAB, ENVIROFENCE, OR APPROVED EQUIVALENT.
5. MAINTENANCE SHALL BE PERFORMED AS NEEDED AND MATERIAL REMOVED WHEN "BULGES" DEVELOP IN THE SILT FENCE.

## SILT FENCE INSTALLATION DETAIL
## ITEM NO. 209.13

N.T.S.

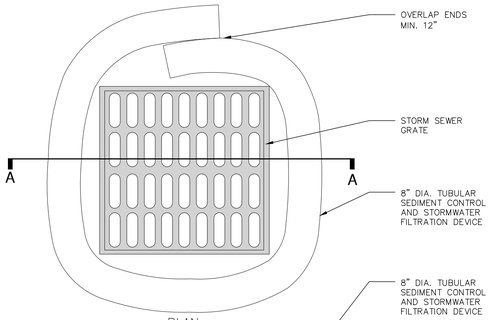


PLAN

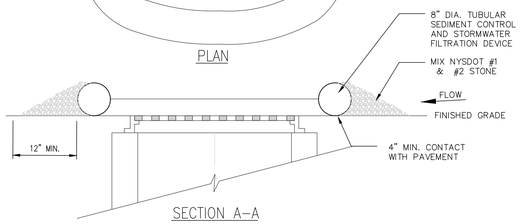


SECTION A–A

NOTES:

1. TUBULAR SEDIMENT CONTROL AND STORMWATER FILTRATION DEVICES SHALL BE FILTREXX FILTERSOXX, OR EQUIVALENT.
2. REPLACE AND DISPOSE OF PER MANUFACTURERS SPECIFICATIONS.
3. THIS PRACTICE INCLUDES SANDBAGS, COMPOST FILTER SOCKS, GEO-TUBES FILLED WITH BALLAST, AND MANUFACTURED SURFACE BARRIERS. PEA GRAVEL CAN ALSO BE USED IN CONJUNCTION WITH THESE PRACTICES TO IMPROVE PERFORMANCE. WHEN INLET IS NOT AT A LOW POINT, AND IS OFF-SET FROM THE PAVEMENT OR GUTTER LINE, PROTECTION SHOULD BE SELECTED AND INSTALLED SO THAT FLOWS ARE NOT DIVERTED AROUND INLET.
4. THE DRAINAGE AREA SHOULD BE LIMITED TO 1 ACRE AT THE DRAINAGE INLET. ALL PRACTICES WILL BE PLACED AT THE INLET PERIMETER OR BEYOND TO MAXIMIZE THE FLOW CAPACITY OF THE INLET. PRACTICES SHALL BE WEIGHTED, BRACED, TIED, OR OTHERWISE ANCHORED TO PREVENT MOVEMENT OR SHIFTING OF LOCATION ON PAVED SURFACES. TRAFFIC SAFETY SHALL BE INTEGRATED WITH THE USE OF THIS PRACTICE. ALL PRACTICES SHOULD BE MARKED WITH TRAFFIC SAFETY CONES AS APPROPRIATE. STRUCTURE HEIGHT SHALL NOT CAUSE FLOODING OR BY-PASS FLOW THAT WOULD CAUSE ADDITIONAL EROSION. THE STRUCTURE SHOULD BE INSPECTED AFTER EVERY STORM EVENT. ANY SEDIMENT SHOULD BE REMOVED AND DISPOSED OF ON THE SITE. ANY BROKEN O DAMAGED COMPONENTS SHOULD BE REPLACED. CHECK ALL MATERIALS FOR PROPER ANCHORING AND SECURE AS NECESSARY.
5. IF USING THE COMPOST FILTER SOCK, THE COMPOST INFILL SHALL BE WELL DECOMPOSED (MATURED AT LEAST 3 MONTHS), WEED-FREE, ORGANIC MATTER. IT SHALL BE AEROBICALLY COMPOSTED, POSSESS NO OBJECTIONABLE ODORS, AND CONTAIN LESS THAN 1%, BY DRY WEIGHT, OF MANMADE FOREIGN MATTER. WHEN USING COMPOST FILTER SOCKS ADJACENT TO SURFACE WATER, THE COMPOST SHOULD HAVE LOW NUTRIENT VALUE.

## DRAINAGE STRUCTURE INLET PROTECTION, TEMPORARY

N.T.S.

## STORM WATER POLLUTION PREVENTION PLAN NOTES:

THE CONTRACTOR SHALL BE RESPONSIBLE FOR IMPLEMENTATION AND ADHERENCE TO THE STORM WATER POLLUTION PREVENTION PLAN (SWPPP) FROM THE COMMENCEMENT OF THE PROJECT TO SITE STABILIZATION.

## POLLUTION PREVENTION MEASURES:

THE CONTRACTOR SHALL TAKE THE FOLLOWING STEPS TO PREVENT LITTER, CHEMICALS AND DEBRIS FROM ENTERING STORM DRAINS AND DISCHARGES.

1. PROPERLY INSTALL AND MAINTAIN EROSION AND SEDIMENT CONTROL DEVICES AS OUTLINED IN THE PROJECT DOCUMENTS AND IN COMPLIANCE WITH THE LATEST EDITION OF THE NEW YORK STATE STANDARDS AND SPECIFICATIONS FOR EROSION AND SEDIMENT CONTROL.
2. PROPERLY CONTAIN AND DISPOSE OF ALL MATERIALS USED ON SITE.
3. CLEAN UP SPILLS IMMEDIATELY TO MINIMIZE SAFETY HAZARD AND PREVENT SPREADING.
4. ROUTINELY INSPECT AND CLEAN OUT CATCH BASINS AND STORM LINES.
5. LABEL ALL STORM INLETS AS "NO DUMPING".
6. CONTROL LITTER BY SWEEPING AND PICKING IT UP DAILY.
7. DO NOT STORE FUEL AND WASTE ON-SITE OR USE SECONDARY CONTAINMENT MEASURES.
8. IF PRACTICAL, USE ALTERNATIVE CLEANING METHODS SUCH AS WIPING DOWN OF VEHICLES AND EQUIPMENT INSTEAD OF HOSING.
9. REMOVE ALL EXCAVATED UNSUITABLE MATERIAL FROM THE SITE AS SOON AS PRACTICABLE.
10. PRACTICE GOOD HOUSEKEEPING AND EDUCATE EMPLOYEES ON POLLUTION PREVENTION MEASURES.

## ON SITE MATERIAL STORAGE:

THE CONTRACTOR MAY HAVE THE FOLLOWING MATERIALS STORED ON-SITE DURING PROJECT CONSTRUCTION. THE LIST MAY NOT BE INCLUSIVE AND WILL VARY DURING THE DIFFERENT STAGES OF THE PROJECT.

1. PRE-CAST CONCRETE MANHOLES, CATCH BASINS AND OUTLET CONTROL STRUCTURE.
2. PVC PIPING AND APPURTENANCES.
3. STOCKPILED SOILS – TOP SOIL, SUB BASE MATERIAL, CUSHION MATERIAL, SELECT GRANULAR MATERIAL, GRAVEL AND CRUSHED STONE.
4. EROSION AND SEDIMENT CONTROL MATERIAL: SILT FENCE, RIP RAP AND SEED.
5. PAVING MATERIALS AND EQUIPMENT
6. SECURITY FENCE AND APPURTENANCES
7. EQUIPMENT REQUIRED TO PERFORM THE WORK.

THE CONTRACTOR SHALL UTILIZE THE POLLUTION PREVENTION MEASURES OUTLINED ABOVE TO PREVENT POLLUTANTS FROM STORED MATERIALS FROM REACHING THE STORM WATER CONVEYANCE DEVICES AND DISCHARGES.

## EROSION AND SEDIMENT CONTROL PRACTICES:

TEMPORARY STORM INLET PROTECTION:
STORM INLET PROTECTION INTERCEPTS SEDIMENT LADEN RUNOFF AND TRAPS SEDIMENT TO PROTECT THE DRAINAGE SYSTEM. STORM INLET PROTECTION SHALL BE PROVIDED AT EACH NEW CATCH BASIN AS IT IS INSTALLED AND AROUND EXISTING CATCH BASINS AS SHOWN.

TEMPORARY SEDIMENT CONTROL – SILT FENCE
SILT FENCE REDUCES RUNOFF VELOCITY AND CAUSES SETTLING OF SEDIMENT. INSTALL SILT FENCE PRIOR TO BEGINNING ANY EXCAVATION OR EARTHWORK ACTIVITIES WHERE SHOWN ON THE DRAWINGS. INSTALL AROUND ANY STOCKPILED SOIL MATERIALS.

TEMPORARY STABILIZED CONSTRUCTION ENTRANCE
THE STABILIZED CONSTRUCTION ENTRANCE IS USED TO REDUCE OR ELIMINATE TRACKING OF SEDIMENT ONTO STREETS AND/OR PUBLIC RIGHT-OF-WAY.

TEMPORARY SEEDING
TEMPORARY SEEDING REDUCES EROSION AND SEDIMENT LOSS FROM THE BARE GROUND. PROVIDE TEMPORARY SEEDING TO PROVIDE TEMPORARY COVER FOR DISTURBED EARTH OR SOIL STOCKPILES HELD FOR LONGER THAN SEVEN (7) DAYS. TEMPORARY SHUT DOWN OF CONSTRUCTION OR WAITING FOR OPTIMAL PLANTING TIME. IN SPRING, SUMMER OR EARLY FALL APPLY RYE GRASS AT A RATE OF 1 LB/ 1,000 SQ. FT. IN LATE FALL APPLY CERTIFIED AROOSTOOK RYE AT 2.5 LBS / 1,000 SQ. FT. OR WOOD FIBER HYDROMULCH AT MANUFACTURE'S RECOMMENDED RATE. HAY OR STRAW SHALL BE ANCHORED.

DUST CONTROL
TEMPORARY AND PERMANENT STABILIZATION MEASURES SUCH AS SEEDING, MULCHING AND INSTALLING EROSION AND SEDIMENT CONTROL BLANKETS WILL PREVENT DUST FROM BLOWING OFF SITE. INSTALL THESE MEASURES AS SOON AS FINAL GRADES ARE REACHED AND ON SOIL STOCKPILES AND DISTURBED AREAS TO BE LEFT FOR LONGER THAN SEVEN (7) DAYS.

## PHASING OF EROSION AND SEDIMENT CONTROL PRACTICES:

1. PRIOR TO COMMENCING ANY CONSTRUCTION ACTIVITIES ON THE SITE, THE CONTRACTOR SHALL MEET WITH THE OWNERS REPRESENTATIVE AND DESIGNER TO DISCUSS THE STORM WATER POLLUTION PREVENTION PLAN.
2. PRIOR TO COMMENCING ANY EXCAVATION PROCEDURES, INSTALL SILT FENCE AS SHOWN ON THE PLANS.
3. INSTALL STABILIZED CONSTRUCTION ENTRANCE.
4. AS THE NEW CATCH BASINS ARE INSTALLED, PROVIDE TEMPORARY INLET PROTECTION.
5. AS SOIL MATERIAL IS EXCAVATED OR STOCKPILED, PROVIDE A SILT FENCE ENCLOSURE AROUND THE PILE. IF THE PILE IS TO REMAIN FOR LONGER THAN SEVEN (7) DAYS, TEMPORARILY SEED THE PILE.
6. DO NOT LEAVE DISTURBED AREAS NOT TO BE COVERED BY IMPERVIOUS SURFACE BARE FOR LONGER THAN SEVEN (7) DAYS, ROUGH GRADE THE AREAS AND TEMPORARILY SEED.
7. AFTER FINAL GRADING OF VEGETATED AREAS, PROVIDE PERMANENT SEEDING.
8. UPON FINAL STABILIZATION OF THE SITE, REMOVE ALL TEMPORARY EROSION AND SEDIMENT CONTROL DEVICES. INSPECT ALL PERMANENT EROSION AND SEDIMENT CONTROL AND STORM WATER MANAGEMENT DEVICES. REPLACE ANY FAILING OR UNSATISFACTORY MEASURES. CLEAN ALL STORMWATER CATCH BASINS AND PIPING.

## EROSION AND SEDIMENT CONTROL AND STORMWATER CONTROL DEVICE MAINTENANCE:

CONSTRUCTION DURATION
ALL EROSION AND SEDIMENT CONTROL DEVICES SHALL BE INSPECTED WEEKLY.

1. SILT FENCE SHALL BE REPLACED WHEN TORN, IS BULGING OR NO LONGER MEETING THE INSTALLATION DETAILS.
2. THE STABILIZED CONSTRUCTION ENTRANCE SHALL BE MAINTAINED IN A CONDITION TO PREVENT TRACKING OF SEDIMENT ON TO ROADS AND PUBLIC RIGHTS-OF-WAY. INSPECT TOP DRESSING AND PROVIDE ADDITIONAL AGGREGATE AS NECESSARY.
3. DRAINAGE STRUCTURES AND PIPING SHALL BE CHECKED FOR CLOGGING AND SEDIMENT ACCUMULATION AND CLEANED IF REQUIRED.

PROJECT COMPLETION
AT THE PROJECT COMPLETION AND PRIOR TO PROJECT CLOSE OUT, THE CONTRACTOR SHALL INSPECT ALL PERMANENT EROSION AND CONTROL AND STORMWATER MANAGEMENT PRACTICES.

1. ACCEPTABLE VEGETATION ESTABLISHMENT IN ACCORDANCE WITH SPECIFICATIONS.
2. DRAINAGE STRUCTURES AND PIPING SHALL BE CHECKED FOR CLOGGING AND SEDIMENT ACCUMULATION AND CLEANED IF REQUIRED.

## MAINTENANCE OF PERMANENT STORMWATER MANAGEMENT PRACTICES

1. DRAINAGE STRUCTURES AND PIPING SHALL BE CHECKED FOR CLOGGING AND SEDIMENT ACCUMULATION AND CLEANED IF REQUIRED.

## SITE ASSESSMENT AND INSPECTIONS

COMPLY WILL ALL CONDITIONS INCLUDED IN THE SPDES PERMIT, PART III.D.3 THROUGH PART III.D.5. THE REQUIREMENTS IN THESE SUBSECTIONS OF THE SPDES PERMIT TAKE PRECEDENCE OVER NOTES ON THIS DRAWING AND ON THE EROSION AND SEDIMENT CONTROL PLAN WHERE CONTRADICTIONS BETWEEN THESE DRAWINGS AND THE SPDES PERMIT MAY ARISE.

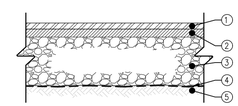


1. 2" TOP COURSE, 12.5 F2 TOP COURSE HMA, 80 SERIES COMPACTION NYSDOT ITEM 402.128204
2. 2" BINDER COURSE, 25 F9 BINDER COURSE HMA, 80 SERIES COMPACTION NYSDOT ITEM 402.258904
3. 4" SUBBASE COURSE, SUBBASE COURSE, TYPE 2 NYSDOT ITEM 304.12
4. GEOTEXTILE SEPARATION NYSDOT ITEM 207.21
5. COMPACTED SUBGRADE

NOTES:

1. COMPACT SUBGRADE TO A MODIFIED PROCTOR DENSITY OF 95%
2. SUBBASE COURSE SHALL HAVE NO MORE THAN (7%) SEVEN PERCENT BY WEIGHT FINER THAN NO. 200 SIEVE.
3. IMPRINTED PATTERN SHOWN IS FOR GRAPHICAL REPRESENTATIONS ONLY. ALL IMPRINTING/PATTERNING LAYOUTS AND POSITIONING SHALL BE APPROVED BY THE PROJECT ENGINEER PRIOR TO ACTUAL CONSTRUCTION.

## ASPHALT PAVEMENT SECTION

N.T.S.

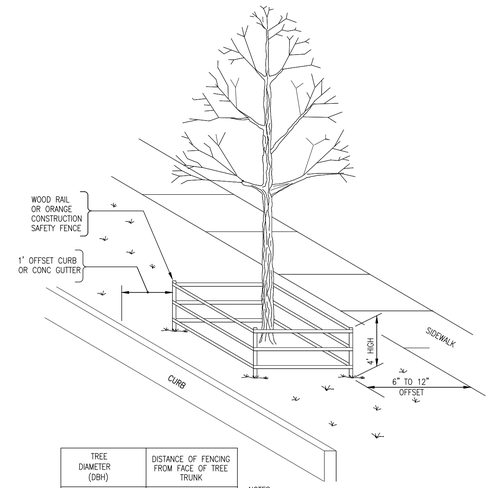


| TREE DIAMETER (DBH) | DISTANCE OF FENCING FROM FACE OF TREE TRUNK |
|---|---|
| LESS THAN 10" | 6' |
| 10" – 14" | 10' |
| 15" – 19" | 12' |
| 20" OR MORE | 15' |

NOTES:

1. ALL TREES WITHIN THE PROJECT LIMITS THAT ARE TO REMAIN, ARE TO RECEIVE THIS TREATMENT.
2. DO NOT LEAVE CONSTRUCTION EQUIPMENT RUNNING (IDLING) UNDER TREE CANOPY.

## TREE PROTECTION SYSTEM 5'–0"
## ITEM NO. 611.21050009

N.T.S.

6/15/2022 4:10:27 PM

CONSULTANT INFORMATION

LiRo Engineers, Inc.
A LiRo Group Company
Mineola, N.Y. 516-746-2350[T]

CONSULTANT SEAL

STATE OF NEW YORK · KENNETH J. HOCHSTEIN · LICENSED PROFESSIONAL ENGINEER · NO. 059134

| REVISION NUMBER | DATE | MADE BY | APP'D BY | REVISION |
|---|---|---|---|---|

RECORD DRAWING CERTIFICATION

☐ AS BUILT – CHANGES AS NOTED ☐ AS BUILT – NO CHANGES

CONTRACTOR: NAME / SIGNATURE / TITLE / DATE

PROJECT COORDINATOR: NAME / SIGNATURE / TITLE / DATE

WESTCHESTER COUNTY, NEW YORK
DEPARTMENT OF PUBLIC WORKS AND TRANSPORTATION
DIVISION OF ENGINEERING

INFRASTRUCTURE REHABILITATION PHASE 3
PLAYLAND PARK, RYE, NEW YORK
CROSS AXIS BUILDING D
CIVIL DETAILS 1

CONTRACT NUMBER: 22-523
SHEET NUMBER: CXD-C-06
DWG NO.: 249 of 664
SCALE: AS NOTED
DATE: 08/23/2022
DPW FILE NUMBER: 1-118-C-998-0
REV. NO.: 0

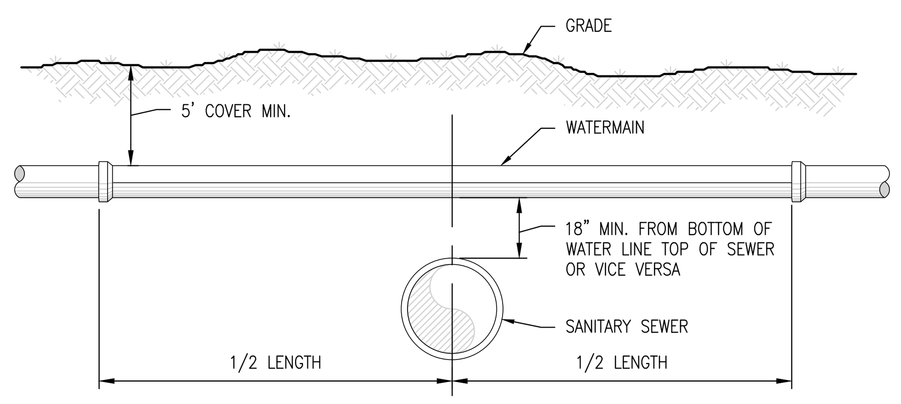


NOTE:

ALL EXCAVATIONS UNDER ANY UTILITY WILL BE BACKFILLED WITH NO. 1 CRUSHED STONE TO A POINT AT LEAST 6" OVER THE TOP OF THE UTILITY.

## TYPICAL WATER LINE – SEWER LINE CROSSING

N.T.S.

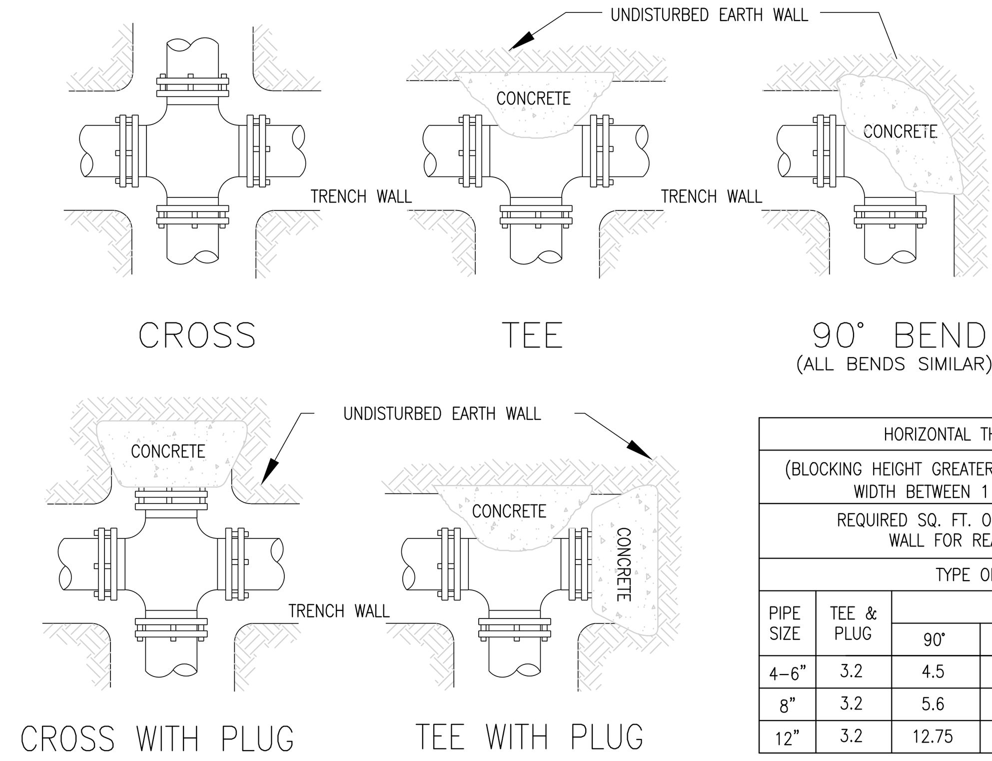


| HORIZONTAL THRUST BLOCKING | | | | | |
|---|---|---|---|---|---|
| (BLOCKING HEIGHT GREATER THAN PIPE O.D.) (BLOCKING WIDTH BETWEEN 1 & 2 TIMES HEIGHT) | | | | | |
| REQUIRED SQ. FT. OF UNDISTURBED EARTH WALL FOR REACTION BACKING | | | | | |
| TYPE OF FITTINGS | | | | | |
| PIPE SIZE | TEE & PLUG | BENDS | | | |
| | | 90° | 45° | 22 1/2° | 11 1/4° |
| 4–6" | 3.2 | 4.5 | 2.5 | 1.3 | 0.7 |
| 8" | 3.2 | 5.6 | 2.5 | 1.3 | 0.7 |
| 12" | 3.2 | 12.75 | 3.7 | 1.3 | 0.7 |

## HORIZONTAL THRUST BLOCKING

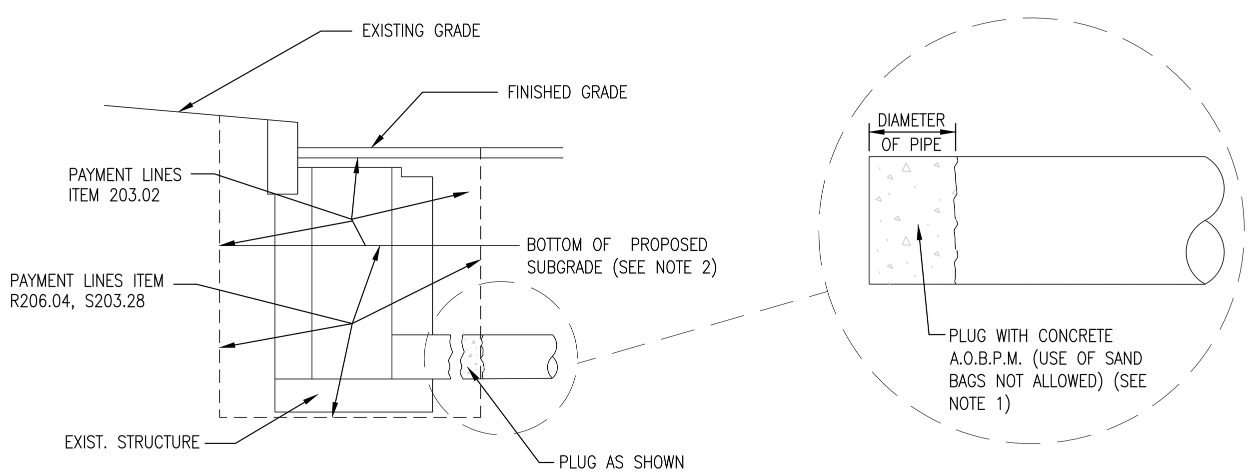


NOTES:

1. THE COST OF PLUGGING EXISTING LATERALS TO BE ABANDONED SHALL BE INCLUDED IN THE PRICE BID FOR TRENCH EXCAVATION IN THE CONTRACT. NO SEPARATE PAYMENT WILL BE MADE FOR THIS WORK.
2. UPPER PAY LIMITS FOR TRENCH AND CULVERT EXCAVATION SHALL BE TOP OF EXISTING SURFACE AT TIME OF EXCAVATION.

## DETAILS FOR PLUGGING ABANDONED DRAINAGE STRUCTURES AND PIPES

N.T.S.

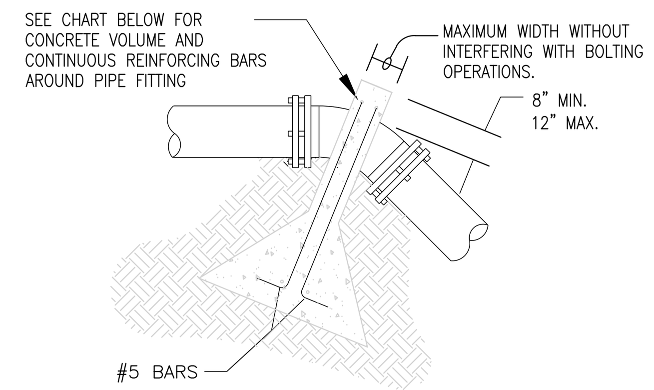


## UPWARD THRUST BLOCKING

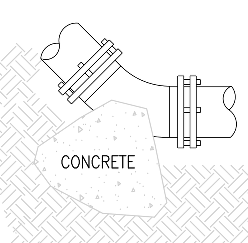


## DOWNWARD THRUST BLOCKING

(SEE HORIZONTAL BLOCKING DETAIL)
(ALL BENDS SIMILAR)

| UPWARD THRUST BLOCKING | | | | | | | | | | | | |
|---|---|---|---|---|---|---|---|---|---|---|---|---|
| (REQUIRED REINFORCING BARS & CUBIC YARDS OF P.C. CONCRETE | | | | | | | | | | | | |
| PIPE SIZE | 90° BEND | | | 45° BEND | | | 22 1/2° BEND | | | 11 1/4° BEND | | |
| | CONC. C.Y. | REINF QTY. | REINF SIZE | CONC. C.Y. | REINF QTY. | REINF SIZE | CONC. C.Y. | REINF QTY. | REINF SIZE | CONC. C.Y. | REINF QTY. | REINF SIZE |
| 4–6" | 2.6 | 4 | #5 | 2.1 | 4 | #5 | 1.1 | 4 | #5 | 0.6 | 4 | #5 |
| 8" | 2.9 | 4 | #5 | 2.1 | 4 | #5 | 1.1 | 4 | #5 | 0.6 | 4 | #5 |
| 12" | 6.6 | 4 | #5 | 4.7 | 4 | #5 | 2.5 | 4 | #5 | 1.3 | 4 | #5 |

## VERTICAL THRUST BLOCKING

NOTES:

1. DO NOT COVER BELLS OR FLANGES WITH CONCRETE
2. WRAP ALL FITTINGS WITH VISQUEEN.
3. BACK ALL TEES ACCORDING TO SIZE OF BRANCH.
4. BACKING FUTURE LINE EXTENSIONS SHALL BE SUCH THAT LATER REMOVAL IS POSSIBLE.
5. ALL BENDS WHERE FITTINGS ARE USED, BOTH HORIZONTAL OR VERTICAL SHALL BE BACKED.
6. REACTION BACKING TABLE IS BASED ON 150 P.S.I. AND SOIL BEARING PRESSURE OF 2,000 lb./sq.ft. ADDITIONAL BACKING MAY BE REQUIRED IN SOME AREAS AS DIRECTED BY ENGINEERS.
7. ALL CONCRETE SHALL BE 2500 P.S.I. MIN. .

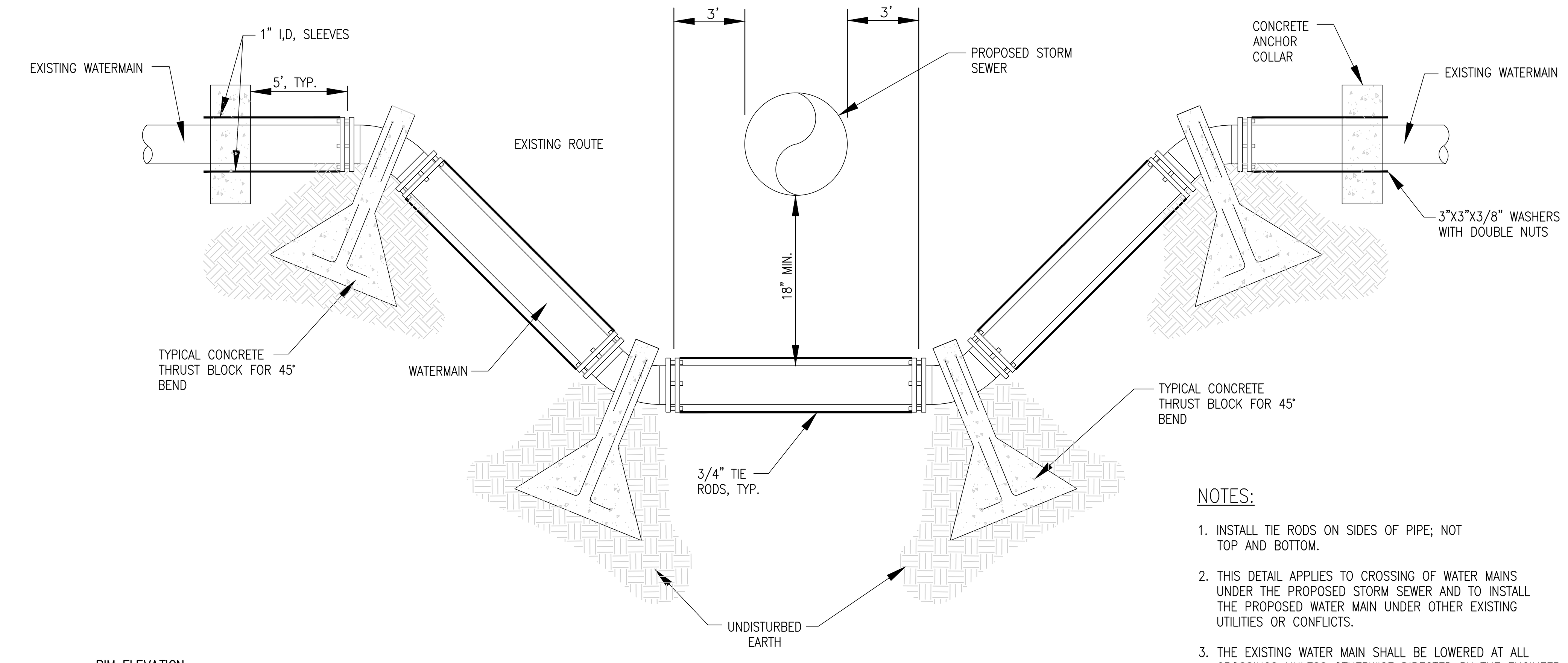


NOTES:

1. INSTALL TIE RODS ON SIDES OF PIPE; NOT TOP AND BOTTOM.
2. THIS DETAIL APPLIES TO CROSSING OF WATER MAINS UNDER THE PROPOSED STORM SEWER AND TO INSTALL THE PROPOSED WATER MAIN UNDER OTHER EXISTING UTILITIES OR CONFLICTS.
3. THE EXISTING WATER MAIN SHALL BE LOWERED AT ALL CROSSINGS UNLESS OTHERWISE DIRECTED BY THE ENGINEER IN THE FIELD.

## TYPICAL WATERMAIN CROSSING DETAIL

N.T.S.

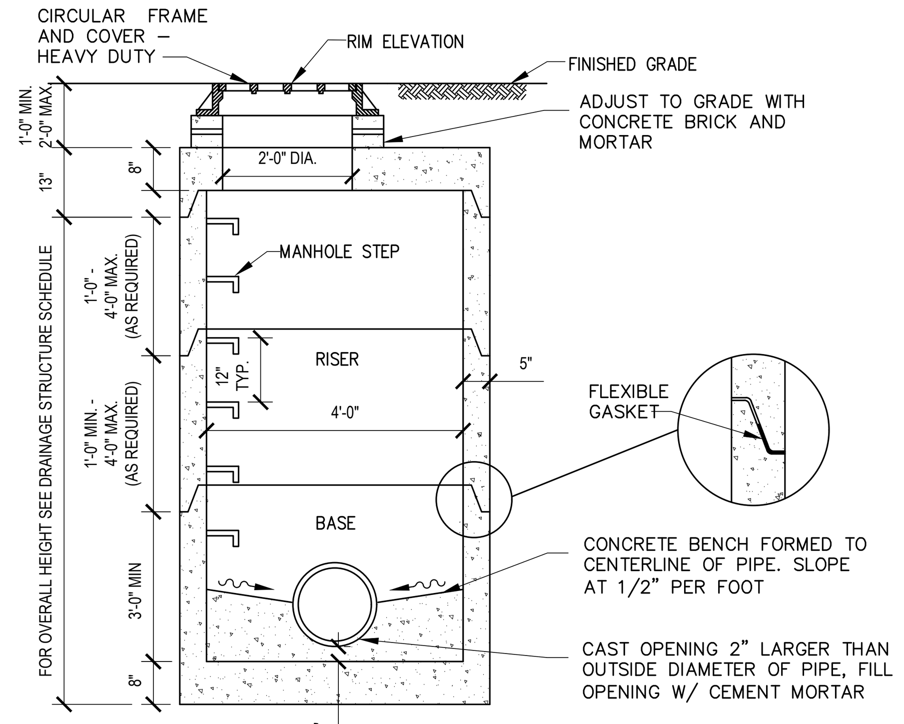


NOTES:

1. MANHOLE IS TO BE REINFORCED PRECAST CONCRETE AND CAPABLE OF SUPPORTING THE AASHTO HS–20 HIGHWAY LOADING.
2. MANHOLE CONSTRUCTION TO CONFORM TO ASTM C913 PROVIDE ADDITIONAL RISERS AS REQUIRED.
3. FLEXIBLE GASKET TO CONFORM TO THE REQUIREMENTS OF ASTM C990.

## 4'ø PRECAST CONCRETE DRAINAGE MANHOLE

N.T.S.

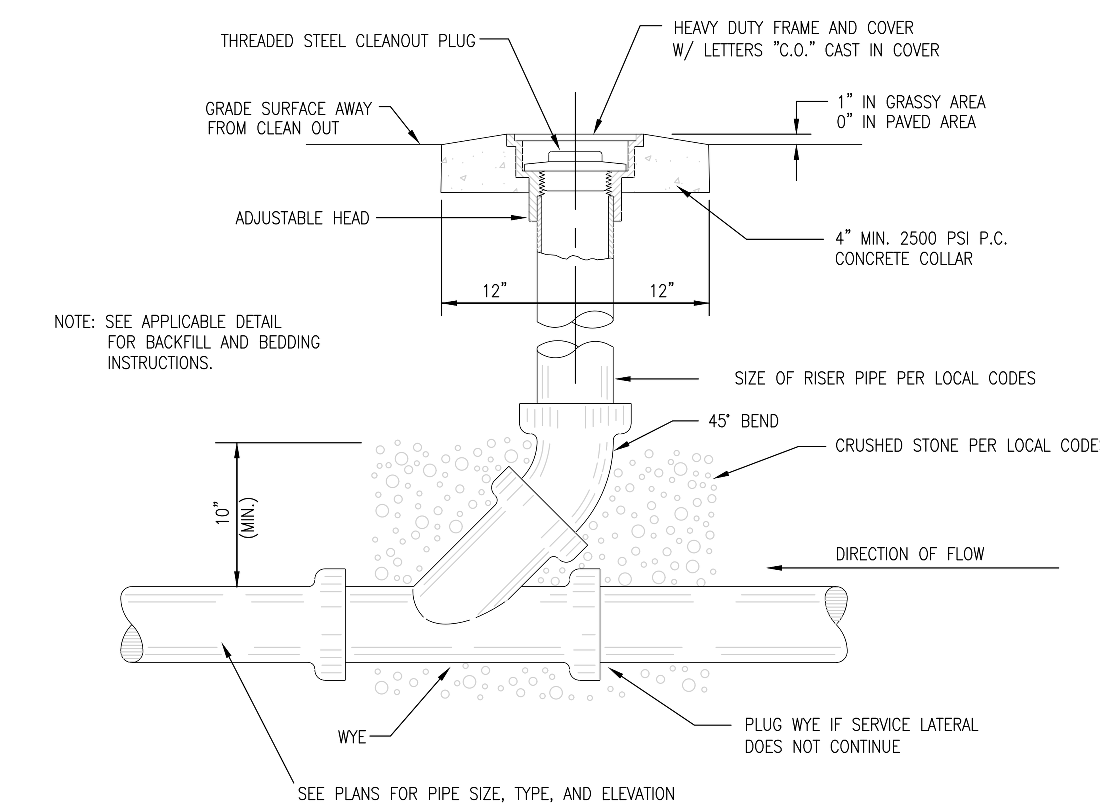


## SEWER CLEAN–OUT

N.T.S.

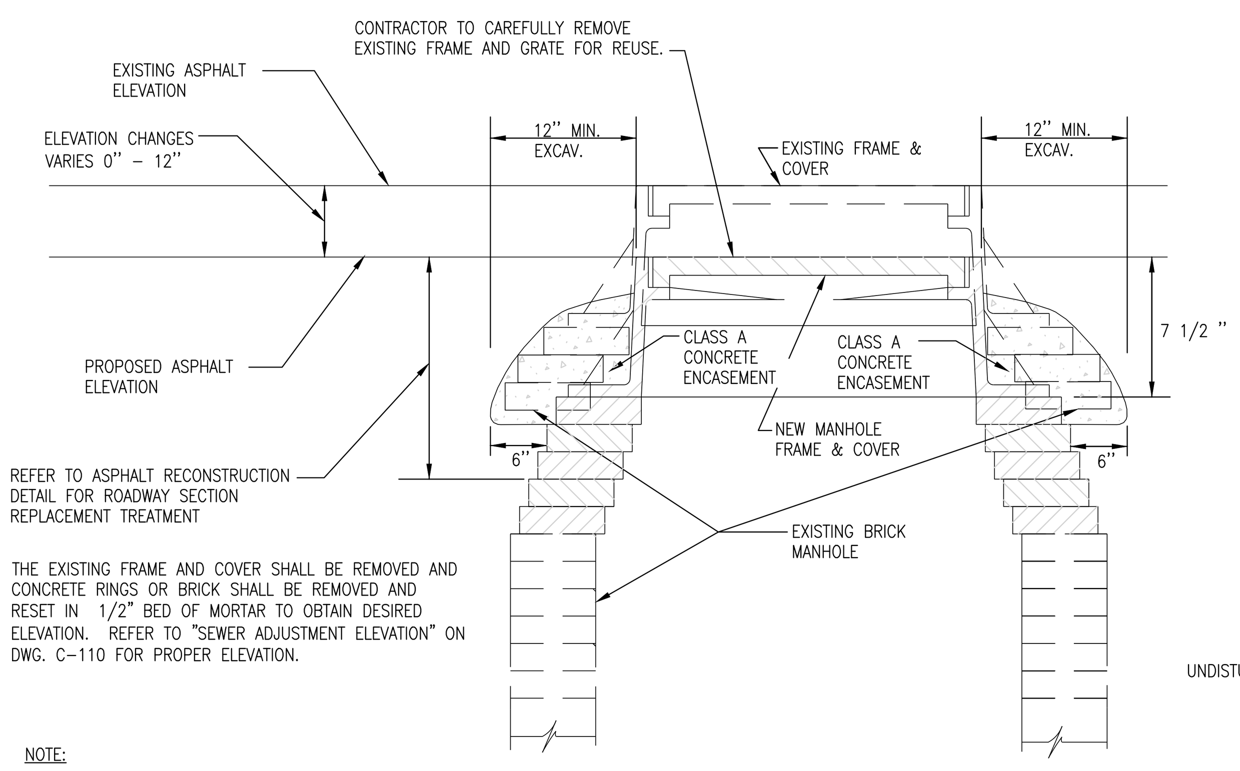


NOTE:

THE LOWER LIMIT OF THE CLASS A CONCRETE ENCASEMENT SHALL BE AT, OR BELOW, THE LOWEST PORTION OF THE BRICK AND MORTAR LEVELING COURSE. ALL BRICK SHALL BE RED, 8,000 PSI BRICK.

ADJUSTMENT AT FLEXIBLE PAVEMENT

## RESETTING EXISTING DRAINAGE FRAMES ON EXISTING DRAINAGE STRUCTURES ITEM NO. 604.07210110

N.T.S.

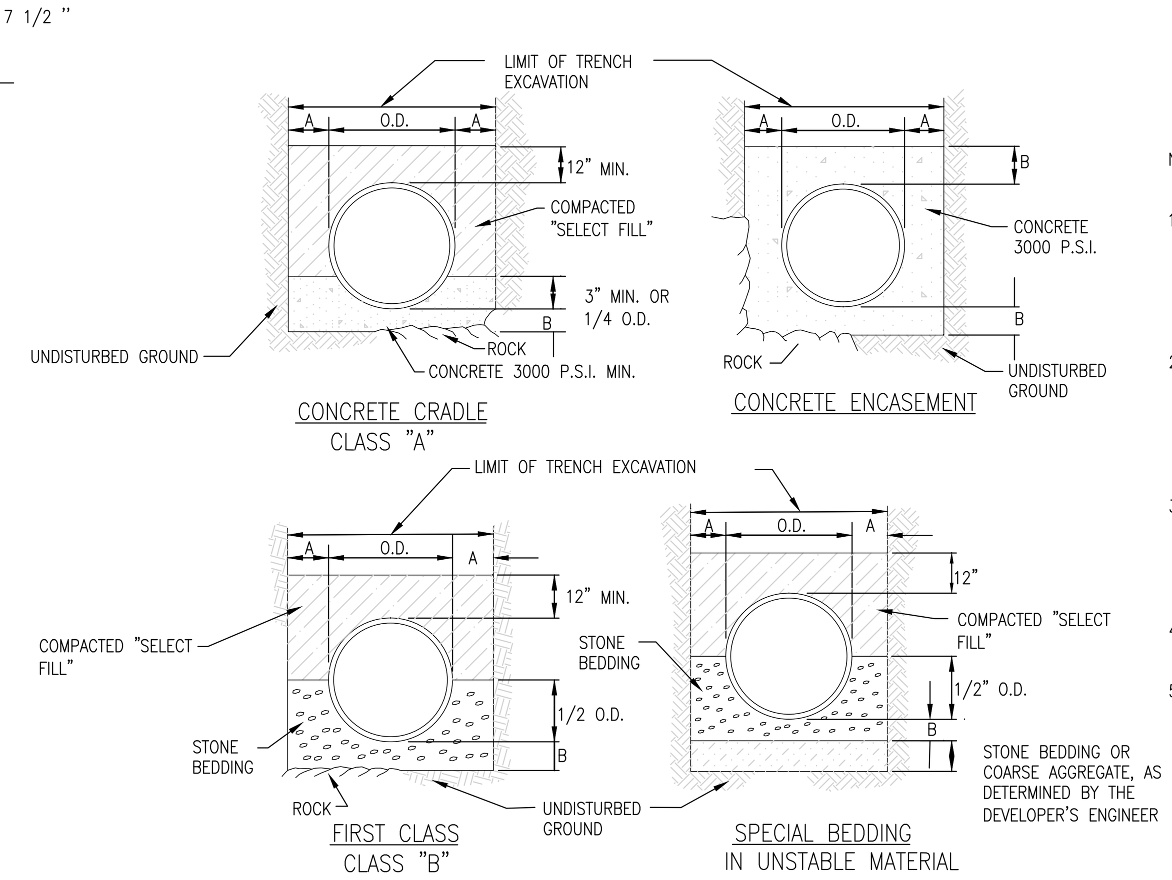


## UTILITY BEDDING MATERIAL DETAIL

N.T.S.

NOTES:

1. SELECT FILL SHALL BE SAND, GRAVEL, AND SIMILAR MATERIAL WHICH SHALL BE FREE FROM CLAY, LOAM, ORGANIC MATERIAL, DEBRIS, FROZEN MATERIAL AND SHALL CONTAIN ONLY SMALL AMOUNTS OF STONE, PEBBLES OR LUMPS OVER ONE INCH IN GREATEST DIMENSION BUT NONE OVER TWO INCHES IN GREATEST DIMENSION, MEETING ASTM IA,IB,OR II.
2. STONE BEDDING SHALL MEAN APPROVED IMPORTED AGGREGATE MEETING THE REQUIREMENTS OF THE NEW YORK STATE DEPARTMENT OF TRANSPORTATION, STANDARD SPECIFICATION, MAY, 2008 EDITION, AS REVISED, SUBSECTION 703–01 "FINE AGGREGATE". PRIMARY SIZE 1 OR A MIXTURE OF PRIMARY SIZES 1 AND 2. OR ASTM CLASS IA,
3. COARSE AGGREGATE SHALL MEAN APPROVED IMPORTED AGGREGATE MEETING THE REQUIREMENTS OF THE NEW YORK STATE DEPARTMENT OF TRANSPORTATION, STANDARD SPECIFICATION, MAT 2008 EDITION, AS REVISED, SUBSECTION 703–02 "COURSE AGGREGATE". PRIMARY SIZE 3 AND/OR 4
4. THIS FIGURE APPLIES TO SANITARY, STORM and COMBINED MAINLINE AND LATERAL PIPE INSTALLATIONS AS WELL AS FORCEMAINS.
5. FIRST CLASS BEDDING SHALL BE USED UNLESS OTHERWISE SHOWN ON THE DRAWINGS OR DIRECTED BY THE ENGINEER.

| PIPE DIA. | DIM. A | DIM. B |
|---|---|---|
| UP TO 18" | 1.0' | 6" |
| 21" TO 36" | 1.5' | 9" |
| OVER 36" | 1.5' | 12" |

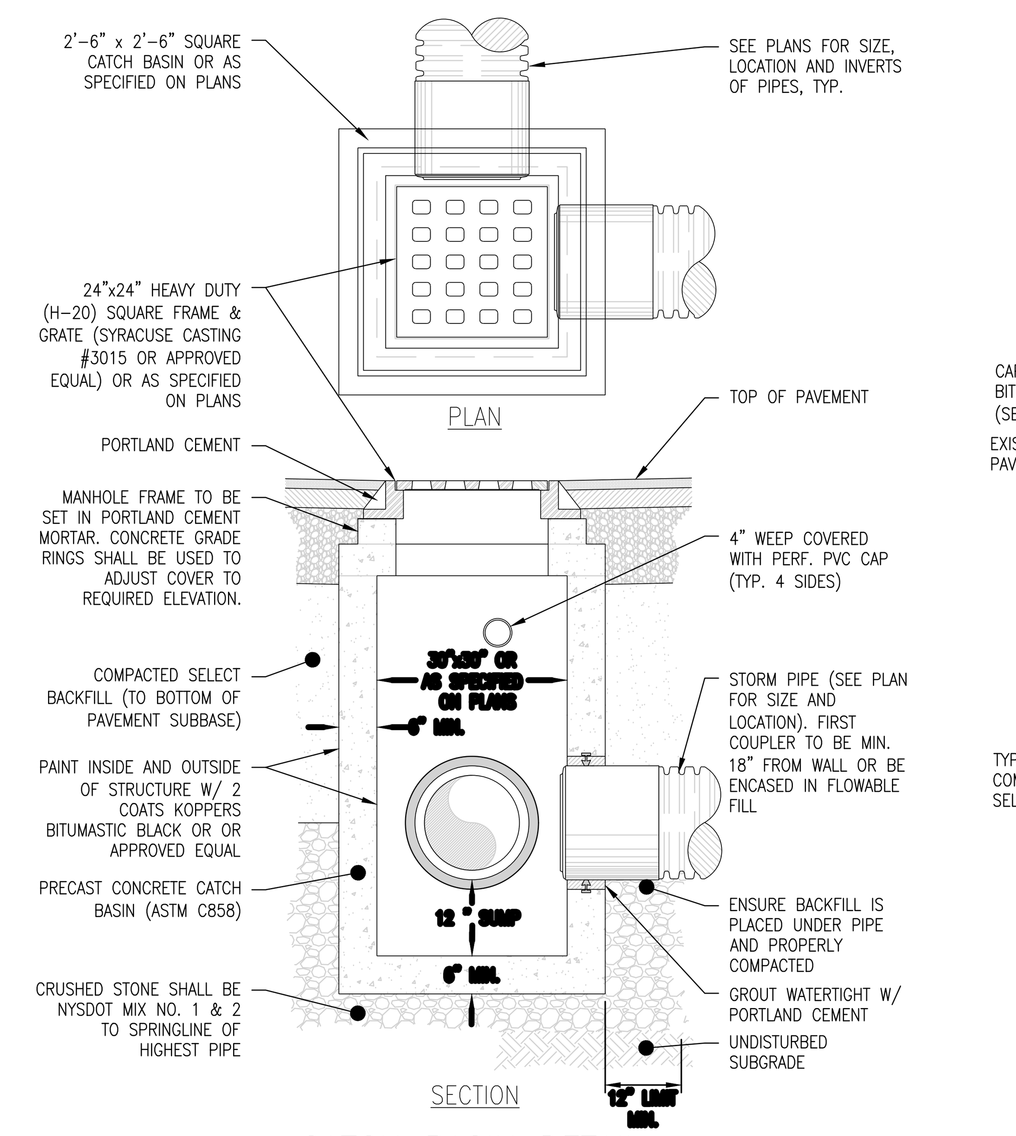


## CATCH BASIN DETAIL

N.T.S.

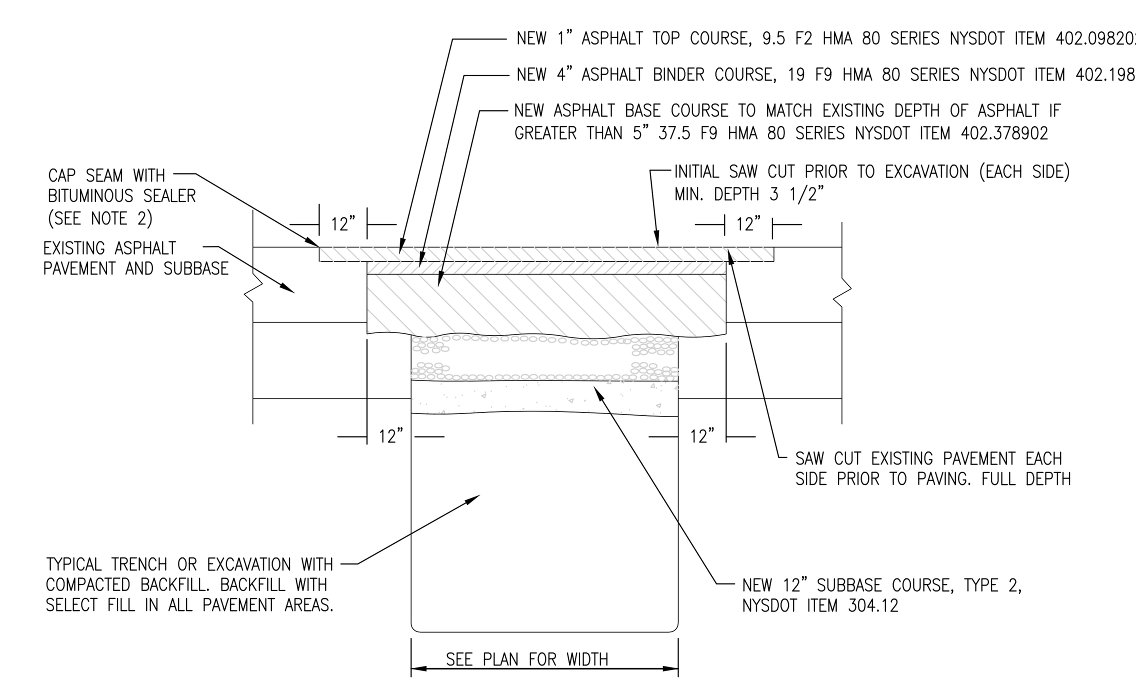


NOTES:

1. EXISTING PAVEMENT SHALL BE SAW CUT TO OBTAIN A STRAIGHT AND NEAT EDGE FOR PAVING. FINAL SAW CUT SHALL BE MADE PRIOR TO PAVING AFTER BACKFILL OF TRENCH TO BOTTOM OF NEW PAVEMENT
2. ALL SEAMS BETWEEN EXISTING AND NEW ASPHALT SURFACES SHALL BE SEALED WITH AN ASPHALT FILLER CORRESPONDING TO THE MATERIAL REQUIREMENTS OF N.Y.S.D.O.T. TABLE 702–5 MATERIAL DESIGNATION 702–3401. COST TO FURNISH AND APPLY THIS MATERIAL SHALL BE INCLUDED IN THE PRICE BID FOR ASPHALT TOP

## PAVEMENT TRENCH RESTORATION DETAIL

N.T.S.

6/15/2022 4:10:27 PM

CONSULTANT INFORMATION

LiRo Engineers, Inc.
A LiRo Group Company
Mineola, N.Y. 516-746-2350[T]

CONSULTANT SEAL

STATE OF NEW YORK · KENNETH J. HOLMSTROM · No. 059134 · LICENSED PROFESSIONAL ENGINEER

| REVISION NUMBER | DATE | MADE BY | APP'D BY | REVISION |
|---|---|---|---|---|

RECORD DRAWING CERTIFICATION

☐ AS BUILT – CHANGES AS NOTED ☐ AS BUILT – NO CHANGES

CONTRACTOR
NAME
SIGNATURE
TITLE DATE

PROJECT COORDINATOR
NAME
SIGNATURE
TITLE DATE

WESTCHESTER COUNTY, NEW YORK
DEPARTMENT OF PUBLIC WORKS AND TRANSPORTATION
DIVISION OF ENGINEERING

INFRASTRUCTURE REHABILITATION PHASE 3
PLAYLAND PARK, RYE, NEW YORK
CROSS AXIS BUILDING D
CIVIL DETAILS 2

CONTRACT NUMBER 22-523
SHEET NUMBER CXD-C-07
DWG NO.: 250 of 664
SCALE: AS NOTED
DATE: 08/23/2022
DPW FILE NUMBER 1-118-C-999-0
REV. NO. 0

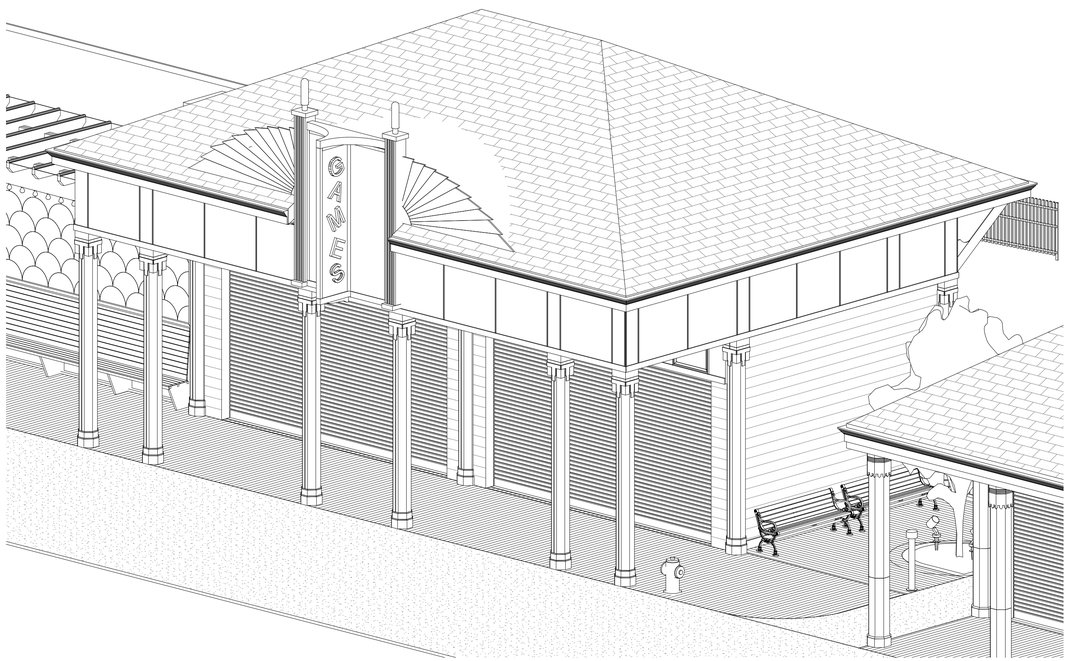


1 CXE - BUILDING AXONOMETRIC

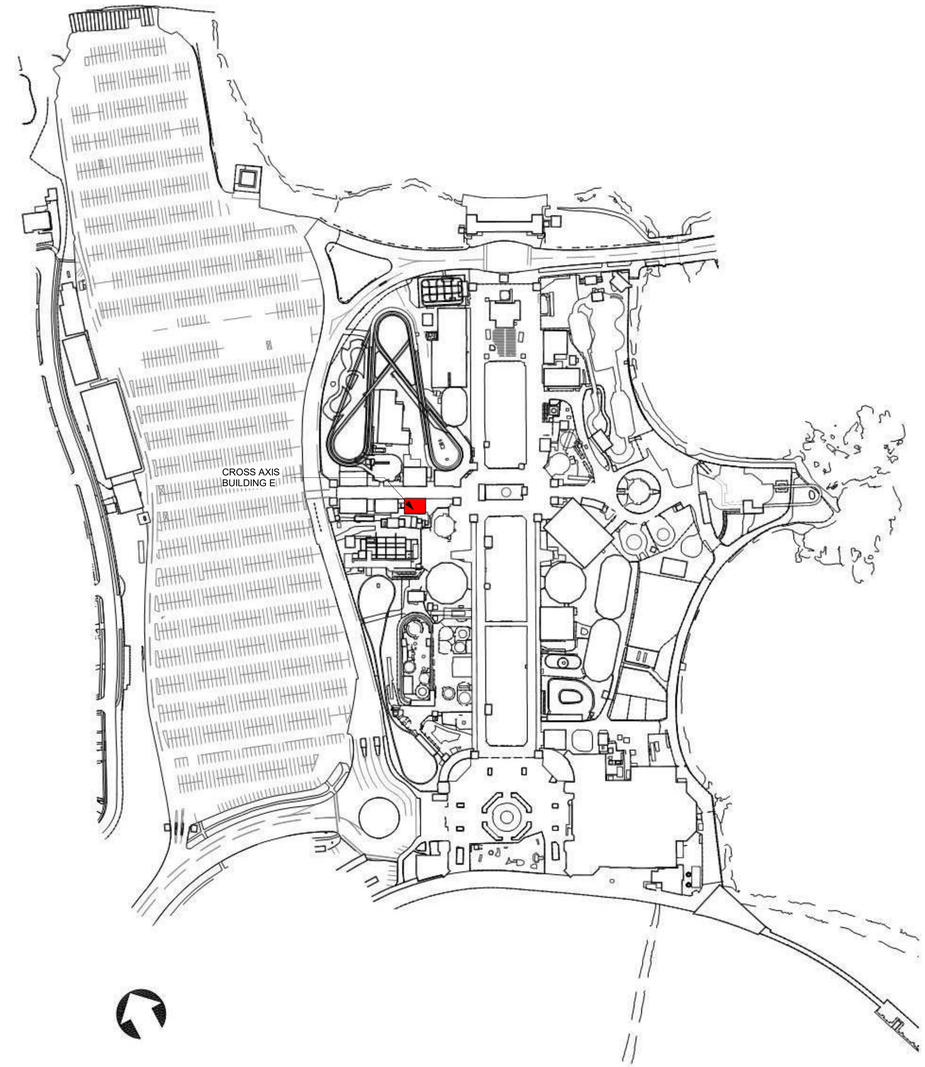


KEY MAP
SCALE: N.T.S.

8/30/2022 4:20:46 PM

CONSULTANT INFORMATION

The LiRo Group
3 Aerial Way, Syosset, New York 11791
(516) 938-5476 www.liro.com

CONSULTANT SEAL

REGISTERED ARCHITECT
ROBERT D. YOUNG JR.
023280
STATE OF NEW YORK

| REVISION NUMBER | DATE | MADE BY | APP'D BY | REVISION |
|---|---|---|---|---|

RECORD DRAWING CERTIFICATION

☐ AS BUILT – CHANGES AS NOTED ☐ AS BUILT – NO CHANGES

CONTRACTOR
NAME
SIGNATURE
TITLE DATE

PROJECT COORDINATOR
NAME
SIGNATURE
TITLE DATE

WESTCHESTER COUNTY, NEW YORK
DEPARTMENT OF PUBLIC WORKS AND TRANSPORTATION
DIVISION OF ENGINEERING

**INFRASTRUCTURE REHABILITATION PHASE 3**
**PLAYLAND PARK, RYE, NEW YORK**
**CROSS AXIS BUILDING E**
**BUILDING INTRO**

CONTRACT NUMBER 22-523
SHEET NUMBER CXE-G-01
DWG NO.: 251 of 664
SCALE: 12" = 1'-0"
DATE: 08/23/2022
DPW FILE NUMBER 1-118-G-1000-0
REV. NO. 0

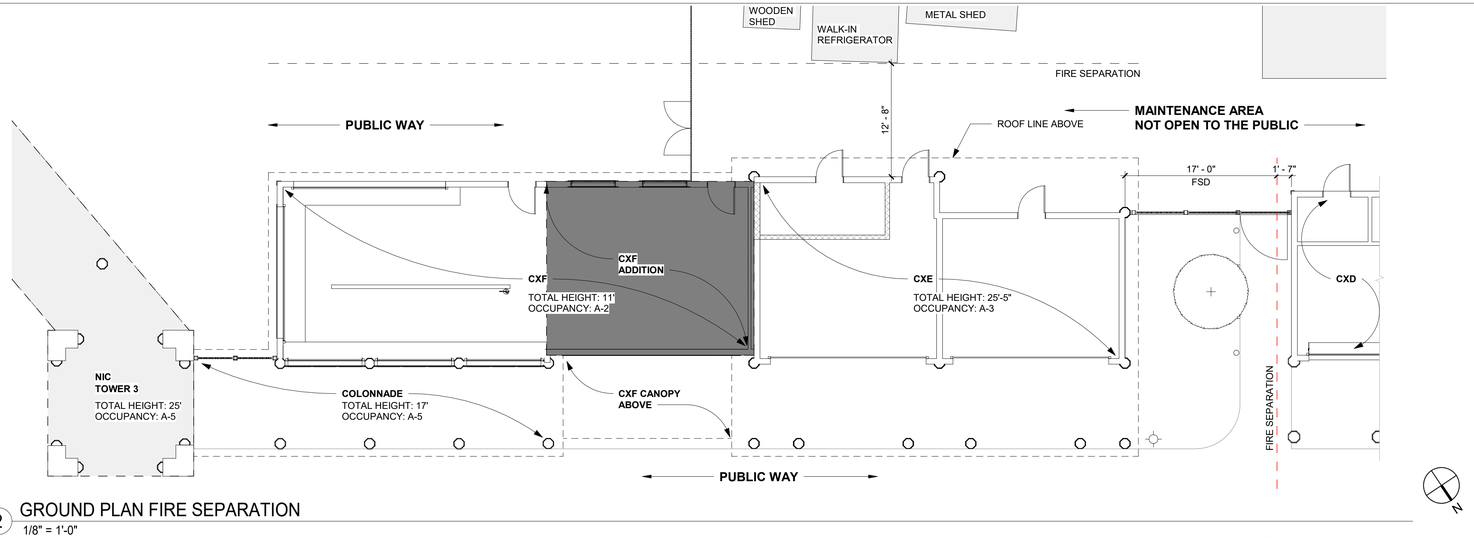


2 GROUND PLAN FIRE SEPARATION
1/8" = 1'-0"

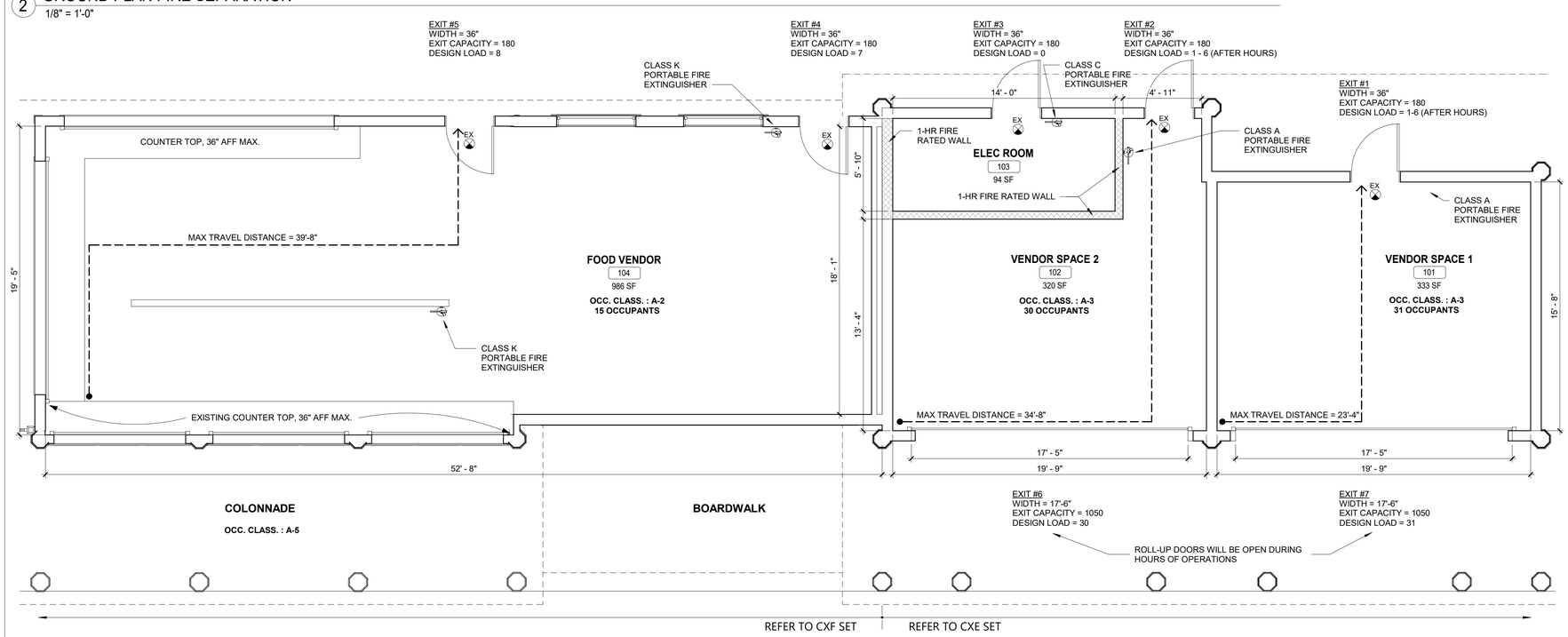


1 GROUND LIFE SAFETY PLAN CXE-CXF
1/4" = 1'-0"

**CODE ANALYSIS**
**2020 Building code of New York State**

| | | |
|---|---|---|
| Construction Type (Tbl 601) | V B | (Fully Sprinklered) |
| Occupancy Classification | A-3 (CXE)<br>A-2 (CXF) | Arcade<br>Food Vendor |
| Number of Stories (Tbl 504.4) | 1 | < 2 (max. allowable) |
| Height (ft) (Tbl 504.3) | 25.4' | < 60 (max. allowable) |
| Building Area (sf) (Tbl 506.2) | 1,795 | < 24,000 (max. allowable) |
| **Fire-Resistance Rating Requirements (Tbl 601)** | **Required** | **Existing** |
| Primary Structure Frame | 0 | 0 |
| (including Columns, Girders, Trusses) | | |
| Bearing Walls | | |
| Exterior (Tbl 602) | | |
| Fire separation distance > = 10 ft | 0 | 0 |
| Interior | 0 | 0 |
| Nonbearing Walls and Partitions | | |
| Exterior (Tbl 602) | | |
| Fire separation distance > = 10 ft | 0 | 0 |
| Interior | 0 | 0 |
| Floor Construction | | |
| Including supporting beam and joists | 0 | 0 |
| Roof Construction | | |
| Including supporting beam and joists | 0 | 0 |
| **Allowable Area of Openings (BC 705.8)** | | |
| Fire separation distance 15 > 10 ft (Unprotected, Sprinklered) | 45% | 12% |
| Fire separation distance > 20 ft (Unprotected, Sprinklered) | No limit | |
| **Interior Finishes Class (BC 803)** | | |
| Wall and Ceiling | C | |
| Floors - Radiant Flux | Class II | |
| **Portable Fire Extinguishers (BC 906)** | **Required** | **Provided** |
| Fire Hazard | Class A | Class A |
| | Class K | Class K |
| Hazard Occupancy | Ordinary | - |
| Minimum rated single extinguisher | 2-A | Class K |
| Maximum floor area per unit of A | 1,500 sf | 333 sf |
| Maximum floor area for extinguisher | 11,250 sf | 493 sf |
| Maximum distance of travel to extinguisher | 75' | 35' |
| Number of Type 2-A extinguishers required | **Required** | **Provided** |
| First Floor | 2 | 4 |
| **Means of Egress** | | |
| Max. Floor Area Allowances per Occupant (Tbl 1004.5) (sf) | | |
| Amusement arcades | 11 gross | |
| Kitchens, commercial | 200 gross | |
| Occupant Load | | |
| Vendor #1 (333 sf) | 31 | |
| Vendor #2 (320 sf) | 30 | |
| Food Vendor (986 sf) | 15 (designed load) | |
| Elec. Room (95 sf) | 0 (not occupiable) | |
| Egress Width per Occupant (BC 1005) | | |
| Other Egress Components | 0.2 | |
| Egress Width Required (inches) | | |
| Vendor #1* | 6.2 | 36 Provided |
| Vendor #2* | 6 | 36 Provided |
| Food Vendor | 3 | 72 Provided |
| *Note: Roll-up doors will be open during business hours | | |
| **Single Exits (BC 1006.3.3[2])** | **Minimum** | **Provided** |
| First Story above or below grade plane (A Occupancy) in compliance with Tbl 1006.2.1. Occupant load < 49 per space | 1 | 1 |
| **Maximum Common Path of Egress Travel (Tbl 1006.2.1)** | **Permitted** | **Proposed** |
| A Occupancy with Sprinkler System | 75' | 0' |
| **Maximum Travel Distance (BC 1017)** | | |
| A Occupancy with Sprinkler System | 250' | 39'-8" |

**APPLICABLE CODES**

NEW YORK STATE BUILDING CODE 2020 (BC)
NEW YORK STATE EXISTING BUILDING CODE 2020 (EBC)
ENERGY CONSERVATION CONSTRUCTION CODE OF NEW YORK STATE (ECCC)
NFPA 13 2013 (NFPA 13)

**HISTORICAL BUILDING REGISTRY**

*PLAYLAND AMUSEMENT PARK* IS A DESIGNATED NATIONAL HISTORIC LANDMARK AND IS LISTED ON THE NATIONAL REGISTER OF HISTORIC PLACES.

THE NATIONAL HISTORIC PLACES REGISTER REFERENCE NUMBER: 80004529_NHL
NATIONAL ARCHIVE IDENTIFIER: 75323175

CROSS AXIS BUILDING E IS A CONTRIBUTING STRUCTURE OF THE LANDMARK AND THEREFORE AN HISTORIC BUILDING UNDER THE 2020 BUILDING CODE AND 2020 EXISTING BUILDING CODE OF NEW YORK STATE

**2020 NYS ENERGY CONSERVATION CODE**

[NY] C501.6 HISTORIC BUILDINGS
PROVISIONS OF THIS CODE RELATING TO THE CONSTRUCTION, REPAIR, ALTERATION, RESTORATION AND MOVEMENT OF STRUCTURES, AND CHANGE OF OCCUPANCY SHALL NOT BE MANDATORY FOR HISTORIC BUILDINGS.

**EXISTING BUILDING CODE**

EBC 302.4 - EXISTING MATERIALS
MATERIALS ALREADY IN USE IN A BUILDING IN COMPLIANCE WITH REQUIREMENTS OR APPROVALS IN EFFECT AT THE TIME OF THEIR ERECTION OR INSTALLATION SHALL BE PERMITTED TO REMAIN IN USE UNLESS DETERMINED BY THE BUILDING OFFICIAL TO BE UNSAFE.

EBC 302.5 - NEW REPLACEMENT MATERIALS
EXCEPT AS OTHERWISE REQUIRED OR PERMITTED BY THIS CODE, MATERIALS PERMITTED BY THE APPLICABLE CODE FOR NEW CONSTRUCTION SHALL BE USED. LIKE MATERIALS SHALL BE PERMITTED FOR REPAIRS AND ALTERATIONS, PROVIDED THAT UNSAFE CONDITIONS ARE NOT CREATED. HAZARDOUS MATERIALS SHALL NOT BE USED WHERE THE CODE FOR NEW CONSTRUCTION WOULD NOT PERMIT THEIR USE IN BUILDINGS OF SIMILAR OCCUPANCY, PURPOSE AND LOCATION.

EBC 305.5 - ADDITIONS
PROVISIONS FOR NEW CONSTRUCTION SHALL APPLY TO ADDITIONS.

**NEW CONSTRUCTION MIN R-VALUE**

[NY] TABLE C402.1.3/4
CLIMATE ZONE - MARINE 4

| | |
|---|---|
| WOOD FRAME WALLS, ABOVE GROUND | MIN R-20 |
| ATTIC AND OTHER ROOFS | MIN R-38 |
| UNHEATED SLABS | MIN R-10 FOR 24" BELOW |
| OPAQUE SWINGING DOOR | MAX U-0.37 |
| GARAGE DOOR | MAX U-0.31 |
| OPERABLE FENESTRATION | MAX U-0.45 |

ADDITION TO MEET PRESCRIPTIVE METHOD C502.2 IN 2020 NYS ECCC

8/30/2022 4:20:48 PM

CONSULTANT INFORMATION
The LiRo Group
3 Aerial Way, Syosset, New York 11791
(516) 938-5476 www.liro.com

CONSULTANT SEAL
REGISTERED ARCHITECT ROBERT D. DONOVAN 023220 STATE OF NEW YORK

| REVISION NUMBER | DATE | MADE BY | APP'D BY | REVISION |
|---|---|---|---|---|

RECORD DRAWING CERTIFICATION
☐ AS BUILT – CHANGES AS NOTED ☐ AS BUILT – NO CHANGES

CONTRACTOR
NAME
SIGNATURE
TITLE DATE

PROJECT COORDINATOR
NAME
SIGNATURE
TITLE DATE

WESTCHESTER COUNTY, NEW YORK
DEPARTMENT OF PUBLIC WORKS AND TRANSPORTATION
DIVISION OF ENGINEERING

**INFRASTRUCTURE REHABILITATION PHASE 3**
**PLAYLAND PARK, RYE, NEW YORK**
**CROSS AXIS BUILDING E**
**CXE & CXF - LIFE SAFETY PLANS**

CONTRACT NUMBER 22-523
SHEET NUMBER CXE-G-02
DWG NO.: 252 of 664
SCALE: As indicated
DATE: 08/23/2022
DPW FILE NUMBER 1-118-G-1001-0
REV. NO. 0

## SHEET NOTES

-PROVIDE PROTECTION FOR EXISTING FEATURES TO REMAIN. PROVIDE PROTECTION PLAN FOR APPROVAL

-SCHEDULE AND COMPLETE WORK AS REQUIRED TO GIVE THE SITE IMPROVEMENT CONTRACTORS ACCESS TO THEIR JOBSITE

## CONSTRUCTION NOTES

-REPLACE ALL PLANTED MATTER DISTURBED DURING CONSTRUCTION UNLESS STATED OTHERWISE.
-REPAIR ALL DAMAGED PARK PROPERTY INCURRED DURING CONSTRUCTION.
-REPAIR ASPHALT AS REQUIRED
-REPAIR SOD AS REQUIRED

## RESTORATION KEY NOTES

1. NEW GRAVEL (PERMEABLE) SURFACE. SEE DETAIL 3 ON SHEET
2. REPAIR ASPHALT AS REQUIRED

## RESTORATION LEGEND

ASPHALT REPAIR

GRAVEL SURFACE IN AREA SHOWN ON 3/CXE-G-3

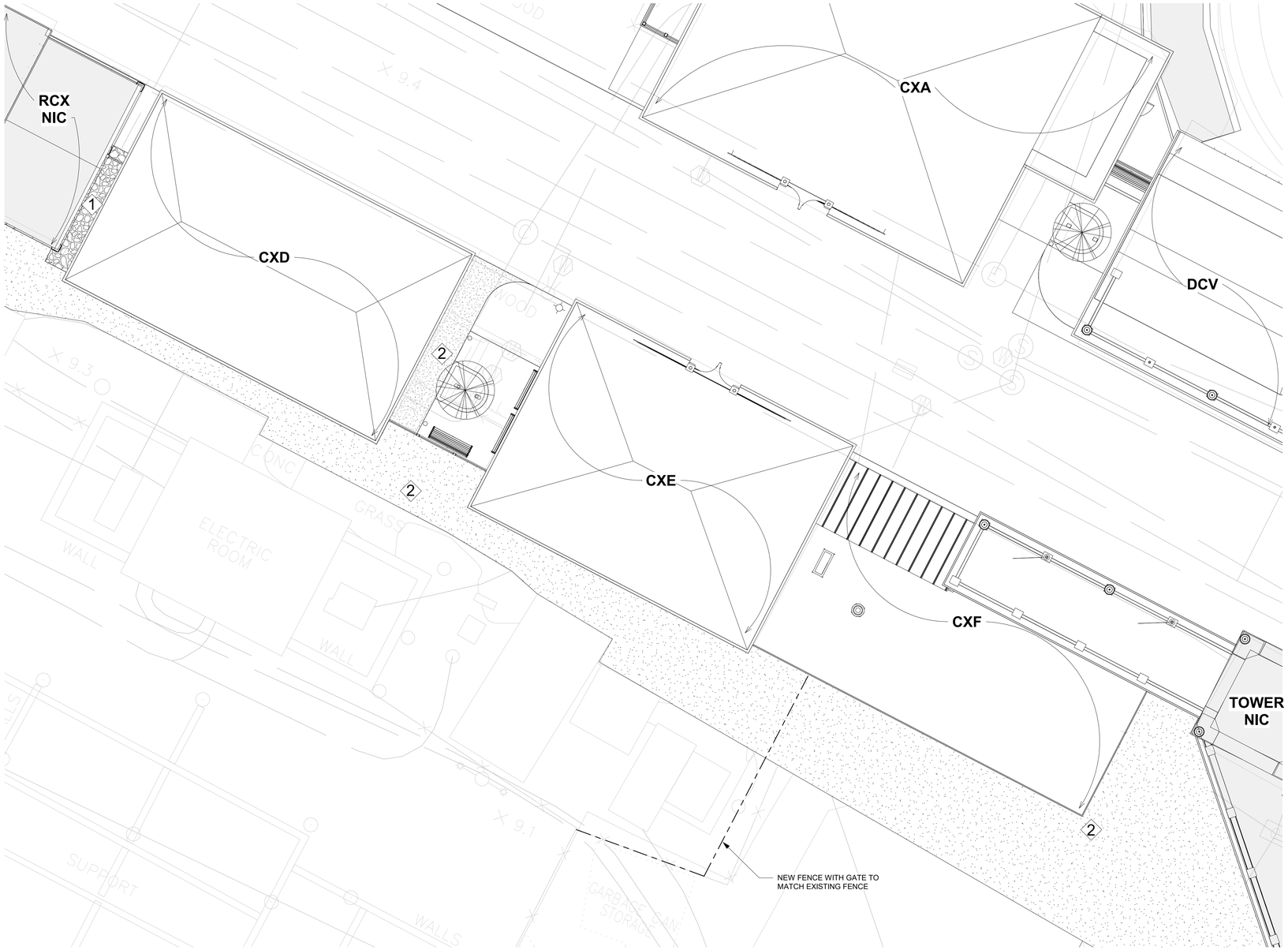


2 SITE RESTORATION PLAN
1/8" = 1'-0"

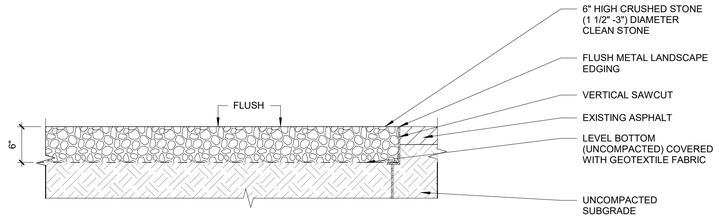


1 GRAVEL SURFACE
1" = 1'-0"

8/30/2022 4:20:56 PM

CONSULTANT INFORMATION

The LiRo Group
3 Aerial Way, Syosset, New York 11791
(516) 938-5476 www.liro.com

CONSULTANT SEAL

REGISTERED ARCHITECT ROBERT D. YOUNG JR. 023220 STATE OF NEW YORK

| REVISION NUMBER | DATE | MADE BY | APP'D BY | REVISION |
|---|---|---|---|---|
| | | | | |

RECORD DRAWING CERTIFICATION

☐ AS BUILT – CHANGES AS NOTED ☐ AS BUILT – NO CHANGES

CONTRACTOR
NAME
SIGNATURE
TITLE DATE

PROJECT COORDINATOR
NAME
SIGNATURE
TITLE DATE

WESTCHESTER COUNTY, NEW YORK
DEPARTMENT OF PUBLIC WORKS AND TRANSPORTATION
DIVISION OF ENGINEERING

**INFRASTRUCTURE REHABILITATION PHASE 3**
**PLAYLAND PARK, RYE, NEW YORK**
**CXD - CXE - CXF**
**CXE - SITE RESTORATION**

| | |
|---|---|
| CONTRACT NUMBER | 22-523 |
| SHEET NUMBER | CXE-G-03 |
| DWG NO.: | 253 of 664 |
| SCALE: | As indicated |
| DATE: | 08/23/2022 |
| DPW FILE NUMBER | 1-118-G-1002-0 |
| REV. NO. | 0 |

# PLAYLAND REHABILITATION & UPGRADES
# CXE - ASBESTOS ABATEMENT
## 1 PLAYLAND PKWY, RYE, NY 10580

**DETAILS:**

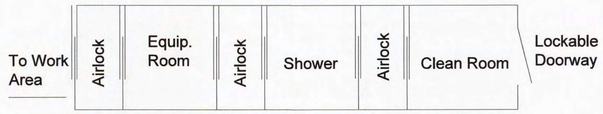


1 CXE-H-10 — LARGE PROJECT REMOTE WORKER DECONTAMINATION UNIT
Not To Scale

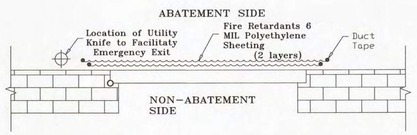


2 CXE-H-10 — TYPICAL SOFT WALL BARRIER AT OPENINGS LESS THAN 32SF
Not To Scale

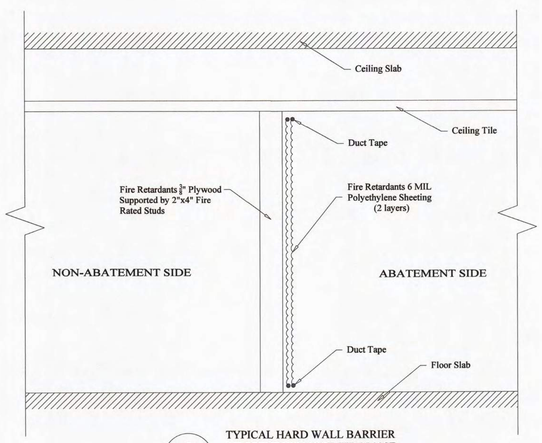


3 CXE-H-10 — TYPICAL HARD WALL BARRIER AT OPENINGS MORE THAN 32SF
Not To Scale

**SCOPE OF WORK TABLE:**

| Work area | Location | Description of Asbestos Materials | Approximate Quantity of ACM | ICR 56 Procedure |
|---|---|---|---|---|
| 1 | CXE Cross Axis Building E (South Games Buildings) | Fascia Board | 1140 SF | 56.11.6 |
| 2 | | Column Caulk | 79 SF | |

**KEYPLAN:**

**LEGEND:**

- WORK AREA LIMITS
- P/W R # — REMOTE WORKER DECONTAMINATION UNIT
- WC — WASTE HOLDING AREA
- AIRLOCK
- W — TEMPORARY WATER SOURCE
- E — TEMPORARY ELECTRICAL SOURCE

**PROJECT NOTES:**

1. The Contractor shall be aware of all conditions of the Project and is responsible for verifying quantities and locations of all Work to be performed. Failure to do so shall not relieve the Contractor of its obligation to furnish all labor and materials necessary to perform the Work.
2. All Work shall be performed in strict accordance with the Project Documents and all governing codes, rules, and regulations. Where conflicts occur between the Project Documents and applicable codes, rules, and regulations, the more stringent shall apply.
3. All abatement work shall be coordinated with General Contractor work; Abatement may be phased with other contract work.
4. Working hours shall be as required and approved by the Owner. Asbestos abatement activities including, but not limited to, work area preparation, gross removal activities, cleaning activities, waste removal, etc. may need to be performed during 'off-hours' (including nights and weekends). In addition, multiple mobilizations may be required to perform the work identified in this project. The Contractor shall coordinate and schedule all Work with the facility and Owner's representative.
5. The Contractor shall prepare and coordinate with facility representative the posting of appropriate signage at the entranceway that redirects park occupants away from the area of the abatement.
6. The Contractor shall use barrier tape to extend the limits of the active, regulated work areas closed to the public and other non-abatement trades.
7. The Contractor shall be responsible for defining and coordinating the phases of the abatement with the facility and DPW, as well as securing any site specific variances, permits, and any necessary NYS DOL approvals.
8. The asbestos abatement Contractor shall coordinate locations of decontamination units, routes of egress, temporary water and power connections and waste container locations with the Owner and the Facility.
9. The Contractor may need to supply temporary power/water sources if they cannot be provided by facility.
10. The General Contractor shall supply any and all scaffolding for the work area(s) under this contract. Scaffolding structure and maintenance shall be in strict accordance with local, state and federal safety requirements.
11. The Contractor is to protect any and all exposed surfaces not targeted for abatement.
12. The Contractor shall request and receive in writing prior to preceding with any work info from the owner regarding surfaces/materials that require protection.
13. Regular waste generated by the abatement work of this contract shall be stored securely using a closed waste container.

5/3/2022 11:43:22 AM

CONSULTANT INFORMATION
The LiRo Group
3 Aerial Way, Syosset, New York 11791
(516) 938-5476 www.liro.com

CONSULTANT SEAL
STATE OF NEW YORK — PETER JOSEPH BERGAN — LICENSED PROFESSIONAL ENGINEER — No. 070446

| REVISION NUMBER | DATE | MADE BY | APP'D BY | REVISION |
|---|---|---|---|---|

RECORD DRAWING CERTIFICATION
☐ AS BUILT – CHANGES AS NOTED ☐ AS BUILT – NO CHANGES

CONTRACTOR: NAME / SIGNATURE / TITLE / DATE
PROJECT COORDINATOR: NAME / SIGNATURE / TITLE / DATE

WESTCHESTER COUNTY, NEW YORK
DEPARTMENT OF PUBLIC WORKS AND TRANSPORTATION
DIVISION OF ENGINEERING

INFRASTRUCTURE REHABILITATION - PHASE 3
PLAYLAND PARK, RYE, NEW YORK
CROASS AXIS BUILDING E
GENERAL ASBESTOS ABATEMENT NOTES

| | |
|---|---|
| CONTRACT NUMBER | 22-523 |
| SHEET NUMBER | CXE-H-10 |
| DWG NO.: | |
| SCALE: | NOT TO SCALE |
| DATE: | 08/23/2022 |
| DPW FILE NUMBER | 1-118-G-1003-0 |
| REV. NO. | 0 |

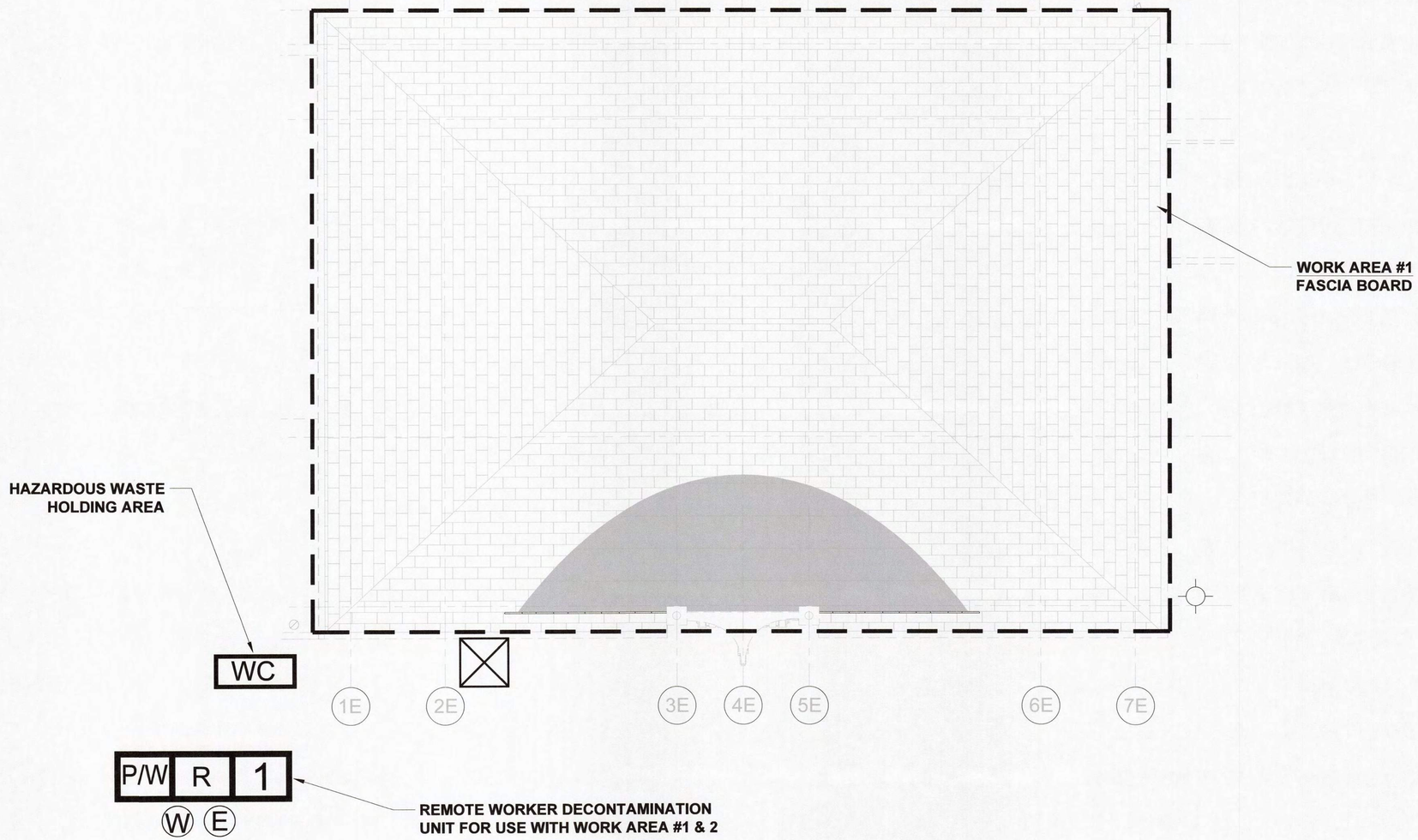


1 ROOF - ASBESTOS ABATEMENT PLAN
NTS

N

5/3/2022 11:43:22 AM

CONSULTANT INFORMATION

The LiRo Group

3 Aerial Way, Syosset, New York 11791
(516) 938-5476 www.liro.com

CONSULTANT SEAL

STATE OF NEW YORK
PETER JOSEPH GERBAS
No. 070446
LICENSED PROFESSIONAL ENGINEER

| REVISION NUMBER | DATE | MADE BY | APP'D BY | REVISION |
|---|---|---|---|---|
| | | | | |

RECORD DRAWING CERTIFICATION

☐ AS BUILT – CHANGES AS NOTED ☐ AS BUILT – NO CHANGES

CONTRACTOR
NAME
SIGNATURE
TITLE DATE

PROJECT COORDINATOR
NAME
SIGNATURE
TITLE DATE

WESTCHESTER COUNTY, NEW YORK
DEPARTMENT OF PUBLIC WORKS AND TRANSPORTATION
DIVISION OF ENGINEERING

**INFRASTRUCTURE REHABILITATION - PHASE 3**
**PLAYLAND PARK, RYE, NEW YORK**
**CROSS AXIS BUILDING E**
**ROOF - ASBESTOS ABATEMENT PLAN**

| | |
|---|---|
| CONTRACT NUMBER | 22-523 |
| SHEET NUMBER | CXE-H-11 |
| DWG NO.: | |
| SCALE: | NOT TO SCALE |
| DATE: | 08/23/2022 |
| DPW FILE NUMBER | 1-118-G-1004-0 |
| REV. NO. | 0 |

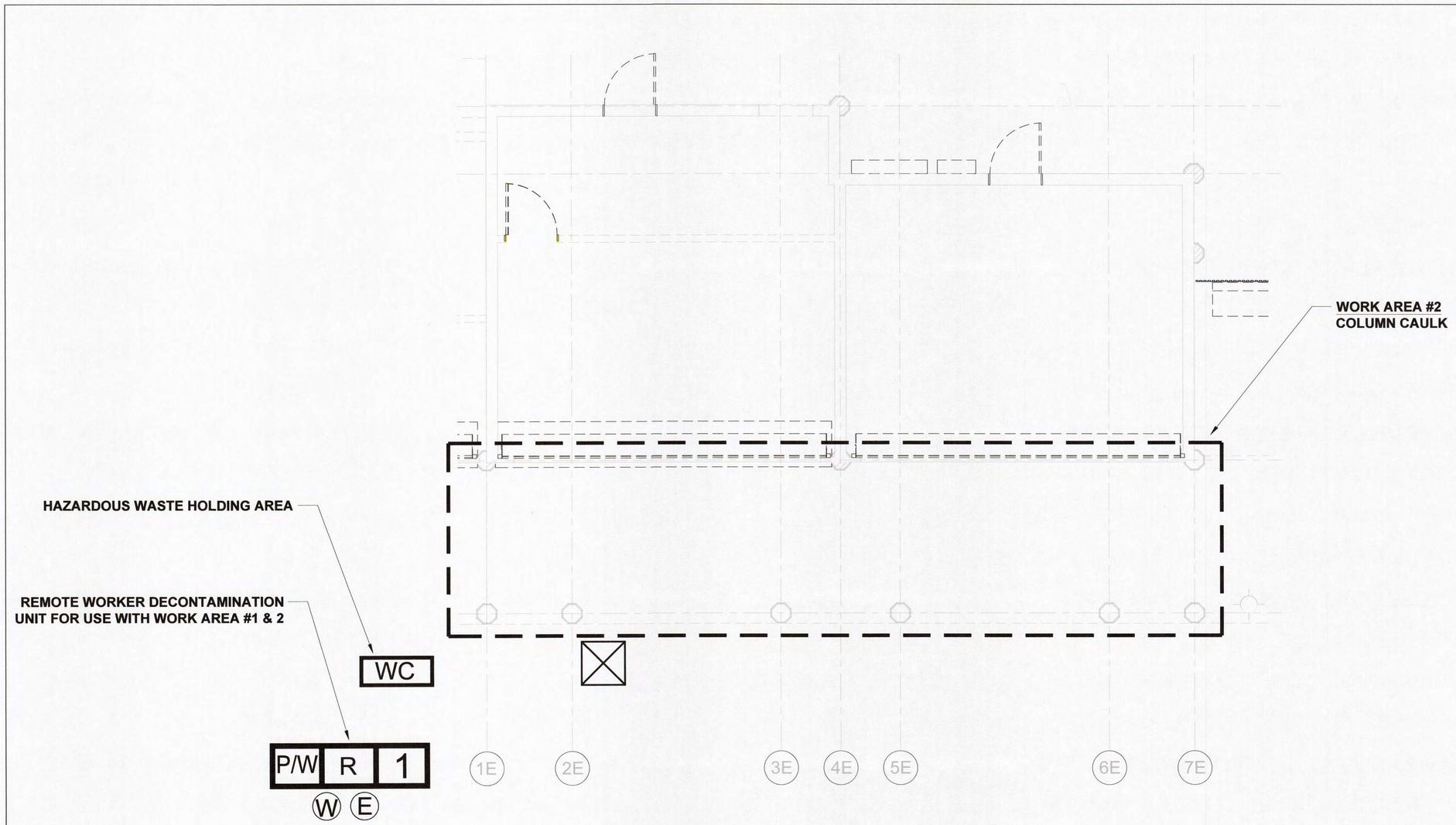


1 GROUND FLOOR - ASBESTOS ABATEMENT PLAN
NTS

5/3/2022 11:43:22 AM

CONSULTANT INFORMATION
The LiRo Group
3 Aerial Way, Syosset, New York 11791
(516) 938-5476 www.liro.com

CONSULTANT SEAL
STATE OF NEW YORK
JOSEPH GERBASI
No. 070446
LICENSED PROFESSIONAL ENGINEER

| REVISION NUMBER | DATE | MADE BY | APP'D BY | REVISION |
|---|---|---|---|---|

RECORD DRAWING CERTIFICATION
AS BUILT – CHANGES AS NOTED
AS BUILT – NO CHANGES

CONTRACTOR
NAME
SIGNATURE
TITLE DATE

PROJECT COORDINATOR
NAME
SIGNATURE
TITLE DATE

WESTCHESTER COUNTY, NEW YORK
DEPARTMENT OF PUBLIC WORKS AND TRANSPORTATION
DIVISION OF ENGINEERING

INFRASTRUCTURE REHABILITATION - PHASE 3
PLAYLAND PARK, RYE, NEW YORK
CROSS AXIS BUILDING E
GROUND FLOOR - ASBESTOS ABATEMENT PLAN

CONTRACT NUMBER 22-523
SHEET NUMBER CXE-H-12
DWG NO.:
SCALE: NOT TO SCALE
DATE: 08/23/2022
DPW FILE NUMBER 1-118-G-1005-0
REV. NO. 0

# PLAYLAND REHABILITATION & UPGRADES
# CXE - LEAD REMEDIATION
## 1 PLAYLAND PKWY, RYE, NY 10580

**DETAILS:**

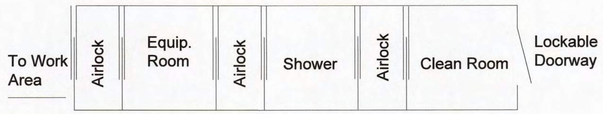


1 CXE-H-20 — LARGE PROJECT REMOTE WORKER DECONTAMINATION UNIT — Not To Scale

**SCOPE OF WORK TABLE:**

| Work area | Location | Description | Material | Quantity | Procedure |
|---|---|---|---|---|---|
| 1 | Exterior | Entire Building | Painted Surfaces | 600 SF | Manual Wet Scraping/Chemical Strip |

**PROJECT NOTES:**

1. All layers of coating shall be considered as LBP and removed down to the substrates. Substrates coated with LBP and targeted for demolition may be removed and disposed of solid structure waste following TCLP testing.
2. Substrates coated with LBP and targeted for refurbish and recoating shall be abated using manual wet scraping or chemical stripping procedures, localized testing of chemical strapping products shall proceed broader use and only after approval by the DPW Environmental Consultant.
3. The abatement contractor shall separate paint chips and contaminated dust/particulate generated by the abatement from other project waste streams including worker personal protective equipment and plastic sheeting. All waste other than lead paint chips and contaminated dust/particulate shall be TCLP tested prior to disposal.
4. Waste generated by the work of this method shall be stored on site in a NYSDEC compliant Hazardous and Waste Storage Area and transported under manifest to the disposal site.
5. The contractor shall prepare a project specific work plan and project specific HASP for the work of this contract.
6. LBP remediation shall be consistent with guidelines from SSPC and work shall comply with the OSHA regulations including using of decontamination units and hand wash stations.
7. The contractor may propose alternate LBP removal procedures however, use of alternate procedures will require approval by DPW Environmental Consultant; the abatement contractor is responsible with maintaining the physical conditions and integrity of the targeted substrates, and the surrounding structures during abatement work.
8. The Contractor shall request and receive in writing prior to preceding with any work info from the owner regarding surfaces/materials that require protection.

**LEGEND:**

- WORK AREA LIMITS
- WS — OSHA HANDWASHING STATION
- HWSA — HAZARDOUS WASTE STORAGE AREA
- AIRLOCK
- W — TEMPORARY WATER SOURCE
- E — TEMPORARY ELECTRICAL SOURCE
- EXTERIOR PAINTED SURFACES

**KEYPLAN:**

CONSULTANT INFORMATION
The LiRo Group
3 Aerial Way, Syosset, New York 11791
(516) 938-5476 www.liro.com


CONSULTANT SEAL: STATE OF NEW YORK — PETER JOSEPH CERBASI — 082446 — LICENSED PROFESSIONAL ENGINEER

| REVISION NUMBER | DATE | MADE BY | APP'D BY | REVISION |
|---|---|---|---|---|

RECORD DRAWING CERTIFICATION
☐ AS BUILT – CHANGES AS NOTED ☐ AS BUILT – NO CHANGES

CONTRACTOR: NAME / SIGNATURE / TITLE / DATE
PROJECT COORDINATOR: NAME / SIGNATURE / TITLE / DATE

WESTCHESTER COUNTY, NEW YORK
DEPARTMENT OF PUBLIC WORKS AND TRANSPORTATION
DIVISION OF ENGINEERING

**INFRASTRUCTURE REHABILITATION - PHASE 3**
**PLAYLAND PARK, RYE, NEW YORK**
**CROSS AXIS BUILDING E**
**GENERAL LEAD REMEDIATION NOTES**

| | |
|---|---|
| CONTRACT NUMBER | 22-523 |
| SHEET NUMBER | CXE-H-20 |
| DWG NO.: | |
| SCALE: | NOT TO SCALE |
| DATE: | 08/23/2022 |
| DPW FILE NUMBER | 1-118-G-1006-0 |
| REV. NO. | 0 |

5/3/2022 11:43:22 AM

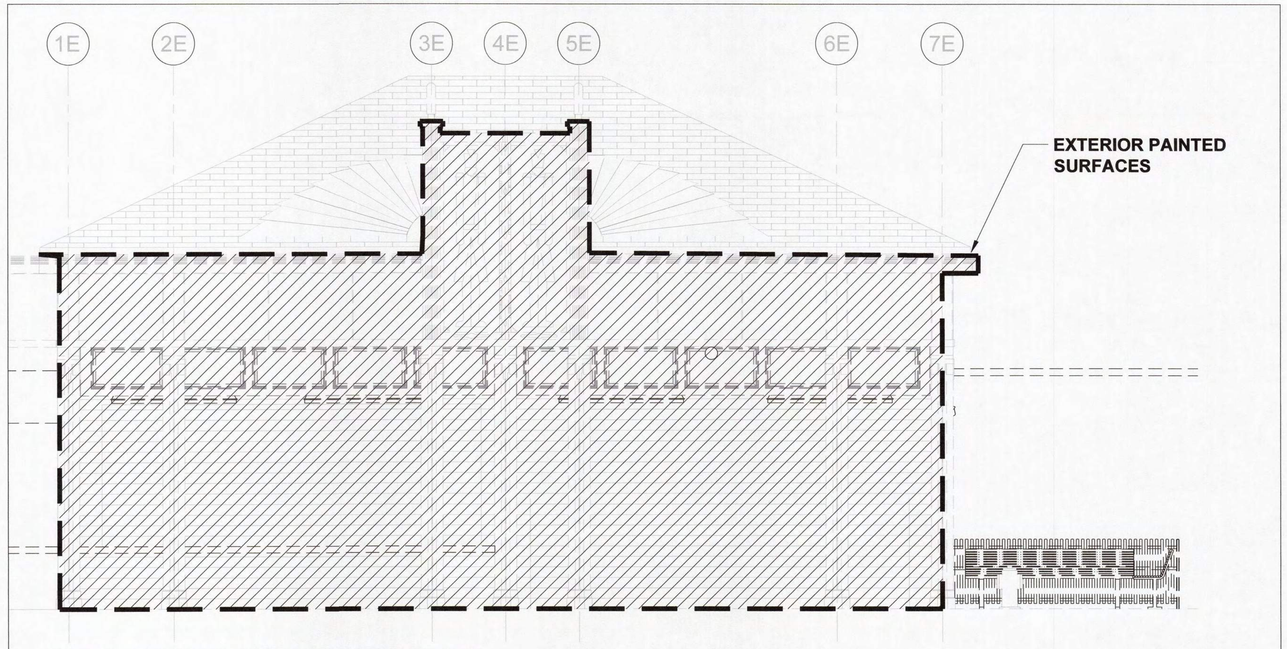


1 NORTH ELEVATION - LEAD REMEDIATION PLAN
NTS

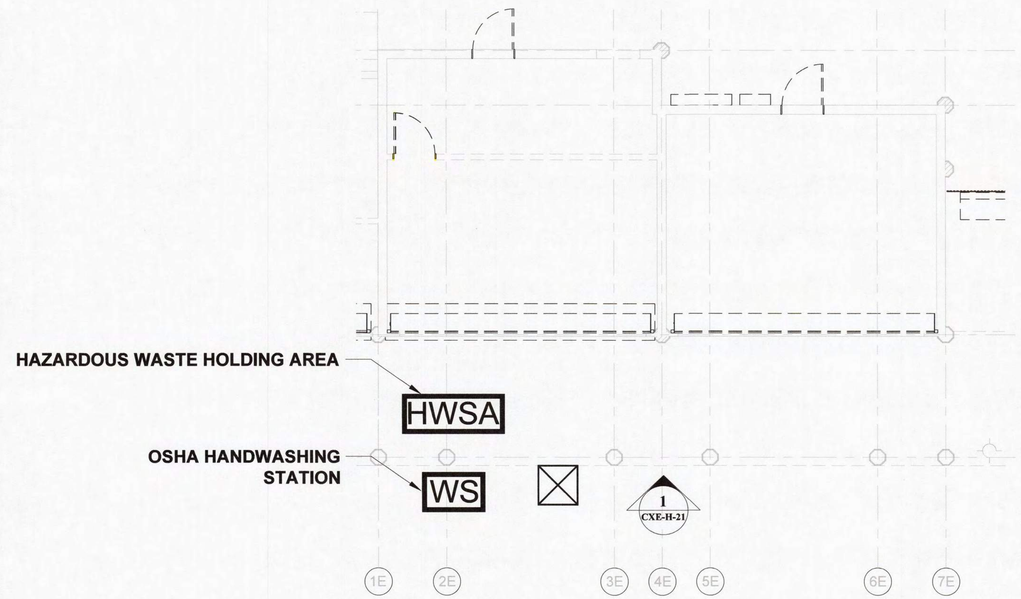


1 ROOF - LEAD REMEDIATION PLAN
NTS

5/3/2022 11:43:22 AM

CONSULTANT INFORMATION

The LiRo Group

3 Aerial Way, Syosset, New York 11791
(516) 938-5476 www.liro.com

CONSULTANT SEAL

STATE OF NEW YORK · PETER JOSEPH SERRAS · No. 070446 · LICENSED PROFESSIONAL ENGINEER

| REVISION NUMBER | DATE | MADE BY | APP'D BY | REVISION |
|---|---|---|---|---|
| | | | | |

RECORD DRAWING CERTIFICATION

☐ AS BUILT – CHANGES AS NOTED ☐ AS BUILT – NO CHANGES

CONTRACTOR
NAME
SIGNATURE
TITLE DATE

PROJECT COORDINATOR
NAME
SIGNATURE
TITLE DATE

WESTCHESTER COUNTY, NEW YORK
DEPARTMENT OF PUBLIC WORKS AND TRANSPORTATION
DIVISION OF ENGINEERING

**INFRASTRUCTURE REHABILITATION - PHASE 3**
**PLAYLAND PARK, RYE, NEW YORK**
**CROSS AXIS BUILDING E**
**NORTH & EAST ELEVATION - LEAD REMEDIATION PLAN**

| | |
|---|---|
| CONTRACT NUMBER | 22-523 |
| SHEET NUMBER | CXE-H-21 |
| DWG NO.: | |
| SCALE: | NOT TO SCALE |
| DATE: | 08/23/2022 |
| DPW FILE NUMBER | 1-118-G-1007-0 |
| REV. NO. | 0 |

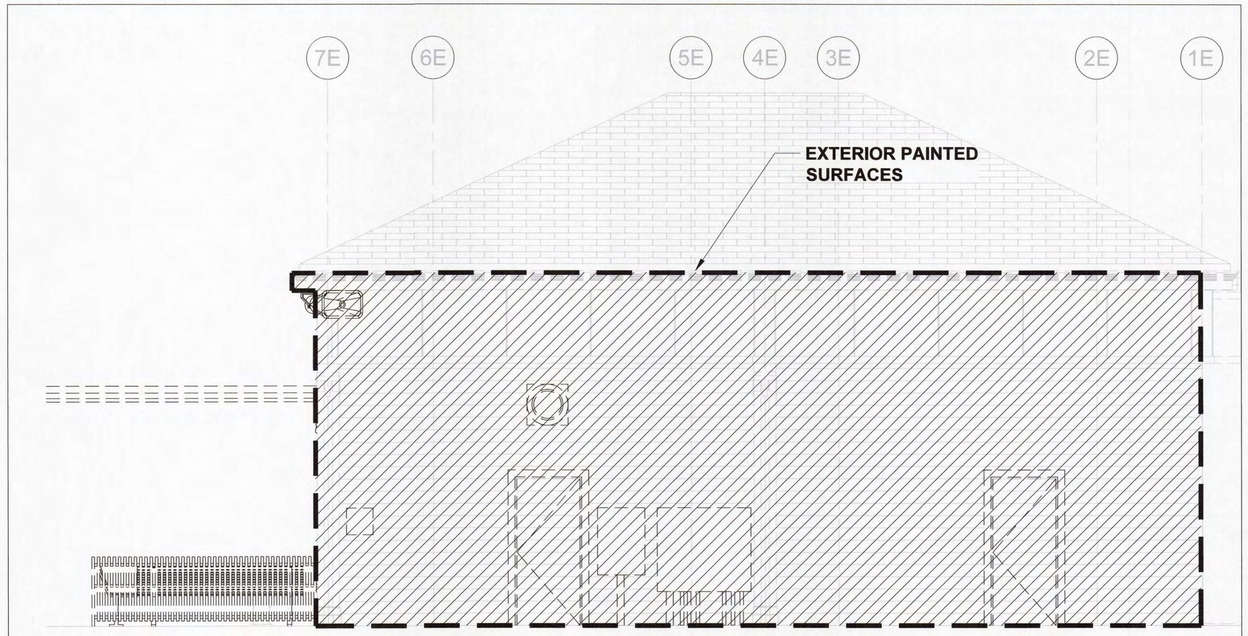


1 SOUTH ELEVATION - LEAD REMEDIATION PLAN
NTS

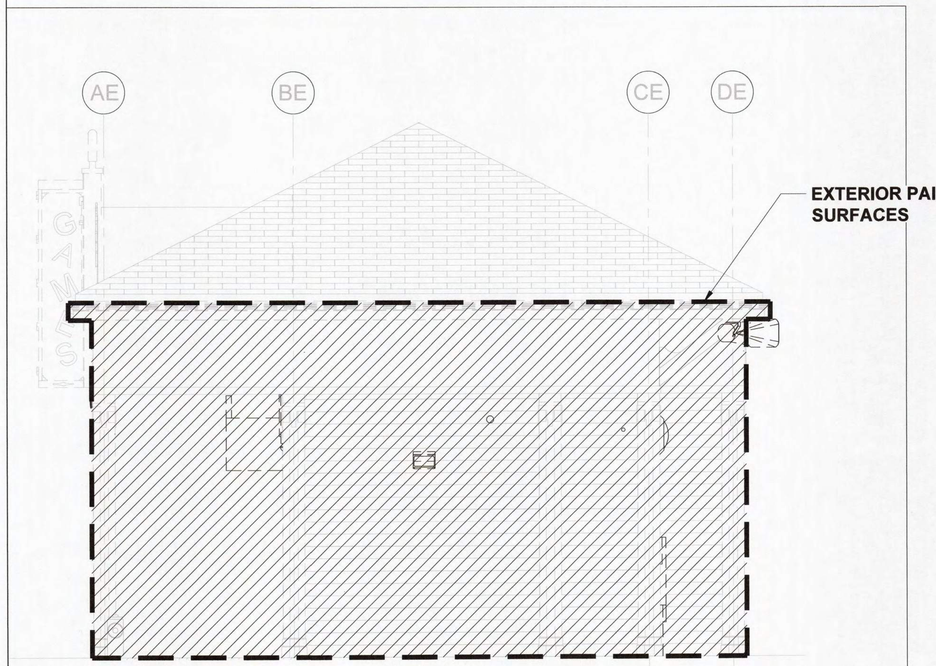


2 WEST ELEVATION - LEAD REMEDIATION PLAN
NTS

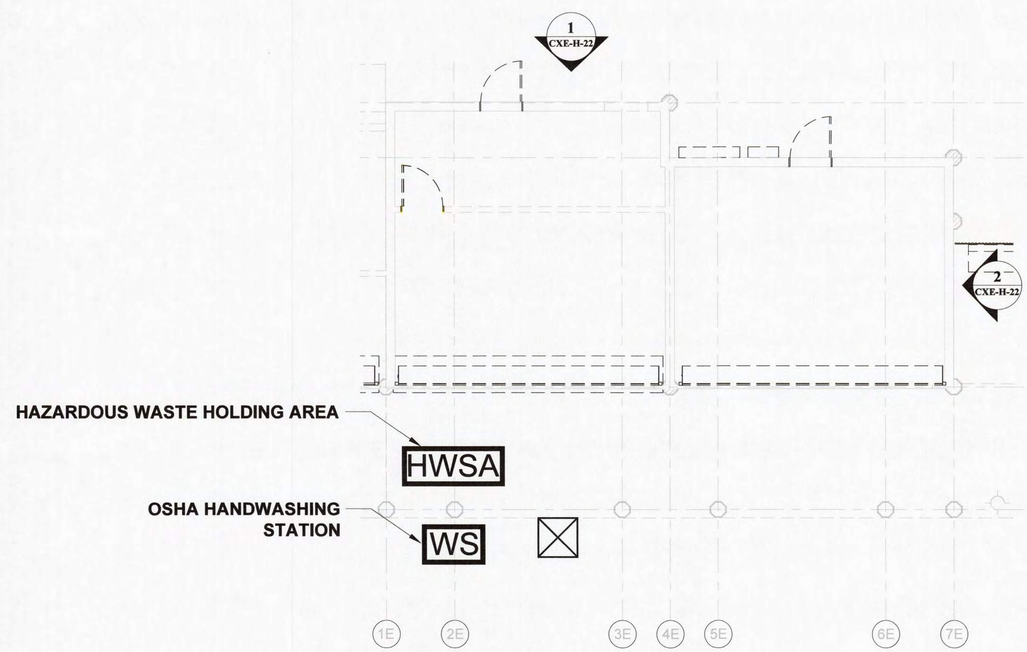


1 ROOF - LEAD REMEDIATION PLAN
NTS

5/3/2022 11:43:22 AM

CONSULTANT INFORMATION

The LiRo Group

3 Aerial Way, Syosset, New York 11791
(516) 938-5476 www.liro.com

CONSULTANT SEAL

STATE OF NEW YORK · PETER JOSEPH LIRO · NO. 070446 · LICENSED PROFESSIONAL ENGINEER

| REVISION NUMBER | DATE | MADE BY | APP'D BY | REVISION |
|---|---|---|---|---|
| | | | | |

RECORD DRAWING CERTIFICATION

☐ AS BUILT – CHANGES AS NOTED ☐ AS BUILT – NO CHANGES

CONTRACTOR
NAME
SIGNATURE
TITLE DATE

PROJECT COORDINATOR
NAME
SIGNATURE
TITLE DATE

WESTCHESTER COUNTY, NEW YORK
DEPARTMENT OF PUBLIC WORKS AND TRANSPORTATION
DIVISION OF ENGINEERING

**INFRASTRUCTURE REHABILITATION - PHASE 3**
**PLAYLAND PARK, RYE, NEW YORK**
**CROSS AXIS BUILDING E**
**SOUTH & WEST ELEVATION - LEAD REMEDIATION PLAN**

| | |
|---|---|
| CONTRACT NUMBER | 22-523 |
| SHEET NUMBER | CXE-H-22 |
| DWG NO.: | |
| SCALE: | NOT TO SCALE |
| DATE: | 08/23/2022 |
| DPW FILE NUMBER | 1-118-G-1008-0 |
| REV. NO. | 0 |

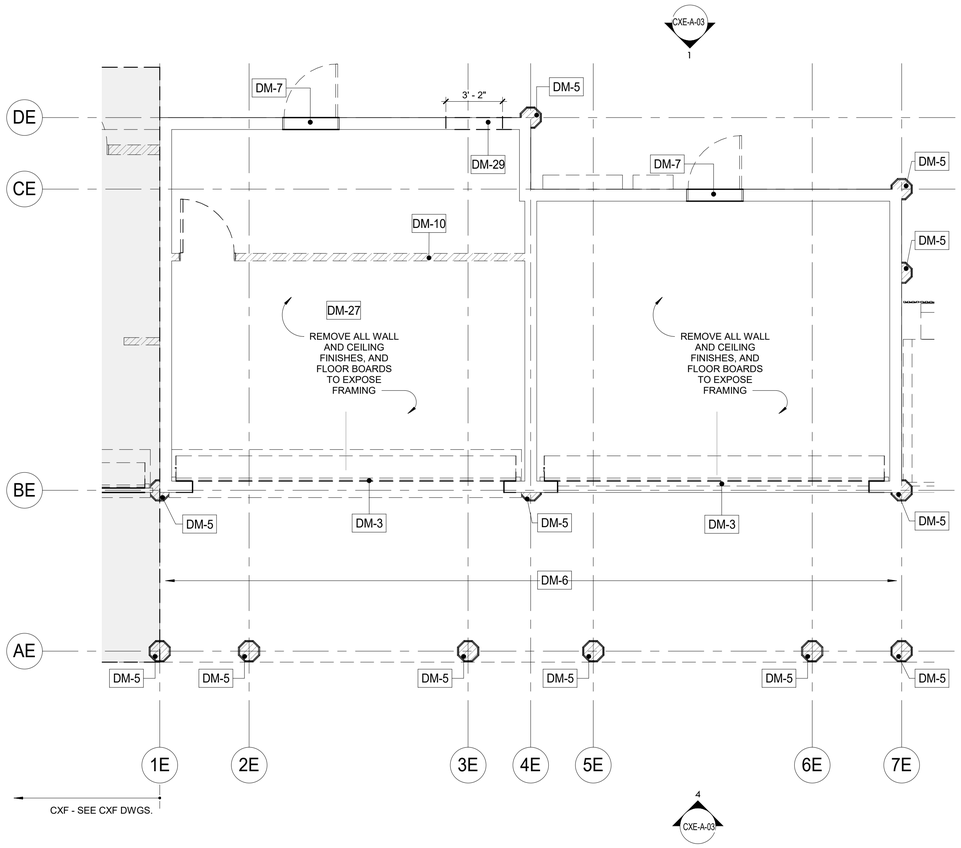


1 GROUND FLOOR DEMOLITION PLAN CXE

1/4" = 1'-0"

## DEMOLITION NOTES:

1. THE GENERAL CONTRACTOR SHALL VISIT THE SITE AND FAMILIARIZE HIM/HERSELF WITH EXISTING CONDITIONS AND REQUIREMENTS OF THE WORK. THE GENERAL CONTRACTOR SHALL FIELD VERIFY EXACT QUANTITIES OF ALL ITEMS TO BE REMOVED.
2. THE CONTRACTOR SHALL PHOTOGRAPH AND DOCUMENT EXISTING HISTORIC DECORATIVE TRIMS INCLUDING SIZES AND PROFILES PRIOR TO ENVIRONMENTAL REMEDIATION WORK START.
3. ITEMS TO BE REMOVED / DEMOLISHED AS INDICATED ON THE DRAWINGS ARE INTENDED TO SHOW THE GENERAL SCOPE OF THE DEMOLITION WORK. THE DRAWINGS DO NOT REPRESENT IN DETAIL ALL ITEMS OR SITUATIONS THAT MAY BE ENCOUNTERED DURING THE DEMOLITION. IT IS THE CONTRACTOR'S RESPONSIBILITY TO REMOVE, PROTECT, AND MAKE CORRECTIONS AS REQUIRED TO ACHIEVE DRAWING INTENT. THE GENERAL CONTRACTOR SHALL NOTIFY ARCHITECT OF ANY STRUCTURAL NONCONFORMITY TO PLANS AND SPECIFICATIONS.
4. PLAYLAND RESERVES THE RIGHT TO REVIEW ALL MATERIALS DESIGNATED FOR REMOVAL AND TO RETAIN OWNERSHIP OF SUCH MATERIALS. IF PLAYLAND RETAINS ANY MATERIAL THE CONTRACTOR SHALL MAKE ARRANGEMENTS WITH THE PLAYLAND'S SUPERINTENDENT TO HAVE THOSE MATERIALS REMOVED AND STORED OFF SITE AT NO ADDITIONAL COST.
5. DEMOLITION OF THE EXISTING BUILDING SHALL INCLUDE REMOVAL OF THE EXISTING FOUNDATIONS FOR THEIR ENTIRE DEPTH TO ACCOMMODATE INSTALLATION OF NEW FOUNDATIONS.
6. THE CONTRACTOR SHALL USE EXTREME CAUTION IN AREAS OF DEMOLITION WHICH MAY DISTURB EXISTING STRUCTURES. TEMPORARY SHORING, BARRICADES, DUST PARTITIONS, ETC. SHALL BE PROVIDED AS REQUIRED TO PROTECT ALL EXISTING STRUCTURES AND PROPERTY.
7. SEE STRUCTURAL, ELECTRICAL, SPRINKLER, AND PLUMBING DRAWINGS FOR RELATED DEMOLITION WORK.
8. VERIFY LOCATION OF EXISTING STRUCTURES AND SHORE UP ROOF/FLOOR ABOVE AS REQUIRED BEFORE REMOVING WALL.
9. REMOVAL OF ALL CEILINGS AND MOUNTED ITEMS THROUGHOUT THE CONTRACT AREA INCLUDE ANCHORING HARDWARE, AND MISCELLANEOUS FASTENINGS, ETC.
10. WALLS SHALL BE REMOVED AS INDICATED ON DEMOLITION PLANS. ALL UTILITIES IN WALL SHALL BE CUT TO BELOW SLAB OR ABOVE THE CEILING.
11. REMOVE ALL EXISTING ELECTRICAL AND PLUMBING LINES NOT TO BE RE-USED. CAP PLUMBING LINES AS REQUIRED. ELECTRICAL WIRING SHALL BE DISCONNECTED BACK TO THE NEAREST ACTIVE LOCATION. ALL ABANDONED COMMUNICATION CABLES (DATA, TELEPHONE, FIRE ALARM, AND AUDIO/VIDEO CABLES) SHALL BE REMOVED TO SOURCE IF NOT TAGGED FOR FUTURE USE.
12. DEMOLITION PROCEDURES ARE THE SOLE RESPONSIBILITY OF THE GENERAL CONTRACTOR OF THIS CONTRACT. CONTRACTOR TO "CUT OFF" ALL NECESSARY UTILITIES REQUIRED TO OBTAIN DESIRED RESULTS. CONTRACTOR TO OBTAIN "SHUT OFF" APPROVALS FROM PLAYLAND PRIOR TO SCHEDULED DEMOLITION.
13. THE GENERAL CONTRACTOR SHALL PATCH AND REPAIR ALL EXISTING CONSTRUCTION DISTURBED BY THE WORK AND PREPARE FOR NEW FINISH AS SHOWN ON THE INTERIOR ELEVATIONS.
14. THE EXISTING WOOD FLOOR SHALL BE CLEANED TO ALLOW FOR THE APPLICATION OF NEW FLOOR COATING.
15. THE GENERAL CONTRACTOR SHALL BE RESPONSIBLE FOR THE CLEANING UP AND HAULING AWAY OF ALL TRASH AND DEBRIS ON A REGULAR BASIS DURING THE CONSTRUCTION PERIOD.
16. ALL DEBRIS REMOVED FROM THE SITE SHALL BE DISPOSED OF IN A LEGAL MANNER.
17. EXISTING EXITS SHALL REMAIN FULLY ACCESSIBLE AND UNOBSTRUCTED DURING THE PROGRESS OF THE WORK.

## DEMOLITION LEGEND

- INDICATES DEMOLITION
- DM - # — DEMOLITION KEY NOTES
- SHINGLES TO BE REMOVED
- SBS MODIFIED BITUMEN TO BE REMOVED
- NIC — INDICATES N.I.C.

## DEMO KEYNOTES

| | |
|---|---|
| DM-3 | REMOVE ROLL DOWN DOOR AND ASSOCIATED HARDWARE. |
| DM-5 | REMOVE COLUMN ENCLOSURES. CAREFULLY REMOVE AT LEAST ONE COLUMN ENCLOSURE TO USE AS REFERENCE IN ORDER TO REPLICATE TRIMS TO MATCH LOCATION, SIZE AND SHAPE AS INDICATED. COORDINATE WITH STRUCTURAL DRAWINGS. |
| DM-6 | REMOVE EXISTING WOOD DECKING. (COORDINATE EXTENT OF REMOVAL REQUIRED TO REPAIR FLOOR JOISTS TO REMAIN AS NEEDED - SEE STRUCTURAL DRAWINGS). |
| DM-7 | REMOVE EXISTING DOOR & FRAME. |
| DM-10 | REMOVE INTERIOR PARTITION. |
| DM-27 | REMOVE EXISTING FLOORING. |
| DM-29 | REMOVE SECTION OF EXISTING WALL. PROVIDE HEADER AS REQUIRED TO CREATE A DOOR OPENING. SEE ELEVATIONS FOR EXTENT. |

8/30/2022 4:20:06 PM

CONSULTANT INFORMATION

The LiRo Group

3 Aerial Way, Syosset, New York 11791
(516) 938-5476 www.liro.com

CONSULTANT SEAL

REGISTERED ARCHITECT ROBERT D. YOUNG 023280 STATE OF NEW YORK

| REVISION NUMBER | DATE | MADE BY | APP'D BY | REVISION |
|---|---|---|---|---|
| | | | | |

RECORD DRAWING CERTIFICATION

☐ AS BUILT – CHANGES AS NOTED ☐ AS BUILT – NO CHANGES

CONTRACTOR
NAME
SIGNATURE
TITLE DATE

PROJECT COORDINATOR
NAME
SIGNATURE
TITLE DATE

WESTCHESTER COUNTY, NEW YORK
DEPARTMENT OF PUBLIC WORKS AND TRANSPORTATION
DIVISION OF ENGINEERING

**INFRASTRUCTURE REHABILITATION PHASE 3**
**PLAYLAND PARK, RYE, NEW YORK**
**CROSS AXIS BUILDING E**
**CXE - GROUND FLOOR DEMOLITION PLAN**

| | |
|---|---|
| CONTRACT NUMBER | 22-523 |
| SHEET NUMBER | CXE-A-01 |
| DWG NO.: | 260 of 664 |
| SCALE: | As indicated |
| DATE: | 08/23/2022 |
| DPW FILE NUMBER | 1-118-A-1009-0 |
| REV. NO. | 0 |

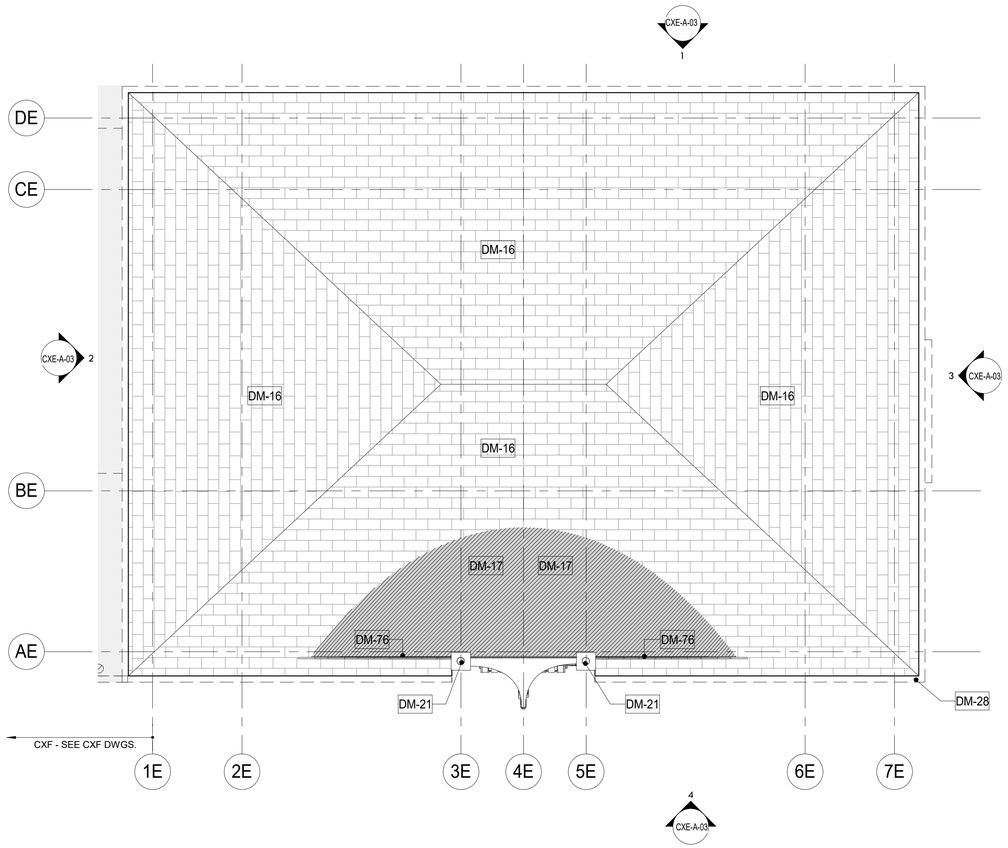


1 ROOF PLAN DEMOLITION CXE
1/4" = 1'-0"

## DEMOLITION NOTES:

1. THE GENERAL CONTRACTOR SHALL VISIT THE SITE AND FAMILIARIZE HIM/HERSELF WITH EXISTING CONDITIONS AND REQUIREMENTS OF THE WORK. THE GENERAL CONTRACTOR SHALL FIELD VERIFY EXACT QUANTITIES OF ALL ITEMS TO BE REMOVED.
2. THE CONTRACTOR SHALL PHOTOGRAPH AND DOCUMENT EXISTING HISTORIC DECORATIVE TRIMS INCLUDING SIZES AND PROFILES PRIOR TO ENVIRONMENTAL REMEDIATION WORK START.
3. ITEMS TO BE REMOVED / DEMOLISHED AS INDICATED ON THE DRAWINGS ARE INTENDED TO SHOW THE GENERAL SCOPE OF THE DEMOLITION WORK. THE DRAWINGS DO NOT REPRESENT IN DETAIL ALL ITEMS OR SITUATIONS THAT MAY BE ENCOUNTERED DURING THE DEMOLITION. IT IS THE CONTRACTOR'S RESPONSIBILITY TO REMOVE, PROTECT, AND MAKE CORRECTIONS AS REQUIRED TO ACHIEVE DRAWING INTENT. THE GENERAL CONTRACTOR SHALL NOTIFY ARCHITECT OF ANY STRUCTURAL NONCONFORMITY TO PLANS AND SPECIFICATIONS.
4. PLAYLAND RESERVES THE RIGHT TO REVIEW ALL MATERIALS DESIGNATED FOR REMOVAL AND TO RETAIN OWNERSHIP OF SUCH MATERIALS. IF PLAYLAND RETAINS ANY MATERIAL THE CONTRACTOR SHALL MAKE ARRANGEMENTS WITH THE PLAYLAND'S SUPERINTENDENT TO HAVE THOSE MATERIALS REMOVED AND STORED OFF SITE AT NO ADDITIONAL COST.
5. DEMOLITION OF THE EXISTING BUILDING SHALL INCLUDE REMOVAL OF THE EXISTING FOUNDATIONS FOR THEIR ENTIRE DEPTH TO ACCOMMODATE INSTALLATION OF NEW FOUNDATIONS.
6. THE CONTRACTOR SHALL USE EXTREME CAUTION IN AREAS OF DEMOLITION WHICH MAY DISTURB EXISTING STRUCTURES. TEMPORARY SHORING, BARRICADES, DUST PARTITIONS, ETC. SHALL BE PROVIDED AS REQUIRED TO PROTECT ALL EXISTING STRUCTURES AND PROPERTY.
7. SEE STRUCTURAL, ELECTRICAL, SPRINKLER, AND PLUMBING DRAWINGS FOR RELATED DEMOLITION WORK.
8. VERIFY LOCATION OF EXISTING STRUCTURES AND SHORE UP ROOF/FLOOR ABOVE AS REQUIRED BEFORE REMOVING WALL.
9. REMOVAL OF ALL CEILINGS AND MOUNTED ITEMS THROUGHOUT THE CONTRACT AREA INCLUDE ANCHORING HARDWARE, AND MISCELLANEOUS FASTENINGS, ETC.
10. WALLS SHALL BE REMOVED AS INDICATED ON DEMOLITION PLANS. ALL UTILITIES IN WALL SHALL BE CUT TO BELOW SLAB OR ABOVE THE CEILING.
11. REMOVE ALL EXISTING ELECTRICAL AND PLUMBING LINES NOT TO BE RE-USED. CAP PLUMBING LINES AS REQUIRED. ELECTRICAL WIRING SHALL BE DISCONNECTED BACK TO THE NEAREST ACTIVE LOCATION. ALL ABANDONED COMMUNICATION CABLES (DATA, TELEPHONE, FIRE ALARM, AND AUDIO/VIDEO CABLES) SHALL BE REMOVED TO SOURCE IF NOT TAGGED FOR FUTURE USE.
12. DEMOLITION PROCEDURES ARE THE SOLE RESPONSIBILITY OF THE GENERAL CONTRACTOR OF THIS CONTRACT. CONTRACTOR TO "CUT OFF" ALL NECESSARY UTILITIES REQUIRED TO OBTAIN DESIRED RESULTS. CONTRACTOR TO OBTAIN "SHUT OFF" APPROVALS FROM PLAYLAND PRIOR TO SCHEDULED DEMOLITION.
13. THE GENERAL CONTRACTOR SHALL PATCH AND REPAIR ALL EXISTING CONSTRUCTION DISTURBED BY THE WORK AND PREPARE FOR NEW FINISH AS SHOWN ON THE INTERIOR ELEVATIONS.
14. THE EXISTING WOOD FLOOR SHALL BE CLEANED TO ALLOW FOR THE APPLICATION OF NEW FLOOR COATING.
15. THE GENERAL CONTRACTOR SHALL BE RESPONSIBLE FOR THE CLEANING UP AND HAULING AWAY OF ALL TRASH AND DEBRIS ON A REGULAR BASIS DURING THE CONSTRUCTION PERIOD.
16. ALL DEBRIS REMOVED FROM THE SITE SHALL BE DISPOSED OF IN A LEGAL MANNER.
17. EXISTING EXITS SHALL REMAIN FULLY ACCESSIBLE AND UNOBSTRUCTED DURING THE PROGRESS OF THE WORK.

## DEMOLITION LEGEND

INDICATES DEMOLITION

DM - # DEMOLITION KEY NOTES

SHINGLES TO BE REMOVED

SBS MODIFIED BITUMEN TO BE REMOVED

NIC INDICATES N.I.C.

## DEMO KEYNOTES

| | |
|---|---|
| DM-16 | REMOVE EXISTING ROOFING SHINGLES, UNDERLAYMENT AND ANY ROTTED WOOD SHEATHING. REPLACE DAMAGED SHEATHING TO MATCH EXISTING. COORDINATE WITH A/E. |
| DM-17 | REMOVE EXISTING ROOFING MEMBRANES, UNDERLAYMENT AND ANY ROTTED WOOD SHEATHING. REPLACE EXISTING DAMAGED SHEATHING TO MATCH EXISTING. COORDINATE WITH A/E. |
| DM-21 | CAREFULLY REMOVE FINIAL LIGHTS (H6) FOR REFURBISHMENT AND REINSTALLATION |
| DM-28 | REMOVE EXISTING GUTTER, FASCIA, AND SOFFITS. |
| DM-76 | CAREFULLY REMOVE SUNBURST AND SIGN ELEMENTS FOR RESTORATION/ REPLICATION AND REINSTALLATION |

8/30/2022 4:20:08 PM

CONSULTANT INFORMATION

The LiRo Group
3 Aerial Way, Syosset, New York 11791
(516) 938-5476 www.liro.com

CONSULTANT SEAL

REGISTERED ARCHITECT ROBERT D. YOUNG JR. 023280 STATE OF NEW YORK

| REVISION NUMBER | DATE | MADE BY | APP'D BY | REVISION |
|---|---|---|---|---|

RECORD DRAWING CERTIFICATION

☐ AS BUILT – CHANGES AS NOTED ☐ AS BUILT – NO CHANGES

CONTRACTOR
NAME
SIGNATURE
TITLE DATE

PROJECT COORDINATOR
NAME
SIGNATURE
TITLE DATE

WESTCHESTER COUNTY, NEW YORK
DEPARTMENT OF PUBLIC WORKS AND TRANSPORTATION
DIVISION OF ENGINEERING

**INFRASTRUCTURE REHABILITATION PHASE 3**
**PLAYLAND PARK, RYE, NEW YORK**
**CROSS AXIS BUILDING E**
**CXE - ROOF DEMOLITION PLAN**

| | |
|---|---|
| CONTRACT NUMBER | 22-523 |
| SHEET NUMBER | CXE-A-02 |
| DWG NO.: | 261 of 664 |
| SCALE: | As indicated |
| DATE: | 08/23/2022 |
| DPW FILE NUMBER | 1-118-A-1010-0 |
| REV. NO. | 0 |

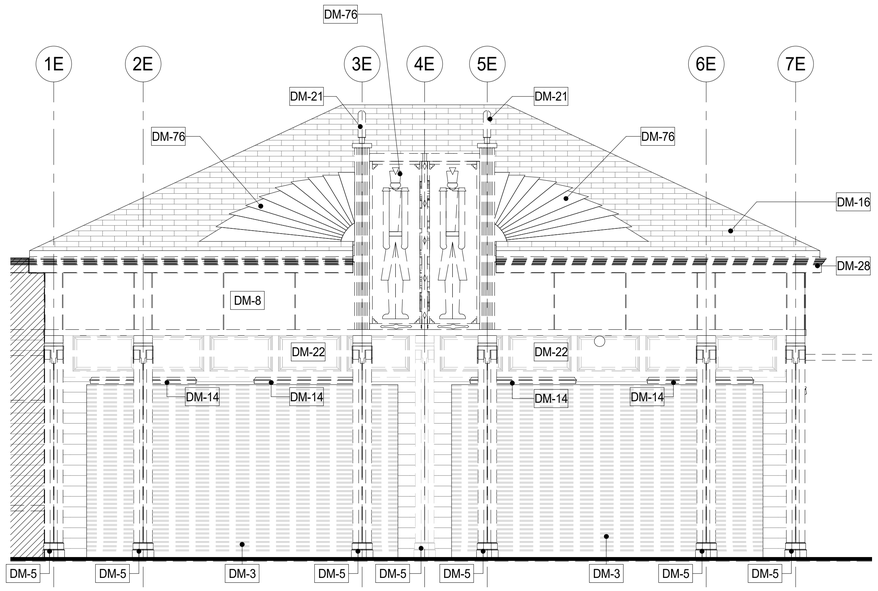


4 CXE - DEMOLITION ELEVATION - NORTH
1/4" = 1'-0"

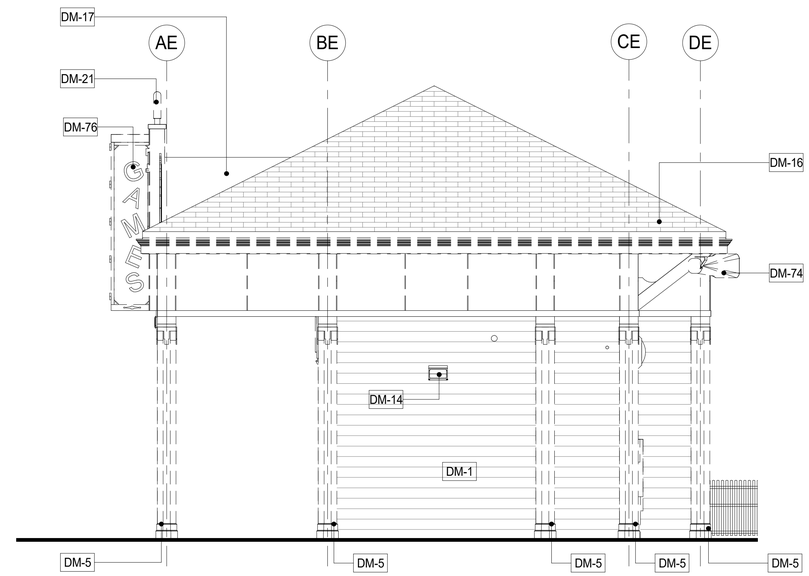


3 CXE - DEMOLITION ELEVATION - WEST
1/4" = 1'-0"

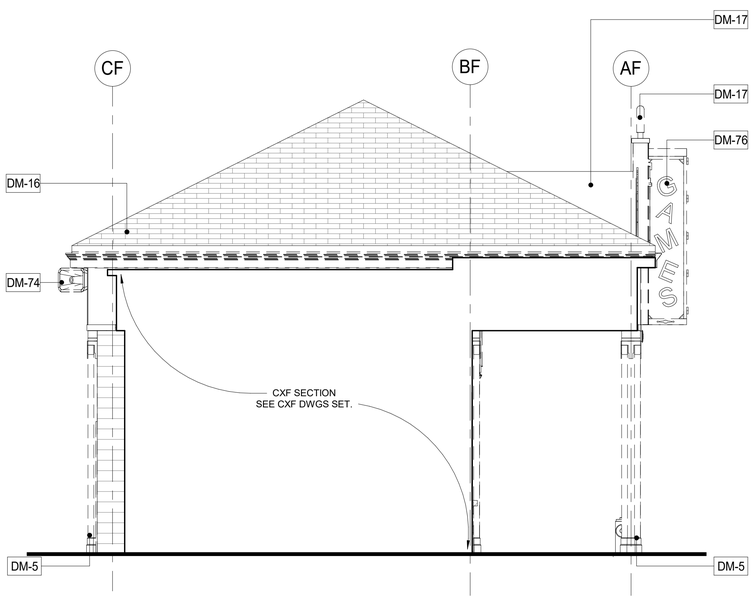


2 CXE - DEMOLITION ELEVATION - EAST
1/4" = 1'-0"

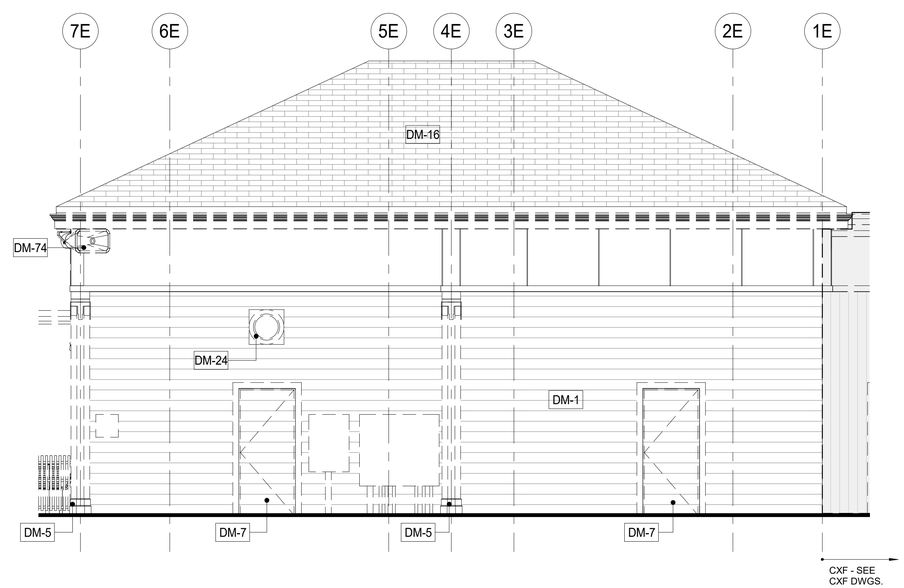


1 CXE - DEMOLITION ELEVATION - SOUTH
1/4" = 1'-0"

## DEMOLITION NOTES:

1. THE GENERAL CONTRACTOR SHALL VISIT THE SITE AND FAMILIARIZE HIM/HERSELF WITH EXISTING CONDITIONS AND REQUIREMENTS OF THE WORK. THE GENERAL CONTRACTOR SHALL FIELD VERIFY EXACT QUANTITIES OF ALL ITEMS TO BE REMOVED.
2. THE CONTRACTOR SHALL PHOTOGRAPH AND DOCUMENT EXISTING HISTORIC DECORATIVE TRIMS INCLUDING SIZES AND PROFILES PRIOR TO ENVIRONMENTAL REMEDIATION WORK START.
3. ITEMS TO BE REMOVED / DEMOLISHED AS INDICATED ON THE DRAWINGS ARE INTENDED TO SHOW THE GENERAL SCOPE OF THE DEMOLITION WORK. THE DRAWINGS DO NOT REPRESENT IN DETAIL ALL ITEMS OR SITUATIONS THAT MAY BE ENCOUNTERED DURING THE DEMOLITION. IT IS THE CONTRACTOR'S RESPONSIBILITY TO REMOVE, PROTECT, AND MAKE CORRECTIONS AS REQUIRED TO ACHIEVE DRAWING INTENT. THE GENERAL CONTRACTOR SHALL NOTIFY ARCHITECT OF ANY STRUCTURAL NONCONFORMITY TO PLANS AND SPECIFICATIONS.
4. PLAYLAND RESERVES THE RIGHT TO REVIEW ALL MATERIALS DESIGNATED FOR REMOVAL AND TO RETAIN OWNERSHIP OF SUCH MATERIALS. IF PLAYLAND RETAINS ANY MATERIAL THE CONTRACTOR SHALL MAKE ARRANGEMENTS WITH THE PLAYLAND'S SUPERINTENDENT TO HAVE THOSE MATERIALS REMOVED AND STORED OFF SITE AT NO ADDITIONAL COST.
5. DEMOLITION OF THE EXISTING BUILDING SHALL INCLUDE REMOVAL OF THE EXISTING FOUNDATIONS FOR THEIR ENTIRE DEPTH TO ACCOMMODATE INSTALLATION OF NEW FOUNDATIONS.
6. THE CONTRACTOR SHALL USE EXTREME CAUTION IN AREAS OF DEMOLITION WHICH MAY DISTURB EXISTING STRUCTURES. TEMPORARY SHORING, BARRICADES, DUST PARTITIONS, ETC. SHALL BE PROVIDED AS REQUIRED TO PROTECT ALL EXISTING STRUCTURES AND PROPERTY.
7. SEE STRUCTURAL, ELECTRICAL, SPRINKLER, AND PLUMBING DRAWINGS FOR RELATED DEMOLITION WORK.
8. VERIFY LOCATION OF EXISTING STRUCTURES AND SHORE UP ROOF/FLOOR ABOVE AS REQUIRED BEFORE REMOVING WALL.
9. REMOVAL OF ALL CEILINGS AND MOUNTED ITEMS THROUGHOUT THE CONTRACT AREA INCLUDE ANCHORING HARDWARE, AND MISCELLANEOUS FASTENINGS, ETC.
10. WALLS SHALL BE REMOVED AS INDICATED ON DEMOLITION PLANS. ALL UTILITIES IN WALL SHALL BE CUT TO BELOW SLAB OR ABOVE THE CEILING.
11. REMOVE ALL EXISTING ELECTRICAL AND PLUMBING LINES NOT TO BE RE-USED. CAP PLUMBING LINES AS REQUIRED. ELECTRICAL WIRING SHALL BE DISCONNECTED BACK TO THE NEAREST ACTIVE LOCATION. ALL ABANDONED COMMUNICATION CABLES (DATA, TELEPHONE, FIRE ALARM, AND AUDIO/VIDEO CABLES) SHALL BE REMOVED TO SOURCE IF NOT TAGGED FOR FUTURE USE.
12. DEMOLITION PROCEDURES ARE THE SOLE RESPONSIBILITY OF THE GENERAL CONTRACTOR OF THIS CONTRACT. CONTRACTOR TO "CUT OFF" ALL NECESSARY UTILITIES REQUIRED TO OBTAIN DESIRED RESULTS. CONTRACTOR TO OBTAIN "SHUT OFF" APPROVALS FROM PLAYLAND PRIOR TO SCHEDULED DEMOLITION.
13. THE GENERAL CONTRACTOR SHALL PATCH AND REPAIR ALL EXISTING CONSTRUCTION DISTURBED BY THE WORK AND PREPARE FOR NEW FINISH AS SHOWN ON THE INTERIOR ELEVATIONS.
14. THE EXISTING WOOD FLOOR SHALL BE CLEANED TO ALLOW FOR THE APPLICATION OF NEW FLOOR COATING.
15. THE GENERAL CONTRACTOR SHALL BE RESPONSIBLE FOR THE CLEANING UP AND HAULING AWAY OF ALL TRASH AND DEBRIS ON A REGULAR BASIS DURING THE CONSTRUCTION PERIOD.
16. ALL DEBRIS REMOVED FROM THE SITE SHALL BE DISPOSED OF IN A LEGAL MANNER.
17. EXISTING EXITS SHALL REMAIN FULLY ACCESSIBLE AND UNOBSTRUCTED DURING THE PROGRESS OF THE WORK.

## DEMOLITION LEGEND

| | |
|---|---|
| | INDICATES DEMOLITION |
| DM - # | DEMOLITION KEY NOTES |
| | SHINGLES TO BE REMOVED |
| | SBS MODIFIED BITUMEN TO BE REMOVED |
| NIC | INDICATES N.I.C. |

## DEMO KEYNOTES

| | |
|---|---|
| DM-1 | REMOVE EXISTING WOOD SIDING. |
| DM-3 | REMOVE ROLL DOWN DOOR AND ASSOCIATED HARDWARE. |
| DM-5 | REMOVE COLUMN ENCLOSURES. CAREFULLY REMOVE AT LEAST ONE COLUMN ENCLOSURE TO USE AS REFERENCE IN ORDER TO REPLICATE TRIMS TO MATCH LOCATION, SIZE AND SHAPE AS INDICATED. COORDINATE WITH STRUCTURAL DRAWINGS. |
| DM-7 | REMOVE EXISTING DOOR & FRAME. |
| DM-8 | REMOVE EXISTING INTERIOR PARTITIONS. RETAIN FRAMING. |
| DM-14 | REMOVE EXISTING LIGHTING FIXTURES AND ELECTRICAL WIRING CONNECTED TO THESE FIXTURES. SEE ELECTRICAL FOR DETAILS. |
| DM-16 | REMOVE EXISTING ROOFING SHINGLES, UNDERLAYMENT AND ANY ROTTED WOOD SHEATHING. REPLACE DAMAGED SHEATHING TO MATCH EXISTING. COORDINATE WITH A/E. |
| DM-17 | REMOVE EXISTING ROOFING MEMBRANES, UNDERLAYMENT AND ANY ROTTED WOOD SHEATHING. REPLACE EXISTING DAMAGED SHEATHING TO MATCH EXISTING. COORDINATE WITH A/E. |
| DM-21 | CAREFULLY REMOVE FINIAL LIGHTS (H6) FOR REFURBISHMENT AND REINSTALLATION |
| DM-22 | EXTERIOR GRADE 3/4" PLYWOOD SHEATHING, AT ALL INDICATED FLAT SURFACES. LOCATE MATERIAL JOINTS TO OCCUR BELOW DOCUMENTED LOCATION OF BATTEN TRIMS. |
| DM-24 | REMOVE EXISTING EXHAUST. SEE MECHANICAL DRAWINGS. |
| DM-28 | REMOVE EXISTING GUTTER, FASCIA, AND SOFFITS. |
| DM-74 | REMOVE SPEAKER AND ASSOCIATED HARDWARE AND ELECTRICAL WIRES. COORDINATE WITH ELEC. DRAWINGS. |
| DM-76 | CAREFULLY REMOVE SUNBURST AND SIGN ELEMENTS FOR RESTORATION/ REPLICATION AND REINSTALLATION |

8/30/2022 4:20:12 PM

CONSULTANT INFORMATION

The LiRo Group
3 Aerial Way, Syosset, New York 11791
(516) 938-5476 www.liro.com

CONSULTANT SEAL

REGISTERED ARCHITECT ROBERT D. KOCHMAN 023220 STATE OF NEW YORK

| REVISION NUMBER | DATE | MADE BY | APP'D BY | REVISION |
|---|---|---|---|---|

RECORD DRAWING CERTIFICATION

☐ AS BUILT – CHANGES AS NOTED ☐ AS BUILT – NO CHANGES

CONTRACTOR
NAME
SIGNATURE
TITLE DATE

PROJECT COORDINATOR
NAME
SIGNATURE
TITLE DATE

WESTCHESTER COUNTY, NEW YORK
DEPARTMENT OF PUBLIC WORKS AND TRANSPORTATION
DIVISION OF ENGINEERING

**INFRASTRUCTURE REHABILITATION PHASE 3**
**PLAYLAND PARK, RYE, NEW YORK**
**CROSS AXIS BUILDING E**
**CXE - EXTERIOR DEMOLITION ELEVATIONS**

| | |
|---|---|
| CONTRACT NUMBER | 22-523 |
| SHEET NUMBER | CXE-A-03 |
| DWG NO.: | 262 of 664 |
| SCALE: | As indicated |
| DATE: | 08/23/2022 |
| DPW FILE NUMBER | 1-118-A-1011-0 |
| REV. NO. | 0 |

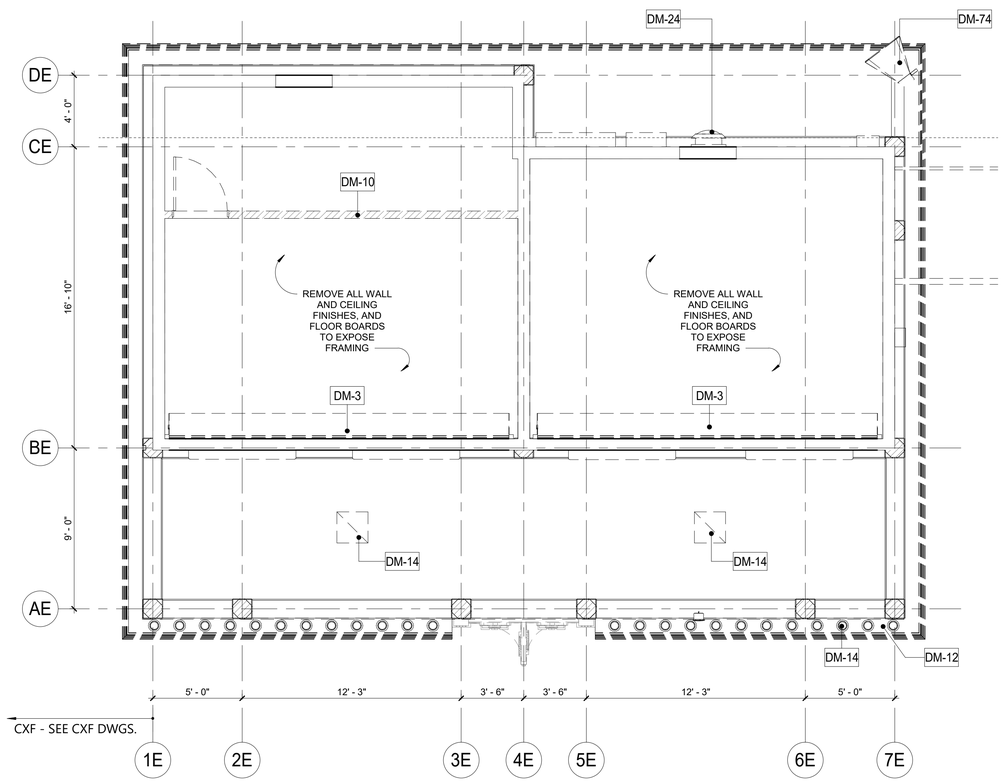


1 CXE - DEMO RCP
1/4" = 1'-0"

## DEMOLITION NOTES:

1. THE GENERAL CONTRACTOR SHALL VISIT THE SITE AND FAMILIARIZE HIM/HERSELF WITH EXISTING CONDITIONS AND REQUIREMENTS OF THE WORK. THE GENERAL CONTRACTOR SHALL FIELD VERIFY EXACT QUANTITIES OF ALL ITEMS TO BE REMOVED.
2. THE CONTRACTOR SHALL PHOTOGRAPH AND DOCUMENT EXISTING HISTORIC DECORATIVE TRIMS INCLUDING SIZES AND PROFILES PRIOR TO ENVIRONMENTAL REMEDIATION WORK START.
3. ITEMS TO BE REMOVED / DEMOLISHED AS INDICATED ON THE DRAWINGS ARE INTENDED TO SHOW THE GENERAL SCOPE OF THE DEMOLITION WORK. THE DRAWINGS DO NOT REPRESENT IN DETAIL ALL ITEMS OR SITUATIONS THAT MAY BE ENCOUNTERED DURING THE DEMOLITION. IT IS THE CONTRACTOR'S RESPONSIBILITY TO REMOVE, PROTECT, AND MAKE CORRECTIONS AS REQUIRED TO ACHIEVE DRAWING INTENT. THE GENERAL CONTRACTOR SHALL NOTIFY ARCHITECT OF ANY STRUCTURAL NONCONFORMITY TO PLANS AND SPECIFICATIONS.
4. PLAYLAND RESERVES THE RIGHT TO REVIEW ALL MATERIALS DESIGNATED FOR REMOVAL AND TO RETAIN OWNERSHIP OF SUCH MATERIALS. IF PLAYLAND RETAINS ANY MATERIAL THE CONTRACTOR SHALL MAKE ARRANGEMENTS WITH THE PLAYLAND'S SUPERINTENDENT TO HAVE THOSE MATERIALS REMOVED AND STORED OFF SITE AT NO ADDITIONAL COST.
5. DEMOLITION OF THE EXISTING BUILDING SHALL INCLUDE REMOVAL OF THE EXISTING FOUNDATIONS FOR THEIR ENTIRE DEPTH TO ACCOMMODATE INSTALLATION OF NEW FOUNDATIONS.
6. THE CONTRACTOR SHALL USE EXTREME CAUTION IN AREAS OF DEMOLITION WHICH MAY DISTURB EXISTING STRUCTURES. TEMPORARY SHORING, BARRICADES, DUST PARTITIONS, ETC. SHALL BE PROVIDED AS REQUIRED TO PROTECT ALL EXISTING STRUCTURES AND PROPERTY.
7. SEE STRUCTURAL, ELECTRICAL, SPRINKLER, AND PLUMBING DRAWINGS FOR RELATED DEMOLITION WORK.
8. VERIFY LOCATION OF EXISTING STRUCTURES AND SHORE UP ROOF/FLOOR ABOVE AS REQUIRED BEFORE REMOVING WALL.
9. REMOVAL OF ALL CEILINGS AND MOUNTED ITEMS THROUGHOUT THE CONTRACT AREA INCLUDE ANCHORING HARDWARE, AND MISCELLANEOUS FASTENINGS, ETC.
10. WALLS SHALL BE REMOVED AS INDICATED ON DEMOLITION PLANS. ALL UTILITIES IN WALL SHALL BE CUT TO BELOW SLAB OR ABOVE THE CEILING.
11. REMOVE ALL EXISTING ELECTRICAL AND PLUMBING LINES NOT TO BE RE-USED. CAP PLUMBING LINES AS REQUIRED. ELECTRICAL WIRING SHALL BE DISCONNECTED BACK TO THE NEAREST ACTIVE LOCATION. ALL ABANDONED COMMUNICATION CABLES (DATA, TELEPHONE, FIRE ALARM, AND AUDIO/VIDEO CABLES) SHALL BE REMOVED TO SOURCE IF NOT TAGGED FOR FUTURE USE.
12. DEMOLITION PROCEDURES ARE THE SOLE RESPONSIBILITY OF THE GENERAL CONTRACTOR OF THIS CONTRACT. CONTRACTOR TO "CUT OFF" ALL NECESSARY UTILITIES REQUIRED TO OBTAIN DESIRED RESULTS. CONTRACTOR TO OBTAIN "SHUT OFF" APPROVALS FROM PLAYLAND PRIOR TO SCHEDULED DEMOLITION.
13. THE GENERAL CONTRACTOR SHALL PATCH AND REPAIR ALL EXISTING CONSTRUCTION DISTURBED BY THE WORK AND PREPARE FOR NEW FINISH AS SHOWN ON THE INTERIOR ELEVATIONS.
14. THE EXISTING WOOD FLOOR SHALL BE CLEANED TO ALLOW FOR THE APPLICATION OF NEW FLOOR COATING.
15. THE GENERAL CONTRACTOR SHALL BE RESPONSIBLE FOR THE CLEANING UP AND HAULING AWAY OF ALL TRASH AND DEBRIS ON A REGULAR BASIS DURING THE CONSTRUCTION PERIOD.
16. ALL DEBRIS REMOVED FROM THE SITE SHALL BE DISPOSED OF IN A LEGAL MANNER.
17. EXISTING EXITS SHALL REMAIN FULLY ACCESSIBLE AND UNOBSTRUCTED DURING THE PROGRESS OF THE WORK.

## DEMOLITION LEGEND

| | |
|---|---|
| | INDICATES DEMOLITION |
| DM - # | DEMOLITION KEY NOTES |
| | SHINGLES TO BE REMOVED |
| | SBS MODIFIED BITUMEN TO BE REMOVED |
| NIC | INDICATES N.I.C. |

## DEMO KEYNOTES

| | |
|---|---|
| DM-3 | REMOVE ROLL DOWN DOOR AND ASSOCIATED HARDWARE. |
| DM-10 | REMOVE INTERIOR PARTITION. |
| DM-12 | REMOVE EXTERIOR SOFFIT AS NECESSARY WHERE PERIMETER LIGHTING IS TO BE REMOVED. COORDINATE WITH ELECTRICAL DRAWINGS. |
| DM-14 | REMOVE EXISTING LIGHTING FIXTURES AND ELECTRICAL WIRING CONNECTED TO THESE FIXTURES. SEE ELECTRICAL FOR DETAILS. |
| DM-24 | REMOVE EXISTING EXHAUST. SEE MECHANICAL DRAWINGS. |
| DM-74 | REMOVE SPEAKER AND ASSOCIATED HARDWARE AND ELECTRICAL WIRES. COORDINATE WITH ELEC. DRAWINGS. |

8/30/2022 4:20:13 PM

CONSULTANT INFORMATION

The LiRo Group
3 Aerial Way, Syosset, New York 11791
(516) 938-5476 www.liro.com

CONSULTANT SEAL

REGISTERED ARCHITECT ROBERT D. VOMMARO 023280 STATE OF NEW YORK

| REVISION NUMBER | DATE | MADE BY | APP'D BY | REVISION |
|---|---|---|---|---|

RECORD DRAWING CERTIFICATION

☐ AS BUILT – CHANGES AS NOTED ☐ AS BUILT – NO CHANGES

CONTRACTOR
NAME
SIGNATURE
TITLE DATE

PROJECT COORDINATOR
NAME
SIGNATURE
TITLE DATE

WESTCHESTER COUNTY, NEW YORK
DEPARTMENT OF PUBLIC WORKS AND TRANSPORTATION
DIVISION OF ENGINEERING

**INFRASTRUCTURE REHABILITATION PHASE 3**
**PLAYLAND PARK, RYE, NEW YORK**
**CROSS AXIS BUILDING E**
**CXE - RCP DEMO PLAN**

| | |
|---|---|
| CONTRACT NUMBER | 22-523 |
| SHEET NUMBER | CXE-A-04 |
| DWG NO.: | 263 of 664 |
| SCALE: | As indicated |
| DATE: | 08/23/2022 |
| DPW FILE NUMBER | 1-118-A-1012-0 |
| REV. NO. | 0 |

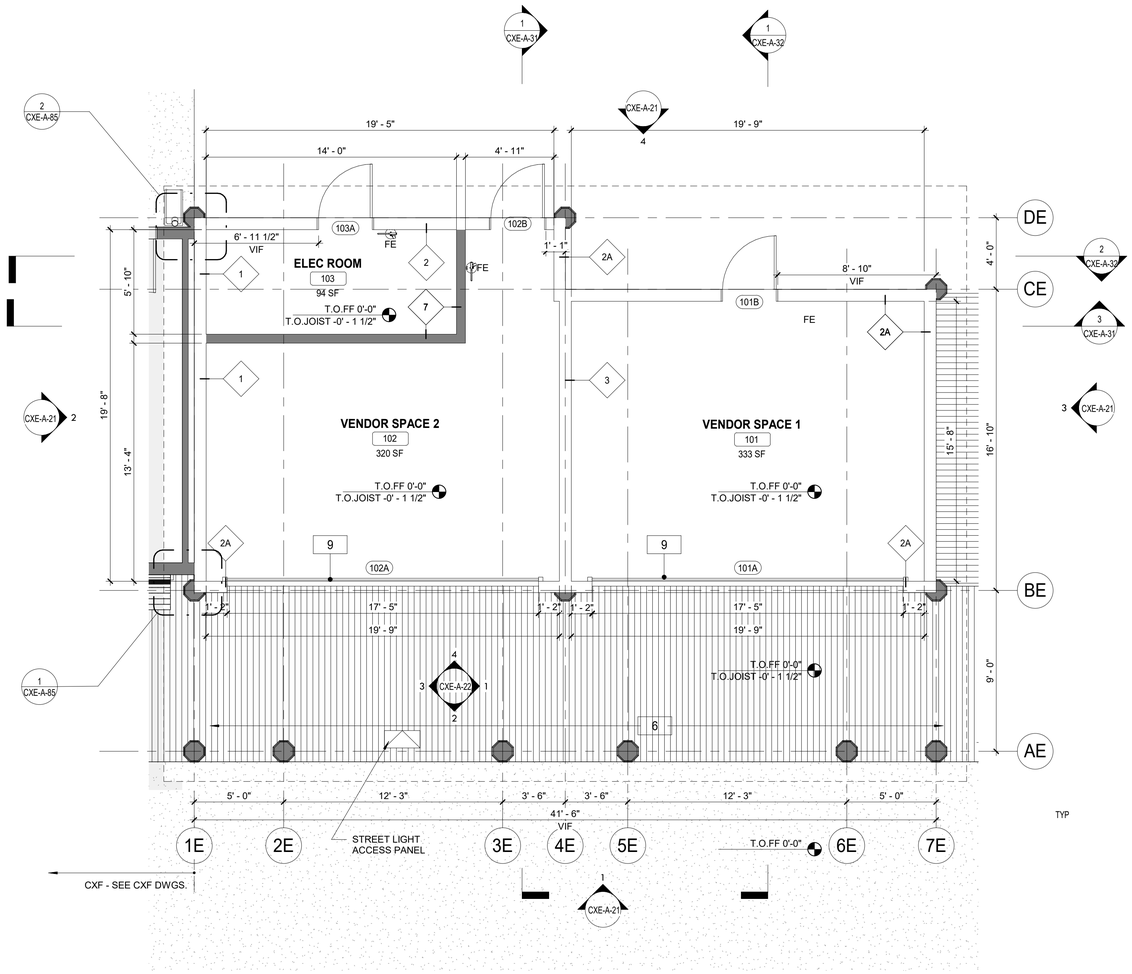


1 GROUND FLOOR PLAN CXE
1/4" = 1'-0"

## FLOOR PLAN NOTES:

1. DIMENSIONS ARE TO FACE OF GYPSUM WALL BOARD, GRID LINES, OR CENTERLINE OF COLUMN. ALL ELEVATIONS ARE NOTED FROM FINISH FLOOR ELEVATIONS.
2. PROVIDE DRYWALL TRIM AT ALL EXPOSED EDGES AND CORNERS.
3. MINIMUM DIMENSION FROM ANY CORNER OR WALL TO FRAMING STUD AT DOOR JAMB OPENING SHALL BE 4" U.N.O.
4. PROVIDE FIRE RETARDANT WOOD BLOCKING FOR ANY WALL MOUNTED EQUIPMENT OR ACCESSORIES. COORDINATE ALL BLOCKING REQUIREMENTS NECESSARY WITH OTHER TRADES.
5. THE CONTRACTOR SHALL VERIFY DIMENSIONS OF THE EXISTING SPACE AND OF ANY EXISTING CONSTRUCTION TO REMAIN BY ACTUAL MEASUREMENT BEFORE ANY WORK IS PERFORMED. IF ANY MEASUREMENTS DIFFER FROM DIMENSIONS SHOWN ON PLAN, GC IS TO NOTIFY THE ARCHITECT IMMEDIATELY. THE CONTRACTOR SHALL BE RESPONSIBLE FOR CORRECTING ANY AND ALL DISCREPANCIES FOUND AFTER THE WORK IS PERFORMED, AT NO ADDITIONAL EXPENSE TO THE OWNER.
6. THE GC SHALL PROVIDE CAULK JOINTS WHERE GYP BD MEETS THE FLOOR OR ROOF DECK.
7. THE GC SHALL BE RESPONSIBLE FOR COORDINATING WITH OWNER ON ALL WORK TO BE PERFORMED BY THE OWNER. ANY POTENTIAL CONFLICTS OR DELAYS CAUSED BY THE OWNER'S SUBCONTRACTORS MUST BE DOCUMENTED IN WRITING TO THE OWNER BEFORE THE DELAY IS ACTUALLY INCURRED FOR IT TO BE CONSIDERED. OTHERWISE THE GC WILL BE RESPONSIBLE FOR MEETING THE SCHEDULE AS OUTLINED IN THE CONTRACT.
8. THE CONTRACTOR TO VERIFY ALL FINISHED DIMENSIONS. FIELD CONDITIONS ALTERING ANY DIMENSIONS SHOULD BE BROUGHT TO THE ATTENTION OF THE OWNER AND ARCHITECT.
9. THE CONTRACTOR SHALL SUPPLY ALL MATERIAL, LABOR, AND COORDINATION REQUIRED FOR THEINSTALLATION OF ALL OWNER-SUPPLIED ITEMS AS DESCRIBED IN THE DOCUMENTS, U.N.O.
10. THE CONTRACTOR IS RESPONSIBLE FOR ALL FLOOR AND WALL PENETRATIONS FOR ELECTRICAL AND MECHANICAL WORK. ALL SUCH OPENING SHALL BE FRAMED AND REINFORCED.
11. FLOOR SURFACES SHALL BE LEVELED TO ASSURE SMOOTH SURFACE FOR FINISH FLOOR INSTALLATION.
12. THE CONTRACTOR. TO COORDINATE ALL UTILITY STUB-UPS AND LOCATION OF ALL EQUIPMENT PRIOR TO INSTALLING ANY ONE ITEM.
13. PROVIDE PAINTED ACCESS PANELS IN WALLS & CEILING AT CONCEALED ITEMS SUCH AS VALVES, ONTROLS, SWITCHES OR ANY OTHER ITEMS THAT REQUIRES ACCESS. GC O DETERMINE ACCESS ANEL LOCATION W/ ARCHITECT PRIOR TO INSTALLATION.

## PLAN LEGEND:

| | | | |
|---|---|---|---|
| | NEW IPE WOOD DECK | 101 | DOOR TAG |
| | NEW CONSTRUCTION | 1i | WINDOW TAG |
| NIC | NOT IN CONTRACT | FE | FIRE EXTINGUISHER |
| # | KEY NOTES | FD | FLOOR DRAIN |
| 1i | WALL TAG | | |

## CONSTRUCTION KEYNOTES

| | |
|---|---|
| 6 | INSTALL NEW IPE DECKING. SEE STRUCTURAL FOR DETAILS. (CXE-S-05/1) |
| 9 | PROVIDE AND INSTALL ROLL DOWN DOOR. SEE DETAILS AND SCHEDULE. |

8/30/2022 4:20:16 PM

CONSULTANT INFORMATION

The LiRo Group
3 Aerial Way, Syosset, New York 11791
(516) 938-5476 www.liro.com

CONSULTANT SEAL

REGISTERED ARCHITECT ROBERT D. YOUNG JR. 023280 STATE OF NEW YORK

| REVISION NUMBER | DATE | MADE BY | APP'D BY | REVISION |
|---|---|---|---|---|
| | | | | |

RECORD DRAWING CERTIFICATION

☐ AS BUILT – CHANGES AS NOTED ☐ AS BUILT – NO CHANGES

CONTRACTOR
NAME
SIGNATURE
TITLE DATE

PROJECT COORDINATOR
NAME
SIGNATURE
TITLE DATE

WESTCHESTER COUNTY, NEW YORK
DEPARTMENT OF PUBLIC WORKS AND TRANSPORTATION
DIVISION OF ENGINEERING

**INFRASTRUCTURE REHABILITATION PHASE 3**
**PLAYLAND PARK, RYE, NEW YORK**
**CROSS AXIS BUILDING E**
**CXE - GROUND FLOOR PLAN**

| | |
|---|---|
| CONTRACT NUMBER | 22-523 |
| SHEET NUMBER | CXE-A-11 |
| DWG NO.: | 264 of 664 |
| SCALE: | As indicated |
| DATE: | 08/23/2022 |
| DPW FILE NUMBER | 1-118-A-1013-0 |
| REV. NO. | 0 |

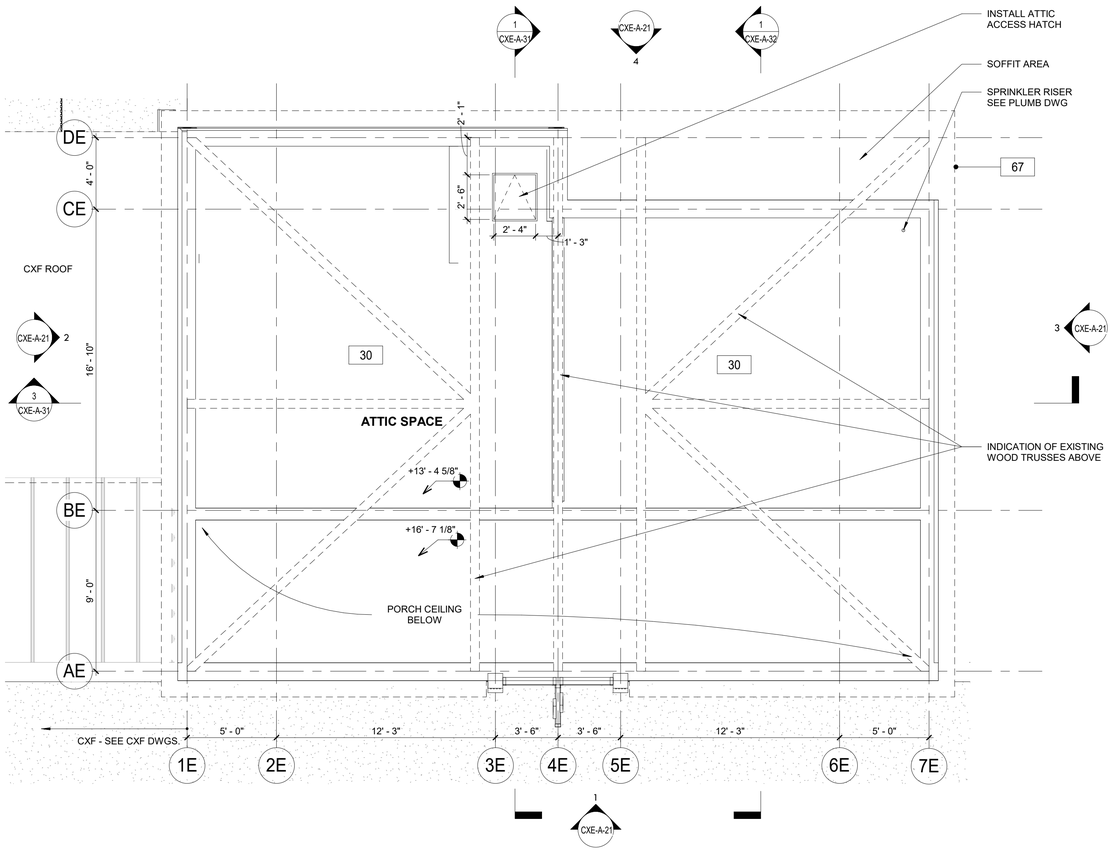


1 CXE - ATTIC PLAN
1/4" = 1'-0"

## FLOOR PLAN NOTES:

1. DIMENSIONS ARE TO FACE OF GYPSUM WALL BOARD, GRID LINES, OR CENTERLINE OF COLUMN. ALL ELEVATIONS ARE NOTED FROM FINISH FLOOR ELEVATIONS.
2. PROVIDE DRYWALL TRIM AT ALL EXPOSED EDGES AND CORNERS.
3. MINIMUM DIMENSION FROM ANY CORNER OR WALL TO FRAMING STUD AT DOOR JAMB OPENING SHALL BE 4" U.N.O.
4. PROVIDE FIRE RETARDANT WOOD BLOCKING FOR ANY WALL MOUNTED EQUIPMENT OR ACCESSORIES. COORDINATE ALL BLOCKING REQUIREMENTS NECESSARY WITH OTHER TRADES.
5. THE CONTRACTOR SHALL VERIFY DIMENSIONS OF THE EXISTING SPACE AND OF ANY EXISTING CONSTRUCTION TO REMAIN BY ACTUAL MEASUREMENT BEFORE ANY WORK IS PERFORMED. IF ANY MEASUREMENTS DIFFER FROM DIMENSIONS SHOWN ON PLAN, GC IS TO NOTIFY THE ARCHITECT IMMEDIATELY. THE CONTRACTOR SHALL BE RESPONSIBLE FOR CORRECTING ANY AND ALL DISCREPANCIES FOUND AFTER THE WORK IS PERFORMED, AT NO ADDITIONAL EXPENSE TO THE OWNER.
6. THE GC SHALL PROVIDE CAULK JOINTS WHERE GYP BD MEETS THE FLOOR OR ROOF DECK.
7. THE GC SHALL BE RESPONSIBLE FOR COORDINATING WITH OWNER ON ALL WORK TO BE PERFORMED BY THE OWNER. ANY POTENTIAL CONFLICTS OR DELAYS CAUSED BY THE OWNER'S SUBCONTRACTORS MUST BE DOCUMENTED IN WRITING TO THE OWNER BEFORE THE DELAY IS ACTUALLY INCURRED FOR IT TO BE CONSIDERED. OTHERWISE THE GC WILL BE RESPONSIBLE FOR MEETING THE SCHEDULE AS OUTLINED IN THE CONTRACT.
8. THE CONTRACTOR TO VERIFY ALL FINISHED DIMENSIONS. FIELD CONDITIONS ALTERING ANY DIMENSIONS SHOULD BE BROUGHT TO THE ATTENTION OF THE OWNER AND ARCHITECT.
9. THE CONTRACTOR SHALL SUPPLY ALL MATERIAL, LABOR, AND COORDINATION REQUIRED FOR THEINSTALLATION OF ALL OWNER-SUPPLIED ITEMS AS DESCRIBED IN THE DOCUMENTS, U.N.O.
10. THE CONTRACTOR IS RESPONSIBLE FOR ALL FLOOR AND WALL PENETRATIONS FOR ELECTRICAL AND MECHANICAL WORK. ALL SUCH OPENING SHALL BE FRAMED AND REINFORCED.
11. FLOOR SURFACES SHALL BE LEVELED TO ASSURE SMOOTH SURFACE FOR FINISH FLOOR INSTALLATION.
12. THE CONTRACTOR. TO COORDINATE ALL UTILITY STUB-UPS AND LOCATION OF ALL EQUIPMENT PRIOR TO INSTALLING ANY ONE ITEM.
13. PROVIDE PAINTED ACCESS PANELS IN WALLS & CEILING AT CONCEALED ITEMS SUCH AS VALVES, ONTROLS, SWITCHES OR ANY OTHER ITEMS THAT REQUIRES ACCESS. GC O DETERMINE ACCESS ANEL LOCATION W/ ARCHITECT PRIOR TO INSTALLATION.

## PLAN LEGEND:

| | | | |
|---|---|---|---|
| | NEW IPE WOOD DECK | 101 | DOOR TAG |
| | NEW CONSTRUCTION | 1i | WINDOW TAG |
| NIC | NOT IN CONTRACT | FE | FIRE EXTINGUISHER |
| # | KEY NOTES | FD | FLOOR DRAIN |
| 1i | WALL TAG | | |

## CONSTRUCTION KEYNOTES

| | |
|---|---|
| 30 | NEW 2x6 WOOD FLOOR. |
| 67 | NEW FASCIA BOARD AND SOFFIT. |

8/30/2022 4:20:17 PM

CONSULTANT INFORMATION
The LiRo Group
3 Aerial Way, Syosset, New York 11791
(516) 938-5476 www.liro.com

CONSULTANT SEAL
REGISTERED ARCHITECT ROBERT D. YOUNG JR. 023280 STATE OF NEW YORK

| REVISION NUMBER | DATE | MADE BY | APP'D BY | REVISION |
|---|---|---|---|---|

RECORD DRAWING CERTIFICATION
☐ AS BUILT – CHANGES AS NOTED ☐ AS BUILT – NO CHANGES

CONTRACTOR
NAME
SIGNATURE
TITLE DATE

PROJECT COORDINATOR
NAME
SIGNATURE
TITLE DATE

WESTCHESTER COUNTY, NEW YORK
DEPARTMENT OF PUBLIC WORKS AND TRANSPORTATION
DIVISION OF ENGINEERING

**INFRASTRUCTURE REHABILITATION PHASE 3**
**PLAYLAND PARK, RYE, NEW YORK**
**CROSS AXIS BUILDING E**
**CXE - ATTIC PLAN**

CONTRACT NUMBER 22-523
SHEET NUMBER **CXE-A-12**
DWG NO.: 265 of 664
SCALE: **As indicated**
DATE: **08/23/2022**
DPW FILE NUMBER **1-118-A-1014-0**
REV. NO. 0

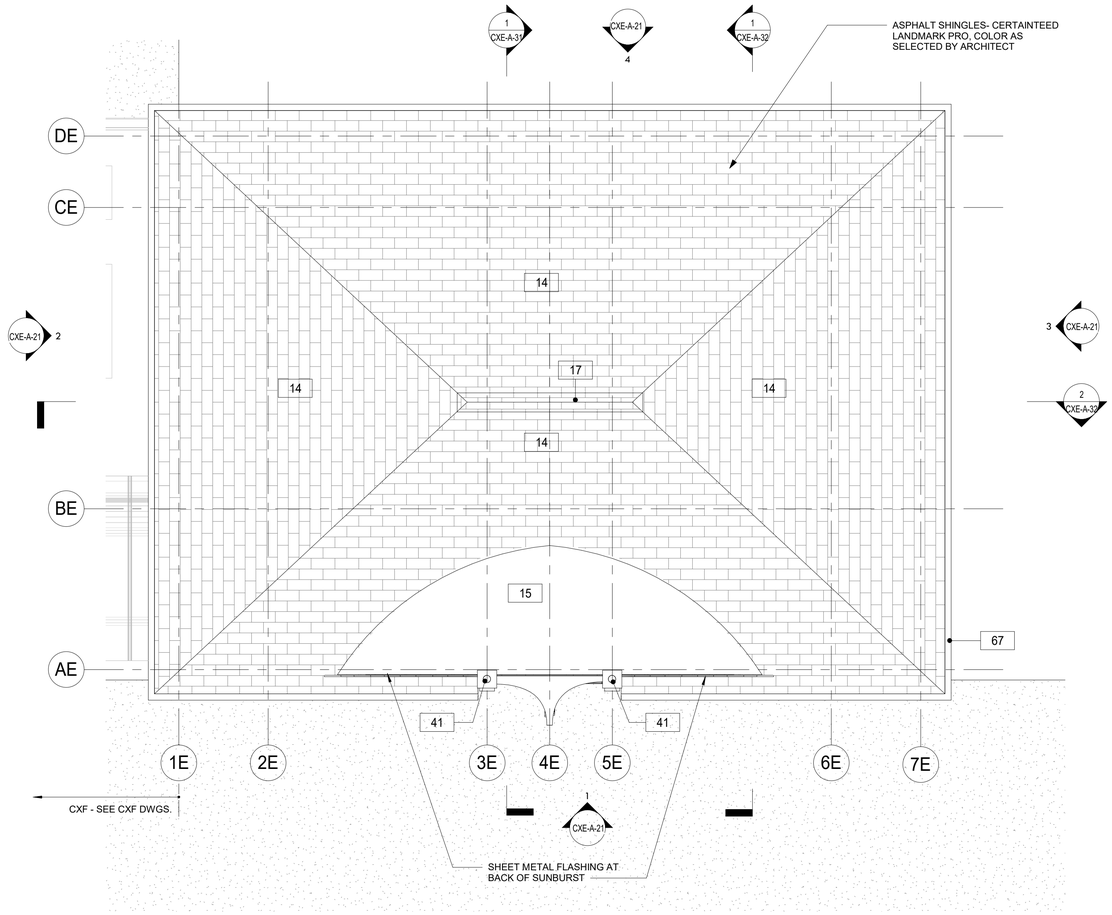


1 CXE - ROOF PLAN
1/4" = 1'-0"

## FLOOR PLAN NOTES:

1. DIMENSIONS ARE TO FACE OF GYPSUM WALL BOARD, GRID LINES, OR CENTERLINE OF COLUMN. ALL ELEVATIONS ARE NOTED FROM FINISH FLOOR ELEVATIONS.
2. PROVIDE DRYWALL TRIM AT ALL EXPOSED EDGES AND CORNERS.
3. MINIMUM DIMENSION FROM ANY CORNER OR WALL TO FRAMING STUD AT DOOR JAMB OPENING SHALL BE 4" U.N.O.
4. PROVIDE FIRE RETARDANT WOOD BLOCKING FOR ANY WALL MOUNTED EQUIPMENT OR ACCESSORIES. COORDINATE ALL BLOCKING REQUIREMENTS NECESSARY WITH OTHER TRADES.
5. THE CONTRACTOR SHALL VERIFY DIMENSIONS OF THE EXISTING SPACE AND OF ANY EXISTING CONSTRUCTION TO REMAIN BY ACTUAL MEASUREMENT BEFORE ANY WORK IS PERFORMED. IF ANY MEASUREMENTS DIFFER FROM DIMENSIONS SHOWN ON PLAN, GC IS TO NOTIFY THE ARCHITECT IMMEDIATELY. THE CONTRACTOR SHALL BE RESPONSIBLE FOR CORRECTING ANY AND ALL DISCREPANCIES FOUND AFTER THE WORK IS PERFORMED, AT NO ADDITIONAL EXPENSE TO THE OWNER.
6. THE GC SHALL PROVIDE CAULK JOINTS WHERE GYP BD MEETS THE FLOOR OR ROOF DECK.
7. THE GC SHALL BE RESPONSIBLE FOR COORDINATING WITH OWNER ON ALL WORK TO BE PERFORMED BY THE OWNER. ANY POTENTIAL CONFLICTS OR DELAYS CAUSED BY THE OWNER'S SUBCONTRACTORS MUST BE DOCUMENTED IN WRITING TO THE OWNER BEFORE THE DELAY IS ACTUALLY INCURRED FOR IT TO BE CONSIDERED. OTHERWISE THE GC WILL BE RESPONSIBLE FOR MEETING THE SCHEDULE AS OUTLINED IN THE CONTRACT.
8. THE CONTRACTOR TO VERIFY ALL FINISHED DIMENSIONS. FIELD CONDITIONS ALTERING ANY DIMENSIONS SHOULD BE BROUGHT TO THE ATTENTION OF THE OWNER AND ARCHITECT.
9. THE CONTRACTOR SHALL SUPPLY ALL MATERIAL, LABOR, AND COORDINATION REQUIRED FOR THEINSTALLATION OF ALL OWNER-SUPPLIED ITEMS AS DESCRIBED IN THE DOCUMENTS, U.N.O.
10. THE CONTRACTOR IS RESPONSIBLE FOR ALL FLOOR AND WALL PENETRATIONS FOR ELECTRICAL AND MECHANICAL WORK. ALL SUCH OPENING SHALL BE FRAMED AND REINFORCED.
11. FLOOR SURFACES SHALL BE LEVELED TO ASSURE SMOOTH SURFACE FOR FINISH FLOOR INSTALLATION.
12. THE CONTRACTOR. TO COORDINATE ALL UTILITY STUB-UPS AND LOCATION OF ALL EQUIPMENT PRIOR TO INSTALLING ANY ONE ITEM.
13. PROVIDE PAINTED ACCESS PANELS IN WALLS & CEILING AT CONCEALED ITEMS SUCH AS VALVES, ONTROLS, SWITCHES OR ANY OTHER ITEMS THAT REQUIRES ACCESS. GC O DETERMINE ACCESS ANEL LOCATION W/ ARCHITECT PRIOR TO INSTALLATION.

## PLAN LEGEND:

| | | | |
|---|---|---|---|
| | NEW IPE WOOD DECK | 101 | DOOR TAG |
| | NEW CONSTRUCTION | 1i | WINDOW TAG |
| NIC | NOT IN CONTRACT | FE | FIRE EXTINGUISHER |
| # | KEY NOTES | FD | FLOOR DRAIN |
| 1i | WALL TAG | | |

## CONSTRUCTION KEYNOTES

| | |
|---|---|
| 14 | PROVIDE NEW ASPHALT SHINGLE ROOFING,UNDERLAYMENT, AND REPLACE IN KIND EXISTING DECKING AS REQUIRED (COORDINATE WITH STRUCTURAL). |
| 15 | PROVIDE AND INSTALL SBS MODIFIED BITUMEN ROOFING AND UNDERLAYMENT. |
| 17 | PROVIDE AND INSTALL RIDGE VENT AT ROOF HIPS. |
| 41 | INSTALL REFURBISHED FINIAL LIGHTS (H6). ARCHITECT TO APPROVE FINISH AND ANY NEEDED MODIFICATIONS TO H6 LIGHTS DURING REFURBISHMENT. |
| 67 | NEW FASCIA BOARD AND SOFFIT. |

8/30/2022 4:20:18 PM

CONSULTANT INFORMATION

The LiRo Group

3 Aerial Way, Syosset, New York 11791
(516) 938-5476 www.liro.com

CONSULTANT SEAL

REGISTERED ARCHITECT ROBERT D. YOUNG 023280 STATE OF NEW YORK

| REVISION NUMBER | DATE | MADE BY | APP'D BY | REVISION |
|---|---|---|---|---|
| | | | | |

RECORD DRAWING CERTIFICATION

☐ AS BUILT – CHANGES AS NOTED ☐ AS BUILT – NO CHANGES

CONTRACTOR
NAME
SIGNATURE
TITLE DATE

PROJECT COORDINATOR
NAME
SIGNATURE
TITLE DATE

WESTCHESTER COUNTY, NEW YORK
DEPARTMENT OF PUBLIC WORKS AND TRANSPORTATION
DIVISION OF ENGINEERING

**INFRASTRUCTURE REHABILITATION PHASE 3**
**PLAYLAND PARK, RYE, NEW YORK**
**CROSS AXIS BUILDING E**
**CXE - ROOF PLAN**

| | |
|---|---|
| CONTRACT NUMBER | 22-523 |
| SHEET NUMBER | CXE-A-13 |
| DWG NO.: | 266 of 664 |
| SCALE: | As indicated |
| DATE: | 08/23/2022 |
| DPW FILE NUMBER | 1-118-A-1015-0 |
| REV. NO. | 0 |

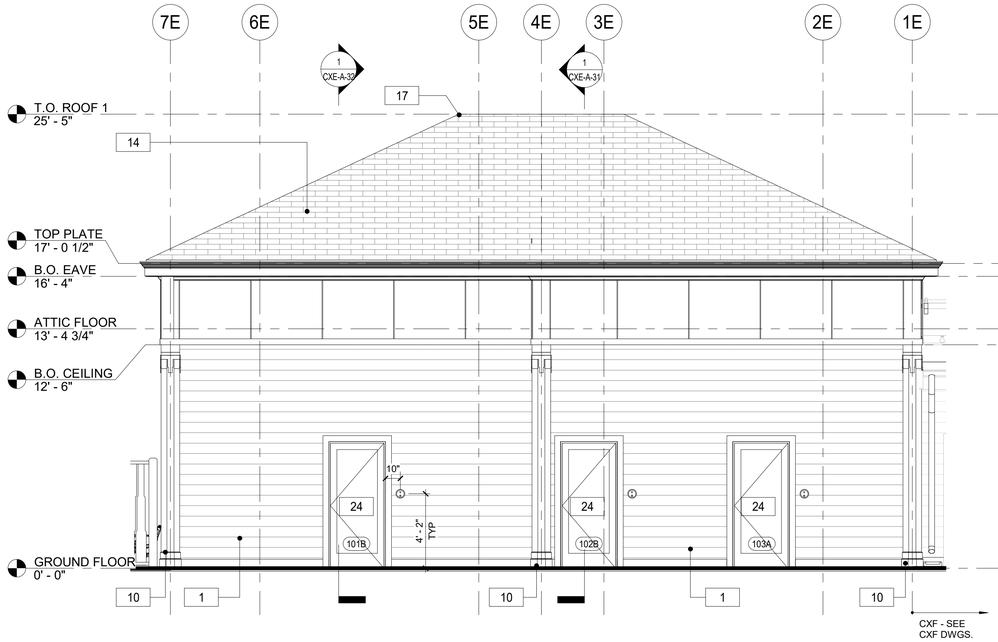


4 CXE - BUILDING ELEVATION - SOUTH
1/4" = 1'-0"

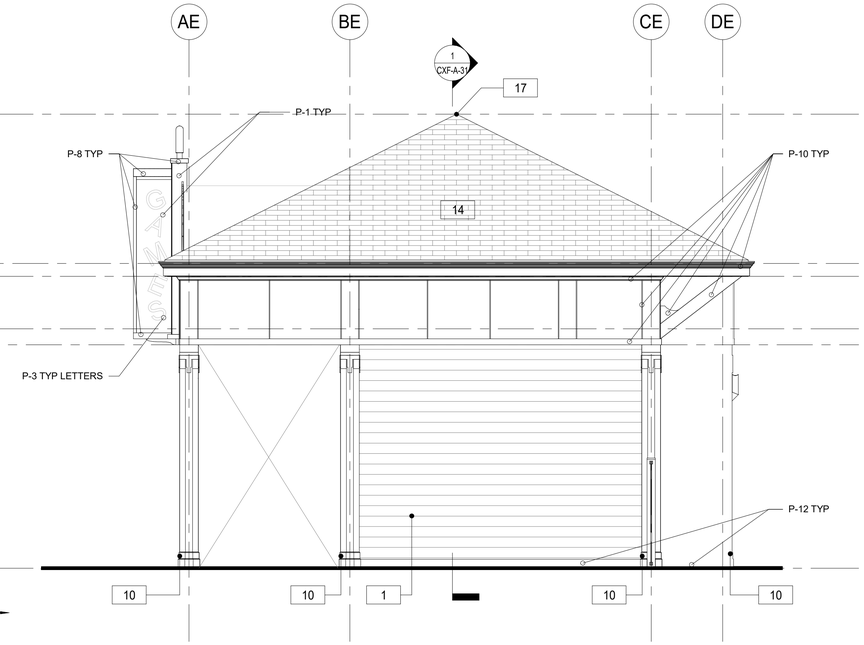


3 CXE - BUILDING ELEVATION - WEST
1/4" = 1'-0"

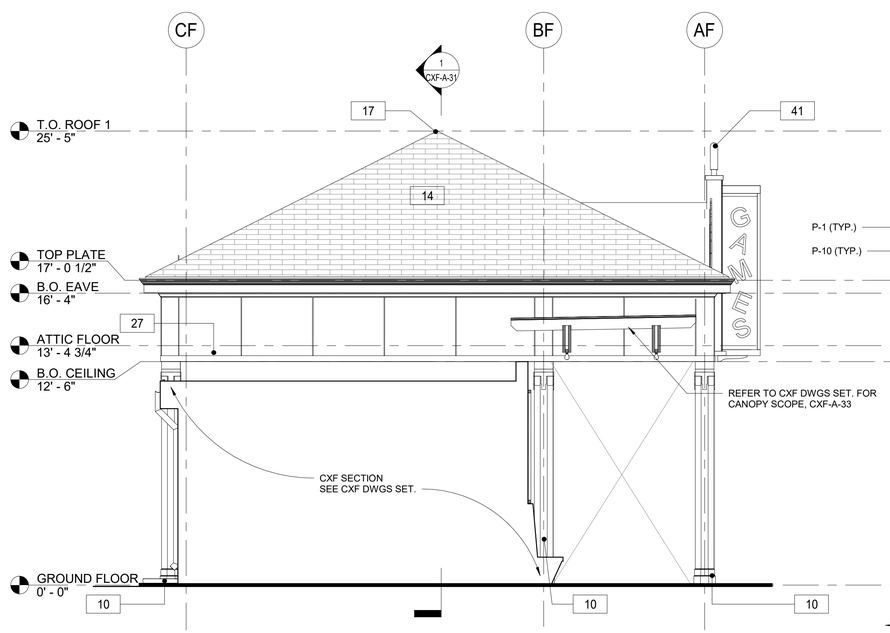


2 CXE - BUILDING ELEVATION - EAST
1/4" = 1'-0"

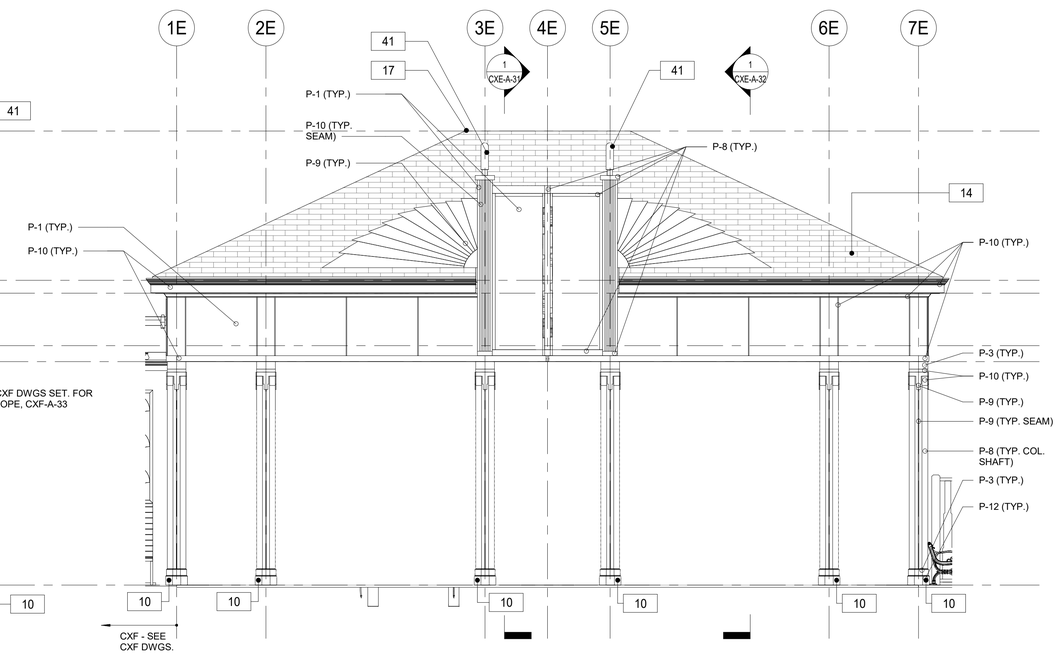


1 CXE - BUILDING ELEVATION - NORTH
1/4" = 1'-0"

## FLOOR PLAN GENERAL NOTES

1. DIMENSIONS ARE TO FACE OF GYPSUM WALL BOARD, GRID LINES, OR CENTERLINE OF COLUMN. ALL ELEVATIONS ARE NOTED FROM FINISH FLOOR ELEVATIONS.
2. PROVIDE DRYWALL TRIM AT ALL EXPOSED EDGES AND CORNERS.
3. MINIMUM DIMENSION FROM ANY CORNER OR WALL TO FRAMING STUD AT DOOR JAMB OPENING SHALL BE 4" (U.N.O.).
4. PROVIDE METAL BLOCKING FOR ANY WALL MOUNTED EQUIPMENT OR ACCESSORIES. COORDINATE ALL BLOCKING REQUIREMENTS NECESSARY WITH OTHER TRADES.
5. THE GC SHALL VERIFY DIMENSIONS OF THE EXISTING SPACE AND OF ANY EXISTING CONSTRUCTION TO REMAIN BY ACTUAL MEASUREMENT BEFORE ANY WORK IS PERFORMED. IF ANY MEASUREMENTS DIFFER FROM DIMENSIONS SHOWN ON PLAN, GC IS TO NOTIFY THE ARCHITECT IMMEDIATELY. THE GC SHALL BE RESPONSIBLE FOR CORRECTING ANY AND ALL DISCREPANCIES FOUND AFTER THE WORK IS PERFORMED, AT NO ADDITIONAL EXPENSE TO THE OWNER.
6. GC TO VERIFY ALL FINISHED DIMENSIONS. FIELD CONDITIONS ALTERING ANY DIMENSIONS SHOULD BE BROUGHT TO THE ATTENTION OF THE OWNER AND ARCHITECT.
7. THE GC SHALL PROVIDE CAULK JOINTS WHERE GYP. BD. MEETS THE FLOOR OR ROOF DECK.
8. THE GC SHALL BE RESPONSIBLE FOR COORDINATING WITH OWNER ON ALL WORK TO BE PERFORMED BY THE OWNER. ANY POTENTIAL CONFLICTS OR DELAYS CAUSED BY THE OWNER'S SUBCONTRACTORS MUST BE DOCUMENTED IN WRITING TO THE OWNER BEFORE THE DELAY IS ACTUALLY INCURRED FOR IT TO BE CONSIDERED. OTHERWISE THE GC WILL BE RESPONSIBLE FOR MEETING THE SCHEDULE AS OUTLINED IN THE CONTRACT.
9. THE GC SHALL SUPPLY ALL MATERIAL, LABOR, AND COORDINATION REQUIRED FOR THE INSTALLATION OF ALL OWNER-SUPPLIED ITEMS AS DESCRIBED IN THE DOCUMENTS, U.N.O.
10. THE GC IS RESPONSIBLE FOR ALL FLOOR AND WALL PENETRATIONS FOR ELECTRICAL AND MECHANICAL WORK. ALL SUCH OPENING SHALL BE FRAMED AND REINFORCED.
11. FLOOR SURFACES SHALL BE LEVELED TO ASSURE SMOOTH SURFACE FOR FINISH FLOOR INSTALLATION. GC SHALL ALSO PAY SPECIAL ATTENTION THAT ALL WALL SURFACES ARE SMOOTH WHERE MURALS WILL BE DIRECTLY APPLIED TO WALL.
12. GC TO COORDINATE ALL UTILITY STUB-UPS AND LOCATION OF ALL EQUIPMENT PRIOR TO INSTALLING ANY ONE ITEM.
13. REFER TO SHEET CXE-A-80 FOR PARTITION TYPE INFORMATION.
14. PROVIDE PAINTED ACCESS PANELS IN WALLS & CEILING AT CONCEALED ITEMS SUCH AS VALVES, CONTROLS, SWITCHES OR ANY OTHER ITEMS THAT REQUIRES ACCESS. GC TO DETERMINE ACCESS PANEL LOCATION W/ ARCHITECT PRIOR TO INSTALLATION.

## PAINTING SCHEDULE

| KEY | COLOR | MANUFACTURER | REMARKS |
|---|---|---|---|
| P- 1 | MYSTICAL POWERS #901 | BENJAMIN MOORE | |
| P- 2 | HERITAGE RED #HC-181 | BENJAMIN MOORE | |
| P- 3 | NEW YORK STATE OF MIND #805 | BENJAMIN MOORE | |
| P- 4 | LAZY SUNDAY #803 | BENJAMIN MOORE | |
| P- 5 | DEEP JUNGLE #595 | BENJAMIN MOORE | |
| P- 6 | LUCK OF THE IRISH #588 | BENJAMIN MOORE | |
| P- 7 | MAJOLICA GREEN #0013 | SHERWIN WILLIAMS | |
| P- 8 | ANTELOPE CANYON #125 | BENJAMIN MOORE | |
| P- 9 | FORSYTHIA #6907 | SHERWIN WILLIAMS | |
| P- 10 | CAPE BLUE #1642 | BENJAMIN MOORE | |
| P- 11 | WHITE SNOW #9541 | SHERWIN WILLIAMS | |
| P- 12 | TRICORN BLACK #6258 | SHERWIN WILLIAMS | |
| P- 13 | READY MIX WHITE | BENJAMIN MOORE | INTERIOR USE ONLY |
| P- 14 | STUCCO PAINT TO MATCH P-1 | KEIM | |
| P- 15 | VAN DEUSEN BLUE #HC-156 | BENJAMIN MOORE | |
| P- 16 | #RAL9001 | - | TYP. ROLL UP DOOR |
| P- 17 | FLORIDA BEACHES #900 | BENJAMIN MOORE | |
| P- 18 | PIRATES COVE PEACH #903 | BENJAMIN MOORE | |
| P- 19 | JADITE #6459 | SHERWIN WILLIAMS | |
| P- 20 | DECISIVE YELLOW #6902 | SHERWIN WILLIAMS | |

## CONSTRUCTION KEYNOTES

| | |
|---|---|
| 1 | PROVIDE AND INSTALL NEW 1x8 MILLED YELLOW PINE - TONGUE AND GROOVE - NO BEVEL |
| 10 | PROVIDE AND INSTALL COLUMN ENCLOSURES. SEE DETAILS. |
| 14 | PROVIDE NEW ASPHALT SHINGLE ROOFING,UNDERLAYMENT, AND REPLACE IN KIND EXISTING DECKING AS REQUIRED (COORDINATE WITH STRUCTURAL). |
| 17 | PROVIDE AND INSTALL RIDGE VENT AT ROOF HIPS. |
| 24 | PROVIDE AND INSTALL NEW DOOR AND FRAME, IN EXISTING OPENING. CONTRACTOR TO V.I.F. ALL DIMENSIONS PRIOR TO ORDERING NEW DOORS. |
| 27 | PROVIDE AND INSTALL STEP FLASHING WHERE SLOPE ROOFS MEET VERTICAL WALLS. |
| 41 | INSTALL REFURBISHED FINIAL LIGHTS (H6). ARCHITECT TO APPROVE FINISH AND ANY NEEDED MODIFICATIONS TO H6 LIGHTS DURING REFURBISHMENT. |

8/30/2022 4:20:22 PM

CONSULTANT INFORMATION
The LiRo Group
3 Aerial Way, Syosset, New York 11791
(516) 938-5476 www.liro.com

CONSULTANT SEAL
REGISTERED ARCHITECT ROBERT D. YOUNG JR. 023280 STATE OF NEW YORK

| REVISION NUMBER | DATE | MADE BY | APP'D BY | REVISION |
|---|---|---|---|---|

RECORD DRAWING CERTIFICATION
☐ AS BUILT – CHANGES AS NOTED ☐ AS BUILT – NO CHANGES

CONTRACTOR
NAME
SIGNATURE
TITLE DATE

PROJECT COORDINATOR
NAME
SIGNATURE
TITLE DATE

WESTCHESTER COUNTY, NEW YORK
DEPARTMENT OF PUBLIC WORKS AND TRANSPORTATION
DIVISION OF ENGINEERING

**INFRASTRUCTURE REHABILITATION PHASE 3**
**PLAYLAND PARK, RYE, NEW YORK**
**CROSS AXIS BUILDING E**
**CXE - EXTERIOR BUILDING ELEVATIONS**

CONTRACT NUMBER 22-523
SHEET NUMBER **CXE-A-21**
DWG NO.: 267 of 664
SCALE: **As indicated**
DATE: **08/23/2022**
DPW FILE NUMBER **1-118-A-1016-0**
REV. NO. 0

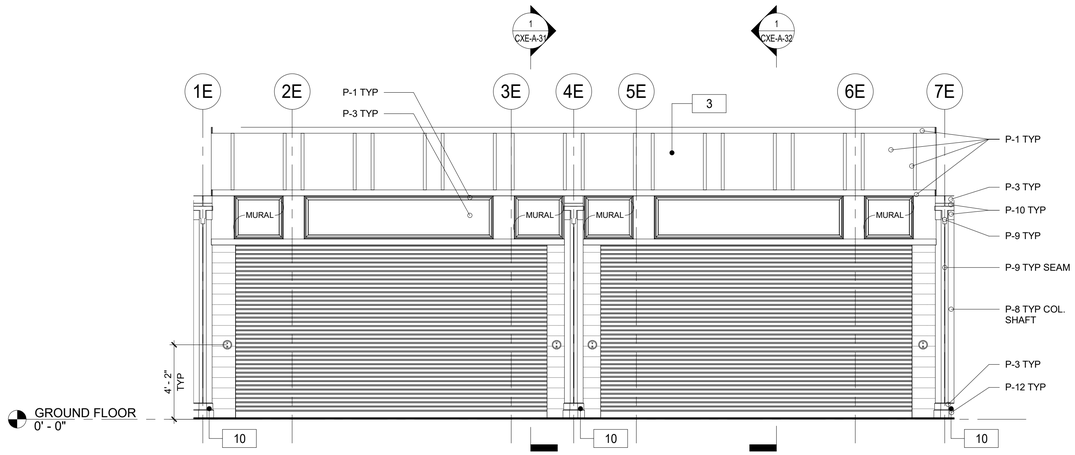


4 CXE - PORCH ELEVATION - NORTH
1/4" = 1'-0"

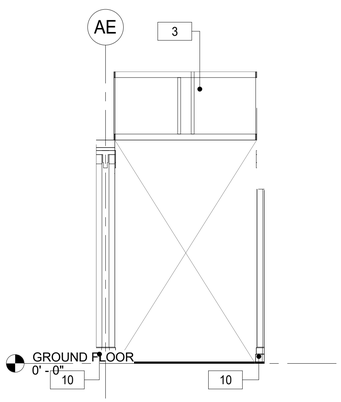


3 CXE - PORCH ELEVATION - WEST
1/4" = 1'-0"

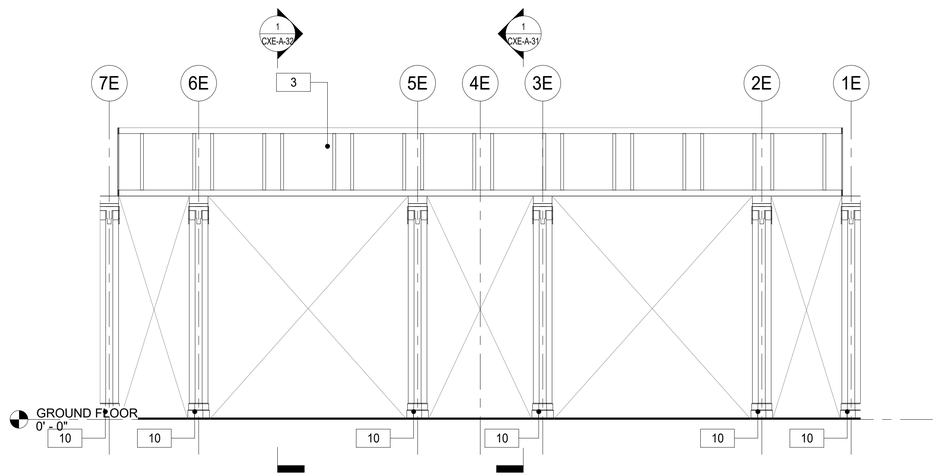


2 CXE - PORCH ELEVATION - SOUTH
1/4" = 1'-0"

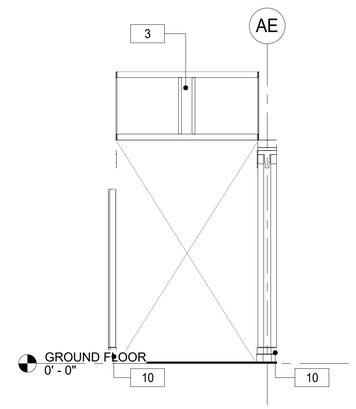


1 CXE - PORCH ELEVATION - EAST
1/4" = 1'-0"

## FLOOR PLAN GENERAL NOTES

1. DIMENSIONS ARE TO FACE OF GYPSUM WALL BOARD, GRID LINES, OR CENTERLINE OF COLUMN. ALL ELEVATIONS ARE NOTED FROM FINISH FLOOR ELEVATIONS.
2. PROVIDE DRYWALL TRIM AT ALL EXPOSED EDGES AND CORNERS.
3. MINIMUM DIMENSION FROM ANY CORNER OR WALL TO FRAMING STUD AT DOOR JAMB OPENING SHALL BE 4" U.N.O.
4. PROVIDE METAL BLOCKING FOR ANY WALL MOUNTED EQUIPMENT OR ACCESSORIES. COORDINATE ALL BLOCKING REQUIREMENTS NECESSARY WITH OTHER TRADES.
5. THE GC SHALL VERIFY DIMENSIONS OF THE EXISTING SPACE AND OF ANY EXISTING CONSTRUCTION TO REMAIN BY ACTUAL MEASUREMENT BEFORE ANY WORK IS PERFORMED. IF ANY MEASUREMENTS DIFFER FROM DIMENSIONS SHOWN ON PLAN, GC IS TO NOTIFY THE ARCHITECT IMMEDIATELY. THE GC SHALL BE RESPONSIBLE FOR CORRECTING ANY AND ALL DISCREPANCIES FOUND AFTER THE WORK IS PERFORMED, AT NO ADDITIONAL EXPENSE TO THE OWNER.
6. GC TO VERIFY ALL FINISHED DIMENSIONS. FIELD CONDITIONS ALTERING ANY DIMENSIONS SHOULD BE BROUGHT TO THE ATTENTION OF THE OWNER AND ARCHITECT.
7. THE GC SHALL PROVIDE CAULK JOINTS WHERE GYP. BD. MEETS THE FLOOR OR ROOF DECK.
8. THE GC SHALL BE RESPONSIBLE FOR COORDINATING WITH OWNER ON ALL WORK TO BE PERFORMED BY THE OWNER. ANY POTENTIAL CONFLICTS OR DELAYS CAUSED BY THE OWNER'S SUBCONTRACTORS MUST BE DOCUMENTED IN WRITING TO THE OWNER BEFORE THE DELAY IS ACTUALLY INCURRED FOR IT TO BE CONSIDERED. OTHERWISE THE GC WILL BE RESPONSIBLE FOR MEETING THE SCHEDULE AS OUTLINED IN THE CONTRACT.
9. THE GC SHALL SUPPLY ALL MATERIAL, LABOR, AND COORDINATION REQUIRED FOR THE INSTALLATION OF ALL OWNER-SUPPLIED ITEMS AS DESCRIBED IN THE DOCUMENTS, U.N.O.
10. THE GC IS RESPONSIBLE FOR ALL FLOOR AND WALL PENETRATIONS FOR ELECTRICAL AND MECHANICAL WORK. ALL SUCH OPENING SHALL BE FRAMED AND REINFORCED.
11. FLOOR SURFACES SHALL BE LEVELED TO ASSURE SMOOTH SURFACE FOR FINISH FLOOR INSTALLATION. GC SHALL ALSO PAY SPECIAL ATTENTION THAT ALL WALL SURFACES ARE SMOOTH WHERE MURALS WILL BE DIRECTLY APPLIED TO WALL.
12. GC TO COORDINATE ALL UTILITY STUB-UPS AND LOCATION OF ALL EQUIPMENT PRIOR TO INSTALLING ANY ONE ITEM.
13. REFER TO SHEET CXE-A-80 FOR PARTITION TYPE INFORMATION.
14. PROVIDE PAINTED ACCESS PANELS IN WALLS & CEILING AT CONCEALED ITEMS SUCH AS VALVES, CONTROLS, SWITCHES OR ANY OTHER ITEMS THAT REQUIRES ACCESS. GC TO DETERMINE ACCESS PANEL LOCATION W/ ARCHITECT PRIOR TO INSTALLATION.

## PAINTING SCHEDULE

| KEY | COLOR | MANUFACTURER | REMARKS |
|---|---|---|---|
| P- 1 | MYSTICAL POWERS #901 | BENJAMIN MOORE | |
| P- 2 | HERITAGE RED #HC-181 | BENJAMIN MOORE | |
| P- 3 | NEW YORK STATE OF MIND #805 | BENJAMIN MOORE | |
| P- 4 | LAZY SUNDAY #803 | BENJAMIN MOORE | |
| P- 5 | DEEP JUNGLE #595 | BENJAMIN MOORE | |
| P- 6 | LUCK OF THE IRISH #588 | BENJAMIN MOORE | |
| P- 7 | MAJOLICA GREEN #0013 | SHERWIN WILLIAMS | |
| P- 8 | ANTELOPE CANYON #125 | BENJAMIN MOORE | |
| P- 9 | FORSYTHIA #6907 | SHERWIN WILLIAMS | |
| P- 10 | CAPE BLUE #1642 | BENJAMIN MOORE | |
| P- 11 | WHITE SNOW #9541 | SHERWIN WILLIAMS | |
| P- 12 | TRICORN BLACK #6258 | SHERWIN WILLIAMS | |
| P- 13 | READY MIX WHITE | BENJAMIN MOORE | INTERIOR USE ONLY |
| P- 14 | STUCCO PAINT TO MATCH P-1 | KEIM | |
| P- 15 | VAN DEUSEN BLUE #HC-156 | BENJAMIN MOORE | |
| P- 16 | #RAL9001 | - | TYP. ROLL UP DOOR |
| P- 17 | FLORIDA BEACHES #900 | BENJAMIN MOORE | |
| P- 18 | PIRATES COVE PEACH #903 | BENJAMIN MOORE | |
| P- 19 | JADITE #6459 | SHERWIN WILLIAMS | |
| P- 20 | DECISIVE YELLOW #6902 | SHERWIN WILLIAMS | |

## CONSTRUCTION KEYNOTES

| | |
|---|---|
| 3 | REPLICATE TRIMS TO MATCH DOCUMENTED TRIM, LOCATIONS, SIZE AND SHAPE. FINISH PAINT COLORS AS SCHEDULED. |
| 10 | PROVIDE AND INSTALL COLUMN ENCLOSURES. SEE DETAILS.(CXE-A-83) |

8/30/2022 4:20:25 PM

CONSULTANT INFORMATION
The LiRo Group
3 Aerial Way, Syosset, New York 11791
(516) 938-5476 www.liro.com

CONSULTANT SEAL
REGISTERED ARCHITECT ROBERT D. YOUNG JR. 023280 STATE OF NEW YORK

| REVISION NUMBER | DATE | MADE BY | APP'D BY | REVISION |
|---|---|---|---|---|

RECORD DRAWING CERTIFICATION
☐ AS BUILT – CHANGES AS NOTED ☐ AS BUILT – NO CHANGES

CONTRACTOR
NAME
SIGNATURE
TITLE DATE

PROJECT COORDINATOR
NAME
SIGNATURE
TITLE DATE

WESTCHESTER COUNTY, NEW YORK
DEPARTMENT OF PUBLIC WORKS AND TRANSPORTATION
DIVISION OF ENGINEERING

**INFRASTRUCTURE REHABILITATION PHASE 3**
**PLAYLAND PARK, RYE, NEW YORK**
**CROSS AXIS BUILDING E**
**CXE - EXTERIOR BUILDING PORCH ELEVATIONS**

CONTRACT NUMBER 22-523
SHEET NUMBER **CXE-A-22**
DWG NO.: 268 of 664
SCALE: **As indicated**
DATE: **08/23/2022**
DPW FILE NUMBER **1-118-A-1017-0**
REV. NO. 0

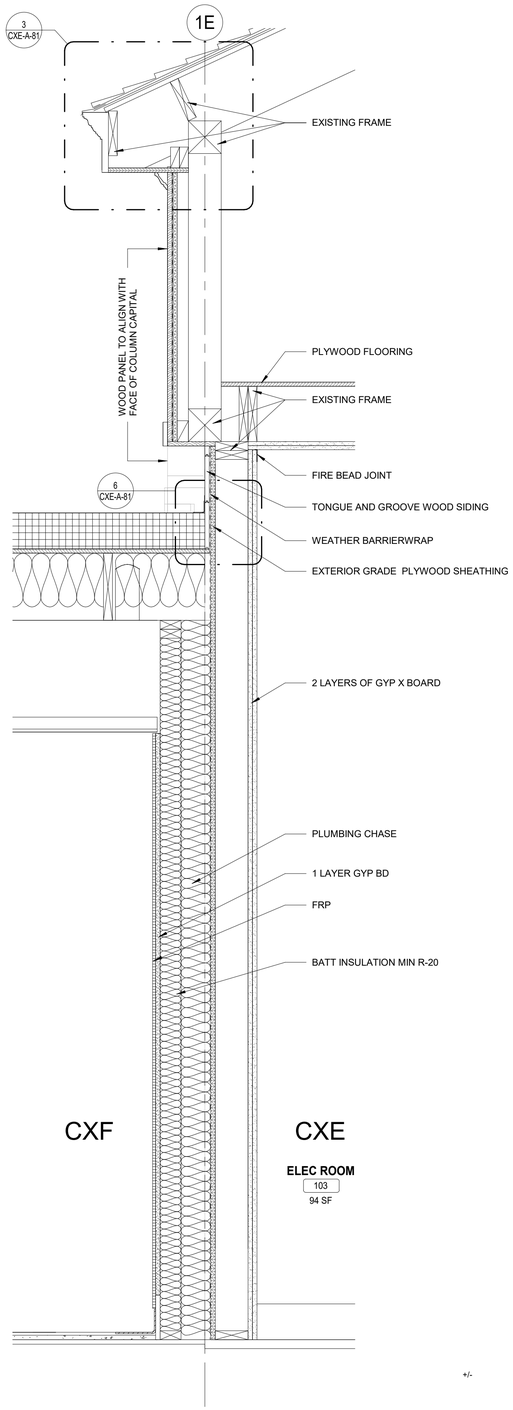


2 CXE - WALL SECTION
1" = 1'-0"

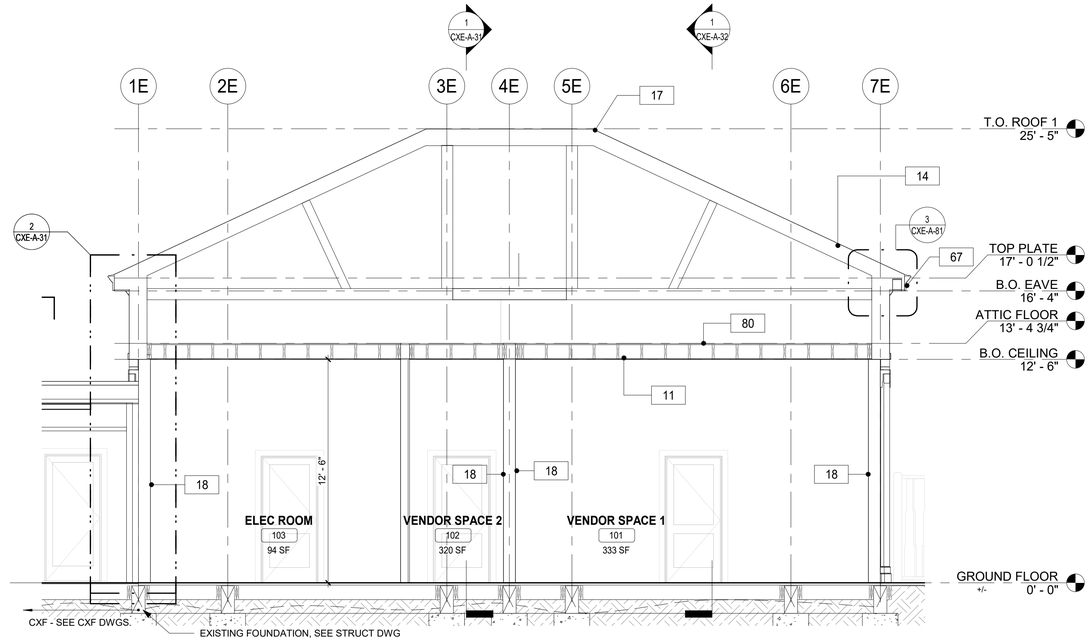


3 CXE - SECTION
1/4" = 1'-0"

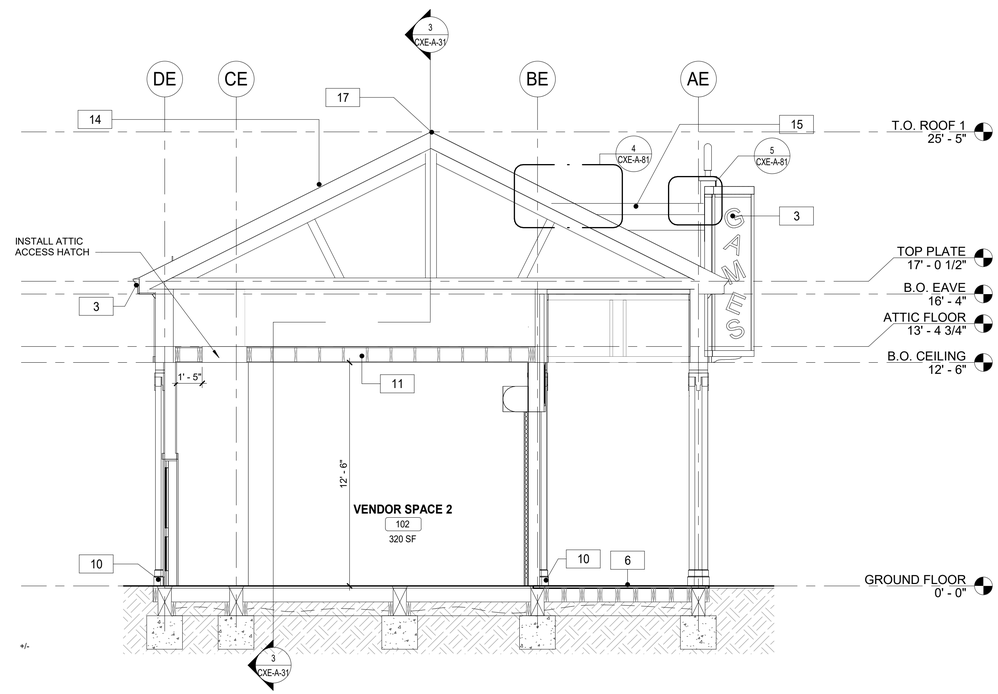


1 CXE - CROSS SECTION
1/4" = 1'-0"

## FLOOR PLAN GENERAL NOTES

1. DIMENSIONS ARE TO FACE OF GYPSUM WALL BOARD, GRID LINES, OR CENTERLINE OF COLUMN. ALL ELEVATIONS ARE NOTED FROM FINISH FLOOR ELEVATIONS.
2. PROVIDE DRYWALL TRIM AT ALL EXPOSED EDGES AND CORNERS.
3. MINIMUM DIMENSION FROM ANY CORNER OR WALL TO FRAMING STUD AT DOOR JAMB OPENING SHALL BE 4" (U.N.O.).
4. PROVIDE METAL BLOCKING FOR ANY WALL MOUNTED EQUIPMENT OR ACCESSORIES. COORDINATE ALL BLOCKING REQUIREMENTS NECESSARY WITH OTHER TRADES.
5. THE GC SHALL VERIFY DIMENSIONS OF THE EXISTING SPACE AND OF ANY EXISTING CONSTRUCTION TO REMAIN BY ACTUAL MEASUREMENT BEFORE ANY WORK IS PERFORMED. IF ANY MEASUREMENTS DIFFER FROM DIMENSIONS SHOWN ON PLAN, GC IS TO NOTIFY THE ARCHITECT IMMEDIATELY. THE GC SHALL BE RESPONSIBLE FOR CORRECTING ANY AND ALL DISCREPANCIES FOUND AFTER THE WORK IS PERFORMED, AT NO ADDITIONAL EXPENSE TO THE OWNER.
6. GC TO VERIFY ALL FINISHED DIMENSIONS. FIELD CONDITIONS ALTERING ANY DIMENSIONS SHOULD BE BROUGHT TO THE ATTENTION OF THE OWNER AND ARCHITECT.
7. THE GC SHALL PROVIDE CAULK JOINTS WHERE GYP. BD. MEETS THE FLOOR OR ROOF DECK.
8. THE GC SHALL BE RESPONSIBLE FOR COORDINATING WITH OWNER ON ALL WORK TO BE PERFORMED BY THE OWNER. ANY POTENTIAL CONFLICTS OR DELAYS CAUSED BY THE OWNER'S SUBCONTRACTORS MUST BE DOCUMENTED IN WRITING TO THE OWNER BEFORE THE DELAY IS ACTUALLY INCURRED FOR IT TO BE CONSIDERED. OTHERWISE THE GC WILL BE RESPONSIBLE FOR MEETING THE SCHEDULE AS OUTLINED IN THE CONTRACT.
9. THE GC SHALL SUPPLY ALL MATERIAL, LABOR, AND COORDINATION REQUIRED FOR THE INSTALLATION OF ALL OWNER-SUPPLIED ITEMS AS DESCRIBED IN THE DOCUMENTS, U.N.O.
10. THE GC IS RESPONSIBLE FOR ALL FLOOR AND WALL PENETRATIONS FOR ELECTRICAL AND MECHANICAL WORK. ALL SUCH OPENING SHALL BE FRAMED AND REINFORCED.
11. FLOOR SURFACES SHALL BE LEVELED TO ASSURE SMOOTH SURFACE FOR FINISH FLOOR INSTALLATION. GC SHALL ALSO PAY SPECIAL ATTENTION THAT ALL WALL SURFACES ARE SMOOTH WHERE MURALS WILL BE DIRECTLY APPLIED TO WALL.
12. GC TO COORDINATE ALL UTILITY STUB-UPS AND LOCATION OF ALL EQUIPMENT PRIOR TO INSTALLING ANY ONE ITEM.
13. REFER TO SHEET CXE-A-80 FOR PARTITION TYPE INFORMATION.
14. PROVIDE PAINTED ACCESS PANELS IN WALLS & CEILING AT CONCEALED ITEMS SUCH AS VALVES, CONTROLS, SWITCHES OR ANY OTHER ITEMS THAT REQUIRES ACCESS. GC TO DETERMINE ACCESS PANEL LOCATION W/ ARCHITECT PRIOR TO INSTALLATION.

## CONSTRUCTION KEYNOTES

| | |
|---|---|
| 3 | REPLICATE TRIMS TO MATCH DOCUMENTED TRIM, LOCATIONS, SIZE AND SHAPE. FINISH PAINT COLORS AS SCHEDULED. |
| 6 | INSTALL NEW IPE DECKING. SEE STRUCTURAL FOR DETAILS. |
| 10 | PROVIDE AND INSTALL COLUMN ENCLOSURES. SEE DETAILS. |
| 11 | PROVIDE AND INSTALL T1-11 CEILING. |
| 12 | PROVIDE DROP CEILING AND ALL HANGERS/ ACCESSORIES. |
| 14 | PROVIDE NEW ASPHALT SHINGLE ROOFING,UNDERLAYMENT, AND REPLACE IN KIND EXISTING DECKING AS REQUIRED (COORDINATE WITH STRUCTURAL). |
| 15 | PROVIDE AND INSTALL SBS MODIFIED BITUMEN ROOFING AND UNDERLAYMENT. |
| 17 | PROVIDE AND INSTALL RIDGE VENT AT ROOF HIPS. |
| 18 | PROVIDE NEW WALL FINISHES. SEE FINISH PLANS. |
| 67 | NEW FASCIA BOARD AND SOFFIT. |
| 80 | NEW 3/4" PLYWOOD FLOOR |

8/30/2022 4:20:28 PM


CONSULTANT INFORMATION
The LiRo Group
3 Aerial Way, Syosset, New York 11791
(516) 938-5476 www.liro.com


CONSULTANT SEAL
REGISTERED ARCHITECT ROBERT D. YOUNG 023280 STATE OF NEW YORK

| REVISION NUMBER | DATE | MADE BY | APP'D BY | REVISION |
|---|---|---|---|---|

RECORD DRAWING CERTIFICATION
☐ AS BUILT – CHANGES AS NOTED ☐ AS BUILT – NO CHANGES

CONTRACTOR
NAME
SIGNATURE
TITLE DATE

PROJECT COORDINATOR
NAME
SIGNATURE
TITLE DATE

WESTCHESTER COUNTY, NEW YORK
DEPARTMENT OF PUBLIC WORKS AND TRANSPORTATION
DIVISION OF ENGINEERING

**INFRASTRUCTURE REHABILITATION PHASE 3**
**PLAYLAND PARK, RYE, NEW YORK**
**CROSS AXIS BUILDING E**
**CXE - BUILDING SECTIONS**

| | |
|---|---|
| CONTRACT NUMBER | 22-523 |
| SHEET NUMBER | CXE-A-31 |
| DWG NO.: | 269 of 664 |
| SCALE: | As indicated |
| DATE: | 08/23/2022 |
| DPW FILE NUMBER | 1-118-A-1018-0 |
| REV. NO. | 0 |

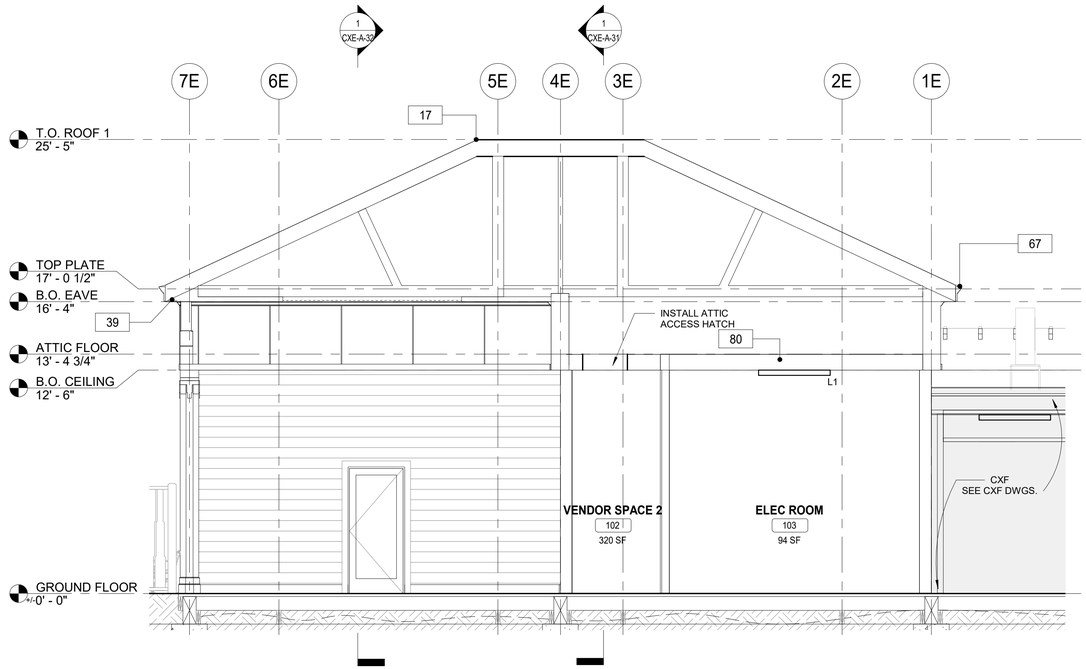


2 CXE - SECTION 2
1/4" = 1'-0"

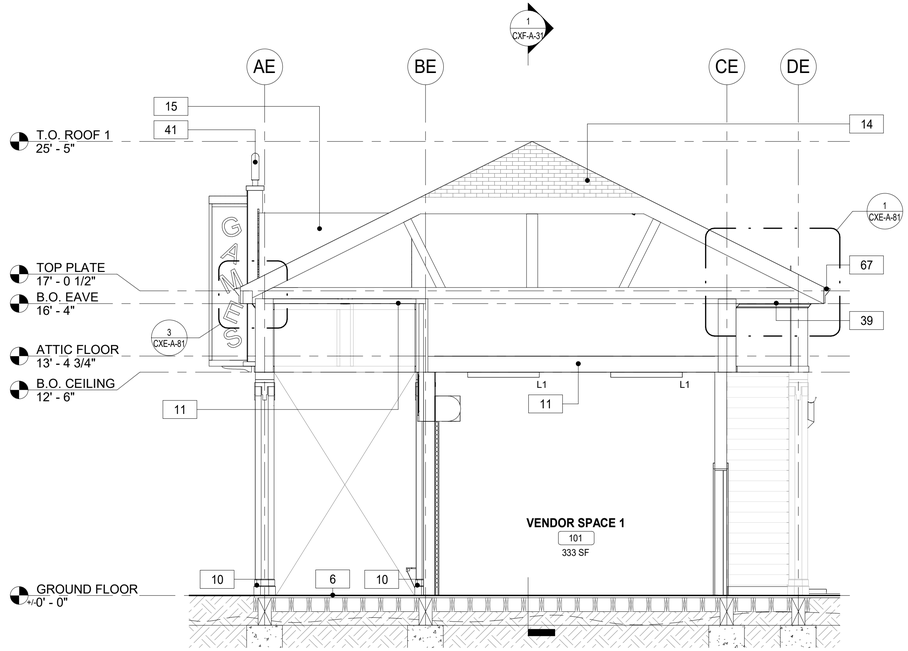


1 CXE - CROSS SECTION 3
1/4" = 1'-0"

## FLOOR PLAN GENERAL NOTES

1. DIMENSIONS ARE TO FACE OF GYPSUM WALL BOARD, GRID LINES, OR CENTERLINE OF COLUMN. ALL ELEVATIONS ARE NOTED FROM FINISH FLOOR ELEVATIONS.
2. PROVIDE DRYWALL TRIM AT ALL EXPOSED EDGES AND CORNERS.
3. MINIMUM DIMENSION FROM ANY CORNER OR WALL TO FRAMING STUD AT DOOR JAMB OPENING SHALL BE 4" (U.N.O.).
4. PROVIDE METAL BLOCKING FOR ANY WALL MOUNTED EQUIPMENT OR ACCESSORIES. COORDINATE ALL BLOCKING REQUIREMENTS NECESSARY WITH OTHER TRADES.
5. THE GC SHALL VERIFY DIMENSIONS OF THE EXISTING SPACE AND OF ANY EXISTING CONSTRUCTION TO REMAIN BY ACTUAL MEASUREMENT BEFORE ANY WORK IS PERFORMED. IF ANY MEASUREMENTS DIFFER FROM DIMENSIONS SHOWN ON PLAN, GC IS TO NOTIFY THE ARCHITECT IMMEDIATELY. THE GC SHALL BE RESPONSIBLE FOR CORRECTING ANY AND ALL DISCREPANCIES FOUND AFTER THE WORK IS PERFORMED, AT NO ADDITIONAL EXPENSE TO THE OWNER.
6. GC TO VERIFY ALL FINISHED DIMENSIONS. FIELD CONDITIONS ALTERING ANY DIMENSIONS SHOULD BE BROUGHT TO THE ATTENTION OF THE OWNER AND ARCHITECT.
7. THE GC SHALL PROVIDE CAULK JOINTS WHERE GYP. BD. MEETS THE FLOOR OR ROOF DECK.
8. THE GC SHALL BE RESPONSIBLE FOR COORDINATING WITH OWNER ON ALL WORK TO BE PERFORMED BY THE OWNER. ANY POTENTIAL CONFLICTS OR DELAYS CAUSED BY THE OWNER'S SUBCONTRACTORS MUST BE DOCUMENTED IN WRITING TO THE OWNER BEFORE THE DELAY IS ACTUALLY INCURRED FOR IT TO BE CONSIDERED. OTHERWISE THE GC WILL BE RESPONSIBLE FOR MEETING THE SCHEDULE AS OUTLINED IN THE CONTRACT.
9. THE GC SHALL SUPPLY ALL MATERIAL, LABOR, AND COORDINATION REQUIRED FOR THE INSTALLATION OF ALL OWNER-SUPPLIED ITEMS AS DESCRIBED IN THE DOCUMENTS, U.N.O.
10. THE GC IS RESPONSIBLE FOR ALL FLOOR AND WALL PENETRATIONS FOR ELECTRICAL AND MECHANICAL WORK. ALL SUCH OPENING SHALL BE FRAMED AND REINFORCED.
11. FLOOR SURFACES SHALL BE LEVELED TO ASSURE SMOOTH SURFACE FOR FINISH FLOOR INSTALLATION. GC SHALL ALSO PAY SPECIAL ATTENTION THAT ALL WALL SURFACES ARE SMOOTH WHERE MURALS WILL BE DIRECTLY APPLIED TO WALL.
12. GC TO COORDINATE ALL UTILITY STUB-UPS AND LOCATION OF ALL EQUIPMENT PRIOR TO INSTALLING ANY ONE ITEM.
13. REFER TO SHEET CXE-A-80 FOR PARTITION TYPE INFORMATION.
14. PROVIDE PAINTED ACCESS PANELS IN WALLS & CEILING AT CONCEALED ITEMS SUCH AS VALVES, CONTROLS, SWITCHES OR ANY OTHER ITEMS THAT REQUIRES ACCESS. GC TO DETERMINE ACCESS PANEL LOCATION W/ ARCHITECT PRIOR TO INSTALLATION.

## CONSTRUCTION KEYNOTES

| | |
|---|---|
| 6 | INSTALL NEW IPE DECKING. SEE STRUCTURAL FOR DETAILS. |
| 10 | PROVIDE AND INSTALL COLUMN ENCLOSURES. SEE DETAILS. |
| 11 | PROVIDE AND INSTALL T1-11 CEILING. |
| 14 | PROVIDE NEW ASPHALT SHINGLE ROOFING,UNDERLAYMENT, AND REPLACE IN KIND EXISTING DECKING AS REQUIRED (COORDINATE WITH STRUCTURAL). |
| 15 | PROVIDE AND INSTALL SBS MODIFIED BITUMEN ROOFING AND UNDERLAYMENT. |
| 17 | PROVIDE AND INSTALL RIDGE VENT AT ROOF HIPS. |
| 39 | NEW SOFFIT WITH RECESSED LIGHTS AS INDICATED ON RCP |
| 41 | INSTALL REFURBISHED FINIAL LIGHTS (H6). ARCHITECT TO APPROVE FINISH AND ANY NEEDED MODIFICATIONS TO H6 LIGHTS DURING REFURBISHMENT. |
| 67 | NEW FASCIA BOARD AND SOFFIT. |
| 80 | NEW 3/4" PLYWOOD FLOOR |

8/30/2022 4:20:31 PM


CONSULTANT INFORMATION
The LiRo Group
3 Aerial Way, Syosset, New York 11791
(516) 938-5476 www.liro.com


CONSULTANT SEAL
REGISTERED ARCHITECT ROBERT D. YOUNG JR. 023280 STATE OF NEW YORK

| REVISION NUMBER | DATE | MADE BY | APP'D BY | REVISION |
|---|---|---|---|---|

RECORD DRAWING CERTIFICATION
☐ AS BUILT – CHANGES AS NOTED ☐ AS BUILT – NO CHANGES

CONTRACTOR
NAME
SIGNATURE
TITLE DATE

PROJECT COORDINATOR
NAME
SIGNATURE
TITLE DATE

WESTCHESTER COUNTY, NEW YORK
DEPARTMENT OF PUBLIC WORKS AND TRANSPORTATION
DIVISION OF ENGINEERING

**INFRASTRUCTURE REHABILITATION PHASE 3**
**PLAYLAND PARK, RYE, NEW YORK**
**CROSS AXIS BUILDING E**
**CXE - BUILDING SECTIONS**

CONTRACT NUMBER 22-523
SHEET NUMBER **CXE-A-32**
DWG NO.: 270 of 664
SCALE: **1/4" = 1'-0"**
DATE: **08/23/2022**
DPW FILE NUMBER **1-118-A-1019-0**
REV. NO. 0

## GENERAL REFLECTED CEILING PLAN NOTES

1. CONTRACTOR SHALL PROVIDE THE NECESSARY FRAMING OR BRIDGING FOR ALL LIGHT FIXTURES, DIFFUSERS, RETURNS, ETC., AS WELL AS REQUIRED CUTOUTS.
2. CONTRACTOR SHALL NOTIFY THE ARCHITECT OF ANY POSSIBLE INTERFERENCES BEFORE PROCEEDING WITH CEILING INSTALLATION.
3. CEILING CONSTRUCTION SHALL NOT BE CLOSED IN UNTIL THE CONSTRUCTION MANAGER AND AUTHORITIES HAVING JURISDICTION HAVE HAD AN OPPORTUNITY TO INSPECT THE AREA AND ASCERTAIN THAT ALL DUCTWORK, PLUMBING, ELECTRICAL CONDUITS AND LINES HAVE BEEN INSTALLED PROPERLY.
4. FASCIAS OR ANY BREAK IN THE CEILING HEIGHTS CREATED BY THE INSTALLATION AND/OR ALTERATION OF HEATING, VENTILATING, A/C OR MECHANICAL DUCTS, PIPING OR OTHER EQUIPMENT SHALL BE FORMED OF GYPSUM WALLBOARD ON FURRING CHANNELS.
5. THE CEILING PANEL JOINTS SHALL BE ALIGNED PERFECTLY WITH LIGHTING FIXTURES.
6. ALL JOINTS IN THE PANEL SHALL BE SQUARE, LEVEL AND PERFECTLY ALIGNED WITH EACH OTHER AND WITH BUILDING FIXTURES.
7. CONTRACTOR SHALL PROVIDE CUTOUTS AND OTHER SPECIAL PROVISIONS IN ACOUSTICAL WORK AS REQUIRED FOR LIGHTING FIXTURES, REGISTERS, DIFFUSERS AND OTHER INSERTED ITEMS. GENERAL CONSTRUCTION CONTRACTOR SHALL INSTALL ACCESS PANELS IN GYPSUM DRYWALL CEILINGS FOR ACCESS TO AIR CONDITIONING, PLUMBING, TELEPHONE & ELECTRICAL CONTROL EQUIPMENT REQUIRING ACCESS.
8. IN GENERAL, WITHIN EACH AREA, CEILING WORK REQUIREMENTS SHALL BE EXECUTED IN SUCH A MANNER AS TO PROVIDE CONTINUOUS MATCHED AND ALIGNED CEILINGS. THE FINAL CEILING INSTALLATION SHALL BE FREE OF ALL VISUAL DEFECTS.

## RCP LEGEND

- R-2 EXTERIOR RECESSED CAN IN SOFFIT (SEE ELEC. DWGS)
- R-6: 4" SQUARE RECESSED LIGHT FIXTURE (SEE ELEC. DWGS)
- L-1 LINEAR LIGHT (SEE ELEC. DWGS)
- M-2 MARQUEE LIGHTING AT BALUSTRADE
- SPRINKLER (SEE FIRE PROTECTION DWGS)
- SUPPLY DIFFUSER. SEE MECHANICAL DRAWINGS
- EXHAUST GRILL. SEE MECHANICAL DRAWINGS
- EX- EXIT SIGN
- NEW CONSTRUCTION
- T1-11 CEILING BOARD
- GYP. BOARD CEILING
- INDICATES SCOPE NOT IN CONTRACT

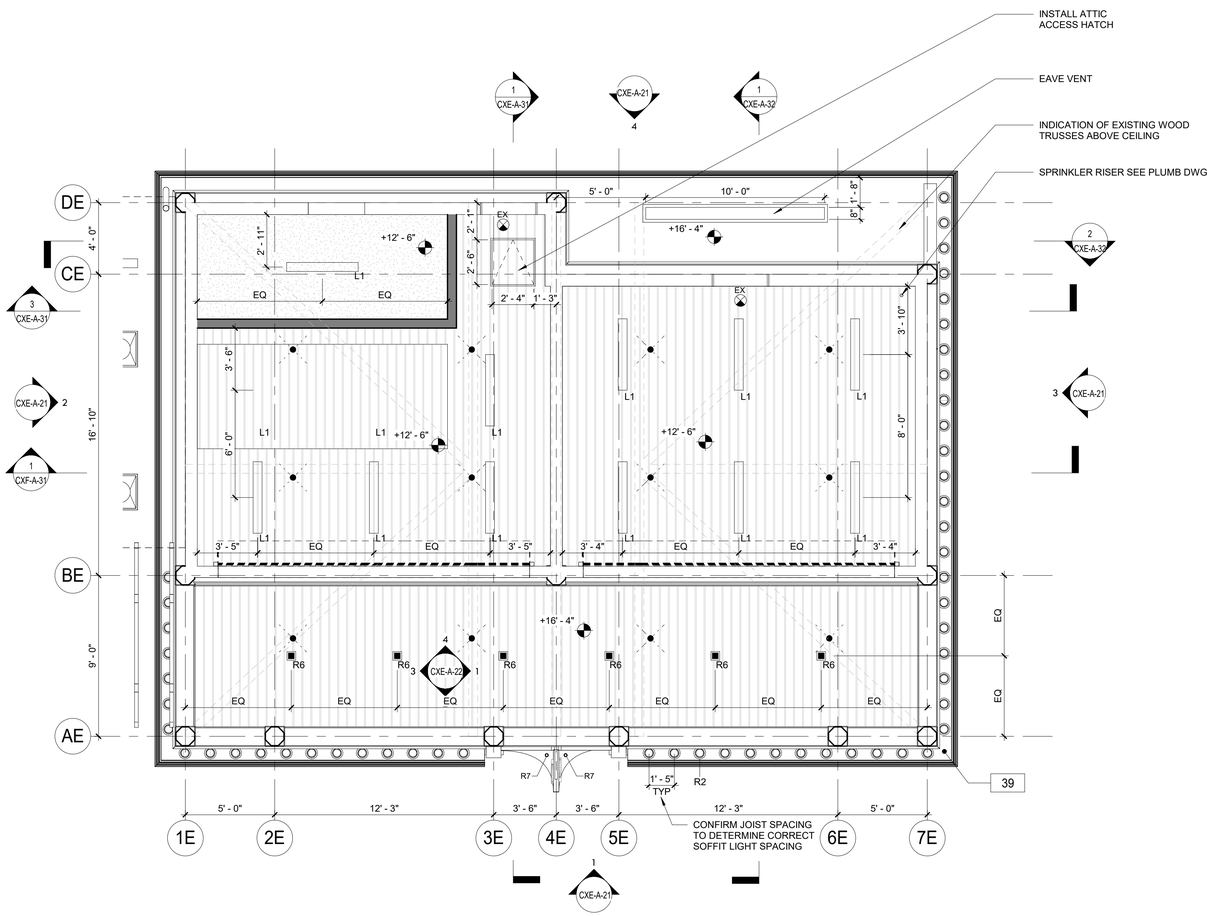


## CONSTRUCTION KEYNOTES

| | |
|---|---|
| 39 | NEW SOFFIT WITH RECESSED LIGHTS AS INDICATED ON RCP |

1 CXE - GROUND RCP
1/4" = 1'-0"

8/30/2022 4:20:33 PM

CONSULTANT INFORMATION

The LiRo Group
3 Aerial Way, Syosset, New York 11791
(516) 938-5476 www.liro.com

CONSULTANT SEAL

REGISTERED ARCHITECT ROBERT D. YOUNG 023220 STATE OF NEW YORK

| REVISION NUMBER | DATE | MADE BY | APP'D BY | REVISION |
|---|---|---|---|---|

RECORD DRAWING CERTIFICATION

☐ AS BUILT – CHANGES AS NOTED ☐ AS BUILT – NO CHANGES

CONTRACTOR
NAME
SIGNATURE
TITLE DATE

PROJECT COORDINATOR
NAME
SIGNATURE
TITLE DATE

WESTCHESTER COUNTY, NEW YORK
DEPARTMENT OF PUBLIC WORKS AND TRANSPORTATION
DIVISION OF ENGINEERING

**INFRASTRUCTURE REHABILITATION PHASE 3**
**PLAYLAND PARK, RYE, NEW YORK**
**CROSS AXIS BUILDING E**
**CXE - GROUND FLOOR REFLECTED CEILING PLAN**

| | |
|---|---|
| CONTRACT NUMBER | 22-523 |
| SHEET NUMBER | CXE-A-41 |
| DWG NO.: | 271 of 664 |
| SCALE: | As indicated |
| DATE: | 08/23/2022 |
| DPW FILE NUMBER | 1-118-A-1020-0 |
| REV. NO. | 0 |

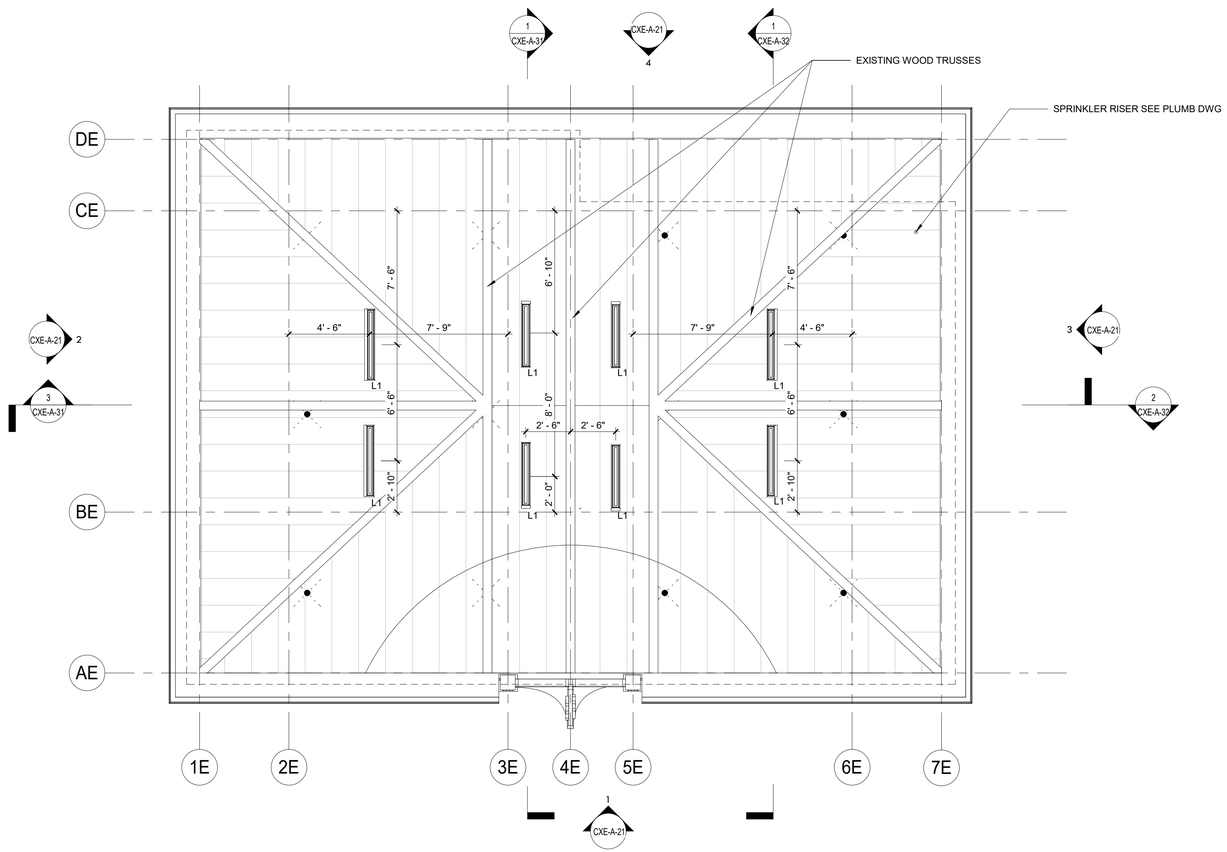


1 CXE - ATTIC PLAN
1/4" = 1'-0"

## GENERAL REFLECTED CEILING PLAN NOTES

1. CONTRACTOR SHALL PROVIDE THE NECESSARY FRAMING OR BRIDGING FOR ALL LIGHT FIXTURES, DIFFUSERS, RETURNS, ETC., AS WELL AS REQUIRED CUTOUTS.
2. CONTRACTOR SHALL NOTIFY THE ARCHITECT OF ANY POSSIBLE INTERFERENCES BEFORE PROCEEDING WITH CEILING INSTALLATION.
3. CEILING CONSTRUCTION SHALL NOT BE CLOSED IN UNTIL THE CONSTRUCTION MANAGER AND AUTHORITIES HAVING JURISDICTION HAVE HAD AN OPPORTUNITY TO INSPECT THE AREA AND ASCERTAIN THAT ALL DUCTWORK, PLUMBING, ELECTRICAL CONDUITS AND LINES HAVE BEEN INSTALLED PROPERLY.
4. FASCIAS OR ANY BREAK IN THE CEILING HEIGHTS CREATED BY THE INSTALLATION AND/OR ALTERATION OF HEATING, VENTILATING, A/C OR MECHANICAL DUCTS, PIPING OR OTHER EQUIPMENT SHALL BE FORMED OF GYPSUM WALLBOARD ON FURRING CHANNELS.
5. THE CEILING PANEL JOINTS SHALL BE ALIGNED PERFECTLY WITH LIGHTING FIXTURES.
6. ALL JOINTS IN THE PANEL SHALL BE SQUARE, LEVEL AND PERFECTLY ALIGNED WITH EACH OTHER AND WITH BUILDING FIXTURES.
7. CONTRACTOR SHALL PROVIDE CUTOUTS AND OTHER SPECIAL PROVISIONS IN ACOUSTICAL WORK AS REQUIRED FOR LIGHTING FIXTURES, REGISTERS, DIFFUSERS AND OTHER INSERTED ITEMS. GENERAL CONSTRUCTION CONTRACTOR SHALL INSTALL ACCESS PANELS IN GYPSUM DRYWALL CEILINGS FOR ACCESS TO AIR CONDITIONING, PLUMBING, TELEPHONE & ELECTRICAL CONTROL EQUIPMENT REQUIRING ACCESS.
8. IN GENERAL, WITHIN EACH AREA, CEILING WORK REQUIREMENTS SHALL BE EXECUTED IN SUCH A MANNER AS TO PROVIDE CONTINUOUS MATCHED AND ALIGNED CEILINGS. THE FINAL CEILING INSTALLATION SHALL BE FREE OF ALL VISUAL DEFECTS.
9. CEILING BOARD OVER VENDOR SPACES SHOULD BE MOISTURE RESISTANT, PRESSURE TREATED WOOD

## RCP LEGEND

- R2 — R-2 EXTERIOR RECESSED CAN IN SOFFIT (SEE ELEC. DWGS)
- R6 — R-6: 4" SQUARE RECESSED LIGHT FIXTURE (SEE ELEC. DWGS)
- L1 — L-1 LINEAR LIGHT (SEE ELEC. DWGS)
- M2 — M-2 MARQUEE LIGHTING AT BALUSTRADE
- SPRINKLER (SEE FIRE PROTECTION DWGS)
- SUPPLY DIFFUSER. SEE MECHANICAL DRAWINGS
- EXHAUST GRILL. SEE MECHANICAL DRAWINGS
- EX — EX- EXIT SIGN
- NEW CONSTRUCTION
- T1-11 CEILING BOARD
- GYP. BOARD CEILING
- INDICATES SCOPE NOT IN CONTRACT

8/30/2022 4:20:34 PM

CONSULTANT INFORMATION
The LiRo Group
3 Aerial Way, Syosset, New York 11791
(516) 938-5476 www.liro.com

CONSULTANT SEAL
REGISTERED ARCHITECT ROBERT D. YOUNG JR. 023280 STATE OF NEW YORK

| REVISION NUMBER | DATE | MADE BY | APP'D BY | REVISION |
|---|---|---|---|---|

RECORD DRAWING CERTIFICATION
☐ AS BUILT – CHANGES AS NOTED ☐ AS BUILT – NO CHANGES

CONTRACTOR
NAME
SIGNATURE
TITLE DATE

PROJECT COORDINATOR
NAME
SIGNATURE
TITLE DATE

WESTCHESTER COUNTY, NEW YORK
DEPARTMENT OF PUBLIC WORKS AND TRANSPORTATION
DIVISION OF ENGINEERING

**INFRASTRUCTURE REHABILITATION PHASE 3**
**PLAYLAND PARK, RYE, NEW YORK**
**CROSS AXIS BUILDING E**
**CXE - ATTIC REFLECTED CEILING PLAN**

| | |
|---|---|
| CONTRACT NUMBER | 22-523 |
| SHEET NUMBER | CXE-A-42 |
| DWG NO.: | 272 of 664 |
| SCALE: | As indicated |
| DATE: | 08/23/2022 |
| DPW FILE NUMBER | 1-118-A-1021-0 |
| REV. NO. | 0 |

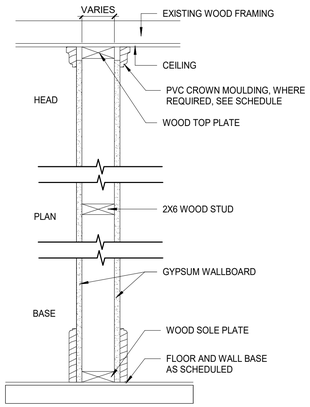


1 **NO RATING**

1 LAYER 5/8" IMPACT & MOLD-RESISTANT GYP. BD. TO CEILING, ON EACH SIDE

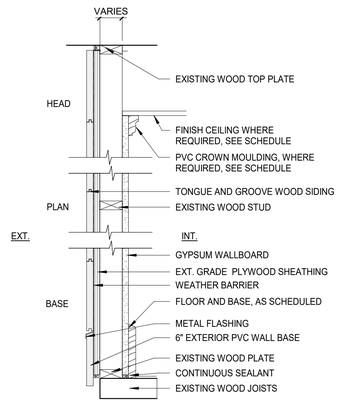


2 **NO RATING**

1 LAYER 5/8" IMPACT & MOLD-RESISTANT GYP. BD. UPTO 8' A.F.F. AND 5/8" MOLD-RESISTANT GYP. BD. TO CEILING ON THE INTERIOR SIDE

2A **NO RATING**

1 LAYER 5/8" IMPACT & MOLD-RESISTANT GYP. BD. AND 5/8" MOLD-RESISTANT GYP. BD. TO CEILING ON THE INTERIOR SIDE. 8' HIGH" BEADBOARD ON INTERIOR SIDE WITH PVC BEADBOARD CAP (NOT SHOWN)

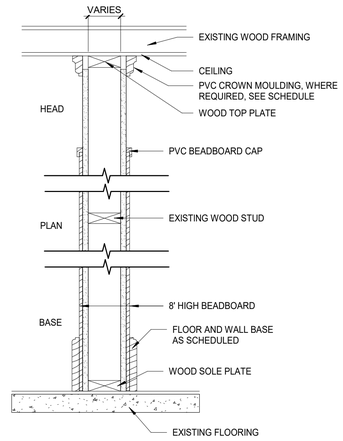


3 **NO RATING**

1 LAYER 5/8" IMPACT & MOLD-RESISTANT GYP. BD. TO CEILING, ON EACH SIDE. 1/4" BEADBOARD ON BOTH SIDE FINISH

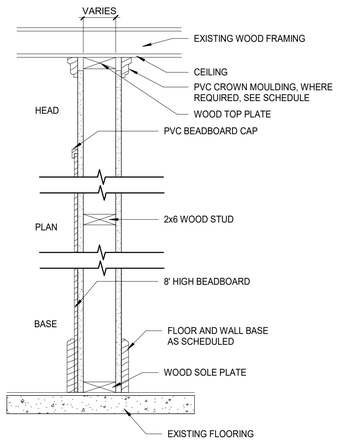


7 **1HR FIRE RATING- U305**

1 LAYER 5/8" IMPACT & MOLD-RESISTANT GYP. BD. TO CEILING, ON EACH SIDE. 8' HIGH" BEADBOARD ON VENDOR SPACE(S) SIDE WITH PVC BEADBOARD CAP

8/30/2022 4:20:34 PM

CONSULTANT INFORMATION

The LiRo Group

3 Aerial Way, Syosset, New York 11791
(516) 938-5476 www.liro.com

CONSULTANT SEAL

REGISTERED ARCHITECT ROBERT D. JOHNSON 023220 STATE OF NEW YORK

| REVISION NUMBER | DATE | MADE BY | APP'D BY | REVISION |
|---|---|---|---|---|

RECORD DRAWING CERTIFICATION

☐ AS BUILT – CHANGES AS NOTED ☐ AS BUILT – NO CHANGES

CONTRACTOR
NAME
SIGNATURE
TITLE DATE

PROJECT COORDINATOR
NAME
SIGNATURE
TITLE DATE

WESTCHESTER COUNTY, NEW YORK
DEPARTMENT OF PUBLIC WORKS AND TRANSPORTATION
DIVISION OF ENGINEERING

**INFRASTRUCTURE REHABILITATION PHASE 3**
**PLAYLAND PARK, RYE, NEW YORK**
**CROSS AXIS BUILDING E**
**PARTITION TYPES**

CONTRACT NUMBER 22-523
SHEET NUMBER **CXE-A-80**
DWG NO.: 273 of 664
SCALE: **1 1/2" = 1'-0"**
DATE: **08/23/2022**
DPW FILE NUMBER **1-118-A-1022-0**
REV. NO. 0

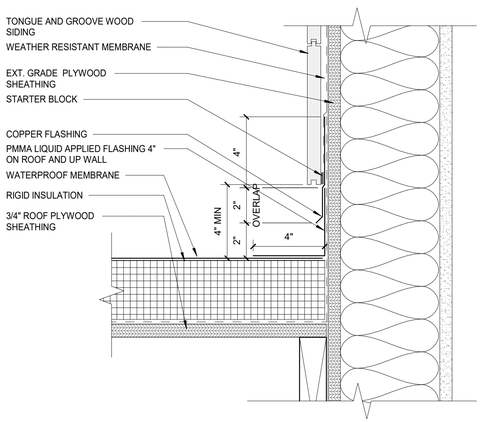


6 ROOF FLASHING DETAIL
3" = 1'-0"

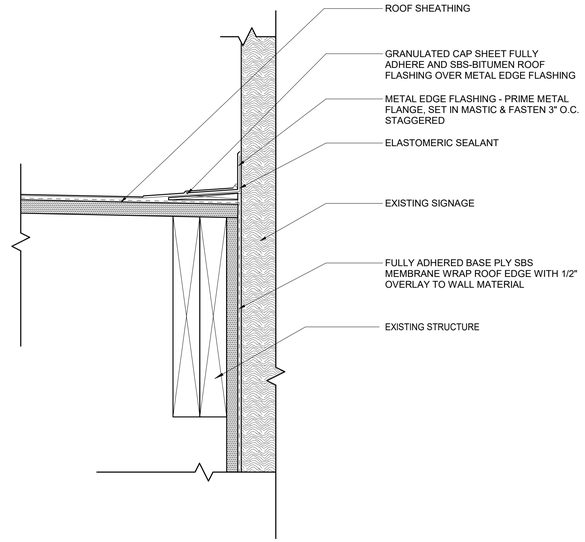


5 SBS ROOF EDGE AT SIGNAGE
3" = 1'-0"

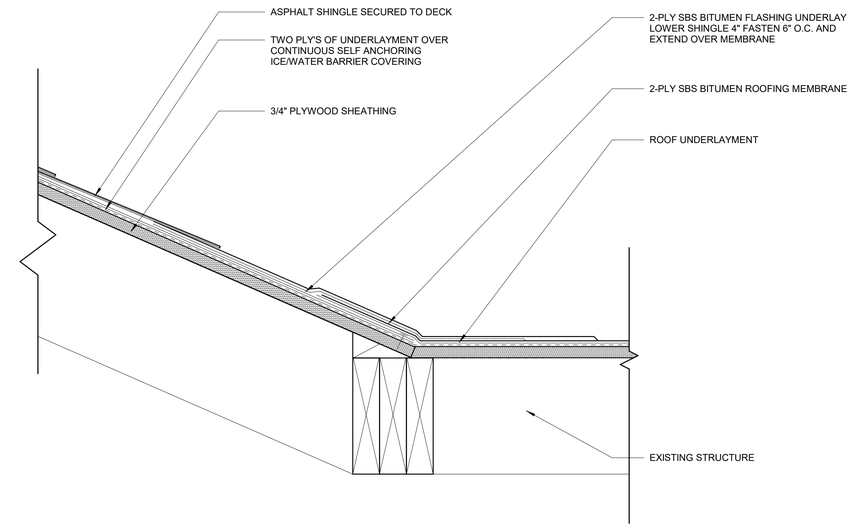


4 TYP. ASPHALT TO SBS ROOF CONNECTION
3" = 1'-0"

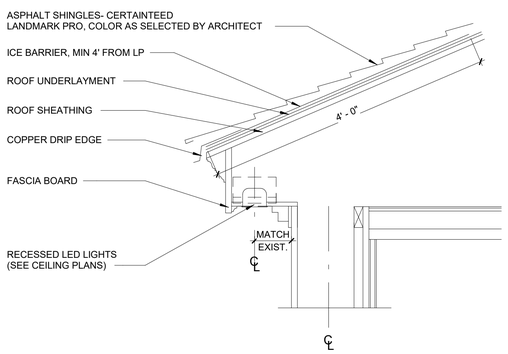


3 TYPICAL ROOF EAVE DETAIL
1" = 1'-0"

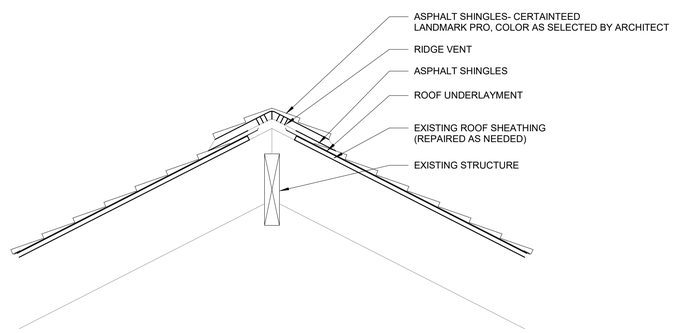


2 RIDGE VENT DETAIL
1" = 1'-0"

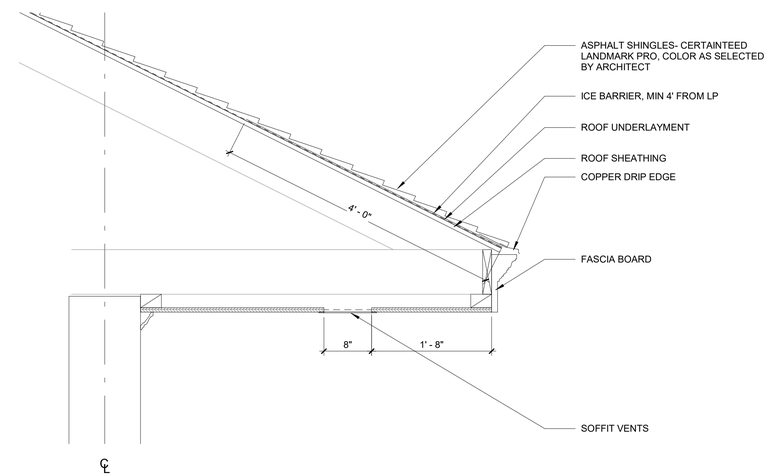


1 ROOF EAVE WITH VENT DETAIL
1" = 1'-0"

8/30/2022 4:20:35 PM

CONSULTANT INFORMATION
The LiRo Group
3 Aerial Way, Syosset, New York 11791
(516) 938-5476 www.liro.com

CONSULTANT SEAL
REGISTERED ARCHITECT ROBERT D. JOHNSON III 023280 STATE OF NEW YORK

| REVISION NUMBER | DATE | MADE BY | APP'D BY | REVISION |
|---|---|---|---|---|
| | | | | |

RECORD DRAWING CERTIFICATION
☐ AS BUILT – CHANGES AS NOTED ☐ AS BUILT – NO CHANGES

CONTRACTOR
NAME
SIGNATURE
TITLE DATE

PROJECT COORDINATOR
NAME
SIGNATURE
TITLE DATE

WESTCHESTER COUNTY, NEW YORK
DEPARTMENT OF PUBLIC WORKS AND TRANSPORTATION
DIVISION OF ENGINEERING

**INFRASTRUCTURE REHABILITATION PHASE 3**
**PLAYLAND PARK, RYE, NEW YORK**
**CROSS AXIS BUILDING E**
**ROOF DETAILS**

CONTRACT NUMBER 22-523
SHEET NUMBER **CXE-A-81**
DWG NO.: 274 of 664
SCALE: **As indicated**
DATE: **08/23/2022**
DPW FILE NUMBER **1-118-A-1023-0**
REV. NO. 0

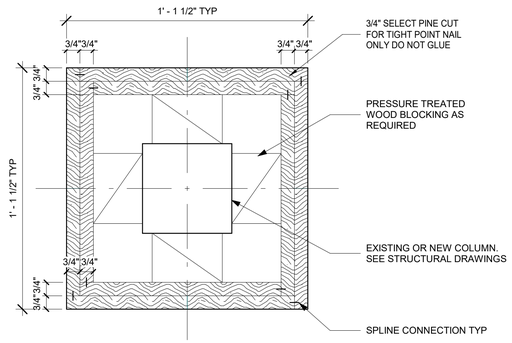


10 COLUMN C CAPITAL 3
3" = 1'-0"

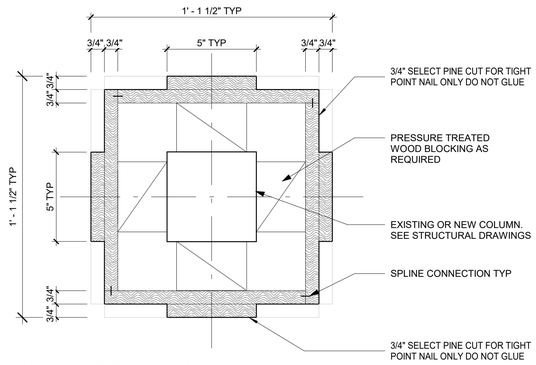


9 COLUMN C CAPITAL 2
3" = 1'-0"

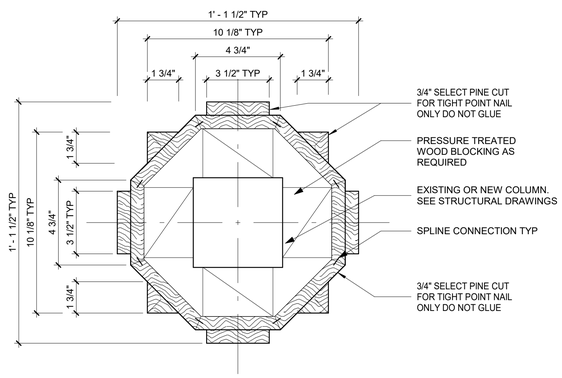


8 COLUMN C CAPITAL 1
3" = 1'-0"

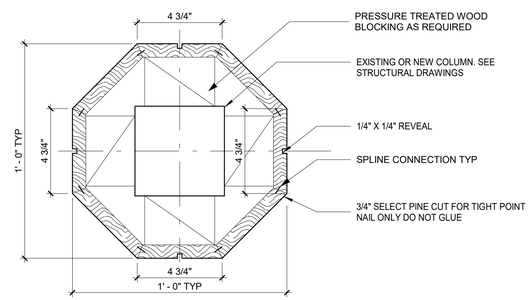


7 COLUMN C SHAFT
3" = 1'-0"

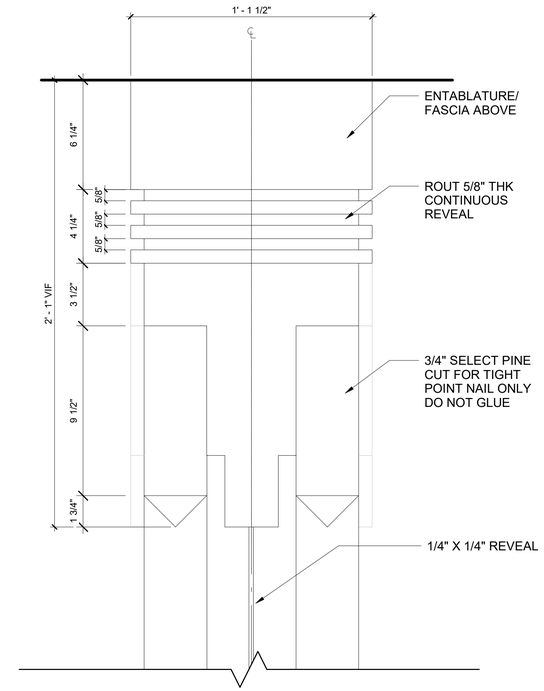


6 COLUMN CAPITAL DETAIL TYPE C
3" = 1'-0"

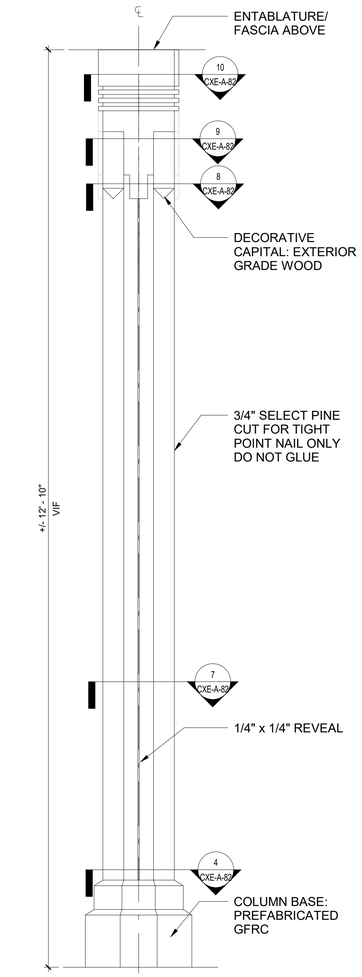


5 COLUMN DETAIL TYPE C
1" = 1'-0"

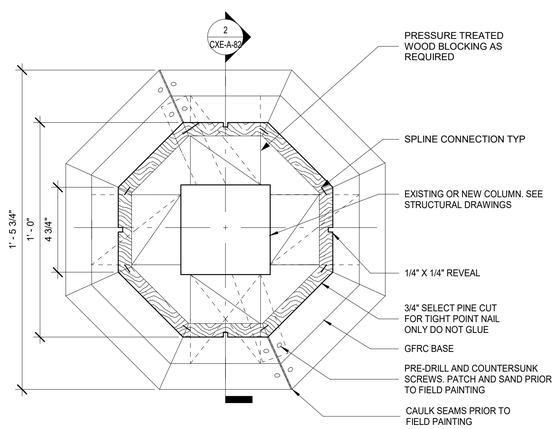


4 COLUMN C BASE PLAN
3" = 1'-0"

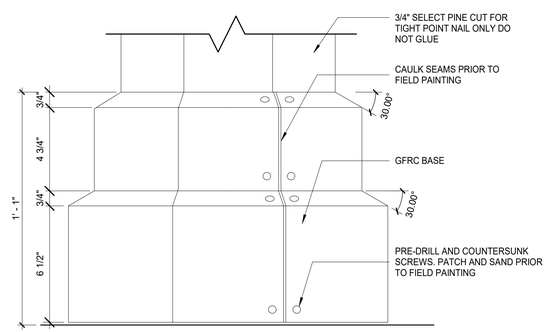


3 COLUMN C ELEVATION- COLUMN BASE
3" = 1'-0"

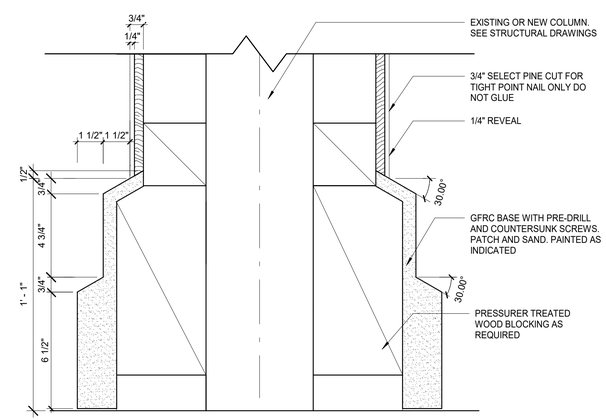


2 COLUMN C SECTION- COLUMN BASE
3" = 1'-0"

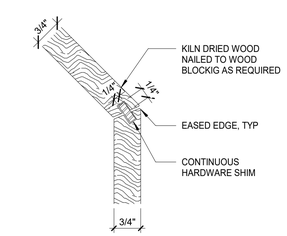


1 SPLINE CONNECTION DETAIL
6" = 1'-0"

NOTES:
1. KILN DRIED WOOD IS TO BE USED FOR COLUMN CLADDINGS.
2. PRESSURE-TREATED WOOD ARE TO BE USED FOR BLOCKING SUBSTRATE AS REQUIRED BY CLADDING INSTALLATIONS.
3. STAINLESS STEEL NAILS FASTENERS ARE TO BE USED FOR CLADDDING, BLOCKING INSTALLATIONS.
4. HARDWOOD IS TO BE USED FOR SPLINE SHIM CLADDIING CONNECTION.
5. SPLICE WOOD CLADDING PANEL OF INDIVIDUAL PIECES WHEN PANEL WIDTH EXCEEDS WIDTH OF WOOD PLANK AVAILABLE
6. **ALL DIMENSIONS TO BE VERIFIED IN FIELD**

8/30/2022 4:20:36 PM

CONSULTANT INFORMATION
The LiRo Group
3 Aerial Way, Syosset, New York 11791
(516) 938-5476 www.liro.com

CONSULTANT SEAL
REGISTERED ARCHITECT ROBERT D. YOUNG JR. 023280 STATE OF NEW YORK

| REVISION NUMBER | DATE | MADE BY | APP'D BY | REVISION |
|---|---|---|---|---|

RECORD DRAWING CERTIFICATION
☐ AS BUILT – CHANGES AS NOTED ☐ AS BUILT – NO CHANGES

CONTRACTOR
NAME
SIGNATURE
TITLE DATE

PROJECT COORDINATOR
NAME
SIGNATURE
TITLE DATE

WESTCHESTER COUNTY, NEW YORK
DEPARTMENT OF PUBLIC WORKS AND TRANSPORTATION
DIVISION OF ENGINEERING

**INFRASTRUCTURE REHABILITATION PHASE 3**
**PLAYLAND PARK, RYE, NEW YORK**
**CROSS AXIS BUILDING E**
**CXE COLUMN DETAILS**

| | |
|---|---|
| CONTRACT NUMBER | 22-523 |
| SHEET NUMBER | **CXE-A-82** |
| DWG NO.: | 275 of 664 |
| SCALE: | **As indicated** |
| DATE: | **08/23/2022** |
| DPW FILE NUMBER | **1-118-A-1024-0** |
| REV. NO. | 0 |

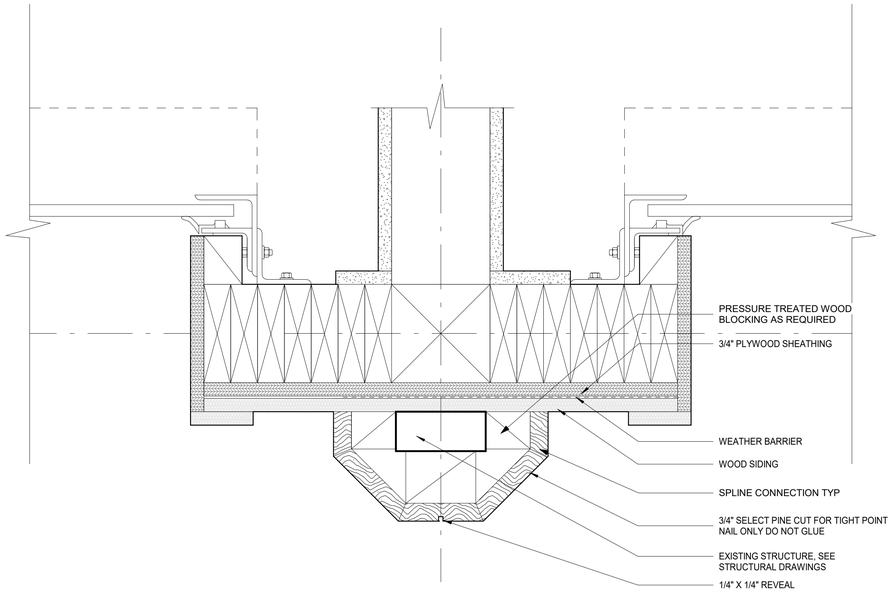


6 EXTERIOR COLUMN BETWEEN ROLL UP DOOR PLAN DETAIL
3" = 1'-0"

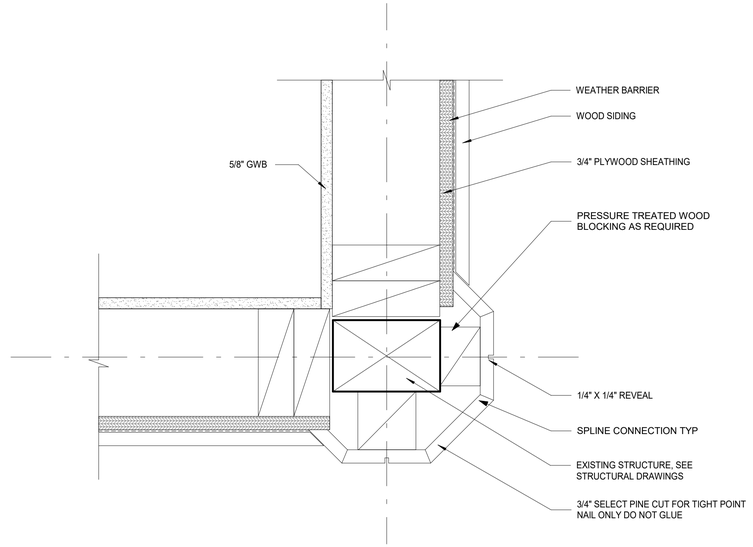


5 EXTERIOR CORNER COLUMN CONNECTION PLAN DETAIL
3" = 1'-0"

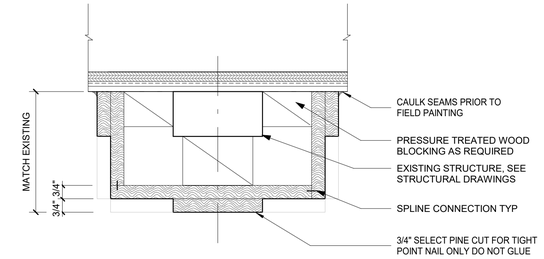


7 PILASTER COLUMN CAPITAL DETAIL
3" = 1'-0"

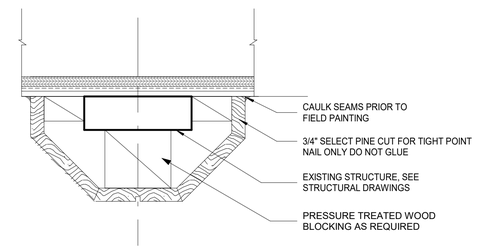


4 PILASTER COLUMN SHAFT DETAIL
3" = 1'-0"

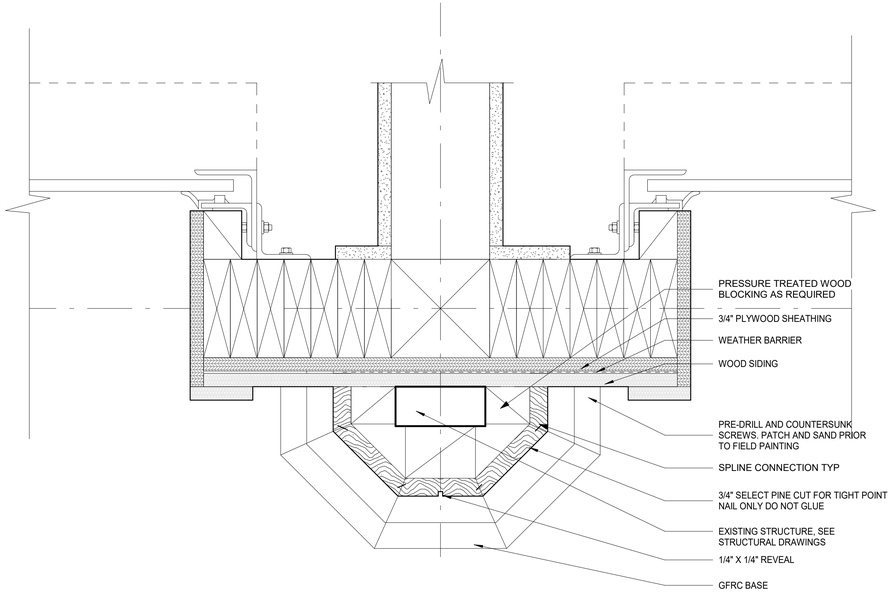


3 EXTERIOR COLUMN BETWEEN ROLL UP DOOR PLAN DETAIL Copy 1
3" = 1'-0"

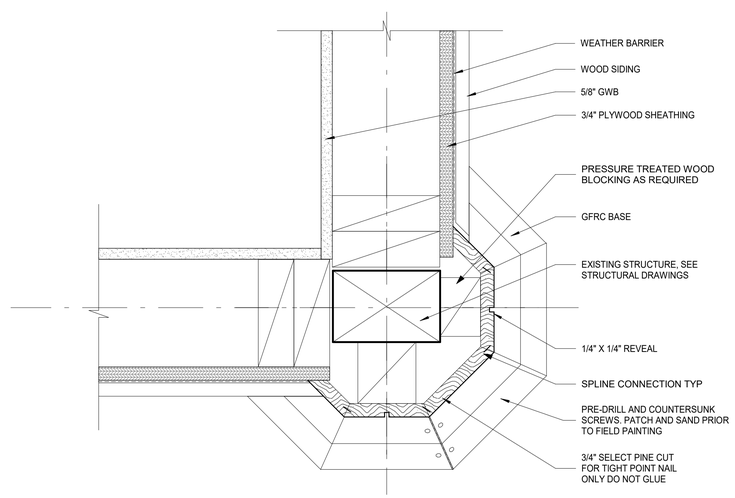


2 EXTERIOR CORNER COLUMN CONNECTION BASE PLAN DETAIL
3" = 1'-0"

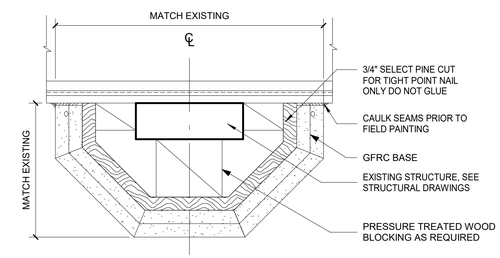


1 PILASTER COLUMN BASE DETAIL
3" = 1'-0"

NOTES:
1. KILN DRIED WOOD IS TO BE USED FOR COLUMN CLADDINGS.
2. PRESSURE-TREATED WOOD ARE TO BE USED FOR BLOCKING SUBSTRATE AS REQUIRED BY CLADDING INSTALLATIONS.
3. STAINLESS STEEL NAILS FASTENERS ARE TO BE USED FOR CLADDDING, BLOCKING INSTALLATIONS.
4. HARDWOOD IS TO BE USED FOR SPLINE SHIM CLADDIING CONNECTION.
5. SPLICE WOOD CLADDING PANEL OF INDIVIDUAL PIECES WHEN PANEL WIDTH EXCEEDS WIDTH OF WOOD PLANK AVAILABLE
6. **ALL DIMENSIONS TO BE VERIFIED IN FIELD**

8/30/2022 4:20:37 PM

CONSULTANT INFORMATION
The LiRo Group
3 Aerial Way, Syosset, New York 11791
(516) 938-5476 www.liro.com

CONSULTANT SEAL
REGISTERED ARCHITECT ROBERT D. JOHNSON 023280 STATE OF NEW YORK

| REVISION NUMBER | DATE | MADE BY | APP'D BY | REVISION |
|---|---|---|---|---|

RECORD DRAWING CERTIFICATION
☐ AS BUILT – CHANGES AS NOTED ☐ AS BUILT – NO CHANGES

CONTRACTOR
NAME
SIGNATURE
TITLE DATE

PROJECT COORDINATOR
NAME
SIGNATURE
TITLE DATE

WESTCHESTER COUNTY, NEW YORK
DEPARTMENT OF PUBLIC WORKS AND TRANSPORTATION
DIVISION OF ENGINEERING

**INFRASTRUCTURE REHABILITATION PHASE 3**
**PLAYLAND PARK, RYE, NEW YORK**
**CROSS AXIS BUILDING E**
**CXE - COLUMN DETAILS 2**

| | |
|---|---|
| CONTRACT NUMBER | 22-523 |
| SHEET NUMBER | **CXE-A-83** |
| DWG NO.: | 276 of 664 |
| SCALE: | **3" = 1'-0"** |
| DATE: | **08/23/2022** |
| DPW FILE NUMBER | **1-118-A-1025-0** |
| REV. NO. | 0 |

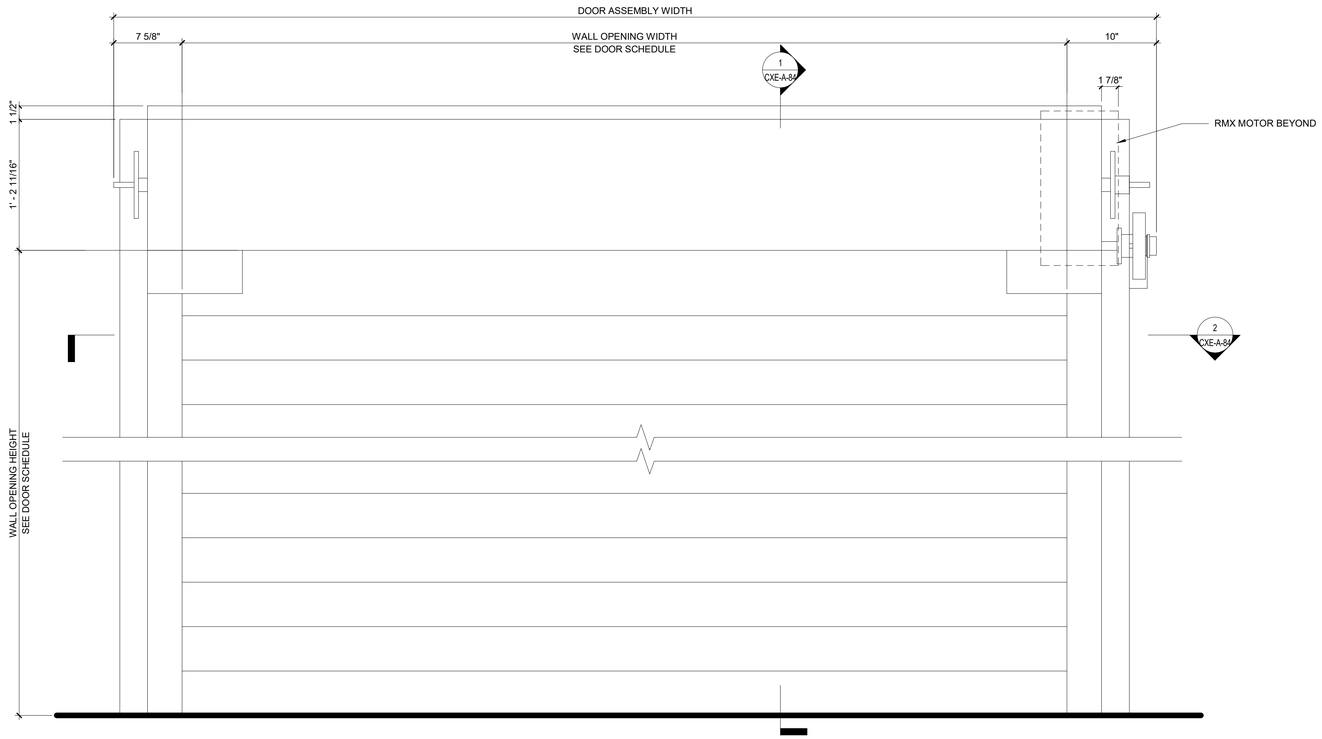


3 ROLL UP DOOR ELEVATION DETAIL
1 1/2" = 1'-0"

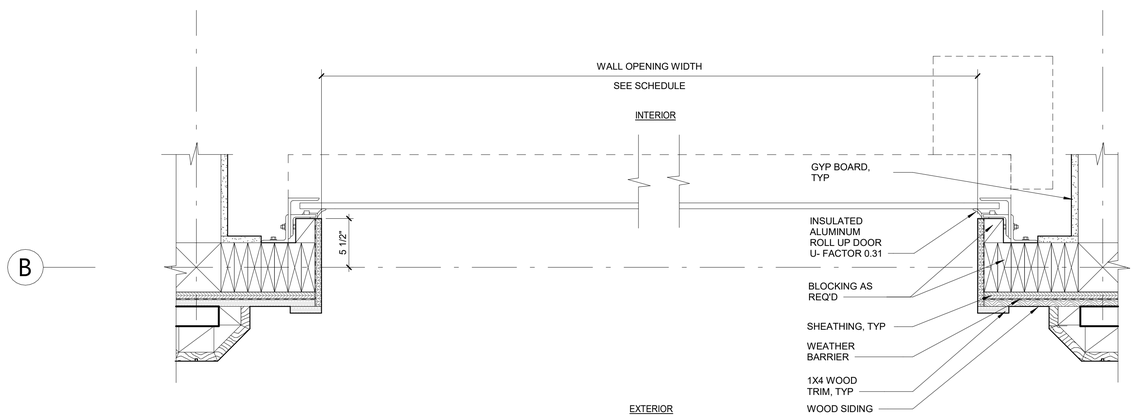


2 ROLL UP DOOR PLAN DETAIL
1 1/2" = 1'-0"

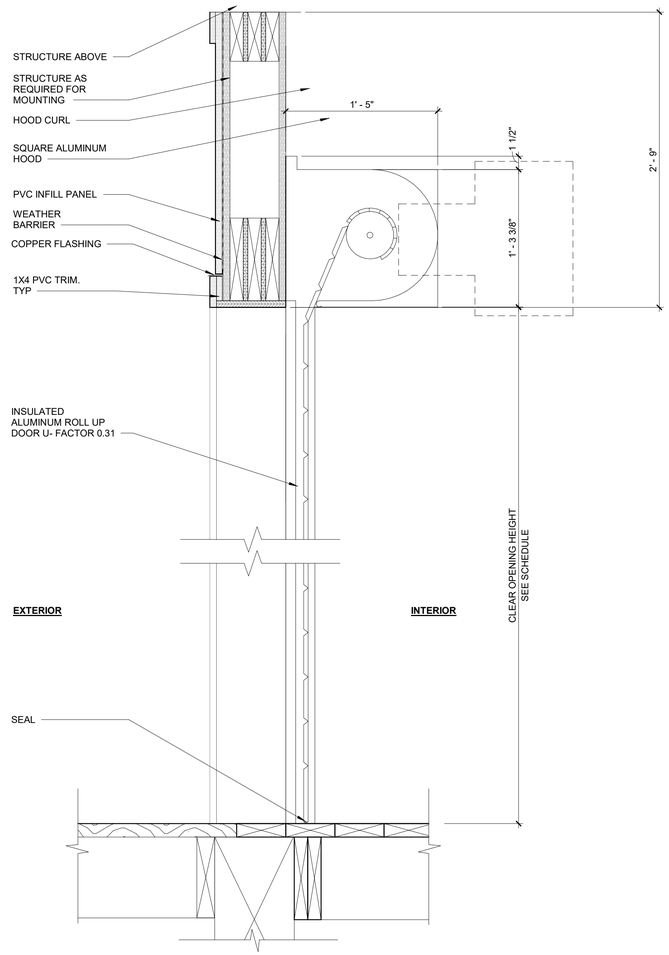


1 ROLL UP DOOR SECTION DETAIL
1 1/2" = 1'-0"

8/30/2022 4:20:38 PM

CONSULTANT INFORMATION
The LiRo Group
3 Aerial Way, Syosset, New York 11791
(516) 938-5476 www.liro.com

CONSULTANT SEAL
REGISTERED ARCHITECT ROBERT D. YOUNG JR. 023280 STATE OF NEW YORK

| REVISION NUMBER | DATE | MADE BY | APP'D BY | REVISION |
|---|---|---|---|---|

RECORD DRAWING CERTIFICATION
☐ AS BUILT – CHANGES AS NOTED ☐ AS BUILT – NO CHANGES

CONTRACTOR
NAME
SIGNATURE
TITLE DATE

PROJECT COORDINATOR
NAME
SIGNATURE
TITLE DATE

WESTCHESTER COUNTY, NEW YORK
DEPARTMENT OF PUBLIC WORKS AND TRANSPORTATION
DIVISION OF ENGINEERING

**INFRASTRUCTURE REHABILITATION PHASE 3**
**PLAYLAND PARK, RYE, NEW YORK**
**CROSS AXIS BUILDING E**
**ROLL UP DOOR DETAILS**

CONTRACT NUMBER 22-523
SHEET NUMBER CXE-A-84
DWG NO.: 277 of 664
SCALE: 1 1/2" = 1'-0"
DATE: 08/23/2022
DPW FILE NUMBER 1-118-A-1026-0
REV. NO. 0

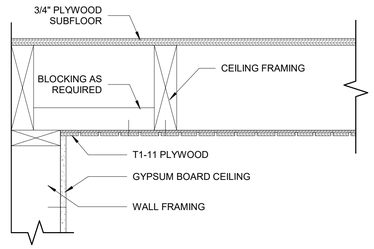


8 T1-11 FRAMING PARALLEL TO WALL
1 1/2" = 1'-0"

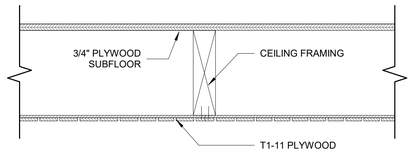


7 T1-11 FRAMING DETAIL
1 1/2" = 1'-0"

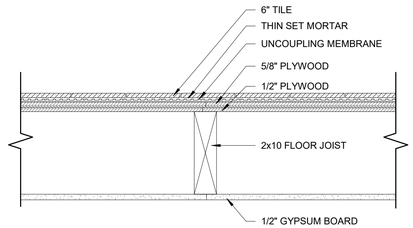


6 1 HOUR NON-COMBUSTILE FLOOR ASSEMBLY - BXUV.L501 - ANSI/UL 263
1 1/2" = 1'-0"

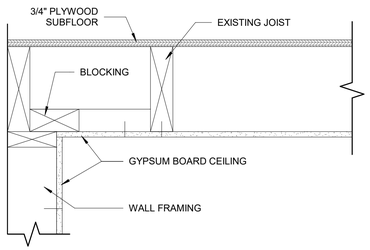


5 GYPSUM CEILING FRAMING PARALLEL TO WALL
1 1/2" = 1'-0"

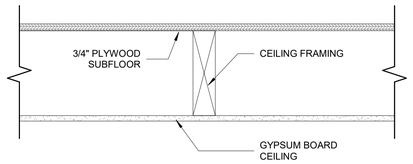


4 GYPSUM CEILING FRAMING DETAIL
1 1/2" = 1'-0"

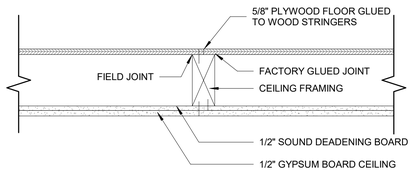


3 1 HOUR NON-COMBUSTILE FLOOR CEILING ASSEMBLY - BXUV.L504 - ANSI/UL 263
1 1/2" = 1'-0"

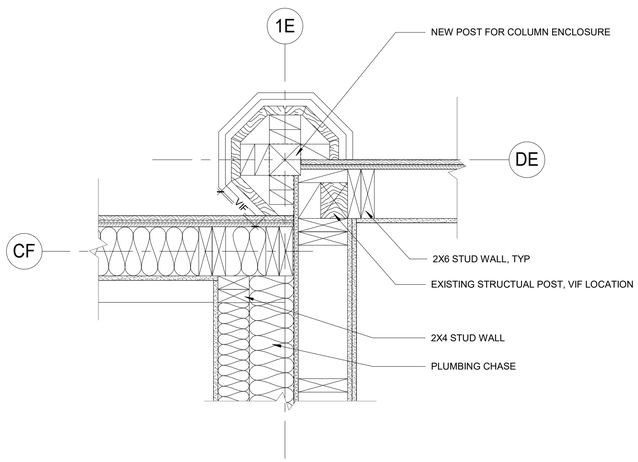


2 CXE PLAN DETAIL 2
1 1/2" = 1'-0"

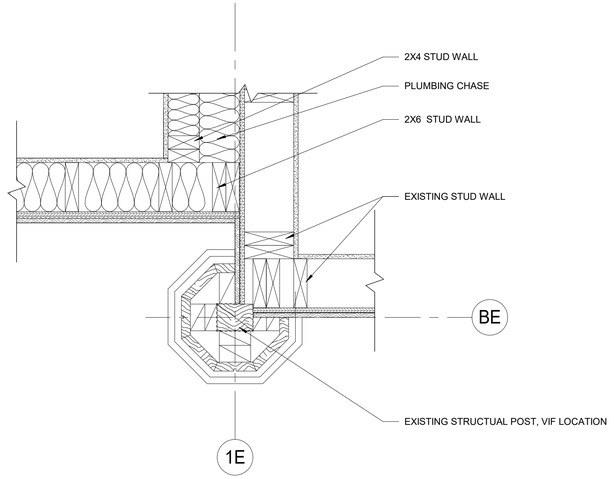


1 CXE PLAN DETAIL 1
1 1/2" = 1'-0"

8/30/2022 4:20:39 PM

CONSULTANT INFORMATION

The LiRo Group
3 Aerial Way, Syosset, New York 11791
(516) 938-5476 www.liro.com

CONSULTANT SEAL

REGISTERED ARCHITECT ROBERT D. YOUNG JR. 023280 STATE OF NEW YORK

| REVISION NUMBER | DATE | MADE BY | APP'D BY | REVISION |
|---|---|---|---|---|
| | | | | |

RECORD DRAWING CERTIFICATION

☐ AS BUILT – CHANGES AS NOTED ☐ AS BUILT – NO CHANGES

CONTRACTOR
NAME
SIGNATURE
TITLE DATE

PROJECT COORDINATOR
NAME
SIGNATURE
TITLE DATE

WESTCHESTER COUNTY, NEW YORK
DEPARTMENT OF PUBLIC WORKS AND TRANSPORTATION
DIVISION OF ENGINEERING

**INFRASTRUCTURE REHABILITATION PHASE 3**
**PLAYLAND PARK, RYE, NEW YORK**
**CROSS AXIS BUILDING E**
**DETAILS**

| | |
|---|---|
| CONTRACT NUMBER | 22-523 |
| SHEET NUMBER | CXE-A-85 |
| DWG NO.: | 278 of 664 |
| SCALE: | 1 1/2" = 1'-0" |
| DATE: | 08/23/2022 |
| DPW FILE NUMBER | 1-118-A-1027-0 |
| REV. NO. | 0 |

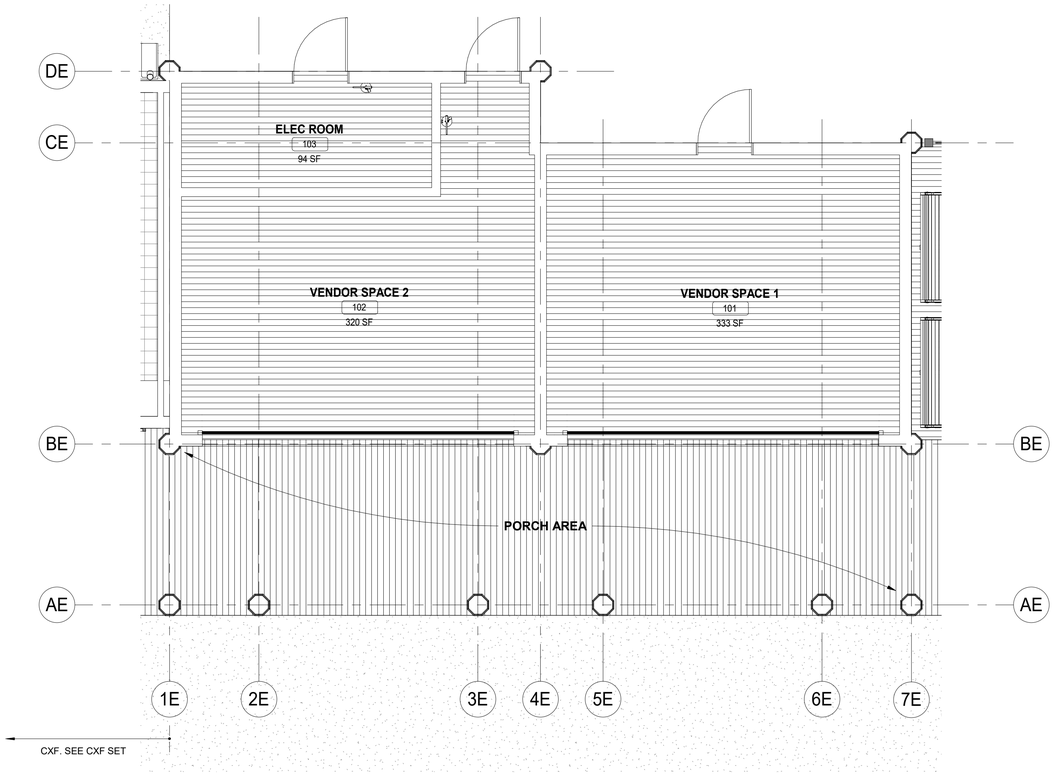


1 CXE FINISH PLAN
1/4" = 1'-0"

## FINISH LEGEND:

| | |
|---|---|
| NIC | ITEMS NOT IN CONTRACT |
| | TILE FLOORING |
| | TIMBER WOOD DECKING |
| | QUARRY TILE FLOORING |

## FINISH PLAN NOTES:

1. INDICATES TYPICAL FINISHES WITHIN ROOM, U.N.O. SEE SHEET CXE-A-91 FOR MATERIAL AND COLOR SCHEDULE.
2. ALL FLOORING COVERING MATERIALS TO BE INSTALLED PER MANUFACTURER'S STANDARD DETAILS AND SPECIFICATIONS. VERIFY WITH MANUFACTURER PRIOR INSTALLATION.
3. THE G.C. IS RESPONSIBLE FOR PROVIDING A SMOOTH LEVEL FLOOR SURFACE THAT MEETS MANUFACTURERS INSTALLATION SPECIFICATIONS PRIOR TO THE INSTALLATION OF ALL FLOORING MATERIALS.
4. THE FLOORING SUB-CONTRACTOR IS RESPONSIBLE FOR VERIFYING THAT THE CONDITION OF THE BASE FLOOR MEETS THE INSTALLATION SPECIFICATIONS PRIOR TO THE INSTALLATION OF THE NEW FLOORING MATERIAL.
5. ALL MATERIAL TRANSITIONS AN DOOR THRESHOLDS TO TAKE PLACE AT DOOR CENTERLINE U.N.O.
6. ALL DIMENSIONS ARE TO CENTERLINE OF TRANSITION BETWEEN FLOORING MATERIALS OR FINISH COLOR OF SAME MATERIAL. PLANS DO NOT SHOW ALL TILES OF SAME MATERIALS. CONTRACTOR TO START TILES AT POINT AS INDICATED ON PLANS.
7. THE GENERAL CONTRACTOR SHALL BE RESPONSIBLE FOR PROPER PREPARATION OF ALL NEW AND EXISTING SURFACES IN A SATISFACTORY MANNER TO RECEIVE NEW FINISHES. THIS INCLUDES THE DEMOLITION AND REMOVAL OF NECESSARY ITEMS. TOUCH- UP AND/ OR REFINISH OF SURFACES DAMAGED BY SUBSEQUENT WORK SHALL BE PERFORMED IN CONFORMANCE WITH THE MANUFACTURER'S RECOMMENDED INSTALLATION METHODS.
8. ALL SURFACES WHICH ARE TO RECEIVE A PAINT FINISH SHALL BE PRIMED AND FINISHED IN ACCORDANCE WITH THE WRITTEN SPECIFICATIONS.
9. ALL JOINTS IN GYPSUM BOARD WALLS SHALL BE FINISHED WITH PAPER TAPE 2" WIDE AND THREE COATS OF VINYL, DRY OR PREMIXED JOINT COMPOUND. ALL OUTSIDE CORNERS SHALL BE FINISHED WITH METAL CORNER BEADS, TAPED AND SPACKLED. ALL AREAS TO BE PAINTED SHALL BE SANDED SMOOTH. JUST PRIOR TO THE APPLICATION OF THE FIRST COAT OF PAINT, WIPE SANDED SURFACES WITH A DAMP CLOTH IN ORDER TO LAY FLAT ANY NAP WHICH MAY HAVE FORMED IN SANDING.
10. THE PAINT CONTRACTOR SHALL REMOVE ALL HARDWARE, SWITCH COVERS, ETC. PRIOR TO PAINTING AND BE RESPONSIBLE FOR THE REINSTALLATION AFTER PAINTING IS COMPLETED.
11. FINISH FLOORING INSTALLATION SHALL BE IN CONFORMANCE WITH THE MANUFACTURER'S RECOMMENDED INSTALLATION GUIDELINES. COORDINATE THE INSTALLATION WITH OTHER TRADES, SUCH AS ELECTRICAL.
12. ALL JOINTS BETWEEN MATERIALS TO BE TIGHT AND CONSTRUCTED IN A NEAT WORKMANLIKE MANNER.
13. ALL FINISHES SHALL BE TOUCHED UP TO CORRECT ANY IMPERFECTIONS AFTER INSTALLATION. FIXTURE CONTRACTOR SHALL PROVIDE TO THE GENERAL CONTRACTOR ALL MATERIALS FOR TOUCH UP WORK.
14. THE INTENT OF THE FINISH SPECIFICATIONS IS TO PROVIDE A SATISFACTORY FINISH TO ALL PARTS OF THE WORK. COVER ALL SURFACES THOROUGHLY. IF THE SPECIFIED NUMBER OF COATS DOES NOT ACCOMPLISH THE INTENT, THE GENERAL CONTRACTOR SHALL BE RESPONSIBLE FOR THE APPLICATION OF ADDITIONAL COATS OF THE SPECIFIED MATERIAL TO GIVE SATISFACTORY COVERAGE, AT NO ADDITIONAL COST TO OWNER.
15. CLEAN ALL GLASS SURFACES WITH LIQUID GLASS CLEANER AT PROJECT COMPLETION.
16. REFERENCE SPECIFICATIONS FOR COMPLETE FINISH DOCUMENTATION AND MANUFACTURER INSTALLATION AND MAINTENANCE DOCUMENTATION.

## FINISH SCHEDULE

| ROOM # | ROOM NAME | FLOORS | WALLS | CEILING | DOORS AND TRIM | WALL BASE |
|---|---|---|---|---|---|---|
| 101 | VENDOR SPACE 1 | WD-1 | P-13 | P-13 | SEE DOOR SCHEDULE (CXE-A-92) | WB-1 |
| 102 | VENDOR SPACE 2 | WD-1 | P-13 | P-13 | SEE DOOR SCHEDULE (CXE-A-92) | WB-1 |
| 104 | ELECTRICAL ROOM | WD-1 | P-13 | P-13 | SEE DOOR SCHEDULE (CXE-A-92) | WB-1 |
| - | PORCH AREA | WD-2 | - | P-10 | - | - |

| | |
|---|---|
| PAINT | (FOR PAINT TYPE AND SYSTEMS, SEE SPECIFICATIONS) |
| P-13 | **MFR:** BENJAMIN MOORE - **COLOR:** READY MIX WHITE |
| CEILING | |
| P-13 | **MFR:** BENJAMIN MOORE - **COLOR:** READY MIX WHITE |
| P-10 | **MFR:** BENJAMIN MOORE - **COLOR:** CAPE BLUE |
| FLOORING | |
| WD-1 | 2X6 WOOD BOARD TO MATCH IN KIND WITH EXISTING FLOOR |
| WD-2 | IPE WOOD DECK |
| WALL BASE | (FOR WALL BASE DETAILS, SEE CXE-A-XX) |
| WB-1 | 1 x 6 WOOD BASE |
| WB-2 | QUARRY TILE BASE TO MATCH IN KIND WITH ADJACENT (N.I.C. SPACE) |
| THRESHOLD | (FOR THRESHOLD DETAILS, SEE CXE-A-92) |
| TR-1 | EXTERIOR DOOR SILL |

## PAINTING SCHEDULE

| KEY | COLOR | MANUFACTURER | REMARKS |
|---|---|---|---|
| P- 1 | MYSTICAL POWERS #901 | BENJAMIN MOORE | |
| P- 2 | HERITAGE RED #HC-181 | BENJAMIN MOORE | |
| P- 3 | NEW YORK STATE OF MIND #805 | BENJAMIN MOORE | |
| P- 4 | LAZY SUNDAY #803 | BENJAMIN MOORE | |
| P- 5 | DEEP JUNGLE #595 | BENJAMIN MOORE | |
| P- 6 | LUCK OF THE IRISH #588 | BENJAMIN MOORE | |
| P- 7 | MAJOLICA GREEN #0013 | SHERWIN WILLIAMS | |
| P- 8 | ANTELOPE CANYON #125 | BENJAMIN MOORE | |
| P- 9 | FORSYTHIA #6907 | SHERWIN WILLIAMS | |
| P- 10 | CAPE BLUE #1642 | BENJAMIN MOORE | |
| P- 11 | WHITE SNOW #9541 | SHERWIN WILLIAMS | |
| P- 12 | TRICORN BLACK #6258 | SHERWIN WILLIAMS | |
| P- 13 | READY MIX WHITE | BENJAMIN MOORE | INTERIOR USE ONLY |
| P- 14 | STUCCO PAINT TO MATCH P-1 | KEIM | |
| P- 15 | VAN DEUSEN BLUE #HC-156 | BENJAMIN MOORE | |
| P- 16 | #RAL9001 | - | TYP. ROLL UP DOOR |
| P- 17 | FLORIDA BEACHES #900 | BENJAMIN MOORE | |
| P- 18 | PIRATES COVE PEACH #903 | BENJAMIN MOORE | |
| P- 19 | JADITE #6459 | SHERWIN WILLIAMS | |
| P- 20 | DECISIVE YELLOW #6902 | SHERWIN WILLIAMS | |

8/30/2022 4:20:41 PM

CONSULTANT INFORMATION
The LiRo Group
3 Aerial Way, Syosset, New York 11791
(516) 938-5476 www.liro.com

CONSULTANT SEAL
REGISTERED ARCHITECT ROBERT D. LIROLA JR. 023220 STATE OF NEW YORK

| REVISION NUMBER | DATE | MADE BY | APP'D BY | REVISION |
|---|---|---|---|---|

RECORD DRAWING CERTIFICATION
☐ AS BUILT – CHANGES AS NOTED ☐ AS BUILT – NO CHANGES

CONTRACTOR
NAME
SIGNATURE
TITLE DATE

PROJECT COORDINATOR
NAME
SIGNATURE
TITLE DATE

WESTCHESTER COUNTY, NEW YORK
DEPARTMENT OF PUBLIC WORKS AND TRANSPORTATION
DIVISION OF ENGINEERING

**INFRASTRUCTURE REHABILITATION PHASE 3**
**PLAYLAND PARK, RYE, NEW YORK**
**CROSS AXIS BUILDING E**
**FINISH PLAN AND FINISH SCHEDULE**

CONTRACT NUMBER 22-523
SHEET NUMBER **CXE-A-91**
DWG NO.: 279 of 664
SCALE: **As indicated**
DATE: **08/23/2022**
DPW FILE NUMBER **1-118-A-1028-0**
REV. NO. 0

## DOOR SCHEDULE - CXE

| BUILDING | DOOR NUMBER | DOOR | | | | | | DOOR | | FRAME | | | | HDWR SET | REMARKS |
|---|---|---|---|---|---|---|---|---|---|---|---|---|---|---|---|
| | | DOOR TYPE | WIDTH | HEIGHT | DOOR THICKNESS | DOOR MATERIAL | GLASS | EXTERIOR FINISH | INTERIOR FINISH | FRAME TYPE | MATERIAL | EXTERIOR | INTERIOR | | |
| CXE | 101A | C | 17' - 5" | 11' - 2" | | ALUM | NO | PAINT, P-16 | PAINT, P-16 | - | - | - | - | 4.0 | |
| CXE | 101B | B | 3' - 0" | 7' - 0" | 1 3/4" | WOOD | NO | PAINT, P-1 | PAINT, P-13 | 2 | WD. | PAINT, P-10 | PAINT, P-13 | 9.0 | STOREFRONT LOCK SET, X-2 SIGN |
| CXE | 102A | C | 17' - 5" | 11' - 2" | | ALUM | NO | PAINT, P-16 | PAINT, P-16 | - | - | - | - | 4.0 | |
| CXE | 102B | B | 3' - 0" | 7' - 0" | 1 3/4" | WOOD | NO | PAINT, P-1 | PAINT, P-13 | 2 | WD. | PAINT, P-10 | PAINT, P-13 | 9.0 | STOREFRONT LOCK SET, X-2 SIGN |
| CXE | 103A | B | 3' - 0" | 7' - 0" | 1 3/4" | WOOD | NO | PAINT, P-1 | PAINT, P-13 | 2 | WD. | PAINT, P-10 | PAINT, P-13 | 11.0 | STOREFRONT LOCK SET, A-3 SIGN |

**NOTE:** GC TO CONFIRM DOOR SIZES IN FIELD PRIOR TO ORDERING

**GENERAL DOOR SCHEDULE NOTES:**

1. REFER TO CXE-A-92 SHEET FOR DOOR SILL & TRANSITION DETAILS. SILL TRANSITION INFORMATION IS INDICATED ON FINISH PLAN UNLESS OTHERWISE NOTED.
2. REFER TO SHEET CXE-A-91 FOR FINISH SCHEDULE AND LEGEND.
3. THE CONTRACTOR SHALL EXAMINE THE DRAWINGS, SCHEDULE AND SPECIFICATIONS AND FURNISH PROPER HARDWARE FOR ALL OPENINGS WHETHER LISTED OR NOT. COMPLETE SHOP DRAWINGS SHALL BE PROVIDED FOR APPROVAL PRIOR TO PURCHASE.
4. ALL EXIT DOORS SHALL BE OPENABLE FROM THE EGRESS SIDE WITHOUT THE USE OF A KEY OR SPECIAL KNOWLEDGE.
5. VERIFY DIMENSIONS OF EXISTING OPENINGS AND DOORS BEFORE ORDERING.
6. THE CONTRACTOR SHALL COORDINATE & VERIFY LOCATION OF RECESSED FLOOR CLOSERS, PIVOTS, ETC. WITH EXISTING FLOOR SLABS AND OTHER FIELD CONDITIONS PRIOR TO ORDERING TO ENSURE PROPER CLEARANCES & DEPTHS ARE ALLOWED.

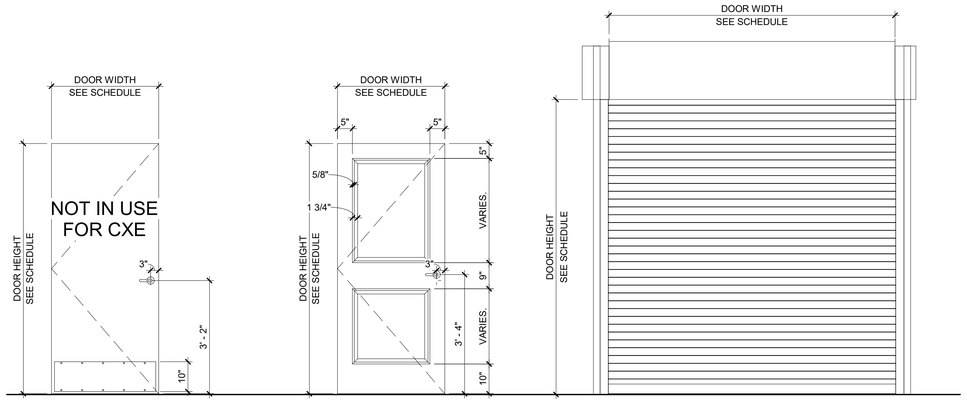


5 DOOR TYPES
1/2" = 1'-0"

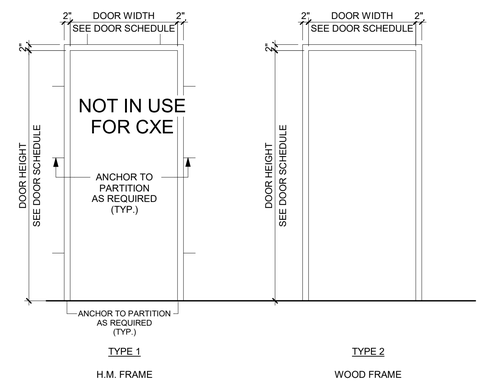


4 DOOR FRAME TYPES
1/2" = 1'-0"

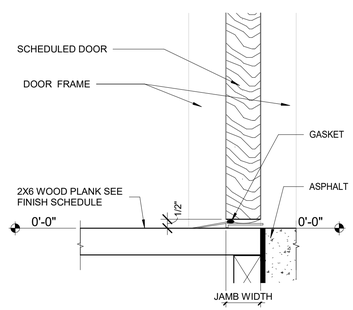


3 WOOD PLANK TO ASPHALT TRANSITION
3" = 1'-0"

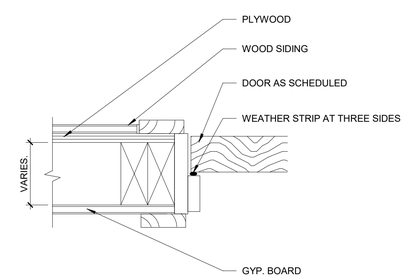


2 WOOD DOOR JAMB DETAIL.
3" = 1'-0"

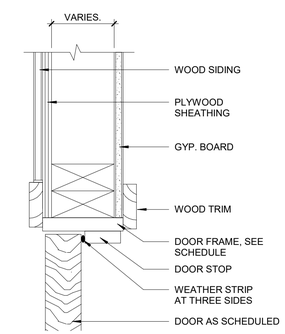


1 WOOD DOOR HEAD DETAIL.
3" = 1'-0"

8/30/2022 4:20:43 PM

CONSULTANT INFORMATION

The LiRo Group
3 Aerial Way, Syosset, New York 11791
(516) 938-5476 www.liro.com

CONSULTANT SEAL

REGISTERED ARCHITECT ROBERT D. YOUNG JR. 023280 STATE OF NEW YORK

| REVISION NUMBER | DATE | MADE BY | APP'D BY | REVISION |
|---|---|---|---|---|

RECORD DRAWING CERTIFICATION

☐ AS BUILT – CHANGES AS NOTED ☐ AS BUILT – NO CHANGES

CONTRACTOR
NAME
SIGNATURE
TITLE DATE

PROJECT COORDINATOR
NAME
SIGNATURE
TITLE DATE

WESTCHESTER COUNTY, NEW YORK
DEPARTMENT OF PUBLIC WORKS AND TRANSPORTATION
DIVISION OF ENGINEERING

**INFRASTRUCTURE REHABILITATION PHASE 3**
**PLAYLAND PARK, RYE, NEW YORK**
**CROSS AXIS BUILDING E**
**DOOR SCHEDULE AND DOOR DETAILS**

| | |
|---|---|
| CONTRACT NUMBER | 22-523 |
| SHEET NUMBER | CXE-A-92 |
| DWG NO.: | 280 of 664 |
| SCALE: | As indicated |
| DATE: | 08/23/2022 |
| DPW FILE NUMBER | 1-118-A-1029-0 |
| REV. NO. | 0 |

## SIGNAGE GENERAL NOTES

1. ALL PANEL SIGNAGE SHALL BE WALL MOUNTED AT 48" MIN AND 60" MAX ABOVE THE ADJACENT FINISHED FLOOR MEASURED FROM THE BASELINE OF THE CHARACTERS AND IN COMPLIANCE WITH THE LATEST ADOPTED VERSION OF ICC/ANSI-A117.1 REQUIREMENTS.
2. SIGNAGE SHOWN HERE MAY NOT BE INCLUSIVE OF ALL TYPES OF SIGNAGE REQUIRED FOR THIS PROJECT. REFER TO DRAWINGS AND SPECIFICATIONS FOR ALL ADDITIONAL SIGNAGE REQUIREMENTS NOT SHOWN HERE.
3. MOUNT SIGN SO THAT A PERSON CAN APPROACH WITHIN 3" AND AVOID DOOR SWING AND PROTRUDING OBJECTS
4. SIGNS SHALL BE LOCATED ON THE WALL ADJACENT TO THE LATCH SIDE OF DOOR, UON.

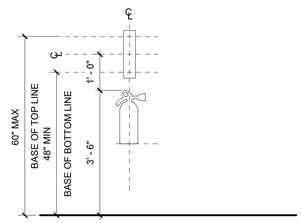


9 FIRE EXTINGUISHER SIGN LOCATION ELEVATION
1/2" = 1'-0"

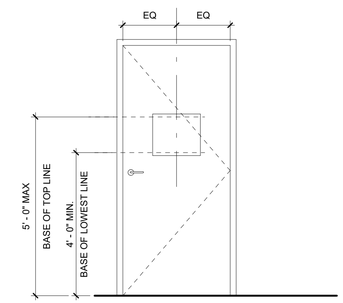


8 SIGN LOCATION ELEVATION - TYPICAL DOOR CONDITION 2
1/2" = 1'-0"

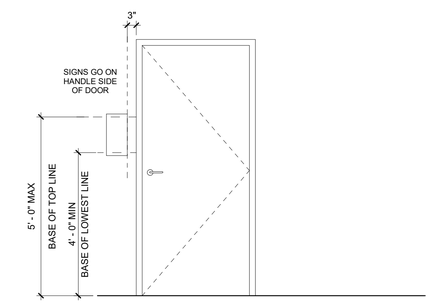


7 SIGN LOCATION ELEVATION - TYPICAL DOOR CONDITION
1/2" = 1'-0"

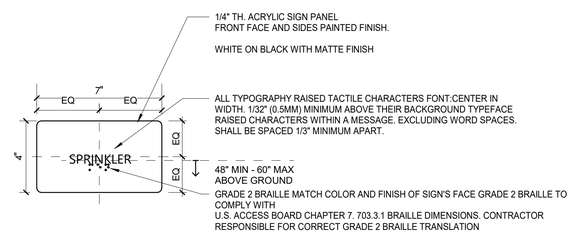


6 TYPE A-2- SPRINKLER ROOM ID. SIGN
3" = 1'-0"

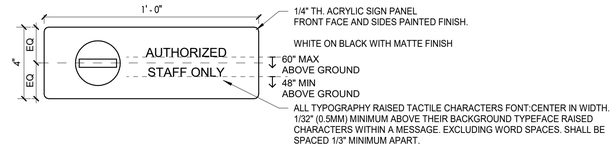


5 TYPE X-3- STAFF ONLY SIGN
3" = 1'-0"

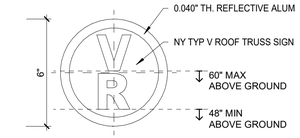


4 TYPE X-4 TRUSS SIGNAGE CLASS VR
3" = 1'-0"

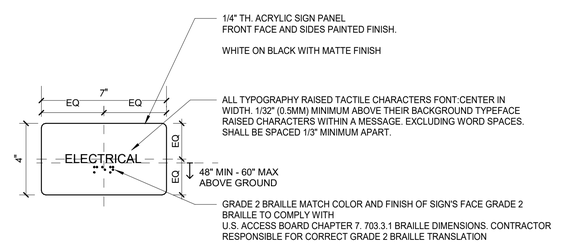


3 TYPE A-3 ELECTRICAL ROOM ID. SIGN
3" = 1'-0"

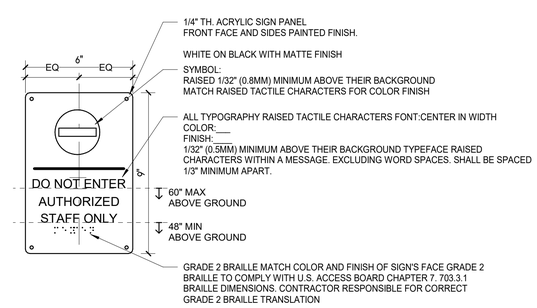


2 TYPE X-2- STAFF ONLY. SIGN
3" = 1'-0"

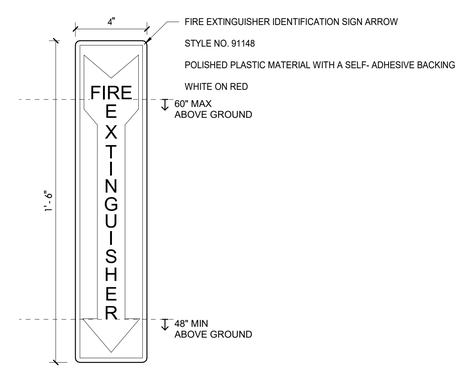


1 TYPE X-1- FIRE EXTINGUISHER. SIGN
3" = 1'-0"

8/30/2022 4:20:44 PM

CONSULTANT INFORMATION

The LiRo Group
3 Aerial Way, Syosset, New York 11791
(516) 938-5476 www.liro.com

CONSULTANT SEAL

REGISTERED ARCHITECT ROBERT D. YOUNG JR. 023280 STATE OF NEW YORK

| REVISION NUMBER | DATE | MADE BY | APP'D BY | REVISION |
|---|---|---|---|---|
| | | | | |

RECORD DRAWING CERTIFICATION

☐ AS BUILT – CHANGES AS NOTED ☐ AS BUILT – NO CHANGES

CONTRACTOR
NAME
SIGNATURE
TITLE DATE

PROJECT COORDINATOR
NAME
SIGNATURE
TITLE DATE

WESTCHESTER COUNTY, NEW YORK
DEPARTMENT OF PUBLIC WORKS AND TRANSPORTATION
DIVISION OF ENGINEERING

**INFRASTRUCTURE REHABILITATION PHASE 3**
**PLAYLAND PARK, RYE, NEW YORK**
**CXD - CXE - CXF**
**SIGNAGE TYPES AND DETAILS**

| | |
|---|---|
| CONTRACT NUMBER | 22-523 |
| SHEET NUMBER | CXE-A-93 |
| DWG NO.: | 281 of 664 |
| SCALE: | As indicated |
| DATE: | 08/23/2022 |
| DPW FILE NUMBER | 1-118-A-1030-0 |
| REV. NO. | 0 |

# STRUCTURAL NOTES

## GENERAL

G-1 THESE NOTES ARE GENERAL AND SUPPLEMENTAL TO THE SPECIFICATIONS. THESE NOTES APPLY TO THE ENTIRE PROJECT UNLESS MODIFIED OR NOTED OTHERWISE IN THE CONTRACT DOCUMENTS.

G-2 STANDARD DETAILS, SHOWN ON DRAWINGS CXE-S-07 SHALL BE USED WHEN REFERRED TO OR WHEN NO MORE RESTRICTIVE OR DIFFERENT DETAILS ARE SHOWN ON THE DRAWINGS.

G-3 DESIGN WAS IN ACCORDANCE WITH AND CONSTRUCTION SHALL COMPLY WITH THE PROVISIONS OF THE NEW YORK STATE BUILDING CODE (NYSBC). THE DESIGN LOADS AND OTHER DESIGN VALUES GIVEN BELOW WERE USED FOR DESIGN OF STRUCTURES UON ON THE DRAWINGS.

G-4 DESIGN LOADS FOR NEW ELEMENTS:

LIVE LOADS:

CROSS AXIS BUILDING E:

| | |
|---|---|
| ROOF: | 60 PSF |
| FLOOR: | 100 PSF |

SNOW LOADS:

| | |
|---|---|
| GROUND SNOW LOAD, | Pg = 30 PSF |
| ROOF SNOW LOAD, | Pf= 21 PSF |
| SNOW EXPOSURE FACTOR, | Ce = 0.9 |
| SNOW LOAD IMPORTANCE FACTOR, | I = 1.1 |
| THERMAL FACTOR, | Ct = 1.0 |

WIND DESIGN:

| | |
|---|---|
| BASIC WIND SPEED, | V = 126 MPH |
| BUILDING CATEGORY: | II |
| WIND EXPOSURE CATEGORY: | D |
| INTERNAL PRESSURE COEFFICIENT, | GCpi = ±0.18 |

SEISMIC DESIGN:

| | |
|---|---|
| SPECTRAL RESPONSE COEFFICIENTS: | |
| SDS = | 0.296 |
| SD1 = | 0.096 |
| SITE CLASS: | B |
| SEISMIC DESIGN CATEGORY: | C |
| SEISMIC IMPORTANCE FACTOR: | I = 1.25 |

BASIC SEISMIC FORCE RESISTING SYSTEM IS AS SHOWN ON DRAWINGS

DESIGN BASE SHEAR, V = AS SHOWN ON DRAWINGS

ANALYSIS PROCEDURE IS EQUIVALENT LATERAL FORCE METHOD, UON.

RESPONSE MODIFICATION FACTOR, R:

CROSS AXIS BUILDING E: R = 7

LOADS INDICATED ABOVE REFLECT DESIGN LOADS FOR ANY NEW OR REHABILITATED STRUCTURAL ELEMENTS. THEY SHOULD NOT BE TAKEN AS DESIGN LOADS FOR THE STRUCTURE AS A WHOLE.

G-5 ALL DIMENSIONS INDICATED (*) ARE TO BE VERIFIED EITHER BY FIELD MEASUREMENTS FOR EXISTING STRUCTURES OR BY SHOP DRAWINGS FOR EQUIPMENT FURNISHED. STRUCTURAL DIMENSIONS NOT SHOWN BUT CONTROLLED BY OR RELATED TO EQUIPMENT SHALL BE VERIFIED BY THE CONTRACTOR WITH THE MANUFACTURER PRIOR TO CONSTRUCTION.

G-6 STRUCTURAL DRAWINGS SHALL BE USED IN COORDINATION WITH THE DRAWINGS OF ALL OTHER DISCIPLINES AND MANUFACTURER'S SHOP DRAWINGS.

G-7 IF A CONFLICT IS FOUND BETWEEN DIFFERENT PORTIONS OF THE CONTRACT DOCUMENTS, THE CONTRACTOR SHALL NOTIFY THE ENGINEER IMMEDIATELY. CONTINUED CONSTRUCTION OF THE AREA IN CONFLICT SHALL BE AT THE CONTRACTOR'S OWN RISK UNTIL THE CONFLICT IS RESOLVED BY THE ENGINEER.

G-8 WHENEVER ONE MEMBER IS FASTENED TO ANOTHER WITH FASTENINGS (BOLTS, WELDS, ETC.) SET AT A UNIFORM SPACING, THERE SHALL BE A MINIMUM OF TWO FASTENINGS PER PIECE CONNECTED AND THE FIRST AND LAST FASTENINGS SHALL BE LOCATED NOT TO EXCEED 0.25 OF FASTENER SPACING FROM EACH END.

G-9 STRUCTURES HAVE BEEN DESIGNED FOR OPERATIONAL LOADS ON THE COMPLETED STRUCTURE. DURING CONSTRUCTION, THE STRUCTURES SHALL BE PROTECTED BY BRACING AND TEMPORARY SUPPORTS WHEREVER EXCESSIVE CONSTRUCTION LOADS MAY OCCUR. OVERSTRESSING OF ANY STRUCTURAL ELEMENT IS PROHIBITED.

G-10 NO BACKFILL SHALL BE PLACED AGAINST ANY WALL UNLESS ALL SUPPORTING ELEMENTS OF THE STRUCTURE HAVE BEEN CONSTRUCTED AND HAVE REACHED THE SPECIFIED MINIMUM CONCRETE STRENGTH.

G-11 THE CONTRACTOR IS RESPONSIBLE FOR VERIFYING ALL EXISTING INFORMATION IN THE FIELD AS REQUIRED FOR NEW WORK.

## FOUNDATIONS

F-1 DESIGN ASSUMPTIONS:

A) ALLOWABLE BEARING PRESSURE: 1. SOUND ROCK – 8 TSF, 2. OVERBURDEN – 1 TSF.

B) GROUNDWATER: EXISTING GROUNDWATER ELEVATIONS VARY ACROSS SITE.

F-2 GRAVITY UNDER DRAINS SHALL BE PROVIDED TO PERMANENTLY LOWER GROUNDWATER.

F-3 CONCRETE GENERAL NOTES APPLY TO FOUNDATIONS.

F-4 MINIMUM DEPTH FROM ADJACENT FINISHED GRADE TO BOTTOM OF FOUNDATION, 4'-0"

F-5 FOUNDATIONS BEARING ON ROCK SHALL BE CONSTRUCTED SUCH THAT ROCK SURFACE IS LEVEL, UNLESS APPROVED BY ENGINEER.

F-6 COMPACTED SELECT GRANULAR FILL 12 INCHES THICK MINIMUM, SHALL BE PLACED BELOW ALL CONCRETE FOUNDATIONS UNLESS DIRECTLY BEARING ON SOUND ROCK.

## STRUCTURAL METALS

S-1 DETAIL, FABRICATE, AND ERECT STRUCTURAL STEEL IN ACCORDANCE WITH AISC SPECIFICATION FOR STRUCTURAL STEEL BUILDINGS, ALLOWABLE STRESS DESIGN AND LRFD DESIGN (LRFD MANUAL OF STEEL CONSTRUCTION, CURRENT EDITION).

S-2 STEEL MATERIAL:

A) STRUCTURAL TUBING, ASTM A 500, GRADE B.
B) STRUCTURAL PIPE, ASTM A 53, GRADE B.
C) PLATES AND ANGLES, ASTM A 36 UNO.
D) STRUCTURAL W SHAPES, ASTM A 992 (MIN. YIELD STRENGTH OF 50 KSI).
E) STRUCTURAL S, M, & H SHAPES ASTM A572 GRADE 50.

S-3 PROVIDE MIN 3/4" DIAMETER ASTM A 325 HIGH STRENGTH BOLTS WITH FULLY TIGHTENED TYPE N CONNECTIONS FOR STRUCTURAL STEEL UON.

S-4 PROVIDE TYPICAL STEEL BEAM CONNECTIONS FOR A CAPACITY NOT LESS THAN THE TOTAL UNIFORM LOAD CAPACITY TABULATED IN THE AISC TABLES FOR ALLOWABLE LOADS OF BEAMS UNLESS NOTED OTHERWISE.

S-5 CAST IN PLACE ANCHOR BOLTS FOR STRUCTURAL STEEL SHALL CONFORM TO ASTM A307 UON.

S-6 DO NOT PAINT STEEL SURFACES WHICH ARE TO BE WELDED OR ARE TO BE ENCASED IN CONCRETE.

S-7 STAINLESS STEEL SHALL BE TYPE 316 FOR BOLTED CONSTRUCTIONS AND 316L FOR WELDED CONSTRUCTIONS.

S-8 ALUMINUM SHALL BE ALLOY 6061-T6.

S-9 ALL GROOVE AND BUTT WELDS SHALL BE FULL PENETRATION.

S-10 FILLET WELD SIZES SHALL BE THE MINIMUM SIZE REQUIRED BY AISC CODE FOR PLATE SIZES TO BE CONNECTED AND SHALL BE APPLIED TO THE ENTIRE JOINT CONTACT LENGTH, BUT NOT LESS THAN 3/16".

S-11 DETAIL, FABRICATE, AND ERECT ALUMINUM IN ACCORDANCE WITH THE ALUMINUM ASSOCIATION CONSTRUCTION MANUAL CURRENT EDITION.

S-12 ALL BOLTS, ANCHOR BOLTS, AND CONCRETE ANCHORS CONNECTING ALUMINUM SHALL BE TYPE 316 STAINLESS STEEL UON.

S-13 ALUMINUM SHALL BE ISOLATED FROM CONTACT WITH CONCRETE OR DISSIMILAR METALS.

## EXCAVATION

E-1 CONTRACTOR SHALL PERFORM ALL EXCAVATION IN ACCORDANCE WITH STATE, LOCAL AND FEDERAL REQUIREMENTS INCLUDING OSHA BRACING AND EXCAVATION REQUIREMENTS.

E-2 TEMPORARY SHEETING AND BRACING IS NOT SHOWN ON CONTRACT DRAWINGS. ALL EXCAVATIONS WITH A POTENTIAL FOR CAVE-IN SHALL BE PROVIDED WITH EXCAVATION PROTECTION SYSTEMS IN ACCORDANCE WITH OSHA 1926. SLOPING AND BENCHING WHICH WILL ENCROACH ON AREAS SLATED TO REMAIN ACCESSIBLE OR THAT MAY ENCROACH ON EXISTING FOOTINGS AND STRUCTURES SHALL NOT BE PERMITTED.

E-3 CONTRACTOR SHALL ENGAGE THE SERVICES OF A LICENSED PROFESSIONAL ENGINEER REGISTERED IN THE STATE OF NEW YORK TO DESIGN ALL TEMPORARY SHEETING AND BRACING AND RELATED APPURTENANCES. CONTRACTOR TO SUBMIT SUCH PLANS TO ENGINEER FOR INFORMATION.

E-4 CONTRACTOR SHALL BE RESPONSIBLE FOR DEWATERING OF OPEN EXCAVATIONS.

E-5 ALL EXCAVATED MATERIALS SHALL BE REMOVED FROM SITE TO A FACILITY AS REQUIRED BY STATE, LOCAL FEDERAL LAW.

## TIMBER

T-1 ALL WOOD FRAMING MEMBERS INCLUDING, BUT NOT LIMITED TO, WALL STUDS AND JOISTS, ARE INTENDED TO ACT AS A SYSTEM AS DETAILED IN THE STRUCTURAL DRAWINGS AND ONCE CONSTRUCTION IS COMPLETE. IT IS THE RESPONSIBILITY OF THE CONTRACTOR TO ENSURE SAFETY AND STABILITY OF WOOD FRAMING SYSTEMS (I.E. TEMPORARY BRACING IF REQUIRED) DURING CONSRTUCTION AS A RESULT OF CONSTRUCTION METHODS AND SEQUENCES.

T-2 ALL TIMBER BELOW FLOOR DECKING SHALL BE PRESSURE-TREATED SOUTHERN PINE LUMBER.

T-3 STORAGE OF ALL LUMBER AND TIMBER ON SITE SHALL BE KEPT OFF GROUND, UNDER COVER AND PROTECTED FROM DAMAGE.

T-4 ALL DIMENSIONAL LUMBER SHALL BE CERTIFIED BY THE SUPPLIER IN WRITING TO BE KILN DRIED.

T-5 STRUCTURE SHALL NOT BE ENCLOSED UNLESS LUMBER MOISTURE CONTENT HAS BEEN VERIFIED TO BE AT OR BELOW 15%. ANY SIGNS OF MOLD SHALL BE REMOVED AND TREATED IN ACCORDANCE WITH PROJECT SPECIFICATIONS OR INDUSTRY STANDARDS.

T-6 ALL LUMBER IN CONTACT WITH THE GROUND OR CONCRETE SHALL BE PRESSURE TREATED.

T-7 FASTENERS FOR PRESERVATIVE TREATED AND FIRE RETARDANT TREATED WOOD SHALL BE OF HOT DIPPED ZINC COATED GALVANIZED STEEL OR STAINLESS STEEL AND SHALL FOLLOW CURRENT SIMPSON GUIDELINES BASED ON WEATHER EXPOSURE. WHERE STAINLESS STEEL CONNECTORS OR HOT DIPPED GALVANIZED CONNECTORS ARE SPECIFIED IN THE DRAWINGS, STAINLESS STEEL OR HOT DIPPED GALVANIZED FASTENERS SHALL BE USED TO MATCH CONNECTOR TYPE.

T-8 ALL PLATES AND LEDGERS SHALL BE FASTENED WITH A MINIMUM (3) ANCHORS PER PIECE UNLESS NOTED OTHERWISE.

T-9 ALL METAL HARDWARE AND FRAMING ACCESSORIES SHALL BE MANUFACTURED BY SIMPSON STRONG-TIE COMPANY. ALL ITEMS SHALL BE INSTALLED PER THE SIMPSON'S INSTALLATION REQUIREMENTS. ALL NAIL HOLES SHALL BE FILLED WITH THE RECOMMENDED FASTENER UNLESS NOTED OTHERWISE ON THE DRAWING.

T-10 HOLES FOR BOLTS SHALL BE DRILLED WITH A BIT OF THE SAME NOMIMAL DIAMETER AS THE BOLT + 1/16". LEAD HOLES FOR LAG SCREWS SHALL BE BORED PER NDS 11.1.3.

T-11 ALL BOLTS, CARRIAGE BOLTS, LAG SCREWS, EXPANSION BOLTS AND EPOXY BOLTS SHALL BE INSTALLED WITH STANDARD CUT WASHERS UNDER THE BOLT HEAD AND NUTS THAT BEAR DIRECTLY ON THE WOOD. ALL NUTS SHALL BE TIGHTENED AT THE TIME OF INSTALLATION AND RE-TIGHTENED IF NECESSARY, DUE TO WOOD SHRINKAGE, PRIOR TO CLOSE OUT OR COMPLETION OF THE PROJECT. BOLTS AND LAG SCREWS SHALL CONFORM TO ANSI/ASME STANDARD B18.2.1. WOOD SCREWS SHALL CONFORM TO B18.6.1. ALL BOLTS SHALL CONFORM TO ASTM A307 GRADE A UNLESS NOTED OTHERWISE.

T-12 CUTTING AND NOTCHING OF SAWN LUMBER RAFTERS AND STUDS SHALL BE IN CONFORMANCE WITH THE FOLLOWING CRITERIA:

A. JOISTS NOTCHES AT THE ENDS OF JOISTS SHALL NOT EXCEED 1/5 OF THE JOIST DEPTH. HOLES IN JOISTS SHALL NOT BE WITHIN 2½ INCHES OF THE TOP OR BOTTOM OF THE JOIST, AND THE DIAMETER OF ANY SUCH HOLE SHALL NOT EXCEED 1/4 THE DEPTH OF THE JOIST. NOTCHES IN THE TOP OR BOTTOM OF THE JOISTS SHALL NOT EXCEED 1/6 THE DEPTH AND SHALL NOT BE LOCATED IN THE MIDDLE OF THE THIRD SPAN.

B. RAFTERS NOTCHES AT THE ENDS OF RAFTERS OR CEILING JOISTS SHALL NOT EXCEED 1/5 OF THE DEPTH. NOTCHES IN THE TOP OR BOTTOM OF THE RAFTER OR CEILING JOIST SHALL NOT EXCEED 1/6 THE DEPTH AND SHALL NOT BE LOCATED IN THE MIDDLE 1/3 OF THE SPAN. EXCEPT THAT A NOTCH NOT EXCEEDING 1/3 OF THE DEPTH IS PERMITTED IN THE TOP OF THE RAFTERS OR CEILING JOIST NOT FURTHER FROM THE FACE OF THE SUPPORT THAN THE DEPTH OF THE MEMBER. HOLES BORED IN RAFTERS OR CEILING JOISTS SHALL NOT BE WITHIN 2½" INCHES OF THE TOP AND BOTTOM AND THEIR DIAMETER SHALL NOT EXCEED 1/4 THE DEPTH OF THE MEMBER.

C. WALL STUDS A MAXIMUM OF 2¼" DIAMETER NEATLY BORED HOLE MAY BE PLACED IN THE CENTER OF ALL BEARING 2x6 STUDS WITH NO ADDITIONAL REINFORCEMENT REQUIRED.

## SPECIAL INSPECTIONS (CROSS AXIS BUILDING E)

S-1 SPECIAL INSPECTION SHALL COMPLY WITH SPECIFICATIONS.

S-2 SPECIAL INSPECTION WILL BE PERFORMED IN ACCORDANCE WITH CHAPTER 17 OF THE NYS BUILDING CODE.

S-3 SPECIAL INSPECTION WILL BE PERFORMED ON THE FOLLOWING STRUCTURAL SYSTEMS:

A) WOOD CONSTRUCTION (1705.4).

## DEMOLITION

LEGEND

EXISTING REINFORCED CONCRETE WALL OR STRUCTURE TO BE DEMOLISHED

SAW CUT LINE – FULL DEPTH UNLESS NOTED OTHERWISE

D-1 CONTRACTOR IS ALERTED THAT LIMITS OF DEMOLITION SHOWN IS APPROXIMATE. ACTUAL LIMITS SHALL BETHE MINIMUM REQUIRED FOR NEW STRUCTURE. CONTRACTOR TO CO-ORDINATE AND SUBMIT DEMOLITION PROCEDURE PER SPECIFICATIONS.

D-2 ALL ITEMS SHOWN ARE EXISTING TO REMAIN UNLESS NOTED OTHERWISE.

D-3 FOR ADDITIONAL DEMOLITION REQUIREMENTS SEE SPECIFICATIONS (024116).

D-4 ALL EXISTING CONCRETE TO BE DEMOLISHED IS STEEL REINFORCED UNLESS NOTED OTHERWISE. REINFORCING STEEL NOT SHOWN FOR CLARITY.

D-5 FOR ADDITIONAL DEMOLITION NOT SHOWN, SEE G, A, M, E, H, AND P DRAWINGS.

Drawing Name: G:\SavinAutocad\2060\25-Playland-Mega-3\S\CXES-1001.dwg
Rev#: Projectname: 211001F02 Comments: -----
Printed by: BKnittle Date: 15 August 2022 9:46 AM Designed by: -----
Xrefs: [TB_24X36_WestchesterCo_3.dwg] [TSG-SVLOGO.dwg] [BCR-A-04.dwg] [BCRE-101.dwg]

CONSULTANT INFORMATION: Savin Engineers, P.C.

CONSULTANT SEAL

| REVISION NUMBER | DATE | MADE BY | APP'D BY | REVISION |
|---|---|---|---|---|

RECORD DRAWING CERTIFICATION

☐ AS BUILT – CHANGES AS NOTED ☐ AS BUILT – NO CHANGES

CONTRACTOR: NAME ____ SIGNATURE ____ TITLE ____ DATE ____

PROJECT COORDINATOR: NAME ____ SIGNATURE ____ TITLE ____ DATE ____

WESTCHESTER COUNTY, NEW YORK
DEPARTMENT OF PUBLIC WORKS AND TRANSPORTATION
DIVISION OF ENGINEERING

**INFRASTRUCTURE REHABILITATION - PHASE 3**
**PLAYLAND PARK, RYE, NEW YORK**
**CROSS AXIS BUILDING E**
**STRUCTURAL NOTES**

CONTRACT NUMBER: **22-523** SHEET NUMBER: **CXE-S-01**

DWG NO.:

SCALE: **AS SHOWN**



DATE: **8/23/ 2022**

DPW FILE NUMBER: **1-118-S-1031-0** REV. NO. **0**

## STRUCTURAL ABBREVIATIONS

| | |
|---|---|
| AB | ANCHOR BOLT |
| ADDL | ADDITIONAL |
| ADH | ADHESIVE |
| ADJ | ADJUSTABLE/ADJACENT |
| AFF | ABOVE FINISHED FLOOR |
| AGG | AGGREGATE |
| AL | ALUMINUM |
| ALT | ALTERNATE |
| APPROX | APPROXIMATE |
| ARCH | ARCHITECTURAL |
| AVG | AVERAGE |
| B | BORING |
| BLDG | BUILDING |
| BM | BEAM/BENCH MARK |
| BOF | BOTTOM OF FOOTING |
| BOS | BOTTOM OF STEEL |
| BOT | BOTTOM |
| BRG | BEARING |
| BT | BOLT |
| C | CHANNEL |
| C TO C | CENTER TO CENTER |
| CANT | CANTILEVER |
| CJ | CONSTRUCTION JOINT |
| CL | CENTER LINE |
| CLR | CLEAR |
| CMU | CONCRETE MASONRY UNIT |
| CO | CLEAN OUT |
| COL | COLUMN |
| CONC | CONCRETE |
| CONST | CONSTRUCTION |
| CONT | CONTINUOUS |
| CONTR | CONTRACTOR |
| CP | CONCRETE PLANK |
| CLJ | CONTROL JOINT |
| CTR | CENTER |
| CY | CUBIC YARD |
| DET | DETAIL |
| DIA (ø) | DIAMETER |
| DIAG | DIAGONAL |
| DIM | DIMENSION |
| DIST | DISTANCE |
| DN | DOWN |
| DO | DITTO |
| DP | DEEP |
| DWG | DRAWING |
| DWL | DOWEL |
| E | EAST |
| EA | EACH |
| EF | EACH FACE |
| EL | ELEVATION |
| ELEV | ELEVATOR |
| ENGR | ENGINEER |
| EMB | EMBEDMENT |
| ENCL | ENCLOSURE |
| ENT | ENTRANCE |
| EQ | EQUAL |
| EQPT | EQUIPMENT |
| EW | EACH WAY |
| EXIST | EXISTING |
| EXP | EXPANSION |
| EXP JT | EXPANSION JOINT |
| EXT | EXTERIOR |
| FAB | FABRICATE |
| FD | FLOOR DRAIN |
| FDN | FOUNDATION |
| FFL | FINISH FLOOR |
| FIN | FINISH |
| FLR | FLOOR |
| FT | FEET |
| FTG | FOOTING |
| F&C | FRAME&COVER |
| F&G | FRAME&GRATE |

| | |
|---|---|
| GA | GAUGE |
| GALV | GALVANIZE |
| GB | GRADE BEAM |
| GR | GRADE |
| GRTG | GRATING |
| HGT | HEIGHT |
| HORZ | HORIZONTAL |
| HP | HIGH POINT |
| HSS | HOLLOW STRUCTURAL STEEL |
| ID | INSIDE DIAMETER |
| IF | INSIDE FACE |
| IN | INCH |
| INCL | INCLUDE |
| INT | INTERIOR |
| INV | INVERT |
| J | JOIST |
| JB | JUNCTION BOX |
| JCT | JUNCTION |
| JT | JOINT |
| L | LENGTH/ANGLE |
| LF | LINEAR FEET |
| LG | LONG |
| LL | LIVE LOAD |
| LLH | LONG LEG HORIZONTAL |
| LLV | LONG LEG VERTICAL |
| LOC | LOCATION |
| LP | LOW POINT |
| LVR | LOUVER |
| LWL | LOW WATER LEVEL |
| MAS | MASONRY |
| MATL | MATERIAL |
| MAX | MAXIMUM |
| MECH | MECHANICAL |
| MET | METAL |
| MFR | MANUFACTURER |
| MG | MILLION GALLONS |
| MGD | MILLION GALLONS PER DAY |
| MH | MANHOLE |
| MIN | MINIMUM |
| MISC | MISCELLANEOUS |
| MO | MASONRY OPENING |
| MOD | MODIFY/MODIFIED |
| MTD | MOUNTED |
| N | NORTH |
| NA | NOT APPLICABLE |
| NIC | NOT IN CONTRACT |
| NO | NUMBER |
| NOM | NOMINAL |
| NTS | NOT TO SCALE |
| OC | ON CENTER |
| OD | OUTSIDE DIAMETER |
| OF | OUTSIDE FACE |
| OPNG | OPENING |
| OPP | OPPOSITE |
| OT | OPEN TRUSS |
| OVHD | OVERHEAD |
| PAR | PARALLEL |
| PC | POINT OF CURVE/PIECE |
| PCO | PILE CUT OFF |
| PI | POINT OF INTERSECTION |
| PL | PLATE/PROPERTY LINE |
| PREFAB | PREFABRICATED |
| PSF | POUNDS PER SQUARE FOOT |
| PSI | POUNDS PER SQUARE INCH |
| PT | POINT OF TANGENCY |
| PTN | PARTITION |
| PVMT | PAVEMENT |
| QTY | QUANTITY |

| | |
|---|---|
| R | RISER |
| RAD | RADIUS |
| RCP | REINFORCED CONCRETE PIPE |
| RD | ROOF DRAIN |
| REINF | REINFORCEMENT |
| RECT | RECTANGULAR |
| REM | REMOVE |
| REQD | REQUIRED |
| RF | ROOF |
| RO | ROUGH OPENING |
| S | SOUTH |
| SCHED | SCHEDULE |
| SECT | SECTION |
| SF | SQUARE FEET |
| SHT | SHEET |
| SIM | SIMILAR |
| SJ | STEEL JOIST |
| SPEC | SPECIFICATION |
| SQ | SQUARE |
| SS | STAINLESS STEEL |
| STA | STATION |
| STD | STANDARD |
| STR | STAIR |
| STIF | STIFFENER |
| STIR | STIRRUP |
| STL | STEEL |
| STRUC | STRUCTURAL |
| SUB | SUBSTITUTE |
| SYM | SYMMETRICAL |
| T | TREAD |
| T&B | TOP AND BOTTOM |
| T&G | TOUNGE AND GROOVE |
| TAN | TANGENT |
| TEMP | TEMPERATURE |
| THK | THICK |
| TOC | TOP OF CURB/CONCRETE |
| TOD | TOP OF DECK |
| TOF | TOP OF FOOTING |
| TOM | TOP OF MASONRY/MANHOLE |
| TOS | TOP OF SLAB/STEEL |
| TOW | TOP OF WALL |
| TYP | TYPICAL |
| UNO | UNLESS NOTED OTHERWISE |
| VERT | VERTICAL |
| W | WEST/WIDTH/WIDE FLANGE |
| W/ | WITH |
| W/O | WITHOUT |
| WL | WATER LEVEL |
| WP | WATERPROOF/WALL PIPE |
| WPT | WALL PENETRATING TYPE |
| WS | WATER SURFACE |
| WT | WEIGHT |
| WWF | WELDED WIRE FABRIC |
| YD | YARD |
| YR | YEAR |

## SYMBOLS

- UNDISTURBED EARTH
- COMPACTED BACKFILL
- SELECT GRANULAR FILL MATERIAL
- CONCRETE BLOCK
- BRICK
- FINISHED WOOD
- CONCRETE
- ROUGH WOOD
- RIGID INSULATION
- REINFORCED STEEL IN CONCRETE
- WELDED WIRE FABRIC
- BLANKET INSULATION
- STEEL
- DENOTES MOMENT CONNECTION

Drawing Name: G:\SavinAutocad\2060\25-Playland-Mega-3\S\CXES-1002.dwg
Rev#: Projectname: ---- Comments: All inquiries regarding this drawing(s) or project should be made to NYC Environmental Protection, Bureau of Engineering Design and Construction.
Printed by: AKCritten Date: 8/23/2022 9:46 AM Designed by: ----

CONSULTANT INFORMATION

Savin Engineers, P.C.

CONSULTANT SEAL

STATE OF NEW YORK — LICENSED PROFESSIONAL ENGINEER — No. 065362

| REVISION NUMBER | DATE | MADE BY | APP'D BY | REVISION |
|---|---|---|---|---|

RECORD DRAWING CERTIFICATION

☐ AS BUILT – CHANGES AS NOTED ☐ AS BUILT – NO CHANGES

CONTRACTOR
NAME
SIGNATURE
TITLE DATE

PROJECT COORDINATOR
NAME
SIGNATURE
TITLE DATE

WESTCHESTER COUNTY, NEW YORK
DEPARTMENT OF PUBLIC WORKS AND TRANSPORTATION
DIVISION OF ENGINEERING

**INFRASTRUCTURE REHABILITATION - PHASE 3**
**PLAYLAND PARK, RYE, NEW YORK**
**CROSS AXIS BUILDING E**
**STRUCTURAL ABBREVIATIONS AND SYMBOLS**

| | |
|---|---|
| CONTRACT NUMBER | 22-523 |
| SHEET NUMBER | CXE-S-02 |
| DWG NO.: | |
| SCALE: | AS SHOWN |
| DATE: | 8/23/ 2022 |
| DPW FILE NUMBER | 1-118-S-1032-0 |
| REV. NO. | 0 |

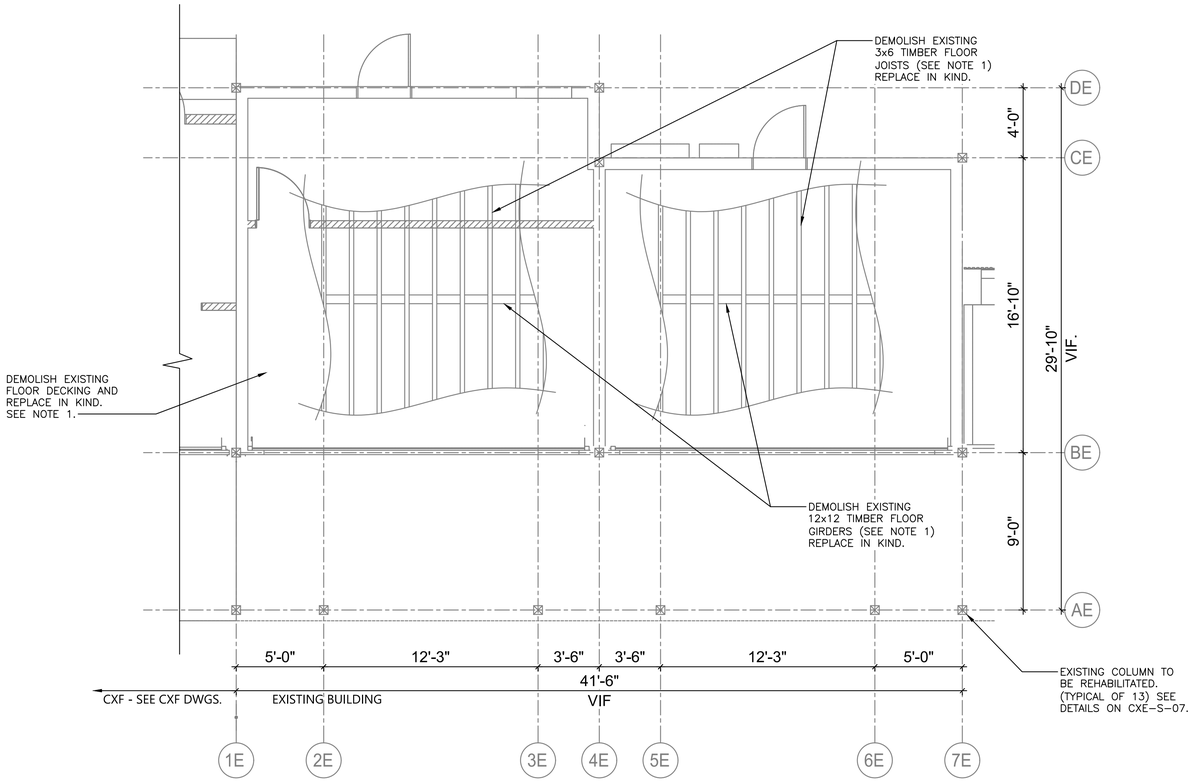


DEMOLITION – GROUND FLOOR PLAN
1/4" = 1'-0"

NOTES:

1. REHABILITATION OF THE CROSS AXIS BUILDING E INCLUDES VARIOUS ELEMENTS SLATED FOR REMOVAL AND REPLACEMENT IN-KIND FOR DETERIORATED MEMBERS. CONTRACTOR IS TO ALERT THE ENGINEER 6 WEEKS PRIOR TO START OF REHABILITATION WORK TO PERFORM FIELD INSPECTION OF THE REPAIR ITEMS IDENTIFIED BELOW. UPON COMPLETION OF THE FIELD INSPECTION WORK, THE ENGINEER WILL PROVIDE TO THE CONTRACTOR IN WRITING THE DEFINED LIMITS OF REPLACEMENT WORK. REHABILITATION WORK FOR VARIOUS ELEMENTS SHALL BE PERFORMED PER DETAILS AND SEQUENCES AS OUTLINED ON DRAWINGS, CXE-S-03, CXE-S-04, CXE-S-05, CXE-S-06 & CXE-S-07. FOR THE PURPOSES OF BIDDING, CONTRACTOR SHALL INCLUDE IN THEIR BID THE QUANTITIES FOR EACH ELEMENT AS MENTIONED BELOW.

| STRUCTURAL ELEMENTS TO BE REPAIRED/REPLACED | QUANTITY | UNITS | REMARKS |
|---|---|---|---|
| 12" x 12" TIMBER FLOOR GIRDERS | 4 | EA | APPROXIMATELY 21 FT LONG EACH |
| 3" x 6" TIMBER FLOOR JOISTS | 20 | EA | APPROXIMATELY 22 FT LONG EACH |
| 1" x 6" TIMBER FLOOR DECKING | 530 | SF | |

NOTE THAT FLOOR GIRDERS AND FLOOR JOIST LOCATIONS MAY BE ANYWHERE WITHIN THE LIMITS OF THE EXISTING FLOOR DECKING. COSTS FOR REMOVAL AND REINSTALLATION OF EXISTING FLOOR DECKING IN ORDER TO ACCESS GIRDERS AND JOISTS SHALL BE DEEMED INCLUDED IN THE CONTRACTOR BID. EXECUTIONS OF THE ABOVE REHABILITATING WORK SHALL BE COORDINATED WITH OVERALL CONSTRUCTION SEQUENCE AND PHASING. SEE SPECIFICATION.
FOR TYPICAL DETAILS OF FLOOR/GIRDER FRAMING AND CONNECTIONS, SEE DRAWING CXE-S-06 & CXE-S-07.

0 4' 8'
SCALE: 1/4" = 1'-0"

Drawing Name: G:\SavinAutocad\2060\25-Playland-Mega-3\S\CXES-1003.dwg
Rev#: Projectname: 211001F02 Comments: ----
Printed by: BKnittle Date: 15 August 2022 9:46 AM Designed by: ----
Xrefs: [TB_24X36_WestchesterCo_3.dwg] [TSG-SVLOGO.dwg] [CXE-A-01.dwg] [CXE-S-1001.dwg]

CONSULTANT INFORMATION
Savin Engineers, P.C.

CONSULTANT SEAL

| REVISION NUMBER | DATE | MADE BY | APP'D BY | REVISION |
|---|---|---|---|---|

RECORD DRAWING CERTIFICATION
☐ AS BUILT – CHANGES AS NOTED ☐ AS BUILT – NO CHANGES

CONTRACTOR
NAME
SIGNATURE
TITLE DATE

PROJECT COORDINATOR
NAME
SIGNATURE
TITLE DATE

WESTCHESTER COUNTY, NEW YORK
DEPARTMENT OF PUBLIC WORKS AND TRANSPORTATION
DIVISION OF ENGINEERING

INFRASTRUCTURE REHABILITATION - PHASE 3
PLAYLAND PARK, RYE, NEW YORK
CROSS AXIS BUILDING E
DEMOLITION - GROUND FLOOR PLAN

CONTRACT NUMBER 22-523
SHEET NUMBER CXE-S-03
DWG NO.:
SCALE: AS SHOWN
DATE: 8/23/ 2022
DPW FILE NUMBER 1-118-S-1033-0
REV. NO. 0

284 of 664

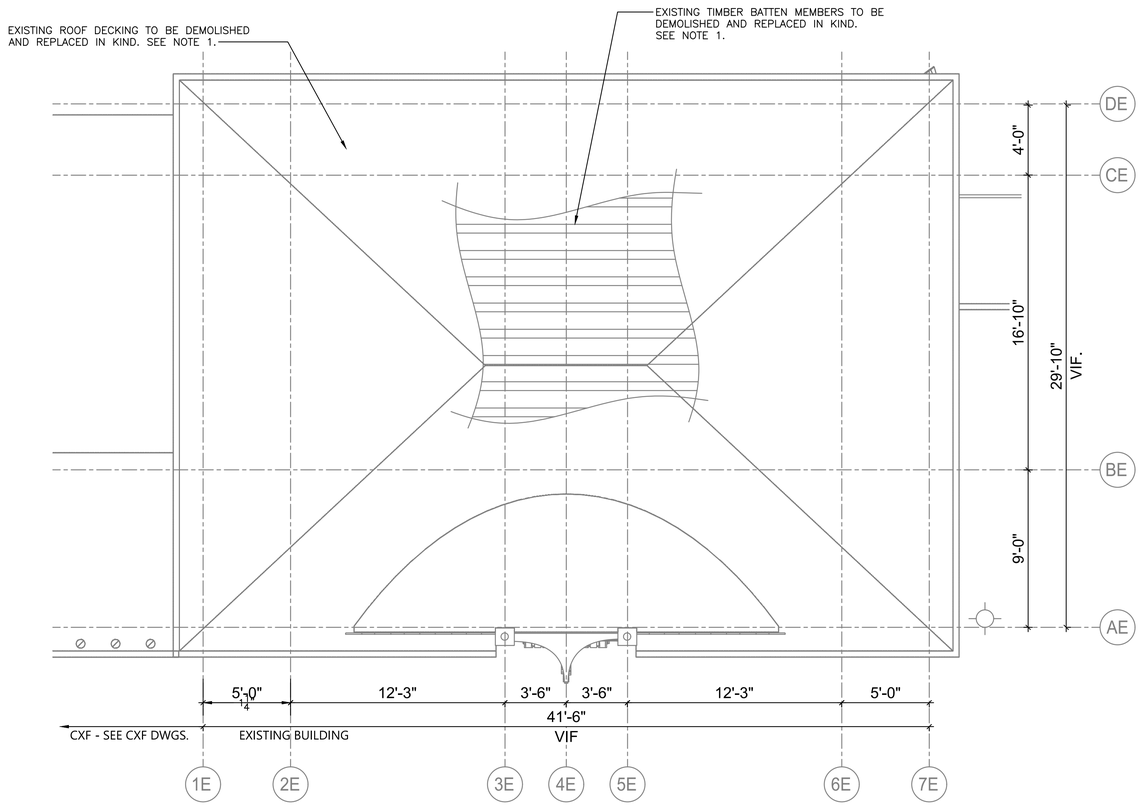


DEMOLITION – ROOF PLAN
1/4" = 1'-0"

NOTES:

1. REHABILITATION OF THE CROSS AXIS BUILDING E INCLUDES VARIOUS ELEMENTS SLATED FOR REMOVAL AND REPLACEMENT IN-KIND FOR DETERIORATED MEMBERS. CONTRACTOR IS TO ALERT THE ENGINEER 6 WEEKS PRIOR TO START OF REHABILITATION WORK TO PERFORM FIELD INSPECTION OF THE REPAIR ITEMS IDENTIFIED BELOW. UPON COMPLETION OF THE FIELD INSPECTION WORK, THE ENGINEER WILL PROVIDE TO THE CONTRACTOR IN WRITING THE DEFINED LIMITS OF REPLACEMENT WORK. REHABILITATION WORK FOR VARIOUS ELEMENTS SHALL BE PERFORMED PER DETAILS AND SEQUENCES AS OUTLINED ON DRAWINGS, CXE-S-03, CXE-S-04, CXE-S-05, CXE-S-06 & CXE-S-07. FOR THE PURPOSES OF BIDDING, CONTRACTOR SHALL INCLUDE IN THEIR BID THE QUANTITIES FOR EACH ELEMENT AS MENTIONED BELOW.

| STRUCTURAL ELEMENTS TO BE REPAIRED/REPLACED | QUANTITY | UNITS | REMARKS |
|---|---|---|---|
| 1" x 4" TIMBER BATTEN MEMBER | 10 | EA | APPROXIMATELY 10 FT LONG EACH |
| 1" ROOF SHEATHING | 100 | SF | |

NOTE THAT FLOOR GIRDERS AND FLOOR JOIST LOCATIONS MAY BE ANYWHERE WITHIN THE LIMITS OF THE EXISTING FLOOR DECKING. COSTS FOR REMOVAL AND REINSTALLATION OF EXISTING FLOOR DECKING IN ORDER TO ACCESS GIRDERS AND JOISTS SHALL BE DEEMED INCLUDED IN THE CONTRACTOR BID. EXECUTIONS OF THE ABOVE REHABILITATING WORK SHALL BE COORDINATED WITH OVERALL CONSTRUCTION SEQUENCE AND PHASING. SEE SPECIFICATION.

0 4' 8'
SCALE: 1/4" = 1'-0"

Drawing Name: G:\SavinAutocad\2060\25-Playland-Mega-3\S\CXES-1011.dwg
Rev#: Projectname: 211001F02 Comments: ----
Printed by: BKnittle Date: 15 August 2022 9:46 AM Designed by: ----
Xrefs: [TB_24X36_WestchesterCo_3.dwg] [TSG-SVLOGO.dwg] [CXE-A-02.dwg] [CXE-S-1007.dwg]

CONSULTANT INFORMATION
Savin Engineers, P.C.

CONSULTANT SEAL

| REVISION NUMBER | DATE | MADE BY | APP'D BY | REVISION |
|---|---|---|---|---|

RECORD DRAWING CERTIFICATION
☐ AS BUILT – CHANGES AS NOTED ☐ AS BUILT – NO CHANGES

CONTRACTOR
NAME
SIGNATURE
TITLE DATE

PROJECT COORDINATOR
NAME
SIGNATURE
TITLE DATE

WESTCHESTER COUNTY, NEW YORK
DEPARTMENT OF PUBLIC WORKS AND TRANSPORTATION
DIVISION OF ENGINEERING

INFRASTRUCTURE REHABILITATION - PHASE 3
PLAYLAND PARK, RYE, NEW YORK
CROSS AXIS BUILDING E
DEMOLITION - ROOF PLAN

CONTRACT NUMBER 22-523
SHEET NUMBER CXE-S-04
DWG NO.:
SCALE: AS SHOWN
DATE: 8/23/ 2022
DPW FILE NUMBER 1-118-S-1034-0
REV. NO. 0

285 of 664

NOTES:

1. FOR STRUCTURAL NOTES, SEE DRAWING CXE–S–01.
2. FOR STRUCTURAL ABBREVIATIONS AND SYMBOLS, SEE DRAWING CXE–S–02.

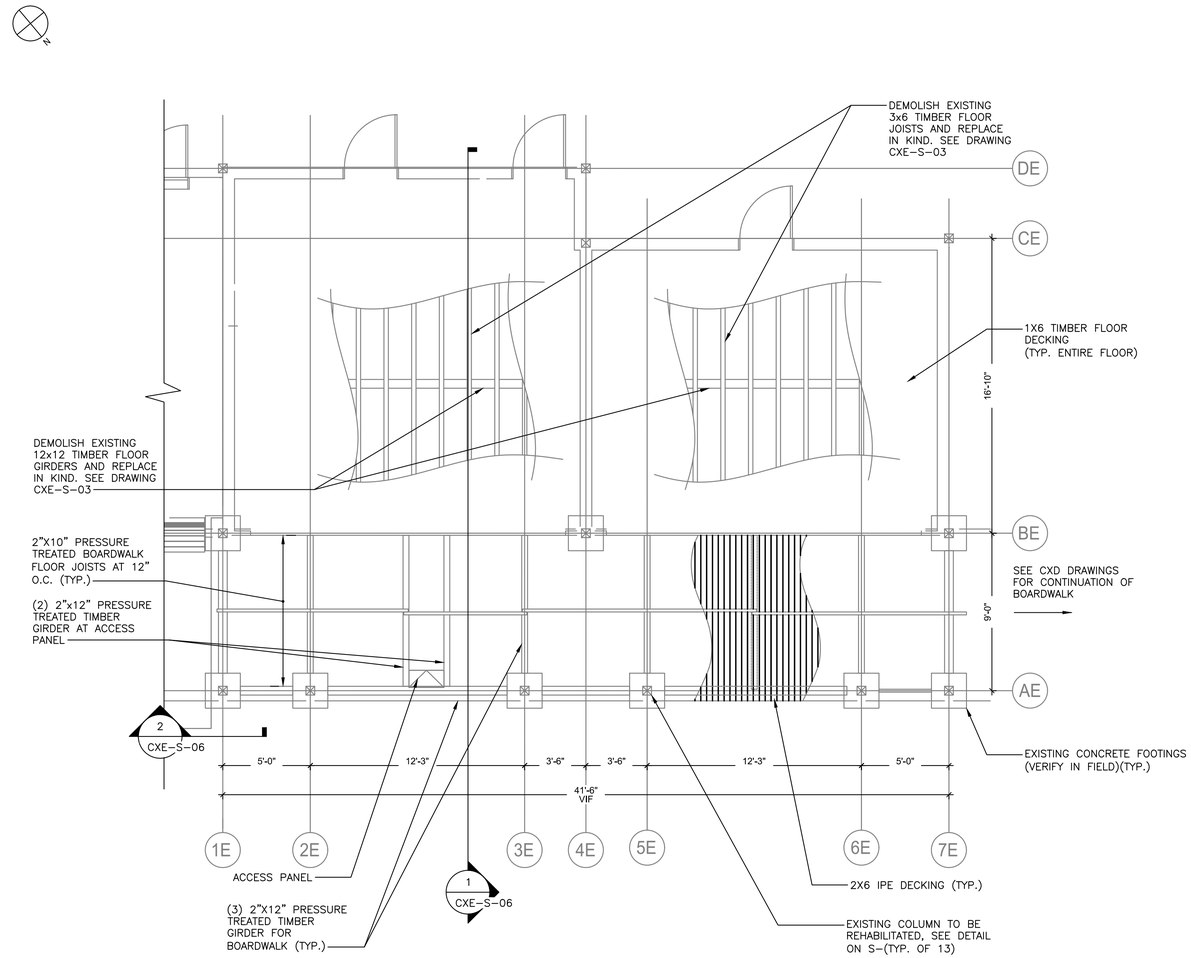


CXE GROUND FLOOR PLAN
1/4" = 1'–0"

SCALE: 1/4" = 1'–0"

CONSULTANT INFORMATION

Savin Engineers, P.C.

CONSULTANT SEAL

| REVISION NUMBER | DATE | MADE BY | APP'D BY | REVISION |
|---|---|---|---|---|

RECORD DRAWING CERTIFICATION

☐ AS BUILT – CHANGES AS NOTED ☐ AS BUILT – NO CHANGES

CONTRACTOR
NAME
SIGNATURE
TITLE DATE

PROJECT COORDINATOR
NAME
SIGNATURE
TITLE DATE

WESTCHESTER COUNTY, NEW YORK
DEPARTMENT OF PUBLIC WORKS AND TRANSPORTATION
DIVISION OF ENGINEERING

**INFRASTRUCTURE REHABILITATION - PHASE 3**
**PLAYLAND PARK, RYE, NEW YORK**
**CROSS AXIS BUILDING E**
**GROUND FLOOR PLAN**

| | |
|---|---|
| CONTRACT NUMBER | 22-523 |
| SHEET NUMBER | CXE-S-05 |
| DWG NO.: | |
| SCALE: | AS SHOWN |
| DATE: | 8/23/ 2022 |
| DPW FILE NUMBER | 1-118-S-1035-0 |
| REV. NO. | 0 |



Drawing Name: G:\SavinAutocad\2060\25-Playland-Mega-3\S\CXES-1012.dwg
Projectname: 211001F02 Comments: ----
Printed by: BKnittle Date: 15 August 2022 9:46 AM Designed by: ----
Xrefs: [TB_24X36_WestchesterCo_3.dwg] [TSG-SVL000.dwg] [CXE-A-11.dwg] [CXE-S-1005.dwg]

NOTES:

1. FOR STRUCTURAL NOTES, SEE DRAWING CXE-S-01.
2. FOR STRUCTURAL ABBREVIATIONS AND SYMBOLS, SEE DRAWING CXE-S-02.

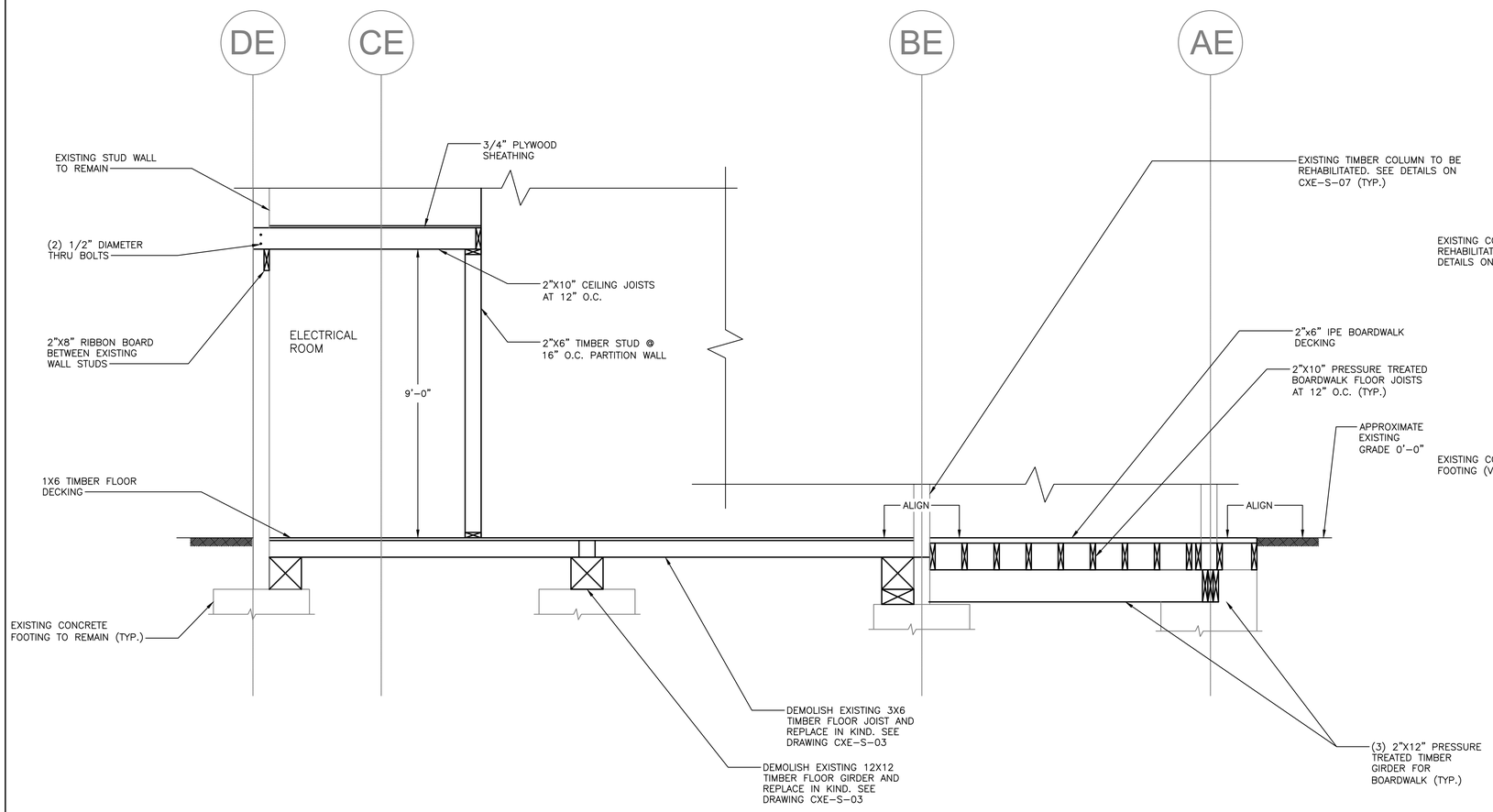


1 SECTION
CXE-S-05 1/2" = 1'-0"

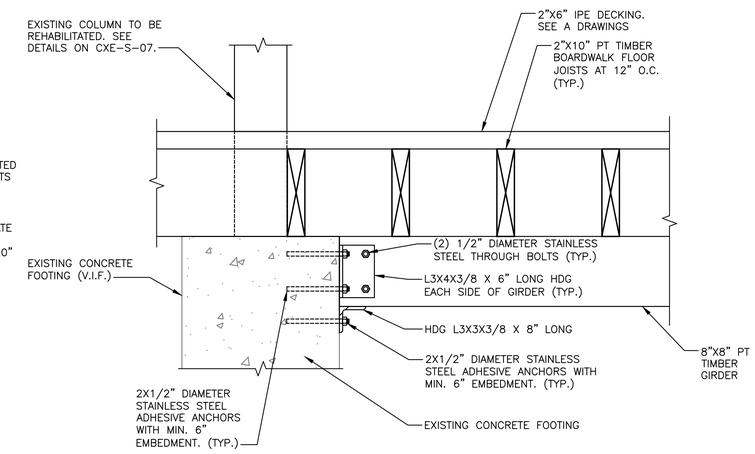


2 SECTION
CXE-S-05 N.T.S.

0 2' 4'
SCALE: 1/2" = 1'-0"

Drawing Name: G:\SavinAutocad\2060\25-Playland-Mega-3\S\CXES-1013.dwg
Rev#: Projectname: 211001F02 Comments: ----
Printed by: BKnittle Date: 15 August 2022 9:47 AM Designed by: ----
Xrefs: [TB_24X36_WestchesterCo_3.dwg] [TSG-SVLOGO.dwg] [CXE-A-31.dwg] [CXE-S-1005.dwg]

CONSULTANT INFORMATION

Savin Engineers, P.C.

CONSULTANT SEAL

| REVISION NUMBER | DATE | MADE BY | APP'D BY | REVISION |
|---|---|---|---|---|

RECORD DRAWING CERTIFICATION

☐ AS BUILT – CHANGES AS NOTED ☐ AS BUILT – NO CHANGES

CONTRACTOR
NAME
SIGNATURE
TITLE DATE

PROJECT COORDINATOR
NAME
SIGNATURE
TITLE DATE

WESTCHESTER COUNTY, NEW YORK
DEPARTMENT OF PUBLIC WORKS AND TRANSPORTATION
DIVISION OF ENGINEERING

**INFRASTRUCTURE REHABILITATION - PHASE 3**
**PLAYLAND PARK, RYE, NEW YORK**
**CROSS AXIS BUILDING E**
**SECTIONS**

| | |
|---|---|
| CONTRACT NUMBER | 22-523 |
| SHEET NUMBER | CXE-S-06 |
| DWG NO.: | |
| SCALE: | AS SHOWN |
| DATE: | 8/23/ 2022 |
| DPW FILE NUMBER | 1-118-S-1036-0 |
| REV. NO. | 0 |

NOTES:

1. FOR STRUCTURAL NOTES, SEE DRAWING CXE–S–01.
2. FOR STRUCTURAL ABBREVIATIONS AND SYMBOLS, SEE DRAWING CXE–S–02.

COLUMN REPAIR NOTES:

CONTRACTOR SHALL SUBMIT A COLUMN REPAIR SEQUENCE OF CONSTRUCTION TO ENGINEER FOR REVIEW. THE FOLLOWING SHALL BE THE MINIMUM REQUIRED.

1. TEMPORARY SHORING AT EACH COLUMN LOCATION SHALL HAVE A MINIMUM 10–TON CAPACITY.
2. COLUMN REPAIR SHALL BE LIMITED TO MAXIMUM 2 COLUMNS AT A TIME. COLUMNS UNDER REPAIR MUST NOT BE ADJACENT TO EACH OTHER.
3. ALL HARDWARE SHALL BE TYPE 316 STAINLESS STEEL, UNLESS OTHERWISE NOTED.

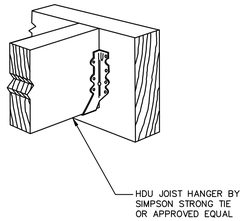


2 FACE MOUNTED JOIST HANGER
1 1/2" = 1'–0"

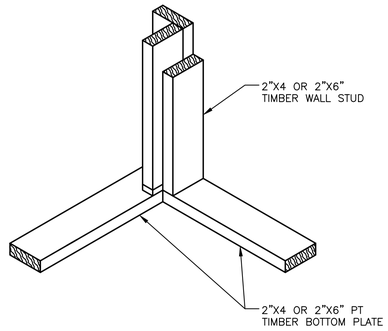


B TYPICAL STUDS AT CORNERS DETAIL
N.T.S.

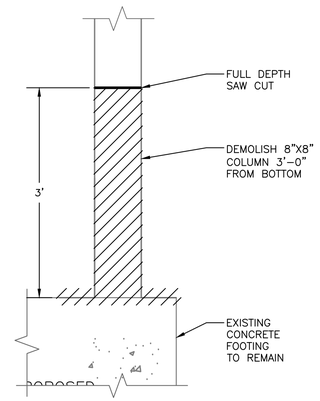


DEMOLITION
N.T.S.

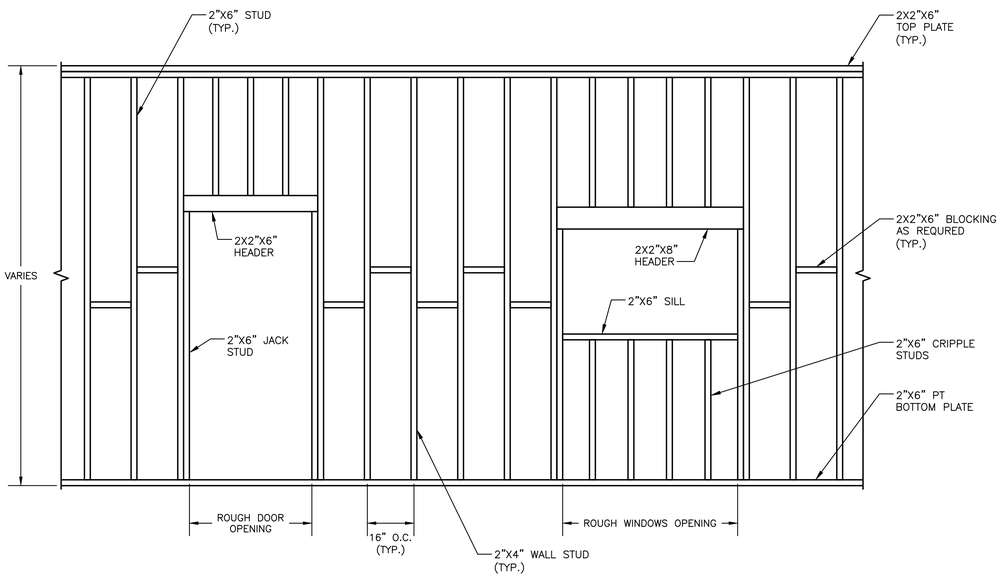


F DETAIL WALL ELEVATION
N.T.S.

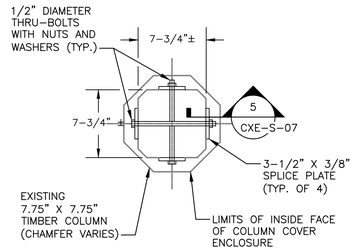


2 CXE–S–07 SECTION
SCALE: 1 1/2 = 1'–0"

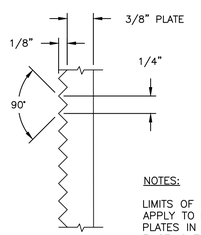


NOTES:

LIMITS OF KNURLING SHALL APPLY TO FACE OF ALL SPLICE PLATES IN CONTACT WITH EXISTING TIMBER COLUMN. KNURLING SHALL RUN AXIALLY AND HORIZONTALLY.

5 CXE–S–07 SECTION
SCALE: N.T.S.

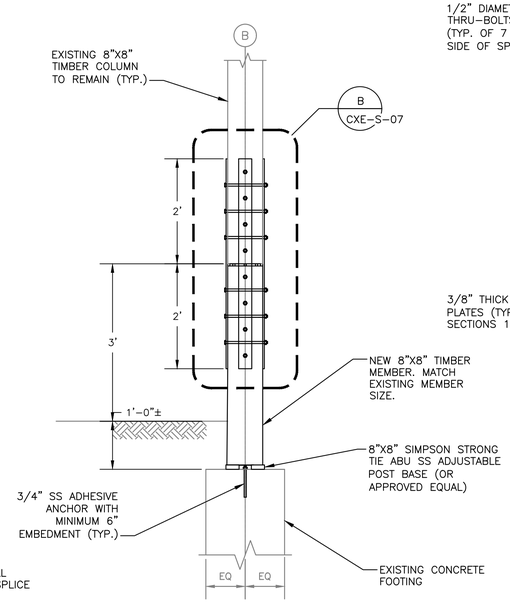


SECTION
SCALE: 3/4" = 1'–0"

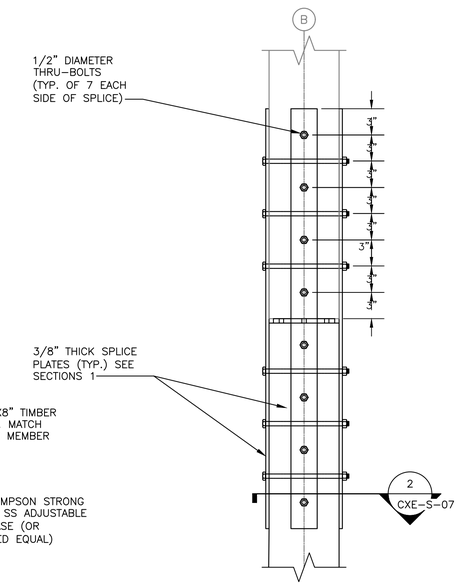


B CXE–S–07 DETAIL
SCALE: 1 1/2 = 1'–0"

SCALE: 3/4" = 1'–0"

SCALE: 1 1/2 = 1'–0"

CONSULTANT INFORMATION

Savin Engineers, P.C.

CONSULTANT SEAL

| REVISION NUMBER | DATE | MADE BY | APP'D BY | REVISION |
|---|---|---|---|---|

RECORD DRAWING CERTIFICATION

☐ AS BUILT – CHANGES AS NOTED ☐ AS BUILT – NO CHANGES

CONTRACTOR
NAME
SIGNATURE
TITLE DATE

PROJECT COORDINATOR
NAME
SIGNATURE
TITLE DATE

WESTCHESTER COUNTY, NEW YORK
DEPARTMENT OF PUBLIC WORKS AND TRANSPORTATION
DIVISION OF ENGINEERING

**INFRASTRUCTURE REHABILITATION - PHASE 3**
**PLAYLAND PARK, RYE, NEW YORK**
**CROSS AXIS BUILDING E**
**SECTIONS AND DETAILS**

| CONTRACT NUMBER | SHEET NUMBER |
|---|---|
| 22-523 | CXE-S-07 |

DWG NO.:
SCALE: AS SHOWN
DATE: 8/23/ 2022
DPW FILE NUMBER 1-118-S-1037-0 REV. NO. 0

288 of 664

Drawing Name: G:\SavinAutocad\2060\25-Playland-Mega-3\S\CXES-1010.dwg
Projectname: 211001F02 Comments: ----
Printed by: BKnittle Date: 15 August 2022 9:48 AM Designed by: ----
Xrefs: [TB_24X36_WestchesterCo_3.dwg] [TSG-SVL060.dwg] [CX-S-1003.dwg] [CXE-S-1006.dwg] [CXE-S-1002.dwg]

# FIRE PROTECTION SAFETY NOTES:

1. SPECIAL PRECAUTION SHALL BE TAKEN BY THE CONTRACTOR SO THAT EQUIPMENT OF THIS APPLICATION AND ITS INSTALLATION WILL NOT AFFECT THE FOLLOWING: EGRESS TO AND FROM THE BUILDING. FIRE SAFETY OR CREATE A FIRE HAZARD. STRUCTURAL SAFETY OF THE BUILDING. ACCUMULATION OF DUST AND DEBRIS. (THE CONTRACTOR SHALL LEAVE THE SITE BROOM CLEANED EACH DAY.)

# FIRE PROTECTION GENERAL NOTES:

1. DIMENSIONS, LOCATIONS AND SIZES INDICATED ON THE PLANS AND THE ELEVATION ARE APPROXIMATE AND SHALL BE VERIFIED BY FIELD INSPECTION BY THE CONTRACTOR.

2. SOME EXISTING PIPE AND EQUIPMENT IS SHOWN FOR CLARIFICATION OF THIS CONTRACT, BUT MUST BE PROTECTED BY THE CONTRACTOR.

3. NO WORK SHALL BE INITIATED UNTIL A WORK PERMIT IS OBTAINED BY THE CONTRACTOR AND A SAFETY PLAN IS SUBMITTED AND IS APPROVED.

4. CONTRACTOR IS RESPONSIBLE FOR OBTAINING ALL PERMITS, EQUIPMENT USE PERMITS, ALL INSPECTION APPROVALS, AND LETTER OF COMPLETION FROM THE DEPARTMENT OF BUILDINGS FOR WORK UNDER THIS CONTRACT AS APPLICABLE.

5. ANY EXISTING MATERIALS, PIPING, ETC., NOT INDICATED FOR DEMOLITION WHICH ARE REMOVED BY THE CONTRACTOR IN ORDER TO INSTALL NEW WORK SHALL BE REINSTALLED BY THE CONTRACTOR. IF EXISTING WORK IS DAMAGED IT SHALL BE REPLACED AT THE CONTRACTOR'S EXPENSE. ALL SURFACES OR FINISHES THAT ARE DAMAGED OR OTHERWISE AFFECTED BY WORK OF THIS CONTRACT SHALL BE PATCHED, REPAIRED, PAINTED OR REPLACED TO MATCH THE PRE-EXISTING CONDITION AND THE NEW WORK.

6. CONTRACTOR MAY PROPOSE ALTERNATE ROUTING IN DIFFICULT AREAS WHERE REPLACEMENT IN KIND IS NOT PRACTICAL. ANY AND ALL ALTERNATE ROUTING IS SUBJECT TO PRIOR REVIEW AND APPROVAL BY THE ENGINEER.

7. A FIRE WATCH SHALL BE PROVIDED WHEN SPRINKLER COVERAGE IS IMPACTED TO MAINTAIN BUILDING OPERATIONS OR AS REQUIRED.

# FIRE PROTECTION SYMBOL LIST

| | |
|---|---|
| — — — — — FS DRY— — | NEW DRY SPRINKLER PIPING |
| — — — — — DRY(E) — | EXISTING TO REMAIN DRY SPRINKLER PIPING |
| ○ | NEW UPRIGHT SPRINKLER HEAD |
| ○ | EXISTING UPRIGHT SPRINKLER HEAD |
| ● | NEW CONCEALED PENDENT SPRINKLER HEAD-ORDINARY TEMPERATURE |
| | SPRINKLER DRY PIPE VALVE |
| | FIRE HOSE CABINET |
| | SIAMESE CONNECTION |
| | CHECK VALVE |
| | CHECK VALVE W/ ALARM |
| | WATER MOTOR ALARM BELL |
| ⊗ | PIPE RISER |
| | PIPE DROP |
| | PIPE UP |
| | POINT OF CONNECTION |
| | POINT OF DISCONNECTION |
| | PREACTION 6" BELL |
| | SOLENOID VALVE |
| | OS & Y VALVE |
| # | REVISION SYMBOL |
| F# | REFER TO SUPPLEMENTAL FIGURE INDICATED BY NUMBER (I.E. F2 REFERS TO FIGURE 2) |
| XXX / X | EQUIPMENT TAG / EQUIPMENT NUMBER |
| X / X-XXX | DETAIL TAG/ CALL OUT TAG / FIRE PROTECTION SHEET NUMBER |

# SHOP DWGS/EQUIPMENT SUBMITTALS

THE CONTRACTOR MUST SUBMIT ANY EQUIPMENT ALTERNATES 2 WEEKS PRIOR TO BIDS DUE FOR REVIEW AND COMMENTS. ALTERNATES MUST BE ACCEPTED BY LIRO ENGINEERS, INC., THE ARCHITECT, AND THE OWNER PRIOR TO INCLUSION IN BID. THE CONTRACTOR IS RESPONSIBLE TO COORDINATE EQUIPMENT ALTERNATES WITH OTHER TRADES AND MAKE ADJUSTMENTS TO THE MECHANICAL SYSTEMS, AS REQUIRED, TO ACCOMMODATE THESE NEW ALTERNATES.

THE CONTRACTOR IS RESPONSIBLE TO SUBMIT ALL OF THE FOLLOWING ITEMS FOR REVIEW/APPROVAL BY NO MORE THAN 3 WEEKS AFTER THE CONTRACTOR'S CONTRACT/BID HAS BEEN AWARDED. ALL SUBMITTALS MUST BE SENT TOGETHER AS A **SINGLE PACKAGE** WITH MANUFACTURER'S SPECIFIC MODELS AND SPECIFICATIONS OUTLINED TO MATCH THE SCHEDULED REQUIREMENTS. EACH SUBMITTAL MUST BE LABELED WITH THE UNIT DESIGNATION USED WITHIN THIS DRAWING SET. IF THE SUBMITTAL PACKAGE IS FOUND TO BE INCOMPLETE UPON RECEIPT, THE PACKAGE WILL BE HELD AND WILL NOT BE REVIEWED UNTIL THE REMAINDER OF THE PACKAGE IS RECEIVED. SIX (6) HARD COPIES OF THE SUBMITTAL PACKAGE MUST BE SENT TO LIRO ENGINEERS, INC. DIGITAL SHOP DRAWING SUBMISSIONS ARE ACCEPTABLE.

# SCOPE OF WORK:

1. THE INSTALLATION OF NEW DRY FS EQUIPMENT.

2. PROPOSED FIRE SPRINKLER HEAD LOCATIONS AND PIPING ARE AS NOTED ON PLANS. EXACT PIPING FROM THE FIRE SPRINKLER MAIN TO ALL HEADS IS TO BE COORDINATED AND HYDRAULICALLY CALCULATED BY THE F.S.C. & SUBMITTED TO THE ENGINEER FOR APPROVAL.

NOTE: THIS SCOPE OF WORK DESCRIPTION IS PROVIDED TO GIVE AN OVERALL "MACRO" DESCRIPTION OF THIS PROJECT. F.S.C. IS RESPONSIBLE TO REVIEW ALL ENGINEERING AND ARCHITECTURAL DRAWINGS AND VISIT THE SITE IF NEEDED, PRIOR TO SUBMISSION OF BID.

**SPRINKLER HEAD SCHEDULE**

| | MANUFACTURER | MODEL | DESCRIPTION | K-FACTOR | QUANTITY |
|---|---|---|---|---|---|
| ○ | RELIABLE | F1FR | DRY ORDINARY UPRIGHT SPRINKLER HEAD | 5.6 | 31 |

**ABBREVIATION**

| | |
|---|---|
| ACV | ALARM CHECK VALVE |
| B.O.P. | BOTTOM OF PIPE |
| (E) | EXISTING TO REMAIN |
| F.S.C. | FIRE SPRINKLER CONTRACTOR |
| P.C | PLUMBING CONTRACTOR |
| TYP | TYPICAL |
| W/ | WITH |
| NYS | NEW YORK STATE |
| U/P | UNDERGROUND PIPING |
| W | WATER |

**DRAWING NOTATIONS**

| | |
|---|---|
| | DRAWING NOTE TAB |
| | RISER DESIGNATION |
| | POINT OF CONNECTION |
| | POINT OF DISCONNECTION |

# DESIGN CRITERIA

1. AREA OF APPLICATION = 1950 SQ. FT

2. OCCUPANCY CLASSIFICATION = ORDINARY HAZARD GROUP 2

3. MAXIMUM COVERAGE PER SPRINKLER HEAD = 130 SQ. FT

4. DESIGN DENSITY = 0.20 GPM/SQ. FT

5. NUMBER OF SPRINKLER HEADS WITHIN AREA OF APPLICATION = 26

6. "K" FACTOR OF SPRINKLER HEADS = 5.6

7. DESIGN CRITERIA REQUIREMENTS BASED ON:
   - 2020 BUILDING CODE OF NEW YORK STATE
   - 2016 NFPA 13

# ORDINARY HAZARD PIPE SCHEDULE

| STEEL | | COPPER | |
|---|---|---|---|
| 1IN. | 2 SPRINKLERS | 1IN. | 2 SPRINKLERS |
| 1 1/4 IN. | 3 SPRINKLERS | 1 1/4 IN. | 3 SPRINKLERS |
| 1 1/2IN. | 5 SPRINKLERS | 1 1/2IN. | 5 SPRINKLERS |
| 2 IN. | 10 SPRINKLERS | 2 IN. | 12 SPRINKLERS |
| 2 1/2 IN. | 20 SPRINKLERS | 2 1/2 IN. | 25 SPRINKLERS |
| 3 IN. | 40 SPRINKLERS | 3 IN. | 45 SPRINKLERS |
| 3 1/2 IN. | 65 SPRINKLERS | 3 1/2 IN. | 75 SPRINKLERS |
| 4 IN. | 100 SPRINKLERS | 4 IN. | 115 SPRINKLERS |
| 5 IN. | 160 SPRINKLERS | 5 IN. | 180 SPRINKLERS |
| 6 IN. | 275 SPRINKLERS | 6 IN. | 300 SPRINKLERS |
| 8 IN. | SEE SECTION 8.2 | 8 IN. | SEE SECTION 8.2 |

FOR SI UNITS, 1 IN. = 25.4 MM.

# MAX DISTANCE BETWEEN HANGERS (FT.-IN.)

| | NOMINAL PIPE SIZE (IN.) | | | | | | | | | | | |
|---|---|---|---|---|---|---|---|---|---|---|---|---|
| | 3/4 | 1 | 1 1/4 | 1 1/2 | 2 | 2 1/2 | 3 | 3 1/2 | 4 | 5 | 6 | 8 |
| STEEL PIPE EXCEPT THREADED LIGHTWALL | N/A | 12-0 | 12-0 | 15-0 | 15-0 | 15-0 | 15-0 | 15-0 | 15-0 | 15-0 | 15-0 | 15-0 |
| THREADED LIGHTWALL STEEL PIPE | N/A | 12-0 | 12-0 | 12-0 | 12-0 | 12-0 | 12-0 | N/A | N/A | N/A | N/A | N/A |
| COPPER TUBE | 8-0 | 8-0 | 10-0 | 10-0 | 12-0 | 12-0 | 12-0 | 15-0 | 15-0 | 15-0 | 15-0 | 15-0 |

# CODE REFERENCE

2020 NEW YORK STATE BUILDING CODE
2016 NFPA 13

# FIRE PROTECTION NOTES

1. THE DRAWINGS SHOW THE LAYOUT OF THE SYSTEM AND INDICATE THE APPROXIMATE LOCATIONS OF EQUIPMENT AND PIPING. CONTRACTOR IS CAUTIONED NOT TO SCALE THE DRAWINGS. THE PIPING SHALL BE RUN APPROXIMATELY IN THE AREAS AS INDICATED ON THE DRAWINGS, [HOWEVER, TO THE ARRANGEMENT OF THE PIPING SYSTEMS AS MAY BE REFERENCED WITH WORK OF OTHER TRADES]. CONTRACTOR SHALL REVIEW AND COORDINATE WITH STRUCTURAL, ELECTRICAL AND MECHANICAL DRAWINGS. PARTITIONS, STRUCTURAL MEMBERS, ETC. ARE DESIGNED TO BE FURRED OR CLOSED IN AND TO INCLUDE ROUGH-IN PIPING. CONTRACTOR SHALL FURNISH ALL OFFSETS, ADDITIONAL FITTINGS, ETC. WHETHER SHOWN ON DRAWINGS OR NOT, AS REQUIRED TO MEET INSTALLATION CONDITIONS.

2. CONTRACTOR IS TO COMPLY WITH LATEST NFPA AND N.Y.S. CODES, AND COORDINATE HIS WORK WITH OTHER TRADES AND MAKE NECESSARY ADJUSTMENTS.

3. CONTRACTOR IS TO PREPARE SHOP DRAWINGS FOR ENGINEERS REVIEW AFTER MAKING A COMPLETE FIELD SURVEY.

4. CONTRACTOR IS TO REPORT ANY CONDITION REQUIRING CHANGES FROM PLANS TO ENGINEER PRIOR TO STARTING WORK.

5. BRANCH LINES AND MAINS (1 1/2" OR LESS) - SCHEDULE 40 FM APPROVED

6. BRANCH LINES AND MAINS (2" OR LARGER) - THINWALL (THICKNESS LESS THEN SCHEDULE 40 MORE THEN SCHEDULE 10 & FM APPROVED)

7. CONTRACTOR IS TO PERFORM A HYDROSTATIC TEST FOR 2 HRS. @ 200 PSI WITH NO LEAKAGE AND PROVIDE A TEST CERTIFICATE TO ENGINEER

8. CONTRACTOR IS TO EMPLOY EXPERIENCED WORKMEN WHO ARE TO FAMILIARIZE THEMSELVES WITH THE BUILDING AND OBSERVE SAFETY REQUIREMENTS.

9. CONTRACTOR TO ADJUST HEAD LOCATION TO COORDINATE WITH LIGHTS, DUCTS, ETC.

10. PERMIT FROM LOCAL AUTHORITY, TO BE OBTAINED BY CONTRACTOR.

11. ALL WORK TO BE APPROVED BY OWNERS ENGINEER, STATE AUTHORITIES HAVING JURISDICTION AND MUNICIPAL FIRE, PLUMBING, BUILDING AND WATER DEPARTMENTS.

12. U.L. AND/OR FM APPROVED EQUIPMENT TO BE USED.

13. WORK TO BE IN ACCORDANCE WITH MUNICIPAL WATER DEPT. RULES
.
14. SYSTEM IS TO BE MAINTAINED AND TESTED BY THE OWNER OR HIS AGENT IN ACCORDANCE WITH APPLICABLE LOCAL AND STATE CODES AND IN CONFORMANCE WITH NFPA 13A, LATEST EDITION.

15. IF BUILDING OCCUPANCY OR CONSTRUCTION CHANGES, THE SPRINKLER SYSTEM IS TO BE UPDATED ACCORDINGLY BY THE OWNER OR HIS AGENT.

16. CONTRACTOR IS TO NEATLY CUT AND PATCH IN A FIRST CLASS WORKMANLIKE MANNER, ALL HOLES AND PENETRATIONS IN WALLS, CEILINGS, FLOORS, PARTITIONS, ETC.

17. THE ENGINEER IS NOT RETAINED FOR SUPERVISION.

18. THE INSTALLATION OF THIS SYSTEM WILL REQUIRE THE CLOSING OF ONE OR MORE FIRE PROTECTION CONTROL VALVES. THESE VALVE CLOSURES SHOULD BE CLOSELY COORDINATED WITH THE OWNERS WHO SHOULD CONTACT THE LOCAL FIRE DEPARTMENT, INSURANCE INTERESTS, ETC. PRIOR TO VALVE CLOSURES.

19. ACTUAL DESIGN DENSITY MAY EXCEED STANDARDS, HOWEVER, IT IS A MINIMUM TO BE USED BY THE CONTRACTOR.

20. ALL ALARMS RELATING TO THE SPRINKLER SYSTEM SHOULD BE ACTIVATED UPON PLACING THE SPRINKLER SYSTEM IN SERVICE.

21. THE INSTALLATION COMPONENTS, SIZING, SPACING, MATERIALS LOCATION CLEARANCES, POSITION AND TYPE OF SYSTEM SHALL CONFORM TO NFPA 13 AND NYS UNIFORM FIRE PREVENTION BUILDING CODE LATEST EDITION.

22. SPRINKLERS SHALL BE PROTECTED AGAINST FREEZING AND INJURY AS PER NFPA CODE.

23. INSPECTION AND TESTS OF SPRINKLER SYSTEM SHALL BE CONDUCTED AS SPECIFIED IN NFPA CODE.

24. WATER SUPPLY TEST PIPES AND GAUGES SHALL BE PROVIDED AS SPECIFIED IN CHAPTER 2-9 OF NPPA 13.

25. PIPING SPECIFICATIONS, PIPE SCHEDULES, SYSTEM TEST PIPES, PROTECTION AGAINST CORROSION, DAMAGE FITTINGS, VALVES, HANGERS, SPRINKLERS, GUARDS AND SHIELDS SHALL BE IN ACCORDANCE WITH CHAPTER 3 AND CHAPTER 8 OF NFPA 13, LATEST EDITION. PIPING SHALL BE PAINTED TO PREVENT CORROSION.

26. STOCK OF EXTRA SPRINKLERS WILL BE FURNISHED AS PER CHAPTER 3 OF NFPA 13 (REQUIRED FOR EACH TEMPERATURE RATING).

27. SPRINKLER ALARMS WILL BE IN ACCORDANCE WITH NFPA 13.

28. SPACING, LOCATION AND POSITION OF SPRINKLERS SHALL BE IN ACCORDANCE WITH CHAPTER 4 OF NFPA 13.

29. ALL PIPING PASSING THROUGH WALLS SHALL COMPLY WITH NFPA FOR FIRE PROOFING.

30. DISTANCE OF SPRINKLERS FROM HEAT SOURCES SHALL BE IN ACCORDANCE WITH TABLE 3-16.6.3 OF NFPA 13.

31. PROVIDE WATER SUPPLY LETTER WITH FLOW TEST DATA.

32. ALL PIPES PASSING THROUGH FOUNDATION WALLS TO BE PROTECTED.

33. ALL VALVES SHALL BE IDENTIFIED AS REQUIRED BY NFPA 13.

34. DRAINAGE TO CONFORM TO CHAPTER 3-11 OF NFPA 13.

35. A ONE PIECE REDUCING FITTING OF GOOD DESIGN SHOULD BE USED WHEREVER A CHANGE IS MADE IN THE SIZE OF PIPE AS PER SECTION 3-12.2.7 OF NFPA 13.

36. ALL VALVES ON CONNECTIONS TO WATER SUPPLIES AND IN SUPPLY TO SPRINKLERS SHALL BE APPROVED O.S. &Y. OR APPROVED INDICATOR TYPE WITH TAMPER SWITCHES.

37. DRAIN VALVES AND TEST VALVES SHALL BE APPROVED TYPE AS PER SECTION 3-14.1.2 OF NFPA 13.

38. HANGERS SHALL BE OF A TYPE APPROVED FOR USE WITH THE PIPE OR TUBE INVOLVED, SPRINKLER PIPING SHOULD BE SUPPORTED BY ADJUSTABLE HANGERS PER NFPA 13, SECTION 3-15.

39. PROVISIONS SHOULD BE MADE TO FACILITATE FLUSHING SYSTEM PIPING BY PROVIDING FLUSHING CONNECTIONS CONSISTING OF A CAPPED NIPPLE 4" LONG ON THE END OF THE CROSS MAIN, AS PER SECTION 3- 8.2 OF NFPA 13.

40. SPRINKLER SHALL BE AN APPROVED TYPE AS PER SECTION 3-16 OF NFPA 13.

41. TEMPERATURE RATING SHALL COMPLY WITH SEC. 3-16.6 OF NFPA 13.

42. CLEARANCES BETWEEN SPRINKLERS AND STORAGE OR PARTITIONS AS PER NFPA 13, SECTION 4-2.5

43. SPACING AND LOCATION OF SPRINKLER SHALL COMPLY WITH CHAPTER 4 NFPA 13.

44. CONTRACTOR TO COORDINATE HIS WORK WITH OTHER TRADES.

45. ONLY EXPERIENCED SPRINKLER MECHANICS TO WORK ON THE SYSTEM.

46. ALL PIPING TO BE A MINIMUM OF 1" UNLESS OTHERWISE NOTED.

47. PROVIDE SHOP DRAWINGS WITH HYDRAULIC CALCULATIONS FOR REVIEW TO LOCAL FIRE MARSHALL AND INSURANCE UNDERWRITER AND ENGINEER FOR APPROVAL PRIOR TO INSTALLATION.

48. ALL FIRE PROTECTION EQUIPMENT SHALL BE INSTALLED PER MANUFACTURER'S REQUIREMENTS/SPECIFICATIONS.

49. ALL FIRE PROTECTION EQUIPMENT SHALL BE MOUNTED ON MINIMUM 6" HIGH CONCRETE PAD UNLESS OTHERWISE NOTED (PAVER AND CINDER BLOCK IS NOT ACCEPTABLE).

50. PERMIT IS REQUIRED PRIOR TO INSTALLATION, TO INCLUDE SIGNED AND SEALED SHOP DRAWINGS, HYDRAULIC CALCULATION, SHOP DRAWINGS, MANUFACTURERS INFORMATION ON HEADS AND APPLIANCES, COMPLIANCE WITH NFPA 13 AND SECTION 903 2020 NYSBC/FC.

# FIRE PROTECTION DRAWING LIST

| SHEET NO. | SHEET NAME | REVISON NO. | REVISION DATE |
|---|---|---|---|
| CXE-FP-01 | FIRE PROTECTION NOTES, SYMBOLS, ABBREVIATIONS, AND DRAWING LIST | 0 | - |
| CXE-FP-11 | FIRE PROTECTION GROUND FLOOR AND ATTIC DEMOLITION PLAN | 0 | - |
| CXE-FP-21 | FIRE PROTECTION GROUND FLOOR AND ATTIC CONSTRUCTION RCP | 0 | - |
| CXE-FP-81 | FIRE PROTECTION DETAILS | 0 | - |


CONSULTANT INFORMATION

LiRo Engineers, Inc.
A LiRo Group Company
Syosset, N.Y. 516-214-8157[T]


CONSULTANT SEAL

STATE OF NEW YORK · FRANK F. ULLISE · No. 0901111 · LICENSED PROFESSIONAL ENGINEER

| REVISION NUMBER | DATE | MADE BY | APP'D BY | REVISION |
|---|---|---|---|---|
| | | | | |

RECORD DRAWING CERTIFICATION

☐ AS BUILT – CHANGES AS NOTED ☐ AS BUILT – NO CHANGES

CONTRACTOR
NAME
SIGNATURE
TITLE DATE

PROJECT COORDINATOR
NAME
SIGNATURE
TITLE DATE

WESTCHESTER COUNTY, NEW YORK
DEPARTMENT OF PUBLIC WORKS AND TRANSPORTATION
DIVISION OF ENGINEERING

**INFRASTRUCTURE REHABILITATION - PHASE 3**
**PLAYLAND PARK, RYE, NEW YORK**
**CROSS AXIS BUILDING E**
**FIRE PROTECTION NOTES, SYMBOLS, ABBREVIATIONS & DWG LIST**

CONTRACT NUMBER 22-523
SHEET NUMBER **CXE-FP-01**
DWG NO.: 289 of 664
SCALE: **AS INDICATED**
DATE: 08/23/2022
DPW FILE NUMBER **1-118-FP-1038-0**
REV. NO. 0

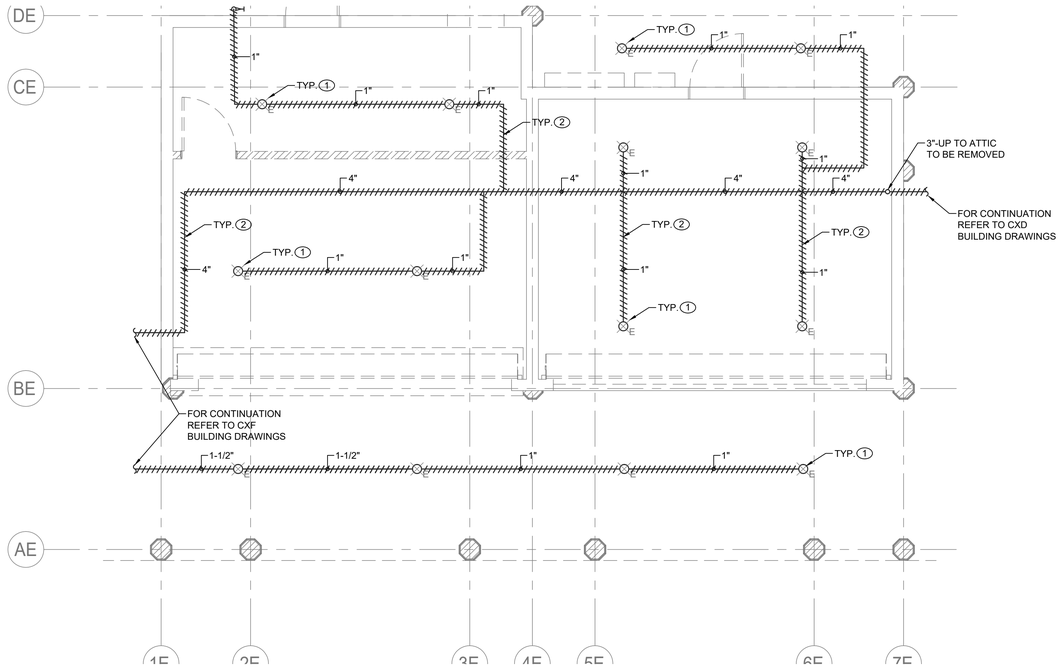


## FIRE PROTECTION GROUND FLOOR DEMOLITION PLAN

SCALE: 1/4" = 1'-0

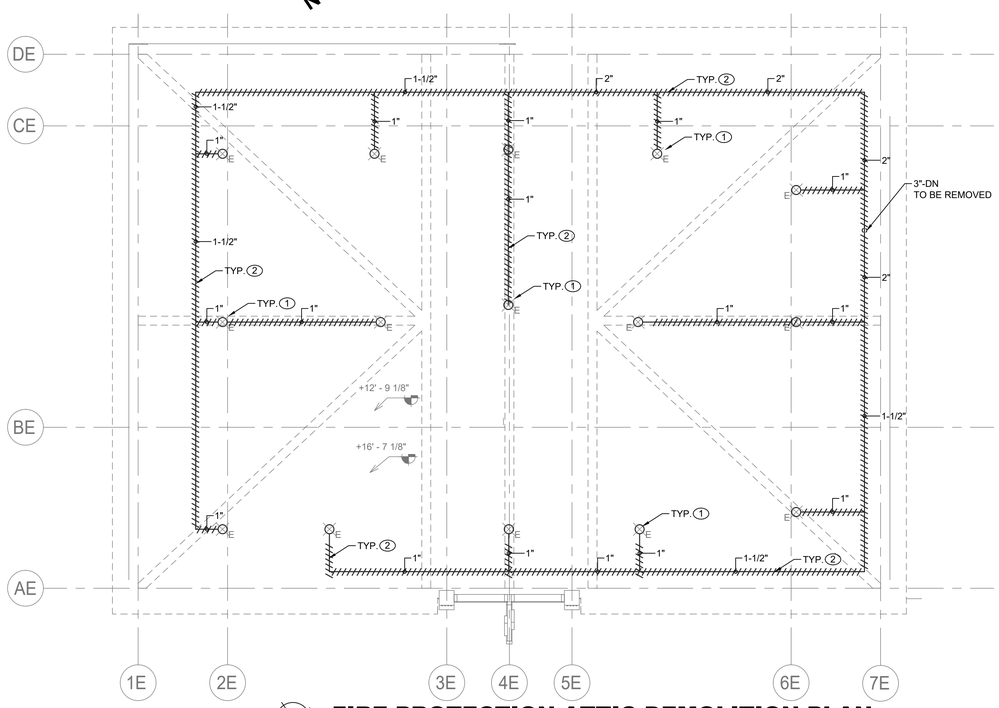


## FIRE PROTECTION ATTIC DEMOLITION PLAN

SCALE: 1/4" = 1'-0

## SPRINKLER DEMOLITION NOTES:

1. DEMOLISH ALL EXISTING SPRINKLER HEADS WITHIN THE CXE BUILDING.
2. DEMOLISH ALL EXISTING DRY SPRINKLER PIPING WITHIN THE CXE BUILDING INCLUDING ATTIC SPACE.

## GENERAL NOTES:

1. COORDINATE WITH FACILITY PRIOR TO SHUTDOWN OF FIRE PROTECTION SYSTEM FOR ANY DEMOLITION AND CONSTRUCTION WORK.

2. CONTRACTOR SHALL PROVIDE FIRE WATCH AS NEEDED FOR THE DEPENDENT BUILDINGS BY THE DEMOLITION AND CONSTRUCTION WORK WHILE SPRINKLER COVERAGE IS IMPACTED.

3. CONTRACTOR TO COORDINATE WITH FACILITY WHEN WORKING AROUND OR ABOVE THE RIDE COMPONENTS, AND PROVIDE ALL NECESSARY MEASURES TO PROTECT THESE COMPONENTS PER THE REQUIREMENTS OF THE FACILITY.

CONSULTANT INFORMATION

LiRo Engineers, Inc.
A LiRo Group Company
Syosset, N.Y. 516-214-8157[T]

CONSULTANT SEAL

STATE OF NEW YORK · FRANK F. ULISSE · No. 090111 · LICENSED PROFESSIONAL ENGINEER

| REVISION NUMBER | DATE | MADE BY | APP'D BY | REVISION |
|---|---|---|---|---|
| | | | | |

RECORD DRAWING CERTIFICATION

☐ AS BUILT – CHANGES AS NOTED ☐ AS BUILT – NO CHANGES

CONTRACTOR
NAME
SIGNATURE
TITLE DATE

PROJECT COORDINATOR
NAME
SIGNATURE
TITLE DATE

WESTCHESTER COUNTY, NEW YORK
DEPARTMENT OF PUBLIC WORKS AND TRANSPORTATION
DIVISION OF ENGINEERING

INFRASTRUCTURE REHABILITATION - PHASE 3
PLAYLAND PARK, RYE, NEW YORK
CROSS AXIS BUILDING E
FIRE PROTECTION GROUND FLOOR AND ATTIC DEMOLITION PLAN

| | |
|---|---|
| CONTRACT NUMBER | 22-523 |
| SHEET NUMBER | CXE-FP-11 |
| DWG NO.: | 290 of 664 |
| SCALE: | AS INDICATED |
| DATE: | 08/23/2022 |
| DPW FILE NUMBER | 1-118-FP-1039-0 |
| REV. NO. | 0 |

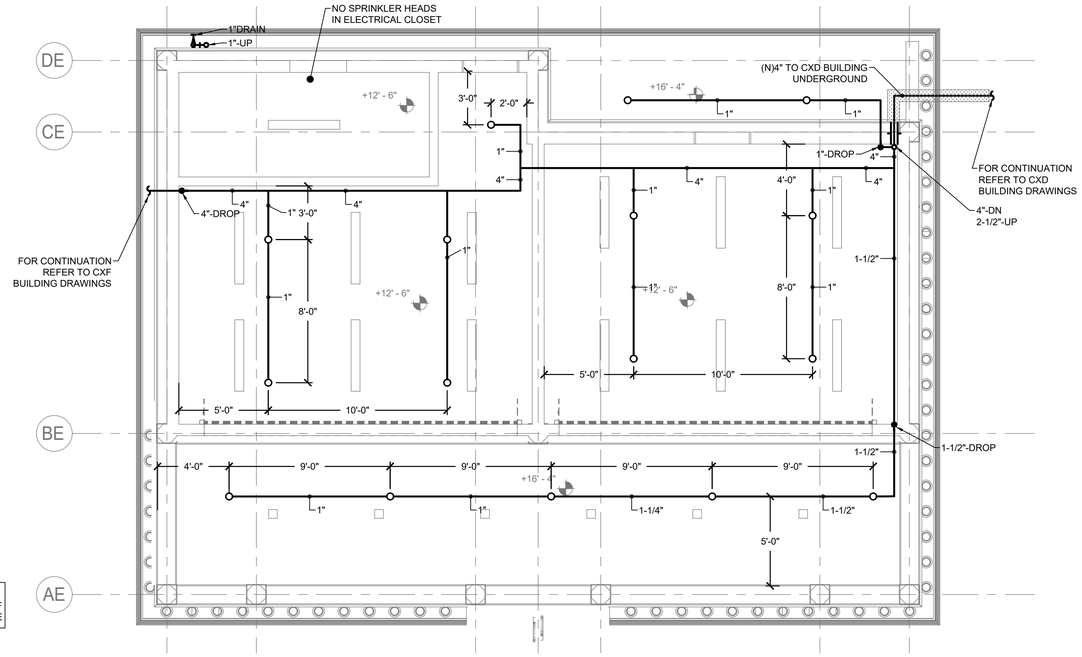


NOTE:
REFER TO PLUMBING DRAWINGS OF CXF BUILDING FOR DOMESTIC WATER SCOPE

## FIRE PROTECTION GROUND FLOOR CONSTRUCTION RCP

SCALE: 1/4" = 1'-0

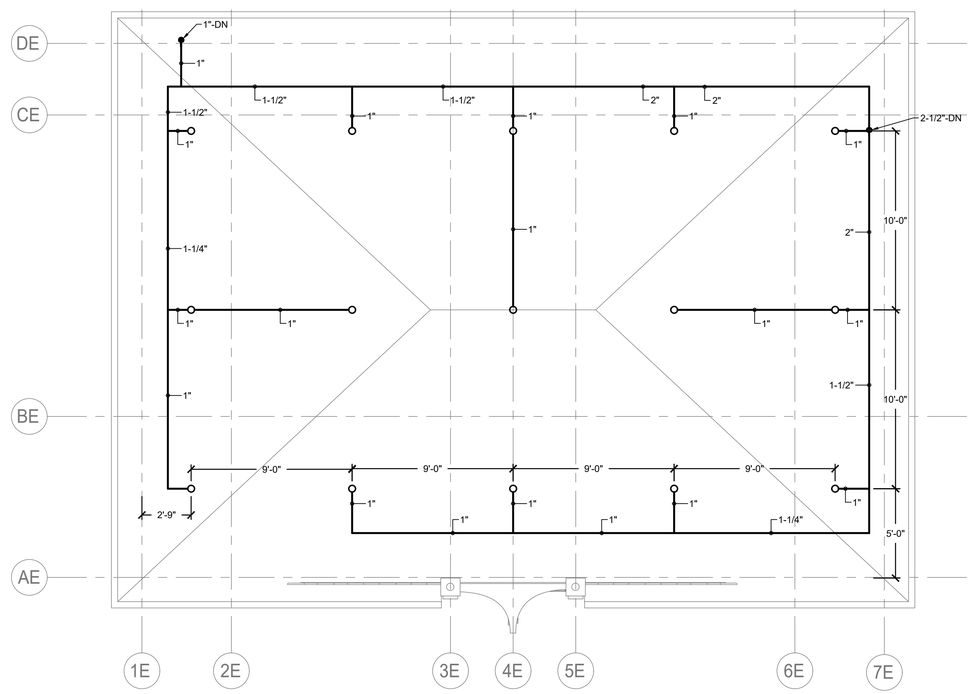


## FIRE PROTECTION ATTIC CONSTRUCTION RCP

SCALE: 1/4" = 1'-0

## GENERAL NOTES:

1. ALL DISTRIBUTION PIPING, SHALL BE PAINTED. REFER TO SPECIFICATION FOR PAINT TYPE AND APPLICATION PROCEDURE.
2. COORDINATE WITH FACILITY PRIOR TO SHUTDOWN OF FIRE PROTECTION SYSTEM FOR ANY DEMOLITION AND CONSTRUCTION WORK.
3. CONTRACTOR SHALL PROVIDE FIRE WATCH AS NEEDED FOR ALL AFFECTED BUILDINGS WHILE SPRINKLER COVERAGE IS IMPACTED.
4. CONTRACTOR TO COORDINATE WITH FACILITY WHEN WORKING AROUND OR ABOVE THE RIDE COMPONENTS, AND PROVIDE ALL NECESSARY MEASURES TO PROTECT THESE COMPONENTS PER THE REQUIREMENTS OF THE FACILITY.
5. UPON COMPLETION, SYSTEM SHALL BE TESTED FOR PROPER OPERATION.
6. PROVIDE REQUIRED PITCH AND DRAINS FOR DRY SPRINKLER PIPING FOR FULL WATER REMOVAL FROM THE SYSTEM.

CONSULTANT INFORMATION

LiRo Engineers, Inc.
A LiRo Group Company
Syosset, N.Y. 516-214-8157[T]

CONSULTANT SEAL

STATE OF NEW YORK · FRANK F. ULRICH · No. 090111 · LICENSED PROFESSIONAL ENGINEER

| REVISION NUMBER | DATE | MADE BY | APP'D BY | REVISION |
|---|---|---|---|---|
| | | | | |

RECORD DRAWING CERTIFICATION

☐ AS BUILT – CHANGES AS NOTED ☐ AS BUILT – NO CHANGES

CONTRACTOR
NAME
SIGNATURE
TITLE DATE

PROJECT COORDINATOR
NAME
SIGNATURE
TITLE DATE

WESTCHESTER COUNTY, NEW YORK
DEPARTMENT OF PUBLIC WORKS AND TRANSPORTATION
DIVISION OF ENGINEERING

**INFRASTRUCTURE REHABILITATION - PHASE 3**
**PLAYLAND PARK, RYE, NEW YORK**
**CROSS AXIS BUILDING E**
**FIRE PROTECTION GROUND FL. AND ATTIC CONSTRUCTION RCP**

| | |
|---|---|
| CONTRACT NUMBER | 22-523 |
| SHEET NUMBER | CXE-FP-21 |
| DWG NO.: | 291 of 664 |
| SCALE: | AS INDICATED |
| DATE: | 08/23/2022 |
| DPW FILE NUMBER | 1-118-FP-1040-0 |
| REV. NO. | 0 |

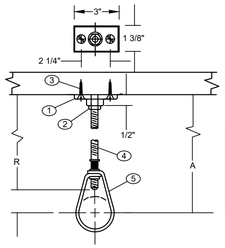


COMPONENTS

1. CLIP (CEILING FLANGE)
2. HEX NUT
3. WOOD SCREW
4. HANGER ROD
5. ADJUSTABLE HANGER RING

NFPA REQUIREMENTS / LIMITATIONS

1. NFPA 13 PERMITS THE USE OF 2 SCREW CEILING FLANGES ONLY
2. HAVING DIMENSIONS NOT LESS THAN THOSE OF NO. 18 X 1 1/2" WOOD SCREWS. DRIVE SCREWS AND NAILS ARE NOT ACCEPTABLE FASTENERS AND WOOD SCREWS ARE NOT TO BE DRIVEN.
3. FOR PIPE SIZES UP TO 2" AND IT CALLS FOR THE USE OF SCREWS

DESIGN DATA FOR CLIP HANGERS

| NOMINAL PIPE SIZE | MINIMUM A DIMENSION | HANGER TAKEOUT | ROD DIAMETER | FASTENERS | |
|---|---|---|---|---|---|
| | INCHES | INCHES | INCHES | QTY | ITEMS |
| 1/2 | 3 3/4 | -1 1/4 | 3/8 | 1<br>2<br>1 | 3/8" CEILING FLANGE (CLIP)<br>NO. 18 X 1 1/2" FLAT HEAD WOOD SCREWS<br>3/8" HEX NUT |
| 3/4 | 3 3/4 | -1 1/4 | " | | SEE ABOVE |
| 1 | 3 3/4 | -1 1/4 | " | | " " |
| 1 1/4 | 4 | -1 1/2 | " | | " " |
| 1 1/2 | 4 | -1 1/2 | " | | " " |
| 2 | 4 1/4 | -1 3/4 | " | | " " |

1 FP-81 **PIPE HANGER DETAIL**
SCALE: NOT TO SCALE

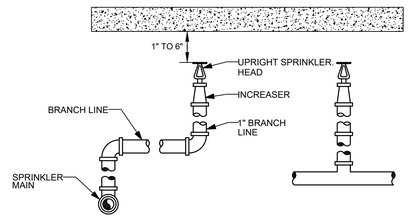


2 FP-81 **UPRIGHT SPRINKLER DETAIL**
SCALE: NOT TO SCALE

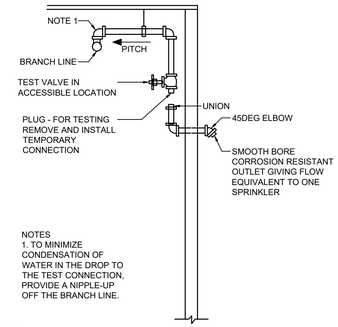


NOTES
1. TO MINIMIZE CONDENSATION OF WATER IN THE DROP TO THE TEST CONNECTION, PROVIDE A NIPPLE-UP OFF THE BRANCH LINE.

3 FP-81 **DRY PIPE TEST CONNECTION**
SCALE: NOT TO SCALE

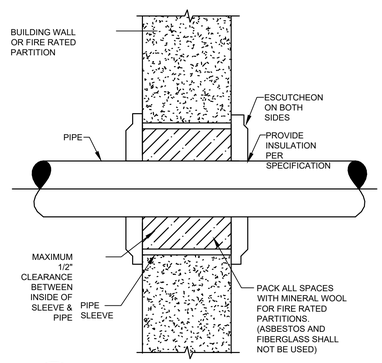


4 FP-81 **PIPE PENETRATION**
SCALE: NOT TO SCALE

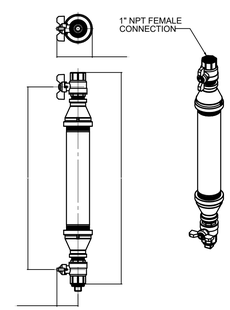


5 FP-81 **DRY SYSTEM AUXILIARY DRAIN**
SCALE: NOT TO SCALE

CONSULTANT INFORMATION

LiRo Engineers, Inc.
A LiRo Group Company
Syosset, N.Y. 516-214-8157[T]

CONSULTANT SEAL

STATE OF NEW YORK · FRANK F. ULISSE · No. 090111-1 · LICENSED PROFESSIONAL ENGINEER

| REVISION NUMBER | DATE | MADE BY | APP'D BY | REVISION |
|---|---|---|---|---|

RECORD DRAWING CERTIFICATION
☐ AS BUILT – CHANGES AS NOTED ☐ AS BUILT – NO CHANGES

CONTRACTOR
NAME
SIGNATURE
TITLE DATE

PROJECT COORDINATOR
NAME
SIGNATURE
TITLE DATE

WESTCHESTER COUNTY, NEW YORK
DEPARTMENT OF PUBLIC WORKS AND TRANSPORTATION
DIVISION OF ENGINEERING

**INFRASTRUCTURE REHABILITATION - PHASE 3**
**PLAYLAND PARK, RYE, NEW YORK**
**CROSS AXIS BUILDING E**
**FIRE PROTECTION DETAILS**

CONTRACT NUMBER 22-523
SHEET NUMBER CXE-FP-81
DWG NO.: 292 of 664
SCALE: AS INDICATED
DATE: 08/23/2022
DPW FILE NUMBER 1-118-FP-1041-0
REV. NO. 0

# MECHANICAL GENERAL NOTES

1. ALL WORK AND MATERIALS SHALL BE PURCHASED AND INSTALLED IN ACCORDANCE WITH ALL NATIONAL & NEW YORK STATE CODES AND REGULATIONS (AS WELL AS ALL APPLICABLE LOCAL CODES & REGULATIONS). THE CONTRACTOR SHALL BE RESPONSIBLE TO ENSURE THAT ALL HVAC WORK IS PROVIDED AND INSTALLED IN STRICT ACCORDANCE WITH SEISMIC REQUIREMENTS.
2. DO NOT SCALE FROM THESE DRAWINGS.
3. THE EXACT MOUNTING HEIGHTS AND LOCATIONS OF ALL HVAC EQUIPMENT SHALL BE FIELD VERIFIED AND COORDINATED WITH ALL OTHER MECHANICAL, ELECTRICAL, PLUMBING, FIRE SPRINKLER, ARCHITECTURAL AND STRUCTURAL SYSTEMS. DURING SHOP DRAWINGS SUBMISSIONS, SHOW ALL MOUNTING HEIGHTS OF DUCTWORK, UNITS, ETC.
4. VERIFY ALL EQUIPMENT VOLTAGES WITH THE ELECTRICAL DESIGN PRIOR TO ORDERING EQUIPMENT.
5. PROVIDE PHASE LOSS PROTECTION FOR ALL POLY-PHASE MOTOR DEVICES.
6. DUCTWORK SHALL BE CONSTRUCTED OF GALVANIZED SHEET STEEL IN STRICT COMPLIANCE WITH THE LATEST EDITION OF THE ASHRAE, NFPA, AND SMACNA GUIDE RECOMMENDATIONS. ALL DUCTS TO HAVE PITTSBURGH TYPE LOCK FOR LONGITUDINAL SEAMS AND DRIVE SLIP / "S" SLIP FOR TRANSVERSE JOINTS. "DUCT-MATE" JOINT SYSTEM IS ACCEPTABLE IN LIEU OF PRIOR SEAM SYSTEMS. SIZES AS SHOWN INDICATE INSIDE CLEAR DIMENSIONS OF THE AIR PASSAGE. DUCTWORK SHALL BE FULLY INSULATED AS PER APPLICABLE CODES AND WRITTEN SPECIFICATIONS.
7. DUCT SIZES MUST BE VERIFIED FOR CLEARANCES AT THE JOB SITE PRIOR TO FABRICATION. DIMENSIONS MAY BE CHANGED TO ACCOMMODATE CONSTRUCTION AS LONG AS EFFECTIVE CROSS-SECTIONAL AREA IS MAINTAINED. DUCT TRANSITIONS SHALL BE CONSTRUCTED WITH A SLOPE OF 1" TO 4". ALL DEVIATIONS FROM ORIGINAL CONTRACT DRAWINGS SHALL BE REVIEWED BY ENGINEER DURING THE SHOP DRAWING PROCESS.
8. PROVIDE MANUAL BALANCING DAMPERS AS REQUIRED TO PROPERLY BALANCE EACH INDIVIDUAL AIR DISTRIBUTION SYSTEM. IF THE LOCATION OF THE BALANCING DAMPER IS NOT DEFINED ON THE DRAWINGS, THE FOLLOWING MINIMUMS STANDARDS SHALL GOVERN. ALL SUPPLY, RETURN, AND EXHAUST MAIN BRANCHES FROM TRUNKS, EACH SPLIT AND ALL SUB- BRANCHES FROM MAIN SHALL INCORPORATE BALANCING DAMPERS.
9. PROVIDE FLEXIBLE CONNECTORS AT ALL DUCT CONNECTIONS TO VIBRATING EQUIPMENT. THESE CONNECTORS SHALL BE INSTALLED IN CLOSE PROXIMITY TO SUCH EQUIPMENT.
10. PROVIDE FIRE DAMPERS WITH RATED ACCESS DOORS AT ALL DUCT PENETRATIONS THROUGH FIRE RATED WALLS, SMOKE AND FIRE STOPPING, SHAFT, FLOORS, RATED CEILINGS AND PARTITIONS AS REQUIRED TO MAINTAIN ARCHITECTURAL FIRE RATINGS. REFER TO THE ARCHITECTURAL PLANS AND SPECIFICATIONS FOR LOCATIONS AND FIRE RATING REQUIREMENTS. CONTRACTOR MUST FULLY REVIEW ALL ARCHITECTURAL AND ENGINEERING DRAWINGS AND VISIT THE SITE PRIOR TO SUBMITTING THE BID. NO EXTRAS WILL BE ALLOWED.
11. ALL ACCESS DOORS REQUIRED IN GENERAL CONSTRUCTION ARE TO BE PROVIDED AND INSTALLED BY THE CONTRACTOR. IT IS THE RESPONSIBILITY OF THE CONTRACTOR TO IDENTIFY SIZE, TYPE AND LOCATION OF SUCH DOORS FOR PROPER ACCESS TO ALL CONCEALED HVAC EQUIPMENT, VALVES AND OTHER RELATED EQUIPMENT. THE CONTRACTOR SHALL IDENTIFY THESE REQUIREMENTS ON A COORDINATED SHOP DRAWING PRIOR TO SYSTEM FABRICATION AND INSTALLATION.
12. ALL CEILING MOUNTED EQUIPMENT MUST BE SUPPORTED DIRECTLY FROM BUILDING STRUCTURE WITH COMBINATION SPRING AND NEOPRENE-IN-SHEAR HANGERS AND ROD. PROVIDE SUPPLEMENTARY STEEL AS REQUIRED TO ADEQUATELY SUPPORT THE LOAD.
13. THE CONTRACTOR MUST CONTRACT AN INDEPENDENT NEBB CERTIFIED AIR BALANCING & TESTING COMPANY TO PERFORM THE AIR BALANCING WORK AND ASSOCIATED SYSTEM AIR BALANCING REPORT. ALL WORK SHALL BE PERFORMED IN STRICT COMPLIANCE WITH ALL APPLICABLE CODES, REGULATIONS, PLANS AND WRITTEN SPECIFICATIONS. SUBMIT THE FINAL AIR BALANCE REPORT TO THE ENGINEER FOR REVIEW AND APPROVAL PRIOR TO SUBSTANTIAL COMPLETION OF THE PROJECT, AS DETERMINED BY THE AND OWNER/CLIENT. THE AIR BALANCE REPORT MUST INCLUDE ALL SUPPLY, RETURN, & EXHAUST AIR TERMINALS, FRESH AIR (OUTSIDE AIR) INTAKE AND VENTILATION EXHAUST CFM RATES FOR ALL UNITS. ALSO INCLUDE ACTUAL SUPPLY & RETURN AIR VELOCITY & STATIC PRESSURE READINGS ALONG WITH ALL MOTOR AMPERAGES FOR ALL UNITS.
14. THE CONTRACTOR IS TO INCLUDE IN THEIR BID ALL LOW VOLTAGE CONTROL WIRING, THERMOSTATS, RELAYS, TRANSFORMERS, STARTERS ETC FOR A COMPLETE OPERATING CONTROL SYSTEM AS DESCRIBED IN THE SEQUENCE OF OPERATIONS. THE CONTRACTOR IS ALSO RESPONSIBLE FOR LINE VOLTAGE CONTROL FOR EXHAUST FANS CONTROLLED FROM LIGHT SWITCH AND THERMOSTATS. ALL CONTROL WIRING IN THE AREAS THAT DO NOT HAVE DROPPED CEILINGS THE CONTRACTOR MUST PROVIDE ALL CONTROL WIRING CONDUIT. IN AREAS OF DROPPED CEILING PLENUM RATED CONTROL WIRING CAN BE RUN EXPOSED ABOVE CEILING.
15. ALL MECHANICAL EQUIPMENT SHALL BE INSTALLED PER MANUFACTURER'S REQUIREMENTS/SPECIFICATIONS.

# CODE REFERENCE

2020 NEW YORK STATE BUILDING CODE
2020 NEW YORK STATE MECHANICAL CODE
2020 NEW YORK STATE ENERGY CONSERVATION CODE

# MECHANICAL DEMOLITION NOTES

1. CONTRACTOR SHALL BE RESPONSIBLE FOR DEMOLITION OF MECHANICAL EQUIPMENT AND MATERIAL RELATING TO THEIR RESPECTIVE TRADE.

2. THE CONTRACTOR SHALL REMOVE, RELOCATE, REPLACE, ADJUST, ADAPT AND MODIFY EXISTING EQUIPMENT AND/OR SYSTEMS AS REQUIRED WHEN SUCH WORK IS UNCOVERED AND FOUND TO INTERFERE WITH COMPLETION OF WORK IN THIS CONTRACT OR OTHER CONTRACT WORK.

3. EXECUTE THE DEMOLITION IN CAREFUL AND ORDERLY MANNER WITH THE LEAST POSSIBLE DISTURBANCE TO THE PUBLIC, EGRESS OR THE FUNCTIONING OF THE EXISTING BUILDING.

4. TAKE NECESSARY PRECAUTIONS TO PREVENT DUST AND DIRT FROM RISING BY WETTING DEMOLISHED DEBRIS. EXCESSIVE USE OF WATER WILL NOT BE PERMITTED.

5. PRIOR TO DEMOLITION, CONTRACTOR SHALL REVIEW WITH OWNER ALL MATERIALS TO BE REMOVED, SHOULD THE OWNER WANT TO KEEP ANY MATERIALS THE CONTRACTOR SHALL REMOVE AND DELIVER THE PARTS TO THE OWNER ON THE SITE WHERE SO DIRECTED. OTHERWISE ALL DEMOLISHED OR REMOVED MATERIALS SHALL BECOME THE PROPERTY OF THE CONTRACTOR AND SHALL BE REMOVED FROM THE SITE AND BE DISPOSED OF IN A LEGAL MANNER.

6. DEMOLITION SHALL INCLUDE REMOVAL OF ALL PARTS AND PIECES IN THEIR ENTIRETY BACK TO POINTS INDICATED OR IF NOT INDICATED BACK TO THEIR POINT OF SOURCE.

7. WHERE CONDITIONS PROHIBIT TOTAL REMOVAL OF THE WORK, THE REMAINING PORTION SHALL BE CUT FLUSH WITH THE SURROUNDING SURFACE AND BE CAPPED, PLUGGED OR SEALED AND THE SURROUNDING SURFACE SHALL BE REFINISHED IN AN APPROVED MANNER.

9. DO NOT REMOVE EXISTING STRUCTURAL WORK. DO NOT REMOVE OPERATIONAL ELEMENTS AND SAFETY-RELATED COMPONENTS IN A MANNER RESULTING IN A REDUCTION OF CAPACITIES TO PERFORM IN THE MANNER INTENDED OR RESULTING IN DECREASED OPERATIONAL LIFE, INCREASED MAINTENANCE, OR DECREASED SAFETY.

10. REMOVALS, DISCONNECTIONS, AND RELOCATIONS SHALL BE PERFORMED BY WORKMEN SKILLED IN THE TRADE INVOLVED AND SHALL BE EMPLOYED BY A CONTRACTOR LICENSED IN THE TRADE INVOLVED. ALL WORK SHALL BE DONE IN ACCORDANCE WITH ACCEPTED TRADE PRACTICES.

11. PROVIDE ADEQUATE TEMPORARY SUPPORT FOR WORK TO REMAIN, TO PREVENT FAILURE. DO NOT ENDANGER OTHER WORK.

12. PROTECTION: PROVIDE ADEQUATE PROTECTION WHERE REQUIRED FOR THE PRESENT BUILDING AND ITS CONTENTS. TEMPORARY DUSTPROOF BARRIERS AND BARRICADES SHALL BE ERECTED WHERE REQUIRED FOR PROTECTION OF PERSONNEL, PROTECTION FROM DUST AND DIRT, FOR SECURITY, FIRE AND WEATHER PROTECTIVE REASONS.

13. CONTRACTOR SHALL TAKE EVERY PRECAUTION AGAINST FIRE BY EMPLOYING FIRE DEPARTMENT TYPE HOSES AND PORTABLE FIRE EXTINGUISHERS AS REQUIRED BY OSHA AND/OR THE OWNER'S INSURANCE UNDERWRITER.

14. BEFORE STARTING DEMOLITION OPERATIONS, PROVIDE THE NECESSARY PROTECTIVE DEVICES, WHERE REQUIRED, AND IN STRICT ACCORDANCE WITH OSHA RULES AND REGULATIONS.

14. USE TEMPORARY ENCLOSURES, OR OTHER SUITABLE METHODS TO LIMIT DUST AND DIRT RISING AND SCATTERING TO LOWEST PRACTICAL LEVEL. COMPLY WITH GOVERNING REGULATIONS PERTAINING TO ENVIRONMENTAL PROTECTION.

15. FIELD VERIFY DEMOLITION REQUIREMENTS AND EXISTING CONDITIONS. DEMOLITION NOTES ARE INDICATED IN NOTE FORM.

16. CONTRACTOR SHALL ESTABLISH A PATH OF TRAVEL AND TIME SCHEDULE FOR THE REMOVAL OF ALL DEBRIS AND WASTE, AND HAVE THIS APPROVED BY OWNER. CONTRACTOR IS TO ENSURE THAT ALL CORRIDORS AND PUBLIC AREAS BE KEPT FREE OF OBSTRUCTIONS, DEBRIS, AND ARE TO BE BROOM SWEPT CLEAN AT ALL TIMES.

17. CONTRACTOR SHALL VISIT THE SITE AND BECOME INFORMED AS TO THE CONDITION OF THE PREMISES AND THE EXTENT AND CHARACTER OF WORK REQUIRED. NO ADDITIONAL COMPENSATION WILL BE APPROVED DUE TO FIELD CONDITIONS.

# NYSECC ENERGY COMPLIANCE STATEMENT:

PER SECTION C101.7 OF THE 2020 NYSECC HISTORIC BUILDINGS ARE EXEMPT FROM THE REQUIREMENTS OF THE ENERGY CODE.

# HVAC SYMBOL LIST

| IDENTIFIER | DESCRIPTION |
|---|---|
| | NEW DUCTWORK OR PIPING |
| | EXISTING DUCTWORK OR PIPING TO BE REMOVED |
| | EXISTING DUCTWORK OR PIPING TO REMAIN |
| 24X12 / 24X12 | DOUBLE-LINE AND SINGLE-LINE RECTANGULAR DUCT, FIRST NUMBER INDICATES SIDE IN VIEW IN INCHES, SECOND NUMBER INDICATES SIDE IN DEPTH IN INCHES |
| | FLEXIBLE DUCTWORK |
| | REGULAR SUPPLY AIR DUCT (UP AND DOWN) |
| | REGULAR RETURN AIR DUCT (UP AND DOWN) |
| | REGULAR EXHAUST AIR DUCT (UP AND DOWN) |
| | REGULAR OUTSIDE AIR DUCT (UP AND DOWN) |
| VD | VOLUME DAMPER |
| BD | BACKDRAFT DAMPER |
| | MOTOR OPERATED DAMPER |
| XXX / XX | EQUIPMENT TAG EQUIPMENT NUMBER |
| XXX / X-XXX | DETAIL TAG/CALL OUT TAG MECHANICAL SHEET NUMBER |
| T | THERMOSTAT |
| | EXHAUST GRILLE |
| F# | REFER TO SUPPLEMENTAL FIGURE INDICATED BY NUMBER (I.E. F2 REFERS TO FIGURE 2) |

# HVAC ABBREVIATIONS

| IDENTIFIER | DESCRIPTION |
|---|---|
| AC | DIRECT EXPANSION AIR CONDITION UNIT |
| CFM | CUBIC FEET PER MINUTE |
| COND | CONDENSATE |
| CU | CONDENSING UNIT |
| CUH | CABINET UNIT HEATER |
| DB | DRY BULB |
| DN | DOWN |
| EA | EXHAUST AIR |
| EF | EXHAUST FAN |
| EG | EXHAUST GRILLE |
| EUH | ELECTRIC UNIT HEATER |
| EER | ENERGY EFFICIENCY RATIO |
| EG | EXHAUST GRILLE |
| FAI | FRESH AIR INTAKE |
| GC | GENERAL CONTRACTOR |
| MBH | THOUSAND BTU PER HOUR |
| PC | PLUMBING CONTRACTOR |
| RG | RETURN GRILLE |
| RGL | REFRIGERANT GAS LINE |
| RLL | REFRIGERANT LIQUID LINE |
| RTU | ROOFTOP UNIT |
| SA | SUPPLY AIR |
| SD | SUPPLY DIFFUSER |
| TYP. | TYPICAL |
| VIF | VERIFY IN FIELD |

# SCOPE OF WORK

DEMOLITION

1. REMOVE ONE (1) EXISTING WALL MOUNTED FAN AS INDICATED ON PLANS.

# MECHANICAL DRAWING LIST

| SHEET NO. | SHEET NAME | REVISON NO. | REVISION DATE |
|---|---|---|---|
| CXE-M-01 | MECHANICAL NOTES, SYMBOLS & LEGENDS | 0 | - |
| CXE-M-11 | MECHANICAL 1ST FLOOR DEMOLITION PLAN | 0 | - |

CONSULTANT INFORMATION

LiRo Engineers, Inc.
A LiRo Group Company
Syosset, N.Y. 516-214-8157[T]

CONSULTANT SEAL

STATE OF NEW YORK · FRANK F. ULLISE · No. 090111 · LICENSED PROFESSIONAL ENGINEER

| REVISION NUMBER | DATE | MADE BY | APP'D BY | REVISION |
|---|---|---|---|---|

RECORD DRAWING CERTIFICATION

☐ AS BUILT – CHANGES AS NOTED ☐ AS BUILT – NO CHANGES

CONTRACTOR
NAME
SIGNATURE
TITLE DATE

PROJECT COORDINATOR
NAME
SIGNATURE
TITLE DATE

WESTCHESTER COUNTY, NEW YORK
DEPARTMENT OF PUBLIC WORKS AND TRANSPORTATION
DIVISION OF ENGINEERING

INFRASTRUCTURE REHABILITATION - PHASE 3
PLAYLAND PARK, RYE, NEW YORK
CROSS AXIS BUILDING E
MECHANICAL NOTES, SYMBOLS AND LEGENDS

CONTRACT NUMBER 22-523
SHEET NUMBER CXE-M-01
DWG NO.: 293 of 664
SCALE: AS INDICATED
DATE: 08/23/2022
DPW FILE NUMBER 1-118-M-1042-0
REV. NO. 0

## GENERAL NOTES:

1. RETURN REMOVED EXISTING EQUIPMENT TO OWNER IF IT IS IN WORKING CONDITION.
2. CONTRACTOR TO COORDINATE WITH FACILITY WHEN WORKING AROUND OR ABOVE THE RIDE COMPONENTS, AND PROVIDE ALL NECESSARY MEASURES TO PROTECT THESE COMPONENTS PER THE REQUIREMENTS OF THE FACILITY.

## MECHANICAL DEMOLITION NOTES:

(1) DEMOLISH EXISTING WALL MOUNTED PROPELLER FAN. COORDINATE REMOVAL OF ELECTRICAL POWER AND WIRING WITH ELECTRICAL CONTRACTOR. COORDINATE WITH GC TO SEAL EXISTING WALL PENETRATION.

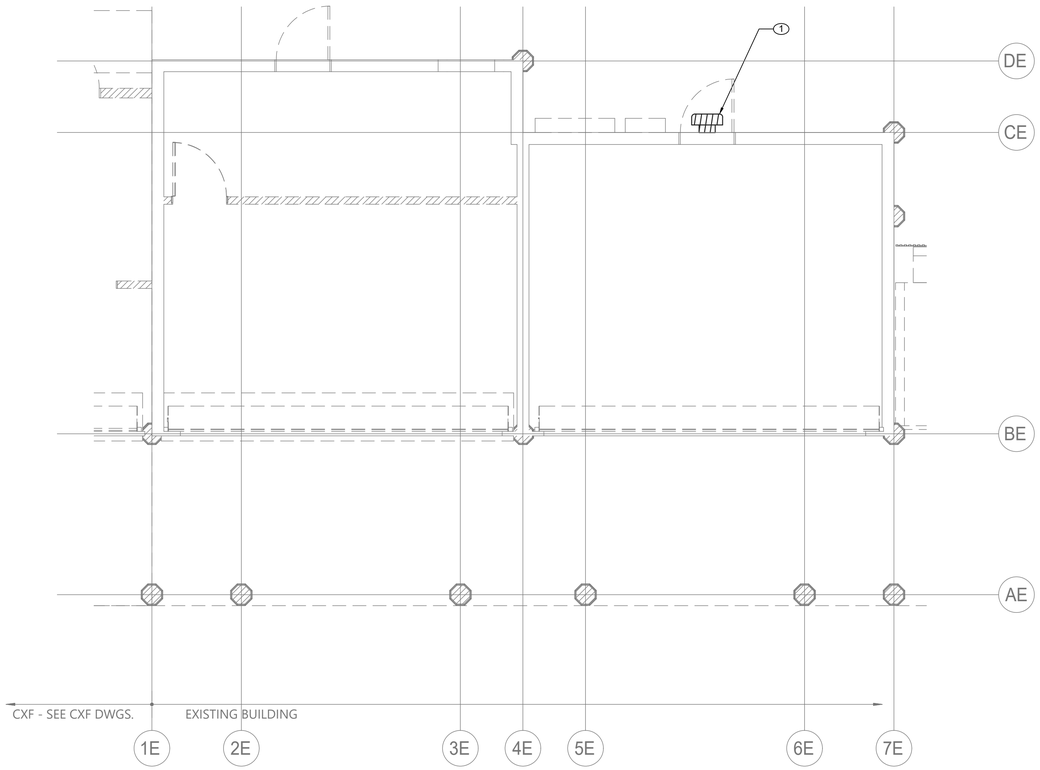


## MECHANICAL FIRST FLOOR DEMOLITION PLAN

SCALE: 1/4" = 1'-0

N

CONSULTANT INFORMATION

LiRo Engineers, Inc.
*A LiRo Group Company*
Syosset, N.Y. 516-214-8157[T]

CONSULTANT SEAL

STATE OF NEW YORK · FRANK F. ULISSE · No. 090111-1 · LICENSED PROFESSIONAL ENGINEER

| REVISION NUMBER | DATE | MADE BY | APP'D BY | REVISION |
|---|---|---|---|---|
| | | | | |

RECORD DRAWING CERTIFICATION

☐ AS BUILT – CHANGES AS NOTED ☐ AS BUILT – NO CHANGES

CONTRACTOR
NAME
SIGNATURE
TITLE DATE

PROJECT COORDINATOR
NAME
SIGNATURE
TITLE DATE

WESTCHESTER COUNTY, NEW YORK
DEPARTMENT OF PUBLIC WORKS AND TRANSPORTATION
DIVISION OF ENGINEERING

**INFRASTRUCTURE REHABILITATION - PHASE 3**
**PLAYLAND PARK, RYE, NEW YORK**
**CROSS AXIS BUILDING E**
**MECHANICALFIRST FLOOR DEMOLITION PLAN**

| | |
|---|---|
| CONTRACT NUMBER | 22-523 |
| SHEET NUMBER | CXE-M-11 |
| DWG NO.: | 294 of 664 |
| SCALE: | AS INDICATED |
| DATE: | 08/23/2022 |
| DPW FILE NUMBER | 1-118-M-1043-0 |
| REV. NO. | 0 |

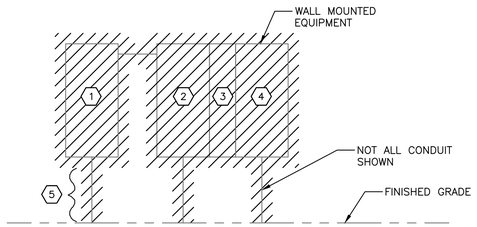


FRONT ELEVATION
N.T.S.

NOTES:

1. FOR ADDITIONAL NOTES, ABBREVIATIONS AND SYMBOLS, SEE DRAWING GE–E–01.
2. CONTRACTOR IS ADVISED THAT LOCATED ON THE SOUTH EXTERIOR ARE FOUR VERY OLD FUSED PANELBOARDS. ALL SHALL BE DISCONNECTED AND REMOVED.
3. ACTUAL FEEDER CIRCUITS ARE UNKNOWN AT THIS TIME. CONTRACTOR SHALL TRACE OUT ALL FEEDER CIRCUITS (UNDERGROUND), VERIFY POWER SOURCE (EITHER FROM LOCAL TRANSFORMER OR FROM QUAD #4 ELECTRICAL BUILDING. BE ADVISED PANELS ARE 20 FEET FROM TRANSFORMER AND 35 FEET FROM BUILDING. ONCE VERIFIED, ALL FEEDER CIRCUITS SHALL BE DISCONNECTED AND REMOVED. UNLESS NOTED OTHERWISE, ABANDON UNDERGROUND CONDUIT IN PLACE.
4. THERE ARE APPROXIMATELY 25 DISTRIBUTION CIRCUITS ASSOCIATED WITH PANEL "ARRAY". 90% ARE NO LONGER USED. HOWEVER, THERE COULD BE "LIVE" CIRCUITS THAT WILL NEED TO BE REPOWERED VIA NEW ELECTRICAL PANELS LOCATED IN THE NEW ELECTRICAL CLOSET. SEE DRAWING CXE–E–05 FOR ADDITIONAL INFORMATION.
5. CONTRACTOR SHALL DISCONNECT AND REMOVE ALL EXPOSED CONDUIT, JUNCTION BOXES, LIGHTS, ETC., MOUNTED TO BUILDING. ASSUME 100' OF CONDUIT.
6. CONTRACTOR IS ADVISED THAT THIS BUILDING DEMOLITION SHALL BE COORDINATED WITH BUILDING CXF.

KEY NOTES:

1. DISCONNECT AND REMOVE 250A–208Y/120 VOLT PANELBOARD
2. DISCONNECT AND REMOVE 200A–240 VOLT (DELTA) PANELBOARD.
3. DISCONNECT AND REMOVE SMALL PANEL AND ASSOCIATED RECEPTACLE. RATINGS UNKNOWN.
4. DISCONNECT AND REMOVE 400A–208Y/120 VOLT PANELBOARD.
5. ± 18 DISTRIBUTION CIRCUITS AND WIRE TO BE DISCONNECTED AND REMOVED. REMOVE CONDUITS TO 18" BELOW GROUND.

Drawing Name: G:\SavinAutocad\2060\25–Playland–Mega–3\E\CXEE–1001.dwg
Projectname: 211001F02 Comments: ----
Printed by: MGadby Date: 26 August 2022 3:44 PM Designed by: ----
Reqf: ----
Xrefs: [TB_24X36_WestchesterCo_3.dwg] [TSG–SVLOGO.dwg] [BCR–A–04.dwg] [BCRE–101.dwg

CONSULTANT INFORMATION

Savin Engineers, P.C.

CONSULTANT SEAL

STATE OF NEW YORK · STEVEN A. MARTINO · 083631 · LICENSED PROFESSIONAL ENGINEER

| REVISION NUMBER | DATE | MADE BY | APP'D BY | REVISION |
|---|---|---|---|---|

RECORD DRAWING CERTIFICATION

☐ AS BUILT – CHANGES AS NOTED ☐ AS BUILT – NO CHANGES

CONTRACTOR
NAME
SIGNATURE
TITLE DATE

PROJECT COORDINATOR
NAME
SIGNATURE
TITLE DATE

WESTCHESTER COUNTY, NEW YORK
DEPARTMENT OF PUBLIC WORKS AND TRANSPORTATION
DIVISION OF ENGINEERING

**INFRASTRUCTURE REHABILITATION - PHASE 3**
**PLAYLAND PARK, RYE, NEW YORK**
**CROSS AXIS BUILDING E**
**ONE LINE DIAGRAM - DEMOLITION**

| | |
|---|---|
| CONTRACT NUMBER | 22-523 |
| SHEET NUMBER | CXE-E-01 |
| DWG NO.: | |
| SCALE: | AS SHOWN |
| DATE: | 8/23/2022 |
| DPW FILE NUMBER | 1-118-E-1044-0 |
| REV. NO. | 0 |

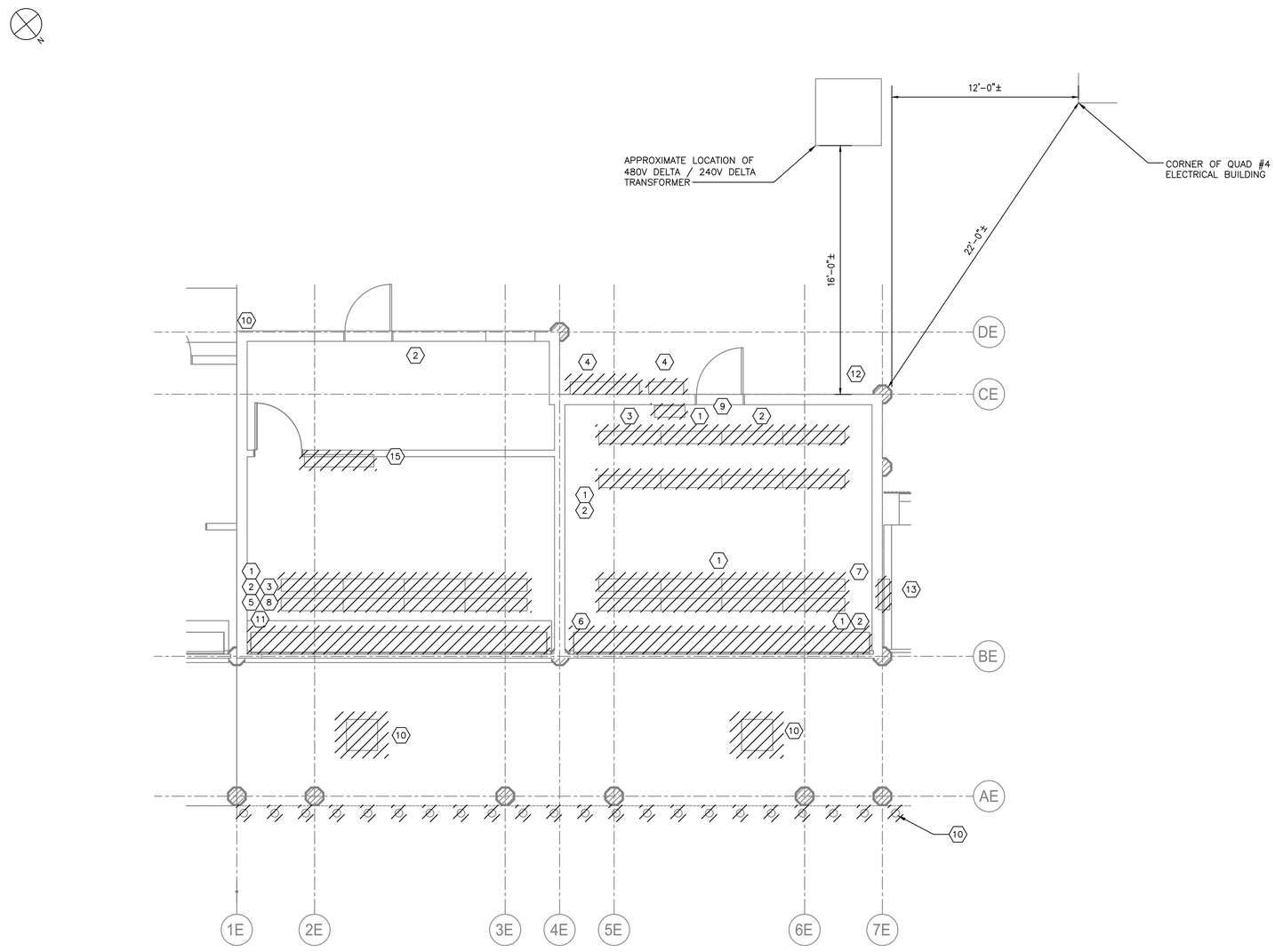


B GROUND FLOOR DEMOLITION POWER AND LIGHTING PLAN
SCALE: 1/4" = 1'-0"

NOTES:

1. FOR ADDITIONAL NOTES, ABBREVIATIONS AND SYMBOLS, SEE DRAWING GE-E-01.
2. ALL REMOVED EQUIPMENT SHALL BE RETURNED TO OWNER UPON REQUEST. OTHERWISE ALL REMOVED MATERIAL SHALL BE LEGALLY DISPOSED OF.
3. DISCONNECT AND REMOVE ALL ELECTRICAL EQUIPMENT, LIGHTING, POWER CONDUIT AND WIRE BACK TO SOURCE. REMOVE ALL PANELBOARDS.
4. ALL ASSOCIATED CIRCUITING TO BE DEMOLISHED FOR RECEPTACLES AND LIGHTING FIXTURES SHALL ASSUME TO BE 3/4" CONDUIT WITH 2#12 & 1#12G, UNLESS OTHERWISE NOTED.
5. CONTRACTOR SHALL DEMOLISH ALL EXISTING JUNCTION BOXES AND ALL ASSOCIATED CONDUITS, WIRES AND APPURTENANCES. FOR BIDDING PURPOSES ASSUME 600 FEET 1"C, 3#12 & 1#12G.
6. ARRAY OF MULTIPLE EXISTING, POOR CONDITION POWER PANELS TO BE DISCONNECTED AND REMOVED. SEE DRAWING CXE-E-01 FOR MORE INFORMATION.
7. MOTOR FOR ROLLING DOOR. CONTRACTOR SHALL DISCONNECT AND REMOVE THE MOTOR AND ALL ASSOCIATED CONDUIT AND WIRE BACK TO SOURCE.
8. DISPOSITION OF EXISTING CCTV/DATA/COMMUNICATIONS SHALL BE BY OTHERS. THIS INCLUDES BOTH INCOMING AND OUTGOING CONDUIT AND CABLES.

| DEMOLITION LEGEND | |
|---|---|
| 1 | RECEPTACLE |
| 2 | LIGHT SWITCH |
| 3 | 24 CKT PANEL "CR-AX3" |
| 4 | EXISITNG PANEL ARRAY (SEE NOTE 6) |
| 5 | 4 CKT PUSHMATIC PANEL |
| 6 | ROLLING DOOR MOTOR (SEE NOTE 7) |
| 7 | 4 CKT PUSHMATIC PANEL (RECESSED IN WALL) |
| 8 | GENERAL DUTY SAFETY SWITCH (30A) |
| 9 | EXHAUST FAN |
| 10 | EXTERIOR LIGHT |
| 11 | 12 CIRCUIT PANEL (BASKETBALL GAME) |
| 12 | COMMUNICATIONS BOX (SEE NOTE 8) |
| 13 | FLOODLIGHT |

0 4' 8'
SCALE: 1/4" = 1'-0"

Drawing Name: G:\SavinAutocad\2060\25-Playland-Mega-3\E\CXEE-1002.dwg
Rev#: Projectname: 211001F02 Comments: ----
Printed by: MGodby Date: 26 August 2022 3:45 PM Designed by: ----
Xrefs: [TB_24X36_WestchesterCo_3.dwg] [TSG-SVLOGO.dwg] [CXE-A-01.dwg] [CXE-E-1005.dwg]

CONSULTANT INFORMATION
Savin Engineers, P.C.

CONSULTANT SEAL
STATE OF NEW YORK
STEVEN A. MARTINO
083631
LICENSED PROFESSIONAL ENGINEER

| REVISION NUMBER | DATE | MADE BY | APP'D BY | REVISION |
|---|---|---|---|---|

RECORD DRAWING CERTIFICATION
AS BUILT - CHANGES AS NOTED
AS BUILT - NO CHANGES

CONTRACTOR
NAME
SIGNATURE
TITLE DATE

PROJECT COORDINATOR
NAME
SIGNATURE
TITLE DATE

WESTCHESTER COUNTY, NEW YORK
DEPARTMENT OF PUBLIC WORKS AND TRANSPORTATION
DIVISION OF ENGINEERING

INFRASTRUCTURE REHABILITATION - PHASE 3
PLAYLAND PARK, RYE, NEW YORK
CROSS AXIS BUILDING E
GROUND FLOOR DEMOLITION - POWER AND LIGHTING PLAN

CONTRACT NUMBER 22-523
SHEET NUMBER CXE-E-02
DWG NO.:
SCALE: AS SHOWN
DATE: 8/23/2022
DPW FILE NUMBER 1-118-E-1045-0
REV. NO. 0

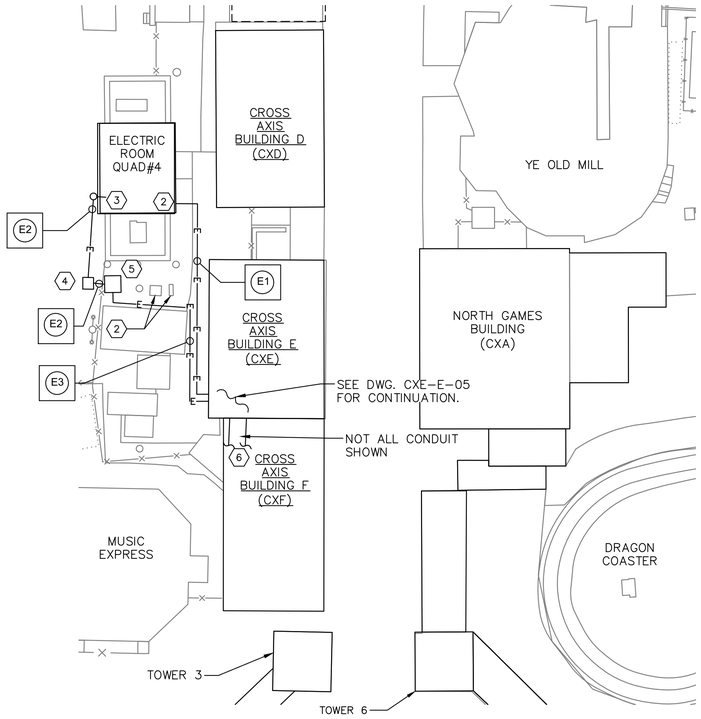


A CXE-E-03 PARTIAL SITE PLAN
SCALE: 1" = 20"

NOTES:

1. FOR ADDITIONAL NOTES, ABBREVIATIONS AND SYMBOLS, SEE DRAWING GE-E-01.
2. FOR PANEL SCHEDULES, SEE DRAWING CXE-E-09.
3. CONTRACTOR SHALL COORDINATE WITH THE CONSTRUCTION MANAGER AND STANDARD AMUSEMENTS FOR EXACT LOCATION OF NEW CXF TRANSFORMER AND ASSOCIATED DISCONNECT SWITCH.

KEY NOTES:

1. LOCATION OF EXTERIOR, PAD-MOUNTED ELECTRICAL EQUIPMENT PREVIOUSLY USED FOR "SPIDER" RIDE AND X-AXIS POWER.
2. INTERNAL TO QUAD #4 ELECTRICAL ROOM, EXTEND WITH NEW 2" CONDUIT WITH 4#2 & 1#8 GND TO 208Y/120 VOLT SWITCHBOARD. MODIFY EXISTING SWITCHBOARD TO ACCEPT A 100 AMP, 3 POLE CIRCUIT BREAKER FOR NEW PANEL CXE-PP1.
3. INTERNAL TO QUAD #4 ELECTRICAL ROOM, EXTEND WITH NEW 3 1/2" CONDUIT WITH 3-350 KCMIL & 1#4 GND TO NEW 480Y/277 VOLT SWITCHBOARD. MODIFY EXISTING SWITCHBOARD TO ACCEPT A 300 AMP, 3 POLE CIRCUIT BREAKER FOR NEW PANEL CXF-PP1.
4. 400 AMP FUSED DISCONNECT SWITCH (FUSED AT 300 AMPS) IN NEMA 3R ENCLOSURE. PROVIDE CONCRETE PAD FOUNDATION AND CHANNEL FRAME SUPPORT. CHANNEL SHALL BE STAINLESS STEEL (304).
5. 225 KVA CXF TRANSFORMER WITH 480 VOLT DELTA PRIMARY AND 208Y/120 VOLT, 3 PHASE, 4-WIRE SECONDARY. TRANSFORMER SHALL BE SUITABLE FOR OUTDOOR USE. MOUNT TRANSFORMER ON PROPERLY SIZED CONCRETE HOUSEKEEPING PAD. PAD SHALL BE MINIMUM 8" THICK AND 4000 PSI CONCRETE.
6. CONTRACTOR IS ADVISED THAT EXISTING PANELS PP-TW2 & 3, TW2-RP AND TW3-RP SHALL BE RELOCATED FROM THE CXF BUILDING. EXTENDING CONDUITS SHALL RUN UNDER THE NEW CXF STRUCTURE AND STUB UP INTO THE NEW ELECTRICAL ROOM LOCATED IN THE CXE BUILDING. SEE CROSS AXIS BUILDING F ELECTRICAL DRAWINGS.

DUCTBANK SCHEDULE

| NAME | FROM | TO | CONDUIT SIZE | CABLE | REMARKS |
|---|---|---|---|---|---|
| E1 | 208Y/120V SWITCHBOARD | PANEL CXE-PP1 | 2"C | 4#2 & 1#8 GND | |
| E2 | 480Y/277V SWITCHBOARD | CXF TRANSFORMER | 3 1/2"C | 3-350 KCMIL & 1#4 GND | |
| E3 | CXF TRANSFORMER | PANEL CXF-PP1 | 2 SETS OF 3 1/2"C | 4-350KCMIL & 1#2 GND (EACH) | VIA DISCONNECT SWITCH |

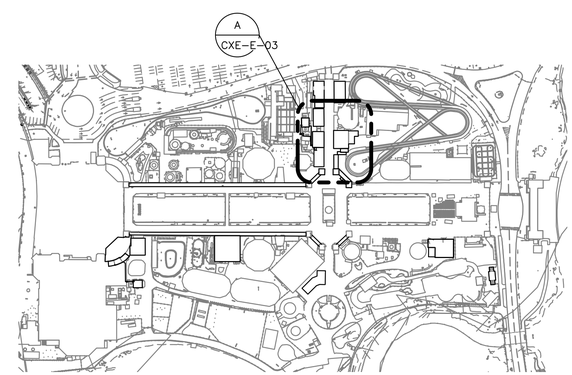


1 KEY PLAN
SCALE: 1" = 200'

0 20' 40'
SCALE: 1" = 20'-0"
0 200' 400'
SCALE: 1" = 200'-0"

Savin Engineers, P.C.

STATE OF NEW YORK · STEVEN A. MARTINO · 083631 · LICENSED PROFESSIONAL ENGINEER

| REVISION NUMBER | DATE | MADE BY | APP'D BY | REVISION |
|---|---|---|---|---|

RECORD DRAWING CERTIFICATION
☐ AS BUILT – CHANGES AS NOTED ☐ AS BUILT – NO CHANGES

CONTRACTOR: NAME / SIGNATURE / TITLE / DATE
PROJECT COORDINATOR: NAME / SIGNATURE / TITLE / DATE

WESTCHESTER COUNTY, NEW YORK
DEPARTMENT OF PUBLIC WORKS AND TRANSPORTATION
DIVISION OF ENGINEERING

INFRASTRUCTURE REHABILITATION - PHASE 3
PLAYLAND PARK, RYE, NEW YORK
CROSS AXIS BUILDING E
SITE DUCTBANK PLAN

CONTRACT NUMBER: 22-523
SHEET NUMBER: CXE-E-03
DWG NO.: 287 of 664
SCALE: AS SHOWN
DATE: 8/23/2022
DPW FILE NUMBER: 1-118-E-1046-0
REV. NO.: 0

Drawing Name: G:\SavinAutocad\2060\25-Playland-Mega-3\E\CXE-1005.dwg
Projectname: ---- Comments: ----
Printed by: MGadby Date: 26 August 2022 3:45 PM Designed by: ----
Xrefs: [TB_24X36_WestchesterCo_3.dwg] [TSG-SVL000.dwg] [TWS-SP0001.dwg] [TWC-SP0001.dwg] [COL-A-01.dwg] [CXE-E-1001.dwg]

NOTES:

1. FOR ADDITIONAL NOTES, ABBREVIATIONS AND SYMBOLS, SEE DRAWING GE–E–01.
2. CONTRACTOR IS ADVISED THAT PANELS SHOWN WILL BE LOCATED IN THE CXE BUILDING ELECTRICAL ROOM. IN ADDITION TO THESE PANELS THERE WILL BE 3 OTHER PANELS RELOCATED TO THIS ROOM AS WELL. SEE CROSS AXIS BUILDING F DRAWINGS FOR ADDITIONAL INFORMATION.

KEY NOTES:

1. INCOMING FEEDER
2. NEW 100 AMP, 3–POLE CIRCUIT BREAKER
3. NEW 208Y/120 VOLT, 3–PHASE, 4–WIRE PANEL WITH 125 AMP MAINS AND 100 AMP MAIN CIRCUIT BREAKER
4. PROVIDE AND INSTALL NEW 300 AMP, 3–POLE BREAKER
5. NEW DISCONNECT SWITCH (NEMA 3R ENCLOSURE)
6. NEW 208Y/120 VOLT, 3–PHASE, 4–WIRE PANEL WITH 600 AMP MAINS AND 600 AMP MAIN CIRCUIT BREAKER
7. NEW RELAY PANEL CXE–RP.

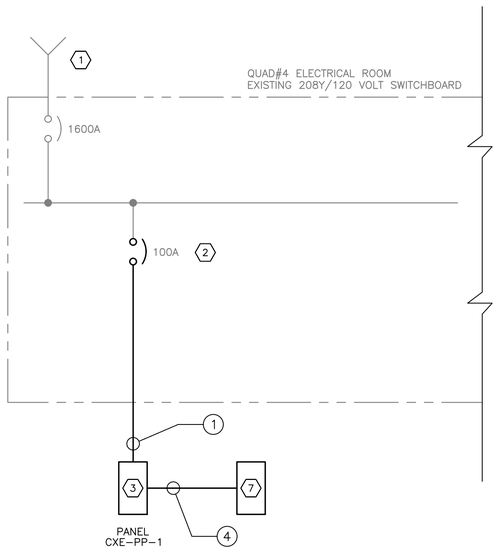


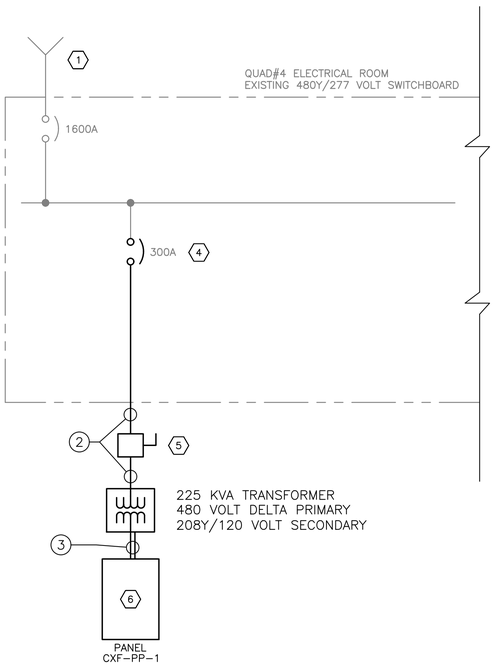


ONE LINE DIAGRAMS
N.T.S.

| CONDUIT AND WIRE LEGEND | |
|---|---|
| NO. | DESCRIPTION |
| 1 | 2"C, 4#2 & 1#8 GND |
| 2 | 3 1/2"C, 3–350 KMCL & 1#4 GND |
| 3 | 2 SETS OF 3 1/2"C, 4–350 KMCL & 1#2 GND |
| 4 | 2"C, 14#12 & 6#12 GNDS |

Drawing Name: G:\SavinAutocad\2060\25–Playland–Mega–3\E\CXE–1006.dwg
Reref: Projectname: 211001F02 Comments: ----
Printed by: MGodby Date: 26 August 2022 3:45 PM Designed by: ----
Xrefs: [TB_24X36_WestchesterCo_3.dwg] [TSG–SVL060.dwg] [BCR–A–04.dwg] [BCRE–101.dwg]

CONSULTANT INFORMATION

Savin Engineers, P.C.

CONSULTANT SEAL

STATE OF NEW YORK · STEVEN A. MARTINO · 083631 · LICENSED PROFESSIONAL ENGINEER

| REVISION NUMBER | DATE | MADE BY | APP'D BY | REVISION |
|---|---|---|---|---|

RECORD DRAWING CERTIFICATION

☐ AS BUILT – CHANGES AS NOTED ☐ AS BUILT – NO CHANGES

CONTRACTOR: NAME / SIGNATURE / TITLE / DATE

PROJECT COORDINATOR: NAME / SIGNATURE / TITLE / DATE

WESTCHESTER COUNTY, NEW YORK
DEPARTMENT OF PUBLIC WORKS AND TRANSPORTATION
DIVISION OF ENGINEERING

**INFRASTRUCTURE REHABILITATION - PHASE 3**
**PLAYLAND PARK, RYE, NEW YORK**
**CROSS AXIS BUILDING E**
**ONE LINE DIAGRAMS**

| | |
|---|---|
| CONTRACT NUMBER | 22-523 |
| SHEET NUMBER | CXE-E-04 |
| DWG NO.: | |
| SCALE: | AS SHOWN |
| DATE: | 8/23/2022 |
| DPW FILE NUMBER | 1-118-E-1047-0 |
| REV. NO. | 0 |

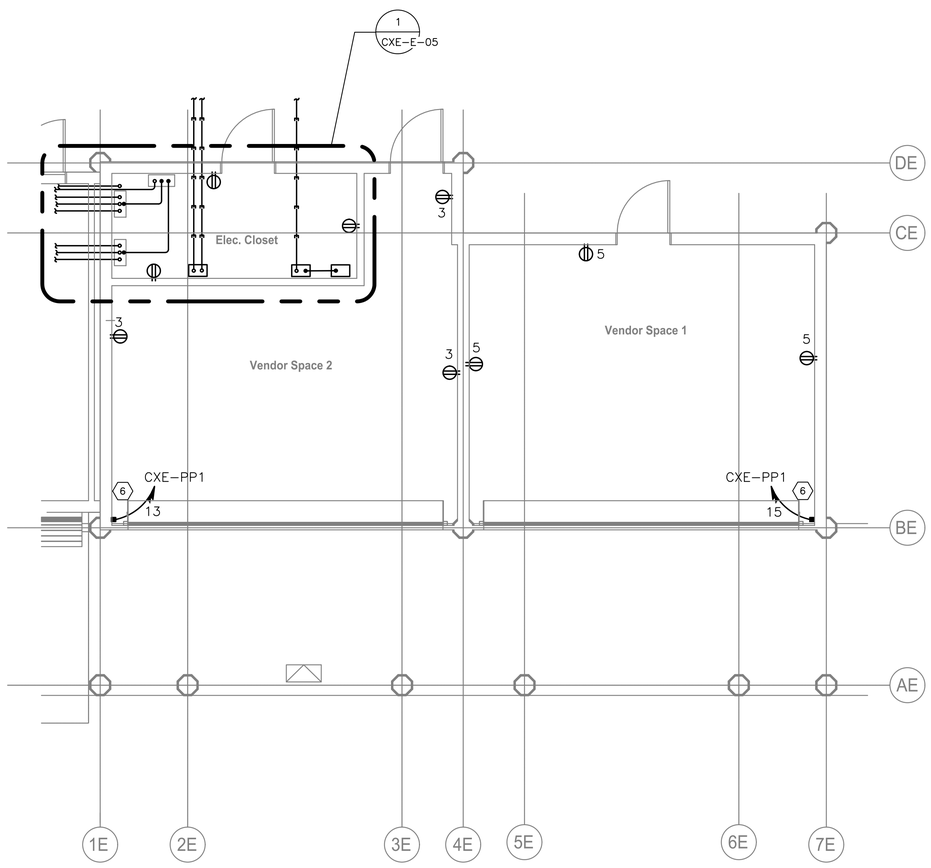


GROUND FLOOR POWER PLAN
1/4"=1'-0"

KEY NOTES:

1. RELOCATED 200 AMP PANEL PP-TW2 & 3. CONTRACTOR SHALL EXTEND ALL DISTRIBUTION CIRCUITS PRESENTLY CONNECTED TO THIS PANEL. CONTRACTOR SHALL TRACE OUT EACH CIRCUIT AND PLAN FOR ALL REQUIRED RECONNECTIONS. SEE DRAWING CXE-E-08 FOR PANEL SCHEDULE.
2. RELOCATED RELAY PANELS TW2-RP AND TW3-RP. SEE CXF DRAWINGS FOR ADDITIONAL INFORMATION.
3. NEW 208Y/120 VOLT, 3 PHASE, 4-WIRE PANEL CXF-PP1 WITH 600 AMP MAINS AND 600 AMP MAIN BREAKER. THIS PANEL WILL BE USED TO SUPPLY NEW KITCHEN LOADS FOR THE CXF BUILDING. KITCHEN LOADS WILL BE DETERMINED BY STANDARD AMUSEMENTS. DISTRIBUTION CIRCUITS ARE NOT REQUIRED AT THIS TIME.
4. NEW 208Y/120 VOLT, 3 PHASE 4-WIRE PANEL CXE-PP1 WITH 125 AMP MAINS AND 100 AMP MAIN CIRCUIT BREAKER. THIS PANEL WILL BE USED FOR ALL ELECTRICAL LOADS IN THE CXE BUILDING.
5. NEW RELAY PANEL CXE-RP. THIS RELAY PANEL SHALL BE USED FOR ALL NEW EXTERIOR LIGHTING FOR BOTH CXE AND CXF BUILDINGS.
6. APPROXIMATE LOCATION OF MOTOR FOR NEW ROLL-UP DOOR. CONTRACTOR SHALL CONFIRM MOTOR LOCATION IN THE FIELD PRIOR TO INSTALLATION. CONTRACTOR SHALL CIRCUIT MOTOR FROM PANEL CXE-PP-1. NUMBER DESIGNATORS INDICATE CIRCUIT NUMBERS. CONTRACTOR SHALL PROVIDE 30 AMP, 2-POLE DISCONNECT SWITCH AT ROLL-UP DOOR MOTOR LOCATION.

NOTES:

1. FOR ADDITIONAL NOTES, ABBREVIATIONS AND SYMBOLS, SEE DRAWING GE-E-01.
2. CONTRACTOR IS ADVISED THAT THERE ARE 3 EXITING PANELS (ONE POWER AND TWO RELAY) THAT NEED TO BE RELOCATED TO THE CXE ELECTRICAL ROOM. THIS INCLUDES ALL ASSOCIATED CONDUIT AND WIRE BOTH FOR POWER AND DISTRIBUTION CIRCUITS. THE INTENT IS TO RELOCATE SAID EQUIPMENT AN PROVIDE NEW CONDUIT AND WIRE FOR CONNECTION TO EXISTING CIRCUITS. FOR ADDITIONAL INFORMATION, SEE CROSS AXIS BUILDING F DRAWINGS. CONTRACTOR SHALL COORDINATE THE REQUIREMENT OF RELOCATING THESE PANELS WITH THE CONSTRUCTION PHASING OF BOTH CXE AND CXF BUILDINGS.
3. ALL RECEPTACLE DESIGNATORS ARE POWERED VIA PANEL CXE-PP-1, UNLESS OTHERWISE NOTED.
4. ALL CIRCUITS SHOWN ON THE DRAWING BUT NOT SPECIFICALLY CALLED OUT ON THE CONDUIT AND WIRE LEGEND SHALL BE 3/4" CONDUIT, 2#12 & 1#12 GND.
5. FOR PANEL SCHEDULES, SEE DRAWING CXE-E-09.
6. CONTRACTOR SHALL ASSUME THAT TWO ADDITIONAL CIRCUITS WILL BE NEEDED FOR EQUIPMENT NOT AS YET SHOWN. ASSUME A TOTAL OF 100 FEET OF 3/4" CONDUIT WITH 3 #12 AWG.

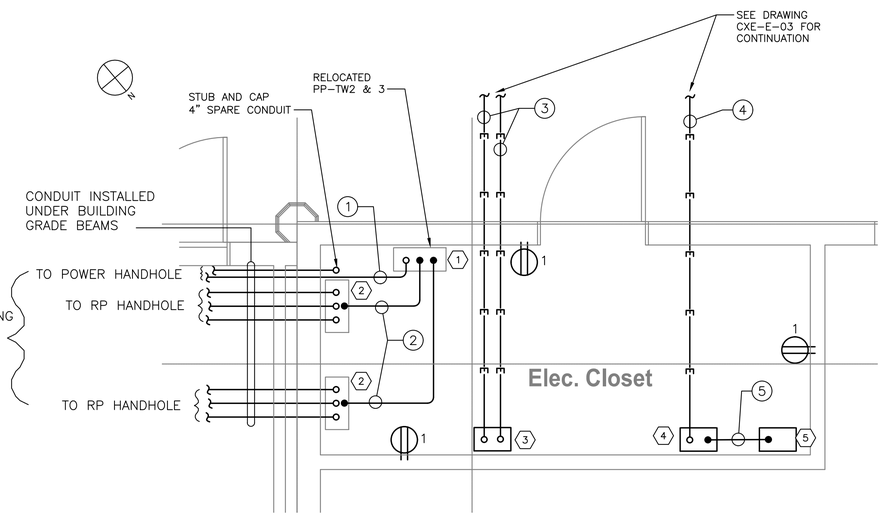


1 CXE-E-05 ELECTRICAL ROOM POWER PLAN
SCALE: 1/2" = 1'-0"

| CONDUIT AND WIRE LEGEND | |
|---|---|
| NO. | DESCRIPTION |
| 1 | 4"C, 4-250 KCMIL & 1#2 GND (OR MATCH EXISTING) |
| 2 | 2"C, 18#10 & 9#10 GNDS (OR MATCH EXISTING) |
| 3 | 2 SETS OF 3 1/2"C, 4-350 KCMIL & 1#2 GND |
| 4 | 2"C, 4#2 & 1#8 GND |
| 5 | 2"C, 18#12 & 7#12 GNDS |

0 2' 4'
SCALE: 1/2" = 1'-0"
0 4' 8'
SCALE: 1/4" = 1'-0"

CONSULTANT INFORMATION
Savin Engineers, P.C.

CONSULTANT SEAL
STATE OF NEW YORK · STEVEN A. MARTINO · 083631 · LICENSED PROFESSIONAL ENGINEER

| REVISION NUMBER | DATE | MADE BY | APP'D BY | REVISION |
|---|---|---|---|---|

RECORD DRAWING CERTIFICATION
AS BUILT - CHANGES AS NOTED
AS BUILT - NO CHANGES

CONTRACTOR
NAME
SIGNATURE
TITLE DATE

PROJECT COORDINATOR
NAME
SIGNATURE
TITLE DATE

WESTCHESTER COUNTY, NEW YORK
DEPARTMENT OF PUBLIC WORKS AND TRANSPORTATION
DIVISION OF ENGINEERING

INFRASTRUCTURE REHABILITATION - PHASE 3
PLAYLAND PARK, RYE, NEW YORK
CROSS AXIS BUILDING E
GROUND FLOOR - POWER PLAN

| | |
|---|---|
| CONTRACT NUMBER | 22-523 |
| SHEET NUMBER | CXE-E-05 |
| DWG NO.: | |
| SCALE: | AS SHOWN |
| DATE: | 8/23/2022 |
| DPW FILE NUMBER | 1-118-E-1048-0 |
| REV. NO. | 0 |



Drawing Name: G:\SavinAutocad\2060\25-Playland-Mega-3\E\CXEE-1007.dwg
Ref#: Projectname: 211001F02 Comments: ----
Printed by: MGadby Date: 26 August 2022 3:46 PM Designed by: ----
Xrefs: [TB_24X36_WestchesterCo_3.dwg] [TSG-SVLOGO.dwg] [CXE-E-1002.dwg] [CXE-A-11.dwg]

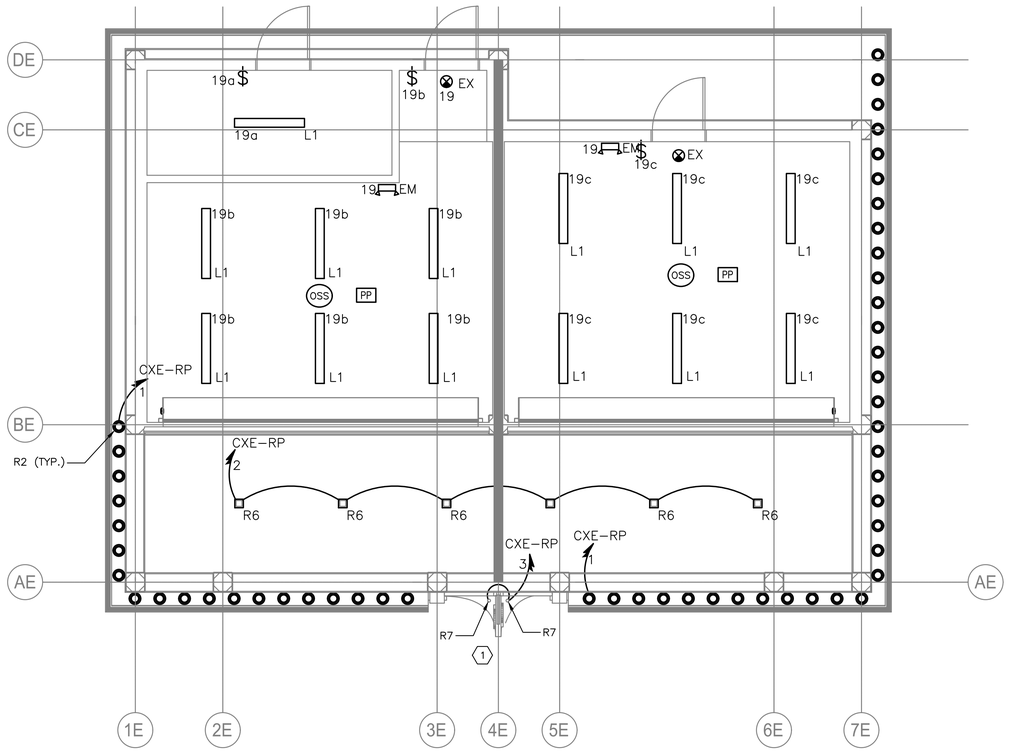


GROUND FLOOR LIGHTING PLAN (CXE)
1/4" = 1'-0"

NOTES:

1. FOR ADDITIONAL NOTES, ABBREVIATIONS AND SYMBOLS, SEE DRAWING GE-E-01.
2. ALL INTERIOR LIGHTING IS POWERED VIA PANEL CXE-PP1, UNLESS NOTED OTHERWISE. CONTRACTOR SHALL CIRCUIT LIGHTING FIXTURES WITH 3/4" CONDUIT WITH 2#12 & 1#12GND.
3. EXIT SIGNS SHALL BE WIRED TO THE UN-SWITCHED LEG OF THE DESIGNATED CIRCUIT.
4. EMERGENCY FIXTURES SHALL BE WIRED TO THE UN-SWITCHED LEG OF THE DESIGNATED CIRCUIT.
5. ALL EXTERIOR LIGHTING SHALL BE CIRCUITED TO RELAY PANEL CXE-RP. CONTRACTOR SHALL CIRCUIT LIGHTING FIXTURES WITH 3/4" CONDUIT WITH 2#10 & 1#10GND, UNLESS NOTED OTHERWISE. CONTRACTOR SHALL DAISY-CHAIN ALL EXTERIOR LIGHT FIXTURES WITH SAME CIRCUIT NUMBER BACK TO RELAY PANEL CXE-RP.
6. FOR LIGHTING PANEL SCHEDULE, REFER TO DRAWING CXE-E-09.
7. NUMBER DESIGNATORS NEXT TO FIXTURES AND/OR CONTROLS INDICATE CIRCUIT NUMBERS.
8. ALL LIGHTING CONTROL COMPONENTS SHALL BE FROM A SINGLE MANUFACTURER, AND MUST BE FROM THE SAME MANUFACTURER FOR ALL BUILDINGS WITHIN THE CONTRACT AND AS PROVIDED ELSEWHERE AT THE PLAYLAND FACILITY.
9. LIGHTING CONTROLS SELECTED SHALL HAVE THE CAPABILITY TO BE CONNECTED TO A MASTER HEAD-END SYSTEM (FUTURE CONTRACT).
10. ALL OUTDOOR LIGHTING SHALL BE POWERED VIA RELAY PANEL CXE-RP. RELAY PANEL SHALL BE EQUIPPED WITH BOTH A BUILT-IN TIME CLOCK AND A PHOTOSENSOR CONTROL.

KEY NOTES:

(1) R7 LIGHT FIXTURES SHALL BE CONNECTED INTO THE SAME CIRCUIT USED FOR POWERING THE REFURBISHED FINIAL LIGHTS. SEE ARCHITECTURAL DRAWINGS FOR ADDITIONAL INFORMATION.

0 4' 8'
SCALE: 1/4" = 1'-0"

CONSULTANT INFORMATION

Savin Engineers, P.C.

CONSULTANT SEAL

STATE OF NEW YORK · STEVEN A. MARTINO · 083631 · LICENSED PROFESSIONAL ENGINEER

| REVISION NUMBER | DATE | MADE BY | APP'D BY | REVISION |
|---|---|---|---|---|
| | | | | |

RECORD DRAWING CERTIFICATION

☐ AS BUILT - CHANGES AS NOTED ☐ AS BUILT - NO CHANGES

CONTRACTOR
NAME
SIGNATURE
TITLE DATE

PROJECT COORDINATOR
NAME
SIGNATURE
TITLE DATE

WESTCHESTER COUNTY, NEW YORK
DEPARTMENT OF PUBLIC WORKS AND TRANSPORTATION
DIVISION OF ENGINEERING

**INFRASTRUCTURE REHABILITATION - PHASE 3**
**PLAYLAND PARK, RYE, NEW YORK**
**CROSS AXIS BUILDING E**
**GROUND FLOOR - LIGHTING PLAN**

| | |
|---|---|
| CONTRACT NUMBER | 22-523 |
| SHEET NUMBER | CXE-E-06 |
| DWG NO.: | |
| SCALE: | AS SHOWN |
| DATE: | 8/23/2022 |
| DPW FILE NUMBER | 1-118-E-1049-0 |
| REV. NO. | 0 |



Drawing Name: G:\SavinAutocad\2060\25-Playland-Mega-3\E\CXEE-1010.dwg
Ref#: Projectname: 211001F02 Comments: ----
Printed by: MGadby Date: 26 August 2022 3:46 PM Designed by: ----
Xrefs: [TB_24X36_WestchesterCo_3.dwg] [TSG-SVLOGO.dwg] [CXE-E-1003.dwg] [CXE-A-41.dwg]

NOTES:

1. FOR ADDITIONAL NOTES, ABBREVIATIONS AND SYMBOLS, SEE DRAWING GE-E-01.
2. MOUNT ATTIC LIGHT SWITCH AT TOP OF ATTIC ACCESS HATCH.

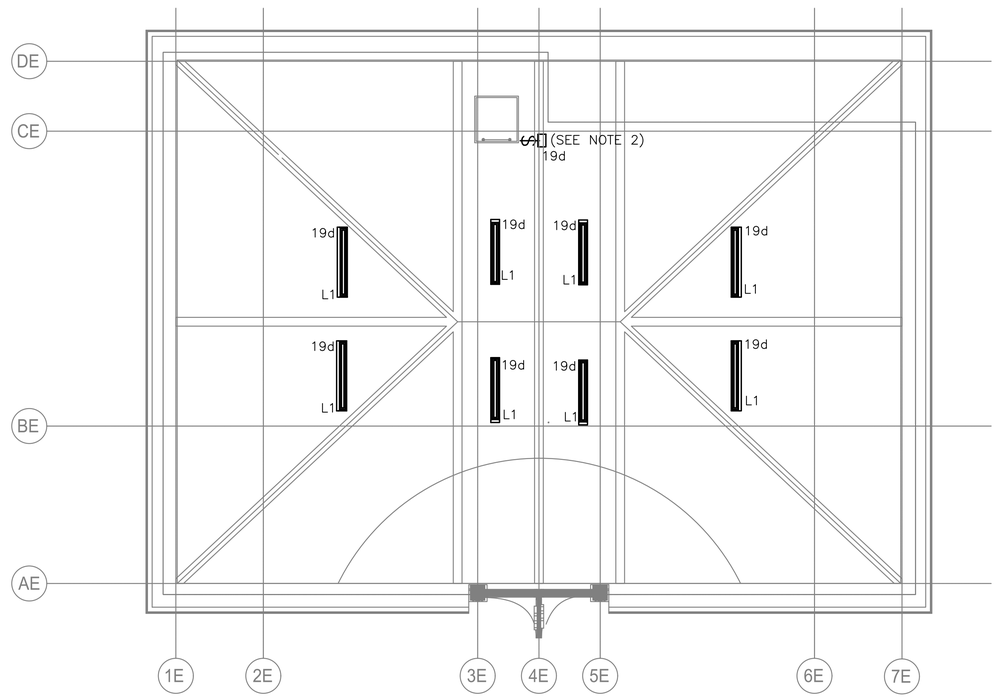


ATTIC LEVEL LIGHTING PLAN
1/4" = 1'-0"

SCALE: 1/4" = 1'-0"

CONSULTANT INFORMATION

Savin Engineers, P.C.

CONSULTANT SEAL

STATE OF NEW YORK · STEVEN A. MARTINO · 083631 · LICENSED PROFESSIONAL ENGINEER

| REVISION NUMBER | DATE | MADE BY | APP'D BY | REVISION |
|---|---|---|---|---|

RECORD DRAWING CERTIFICATION

☐ AS BUILT – CHANGES AS NOTED ☐ AS BUILT – NO CHANGES

CONTRACTOR
NAME
SIGNATURE
TITLE DATE

PROJECT COORDINATOR
NAME
SIGNATURE
TITLE DATE

WESTCHESTER COUNTY, NEW YORK
DEPARTMENT OF PUBLIC WORKS AND TRANSPORTATION
DIVISION OF ENGINEERING

**INFRASTRUCTURE REHABILITATION - PHASE 3**
**PLAYLAND PARK, RYE, NEW YORK**
**CROSS AXIS BUILDING E**
**ATTIC LEVEL - LIGHTING PLAN**

| | |
|---|---|
| CONTRACT NUMBER | 22-523 |
| SHEET NUMBER | CXE-E-07 |
| DWG NO.: | |
| SCALE: | AS SHOWN |
| DATE: | 8/23/2022 |
| DPW FILE NUMBER | 1-118-E-1050-0 |
| REV. NO. | 0 |



Drawing Name: G:\SavinAutocad\2060\25-Playland-Mega-3\E\CXEE-1011.dwg
Projectname: 211001F02 Comments: ----
Printed by: MGadby Date: 26 August 2022 3:46 PM Designed by: ----
Xrefs: [TB_24X36_WestchesterCo_3.dwg] [TSG-SVLOGO.dwg] [CXE-E-1007.dwg] [CXE-A-42.dwg]

NOTES:

1. FOR ADDITIONAL NOTES, ABBREVIATIONS AND SYMBOLS, SEE DRAWING GE-E-01.
2. HISTORIC FINIAL LIGHTS TO BE REFURBISHED AND REINSTALLED UNDER THIS CONTRACT. CONTRACTOR SHALL RE-INSTALL THESE UNITS. REFER TO ARCHITECTURAL DRAWINGS FOR MORE INFORMATION.

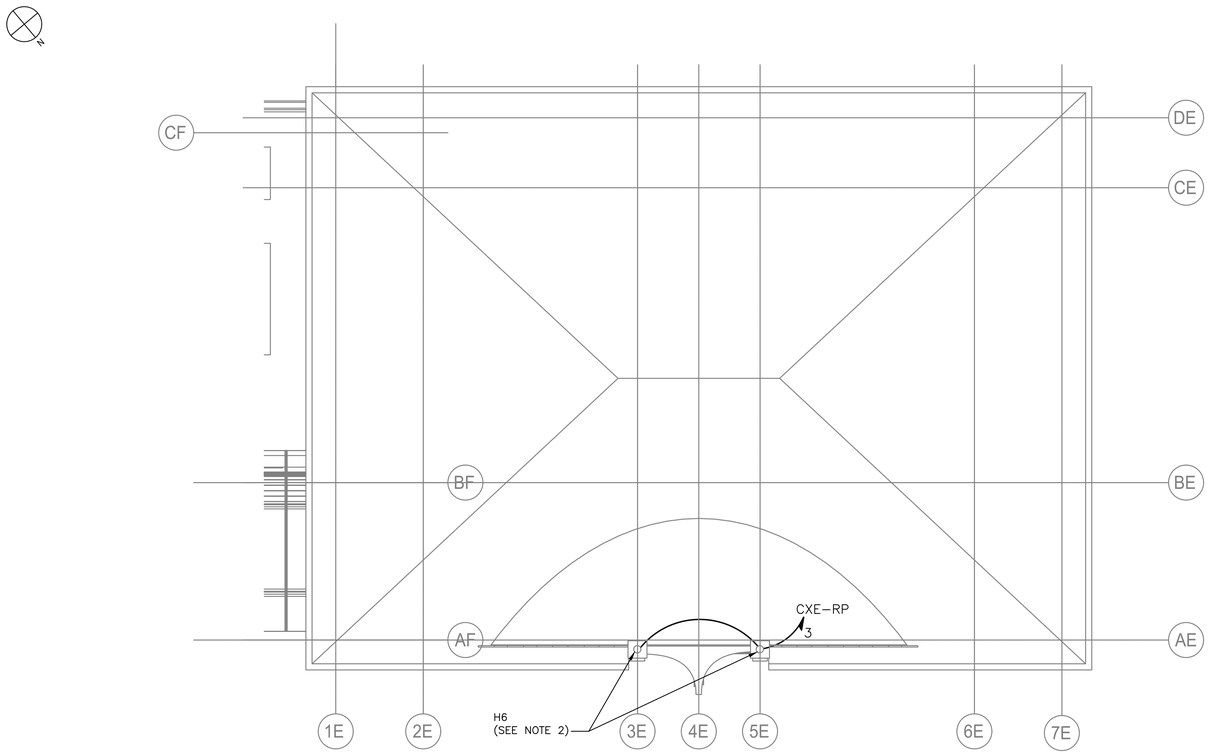


ROOF LIGHTING PLAN
1/4" = 1'-0"

SCALE: 1/4" = 1'-0"

Drawing Name: G:\SavinAutocad\2060\25-Playland-Mega-3\E\CXEE-1013.dwg
Projectname: 211001F02 Comments: ----
Printed by: MGodby Date: 31 August 2022 7:57 AM Designed by: ----
Xrefs: [TB_24X36_WestchesterCo_3.dwg] [TSG-SVL000.dwg] [CXE-E-1008.dwg] [CXE-A-13.dwg]

CONSULTANT INFORMATION

Savin Engineers, P.C.

CONSULTANT SEAL

STATE OF NEW YORK · STEVEN A. MARTINEZ · 083631 · LICENSED PROFESSIONAL ENGINEER

| REVISION NUMBER | DATE | MADE BY | APP'D BY | REVISION |
|---|---|---|---|---|
| | | | | |

RECORD DRAWING CERTIFICATION

☐ AS BUILT - CHANGES AS NOTED ☐ AS BUILT - NO CHANGES

CONTRACTOR
NAME
SIGNATURE
TITLE DATE

PROJECT COORDINATOR
NAME
SIGNATURE
TITLE DATE

WESTCHESTER COUNTY, NEW YORK
DEPARTMENT OF PUBLIC WORKS AND TRANSPORTATION
DIVISION OF ENGINEERING

**INFRASTRUCTURE REHABILITATION - PHASE 3**
**PLAYLAND PARK, RYE, NEW YORK**
**CROSS AXIS BUILDING E**
**ROOF PLAN - LIGHTING AND LIGHTNING PROTECTION PLAN**

| | |
|---|---|
| CONTRACT NUMBER | 22-523 |
| SHEET NUMBER | CXE-E-08 |
| DWG NO.: | |
| SCALE: | AS SHOWN |
| DATE: | 8/23/2022 |
| DPW FILE NUMBER | 1-118-E-1051-0 |
| REV. NO. | 0 |

203-37-664

**PANELBOARD:** CXE-PP1 **LOCATION:** ELECTRICAL ROOM

1 **NEMA RATING** 3 **POLES** **MOUNTING:** SURFACE

125 **AMP BUS RATING** 100 **AMP MAIN BREAKER** 42 **KA SHORT CIRCUIT RATING**

208Y/120 **VOLTS** 3 **PHASE** 4 **WIRE** **ELECTRONIC GRADE :** NO

| CIRCUIT NO. | DESCRIPTION | LOAD KVA PHASE A | LOAD KVA PHASE B | LOAD KVA PHASE C | BREAKER AMPS / POLES | NOTES | CIRCUIT NO. | DESCRIPTION | LOAD KVA PHASE A | LOAD KVA PHASE B | LOAD KVA PHASE C | BREAKER AMPS / POLES | NOTES |
|---|---|---|---|---|---|---|---|---|---|---|---|---|---|
| 1 | RECEPTACLES | 0.2 | | | 20/1 | | 2 | CXE - EXTERIOR SOFFITS | 0.2 | | | 20/1 | |
| 3 | RECEPTACLES | | 0.2 | | 20/1 | | 4 | CXE - PORCH LIGHTING | | 0.2 | | 20/1 | |
| 5 | RECEPTACLES | | | 0.2 | 20/1 | | 6 | CXE - GAMES SIGNAGE LIGHTING | | | 0.2 | 20/1 | |
| 7 | FIRE ALARM | 0.1 | | | 20/1 | | 8 | CXF - EXTERIOR SOFFITS | 0.2 | | | 20/1 | |
| 9 | COM CABINET | | 0.1 | | 20/1 | | 10 | CXF - CANOPY LIGHTING | | 0.2 | | 20/1 | |
| 11 | SPARE | | | - | 20/1 | | 12 | CXF - COLONNADE LIGHTING | | | 0.5 | 20/1 | |
| 13 | ROLL-UP DOOR | 1.2 | | | 20/1 | | 14 | SPARE | - | | | 20/1 | |
| 15 | ROLL-UP DOOR | | 1.2 | | 20/1 | | 16 | SPARE | | - | | 20/1 | |
| 17 | SPARE | | | - | 20/1 | | 18 | SPARE | | | - | 20/1 | |
| 19 | BUILDING LIGHTING | 0.5 | | | 20/1 | | 20 | RELAY PANEL CXE-RP POWER (120V) | 0.6 | | | 20/1 | |
| 21 | SPARE | | - | | 20/1 | | 22 | SPARE | | - | | 20/1 | |
| 23 | SPARE | | | - | 20/1 | | 24 | SPARE | | | - | 20/1 | |
| 25 | SPACE | | | | | | 26 | SPACE | | | | | |
| 27 | SPACE | | | | | | 28 | SPACE | | | | | |
| 29 | SPACE | | | | | | 30 | SPACE | | | | | |
| 31 | SPACE | | | | | | 32 | SPACE | | | | | |
| 33 | SPACE | | | | | | 34 | SPACE | | | | | |
| 35 | SPACE | | | | | | 36 | SPACE | | | | | |
| 37 | SPACE | | | | | | 38 | SPACE | | | | | |
| 39 | SPACE | | | | | | 40 | SPACE | | | | | |
| 41 | SPACE | | | | | | 42 | SPACE | | | | | |
| | **TOTAL PHASE KVA THIS SIDE** | 2 | 1.5 | 0.2 | | | | **TOTAL PHASE KVA THIS SIDE** | 1 | 0.4 | 0.7 | | |
| | | | | | | | | **TOTAL KVA PER PHASE** | 3 | 1.9 | 0.9 | | |
| | | | | | | | | **TOTAL THREE PHASE KVA** | 5.8 | | | | |

NOTES:
1.
2.
3.
4.

NOTES CONT.:
5.
6.
7.
8.

NOTES:

1. FOR ADDITIONAL NOTES, ABBREVIATIONS AND SYMBOLS, SEE DRAWING GE-E-01.
2. FOR PANEL SCHEDULE PP-TW2 & 3 SEE CXF BUILDING-DRAWING CXF-E-08.

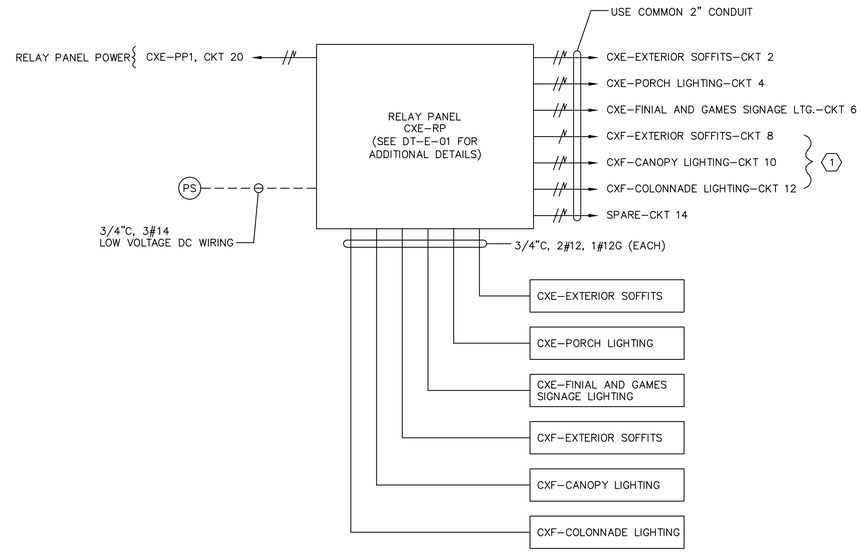


1 CXE-E-07 EXTERIOR CXE & CXF EXTERIOR BUILDING WIRING DETAIL

KEY NOTE:

1 REFER TO CXF BUILDING LIGHTING DRAWINGS FOR FIXTURE LOCATIONS.

| CXE-RP | LOCATION: CXE ELECTRICAL CLOSET | |
|---|---|---|
| CKT NO | DESCRIPTION | NOTES |
| 1 | CXE-EXTERIOR SOFFITS | |
| 2 | CXE-PORCH LIGHTING | |
| 3 | CXE-FINIAL AND GAMES SIGNAGE LIGHTING | |
| 4 | CXF-EXTERIOR SOFFITS | |
| 5 | CXF-CANOPY LIGHTING | |
| 6 | CXF-COLONNADE LIGHTING | |
| 7 | SPARE | |
| 8 | SPARE | |


Drawing Name: G:\SavinAutocad\2060\25-Playland-Mega-3\E\CXEE-1012.dwg
Projectname: 211001F02 Comments: ----
Printed by: MGadby Date: 26 August 2022 3:47 PM Designed by: ----
Xrefs: [TB_24X36_WestchesterCo_3.dwg] [TSG-SVLOGO.dwg] [BCR-A-04.dwg] [BCRE-101.dwg]


CONSULTANT INFORMATION

Savin Engineers, P.C.

CONSULTANT SEAL

STATE OF NEW YORK · STEVEN A. MARTINO · 083631 · LICENSED PROFESSIONAL ENGINEER

| REVISION NUMBER | DATE | MADE BY | APP'D BY | REVISION |
|---|---|---|---|---|

RECORD DRAWING CERTIFICATION

☐ AS BUILT - CHANGES AS NOTED ☐ AS BUILT - NO CHANGES

CONTRACTOR
NAME
SIGNATURE
TITLE DATE

PROJECT COORDINATOR
NAME
SIGNATURE
TITLE DATE

WESTCHESTER COUNTY, NEW YORK
DEPARTMENT OF PUBLIC WORKS AND TRANSPORTATION
DIVISION OF ENGINEERING

**INFRASTRUCTURE REHABILITATION - PHASE 3**
**PLAYLAND PARK, RYE, NEW YORK**
**CROSS AXIS BUILDING E**
**PANEL SCHEDULES**

CONTRACT NUMBER **22-523**
SHEET NUMBER **CXE-E-09**
DWG NO.:
SCALE: **AS SHOWN**
DATE: **8/23/2022**
DPW FILE NUMBER **1-118-E-1052-0**
REV. NO. **0**

# FIRE ALARM GENERAL NOTES:

1. THE FIRE ALARM AND SMOKE DETECTION SYSTEM SHALL BE INSTALLED IN COMPLIANCE WITH THE NATIONAL FIRE PREVENTION CODE (NFPA 72 - 2016), NATIONAL LIFE SAFETY CODE (NFPA 101 - 2018), NATIONAL ELECTRICAL CODE (NFPA 70 - 2017), 2020 NEW YORK STATE BUILDING CODE, AND ALL LOCAL MUNICIPAL CODES HAVING JURISDICTION.
2. THE FIRE ALARM AND SMOKE DETECTION SYSTEM SHALL BE MAINTAINED AND TESTED IN COMPLIANCE WITH NFPA 72.
3. A CONTINUOUS FIRE WATCH SHALL BE PROVIDED IF THERE IS FIRE SYSTEM IMPAIRMENT.
4. ALL FIRE ALARM STROBES SHALL BE SYNCHRONIZED AND SHALL REMAIN FLASHING AFTER SYSTEM SILENCE FUNCTION.
5. CONTRACTOR TO UPDATE ALL NECESSARY CORRESPONDING FIRE ALARM SIGNALS WHEN PERFORMING ANY MODIFICATION TO THE BUILDING, WHERE APPLICABLE, MAKE SURE THE SAME UPDATES ARE COORDINATED AND TRANSMITTED TO THE CENTRAL STATION.
6. HORNS WILL SOUND A TEMPORAL 3-SIGNALING RHYTHM PER NFPA 72.
7. EXACT PLACEMENT OF DEVICES TO BE VERIFIED IN FIELD.
8. ALL SMOKE DETECTORS SHALL BE INSTALLED A MINIMUM OF 36" FROM ANY HVAC SUPPLY OR RETURN REGISTER.
9. FIRE ALARM WIRING SHALL BE INSTALLED IN A MINIMUM OF 3/4" RIGID GALVANIZED CONDUIT OR BY NEW YORK STATE BUILDING CODE APPROVED WIRING METHODS.
10. WALL MOUNTED HORNS AND VISUAL FIRE ALARMS (STROBES) SHALL BE MOUNTED NOT LESS THAN 6'-8" AND NOT GREATER THAN 8'-0" A.F.F. WHERE LOCAL CONDITIONS ARE TOO LOW TO PERMIT THE REQUIRED MINIMUM INSTALLATION HEIGHT, INSTALL THE STROBES AT 6" BELOW THE CEILING.
11. MANUAL PULL STATIONS SHALL BE MOUNTED AT 4'-0" A.F.F. AND SHALL BE INSTALLED WITHIN 5'-0" OF EXIT DOOR.
12. WIRING SHALL BE INSTALLED IN ACCORDANCE WITH NFPA 70 AND AS RECOMMENDED BY THE MANUFACTURER OF THE FIRE ALARM SYSTEM.
13. ALL EQUIPMENT AND COMPONENTS SHALL BE NEW AND SHALL BE TESTED AND LISTED BY A NATIONALLY RECOGNIZED APPROVALS AGENCY.
14. ALL EQUIPMENT SHALL BE ATTACHED TO WALLS AND CEILING/FLOOR ASSEMBLIES AND SHALL BE HELD FIRMLY IN PLACE. FASTENERS AND SUPPORTS SHALL BE ADEQUATE TO SUPPORT REQUIRED LOAD.
15. ALL FIELD WIRING SHALL BE ELECTRICALLY SUPERVISED FOR OPEN CIRCUIT AND GROUND FAULTS.
16. ALL BOXES AND CABINETS SHALL BE UL LISTED FOR THEIR USE AND PURPOSE.
17. DIALER OR ALARM COMMUNICATOR TRANSMITTER SHALL TRANSMIT ALL POINTS AS THEY ARE REPORTED TO THE HOST PANEL.
18. ALL DEVICES SHALL BE COMPATIBLE WITH EXISTING SYSTEM (EST3 BY EDWARDS). FIRE ALARM PRODUCTS SHALL BE APPROVED BY THE ENGINEER OR OWNER.
19. ALL PENETRATIONS SHALL BE FIRE PROOFED AS REQUIRED.

# FIRE ALARM CONSTRUCTION NOTES:

1. ELECTRICIAN SHALL COORDINATE WITH THE FIRE ALARM VENDOR TO PRODUCE A SEPARATE FIXED PRICE TO PERFORM THE SCOPE OF WORK CONTAINED ON THESE DRAWINGS IN CONNECTION WITH THE FIRE ALARM SYSTEM. THESE DRAWINGS ARE PROVIDED FOR BID PURPOSES ONLY AND TO ILLUSTRATE THE SCOPE OF WORK INTENT OF THIS PROJECT.
2. ELECTRICIAN SHALL OBTAIN SEPARATE PERMIT FOR FIRE ALARM PRIOR TO INSTALLATION.
3. PRIOR TO SUBMISSION OF THE FIRE ALARM SYSTEM BID, THE FIRE ALARM VENDOR IS RESPONSIBLE TO REVIEW ALL DRAWINGS (I.E., MECHANICAL/HVAC, ELECTRICAL, PLUMBING, FIRE SPRINKLER, AND ARCHITECTURAL). UPON SUBMISSION OF THE FIRE ALARM BID, THE FIRE ALARM VENDOR CERTIFIES THAT ALL DRAWINGS HAVE BEEN REVIEWED, THE SITE HAS BEEN VISITED/INSPECTED (IF APPLICABLE), AND THAT ALL LOCAL FIRE DEPARTMENT REQUIRED ITEMS ARE FULLY UNDERSTOOD AND INCLUDED IN THE BID PRICE (NO CHANGE ORDERS ALLOWED).
4. FIRE ALARM VENDOR MUST ADHERE TO NFPA 72, NFPA 101, AND ALL LOCAL CODES AND AUTHORITIES HAVING JURISDICTION. THE ENTIRE SYSTEM MUST BE DESIGNED IN ACCORDANCE WITH THESE AUTHORITIES HAVING JURISDICTION.
5. FIRE ALARM VENDOR SHALL INCLUDE THE COST OF THE ENGINEERING FEE, PROGRAMMING CHARGE, NEW EQUIPMENT, CONNECTION & TESTING, TROUBLESHOOTING, ATTENDANCE AT THE FIRE ALARM INSPECTION, ETC. AS PART OF THE TOTAL PRICE.
6. FIRE ALARM VENDOR MUST SUBMIT APPROVED, SIGNED AND SEALED DESIGN/BUILD DRAWINGS TO THE ENGINEER AND OWNER, INCLUDING: FIRE ALARM RISER DIAGRAM, LAYOUT, EQUIPMENT LIST, SPECIFICATIONS PRIOR TO START OF INSTALLATION. INSTALLATION OF THE NEW FIRE ALARM SYSTEM SHALL NOT PROCEED PRIOR TO WRITTEN APPROVAL BY THE ENGINEER.
7. FIRE ALARM VENDOR SHALL SUBMIT SHOP DRAWINGS IN COMPLIANCE WITH NFPA 72, 2020 NEW YORK STATE BUILDING CODE, AND 2020 NEW YORK STATE FIRE CODE SECTION 907.1.1.
8. ALL FIRE ALARM CABLES AND WIRING MUST BE PLENUM RETURN RATED CABLES.

# SCOPE OF WORK:

1. DEMOLISH EXISTING FIRE ALARM DEVICES AND ASSOCIATED WIRING BACK TO SOURCE.
2. INSTALL NEW FIRE ALARM DEVICES AS PER DRAWINGS. PROVIDE ALL NECESSARY WIRING, CONNECTIONS, CONDUIT, AND FITTINGS.
3. NEW FIRE ALARM DEVICES AND SIGNAL WIRING SHALL BE CONNECTED TO THE EXISTING "QUAD 4" FIRE ALARM PANEL.
4. NEW FIRE ALARM SYSTEM SHALL BE INSPECTED BY A THIRD PARTY INSPECTION AGENCY CERTIFIED BY WESTCHESTER COUNTY. ELECTRICIAN SHALL INCLUDE INSPECTION IN BASE BID SCOPE AND COORDINATE WITH INSPECTION AGENCY TO CERTIFY THE SYSTEM.
5. ELECTRICIAN SHALL COORDINATE WITH THE FIRE ALARM VENDOR (OPEN SYSTEMS METRO) TO RE-PROGRAM AND TEST THE CENTRAL FIRE ALARM SYSTEM IN THE PLAYLAND MAIN ADMINISTRATION BUILDING FOLLOWING THE INSTALLATION OF NEW SYSTEM AND DEVICES.
6. ELECTRICIAN SHALL COORDINATE WITH THE FIRE ALARM CENTRAL MONITORING PROVIDER (STATEWIDE MONITORING) TO TEST AND VERIFY CENTRAL MONITORING OF PARKWIDE SYSTEM FOLLOWING THE INSTALLATION OF NEW SYSTEM AND DEVICES.

# FIRE ALARM SYSTEM RISER NOTES:

1. LOCATION OF DEVICES AND EQUIPMENT ARE APPROXIMATE. FINAL LOCATIONS MUST BE DETERMINED ACCORDING TO THE SITE CONDITIONS.
2. VISUAL FIRE ALARMS (STROBES) SHALL HAVE MINIMUM 5'-0" CLEARANCE FROM ANY OBSTRUCTIONS, SHALL BE FIELD ADJUSTABLE, AND SHALL BE RATED AT 75 CANDELA MINIMUM, UNLESS OTHERWISE NOTED. ALL STROBES SHALL BE SYNCHRONIZED AT LINE OF SIGHT.
3. WALL MOUNTED HORNS AND VISUAL FIRE ALARMS (STROBES) SHALL BE MOUNTED NOT LESS THAN 6'-8" AND NOT GREATER THAN 8'-0" A.F.F. WHERE LOCAL CONDITIONS ARE TOO LOW TO PERMIT THE REQUIRED MINIMUM INSTALLATION HEIGHT, INSTALL THE STROBES AT 6" BELOW THE CEILING.
4. MANUAL PULL STATIONS SHALL BE MOUNTED AT 4'-0" A.F.F. AND SHALL BE INSTALLED WITHIN 5'-0" OF EXIT DOOR.
5. FUSE CUT OUT BOX SHALL COMPLY WITH THE NATIONAL ELECTRICAL CODE AND HAVE A REMOVABLE SOLID COPPER NEUTRAL BAR.
6. ALL CONDUITS AND CONTROL PANELS SHALL BE GROUNDED TO BUILDING STEEL/GROUND GRID WITH A MINIMUM #8 CONDUCTOR.
7. RISER DIAGRAM ON THIS DRAWING IS FOR DESIGN PURPOSE ONLY. FIRE ALARM CONTRACTOR SHALL PROVIDE A COMPLETE RISER DIAGRAM WITH ACTUAL FIELD WIRING REQUIRED.
8. EACH FIRE ALARM INITIATING AND INDICATING CIRCUIT SHALL BE ELECTRICALLY SUPERVISED.
9. EACH VISUAL FIRE ALARM CIRCUIT SHALL CONTAIN AT LEAST 20% SPARE CAPACITY.
10. ALL CONTROL PANELS, FUSE CUTOUTS, TROUBLE BELLS, ALARM BELLS AND SILENCE SWITCHES SHALL BE PROPERLY LABELED WITH MINIMUM 1/4" HIGH LETTERS.
11. WIRING FOR AUDIBLE AND VISUAL ALARM NOTIFICATION DEVICES SHALL BE ARRANGED SO THAT A LOSS OF A PORTION OF THE WIRING ON A FLOOR WILL NOT RENDER MORE THAN 60% OF THE DEVICES OF EACH TYPE INOPERATIVE, AND THE DEVICES SHALL BE SO CONNECTED TO THE CIRCUITRY (i.e., BY MEANS OF ALTERNATE CIRCUITS) AS TO MAINTAIN AT LEAST PARTIAL AUDIBILITY/VISIBILITY THROUGHOUT THE ENTIRE FLOOR.
12. THE FIRE ALARM CONTROL PANEL SHALL BE PROVIDED WITH A KEY SWITCH. DURING DAILY TESTS, THE KEY SWITCH SHALL BE USED TO BYPASS THE CIRCUITS THAT CONTROL DAMPERS AND FAN SHUTDOWN.
13. THE DAMPERS AND FAN BYPASS FUNCTION SHALL BE AUTOMATICALLY RESTORED TO BE NORMAL UN-SHUNTED CONDITION WITHIN FORTY-FIVE MINUTES, IF NOT DONE SO MANUALLY BEFORE FORTY-FIVE MINUTES.
14. PERFORM FIRE ALARM SYSTEM TESTING PER THE 2020 NEW YORK STATE FIRE CODE AND NFPA 72.

# FIRE ALARM LEGEND:

| SYMBOL | DESCRIPTION |
|---|---|
| FA | FIRE ALARM SUB PANEL |
| S | SMOKE DETECTOR |
| H | HEAT DETECTOR |
| F | MANUAL FIRE ALARM PULL STATION |
| # H | FIRE ALARM WALL MOUNTED HORN/STROBE<br># = CANDELA RATING |
| FCO | FUSED CUT OUT SWITCH/FUSED LOCKABLE DISCONNECT SWITCH |
| ST # | WALL MOUNTED STROBE<br># = CANDELA RATING |
| | FLOW SWITCH CONNECTED TO FIRE ALARM SYSTEM |
| GV | SPRINKLER VALVE TAMPER SWITCH CONNECTED TO FIRE ALARM SYSTEM |
| S | DUCT MOUNTED SMOKE DETECTOR |
| FSR | FIRE ALARM INTERFACE RELAY FOR HVAC FAN SHUTDOWN |

# FIRE ALARM ABBREVIATIONS:

| | |
|---|---|
| E | EXISTING TO REMAIN |
| ER | EXISTING TO BE RELOCATED |
| EL | EXISTING AS SHOWN IN NEW LOCATION |
| FACP | FIRE ALARM CONTROL PANEL |
| FCO | FUSED CUT OUT |
| FCU | FIRE ALARM CONTROL UNIT |
| FP | FIRE PROTECTION |
| N | NEW |
| RTU | ROOFTOP UNIT |
| SP | SPRINKLER |
| WP | WEATHERPROOF |
| X | EXISTING TO BE DEMOLISHED |

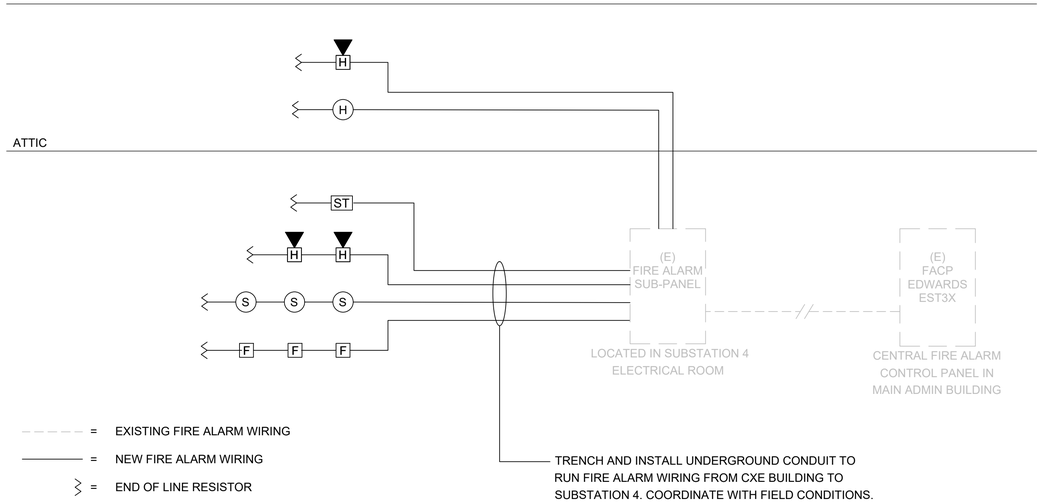


NOTES:
1. WIRING SHOWN ON RISER IS DIAGRAMMATICAL. PROVIDE NEW FIRE ALARM CABLE AS REQUIRED AND INSTALL WIRING LOOPS AS BEST SUITED FOR FIELD CONDITIONS.
2. THE BUILDING IS FULLY SPRINKLERED.

## 1 FIRE ALARM RISER DIAGRAM

SCALE: NOT TO SCALE

| | | SYSTEM OUTPUTS | | | | | | | | | | | | | | | | |
|---|---|---|---|---|---|---|---|---|---|---|---|---|---|---|---|---|---|---|
| | | Control Unit Annunciation | | | | | | Notification | | | | | | | | | Supp. | |
| | EVENT | A ACTUATE COMMON ALARM SIGNAL | B ACTUATE AUDIBLE ALARM SIGNAL | C INDICATE COMMON SUPERVISORY STATUS | D ACTUATE AUDIBLE SUPERVISORY SIGNAL | E INDICATE COMMON TROBLE SIGNAL | F ACTUATE AUDIBLE COMMON TROUBLE SIGNAL | G ACTIVATE HORNS AND STROBES THROUGHOUT THE PROTECTED AREA | H DISPLAY/PRINT CHANGE OF STATUS | I TRANSMIT AUTOMATIC ALARM SIGNAL TO SUPERVISING STATION | J TRANSMIT MANUAL ALARM SIGNAL TO SUPERVISING STATION | K TRANSMIT WATERFLOW ALARM SIGNAL TO SUPERVISING STATION | L TRANSMIT SUPERVISORY SIGNAL TO SUPERVISING STATION | M TRANSMIT CO ALARM SIGNAL TO SUPERVISING STATION | N TRANSMIT TROUBLE SIGNAL TO SUPERVISING STATION | O ACTIVATE TEMPORAL 4 SIGNAL ON ACTIVATED CO DETECTOR SOUNDER BASES | P SHUT DOWN CO PRODUCING EQUIPMENT | Q SHUT DOWN FANS/AIR HANDLING UNITS |
| 1 | ACTIVATION OF MANUAL PULL STATION | X | X | | | | | X | X | | X | | | | | | | |
| 2 | ACTIVATION OF SMOKE DETECTOR | X | X | | | | | X | X | X | | | | | | | | X |
| 3 | ACTIVATION OF DUCT MOUNTED SMOKE DETECTOR | X | X | | | | | X | X | X | | | | | | | | X |
| 4 | ACTIVATION OF HEAT DETECTOR | X | X | | | | | X | X | X | | | | | | | | X |
| 5 | WATERFLOW SWITCH FOR FIRE SPRINKLER SYSTEM | X | X | | | | | X | X | | | X | | | | | | X |
| 6 | ACTIVATION OF CARBON MONOXIDE DETECTOR | | | X | X | | | X | X | | | | | X | | X | X | |
| 7 | SPRINKLER VALVE (TAMPER SWITCH) | | | X | X | | | | X | | | | X | | | | | |
| 8 | FIRE ALARM LOSS OF PRIMARY/SECONDARY POWER | | | | | X | X | | X | | | | | | X | | | |
| 9 | FIRE ALARM SYSTEM WIRING FAILURE | | | | | X | X | | X | | | | | | X | | | |

## 2 FIRE ALARM SEQUENCE OF OPERATIONS MATRIX

SCALE: NOT TO SCALE


CONSULTANT INFORMATION
LiRo Engineers, Inc.
A LiRo Group Company
Syosset, N.Y. 516-214-8157[T]


CONSULTANT SEAL
STATE OF NEW YORK · FRANK F. UCCIO · No. 090111-1 · LICENSED PROFESSIONAL ENGINEER

| REVISION NUMBER | DATE | MADE BY | APP'D BY | REVISION |
|---|---|---|---|---|

RECORD DRAWING CERTIFICATION
☐ AS BUILT – CHANGES AS NOTED ☐ AS BUILT – NO CHANGES

CONTRACTOR
NAME
SIGNATURE
TITLE DATE

PROJECT COORDINATOR
NAME
SIGNATURE
TITLE DATE

WESTCHESTER COUNTY, NEW YORK
DEPARTMENT OF PUBLIC WORKS AND TRANSPORTATION
DIVISION OF ENGINEERING

**INFRASTRUCTURE REHABILITATION - PHASE 3**
**PLAYLAND PARK, RYE, NEW YORK**
**CROSS AXIS BUILDING E**
**FIRE ALARM NOTES, SYMBOLS, LEGEND, AND RISER DIAGRAM**

| | |
|---|---|
| CONTRACT NUMBER | 22-523 |
| SHEET NUMBER | CXE-FA-01 |
| DWG NO.: | 304 of 664 |
| SCALE: | As indicated |
| DATE: | 08/23/2022 |
| DPW FILE NUMBER | 1-118-FA-1053-0 |
| REV. NO. | 0 |

## FIRE ALARM DEMOLITION NOTES:

1. NO EXISTING FIRE ALARM DEVICES WERE NOTED DURING BUILDING SURVEY. ANY ABANDONED DEVICES OR WIRING DISCOVERED DURING THE COURSE OF DEMOLITION SHALL BE REMOVED.

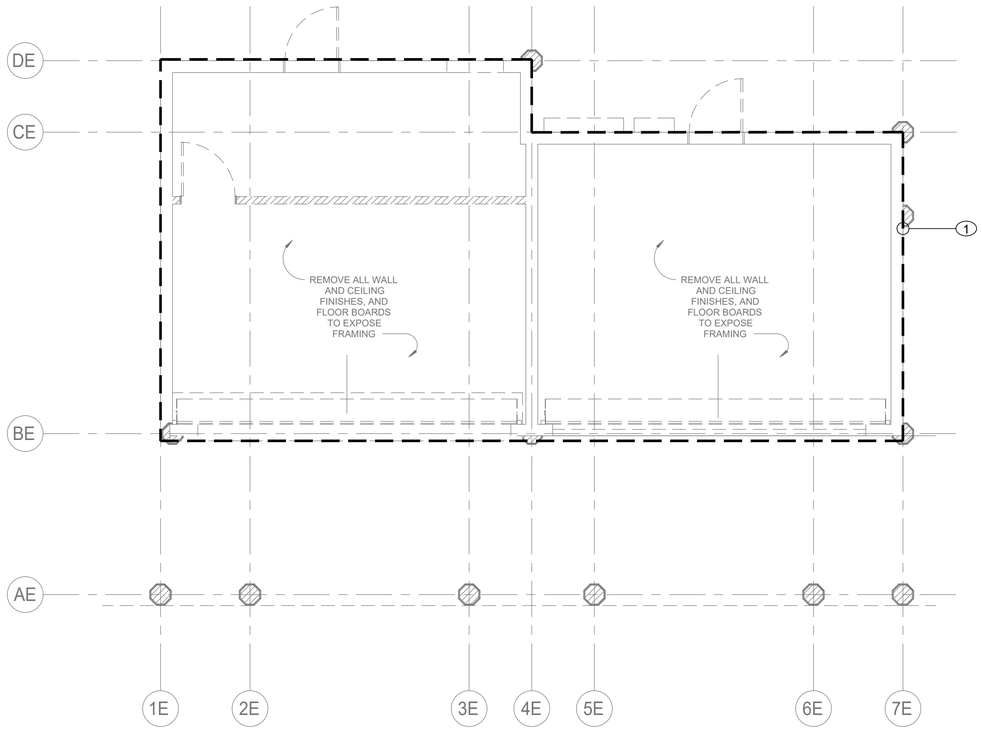


## 1 FIRE ALARM FIRST FLOOR DEMOLITION PLAN

SCALE: 1/4" = 1'-0"

| CONSULTANT INFORMATION | CONSULTANT SEAL | REVISION NUMBER | DATE | MADE BY | APP'D BY | REVISION |
|---|---|---|---|---|---|---|
| LiRo Engineers, Inc. *A LiRo Group Company* Syosset, N.Y. 516-214-8157[T] | STATE OF NEW YORK FRANK F. ULISSE No. 090111-1 LICENSED PROFESSIONAL ENGINEER | | | | | |

RECORD DRAWING CERTIFICATION

☐ AS BUILT – CHANGES AS NOTED ☐ AS BUILT – NO CHANGES

| CONTRACTOR | PROJECT COORDINATOR |
|---|---|
| NAME | NAME |
| SIGNATURE | SIGNATURE |
| TITLE DATE | TITLE DATE |

WESTCHESTER COUNTY, NEW YORK
DEPARTMENT OF PUBLIC WORKS AND TRANSPORTATION
DIVISION OF ENGINEERING

**INFRASTRUCTURE REHABILITATION - PHASE 3**
**PLAYLAND PARK, RYE, NEW YORK**
**CROSS AXIS BUILDING E**
**FIRE ALARM FIRST FLOOR DEMOLITION PLAN**

| | |
|---|---|
| CONTRACT NUMBER | 22-523 |
| SHEET NUMBER | CXE-FA-11 |
| DWG NO.: | 305 of 664 |
| SCALE: | As indicated |
| DATE: | 08/23/2022 |
| DPW FILE NUMBER | 1-118-FA-1054-0 |
| REV. NO. | 0 |

## FIRE ALARM DEMOLITION NOTES:

1. NO EXISTING FIRE ALARM DEVICES WERE NOTED DURING BUILDING SURVEY. ANY ABANDONED DEVICES OR WIRING DISCOVERED DURING THE COURSE OF DEMOLITION SHALL BE REMOVED.

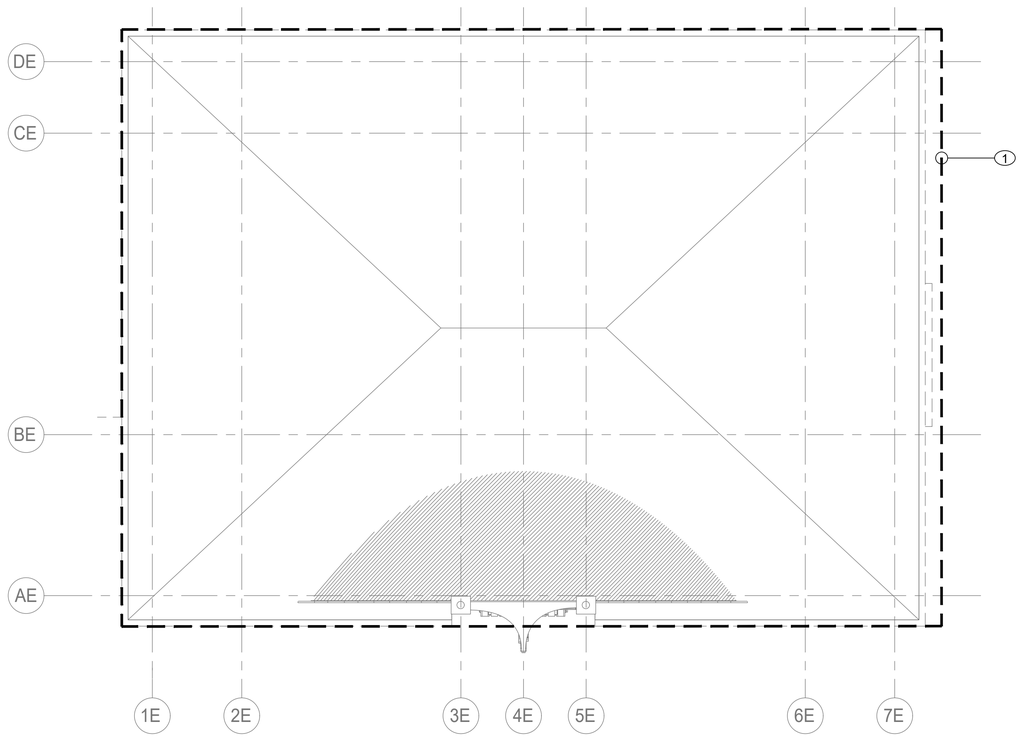


## 1 FIRE ALARM ATTIC DEMOLITION PLAN

SCALE: 1/4" = 1'-0"

CONSULTANT INFORMATION

LiRo Engineers, Inc.
*A LiRo Group Company*
Syosset, N.Y. 516-214-8157[T]

CONSULTANT SEAL

STATE OF NEW YORK · FRANK F. ULISSE · No. 090111-1 · LICENSED PROFESSIONAL ENGINEER

| REVISION NUMBER | DATE | MADE BY | APP'D BY | REVISION |
|---|---|---|---|---|
| | | | | |

RECORD DRAWING CERTIFICATION

☐ AS BUILT – CHANGES AS NOTED ☐ AS BUILT – NO CHANGES

CONTRACTOR
NAME
SIGNATURE
TITLE DATE

PROJECT COORDINATOR
NAME
SIGNATURE
TITLE DATE

WESTCHESTER COUNTY, NEW YORK
DEPARTMENT OF PUBLIC WORKS AND TRANSPORTATION
DIVISION OF ENGINEERING

**INFRASTRUCTURE REHABILITATION - PHASE 3**
**PLAYLAND PARK, RYE, NEW YORK**
**CROSS AXIS BUILDING E**
**FIRE ALARM ATTIC DEMOLITION PLAN**

| | |
|---|---|
| CONTRACT NUMBER | 22-523 |
| SHEET NUMBER | CXE-FA-12 |
| DWG NO.: | 306 of 664 |
| SCALE: | As indicated |
| DATE: | 08/23/2022 |
| DPW FILE NUMBER | 1-118-FA-1055-0 |
| REV. NO. | 0 |

## FIRE ALARM CONSTRUCTION NOTES:

1. CONNECT NEW FIRE ALARM DEVICES TO EXISTING FIRE ALARM CONTROL PANEL IN SUBSTATION 4 ELECTRICAL ROOM.
2. NEW MANUAL PULL STATIONS SHALL BE INSTALLED AT 4'-0" ABOVE FINISHED FLOOR AT EACH BUILDING EXIT (MAX. DISTANCE OF 5'-0" FROM EXIT).
3. FIRE ALARM STROBES AND HORN STROBES SHALL BE FIELD ADJUSTABLE AND SET CANDELA RATING INDICATED ON PLAN. FIRE ALARM STROBES AND HORN STROBES SHALL BE INSTALLED AT 7'-4" ABOVE FINISHED FLOOR UNLESS OTHERWISE NOTED.

## FIRE ALARM GENERAL NOTES:

1. REFER TO DRAWING FA-001.00 FOR SYMBOLS, ABBREVIATIONS, AND NOTES. LAYOUT OF FIRE ALARM DEVICES ON THIS PLAN IS DIAGRAMMATIC; EXACT LOCATIONS OF DEVICES AND CONDUIT SHALL BE COORDINATED WITH FIELD CONDITIONS, ARCHITECTURAL REQUIREMENTS, AND MANUFACTURER RECOMMENDATIONS.
2. ALL DEVICES AND EQUIPMENT SHOWN ON THIS PLAN ARE NEW, UNLESS OTHERWISE NOTED.
3. INSTALL NEW FIRE ALARM SYSTEM IN STRICT ACCORDANCE WITH NFPA-72 AND NFPA-90A REQUIREMENTS.
4. CONTRACTOR SHALL INSTALL NEW FIRE ALARM SYSTEM AS INDICATED AND PROVIDE ALL NECESSARY WIRING, CONDUIT, AND APPARATUSES.
5. ALL VISUAL NOTIFICATION DEVICES IN THE SAME SPACE SHALL BE SYNCHRONIZED IN ACCORDANCE WITH NFPA-72.
6. COORDINATE INSTALLATION WITH FIRE ALARM SYSTEM VENDOR AND MANUFACTURER REQUIREMENTS.
7. COORDINATE FIRE ALARM DEVICES WITH ARCHITECTURAL FINISHES. CONCEAL CONDUIT IN FINISHED WALLS AND FLUSH MOUNT DEVICES WHERE POSSIBLE.
8. CONTRACTOR SHALL TEST THE FIRE ALARM SYSTEM AFTER COMPLETION OF INSTALLATION. FIRE ALARM SYSTEM SHALL BE TESTED AND VERIFIED TO BE WORKING PROPERLY PRIOR TO INSPECTION BY THE AUTHORITY HAVING JURISDICTION.
9. FOLLOWING INSTALLATION, CONTRACTOR SHALL PATCH, PAINT, AND RESTORE ALL WALLS AND CEILINGS TO MATCH EXISTING OR DESIRED NEW CONDITION.
10. FIRESTOP ALL FIRE-RATED FLOOR OR WALL PENETRATIONS TO MAINTAIN ORIGINAL FIRE RATING TO FULL DEPTH OF OPENING.
11. CONTRACTOR SHALL PROVIDE SLEEVE FOR CONDUIT PENETRATIONS THROUGH WALL AND CEILING FLOORS.

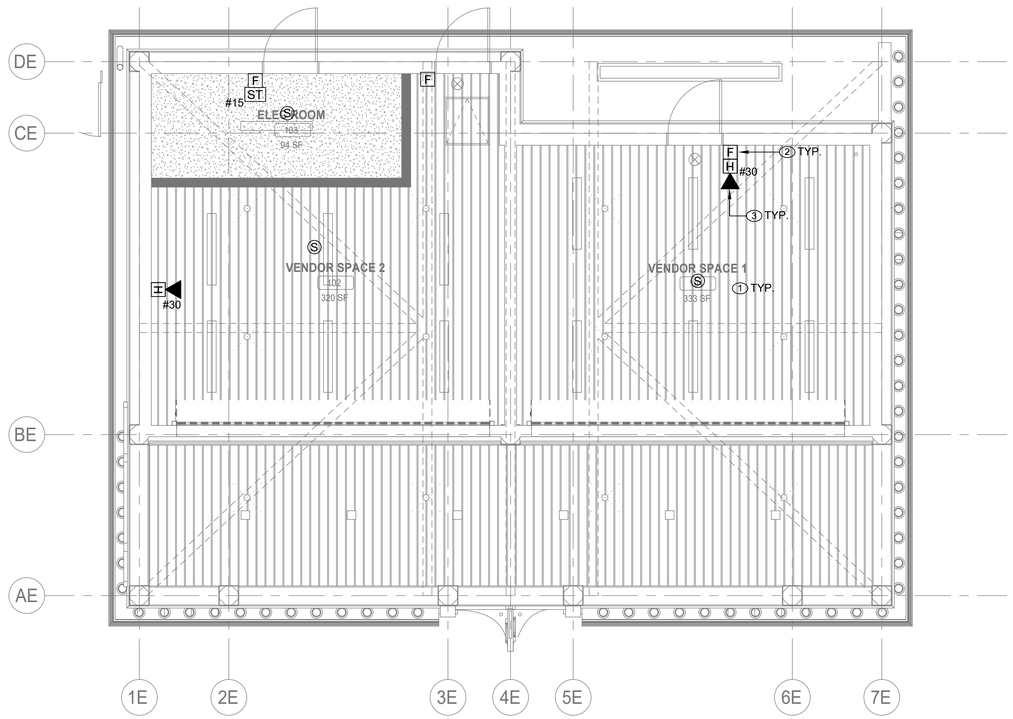


## 1 FIRE ALARM FIRST FLOOR PLAN

SCALE: 1/4" = 1'-0"

CONSULTANT INFORMATION

LiRo Engineers, Inc.
A LiRo Group Company
Syosset, N.Y. 516-214-8157[T]

CONSULTANT SEAL

STATE OF NEW YORK · FRANK F. ULISSE · NO. 090111-1 · LICENSED PROFESSIONAL ENGINEER

| REVISION NUMBER | DATE | MADE BY | APP'D BY | REVISION |
|---|---|---|---|---|
| | | | | |

RECORD DRAWING CERTIFICATION

☐ AS BUILT – CHANGES AS NOTED ☐ AS BUILT – NO CHANGES

CONTRACTOR: NAME / SIGNATURE / TITLE / DATE

PROJECT COORDINATOR: NAME / SIGNATURE / TITLE / DATE

WESTCHESTER COUNTY, NEW YORK
DEPARTMENT OF PUBLIC WORKS AND TRANSPORTATION
DIVISION OF ENGINEERING

**INFRASTRUCTURE REHABILITATION - PHASE 3**
**PLAYLAND PARK, RYE, NEW YORK**
**CROSS AXIS BUILDING E**
**FIRE ALARM FIRST FLOOR PLAN**

| | |
|---|---|
| CONTRACT NUMBER | 22-523 |
| SHEET NUMBER | CXE-FA-21 |
| DWG NO.: | 307 of 664 |
| SCALE: | As indicated |
| DATE: | 08/23/2022 |
| DPW FILE NUMBER | 1-118-FA-1056-0 |
| REV. NO. | 0 |

## FIRE ALARM CONSTRUCTION NOTES:

1. CONNECT NEW FIRE ALARM DEVICES TO EXISTING FIRE ALARM CONTROL PANEL IN SUBSTATION 4 ELECTRICAL ROOM.
2. FIRE ALARM STROBES AND HORN STROBES SHALL BE FIELD ADJUSTABLE AND SET CANDELA RATING INDICATED ON PLAN. FIRE ALARM STROBES AND HORN STROBES SHALL BE INSTALLED AT 7'-4" ABOVE FINISHED FLOOR UNLESS OTHERWISE NOTED.

## FIRE ALARM GENERAL NOTES:

1. REFER TO DRAWING FA-001.00 FOR SYMBOLS, ABBREVIATIONS, AND NOTES. LAYOUT OF FIRE ALARM DEVICES ON THIS PLAN IS DIAGRAMMATIC; EXACT LOCATIONS OF DEVICES AND CONDUIT SHALL BE COORDINATED WITH FIELD CONDITIONS, ARCHITECTURAL REQUIREMENTS, AND MANUFACTURER RECOMMENDATIONS.
2. ALL DEVICES AND EQUIPMENT SHOWN ON THIS PLAN ARE NEW, UNLESS OTHERWISE NOTED.
3. INSTALL NEW FIRE ALARM SYSTEM IN STRICT ACCORDANCE WITH NFPA-72 AND NFPA-90A REQUIREMENTS.
4. CONTRACTOR SHALL INSTALL NEW FIRE ALARM SYSTEM AS INDICATED AND PROVIDE ALL NECESSARY WIRING, CONDUIT, AND APPARATUSES.
5. ALL VISUAL NOTIFICATION DEVICES IN THE SAME SPACE SHALL BE SYNCHRONIZED IN ACCORDANCE WITH NFPA-72.
6. COORDINATE INSTALLATION WITH FIRE ALARM SYSTEM VENDOR AND MANUFACTURER REQUIREMENTS.
7. COORDINATE FIRE ALARM DEVICES WITH ARCHITECTURAL FINISHES. CONCEAL CONDUIT IN FINISHED WALLS AND FLUSH MOUNT DEVICES WHERE POSSIBLE.
8. CONTRACTOR SHALL TEST THE FIRE ALARM SYSTEM AFTER COMPLETION OF INSTALLATION. FIRE ALARM SYSTEM SHALL BE TESTED AND VERIFIED TO BE WORKING PROPERLY PRIOR TO INSPECTION BY THE AUTHORITY HAVING JURISDICTION.
9. FOLLOWING INSTALLATION, CONTRACTOR SHALL PATCH, PAINT, AND RESTORE ALL WALLS AND CEILINGS TO MATCH EXISTING OR DESIRED NEW CONDITION.
10. FIRESTOP ALL FIRE-RATED FLOOR OR WALL PENETRATIONS TO MAINTAIN ORIGINAL FIRE RATING TO FULL DEPTH OF OPENING.
11. CONTRACTOR SHALL PROVIDE SLEEVE FOR CONDUIT PENETRATIONS THROUGH WALL AND CEILING FLOORS.

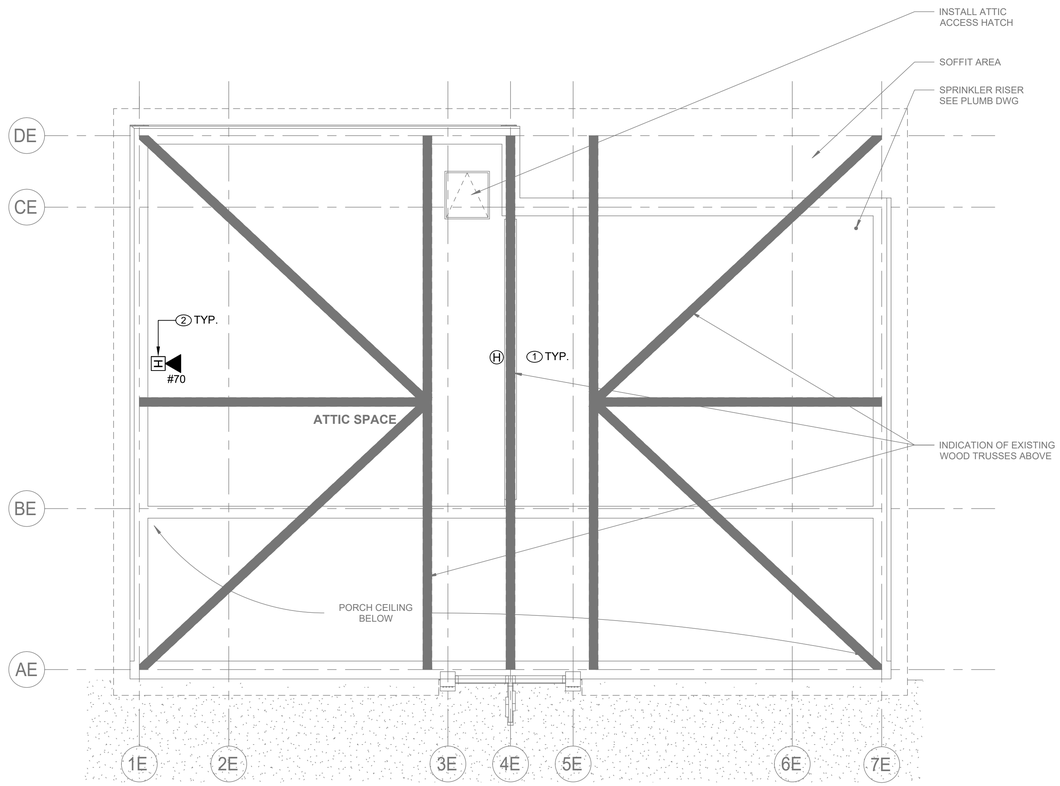


## 1 FIRE ALARM ATTIC PLAN

SCALE: 1/4" = 1'-0"

| CONSULTANT INFORMATION | CONSULTANT SEAL | REVISION NUMBER | DATE | MADE BY | APP'D BY | REVISION |
|---|---|---|---|---|---|---|
| LiRo Engineers, Inc. *A LiRo Group Company* Syosset, N.Y. 516-214-8157[T] | STATE OF NEW YORK FRANK F. ULISSE No. 090111-1 LICENSED PROFESSIONAL ENGINEER | | | | | |

RECORD DRAWING CERTIFICATION

☐ AS BUILT – CHANGES AS NOTED ☐ AS BUILT – NO CHANGES

| CONTRACTOR | PROJECT COORDINATOR |
|---|---|
| NAME | NAME |
| SIGNATURE | SIGNATURE |
| TITLE DATE | TITLE DATE |

WESTCHESTER COUNTY, NEW YORK
DEPARTMENT OF PUBLIC WORKS AND TRANSPORTATION
DIVISION OF ENGINEERING

**INFRASTRUCTURE REHABILITATION - PHASE 3**
**PLAYLAND PARK, RYE, NEW YORK**
**CROSS AXIS BUILDING E**
**FIRE ALARM ATTIC PLAN**

| | |
|---|---|
| CONTRACT NUMBER | 22-523 |
| SHEET NUMBER | CXE-FA-22 |
| DWG NO.: | 308 of 664 |
| SCALE: | As indicated |
| DATE: | 08/23/2022 |
| DPW FILE NUMBER | 1-118-FA-1057-0 |
| REV. NO. | 0 |

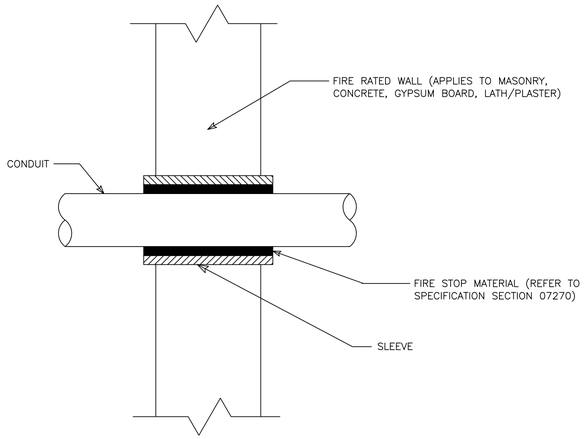


1 / FA-81 CONDUIT PENETRATION THRU FIRE RATED WALL
NOT TO SCALE

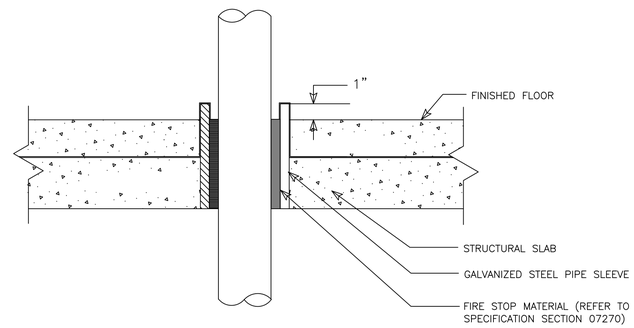


2 / FA-81 CONDUIT PENETRATION THRU FLOOR SLAB
NOT TO SCALE

CONSULTANT INFORMATION

LiRo Engineers, Inc.
*A LiRo Group Company*
Syosset, N.Y. 516-214-8157[T]

CONSULTANT SEAL

STATE OF NEW YORK · FRANK F. ULLOSE · NO. 090111-1 · LICENSED PROFESSIONAL ENGINEER

| REVISION NUMBER | DATE | MADE BY | APP'D BY | REVISION |
|---|---|---|---|---|
| | | | | |

RECORD DRAWING CERTIFICATION

☐ AS BUILT – CHANGES AS NOTED ☐ AS BUILT – NO CHANGES

CONTRACTOR
NAME
SIGNATURE
TITLE DATE

PROJECT COORDINATOR
NAME
SIGNATURE
TITLE DATE

WESTCHESTER COUNTY, NEW YORK
DEPARTMENT OF PUBLIC WORKS AND TRANSPORTATION
DIVISION OF ENGINEERING

**INFRASTRUCTURE REHABILITATION - PHASE 3**
**PLAYLAND PARK, RYE, NEW YORK**
**CROSS AXIS BUILDING E**
**FIRE ALARM DETAILS**

CONTRACT NUMBER 22-523
SHEET NUMBER **CXE-FA-81**
DWG NO.: 309 of 664
SCALE: **As indicated**
DATE: 08/23/2022
DPW FILE NUMBER **1-118-FA-1058-0**
REV. NO. 0

## GENERAL NOTES:

1. DIMENSIONS INDICATED ON THE DRAWINGS ARE APPROXIMATE AND SUBJECT TO REVISIONS AS PER ACTUAL FIELD CONDITIONS.
2. CONTRACTOR SHALL COMPLY WITH ALL NYSDEC PERMIT REQUIREMENTS AND ANY OTHER STATE, COUNTY, CITY OR TOWN AGENCY HAVING JURISDICTION. REFER TO THE CONTRACT SPECIFICATIONS FOR PERMIT REQUIREMENTS.
3. CONTRACTOR SHALL TAKE ALL PRECAUTIONS TO MAINTAIN UTILITY SERVICE TO AND FROM BUILDINGS AND PARK AREAS.
4. ANY UTILITIES SHOWN ON THE PLANS ARE FOR INFORMATION ONLY AND HAVE BEEN OBTAINED FROM AVAILABLE SOURCES. THE EXISTENCE AND LOCATION OF ANY UTILITIES INDICATED ON THE PLANS ARE NOT GUARANTEED AND SHALL BE INVESTIGATED AND VERIFIED IN THE FIELD BY THE CONTRACTOR BEFORE STARTING WORK. THE CONTRACTOR SHALL HAVE ALL EXISTING UTILITIES FIELD STAKED BEFORE STARTING WORK BY CALLING DIG SAFELY NEW YORK AT 1-800-962-7962. EXCAVATION IN THE VICINITY OF UNDERGROUND UTILITIES SHALL BE DUG BY HAND. THE CONTRACTOR WILL BE HELD RESPONSIBLE FOR ANY DAMAGE TO EXISTING UTILITIES. NO SEPARATE PAYMENT SHALL BE MADE FOR THIS WORK.
5. THE CONTRACTOR WILL BE REQUIRED TO PROVIDE PRIVATE UTILITY MARKOUTS FOR ALL UTILITIES IN THE WORK AREAS. THE CONTRACTOR SHALL SUBMIT THE PROPOSED UTILITY SUB-CONTRACTOR FOR APPROVAL.
6. THE CONTRACTOR SHALL OBTAIN AND HAVE ON THE JOB SITE, AT ALL TIMES, ALL PERMITS AS REQUIRED BY THE STATE, COUNTY, CITY, TOWN/VILLAGE OR ANY OTHER PERMITTING AGENCY. THE CONTRACTOR SHALL BEAR ALL COSTS OF OBTAINING THESE PERMITS.
7. CONTRACTOR SHALL REMOVE ALL DEBRIS AND EXCESS CONSTRUCTION MATERIALS TO THE SATISFACTION OF THE OWNER AND ENGINEER. THE CONTRACTOR SHALL BE RESPONSIBLE FOR THE REMOVAL AND LEGAL DISPOSAL OF ALL MATERIALS RESULTING FROM THE CONTRACT.
8. CONTRACTOR SHALL COORDINATE ALL CONSTRUCTION ACTIVITIES WITH THE OWNER AND ENGINEER TO MINIMIZE INTERRUPTIONS TO NORMAL PARK OPERATIONS.
9. CONTRACTOR SHALL SUBMIT A DETAILED WORK PLAN INCLUDING SEQUENCE OF OPERATIONS PRIOR TO COMMENCING WORK AND SHALL BE SUBJECT TO APPROVAL OF THE OWNER/ENGINEER.
10. THE CONTRACTOR SHALL NOTIFY THE OWNER AND THE ENGINEER A MINIMUM OF SEVENTY-TWO (72) HOURS PRIOR TO THE START OF CONSTRUCTION. IN ADDITION, IF WORK SHOULD BE STOPPED AND RESTARTED FOR ANY REASON, THE CONTRACTOR SHALL GIVE THE ENGINEER A MINIMUM OF SEVENTY-TWO (72) HOURS NOTICE.
11. ITEMS SUSTAINING DAMAGE DURING CONSTRUCTION AS A RESULT OF THE CONTRACTOR'S OPERATIONS SHALL BE REPAIRED AND/OR REPLACED TO THE SATISFACTION AND APPROVAL OF THE OWNER AT THE CONTRACTORS EXPENSE. ANY DAMAGE SHALL BE REPAIRED AT NO ADDITIONAL COST TO THE OWNER.
12. ALL NECESSARY PRECAUTIONS SHALL BE TAKEN TO PRESERVE THE MATERIAL BELOW AND BEYOND THE LINES OF ALL EXCAVATION IN THE SOUNDEST POSSIBLE CONDITION. ANY DAMAGE TO THE WORK DUE TO THE CONTRACTOR'S OPERATIONS SHALL BE REPAIRED AT THE EXPENSE OF AND BY THE CONTRACTOR.
13. NO MATERIALS OF ANY KIND SHALL BE USED UNTIL IT HAS BEEN INSPECTED AND ACCEPTED BY THE ENGINEER; ALL MATERIALS REJECTED SHALL BE IMMEDIATELY REMOVED FROM THE WORK SITE AND SHALL NOT BE OFFERED FOR INSPECTION AGAIN.
14. ANY MATERIALS OR WORKMANSHIP FOUND AT ANY TIME TO BE DEFECTIVE SHALL BE REMEDIED AT ONCE, REGARDLESS OF PREVIOUS INSPECTION, THE INSPECTION AND OBSERVATION OF WORK BY THE ENGINEER IS INTENDED TO AID THE CONTRACTOR IN APPLYING LABOR AND MATERIAL TO AND IN ACCORDANCE WITH THE SPECIFICATION, BUT SUCH INSPECTION SHALL NOT RELEASE THE CONTRACTOR FROM ANY CONTRACT OBLIGATIONS.
15. THE CONTRACTOR SHALL CONDUCT THE WORK IN A SAFE MANNER SO AS TO POSE NO DANGER OR HAZARDS TO PERSONS OR PROPERTY. WHERE NECESSARY, TEMPORARY SHIELDS OR OTHER PROTECTIVE DEVICES MUST BE UTILIZED. THE CONTRACTOR ASSUMES FULL RESPONSIBILITY AND EXPENSE OF ANY AND ALL SAFETY MEASURES. THE USE OF EXPLOSIVES IS STRICTLY PROHIBITED. THE CONTRACTOR SHALL COMPLY WITH ALL OSHA AND NEW YORK STATE DEPARTMENT OF LABOR REQUIREMENTS.
16. RESEED ALL AREAS WHERE WORK OCCURS AND/OR WHERE CONTRACTOR DAMAGES EXISTING GRASS. COMPLY WITH THE SPECIFICATIONS. STAGING AREAS SHALL BE RESTORED TO ORIGINAL CONDITION AND SHALL BE SEEDED FOLLOWING COMPLETION OF ALL PHYSICAL WORK.
17. THE CONTRACTOR SHALL HAVE A COMPETENT REPRESENTATIVE PRESENT WHO SHALL RESPOND TO ANY QUESTIONS OR REQUESTS OF THE ENGINEER IN THE PROSECUTION AND COMPLETION OF THE WORK IN CONFORMITY WITH THIS CONTRACT, AND SHALL HAVE FULL AUTHORITY TO SUPPLY LABOR AND MATERIAL IMMEDIATELY. THE CONTRACTOR SHALL ALSO HAVE A COMPETENT REPRESENTATIVE AVAILABLE TO RECEIVE TELEPHONE MESSAGES AND PROVIDE A REASONABLE REPLY AS SOON AS POSSIBLE, BUT NO LATER THAN 24 HOURS.
18. NEITHER THE OWNER OR ENGINEER SHALL BE RESPONSIBLE FOR THE MEANS AND METHODS CHOSEN BY THE CONTRACTOR TO COMPLETE THE WORK.
19. THE CONTRACTOR SHALL HAVE FULL RESPONSIBILITY FOR SITE SAFETY AND THE SAFETY OF THE CONTRACTOR'S WORK FORCE.
20. BACKFILL AT ALL EXCAVATIONS SHALL BE PLACED IN 6" LIFTS AND SHALL ACHIEVE A COMPACTION NOT LESS THAN 95 PERCENT OF STANDARD PROCTOR MAXIMUM DENSITY. UNDER THE TERMS OF THE CONTRACT, THE CONTRACTOR SHALL PERFORM FIELD TESTS BY AN APPROVED LABORATORY TO ASSURE THIS COMPACTION RATE AT VARYING DEPTHS. THE CONTRACTOR SHALL BEAR ALL COSTS FOR TESTING AND ANY DELAYS THAT RESULT FROM SUCH TESTING.
21. THE CONTRACTOR SHALL ADJUST ALL MANHOLE FRAMES AND COVERS, VALVE COVERS, WATERVALVE BOXES, DRAINAGE INLETS, ETC. AS NECESSARY TO MEET THE SURFACE OF NEW PAVEMENT OR WALKWAY AS REQUIRED TO ALLOW POSITIVE DRAINAGE. NO SEPARATE PAYMENT WILL BE MADE FOR THIS WORK UNLESS OTHERWISE NOTED IN THE CONTRACT DOCUMENTS. THE CONTRACTOR SHALL COORDINATE THIS ACTIVITY WITH THE RELATED UTILITY COMPANIES, IF APPLICABLE. WARPING OF THE PAVEMENT SURFACE TO MEET THESE ITEMS WILL NOT BE PERMITTED.
22. ALL EXISTING SIGNS IN THE CONTRACT AREA ARE TO REMAIN INTACT. SIGNS DAMAGED SHALL BE REPLACED AT THE CONTRACTOR'S EXPENSE. ANY SIGNS THAT REQUIRE RESETTING SHALL BE PLACED IN A FINAL POSITION DETERMINED BY THE OWNER. NO SEPARATE PAYMENT SHALL BE MADE FOR THIS WORK. THE CONTRACTOR SHALL BE HELD RESPONSIBLE FOR SIGNS DAMAGED BY HIS OPERATIONS. THE CONTRACTOR SHALL BE RESPONSIBLE FOR ALL DAMAGES TO BURIED AND OVERHEAD UTILITIES LOCATED ON PUBLIC AND PRIVATE PROPERTY. THE CONTRACTOR SHALL BE RESPONSIBLE FOR ALL DAMAGES TO FACILITIES ON PUBLIC AND PRIVATE PROPERTY, SUCH AS, LANDSCAPING, DRIVEWAYS, CURBS, PAVEMENT, SIDEWALK, ETC.
23. CONTRACTOR IS RESPONSIBLE TO COORDINATE AND VERIFY THE EXTENT OF ALL DEMOLITION WITH THE ENGINEER PRIOR TO PERFORMING THE WORK.
24. CONTRACTOR SHALL RESTORE STAGING AREA BACK TO ITS ORIGINAL CONDITION INCLUDING GRADING, SEEDING ETC. EXISTING TREES, UTILITIES, LIGHT POLES, STONE, SIDEWALK, CURB, ETC. SHALL BE PROTECTED AND REPLACED IF DAMAGED. PROVIDE ELECTRICAL POWER, WATER, TELEPHONE, ETC. AS SPECIFIED FOR THE ENGINEERS TRAILER WHICH SHALL BE LOCATED IN THE STAGING AREA.

## SURVEY NOTES:

1. HORIZONTAL COORDINATES SHOWN HEREON REFER TO THE NORTH AMERICAN DATUM OF 1983 (NAD83), NEW YORK STATE PLANE COORDINATE SYSTEM, NEW YORK EAST ZONE 3101.
2. VERTICAL ELEVATIONS SHOWN HEREON REFER TO THE NORTH AMERICAN VERTICAL DATUM OF 1988 (NAVD88) WHICH IS BASED ON THE UNITED STATES COAST & GEODETIC SURVEY MEAN SEA LEVEL AT SANDY HOOK, NEW JERSEY.
3. LOCATION OF UTILITIES AS SHOWN ARE BASED UPON MAP TITLED "PARTIAL TOPOGRAPHICAL AND UTILITY SURVEY OF RYE PLAYLAND PARK" BY LKB LAST UPDATED SEPTEMBER 8, 2017.
4. LOCATIONS OF UNDERGROUND UTILITIES SHOWN ON THIS SURVEY ARE APPROXIMATE. RLT ENGINEERING, GEOLOGY, AND LAND SURVEYING, P.C., CANNOT GUARANTEE THE LOCATION OF UNDERGROUND UTILITIES AND STRUCTURES. THE STANDARD OF CARE USED BY RLT ENGINEERING, GEOLOGY, AND LAND SURVEYING, P.C. TO LOCATE THE UTILITIES IS REASONABLE AND CONSISTENT WITH THE LOCAL STANDARD OF CARE USED TO LOCATE THE UNDERGROUND UTILITIES. LOCATIONS AND SIZE ARE BASED ON UTILITY MARK-OUTS, AS-BUILT MAPS AND OTHER VISIBLE SURFACE EVIDENCE OBSERVED IN THE COURSE OF THIS SURVEY. PRIOR TO EXCAVATION OR CONSTRUCTION THE LOCATION, SIZE AND TYPE OF ALL UNDERGROUND UTILITY LOCATIONS MUST BE VERIFIED BY THE RESPECTIVE UTILITY COMPANY.
5. THE SUBJECT PROPERTY OF RYE PLAYLAND PARK FALLS WITHIN FEMA FLOOD ZONES AE (EL 12), AE (EL 13), VE (EL 14), VE (EL 15), VE (EL 16), VE (EL 17) AS SHOWN ON THE FEMA FLOOD INSURANCE RATE MAP COMMUNITY PANEL #36119C0358 F EFFECTIVE DATE SEPTEMBER 28, 2007 AND FEMA FLOOD INSURANCE RATE MAP COMMUNITY PANEL #36119C0356 F EFFECTIVE DATE SEPTEMBER 28, 2007. FEMA ELEVATIONS REFER TO NAVD88."

## DEMOLITION NOTES:

1. ALL REQUIRED DEMOLITION PERMITS MUST BE OBTAINED FROM ALL REQUIRED AGENCIES PRIOR TO COMMENCEMENT OF WORK.
2. ANY ASBESTOS REMOVAL MUST BE DONE BY A CERTIFIED ASBESTOS REMOVAL CONTRACTOR.
3. ALL UTILITY COMPANIES MUST BE NOTIFIED A MINIMUM OF 48 HOURS IN ADVANCE OF DEMOLITION.
4. FOR ALL UTILITIES, CONTRACTOR SHALL VERIFY DISCONNECT PRIOR TO DEMOLITION.
5. PROPER FENCING OR PUBLIC PROTECTION DEVICES MUST BE CONSTRUCTED AND MAINTAINED AROUND THE PERIMETER OF THE SITE AT ALL TIMES DURING DEMOLITION PHASE.
6. IT IS THE CONTRACTOR'S RESPONSIBILITY TO CONTROL DUST, DIRT, AND DEBRIS DURING DEMOLITION AND CONSTRUCTION PHASES.
7. IF SUSPICIOUS AND/OR HAZARDOUS MATERIAL IS ENCOUNTERED DURING DEMOLITION / CONSTRUCTION, ALL WORK SHALL STOP AND THE COUNTY DEPARTMENT OF HEALTH AND THE NEW YORK STATE DEPARTMENT OF ENVIRONMENTAL CONSERVATION SHALL BE NOTIFIED IMMEDIATELY. WORK SHALL NOT RESUME UNTIL THE CONTRACTOR HAS OUTLINED APPROPRIATE ACTION FOR DEALING WITH THE WASTE MATERIAL.
8. WHERE EXISTING CURB, GUTTER, SIDEWALK OR WALK IS TO BE REMOVED, IT SHALL BE SAW CUT OR REMOVED AT THE NEAREST JOINT.
9. THE CONTRACTOR SHALL PERFORM DAILY CLEANUP OPERATIONS WHICH INCLUDE SWEEPING OF THE ROADWAYS, REMOVAL OF DEBRIS (CUPS, PAPER BAGS, CANS, ETC.), REMOVAL OF EXCESS CONSTRUCTION MATERIALS, ALL TO THE SATISFACTION OF THE OWNER.
10. THE CONTRACTOR SHALL CONFORM TO ALL STATE AND LOCAL RULES, REGULATIONS AND LAWS WHICH SHALL GOVERN THE HAULING AND DISPOSING OF TREES, SHRUBS, STUMPS, ROOTS, RUBBISH, DEBRIS AND OTHER MATTER.
11. NO TREES , SHRUBS, ROOTS, BRANCHES, WOOD, CONCRETE OR OTHER DEBRIS SHALL BE BURIED IN FILLS, EMBANKMENTS OR STOCK PILES.
12. NO CLEARED MATTER, DEBRIS SHALL BE STORED AT THE CONSTRUCTION SITE.
13. CONTRACTOR SHALL GUARANTEE THAT WORK PERFORMED UNDER THIS CONTRACT WILL NOT PERMANENTLY DAMAGE TREES, SHRUBS, TURF OR PLANTS DESIGNATED TO REMAIN, OR OTHER ADJACENT WORK OR FACILITIES. IF DAMAGE RESULTING FROM CONTRACTOR'S OPERATIONS APPEARS DURING THE PERIOD UP TO 24 MONTHS AFTER COMPLETION OF THE PROJECT, THE CONTRACTOR SHALL REPLACE DAMAGED ITEMS AT HIS EXPENSE.
14. DAMAGE TO ANY EXISTING ITEMS, NOT SHOWN IN CONTRACT DOCUMENTS TO BE REMOVED, SUCH AS PAVEMENT, GRASSED AREAS, UTILITIES, STRUCTURES OR OTHER FACILITIES SHALL BE REPAIRED BY THE CONTRACTOR IMMEDIATELY AT HIS OWN EXPENSE TO THE SATISFACTION OF THE ENGINEER AND OWNER. ALL ASPHALT PAVEMENTS, GRASSED AREAS AND LANDSCAPING THAT ARE DAMAGED OR DISTURBED SHALL BE RESTORED IN ACCORDANCE WITH APPLICABLE SECTIONS ON THE CONTRACT SPECIFICATIONS.
15. EXCEPT AS NOTED BELOW, CONTRACTOR SHALL REMOVE FROM THE SITE AND SATISFACTORILY DISPOSE OF ALL TREES, SHRUBS, ROOTS, BRUSH, MASONRY, RUBBISH, SCRAP, DEBRIS, PAVEMENT, CURBS, FENCES AND MISCELLANEOUS OTHER ITEMS NOT COVERED UNDER OTHER SECTIONS AS SHOWN, SPECIFIED OR OTHERWISE REQUIRED TO PERMIT CONSTRUCTION OF NEW WORK.
16. BURNING OF MATERIAL IS EXPRESSLY FORBIDDEN.
17. TREES AND SHRUBS TO BE SAVED:

A. TREES AND SHRUBS WHICH ARE TO REMAIN SHALL BE PROTECTED BY FENCES, BARRICADES, WRAPPING OR OTHER MEANS OF PROTECTION. EQUIPMENT STORAGE, MATERIAL STOCKPILES, ETC., SHALL NOT BE PERMITTED WITHIN TREE BRANCH SPREAD.

B. PROTECT ALL OTHER TREES AND SHRUBS FROM DEFACEMENT, INJURY AND DESTRUCTION. PRESERVE TREES WITHIN THE CONTRACT LIMITS THAT ARE SO DELINEATED ON THE PLANS OR AS MARKED IN THE FIELD BY THE ENGINEER. ALSO, ALL TO BE SAVED SHALL BE PROTECTED IN ACCORDANCE WITH THE CONTRACT DOCUMENTS.

C. DO NOT CUT ROOTS UNNECESSARILY; HANDWORK OR OTHER METHODS SHALL BE IMPLEMENTED TO PREVENT DAMAGE TO ROOTS WHICH EXTEND INTO GRADING LIMITS OR LIMITS OF EXCAVATION. DISTURB ROOTS AS LITTLE AS POSSIBLE WHEN TUNNELING UNDER TREES. BACKFILLING AROUND TREE ROOTS SHALL BE DONE IMMEDIATELY AFTER COMPLETION OF CONSTRUCTION IN THE VICINITY OF TREES.

D. THE CONTRACTOR SHALL BE RESPONSIBLE FOR THE PROTECTION OF ALL VEGETATION FROM DAMAGE RESULTING FROM EMISSIONS FROM MOTORIZED EQUIPMENT.

E. CONTRACTOR SHALL BE VIGILANT OF ANY OVERHEAD UTILITY LINES WHEN USING AERIAL EQUIPMENT FOR TREE TRIMMING OPERATIONS.

F. DURING WORKING OPERATION, PROTECT THE TRUNK, FOLIAGE, AND ROOT SYSTEM OF ALL TREES TO BE SAVED WITH BOARDS OR OTHER GUARDS AND AS REQUIRED TO PREVENT DAMAGE, INJURY AND DEFACEMENT. DO NOT PILE EXCAVATED MATERIAL ADJACENT TO THE BASE OF ANY TREES. DO NOT ALLOW RUNOFF TO ACCUMULATE AROUND BASE OF TREES. DO NOT FASTEN OR ATTACH ROPES, CABLE OR GUY WIRES TO TREES WITHOUT PERMISSION OF THE ENGINEER. WHEN SUCH PERMISSION IS GRANTED, PROTECT THE TREE BEFORE MAKING FASTENING OR ATTACHMENTS BY PROVIDING BURLAP WRAPPING AND SOFTWOOD CLEATS. THE CONTRACTOR SHALL BE HELD RESPONSIBLE FOR DAMAGE RESULTING FROM THESE ACTIONS. USE OF AXES OR CLIMBING SPURS FOR TRIMMING WILL NOT BE PERMITTED. PROVIDE CLIMBING ROPES DURING TRIMMING.

G. REMOVE SHRUBS TO BE SAVED, TAKING A SUFFICIENT EARTH BALL AT THE ROOTS TO MAINTAIN THE SHRUB. TEMPORARILY REPLANT IF REQUIRED, AND REPLACE AT THE COMPLETION OF CONSTRUCTION IN CONDITION EQUALING THE ORIGINAL.

H. TREE AND SHRUB REPAIR WHERE REQUIRED SHALL BE PERFORMED BY A TREE SURGEON.

I. TREES AND SHRUBS INTENDED TO REMAIN WHICH ARE DAMAGED BEYOND REPAIR BY CONSTRUCTION, SHALL BE REPLACED BY THE CONTRACTOR AT NO EXPENSE TO THE OWNER.

## SITE NOTES:

1. THE CONTRACTOR SHALL PERFORM ALL WORK IN COMPLIANCE WITH TITLE 29 OF FEDERAL REGULATIONS, PART 1926, SAFETY AND HEALTH REGULATIONS FOR CONSTRUCTION(OSHA).
2. HIGHWAY DRAINAGE ALONG ALL ROADS AND PRIVATE DRIVES SHALL BE KEPT CLEAN OF MUD, DEBRIS ETC. AT ALL TIMES.
3. REFER TO ARCHITECTURAL DRAWINGS FOR BUILDING INFORMATION.
4. THE CONTRACTOR SHALL CONSULT THE DESIGN ENGINEER BEFORE DEVIATING FROM THESE PLANS.
5. IN ALL TRENCH EXCAVATIONS, CONTRACTOR MUST LAY THE TRENCH SIDE SLOPES BACK TO A SAFE SLOPE, USE A TRENCH SHIELD OR PROVIDE SHEETING AND BRACING IF REQUIRED.
6. THE CONTRACTOR SHALL TAKE PRECAUTIONS TO MAINTAIN A MINIMUM OF 2' OF COVER OVER ALL EXISTING AND NEW STORM AND SANITARY PIPES DURING CONSTRUCTION.
7. ALL EXISTING SURFACE APPURTENANCES (I.E. WATER VALVES, CATCH BASIN FRAMES AND GRATES, MANHOLE COVERS) WITHIN THE PROJECT LIMITS SHALL BE ADJUSTED TO FINISHED GRADE.
8. UNLESS COVERED BY THE CONTRACT SPECIFICATIONS OR AS NOTED ON THE PLANS, ALL WORK SHALL CONFORM TO THE NEW YORK STATE DEPARTMENT OF TRANSPORTATION STANDARD SPECIFICATIONS DATED JANUARY 1, 2020 AND ANY SUBSEQUENT APPENDICES.

## UTILITY NOTES:

1. APPROXIMATE LOCATION OF KNOWN UTILITY STRUCTURES AND FACILITIES THAT MAY BE ENCOUNTERED WITHIN AND ADJACENT TO THE LIMITS OF WORK ARE SHOWN ON THE PLANS. THE ACCURACY AND COMPLETENESS OF THIS INFORMATION IS NOT GUARANTEED BY THE ENGINEER. THE CONTRACTOR IS ADVISED TO VERIFY IN FIELD ALL THE FACTS CONCERNING THE UTILITY LOCATIONS AND OTHER CONSTRUCTION OBSTACLES PRIOR TO CONSTRUCTION OF ANY DISCREPANCIES WHICH MAY AFFECT PROJECT DESIGN AND/OR SCOPE.
2. ALL ABANDONED WATER LINES SHALL BE CUT AND CAPPED IN ACCORDANCE WITH WESTCHESTER COUNTY REQUIREMENTS.
3. TRENCH DETAILS ARE INTENDED TO PROVIDE INFORMATION REGARDING BACKFILLING MATERIALS AND GENERAL MATERIAL DEPTHS ONLY. THE CONTRACTOR SHALL BE RESPONSIBLE FOR THE MEANS AND METHODS OF CONSTRUCTION AND SHALL PROVIDE APPROPRIATE SAFETY MEASURES, SHEETING AND BRACING AS NECESSARY. SHEETING CONDITIONS ARE TO BE DESIGNED BY A NEW YORK STATE LICENSED PROFESSIONAL ENGINEER AND SUBMITTED TO THE DESIGN ENGINEER FOR APPROVAL. THE DESIGN ENGINEER ASSUMES NO RESPONSIBILITY OR LIABILITY FOR FIELD CONDITIONS, TRENCHING OR BACKFILLING OPERATIONS DURING CONSTRUCTION. THE CONTRACTOR SHALL COMPLY WITH ALL APPLICABLE OSHA STANDARDS AND DETAILS FOR TRENCH EXCAVATION.
4. CONTRACTOR SHALL BE RESPONSIBLE FOR DEWATERING AND PRECLUDING PONDING OF WATER IN ALL AREAS. DEWATERING OPERATIONS SHALL BE IN ACCORDANCE WITH NYSDEC REGULATIONS, THE PROJECT STORMWATER POLLUTION PREVENTION PLAN AND WESTCHESTER COUNTY.
5. THE CONTRACTOR SHALL COMPLY WITH THE LATEST OSHA CONFINED SPACE ENTRY REQUIREMENTS (29 CFR PART 1910).
6. THE CONTRACTOR SHALL COMPLY WITH THE LATEST REVISED OSHA SHEETING REQUIREMENTS (29 CFR PART 1926.650, 651, 652).
7. ALL EXISTING UTILITIES THAT ARE TO REMAIN IN SERVICE AND THAT INTERFERE WITH THE WORK SHALL BE RELOCATED UNLESS OTHERWISE SHOWN.
8. ALL ABANDONED PIPES SHALL BE PLUGGED, REMOVED, CRUSHED OR FILLED WITH A SUITABLE MATERIAL AS DIRECTED BY THE ENGINEERS, ABANDONED PIPES 12" INSIDE DIAMETER AND LARGER MUST BE REMOVED, FILLED OR CRUSHED IN PLACE. SMALLER PIPES SHALL BE PLUGGED AND ABANDONED IN PLACE UNLESS OTHERWISE DIRECTED BY THE ENGINEER.
9. THE CONTRACTOR SHALL CONTACT THE UTILITY COMPANIES TO DETERMINE THEIR SCHEDULE FOR PERFORMING UTILITY RELOCATION AND INSTALLATION WORK. THE CONTRACTOR SHALL SCHEDULE THEIR WORK ACCORDINGLY IN ORDER TO NOT INTERFERE WITH THE WORK OF THE UTILITY COMPANIES.
10. TRENCHES SHALL BE BACKFILLED WITHOUT DELAY. OPEN TRENCHES SHALL BE TEMPORARILY SUPPORTED AND STEEL PLATED WHEN WORK IS NOT IN PROGRESS. CONTRACTOR MUST ENSURE NO TRENCHES ARE LEFT OPEN OVERNIGHT. THE CONTRACTOR IS RESPONSIBLE FOR THE DESIGN AND INSTALLATION OF STEEL PLATES THAT ARE CAPABLE OF SAFELY SUPPORTING THE SUBJECTED LOADS.
11. THE CONTRACTOR SHALL BE RESPONSIBLE FOR PROVIDING TEMPORARY LIGHTING WITHIN THE LIMITS OF CONSTRUCTION AND FOR ALL AREAS WHERE WHERE EXISTING STREET AND AREA LIGHTING SHUT-DOWN IS REQUIRED TO INSTALL NEW LIGHTING AND ELECTRICAL SERVICE.
12. ALL CMP PIPES SHALL FOLLOW NYSDOT SECTION 602-2 AND 707.02, BE HELICAL BITUMINOUS COATED, SHALL HAVE GASKETED AND BANDED JOINTS AND BE OF THE FOLLOWING PIPE GAUGES UNLESS OTHERWISE SPECIFIED.

   10" TO 21" - 14 GAUGE
   24" TO 30" - 12 GAUGE
   30" TO 60" - 10 GAUGE

13. IN INSTANCES WHERE THE STORM SEWER CROSSES THE SANITARY SEWER A CRUSHED STONE ENCASEMENT SHALL BE PROVIDED AROUND THE SANITARY SEWER UP TO THE STORM SEWER-COMPACT WITH APPROVED EQUIPMENT
14. ALL CATCH BASINS AND STORM MANHOLES WITHIN PAVEMENT TO BE CONSTRUCTED TO WITHSTAND H-20 LOADING.
15. ALL EXISTING CATCH BASINS WITHIN WORK LIMITS TO BE CLEANED OF ANY DEBRIS OR SILT.

## GRADING NOTES:

1. REMOVE AND STOCKPILE TOPSOIL AS DIRECTED BY THE CONSTRUCTION MANAGER. REPLACE TOPSOIL TO A MINIMUM 4" DEPTH. ALL DISTURBED AREAS TO BE HYDROSEEDED AS DIRECTED BY THE CONSTRUCTION MANAGER.
2. CONTRACTOR SHALL BE RESPONSIBLE FOR THE MAINTENANCE AND REMOVAL OF TEMPORARY SEDIMENTATION CONTROLS, INCLUDING SILT SINK AND SILT FENCE. EROSION CONTROL MEASURES SHALL NOT BE REMOVED BEFORE VEGETATION HAS OCCURRED COMPLETELY.
3. ALL SILT FENCE TO BE REPLACED WHENEVER THEY BECOME CLOGGED OR INOPERABLE AND SHALL BE REPLACED AS DIRECTED BY THE ENGINEER.
4. THE CONTRACTOR SHALL BE RESPONSIBLE FOR RESTORATION OF TOPSOIL TO ALL DISTURBED AREAS. IT IS THE CONTRACTOR'S RESPONSIBILITY TO MAINTAIN EROSION CONTROL MEASURES AT ALL TIMES.
5. EROSION CONTROL MEASURES WILL BE IMPLEMENTED IN ACCORDANCE WITH THE NEW YORK STATE GUIDELINES FOR URBAN EROSION SEDIMENT CONTROL MANUAL, WESTCHESTER COUNTY HEALTH DEPARTMENT, AND THE CITY OF RYE REQUIREMENTS.
6. ALL INLETS TO THE STORM SEWER SHALL HAVE STONE DROP INLET PROTECTION. THE CONTRACTOR SHALL BE RESPONSIBLE FOR MAINTAINING THE BEST MANAGEMENT PRACTICES (BMP'S) UNTIL GROUND COVER IS ESTABLISHED.
7. SILT FENCE, JUTE MESH, AND/OR EROSION CONTROL BLANKETS WILL BE USED ON STEEP SLOPES AND WHEREVER NECESSARY TO CONTROL EROSION AND SILTATION OF EXISTING DRAINAGE SYSTEMS AS ORDERED BY THE ENGINEER OR SPECIFIED ON PLANS.
8. THE CONTRACTOR SHALL DESIGNATE A MEMBER OF HIS/HER FIRM TO BE RESPONSIBLE TO MONITOR EROSION CONTROL, EROSION CONTROL STRUCTURES, TREE PROTECTION AND PRESERVATION THROUGHOUT CONSTRUCTION.
9. ALL DISTURBED AREAS SHALL BE PROTECTED FROM EROSION EITHER BY MULCH OR TEMPORARY SEEDING WITHIN 2 WEEKS OF DISTURBANCE.

## SOIL EROSION AND SEDIMENT CONTROL NOTES:

1. ALL SOIL EROSION AND SEDIMENT CONTROL PRACTICES TO BE INSTALLED PRIOR TO ANY SOIL DISTURBANCE, OR IN THEIR PROPER SEQUENCE, AND MAINTAINED UNTIL PERMANENT PROTECTION IS ESTABLISHED. CONTRACTOR SHALL COMPLY WITH ALL REQUIREMENTS OF THE STORMWATER POLLUTION PREVENTION PLAN.
2. ANY DISTURBED AREAS THAT WILL NOT RECEIVE PERMANENT RESTORATION WITHIN TEN (10) DAYS AFTER FINAL GRADING, AND NOT SUBJECT TO CONSTRUCTION TRAFFIC, WILL IMMEDIATELY RECEIVE A TEMPORARY COVER. THE DISTURBED AREAS WILL BE MULCHED WITH STRAW, OR EQUIVALENT MATERIAL AT A RATE OF TWO (2) TONS PER ACRE, ACCORDING TO STATE STANDARDS.
3. PERMANENT VEGETATION TO BE SEEDED OR SODDED ON ALL EXPOSED AREAS WITHIN TEN (10) DAYS AFTER FINAL GRADING. MULCH WILL BE USED AS NECESSARY FOR PROTECTION UNTIL SEEDING IS ESTABLISHED.
4. ALL WORK TO BE DONE IN ACCORDANCE WITH THE STANDARDS FOR SOIL EROSION AND SEDIMENT CONTROL IN THE STATE OF NEW YORK.
5. A SUB-BASE COURSE DETAIL WILL BE APPLIED IMMEDIATELY FOLLOWING ROUGH GRADING AND INSTALLATION OF IMPROVEMENTS IN ORDER TO STABILIZE ROADS, DRIVEWAYS PARKING AREAS AND SIDEWALKS. IN AREAS WHERE NO UTILITIES ARE PRESENT, THE SUB-BASE SHALL BE INSTALLED WITHIN 15 DAYS OF THE PRELIMINARY GRADING.
6. IMMEDIATELY FOLLOWING INITIAL DISTURBANCE OR ROUGH GRADING, ALL CRITICAL AREAS SUBJECT TO EROSION (I.E.; STEEP SLOPES AND ROADWAY EMBANKMENTS) WILL RECEIVE A TEMPORARY COVER OF STRAW MULCH OR A SUITABLE EQUIVALENT AT A RATE OF TWO (2) TONS PER ACRE, ACCORDING TO NYS STANDARDS.
7. ANY STEEP SLOPES RECEIVING PIPELINE INSTALLATION WILL BE BACKFILLED AND STABILIZED DAILY, AS THE INSTALLATION PROCEEDS (I.E.; SLOPES GREATER THAN 3:1).
8. IN ACCORDANCE WITH THE STANDARDS FOR PERMANENT VEGETATIVE COVER FOR SOIL STABILIZATION, ANY SOIL HAVING A pH OF 4 OR LESS OR CONTAINING IRON SULFIDES SHALL BE COVERED WITH A MINIMUM OF 12 INCHES OF SOIL HAVING A pH OF 5 OR GREATER PRIOR TO SEEDBED PREPARATION.
9. WESTCHESTER COUNTY AND THE ENGINEER, SHALL BE NOTIFIED 72 HOURS IN ADVANCE OF ANY LAND DISTURBING ACTIVITY.
10. AT THE TIME WHEN THE SITE PREPARATION FOR PERMANENT VEGETATIVE STABILIZATION IS GOING TO BE ACCOMPLISHED, ANY SOIL THAT WILL NOT PROVIDE A SUITABLE ENVIRONMENT TO SUPPORT ADEQUATE VEGETATIVE GROUND COVER, SHALL BE REMOVED OR TREATED IN SUCH A WAY THAT WILL PERMANENTLY ADJUST THE SOIL CONDITIONS AND RENDER IT SUITABLE FOR VEGETATIVE COVER. IF THE REMOVAL OR TREATMENT OF THE SOIL WILL NOT PROVIDE SUITABLE CONDITIONS, NON-VEGETATIVE MEANS OF PERMANENT GROUND STABILIZATION WILL HAVE TO BE EMPLOYED.
11. THE CONTRACTOR SHALL TAKE NECESSARY MEASURES TO MAINTAIN DUST CONTROL. DIRT HAUL ROADS SHALL BE SPRINKLED WITH WATER OR GIVEN A SURFACE OF CRUSHED STONES OR WOOD CHIPS AS REQUIRED. VEHICLES SHALL BE CLEANED, AS NECESSARY, PRIOR TO USING PUBLIC STREETS. PAVED ROADS SHALL BE SPRINKLED WITH WATER.
12. ALL SOIL EROSION AND SEDIMENT CONTROL DEVICES SHALL BE LOCATED IN THE FIELD AS REQUIRED OR AT THE DIRECTION OF THE ENGINEER. THE CONTRACT DRAWING ARE NOT INTENDED TO SHOW THE LOCATION AND DETAILS FOR ALL SUCH DEVICES BUT ARE TO BE USED AS A REASONABLE GUIDE.
13. ANY CHANGES TO THE SOIL AND SEDIMENT CONTROL PLANS WILL REQUIRE THE SUBMISSION OF REVISED SOIL EROSION AND SEDIMENT CONTROL PLANS TO WESTCHESTER COUNTY AND THE ENGINEER. THE REVISED PLANS MUST BE PREPARED BY THE CONTRACTOR AND MUST MEET ALL CURRENT NYS SOIL EROSION AND SEDIMENT CONTROL PRACTICES.
14. CONTRACTOR SHALL OBTAIN ALL REQUIRED SEDIMENT CONTROL PERMITS.
15. UPON COMPLETION OF CONSTRUCTION WORK AND AFTER FINAL GRADING AND WHEN PERMANENT STABILIZATION HAS BEEN ESTABLISHED, STRAW BALES, SILT FENCES AND ALL OTHER SOIL PLAN APPURTENANCES WILL BE REMOVED AND DISPOSED OF BY THE CONTRACTOR, UNLESS ORDERED TO REMAIN BY THE ENGINEER.
16. ALL EXCESS EXCAVATED MATERIAL, EXCEPT FOR TOP SOIL, WILL BE REMOVED FROM THE SITE BY THE CONTRACTOR IN ACCORDANCE WITH THE CONTRACT DOCUMENTS.
17. CONDUIT OUTLETS AND CATCH BASIN INLETS MUST BE PROTECTED PRIOR TO START OF CONSTRUCTION.
18. THE CONTRACTOR SHALL PROVIDE A DETAILED SEQUENCE OF CONSTRUCTION OPERATIONS FOR REVIEW AND SUBMITTAL TO WESTCHESTER COUNTY AND THE ENGINEER.
19. THE CONTRACTOR SHALL MEET ENGINEER ON-SITE TO DEFINE THOSE AREAS WHICH WILL REQUIRE SOIL EROSION AND SEDIMENT CONTROL FACILITIES, DISCUSS THEIR CONSTRUCTION AND THEREAFTER PROVIDE DETAILED PLANS FOR REVIEW OF SUCH FACILITIES BY WESTCHESTER COUNTY AND THE ENGINEER.
20. ALL SOIL EROSION AND SEDIMENT CONTROL PRACTICES SHALL BE IN PLACE WHERE POSSIBLE PRIOR TO, OR IMMEDIATELY FOLLOWING SITE AND ACCESS CLEARING.
21. ALL SOIL EROSION AND SEDIMENT CONTROL PRACTICES SHALL BE LEFT IN PLACE AND MAINTAINED; INCLUDING SILT AND SEDIMENT REMOVAL, UNTIL CONSTRUCTION IS COMPLETED, AREA STABILIZED AND THE ENGINEER SO DIRECTS.
22. CONTRACTOR SHALL CONFINE SOIL DISTURBANCE ACTIVITY TO THE AREAS CONTAINED WITHIN THE "LIMIT OF DISTURBANCE" LINES EXCEPT AS DIRECTED BY THE ENGINEER AND IN ACCORDANCE AND COORDINATION WITH ADJACENT CONTRACTS. SUCH ACTIVITY SHALL SHALL ESSENTIALLY CONSIST OF CLEARING, GRUBBING, GRADING AND CONSTRUCTION IN AREAS DEFINED AS BUILDINGS, PIPELINE, PARKING AREAS, DRIVES AND WALKWAYS OR AS MAY BE REQUIRED DUE TO GRADE CHANGES OR RETAINING WALLS.
23. ALL DEWATERING OPERATIONS MUST DISCHARGE DIRECTLY INTO A SEDIMENT FILTER AREA. SEDIMENT FILTER SHALL BE INSTALLED IN ACCORDANCE WITH THE CONTRACT DOCUMENTS AND THE DETAILS OF DESIGN AND CONSTRUCTION SHALL PREPARED AND SUBMITTED BY THE CONTRACTOR TO THE ENGINEER, AND ALL OTHER PERTINENT AGENCIES FOR REVIEW.
24. SOIL STABILIZATION METHODS SHALL BE UNDERTAKEN COINCIDENTALLY WITH ALL SITE IMPROVEMENTS AND CONTINUE DURING THE CONSTRUCTION ACTIVITY PERIOD.
25. THE LIMITS OF FENCING FOR TREE PROTECTION WILL BE DETERMINED IN THE FIELD PRIOR TO CONSTRUCTION AND WILL INCLUDE THE TREE CANOPY.
26. COMPLY WITH GENERAL PERMIT GP-0-20-001, AS OUTLINED IN THE STORM WATER PREVENTION PLAN (SWPPP).

6/15/2022 4:10:27 PM

CONSULTANT INFORMATION

LiRo Engineers, Inc.
*A LiRo Group Company*
Mineola, N.Y. 516-746-2350[T]

CONSULTANT SEAL

STATE OF NEW YORK · KENNETH J. HOLMSTROM · LICENSED PROFESSIONAL ENGINEER · No. 059134

| REVISION NUMBER | DATE | MADE BY | APP'D BY | REVISION |
|---|---|---|---|---|

RECORD DRAWING CERTIFICATION
☐ AS BUILT - CHANGES AS NOTED ☐ AS BUILT - NO CHANGES

| CONTRACTOR | PROJECT COORDINATOR |
|---|---|
| NAME | NAME |
| SIGNATURE | SIGNATURE |
| TITLE DATE | TITLE DATE |

WESTCHESTER COUNTY, NEW YORK
DEPARTMENT OF PUBLIC WORKS AND TRANSPORTATION
DIVISION OF ENGINEERING

**INFRASTRUCTURE REHABILITATION PHASE 3**
**PLAYLAND PARK, RYE, NEW YORK**
**CROSS AXIS BUILDING E**
**GENERAL NOTES**

| | |
|---|---|
| CONTRACT NUMBER | 22-523 |
| SHEET NUMBER | CXE-C-01 |
| DWG NO.: | 310 of 664 |
| SCALE: | 1"=10' |
| DATE: | 08/23/2022 |
| DPW FILE NUMBER | 1-118-C-1059-0 |
| REV. NO. | 0 |

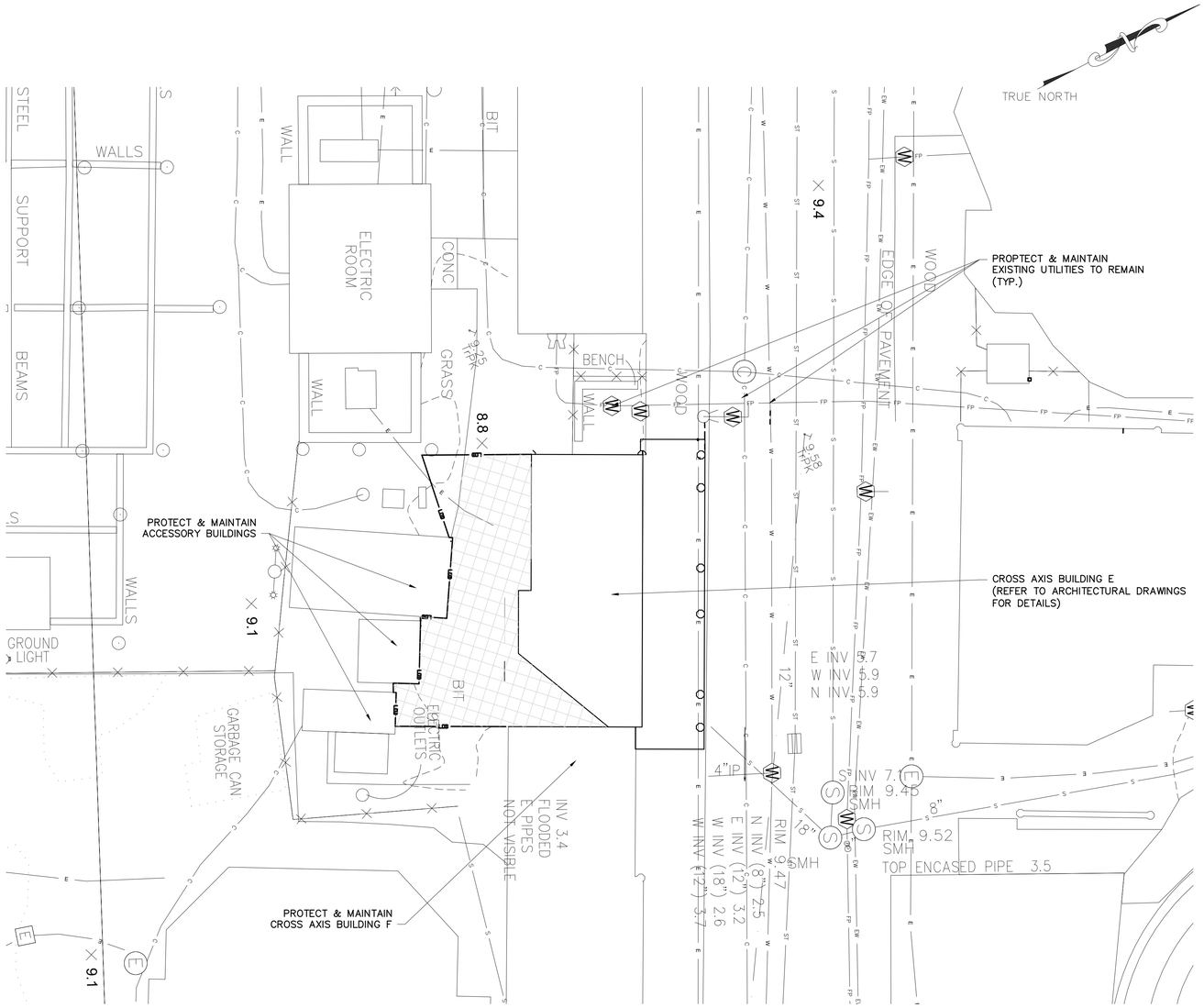


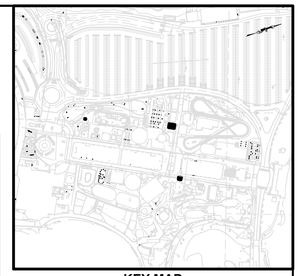

**KEY MAP**
**NOT TO SCALE**

## EXISTING LEGEND

- POST
- UTILITY POLE
- SIGN
- HANDICAP PARKING
- GROUND LIGHT
- LIGHT POLE
- UTILITY POLE WITH LIGHT
- LIGHT POLE (SINGLE LIGHT)
- LIGHT POLE (DOUBLE LIGHT)
- LIGHT POLE (MULTI LIGHT)
- BOAT TIE-OFF CLEAT
- CATCH BASIN
- TRENCH DRAIN
- MAILBOX
- UNKNOWN MANHOLE
- COMMUNICATIONS BOX/HAND HOLE
- ELECTRIC HAND HOLE
- ELECTRIC BOX
- GAS METER
- IRRIGATION BOX
- UNKNOWN UTILITY BOX/HAND HOLE
- COMMUNICATION MANHOLE
- DRAINAGE MANHOLE
- ELECTRIC MANHOLE
- SEWER MANHOLE
- STORM SEWER MANHOLE
- SEWER CLEANOUT
- HYDRANT
- SIAMESE CONNECTION
- UNKNOWN VALVE
- WATER VALVE
- GAS VALVE
- WATER SPIGOT OR FOUNTAIN
- MONITORING WELL
- DECIDUOUS BUSH
- EVERGREEN BUSH
- DECIDUOUS TREE
- EVERGREEN TREE
- STUMP
- HEDGE ROW
- TREELINE
- BRUSHLINE
- RETAINING WALL
- GUIDE RAIL
- STONE WALL
- WATERLINE
- FENCE
- UNDERGROUND COMMUNICATION
- UNDERGROUND PROPANE
- UNDERGROUND ELECTRICAL
- UNDERGROUND STREET LIGHTING
- UNDERGROUND ENVIRONMENTAL WASTEWATER
- UNDERGROUND SEWER
- UNDERGROUND STORM SEWER
- UNDERGROUND WATER
- UNDERGROUND FIRE PROTECTION
- EXISTING MAJOR CONTOUR
- EXISTING MINOR CONTOUR

## PROPOSED LEGEND:

- SAW CUTTING ASPHALT CONCRETE
- LOD — LIMITS OF DISTURBANCE
- LIMITS OF PAVEMENT REMOVAL (MILLING & EXCAVATION)
- AREA OF ASPHALT PAVEMENT REMOVAL (FULL DEPTH & EXCAVATION)
- DRAINAGE STRUCTURE INLET PROTECTION

## NOTES:

1. PAVEMENT REMOVAL, MILLING AND EXCAVATION, MATERIAL SHALL NOT BE STOCKPILED ON SITE.
2. EXISTING GRADES, PIPE LOCATIONS, SIZES, MATERIAL, INVERTS AND OTHER EXISTING CONDITIONS ARE SHOWN ON THE DRAWINGS FROM AVAILABLE AS-BUILT DRAWINGS AND FIELD SURVEY BY OTHERS. IT SHALL BE THE RESPONSIBILITY OF THE CONTRACTOR TO VERIFY ALL EXISTING CONDITIONS.
3. THE CONTRACTOR SHALL TAKE PROPER PRECAUTIONS NOT TO DAMAGE ANY EXISTING SITE CONDITIONS SPECIFICALLY EXCLUDED FROM THE CONTRACT AND WILL BE HELD SOLELY RESPONSIBLE FOR ANY DAMAGE OCCURRING DURING THE COURSE OF THE WORK DURING CONSTRUCTION. THE CONTRACTOR SHALL, AT THEIR OWN EXPENSE, MAKE ALL REPAIRS REQUIRED TO RESTORE ANY DAMAGED AREAS TO ORIGINAL CONDITIONS.

New York 811 — Know what's below. Call before you dig.

0 10 20 30
1"=10' SCALE BAR

6/15/2022 4:10:27 PM

CONSULTANT INFORMATION
LiRo Engineers, Inc.
A LiRo Group Company
Mineola, N.Y. 516-746-2350[T]

CONSULTANT SEAL
STATE OF NEW YORK — KENNETH J. HOLLOWAY — LICENSED PROFESSIONAL ENGINEER — NO. 059134

| REVISION NUMBER | DATE | MADE BY | APP'D BY | REVISION |
|---|---|---|---|---|

RECORD DRAWING CERTIFICATION
☐ AS BUILT – CHANGES AS NOTED ☐ AS BUILT – NO CHANGES

CONTRACTOR: NAME / SIGNATURE / TITLE / DATE
PROJECT COORDINATOR: NAME / SIGNATURE / TITLE / DATE

WESTCHESTER COUNTY, NEW YORK
DEPARTMENT OF PUBLIC WORKS AND TRANSPORTATION
DIVISION OF ENGINEERING

**INFRASTRUCTURE REHABILITATION PHASE 3**
**PLAYLAND PARK, RYE, NEW YORK**
**CROSS AXIS BUILDING E**
**EXISTING CONDITIONS/DEMOLITION PLAN**

| | |
|---|---|
| CONTRACT NUMBER | 22-523 |
| SHEET NUMBER | CXE-C-02 |
| DWG NO.: | 311 of 664 |
| SCALE: | 1"=10' |
| DATE: | 08/23/2022 |
| DPW FILE NUMBER | 1-118-C-1060-0 |
| REV. NO.: | 0 |

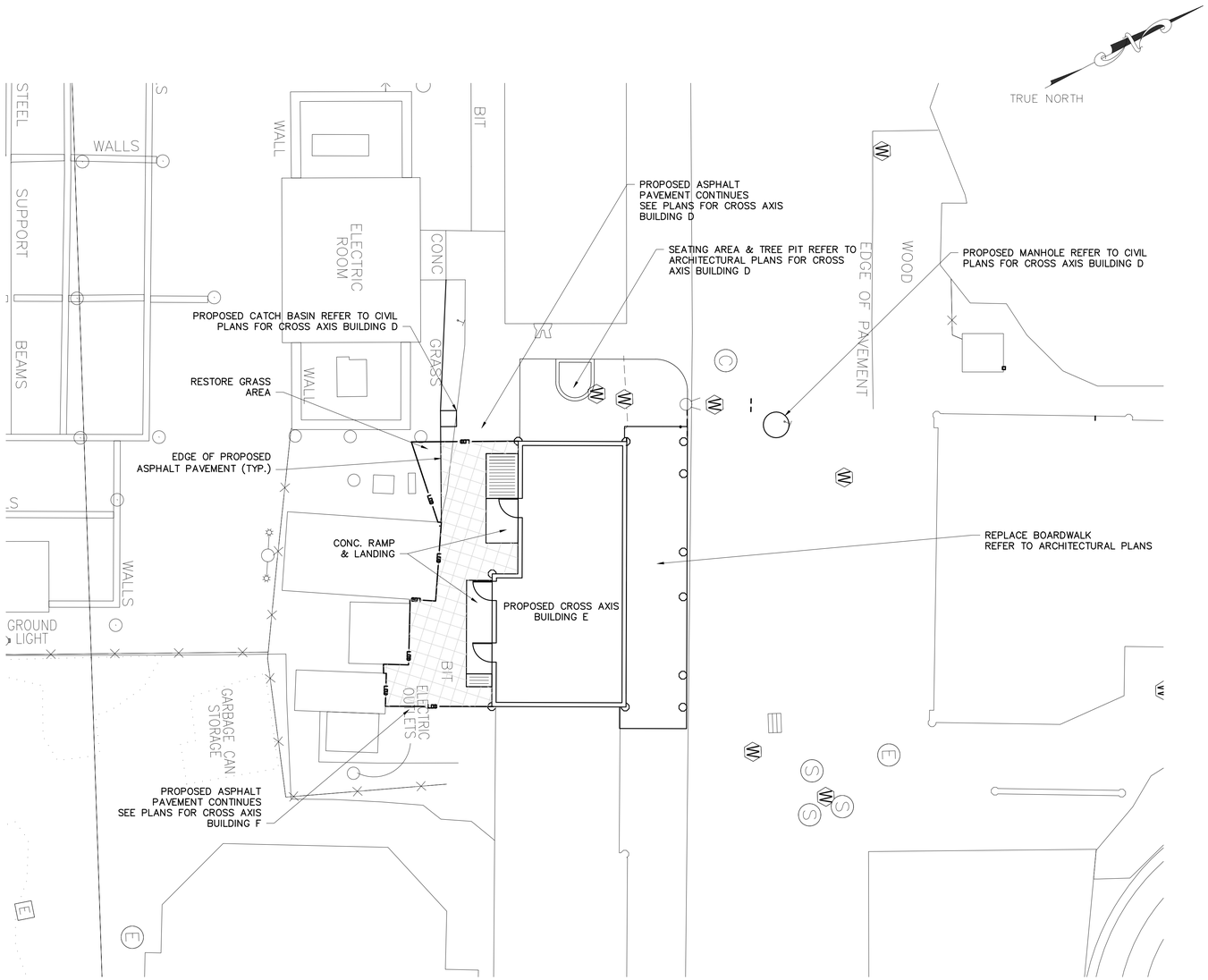


## EXISTING LEGEND

- POST
- UTILITY POLE
- SIGN
- HANDICAP PARKING
- GROUND LIGHT
- LIGHT POLE
- UTILITY POLE WITH LIGHT
- LIGHT POLE (SINGLE LIGHT)
- LIGHT POLE (DOUBLE LIGHT)
- LIGHT POLE (MULTI LIGHT)
- BOAT TIE-OFF CLEAT
- CATCH BASIN
- TRENCH DRAIN
- MAILBOX
- UNKNOWN MANHOLE
- COMMUNICATIONS BOX/HAND HOLE
- ELECTRIC HAND HOLE
- ELECTRIC BOX
- GAS METER
- IRRIGATION BOX
- UNKNOWN UTILITY BOX/HAND HOLE
- COMMUNICATION MANHOLE
- DRAINAGE MANHOLE
- ELECTRIC MANHOLE
- SEWER MANHOLE
- STORM SEWER MANHOLE
- SEWER CLEANOUT
- HYDRANT
- SIAMESE CONNECTION
- UNKNOWN VALVE
- WATER VALVE
- GAS VALVE
- WATER SPIGOT OR FOUNTAIN
- MONITORING WELL
- DECIDUOUS BUSH
- EVERGREEN BUSH
- DECIDUOUS TREE
- EVERGREEN TREE
- STUMP
- HEDGE ROW
- TREELINE
- BRUSHLINE
- RETAINING WALL
- GUIDE RAIL
- STONE WALL
- WATERLINE
- FENCE
- UNDERGROUND COMMUNICATION
- UNDERGROUND PROPANE
- UNDERGROUND ELECTRICAL
- UNDERGROUND STREET LIGHTING
- UNDERGROUND ENVIRONMENTAL WASTEWATER
- UNDERGROUND SEWER
- UNDERGROUND STORM SEWER
- UNDERGROUND WATER
- UNDERGROUND FIRE PROTECTION

## PROPOSED LEGEND:

- MOVABLE CONSTRUCTION FENCE
- SAW CUTTING ASPHALT CONCRETE
- LIMITS OF DISTURBANCE
- LIMITS OF PAVEMENT REMOVAL
- AREA OF FULL DEPTH ASPHALT PAVEMENT
- DRAINAGE STRUCTURE INLET PROTECTION

0 10 20 30
1"=10' SCALE BAR

6/15/2022 4:10:27 PM

CONSULTANT INFORMATION
LiRo Engineers, Inc.
A LiRo Group Company
Mineola, N.Y. 516-746-2350[T]

CONSULTANT SEAL
STATE OF NEW YORK · KENNETH J. HOLT · LICENSED PROFESSIONAL ENGINEER · NO. 059134

| REVISION NUMBER | DATE | MADE BY | APP'D BY | REVISION |
|---|---|---|---|---|

RECORD DRAWING CERTIFICATION
☐ AS BUILT – CHANGES AS NOTED ☐ AS BUILT – NO CHANGES

CONTRACTOR
NAME
SIGNATURE
TITLE DATE

PROJECT COORDINATOR
NAME
SIGNATURE
TITLE DATE

WESTCHESTER COUNTY, NEW YORK
DEPARTMENT OF PUBLIC WORKS AND TRANSPORTATION
DIVISION OF ENGINEERING

**INFRASTRUCTURE REHABILITATION PHASE 3**
**PLAYLAND PARK, RYE, NEW YORK**
**CROSS AXIS BUILDING E**
**SITE CONSTRUCTION PLAN**

CONTRACT NUMBER: 22-523
SHEET NUMBER: CXE-C-03
DWG NO.: 312 of 664
SCALE: 1"=10'
DATE: 08/23/2022
DPW FILE NUMBER: 1-118-C-1061-0
REV. NO.: 0

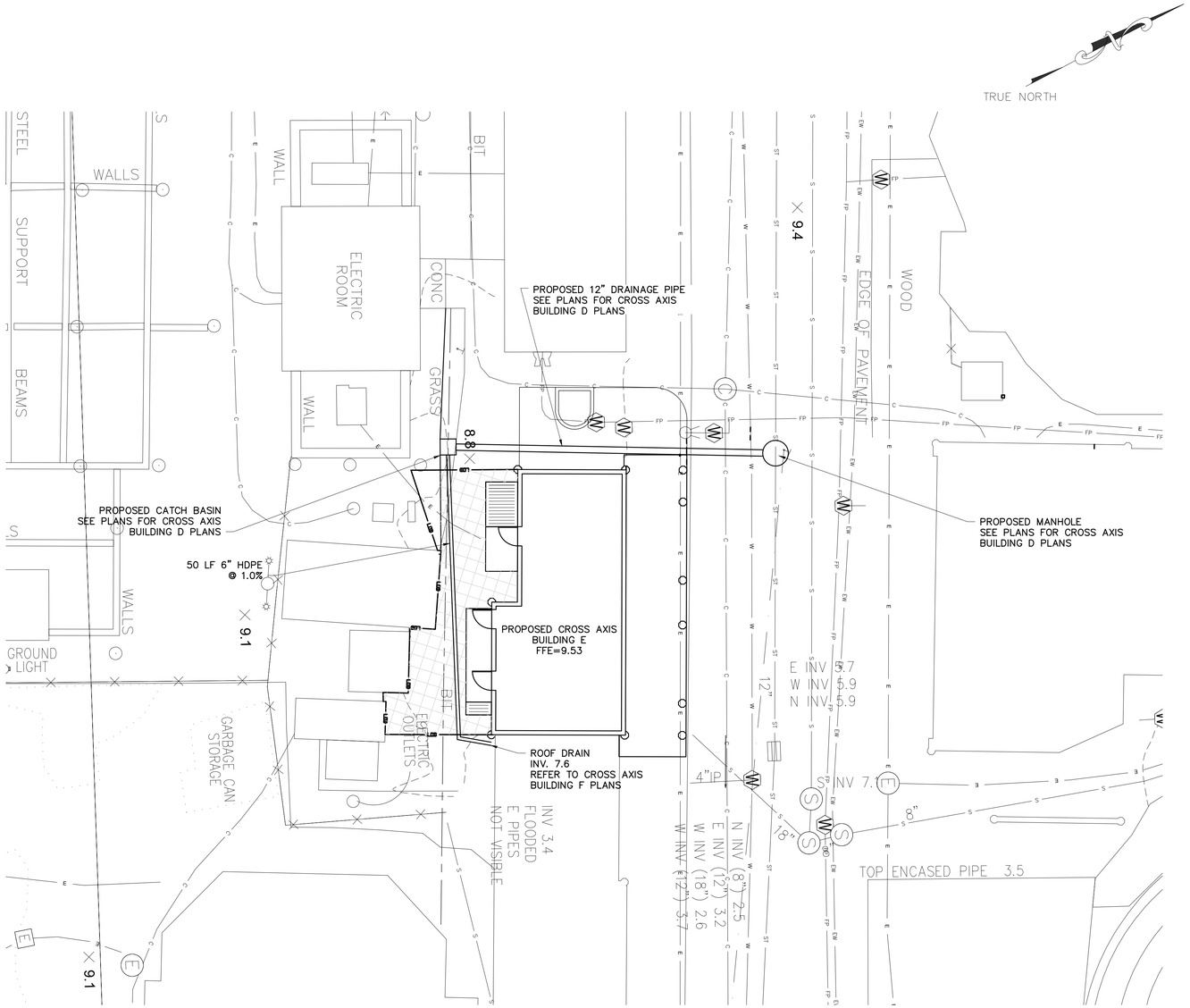


NOTE:
NO WATER AND SEWER SUPPLY NEEDED FOR THIS BUILDING. SEE FIRE PROTECTION PLAN FOR DETAILS

## EXISTING LEGEND

- POST
- UTILITY POLE
- SIGN
- HANDICAP PARKING
- GROUND LIGHT
- LIGHT POLE
- UTILITY POLE WITH LIGHT
- LIGHT POLE (SINGLE LIGHT)
- LIGHT POLE (DOUBLE LIGHT)
- LIGHT POLE (MULTI LIGHT)
- BOAT TIE-OFF CLEAT
- CATCH BASIN
- TRENCH DRAIN
- MAILBOX
- UNKNOWN MANHOLE
- COMMUNICATIONS BOX/HAND HOLE
- ELECTRIC HAND HOLE
- ELECTRIC BOX
- GAS METER
- IRRIGATION BOX
- UNKNOWN UTILITY BOX/HAND HOLE
- COMMUNICATION MANHOLE
- DRAINAGE MANHOLE
- ELECTRIC MANHOLE
- SEWER MANHOLE
- STORM SEWER MANHOLE
- SEWER CLEANOUT
- HYDRANT
- SIAMESE CONNECTION
- UNKNOWN VALVE
- WATER VALVE
- GAS VALVE
- WATER SPIGOT OR FOUNTAIN
- MONITORING WELL
- DECIDUOUS BUSH
- EVERGREEN BUSH
- DECIDUOUS TREE
- EVERGREEN TREE
- STUMP
- HEDGE ROW
- TREELINE
- BRUSHLINE
- RETAINING WALL
- GUIDE RAIL
- STONE WALL
- WATERLINE
- FENCE
- UNDERGROUND COMMUNICATION
- UNDERGROUND PROPANE
- UNDERGROUND ELECTRICAL
- UNDERGROUND STREET LIGHTING
- UNDERGROUND ENVIRONMENTAL WASTEWATER
- UNDERGROUND SEWER
- UNDERGROUND STORM SEWER
- UNDERGROUND WATER
- UNDERGROUND FIRE PROTECTION

PROPOSED LEGEND:

- SAW CUTTING ASPHALT CONCRETE
- LIMITS OF DISTURBANCE
- LIMITS OF PAVEMENT REMOVAL (MILLING & EXCAVATION)
- PROPOSED WATER LINE
- PROPOSED CATCH BASIN
- PROPOSED STORM PIPE
- PROPOSED SANITARY MANHOLE
- PROPOSED SANITARY PIPE
- PROPOSED UNDERGROUND ELECTRIC

New York 811 Know what's below. Call before you dig.

0 10 20 30
1"=10' SCALE BAR

6/15/2022 4:10:27 PM

CONSULTANT INFORMATION
LiRo Engineers, Inc.
A LiRo Group Company
Mineola, N.Y. 516-746-2350[T]

CONSULTANT SEAL
STATE OF NEW YORK
KENNETH J. HOLDSTROM
No. 059134
LICENSED PROFESSIONAL ENGINEER

| REVISION NUMBER | DATE | MADE BY | APP'D BY | REVISION |
|---|---|---|---|---|

RECORD DRAWING CERTIFICATION
AS BUILT – CHANGES AS NOTED
AS BUILT – NO CHANGES

CONTRACTOR
NAME
SIGNATURE
TITLE DATE

PROJECT COORDINATOR
NAME
SIGNATURE
TITLE DATE

WESTCHESTER COUNTY, NEW YORK
DEPARTMENT OF PUBLIC WORKS AND TRANSPORTATION
DIVISION OF ENGINEERING

**INFRASTRUCTURE REHABILITATION PHASE 3**
**PLAYLAND PARK, RYE, NEW YORK**
**CROSS AXIS BUILDING E**
**UTILITY CONSTRUCTION PLAN**

CONTRACT NUMBER: 22-523
SHEET NUMBER: CXE-C-04
DWG NO.: 313 of 664
SCALE: 1"=10'
DATE: 08/23/2022
DPW FILE NUMBER: 1-118-C-1062-0
REV. NO.: 0

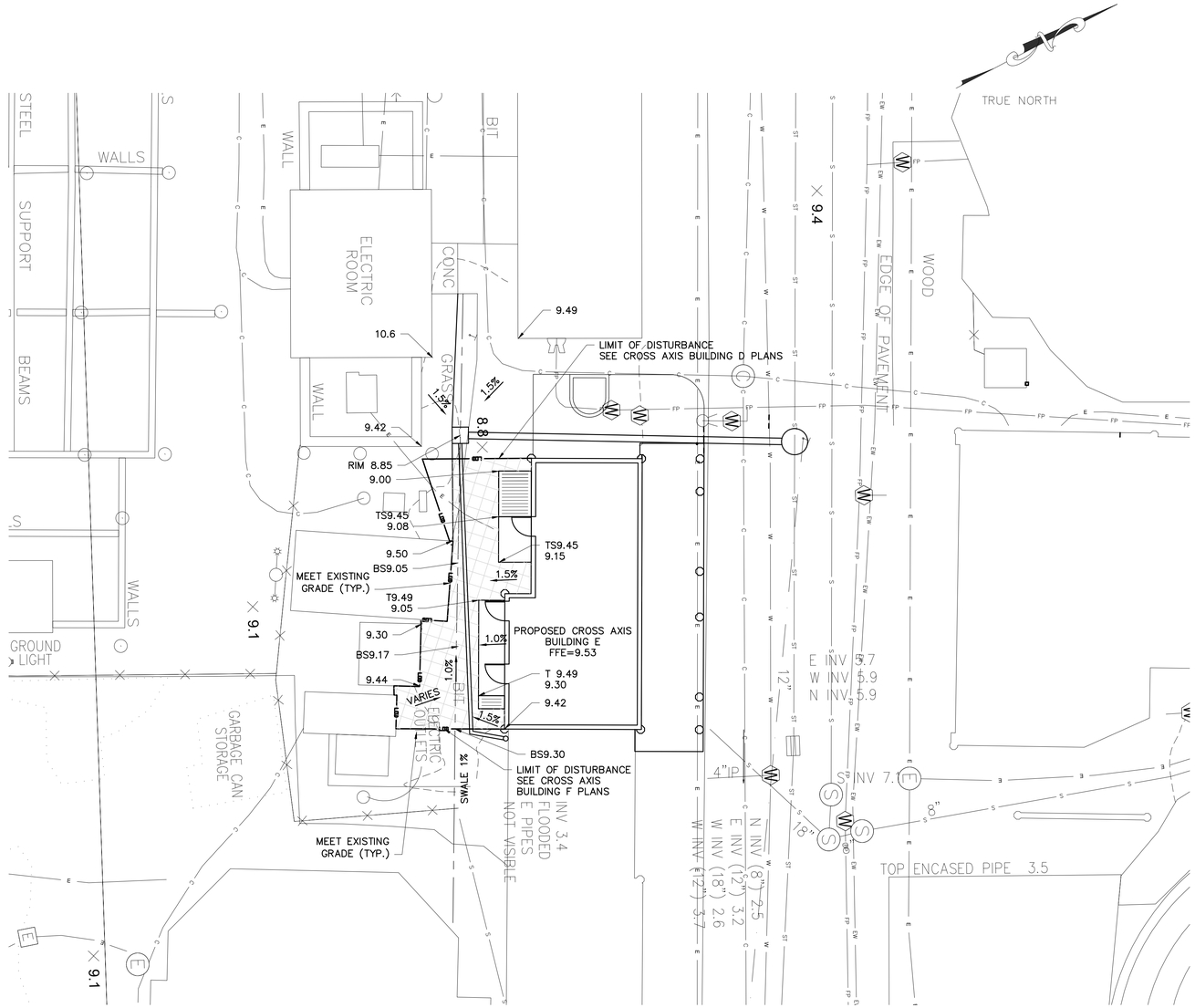


## EXISTING LEGEND

- POST
- UTILITY POLE
- SIGN
- HANDICAP PARKING
- GROUND LIGHT
- LIGHT POLE
- UTILITY POLE WITH LIGHT
- LIGHT POLE (SINGLE LIGHT)
- LIGHT POLE (DOUBLE LIGHT)
- LIGHT POLE (MULTI LIGHT)
- BOAT TIE-OFF CLEAT
- CATCH BASIN
- TRENCH DRAIN
- MAILBOX
- UNKNOWN MANHOLE
- COMMUNICATIONS BOX/HAND HOLE
- ELECTRIC HAND HOLE
- ELECTRIC BOX
- GAS METER
- IRRIGATION BOX
- UNKNOWN UTILITY BOX/HAND HOLE
- COMMUNICATION MANHOLE
- DRAINAGE MANHOLE
- ELECTRIC MANHOLE
- SEWER MANHOLE
- STORM SEWER MANHOLE
- SEWER CLEANOUT
- HYDRANT
- SIAMESE CONNECTION
- UNKNOWN VALVE
- WATER VALVE
- GAS VALVE
- WATER SPIGOT OR FOUNTAIN
- MONITORING WELL
- DECIDUOUS BUSH
- EVERGREEN BUSH
- DECIDUOUS TREE
- EVERGREEN TREE
- STUMP
- HEDGE ROW
- TREELINE
- BRUSHLINE
- RETAINING WALL
- GUIDE RAIL
- STONE WALL
- WATERLINE
- FENCE
- UNDERGROUND COMMUNICATION
- UNDERGROUND PROPANE
- UNDERGROUND ELECTRICAL
- UNDERGROUND STREET LIGHTING
- UNDERGROUND ENVIRONMENTAL WASTEWATER
- UNDERGROUND SEWER
- UNDERGROUND STORM SEWER
- UNDERGROUND WATER
- UNDERGROUND FIRE PROTECTION
- 415.50 EXISTING SPOT ELEVATION
- TG=415.50 EXISTING TOP OF GRATE ELEVATION

PROPOSED LEGEND:

- SAW CUTTING ASPHALT CONCRETE
- LOD LIMITS OF DISTURBANCE
- 415 PROPOSED MAJOR CONTOUR
- 414 PROPOSED MINOR CONTOUR
- 9.30 PROPOSED SPOT ELEVATION
- BS9.30 PROPOSED BOTTOM SWALE
- TS9.30 TOP OF SLAB
- PROPOSED INLET PROTECTION

New York 811 Know what's below. Call before you dig.

0 10 20 30
1'=10' SCALE BAR

6/15/2022 4:10:27 PM

CONSULTANT INFORMATION
LiRo Engineers, Inc.
A LiRo Group Company
Mineola, N.Y. 516-746-2350[T]

CONSULTANT SEAL
STATE OF NEW YORK
KENNETH J. HOLDSTROM
No. 059134
LICENSED PROFESSIONAL ENGINEER

| REVISION NUMBER | DATE | MADE BY | APP'D BY | REVISION |
|---|---|---|---|---|

RECORD DRAWING CERTIFICATION
AS BUILT – CHANGES AS NOTED
AS BUILT – NO CHANGES

CONTRACTOR
NAME
SIGNATURE
TITLE DATE

PROJECT COORDINATOR
NAME
SIGNATURE
TITLE DATE

WESTCHESTER COUNTY, NEW YORK
DEPARTMENT OF PUBLIC WORKS AND TRANSPORTATION
DIVISION OF ENGINEERING

**INFRASTRUCTURE REHABILITATION PHASE 3**
**PLAYLAND PARK, RYE, NEW YORK**
**CROSS AXIS BUILDING E**
**GRADING AND EROSION CONTROL PLAN**

| | |
|---|---|
| CONTRACT NUMBER | 22-523 |
| SHEET NUMBER | CXE-C-05 |
| DWG NO.: | 314 of 664 |
| SCALE: | 1"=10' |
| DATE: | 08/23/2022 |
| DPW FILE NUMBER | 1-118-C-1063-0 |
| REV. NO. | 0 |

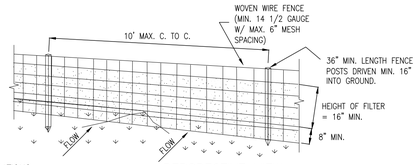


PERSPECTIVE VIEW

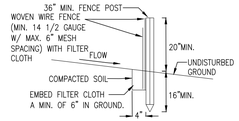


SECTION VIEW

CONSTRUCTION SPECIFICATIONS

1. WOVEN WIRE FENCE TO BE FASTENED SECURELY TO FENCE POSTS WITH WIRE TIES OR STAPLES. POSTS SHALL BE STEEL EITHER "T" OR "U" TYPE OR HARDWOOD.
2. FILTER CLOTH TO BE TO BE FASTENED SECURELY TO WOVEN WIRE FENCE WITH TIES SPACED EVERY 24" AT TOP AND MID SECTION. FENCE SHALL BE WOVEN WIRE, 12 1/2 GAUGE, 6" MAXIMUM MESH OPENING.
3. WHEN TWO SECTIONS OF FILTER CLOTH ADJOIN EACH OTHER THEY SHALL BE OVER-LAPPED BY SIX INCHES AND FOLDED. FILTER CLOTH SHALL BE EITHER FILTER X, MIRAFI 100X, STABILINKA T140N, OR APPROVED EQUIVALENT.
4. PREFABRICATED UNITS SHALL BE GEOFAB, ENVIROFENCE, OR APPROVED EQUIVALENT.
5. MAINTENANCE SHALL BE PERFORMED AS NEEDED AND MATERIAL REMOVED WHEN "BULGES" DEVELOP IN THE SILT FENCE.

## SILT FENCE INSTALLATION DETAIL
## ITEM NO. 209.13

N.T.S.

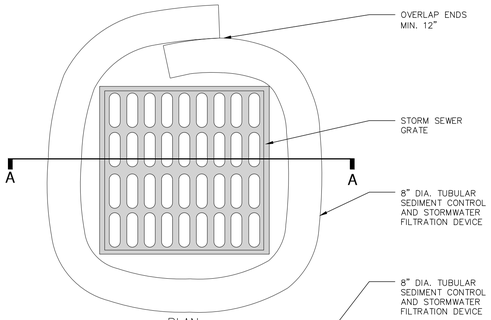


PLAN

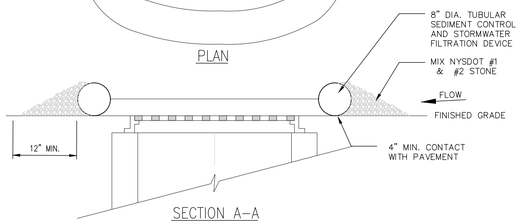


SECTION A–A

NOTES:

1. TUBULAR SEDIMENT CONTROL AND STORMWATER FILTRATION DEVICES SHALL BE FILTREXX FILTERSOXX, OR EQUIVALENT.
2. REPLACE AND DISPOSE OF PER MANUFACTURERS SPECIFICATIONS.
3. THIS PRACTICE INCLUDES SANDBAGS, COMPOST FILTER SOCKS, GEO-TUBES FILLED WITH BALLAST, AND MANUFACTURED SURFACE BARRIERS. PEA GRAVEL CAN ALSO BE USED IN CONJUNCTION WITH THESE PRACTICES TO IMPROVE PERFORMANCE. WHEN INLET IS NOT AT A LOW POINT, AND IS OFF-SET FROM THE PAVEMENT OR GUTTER LINE, PROTECTION SHOULD BE SELECTED AND INSTALLED SO THAT FLOWS ARE NOT DIVERTED AROUND INLET.
4. THE DRAINAGE AREA SHOULD BE LIMITED TO 1 ACRE AT THE DRAINAGE INLET. ALL PRACTICES WILL BE PLACED AT THE INLET PERIMETER OR BEYOND TO MAXIMIZE THE FLOW CAPACITY OF THE INLET. PRACTICES SHALL BE WEIGHTED, BRACED, TIED, OR OTHERWISE ANCHORED TO PREVENT MOVEMENT OR SHIFTING OF LOCATION ON PAVED SURFACES. TRAFFIC SAFETY SHALL BE INTEGRATED WITH THE USE OF THIS PRACTICE. ALL PRACTICES SHOULD BE MARKED WITH TRAFFIC SAFETY CONES AS APPROPRIATE. STRUCTURE HEIGHT SHALL NOT CAUSE FLOODING OR BY-PASS FLOW THAT WOULD CAUSE ADDITIONAL EROSION. THE STRUCTURE SHOULD BE INSPECTED AFTER EVERY STORM EVENT. ANY SEDIMENT SHOULD BE REMOVED AND DISPOSED OF ON THE SITE. ANY BROKEN O DAMAGED COMPONENTS SHOULD BE REPLACED. CHECK ALL MATERIALS FOR PROPER ANCHORING AND SECURE AS NECESSARY.
5. IF USING THE COMPOST FILTER SOCK, THE COMPOST INFILL SHALL BE WELL DECOMPOSED (MATURED AT LEAST 3 MONTHS), WEED-FREE, ORGANIC MATTER. IT SHALL BE AEROBICALLY COMPOSTED, POSSESS NO OBJECTIONABLE OODRS, AND CONTAIN LESS THAN 1%, BY DRY WEIGHT, OF MANMADE FOREIGN MATTER. WHEN USING COMPOST FILTER SOCKS ADJACENT TO SURFACE WATER, THE COMPOST SHOULD HAVE LOW NUTRIENT VALUE.

## DRAINAGE STRUCTURE INLET PROTECTION, TEMPORARY

N.T.S.

## STORM WATER POLLUTION PREVENTION PLAN NOTES:

THE CONTRACTOR SHALL BE RESPONSIBLE FOR IMPLEMENTATION AND ADHERENCE TO THE STORM WATER POLLUTION PREVENTION PLAN (SWPPP) FROM THE COMMENCEMENT OF THE PROJECT TO SITE STABILIZATION.

## POLLUTION PREVENTION MEASURES:

THE CONTRACTOR SHALL TAKE THE FOLLOWING STEPS TO PREVENT LITTER, CHEMICALS AND DEBRIS FROM ENTERING STORM DRAINS AND DISCHARGES.

1. PROPERLY INSTALL AND MAINTAIN EROSION AND SEDIMENT CONTROL DEVICES AS OUTLINED IN THE PROJECT DOCUMENTS AND IN COMPLIANCE WITH THE LATEST EDITION OF THE NEW YORK STATE STANDARDS AND SPECIFICATIONS FOR EROSION AND SEDIMENT CONTROL.
2. PROPERLY CONTAIN AND DISPOSE OF ALL MATERIALS USED ON SITE.
3. CLEAN UP SPILLS IMMEDIATELY TO MINIMIZE SAFETY HAZARD AND PREVENT SPREADING.
4. ROUTINELY INSPECT AND CLEAN OUT CATCH BASINS AND STORM LINES.
5. LABEL ALL STORM INLETS AS "NO DUMPING".
6. CONTROL LITTER BY SWEEPING AND PICKING IT UP DAILY.
7. DO NOT STORE FUEL AND WASTE ON-SITE OR USE SECONDARY CONTAINMENT MEASURES.
8. IF PRACTICAL, USE ALTERNATIVE CLEANING METHODS SUCH AS WIPING DOWN OF VEHICLES AND EQUIPMENT INSTEAD OF HOSING.
9. REMOVE ALL EXCAVATED UNSUITABLE MATERIAL FROM THE SITE AS SOON AS PRACTICABLE.
10. PRACTICE GOOD HOUSEKEEPING AND EDUCATE EMPLOYEES ON POLLUTION PREVENTION MEASURES.

## ON SITE MATERIAL STORAGE:

THE CONTRACTOR MAY HAVE THE FOLLOWING MATERIALS STORED ON-SITE DURING PROJECT CONSTRUCTION. THE LIST MAY NOT BE INCLUSIVE AND WILL VARY DURING THE DIFFERENT STAGES OF THE PROJECT.

1. PRE-CAST CONCRETE MANHOLES, CATCH BASINS AND OUTLET CONTROL STRUCTURE.
2. PVC PIPING AND APPURTENANCES.
3. STOCKPILED SOILS – TOP SOIL, SUB BASE MATERIAL, CUSHION MATERIAL, SELECT GRANULAR MATERIAL, GRAVEL AND CRUSHED STONE.
4. EROSION AND SEDIMENT CONTROL MATERIAL: SILT FENCE, RIP RAP AND SEED.
5. PAVING MATERIALS AND EQUIPMENT
6. SECURITY FENCE AND APPURTENANCES
7. EQUIPMENT REQUIRED TO PERFORM THE WORK.

THE CONTRACTOR SHALL UTILIZE THE POLLUTION PREVENTION MEASURES OUTLINED ABOVE TO PREVENT POLLUTANTS FROM STORED MATERIALS FROM REACHING THE STORM WATER CONVEYANCE DEVICES AND DISCHARGES.

## EROSION AND SEDIMENT CONTROL PRACTICES:

TEMPORARY STORM INLET PROTECTION:
STORM INLET PROTECTION INTERCEPTS SEDIMENT LADEN RUNOFF AND TRAPS SEDIMENT TO PROTECT THE DRAINAGE SYSTEM. STORM INLET PROTECTION SHALL BE PROVIDED AT EACH NEW CATCH BASIN AS IT IS INSTALLED AND AROUND EXISTING CATCH BASINS AS SHOWN.

TEMPORARY SEDIMENT CONTROL – SILT FENCE
SILT FENCE REDUCES RUNOFF VELOCITY AND CAUSES SETTLING OF SEDIMENT. INSTALL SILT FENCE PRIOR TO BEGINNING ANY EXCAVATION OR EARTHWORK ACTIVITIES WHERE SHOWN ON THE DRAWINGS. INSTALL AROUND ANY STOCKPILED SOIL MATERIALS.

TEMPORARY STABILIZED CONSTRUCTION ENTRANCE
THE STABILIZED CONSTRUCTION ENTRANCE IS USED TO REDUCE OR ELIMINATE TRACKING OF SEDIMENT ONTO STREETS AND/OR PUBLIC RIGHT-OF-WAY.

TEMPORARY SEEDING
TEMPORARY SEEDING REDUCES EROSION AND SEDIMENT LOSS FROM THE BARE GROUND. PROVIDE TEMPORARY SEEDING TO PROVIDE TEMPORARY COVER FOR DISTURBED EARTH OR SOIL STOCKPILES HELD FOR LONGER THAN SEVEN (7) DAYS. TEMPORARY SHUT DOWN OF CONSTRUCTION OR WAITING FOR OPTIMAL PLANTING TIME. IN SPRING, SUMMER OR EARLY FALL APPLY RYE GRASS AT A RATE OF 1 LB/ 1,000 SQ. FT. IN LATE FALL APPLY CERTIFIED AROOSTOOK RYE AT 2.5 LBS / 1,000 SQ. FT. OR WOOD FIBER HYDROMULCH AT MANUFACTURE'S RECOMMENDED RATE. HAY OR STRAW SHALL BE ANCHORED.

DUST CONTROL
TEMPORARY AND PERMANENT STABILIZATION MEASURES SUCH AS SEEDING, MULCHING AND INSTALLING EROSION AND SEDIMENT CONTROL BLANKETS WILL PREVENT DUST FROM BLOWING OFF SITE. INSTALL THESE MEASURES AS SOON AS FINAL GRADES ARE REACHED AND ON SOIL STOCKPILES AND DISTURBED AREAS TO BE LEFT FOR LONGER THAN SEVEN (7) DAYS.

## PHASING OF EROSION AND SEDIMENT CONTROL PRACTICES:

1. PRIOR TO COMMENCING ANY CONSTRUCTION ACTIVITIES ON THE SITE, THE CONTRACTOR SHALL MEET WITH THE OWNERS REPRESENTATIVE AND DESIGNER TO DISCUSS THE STORM WATER POLLUTION PREVENTION PLAN.
2. PRIOR TO COMMENCING ANY EXCAVATION PROCEDURES, INSTALL SILT FENCE AS SHOWN ON THE PLANS.
3. INSTALL STABILIZED CONSTRUCTION ENTRANCE.
4. AS THE NEW CATCH BASINS ARE INSTALLED, PROVIDE TEMPORARY INLET PROTECTION.
5. AS SOIL MATERIAL IS EXCAVATED OR STOCKPILED, PROVIDE A SILT FENCE ENCLOSURE AROUND THE PILE. IF THE PILE IS TO REMAIN FOR LONGER THAN SEVEN (7) DAYS, TEMPORARILY SEED THE PILE.
6. DO NOT LEAVE DISTURBED AREAS NOT TO BE COVERED BY IMPERVIOUS SURFACE BARE FOR LONGER THAN SEVEN (7) DAYS, ROUGH GRADE THE AREAS AND TEMPORARILY SEED.
7. AFTER FINAL GRADING OF VEGETATED AREAS, PROVIDE PERMANENT SEEDING.
8. UPON FINAL STABILIZATION OF THE SITE, REMOVE ALL TEMPORARY EROSION AND SEDIMENT CONTROL DEVICES. INSPECT ALL PERMANENT EROSION AND SEDIMENT CONTROL AND STORM WATER MANAGEMENT DEVICES. REPLACE ANY FAILING OR UNSATISFACTORY MEASURES. CLEAN ALL STORMWATER CATCH BASINS AND PIPING.

## EROSION AND SEDIMENT CONTROL AND STORMWATER CONTROL DEVICE MAINTENANCE:

CONSTRUCTION DURATION
ALL EROSION AND SEDIMENT CONTROL DEVICES SHALL BE INSPECTED WEEKLY.

1. SILT FENCE SHALL BE REPLACED WHEN TORN, IS BULGING OR NO LONGER MEETING THE INSTALLATION DETAILS.
2. THE STABILIZED CONSTRUCTION ENTRANCE SHALL BE MAINTAINED IN A CONDITION TO PREVENT TRACKING OF SEDIMENT ON TO ROADS AND PUBLIC RIGHTS-OF-WAY. INSPECT TOP DRESSING AND PROVIDE ADDITIONAL AGGREGATE AS NECESSARY.
3. DRAINAGE STRUCTURES AND PIPING SHALL BE CHECKED FOR CLOGGING AND SEDIMENT ACCUMULATION AND CLEANED IF REQUIRED.

PROJECT COMPLETION
AT THE PROJECT COMPLETION AND PRIOR TO PROJECT CLOSE OUT, THE CONTRACTOR SHALL INSPECT ALL PERMANENT EROSION AND CONTROL AND STORMWATER MANAGEMENT PRACTICES.

1. ACCEPTABLE VEGETATION ESTABLISHMENT IN ACCORDANCE WITH SPECIFICATIONS.
2. DRAINAGE STRUCTURES AND PIPING SHALL BE CHECKED FOR CLOGGING AND SEDIMENT ACCUMULATION AND CLEANED IF REQUIRED.

## MAINTENANCE OF PERMANENT STORMWATER MANAGEMENT PRACTICES

1. DRAINAGE STRUCTURES AND PIPING SHALL BE CHECKED FOR CLOGGING AND SEDIMENT ACCUMULATION AND CLEANED IF REQUIRED.

## SITE ASSESSMENT AND INSPECTIONS

COMPLY WILL ALL CONDITIONS INCLUDED IN THE SPDES PERMIT, PART III.D.3 THROUGH PART III.D.5. THE REQUIREMENTS IN THESE SUBSECTIONS OF THE SPDES PERMIT TAKE PRECEDENCE OVER NOTES ON THIS DRAWING AND ON THE EROSION AND SEDIMENT CONTROL PLAN WHERE CONTRADICTIONS BETWEEN THESE DRAWINGS AND THE SPDES PERMIT MAY ARISE.

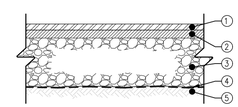


1. 2" TOP COURSE, 12.5 F2 TOP COURSE HMA, 80 SERIES COMPACTION NYSDOT ITEM 402.128204
2. 2" BINDER COURSE, 25 F9 BINDER COURSE HMA, 80 SERIES COMPACTION NYSDOT ITEM 402.258904
3. 4" SUBBASE COURSE, SUBBASE COURSE, TYPE 2 NYSDOT ITEM 304.12
4. GEOTEXTILE SEPARATION NYSDOT ITEM 207.21
5. COMPACTED SUBGRADE

NOTES:

1. COMPACT SUBGRADE TO A MODIFIED PROCTOR DENSITY OF 95%
2. SUBBASE COURSE SHALL HAVE NO MORE THAN (7%) SEVEN PERCENT BY WEIGHT FINER THAN NO. 200 SIEVE.
3. IMPRINTED PATTERN SHOWN IS FOR GRAPHICAL REPRESENTATIONS ONLY. ALL IMPRINTING/PATTERNING LAYOUTS AND POSITIONING SHALL BE APPROVED BY THE PROJECT ENGINEER PRIOR TO ACTUAL CONSTRUCTION.

## ASPHALT PAVEMENT SECTION

N.T.S.

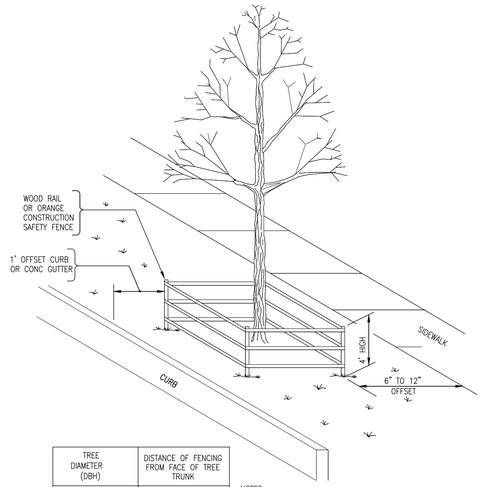


| TREE DIAMETER (DBH) | DISTANCE OF FENCING FROM FACE OF TREE TRUNK |
|---|---|
| LESS THAN 10" | 6' |
| 10" – 14" | 10' |
| 15" – 19" | 12' |
| 20" OR MORE | 15' |

NOTES:

1. ALL TREES WITHIN THE PROJECT LIMITS THAT ARE TO REMAIN, ARE TO RECEIVE THIS TREATMENT.
2. DO NOT LEAVE CONSTRUCTION EQUIPMENT RUNNING (IDLING) UNDER TREE CANOPY.

## TREE PROTECTION SYSTEM 5'–0"
## ITEM NO. 611.21050009

N.T.S.

6/15/2022 4:10:27 PM

CONSULTANT INFORMATION
LiRo Engineers, Inc.
A LiRo Group Company
Mineola, N.Y. 516-746-2350[T]

CONSULTANT SEAL
STATE OF NEW YORK · KENNETH J. KOLB · LICENSED PROFESSIONAL ENGINEER · NO. 059134

| REVISION NUMBER | DATE | MADE BY | APP'D BY | REVISION |
|---|---|---|---|---|

RECORD DRAWING CERTIFICATION
☐ AS BUILT – CHANGES AS NOTED ☐ AS BUILT – NO CHANGES

CONTRACTOR: NAME / SIGNATURE / TITLE / DATE
PROJECT COORDINATOR: NAME / SIGNATURE / TITLE / DATE

WESTCHESTER COUNTY, NEW YORK
DEPARTMENT OF PUBLIC WORKS AND TRANSPORTATION
DIVISION OF ENGINEERING

INFRASTRUCTURE REHABILITATION PHASE 3
PLAYLAND PARK, RYE, NEW YORK
CROSS AXIS BUILDING E
CIVIL DETAILS 1

CONTRACT NUMBER 22-523
SHEET NUMBER CXE-C-06
DWG NO.: 315 of 664
SCALE: AS NOTED
DATE: 08/23/2022
DPW FILE NUMBER 1-118-C-1064-0
REV. NO. 0

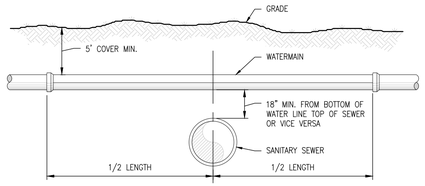


NOTE:

ALL EXCAVATIONS UNDER ANY UTILITY WILL BE BACKFILLED WITH NO. 1 CRUSHED STONE TO A POINT AT LEAST 6" OVER THE TOP OF THE UTILITY.

## TYPICAL WATER LINE – SEWER LINE CROSSING

N.T.S.

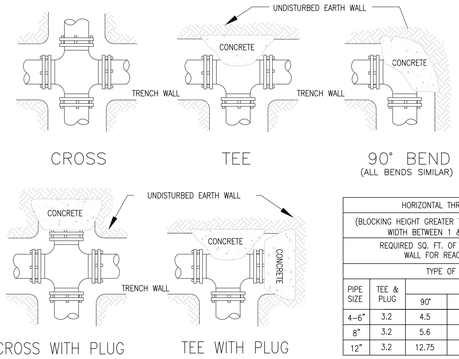


| HORIZONTAL THRUST BLOCKING | | | | | |
|---|---|---|---|---|---|
| (BLOCKING HEIGHT GREATER THAN PIPE O.D.) (BLOCKING WIDTH BETWEEN 1 & 2 TIMES HEIGHT) | | | | | |
| REQUIRED SQ. FT. OF UNDISTURBED EARTH WALL FOR REACTION BACKING | | | | | |
| TYPE OF FITTINGS | | | | | |
| PIPE SIZE | TEE & PLUG | BENDS | | | |
| | | 90° | 45° | 22 1/2° | 11 1/4° |
| 4–6" | 3.2 | 4.5 | 2.5 | 1.3 | 0.7 |
| 8" | 3.2 | 5.6 | 2.5 | 1.3 | 0.7 |
| 12" | 3.2 | 12.75 | 3.7 | 1.3 | 0.7 |

## HORIZONTAL THRUST BLOCKING

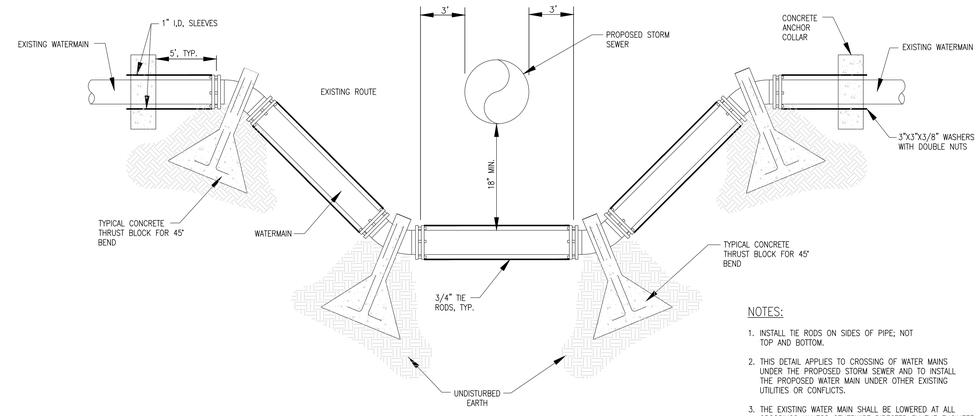


NOTES:

1. INSTALL TIE RODS ON SIDES OF PIPE; NOT TOP AND BOTTOM.
2. THIS DETAIL APPLIES TO CROSSING OF WATER MAINS UNDER THE PROPOSED STORM SEWER AND TO INSTALL THE PROPOSED WATER MAIN UNDER OTHER EXISTING UTILITIES OR CONFLICTS.
3. THE EXISTING WATER MAIN SHALL BE LOWERED AT ALL CROSSINGS UNLESS OTHERWISE DIRECTED BY THE ENGINEER IN THE FIELD.

## TYPICAL WATERMAIN CROSSING DETAIL

N.T.S.

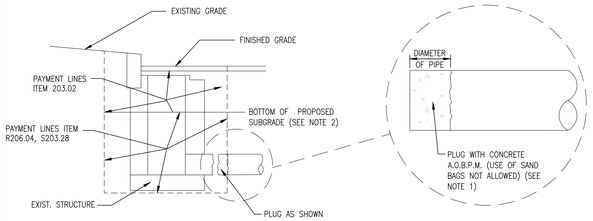


NOTES:

1. THE COST OF PLUGGING EXISTING LATERALS TO BE ABANDONED SHALL BE INCLUDED IN THE PRICE BID FOR TRENCH EXCAVATION IN THE CONTRACT. NO SEPARATE PAYMENT WILL BE MADE FOR THIS WORK.
2. UPPER PAY LIMITS FOR TRENCH AND CULVERT EXCAVATION SHALL BE TOP OF EXISTING SURFACE AT TIME OF EXCAVATION.

## DETAILS FOR PLUGGING ABANDONED DRAINAGE STRUCTURES AND PIPES

N.T.S.

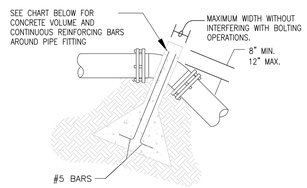


## UPWARD THRUST BLOCKING

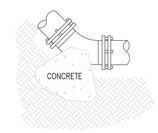


## DOWNWARD THRUST BLOCKING

(SEE HORIZONTAL BLOCKING DETAIL)
(ALL BENDS SIMILAR)

| UPWARD THRUST BLOCKING | | | | | | | | | | | | |
|---|---|---|---|---|---|---|---|---|---|---|---|---|
| (REQUIRED REINFORCING BARS & CUBIC YARDS OF P.C. CONCRETE | | | | | | | | | | | | |
| PIPE SIZE | 90° BEND | | | 45° BEND | | | 22 1/2° BEND | | | 11 1/4° BEND | | |
| | CONC. C.Y. | REINF | | CONC. C.Y. | REINF | | CONC. C.Y. | REINF | | CONC. C.Y. | REINF | |
| | | QTY. | SIZE | | QTY. | SIZE | | QTY. | SIZE | | QTY. | SIZE |
| 4–6" | 2.6 | 4 | #5 | 2.1 | 4 | #5 | 1.1 | 4 | #5 | 0.6 | 4 | #5 |
| 8" | 2.9 | 4 | #5 | 2.1 | 4 | #5 | 1.1 | 4 | #5 | 0.6 | 4 | #5 |
| 12" | 6.6 | 4 | #5 | 4.7 | 4 | #5 | 2.5 | 4 | #5 | 1.3 | 4 | #5 |

## VERTICAL THRUST BLOCKING

NOTES:

1. DO NOT COVER BELLS OR FLANGES WITH CONCRETE
2. WRAP ALL FITTINGS WITH VISQUEEN.
3. BACK ALL TEES ACCORDING TO SIZE OF BRANCH.
4. BACKING FUTURE LINE EXTENSIONS SHALL BE SUCH THAT LATER REMOVAL IS POSSIBLE.
5. ALL BENDS WHERE FITTINGS ARE USED, BOTH HORIZONTAL OR VERTICAL SHALL BE BACKED.
6. REACTION BACKING TABLE IS BASED ON 150 P.S.I. AND SOIL BEARING PRESSURE OF 2,000 lb./sq.ft. ADDITIONAL BACKING MAY BE REQUIRED IN SOME AREAS AS DIRECTED BY ENGINEERS.
7. ALL CONCRETE SHALL BE 2500 P.S.I. MIN. .

## THRUST BLOCKING DETAIL

N.T.S.

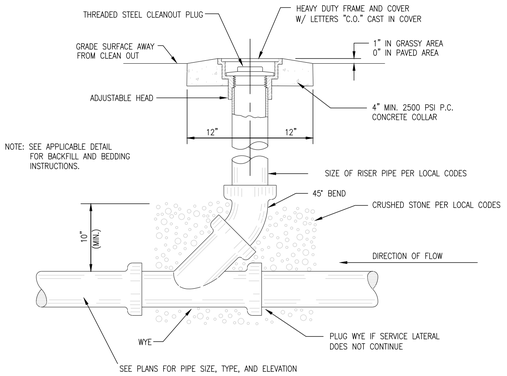


## SEWER CLEAN–OUT

N.T.S.

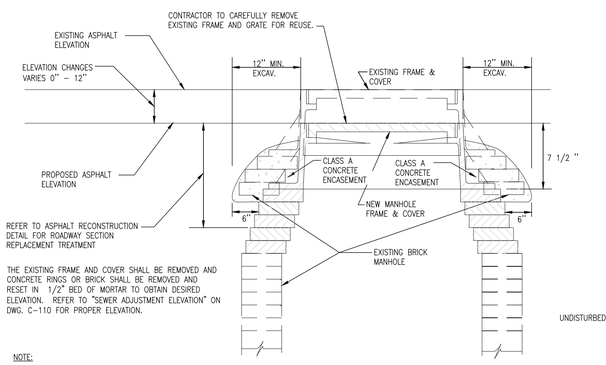


NOTE:

THE LOWER LIMIT OF THE CLASS A CONCRETE ENCASEMENT SHALL BE AT, OR BELOW, THE LOWEST PORTION OF THE BRICK AND MORTAR LEVELING COURSE. ALL BRICK SHALL BE RED, 8,000 PSI BRICK.

ADJUSTMENT AT FLEXIBLE PAVEMENT

## RESETTING EXISTING DRAINAGE FRAMES ON EXISTING DRAINAGE STRUCTURES
## ITEM NO. 604.07210110

N.T.S.

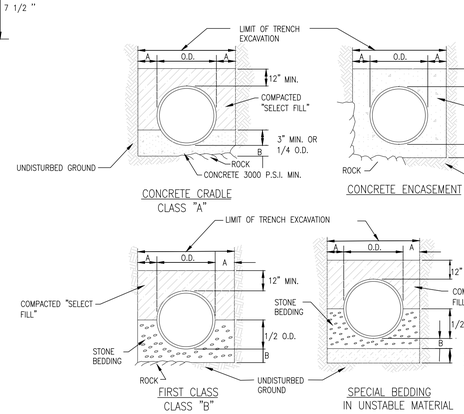


NOTES:

1. SELECT FILL SHALL BE SAND, GRAVEL, AND SIMILAR MATERIAL WHICH SHALL BE FREE FROM CLAY, LOAM, ORGANIC MATERIAL, DEBRIS, FROZEN MATERIAL AND SHALL CONTAIN ONLY SMALL AMOUNTS OF STONE, PEBBLES OR LUMPS OVER ONE INCH IN GREATEST DIMENSION BUT NONE OVER TWO INCHES IN GREATEST DIMENSION, MEETING ASTM IA,IB,OR II.
2. STONE BEDDING SHALL MEAN APPROVED IMPORTED AGGREGATE MEETING THE REQUIREMENTS OF THE NEW YORK STATE DEPARTMENT OF TRANSPORTATION, STANDARD SPECIFICATION, MAY, 2008 EDITION, AS REVISED, SUBSECTION 703–01 "FINE AGGREGATE". PRIMARY SIZE 1 OR A MIXTURE OF PRIMARY SIZES 1 AND 2. OR ASTM CLASS IA,
3. COARSE AGGREGATE SHALL MEAN APPROVED IMPORTED AGGREGATE MEETING THE REQUIREMENTS OF THE NEW YORK STATE DEPARTMENT OF TRANSPORTATION, STANDARD SPECIFICATION, MAT 2008 EDITION, AS REVISED, SUBSECTION 703–02 "COURSE AGGREGATE". PRIMARY SIZE 3 AND/OR 4
4. THIS FIGURE APPLIES TO SANITARY, STORM and COMBINED MAINLINE AND LATERAL PIPE INSTALLATIONS AS WELL AS FORCEMAINS.
5. FIRST CLASS BEDDING SHALL BE USED UNLESS OTHERWISE SHOWN ON THE DRAWINGS OR DIRECTED BY THE ENGINEER.

| PIPE DIA. | DIM. A | DIM. B |
|---|---|---|
| UP TO 18" | 1.0' | 6" |
| 21" TO 36" | 1.5' | 9" |
| OVER 36" | 1.5' | 12" |

## UTILITY BEDDING MATERIAL DETAIL

N.T.S.

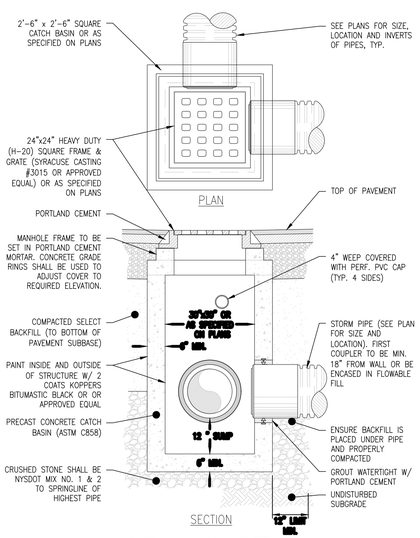


## CATCH BASIN DETAIL

N.T.S.

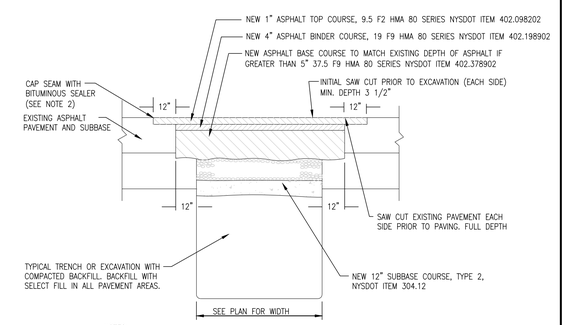


NOTES:

1. EXISTING PAVEMENT SHALL BE SAW CUT TO OBTAIN A STRAIGHT AND NEAT EDGE FOR PAVING. FINAL SAW CUT SHALL BE MADE PRIOR TO PAVING AFTER BACKFILL OF TRENCH TO BOTTOM OF NEW PAVEMENT
2. ALL SEAMS BETWEEN EXISTING AND NEW ASPHALT SURFACES SHALL BE SEALED WITH AN ASPHALT FILLER CORRESPONDING TO THE MATERIAL REQUIREMENTS OF N.Y.S.D.O.T. TABLE 702–5 MATERIAL DESIGNATION 702–3401. COST TO FURNISH AND APPLY THIS MATERIAL SHALL BE INCLUDED IN THE PRICE BID FOR ASPHALT TOP

## PAVEMENT TRENCH RESTORATION DETAIL

N.T.S.

6/15/2022 4:10:27 PM

CONSULTANT INFORMATION

LiRo Engineers, Inc.
A LiRo Group Company
Mineola, N.Y. 516-746-2350[T]

CONSULTANT SEAL

STATE OF NEW YORK · KENNETH J. HOCHSTRASSER · LICENSE NO. 059134 · PROFESSIONAL ENGINEER

| REVISION NUMBER | DATE | MADE BY | APP'D BY | REVISION |
|---|---|---|---|---|

RECORD DRAWING CERTIFICATION

☐ AS BUILT – CHANGES AS NOTED ☐ AS BUILT – NO CHANGES

CONTRACTOR
NAME
SIGNATURE
TITLE DATE

PROJECT COORDINATOR
NAME
SIGNATURE
TITLE DATE

WESTCHESTER COUNTY, NEW YORK
DEPARTMENT OF PUBLIC WORKS AND TRANSPORTATION
DIVISION OF ENGINEERING

INFRASTRUCTURE REHABILITATION PHASE 3
PLAYLAND PARK, RYE, NEW YORK
CROSS AXIS BUILDING E
CIVIL DETAILS 2

| | |
|---|---|
| CONTRACT NUMBER | 22-523 |
| SHEET NUMBER | CXE-C-07 |
| DWG NO.: | 316 of 664 |
| SCALE: | AS NOTED |
| DATE: | 08/23/2022 |
| DPW FILE NUMBER | 1-118-C-1065-0 |
| REV. NO.: | 0 |