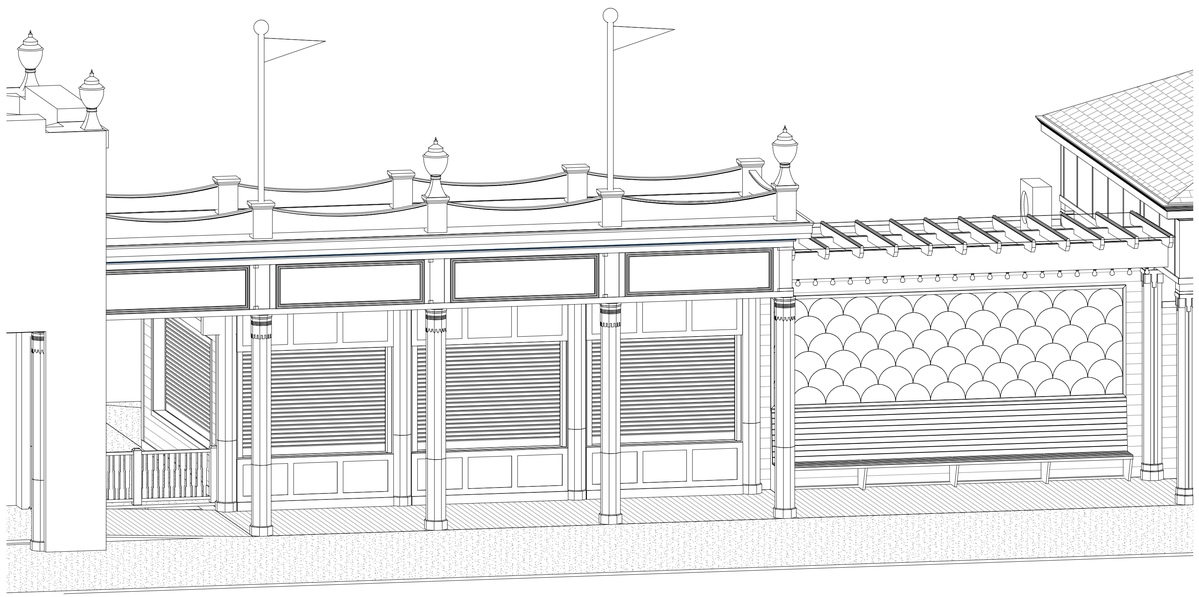

1 CXF - BUILDING AXONOMETRIC

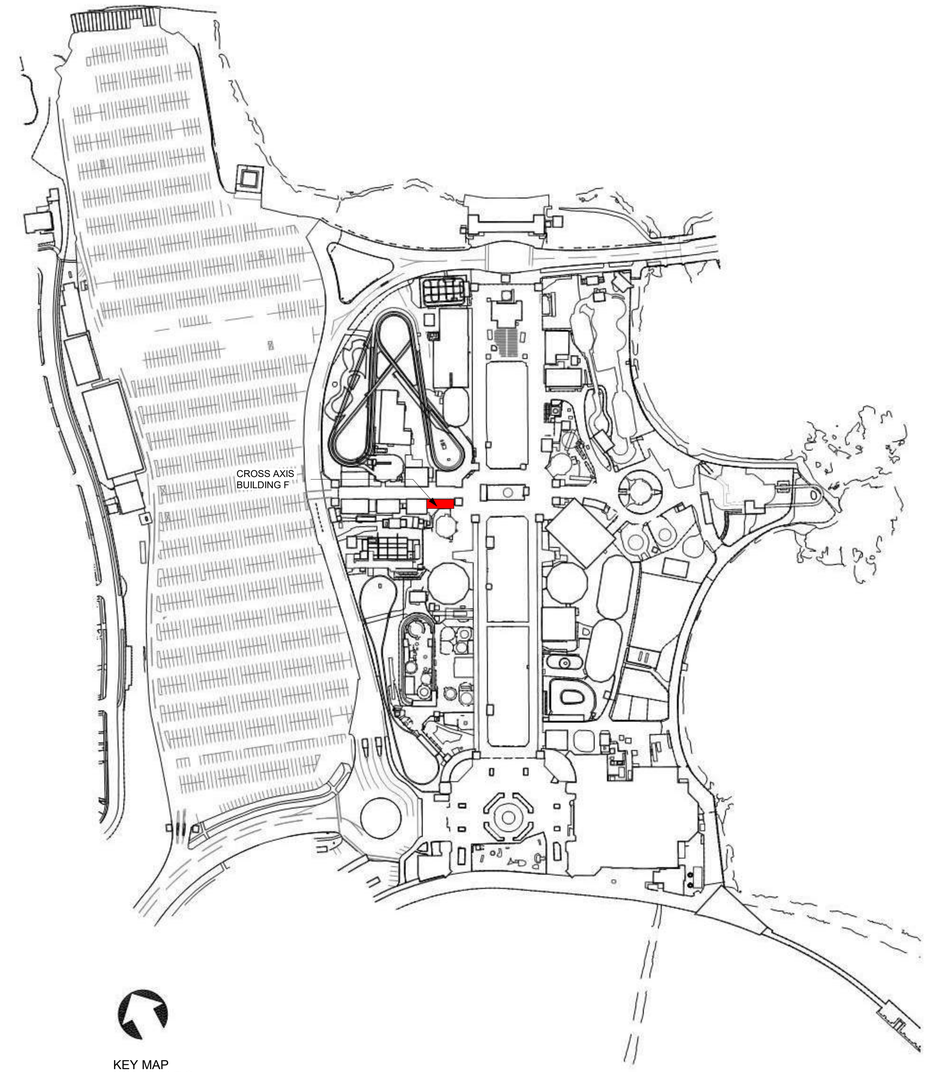

KEY MAP
SCALE: N.T.S.

8/30/2022 4:29:23 PM

CONSULTANT INFORMATION

The LiRo Group

3 Aerial Way, Syosset, New York 11791
(516) 938-5476 www.liro.com

CONSULTANT SEAL

REGISTERED ARCHITECT ROBERT D. YOUNG 023280 STATE OF NEW YORK

REVISION NUMBER	DATE	MADE BY	APP'D BY	REVISION

RECORD DRAWING CERTIFICATION

☐ AS BUILT – CHANGES AS NOTED ☐ AS BUILT – NO CHANGES

CONTRACTOR
NAME
SIGNATURE
TITLE DATE

PROJECT COORDINATOR
NAME
SIGNATURE
TITLE DATE

WESTCHESTER COUNTY, NEW YORK
DEPARTMENT OF PUBLIC WORKS AND TRANSPORTATION
DIVISION OF ENGINEERING

INFRASTRUCTURE REHABILITATION PHASE 3
PLAYLAND PARK, RYE, NEW YORK
CROSS AXIS BUILDING F
BUILDING INTRO

CONTRACT NUMBER	22-523
SHEET NUMBER	CXF-G-01
DWG NO.:	317 of 664
SCALE:	12" = 1'-0"
DATE:	08/23/2022
DPW FILE NUMBER	1-118-G-1066-0
REV. NO.	0

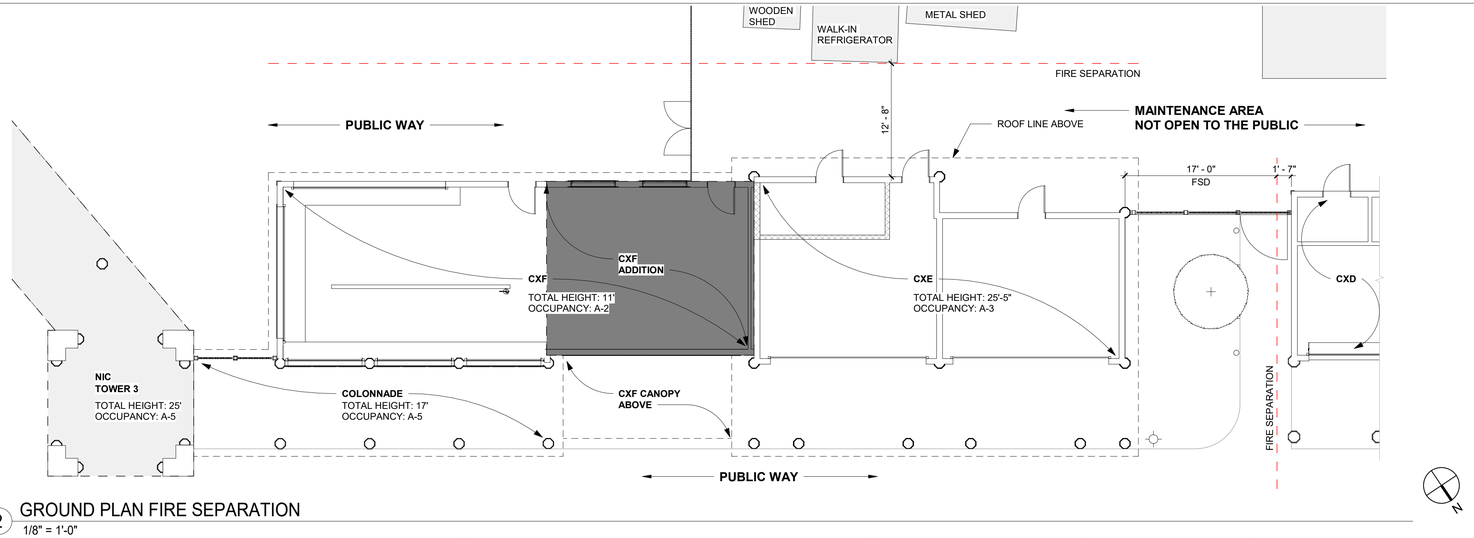

2 GROUND PLAN FIRE SEPARATION
1/8" = 1'-0"

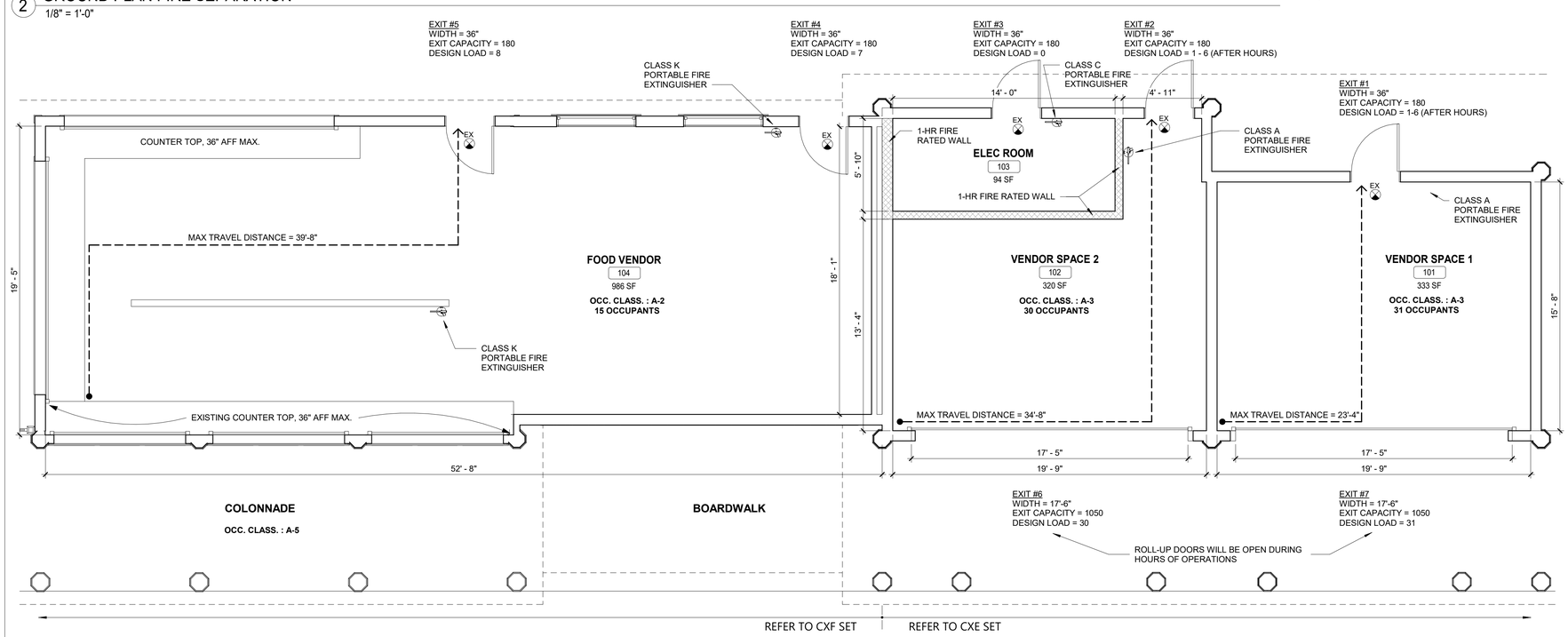

1 GROUND LIFE SAFETY PLAN CXE-CXF
1/4" = 1'-0"

CODE ANALYSIS

2020 Building code of New York State

Construction Type (Tbl 601)	V B	(Fully Sprinklered)
Occupancy Classification	A-3 (CXE) A-2 (CXF)	Arcade Food Vendor
Number of Stories (Tbl 504.4)	1	< 2 (max. allowable)
Height (ft) (Tbl 504.3)	25.4'	< 60 (max. allowable)
Building Area (sf) (Tbl 506.2)	1,795	< 24,000 (max. allowable)
Fire-Resistance Rating Requirements (Tbl 601)	**Required**	**Existing**
Primary Structure Frame	0	0
(including Columns, Girders, Trusses)		
Bearing Walls		
Exterior (Tbl 602)		
Fire separation distance > = 10 ft	0	0
Interior	0	0
Nonbearing Walls and Partitions		
Exterior (Tbl 602)		
Fire separation distance > = 10 ft	0	0
Interior	0	0
Floor Construction		
Including supporting beam and joists	0	0
Roof Construction		
Including supporting beam and joists	0	0
Allowable Area of Openings (BC 705.8)		
Fire separation distance 15 > 10 ft (Unprotected, Sprinklered)	45%	12%
Fire separation distance > 20 ft (Unprotected, Sprinklered)	No limit	
Interior Finishes Class (BC 803)		
Wall and Ceiling	C	
Floors - Radiant Flux	Class II	
Portable Fire Extinguishers (BC 906)	**Required**	**Provided**
Fire Hazard	Class A Class K	Class A Class K
Hazard Occupancy	Ordinary	-
Minimum rated single extinguisher	2-A	Class K
Maximum floor area per unit of A	1,500 sf	333 sf
Maximum floor area for extinguisher	11,250 sf	493 sf
Maximum distance of travel to extinguisher	75'	35'
Number of Type 2-A extinguishers required	**Required**	**Provided**
First Floor	2	4
Means of Egress		
Max. Floor Area Allowances per Occupant (Tbl 1004.5) (sf)		
Amusement arcades	11 gross	
Kitchens, commercial	200 gross	
Occupant Load		
Vendor #1 (333 sf)	31	
Vendor #2 (320 sf)	30	
Food Vendor (986 sf)	15 (designed load)	
Elec. Room (95 sf)	0 (not occupiable)	
Egress Width per Occupant (BC 1005)		
Other Egress Components	0.2	
Egress Width Required (inches)		
Vendor #1*	6.2	36 Provided
Vendor #2*	6	36 Provided
Food Vendor	3	72 Provided
*Note: Roll-up doors will be open during business hours		
Single Exits (BC 1006.3.3[2])	**Minimum**	**Provided**
First Story above or below grade plane (A Occupancy) in compliance with Tbl 1006.2.1. Occupant load < 49 per space	1	1
Maximum Common Path of Egress Travel (Tbl 1006.2.1)	**Permitted**	**Proposed**
A Occupancy with Sprinkler System	75'	0'
Maximum Travel Distance (BC 1017)		
A Occupancy with Sprinkler System	250'	39'-8"

APPLICABLE CODES

NEW YORK STATE BUILDING CODE 2020 (BC)
NEW YORK STATE EXISTING BUILDING CODE 2020 (EBC)
ENERGY CONSERVATION CONSTRUCTION CODE OF NEW YORK STATE (ECCC)
NFPA 13 2013 (NFPA 13)

HISTORICAL BUILDING REGISTRY

PLAYLAND AMUSEMENT PARK IS A DESIGNATED NATIONAL HISTORIC LANDMARK AND IS LISTED ON THE NATIONAL REGISTER OF HISTORIC PLACES.

THE NATIONAL HISTORIC PLACES REGISTER REFERENCE NUMBER: 80004529_NHL
NATIONAL ARCHIVE IDENTIFIER: 75323175

CROSS AXIS BUILDING E IS A CONTRIBUTING STRUCTURE OF THE LANDMARK AND THEREFORE AN HISTORIC BUILDING UNDER THE 2020 BUILDING CODE AND 2020 EXISTING BUILDING CODE OF NEW YORK STATE

2020 NYS ENERGY CONSERVATION CODE

[NY] C501.6 HISTORIC BUILDINGS
PROVISIONS OF THIS CODE RELATING TO THE CONSTRUCTION, REPAIR, ALTERATION, RESTORATION AND MOVEMENT OF STRUCTURES, AND CHANGE OF OCCUPANCY SHALL NOT BE MANDATORY FOR HISTORIC BUILDINGS.

EXISTING BUILDING CODE

EBC 302.4 - EXISTING MATERIALS
MATERIALS ALREADY IN USE IN A BUILDING IN COMPLIANCE WITH REQUIREMENTS OR APPROVALS IN EFFECT AT THE TIME OF THEIR ERECTION OR INSTALLATION SHALL BE PERMITTED TO REMAIN IN USE UNLESS DETERMINED BY THE BUILDING OFFICIAL TO BE UNSAFE.

EBC 302.5 - NEW REPLACEMENT MATERIALS
EXCEPT AS OTHERWISE REQUIRED OR PERMITTED BY THIS CODE, MATERIALS PERMITTED BY THE APPLICABLE CODE FOR NEW CONSTRUCTION SHALL BE USED. LIKE MATERIALS SHALL BE PERMITTED FOR REPAIRS AND ALTERATIONS, PROVIDED THAT UNSAFE CONDITIONS ARE NOT CREATED. HAZARDOUS MATERIALS SHALL NOT BE USED WHERE THE CODE FOR NEW CONSTRUCTION WOULD NOT PERMIT THEIR USE IN BUILDINGS OF SIMILAR OCCUPANCY, PURPOSE AND LOCATION.

EBC 305.5 - ADDITIONS
PROVISIONS FOR NEW CONSTRUCTION SHALL APPLY TO ADDITIONS.

NEW CONSTRUCTION MIN R-VALUE

[NY] TABLE C402.1.3/4
CLIMATE ZONE - MARINE 4

WOOD FRAME WALLS, ABOVE GROUND	MIN R-20
ATTIC AND OTHER ROOFS	MIN R-38
UNHEATED SLABS	MIN R-10 FOR 24" BELOW
OPAQUE SWINGING DOOR	MAX U-0.37
GARAGE DOOR	MAX U-0.31
OPERABLE FENESTRATION	MAX U-0.45

ADDITION TO MEET PRESCRIPTIVE METHOD C502.2 IN 2020 NYS ECCC

8/30/2022 4:28:17 PM

CONSULTANT INFORMATION
The LiRo Group
3 Aerial Way, Syosset, New York 11791
(516) 938-5476 www.liro.com

CONSULTANT SEAL
REGISTERED ARCHITECT ROBERT D. DONOVAN 023220 STATE OF NEW YORK

REVISION NUMBER	DATE	MADE BY	APP'D BY	REVISION

RECORD DRAWING CERTIFICATION
☐ AS BUILT – CHANGES AS NOTED ☐ AS BUILT – NO CHANGES

CONTRACTOR
NAME
SIGNATURE
TITLE DATE

PROJECT COORDINATOR
NAME
SIGNATURE
TITLE DATE

WESTCHESTER COUNTY, NEW YORK
DEPARTMENT OF PUBLIC WORKS AND TRANSPORTATION
DIVISION OF ENGINEERING

INFRASTRUCTURE REHABILITATION PHASE 3
PLAYLAND PARK, RYE, NEW YORK
CROSS AXIS BUILDING E
CXE & CXF - LIFE SAFETY PLANS

CONTRACT NUMBER 22-523
SHEET NUMBER CXF-G-02
DWG NO.: 318 of 664
SCALE: As indicated
DATE: 08/23/2022
DPW FILE NUMBER 1-118-G-1067-0
REV. NO. 0

SHEET NOTES

-PROVIDE PROTECTION FOR EXISTING FEATURES TO REMAIN. PROVIDE PROTECTION PLAN FOR APPROVAL

-SCHEDULE AND COMPLETE WORK AS REQUIRED TO GIVE THE SITE IMPROVEMENT CONTRACTORS ACCESS TO THEIR JOBSITE

CONSTRUCTION NOTES

-REPLACE ALL PLANTED MATTER DISTURBED DURING CONSTRUCTION UNLESS STATED OTHERWISE.
-REPAIR ALL DAMAGED PARK PROPERTY INCURRED DURING CONSTRUCTION.
-REPAIR ASPHALT AS REQUIRED
-REPAIR SOD AS REQUIRED

RESTORATION KEY NOTES

1. NEW GRAVEL (PERMEABLE) SURFACE. SEE DETAIL 3 ON SHEET
2. REPAIR ASPHALT AS REQUIRED

RESTORATION LEGEND

ASPHALT REPAIR

GRAVEL SURFACE IN AREA SHOWN ON 3/CXE-G-3

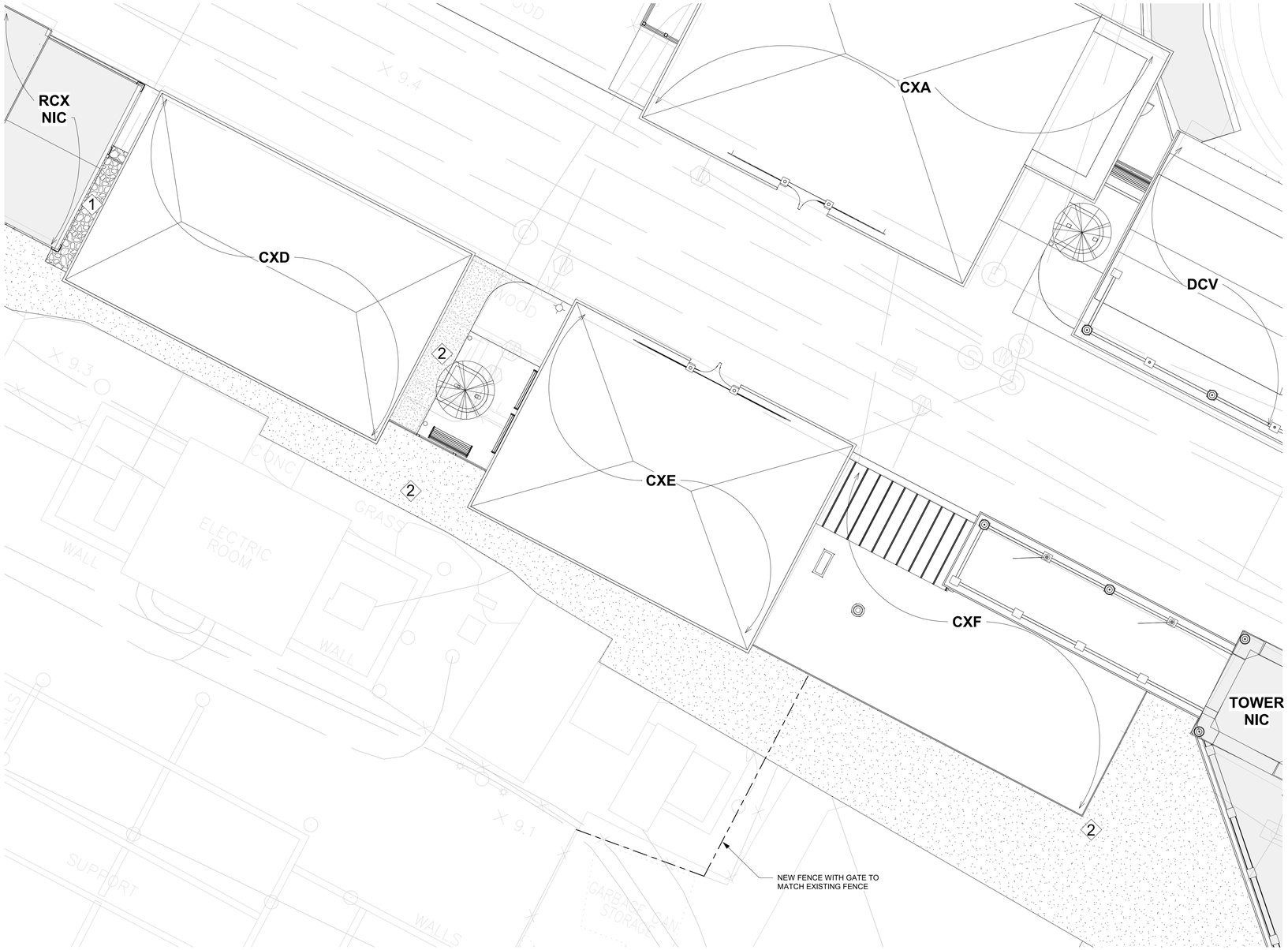

2 SITE RESTORATION PLAN
1/8" = 1'-0"

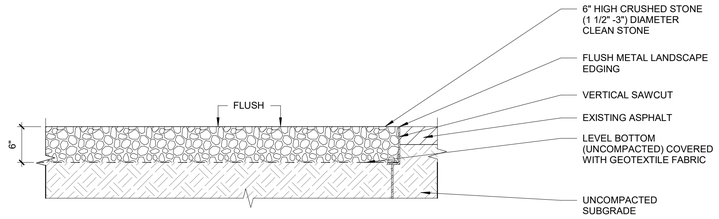

1 GRAVEL SURFACE
1" = 1'-0"

8/30/2022 4:28:24 PM

CONSULTANT INFORMATION

The LiRo Group
3 Aerial Way, Syosset, New York 11791
(516) 938-5476 www.liro.com

CONSULTANT SEAL

REGISTERED ARCHITECT ROBERT D. YOUNG JR. 023220 STATE OF NEW YORK

REVISION NUMBER	DATE	MADE BY	APP'D BY	REVISION

RECORD DRAWING CERTIFICATION

☐ AS BUILT – CHANGES AS NOTED ☐ AS BUILT – NO CHANGES

CONTRACTOR
NAME
SIGNATURE
TITLE DATE

PROJECT COORDINATOR
NAME
SIGNATURE
TITLE DATE

WESTCHESTER COUNTY, NEW YORK
DEPARTMENT OF PUBLIC WORKS AND TRANSPORTATION
DIVISION OF ENGINEERING

INFRASTRUCTURE REHABILITATION PHASE 3
PLAYLAND PARK, RYE, NEW YORK
CXD - CXE - CXF
CXE - SITE RESTORATION

CONTRACT NUMBER	22-523
SHEET NUMBER	CXF-G-03
DWG NO.:	319 of 664
SCALE:	As indicated
DATE:	08/23/2022
DPW FILE NUMBER	1-118-G-1068-0
REV. NO.	0

PLAYLAND REHABILITATION & UPGRADES
CXF - ASBESTOS ABATEMENT
1 PLAYLAND PKWY, RYE, NY 10580

DETAILS:

1 CXF-H-10 — LARGE PROJECT REMOTE WORKER DECONTAMINATION UNIT
Not To Scale

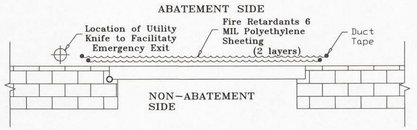

2 CXF-H-10 — TYPICAL SOFT WALL BARRIER AT OPENINGS LESS THAN 32SF
Not To Scale

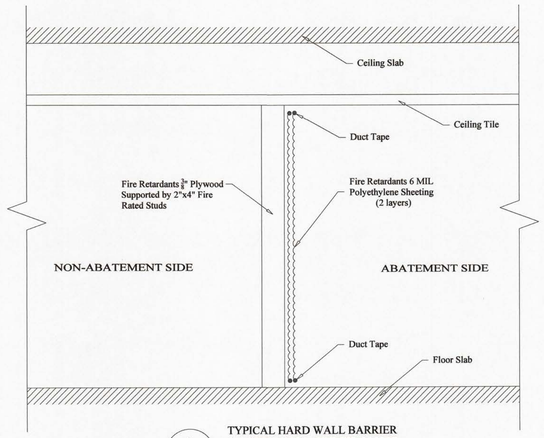

3 CXF-H-10 — TYPICAL HARD WALL BARRIER AT OPENINGS MORE THAN 32SF
Not To Scale

SCOPE OF WORK TABLE:

Work area	Location	Description of Asbestos Materials	Approximate Quantity of ACM	ICR 56 Procedure
1	CXF Cross Axis Building E (South Games Buildings)	Fascia Board	560 SF	56.11.6
2		Column Caulk	55 SF	

KEYPLAN:

LEGEND:

- WORK AREA LIMITS
- P/W R # — REMOTE WORKER DECONTAMINATION UNIT
- WC — WASTE HOLDING AREA
- AIRLOCK
- W — TEMPORARY WATER SOURCE
- E — TEMPORARY ELECTRICAL SOURCE

PROJECT NOTES:

1. The Contractor shall be aware of all conditions of the Project and is responsible for verifying quantities and locations of all Work to be performed. Failure to do so shall not relieve the Contractor of its obligation to furnish all labor and materials necessary to perform the Work.
2. All Work shall be performed in strict accordance with the Project Documents and all governing codes, rules, and regulations. Where conflicts occur between the Project Documents and applicable codes, rules, and regulations, the more stringent shall apply.
3. All abatement work shall be coordinated with General Contractor work; Abatement may be phased with other contract work.
4. Working hours shall be as required and approved by the Owner. Asbestos abatement activities including, but not limited to, work area preparation, gross removal activities, cleaning activities, waste removal, etc. may need to be performed during 'off-hours' (including nights and weekends). In addition, multiple mobilizations may be required to perform the work identified in this project. The Contractor shall coordinate and schedule all Work with the facility and Owner's representative.
5. The Contractor shall prepare and coordinate with facility representative the posting of appropriate signage at the entranceway that redirects park occupants away from the area of the abatement.
6. The Contractor shall use barrier tape to extend the limits of the active, regulated work areas closed to the public and other non-abatement trades.
7. The Contractor shall be responsible for defining and coordinating the phases of the abatement with the facility and DPW, as well as securing any site specific variances, permits, and any necessary NYS DOL approvals.
8. The asbestos abatement Contractor shall coordinate locations of decontamination units, routes of egress, temporary water and power connections and waste container locations with the Owner and the Facility.
9. The Contractor may need to supply temporary power/water sources if they cannot be provided by facility.
10. The General Contractor shall supply any and all scaffolding for the work area(s) under this contract. Scaffolding structure and maintenance shall be in strict accordance with local, state and federal safety requirements.
11. The Contractor is to protect any and all exposed surfaces not targeted for abatement.
12. The Contractor shall request and receive in writing prior to preceding with any work info from the owner regarding surfaces/materials that require protection.
13. Regular waste generated by the abatement work of this contract shall be stored securely using a closed waste container.

5/24/2022 5:42:04 PM

CONSULTANT INFORMATION
The LiRo Group
3 Aerial Way, Syosset, New York 11791
(516) 938-5476 www.liro.com

CONSULTANT SEAL
STATE OF NEW YORK — PETER JOSEPH GERBASI — LICENSED PROFESSIONAL ENGINEER — 070246

REVISION NUMBER	DATE	MADE BY	APP'D BY	REVISION

RECORD DRAWING CERTIFICATION
AS BUILT – CHANGES AS NOTED
AS BUILT – NO CHANGES

CONTRACTOR
NAME
SIGNATURE
TITLE DATE

PROJECT COORDINATOR
NAME
SIGNATURE
TITLE DATE

WESTCHESTER COUNTY, NEW YORK
DEPARTMENT OF PUBLIC WORKS AND TRANSPORTATION
DIVISION OF ENGINEERING

INFRASTRUCTURE REHABILITATION - PHASE 3
PLAYLAND PARK, RYE, NEW YORK
CROSS AXIS BUILDING F
GENERAL ASBESTOS ABATEMENT NOTES

CONTRACT NUMBER	22-523
SHEET NUMBER	CXF-H-10
DWG NO.:	
SCALE:	NOT TO SCALE
DATE:	08/23/2022
DPW FILE NUMBER	1-118-G-1069-0
REV. NO.	0

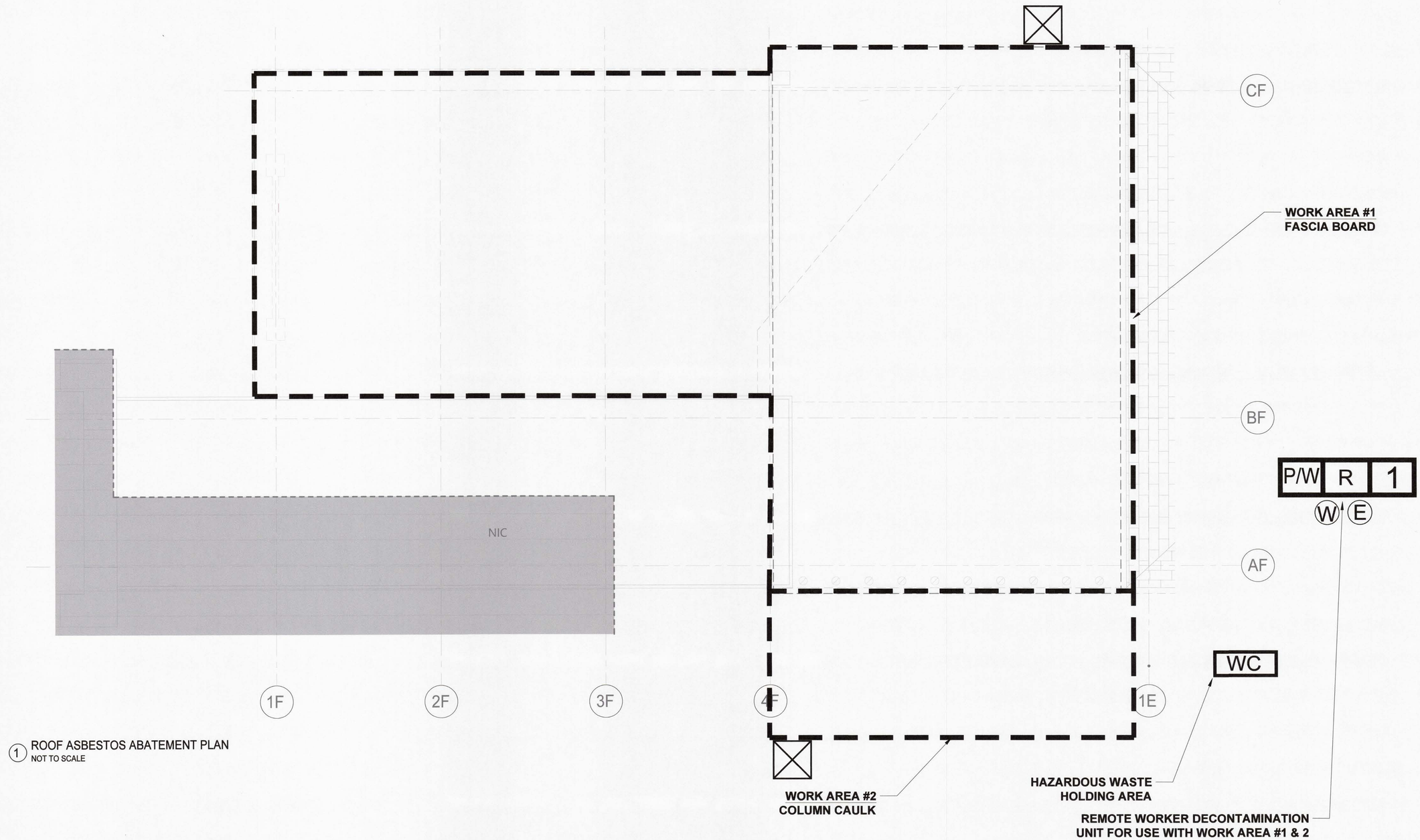

1 ROOF ASBESTOS ABATEMENT PLAN
NOT TO SCALE

5/24/2022 5:42:04 PM

CONSULTANT INFORMATION
The LiRo Group
3 Aerial Way, Syosset, New York 11791
(516) 938-5476 www.liro.com

CONSULTANT SEAL
STATE OF NEW YORK
PETER JOSEPH GERBASI
No. 070446
LICENSED PROFESSIONAL ENGINEER

REVISION NUMBER	DATE	MADE BY	APP'D BY	REVISION

RECORD DRAWING CERTIFICATION
AS BUILT – CHANGES AS NOTED
AS BUILT – NO CHANGES

CONTRACTOR
NAME
SIGNATURE
TITLE DATE

PROJECT COORDINATOR
NAME
SIGNATURE
TITLE DATE

WESTCHESTER COUNTY, NEW YORK
DEPARTMENT OF PUBLIC WORKS AND TRANSPORTATION
DIVISION OF ENGINEERING

INFRASTRUCTURE REHABILITATION - PHASE 3
PLAYLAND PARK, RYE, NEW YORK
CROSS AXIS BUILDING F
ROOF ASBESTOS ABATEMENT PLAN

CONTRACT NUMBER 22-523
SHEET NUMBER CXF-H-11
DWG NO.:
SCALE: NOT TO SCALE
DATE: 08/23/2022
DPW FILE NUMBER 1-118-G-1070-0
REV. NO. 0

PLAYLAND REHABILITATION & UPGRADES
CXF - LEAD REMEDIATION
1 PLAYLAND PKWY, RYE, NY 10580

DETAILS:

1 CXF-H-20 LARGE PROJECT REMOTE WORKER DECONTAMINATION UNIT
Not To Scale

SCOPE OF WORK TABLE:

Work area	Location	Description	Material	Quantity	Procedure
1	Exterior	Entire Building	Painted Surfaces	200 SF	Manual Wet Scraping/Chemical Strip

LEGEND:

- WORK AREA LIMITS
- WS — OSHA HANDWASHING STATION
- HWSA — HAZARDOUS WASTE STORAGE AREA
- AIRLOCK
- W — TEMPORARY WATER SOURCE
- E — TEMPORARY ELECTRICAL SOURCE
- EXTERIOR PAINTED SURFACES

KEYPLAN:

PROJECT NOTES:

1. All layers of coating shall be considered as LBP and removed down to the substrates. Substrates coated with LBP and targeted for demolition may be removed and disposed of solid structure waste following TCLP testing.
2. Substrates coated with LBP and targeted for refurbish and recoating shall be abated using manual wet scraping or chemical stripping procedures, localized testing of chemical strapping products shall proceed broader use and only after approval by the DPW Environmental Consultant.
3. The abatement contractor shall separate paint chips and contaminated dust/particulate generated by the abatement from other project waste streams including worker personal protective equipment and plastic sheeting. All waste other than lead paint chips and contaminated dust/particulate shall be TCLP tested prior to disposal.
4. Waste generated by the work of this method shall be stored on site in a NYSDEC compliant Hazardous and Waste Storage Area and transported under manifest to the disposal site.
5. The contractor shall prepare a project specific work plan and project specific HASP for the work of this contract.
6. LBP remediation shall be consistent with guidelines from SSPC and work shall comply with the OSHA regulations including using of decontamination units and hand wash stations.
7. The contractor may propose alternate LBP removal procedures however, use of alternate procedures will require approval by DPW Environmental Consultant; the abatement contractor is responsible with maintaining the physical conditions and integrity of the targeted substrates, and the surrounding structures during abatement work.
8. The Contractor shall request and receive in writing prior to preceding with any work info from the owner regarding surfaces/materials that require protection.

5/24/2022 5:42:04 PM

CONSULTANT INFORMATION
The LiRo Group
3 Aerial Way, Syosset, New York 11791
(516) 938-5476 www.liro.com

CONSULTANT SEAL
STATE OF NEW YORK · PETER JOSEPH GERBASI · No. 070446 · LICENSED PROFESSIONAL ENGINEER

REVISION NUMBER	DATE	MADE BY	APP'D BY	REVISION

RECORD DRAWING CERTIFICATION
AS BUILT – CHANGES AS NOTED
AS BUILT – NO CHANGES

CONTRACTOR
NAME
SIGNATURE
TITLE DATE

PROJECT COORDINATOR
NAME
SIGNATURE
TITLE DATE

WESTCHESTER COUNTY, NEW YORK
DEPARTMENT OF PUBLIC WORKS AND TRANSPORTATION
DIVISION OF ENGINEERING

INFRASTRUCTURE REHABILITATION - PHASE 3
PLAYLAND PARK, RYE, NEW YORK
CROSS AXIS BUILDING F
GENERAL LEAD REMEDIATION NOTES

CONTRACT NUMBER 22-523
SHEET NUMBER CXF-H-20
DWG NO.:
SCALE: NOT TO SCALE
DATE: 08/23/2022
DPW FILE NUMBER 1-118-G-1071-0
REV. NO. 0

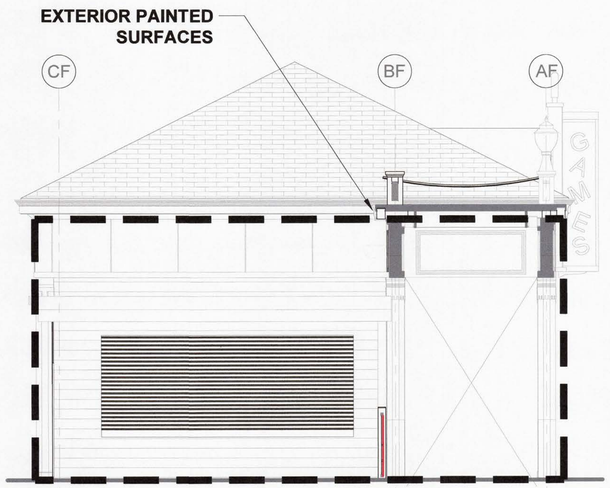

1 EAST ELEVATION - LEAD REMEDIATION PLAN
NOT TO SCALE

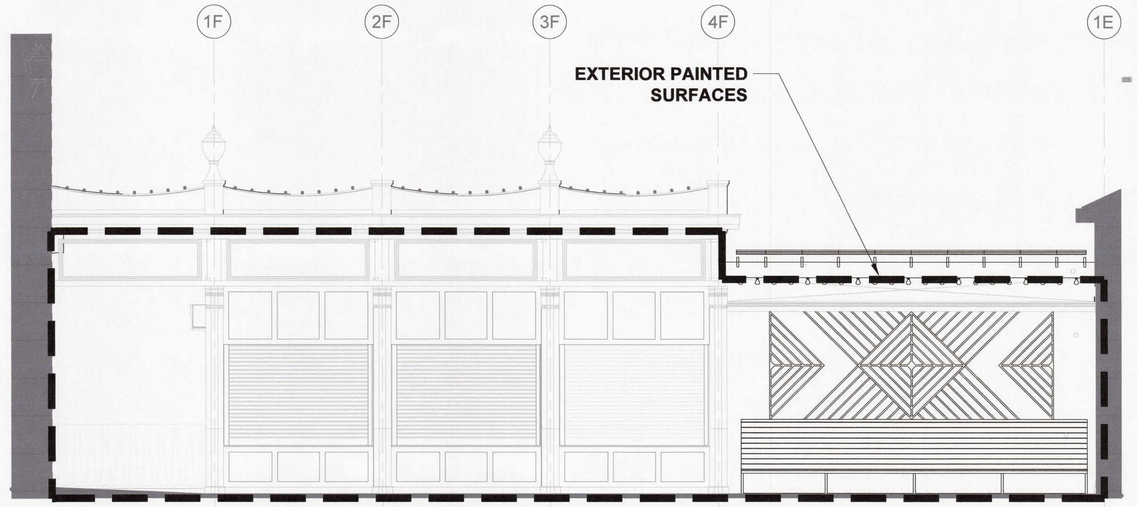

2 NORTH ELEVATION - LEAD REMEDIATION PLAN
NOT TO SCALE

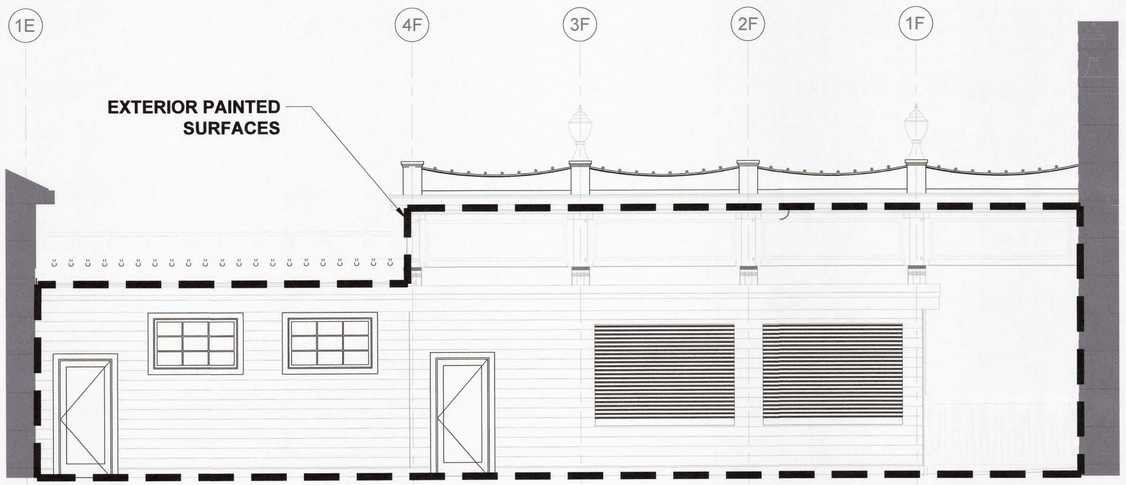

3 SOUTH ELEVATION - LEAD REMEDIATION PLAN
NOT TO SCALE

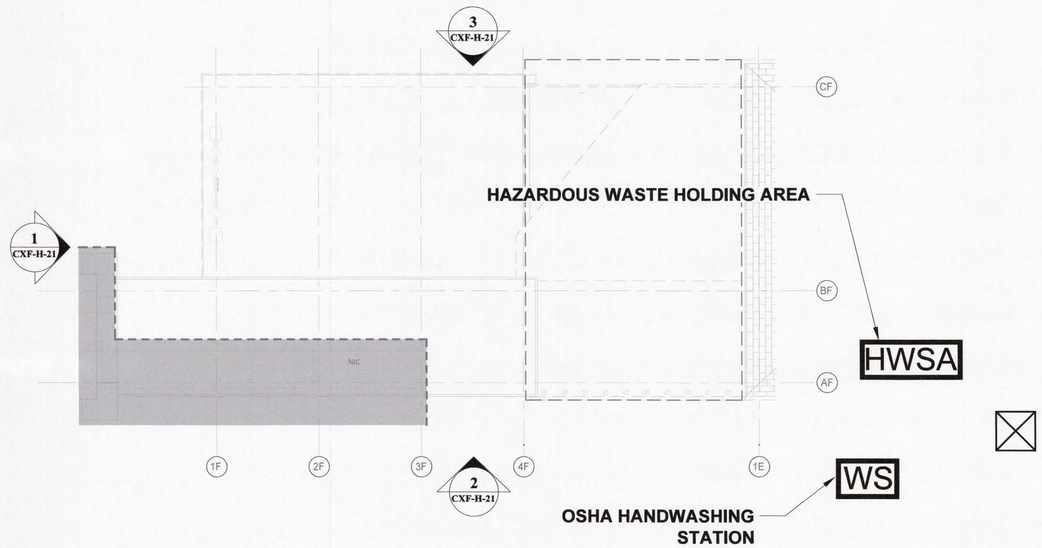

4 ROOF LEAD REMEDIATION PLAN
NOT TO SCALE

5/24/2022 5:42:04 PM

CONSULTANT INFORMATION

The LiRo Group

3 Aerial Way, Syosset, New York 11791
(516) 938-5476 www.liro.com

CONSULTANT SEAL

STATE OF NEW YORK · JOSEPH GERASI · 070146 · LICENSED PROFESSIONAL ENGINEER

REVISION NUMBER	DATE	MADE BY	APP'D BY	REVISION

RECORD DRAWING CERTIFICATION

☐ AS BUILT – CHANGES AS NOTED ☐ AS BUILT – NO CHANGES

CONTRACTOR
NAME
SIGNATURE
TITLE DATE

PROJECT COORDINATOR
NAME
SIGNATURE
TITLE DATE

WESTCHESTER COUNTY, NEW YORK
DEPARTMENT OF PUBLIC WORKS AND TRANSPORTATION
DIVISION OF ENGINEERING

INFRASTRUCTURE REHABILITATION - PHASE 3
PLAYLAND PARK, RYE, NEW YORK
CROSS AXIS BUILDING F
NORTH, SOUTH & EAST LEAD REMEDIATION PLAN

CONTRACT NUMBER	22-523
SHEET NUMBER	CXF-H-21
DWG NO.:	
SCALE:	NOT TO SCALE
DATE:	08/23/2022
DPW FILE NUMBER	1-118-G-1072-0
REV. NO.	0

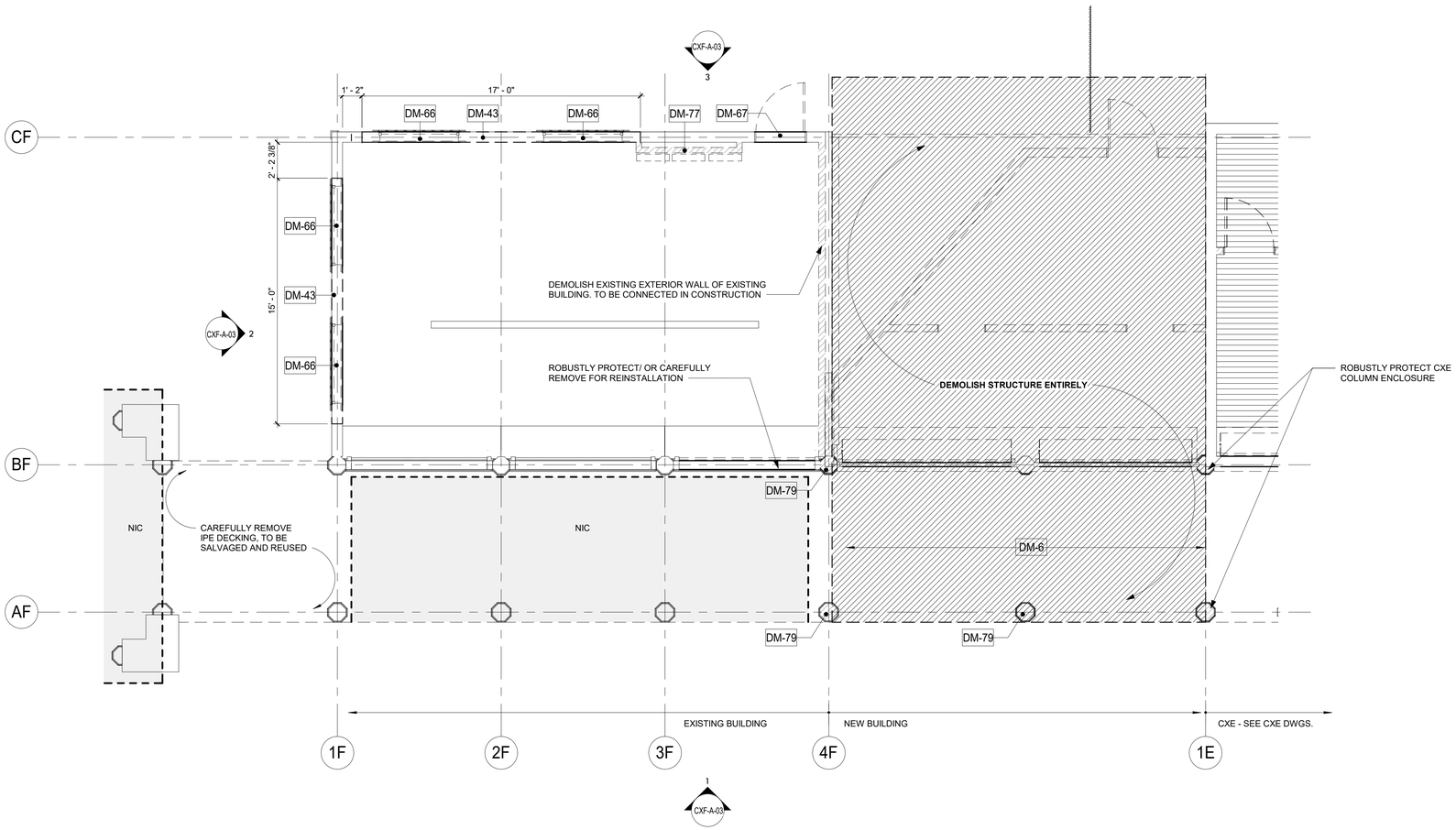

1 GROUND FLOOR DEMOLITION PLAN CXF
1/4" = 1'-0"

DEMOLITION NOTES:

1. THE GENERAL CONTRACTOR SHALL VISIT THE SITE AND FAMILIARIZE HIM/HERSELF WITH EXISTING CONDITIONS AND REQUIREMENTS OF THE WORK. THE GENERAL CONTRACTOR SHALL FIELD VERIFY EXACT QUANTITIES OF ALL ITEMS TO BE REMOVED.
2. THE CONTRACTOR SHALL PHOTOGRAPH AND DOCUMENT EXISTING HISTORIC DECORATIVE TRIMS INCLUDING SIZES AND PROFILES PRIOR TO ENVIRONMENTAL REMEDIATION WORK START.
3. ITEMS TO BE REMOVED / DEMOLISHED AS INDICATED ON THE DRAWINGS ARE INTENDED TO SHOW THE GENERAL SCOPE OF THE DEMOLITION WORK. THE DRAWINGS DO NOT REPRESENT IN DETAIL ALL ITEMS OR SITUATIONS THAT MAY BE ENCOUNTERED DURING THE DEMOLITION. IT IS THE CONTRACTOR'S RESPONSIBILITY TO REMOVE, PROTECT, AND MAKE CORRECTIONS AS REQUIRED TO ACHIEVE DRAWING INTENT. THE GENERAL CONTRACTOR SHALL NOTIFY ARCHITECT OF ANY STRUCTURAL NONCONFORMITY TO PLANS AND SPECIFICATIONS.
4. PLAYLAND RESERVES THE RIGHT TO REVIEW ALL MATERIALS DESIGNATED FOR REMOVAL AND TO RETAIN OWNERSHIP OF SUCH MATERIALS. IF PLAYLAND RETAINS ANY MATERIAL THE CONTRACTOR SHALL MAKE ARRANGEMENTS WITH THE PLAYLAND'S SUPERINTENDENT TO HAVE THOSE MATERIALS REMOVED AND STORED OFF SITE AT NO ADDITIONAL COST.
5. DEMOLITION OF THE EXISTING BUILDING SHALL INCLUDE REMOVAL OF THE EXISTING FOUNDATIONS FOR THEIR ENTIRE DEPTH TO ACCOMMODATE INSTALLATION OF NEW FOUNDATIONS.
6. THE CONTRACTOR SHALL USE EXTREME CAUTION IN AREAS OF DEMOLITION WHICH MAY DISTURB EXISTING STRUCTURES. TEMPORARY SHORING, BARRICADES, DUST PARTITIONS, ETC. SHALL BE PROVIDED AS REQUIRED TO PROTECT ALL EXISTING STRUCTURES AND PROPERTY.
7. SEE STRUCTURAL, ELECTRICAL, SPRINKLER, AND PLUMBING DRAWINGS FOR RELATED DEMOLITION WORK.
8. VERIFY LOCATION OF EXISTING STRUCTURES AND SHORE UP ROOF/FLOOR ABOVE AS REQUIRED BEFORE REMOVING WALL.
9. REMOVAL OF ALL CEILINGS AND MOUNTED ITEMS THROUGHOUT THE CONTRACT AREA INCLUDE ANCHORING HARDWARE, AND MISCELLANEOUS FASTENINGS, ETC.
10. WALLS SHALL BE REMOVED AS INDICATED ON DEMOLITION PLANS. ALL UTILITIES IN WALL SHALL BE CUT TO BELOW SLAB OR ABOVE THE CEILING.
11. REMOVE ALL EXISTING ELECTRICAL AND PLUMBING LINES NOT TO BE RE-USED. CAP PLUMBING LINES AS REQUIRED. ELECTRICAL WIRING SHALL BE DISCONNECTED BACK TO THE NEAREST ACTIVE LOCATION. ALL ABANDONED COMMUNICATION CABLES (DATA, TELEPHONE, FIRE ALARM, AND AUDIO/VIDEO CABLES) SHALL BE REMOVED TO SOURCE IF NOT TAGGED FOR FUTURE USE.
12. DEMOLITION PROCEDURES ARE THE SOLE RESPONSIBILITY OF THE GENERAL CONTRACTOR OF THIS CONTRACT. CONTRACTOR TO "CUT OFF" ALL NECESSARY UTILITIES REQUIRED TO OBTAIN DESIRED RESULTS. CONTRACTOR TO OBTAIN "SHUT OFF" APPROVALS FROM PLAYLAND PRIOR TO SCHEDULED DEMOLITION.
13. THE GENERAL CONTRACTOR SHALL PATCH AND REPAIR ALL EXISTING CONSTRUCTION DISTURBED BY THE WORK AND PREPARE FOR NEW FINISH AS SHOWN ON THE INTERIOR ELEVATIONS.
14. THE EXISTING WOOD FLOOR SHALL BE CLEANED TO ALLOW FOR THE APPLICATION OF NEW FLOOR COATING.
15. THE GENERAL CONTRACTOR SHALL BE RESPONSIBLE FOR THE CLEANING UP AND HAULING AWAY OF ALL TRASH AND DEBRIS ON A REGULAR BASIS DURING THE CONSTRUCTION PERIOD.
16. ALL DEBRIS REMOVED FROM THE SITE SHALL BE DISPOSED OF IN A LEGAL MANNER.
17. EXISTING EXITS SHALL REMAIN FULLY ACCESSIBLE AND UNOBSTRUCTED DURING THE PROGRESS OF THE WORK.

DEMOLITION LEGEND

- INDICATES DEMOLITION
- DM - # — DEMOLITION KEY NOTES
- SHINGLES TO BE REMOVED
- SBS MODIFIED BITUMEN TO BE REMOVED
- NIC — INDICATES N.I.C.

DEMO KEYNOTES

DM-6	REMOVE EXISTING WOOD DECKING. (COORDINATE EXTENT OF REMOVAL REQUIRED TO REPAIR FLOOR JOISTS TO REMAIN AS NEEDED - SEE STRUCTURAL DRAWINGS).
DM-43	REMOVE SECTION OF EXISTING WALL. PROVIDE HEADER AND SILL AS REQUIRED TO CREATE A WINDOW OPENING. SEE ELEVATIONS.
DM-66	CAREFULLY REMOVE WINDOW AND FRAME. TO BE SALVAGED AND REINSTALLED IN CXD WORK (SEE CXD-A-11).
DM-67	CAREFULLY REMOVE DOOR AND FRAME, FOR REINSTALLATION.
DM-77	DEMOLISH EXISTING FURRED WALL AND REMOVE ELECTRICAL PANELS (TO BE RELOCATED. COORDINATE WITH ELEC DWGS)
DM-79	REMOVE EXISTING COLUMN ENCLOSURE AND STRUCTURAL POST. USE TEMPORARY SHORING AS REQUIRED. COORDINATE WITH STRUCT DWG.

8/30/2022 4:28:26 PM

CONSULTANT INFORMATION
The LiRo Group
3 Aerial Way, Syosset, New York 11791
(516) 938-5476 www.liro.com

CONSULTANT SEAL
REGISTERED ARCHITECT ROBERT D. YOUNG JR. 023280 STATE OF NEW YORK

REVISION NUMBER	DATE	MADE BY	APP'D BY	REVISION

RECORD DRAWING CERTIFICATION
☐ AS BUILT – CHANGES AS NOTED ☐ AS BUILT – NO CHANGES

CONTRACTOR
NAME
SIGNATURE
TITLE DATE

PROJECT COORDINATOR
NAME
SIGNATURE
TITLE DATE

WESTCHESTER COUNTY, NEW YORK
DEPARTMENT OF PUBLIC WORKS AND TRANSPORTATION
DIVISION OF ENGINEERING

INFRASTRUCTURE REHABILITATION PHASE 3
PLAYLAND PARK, RYE, NEW YORK
CROSS AXIS BUILDING F
CXF - GROUND FLOOR DEMOLITION PLAN

CONTRACT NUMBER	22-523
SHEET NUMBER	CXF-A-01
DWG NO.:	324 of 664
SCALE:	As indicated
DATE:	08/23/2022
DPW FILE NUMBER	1-118-A-1073-0
REV. NO.	0

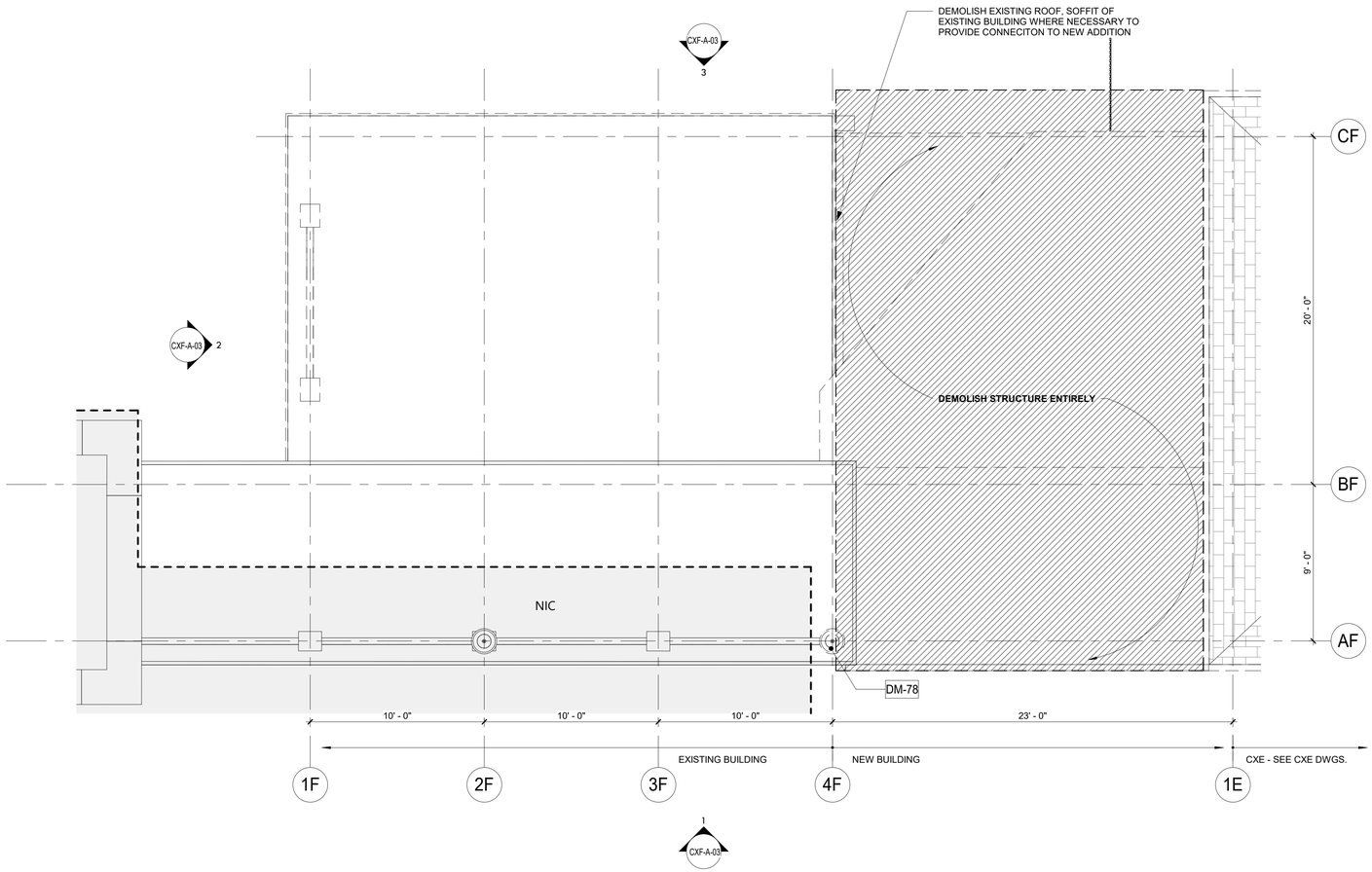

1 ROOF PLAN DEMOLITION CXF
1/4" = 1'-0"

DEMOLITION NOTES:

1. THE GENERAL CONTRACTOR SHALL VISIT THE SITE AND FAMILIARIZE HIM/HERSELF WITH EXISTING CONDITIONS AND REQUIREMENTS OF THE WORK. THE GENERAL CONTRACTOR SHALL FIELD VERIFY EXACT QUANTITIES OF ALL ITEMS TO BE REMOVED.
2. THE CONTRACTOR SHALL PHOTOGRAPH AND DOCUMENT EXISTING HISTORIC DECORATIVE TRIMS INCLUDING SIZES AND PROFILES PRIOR TO ENVIRONMENTAL REMEDIATION WORK START.
3. ITEMS TO BE REMOVED / DEMOLISHED AS INDICATED ON THE DRAWINGS ARE INTENDED TO SHOW THE GENERAL SCOPE OF THE DEMOLITION WORK. THE DRAWINGS DO NOT REPRESENT IN DETAIL ALL ITEMS OR SITUATIONS THAT MAY BE ENCOUNTERED DURING THE DEMOLITION. IT IS THE CONTRACTOR'S RESPONSIBILITY TO REMOVE, PROTECT, AND MAKE CORRECTIONS AS REQUIRED TO ACHIEVE DRAWING INTENT. THE GENERAL CONTRACTOR SHALL NOTIFY ARCHITECT OF ANY STRUCTURAL NONCONFORMITY TO PLANS AND SPECIFICATIONS.
4. PLAYLAND RESERVES THE RIGHT TO REVIEW ALL MATERIALS DESIGNATED FOR REMOVAL AND TO RETAIN OWNERSHIP OF SUCH MATERIALS. IF PLAYLAND RETAINS ANY MATERIAL THE CONTRACTOR SHALL MAKE ARRANGEMENTS WITH THE PLAYLAND'S SUPERINTENDENT TO HAVE THOSE MATERIALS REMOVED AND STORED OFF SITE AT NO ADDITIONAL COST.
5. DEMOLITION OF THE EXISTING BUILDING SHALL INCLUDE REMOVAL OF THE EXISTING FOUNDATIONS FOR THEIR ENTIRE DEPTH TO ACCOMMODATE INSTALLATION OF NEW FOUNDATIONS.
6. THE CONTRACTOR SHALL USE EXTREME CAUTION IN AREAS OF DEMOLITION WHICH MAY DISTURB EXISTING STRUCTURES. TEMPORARY SHORING, BARRICADES, DUST PARTITIONS, ETC. SHALL BE PROVIDED AS REQUIRED TO PROTECT ALL EXISTING STRUCTURES AND PROPERTY.
7. SEE STRUCTURAL, ELECTRICAL, SPRINKLER, AND PLUMBING DRAWINGS FOR RELATED DEMOLITION WORK.
8. VERIFY LOCATION OF EXISTING STRUCTURES AND SHORE UP ROOF/FLOOR ABOVE AS REQUIRED BEFORE REMOVING WALL.
9. REMOVAL OF ALL CEILINGS AND MOUNTED ITEMS THROUGHOUT THE CONTRACT AREA INCLUDE ANCHORING HARDWARE, AND MISCELLANEOUS FASTENINGS, ETC.
10. WALLS SHALL BE REMOVED AS INDICATED ON DEMOLITION PLANS. ALL UTILITIES IN WALL SHALL BE CUT TO BELOW SLAB OR ABOVE THE CEILING.
11. REMOVE ALL EXISTING ELECTRICAL AND PLUMBING LINES NOT TO BE RE-USED. CAP PLUMBING LINES AS REQUIRED. ELECTRICAL WIRING SHALL BE DISCONNECTED BACK TO THE NEAREST ACTIVE LOCATION. ALL ABANDONED COMMUNICATION CABLES (DATA, TELEPHONE, FIRE ALARM, AND AUDIO/VIDEO CABLES) SHALL BE REMOVED TO SOURCE IF NOT TAGGED FOR FUTURE USE.
12. DEMOLITION PROCEDURES ARE THE SOLE RESPONSIBILITY OF THE GENERAL CONTRACTOR OF THIS CONTRACT. CONTRACTOR TO "CUT OFF" ALL NECESSARY UTILITIES REQUIRED TO OBTAIN DESIRED RESULTS. CONTRACTOR TO OBTAIN "SHUT OFF" APPROVALS FROM PLAYLAND PRIOR TO SCHEDULED DEMOLITION.
13. THE GENERAL CONTRACTOR SHALL PATCH AND REPAIR ALL EXISTING CONSTRUCTION DISTURBED BY THE WORK AND PREPARE FOR NEW FINISH AS SHOWN ON THE INTERIOR ELEVATIONS.
14. THE EXISTING WOOD FLOOR SHALL BE CLEANED TO ALLOW FOR THE APPLICATION OF NEW FLOOR COATING.
15. THE GENERAL CONTRACTOR SHALL BE RESPONSIBLE FOR THE CLEANING UP AND HAULING AWAY OF ALL TRASH AND DEBRIS ON A REGULAR BASIS DURING THE CONSTRUCTION PERIOD.
16. ALL DEBRIS REMOVED FROM THE SITE SHALL BE DISPOSED OF IN A LEGAL MANNER.
17. EXISTING EXITS SHALL REMAIN FULLY ACCESSIBLE AND UNOBSTRUCTED DURING THE PROGRESS OF THE WORK.

DEMOLITION LEGEND

- INDICATES DEMOLITION
- DM - # — DEMOLITION KEY NOTES
- SHINGLES TO BE REMOVED
- SBS MODIFIED BITUMEN TO BE REMOVED
- NIC — INDICATES N.I.C.

DEMO KEYNOTES

DM-78	ACORN LIGHT TO PROTECTED, OR CAREFULLY REMOVED AND REINSTALLED AS NEEDED FOR CONSTRUCTION.

8/30/2022 4:28:28 PM

CONSULTANT INFORMATION

The LiRo Group
3 Aerial Way, Syosset, New York 11791
(516) 938-5476 www.liro.com

CONSULTANT SEAL

REGISTERED ARCHITECT ROBERT D. YOUNG JR. 023280 STATE OF NEW YORK

REVISION NUMBER	DATE	MADE BY	APP'D BY	REVISION

RECORD DRAWING CERTIFICATION

☐ AS BUILT – CHANGES AS NOTED ☐ AS BUILT – NO CHANGES

CONTRACTOR
NAME
SIGNATURE
TITLE DATE

PROJECT COORDINATOR
NAME
SIGNATURE
TITLE DATE

WESTCHESTER COUNTY, NEW YORK
DEPARTMENT OF PUBLIC WORKS AND TRANSPORTATION
DIVISION OF ENGINEERING

INFRASTRUCTURE REHABILITATION PHASE 3
PLAYLAND PARK, RYE, NEW YORK
CROSS AXIS BUILDING F
CXF - ROOF DEMOLITION PLAN

CONTRACT NUMBER	22-523
SHEET NUMBER	CXF-A-02
DWG NO.:	325 of 664
SCALE:	As indicated
DATE:	08/23/2022
DPW FILE NUMBER	1-118-A-1074-0
REV. NO.	0

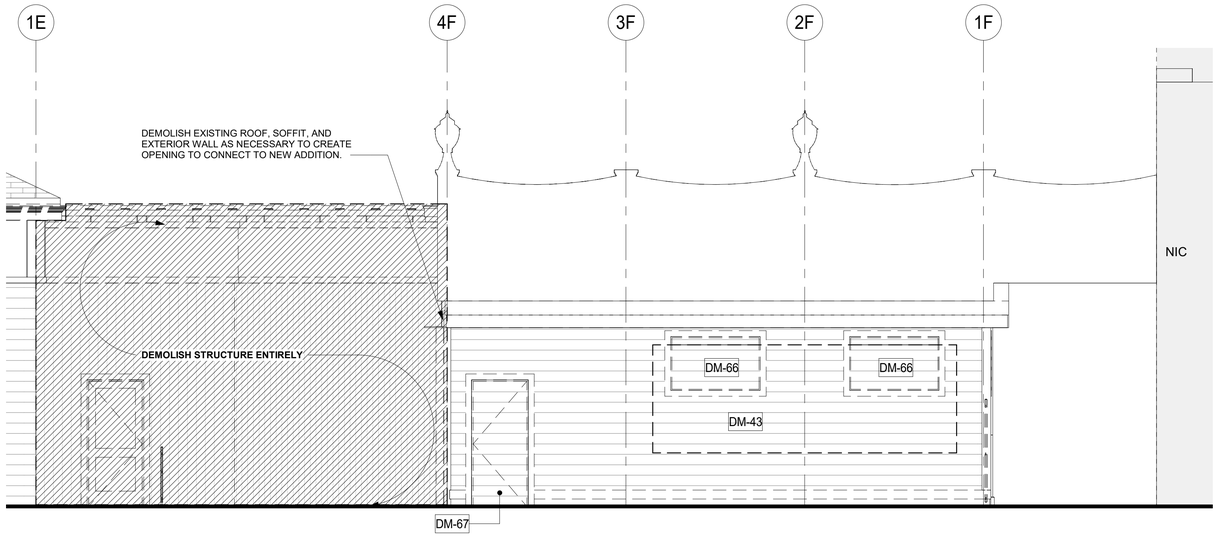

3 CXF - DEMOLITION ELEVATION - SOUTH
1/4" = 1'-0"

DEMOLITION NOTES:

1. THE GENERAL CONTRACTOR SHALL VISIT THE SITE AND FAMILIARIZE HIM/HERSELF WITH EXISTING CONDITIONS AND REQUIREMENTS OF THE WORK. THE GENERAL CONTRACTOR SHALL FIELD VERIFY EXACT QUANTITIES OF ALL ITEMS TO BE REMOVED.
2. THE CONTRACTOR SHALL PHOTOGRAPH AND DOCUMENT EXISTING HISTORIC DECORATIVE TRIMS INCLUDING SIZES AND PROFILES PRIOR TO ENVIRONMENTAL REMEDIATION WORK START.
3. ITEMS TO BE REMOVED / DEMOLISHED AS INDICATED ON THE DRAWINGS ARE INTENDED TO SHOW THE GENERAL SCOPE OF THE DEMOLITION WORK. THE DRAWINGS DO NOT REPRESENT IN DETAIL ALL ITEMS OR SITUATIONS THAT MAY BE ENCOUNTERED DURING THE DEMOLITION. IT IS THE CONTRACTOR'S RESPONSIBILITY TO REMOVE, PROTECT, AND MAKE CORRECTIONS AS REQUIRED TO ACHIEVE DRAWING INTENT. THE GENERAL CONTRACTOR SHALL NOTIFY ARCHITECT OF ANY STRUCTURAL NONCONFORMITY TO PLANS AND SPECIFICATIONS.
4. PLAYLAND RESERVES THE RIGHT TO REVIEW ALL MATERIALS DESIGNATED FOR REMOVAL AND TO RETAIN OWNERSHIP OF SUCH MATERIALS. IF PLAYLAND RETAINS ANY MATERIAL THE CONTRACTOR SHALL MAKE ARRANGEMENTS WITH THE PLAYLAND'S SUPERINTENDENT TO HAVE THOSE MATERIALS REMOVED AND STORED OFF SITE AT NO ADDITIONAL COST.
5. DEMOLITION OF THE EXISTING BUILDING SHALL INCLUDE REMOVAL OF THE EXISTING FOUNDATIONS FOR THEIR ENTIRE DEPTH TO ACCOMMODATE INSTALLATION OF NEW FOUNDATIONS.
6. THE CONTRACTOR SHALL USE EXTREME CAUTION IN AREAS OF DEMOLITION WHICH MAY DISTURB EXISTING STRUCTURES. TEMPORARY SHORING, BARRICADES, DUST PARTITIONS, ETC. SHALL BE PROVIDED AS REQUIRED TO PROTECT ALL EXISTING STRUCTURES AND PROPERTY.
7. SEE STRUCTURAL, ELECTRICAL, SPRINKLER, AND PLUMBING DRAWINGS FOR RELATED DEMOLITION WORK.
8. VERIFY LOCATION OF EXISTING STRUCTURES AND SHORE UP ROOF/FLOOR ABOVE AS REQUIRED BEFORE REMOVING WALL.
9. REMOVAL OF ALL CEILINGS AND MOUNTED ITEMS THROUGHOUT THE CONTRACT AREA INCLUDE ANCHORING HARDWARE, AND MISCELLANEOUS FASTENINGS, ETC.
10. WALLS SHALL BE REMOVED AS INDICATED ON DEMOLITION PLANS. ALL UTILITIES IN WALL SHALL BE CUT TO BELOW SLAB OR ABOVE THE CEILING.
11. REMOVE ALL EXISTING ELECTRICAL AND PLUMBING LINES NOT TO BE RE-USED. CAP PLUMBING LINES AS REQUIRED. ELECTRICAL WIRING SHALL BE DISCONNECTED BACK TO THE NEAREST ACTIVE LOCATION. ALL ABANDONED COMMUNICATION CABLES (DATA, TELEPHONE, FIRE ALARM, AND AUDIO/VIDEO CABLES) SHALL BE REMOVED TO SOURCE IF NOT TAGGED FOR FUTURE USE.
12. DEMOLITION PROCEDURES ARE THE SOLE RESPONSIBILITY OF THE GENERAL CONTRACTOR OF THIS CONTRACT. CONTRACTOR TO "CUT OFF" ALL NECESSARY UTILITIES REQUIRED TO OBTAIN DESIRED RESULTS. CONTRACTOR TO OBTAIN "SHUT OFF" APPROVALS FROM PLAYLAND PRIOR TO SCHEDULED DEMOLITION.
13. THE GENERAL CONTRACTOR SHALL PATCH AND REPAIR ALL EXISTING CONSTRUCTION DISTURBED BY THE WORK AND PREPARE FOR NEW FINISH AS SHOWN ON THE INTERIOR ELEVATIONS.
14. THE EXISTING WOOD FLOOR SHALL BE CLEANED TO ALLOW FOR THE APPLICATION OF NEW FLOOR COATING.
15. THE GENERAL CONTRACTOR SHALL BE RESPONSIBLE FOR THE CLEANING UP AND HAULING AWAY OF ALL TRASH AND DEBRIS ON A REGULAR BASIS DURING THE CONSTRUCTION PERIOD.
16. ALL DEBRIS REMOVED FROM THE SITE SHALL BE DISPOSED OF IN A LEGAL MANNER.
17. EXISTING EXITS SHALL REMAIN FULLY ACCESSIBLE AND UNOBSTRUCTED DURING THE PROGRESS OF THE WORK.

DEMOLITION LEGEND

- INDICATES DEMOLITION
- DM - # — DEMOLITION KEY NOTES
- SHINGLES TO BE REMOVED
- SBS MODIFIED BITUMEN TO BE REMOVED
- NIC — INDICATES N.I.C.

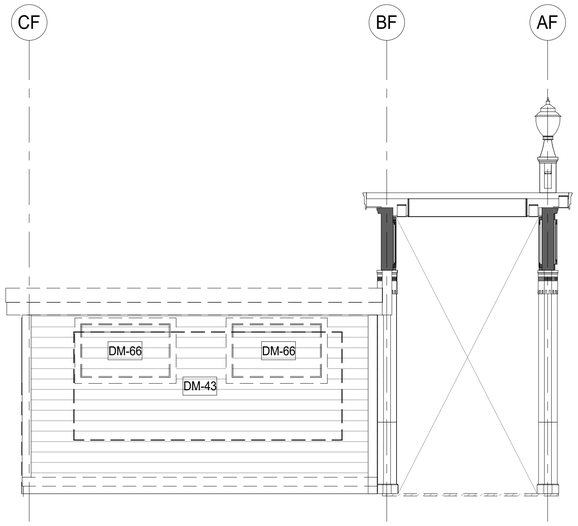

2 CXF - DEMOLITION ELEVATION - EAST
1/4" = 1'-0"

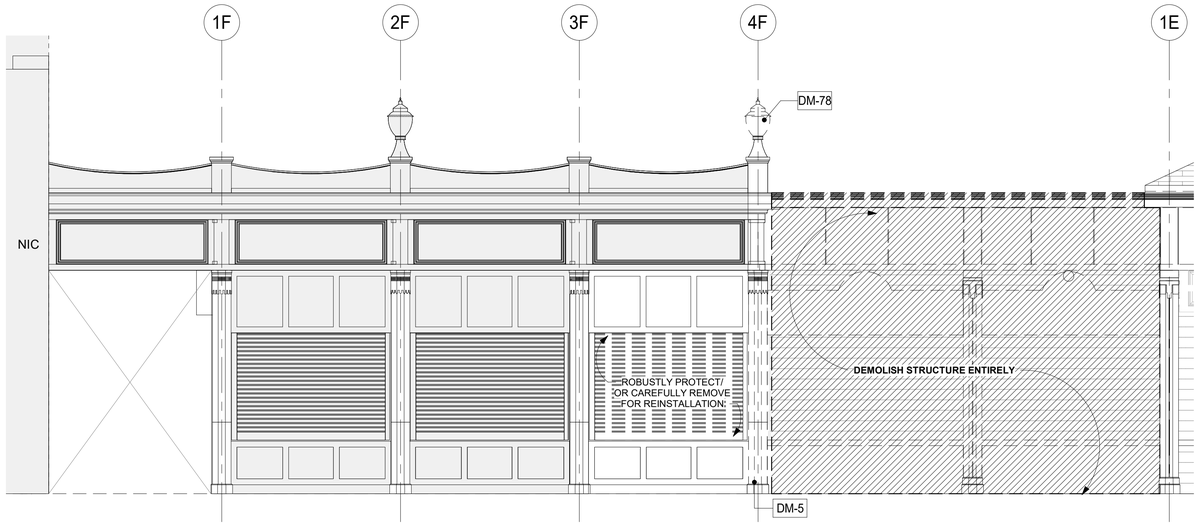

1 CXF - DEMOLITION ELEVATION - NORTH
1/4" = 1'-0"

DEMO KEYNOTES

DM-5	REMOVE COLUMN ENCLOSURES. CAREFULLY REMOVE AT LEAST ONE COLUMN ENCLOSURE TO USE AS REFERENCE IN ORDER TO REPLICATE TRIMS TO MATCH LOCATION, SIZE AND SHAPE AS INDICATED. COORDINATE WITH STRUCTURAL DRAWINGS.
DM-43	REMOVE SECTION OF EXISTING WALL. PROVIDE HEADER AND SILL AS REQUIRED TO CREATE A WINDOW OPENING. SEE ELEVATIONS.
DM-66	CAREFULLY REMOVE WINDOW AND FRAME. TO BE SALVAGED AND REINSTALLED IN CXD WORK (SEE CXD-A-11).
DM-67	CAREFULLY REMOVE DOOR AND FRAME, FOR REINSTALLATION.
DM-78	ACORN LIGHT TO PROTECTED, OR CAREFULLY REMOVED AND REINSTALLED AS NEEDED FOR CONSTRUCTION.

8/30/2022 4:28:31 PM

CONSULTANT INFORMATION
The LiRo Group
3 Aerial Way, Syosset, New York 11791
(516) 938-5476 www.liro.com

CONSULTANT SEAL
REGISTERED ARCHITECT ROBERT D. LIROLA JR. 023220 STATE OF NEW YORK

REVISION NUMBER	DATE	MADE BY	APP'D BY	REVISION

RECORD DRAWING CERTIFICATION
☐ AS BUILT – CHANGES AS NOTED ☐ AS BUILT – NO CHANGES

CONTRACTOR
NAME
SIGNATURE
TITLE DATE

PROJECT COORDINATOR
NAME
SIGNATURE
TITLE DATE

WESTCHESTER COUNTY, NEW YORK
DEPARTMENT OF PUBLIC WORKS AND TRANSPORTATION
DIVISION OF ENGINEERING

INFRASTRUCTURE REHABILITATION PHASE 3
PLAYLAND PARK, RYE, NEW YORK
CROSS AXIS BUILDING F
CXF - EXTERIOR DEMOLITION ELEVATIONS

CONTRACT NUMBER 22-523
SHEET NUMBER CXF-A-03
DWG NO.: 326 of 664
SCALE: As indicated
DATE: 08/23/2022
DPW FILE NUMBER 1-118-A-1075-0
REV. NO. 0

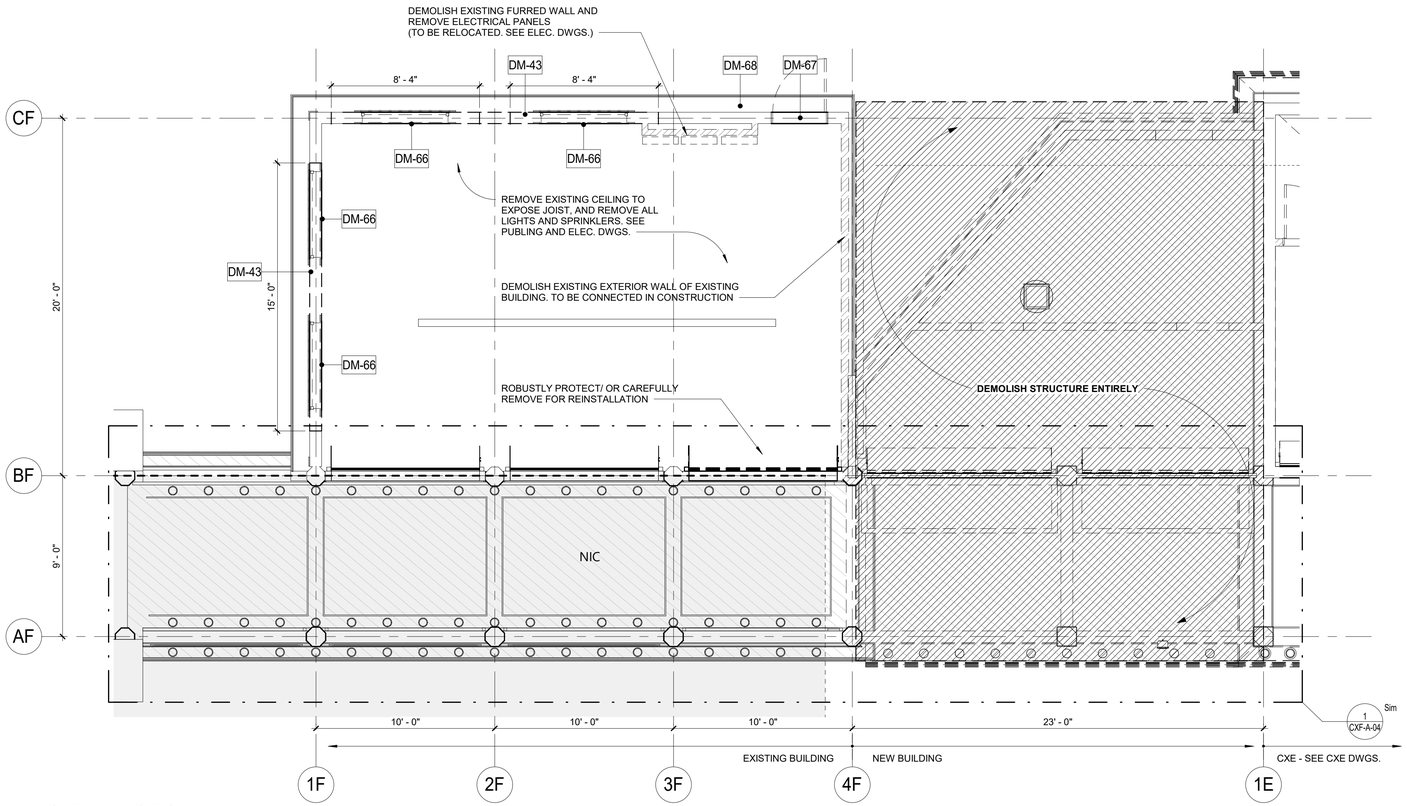

2 CXF - DEMO RCP
1/4" = 1'-0"

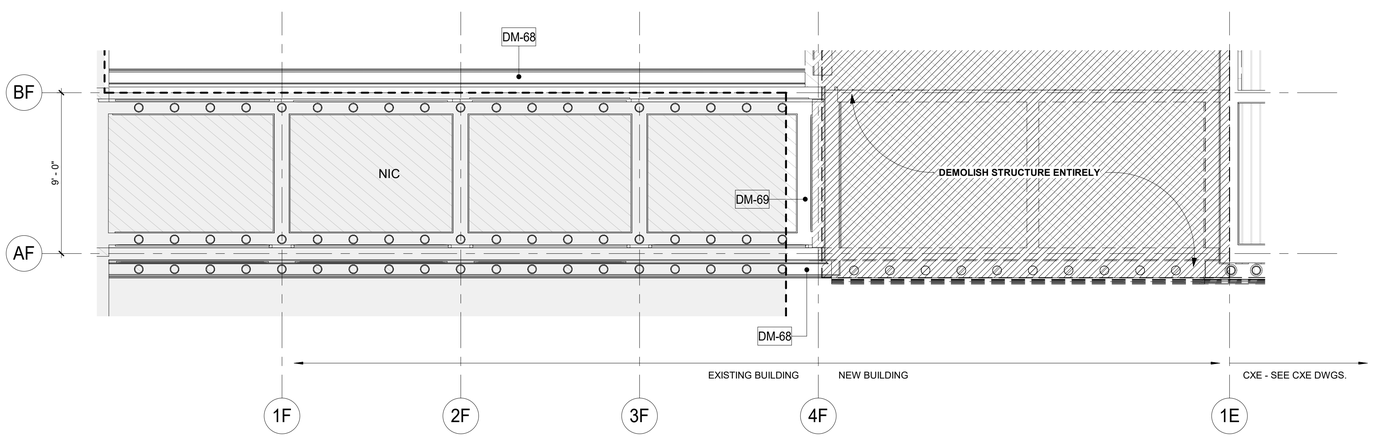

1 CXF - COLONNADE RCP DEMO
1/4" = 1'-0"

DEMOLITION NOTES:

1. THE GENERAL CONTRACTOR SHALL VISIT THE SITE AND FAMILIARIZE HIM/HERSELF WITH EXISTING CONDITIONS AND REQUIREMENTS OF THE WORK. THE GENERAL CONTRACTOR SHALL FIELD VERIFY EXACT QUANTITIES OF ALL ITEMS TO BE REMOVED.
2. THE CONTRACTOR SHALL PHOTOGRAPH AND DOCUMENT EXISTING HISTORIC DECORATIVE TRIMS INCLUDING SIZES AND PROFILES PRIOR TO ENVIRONMENTAL REMEDIATION WORK START.
3. ITEMS TO BE REMOVED / DEMOLISHED AS INDICATED ON THE DRAWINGS ARE INTENDED TO SHOW THE GENERAL SCOPE OF THE DEMOLITION WORK. THE DRAWINGS DO NOT REPRESENT IN DETAIL ALL ITEMS OR SITUATIONS THAT MAY BE ENCOUNTERED DURING THE DEMOLITION. IT IS THE CONTRACTOR'S RESPONSIBILITY TO REMOVE, PROTECT, AND MAKE CORRECTIONS AS REQUIRED TO ACHIEVE DRAWING INTENT. THE GENERAL CONTRACTOR SHALL NOTIFY ARCHITECT OF ANY STRUCTURAL NONCONFORMITY TO PLANS AND SPECIFICATIONS.
4. PLAYLAND RESERVES THE RIGHT TO REVIEW ALL MATERIALS DESIGNATED FOR REMOVAL AND TO RETAIN OWNERSHIP OF SUCH MATERIALS. IF PLAYLAND RETAINS ANY MATERIAL THE CONTRACTOR SHALL MAKE ARRANGEMENTS WITH THE PLAYLAND'S SUPERINTENDENT TO HAVE THOSE MATERIALS REMOVED AND STORED OFF SITE AT NO ADDITIONAL COST.
5. DEMOLITION OF THE EXISTING BUILDING SHALL INCLUDE REMOVAL OF THE EXISTING FOUNDATIONS FOR THEIR ENTIRE DEPTH TO ACCOMMODATE INSTALLATION OF NEW FOUNDATIONS.
6. THE CONTRACTOR SHALL USE EXTREME CAUTION IN AREAS OF DEMOLITION WHICH MAY DISTURB EXISTING STRUCTURES. TEMPORARY SHORING, BARRICADES, DUST PARTITIONS, ETC. SHALL BE PROVIDED AS REQUIRED TO PROTECT ALL EXISTING STRUCTURES AND PROPERTY.
7. SEE STRUCTURAL, ELECTRICAL, SPRINKLER, AND PLUMBING DRAWINGS FOR RELATED DEMOLITION WORK.
8. VERIFY LOCATION OF EXISTING STRUCTURES AND SHORE UP ROOF/FLOOR ABOVE AS REQUIRED BEFORE REMOVING WALL.
9. REMOVAL OF ALL CEILINGS AND MOUNTED ITEMS THROUGHOUT THE CONTRACT AREA INCLUDE ANCHORING HARDWARE, AND MISCELLANEOUS FASTENINGS, ETC.
10. WALLS SHALL BE REMOVED AS INDICATED ON DEMOLITION PLANS. ALL UTILITIES IN WALL SHALL BE CUT TO BELOW SLAB OR ABOVE THE CEILING.
11. REMOVE ALL EXISTING ELECTRICAL AND PLUMBING LINES NOT TO BE RE-USED. CAP PLUMBING LINES AS REQUIRED. ELECTRICAL WIRING SHALL BE DISCONNECTED BACK TO THE NEAREST ACTIVE LOCATION. ALL ABANDONED COMMUNICATION CABLES (DATA, TELEPHONE, FIRE ALARM, AND AUDIO/VIDEO CABLES) SHALL BE REMOVED TO SOURCE IF NOT TAGGED FOR FUTURE USE.
12. DEMOLITION PROCEDURES ARE THE SOLE RESPONSIBILITY OF THE GENERAL CONTRACTOR OF THIS CONTRACT. CONTRACTOR TO "CUT OFF" ALL NECESSARY UTILITIES REQUIRED TO OBTAIN DESIRED RESULTS. CONTRACTOR TO OBTAIN "SHUT OFF" APPROVALS FROM PLAYLAND PRIOR TO SCHEDULED DEMOLITION.
13. THE GENERAL CONTRACTOR SHALL PATCH AND REPAIR ALL EXISTING CONSTRUCTION DISTURBED BY THE WORK AND PREPARE FOR NEW FINISH AS SHOWN ON THE INTERIOR ELEVATIONS.
14. THE EXISTING WOOD FLOOR SHALL BE CLEANED TO ALLOW FOR THE APPLICATION OF NEW FLOOR COATING.
15. THE GENERAL CONTRACTOR SHALL BE RESPONSIBLE FOR THE CLEANING UP AND HAULING AWAY OF ALL TRASH AND DEBRIS ON A REGULAR BASIS DURING THE CONSTRUCTION PERIOD.
16. ALL DEBRIS REMOVED FROM THE SITE SHALL BE DISPOSED OF IN A LEGAL MANNER.
17. EXISTING EXITS SHALL REMAIN FULLY ACCESSIBLE AND UNOBSTRUCTED DURING THE PROGRESS OF THE WORK.

DEMOLITION LEGEND

- INDICATES DEMOLITION
- DM - # — DEMOLITION KEY NOTES
- SHINGLES TO BE REMOVED
- SBS MODIFIED BITUMEN TO BE REMOVED
- NIC — INDICATES N.I.C.

DEMO KEYNOTES

DM-43	REMOVE SECTION OF EXISTING WALL. PROVIDE HEADER AND SILL AS REQUIRED TO CREATE A WINDOW OPENING. SEE ELEVATIONS.
DM-66	CAREFULLY REMOVE WINDOW AND FRAME. TO BE SALVAGED AND REINSTALLED IN CXD WORK (SEE CXD-A-11).
DM-67	CAREFULLY REMOVE DOOR AND FRAME, FOR REINSTALLATION.
DM-68	REMOVE EXTERIOR SOFFIT AS NECESSARY WHERE SOFFIT LIGHTS ARE TO BE INSTALLED. COORDINATE WITH ELECTRICAL DRAWINGS.
DM-69	REMOVE COLONNADE CEILING AS NECESSARY WHERE RECESSED LIGHTS ARE TO BE INSTALLED. COORDINATE WITH ELECTRICAL DRAWINGS.

8/30/2022 4:28:36 PM

CONSULTANT INFORMATION
The LiRo Group
3 Aerial Way, Syosset, New York 11791
(516) 938-5476 www.liro.com

CONSULTANT SEAL
REGISTERED ARCHITECT ROBERT D. YOUNG 023280 STATE OF NEW YORK

REVISION NUMBER	DATE	MADE BY	APP'D BY	REVISION

RECORD DRAWING CERTIFICATION
☐ AS BUILT – CHANGES AS NOTED ☐ AS BUILT – NO CHANGES

CONTRACTOR
NAME
SIGNATURE
TITLE DATE

PROJECT COORDINATOR
NAME
SIGNATURE
TITLE DATE

WESTCHESTER COUNTY, NEW YORK
DEPARTMENT OF PUBLIC WORKS AND TRANSPORTATION
DIVISION OF ENGINEERING

INFRASTRUCTURE REHABILITATION PHASE 3
PLAYLAND PARK, RYE, NEW YORK
CROSS AXIS BUILDING F
CXF - RCP DEMOLITION PLAN

CONTRACT NUMBER	22-523
SHEET NUMBER	CXF-A-04
DWG NO.:	327 of 664
SCALE:	As indicated
DATE:	08/23/2022
DPW FILE NUMBER	1-118-A-1076-0
REV. NO.	0

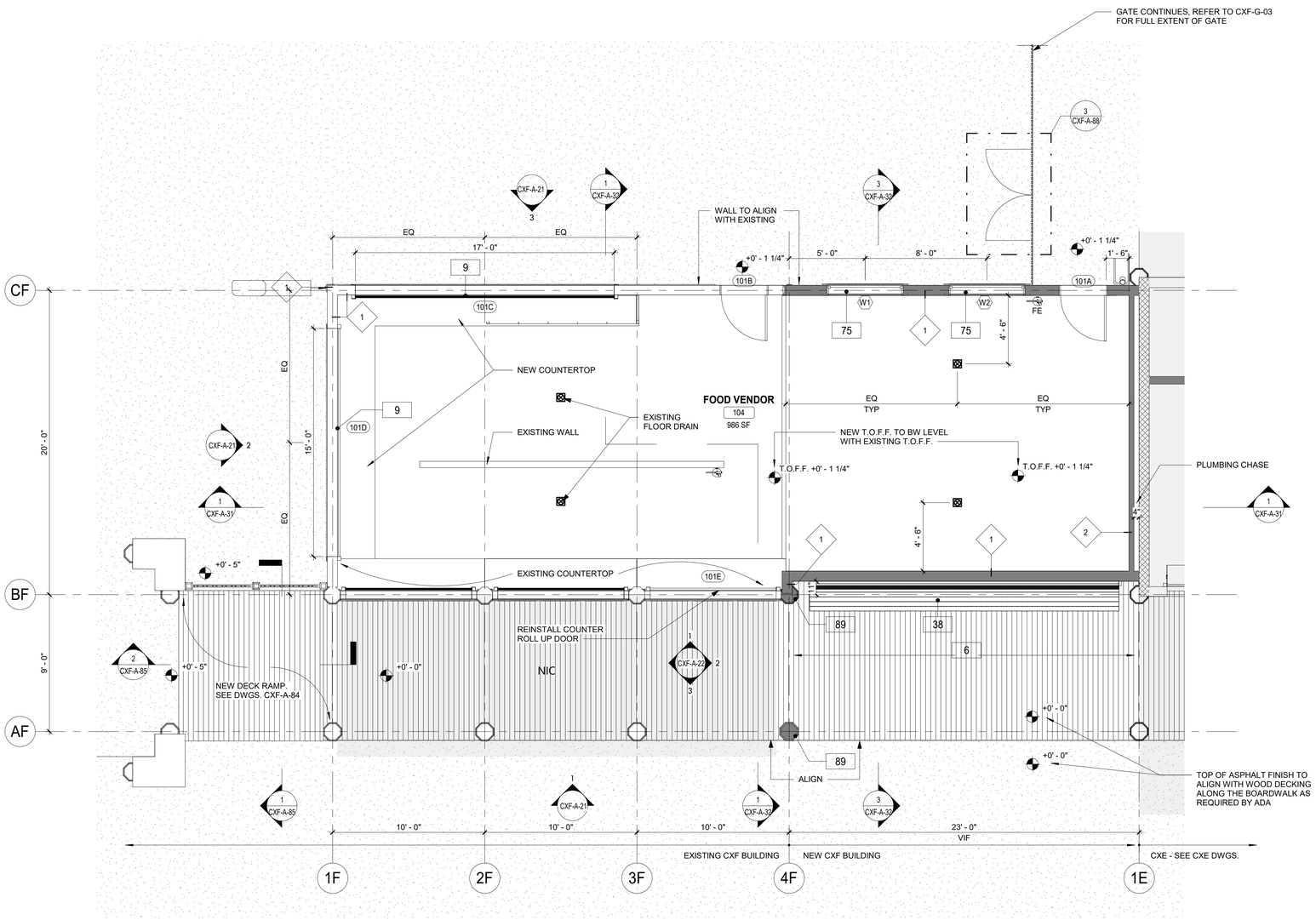

1 GROUND FLOOR PLAN CXF
1/4" = 1'-0"

FLOOR PLAN NOTES:

1. DIMENSIONS ARE TO FACE OF GYPSUM WALL BOARD, GRID LINES, OR CENTERLINE OF COLUMN. ALL ELEVATIONS ARE NOTED FROM FINISH FLOOR ELEVATIONS.
2. PROVIDE DRYWALL TRIM AT ALL EXPOSED EDGES AND CORNERS.
3. MINIMUM DIMENSION FROM ANY CORNER OR WALL TO FRAMING STUD AT DOOR JAMB OPENING SHALL BE 4" U.N.O.
4. PROVIDE FIRE RETARDANT WOOD BLOCKING FOR ANY WALL MOUNTED EQUIPMENT OR ACCESSORIES. COORDINATE ALL BLOCKING REQUIREMENTS NECESSARY WITH OTHER TRADES.
5. THE CONTRACTOR SHALL VERIFY DIMENSIONS OF THE EXISTING SPACE AND OF ANY EXISTING CONSTRUCTION TO REMAIN BY ACTUAL MEASUREMENT BEFORE ANY WORK IS PERFORMED. IF ANY MEASUREMENTS DIFFER FROM DIMENSIONS SHOWN ON PLAN, GC IS TO NOTIFY THE ARCHITECT IMMEDIATELY. THE CONTRACTOR SHALL BE RESPONSIBLE FOR CORRECTING ANY AND ALL DISCREPANCIES FOUND AFTER THE WORK IS PERFORMED, AT NO ADDITIONAL EXPENSE TO THE OWNER.
6. THE GC SHALL PROVIDE CAULK JOINTS WHERE GYP BD MEETS THE FLOOR OR ROOF DECK.
7. THE GC SHALL BE RESPONSIBLE FOR COORDINATING WITH OWNER ON ALL WORK TO BE PERFORMED BY THE OWNER. ANY POTENTIAL CONFLICTS OR DELAYS CAUSED BY THE OWNER'S SUBCONTRACTORS MUST BE DOCUMENTED IN WRITING TO THE OWNER BEFORE THE DELAY IS ACTUALLY INCURRED FOR IT TO BE CONSIDERED. OTHERWISE THE GC WILL BE RESPONSIBLE FOR MEETING THE SCHEDULE AS OUTLINED IN THE CONTRACT.
8. THE CONTRACTOR TO VERIFY ALL FINISHED DIMENSIONS. FIELD CONDITIONS ALTERING ANY DIMENSIONS SHOULD BE BROUGHT TO THE ATTENTION OF THE OWNER AND ARCHITECT.
9. THE CONTRACTOR SHALL SUPPLY ALL MATERIAL, LABOR, AND COORDINATION REQUIRED FOR THEINSTALLATION OF ALL OWNER-SUPPLIED ITEMS AS DESCRIBED IN THE DOCUMENTS, U.N.O.
10. THE CONTRACTOR IS RESPONSIBLE FOR ALL FLOOR AND WALL PENETRATIONS FOR ELECTRICAL AND MECHANICAL WORK. ALL SUCH OPENING SHALL BE FRAMED AND REINFORCED.
11. FLOOR SURFACES SHALL BE LEVELED TO ASSURE SMOOTH SURFACE FOR FINISH FLOOR INSTALLATION.
12. THE CONTRACTOR. TO COORDINATE ALL UTILITY STUB-UPS AND LOCATION OF ALL EQUIPMENT PRIOR TO INSTALLING ANY ONE ITEM.
13. PROVIDE PAINTED ACCESS PANELS IN WALLS & CEILING AT CONCEALED ITEMS SUCH AS VALVES, ONTROLS, SWITCHES OR ANY OTHER ITEMS THAT REQUIRES ACCESS. GC O DETERMINE ACCESS ANEL LOCATION W/ ARCHITECT PRIOR TO INSTALLATION.

PLAN LEGEND:

	NEW IPE WOOD DECK	101	DOOR TAG
	NEW CONSTRUCTION	1i	WINDOW TAG
NIC	NOT IN CONTRACT	FE	FIRE EXTINGUISHER
#	KEY NOTES	FD	FLOOR DRAIN
1i	WALL TAG		

CONSTRUCTION KEYNOTES

6	INSTALL NEW IPE DECKING. SEE STRUCTURAL FOR DETAILS.
9	PROVIDE AND INSTALL ROLL DOWN DOOR. SEE DETAILS AND SCHEDULE.
38	NEW BUILT IN SEATING. SEE DETAILS.(CXF-A-86)
75	REINSTALL SALVAGED WINDOWS FROM CXF (SEE CXF-A-01).
89	NEW STRUCTURAL POST AND COLUMN ENCLOSURE. COORDINATE WITH STRUCT DWG.

8/30/2022 4:28:38 PM

CONSULTANT INFORMATION
The LiRo Group
3 Aerial Way, Syosset, New York 11791
(516) 938-5476 www.liro.com

CONSULTANT SEAL
REGISTERED ARCHITECT ROBERT D. YOUNG JR. 023280 STATE OF NEW YORK

REVISION NUMBER	DATE	MADE BY	APP'D BY	REVISION

RECORD DRAWING CERTIFICATION
☐ AS BUILT – CHANGES AS NOTED ☐ AS BUILT – NO CHANGES

CONTRACTOR
NAME
SIGNATURE
TITLE DATE

PROJECT COORDINATOR
NAME
SIGNATURE
TITLE DATE

WESTCHESTER COUNTY, NEW YORK
DEPARTMENT OF PUBLIC WORKS AND TRANSPORTATION
DIVISION OF ENGINEERING

INFRASTRUCTURE REHABILITATION PHASE 3
PLAYLAND PARK, RYE, NEW YORK
CROSS AXIS BUILDING F
CXF - GROUND FLOOR PLAN

CONTRACT NUMBER	22-523
SHEET NUMBER	CXF-A-11
DWG NO.:	328 of 664
SCALE:	As indicated
DATE:	08/23/2022
DPW FILE NUMBER	1-118-A-1077-0
REV. NO.	0

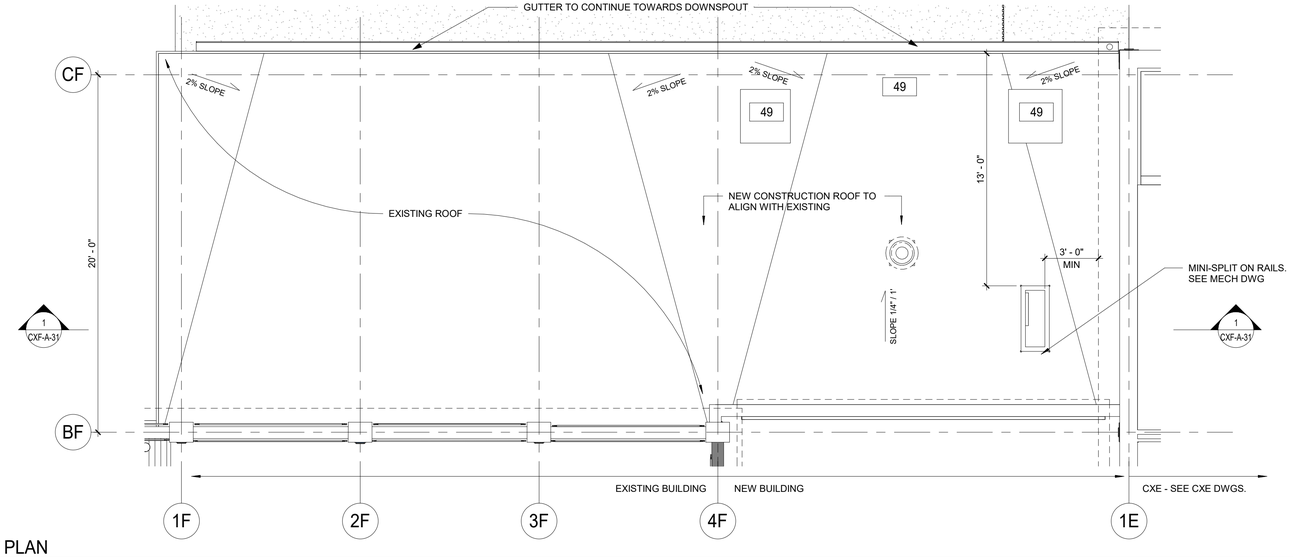

2 CXF - ROOF PLAN
1/4" = 1'-0"

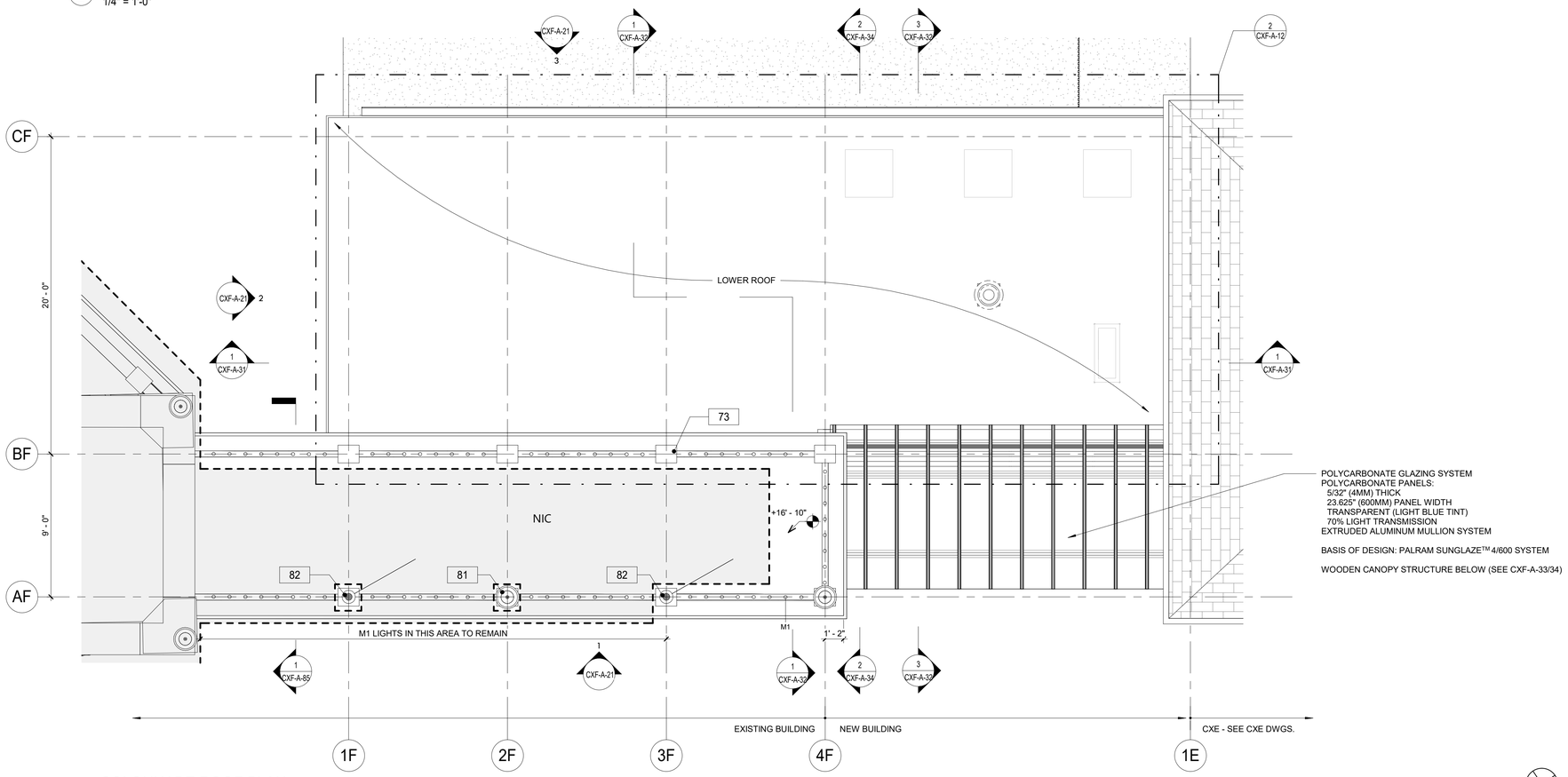

1 COLONNADE ROOF PLAN
1/4" = 1'-0"

FLOOR PLAN NOTES:

1. DIMENSIONS ARE TO FACE OF GYPSUM WALL BOARD, GRID LINES, OR CENTERLINE OF COLUMN. ALL ELEVATIONS ARE NOTED FROM FINISH FLOOR ELEVATIONS.
2. PROVIDE DRYWALL TRIM AT ALL EXPOSED EDGES AND CORNERS.
3. MINIMUM DIMENSION FROM ANY CORNER OR WALL TO FRAMING STUD AT DOOR JAMB OPENING SHALL BE 4" U.N.O.
4. PROVIDE FIRE RETARDANT WOOD BLOCKING FOR ANY WALL MOUNTED EQUIPMENT OR ACCESSORIES. COORDINATE ALL BLOCKING REQUIREMENTS NECESSARY WITH OTHER TRADES.
5. THE CONTRACTOR SHALL VERIFY DIMENSIONS OF THE EXISTING SPACE AND OF ANY EXISTING CONSTRUCTION TO REMAIN BY ACTUAL MEASUREMENT BEFORE ANY WORK IS PERFORMED. IF ANY MEASUREMENTS DIFFER FROM DIMENSIONS SHOWN ON PLAN, GC IS TO NOTIFY THE ARCHITECT IMMEDIATELY. THE CONTRACTOR SHALL BE RESPONSIBLE FOR CORRECTING ANY AND ALL DISCREPANCIES FOUND AFTER THE WORK IS PERFORMED, AT NO ADDITIONAL EXPENSE TO THE OWNER.
6. THE GC SHALL PROVIDE CAULK JOINTS WHERE GYP BD MEETS THE FLOOR OR ROOF DECK.
7. THE GC SHALL BE RESPONSIBLE FOR COORDINATING WITH OWNER ON ALL WORK TO BE PERFORMED BY THE OWNER. ANY POTENTIAL CONFLICTS OR DELAYS CAUSED BY THE OWNER'S SUBCONTRACTORS MUST BE DOCUMENTED IN WRITING TO THE OWNER BEFORE THE DELAY IS ACTUALLY INCURRED FOR IT TO BE CONSIDERED. OTHERWISE THE GC WILL BE RESPONSIBLE FOR MEETING THE SCHEDULE AS OUTLINED IN THE CONTRACT.
8. THE CONTRACTOR TO VERIFY ALL FINISHED DIMENSIONS. FIELD CONDITIONS ALTERING ANY DIMENSIONS SHOULD BE BROUGHT TO THE ATTENTION OF THE OWNER AND ARCHITECT.
9. THE CONTRACTOR SHALL SUPPLY ALL MATERIAL, LABOR, AND COORDINATION REQUIRED FOR THEINSTALLATION OF ALL OWNER-SUPPLIED ITEMS AS DESCRIBED IN THE DOCUMENTS, U.N.O.
10. THE CONTRACTOR IS RESPONSIBLE FOR ALL FLOOR AND WALL PENETRATIONS FOR ELECTRICAL AND MECHANICAL WORK. ALL SUCH OPENING SHALL BE FRAMED AND REINFORCED.
11. FLOOR SURFACES SHALL BE LEVELED TO ASSURE SMOOTH SURFACE FOR FINISH FLOOR INSTALLATION.
12. THE CONTRACTOR. TO COORDINATE ALL UTILITY STUB-UPS AND LOCATION OF ALL EQUIPMENT PRIOR TO INSTALLING ANY ONE ITEM.
13. PROVIDE PAINTED ACCESS PANELS IN WALLS & CEILING AT CONCEALED ITEMS SUCH AS VALVES, ONTROLS, SWITCHES OR ANY OTHER ITEMS THAT REQUIRES ACCESS. GC O DETERMINE ACCESS ANEL LOCATION W/ ARCHITECT PRIOR TO INSTALLATION.

PLAN LEGEND:

	NEW IPE WOOD DECK	101	DOOR TAG
	NEW CONSTRUCTION	1i	WINDOW TAG
NIC	NOT IN CONTRACT	FE	FIRE EXTINGUISHER
#	KEY NOTES	FD	FLOOR DRAIN
1i	WALL TAG		

CONSTRUCTION KEYNOTES

49	NEW CURBS FOR KITCHEN EXHAUST.
73	CONSTRUCT NEW ROOF BALUSTRADE. SEE DETAILS.
81	REINSTALL ACORN LIGHTS AND REPAIR BALUSTRADE AS NEEDED.
82	INSTALL FLAG POLES. COORDINATE WITH STRUCT DWG

8/30/2022 4:28:42 PM

CONSULTANT INFORMATION
The LiRo Group
3 Aerial Way, Syosset, New York 11791
(516) 938-5476 www.liro.com

CONSULTANT SEAL
REGISTERED ARCHITECT ROBERT D. TOMASZEWSKI 023280 STATE OF NEW YORK

REVISION NUMBER	DATE	MADE BY	APP'D BY	REVISION

RECORD DRAWING CERTIFICATION
☐ AS BUILT – CHANGES AS NOTED ☐ AS BUILT – NO CHANGES

CONTRACTOR
NAME
SIGNATURE
TITLE DATE

PROJECT COORDINATOR
NAME
SIGNATURE
TITLE DATE

WESTCHESTER COUNTY, NEW YORK
DEPARTMENT OF PUBLIC WORKS AND TRANSPORTATION
DIVISION OF ENGINEERING

INFRASTRUCTURE REHABILITATION PHASE 3
PLAYLAND PARK, RYE, NEW YORK
CROSS AXIS BUILDING F
CXF- ROOF PLAN

CONTRACT NUMBER	22-523
SHEET NUMBER	CXF-A-12
DWG NO.:	329 of 664
SCALE:	As indicated
DATE:	08/23/2022
DPW FILE NUMBER	1-118-A-1078-0
REV. NO.	0

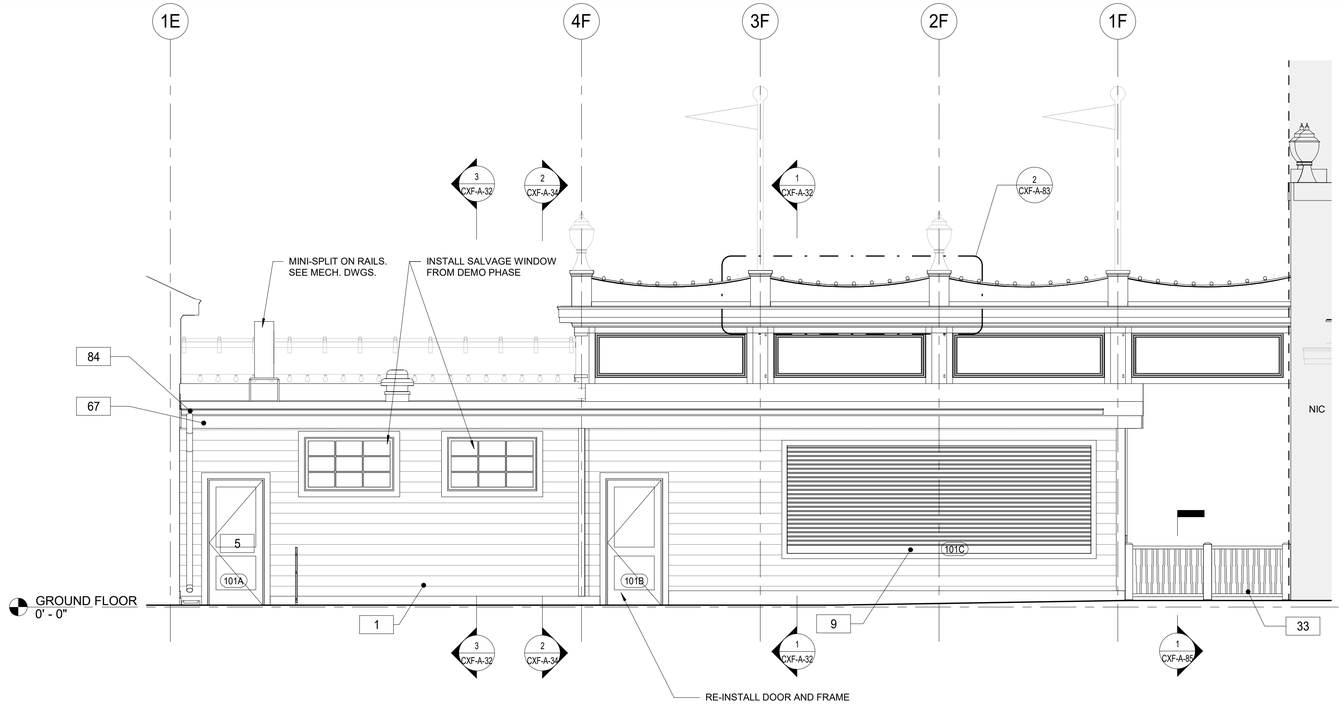

3 CXF - BUILDING ELEVATION - SOUTH
1/4" = 1'-0"

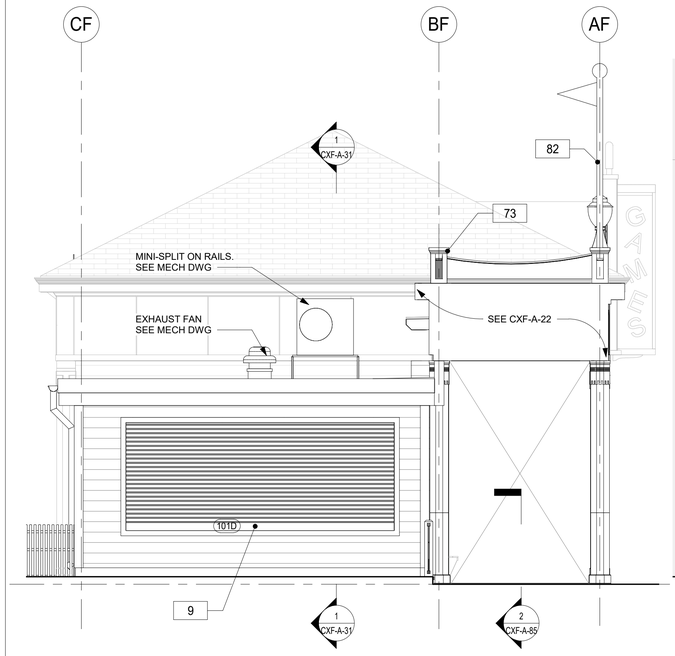

2 CXF - EAST ELEVATION
1/4" = 1'-0"

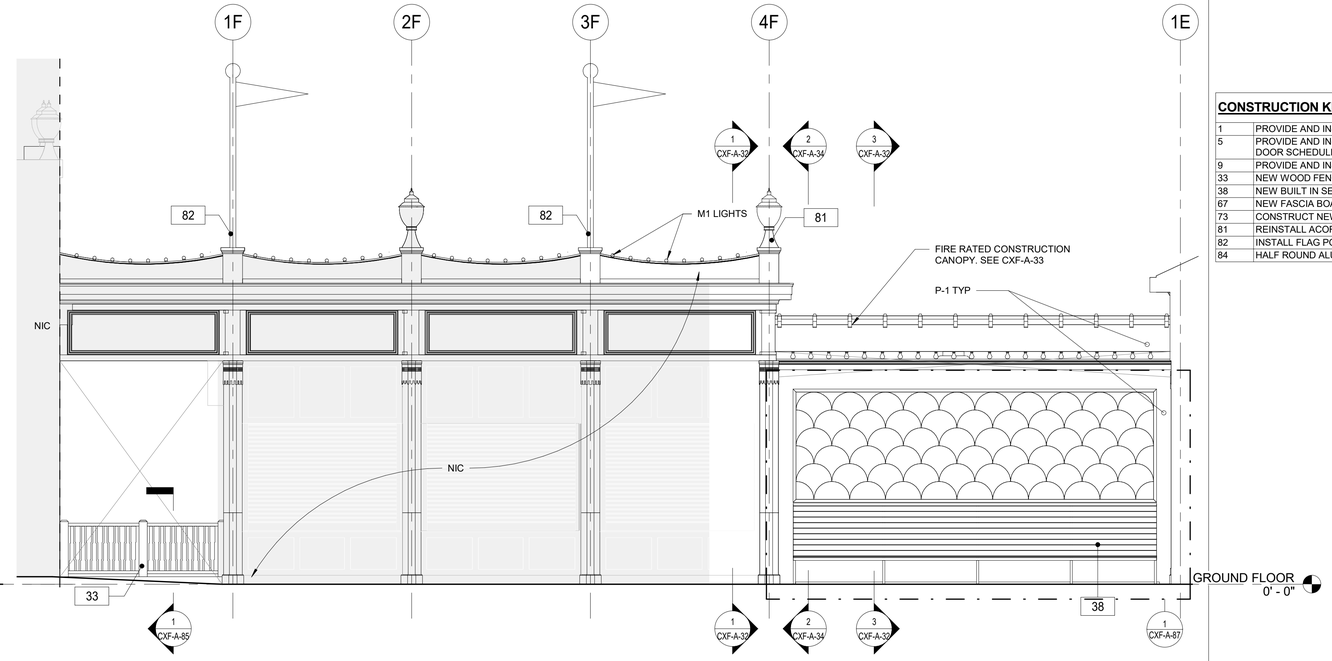

1 CXF - BUILDING ELEVATION - NORTH
1/4" = 1'-0"

FLOOR PLAN GENERAL NOTES

1. DIMENSIONS ARE TO FACE OF GYPSUM WALL BOARD, GRID LINES, OR CENTERLINE OF COLUMN. ALL ELEVATIONS ARE NOTED FROM FINISH FLOOR ELEVATIONS.
2. PROVIDE DRYWALL TRIM AT ALL EXPOSED EDGES AND CORNERS.
3. MINIMUM DIMENSION FROM ANY CORNER OR WALL TO FRAMING STUD AT DOOR JAMB OPENING SHALL BE 4" U.N.O.
4. PROVIDE METAL BLOCKING FOR ANY WALL MOUNTED EQUIPMENT OR ACCESSORIES. COORDINATE ALL BLOCKING REQUIREMENTS NECESSARY WITH OTHER TRADES.
5. THE GC SHALL VERIFY DIMENSIONS OF THE EXISTING SPACE AND OF ANY EXISTING CONSTRUCTION TO REMAIN BY ACTUAL MEASUREMENT BEFORE ANY WORK IS PERFORMED. IF ANY MEASUREMENTS DIFFER FROM DIMENSIONS SHOWN ON PLAN, GC IS TO NOTIFY THE ARCHITECT IMMEDIATELY. THE GC SHALL BE RESPONSIBLE FOR CORRECTING ANY AND ALL DISCREPANCIES FOUND AFTER THE WORK IS PERFORMED, AT NO ADDITIONAL EXPENSE TO THE OWNER.
6. GC TO VERIFY ALL FINISHED DIMENSIONS. FIELD CONDITIONS ALTERING ANY DIMENSIONS SHOULD BE BROUGHT TO THE ATTENTION OF THE OWNER AND ARCHITECT.
7. THE GC SHALL PROVIDE CAULK JOINTS WHERE GYP. BD. MEETS THE FLOOR OR ROOF DECK.
8. THE GC SHALL BE RESPONSIBLE FOR COORDINATING WITH OWNER ON ALL WORK TO BE PERFORMED BY THE OWNER. ANY POTENTIAL CONFLICTS OR DELAYS CAUSED BY THE OWNER'S SUBCONTRACTORS MUST BE DOCUMENTED IN WRITING TO THE OWNER BEFORE THE DELAY IS ACTUALLY INCURRED FOR IT TO BE CONSIDERED. OTHERWISE THE GC WILL BE RESPONSIBLE FOR MEETING THE SCHEDULE AS OUTLINED IN THE CONTRACT.
9. THE GC SHALL SUPPLY ALL MATERIAL, LABOR, AND COORDINATION REQUIRED FOR THE INSTALLATION OF ALL OWNER-SUPPLIED ITEMS AS DESCRIBED IN THE DOCUMENTS, U.N.O.
10. THE GC IS RESPONSIBLE FOR ALL FLOOR AND WALL PENETRATIONS FOR ELECTRICAL AND MECHANICAL WORK. ALL SUCH OPENING SHALL BE FRAMED AND REINFORCED.
11. FLOOR SURFACES SHALL BE LEVELED TO ASSURE SMOOTH SURFACE FOR FINISH FLOOR INSTALLATION. GC SHALL ALSO PAY SPECIAL ATTENTION THAT ALL WALL SURFACES ARE SMOOTH WHERE MURALS WILL BE DIRECTLY APPLIED TO WALL.
12. GC TO COORDINATE ALL UTILITY STUB-UPS AND LOCATION OF ALL EQUIPMENT PRIOR TO INSTALLING ANY ONE ITEM.
13. REFER TO SHEET CXF-A-80 FOR PARTITION TYPE INFORMATION.
14. PROVIDE PAINTED ACCESS PANELS IN WALLS & CEILING AT CONCEALED ITEMS SUCH AS VALVES, CONTROLS, SWITCHES OR ANY OTHER ITEMS THAT REQUIRES ACCESS. GC TO DETERMINE ACCESS PANEL LOCATION W/ ARCHITECT PRIOR TO INSTALLATION.

PAINTING SCHEDULE

KEY	COLOR	MANUFACTURER	REMARKS
P- 1	MYSTICAL POWERS #901	BENJAMIN MOORE	
P- 2	HERITAGE RED #HC-181	BENJAMIN MOORE	
P- 3	NEW YORK STATE OF MIND #805	BENJAMIN MOORE	
P- 4	LAZY SUNDAY #803	BENJAMIN MOORE	
P- 5	DEEP JUNGLE #595	BENJAMIN MOORE	
P- 6	LUCK OF THE IRISH #588	BENJAMIN MOORE	
P- 7	MAJOLICA GREEN #0013	SHERWIN WILLIAMS	
P- 8	ANTELOPE CANYON #125	BENJAMIN MOORE	
P- 9	FORSYTHIA #6907	SHERWIN WILLIAMS	
P- 10	CAPE BLUE #1642	BENJAMIN MOORE	
P- 11	WHITE SNOW #9541	SHERWIN WILLIAMS	
P- 12	TRICORN BLACK #6258	SHERWIN WILLIAMS	
P- 13	READY MIX WHITE	BENJAMIN MOORE	INTERIOR USE ONLY
P- 14	STUCCO PAINT TO MATCH P-1	KEIM	
P- 15	VAN DEUSEN BLUE #HC-156	BENJAMIN MOORE	
P- 16	#RAL9001	-	TYP. ROLL UP DOOR
P- 17	FLORIDA BEACHES #900	BENJAMIN MOORE	
P- 18	PIRATES COVE PEACH #903	BENJAMIN MOORE	
P- 19	JADITE #6459	SHERWIN WILLIAMS	
P- 20	DECISIVE YELLOW #6902	SHERWIN WILLIAMS	

CONSTRUCTION KEYNOTES

1	PROVIDE AND INSTALL NEW 1x8 MILLED YELLOW PINE - TONGUE AND GROOVE - NO BEVEL
5	PROVIDE AND INSTALL DOOR INCLUDING FRAME, SILL, LINTEL AND ANY ASSOCIATE HARDWARE. SEE DOOR SCHEDULE.
9	PROVIDE AND INSTALL ROLL DOWN DOOR. SEE DETAILS AND SCHEDULE.
33	NEW WOOD FENCE. SEE DETAILS.
38	NEW BUILT IN SEATING. SEE DETAILS.
67	NEW FASCIA BOARD AND SOFFIT.
73	CONSTRUCT NEW ROOF BALUSTRADE. SEE DETAILS.
81	REINSTALL ACORN LIGHTS AND REPAIR BALUSTRADE AS NEEDED.
82	INSTALL FLAG POLES. COORDINATE WITH STRUCT DWG
84	HALF ROUND ALUMINUM GUTTER AND DOWNSPOUT.

8/30/2022 4:28:49 PM

CONSULTANT INFORMATION
The LiRo Group
3 Aerial Way, Syosset, New York 11791
(516) 938-5476 www.liro.com

CONSULTANT SEAL
REGISTERED ARCHITECT ROBERT D. TOMASULO 023280 STATE OF NEW YORK

REVISION NUMBER	DATE	MADE BY	APP'D BY	REVISION

RECORD DRAWING CERTIFICATION
☐ AS BUILT – CHANGES AS NOTED ☐ AS BUILT – NO CHANGES

CONTRACTOR
NAME
SIGNATURE
TITLE DATE

PROJECT COORDINATOR
NAME
SIGNATURE
TITLE DATE

WESTCHESTER COUNTY, NEW YORK
DEPARTMENT OF PUBLIC WORKS AND TRANSPORTATION
DIVISION OF ENGINEERING

INFRASTRUCTURE REHABILITATION PHASE 3
PLAYLAND PARK, RYE, NEW YORK
CROSS AXIS BUILDING F
CXF - EXTERIOR ELEVATIONS

CONTRACT NUMBER	22-523
SHEET NUMBER	CXF-A-21
DWG NO.:	330 of 664
SCALE:	As indicated
DATE:	08/23/2022
DPW FILE NUMBER	1-118-A-1079-0
REV. NO.	0

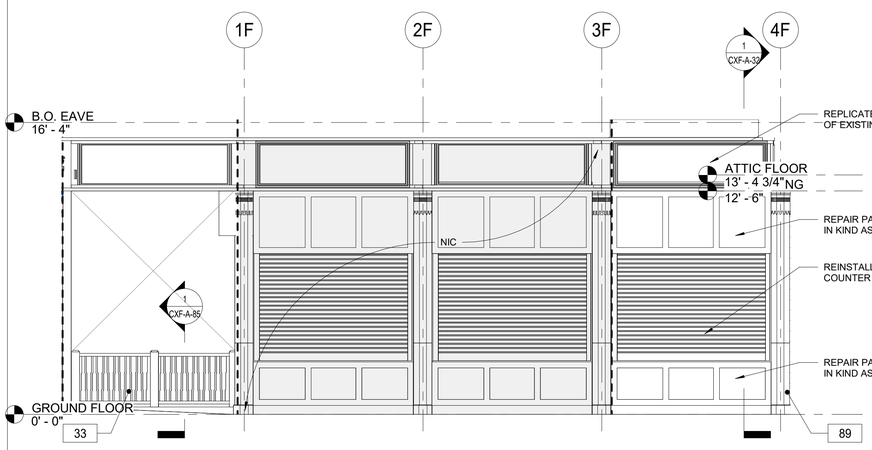

1 COLONNADE ELEVATION - NORTH
1/4" = 1'-0"

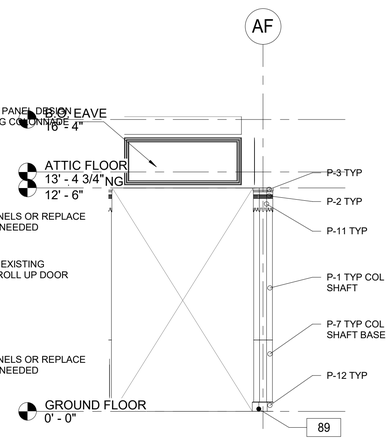

2 COLONNADE ELEVATION - EAST
1/4" = 1'-0"

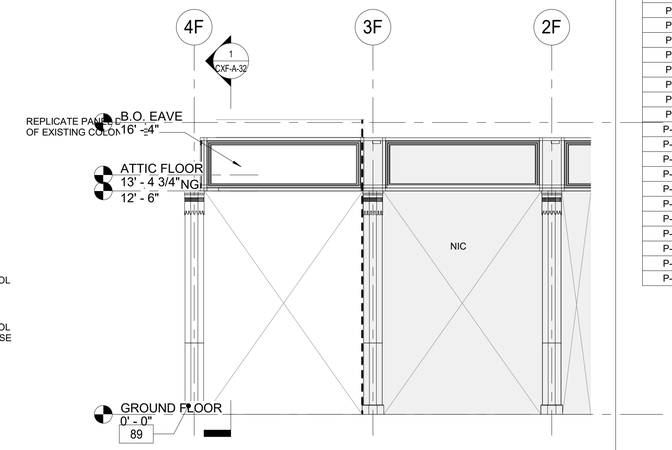

3 COLONNADE ELEVATION - SOUTH
1/4" = 1'-0"

FLOOR PLAN GENERAL NOTES

1. DIMENSIONS ARE TO FACE OF GYPSUM WALL BOARD, GRID LINES, OR CENTERLINE OF COLUMN. ALL ELEVATIONS ARE NOTED FROM FINISH FLOOR ELEVATIONS.
2. PROVIDE DRYWALL TRIM AT ALL EXPOSED EDGES AND CORNERS.
3. MINIMUM DIMENSION FROM ANY CORNER OR WALL TO FRAMING STUD AT DOOR JAMB OPENING SHALL BE 4" U.N.O.
4. PROVIDE METAL BLOCKING FOR ANY WALL MOUNTED EQUIPMENT OR ACCESSORIES. COORDINATE ALL BLOCKING REQUIREMENTS NECESSARY WITH OTHER TRADES.
5. THE GC SHALL VERIFY DIMENSIONS OF THE EXISTING SPACE AND OF ANY EXISTING CONSTRUCTION TO REMAIN BY ACTUAL MEASUREMENT BEFORE ANY WORK IS PERFORMED. IF ANY MEASUREMENTS DIFFER FROM DIMENSIONS SHOWN ON PLAN, GC IS TO NOTIFY THE ARCHITECT IMMEDIATELY. THE GC SHALL BE RESPONSIBLE FOR CORRECTING ANY AND ALL DISCREPANCIES FOUND AFTER THE WORK IS PERFORMED, AT NO ADDITIONAL EXPENSE TO THE OWNER.
6. GC TO VERIFY ALL FINISHED DIMENSIONS. FIELD CONDITIONS ALTERING ANY DIMENSIONS SHOULD BE BROUGHT TO THE ATTENTION OF THE OWNER AND ARCHITECT.
7. THE GC SHALL PROVIDE CAULK JOINTS WHERE GYP. BD. MEETS THE FLOOR OR ROOF DECK.
8. THE GC SHALL BE RESPONSIBLE FOR COORDINATING WITH OWNER ON ALL WORK TO BE PERFORMED BY THE OWNER. ANY POTENTIAL CONFLICTS OR DELAYS CAUSED BY THE OWNER'S SUBCONTRACTORS MUST BE DOCUMENTED IN WRITING TO THE OWNER BEFORE THE DELAY IS ACTUALLY INCURRED FOR IT TO BE CONSIDERED. OTHERWISE THE GC WILL BE RESPONSIBLE FOR MEETING THE SCHEDULE AS OUTLINED IN THE CONTRACT.
9. THE GC SHALL SUPPLY ALL MATERIAL, LABOR, AND COORDINATION REQUIRED FOR THE INSTALLATION OF ALL OWNER-SUPPLIED ITEMS AS DESCRIBED IN THE DOCUMENTS, U.N.O.
10. THE GC IS RESPONSIBLE FOR ALL FLOOR AND WALL PENETRATIONS FOR ELECTRICAL AND MECHANICAL WORK. ALL SUCH OPENING SHALL BE FRAMED AND REINFORCED.
11. FLOOR SURFACES SHALL BE LEVELED TO ASSURE SMOOTH SURFACE FOR FINISH FLOOR INSTALLATION. GC SHALL ALSO PAY SPECIAL ATTENTION THAT ALL WALL SURFACES ARE SMOOTH WHERE MURALS WILL BE DIRECTLY APPLIED TO WALL.
12. GC TO COORDINATE ALL UTILITY STUB-UPS AND LOCATION OF ALL EQUIPMENT PRIOR TO INSTALLING ANY ONE ITEM.
13. REFER TO SHEET CXF-A-80 FOR PARTITION TYPE INFORMATION.
14. PROVIDE PAINTED ACCESS PANELS IN WALLS & CEILING AT CONCEALED ITEMS SUCH AS VALVES, CONTROLS, SWITCHES OR ANY OTHER ITEMS THAT REQUIRES ACCESS. GC TO DETERMINE ACCESS PANEL LOCATION W/ ARCHITECT PRIOR TO INSTALLATION.

PAINTING SCHEDULE

KEY	COLOR	MANUFACTURER	REMARKS
P- 1	MYSTICAL POWERS #901	BENJAMIN MOORE	
P- 2	HERITAGE RED #HC-181	BENJAMIN MOORE	
P- 3	NEW YORK STATE OF MIND #805	BENJAMIN MOORE	
P- 4	LAZY SUNDAY #803	BENJAMIN MOORE	
P- 5	DEEP JUNGLE #595	BENJAMIN MOORE	
P- 6	LUCK OF THE IRISH #588	BENJAMIN MOORE	
P- 7	MAJOLICA GREEN #0013	SHERWIN WILLIAMS	
P- 8	ANTELOPE CANYON #125	BENJAMIN MOORE	
P- 9	FORSYTHIA #6907	SHERWIN WILLIAMS	
P- 10	CAPE BLUE #1642	BENJAMIN MOORE	
P- 11	WHITE SNOW #9541	SHERWIN WILLIAMS	
P- 12	TRICORN BLACK #6258	SHERWIN WILLIAMS	
P- 13	READY MIX WHITE	BENJAMIN MOORE	INTERIOR USE ONLY
P- 14	STUCCO PAINT TO MATCH P-1	KEIM	
P- 15	VAN DEUSEN BLUE #HC-156	BENJAMIN MOORE	
P- 16	#RAL9001	-	TYP. ROLL UP DOOR
P- 17	FLORIDA BEACHES #900	BENJAMIN MOORE	
P- 18	PIRATES COVE PEACH #903	BENJAMIN MOORE	
P- 19	JADITE #6459	SHERWIN WILLIAMS	
P- 20	DECISIVE YELLOW #6902	SHERWIN WILLIAMS	

CONSTRUCTION KEYNOTES

33	NEW WOOD FENCE. SEE DETAILS.
89	NEW STRUCTURAL POST AND COLUMN ENCLOSURE. COORDINATE WITH STRUCT DWG.

8/30/2022 4:28:51 PM

CONSULTANT INFORMATION

The LiRo Group
3 Aerial Way, Syosset, New York 11791
(516) 938-5476 www.liro.com

CONSULTANT SEAL

REGISTERED ARCHITECT ROBERT D. DONNINO 023292 STATE OF NEW YORK

REVISION NUMBER	DATE	MADE BY	APP'D BY	REVISION

RECORD DRAWING CERTIFICATION

☐ AS BUILT – CHANGES AS NOTED ☐ AS BUILT – NO CHANGES

CONTRACTOR
NAME
SIGNATURE
TITLE DATE

PROJECT COORDINATOR
NAME
SIGNATURE
TITLE DATE

WESTCHESTER COUNTY, NEW YORK
DEPARTMENT OF PUBLIC WORKS AND TRANSPORTATION
DIVISION OF ENGINEERING

INFRASTRUCTURE REHABILITATION PHASE 3
PLAYLAND PARK, RYE, NEW YORK
CROSS AXIS BUILDING F
CXF - INTERIOR COLONNADE ELEVATIONS

CONTRACT NUMBER	22-523
SHEET NUMBER	CXF-A-22
DWG NO.:	331 of 664
SCALE:	As indicated
DATE:	08/23/2022
DPW FILE NUMBER	1-118-A-1080-0
REV. NO.	0

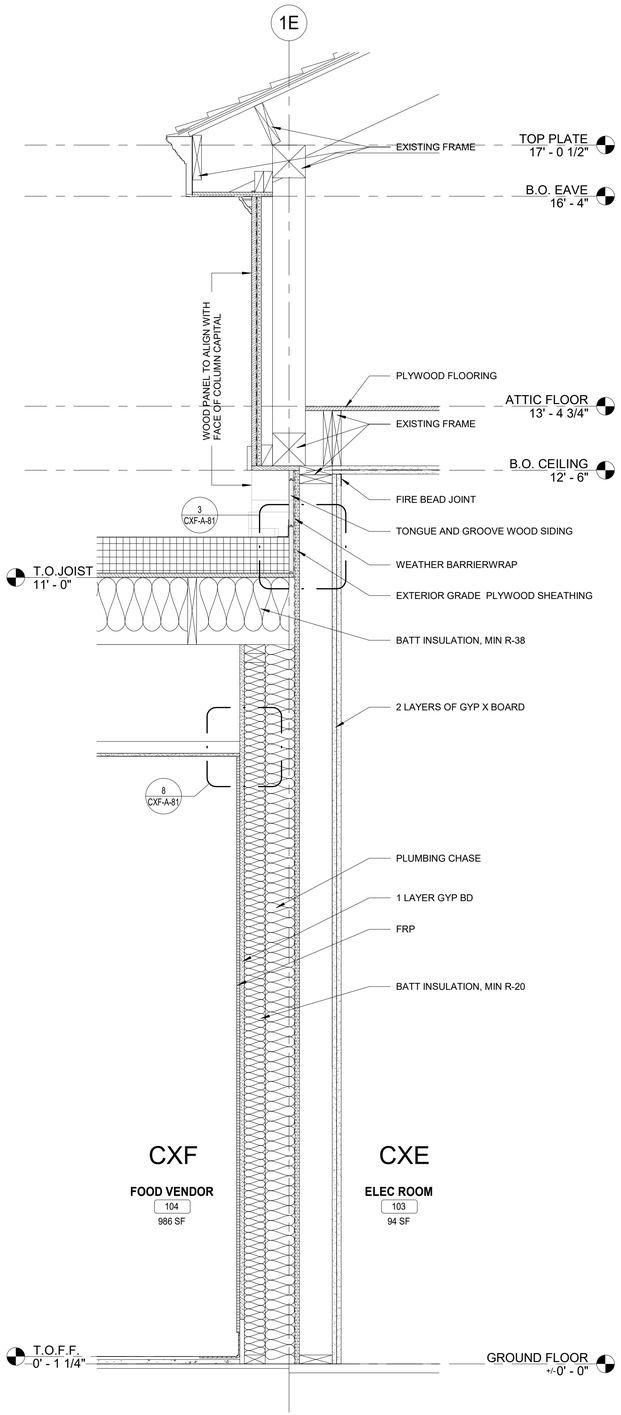

2 CXE - WALL SECTION
1" = 1'-0"

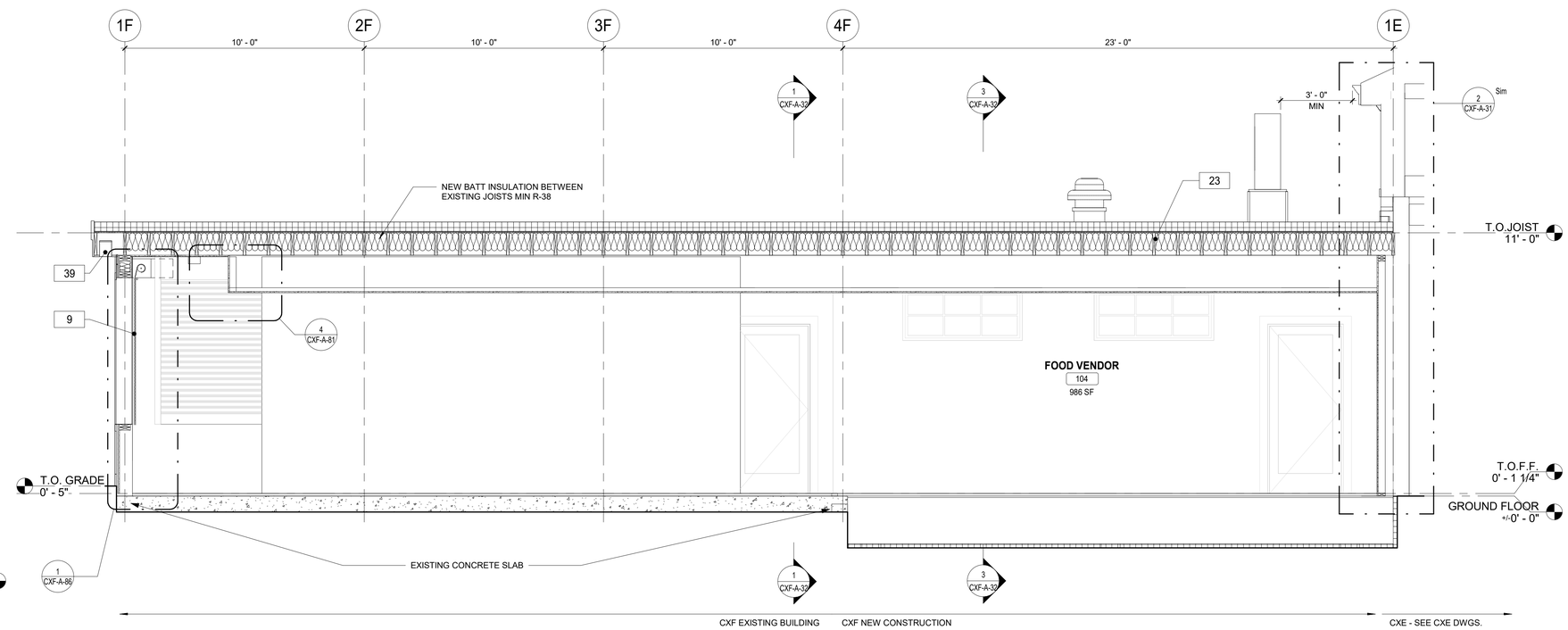

1 CXF - SECTION
3/8" = 1'-0"

8/30/2022 4:28:53 PM

CONSULTANT INFORMATION

The LiRo Group
3 Aerial Way, Syosset, New York 11791
(516) 938-5476 www.liro.com

CONSULTANT SEAL

REGISTERED ARCHITECT ROBERT D. YOUNG JR. 023280 STATE OF NEW YORK

REVISION NUMBER	DATE	MADE BY	APP'D BY	REVISION

RECORD DRAWING CERTIFICATION

☐ AS BUILT – CHANGES AS NOTED ☐ AS BUILT – NO CHANGES

CONTRACTOR
NAME
SIGNATURE
TITLE DATE

PROJECT COORDINATOR
NAME
SIGNATURE
TITLE DATE

WESTCHESTER COUNTY, NEW YORK
DEPARTMENT OF PUBLIC WORKS AND TRANSPORTATION
DIVISION OF ENGINEERING

INFRASTRUCTURE REHABILITATION PHASE 3
PLAYLAND PARK, RYE, NEW YORK
CROSS AXIS BUILDING F
CXF - SECTIONS

CONTRACT NUMBER	22-523
SHEET NUMBER	CXF-A-31
DWG NO.:	332 of 664
SCALE:	As indicated
DATE:	08/23/2022
DPW FILE NUMBER	1-118-A-1081-0
REV. NO.	0

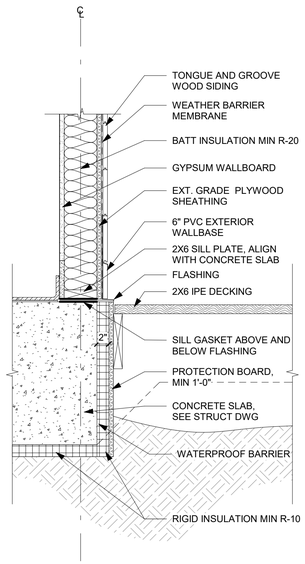

4 BASE CONDITION AT BOARDWALK
1" = 1'-0"

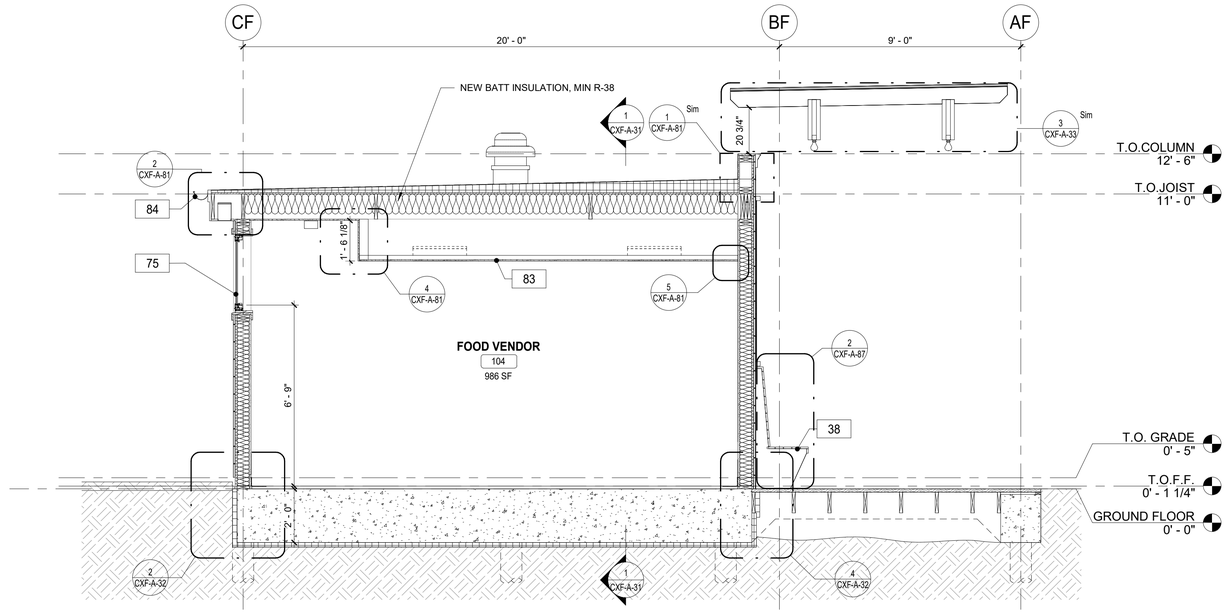

3 CXF - NEW ADDITION SECTION
3/8" = 1'-0"

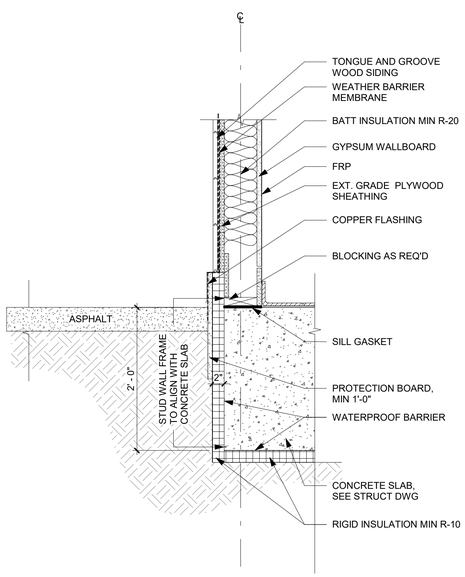

2 BASE CONDITION DETAIL
1" = 1'-0"

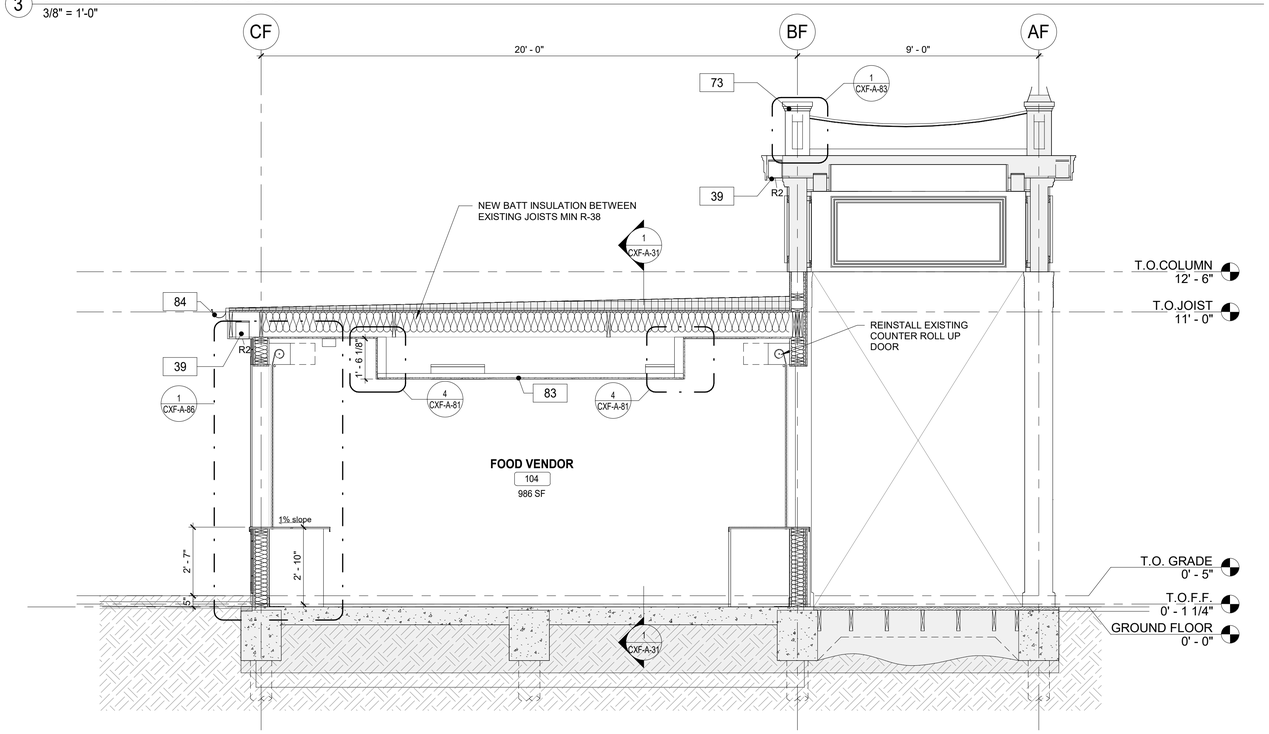

1 CXF - EXISTING BUILDING SECTION
3/8" = 1'-0"

FLOOR PLAN GENERAL NOTES

1. DIMENSIONS ARE TO FACE OF GYP BD, GRID LINES, OR CENTERLINE OF COLUMN. ALL ELEVATIONS ARE NOTED FROM FINISH FLOOR ELEVATIONS.
2. PROVIDE DRYWALL TRIM AT ALL EXPOSED EDGES AND CORNERS.
3. MINIMUM DIMENSION FROM ANY CORNER OR WALL TO FRAMING STUD AT DOOR JAMB OPENING SHALL BE 4" (U.N.O.).
4. PROVIDE METAL BLOCKING FOR ANY WALL MOUNTED EQUIPMENT OR ACCESSORIES. COORDINATE ALL BLOCKING REQUIREMENTS NECESSARY WITH OTHER TRADES.
5. THE GC SHALL VERIFY DIMENSIONS OF THE EXISTING SPACE AND OF ANY EXISTING CONSTRUCTION TO REMAIN BY ACTUAL MEASUREMENT BEFORE ANY WORK IS PERFORMED. IF ANY MEASUREMENTS DIFFER FROM DIMENSIONS SHOWN ON PLAN, GC IS TO NOTIFY THE ARCHITECT IMMEDIATELY. THE GC SHALL BE RESPONSIBLE FOR CORRECTING ANY AND ALL DISCREPANCIES FOUND AFTER THE WORK IS PERFORMED, AT NO ADDITIONAL EXPENSE TO THE OWNER.
6. GC TO VERIFY ALL FINISHED DIMENSIONS. FIELD CONDITIONS ALTERING ANY DIMENSIONS SHOULD BE BROUGHT TO THE ATTENTION OF THE OWNER AND ARCHITECT.
7. THE GC SHALL PROVIDE CAULK JOINTS WHERE GYP BD MEETS THE FLOOR OR ROOF DECK.
8. THE GC SHALL BE RESPONSIBLE FOR COORDINATING WITH OWNER ON ALL WORK TO BE PERFORMED BY THE OWNER. ANY POTENTIAL CONFLICTS OR DELAYS CAUSED BY THE OWNER'S SUBCONTRACTORS MUST BE DOCUMENTED IN WRITING TO THE OWNER BEFORE THE DELAY IS ACTUALLY INCURRED FOR IT TO BE CONSIDERED. OTHERWISE THE GC WILL BE RESPONSIBLE FOR MEETING THE SCHEDULE AS OUTLINED IN THE CONTRACT.
9. THE GC SHALL SUPPLY ALL MATERIAL, LABOR, AND COORDINATION REQUIRED FOR THE INSTALLATION OF ALL OWNER-SUPPLIED ITEMS AS DESCRIBED IN THE DOCUMENTS, U.N.O.
10. THE GC IS RESPONSIBLE FOR ALL FLOOR AND WALL PENETRATIONS FOR ELECTRICAL AND MECHANICAL WORK. ALL SUCH OPENING SHALL BE FRAMED AND REINFORCED.
11. FLOOR SURFACES SHALL BE LEVELED TO ASSURE SMOOTH SURFACE FOR FINISH FLOOR INSTALLATION. GC SHALL ALSO PAY SPECIAL ATTENTION THAT ALL WALL SURFACES ARE SMOOTH WHERE MURALS WILL BE DIRECTLY APPLIED TO WALL.
12. GC TO COORDINATE ALL UTILITY STUB-UPS AND LOCATION OF ALL EQUIPMENT PRIOR TO INSTALLING ANY ONE ITEM.
13. REFER TO SHEET CXF-A-80 FOR PARTITION TYPE INFORMATION.
14. PROVIDE PAINTED ACCESS PANELS IN WALLS & CEILING AT CONCEALED ITEMS SUCH AS VALVES, CONTROLS, SWITCHES OR ANY OTHER ITEMS THAT REQUIRES ACCESS. GC TO DETERMINE ACCESS PANEL LOCATION W/ ARCHITECT PRIOR TO INSTALLATION.

CONSTRUCTION KEYNOTES

38	NEW BUILT IN SEATING. SEE DETAILS.
39	NEW SOFFIT WITH RECESSED LIGHTS AS INDICATED ON RCP
73	CONSTRUCT NEW ROOF BALUSTRADE. SEE DETAILS.
75	REINSTALL SALVAGED WINDOWS FROM CXF (SEE CXF-A-01).
83	FDA AND USDA COMPLIANT SQUARE LAY IN CEILING TILES.
84	HALF ROUND ALUMINUM GUTTER AND DOWNSPOUT.

8/30/2022 4:28:56 PM

CONSULTANT INFORMATION
The LiRo Group
3 Aerial Way, Syosset, New York 11791
(516) 938-5476 www.liro.com

CONSULTANT SEAL
REGISTERED ARCHITECT ROBERT D. TOWNSLEY 023280 STATE OF NEW YORK

REVISION NUMBER	DATE	MADE BY	APP'D BY	REVISION

RECORD DRAWING CERTIFICATION
☐ AS BUILT – CHANGES AS NOTED ☐ AS BUILT – NO CHANGES

CONTRACTOR
NAME
SIGNATURE
TITLE DATE

PROJECT COORDINATOR
NAME
SIGNATURE
TITLE DATE

WESTCHESTER COUNTY, NEW YORK
DEPARTMENT OF PUBLIC WORKS AND TRANSPORTATION
DIVISION OF ENGINEERING

INFRASTRUCTURE REHABILITATION PHASE 3
PLAYLAND PARK, RYE, NEW YORK
CROSS AXIS BUILDING F
CXF - ENLARGED SECTION

CONTRACT NUMBER 22-523
SHEET NUMBER CXF-A-32
DWG NO.: 333 of 664
SCALE: As indicated
DATE: 08/23/2022
DPW FILE NUMBER 1-118-A-1082-0
REV. NO. 0

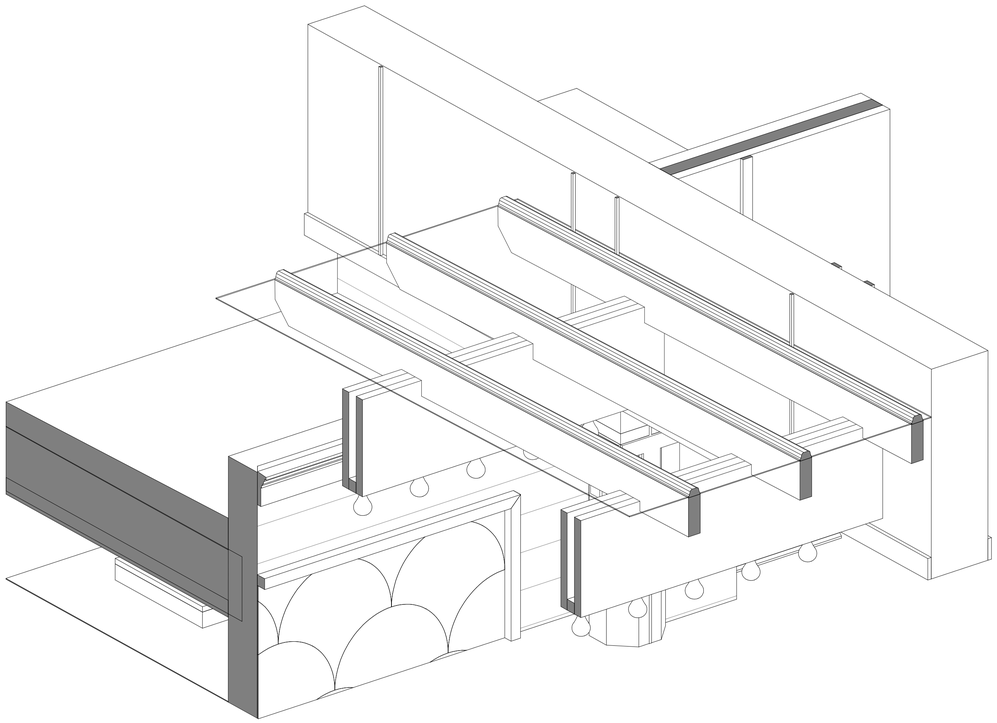

4 GLASS CANOPY AXON

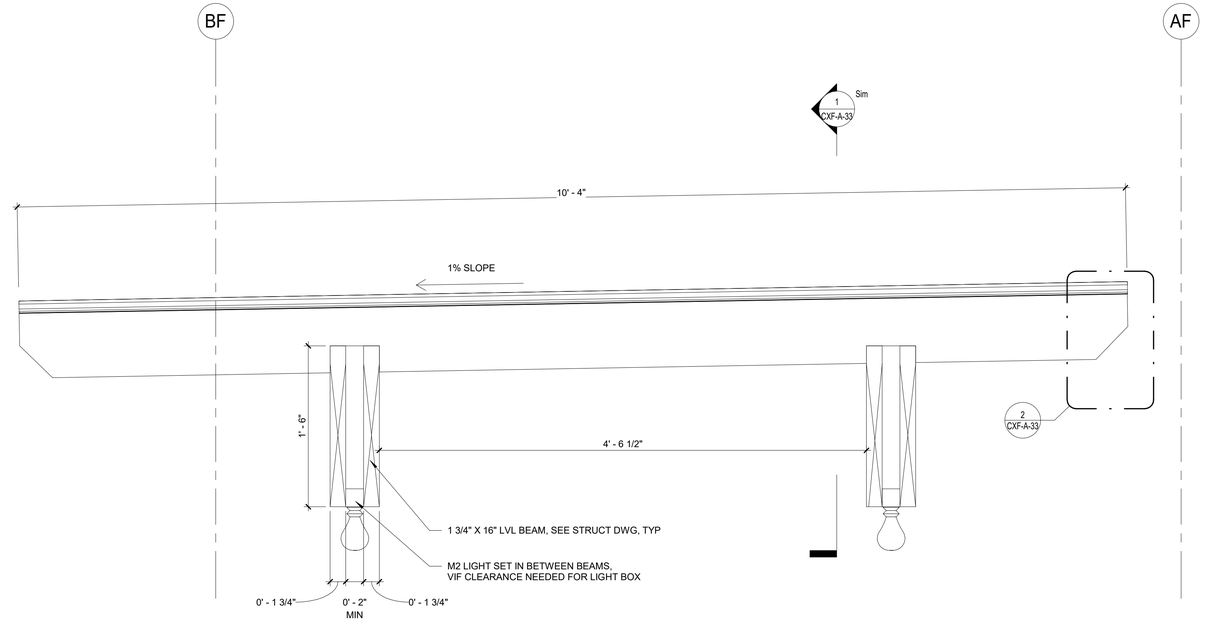

3 CXF - CANOPY CROSS SECTION
1 1/2" = 1'-0"

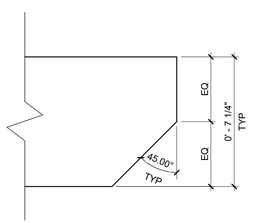

2 CANOPY JOIST MITER CUT DETAIL
3" = 1'-0"

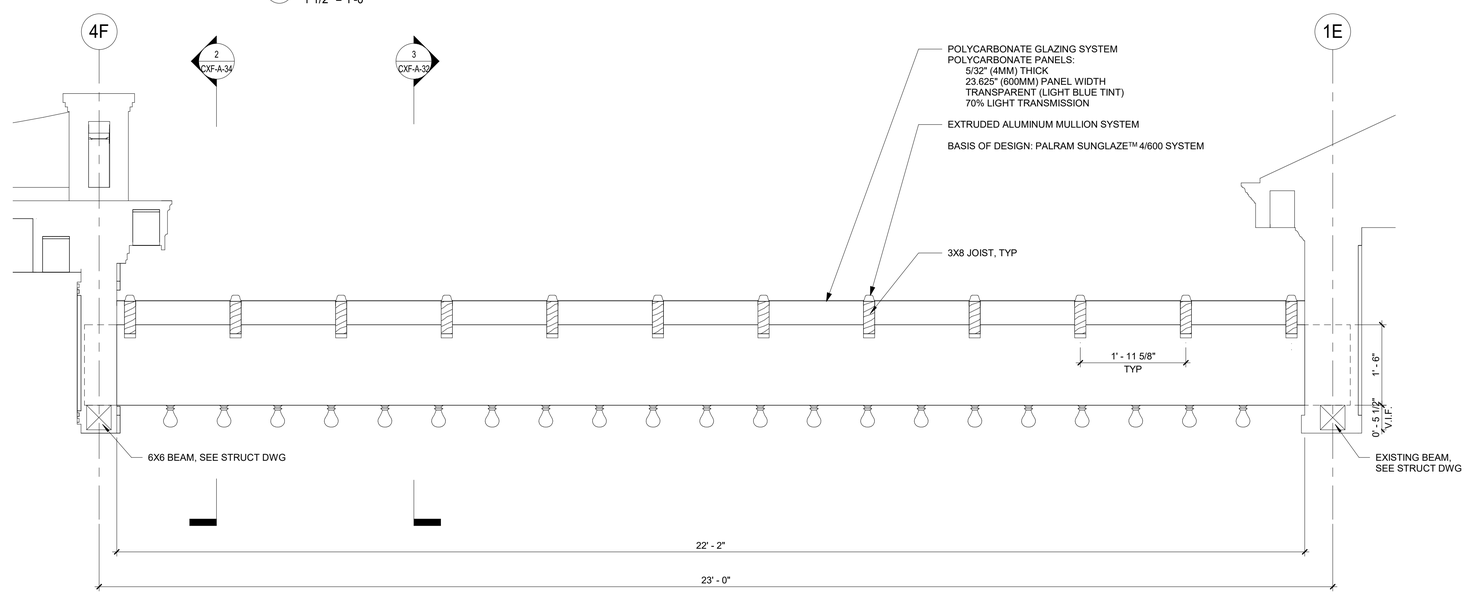

1 CANOPY SECTION
3/4" = 1'-0"

8/30/2022 4:28:57 PM

CONSULTANT INFORMATION

The LiRo Group

3 Aerial Way, Syosset, New York 11791
(516) 938-5476 www.liro.com

CONSULTANT SEAL

REGISTERED ARCHITECT ROBERT D. KONIGSBERG 023280 STATE OF NEW YORK

REVISION NUMBER	DATE	MADE BY	APP'D BY	REVISION

RECORD DRAWING CERTIFICATION

☐ AS BUILT – CHANGES AS NOTED ☐ AS BUILT – NO CHANGES

CONTRACTOR
NAME
SIGNATURE
TITLE DATE

PROJECT COORDINATOR
NAME
SIGNATURE
TITLE DATE

WESTCHESTER COUNTY, NEW YORK
DEPARTMENT OF PUBLIC WORKS AND TRANSPORTATION
DIVISION OF ENGINEERING

INFRASTRUCTURE REHABILITATION PHASE 3
PLAYLAND PARK, RYE, NEW YORK
CROSS AXIS BUILDING F
CXF - CANOPY SECTIONS

CONTRACT NUMBER	22-523
SHEET NUMBER	CXF-A-33
DWG NO.:	334 of 664
SCALE:	As indicated
DATE:	08/23/2022
DPW FILE NUMBER	1-118-A-1083-0
REV. NO.	0

POLYCARBONATE GLAZING SYSTEM
POLYCARBONATE PANELS:
5/32" (4MM) THICK
23.625" (600MM) PANEL WIDTH
TRANSPARENT (LIGHT BLUE TINT)
70% LIGHT TRANSMISSION

EXTRUDED ALUMINUM MULLION SYSTEM

BASIS OF DESIGN: PALRAM SUNGLAZE™ 4/600 SYSTEM

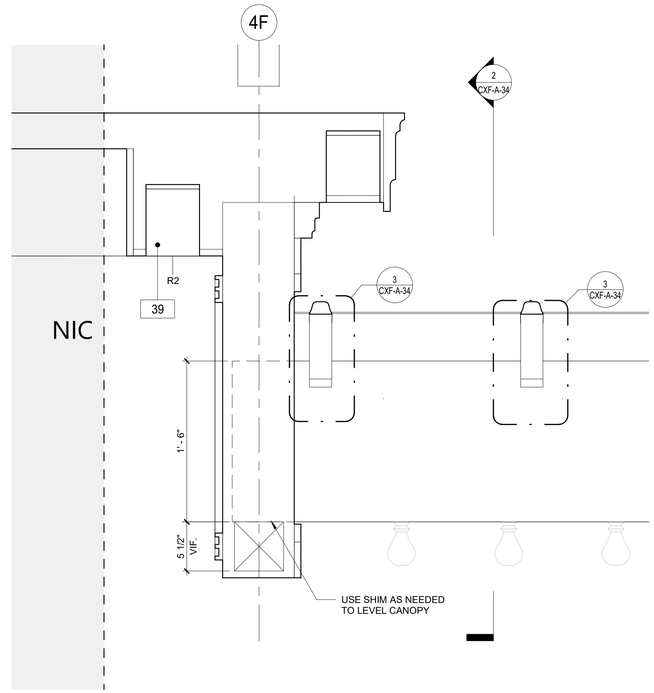

5 CANOPY SECTION - CXF
1 1/2" = 1'-0"

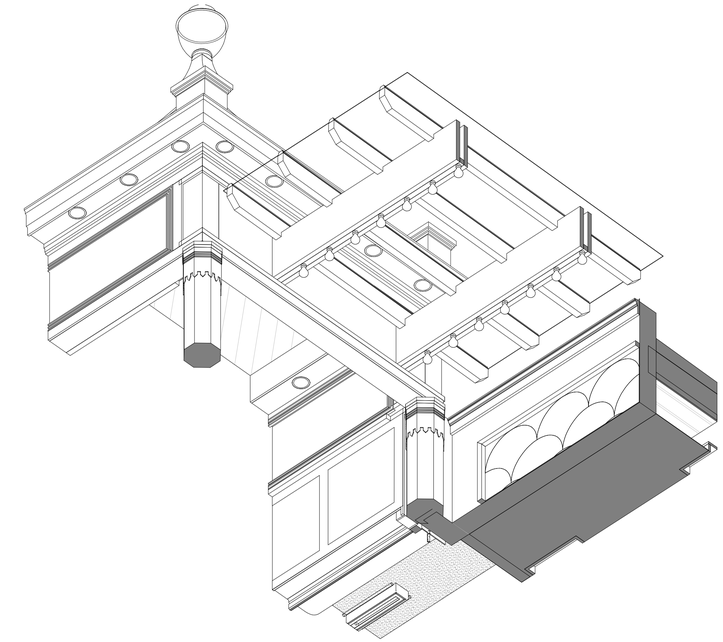

4 CANOPY AXON - CXF SIDE

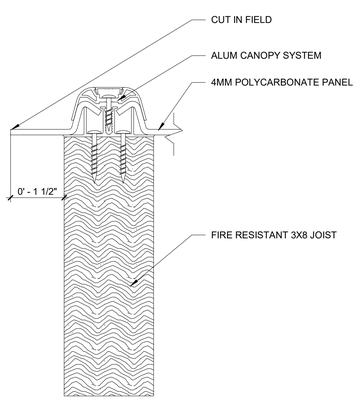

6 CANOPY SYSTEM DETAIL - END
6" = 1'-0"

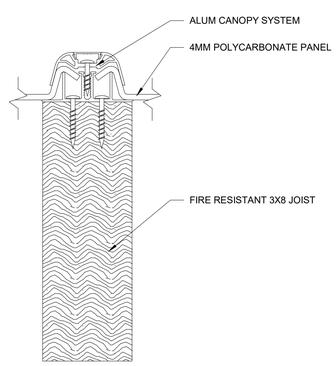

3 CANOPY SYSTEM DETAIL
6" = 1'-0"

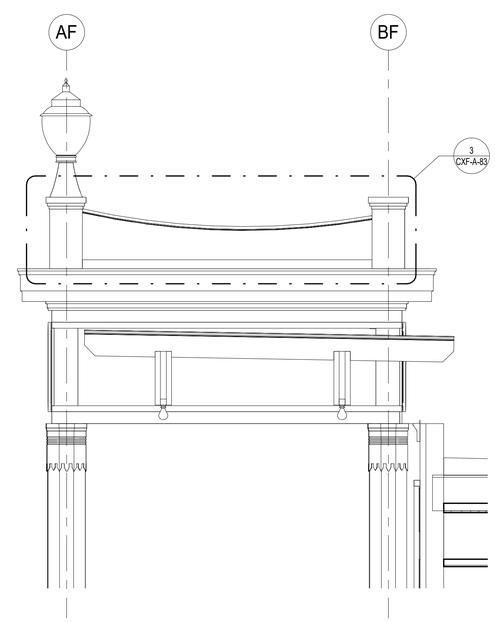

2 CXF - COLONNADE ELEVATION
1/2" = 1'-0"

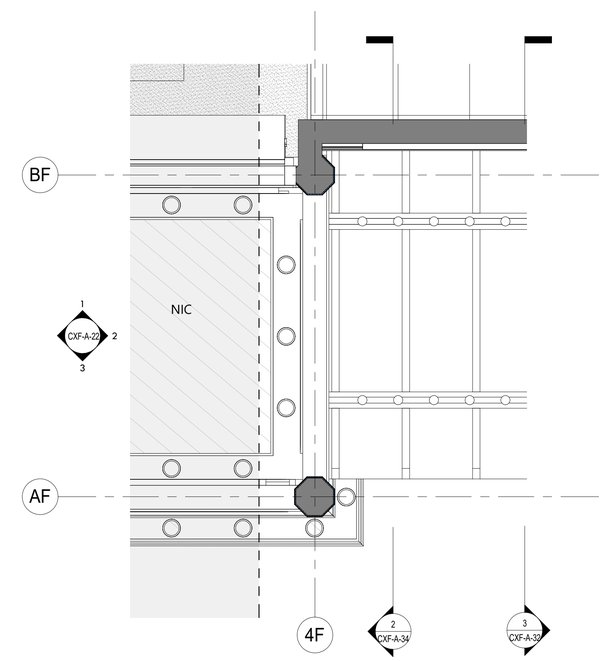

1 CXF - RCP CANOPY
1/2" = 1'-0"

8/30/2022 4:29:00 PM

CONSULTANT INFORMATION
The LiRo Group
3 Aerial Way, Syosset, New York 11791
(516) 938-5476 www.liro.com

CONSULTANT SEAL
REGISTERED ARCHITECT ROBERT D. YOUNG JR. 023280 STATE OF NEW YORK

REVISION NUMBER	DATE	MADE BY	APP'D BY	REVISION

RECORD DRAWING CERTIFICATION
☐ AS BUILT – CHANGES AS NOTED ☐ AS BUILT – NO CHANGES

CONTRACTOR
NAME
SIGNATURE
TITLE DATE

PROJECT COORDINATOR
NAME
SIGNATURE
TITLE DATE

WESTCHESTER COUNTY, NEW YORK
DEPARTMENT OF PUBLIC WORKS AND TRANSPORTATION
DIVISION OF ENGINEERING

INFRASTRUCTURE REHABILITATION PHASE 3
PLAYLAND PARK, RYE, NEW YORK
CROSS AXIS BUILDING F
CXF - COLONNADE SECTIONS

CONTRACT NUMBER 22-523
SHEET NUMBER **CXF-A-34**
DWG NO.: 335 of 664
SCALE: **As indicated**
DATE: **08/23/2022**
DPW FILE NUMBER **1-118-A-1084-0**
REV. NO. 0

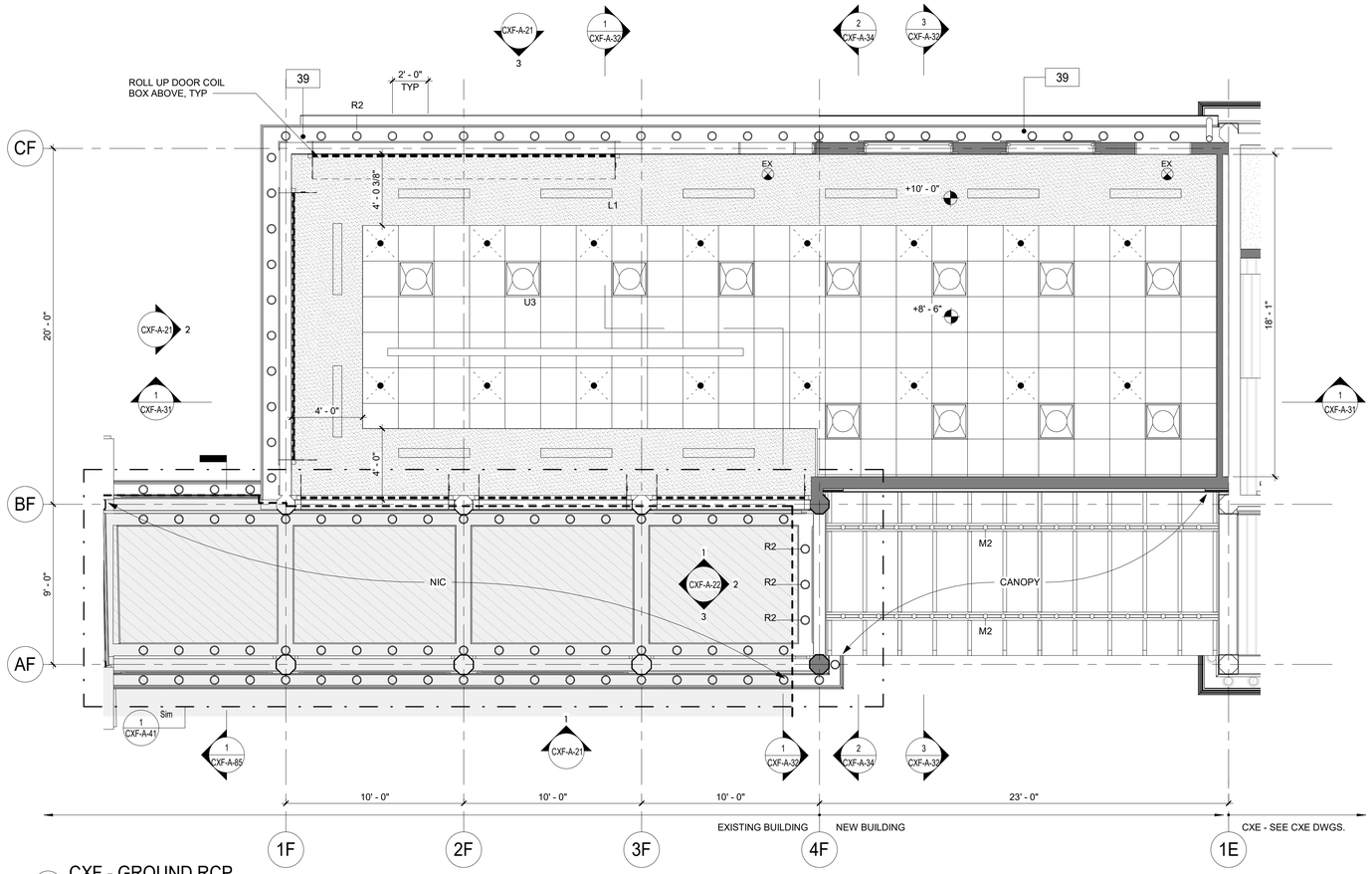

2 CXF - GROUND RCP
1/4" = 1'-0"

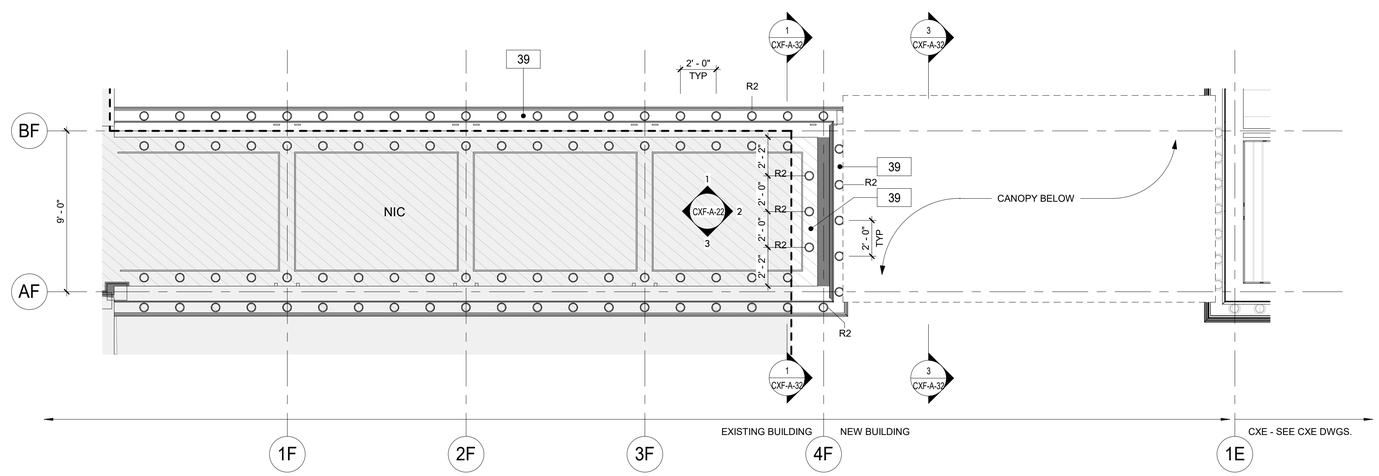

1 CXF - COLONNADE RCP
1/4" = 1'-0"

GENERAL REFLECTED CEILING PLAN NOTES

1. CONTRACTOR SHALL PROVIDE THE NECESSARY FRAMING OR BRIDGING FOR ALL LIGHT FIXTURES, DIFFUSERS, RETURNS, ETC., AS WELL AS REQUIRED CUTOUTS.
2. CONTRACTOR SHALL NOTIFY THE ARCHITECT OF ANY POSSIBLE INTERFERENCES BEFORE PROCEEDING WITH CEILING INSTALLATION.
3. CEILING CONSTRUCTION SHALL NOT BE CLOSED IN UNTIL THE CONSTRUCTION MANAGER AND AUTHORITIES HAVING JURISDICTION HAVE HAD AN OPPORTUNITY TO INSPECT THE AREA AND ASCERTAIN THAT ALL DUCTWORK, PLUMBING, ELECTRICAL CONDUITS AND LINES HAVE BEEN INSTALLED PROPERLY.
4. FASCIAS OR ANY BREAK IN THE CEILING HEIGHTS CREATED BY THE INSTALLATION AND/OR ALTERATION OF HEATING, VENTILATING, A/C OR MECHANICAL DUCTS, PIPING OR OTHER EQUIPMENT SHALL BE FORMED OF GYPSUM WALLBOARD ON FURRING CHANNELS.
5. THE CEILING PANEL JOINTS SHALL BE ALIGNED PERFECTLY WITH LIGHTING FIXTURES.
6. ALL JOINTS IN THE PANEL SHALL BE SQUARE, LEVEL AND PERFECTLY ALIGNED WITH EACH OTHER AND WITH BUILDING FIXTURES.
7. CONTRACTOR SHALL PROVIDE CUTOUTS AND OTHER SPECIAL PROVISIONS IN ACOUSTICAL WORK AS REQUIRED FOR LIGHTING FIXTURES, REGISTERS, DIFFUSERS AND OTHER INSERTED ITEMS. GENERAL CONSTRUCTION CONTRACTOR SHALL INSTALL ACCESS PANELS IN GYPSUM DRYWALL CEILINGS FOR ACCESS TO AIR CONDITIONING, PLUMBING, TELEPHONE & ELECTRICAL CONTROL EQUIPMENT REQUIRING ACCESS.
8. IN GENERAL, WITHIN EACH AREA, CEILING WORK REQUIREMENTS SHALL BE EXECUTED IN SUCH A MANNER AS TO PROVIDE CONTINUOUS MATCHED AND ALIGNED CEILINGS. THE FINAL CEILING INSTALLATION SHALL BE FREE OF ALL VISUAL DEFECTS.

RCP LEGEND

- R2 — R-2 EXTERIOR RECESSED CAN IN SOFFIT (SEE ELEC. DWGS)
- R6 — R-6: 4" SQUARE RECESSED LIGHT FIXTURE (SEE ELEC. DWGS)
- L1 — L-1 LINEAR LIGHT (SEE ELEC. DWGS)
- M2 — M-2 MARQUEE LIGHTING AT BALUSTRADE
- SPRINKLER (SEE FIRE PROTECTION DWGS)
- SUPPLY DIFFUSER. SEE MECHANICAL DRAWINGS
- EXHAUST GRILL. SEE MECHANICAL DRAWINGS
- EX — EX- EXIT SIGN
- NEW CONSTRUCTION
- T1-11 CEILING BOARD
- GYP. BOARD CEILING
- INDICATES SCOPE NOT IN CONTRACT

CONSTRUCTION KEYNOTES

39	NEW SOFFIT WITH RECESSED LIGHTS AS INDICATED ON RCP

8/30/2022 4:29:08 PM

CONSULTANT INFORMATION

The LiRo Group
3 Aerial Way, Syosset, New York 11791
(516) 938-5476 www.liro.com

CONSULTANT SEAL
REGISTERED ARCHITECT ROBERT D. TOWNLEY JR. 023290 STATE OF NEW YORK

REVISION NUMBER	DATE	MADE BY	APP'D BY	REVISION

RECORD DRAWING CERTIFICATION
☐ AS BUILT – CHANGES AS NOTED ☐ AS BUILT – NO CHANGES

CONTRACTOR
NAME
SIGNATURE
TITLE DATE

PROJECT COORDINATOR
NAME
SIGNATURE
TITLE DATE

WESTCHESTER COUNTY, NEW YORK
DEPARTMENT OF PUBLIC WORKS AND TRANSPORTATION
DIVISION OF ENGINEERING

INFRASTRUCTURE REHABILITATION PHASE 3
PLAYLAND PARK, RYE, NEW YORK
CROSS AXIS BUILDING F
CXF - GROUND FLOOR REFLECTED CEILING PLAN

CONTRACT NUMBER	22-523
SHEET NUMBER	CXF-A-41
DWG NO.:	336 of 664
SCALE:	As indicated
DATE:	08/23/2022
DPW FILE NUMBER	1-118-A-1085-0
REV. NO.	0

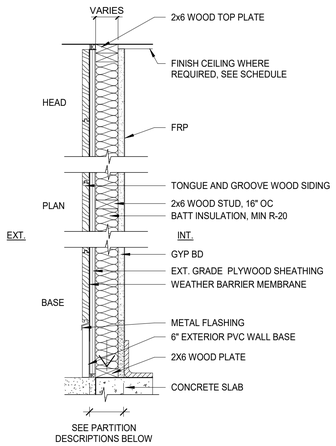

1 **NO RATING**
1 LAYER 5/8" IMPACT & MOLD-RESISTANT GYP BD TO CEILING AND FINISH LAYER OF FRP ON THE INTERIOR SIDE

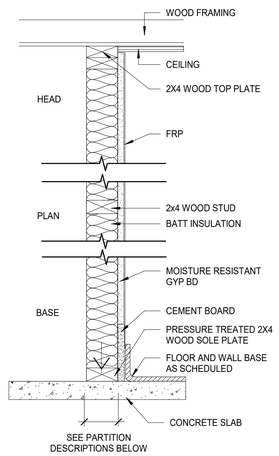

2 **NO RATING**
1 LAYER 5/8" IMPACT & MOLD-RESISTANT GYP BD TO CEILING AND FINISH LAYER OF FRP ON THE INTERIOR SIDE

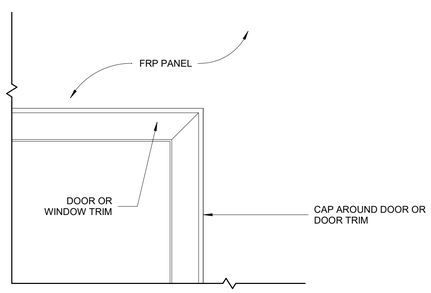

4 DOOR/ WINDOW TRIM DETAIL
3" = 1'-0"

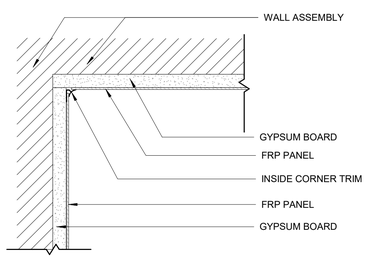

3 FRP PANEL INSIDE CORNER TRIM
3" = 1'-0"

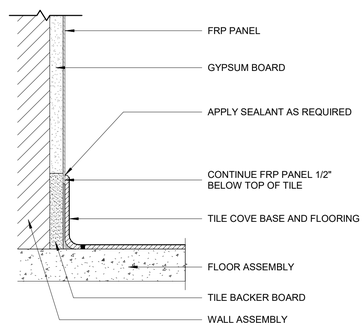

2 TILE BASE DETAIL
3" = 1'-0"

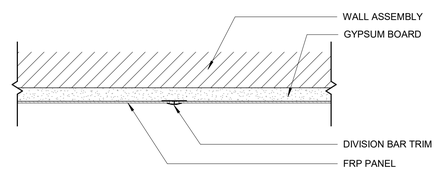

1 VERTICAL SEAM TRIM DETAIL
3" = 1'-0"

8/30/2022 4:29:08 PM

CONSULTANT INFORMATION
The LiRo Group
3 Aerial Way, Syosset, New York 11791
(516) 938-5476 www.liro.com

CONSULTANT SEAL
REGISTERED ARCHITECT ROBERT D. JOHNSON 023220 STATE OF NEW YORK

REVISION NUMBER	DATE	MADE BY	APP'D BY	REVISION

RECORD DRAWING CERTIFICATION
☐ AS BUILT – CHANGES AS NOTED ☐ AS BUILT – NO CHANGES

CONTRACTOR
NAME
SIGNATURE
TITLE DATE

PROJECT COORDINATOR
NAME
SIGNATURE
TITLE DATE

WESTCHESTER COUNTY, NEW YORK
DEPARTMENT OF PUBLIC WORKS AND TRANSPORTATION
DIVISION OF ENGINEERING

INFRASTRUCTURE REHABILITATION PHASE 3
PLAYLAND PARK, RYE, NEW YORK
CROSS AXIS BUILDING F
PARTITION TYPES AND DETAILS

CONTRACT NUMBER	22-523
SHEET NUMBER	CXF-A-80
DWG NO.:	337 of 664
SCALE:	As indicated
DATE:	08/23/2022
DPW FILE NUMBER	1-118-A-1086-0
REV. NO.	0

GENERAL REFLECTED CEILING PLAN NOTES:

1. IN OPEN CEILING AREAS THE STRUCTURE ABOVE SHALL BE PAINTED THE STANDARD CEILING PAINT COLOR. USE THE NUMBER OF COATS REQUIRED TO FULLY COVER THE CEILING CONSTRUCTION.

2. CONTRACTOR SHALL PROVIDE THE NECESSARY FRAMING OR BRIDGING FOR ALL LIGHT FIXTURES, DIFFUSERS, RETURNS, ETC., AS WELL AS REQUIRED CUTOUTS.

3. CONTRACTOR SHALL NOTIFY THE ARCHITECT OF ANY POSSIBLE INTERFERENCES BEFORE PROCEEDING WITH CEILING INSTALLATION.

4. CEILING CONSTRUCTION SHALL NOT BE CLOSED IN UNTIL THE CONSTRUCTION MANAGER AND AUTHORITIES HAVING JURISDICTION HAVE HAD AN OPPORTUNITY TO INSPECT THE AREA AND ASCERTAIN THAT ALL DUCTWORK, PLUMBING, ELECTRICAL CONDUITS AND LINES HAVE BEEN INSTALLED PROPERLY.

5. CARRYING CHANNELS FOR THE CEILING SHALL BE BOLTED TO HANGERS, AS REQUIRED BUT NOT MORE THAN 4'-0" O.C. AND 6" MIN. FROM WALLS AND PARTITIONS PARALLEL TO THE CHANNELS.

6. FASCIAS OR ANY BREAK IN THE CEILING HEIGHTS CREATED BY THE INSTALLATION AND/OR ALTERATION OF HEATING, VENTILATING, A/C OR MECHANICAL DUCTS, PIPING OR OTHER EQUIPMENT SHALL BE FORMED OF GYPSUM WALLBOARD ON FURRING CHANNELS.

7. THE CEILING TILE JOINTS SHALL BE ALIGNED PERFECTLY WITH RECESSED LIGHTING FIXTURES.

8. ALL JOINTS IN THE TILE FIELD SHALL BE SQUARE, LEVEL AND PERFECTLY ALIGNED WITH EACH OTHER AND WITH BUILDING FIXTURES.

9. CONTRACTOR SHALL PROVIDE CUTOUTS AND OTHER SPECIAL PROVISIONS IN ACOUSTICAL WORK AS REQUIRED FOR LIGHTING FIXTURES, REGISTERS, DIFFUSERS AND OTHER INSERTED ITEMS. GENERAL CONSTRUCTION CONTRACTOR SHALL INSTALL ACCESS PANELS IN GYPSUM DRYWALL CEILINGS FOR ACCESS TO AIR CONDITIONING, PLUMBING, TELEPHONE & ELECTRICAL CONTROL EQUIPMENT REQUIRING ACCESS.

10. IN GENERAL, WITHIN EACH AREA, CEILING WORK REQUIREMENTS SHALL BE EXECUTED IN SUCH A MANNER AS TO PROVIDE CONTINUOUS MATCHED AND ALIGNED CEILINGS. THE FINAL CEILING INSTALLATION SHALL BE FREE OF ALL VISUAL DEFECTS.

KEYNOTES- STEEL CHANNEL SUSPENSION BASIC CEILING DETAILS:

1. ATTACH WALL ANGLE AT CEILING PERIMETER.
2. WALL ANGLE
3. REMOVE CLIP FROM CROSS TEE AT WALL ANGLE.
4. CROSS TEE
5. CEILING PANEL
6. STEEL HANGER ROD AND CHANNEL CLIP BY OTHERS.
7. ATTACH GRID TO CARRYING CHANNEL WITH USG V-14 FURRING CLIP OR EQUAL.
8. FIELD-CUT CROSS TEE AT WALL ANGLE
9. FIELD-CUT EDGE TO MATCH PANEL PROFILE.
10. SHADOW MOLDING
11. REMOVE CLIP FROM MAIN TEE AT WALL ANGLE.
12. MAIN TEE
13. FIELD- CUT MAIN TEE AT WALL ANGLE.
14. STEEL CARRYING CHANNEL BY OTHERS.
15. SQUARE-CUT PANEL AT PERIMETER (OPTIONAL INSTALLATION)
16. COMPATIBLE T-BAR LED. SEE ELECTRICAL DRAWINGS

NOTE: USE MECHANICAL FASTENERS AS REQUIRED BY CODE FOR COMPLIANCE.

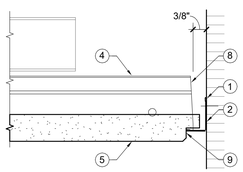

9 FIELD- CUT GRID AND PANEL AT WALL ANGLE
6" = 1'-0"

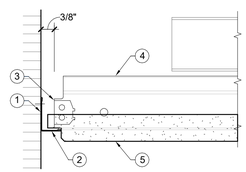

8 FULL CEILING PANEL WITH WALL ANGLE
6" = 1'-0"

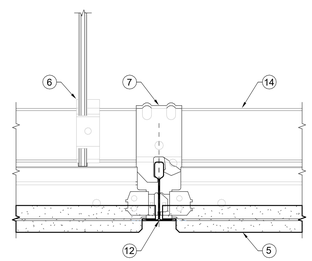

7 PANEL AND GRID SECTION CUT THROUGH MAIN TEE
6" = 1'-0"

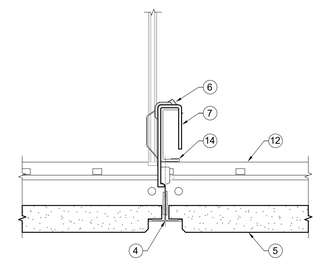

6 PANEL AND GRID SECTION CUT THROUGH CROSS TEE
6" = 1'-0"

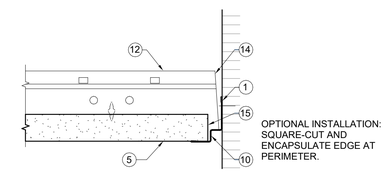

5 FIELD- CUT GRID WITH SQUARE- CUT PANEL
6" = 1'-0"

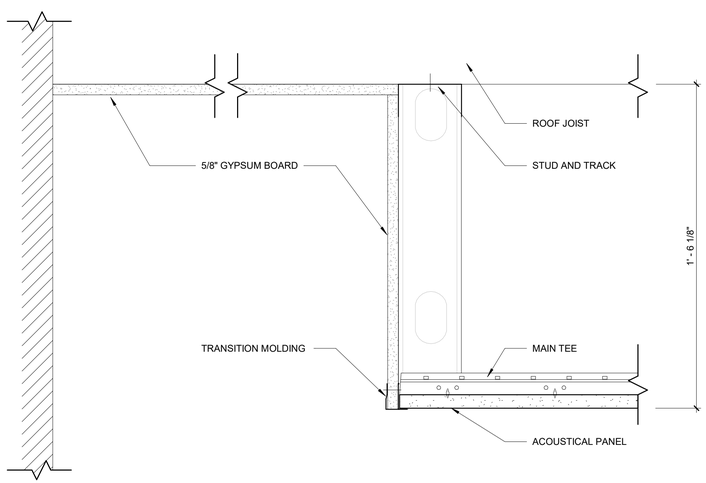

4 TRANSITION FROM DRYWALL TO ACOUSTICAL COVE
3" = 1'-0"

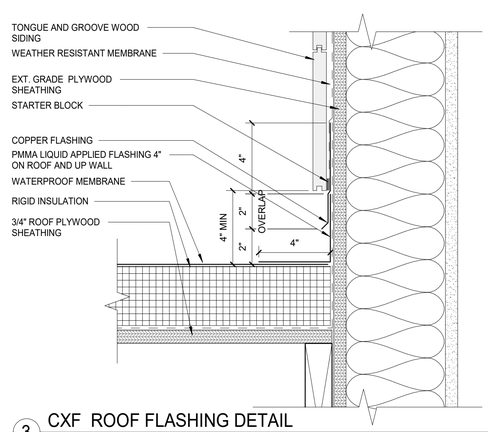

3 CXF ROOF FLASHING DETAIL
3" = 1'-0"

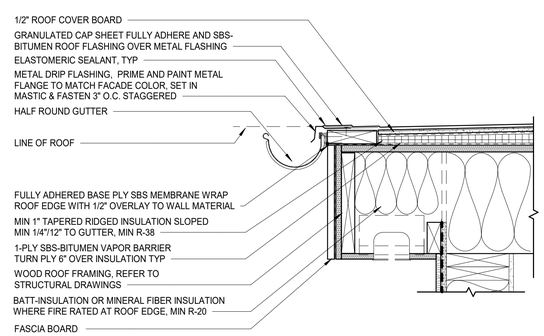

2 CXF ROOF AT GUTTER DETAIL
1 1/2" = 1'-0"

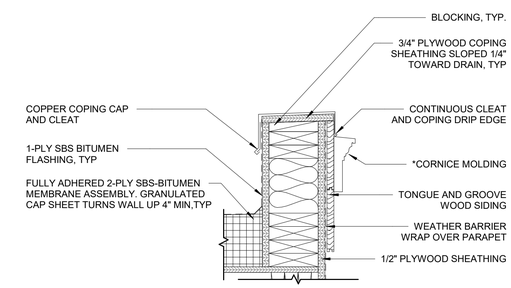

1 CXF - ROOF DETAIL
1 1/2" = 1'-0"

8/30/2022 4:29:10 PM

CONSULTANT INFORMATION

The LiRo Group
3 Aerial Way, Syosset, New York 11791
(516) 938-5476 www.liro.com

CONSULTANT SEAL

REGISTERED ARCHITECT ROBERT D. TOWNSEND 023280 STATE OF NEW YORK

REVISION NUMBER	DATE	MADE BY	APP'D BY	REVISION

RECORD DRAWING CERTIFICATION

☐ AS BUILT – CHANGES AS NOTED ☐ AS BUILT – NO CHANGES

CONTRACTOR
NAME
SIGNATURE
TITLE DATE

PROJECT COORDINATOR
NAME
SIGNATURE
TITLE DATE

WESTCHESTER COUNTY, NEW YORK
DEPARTMENT OF PUBLIC WORKS AND TRANSPORTATION
DIVISION OF ENGINEERING

INFRASTRUCTURE REHABILITATION PHASE 3
PLAYLAND PARK, RYE, NEW YORK
CROSS AXIS BUILDING F
ROOF AND CEILING DETAILS

CONTRACT NUMBER	22-523
SHEET NUMBER	CXF-A-81
DWG NO.:	338 of 664
SCALE:	As indicated
DATE:	08/23/2022
DPW FILE NUMBER	1-118-A-1087-0
REV. NO.	0

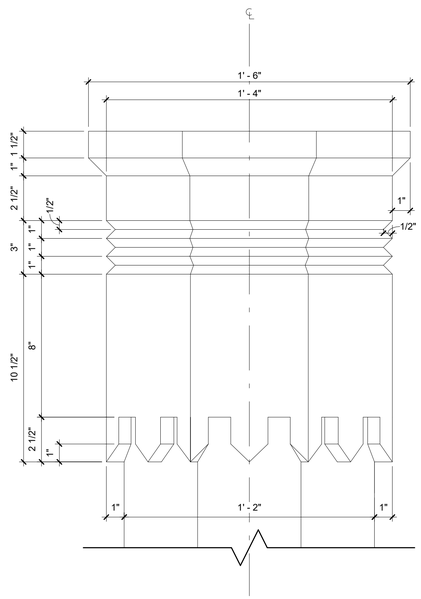

8 COLUMN CAPITAL DETAIL TYPE B
3" = 1'-0"

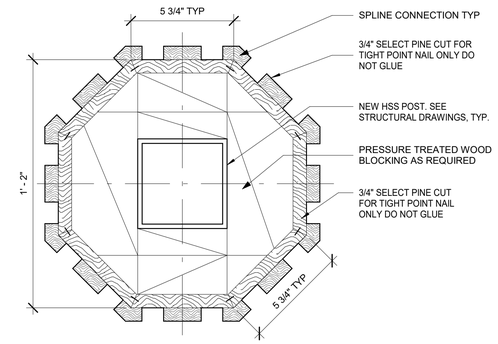

10 COLUMN B CAPITAL PLAN
3" = 1'-0"

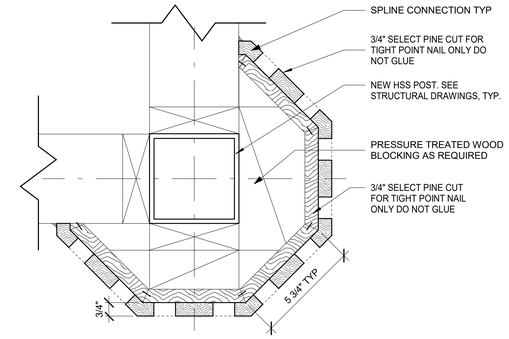

9 TYPE B - 3/4 COLUMN CAPITAL PLAN
3" = 1'-0"

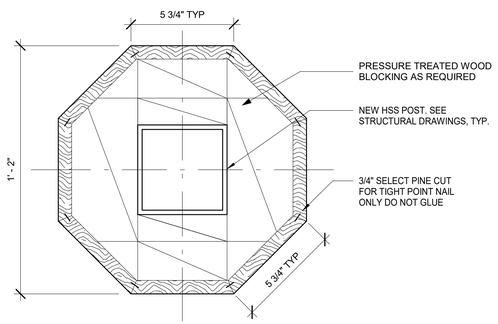

7 COLUMN B SHAFT PLAN
3" = 1'-0"

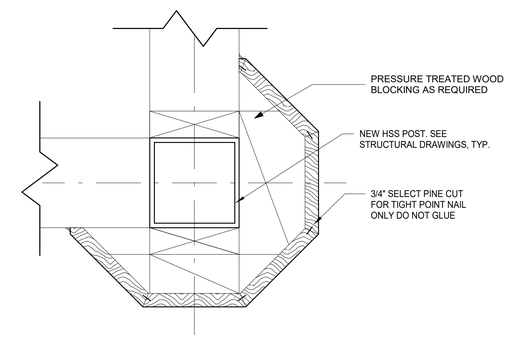

6 TYPE B 3/4 COLUMN SHAFT PLAN
3" = 1'-0"

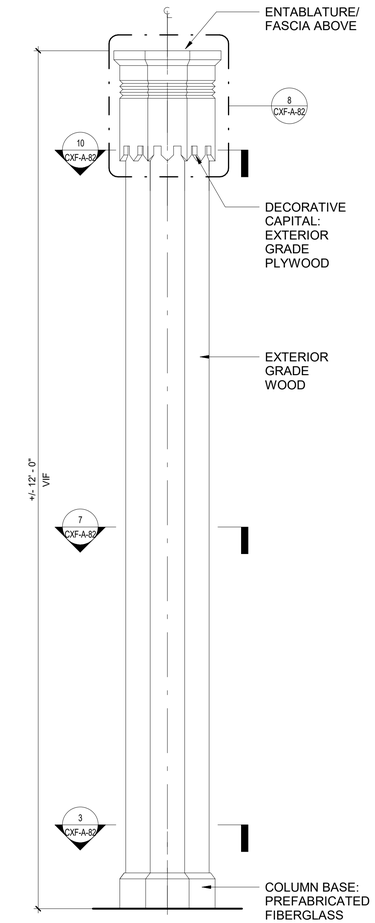

5 COLUMN DETAIL TYPE B
1" = 1'-0"

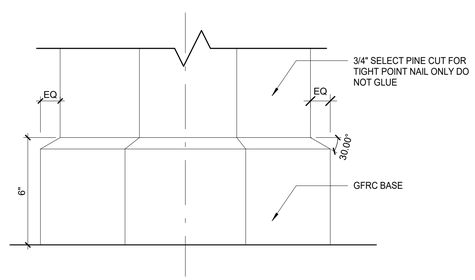

4 COLUMN BASE ELEVATION TYPE B
3" = 1'-0"

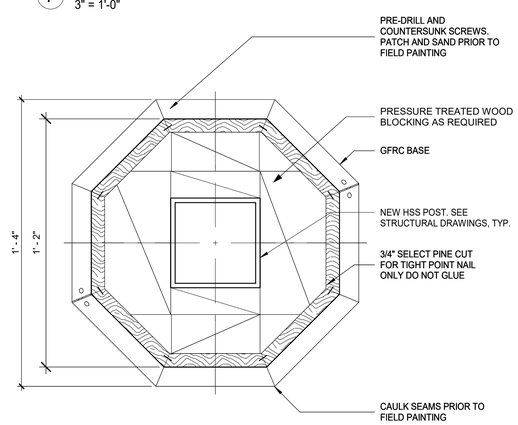

3 COLUMN B BASE PLAN
3" = 1'-0"

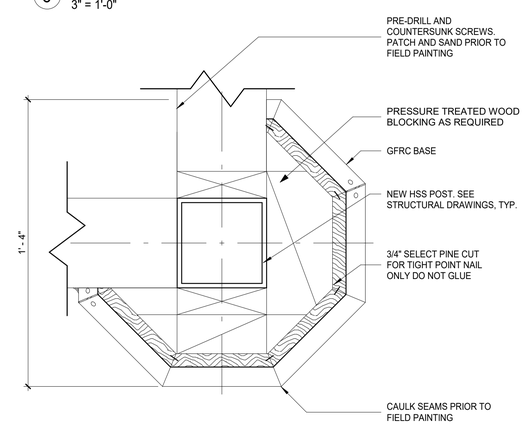

2 TYPE B 3/4 COLUMN BASE PLAN
3" = 1'-0"

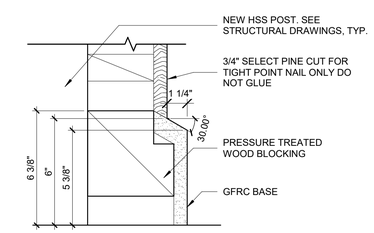

1 COLUMN B SECTION AT COLUMN BASE
3" = 1'-0"

8/30/2022 4:29:11 PM

CONSULTANT INFORMATION
The LiRo Group
3 Aerial Way, Syosset, New York 11791
(516) 938-5476 www.liro.com

CONSULTANT SEAL
REGISTERED ARCHITECT ROBERT D. TOWNSEND 023280 STATE OF NEW YORK

REVISION NUMBER	DATE	MADE BY	APP'D BY	REVISION

RECORD DRAWING CERTIFICATION
☐ AS BUILT – CHANGES AS NOTED ☐ AS BUILT – NO CHANGES

CONTRACTOR
NAME
SIGNATURE
TITLE DATE

PROJECT COORDINATOR
NAME
SIGNATURE
TITLE DATE

WESTCHESTER COUNTY, NEW YORK
DEPARTMENT OF PUBLIC WORKS AND TRANSPORTATION
DIVISION OF ENGINEERING

INFRASTRUCTURE REHABILITATION PHASE 3
PLAYLAND PARK, RYE, NEW YORK
CROSS AXIS BUILDING F
CXF COLONNADE COLUMN DETAILS

CONTRACT NUMBER	22-523
SHEET NUMBER	CXF-A-82
DWG NO.:	339 of 664
SCALE:	As indicated
DATE:	08/23/2022
DPW FILE NUMBER	1-118-A-1088-0
REV. NO.	0

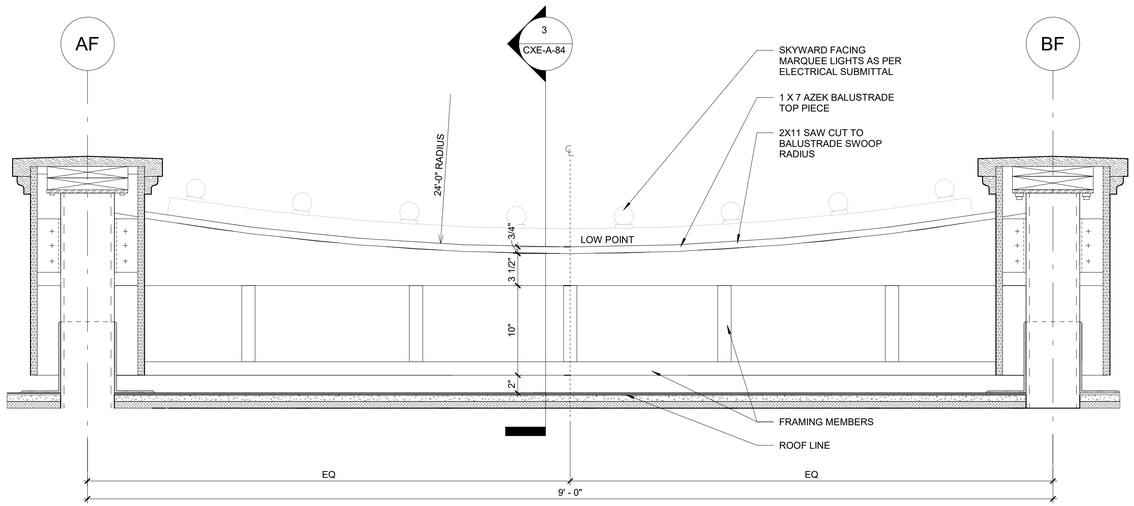

3 END OF BALUSTRADE ELEVATION SECTION
1 1/2" = 1'-0"

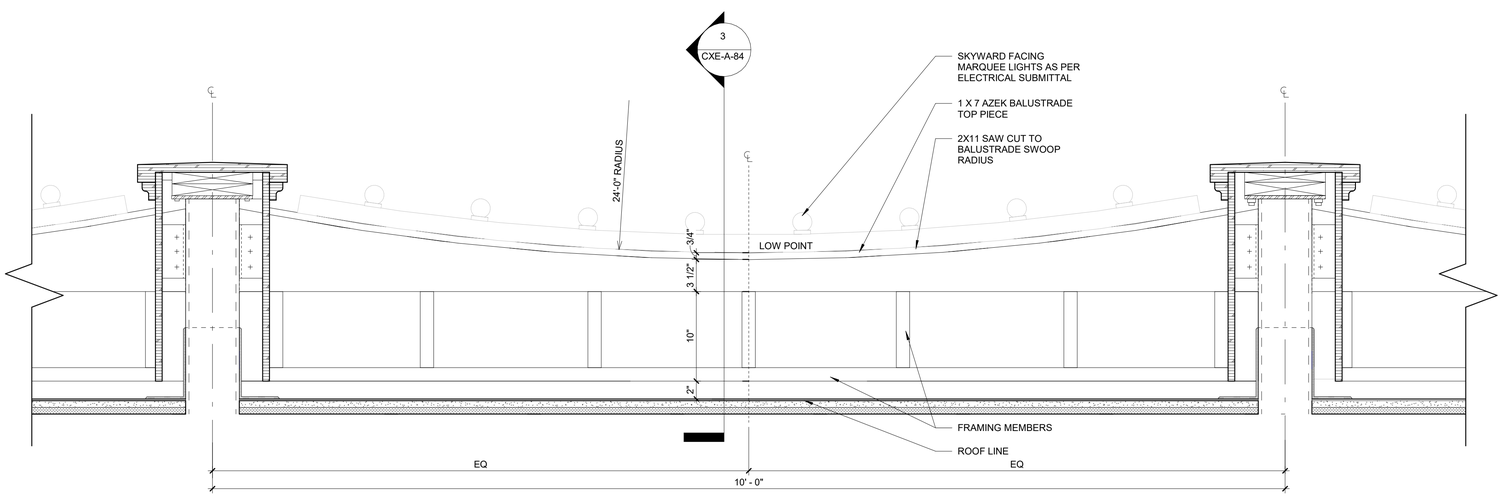

2 TYPICAL BALUSTRADE ELEVATION SECTION
1 1/2" = 1'-0"

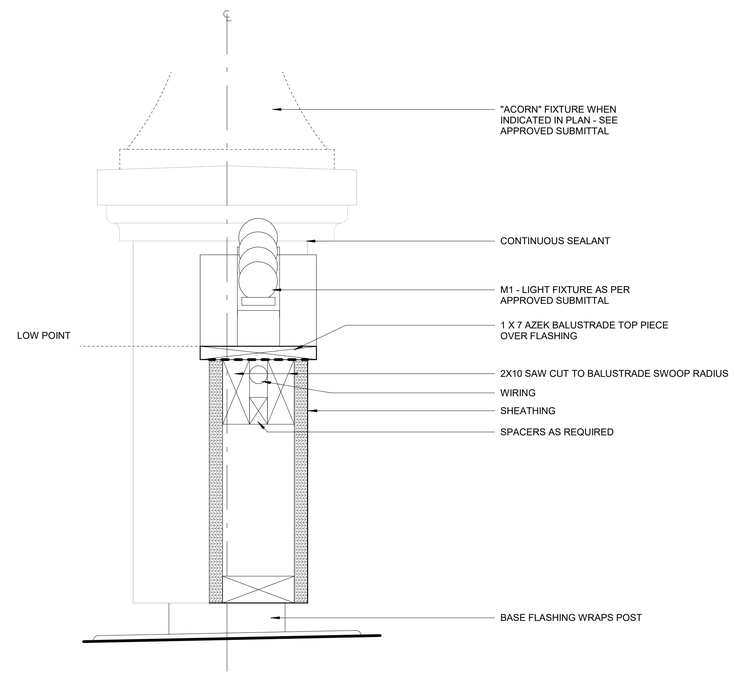

1 BALUSTRADE SECTION AT RAIL
3" = 1'-0"

8/30/2022 4:29:12 PM

CONSULTANT INFORMATION
The LiRo Group
3 Aerial Way, Syosset, New York 11791
(516) 938-5476 www.liro.com

CONSULTANT SEAL
REGISTERED ARCHITECT ROBERT D. YOUNG JR. 023290 STATE OF NEW YORK

REVISION NUMBER	DATE	MADE BY	APP'D BY	REVISION

RECORD DRAWING CERTIFICATION
☐ AS BUILT – CHANGES AS NOTED ☐ AS BUILT – NO CHANGES

CONTRACTOR
NAME
SIGNATURE
TITLE DATE

PROJECT COORDINATOR
NAME
SIGNATURE
TITLE DATE

WESTCHESTER COUNTY, NEW YORK
DEPARTMENT OF PUBLIC WORKS AND TRANSPORTATION
DIVISION OF ENGINEERING

INFRASTRUCTURE REHABILITATION PHASE 3
PLAYLAND PARK, RYE, NEW YORK
CROSS AXIS BUILDING F
BALUSTRADE DETAILS

CONTRACT NUMBER 22-523
SHEET NUMBER CXF-A-83
DWG NO.: 340 of 664
SCALE: As indicated
DATE: 08/23/2022
DPW FILE NUMBER 1-118-A-1089-0
REV. NO. 0

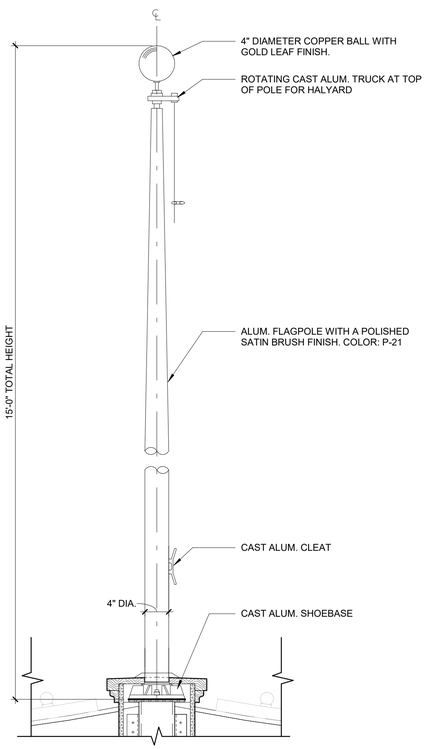

2 TYPICAL FLAG ELEVATION DETAIL
1" = 1'-0"

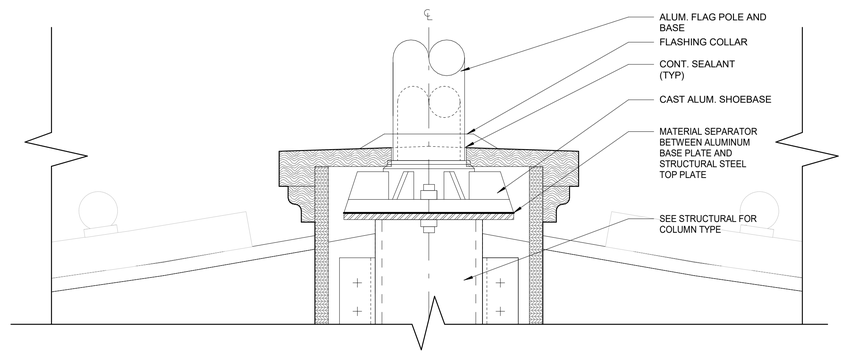

1 FLAGPOLE MOUNTING TO STRUCTURAL TOP PLATE IN PEDESTAL
3" = 1'-0"

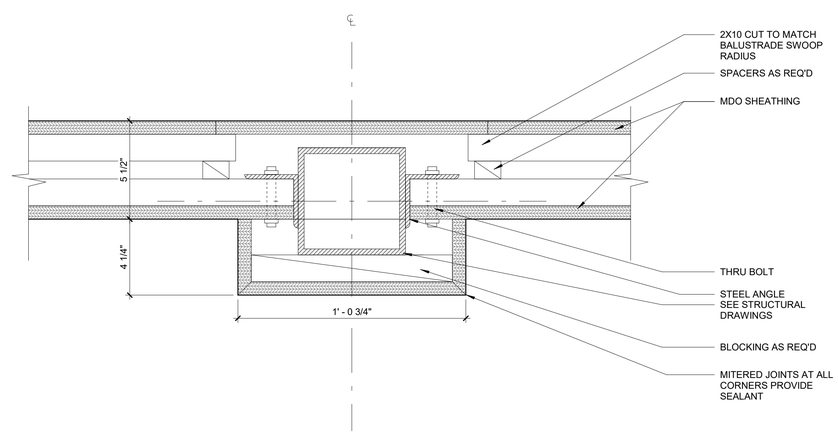

3 BALUSTRADE SECTION AT PEDASTAL
3" = 1'-0"

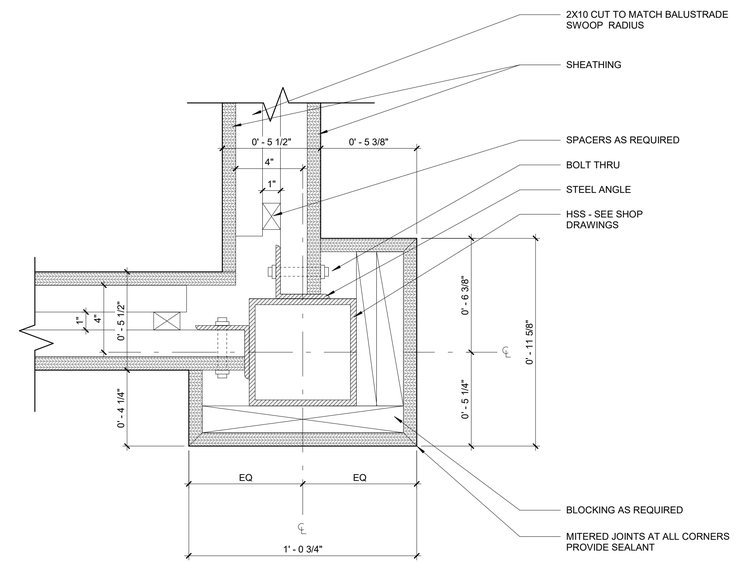

4 BALUSTRADE SECTION AT CORNER PEDASTAL
3" = 1'-0"

8/30/2022 4:29:12 PM

CONSULTANT INFORMATION
The LiRo Group
3 Aerial Way, Syosset, New York 11791
(516) 938-5476 www.liro.com

CONSULTANT SEAL
REGISTERED ARCHITECT ROBERT D. TOWNSEND 023280 STATE OF NEW YORK

REVISION NUMBER	DATE	MADE BY	APP'D BY	REVISION

RECORD DRAWING CERTIFICATION
☐ AS BUILT – CHANGES AS NOTED ☐ AS BUILT – NO CHANGES

CONTRACTOR
NAME
SIGNATURE
TITLE DATE

PROJECT COORDINATOR
NAME
SIGNATURE
TITLE DATE

WESTCHESTER COUNTY, NEW YORK
DEPARTMENT OF PUBLIC WORKS AND TRANSPORTATION
DIVISION OF ENGINEERING

INFRASTRUCTURE REHABILITATION PHASE 3
PLAYLAND PARK, RYE, NEW YORK
CROSS AXIS BUILDING F
BALUSTRADE DETAILS

CONTRACT NUMBER	22-523
SHEET NUMBER	CXF-A-84
DWG NO.:	341 of 664
SCALE:	As indicated
DATE:	08/23/2022
DPW FILE NUMBER	1-118-A-1090-0
REV. NO.	0

FENCE & GATE PAINTING SCHEDULE	
COMPONENTS	COLOR
POSTS	P- 7
RAILS	P- 1
BALLUSTER, A	P- 15
BALLUSTER, B	P- 1
HARDWARE	BLACK

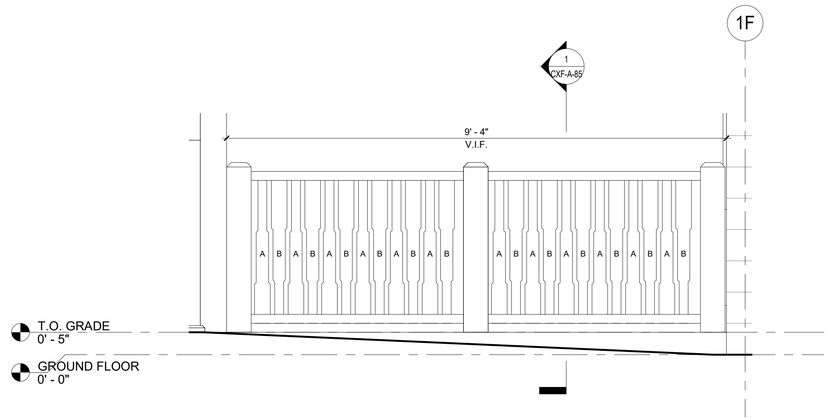

4 CXF -FENCE ELEVATION
3/4" = 1'-0"

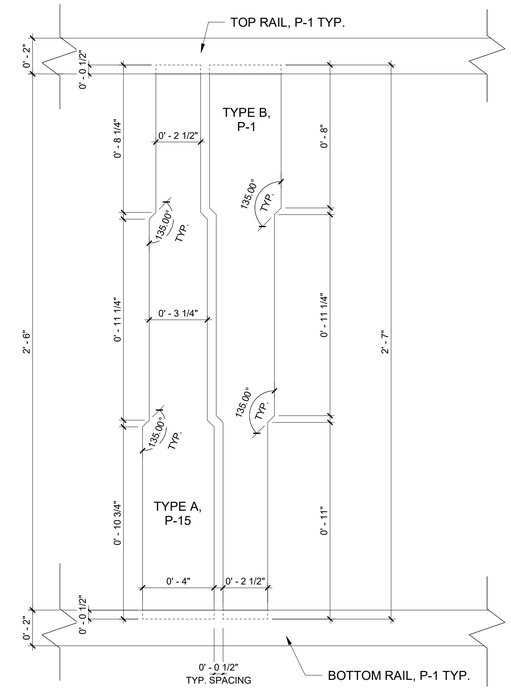

3 TYPICAL RAIL - CXF
3" = 1'-0"

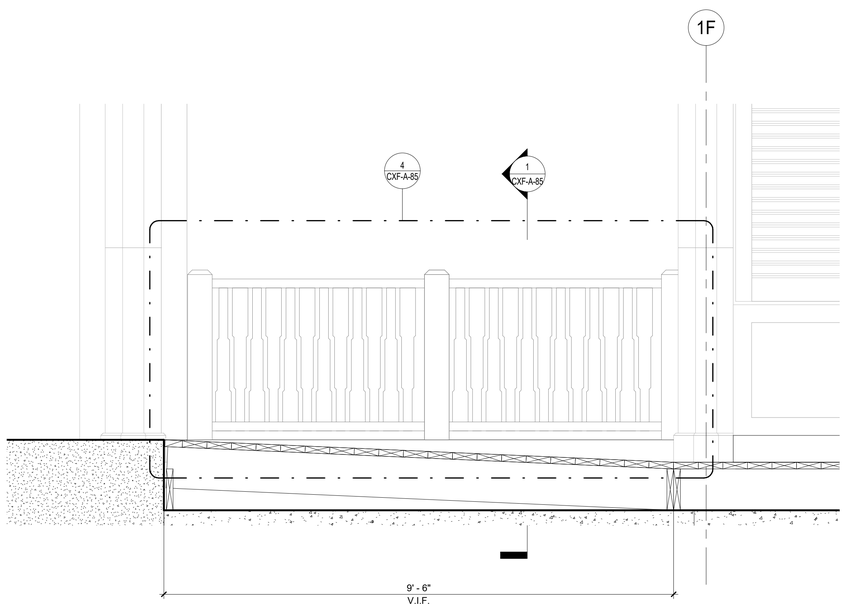

2 CXF - BOARDWALK SECTION
3/4" = 1'-0"

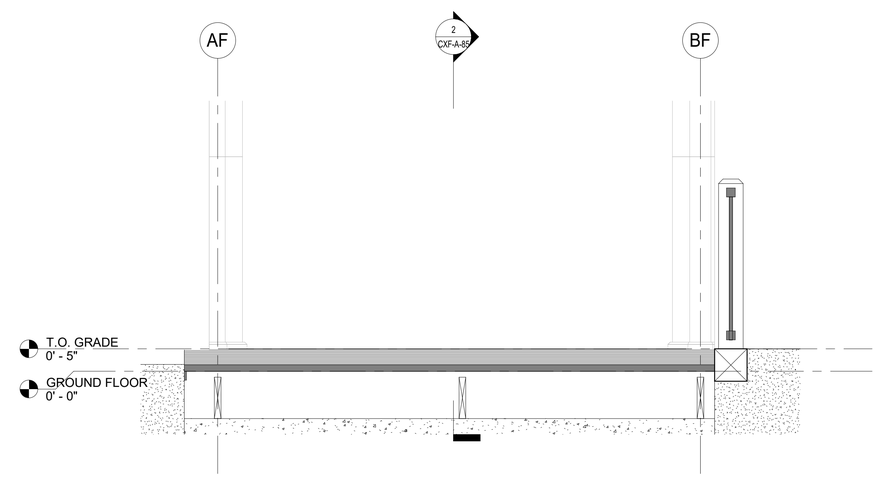

1 CXF - BOARDWALK CROSS SECTION
3/4" = 1'-0"

8/30/2022 4:29:13 PM

CONSULTANT INFORMATION

The LiRo Group

3 Aerial Way, Syosset, New York 11791
(516) 938-5476 www.liro.com

CONSULTANT SEAL

REGISTERED ARCHITECT ROBERT D. YOUNG JR. 023280 STATE OF NEW YORK

REVISION NUMBER	DATE	MADE BY	APP'D BY	REVISION

RECORD DRAWING CERTIFICATION

☐ AS BUILT – CHANGES AS NOTED ☐ AS BUILT – NO CHANGES

CONTRACTOR
NAME
SIGNATURE
TITLE DATE

PROJECT COORDINATOR
NAME
SIGNATURE
TITLE DATE

WESTCHESTER COUNTY, NEW YORK
DEPARTMENT OF PUBLIC WORKS AND TRANSPORTATION
DIVISION OF ENGINEERING

INFRASTRUCTURE REHABILITATION PHASE 3
PLAYLAND PARK, RYE, NEW YORK
CROSS AXIS BUILDING F
FENCE AND RAMP DETAIL

CONTRACT NUMBER	22-523
SHEET NUMBER	CXF-A-85
DWG NO.:	342 of 664
SCALE:	As indicated
DATE:	08/23/2022
DPW FILE NUMBER	1-118-A-1091-0
REV. NO.	0

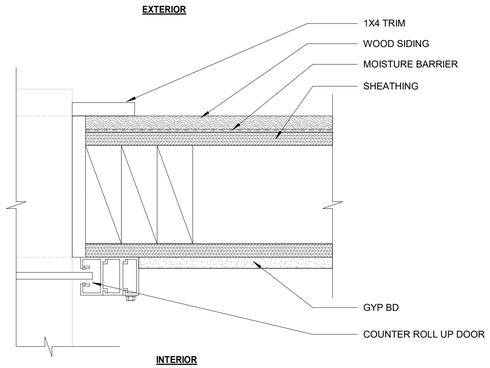

3 ROLL UP JAMB DETAIL
3" = 1'-0"

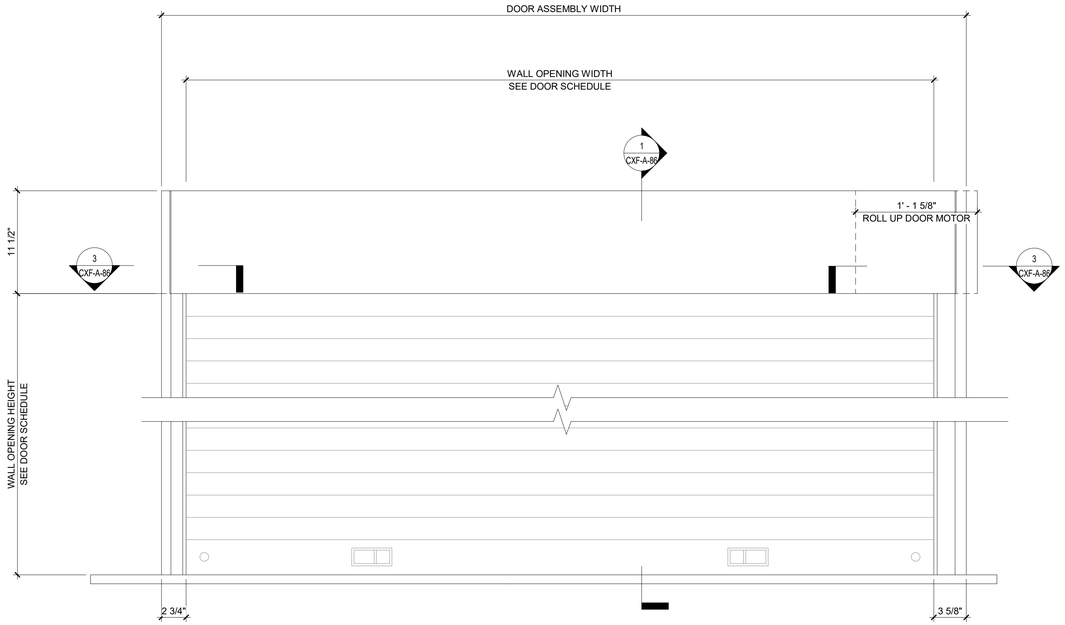

2 COUNTER ROLL UP DOOR ELEVATION
1 1/2" = 1'-0"

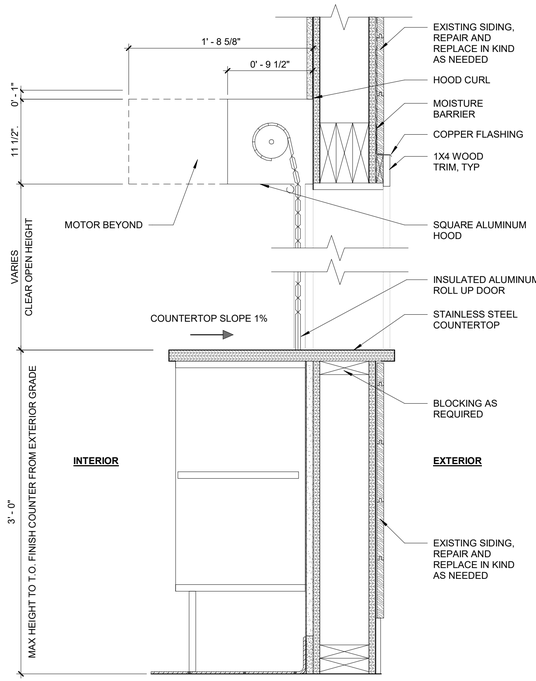

1 COUNTER ROLL UP DOOR SECTION
1 1/2" = 1'-0"

8/30/2022 4:29:14 PM

CONSULTANT INFORMATION
The LiRo Group
3 Aerial Way, Syosset, New York 11791
(516) 938-5476 www.liro.com

CONSULTANT SEAL
REGISTERED ARCHITECT ROBERT D. YOUNG JR. 023280 STATE OF NEW YORK

REVISION NUMBER	DATE	MADE BY	APP'D BY	REVISION

RECORD DRAWING CERTIFICATION
☐ AS BUILT – CHANGES AS NOTED ☐ AS BUILT – NO CHANGES

CONTRACTOR
NAME
SIGNATURE
TITLE DATE

PROJECT COORDINATOR
NAME
SIGNATURE
TITLE DATE

WESTCHESTER COUNTY, NEW YORK
DEPARTMENT OF PUBLIC WORKS AND TRANSPORTATION
DIVISION OF ENGINEERING

INFRASTRUCTURE REHABILITATION PHASE 3
PLAYLAND PARK, RYE, NEW YORK
CROSS AXIS BUILDING F
COUNTER DOOR DETAILS

CONTRACT NUMBER	22-523
SHEET NUMBER	CXF-A-86
DWG NO.:	343 of 664
SCALE:	As indicated
DATE:	08/23/2022
DPW FILE NUMBER	1-118-A-1092-0
REV. NO.	0

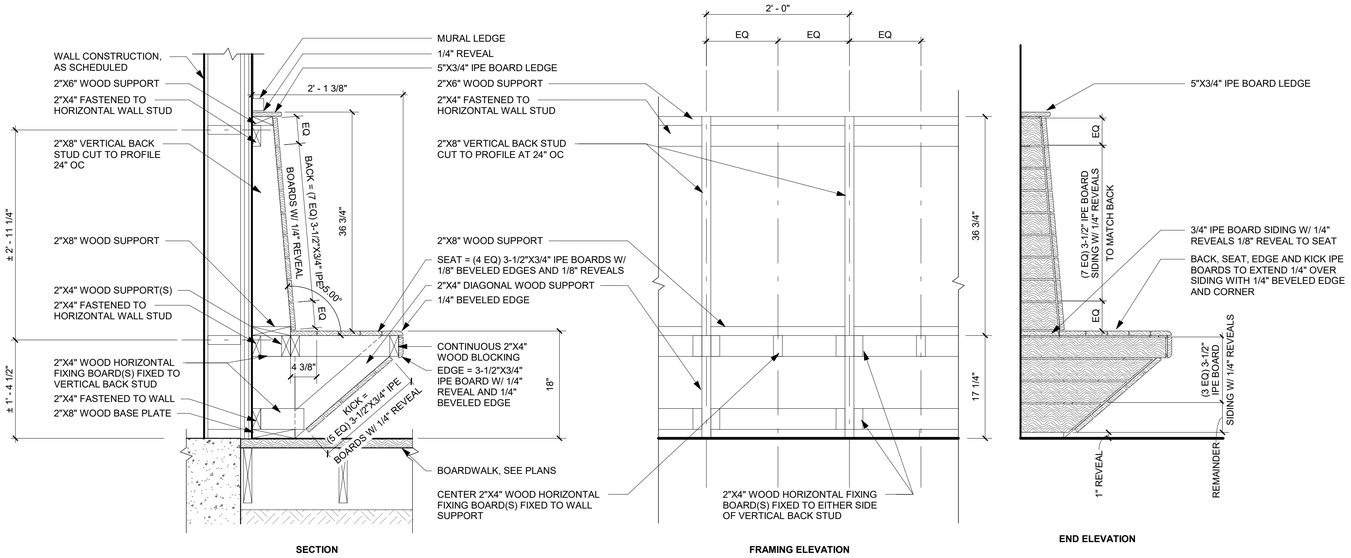

NOTE:
ALL BLOCKING SHALL BE EXTERIOR GRADE NON-TREATED WOOD
IPE BOARDS SHALL BE SMOOTH FINISH QUALITY FREE OF KNOTS, SHAKES, CHECKS, WANES, CUPING, BOWING, COOKS AND TWISTS.

2 CXF - BENCH SECTIONS AND ELEVATIONS
1" = 1'-0"

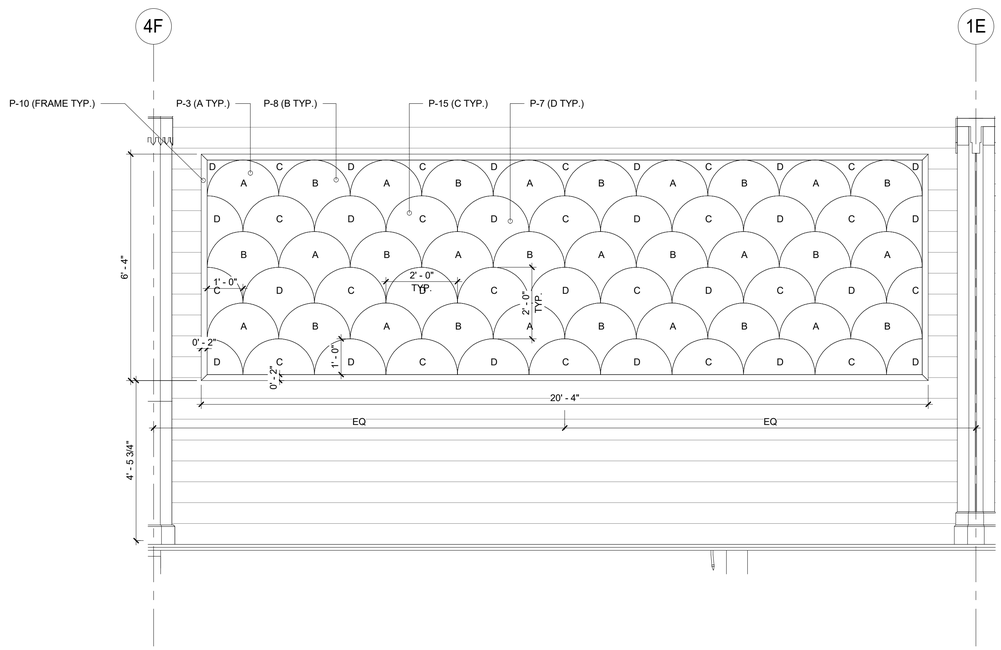

1 CXF - MURAL DETAIL
1/2" = 1'-0"

PAINTING SCHEDULE

KEY	COLOR	MANUFACTURER	REMARKS
P- 1	MYSTICAL POWERS #901	BENJAMIN MOORE	
P- 2	HERITAGE RED #HC-181	BENJAMIN MOORE	
P- 3	NEW YORK STATE OF MIND #805	BENJAMIN MOORE	
P- 4	LAZY SUNDAY #803	BENJAMIN MOORE	
P- 5	DEEP JUNGLE #595	BENJAMIN MOORE	
P- 6	LUCK OF THE IRISH #588	BENJAMIN MOORE	
P- 7	MAJOLICA GREEN #0013	SHERWIN WILLIAMS	
P- 8	ANTELOPE CANYON #125	BENJAMIN MOORE	
P- 9	FORSYTHIA #6907	SHERWIN WILLIAMS	
P- 10	CAPE BLUE #1642	BENJAMIN MOORE	
P- 11	WHITE SNOW #9541	SHERWIN WILLIAMS	
P- 12	TRICORN BLACK #6258	SHERWIN WILLIAMS	
P- 13	READY MIX WHITE	BENJAMIN MOORE	INTERIOR USE ONLY
P- 14	STUCCO PAINT TO MATCH P-1	KEIM	
P- 15	VAN DEUSEN BLUE #HC-156	BENJAMIN MOORE	
P- 16	#RAL9001	-	TYP. ROLL UP DOOR
P- 17	FLORIDA BEACHES #900	BENJAMIN MOORE	
P- 18	PIRATES COVE PEACH #903	BENJAMIN MOORE	
P- 19	JADITE #6459	SHERWIN WILLIAMS	
P- 20	DECISIVE YELLOW #6902	SHERWIN WILLIAMS	

8/30/2022 4:29:15 PM

CONSULTANT INFORMATION
The LiRo Group
3 Aerial Way, Syosset, New York 11791
(516) 938-5476 www.liro.com

CONSULTANT SEAL
REGISTERED ARCHITECT ROBERT D. YOUNG JR. 023280 STATE OF NEW YORK

REVISION NUMBER	DATE	MADE BY	APP'D BY	REVISION

RECORD DRAWING CERTIFICATION
☐ AS BUILT – CHANGES AS NOTED ☐ AS BUILT – NO CHANGES

CONTRACTOR
NAME
SIGNATURE
TITLE DATE

PROJECT COORDINATOR
NAME
SIGNATURE
TITLE DATE

WESTCHESTER COUNTY, NEW YORK
DEPARTMENT OF PUBLIC WORKS AND TRANSPORTATION
DIVISION OF ENGINEERING

INFRASTRUCTURE REHABILITATION PHASE 3
PLAYLAND PARK, RYE, NEW YORK
CROSS AXIS BUILDING D
BENCH AND MURAL DETAILS

CONTRACT NUMBER 22-523
SHEET NUMBER **CXF-A-87**
DWG NO.: 344 of 664
SCALE: **As indicated**
DATE: **08/23/2022**
DPW FILE NUMBER **1-118-A-1093-0**
REV. NO. 0

GENERAL NOTES:

1. ALL CONCRETE USED IN NOW STRIP SHALL HAVE A MINIMUM COMPRESSIVE STRENGTH OF 3600 PSI @ 28 DAYS
2. 1" DEPTH CONTROL JOINTS SHALL BE INSTALLED PERPENDICULARLY BETWEEN POSTS UNLESS NOTED OTHERWISE ALONG ENTIRE LENGTH OF MOW STRIP
3. ALL TUBULAR STEEL POSTS, RAILS, AND PICKETS SHALL BE FLUSH AND FREE OF ALL DENTS, SPURS, AND SHARP EDGES AND SHALL BE INSTALLED LEVEL, PLUMB, AND SQUARE
4. PROVIDE CONTINUOUS LEVEL #2 WELDS ALONG ALL EDGES OF FENCE MEMBERS. GRIND SMOOTH ALL WELDS
5. ALL METAL SURFACES SHALL BE PRIMED AND PAINTED WITH TWO COATS OF RUST-PROOF PAINT, COLOR TO MATCH EXISTING ADJACENT FENCE. GC TO SUBMIT SAMPLES AS REQUIRED
6. GC IS RESPONSIBLE FOR VERIFYING ALL DIMENSIONS BEFORE MANUFACTURING GATES AND FENCE
7. ALL TUBULAR STEEL FENCE MEMBERS ARE TO BE IN ACCORDANCE WITH ASTM 513 HOT ROLLED STRUCTURAL STEEL 50,000 PSI TENSILTE STRENGTH, 60,000 PSI YIELD STRENGTH
8. GC TO PROVIDE SHOP DRAWINGS FOR ALL FENCE COMPONENTS AND GATES. SHOP DRAWINGS SHALL INCLUDE ALL PRODUCT CUT SHEETS AS WELL AS INSTALLATION AND MANUFACTURING DETAILS. GC RESPONSIBLE FOR STRUCTURAL DESIGN OF GATES

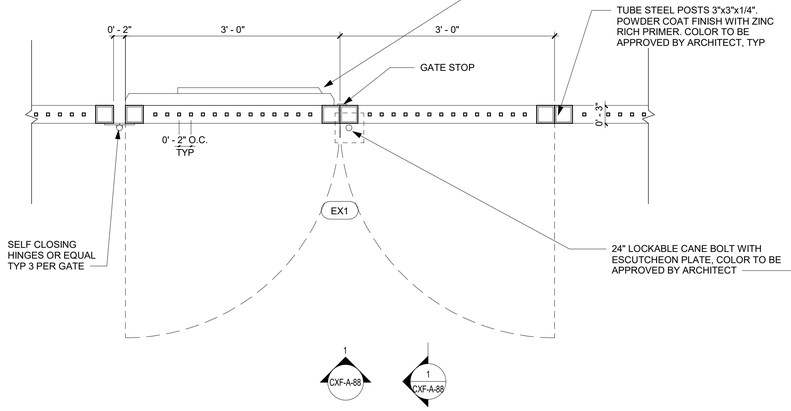

3 GATE DETAIL - PLAN
1" = 1'-0"

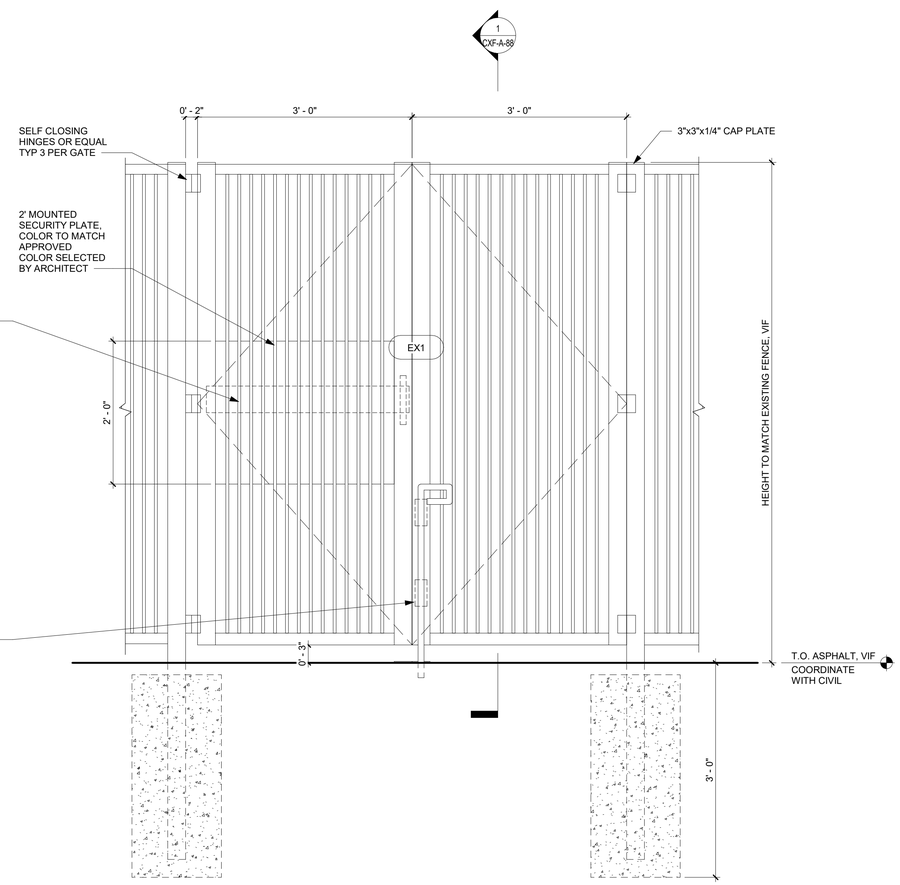

2 GATE DETAIL - ELEVATION
1" = 1'-0"

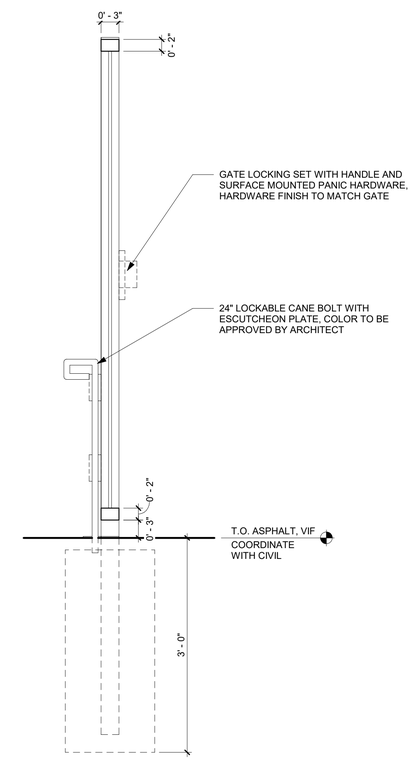

1 GATE DETAIL - SECTION
1" = 1'-0"

8/30/2022 4:29:16 PM

CONSULTANT INFORMATION

The LiRo Group
3 Aerial Way, Syosset, New York 11791
(516) 938-5476 www.liro.com

CONSULTANT SEAL
REGISTERED ARCHITECT ROBERT D. YOUNG JR. 023280 STATE OF NEW YORK

REVISION NUMBER	DATE	MADE BY	APP'D BY	REVISION

RECORD DRAWING CERTIFICATION
☐ AS BUILT – CHANGES AS NOTED ☐ AS BUILT – NO CHANGES

CONTRACTOR
NAME
SIGNATURE
TITLE DATE

PROJECT COORDINATOR
NAME
SIGNATURE
TITLE DATE

WESTCHESTER COUNTY, NEW YORK
DEPARTMENT OF PUBLIC WORKS AND TRANSPORTATION
DIVISION OF ENGINEERING

INFRASTRUCTURE REHABILITATION PHASE 3
PLAYLAND PARK, RYE, NEW YORK
CROSS AXIS BUILDING F
STEEL FENCE AND GATE DETAIL

CONTRACT NUMBER	22-523
SHEET NUMBER	CXF-A-88
DWG NO.:	345 of 664
SCALE:	1" = 1'-0"
DATE:	08/23/2022
DPW FILE NUMBER	1-118-A-1094-0
REV. NO.	0

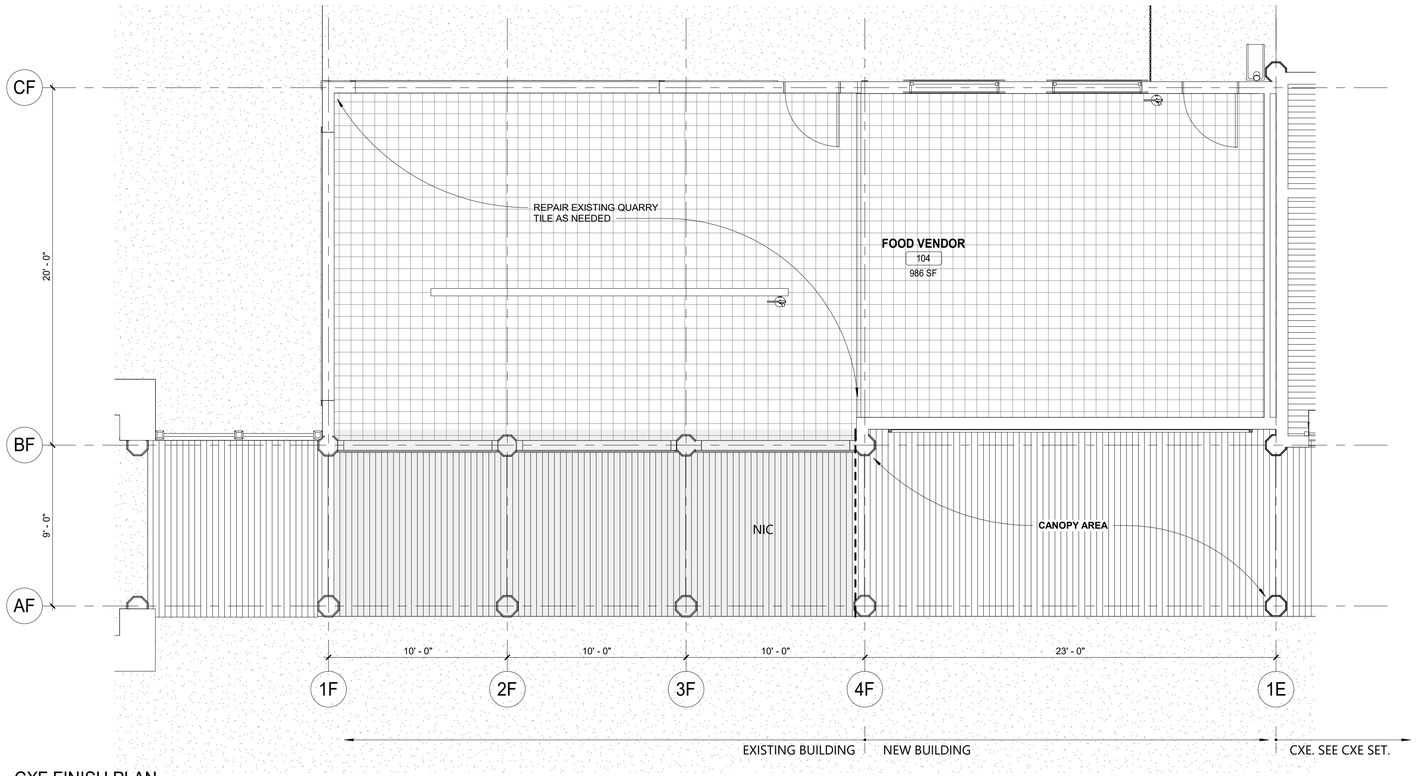

1 CXF FINISH PLAN
1/4" = 1'-0"

FINISH LEGEND:

NIC	ITEMS NOT IN CONTRACT
	TILE FLOORING
	TIMBER WOOD DECKING
	QUARRY TILE FLOORING

FINISH PLAN NOTES:

1. INDICATES TYPICAL FINISHES WITHIN ROOM, U.N.O. SEE SHEET CXE-A-91 FOR MATERIAL AND COLOR SCHEDULE.
2. ALL FLOORING COVERING MATERIALS TO BE INSTALLED PER MANUFACTURER'S STANDARD DETAILS AND SPECIFICATIONS. VERIFY WITH MANUFACTURER PRIOR INSTALLATION.
3. THE G.C. IS RESPONSIBLE FOR PROVIDING A SMOOTH LEVEL FLOOR SURFACE THAT MEETS MANUFACTURERS INSTALLATION SPECIFICATIONS PRIOR TO THE INSTALLATION OF ALL FLOORING MATERIALS.
4. THE FLOORING SUB-CONTRACTOR IS RESPONSIBLE FOR VERIFYING THAT THE CONDITION OF THE BASE FLOOR MEETS THE INSTALLATION SPECIFICATIONS PRIOR TO THE INSTALLATION OF THE NEW FLOORING MATERIAL.
5. ALL MATERIAL TRANSITIONS AN DOOR THRESHOLDS TO TAKE PLACE AT DOOR CENTERLINE U.N.O.
6. ALL DIMENSIONS ARE TO CENTERLINE OF TRANSITION BETWEEN FLOORING MATERIALS OR FINISH COLOR OF SAME MATERIAL. PLANS DO NOT SHOW ALL TILES OF SAME MATERIALS. CONTRACTOR TO START TILES AT POINT AS INDICATED ON PLANS.
7. THE GENERAL CONTRACTOR SHALL BE RESPONSIBLE FOR PROPER PREPARATION OF ALL NEW AND EXISTING SURFACES IN A SATISFACTORY MANNER TO RECEIVE NEW FINISHES. THIS INCLUDES THE DEMOLITION AND REMOVAL OF NECESSARY ITEMS. TOUCH- UP AND/ OR REFINISH OF SURFACES DAMAGED BY SUBSEQUENT WORK SHALL BE PERFORMED IN CONFORMANCE WITH THE MANUFACTURER'S RECOMMENDED INSTALLATION METHODS.
8. ALL SURFACES WHICH ARE TO RECEIVE A PAINT FINISH SHALL BE PRIMED AND FINISHED IN ACCORDANCE WITH THE WRITTEN SPECIFICATIONS.
9. ALL JOINTS IN GYPSUM BOARD WALLS SHALL BE FINISHED WITH PAPER TAPE 2" WIDE AND THREE COATS OF VINYL, DRY OR PREMIXED JOINT COMPOUND. ALL OUTSIDE CORNERS SHALL BE FINISHED WITH METAL CORNER BEADS, TAPED AND SPACKLED. ALL AREAS TO BE PAINTED SHALL BE SANDED SMOOTH. JUST PRIOR TO THE APPLICATION OF THE FIRST COAT OF PAINT, WIPE SANDED SURFACES WITH A DAMP CLOTH IN ORDER TO LAY FLAT ANY NAP WHICH MAY HAVE FORMED IN SANDING.
10. THE PAINT CONTRACTOR SHALL REMOVE ALL HARDWARE, SWITCH COVERS, ETC. PRIOR TO PAINTING AND BE RESPONSIBLE FOR THE REINSTALLATION AFTER PAINTING IS COMPLETED.
11. FINISH FLOORING INSTALLATION SHALL BE IN CONFORMANCE WITH THE MANUFACTURER'S RECOMMENDED INSTALLATION GUIDELINES. COORDINATE THE INSTALLATION WITH OTHER TRADES, SUCH AS ELECTRICAL.
12. ALL JOINTS BETWEEN MATERIALS TO BE TIGHT AND CONSTRUCTED IN A NEAT WORKMANLIKE MANNER.
13. ALL FINISHES SHALL BE TOUCHED UP TO CORRECT ANY IMPERFECTIONS AFTER INSTALLATION. FIXTURE CONTRACTOR SHALL PROVIDE TO THE GENERAL CONTRACTOR ALL MATERIALS FOR TOUCH UP WORK.
14. THE INTENT OF THE FINISH SPECIFICATIONS IS TO PROVIDE A SATISFACTORY FINISH TO ALL PARTS OF THE WORK. COVER ALL SURFACES THOROUGHLY. IF THE SPECIFIED NUMBER OF COATS DOES NOT ACCOMPLISH THE INTENT, THE GENERAL CONTRACTOR SHALL BE RESPONSIBLE FOR THE APPLICATION OF ADDITIONAL COATS OF THE SPECIFIED MATERIAL TO GIVE SATISFACTORY COVERAGE, AT NO ADDITIONAL COST TO OWNER.
15. CLEAN ALL GLASS SURFACES WITH LIQUID GLASS CLEANER AT PROJECT COMPLETION.
16. REFERENCE SPECIFICATIONS FOR COMPLETE FINISH DOCUMENTATION AND MANUFACTURER INSTALLATION AND MAINTENANCE DOCUMENTATION.

FINISH SCHEDULE

ROOM #	ROOM NAME	FLOORS	WALLS	CEILING	DOORS AND TRIM	WALL BASE
101	FOOD VENDOR	Q-1	FRP-1	P-13	SEE DOOR SCHEDULE (CXF-A-92)	WB-2
-	PORCH AREA	WD-2	-	P-10	-	-

PAINT	(FOR PAINT TYPE AND SYSTEMS, SEE SPECIFICATIONS)
P-13	**MFR:** BENJAMIN MOORE - **COLOR:** READY MIX WHITE
CEILING	(FOR CEILING DETAILS, SEE CXF-A-81)
P-13	**MFR:** BENJAMIN MOORE - **COLOR:** READY MIX WHITE
P-10	**MFR:** BENJAMIN MOORE - **COLOR:** CAPE BLUE
FLOORING	
WD-1	2X6 WOOD BOARD TO MATCH IN KIND WITH EXISTING FLOOR
WD-2	IPE WOOD DECK
Q-1	6X6 QUARRY TILE TO MATCH IN KIND WITH ADJACENT (N.I.C. SPACE)
WALL BASE	(FOR WALL BASE DETAILS, SEE CXF-A-80)
WB-1	1 x 6 WOOD BASE
WB-2	QUARRY TILE BASE TO MATCH IN KIND WITH ADJACENT (N.I.C. SPACE)
THRESHOLD	(FOR THRESHOLD DETAILS, SEE CXF-A-92)
TR-1	EXTERIOR DOOR SILL

PAINTING SCHEDULE

KEY	COLOR	MANUFACTURER	REMARKS
P- 1	MYSTICAL POWERS #901	BENJAMIN MOORE	
P- 2	HERITAGE RED #HC-181	BENJAMIN MOORE	
P- 3	NEW YORK STATE OF MIND #805	BENJAMIN MOORE	
P- 4	LAZY SUNDAY #803	BENJAMIN MOORE	
P- 5	DEEP JUNGLE #595	BENJAMIN MOORE	
P- 6	LUCK OF THE IRISH #588	BENJAMIN MOORE	
P- 7	MAJOLICA GREEN #0013	SHERWIN WILLIAMS	
P- 8	ANTELOPE CANYON #125	BENJAMIN MOORE	
P- 9	FORSYTHIA #6907	SHERWIN WILLIAMS	
P- 10	CAPE BLUE #1642	BENJAMIN MOORE	
P- 11	WHITE SNOW #9541	SHERWIN WILLIAMS	
P- 12	TRICORN BLACK #6258	SHERWIN WILLIAMS	
P- 13	READY MIX WHITE	BENJAMIN MOORE	INTERIOR USE ONLY
P- 14	STUCCO PAINT TO MATCH P-1	KEIM	
P- 15	VAN DEUSEN BLUE #HC-156	BENJAMIN MOORE	
P- 16	#RAL9001	-	TYP. ROLL UP DOOR
P- 17	FLORIDA BEACHES #900	BENJAMIN MOORE	
P- 18	PIRATES COVE PEACH #903	BENJAMIN MOORE	
P- 19	JADITE #6459	SHERWIN WILLIAMS	
P- 20	DECISIVE YELLOW #6902	SHERWIN WILLIAMS	

8/30/2022 4:29:17 PM

CONSULTANT INFORMATION
The LiRo Group
3 Aerial Way, Syosset, New York 11791
(516) 938-5476 www.liro.com

CONSULTANT SEAL
REGISTERED ARCHITECT ROBERT D. DONNIGAN 023292 STATE OF NEW YORK

REVISION NUMBER	DATE	MADE BY	APP'D BY	REVISION

RECORD DRAWING CERTIFICATION
☐ AS BUILT – CHANGES AS NOTED ☐ AS BUILT – NO CHANGES

CONTRACTOR
NAME
SIGNATURE
TITLE DATE

PROJECT COORDINATOR
NAME
SIGNATURE
TITLE DATE

WESTCHESTER COUNTY, NEW YORK
DEPARTMENT OF PUBLIC WORKS AND TRANSPORTATION
DIVISION OF ENGINEERING

INFRASTRUCTURE REHABILITATION PHASE 3
PLAYLAND PARK, RYE, NEW YORK
CROSS AXIS BUILDING F
FINISH PLAN AND FINISH SCHEDULE

CONTRACT NUMBER 22-523
SHEET NUMBER **CXF-A-91**
DWG NO.: 346 of 664
SCALE: **As indicated**
DATE: **08/23/2022**
DPW FILE NUMBER **1-118-A-1095-0**
REV. NO. 0

DOOR SCHEDULE - CXF

BUILDING	DOOR NUMBER	DOOR TYPE	WIDTH	HEIGHT	DOOR THICKNESS	DOOR MATERIAL	GLASS	DOOR EXTERIOR FINISH	DOOR INTERIOR FINISH	FRAME TYPE	FRAME MATERIAL	FRAME EXTERIOR	FRAME INTERIOR	HDWR SET	REMARKS
		DOOR						DOOR		FRAME					
CXF	101A	B	3' - 0"	7' - 0"	1 3/4"	WOOD	NO	PAINT, TBD	PAINT, P-13	2	WD.	PAINT, P-10	PAINT, P-13	11.0	TYPE X-2 SIGN
CXF	101B	B	3' - 0"	7' - 0"	1 3/4"	WOOD	NO	PAINT, P-16	PAINT, P-13	2	WD.	PAINT, P-10	PAINT, P-13	9.0	REINSTALL EXISTING DOOR AND HARDWARE, TYPE X-2 SIGN
CXF	101C	C	17' - 0"	7' - 5 1/2"		ALUM	NO	-	-	-	-	-	-	6.0	
CXF	101D	C	15' - 0"	7' - 5 1/2"		ALUM	NO	-	-	-	-	-	-	4.0	
CXF	101E	C	8' - 3 1/2"	7' - 5 1/2"		ALUM	NO	-	-	-	-	-	-	4.0	REINSTALL EXISTING ROLL UP DOOR

NOTE: GC TO CONFIRM DOOR SIZES IN FIELD PRIOR TO ORDERING

GATE SCHEDULE - CXF

DOOR NUMBER	DOOR TYPE	WIDTH	HEIGHT	GATE MATERIAL	FINISH	HDWR SET	REMARKS
EX1	SEE CXF-A-88	(2) 3'-0"	6'-0" VIF	STEEL	SEE CXF-A-88	PROVIDE LATCHES, SELF CLOSING HINGES, & LOCKS. TO BE APPROVED BY ARCHITECT	SEE DETAILS ON CXF-A-88

GENERAL DOOR SCHEDULE NOTES:

1. REFER TO CXF-A-92 SHEET FOR DOOR SILL & TRANSITION DETAILS. SILL TRANSITION INFORMATION IS INDICATED ON FINISH PLAN UNLESS OTHERWISE NOTED.
2. REFER TO SHEET CXF-A-91 FOR FINISH SCHEDULE AND LEGEND.
3. THE CONTRACTOR SHALL EXAMINE THE DRAWINGS, SCHEDULE AND SPECIFICATIONS AND FURNISH PROPER HARDWARE FOR ALL OPENINGS WHETHER LISTED OR NOT. COMPLETE SHOP DRAWINGS SHALL BE PROVIDED FOR APPROVAL PRIOR TO PURCHASE.
4. ALL EXIT DOORS SHALL BE OPENABLE FROM THE EGRESS SIDE WITHOUT THE USE OF A KEY OR SPECIAL KNOWLEDGE.
5. VERIFY DIMENSIONS OF EXISTING OPENINGS AND DOORS BEFORE ORDERING.
6. THE CONTRACTOR SHALL COORDINATE & VERIFY LOCATION OF RECESSED FLOOR CLOSERS, PIVOTS, ETC. WITH EXISTING FLOOR SLABS AND OTHER FIELD CONDITIONS PRIOR TO ORDERING TO ENSURE PROPER CLEARANCES & DEPTHS ARE ALLOWED.
7. MIN DIMENSION FROM ANY CORNER OR WALL TO FRAME STUD AT DOOR JAMB OPENING SHALL BE 4" U.NO.
8. LATCH SIDE CLEARANCE BETWEEN THE EDGE OF DOOR AND ADJACENT WALL OR OBSTRUCTIONS ON PULL SIDE SHALL BE 18" MIN
9. LATCH SIDE CLEARANCE BETWEEN EDGE OF THE DOOR AND ADJACENT WALL OR OBSTRUCTIONS ON PUSH SIDE SHALL BE 12" MIN
10. FINISHES FOR DOORS TO BE SELECTED BY ARCHITECT

HM - HOLLOW METAL
WD - WOOD
AL - ALUMINUM

PAINTING SCHEDULE

KEY	COLOR	MANUFACTURER	REMARKS
P- 1	MYSTICAL POWERS #901	BENJAMIN MOORE	
P- 2	HERITAGE RED #HC-181	BENJAMIN MOORE	
P- 3	NEW YORK STATE OF MIND #805	BENJAMIN MOORE	
P- 4	LAZY SUNDAY #803	BENJAMIN MOORE	
P- 5	DEEP JUNGLE #595	BENJAMIN MOORE	
P- 6	LUCK OF THE IRISH #588	BENJAMIN MOORE	
P- 7	MAJOLICA GREEN #0013	SHERWIN WILLIAMS	
P- 8	ANTELOPE CANYON #125	BENJAMIN MOORE	
P- 9	FORSYTHIA #6907	SHERWIN WILLIAMS	
P- 10	CAPE BLUE #1642	BENJAMIN MOORE	
P- 11	WHITE SNOW #9541	SHERWIN WILLIAMS	
P- 12	TRICORN BLACK #6258	SHERWIN WILLIAMS	
P- 13	READY MIX WHITE	BENJAMIN MOORE	INTERIOR USE ONLY
P- 14	STUCCO PAINT TO MATCH P-1	KEIM	
P- 15	VAN DEUSEN BLUE #HC-156	BENJAMIN MOORE	
P- 16	#RAL9001	-	TYP. ROLL UP DOOR
P- 17	FLORIDA BEACHES #900	BENJAMIN MOORE	
P- 18	PIRATES COVE PEACH #903	BENJAMIN MOORE	
P- 19	JADITE #6459	SHERWIN WILLIAMS	
P- 20	DECISIVE YELLOW #6902	SHERWIN WILLIAMS	

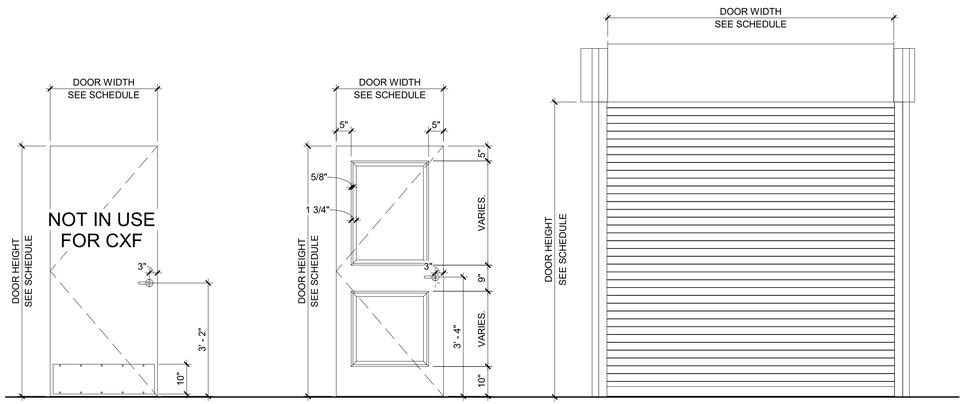

DOOR TYPES

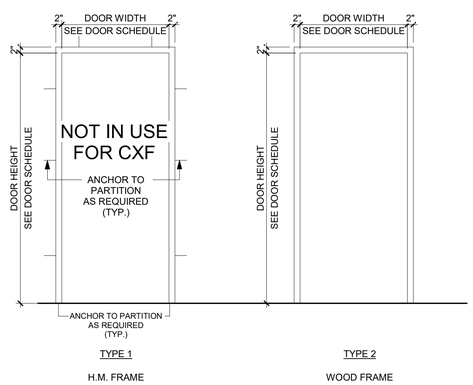

DOOR FRAME TYPES

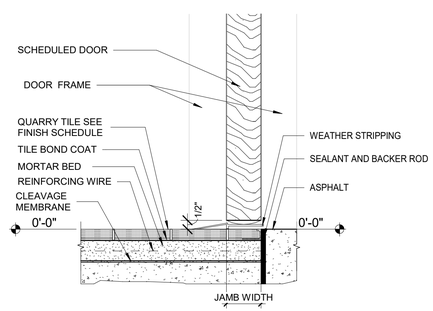

3 QUARRY TILE TO ASPHALT TRANSITION
3" = 1'-0"

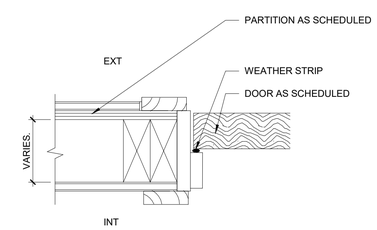

2 WOOD DOOR JAMB DETAIL
3" = 1'-0"

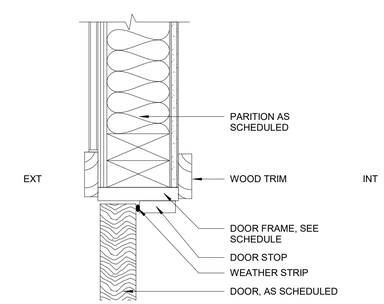

1 WOOD DOOR HEAD DETAIL
3" = 1'-0"

8/30/2022 4:29:20 PM

CONSULTANT INFORMATION
The LiRo Group
3 Aerial Way, Syosset, New York 11791
(516) 938-5476 www.liro.com

CONSULTANT SEAL
REGISTERED ARCHITECT ROBERT D. YOUNG JR. 023280 STATE OF NEW YORK

REVISION NUMBER	DATE	MADE BY	APP'D BY	REVISION

RECORD DRAWING CERTIFICATION
☐ AS BUILT – CHANGES AS NOTED ☐ AS BUILT – NO CHANGES

CONTRACTOR
NAME
SIGNATURE
TITLE DATE

PROJECT COORDINATOR
NAME
SIGNATURE
TITLE DATE

WESTCHESTER COUNTY, NEW YORK
DEPARTMENT OF PUBLIC WORKS AND TRANSPORTATION
DIVISION OF ENGINEERING

INFRASTRUCTURE REHABILITATION PHASE 3
PLAYLAND PARK, RYE, NEW YORK
CROSS AXIS BUILDING F
DOOR SCHEDULE AND DOOR DETAILS

CONTRACT NUMBER	22-523
SHEET NUMBER	CXF-A-92
DWG NO.:	347 of 664
SCALE:	As indicated
DATE:	08/23/2022
DPW FILE NUMBER	1-118-A-1096-0
REV. NO.	0

WINDOW SCHEDULE - CXF										
BUILDING	MARK	LEVEL	WINDOW TYPE	WIDTH	HEIGHT	SILL HEIGHT	WINDOW MATERIAL	EXTERIOR TRIM	INTERIOR TRIM	REMARKS
CXF	W1	GROUND FLOOR	12	VIF	VIF	6' - 6"	FIBER GLASS, BLACK	WOOD, P-10	WOOD, P-13	SALVAGED FROM CXF DEMO (SEE CXF-A-01). V.I.F. WINDOW DIMENSIONS.
CXF	W2	GROUND FLOOR	12	VIF	VIF	6' - 6"	FIBER GLASS, BLACK	WOOD, P-10	WOOD, P-13	SALVAGED FROM CXF DEMO (SEE CXF-A-01). V.I.F. WINDOW DIMENSIONS.

PAINTING SCHEDULE

KEY	COLOR	MANUFACTURER	REMARKS
P- 1	MYSTICAL POWERS #901	BENJAMIN MOORE	
P- 2	HERITAGE RED #HC-181	BENJAMIN MOORE	
P- 3	NEW YORK STATE OF MIND #805	BENJAMIN MOORE	
P- 4	LAZY SUNDAY #803	BENJAMIN MOORE	
P- 5	DEEP JUNGLE #595	BENJAMIN MOORE	
P- 6	LUCK OF THE IRISH #588	BENJAMIN MOORE	
P- 7	MAJOLICA GREEN #0013	SHERWIN WILLIAMS	
P- 8	ANTELOPE CANYON #125	BENJAMIN MOORE	
P- 9	FORSYTHIA #6907	SHERWIN WILLIAMS	
P- 10	CAPE BLUE #1642	BENJAMIN MOORE	
P- 11	WHITE SNOW #9541	SHERWIN WILLIAMS	
P- 12	TRICORN BLACK #6258	SHERWIN WILLIAMS	
P- 13	READY MIX WHITE	BENJAMIN MOORE	INTERIOR USE ONLY
P- 14	STUCCO PAINT TO MATCH P-1	KEIM	
P- 15	VAN DEUSEN BLUE #HC-156	BENJAMIN MOORE	
P- 16	#RAL9001	-	TYP. ROLL UP DOOR
P- 17	FLORIDA BEACHES #900	BENJAMIN MOORE	
P- 18	PIRATES COVE PEACH #903	BENJAMIN MOORE	
P- 19	JADITE #6459	SHERWIN WILLIAMS	
P- 20	DECISIVE YELLOW #6902	SHERWIN WILLIAMS	

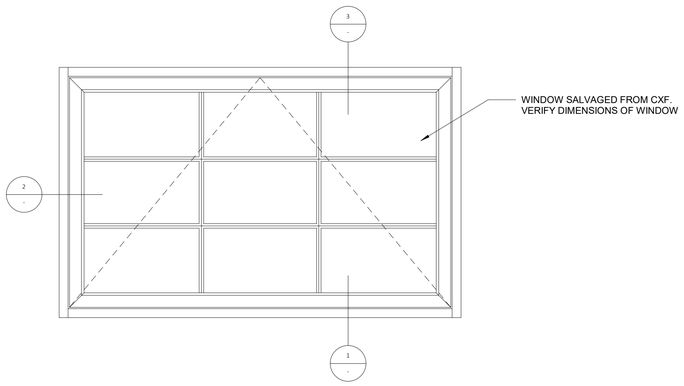

WINDOW TYPE A

WINDOW TYPE.

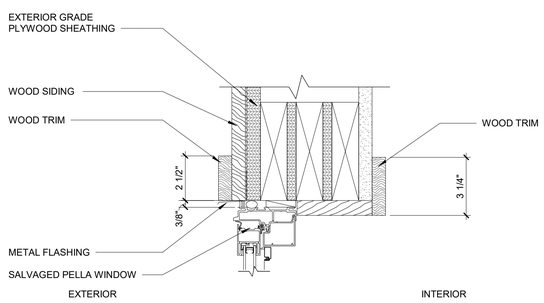

1 AWNING WINDOW HEAD DEATIL
3" = 1'-0"

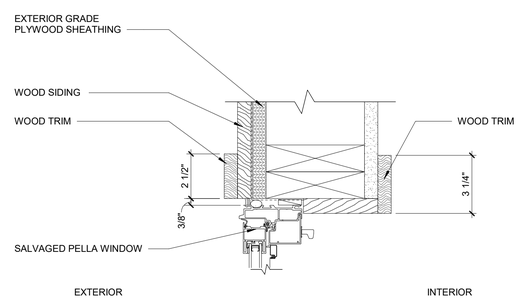

2 AWNING WINDOW JAMB DETAIL
3" = 1'-0"

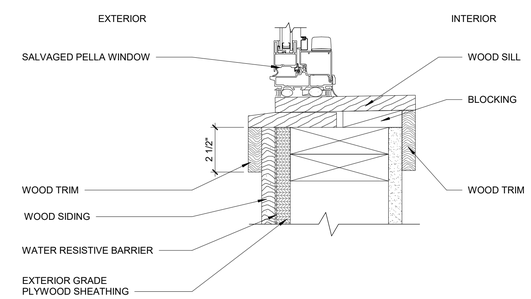

3 AWNING WINDOW SILL DETAIL
3" = 1'-0"

8/30/2022 4:29:21 PM

CONSULTANT INFORMATION

The LiRo Group

3 Aerial Way, Syosset, New York 11791
(516) 938-5476 www.liro.com

CONSULTANT SEAL

REGISTERED ARCHITECT ROBERT D. LIROSO JR. 023220 STATE OF NEW YORK

REVISION NUMBER	DATE	MADE BY	APP'D BY	REVISION

RECORD DRAWING CERTIFICATION

☐ AS BUILT – CHANGES AS NOTED ☐ AS BUILT – NO CHANGES

CONTRACTOR
NAME
SIGNATURE
TITLE DATE

PROJECT COORDINATOR
NAME
SIGNATURE
TITLE DATE

WESTCHESTER COUNTY, NEW YORK
DEPARTMENT OF PUBLIC WORKS AND TRANSPORTATION
DIVISION OF ENGINEERING

INFRASTRUCTURE REHABILITATION PHASE 3
PLAYLAND PARK, RYE, NEW YORK
CROSS AXIS BUILDING F
WINDOW SCHEDULE AND WINDOW DETAILS

CONTRACT NUMBER 22-523
SHEET NUMBER **CXF-A-93**
DWG NO.: 348 of 664
SCALE: **As indicated**
DATE: **08/23/2022**
DPW FILE NUMBER **1-118-A-1097-0**
REV. NO. 0

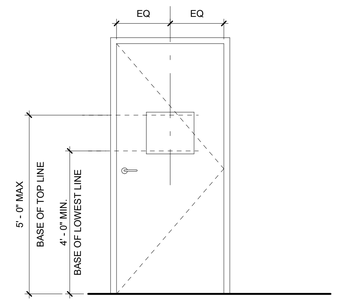

4 SIGN LOCATION ELEVATION - TYPICAL DOOR CONDITION
1/2" = 1'-0"

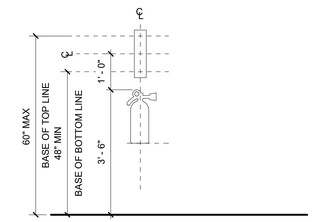

3 FIRE EXTINGUISHER SIGN LOCATION ELEVATION
1/2" = 1'-0"

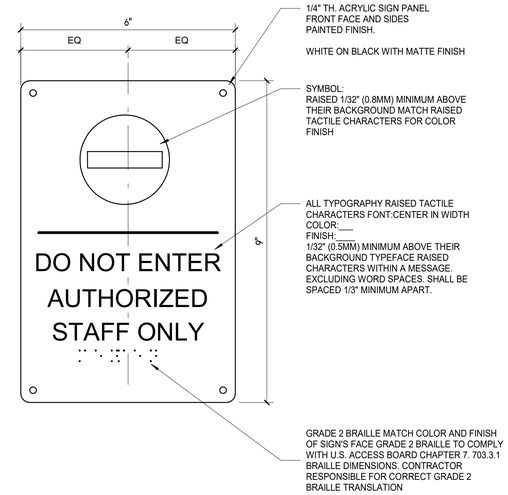

2 TYPE X-2 - STAFF ONLY SIGN
6" = 1'-0"

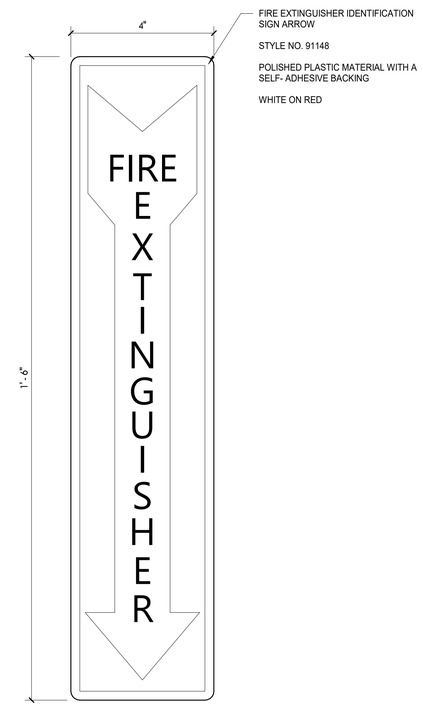

1 TYPE X-1 - FIRE EXTINGUISHER SIGN
6" = 1'-0"

8/30/2022 4:29:21 PM

CONSULTANT INFORMATION
The LiRo Group
3 Aerial Way, Syosset, New York 11791
(516) 938-5476 www.liro.com

CONSULTANT SEAL
REGISTERED ARCHITECT ROBERT D. YOUNG JR. 023280 STATE OF NEW YORK

REVISION NUMBER	DATE	MADE BY	APP'D BY	REVISION

RECORD DRAWING CERTIFICATION
☐ AS BUILT – CHANGES AS NOTED ☐ AS BUILT – NO CHANGES

CONTRACTOR
NAME
SIGNATURE
TITLE DATE

PROJECT COORDINATOR
NAME
SIGNATURE
TITLE DATE

WESTCHESTER COUNTY, NEW YORK
DEPARTMENT OF PUBLIC WORKS AND TRANSPORTATION
DIVISION OF ENGINEERING

INFRASTRUCTURE REHABILITATION PHASE 3
PLAYLAND PARK, RYE, NEW YORK
CROSS AXIS BUILDING F
SIGNAGE TYPES, SCHEDULES AND DETAILS

CONTRACT NUMBER 22-523
SHEET NUMBER CXF-A-94
DWG NO.: 349 of 664
SCALE: As indicated
DATE: 08/23/2022
DPW FILE NUMBER 1-118-A-1098-0
REV. NO. 0

STRUCTURAL NOTES

GENERAL

G-1 THESE NOTES ARE GENERAL AND SUPPLEMENTAL TO THE SPECIFICATIONS. THESE NOTES APPLY TO THE ENTIRE PROJECT UNLESS MODIFIED OR NOTED OTHERWISE IN THE CONTRACT DOCUMENTS.

G-2 STANDARD DETAILS, SHOWN ON DRAWINGS CXF-S-07 SHALL BE USED WHEN REFERRED TO OR WHEN NO MORE RESTRICTIVE OR DIFFERENT DETAILS ARE SHOWN ON THE DRAWINGS.

G-3 DESIGN WAS IN ACCORDANCE WITH AND CONSTRUCTION SHALL COMPLY WITH THE PROVISIONS OF THE NEW YORK STATE BUILDING CODE (2020 NYSBC). THE DESIGN LOADS AND OTHER DESIGN VALUES GIVEN BELOW WERE USED FOR DESIGN OF STRUCTURES UON ON THE DRAWINGS.

G-4 DESIGN LOADS FOR NEW ELEMENTS:
LIVE LOADS:
CROSS AXIS BUILDING F:

ROOF:	60 PSF
FLOOR:	100 PSF

SNOW LOADS:

GROUND SNOW LOAD,	Pg = 30 PSF
ROOF SNOW LOAD,	Pf= 21 PSF
SNOW EXPOSURE FACTOR,	Ce = 0.9
SNOW LOAD IMPORTANCE FACTOR,	I = 1.1
THERMAL FACTOR,	Ct = 1.0

WIND DESIGN:

BASIC WIND SPEED,	V = 126 MPH
BUILDING CATEGORY:	II
WIND EXPOSURE CATEGORY:	D
INTERNAL PRESSURE COEFFICIENT,	GCpi = ±0.18

SEISMIC DESIGN:

SPECTRAL RESPONSE COEFFICIENTS:	
SDS =	0.296
SD1 =	0.096
SITE CLASS:	B
SEISMIC DESIGN CATEGORY:	C
SEISMIC IMPORTANCE FACTOR:	I = 1.25

BASIC SEISMIC FORCE RESISTING SYSTEM IS AS SHOWN ON DRAWINGS
DESIGN BASE SHEAR, V = AS SHOWN ON DRAWINGS
ANALYSIS PROCEDURE IS EQUIVALENT LATERAL FORCE METHOD, UON.
RESPONSE MODIFICATION FACTOR, R:
CROSS AXIS BUILDING F: R = 7

LOADS INDICATED ABOVE REFLECT DESIGN LOADS FOR ANY NEW OR REHABILITATED STRUCTURAL ELEMENTS. THEY SHOULD NOT BE TAKEN AS DESIGN LOADS FOR THE STRUCTURE AS A WHOLE.

G-5 ALL DIMENSIONS INDICATED (*) ARE TO BE VERIFIED EITHER BY FIELD MEASUREMENTS FOR EXISTING STRUCTURES OR BY SHOP DRAWINGS FOR EQUIPMENT FURNISHED. STRUCTURAL DIMENSIONS NOT SHOWN BUT CONTROLLED BY OR RELATED TO EQUIPMENT SHALL BE VERIFIED BY THE CONTRACTOR WITH THE MANUFACTURER PRIOR TO CONSTRUCTION.

G-6 STRUCTURAL DRAWINGS SHALL BE USED IN COORDINATION WITH THE DRAWINGS OF ALL OTHER DISCIPLINES AND MANUFACTURER'S SHOP DRAWINGS.

G-7 IF A CONFLICT IS FOUND BETWEEN DIFFERENT PORTIONS OF THE CONTRACT DOCUMENTS, THE CONTRACTOR SHALL NOTIFY THE ENGINEER IMMEDIATELY. CONTINUED CONSTRUCTION OF THE AREA IN CONFLICT SHALL BE AT THE CONTRACTOR'S OWN RISK UNTIL THE CONFLICT IS RESOLVED BY THE ENGINEER.

G-8 WHENEVER ONE MEMBER IS FASTENED TO ANOTHER WITH FASTENINGS (BOLTS, WELDS, ETC.) SET AT A UNIFORM SPACING, THERE SHALL BE A MINIMUM OF TWO FASTENINGS PER PIECE CONNECTED AND THE FIRST AND LAST FASTENINGS SHALL BE LOCATED NOT TO EXCEED 0.25 OF FASTENER SPACING FROM EACH END.

G-9 STRUCTURES HAVE BEEN DESIGNED FOR OPERATIONAL LOADS ON THE COMPLETED STRUCTURE. DURING CONSTRUCTION, THE STRUCTURES SHALL BE PROTECTED BY BRACING AND TEMPORARY SUPPORTS WHEREVER EXCESSIVE CONSTRUCTION LOADS MAY OCCUR. OVERSTRESSING OF ANY STRUCTURAL ELEMENT IS PROHIBITED.

G-10 NO BACKFILL SHALL BE PLACED AGAINST ANY WALL UNLESS ALL SUPPORTING ELEMENTS OF THE STRUCTURE HAVE BEEN CONSTRUCTED AND HAVE REACHED THE SPECIFIED MINIMUM CONCRETE STRENGTH.

G-11 THE CONTRACTOR IS RESPONSIBLE FOR VERIFYING ALL EXISTING INFORMATION IN THE FIELD AS REQUIRED FOR NEW WORK.

FOUNDATIONS

F-1 DESIGN ASSUMPTIONS:
A) ALLOWABLE BEARING PRESSURE: 1. SOUND ROCK – 8 TSF, 2. OVERBURDEN – 1 TSF.
B) GROUNDWATER: EXISTING GROUNDWATER ELEVATIONS VARY ACROSS SITE.

F-2 GRAVITY UNDER DRAINS SHALL BE PROVIDED TO PERMANENTLY LOWER GROUNDWATER.

F-3 CONCRETE GENERAL NOTES APPLY TO FOUNDATIONS.

F-4 MINIMUM DEPTH FROM ADJACENT FINISHED GRADE TO BOTTOM OF FOUNDATION, 4'-0"

F-5 FOUNDATIONS BEARING ON ROCK SHALL BE CONSTRUCTED SUCH THAT ROCK SURFACE IS LEVEL, UNLESS APPROVED BY ENGINEER.

F-6 COMPACTED SELECT GRANULAR FILL 12 INCHES THICK MINIMUM, SHALL BE PLACED BELOW ALL CONCRETE FOUNDATIONS UNLESS DIRECTLY BEARING ON SOUND ROCK.

STRUCTURAL METALS

S-1 DETAIL, FABRICATE, AND ERECT STRUCTURAL STEEL IN ACCORDANCE WITH AISC SPECIFICATION FOR STRUCTURAL STEEL BUILDINGS, ALLOWABLE STRESS DESIGN AND LRFD DESIGN (LRFD MANUAL OF STEEL CONSTRUCTION, CURRENT EDITION).

S-2 STEEL MATERIAL:
A) STRUCTURAL TUBING, ASTM A 500, GRADE B.
B) STRUCTURAL PIPE, ASTM A 53, GRADE B.
C) PLATES AND ANGLES, ASTM A 36 UNO.
D) STRUCTURAL W SHAPES, ASTM A 992 (MIN. YIELD STRENGTH OF 50 KSI).
E) STRUCTURAL S, M, & H SHAPES ASTM A572 GRADE 50.

S-3 PROVIDE MIN 3/4" DIAMETER ASTM A 325 HIGH STRENGTH BOLTS WITH FULLY TIGHTENED TYPE N CONNECTIONS FOR STRUCTURAL STEEL UON.

S-4 PROVIDE TYPICAL STEEL BEAM CONNECTIONS FOR A CAPACITY NOT LESS THAN THE TOTAL UNIFORM LOAD CAPACITY TABULATED IN THE AISC TABLES FOR ALLOWABLE LOADS OF BEAMS UNLESS NOTED OTHERWISE.

S-5 CAST IN PLACE ANCHOR BOLTS FOR STRUCTURAL STEEL SHALL CONFORM TO ASTM A307 UON.

S-6 DO NOT PAINT STEEL SURFACES WHICH ARE TO BE WELDED OR ARE TO BE ENCASED IN CONCRETE.

S-7 STAINLESS STEEL SHALL BE TYPE 316 FOR BOLTED CONSTRUCTIONS AND 316L FOR WELDED CONSTRUCTIONS.

S-8 ALUMINUM SHALL BE ALLOY 6061-T6.

S-9 ALL GROOVE AND BUTT WELDS SHALL BE FULL PENETRATION.

S-10 FILLET WELD SIZES SHALL BE THE MINIMUM SIZE REQUIRED BY AISC CODE FOR PLATE SIZES TO BE CONNECTED AND SHALL BE APPLIED TO THE ENTIRE JOINT CONTACT LENGTH, BUT NOT LESS THAN 3/16".

S-11 DETAIL, FABRICATE, AND ERECT ALUMINUM IN ACCORDANCE WITH THE ALUMINUM ASSOCIATION CONSTRUCTION MANUAL CURRENT EDITION.

S-12 ALL BOLTS, ANCHOR BOLTS, AND CONCRETE ANCHORS CONNECTING ALUMINUM SHALL BE TYPE 316 STAINLESS STEEL UON.

S-13 ALUMINUM SHALL BE ISOLATED FROM CONTACT WITH CONCRETE OR DISSIMILAR METALS.

EXCAVATION

E-1 CONTRACTOR SHALL PERFORM ALL EXCAVATION IN ACCORDANCE WITH STATE, LOCAL AND FEDERAL REQUIREMENTS INCLUDING OSHA BRACING AND EXCAVATION REQUIREMENTS.

E-2 TEMPORARY SHEETING AND BRACING IS NOT SHOWN ON CONTRACT DRAWINGS. ALL EXCAVATIONS WITH A POTENTIAL FOR CAVE-IN SHALL BE PROVIDED WITH EXCAVATION PROTECTION SYSTEMS IN ACCORDANCE WITH OSHA 1926. SLOPING AND BENCHING WHICH WILL ENCROACH ON AREAS SLATED TO REMAIN ACCESSIBLE OR THAT MAY ENCROACH ON EXISTING FOOTINGS AND STRUCTURES SHALL NOT BE PERMITTED.

E-3 CONTRACTOR SHALL ENGAGE THE SERVICES OF A LICENSED PROFESSIONAL ENGINEER REGISTERED IN THE STATE OF NEW YORK TO DESIGN ALL TEMPORARY SHEETING AND BRACING AND RELATED APPURTENANCES. CONTRACTOR TO SUBMIT SUCH PLANS TO ENGINEER FOR INFORMATION.

E-4 CONTRACTOR SHALL BE RESPONSIBLE FOR DEWATERING OF OPEN EXCAVATIONS.

E-5 ALL EXCAVATED MATERIALS SHALL BE REMOVED FROM SITE TO A FACILITY AS REQUIRED BY STATE, LOCAL FEDERAL LAW.

TIMBER

T-1 ALL WOOD FRAMING MEMBERS INCLUDING, BUT NOT LIMITED TO, WALL STUDS AND JOISTS, ARE INTENDED TO ACT AS A SYSTEM AS DETAILED IN THE STRUCTURAL DRAWINGS AND ONCE CONSTRUCTION IS COMPLETE. IT IS THE RESPONSIBILITY OF THE CONTRACTOR TO ENSURE SAFETY AND STABILITY OF WOOD FRAMING SYSTEMS (I.E. TEMPORARY BRACING IF REQUIRED) DURING CONSRTUCTION AS A RESULT OF CONSTRUCTION METHODS AND SEQUENCES.

T-2 ALL TIMBER BELOW FLOOR DECKING SHALL BE PRESSURE-TREATED SOUTHERN PINE LUMBER.

T-3 STORAGE OF ALL LUMBER AND TIMBER ON SITE SHALL BE KEPT OFF GROUND, UNDER COVER AND PROTECTED FROM DAMAGE.

T-4 ALL DIMENSIONAL LUMBER SHALL BE CERTIFIED BY THE SUPPLIER IN WRITING TO BE KILN DRIED.

T-5 STRUCTURE SHALL NOT BE ENCLOSED UNLESS LUMBER MOISTURE CONTENT HAS BEEN VERIFIED TO BE AT OR BELOW 15%. ANY SIGNS OF MOLD SHALL BE REMOVED AND TREATED IN ACCORDANCE WITH PROJECT SPECIFICATIONS OR INDUSTRY STANDARDS.

T-6 ALL LUMBER IN CONTACT WITH THE GROUND OR CONCRETE SHALL BE PRESSURE TREATED.

T-7 FASTENERS FOR PRESERVATIVE TREATED AND FIRE RETARDANT TREATED WOOD SHALL BE OF HOT DIPPED ZINC COATED GALVANIZED STEEL OR STAINLESS STEEL AND SHALL FOLLOW CURRENT SIMPSON GUIDELINES BASED ON WEATHER EXPOSURE. WHERE STAINLESS STEEL CONNECTORS OR HOT DIPPED GALVANIZED CONNECTORS ARE SPECIFIED IN THE DRAWINGS, STAINLESS STEEL OR HOT DIPPED GALVANIZED FASTENERS SHALL BE USED TO MATCH CONNECTOR TYPE.

T-8 ALL PLATES AND LEDGERS SHALL BE FASTENED WITH A MINIMUM (3) ANCHORS PER PIECE UNLESS NOTED OTHERWISE.

T-9 ALL METAL HARDWARE AND FRAMING ACCESSORIES SHALL BE MANUFACTURED BY SIMPSON STRONG-TIE COMPANY. ALL ITEMS SHALL BE INSTALLED PER THE SIMPSON'S INSTALLATION REQUIREMENTS. ALL NAIL HOLES SHALL BE FILLED WITH THE RECOMMENDED FASTENER UNLESS NOTED OTHERWISE ON THE DRAWING.

T-10 HOLES FOR BOLTS SHALL BE DRILLED WITH A BIT OF THE SAME NOMIMAL DIAMETER AS THE BOLT + 1/16". LEAD HOLES FOR LAG SCREWS SHALL BE BORED PER NDS 11.1.3.

T-11 ALL BOLTS, CARRIAGE BOLTS, LAG SCREWS, EXPANSION BOLTS AND EPOXY BOLTS SHALL BE INSTALLED WITH STANDARD CUT WASHERS UNDER THE BOLT HEAD AND NUTS THAT BEAR DIRECTLY ON THE WOOD. ALL NUTS SHALL BE TIGHTENED AT THE TIME OF INSTALLATION AND RE-TIGHTENED IF NECESSARY, DUE TO WOOD SHRINKAGE, PRIOR TO CLOSE OUT OR COMPLETION OF THE PROJECT. BOLTS AND LAG SCREWS SHALL CONFORM TO ANSI/ASME STANDARD B18.2.1. WOOD SCREWS SHALL CONFORM TO B18.6.1. ALL BOLTS SHALL CONFORM TO ASTM A307 GRADE A UNLESS NOTED OTHERWISE.

T-12 CUTTING AND NOTCHING OF SAWN LUMBER RAFTERS AND STUDS SHALL BE IN CONFORMANCE WITH THE FOLLOWING CRITERIA:

A. JOISTS NOTCHES AT THE ENDS OF JOISTS SHALL NOT EXCEED 1/5 OF THE JOIST DEPTH. HOLES IN JOISTS SHALL NOT BE WITHIN 2½ INCHES OF THE TOP OR BOTTOM OF THE JOIST, AND THE DIAMETER OF ANY SUCH HOLE SHALL NOT EXCEED 1/4 THE DEPTH OF THE JOIST. NOTCHES IN THE TOP OR BOTTOM OF THE JOISTS SHALL NOT EXCEED 1/6 THE DEPTH AND SHALL NOT BE LOCATED IN THE MIDDLE OF THE THIRD SPAN.

B. RAFTERS NOTCHES AT THE ENDS OF RAFTERS OR CEILING JOISTS SHALL NOT EXCEED 1/5 OF THE DEPTH. NOTCHES IN THE TOP OR BOTTOM OF THE RAFTER OR CEILING JOIST SHALL NOT EXCEED 1/6 THE DEPTH AND SHALL NOT BE LOCATED IN THE MIDDLE 1/3 OF THE SPAN. EXCEPT THAT A NOTCH NOT EXCEEDING 1/3 OF THE DEPTH IS PERMITTED IN THE TOP OF THE RAFTERS OR CEILING JOIST NOT FURTHER FROM THE FACE OF THE SUPPORT THAN THE DEPTH OF THE MEMBER. HOLES BORED IN RAFTERS OR CEILING JOISTS SHALL NOT BE WITHIN 2½" INCHES OF THE TOP AND BOTTOM AND THEIR DIAMETER SHALL NOT EXCEED 1/4 THE DEPTH OF THE MEMBER.

C. WALL STUDS A MAXIMUM OF 2¼" DIAMETER NEATLY BORED HOLE MAY BE PLACED IN THE CENTER OF ALL BEARING 2x6 STUDS WITH NO ADDITIONAL REINFORCEMENT REQUIRED.

SPECIAL INSPECTIONS – CROSS AXIS BUILDING F

S-1 SPECIAL INSPECTION SHALL COMPLY WITH SPECIFICATIONS.

S-2 SPECIAL INSPECTION WILL BE PERFORMED IN ACCORDANCE WITH CHAPTER 17 OF THE NYS BUILDING CODE.

S-3 SPECIAL INSPECTION WILL BE PERFORMED ON THE FOLLOWING STRUCTURAL SYSTEMS:

A) STRUCTURAL STEEL CONSTRUCTION (1705.2)

B) WOOD CONSTRUCTION (1705.5)

C) CONCRETE CONSTRUCTION (1705.3)

D) DRIVEN DEEP FOUNDATIONS (1705.7)

E) WIND RESISTANCE (1705.11)

F) SEISMIC RESISTANCE (1705.12)

CONCRETE (EXCEPT PRECAST)

C-1 CONCRETE STRENGTH CLASSES (28-DAY COMPRESSIVE STRENGTH): CLASS A (5000 PSI) STRUCTURES, REINFORCED DUCT BANKS, AND PIPE ENCASEMENT. FOR CONCRETE WALLS GREATER THAN 2 FEET THICK FOLLOW ACI RECOMMENDATIONS FOR MASS CONCRETE. CLASS D (2500 PSI) SIDEWALKS, CURBS AND GUTTERS, CONCRETE FILL, THRUST BLOCKS, UNREINFORCED DUCT BANKS AND PIPE ENCASEMENT, FENCE POST EMBEDMENT.

C-2 REINFORCEMENT: ASTM A615, GRADE 60, OR ASTM A706, GRADE 60 WHERE REINFORCEMENT IS TO BE WELDED.

C-3 CONCRETE COVER FOR REINFORCING:
A) SURFACES CAST AGAINST SUBGRADE 3" MIN.
B) FORMED SURFACES IN CONTACT WITH SOIL OR LIQUID 2" MIN.
C) SURFACES NOT IN CONTACT WITH WEATHER, SOIL, OR LIQUID 1 1/2" MIN.

C-4 CONSTRUCTION JOINTS & CONTROL JOINTS SHALL BE LOCATED AS SHOWN ON THE DRAWINGS. WHERE NOT SHOWN, CONSTRUCTION JOINTS SHALL BE LOCATED AT NO MORE THAN 30 FEET ON CENTER. JOINT LOCATIONS SHALL BE AS APPROVED BY THE ENGINEER.

C-5 EQUIPMENT SUPPORTS, ANCHORAGES, OPENINGS, RECESSES AND REVEALS NOT SHOWN ON THE STRUCTURAL DRAWINGS BUT REQUIRED BY OTHER DISCIPLINES, SHALL BE PROVIDED FOR PRIOR TO PLACING CONCRETE.

C-6 SPLICES SHALL BE CLASS 'B' CONFORMING TO THE PROVISIONS OF ACI 318 UNLESS NOTED OTHERWISE.

C-7 AT ALL TYPICAL CURBS, EQUIPMENT PADS, AND PIPE SUPPORT PIERS, REINFORCING DOWELS SHOWN MAY BE REPLACED WITH MATCHING DOWELS SET IN EPOXY IN DRILLED HOLES AS SPECIFIED. DOWELS LOCATED CLOSER THAN 3" FROM ANY EDGE OF CONCRETE SHALL NOT BE REPLACED WITH DRILLED DOWELS.

C-8 DRILLED EPOXY DOWELS (WHERE DOWELS ARE SHOWN TO BE PLACED INTO HARDENED CONCRETE):
A) THE HOLE DIAMETER SHALL BE NO LARGER THAN 1/8" GREATER THAN THE DIAMETER OF THE REINFORCING BAR AT THE DEFORMATIONS.
B) THE DEPTH OF EMBEDMENT SHALL BE 12 BAR DIAMETERS, UNLESS SHOWN OTHERWISE.
C) ADJUST THE DOWEL LOCATIONS AS NEEDED TO AVOID DRILLING THROUGH ANY REINFORCING BARS.IF THE DOWEL LOCATION NEEDS TO BE MODIFIED, CONTACT THE ENGINEER.

C-9 SLABS WITH SLOPING SURFACES SHALL HAVE THE INDICATED SLAB THICKNESS MAINTAINED AS THE MINIMUM. SLAB BOTTOMS CAN EITHER SLOPE WITH THE TOP SURFACE OR BE LEVEL. REINFORCEMENT IN SLABS WITH SLOPING SURFACES SHALL BE PLACED AT THE REQUIRED CLEARANCE FROM THE SLAB SURFACE.

C-10 SLOPES SHOWN ON SLAB SURFACES BY FLOW ARROWS SHALL BE 1.0 PERCENT UNLESS NOTED OTHERWISE.

C-11 WHERE HORIZONTAL CONSTRUCTION JOINTS, LOCATED ABOVE THE FOUNDATION SLAB, EXTEND BEYOND WHERE NEEDED, THEY SHALL BE TERMINATED AT A VERTICAL CONSTRUCTION JOINT APPROVED BY THE ENGINEER.

C-12 DOWELS, ANCHOR BOLTS, PIPES, WATERSTOPS AND OTHER EMBEDDED ITEMS SHALL BE HELD SECURELY IN POSITION WHILE CONCRETE IS BEING PLACED.

C-13 CONDUITS AND OTHER SIMILAR ITEMS EMBEDDED IN OR PENETRATING THROUGH CONCRETE SHALL BE SPACED ON CENTER NOT LESS THAN 3 TIMES THEIR OUTSIDE DIMENSION, BUT NOT LESS THAN 2 1/2" CLEAR IN CLASS 45F CONCRETE OR 2" CLEAR IN CLASS 45 CONCRETE. SUCH ITEMS SHALL NOT EXCEED 1/3 OF THE MEMBER THICKNESS.

C-14 REINFORCING BARS AND ACCESSORIES SHALL NOT BE IN CONTACT WITH ANY METAL PIPE, PIPE FLANGE, METAL CONDUIT, OR OTHER METAL PARTS EMBEDDED IN CONCRETE. A MINIMUM CLEARANCE OF 2 INCHES SHALL BE PROVIDED.

C-15 ALL JOINTS WHICH ARE IN MEMBERS IN CONTACT WITH LIQUID OR BELOW GRADE SHALL HAVE A WATERSTOP. CONSTRUCTION JOINTS SHALL HAVE A 6" PVC FLATSTRIP WATERSTOP. EXPANSION JOINTS SHALL HAVE A 9" PVC CENTERBULB WATERSTOP.

C-16 IN VERTICAL JOINTS, WATERSTOP SHALL STOP NO LESS THAN 18" ABOVE THE MAXIMUM WATER SURFACE OR 18" ABOVE GRADE, WHICHEVER IS HIGHER.

C-17 AT JOINT INTERSECTIONS, WATERSTOPS SHALL BE CONNECTED SO AS TO FORM A COMPLETE SEAL USING CONNECTION PIECES AS NEEDED.

C-18 ALL EXPOSED CORNERS SHALL HAVE A 3/4" CHAMFER OR A 1/2" RADIUS TOOLED CORNER.

DEMOLITION

LEGEND

EXISTING REINFORCED CONCRETE WALL OR STRUCTURE TO BE DEMOLISHED

SAW CUT LINE – FULL DEPTH UNLESS NOTED OTHERWISE

D-1 CONTRACTOR IS ALERTED THAT LIMITS OF DEMOLITION SHOWN IS APPROXIMATE. ACTUAL LIMITS SHALL BETHE MINIMUM REQUIRED FOR NEW STRUCTURE. CONTRACTOR TO CO-ORDINATE AND SUBMIT DEMOLITION PROCEDURE PER SPECIFICATIONS.

D-2 ALL ITEMS SHOWN ARE EXISTING TO REMAIN UNLESS NOTED OTHERWISE.

D-3 FOR ADDITIONAL DEMOLITION REQUIREMENTS SEE SPECIFICATIONS (024116).

D-4 ALL EXISTING CONCRETE TO BE DEMOLISHED IS STEEL REINFORCED UNLESS NOTED OTHERWISE. REINFORCING STEEL NOT SHOWN FOR CLARITY.

D-5 FOR ADDITIONAL DEMOLITION NOT SHOWN, SEE G, A, M, E, H, AND P DRAWINGS.

PILE NOTES

P-1 PILES SHALL BE DESIGNED AND INSTALLED BY A QUALIFIED PILE CONTRACTOR IN ACCORDANCE WITH THE BORED-IN PILE SPECIFICATIONS AND SUBJECT TO THE REQUIREMENTS LISTED HEREIN.

P-2 THE CONTRACTOR SHALL ENGAGE A LICENSED PROFESSIONAL ENGINEER REGISTERED IN THE STATE OF NEW YORK TO DESIGN PILE AND SUBMIT THE DESIGN TO THE ENGINEER FOR APPROVAL.

P-3 THE BORED-IN PILE SHALL BE MIN. 9 5/8" DIAMETER WITH 0.545" WALL THICKNESS AND DESIGNED AND INSTALLED FOR ULTIMATE LOAD IN COMPRESSION = 60 TONS ALLOWABLE LOAD IN COMPRESSION = 30 TONS.

P-4 ALL BORED-IN PILES SHALL BE GROUTED WITH A MINIMUM 28 DAY COMPRESSIVE STRENGTH OF 4000 PSI.

P-5 ALL BORED-IN PILES SHALL HAVE FULL LENGTH 1-1/4" ø THREADBARS. THE THREADBARS SHALL CONFORM TO THE REQUIREMENTS OF ASTM A722, GRADE 150 AS MANUFACTURED BY DYWIDAG OR APPROVED EQUAL, UNLESS NOTED OTHERWISE. PROVIDE BEARING PLATES AND NUTS IN ACCORDANCE WITH THE THREADBAR MANUFACTURER'S RECOMMENDATIONS.

P-6 PROVIDE CENTRALIZERS FOR THREADBARS AT 10 FEET MAXIMUM VERTICAL SPACING.

P-7 CUT OFF THE ELEVATIONS OF THE BORED-IN PILES AS SHOWN ON DRAWINGS.

P-8 ALL BORED-IN PILES SHALL BE INSTALLED WITH A MAXIMUM LATERAL TOLERANCE OF THREE INCHES.

P-9 DRILLING OPERATION SHALL BE PERFORMED IN THE PRESENCE OF THE ENGINEER.

P-10 ONE (1) STATIC AXIAL COMPRESSION LOAD TEST WILL BE REQUIRED.

P-11 THE INSTALLATION METHOD USED FOR THE SUCCESSFUL COMPLETION OF LOAD TESTING SHALL BE USED FOR ALL THE PRODUCTION PILES.

P-12 THE CONTRACTOR SHALL SUBMIT A STATIC AXIAL LOAD TESTING PROGRAM CONSISTING OF ONE (1) COMPRESSION TEST AND ONE (1) TENSION TEST SHOWING PROPOSED PILE LOAD TEST LOCATIONS FOR APPROVAL OF THE ENGINEER.

P-13 COMPRESSION LOAD TESTING SHALL CONFORM TO ASTM D1143 AND THE PROJECT SPECIFICATIONS. UPLIFT LOAD TESTING SHALL CONFORM TO THE PROJECT SPECIFICATIONS AND ASTM D3689.

P-14 A MINIMUM PERIOD OF TWO (2) WEEKS SHALL ELAPSE FROM THE INSTALLATION OF THE TEST PILE TO THE COMMENCEMENT OF THE LOAD TEST.

P-15 TWO (2) TELLTALE RODS SHALL BE INSTALLED IN THE LOAD TEST PILE. THE BOTTOM END OF ONE TELLTALE ROD SHALL BE AT THE BOTTOM OF THE TEST PILE, AND THE BOTTOM END OF THE OTHER ROD SHALL BE TERMINATED MIDWAY BETWEEN PILE CUT-OFF AND PILE TIP. THE TELLTALE SHALL CONSIST OF A STEEL SOUNDING ROD EXTENDED TO AN ELEVATION DESIGNATED BY THE ENGINEER. THE TELLTALES SHALL BE PROTECTED BY A STEEL TUBE EMBEDDED IN GROUT. THE TELLTALE SHALL BE CENTERED IN THE TUBE IN A MANNER TO AVOID FRICTION BETWEEN THE TELLTALE AND THE TUBE.

P-16 THE LOADING PROCEDURE FOR STATIC AXIAL COMPRESSION TEST SHALL BE IN ACCORDANCE WITH NEW YORK STATE BUILDING CODE.

P-17 MEASUREMENTS OF MOVEMENT OF THE PILE BUTT, TELLTALES, REFERENCE BEAMS, ETC. SHALL BE TAKEN BY LICENSED SURVEYOR (REGISTERED IN THE STATE OF NEW YORK) ENGAGED BY THE OWNER.

P-18 MONITORING OF LOAD TEST SHALL BE PERFORMED BY A THIRD PARTY PROFESSIONAL ENGINEER REGISTERED IN THE STATE OF NEW YORK AND HIRED BY THE CONTRACTOR.

P-19 THE DIAL GAUGES FOR MONITORING THE MOVEMENT OF THE PILE SHALL HAVE A MINIMUM TRAVEL OF THREE (3) INCHES AND SHALL BE AT LEAST THREE (3) INCHES IN DIAMETER.

Drawing Name: G:\SavinAutocad\2060\25-Playland-Mega-3\S\CXFS-1001.dwg
Rev#: Projectname: 211001F02 Comments: ----
Printed by: tblackhorse Date: 18 August 2022 6:53 PM Designed by: ----
Xrefs: [TB_24X36_WestchesterCo_3.dwg] [TSG-SVLOGO.dwg] [BCR-A-04.dwg] [BCRE-101.dwg]

CONSULTANT INFORMATION
Savin Engineers, P.C.

CONSULTANT SEAL

REVISION NUMBER	DATE	MADE BY	APP'D BY	REVISION

RECORD DRAWING CERTIFICATION
☐ AS BUILT – CHANGES AS NOTED ☐ AS BUILT – NO CHANGES

CONTRACTOR	PROJECT COORDINATOR
NAME	NAME
SIGNATURE	SIGNATURE
TITLE DATE	TITLE DATE

WESTCHESTER COUNTY, NEW YORK
DEPARTMENT OF PUBLIC WORKS AND TRANSPORTATION
DIVISION OF ENGINEERING

INFRASTRUCTURE REHABILITATION - PHASE 3
PLAYLAND PARK, RYE, NEW YORK
CROSS AXIS BUILDING F
STRUCTURAL NOTES

CONTRACT NUMBER: 22-523	SHEET NUMBER: CXF-S-01
DWG NO.:	
SCALE: AS SHOWN	
DATE: 8/23/ 2022	
DPW FILE NUMBER: 1-118-S-1099-0	REV. NO. 0

STRUCTURAL ABBREVIATIONS

AB	ANCHOR BOLT
ADDL	ADDITIONAL
ADH	ADHESIVE
ADJ	ADJUSTABLE/ADJACENT
AFF	ABOVE FINISHED FLOOR
AGG	AGGREGATE
AL	ALUMINUM
ALT	ALTERNATE
APPROX	APPROXIMATE
ARCH	ARCHITECTURAL
AVG	AVERAGE
B	BORING
BLDG	BUILDING
BM	BEAM/BENCH MARK
BOF	BOTTOM OF FOOTING
BOS	BOTTOM OF STEEL
BOT	BOTTOM
BRG	BEARING
BT	BOLT
C	CHANNEL
C TO C	CENTER TO CENTER
CANT	CANTILEVER
CJ	CONSTRUCTION JOINT
CL	CENTER LINE
CLR	CLEAR
CMU	CONCRETE MASONRY UNIT
CO	CLEAN OUT
COL	COLUMN
CONC	CONCRETE
CONST	CONSTRUCTION
CONT	CONTINUOUS
CONTR	CONTRACTOR
CP	CONCRETE PLANK
CLJ	CONTROL JOINT
CTR	CENTER
CY	CUBIC YARD
DET	DETAIL
DIA (ø)	DIAMETER
DIAG	DIAGONAL
DIM	DIMENSION
DIST	DISTANCE
DN	DOWN
DO	DITTO
DP	DEEP
DWG	DRAWING
DWL	DOWEL
E	EAST
EA	EACH
EF	EACH FACE
EL	ELEVATION
ELEV	ELEVATOR
ENGR	ENGINEER
EMB	EMBEDMENT
ENCL	ENCLOSURE
ENT	ENTRANCE
EQ	EQUAL
EQPT	EQUIPMENT
EW	EACH WAY
EXIST	EXISTING
EXP	EXPANSION
EXP JT	EXPANSION JOINT
EXT	EXTERIOR
FAB	FABRICATE
FD	FLOOR DRAIN
FDN	FOUNDATION
FFL	FINISH FLOOR
FIN	FINISH
FLR	FLOOR
FT	FEET
FTG	FOOTING
F&C	FRAME&COVER
F&G	FRAME&GRATE

GA	GAUGE
GALV	GALVANIZE
GB	GRADE BEAM
GR	GRADE
GRTG	GRATING
HGT	HEIGHT
HORZ	HORIZONTAL
HP	HIGH POINT
HSS	HOLLOW STRUCTURAL STEEL
ID	INSIDE DIAMETER
IF	INSIDE FACE
IN	INCH
INCL	INCLUDE
INT	INTERIOR
INV	INVERT
J	JOIST
JB	JUNCTION BOX
JCT	JUNCTION
JT	JOINT
L	LENGTH/ANGLE
LF	LINEAR FEET
LG	LONG
LL	LIVE LOAD
LLH	LONG LEG HORIZONTAL
LLV	LONG LEG VERTICAL
LOC	LOCATION
LP	LOW POINT
LVR	LOUVER
LWL	LOW WATER LEVEL
MAS	MASONRY
MATL	MATERIAL
MAX	MAXIMUM
MECH	MECHANICAL
MET	METAL
MFR	MANUFACTURER
MG	MILLION GALLONS
MGD	MILLION GALLONS PER DAY
MH	MANHOLE
MIN	MINIMUM
MISC	MISCELLANEOUS
MO	MASONRY OPENING
MOD	MODIFY/MODIFIED
MTD	MOUNTED
N	NORTH
NA	NOT APPLICABLE
NIC	NOT IN CONTRACT
NO	NUMBER
NOM	NOMINAL
NTS	NOT TO SCALE
OC	ON CENTER
OD	OUTSIDE DIAMETER
OF	OUTSIDE FACE
OPNG	OPENING
OPP	OPPOSITE
OT	OPEN TRUSS
OVHD	OVERHEAD
PAR	PARALLEL
PC	POINT OF CURVE/PIECE
PCO	PILE CUT OFF
PI	POINT OF INTERSECTION
PL	PLATE/PROPERTY LINE
PREFAB	PREFABRICATED
PSF	POUNDS PER SQUARE FOOT
PSI	POUNDS PER SQUARE INCH
PT	POINT OF TANGENCY
PTN	PARTITION
PVMT	PAVEMENT
QTY	QUANTITY

R	RISER
RAD	RADIUS
RCP	REINFORCED CONCRETE PIPE
RD	ROOF DRAIN
REINF	REINFORCEMENT
RECT	RECTANGULAR
REM	REMOVE
REQD	REQUIRED
RF	ROOF
RO	ROUGH OPENING
S	SOUTH
SCHED	SCHEDULE
SECT	SECTION
SF	SQUARE FEET
SHT	SHEET
SIM	SIMILAR
SJ	STEEL JOIST
SPEC	SPECIFICATION
SQ	SQUARE
SS	STAINLESS STEEL
STA	STATION
STD	STANDARD
STR	STAIR
STIF	STIFFENER
STIR	STIRRUP
STL	STEEL
STRUC	STRUCTURAL
SUB	SUBSTITUTE
SYM	SYMMETRICAL
T	TREAD
T&B	TOP AND BOTTOM
T&G	TOUNGE AND GROOVE
TAN	TANGENT
TEMP	TEMPERATURE
THK	THICK
TOC	TOP OF CURB/CONCRETE
TOD	TOP OF DECK
TOF	TOP OF FOOTING
TOM	TOP OF MASONRY/MANHOLE
TOS	TOP OF SLAB/STEEL
TOW	TOP OF WALL
TYP	TYPICAL
UNO	UNLESS NOTED OTHERWISE
VERT	VERTICAL
W	WEST/WIDTH/WIDE FLANGE
W/	WITH
W/O	WITHOUT
WL	WATER LEVEL
WP	WATERPROOF/WALL PIPE
WPT	WALL PENETRATING TYPE
WS	WATER SURFACE
WT	WEIGHT
WWF	WELDED WIRE FABRIC
YD	YARD
YR	YEAR

SYMBOLS

- UNDISTURBED EARTH
- COMPACTED BACKFILL
- SELECT GRANULAR FILL MATERIAL
- CONCRETE BLOCK
- BRICK
- FINISHED WOOD
- CONCRETE
- ROUGH WOOD
- RIGID INSULATION
- REINFORCED STEEL IN CONCRETE
- WELDED WIRE FABRIC
- BLANKET INSULATION
- STEEL
- DENOTES MOMENT CONNECTION

Drawing Name: G:\SavinAutocad\2060\25-Playland-Mega-3\S\CXFS-1002.dwg
Rev#: Projectname: ---- Comments: All inquiries regarding this drawing(s) or project should be made to NYC Environmental Protection, Bureau of Engineering Design and Construction.
Printed by: [illegible] 6:53 PM Designed by: ---

CONSULTANT INFORMATION

Savin Engineers, P.C.

CONSULTANT SEAL

STATE OF NEW YORK — LICENSED PROFESSIONAL ENGINEER — No. 065362

REVISION NUMBER	DATE	MADE BY	APP'D BY	REVISION

RECORD DRAWING CERTIFICATION

☐ AS BUILT – CHANGES AS NOTED ☐ AS BUILT – NO CHANGES

CONTRACTOR
NAME
SIGNATURE
TITLE DATE

PROJECT COORDINATOR
NAME
SIGNATURE
TITLE DATE

WESTCHESTER COUNTY, NEW YORK
DEPARTMENT OF PUBLIC WORKS AND TRANSPORTATION
DIVISION OF ENGINEERING

INFRASTRUCTURE REHABILITATION - PHASE 3
PLAYLAND PARK, RYE, NEW YORK
CROSS AXIS BUILDING F
STRUCTURAL ABBREVIATIONS AND SYMBOLS

CONTRACT NUMBER	22-523
SHEET NUMBER	CXF-S-02
DWG NO.:	
SCALE:	AS SHOWN
DATE:	8/23/ 2022
DPW FILE NUMBER	1-118-S-1100-0
REV. NO.	0

NOTES:

1. CONTRACTOR SHALL COORDINATE DEMOLITION WORK WITH NEW CONSTRUCTION. PROVIDE TEMPORARY SHORING AS REQUIRED FOR IMPLEMENTATION OF ROLL–UP DOOR OPENINGS.

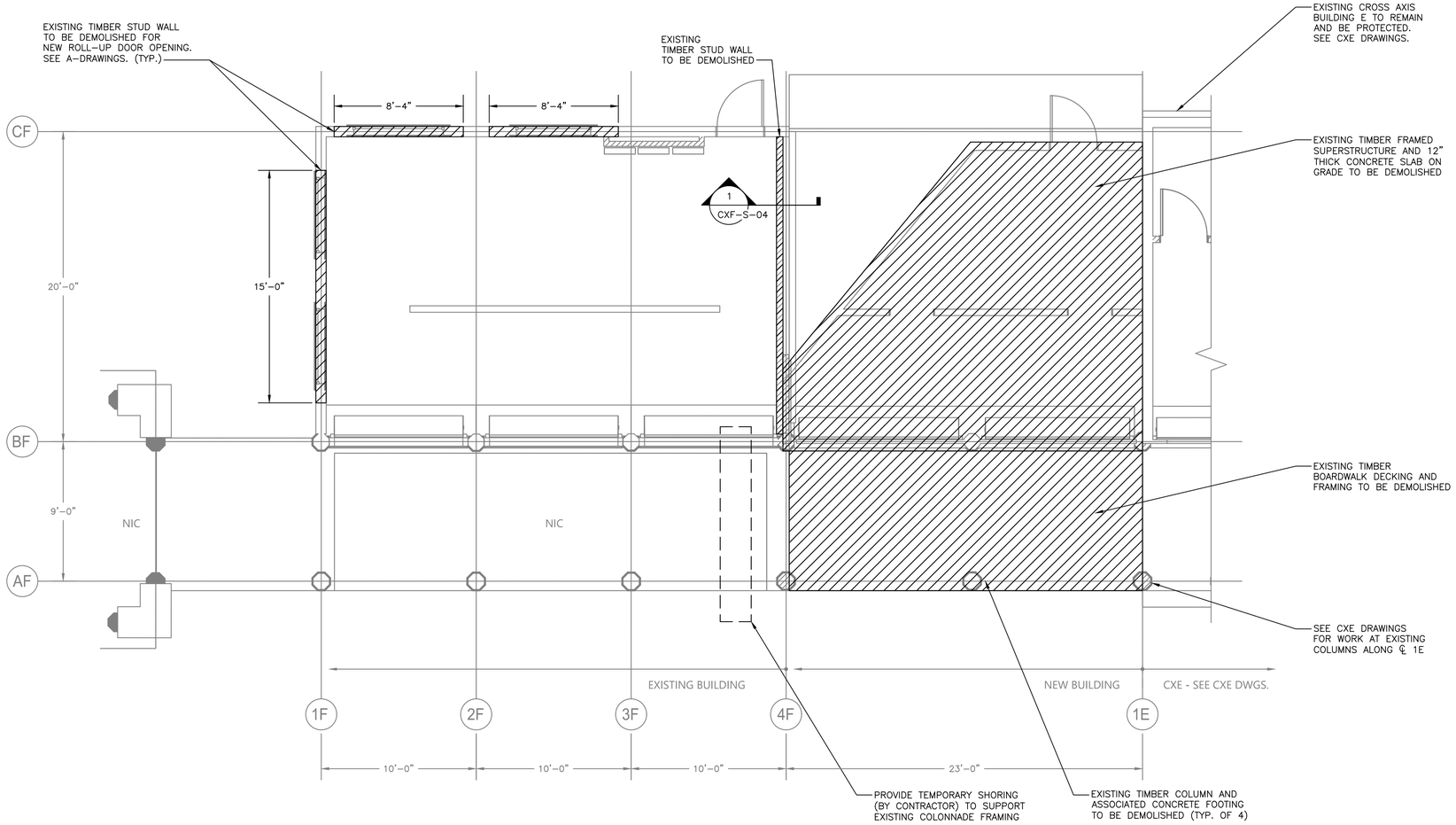

DEMOLITION – GROUND FLOOR PLAN

SCALE: 1/4" = 1'–0"

Drawing Name: G:\SavinAutocad\2060\25–Playland–Mega–3\S\CXFS–1003.dwg
Projectname: 211001F02 Comments: ----
Printed by: tblackhorse Date: 18 August 2022 6:53 PM Designed by: ----
Xrefs: [TB_24X36_WestchesterCo_3.dwg] [TSG–SVLOGO.dwg] [CXF–A–01.dwg]

CONSULTANT INFORMATION

Savin Engineers, P.C.

CONSULTANT SEAL

STATE OF NEW YORK · PROFESSIONAL ENGINEER · No. 085354 · LICENSED PROFESSIONAL ENGINEER

REVISION NUMBER	DATE	MADE BY	APP'D BY	REVISION

RECORD DRAWING CERTIFICATION

☐ AS BUILT – CHANGES AS NOTED ☐ AS BUILT – NO CHANGES

CONTRACTOR: NAME ____ SIGNATURE ____ TITLE ____ DATE ____

PROJECT COORDINATOR: NAME ____ SIGNATURE ____ TITLE ____ DATE ____

WESTCHESTER COUNTY, NEW YORK
DEPARTMENT OF PUBLIC WORKS AND TRANSPORTATION
DIVISION OF ENGINEERING

INFRASTRUCTURE REHABILITATION - PHASE 3
PLAYLAND PARK, RYE, NEW YORK
CROSS AXIS BUILDING F
DEMOLITION - GROUND FLOOR PLAN

CONTRACT NUMBER	SHEET NUMBER
22-523	CXF-S-03

DWG NO.:

SCALE: 1/4" = 1'-0"

DATE: 8/23/ 2022

DPW FILE NUMBER 1-118-S-1101-0 REV. NO. 0

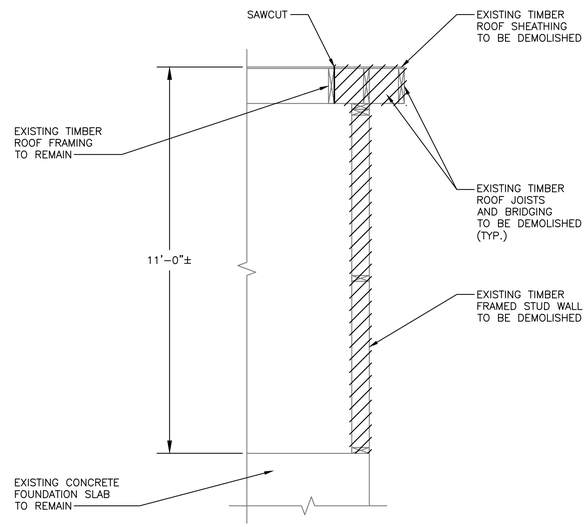

1 SECTION
CXF-S-03 SCALE: 1/2" = 1'-0"

Drawing Name: G:\SavinAutocad\2060\25-Playland-Mega-3\S\CXFS-1004.dwg
Rev#: Projectname: 211001F02 Comments: ----
Printed by: tblackhorse Date: 18 August 2022 6:54 PM Designed by: ----
Xrefs: [TB_24X36_WestchesterCo_3.dwg] [TSG-SVLOGO.dwg

CONSULTANT INFORMATION
Savin Engineers, P.C.

CONSULTANT SEAL

REVISION NUMBER	DATE	MADE BY	APP'D BY	REVISION

RECORD DRAWING CERTIFICATION
☐ AS BUILT – CHANGES AS NOTED ☐ AS BUILT – NO CHANGES

CONTRACTOR
NAME
SIGNATURE
TITLE DATE

PROJECT COORDINATOR
NAME
SIGNATURE
TITLE DATE

WESTCHESTER COUNTY, NEW YORK
DEPARTMENT OF PUBLIC WORKS AND TRANSPORTATION
DIVISION OF ENGINEERING

INFRASTRUCTURE REHABILITATION - PHASE 3
PLAYLAND PARK, RYE, NEW YORK
CROSS AXIS BUILDING F
DEMOLITION - SECTIONS & DETAILS

CONTRACT NUMBER 22-523
SHEET NUMBER CXF-S-04
DWG NO.:
SCALE: AS SHOWN
DATE: 8/23/ 2022
DPW FILE NUMBER 1-118-S-1102-0
REV. NO. 0

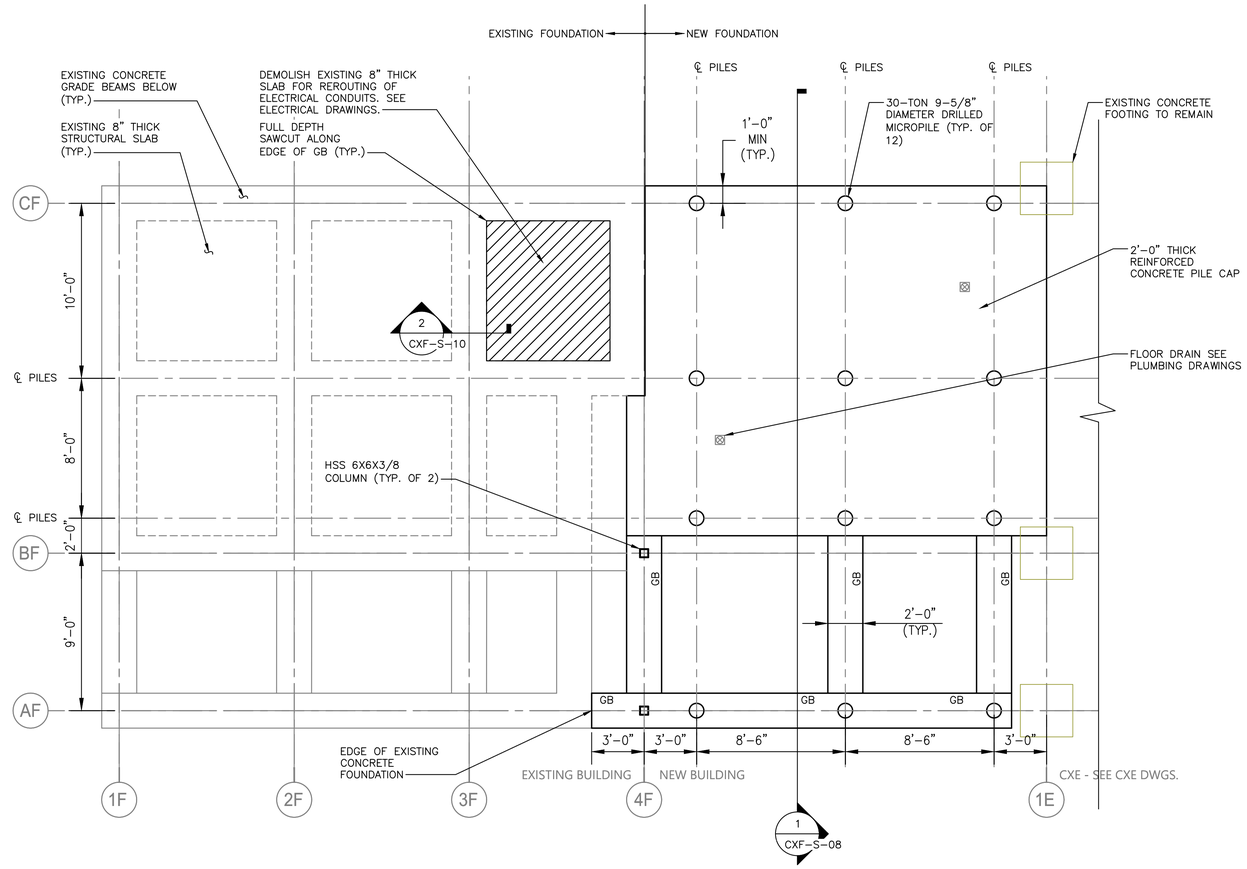

FOUNDATION PLAN
1/4" = 1'-0"

NOTES:

1. FOR STRUCTURAL NOTES, SEE DRAWING CXE-S-01.
2. FOR STRUCTURAL ABBREVIATIONS AND SYMBOLS, SEE DRAWING CXE-S-02.

0 4' 8'
SCALE: 1/4" = 1'-0"

CONSULTANT INFORMATION

Savin Engineers, P.C.

CONSULTANT SEAL

STATE OF NEW YORK · LICENSED PROFESSIONAL ENGINEER · No. 085354

REVISION NUMBER	DATE	MADE BY	APP'D BY	REVISION

RECORD DRAWING CERTIFICATION

☐ AS BUILT – CHANGES AS NOTED ☐ AS BUILT – NO CHANGES

CONTRACTOR
NAME
SIGNATURE
TITLE DATE

PROJECT COORDINATOR
NAME
SIGNATURE
TITLE DATE

WESTCHESTER COUNTY, NEW YORK
DEPARTMENT OF PUBLIC WORKS AND TRANSPORTATION
DIVISION OF ENGINEERING

INFRASTRUCTURE REHABILITATION - PHASE 3
PLAYLAND PARK, RYE, NEW YORK
CROSS AXIS BUILDING F
FOUNDATION PLAN

CONTRACT NUMBER	22-523
SHEET NUMBER	CXF-S-05
DWG NO.:	
SCALE:	AS SHOWN
DATE:	8/23/2022
DPW FILE NUMBER	1-118-S-1103-0
REV. NO.	0

Drawing Name: G:\SavinAutocad\2060\25-Playland-Mega-3\S\CXFS-1011.dwg
Proj#: Projectname: 211001F02 Comments: ----
Printed by: tblackhorse Date: 19 August 2022 3:48 PM Designed by: ----
Xrefs: [TB_24X36_WestchesterCo_3.dwg] [TSG-SVLOGO.dwg] [CXF-A-11.dwg] [CXF-S-1008.dwg

NOTES:

1. FOR STRUCTURAL NOTES, SEE DRAWING CXE–S–01.
2. FOR STRUCTURAL ABBREVIATIONS AND SYMBOLS, SEE DRAWING CXE–S–02.
3. COORDINATE INTERIOR WALL LAYOUTS AND OPENINGS WITH ARCHITECTURAL DRAWINGS.

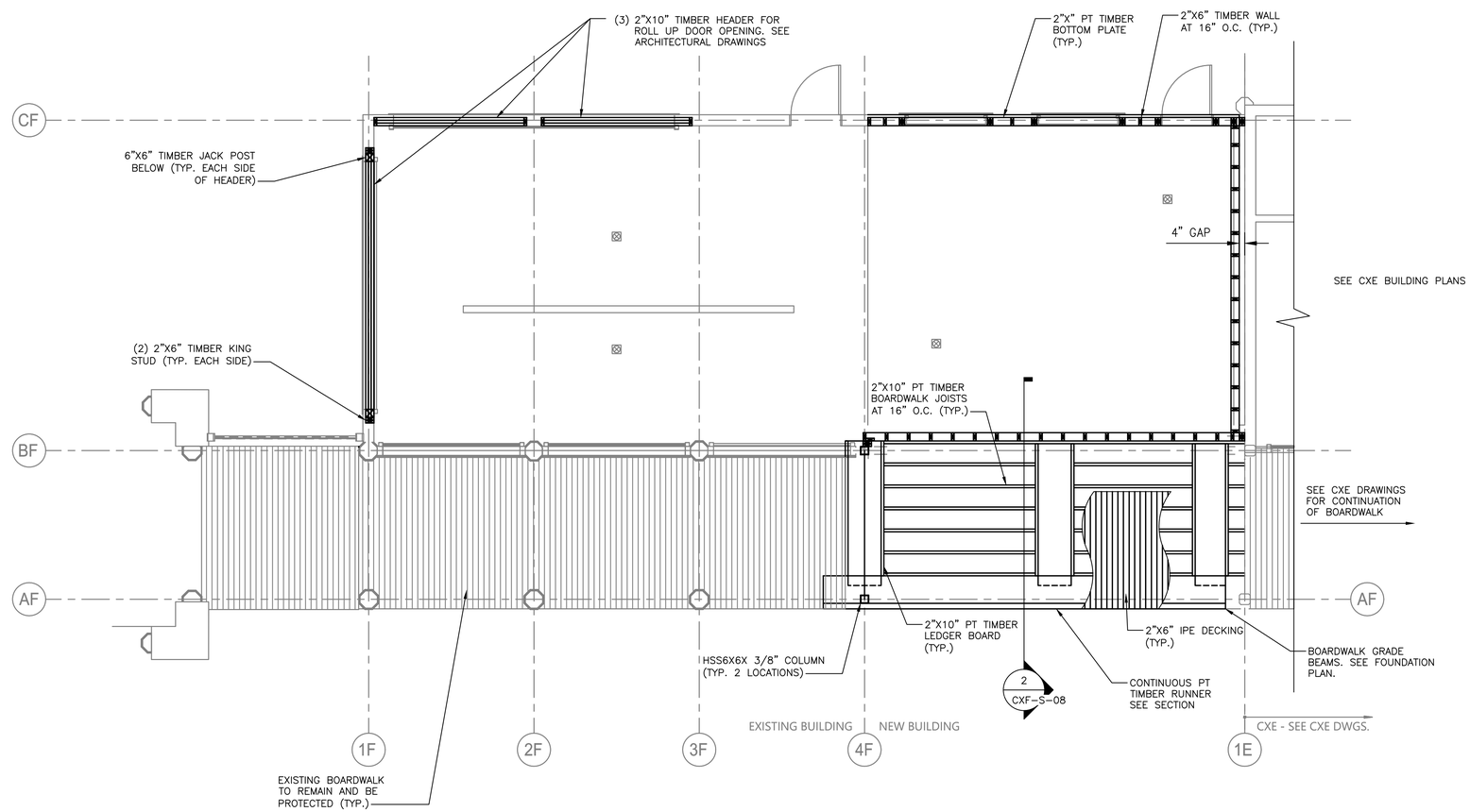

GROUND FLOOR PLAN
1/4" = 1'–0"

SCALE: 1/4" = 1'–0"

Drawing Name: G:\SavinAutocad\2060\25-Playland-Mega-3\S\CXFS-1012.dwg
Ref#: Projectname: 211001F02 Comments: ----
Printed by: tblackhorse Date: 19 August 2022 3:26 PM Designed by: ----
Xrefs: [TB_24X36_WestchesterCo_3.dwg] [TSG-SVLOGO.dwg] [CXF-A-11.dwg] [CXF-S-1006.dwg]

CONSULTANT INFORMATION

Savin Engineers, P.C.

CONSULTANT SEAL

STATE OF NEW YORK · LICENSED PROFESSIONAL ENGINEER · No. 085354

REVISION NUMBER	DATE	MADE BY	APP'D BY	REVISION

RECORD DRAWING CERTIFICATION

☐ AS BUILT – CHANGES AS NOTED ☐ AS BUILT – NO CHANGES

CONTRACTOR
NAME
SIGNATURE
TITLE DATE

PROJECT COORDINATOR
NAME
SIGNATURE
TITLE DATE

WESTCHESTER COUNTY, NEW YORK
DEPARTMENT OF PUBLIC WORKS AND TRANSPORTATION
DIVISION OF ENGINEERING

INFRASTRUCTURE REHABILITATION - PHASE 3
PLAYLAND PARK, RYE, NEW YORK
CROSS AXIS BUILDING F
GROUND FLOOR PLAN

CONTRACT NUMBER	22-523
SHEET NUMBER	CXF-S-06
DWG NO.:	
SCALE:	AS SHOWN
DATE:	8/23/2022
DPW FILE NUMBER	1-118-S-1104-0
REV. NO.	0

NOTES:

1. FOR STRUCTURAL NOTES, SEE DRAWING CXF-S-01.
2. FOR STRUCTURAL ABBREVIATIONS AND SYMBOLS, SEE DRAWING CXF-S-02.

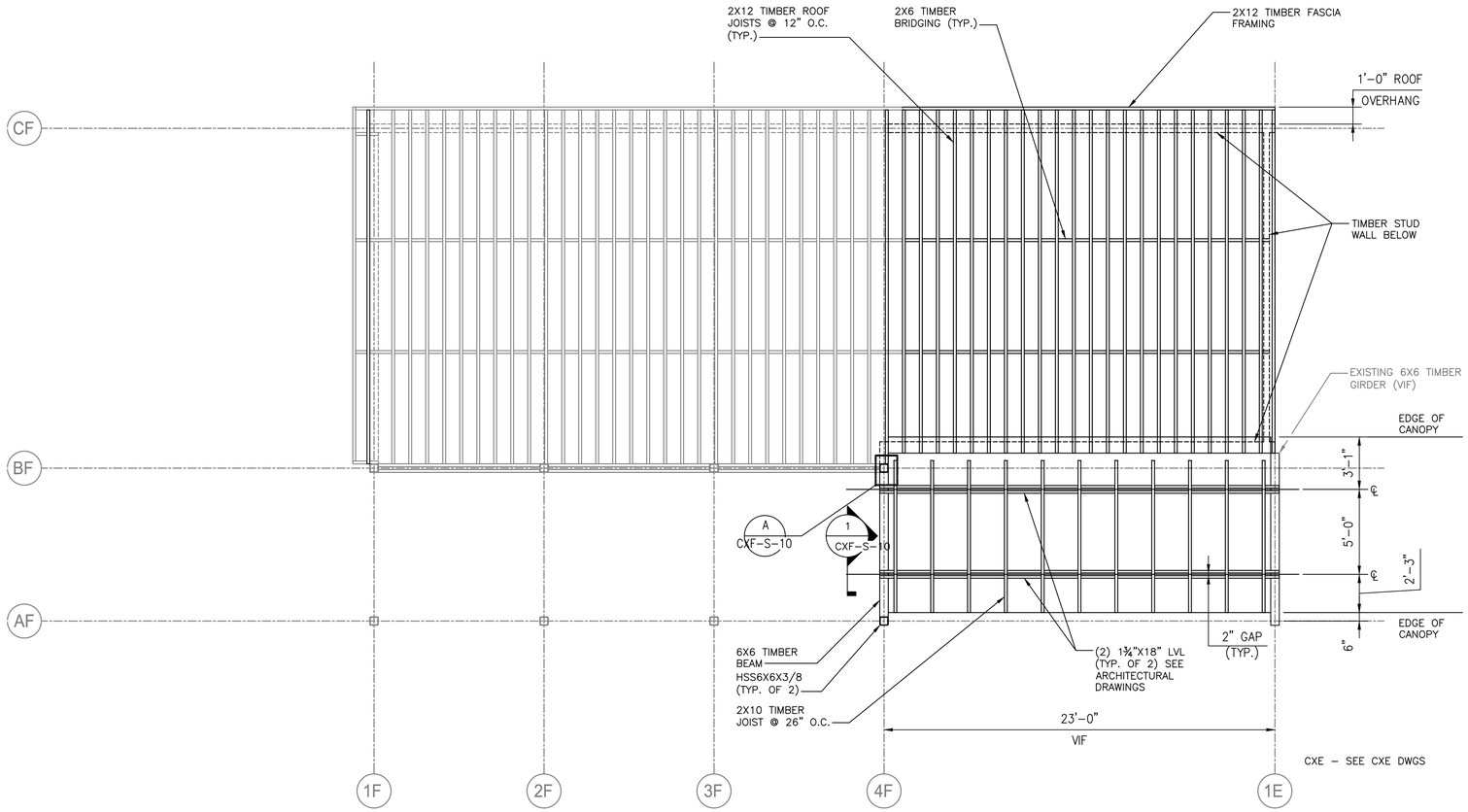

ROOF PLAN
SCALE: 1/4" = 1'-0"

Drawing Name: G:\SavinAutocad\2060\25-Playland-Mega-3\S\CXFS-1007.dwg
Ref#: Projectname: 211001F02 Comments: ----
Printed by: tblackhorse Date: 19 August 2022 3:27 PM Designed by: ----
Xrefs: [TB_24X36_WestchesterCo_3.dwg] [TSG-SVLOGO.dwg] [CXF-A-12.dwg] [CXF-S-1007.dwg]

CONSULTANT INFORMATION

Savin Engineers, P.C.

CONSULTANT SEAL

STATE OF NEW YORK · LICENSED PROFESSIONAL ENGINEER · No. 085354

REVISION NUMBER	DATE	MADE BY	APP'D BY	REVISION

RECORD DRAWING CERTIFICATION

☐ AS BUILT – CHANGES AS NOTED ☐ AS BUILT – NO CHANGES

CONTRACTOR
NAME
SIGNATURE
TITLE DATE

PROJECT COORDINATOR
NAME
SIGNATURE
TITLE DATE

WESTCHESTER COUNTY, NEW YORK
DEPARTMENT OF PUBLIC WORKS AND TRANSPORTATION
DIVISION OF ENGINEERING

INFRASTRUCTURE REHABILITATION - PHASE 3
PLAYLAND PARK, RYE, NEW YORK
CROSS AXIS BUILDING F
ROOF PLAN

CONTRACT NUMBER	SHEET NUMBER
22-523	CXF-S-07
DWG NO.:	
SCALE: AS SHOWN	
DATE: 8/23/2022	
DPW FILE NUMBER 1-118-S-1105-0	REV. NO. 0

NOTES:

1. FOR STRUCTURAL NOTES, SEE DRAWING CXF-S-01.
2. FOR STRUCTURAL ABBREVIATIONS AND SYMBOLS, SEE DRAWING CXF-S-02.

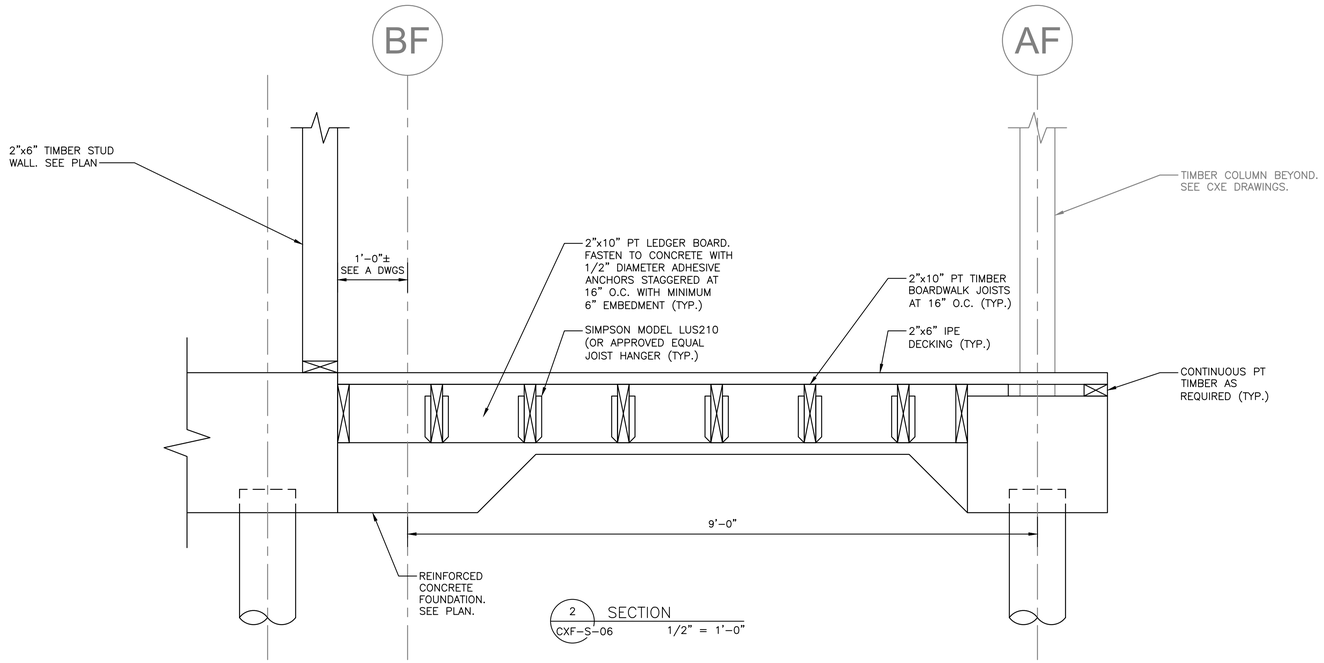

2 SECTION
CXF-S-06 1/2" = 1'-0"

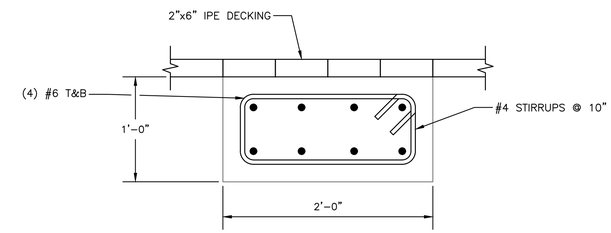

3 SECTION
CXF-S-08 1 1/2" = 1'-0"

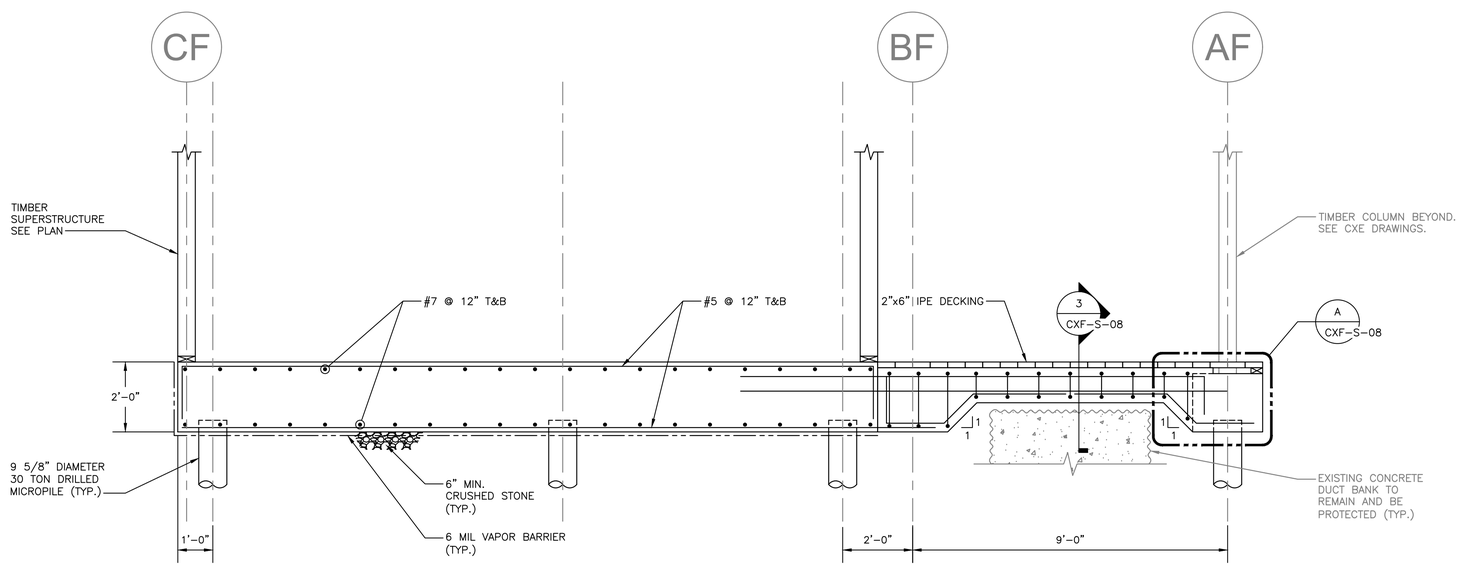

1 SECTION
CXF-S-05 1/2" = 1'-0"

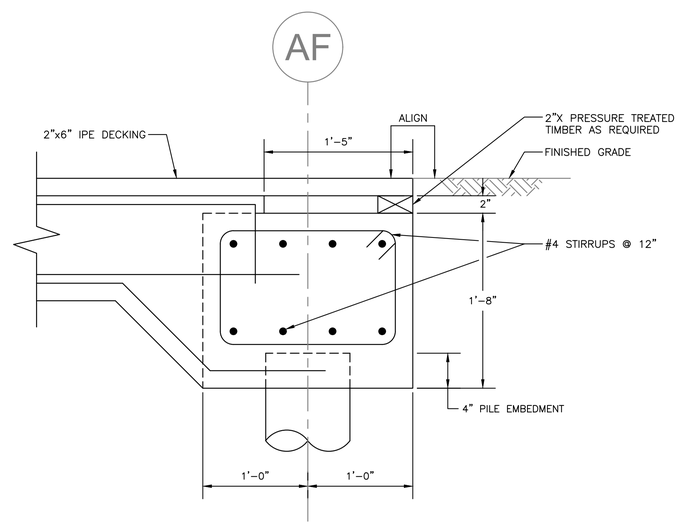

A DETAIL
CXF-S-08 1 1/2" = 1'-0"

Drawing Name: G:\SavinAutocad\2060\25-Playland-Mega-3\S\CXFS-1008.dwg
Rev#: Projectname: 211001F02 Comments: ----
Printed by: tblackhorse Date: 18 August 2022 6:55 PM Designed by: ----
Xrefs: [TB_24X36_WestchesterCo_3.dwg] [TSG-SVLOGO.dwg] [CXE-A-31.dwg] [CXE-S-1005.dwg]

CONSULTANT INFORMATION

Savin Engineers, P.C.

CONSULTANT SEAL

REVISION NUMBER	DATE	MADE BY	APP'D BY	REVISION

RECORD DRAWING CERTIFICATION

☐ AS BUILT – CHANGES AS NOTED ☐ AS BUILT – NO CHANGES

CONTRACTOR
NAME
SIGNATURE
TITLE DATE

PROJECT COORDINATOR
NAME
SIGNATURE
TITLE DATE

WESTCHESTER COUNTY, NEW YORK
DEPARTMENT OF PUBLIC WORKS AND TRANSPORTATION
DIVISION OF ENGINEERING

INFRASTRUCTURE REHABILITATION - PHASE 3
PLAYLAND PARK, RYE, NEW YORK
CROSS AXIS BUILDING F
SECTIONS AND DETAILS

CONTRACT NUMBER	22-523
SHEET NUMBER	CXF-S-08
DWG NO.:	
SCALE:	AS SHOWN
DATE:	8/23/ 2022
DPW FILE NUMBER	1-118-S-1106-0
REV. NO.	0

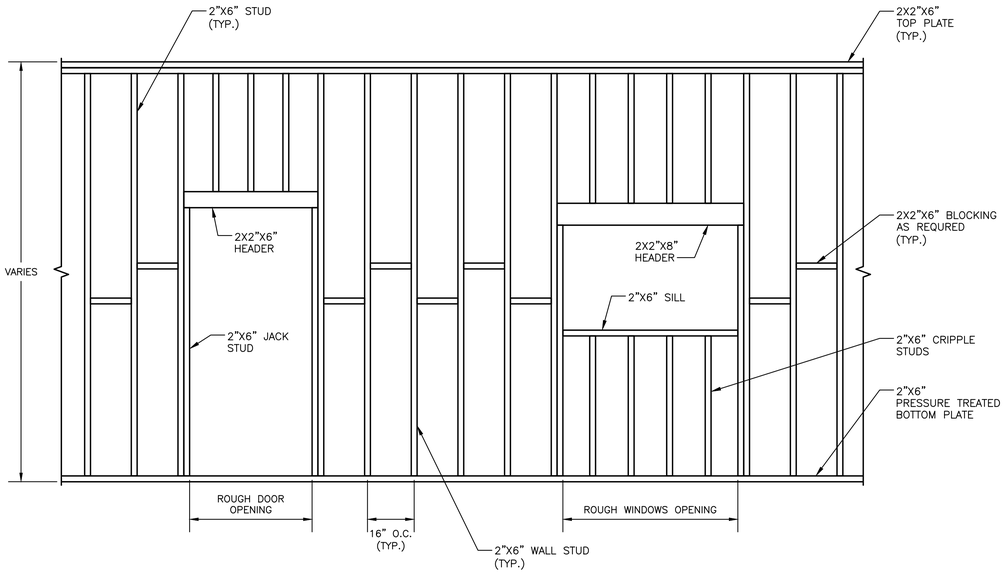

DETAIL WALL ELEVATION
N.T.S.

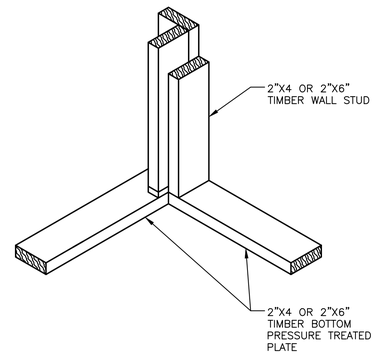

TYPICAL STUDS AT CORNERS DETAIL
N.T.S.

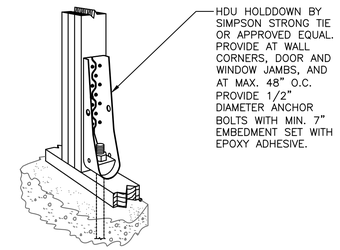

HOLD DOWN/TENSION TIE
SCALE: N.T.S.

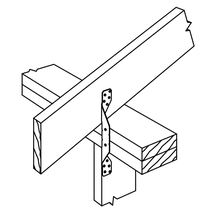

SIMPSON STRONG TIE H2 (OR APPROVED EQUAL). TYPICAL AT EACH RAFTER.

HURRICANE TIE
SCALE: N.T.S.

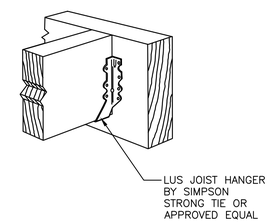

FACE MOUNTED JOIST HANGER
SCALE: N.T.S.

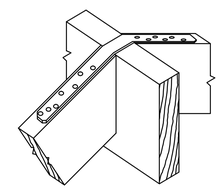

SIMPSON STRONG TIE (OR APPROVED EQUAL) AT EACH RAFTER. ATTACH DIRECTLY TO RAFTER

RIDGE STRAPPING
SCALE: N.T.S.

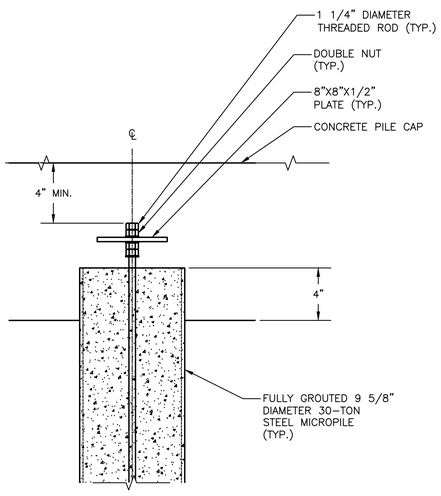

TYPICAL PILE HEAD DETAIL
SCALE: 1 1/2" = 1'-0"

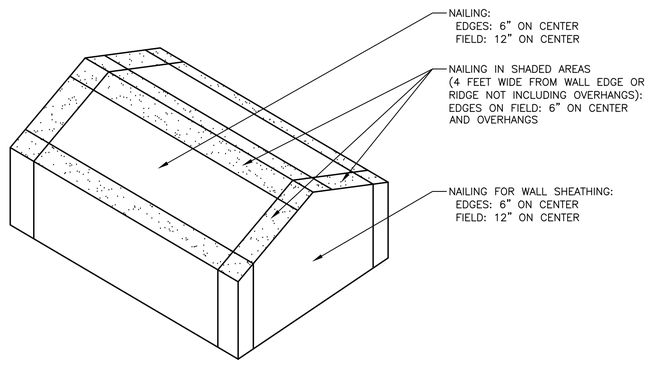

ROOF SHEATHING AND WALL SHEATHING ATTACHMENT DIAGRAMS
N.T.S.

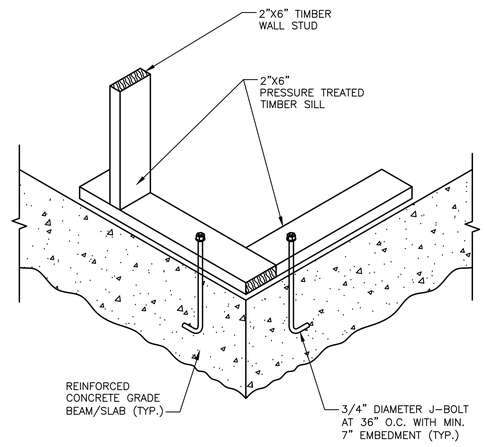

TYPICAL FLOOR FRAMING DETAIL
N.T.S.

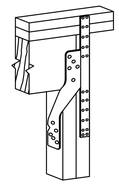

SIMPSON STRONG TIE H6 (OR APPROVED EQUAL) TYPICAL AT ALL EXTERIOR HEADER LOCATIONS.

HEADER TO JACK STUD CONNECTION
SCALE: N.T.S.

CONSULTANT INFORMATION
Savin Engineers, P.C.

CONSULTANT SEAL
STATE OF NEW YORK · LICENSED PROFESSIONAL ENGINEER · No. 065364

REVISION NUMBER	DATE	MADE BY	APP'D BY	REVISION

RECORD DRAWING CERTIFICATION
☐ AS BUILT – CHANGES AS NOTED ☐ AS BUILT – NO CHANGES

CONTRACTOR
NAME
SIGNATURE
TITLE DATE

PROJECT COORDINATOR
NAME
SIGNATURE
TITLE DATE

WESTCHESTER COUNTY, NEW YORK
DEPARTMENT OF PUBLIC WORKS AND TRANSPORTATION
DIVISION OF ENGINEERING

INFRASTRUCTURE REHABILITATION - PHASE 3
PLAYLAND PARK, RYE, NEW YORK
CROSS AXIS BUILDING F
TYPICAL SECTIONS AND DETAILS

CONTRACT NUMBER	SHEET NUMBER
22-523	CXF-S-09

DWG NO.:
SCALE: AS SHOWN
DATE: 8/23/2022
DPW FILE NUMBER 1-118-S-1107-0 REV. NO. 0

Drawing Name: G:\SavinAutocad\2060\25-Playland-Mega-3\S\CXFS-1009.dwg
Proj/Frame: 211001F02 Comments: ----
Printed by: tblackhorse Date: 19 August 2022 3:27 PM Designed by: ----
Xrefs: [TB_24X36_WestchesterCo_3.dwg] [TSG-SVLOGO.dwg] [K-A-16.dwg]

NOTES:

1. FOR STRUCTURAL NOTES, SEE DRAWING CXF–S–01.
2. FOR STRUCTURAL ABBREVIATIONS AND SYMBOLS, SEE DRAWING CXF–S–02.
3. ALL HARDWARE SHALL BE STAINLESS STEEL TYPE 316 U.O.N.

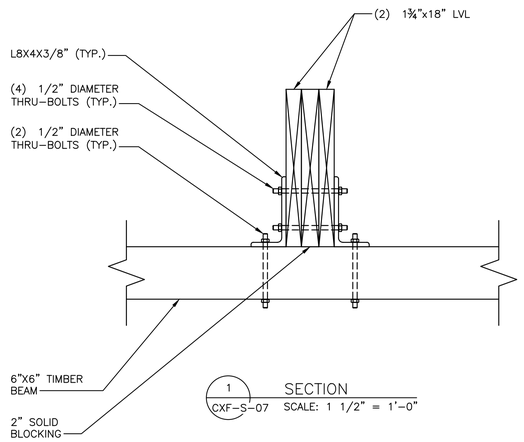

1 CXF–S–07 SECTION SCALE: 1 1/2" = 1'–0"

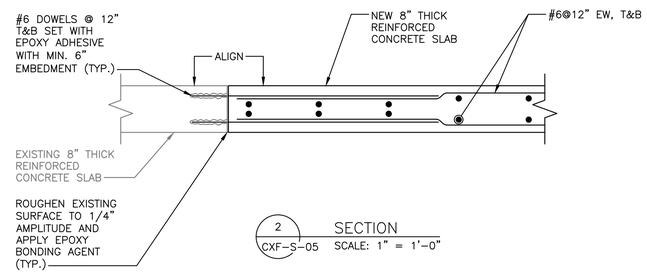

2 CXF–S–05 SECTION SCALE: 1" = 1'–0"

NOTES:

1. SEE E DRAWINGS FOR ELECTRICAL HANDHOLE QUANTITIES, SIZES & LOCATIONS. PROVIDE ADDITIONAL REINFORCEMENT FOR OPENINGS PER TYPICAL DETAIL ON CXF–S–10.

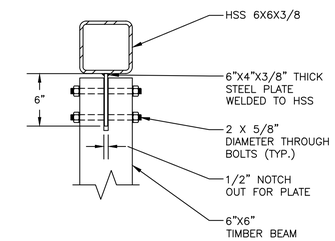

A CXF–S–07 DETAIL SCALE: 1 1/2" = 1'–0"

BASIC DEVELOPMENT LENGTH AND SPLICE LENGTH								
FOR BARS IN TENSION								
fy = 60,000 psi				fc = 4000 psi OR GREATER, NORMAL WEIGHT CONCRETE				
BASIC DEVELOPMENT LENGTH ** l d				BAR SIZE	CLASS B SPLICE LENGTH ** 1.3 x l d			
CLEAR SPACING > 3"		CLEAR SPACING < 3"			CLEAR SPACING > 3"		CLEAR SPACING < 3"	
BASIC	TOP *	BASIC	TOP *		BASIC	TOP *	BASIC	TOP *
1'–0"	1'–4"	1'–9"	2'–2"	#3	1'–4"	1'–9"	2'–2"	2'–11"
1'–4"	1'–8"	2'–2"	2'–9"	#4	1'–8"	2'–2"	2'–9"	3'–7"
1'–8"	2'–2"	2'–10"	3'–7"	#5	2'–2"	2'–10"	3'–7"	4'–8"
2'–0"	2'–6"	3'–3"	4'–2"	#6	2'–6"	3'–3"	4'–2"	5'–5"
3'–6"	4'–7"	5'–11"	7'–7"	#7	4'–7"	5'–11"	7'–7"	9'–11"
4'–0"	5'–2"	6'–9"	8'–8"	#8	5'–2"	6'–9"	8'–8"	11'–4"
4'–6"	5'–10"	7'–7"	9'–10"	#9	5'–10"	7'–7"	9'–9"	12'–9"
5'–0"	6'–5"	8'–6"	11'–10"	#10	6'–5"	8'–6"	11'–0"	13'–7"
5'–7"	7'–4"	9'–5"	12'–6"	#11	7'–4"	9'–5"	12'–6"	14'–9"

NOTES:

* TOP REINFORCEMENT IS HORIZONTAL REINFORCEMENT SO PLACED THAT MORE THAN 12 INCHES OF FRESH CONCRETE IS CAST IN THE MEMBER BELOW THE REINFORCEMENT

** LENGTHS SHOWN IN CHART SHALL BE MODIFIED WHERE REQUIRED TO CONFORM TO THE PROVISIONS OF ACI 318, SECTION 12.2

*** UNCOATED REINFORCEMENT

DEVELOPMENT LENGTH OF STANDARD HOOKS		
FOR BARS IN TENSION		
fy = 60,000 psi fc = 4000 psi OR GREATER, NORMAL WEIGHT CONCRETE		
	DEVELOPMENT LENGTH, l dh	
BAR SIZE	BASIC	W/CONC. COVER *
#3	8"	6"
#4	10"	7"
#5	1'–0"	9"
#6	1'–3"	11"
#7	1'–5"	1'–0"
#8	1'–7"	1'–2"
#9	1'–10"	1'–4"
#10	2'–1"	1'–6"
#11	2'–3"	1'–7"

NOTES:

* SIDE COVER NORMAL TO PLANE OF HOOK AT LEAST 2 1/2"; AND FOR 90° HOOK, END COVER BEYOND OUTSIDE END OF HOOK AT LEAST 2".

** UNCOATED REINFORCEMENT

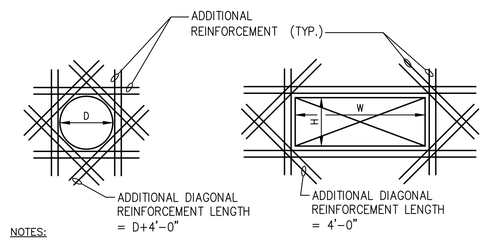

NOTES:

1. PROVIDE ADDITIONAL REINFORCEMENT WHEN OPENING SIZE (D, W, OR H) IS EQUAL TO OR GREATER THAN SPECIFIED BAR SPACING
2. EXTEND REINFORCEMENT A MINIMUM OF 48 BAR DIAMETERS BEYOND THE FACE OF THE OPENING.
3. PROVIDE ONE HALF THE AREA OF CUT BARS, EACH SIDE, MINIMUM 2 #4 @ 6" EF.
4. PROVIDE ADDITIONAL DIAGONAL REINFORCEMENT AT ALL OPENINGS.
   A. OPENINGS (D, H, OR W) UP TO 1'–0": 2 #4 @ 6" EF
   A. OPENINGS (D, H, OR W) UP TO 2'–0": 2 #5 @ 6" EF
   A. OPENINGS (D, H, OR W) UP TO 4'–0": 2 #6 @ 6" EF
5. WHERE REINFORCING AROUND OPENINGS IS SHOWN ON OTHER DRAWINGS PROVIDE ADDITIONAL REINFORCING AS PER THIS DETAIL.

TYPICAL ADDITIONAL REINFORCEMENT AT OPENING > 12" DIAMETER

SCALE: N.T.S.

Drawing Name: G:\SavinAutocad\2060\25–Playland–Mega–3\S\CXFS–1010.dwg
Proj#: Projectname: 211001F02 Comments: ----
Printed by: tblackhorse Date: 19 August 2022 3:27 PM Designed by: ----
Xrefs: [TB_24X36_WestchesterCo_3.dwg] [TSG–SVLOGO.dwg] [CXF–S–1009.dwg]

CONSULTANT INFORMATION

Savin Engineers, P.C.

CONSULTANT SEAL

STATE OF NEW YORK · LICENSED PROFESSIONAL ENGINEER · No. 065364

REVISION NUMBER	DATE	MADE BY	APP'D BY	REVISION

RECORD DRAWING CERTIFICATION

☐ AS BUILT – CHANGES AS NOTED ☐ AS BUILT – NO CHANGES

CONTRACTOR
NAME
SIGNATURE
TITLE DATE

PROJECT COORDINATOR
NAME
SIGNATURE
TITLE DATE

WESTCHESTER COUNTY, NEW YORK
DEPARTMENT OF PUBLIC WORKS AND TRANSPORTATION
DIVISION OF ENGINEERING

INFRASTRUCTURE REHABILITATION - PHASE 3
PLAYLAND PARK, RYE, NEW YORK
CROSS AXIS BUILDING F
SECTIONS AND DETAILS

CONTRACT NUMBER	SHEET NUMBER
22-523	CXF-S-10
DWG NO.:	
SCALE: AS SHOWN	
DATE: 8/23/2022	
DPW FILE NUMBER 1-118-S-1108-0	REV. NO. 0

FIRE PROTECTION SAFETY NOTES:

1. SPECIAL PRECAUTION SHALL BE TAKEN BY THE CONTRACTOR SO THAT EQUIPMENT OF THIS APPLICATION AND ITS INSTALLATION WILL NOT AFFECT THE FOLLOWING: EGRESS TO AND FROM THE BUILDING. FIRE SAFETY OR CREATE A FIRE HAZARD. STRUCTURAL SAFETY OF THE BUILDING. ACCUMULATION OF DUST AND DEBRIS. (THE CONTRACTOR SHALL LEAVE THE SITE BROOM CLEANED EACH DAY.)

FIRE PROTECTION GENERAL NOTES:

1. DIMENSIONS, LOCATIONS AND SIZES INDICATED ON THE PLANS AND THE ELEVATION ARE APPROXIMATE AND SHALL BE VERIFIED BY FIELD INSPECTION BY THE CONTRACTOR.

2. SOME EXISTING PIPE AND EQUIPMENT IS SHOWN FOR CLARIFICATION OF THIS CONTRACT, BUT MUST BE PROTECTED BY THE CONTRACTOR.

3. NO WORK SHALL BE INITIATED UNTIL A WORK PERMIT IS OBTAINED BY THE CONTRACTOR AND A SAFETY PLAN IS SUBMITTED AND IS APPROVED.

4. CONTRACTOR IS RESPONSIBLE FOR OBTAINING ALL PERMITS, EQUIPMENT USE PERMITS, ALL INSPECTION APPROVALS, AND LETTER OF COMPLETION FROM THE DEPARTMENT OF BUILDINGS FOR WORK UNDER THIS CONTRACT AS APPLICABLE.

5. ANY EXISTING MATERIALS, PIPING, ETC., NOT INDICATED FOR DEMOLITION WHICH ARE REMOVED BY THE CONTRACTOR IN ORDER TO INSTALL NEW WORK SHALL BE REINSTALLED BY THE CONTRACTOR. IF EXISTING WORK IS DAMAGED IT SHALL BE REPLACED AT THE CONTRACTOR'S EXPENSE. ALL SURFACES OR FINISHES THAT ARE DAMAGED OR OTHERWISE AFFECTED BY WORK OF THIS CONTRACT SHALL BE PATCHED, REPAIRED, PAINTED OR REPLACED TO MATCH THE PRE-EXISTING CONDITION AND THE NEW WORK.

6. CONTRACTOR MAY PROPOSE ALTERNATE ROUTING IN DIFFICULT AREAS WHERE REPLACEMENT IN KIND IS NOT PRACTICAL. ANY AND ALL ALTERNATE ROUTING IS SUBJECT TO PRIOR REVIEW AND APPROVAL BY THE ENGINEER.

7. A FIRE WATCH SHALL BE PROVIDED WHEN SPRINKLER COVERAGE IS IMPACTED TO MAINTAIN BUILDING OPERATIONS OR AS REQUIRED.

FIRE PROTECTION SYMBOL LIST

— — — — — FS DRY— —	NEW DRY SPRINKLER PIPING
— — — — — DRY(E) —	EXISTING TO REMAIN DRY SPRINKLER PIPING
○	NEW UPRIGHT SPRINKLER HEAD
○	EXISTING UPRIGHT SPRINKLER HEAD
●	NEW CONCEALED PENDENT SPRINKLER HEAD-ORDINARY TEMPERATURE
	SPRINKLER DRY PIPE VALVE
	FIRE HOSE CABINET
	SIAMESE CONNECTION
	CHECK VALVE
	CHECK VALVE W/ ALARM
	WATER MOTOR ALARM BELL
⊗	PIPE RISER
	PIPE DROP
	PIPE UP
	POINT OF CONNECTION
	POINT OF DISCONNECTION
	PREACTION 6" BELL
	SOLENOID VALVE
	OS & Y VALVE
#	REVISION SYMBOL
F#	REFER TO SUPPLEMENTAL FIGURE INDICATED BY NUMBER (I.E. F2 REFERS TO FIGURE 2)
XXX / X	EQUIPMENT TAG / EQUIPMENT NUMBER
X / X-XXX	DETAIL TAG/ CALL OUT TAG / FIRE PROTECTION SHEET NUMBER

SHOP DWGS/EQUIPMENT SUBMITTALS

THE CONTRACTOR MUST SUBMIT ANY EQUIPMENT ALTERNATES 2 WEEKS PRIOR TO BIDS DUE FOR REVIEW AND COMMENTS. ALTERNATES MUST BE ACCEPTED BY LIRO ENGINEERS, INC., THE ARCHITECT, AND THE OWNER PRIOR TO INCLUSION IN BID. THE CONTRACTOR IS RESPONSIBLE TO COORDINATE EQUIPMENT ALTERNATES WITH OTHER TRADES AND MAKE ADJUSTMENTS TO THE MECHANICAL SYSTEMS, AS REQUIRED, TO ACCOMMODATE THESE NEW ALTERNATES.

THE CONTRACTOR IS RESPONSIBLE TO SUBMIT ALL OF THE FOLLOWING ITEMS FOR REVIEW/APPROVAL BY NO MORE THAN 3 WEEKS AFTER THE CONTRACTOR'S CONTRACT/BID HAS BEEN AWARDED. ALL SUBMITTALS MUST BE SENT TOGETHER AS A **SINGLE PACKAGE** WITH MANUFACTURER'S SPECIFIC MODELS AND SPECIFICATIONS OUTLINED TO MATCH THE SCHEDULED REQUIREMENTS. EACH SUBMITTAL MUST BE LABELED WITH THE UNIT DESIGNATION USED WITHIN THIS DRAWING SET. IF THE SUBMITTAL PACKAGE IS FOUND TO BE INCOMPLETE UPON RECEIPT, THE PACKAGE WILL BE HELD AND WILL NOT BE REVIEWED UNTIL THE REMAINDER OF THE PACKAGE IS RECEIVED. SIX (6) HARD COPIES OF THE SUBMITTAL PACKAGE MUST BE SENT TO LIRO ENGINEERS, INC. DIGITAL SHOP DRAWING SUBMISSIONS ARE ACCEPTABLE.

SCOPE OF WORK:

1. THE INSTALLATION OF NEW DRY FS EQUIPMENT.

2. PROPOSED FIRE SPRINKLER HEAD LOCATIONS AND PIPING ARE AS NOTED ON PLANS. EXACT PIPING FROM THE FIRE SPRINKLER MAIN TO ALL HEADS IS TO BE COORDINATED AND HYDRAULICALLY CALCULATED BY THE F.S.C. & SUBMITTED TO THE ENGINEER FOR APPROVAL.

NOTE: THIS SCOPE OF WORK DESCRIPTION IS PROVIDED TO GIVE AN OVERALL "MACRO" DESCRIPTION OF THIS PROJECT. F.S.C. IS RESPONSIBLE TO REVIEW ALL ENGINEERING AND ARCHITECTURAL DRAWINGS AND VISIT THE SITE IF NEEDED, PRIOR TO SUBMISSION OF BID.

SPRINKLER HEAD SCHEDULE

	MANUFACTURER	MODEL	DESCRIPTION	K-FACTOR	QUANTITY
●	RELIABLE	F1FR	DRY ORDINARY CONCEALED SPRINKLE HEAD	5.6	12

ABBREVIATION

ACV	ALARM CHECK VALVE
B.O.P.	BOTTOM OF PIPE
(E)	EXISTING TO REMAIN
F.S.C.	FIRE SPRINKLER CONTRACTOR
P.C	PLUMBING CONTRACTOR
TYP	TYPICAL
W/	WITH
NYS	NEW YORK STATE
U/P	UNDERGROUND PIPING
W	WATER

DRAWING NOTATIONS

	DRAWING NOTE TAB
	RISER DESIGNATION
	POINT OF CONNECTION
	POINT OF DISCONNECTION

DESIGN CRITERIA

1. AREA OF APPLICATION = 1950 SQ. FT

2. OCCUPANCY CLASSIFICATION = ORDINARY HAZARD GROUP 2

3. MAXIMUM COVERAGE PER SPRINKLER HEAD = 130 SQ. FT

4. DESIGN DENSITY = 0.20 GPM/SQ. FT

5. NUMBER OF SPRINKLER HEADS WITHIN AREA OF APPLICATION = 26

6. "K" FACTOR OF SPRINKLER HEADS = 5.6

7. DESIGN CRITERIA REQUIREMENTS BASED ON:
   - 2020 BUILDING CODE OF NEW YORK STATE
   - 2016 NFPA 13

ORDINARY HAZARD PIPE SCHEDULE

STEEL		COPPER	
1IN.	2 SPRINKLERS	1IN.	2 SPRINKLERS
1 1/4 IN.	3 SPRINKLERS	1 1/4 IN.	3 SPRINKLERS
1 1/2IN.	5 SPRINKLERS	1 1/2IN.	5 SPRINKLERS
2 IN.	10 SPRINKLERS	2 IN.	12 SPRINKLERS
2 1/2 IN.	20 SPRINKLERS	2 1/2 IN.	25 SPRINKLERS
3 IN.	40 SPRINKLERS	3 IN.	45 SPRINKLERS
3 1/2 IN.	65 SPRINKLERS	3 1/2 IN.	75 SPRINKLERS
4 IN.	100 SPRINKLERS	4 IN.	115 SPRINKLERS
5 IN.	160 SPRINKLERS	5 IN.	180 SPRINKLERS
6 IN.	275 SPRINKLERS	6 IN.	300 SPRINKLERS
8 IN.	SEE SECTION 8.2	8 IN.	SEE SECTION 8.2

FOR SI UNITS, 1 IN. = 25.4 MM.

MAX DISTANCE BETWEEN HANGERS (FT.-IN.)

	NOMINAL PIPE SIZE (IN.)											
	3/4	1	1 1/4	1 1/2	2	2 1/2	3	3 1/2	4	5	6	8
STEEL PIPE EXCEPT THREADED LIGHTWALL	N/A	12-0	12-0	15-0	15-0	15-0	15-0	15-0	15-0	15-0	15-0	15-0
THREADED LIGHTWALL STEEL PIPE	N/A	12-0	12-0	12-0	12-0	12-0	12-0	N/A	N/A	N/A	N/A	N/A
COPPER TUBE	8-0	8-0	10-0	10-0	12-0	12-0	12-0	15-0	15-0	15-0	15-0	15-0

CODE REFERENCE

2020 NEW YORK STATE BUILDING CODE
2016 NFPA 13

FIRE PROTECTION NOTES

1. THE DRAWINGS SHOW THE LAYOUT OF THE SYSTEM AND INDICATE THE APPROXIMATE LOCATIONS OF EQUIPMENT AND PIPING. CONTRACTOR IS CAUTIONED NOT TO SCALE THE DRAWINGS. THE PIPING SHALL BE RUN APPROXIMATELY IN THE AREAS AS INDICATED ON THE DRAWINGS, [HOWEVER, TO THE ARRANGEMENT OF THE PIPING SYSTEMS AS MAY BE REFERENCED WITH WORK OF OTHER TRADES]. CONTRACTOR SHALL REVIEW AND COORDINATE WITH STRUCTURAL, ELECTRICAL AND MECHANICAL DRAWINGS. PARTITIONS, STRUCTURAL MEMBERS, ETC. ARE DESIGNED TO BE FURRED OR CLOSED IN AND TO INCLUDE ROUGH-IN PIPING. CONTRACTOR SHALL FURNISH ALL OFFSETS, ADDITIONAL FITTINGS, ETC. WHETHER SHOWN ON DRAWINGS OR NOT, AS REQUIRED TO MEET INSTALLATION CONDITIONS.

2. CONTRACTOR IS TO COMPLY WITH LATEST NFPA AND N.Y.S. CODES, AND COORDINATE HIS WORK WITH OTHER TRADES AND MAKE NECESSARY ADJUSTMENTS.

3. CONTRACTOR IS TO PREPARE SHOP DRAWINGS FOR ENGINEERS REVIEW AFTER MAKING A COMPLETE FIELD SURVEY.

4. CONTRACTOR IS TO REPORT ANY CONDITION REQUIRING CHANGES FROM PLANS TO ENGINEER PRIOR TO STARTING WORK.

5. BRANCH LINES AND MAINS (1 1/2" OR LESS) - SCHEDULE 40 FM APPROVED

6. BRANCH LINES AND MAINS (2" OR LARGER) - THINWALL (THICKNESS LESS THEN SCHEDULE 40 MORE THEN SCHEDULE 10 & FM APPROVED)

7. CONTRACTOR IS TO PERFORM A HYDROSTATIC TEST FOR 2 HRS. @ 200 PSI WITH NO LEAKAGE AND PROVIDE A TEST CERTIFICATE TO ENGINEER

8. CONTRACTOR IS TO EMPLOY EXPERIENCED WORKMEN WHO ARE TO FAMILIARIZE THEMSELVES WITH THE BUILDING AND OBSERVE SAFETY REQUIREMENTS.

9. CONTRACTOR TO ADJUST HEAD LOCATION TO COORDINATE WITH LIGHTS, DUCTS, ETC.

10. PERMIT FROM LOCAL AUTHORITY, TO BE OBTAINED BY CONTRACTOR.

11. ALL WORK TO BE APPROVED BY OWNERS ENGINEER, STATE AUTHORITIES HAVING JURISDICTION AND MUNICIPAL FIRE, PLUMBING, BUILDING AND WATER DEPARTMENTS.

12. U.L. AND/OR FM APPROVED EQUIPMENT TO BE USED.

13. WORK TO BE IN ACCORDANCE WITH MUNICIPAL WATER DEPT. RULES

14. SYSTEM IS TO BE MAINTAINED AND TESTED BY THE OWNER OR HIS AGENT IN ACCORDANCE WITH APPLICABLE LOCAL AND STATE CODES AND IN CONFORMANCE WITH NFPA 13A, LATEST EDITION.

15. IF BUILDING OCCUPANCY OR CONSTRUCTION CHANGES, THE SPRINKLER SYSTEM IS TO BE UPDATED ACCORDINGLY BY THE OWNER OR HIS AGENT.

16. CONTRACTOR IS TO NEATLY CUT AND PATCH IN A FIRST CLASS WORKMANLIKE MANNER, ALL HOLES AND PENETRATIONS IN WALLS, CEILINGS, FLOORS, PARTITIONS, ETC.

17. THE ENGINEER IS NOT RETAINED FOR SUPERVISION.

18. THE INSTALLATION OF THIS SYSTEM WILL REQUIRE THE CLOSING OF ONE OR MORE FIRE PROTECTION CONTROL VALVES. THESE VALVE CLOSURES SHOULD BE CLOSELY COORDINATED WITH THE OWNERS WHO SHOULD CONTACT THE LOCAL FIRE DEPARTMENT, INSURANCE INTERESTS, ETC. PRIOR TO VALVE CLOSURES.

19. ACTUAL DESIGN DENSITY MAY EXCEED STANDARDS, HOWEVER, IT IS A MINIMUM TO BE USED BY THE CONTRACTOR.

20. ALL ALARMS RELATING TO THE SPRINKLER SYSTEM SHOULD BE ACTIVATED UPON PLACING THE SPRINKLER SYSTEM IN SERVICE.

21. THE INSTALLATION COMPONENTS, SIZING, SPACING, MATERIALS LOCATION CLEARANCES, POSITION AND TYPE OF SYSTEM SHALL CONFORM TO NFPA 13 AND NYS UNIFORM FIRE PREVENTION BUILDING CODE LATEST EDITION.

22. SPRINKLERS SHALL BE PROTECTED AGAINST FREEZING AND INJURY AS PER NFPA CODE.

23. INSPECTION AND TESTS OF SPRINKLER SYSTEM SHALL BE CONDUCTED AS SPECIFIED IN NFPA CODE.

24. WATER SUPPLY TEST PIPES AND GAUGES SHALL BE PROVIDED AS SPECIFIED IN CHAPTER 2-9 OF NPPA 13.

25. PIPING SPECIFICATIONS, PIPE SCHEDULES, SYSTEM TEST PIPES, PROTECTION AGAINST CORROSION, DAMAGE FITTINGS, VALVES, HANGERS, SPRINKLERS, GUARDS AND SHIELDS SHALL BE IN ACCORDANCE WITH CHAPTER 3 AND CHAPTER 8 OF NFPA 13, LATEST EDITION. PIPING SHALL BE PAINTED TO PREVENT CORROSION.

26. STOCK OF EXTRA SPRINKLERS WILL BE FURNISHED AS PER CHAPTER 3 OF NFPA 13 (REQUIRED FOR EACH TEMPERATURE RATING).

27. SPRINKLER ALARMS WILL BE IN ACCORDANCE WITH NFPA 13.

28. SPACING, LOCATION AND POSITION OF SPRINKLERS SHALL BE IN ACCORDANCE WITH CHAPTER 4 OF NFPA 13.

29. ALL PIPING PASSING THROUGH WALLS SHALL COMPLY WITH NFPA FOR FIRE PROOFING.

30. DISTANCE OF SPRINKLERS FROM HEAT SOURCES SHALL BE IN ACCORDANCE WITH TABLE 3-16.6.3 OF NFPA 13.

31. PROVIDE WATER SUPPLY LETTER WITH FLOW TEST DATA.

32. ALL PIPES PASSING THROUGH FOUNDATION WALLS TO BE PROTECTED.

33. ALL VALVES SHALL BE IDENTIFIED AS REQUIRED BY NFPA 13.

34. DRAINAGE TO CONFORM TO CHAPTER 3-11 OF NFPA 13.

35. A ONE PIECE REDUCING FITTING OF GOOD DESIGN SHOULD BE USED WHEREVER A CHANGE IS MADE IN THE SIZE OF PIPE AS PER SECTION 3-12.2.7 OF NFPA 13.

36. ALL VALVES ON CONNECTIONS TO WATER SUPPLIES AND IN SUPPLY TO SPRINKLERS SHALL BE APPROVED O.S. &Y. OR APPROVED INDICATOR TYPE WITH TAMPER SWITCHES.

37. DRAIN VALVES AND TEST VALVES SHALL BE APPROVED TYPE AS PER SECTION 3-14.1.2 OF NFPA 13.

38. HANGERS SHALL BE OF A TYPE APPROVED FOR USE WITH THE PIPE OR TUBE INVOLVED, SPRINKLER PIPING SHOULD BE SUPPORTED BY ADJUSTABLE HANGERS PER NFPA 13, SECTION 3-15.

39. PROVISIONS SHOULD BE MADE TO FACILITATE FLUSHING SYSTEM PIPING BY PROVIDING FLUSHING CONNECTIONS CONSISTING OF A CAPPED NIPPLE 4" LONG ON THE END OF THE CROSS MAIN, AS PER SECTION 3- 8.2 OF NFPA 13.

40. SPRINKLER SHALL BE AN APPROVED TYPE AS PER SECTION 3-16 OF NFPA 13.

41. TEMPERATURE RATING SHALL COMPLY WITH SEC. 3-16.6 OF NFPA 13.

42. CLEARANCES BETWEEN SPRINKLERS AND STORAGE OR PARTITIONS AS PER NFPA 13, SECTION 4-2.5

43. SPACING AND LOCATION OF SPRINKLER SHALL COMPLY WITH CHAPTER 4 NFPA 13.

44. CONTRACTOR TO COORDINATE HIS WORK WITH OTHER TRADES.

45. ONLY EXPERIENCED SPRINKLER MECHANICS TO WORK ON THE SYSTEM.

46. ALL PIPING TO BE A MINIMUM OF 1" UNLESS OTHERWISE NOTED.

47. PROVIDE SHOP DRAWINGS WITH HYDRAULIC CALCULATIONS FOR REVIEW TO LOCAL FIRE MARSHALL AND INSURANCE UNDERWRITER AND ENGINEER FOR APPROVAL PRIOR TO INSTALLATION.

48. ALL FIRE PROTECTION EQUIPMENT SHALL BE INSTALLED PER MANUFACTURER'S REQUIREMENTS/SPECIFICATIONS.

49. ALL FIRE PROTECTION EQUIPMENT SHALL BE MOUNTED ON MINIMUM 6" HIGH CONCRETE PAD UNLESS OTHERWISE NOTED (PAVER AND CINDER BLOCK IS NOT ACCEPTABLE).

50. PERMIT IS REQUIRED PRIOR TO INSTALLATION, TO INCLUDE SIGNED AND SEALED SHOP DRAWINGS, HYDRAULIC CALCULATION, SHOP DRAWINGS, MANUFACTURERS INFORMATION ON HEADS AND APPLIANCES, COMPLIANCE WITH NFPA 13 AND SECTION 903 2020 NYSBC/FC.

FIRE PROTECTION DRAWING LIST

SHEET NO.	SHEET NAME	REVISON NO.	REVISION DATE
CXF-FP-01	FIRE PROTECTION NOTES, SYMBOLS, ABBREVIATIONS, AND DRAWING LIST	0	-
CXF-FP-11	FIRE PROTECTION GROUND FLOOR DEMOLITION RCP	0	-
CXF-FP-21	FIRE PROTECTION GROUND FLOOR CONSTRUCTION RCP	0	-
CXF-FP-81	FIRE PROTECTION DETAILS	0	-

CONSULTANT INFORMATION

LiRo Engineers, Inc.
A LiRo Group Company
Syosset, N.Y. 516-214-8157[T]

CONSULTANT SEAL

STATE OF NEW YORK · FRANK F. ULLISE · No. 0901111 · LICENSED PROFESSIONAL ENGINEER

REVISION NUMBER	DATE	MADE BY	APP'D BY	REVISION

RECORD DRAWING CERTIFICATION

☐ AS BUILT – CHANGES AS NOTED ☐ AS BUILT – NO CHANGES

CONTRACTOR
NAME
SIGNATURE
TITLE DATE

PROJECT COORDINATOR
NAME
SIGNATURE
TITLE DATE

WESTCHESTER COUNTY, NEW YORK
DEPARTMENT OF PUBLIC WORKS AND TRANSPORTATION
DIVISION OF ENGINEERING

INFRASTRUCTURE REHABILITATION - PHASE 3
PLAYLAND PARK, RYE, NEW YORK
CROSS AXIS BUILDING F
FIRE PROTECTION NOTES, SYMBOLS, ABBREVIATIONS & DWG LIST

CONTRACT NUMBER	22-523
SHEET NUMBER	CXF-FP-01
DWG NO.:	360 of 664
SCALE:	AS INDICATED
DATE:	08/23/2022
DPW FILE NUMBER	1-118-FP-1109-0
REV. NO.	0

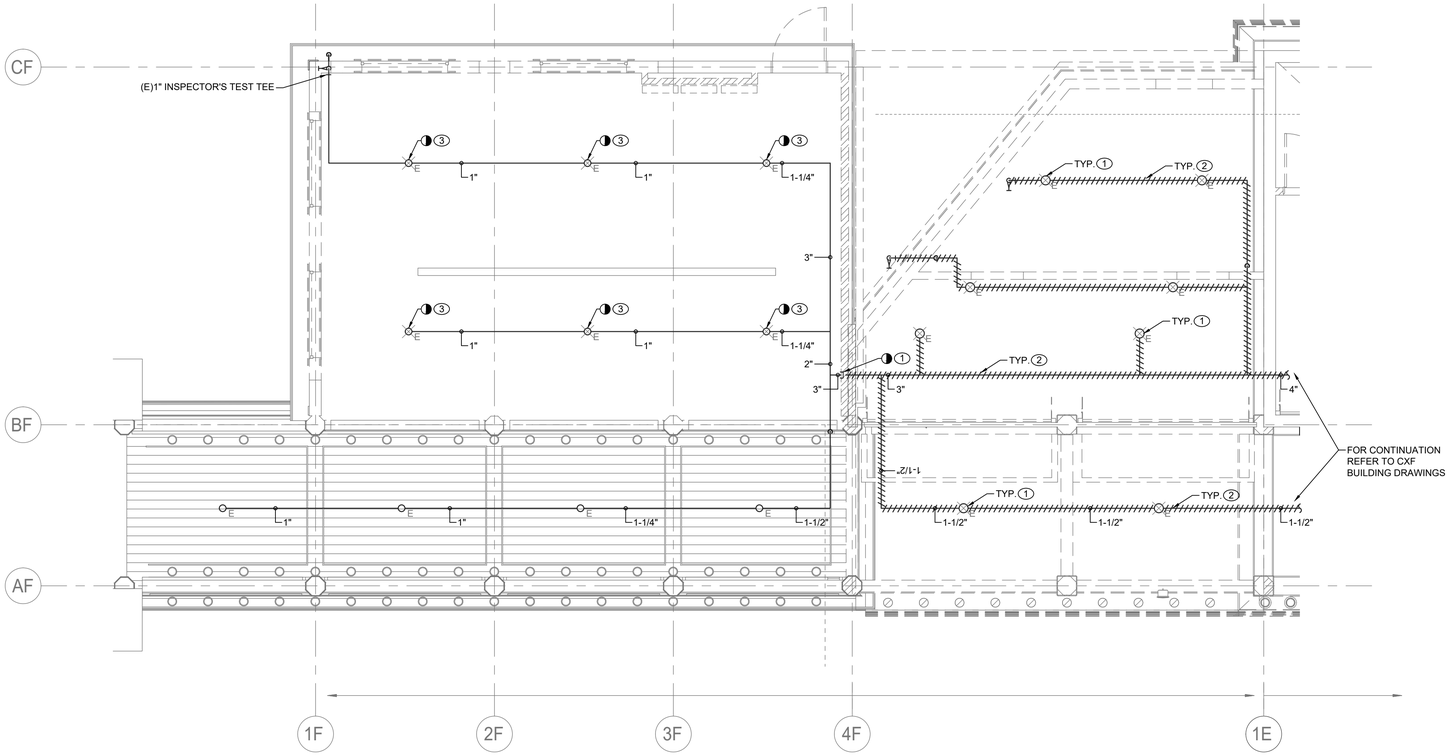

FIRE PROTECTION GROUND FLOOR DEMOLITION RCP

SCALE: 1/4" = 1'-0

SPRINKLER DEMOLITION NOTES:

1. DEMOLISH ALL EXISTING SPRINKLER HEADS WITHIN THE CXF BUILDING AS INDICATED ON PLANS.
2. DEMOLISH ALL EXISTING DRY SPRINKLER PIPING WITHIN THE CXF BUILDING INCLUDING ATTIC SPACE AS INDICATED ON PLANS.
3. REMOVE EXISTING UPRIGHT SPRINKLER HEAD AND TEMPORARILY CAP PIPING FOR FUTURE CONCEALED SPRINKLER.

GENERAL NOTES:

1. COORDINATE WITH FACILITY PRIOR TO SHUTDOWN OF FIRE PROTECTION SYSTEM FOR ANY DEMOLITION AND CONSTRUCTION WORK.
2. CONTRACTOR SHALL PROVIDE FIRE WATCH AS NEEDED FOR THE DEPENDENT BUILDINGS BY THE DEMOLITION AND CONSTRUCTION WORK WHILE SPRINKLER COVERAGE IS IMPACTED.
3. CONTRACTOR TO COORDINATE WITH FACILITY WHEN WORKING AROUND OR ABOVE THE RIDE COMPONENTS, AND PROVIDE ALL NECESSARY MEASURES TO PROTECT THESE COMPONENTS PER THE REQUIREMENTS OF THE FACILITY.

CONSULTANT INFORMATION

LiRo Engineers, Inc.
A LiRo Group Company
Syosset, N.Y. 516-214-8157[T]

CONSULTANT SEAL

STATE OF NEW YORK · FRANK F. ULLISE · No. 090111-1 · LICENSED PROFESSIONAL ENGINEER

REVISION NUMBER	DATE	MADE BY	APP'D BY	REVISION

RECORD DRAWING CERTIFICATION

☐ AS BUILT – CHANGES AS NOTED ☐ AS BUILT – NO CHANGES

CONTRACTOR
NAME
SIGNATURE
TITLE DATE

PROJECT COORDINATOR
NAME
SIGNATURE
TITLE DATE

WESTCHESTER COUNTY, NEW YORK
DEPARTMENT OF PUBLIC WORKS AND TRANSPORTATION
DIVISION OF ENGINEERING

INFRASTRUCTURE REHABILITATION - PHASE 3
PLAYLAND PARK, RYE, NEW YORK
CROSS AXIS BUILDING F
FIRE PROTECTION GROUND FLOOR DEMOLITION RCP

CONTRACT NUMBER	22-523
SHEET NUMBER	CXF-FP-11
DWG NO.:	361 of 664
SCALE:	AS INDICATED
DATE:	08/23/2022
DPW FILE NUMBER	1-118-FP-1110-0
REV. NO.	0

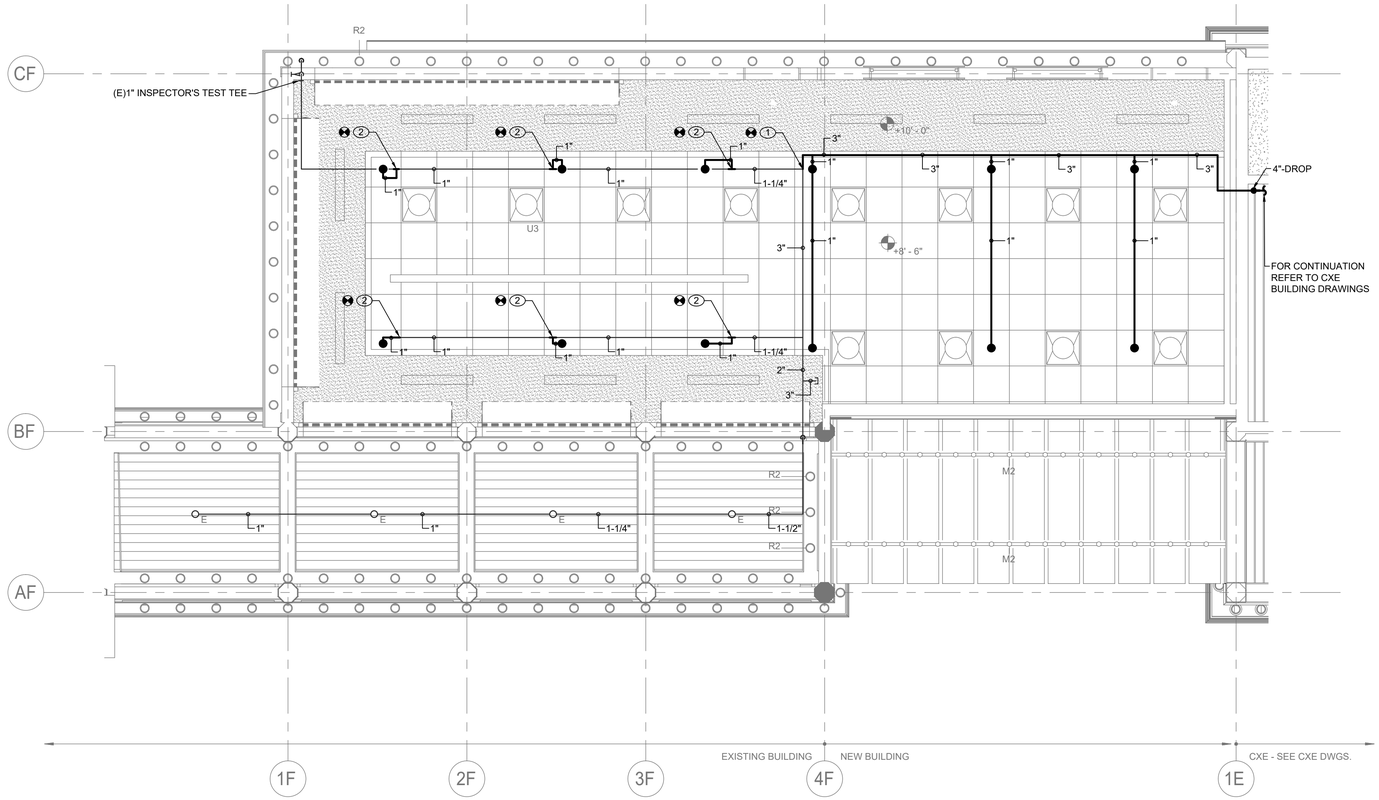

FIRE PROTECTION GROUND FLOOR CONSTRUCTION RCP

SCALE: 1/4" = 1'-0

SPRINKLER CONSTRUCTION NOTES:

1. CONNECT NEW 3" SPRINKLER PIPE TO EXISTING.
2. CONNECT AND EXTEND NEW SPRINKLER PIPING TO NEW CONCEALED SPRINKLERS FROM EXISTING PIPING.

GENERAL NOTES:

1. ALL DISTRIBUTION PIPING, SHALL BE PAINTED. REFER TO SPECIFICATION FOR PAINT TYPE AND APPLICATION PROCEDURE.
2. COORDINATE WITH FACILITY PRIOR TO SHUTDOWN OF FIRE PROTECTION SYSTEM FOR ANY DEMOLITION AND CONSTRUCTION WORK.
3. CONTRACTOR SHALL PROVIDE FIRE WATCH AS NEEDED FOR ALL AFFECTED BUILDINGS WHILE SPRINKLER COVERAGE IS IMPACTED.
4. CONTRACTOR TO COORDINATE WITH FACILITY WHEN WORKING AROUND OR ABOVE THE RIDE COMPONENTS, AND PROVIDE ALL NECESSARY MEASURES TO PROTECT THESE COMPONENTS PER THE REQUIREMENTS OF THE FACILITY.
5. UPON COMPLETION, SYSTEM SHALL BE TESTED FOR PROPER OPERATION.
6. PROVIDE REQUIRED PITCH AND DRAINS FOR DRY SPRINKLER PIPING FOR FULL WATER REMOVAL FROM THE SYSTEM.
7. ADJUST HEIGHT OF THE EXISTING SPRINKLER PIPING AS NECESSARY TO ACCOMMODATE NEW DROPPED CEILING.

CONSULTANT INFORMATION

LiRo Engineers, Inc.
A LiRo Group Company
Syosset, N.Y. 516-214-8157[T]

CONSULTANT SEAL

STATE OF NEW YORK · FRANK F. GUISE · No. 090111-1 · LICENSED PROFESSIONAL ENGINEER

REVISION NUMBER	DATE	MADE BY	APP'D BY	REVISION

RECORD DRAWING CERTIFICATION

☐ AS BUILT – CHANGES AS NOTED ☐ AS BUILT – NO CHANGES

CONTRACTOR: NAME / SIGNATURE / TITLE / DATE

PROJECT COORDINATOR: NAME / SIGNATURE / TITLE / DATE

WESTCHESTER COUNTY, NEW YORK
DEPARTMENT OF PUBLIC WORKS AND TRANSPORTATION
DIVISION OF ENGINEERING

INFRASTRUCTURE REHABILITATION - PHASE 3
PLAYLAND PARK, RYE, NEW YORK
CROSS AXIS BUILDING F
FIRE PROTECTION GROUND FLOOR CONSTRUCTION RCP

CONTRACT NUMBER	22-523
SHEET NUMBER	CXF-FP-21
DWG NO.:	362 of 664
SCALE:	AS INDICATED
DATE:	08/23/2022
DPW FILE NUMBER	1-118-FP-1111-0
REV. NO.	0

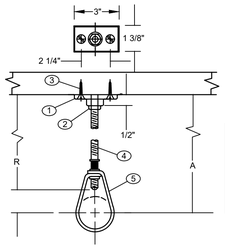

COMPONENTS

1. CLIP (CEILING FLANGE)
2. HEX NUT
3. WOOD SCREW
4. HANGER ROD
5. ADJUSTABLE HANGER RING

NFPA REQUIREMENTS / LIMITATIONS

1. NFPA 13 PERMITS THE USE OF 2 SCREW CEILING FLANGES ONLY
2. HAVING DIMENSIONS NOT LESS THAN THOSE OF NO. 18 X 1 1/2" WOOD SCREWS. DRIVE SCREWS AND NAILS ARE NOT ACCEPTABLE FASTENERS AND WOOD SCREWS ARE NOT TO BE DRIVEN.
3. FOR PIPE SIZES UP TO 2" AND IT CALLS FOR THE USE OF SCREWS

DESIGN DATA FOR CLIP HANGERS

NOMINAL PIPE SIZE	MINIMUM A DIMENSION	HANGER TAKEOUT	ROD DIAMETER	FASTENERS	
	INCHES	INCHES	INCHES	QTY	ITEMS
1/2	3 3/4	-1 1/4	3/8	1 2 1	3/8" CEILING FLANGE (CLIP) NO. 18 X 1 1/2" FLAT HEAD WOOD SCREWS 3/8" HEX NUT
3/4	3 3/4	-1 1/4	"		SEE ABOVE
1	3 3/4	-1 1/4	"		" "
1 1/4	4	-1 1/2	"		" "
1 1/2	4	-1 1/2	"		" "
2	4 1/4	-1 3/4	"		" "

1 / FP-81 PIPE HANGER DETAIL

SCALE: NOT TO SCALE

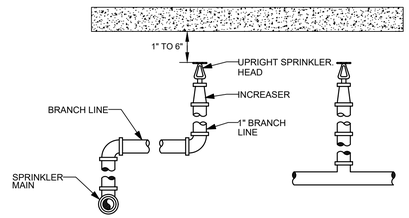

2 / FP-81 UPRIGHT SPRINKLER DETAIL

SCALE: NOT TO SCALE

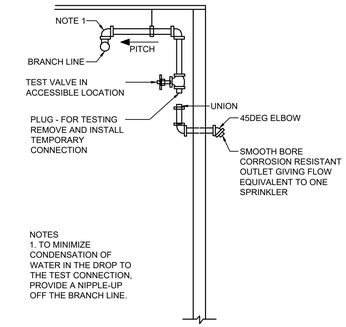

NOTES
1. TO MINIMIZE CONDENSATION OF WATER IN THE DROP TO THE TEST CONNECTION, PROVIDE A NIPPLE-UP OFF THE BRANCH LINE.

3 / FP-81 DRY PIPE TEST CONNECTION

SCALE: NOT TO SCALE

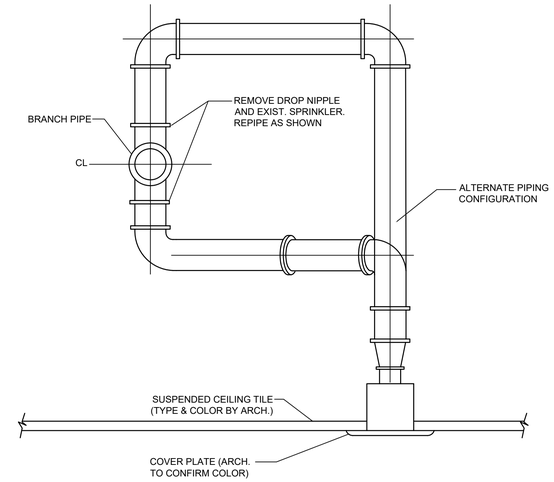

6 / FP-81 TYPICAL SPRINKLER HEAD RELOCATION

SCALE: NOT TO SCALE

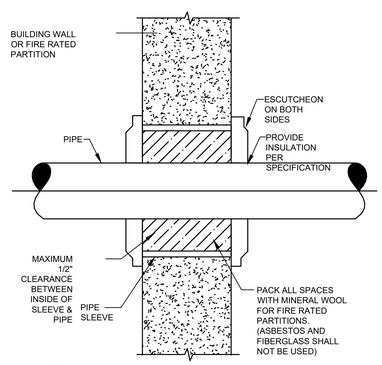

4 / FP-81 PIPE PENETRATION

SCALE: NOT TO SCALE

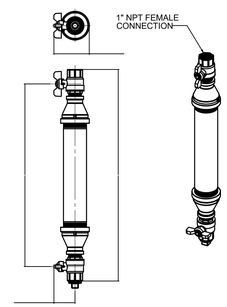

5 / FP-81 DRY SYSTEM AUXILIARY DRAIN

SCALE: NOT TO SCALE

CONSULTANT INFORMATION

LiRo Engineers, Inc.
A LiRo Group Company
Syosset, N.Y. 516-214-8157[T]

CONSULTANT SEAL

STATE OF NEW YORK · FRANK F. UGUSSE · No. 0901111 · LICENSED PROFESSIONAL ENGINEER

REVISION NUMBER	DATE	MADE BY	APP'D BY	REVISION

RECORD DRAWING CERTIFICATION

☐ AS BUILT – CHANGES AS NOTED ☐ AS BUILT – NO CHANGES

CONTRACTOR
NAME
SIGNATURE
TITLE DATE

PROJECT COORDINATOR
NAME
SIGNATURE
TITLE DATE

WESTCHESTER COUNTY, NEW YORK
DEPARTMENT OF PUBLIC WORKS AND TRANSPORTATION
DIVISION OF ENGINEERING

INFRASTRUCTURE REHABILITATION - PHASE 3
PLAYLAND PARK, RYE, NEW YORK
CROSS AXIS BUILDING F
FIRE PROTECTION DETAILS

CONTRACT NUMBER	22-523
SHEET NUMBER	CXF-FP-81
DWG NO.:	363 of 664
SCALE:	AS INDICATED
DATE:	08/23/2022
DPW FILE NUMBER	1-118-FP-1112-0
REV. NO.	0

PLUMBING SYMBOL LIST

IDENTIFIER	DESCRIPTION
——— — ——CW	DOMESTIC COLD WATER
——— W ———	WASTE PIPING (ABOVE SLAB)
— — — - W - — — — —	WASTE PIPING (UNDER SLAB)
——— S ———	SANITARY PIPING (ABOVE SLAB)
— — — - S - — — — —	SANITARY PIPING (UNDER SLAB)
--------- V -----------	SANITARY VENT PIPING
◕	FIELD CONNECT
◐	FIELD DISCONNECT
(F#)	REFER TO SUPPLEMENTAL FIGURE INDICATED BY NUMBER (I.E. F2 REFERS TO FIGURE 2)
XXX / XX	EQUIPMENT TAG EQUIPMENT NUMBER
XXX / X-XXX	DETAIL TAG/CALL OUT TAG PLUMBING SHEET NUMBER

PIPING ELEMENTS/VALVING

- BACKFLOW PREVENTER (DOUBLE CHECK VALVE ASSEMBLY)
- BALL VALVE
- CAP ON END OF PIPE
- CO — CLEANOUT
- FD — FLOOR DRAIN
- GATE VALVE
- HB — HOSE BIBB
- VALVE IN VALVE BOX
- PIPE DROPPING DOWN
- PIPE RISING UP
- TEE OUTLET DOWN
- TEE OUTLET UP
- VALVE IN RISE OR DROP
- NFHB — NON FREEZE HOSE BIBB IN BOX W/VACUUM BREAKER

SCOPE OF WORK

PLUMBING SCOPE OF WORK INCLUDES, BUT IS NOT LIMITED TO:

1. REMOVAL OF EXISTING WATER SERVICE.

2. THE INSTALLATION OF NEW PLUMBING FIXTURES AND ALL ASSOCIATED PIPING AND ACCESSORIES.

3. THE INSTALLATION OF NEW SANITARY AND DOMESTIC WATER SERVICES.

NOTE: THIS SCOPE OF WORK DESCRIPTION IS PROVIDED TO GIVE AN OVERALL "MACRO" DESCRIPTION OF THIS PROJECT .P.C. IS RESPONSIBLE TO REVIEW ALL ENGINEERING & ARCHITECTURAL DRAWINGS & VISIT THE SITE IF NEEDED, PRIOR TO SUBMISSION OF BID.

CODE REFERENCE

2020 NEW YORK STATE BUILDING CODE
2020 NEW YORK STATE MECHANICAL CODE
2020 NEW YORK STATE PLUMBING CODE
2020 NEW YORK STATE ENERGY CONSERVATION CODE

SECTION 704
DRAINAGE PIPING INSTALLATION

704.1 SLOPE OF HORIZONTAL DRAINAGE PIPING.

HORIZONTAL DRAINAGE PIPING SHALL BE INSTALLED IN UNIFORM ALIGNMENT AT UNIFORM SLOPES. THE MINIMUM SLOPE OF HORIZONTAL DRAINAGE PIPE SHALL BE IN ACCORDANCE WITH TABLE 704.1.

TABLE 704.1
SLOPE OF HORIZONTAL DRAINAGE PIPE

SIZE (INCHES)	MINIMUM SLOPE (INCH PER FOOT)
2 1/2 OR LESS	1/4
3 TO 6	1/8
8 OR LARGER	1/16

LEED NOTES

1. ALL ADHESIVES, SEALANTS, PAINTS & COATINGS APPLIED TO THE INTERIOR OF THE BUILDING (WITHIN THE WEATHER PROOFING SYSTEM, INCLUDING WALL CAVITIES) MUST NOT EXCEED THE LEED VOC LIMITS. PROVIDE A VOC SUBMITTAL AND MSDS FOR ALL ADHESIVES, SEALANTS, PAINTS AND COATINGS TO BE APPLIED.

PLUMBING GENERAL NOTES:

1. ALL PLUMBING WORK UNDER THIS CONTRACT SHALL CONFORM TO THE LATEST EDITION OF THE PLUMBING CODE OF NEW YORK STATE (PC-NYS), THE NEW YORK STATE ENERGY CODE, AND THE REQUIREMENTS OF THE UTILITY AND THE LOCAL WATER COMPANY.
2. ALL MATERIALS SHALL BE NEW UNLESS NOTED OTHERWISE.
3. THE PLUMBING CONTRACTOR SHALL ASSUME RESPONSIBILITY FOR ALL LABOR AND MATERIALS SUPPLIED AND INSTALLED UNDER THIS CONTRACT AND SHALL GUARANTEE THE WORK PERFORMED UNDER THIS CONTRACT FOR A PERIOD OF ONE (1) YEAR FROM THE DATE OF ACCEPTANCE OF THIS WORK.
4. PLUMBING CONTRACTOR SHALL CONSULT WITH, COOPERATE AND COORDINATE WITH THE GENERAL CONTRACTOR, MECHANICAL CONTRACTOR, SPRINKLER CONTRACTOR, ELECTRICAL CONTRACTOR, ETC. IN ORDER TO MINIMIZE INTERFERENCES BETWEEN TRADES DURING PERFORMANCE OF THIS WORK.
5. THE PLUMBING CONTRACTOR SHALL PREPARE AND FILE ALL REQUIRED PLANS AND PERMITS WITH THE LOCAL AUTHORITIES. PC SHALL PAY THE FILING FEES AS REQUIRED. PC SHALL OBTAIN ALL APPROVALS AND SHALL PAY FOR ALL WORK PERMITS, INSPECTIONS AND SIGN-OFFS AS REQUIRED TO EXECUTE THIS WORK IN A MANNER IN CONFORMANCE WITH THE CODES AND AUTHORITIES HAVING JURISDICTION.
6. THE PLUMBING CONTRACTOR SHALL PERFORM ALL TESTS AND ARRANGE FOR ALL INSPECTIONS FOR WORK UNDER HIS CONTRACT AS REQUIRED BY LAW AND SHALL SUPPLY ALL CERTIFICATES OF INSURANCE AS REQUIRED BY THE LAW AND THE OWNER. REFER TO SECTION 107 (INSPECTIONS) OF THE PC-NYS.
7. THE PLUMBING CONTRACTOR SHALL MAKE ALL FINAL CONNECTIONS TO ALL PLUMBING EQUIPMENT REGARDLESS WHETHER ILLUSTRATED HEREIN WITHOUT ANY ADDITIONAL COSTS TO THE OWNER.
8. PLUMBING CONTRACTOR SHALL VISIT THE SITE & BECOME FAMILIAR WITH THE EXISTING CONDITIONS, INCLUDING THE SIZE OF CONNECTIONS, ROUGHING DIMENSIONS, ETC. BEFORE SUBMITTING A QUOTATION FOR THE WORK.
9. PLUMBING CONTRACTOR SHALL PERFORM ALL CUTTING, EXCAVATION, BACKFILLING, ROUGH & FINISH PATCHING AS PER THE SPECIFICATIONS AS REQUIRED FOR THE INSTALLATION OF THE WORK, UNLESS NOTED OTHERWISE.
10. ALL CONNECTIONS TO NEW AND/OR EXISTING EQUIPMENT SHALL BE SIZED AND INSTALLED IN ACCORDANCE WITH THE MANUFACTURER'S INSTRUCTIONS.
11. IT IS THE INTENT OF THIS CONTRACT THAT THE COMPLETED WORK BE FULLY OPERATIONAL.
12. ALL PIPE HANGERS AND SUPPORTS SHALL BE INSTALLED AT INTERVALS AND BE FABRICATED OF MATERIALS AS REQUIRED BY THE PC-NYS.
13. ALL NEW PLUMBING FIXTURES SHALL BE INSTALLED WITH ANGLE STOP VALVES IN THE SUPPLY LINES SERVING THE FIXTURE.
14. ALL NEW EXPOSED WATER AND WASTE PIPING SERVING THE FIXTURES SHALL BE CHROME PLATED AND SHALL HAVE CHROME PLATED ESCUTCHEONS RIGIDLY ATTACHED TO THE PIPING AT THE POINT OF WALL OR FLOOR PENETRATIONS.
15. PLUMBING CONTRACTOR SHALL SUBMIT SHOP DRAWINGS FOR ALL NEW PLUMBING FIXTURES AND EQUIPMENT TO BE SUPPLIED AND INSTALLED UNDER THIS CONTRACT FOR APPROVAL BEFORE INSTALLATION OF SAME.
16. WATERPROOF PIPE SLEEVES SHALL BE INSTALLED AT ALL PENETRATIONS THROUGH EXTERIOR WALLS. PIPE SLEEVES SHALL BE INSTALLED AT ALL WALL PENETRATIONS THROUGH INTERIOR WALLS AND FLOORS.
17. WATER HAMMER ELIMINATORS (APPROVED - FIELD FABRICATED OR MANUFACTURED) SHALL BE INSTALLED AT ALL RUN OUTS IN HOT AND/OR COLD WATER LINES SERVING TOILET ROOMS AND OTHER AREAS WHICH INCORPORATE "RAPID - ACTION" VALVES SUCH AS FLUSHOMETERS, SOLENOID VALVES, ETC.
18. ALL PIPING SHALL BE TESTED AT A MINIMUM PRESSURE OF 1-1/2 TIMES THE MAXIMUM OPERATING PRESSURE UNLESS OTHERWISE NOTED ON THE DOCUMENTS OR THE PLUMBING CODE AND IN ACCORDANCE WITH THE UTILITY REQUIREMENTS.
19. ALL REMOVALS PERFORMED UNDER THIS CONTRACT SHALL INCLUDE REMOVAL OF ALL DEBRIS AND DISPOSAL AT AN APPROPRIATE SITE.
20. ALL LAVATORIES DESIGNED FOR USE BY PERSONS CONFINED TO WHEELCHAIRS SHALL HAVE THE HOT & COLD WATER SERVICES, AS WELL AS THE TRAP, RECESSED & INSULATED IN ACCORDANCE WITH ADA REQUIREMENTS.
21. REFER TO THE ARCHITECTURAL PLANS FOR ALL STRUCTURAL DIMENSIONS.
22. ALL WORK TO BE COORDINATED WITH OTHER TRADES.
23. ALL PIPING PENETRATIONS TO BE SEALED AROUND WITH "NELSON" FIRE SEAL.
24. ALL WATER SERVICE PIPING WITHIN THE BUILDING IS TO BE INSULATED IN ACCORDANCE WITH ALL NEW YORK STATE PLUMBING CODE (NYS-PC) AND NYS ENERGY CODES.
25. ALL PLUMBING FIXTURES TO BE INSTALLED AS PER FACTORY RECOMMENDATIONS.
26. ALL PLUMBING FIXTURES TO BE TRAPPED, VENTED AND PROVIDED WITH AIR SHOCKS WHEN REQUIRED.
27. PLUMBING FIXTURES SHALL COMPLY WITH "WATER CONSERVATION" REQUIREMENT AS DETAILED IN THE NYS-PC.
28. GC IS RESPONSIBLE TO SUBMIT APPLICATION AND TAP FEES TO LOCAL WATER AUTHORITY AND HAVE OWNER FILL OUT APPLICATION UPON COMPLETION OF PLUMBING ROUGH-IN INSPECTION.
29. ALL WATER AND HORIZONTAL STORM DRAIN PIPING INCLUDING ROOF DRAIN BODY SHALL BE INSULATED.
30. FLOOR DRAINS AND FLOOR CLEAN-OUTS SHALL BE SET LEVEL WITH FINISHED FLOORS.
31. ALL PIPE DIMENSIONS ARE INSIDE CLEAR.
32. ALL PLUMBING FIXTURES TO HAVE ISOLATION VALVES.
33. P.C. IS RESPONSIBLE TO ADJUST HOT WATER HEATER (WH) TEMPERATURE TO ENSURE A TEMPERATURE RANGE OF 110°F TO 120°F AT THE INDIVIDUAL FIXTURE OUTPUT. P.C. MUST ENSURE A TEMPERATURE OF 120° F MAXIMUM AT THE FIXTURES TO PREVENT SCALDING.
34. BUILDING DOMESTIC WATER DEMAND & SIZING IS CALCULATED FROM NYS-PC SECTION 603, 604 & APPENDIX E.
35. BUILDING SANITARY DEMAND & SIZING IS CALCULATED FROM NYS-PC SECTIONS 709 AND 710.
36. ALL DFU CALCULATIONS ARE BASED OFF OF TABLE 709.1 OF THE NYS-PC.
37. ALL SANITARY WATER PIPING SHALL BE PITCHED IN ACCORDANCE WITH NYS-PC SECTION 704 BASED ON TABLE 704.1 SLOPE OF HORIZONTAL DRAINAGE PIPE.
38. ALL VENT SIZING IS BASED OFF OF SECTION 916 OF THE NYS PLUMBING CODE.
39. ALL PLUMBING EQUIPMENT SHALL BE INSTALLED PER MANUFACTURER'S REQUIREMENTS/SPECIFICATIONS.

ABBREVIATIONS:

AD	ACCESS DOOR
BFP	BACKFLOW PREVENTER
CO	CLEAN OUT
CW	COLD WATER
DCV	DOUBLE CHECK VALVE
DFU	DRAINAGE FIXTURE UNIT
DPCO	DECK PLATE CLEAN OUT
FC	FIELD CONNECT
FD	FLOOR DRAIN
FFD	FUNNEL FLOOR DRAIN
FU	FIXTURE UNIT
HW	HOT WATER
HWR	HOT WATER RETURN
IAW	IN ACCORDANCE WITH
IWFD	INDIRECT WASTE FUNNEL DRAIN
LAV	LAVATORY
JS	JANITOR'S SINK
NC	NORMALLY CLOSED
NO	NORMALLY OPEN
NYS-PC	NEW YORK STATE PLUMBING CODE
RD	ROOF DRAIN
S	SANITARY
SD	STORM DRAIN
TMV	THERMOSTATIC MIXING VALVE
U.O.N.	UNLESS OTHERWISE NOTED
UR	URINAL
V	VENT
WC	WATER CLOSET
PC	PLUMBING CONTRACTOR
MC	MECHANICAL CONTRACTOR
TYP.	TYPICAL
VIF	VERIFY IN FIELD
WCO	WALL CLEAN OUT
WFU	WATER FIXTURE UNITS
(N)	NEW
(E)	EXISTING
(D)	DEMO

THE ABBREVIATIONS ARE SHOWN FOR GENERAL REFERENCE ONLY. THE PRESENCE OF AN ABBREVIATION ON THIS LIST DOES NOT IMPLY ITS USE ON THIS PROJECT. REFER TO DRAWINGS FOR SPECIFIC ABBREVIATIONS USED.

FLOOR DRAIN SCHEDULE

TAG	TYPE	MANUFACTURER	MODEL	SERVICE
FD-1	ADJUSTABLE	ZURN	FD-2320-R5	ALL SPACES

NOTES:
1. PROVIDE THE FOLLOWING FOR FD-1; CHORME PLATED STRAINER ASSEMBLY, 6" NICKEL HEAD ASSEMBLY, AND VANDAL PROOF.
2. PROVIDE BARRIER-TYPE TRAP SEAL PROTECTION DEVICE ZURN Z1072 OR APPROVED EQUAL.

CLEANOUT SCHEDULE

TAG	TYPE	MANUFACTURER	MODEL
CO	ADJUSTABLE DECK PLATE CLEAN OUT	WATTS	CO-1200-R

REDUCED PRESSURE ZONE VALVE SCHEDULE

TAG	MANUFACTURER	MODEL	LOCATION	SIZE (INCH)	PRESSURE DROP (PSI)
RPZ-1	WATTS	009LF	FOOD VENDOR CXF BLDG	3/4	N/A

NOTES: LEAD FREE
PROVIDE AIR GAP AND DRAINAGE PIPING FOR RELIEF VALVE AND DIRRECT TO OUTSIDE.

PLUMBING DRAWING LIST

SHEET NO.	SHEET NAME	REVISON NO.	REVISION DATE
CXF-P-01	PLUMBING NOTES, SYMBOLS, ABBREVIATIONS AND DRAWING LIST	0	-
CXF-P-11	PLUMBING GROUND FLOOR DEMOLITION PLAN	0	-
CXF-P-21	PLUMBING GROUND FLOOR CONSTRUCTION PLAN	0	-
CXF-P-81	PLUMBING DETAILS	0	-

NON-FREEZE HOSE BIB

TAG	MANUFACTURER	MODEL	LOCATION	TYPE	MATERIAL	CASING
NFHB	ZURN	Z1320XL	EXTERIOR WALL	NON-FREEZE HYDRANT	BRONZE	COPPER

CONSULTANT INFORMATION

LiRo Engineers, Inc.
A LiRo Group Company
Syosset, N.Y. 516-214-8157[T]

CONSULTANT SEAL

STATE OF NEW YORK · FRANK F. ULISSE · LICENSED PROFESSIONAL ENGINEER · No. 090111-1

REVISION NUMBER	DATE	MADE BY	APP'D BY	REVISION

RECORD DRAWING CERTIFICATION
☐ AS BUILT - CHANGES AS NOTED ☐ AS BUILT - NO CHANGES

CONTRACTOR
NAME ____ SIGNATURE ____ TITLE ____ DATE ____

PROJECT COORDINATOR
NAME ____ SIGNATURE ____ TITLE ____ DATE ____

WESTCHESTER COUNTY, NEW YORK
DEPARTMENT OF PUBLIC WORKS AND TRANSPORTATION
DIVISION OF ENGINEERING

INFRASTRUCTURE REHABILITATION - PHASE 3
PLAYLAND PARK, RYE, NEW YORK
CROSS AXIS BUILDING F
PLUMBING NOTES, SYMBOLS, ABBREVIATIONS AND DRAWING LIST

CONTRACT NUMBER: 22-523
SHEET NUMBER: **CXF-P-01**
DWG NO.: 364 of 664
SCALE: **AS INDICATED**
DATE: 08/23/2022
DPW FILE NUMBER: **1-118-P-1113-0**
REV. NO.: 0

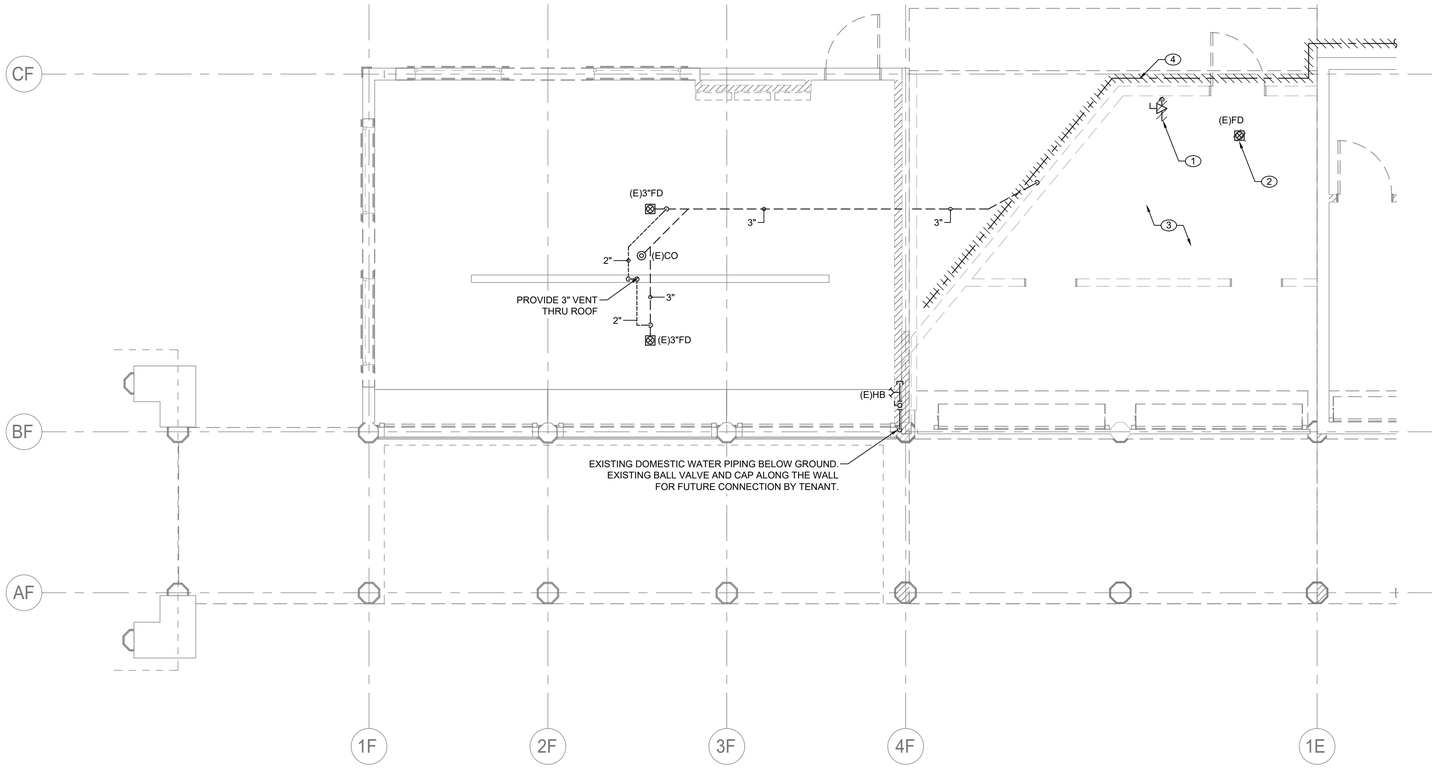

1 / P-11 **PLUMBING GROUND FLOOR DEMOLITION PLAN**

SCALE: 1/4" = 1'-0

N

PLUMBING DEMOLITION NOTES:

1. REMOVE EXISTING ABANDONED ABOVE FLOOR GAS PIPING AND CAP PERMANENTLY BELOW SLAB.
2. REMOVE EXISTING FLOOR DRAIN. REMOVE AND CAP PERMANENTLY EXISTING UNDERGROUND PIPING BACK TO SOURCE.
3. REMOVE ALL EXISTING PLUMBING FIXTURES WITH ALL ASSOCIATED PLUMBING PIPING WITHIN CXF BUILDING.
4. REMOVE EXISTING WATER PIPING FOR HOSE BIBS ALONG THE EXTERIOR WALL FROM CXF BUILDING UP TO CXD BUILDING.

GENERAL NOTES:

1. ALL EXISTING PIPING ARE SHOWN AS A REFERENCE ONLY. CONTRACTOR SHALL FIELD VERIFY LOCATIONS AND SIZES FOR ALL EXISTING SERVICES PRIOR TO DEMOLITION.
2. COORDINATE WITH FACILITY PRIOR TO SHUTDOWN OF DOMESTIC WATER SYSTEM FOR ANY DEMOLITION AND CONSTRUCTION WORK.

CONSULTANT INFORMATION

LiRo Engineers, Inc.
A LiRo Group Company
Syosset, N.Y. 516-214-8157[T]

CONSULTANT SEAL

STATE OF NEW YORK · FRANK F. ULRICH · No. 090111 · LICENSED PROFESSIONAL ENGINEER

REVISION NUMBER	DATE	MADE BY	APP'D BY	REVISION

RECORD DRAWING CERTIFICATION

☐ AS BUILT – CHANGES AS NOTED ☐ AS BUILT – NO CHANGES

CONTRACTOR: NAME / SIGNATURE / TITLE / DATE

PROJECT COORDINATOR: NAME / SIGNATURE / TITLE / DATE

WESTCHESTER COUNTY, NEW YORK
DEPARTMENT OF PUBLIC WORKS AND TRANSPORTATION
DIVISION OF ENGINEERING

INFRASTRUCTURE REHABILITATION - PHASE 3
PLAYLAND PARK, RYE, NEW YORK
CROSS AXIS BUILDING F
PLUMBING GROUND FLOOR DEMOLITION PLAN

CONTRACT NUMBER	22-523
SHEET NUMBER	CXF-P-11
DWG NO.:	365 of 664
SCALE:	AS INDICATED
DATE:	08/23/2022
DPW FILE NUMBER	1-118-P-1114-0
REV. NO.	0

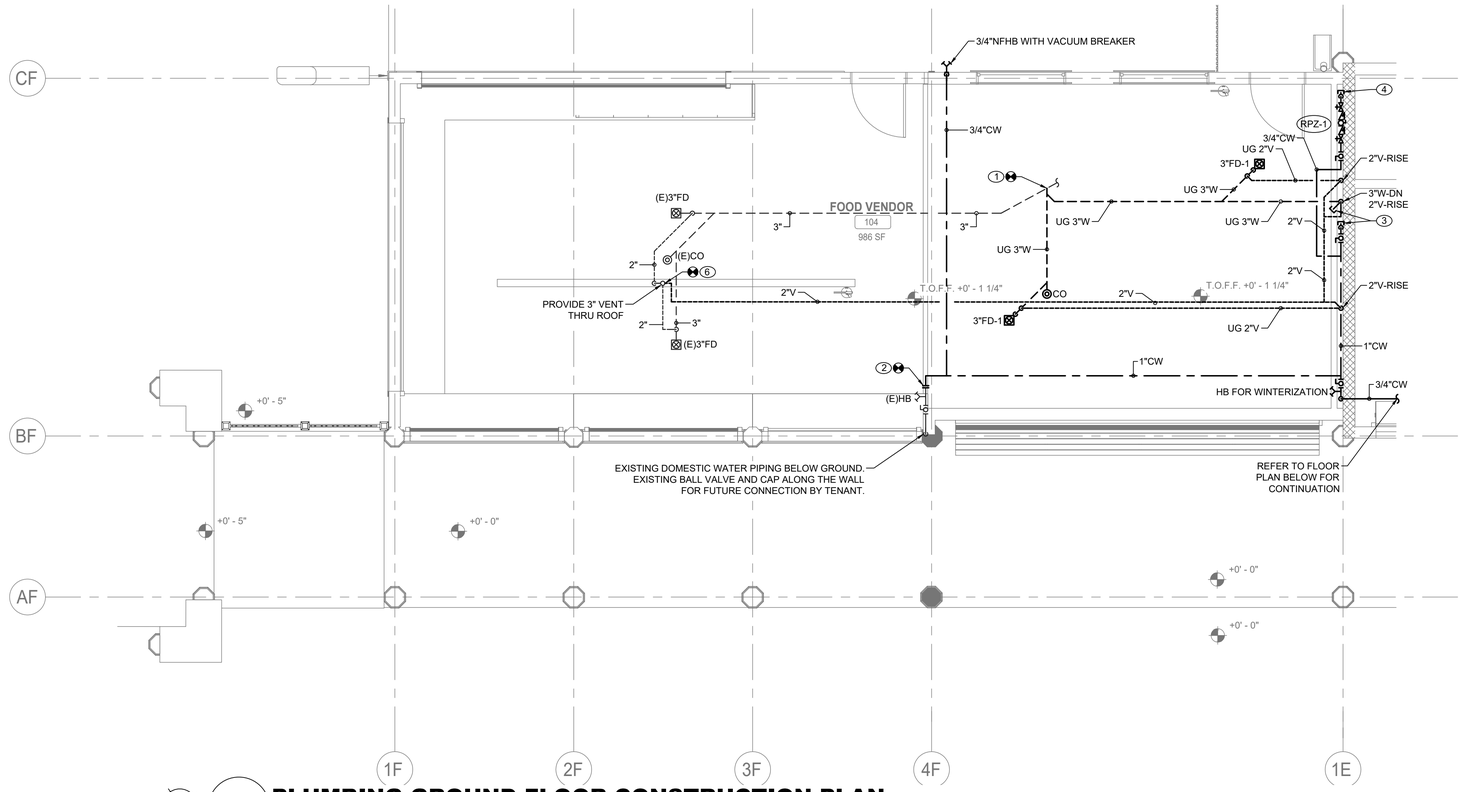

1 P-21 **PLUMBING GROUND FLOOR CONSTRUCTION PLAN**

SCALE: 1/4" = 1'-0

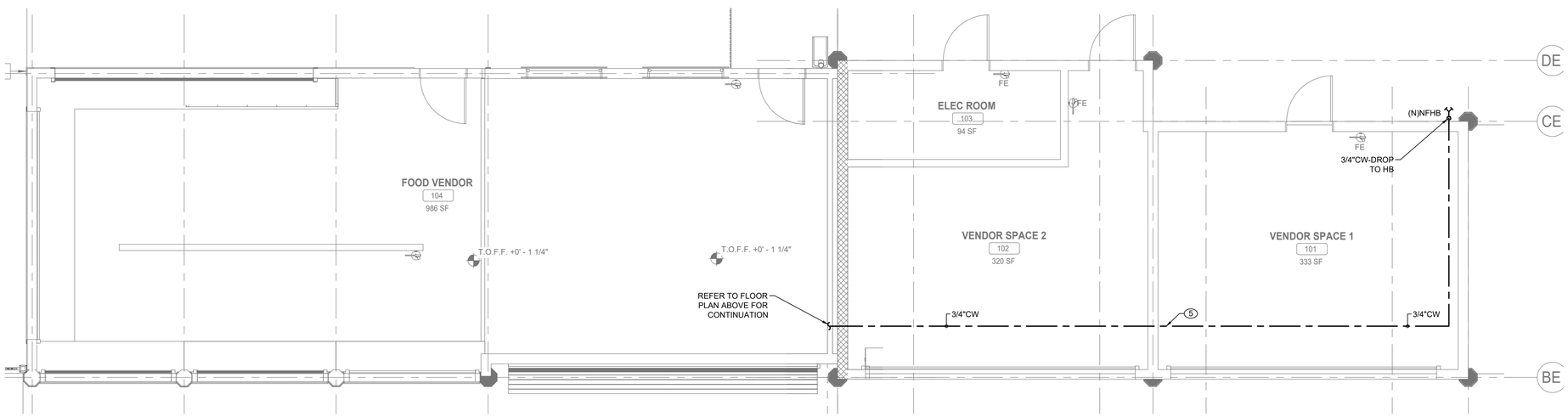

2 P-21 **PLUMBING GROUND FLOOR CXE AND CXD CONSTRUCTION PLAN**

SCALE: 1/4" = 1'-0

PLUMBING CONSTRUCTION NOTES:

1. CONNECT NEW 3" SANITARY LINE TO EXISTING. CONTRACTOR TO VERIFY LOCATION OF THE EXISTING SANITARY PIPING TO FACILITATE NEW SANITARY LINE CONNECTION.
2. CONNECT NEW 1" DOMESTIC COLD WATER TO EXISTING WATER LINE.. PROVIDE WINTERIZATION VALVES AND DRAINS. PITCH PIPING TOWARDS VALVE DRAINS. PROVIDE A COMPRESSED AIR CONNECTION FOR WINTERIZING.
3. PROVIDE 3"W AND 3/4"CW STUB-UP FOR FUTURE SINK WITHIN NEW WALL. CONNECTION SHALL BE ACCESSIBLE AFTER CONSTRUCTION.
4. CONTRACTOR TO INSTALL 3/4" RPZ FOR IRRIGATION SYSTEM PROVIDED AND INSTALLED FOR PLANTER AREA AND TREE (REFER TO ARCHITECTURAL CXD DRAWINGS FOR LOCATION). CONTRACTOR TO SUBMIT IRRIGATION SYSTEM DESIGN AND COMPONENTS FOR AOR AND EOR REVIEW. PROVIDE DRAINAGE PIPING AND AIR GAP FOR RPZ'S RELIEF VALVE AND DIRECT IT TO OUTSIDE.
5. CONTRACTOR TO PROVIDE INSULATED 3/4"CW LINE WITHIN ATTIC SPACE OF CXE BUILDING FOR HOSE BIB WITH VACUUM BREAKER AS INDICATED ON PLANS.
6. CONNECT NEW 2"V LINE TO EXISTING VENT SYSTEM WITH EXISTING 3" VTR.

GENERAL NOTES:

1. COORDINATE WITH FACILITY PRIOR TO SHUTDOWN OF WATER DISTRIBUTION SYSTEM FOR ANY DEMOLITION AND CONSTRUCTION WORK.
2. PROVIDE DRAIN VALVES AT BOTTOM FOR EACH BRANCH. PROVIDE ACCESS PANELS TO ALL VALVES ABOVE CEILING AND BEHIND WALLS.
3. INSTALL NEW WATER PIPING WITH PROPER SLOPES TO AVOID WATER TRAPS DURING WINTER SEASON.
4. CONTRACTOR TO COORDINATE WITH FACILITY WHEN WORKING AROUND OR ABOVE THE RIDE COMPONENTS, AND PROVIDE ALL NECESSARY MEASURES TO PROTECT THESE COMPONENTS PER THE REQUIREMENTS OF THE FACILITY.
5. UPON COMPLETION, SYSTEM SHALL BE TESTED FOR PROPER OPERATION.

CONSULTANT INFORMATION

LiRo Engineers, Inc.
A LiRo Group Company
Syosset, N.Y. 516-214-8157[T]

CONSULTANT SEAL

STATE OF NEW YORK · FRANK F. ULISSE · No. 090111-1 · LICENSED PROFESSIONAL ENGINEER

REVISION NUMBER	DATE	MADE BY	APP'D BY	REVISION

RECORD DRAWING CERTIFICATION

☐ AS BUILT – CHANGES AS NOTED ☐ AS BUILT – NO CHANGES

CONTRACTOR: NAME / SIGNATURE / TITLE / DATE

PROJECT COORDINATOR: NAME / SIGNATURE / TITLE / DATE

WESTCHESTER COUNTY, NEW YORK
DEPARTMENT OF PUBLIC WORKS AND TRANSPORTATION
DIVISION OF ENGINEERING

INFRASTRUCTURE REHABILITATION - PHASE 3
PLAYLAND PARK, RYE, NEW YORK
CROSS AXIS BUILDING F
PLUMBING FIRST FLOOR CONSTRUCTION PLAN

CONTRACT NUMBER	22-523
SHEET NUMBER	CXF-P-21
DWG NO.:	366 of 664
SCALE:	AS INDICATED
DATE:	08/23/2022
DPW FILE NUMBER	1-118-P-1115-0
REV. NO.	0

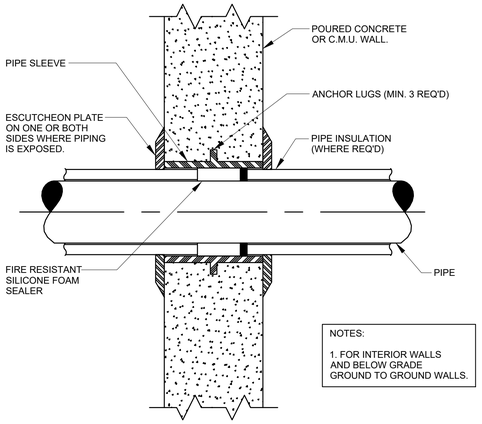

NOTES:

1. FOR INTERIOR WALLS AND BELOW GRADE GROUND TO GROUND WALLS.

1 / P-81 PIPE SLEEVE THROUGH WALL DETAIL

SCALE: NOT TO SCALE

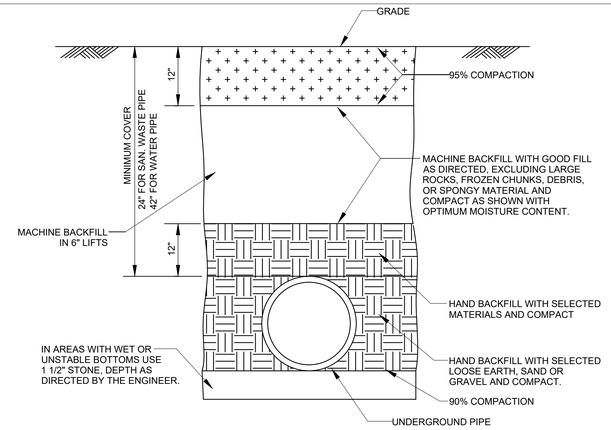

2 / P-81 PIPE TRENCH DETAIL

SCALE: NOT TO SCALE

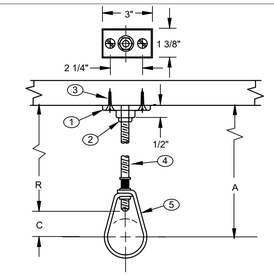

COMPONENTS:

1. CLIP (CEILING FLANGE)
2. HEX NUT
3. WOOD SCREW
4. HANGER ROD
5. ADJUSTABLE HANGER RING

DESIGN DATA FOR CLIP HANGERS

NOMINAL PIPE SIZE	MINIMUM A DIMENSION	HANGER TAKEOUT	ROD DIAMETER	FASTENERS	
	INCHES	INCHES	INCHES	QTY	ITEMS
1/2	3 3/4	-1 1/4	3/8	1 2 1	3/8" CEILING FLANGE (CLIP) NO. 18 X 1 1/2" FLAT HEAD WOOD SCREWS 3/8" HEX NUT
3/4	3 3/4	-1 1/4	"		SEE ABOVE
1	3 3/4	-1 1/4	"		" "
1 1/4	4	-1 1/2	"		" "
1 1/2	4	-1 1/2	"		" "
2	4 1/4	-1 3/4	"		" "

3 / P-81 CLIP PIPE HANGER

SCALE: NOT TO SCALE

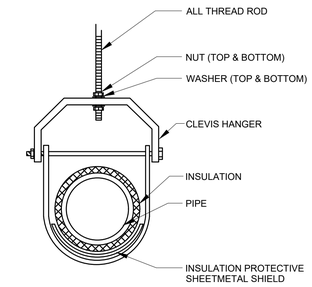

4 / P-81 TYPICAL CLEVIS HANGER DETAIL

SCALE: NOT TO SCALE

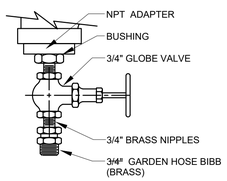

5 / P-81 DRAIN VALVE DETAIL

SCALE: NOT TO SCALE

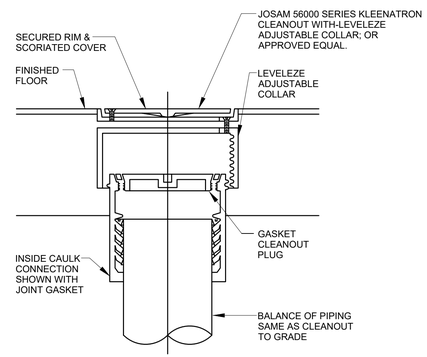

6 / P-81 FLOOR CLEANOUT DETAIL

SCALE: NOT TO SCALE

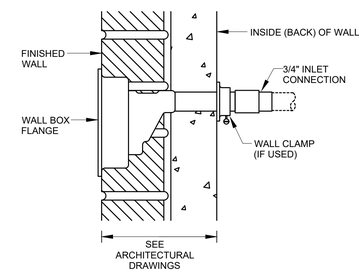

7 / P-81 FREEZE PROOF WALL HYDRANT

SCALE: NOT TO SCALE

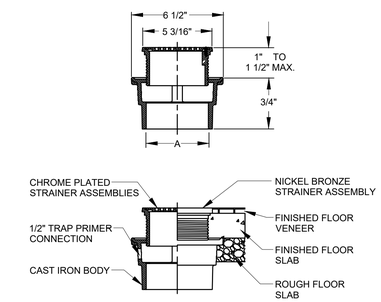

8 / P-81 FLOOR DRAIN DETAIL

SCALE: NOT TO SCALE

CONSULTANT INFORMATION

LiRo Engineers, Inc.
A LiRo Group Company
Syosset, N.Y. 516-214-8157[T]

CONSULTANT SEAL

STATE OF NEW YORK · FRANK F. ULISSE · No. 090111 · LICENSED PROFESSIONAL ENGINEER

REVISION NUMBER	DATE	MADE BY	APP'D BY	REVISION

RECORD DRAWING CERTIFICATION

☐ AS BUILT – CHANGES AS NOTED ☐ AS BUILT – NO CHANGES

CONTRACTOR: NAME / SIGNATURE / TITLE / DATE

PROJECT COORDINATOR: NAME / SIGNATURE / TITLE / DATE

WESTCHESTER COUNTY, NEW YORK
DEPARTMENT OF PUBLIC WORKS AND TRANSPORTATION
DIVISION OF ENGINEERING

INFRASTRUCTURE REHABILITATION PHASE 3
PLAYLAND PARK, RYE, NEW YORK
CROSS AXIS BUILDING F
PLUMBING DETAILS

CONTRACT NUMBER	22-523
SHEET NUMBER	CXF-P-81
DWG NO.:	367 of 664
SCALE:	AS INDICATED
DATE:	08/23/2022
DPW FILE NUMBER	1-118-P-1116-0
REV. NO.	0

MECHANICAL GENERAL NOTES

1. ALL WORK AND MATERIALS SHALL BE PURCHASED AND INSTALLED IN ACCORDANCE WITH ALL NATIONAL & NEW YORK STATE CODES AND REGULATIONS (AS WELL AS ALL APPLICABLE LOCAL CODES & REGULATIONS). THE CONTRACTOR SHALL BE RESPONSIBLE TO ENSURE THAT ALL HVAC WORK IS PROVIDED AND INSTALLED IN STRICT ACCORDANCE WITH SEISMIC REQUIREMENTS.
2. DO NOT SCALE FROM THESE DRAWINGS.
3. THE EXACT MOUNTING HEIGHTS AND LOCATIONS OF ALL HVAC EQUIPMENT SHALL BE FIELD VERIFIED AND COORDINATED WITH ALL OTHER MECHANICAL, ELECTRICAL, PLUMBING, FIRE SPRINKLER, ARCHITECTURAL AND STRUCTURAL SYSTEMS. DURING SHOP DRAWINGS SUBMISSIONS, SHOW ALL MOUNTING HEIGHTS OF DUCTWORK, UNITS, ETC.
4. VERIFY ALL EQUIPMENT VOLTAGES WITH THE ELECTRICAL DESIGN PRIOR TO ORDERING EQUIPMENT.
5. PROVIDE PHASE LOSS PROTECTION FOR ALL POLY-PHASE MOTOR DEVICES.
6. DUCTWORK SHALL BE CONSTRUCTED OF GALVANIZED SHEET STEEL IN STRICT COMPLIANCE WITH THE LATEST EDITION OF THE ASHRAE, NFPA, AND SMACNA GUIDE RECOMMENDATIONS. ALL DUCTS TO HAVE PITTSBURGH TYPE LOCK FOR LONGITUDINAL SEAMS AND DRIVE SLIP / "S" SLIP FOR TRANSVERSE JOINTS. "DUCT-MATE" JOINT SYSTEM IS ACCEPTABLE IN LIEU OF PRIOR SEAM SYSTEMS. SIZES AS SHOWN INDICATE INSIDE CLEAR DIMENSIONS OF THE AIR PASSAGE. DUCTWORK SHALL BE FULLY INSULATED AS PER APPLICABLE CODES AND WRITTEN SPECIFICATIONS.
7. DUCT SIZES MUST BE VERIFIED FOR CLEARANCES AT THE JOB SITE PRIOR TO FABRICATION. DIMENSIONS MAY BE CHANGED TO ACCOMMODATE CONSTRUCTION AS LONG AS EFFECTIVE CROSS-SECTIONAL AREA IS MAINTAINED. DUCT TRANSITIONS SHALL BE CONSTRUCTED WITH A SLOPE OF 1" TO 4". ALL DEVIATIONS FROM ORIGINAL CONTRACT DRAWINGS SHALL BE REVIEWED BY ENGINEER DURING THE SHOP DRAWING PROCESS.
8. PROVIDE MANUAL BALANCING DAMPERS AS REQUIRED TO PROPERLY BALANCE EACH INDIVIDUAL AIR DISTRIBUTION SYSTEM. IF THE LOCATION OF THE BALANCING DAMPER IS NOT DEFINED ON THE DRAWINGS, THE FOLLOWING MINIMUMS STANDARDS SHALL GOVERN. ALL SUPPLY, RETURN, AND EXHAUST MAIN BRANCHES FROM TRUNKS, EACH SPLIT AND ALL SUB- BRANCHES FROM MAIN SHALL INCORPORATE BALANCING DAMPERS.
9. PROVIDE FLEXIBLE CONNECTORS AT ALL DUCT CONNECTIONS TO VIBRATING EQUIPMENT. THESE CONNECTORS SHALL BE INSTALLED IN CLOSE PROXIMITY TO SUCH EQUIPMENT.
10. PROVIDE FIRE DAMPERS WITH RATED ACCESS DOORS AT ALL DUCT PENETRATIONS THROUGH FIRE RATED WALLS, SMOKE AND FIRE STOPPING, SHAFT, FLOORS, RATED CEILINGS AND PARTITIONS AS REQUIRED TO MAINTAIN ARCHITECTURAL FIRE RATINGS. REFER TO THE ARCHITECTURAL PLANS AND SPECIFICATIONS FOR LOCATIONS AND FIRE RATING REQUIREMENTS. CONTRACTOR MUST FULLY REVIEW ALL ARCHITECTURAL AND ENGINEERING DRAWINGS AND VISIT THE SITE PRIOR TO SUBMITTING THE BID. NO EXTRAS WILL BE ALLOWED.
11. ALL ACCESS DOORS REQUIRED IN GENERAL CONSTRUCTION ARE TO BE PROVIDED AND INSTALLED BY THE CONTRACTOR. IT IS THE RESPONSIBILITY OF THE CONTRACTOR TO IDENTIFY SIZE, TYPE AND LOCATION OF SUCH DOORS FOR PROPER ACCESS TO ALL CONCEALED HVAC EQUIPMENT, VALVES AND OTHER RELATED EQUIPMENT. THE CONTRACTOR SHALL IDENTIFY THESE REQUIREMENTS ON A COORDINATED SHOP DRAWING PRIOR TO SYSTEM FABRICATION AND INSTALLATION.
12. ALL CEILING MOUNTED EQUIPMENT MUST BE SUPPORTED DIRECTLY FROM BUILDING STRUCTURE WITH COMBINATION SPRING AND NEOPRENE-IN-SHEAR HANGERS AND ROD. PROVIDE SUPPLEMENTARY STEEL AS REQUIRED TO ADEQUATELY SUPPORT THE LOAD.
13. THE CONTRACTOR MUST CONTRACT AN INDEPENDENT NEBB CERTIFIED AIR BALANCING & TESTING COMPANY TO PERFORM THE AIR BALANCING WORK AND ASSOCIATED SYSTEM AIR BALANCING REPORT. ALL WORK SHALL BE PERFORMED IN STRICT COMPLIANCE WITH ALL APPLICABLE CODES, REGULATIONS, PLANS AND WRITTEN SPECIFICATIONS. SUBMIT THE FINAL AIR BALANCE REPORT TO THE ENGINEER FOR REVIEW AND APPROVAL PRIOR TO SUBSTANTIAL COMPLETION OF THE PROJECT, AS DETERMINED BY THE AND OWNER/CLIENT. THE AIR BALANCE REPORT MUST INCLUDE ALL SUPPLY, RETURN, & EXHAUST AIR TERMINALS, FRESH AIR (OUTSIDE AIR) INTAKE AND VENTILATION EXHAUST CFM RATES FOR ALL UNITS. ALSO INCLUDE ACTUAL SUPPLY & RETURN AIR VELOCITY & STATIC PRESSURE READINGS ALONG WITH ALL MOTOR AMPERAGES FOR ALL UNITS.
14. THE CONTRACTOR IS TO INCLUDE IN THEIR BID ALL LOW VOLTAGE CONTROL WIRING, THERMOSTATS, RELAYS, TRANSFORMERS, STARTERS ETC FOR A COMPLETE OPERATING CONTROL SYSTEM AS DESCRIBED IN THE SEQUENCE OF OPERATIONS. THE CONTRACTOR IS ALSO RESPONSIBLE FOR LINE VOLTAGE CONTROL FOR EXHAUST FANS CONTROLLED FROM LIGHT SWITCH AND THERMOSTATS. ALL CONTROL WIRING IN THE AREAS THAT DO NOT HAVE DROPPED CEILINGS THE CONTRACTOR MUST PROVIDE ALL CONTROL WIRING CONDUIT. IN AREAS OF DROPPED CEILING PLENUM RATED CONTROL WIRING CAN BE RUN EXPOSED ABOVE CEILING.
15. ALL MECHANICAL EQUIPMENT SHALL BE INSTALLED PER MANUFACTURER'S REQUIREMENTS/SPECIFICATIONS.

CODE REFERENCE

2020 NEW YORK STATE BUILDING CODE
2020 NEW YORK STATE MECHANICAL CODE
2020 NEW YORK STATE ENERGY CONSERVATION CODE

MECHANICAL DEMOLITION NOTES

1. CONTRACTOR SHALL BE RESPONSIBLE FOR DEMOLITION OF MECHANICAL EQUIPMENT AND MATERIAL RELATING TO THEIR RESPECTIVE TRADE.

2. THE CONTRACTOR SHALL REMOVE, RELOCATE, REPLACE, ADJUST, ADAPT AND MODIFY EXISTING EQUIPMENT AND/OR SYSTEMS AS REQUIRED WHEN SUCH WORK IS UNCOVERED AND FOUND TO INTERFERE WITH COMPLETION OF WORK IN THIS CONTRACT OR OTHER CONTRACT WORK.

3. EXECUTE THE DEMOLITION IN CAREFUL AND ORDERLY MANNER WITH THE LEAST POSSIBLE DISTURBANCE TO THE PUBLIC, EGRESS OR THE FUNCTIONING OF THE EXISTING BUILDING.

4. TAKE NECESSARY PRECAUTIONS TO PREVENT DUST AND DIRT FROM RISING BY WETTING DEMOLISHED DEBRIS. EXCESSIVE USE OF WATER WILL NOT BE PERMITTED.

5. PRIOR TO DEMOLITION, CONTRACTOR SHALL REVIEW WITH OWNER ALL MATERIALS TO BE REMOVED, SHOULD THE OWNER WANT TO KEEP ANY MATERIALS THE CONTRACTOR SHALL REMOVE AND DELIVER THE PARTS TO THE OWNER ON THE SITE WHERE SO DIRECTED. OTHERWISE ALL DEMOLISHED OR REMOVED MATERIALS SHALL BECOME THE PROPERTY OF THE CONTRACTOR AND SHALL BE REMOVED FROM THE SITE AND BE DISPOSED OF IN A LEGAL MANNER.

6. DEMOLITION SHALL INCLUDE REMOVAL OF ALL PARTS AND PIECES IN THEIR ENTIRETY BACK TO POINTS INDICATED OR IF NOT INDICATED BACK TO THEIR POINT OF SOURCE.

7. WHERE CONDITIONS PROHIBIT TOTAL REMOVAL OF THE WORK, THE REMAINING PORTION SHALL BE CUT FLUSH WITH THE SURROUNDING SURFACE AND BE CAPPED, PLUGGED OR SEALED AND THE SURROUNDING SURFACE SHALL BE REFINISHED IN AN APPROVED MANNER.

9. DO NOT REMOVE EXISTING STRUCTURAL WORK. DO NOT REMOVE OPERATIONAL ELEMENTS AND SAFETY-RELATED COMPONENTS IN A MANNER RESULTING IN A REDUCTION OF CAPACITIES TO PERFORM IN THE MANNER INTENDED OR RESULTING IN DECREASED OPERATIONAL LIFE, INCREASED MAINTENANCE, OR DECREASED SAFETY.

10. REMOVALS, DISCONNECTIONS, AND RELOCATIONS SHALL BE PERFORMED BY WORKMEN SKILLED IN THE TRADE INVOLVED AND SHALL BE EMPLOYED BY A CONTRACTOR LICENSED IN THE TRADE INVOLVED. ALL WORK SHALL BE DONE IN ACCORDANCE WITH ACCEPTED TRADE PRACTICES.

11. PROVIDE ADEQUATE TEMPORARY SUPPORT FOR WORK TO REMAIN, TO PREVENT FAILURE. DO NOT ENDANGER OTHER WORK.

12. PROTECTION: PROVIDE ADEQUATE PROTECTION WHERE REQUIRED FOR THE PRESENT BUILDING AND ITS CONTENTS. TEMPORARY DUSTPROOF BARRIERS AND BARRICADES SHALL BE ERECTED WHERE REQUIRED FOR PROTECTION OF PERSONNEL, PROTECTION FROM DUST AND DIRT, FOR SECURITY, FIRE AND WEATHER PROTECTIVE REASONS.

13. CONTRACTOR SHALL TAKE EVERY PRECAUTION AGAINST FIRE BY EMPLOYING FIRE DEPARTMENT TYPE HOSES AND PORTABLE FIRE EXTINGUISHERS AS REQUIRED BY OSHA AND/OR THE OWNER'S INSURANCE UNDERWRITER.

14. BEFORE STARTING DEMOLITION OPERATIONS, PROVIDE THE NECESSARY PROTECTIVE DEVICES, WHERE REQUIRED, AND IN STRICT ACCORDANCE WITH OSHA RULES AND REGULATIONS.

14. USE TEMPORARY ENCLOSURES, OR OTHER SUITABLE METHODS TO LIMIT DUST AND DIRT RISING AND SCATTERING TO LOWEST PRACTICAL LEVEL. COMPLY WITH GOVERNING REGULATIONS PERTAINING TO ENVIRONMENTAL PROTECTION.

15. FIELD VERIFY DEMOLITION REQUIREMENTS AND EXISTING CONDITIONS. DEMOLITION NOTES ARE INDICATED IN NOTE FORM.

16. CONTRACTOR SHALL ESTABLISH A PATH OF TRAVEL AND TIME SCHEDULE FOR THE REMOVAL OF ALL DEBRIS AND WASTE, AND HAVE THIS APPROVED BY OWNER. CONTRACTOR IS TO ENSURE THAT ALL CORRIDORS AND PUBLIC AREAS BE KEPT FREE OF OBSTRUCTIONS, DEBRIS, AND ARE TO BE BROOM SWEPT CLEAN AT ALL TIMES.

17. CONTRACTOR SHALL VISIT THE SITE AND BECOME INFORMED AS TO THE CONDITION OF THE PREMISES AND THE EXTENT AND CHARACTER OF WORK REQUIRED. NO ADDITIONAL COMPENSATION WILL BE APPROVED DUE TO FIELD CONDITIONS.

NYSECC ENERGY COMPLIANCE STATEMENT:

PER SECTION C101.7 OF THE 2020 NYSECC HISTORIC BUILDINGS ARE EXEMPT FROM THE REQUIREMENTS OF THE ENERGY CODE.

HVAC SYMBOL LIST

IDENTIFIER	DESCRIPTION
	NEW DUCTWORK OR PIPING
	EXISTING DUCTWORK OR PIPING TO BE REMOVED
	EXISTING DUCTWORK OR PIPING TO REMAIN
24X12 / 24X12	DOUBLE-LINE AND SINGLE-LINE RECTANGULAR DUCT, FIRST NUMBER INDICATES SIDE IN VIEW IN INCHES, SECOND NUMBER INDICATES SIDE IN DEPTH IN INCHES
	FLEXIBLE DUCTWORK
	REGULAR SUPPLY AIR DUCT (UP AND DOWN)
	REGULAR RETURN AIR DUCT (UP AND DOWN)
	REGULAR EXHAUST AIR DUCT (UP AND DOWN)
	REGULAR OUTSIDE AIR DUCT (UP AND DOWN)
VD	VOLUME DAMPER
BD	BACKDRAFT DAMPER
S	MOTOR OPERATED DAMPER
XXX / XX	EQUIPMENT TAG / EQUIPMENT NUMBER
XXX / X-XXX	DETAIL TAG/CALL OUT TAG / MECHANICAL SHEET NUMBER
T	THERMOSTAT
	EXHAUST GRILLE
F#	REFER TO SUPPLEMENTAL FIGURE INDICATED BY NUMBER (I.E. F2 REFERS TO FIGURE 2)

HVAC ABBREVIATIONS

IDENTIFIER	DESCRIPTION
AC	DIRECT EXPANSION AIR CONDITION UNIT
CFM	CUBIC FEET PER MINUTE
COND	CONDENSATE
CU	CONDENSING UNIT
CUH	CABINET UNIT HEATER
DB	DRY BULB
DN	DOWN
EA	EXHAUST AIR
EF	EXHAUST FAN
EG	EXHAUST GRILLE
EUH	ELECTRIC UNIT HEATER
EER	ENERGY EFFICIENCY RATIO
EG	EXHAUST GRILLE
FAI	FRESH AIR INTAKE
GC	GENERAL CONTRACTOR
MBH	THOUSAND BTU PER HOUR
PC	PLUMBING CONTRACTOR
RG	RETURN GRILLE
RGL	REFRIGERANT GAS LINE
RLL	REFRIGERANT LIQUID LINE
RTU	ROOFTOP UNIT
SA	SUPPLY AIR
SD	SUPPLY DIFFUSER
TYP.	TYPICAL
VIF	VERIFY IN FIELD

SCOPE OF WORK

CONSTRUCTION

1. PROVIDE ONE (1) NEW OUTDOOR SPLIT CONDENSER AIR CONDITIONER UNIT ON ROOF AS INDICATED.
2. PROVIDE ONE (1) NEW WALL MOUNTED INDOOR UNIT AS INDICATED.
3. PROVIDE ONE (1) NEW ROOF MOUNTED EXHAUST FAN AND ASSOCIATED DUCTWORK AS INDICATED.

MECHANICAL DRAWING LIST

SHEET NO.	SHEET NAME	REVISON NO.	REVISION DATE
CXF-M-01	MECHANICAL NOTES, SYMBOLS & LEGENDS	0	-
CXF-M-21	MECHANICAL 1ST FLOOR CONSTRUCTION PLAN	0	-
CXF-M-22	MECHANICAL ROOF CONSTRUCTION PLAN	0	-
CXF-M-61	MECHANICAL SCHEDULES	0	-
CXF-M-81	MECHANICAL DETAILS	0	-
CXF-M-91	MECHANICAL CONTROLS	0	-

NATURAL VENTILATION SCHEDULE

SPACE DETAILS			DESIGN			NOTES
ROOM	AREA (SF)	4% FLOOR AREA (SF)	WINDOW FREE AREA (SF)	DOOR AREA (SF)	TOTAL OPENABLE AREA (SF)	
101 FOOD VENDOR	986	39	-	464	464	1,2

NOTES:
1. NEW YORK STATE MECHANICAL CODE.
2. NATURAL VENTILATION OF AN OCCUPIED SPACE SHALL BE THROUGH WINDOWS, DOORS, LOUVERS, AND OTHER OPENINGS TO THE OUTDOORS. THE MINIMUM OPENABLE AREA TO THE OUTDOORS SHALL BE 4 PERCENT OF THE FLOOR AREA BEING VENTILATED.

TABLE 1: ENERGY CODE ANALYSIS TABLE FOR MECHANICAL SYSTEMS

(PER 2020 NYS ENERGY CODE)

ITEM DESCRIPTION			PROPOSED VALUE	MINIMUM EFFECIENCY	CODE PRECRIBED VALUE AND CITATION	CITATION	SUPPORTING DOCUMENTATION
	UNIT TAG	EQUIPMENT TYPE					
HVAC EQUIPMENT PERFORMANCE	AC-1, CU-1	SPLIT SYSTEM	SEER=19.8	SEER=13.0	MINIMUM EFFICIENCY REQUIREMENTS: ELECTRICALLY OPERATED UNITARY AIR CONDITIONERS AND CONDENSING UNITS < 65,000 Btu/hb	C403.2.3(1)	MECHANICAL SCHEDULES
HVAC SYSTEM CONTROLS	ALL HEATING COOLING EQUIPMENT	THERMOSTATIC CONTROLS	DIGITAL THERMOSTATS	-	THERMOSTATIC CONTROLS FOR HVAC SYSTEM	C403.2.6	MECHANICAL SCHEDULES AND PLANS
SHUTOFF DAMPERS			GRAVITY/BACKDRAFT DAMPERS PROVIDED IN LIEU OF MOTORIZED DAMPER MOTORIZED DAMPERS PER EXCEPTIONS 1 AND 3	-	BACDRAFT DAMPER INSTALLED AT EXHAUST OPENINGS	C403.7.7	MECHANICAL SCHEDULES AND PLANS
DUCT LEAKAGE			SMACNA HVAC DUCT LEAKAGE TEST	-	SMACNA HVAC DUCT LEAKAGE TEST	PER C403	MECHANICAL DWGS. & SPECS

TABLE 2: ENERGY CODE COMPLIANCE INSPECTIONS FOR MECHANICAL SYSTEMS

(IIB - MECHANICAL AND SERVICE WATER HEATING INSPECTIONS)

	INSPECTION TEST	FREQUENCY	REFERENCE STANDARDS	INSPECTION DESCRIPTION	ECC CITATION
IIB2	SHUT-OFF DAMPERS	AS REQUIRED DURING INSTALLATION	APPROVED CONSTRUCTION DOCUMENTS	DAMPERS FOR STAIR AND ELEVATOR SHAFT VENTS AND OTHER OUTDOOR AIR INTAKES AND EXHAUST OPENINGS INTEGRAL TO THE BUILDING ENVELOPE SHALL BE VISUALLY INSPECTED TO VERIFY THAT SUCH DAMPERS, EXCEPT WHERE PERMITTED TO BE GRAVITY DAMPERS, COMPLY WITH APPROVED CONSTRUCTION DRAWINGS. MANUFACTURER'S LITERATURE SHALL BE REVIEWED TO VERIFY THAT THE PRODUCT HAS BEEN TESTED AND FOUND TO MEET THE STANDARD.	NYSECC C403.2.4.4, OR ASHRAE 90.1-6.4.3.4
IIB3	HVAC AND SERVICE WATER HEATING EQUIPMENT	PRIOR TO FINAL MECHANICAL AND CONSTRUCTION INSPECTION	APPROVED CONSTRUCTION DOCUMENTS	EQUIPMENT SIZING, EFFICIENCIES AND OTHER PERFORMANCE FACTORS OF ALL MAJOR EQUIPMENT UNITS, AS DETERMINED BY THE APPLICANT OF RECORD, AND NO LESS THAN 15% OF MINOR EQUIPMENT UNITS, SHALL BE VERIFIED BY VISUAL INSPECTION AND, WHERE NECESSARY, REVIEW OF MANUFACTURER'S DATA. POOL HEATERS AND COVERS SHALL BE VERIFIED BY VISUAL INSPECTION	NYSECC C403.2, C404.2, C404.7, C406.2
IIB4	HVAC AND SERVICE WATER HEATING SYSTEM CONTROLS	AFTER INSTALLATION AND PRIOR TO FINAL ELECTRICAL AND CONSTRUCTION INSPECTION, EXCEPT THAT FOR CONTROLS WITH SEASONALLY DEPENDENT FUNCTIONALITY, SUCH TESTING SHALL BE PERFORMED BEFORE SIGN-OFF FOR ISSUANCE OF A FINAL CERTIFICATE OF OCCUPANCY	APPROVED CONSTRUCTION DOCUMENTS INCLUDING CONTROL SYSTEM NARRATIVES	NO LESS THAN 20% OF EACH TYPE OF REQUIRED CONTROLS AND ECONOMIZERS SHALL BE VERIFIED BY VISUAL INSPECTION AND TESTED FOR FUNCTIONALITY AND PROPER OPERATION. SUCH CONTROLS SHALL INCLUDE, BUT ARE NOT LIMITED TO, THERMOSTATIC AND ECONOMIZER CONTROLS	NYSECC C403.2.4, C403.2.5.1, C403.2.11, C403.3, C403.4, C404.3, C404.6, C404.7
IIB6	HVAC DUCT LEAKAGE TESTING	PRIOR TO CLOSING CEILINGS AND WALLS AND PRIOR TO FINAL CONSTRUCTION INSPECTION	APPROVED CONSTRUCTION DOCUMENTS; NYC MECHANICAL CODE	WHERE THE AIR HANDLER AND/OR SOME DUCTWORK IS IN UNCONDITIONED SPACE, DUCT-LEAKAGE TESTING SHALL BE PERFORMED EITHER AFTER ROUGH-IN OR POST-CONSTRUCTION TO ENSURE COMPLIANCE WITH ECC R403.3.3 AND R403.3.4. NOT LESS THAN 20% OF SUCH DUCTWORK SHALL BE TESTED	NYSECC C403

CONSULTANT INFORMATION

LiRo Engineers, Inc.
A LiRo Group Company
Syosset, N.Y. 516-214-8157[T]

CONSULTANT SEAL

STATE OF NEW YORK · FRANK F. ULISSE · No. 090111-1 · LICENSED PROFESSIONAL ENGINEER

REVISION NUMBER	DATE	MADE BY	APP'D BY	REVISION

RECORD DRAWING CERTIFICATION

☐ AS BUILT – CHANGES AS NOTED ☐ AS BUILT – NO CHANGES

CONTRACTOR
NAME
SIGNATURE
TITLE DATE

PROJECT COORDINATOR
NAME
SIGNATURE
TITLE DATE

WESTCHESTER COUNTY, NEW YORK
DEPARTMENT OF PUBLIC WORKS AND TRANSPORTATION
DIVISION OF ENGINEERING

INFRASTRUCTURE REHABILITATION - PHASE 3
PLAYLAND PARK, RYE, NEW YORK
CROSS AXIS BUILDING F
MECHANICAL NOTES, SYMBOLS AND LEGENDS

CONTRACT NUMBER	22-523
SHEET NUMBER	CXF-M-01
DWG NO.:	368 of 664
SCALE:	AS INDICATED
DATE:	08/23/2022
DPW FILE NUMBER	1-118-M-1117-0
REV. NO.	0

GENERAL NOTES:

1. CONTRACTOR TO COORDINATE WITH FACILITY WHEN WORKING AROUND OR ABOVE THE RIDE COMPONENTS, AND PROVIDE ALL NECESSARY MEASURES TO PROTECT THESE COMPONENTS PER THE REQUIREMENTS OF THE FACILITY.
2. UPON COMPLETION, SYSTEM SHALL BE TESTED FOR PROPER OPERATION.

MECHANICAL CONSTRUCTION NOTES:

(1) PROVIDE NEW WALL MOUNTED INDOOR UNITS AS INDICATED WITH CONDENSATE LIFT PUMPS. INSTALL AC-1 AT 7'0" AFF. COORDINATE ELECTRICAL POWER AND WIRING WITH ELECTRICAL CONTRACTOR.

(2) PROVIDE NEW EXHAUST DUCTWORK FROM KITCHEN TO ROOF TOP EXHAUST FAN.

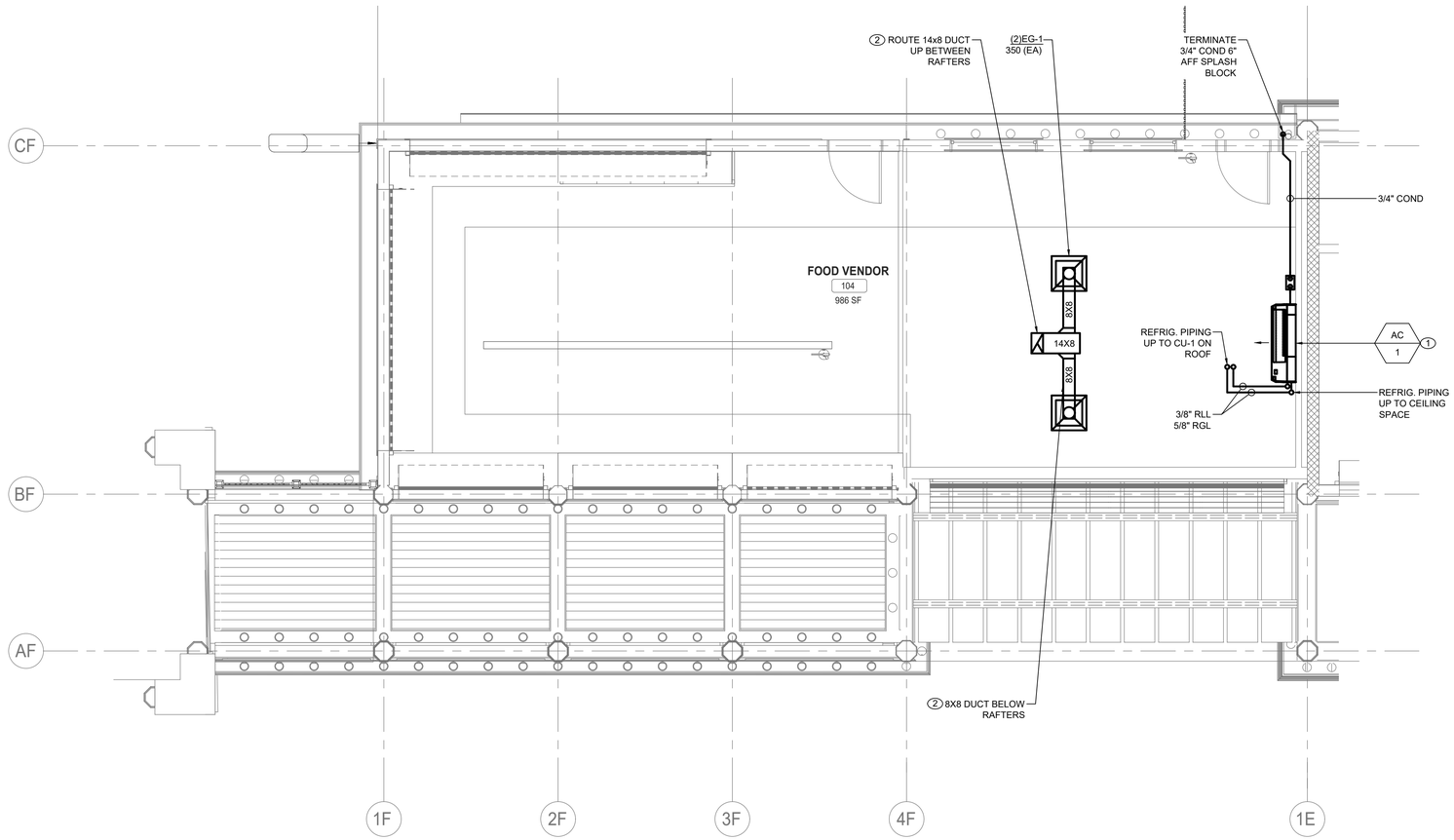

MECHANICAL FIRST FLOOR CONSTRUCTION PLAN

SCALE: 1/4" = 1'-0

N

CONSULTANT INFORMATION

LiRo Engineers, Inc.
A LiRo Group Company
Syosset, N.Y. 516-214-8157[T]

CONSULTANT SEAL

STATE OF NEW YORK · FRANK F. ULISSE · No. 090111-1 · LICENSED PROFESSIONAL ENGINEER

REVISION NUMBER	DATE	MADE BY	APP'D BY	REVISION

RECORD DRAWING CERTIFICATION

☐ AS BUILT – CHANGES AS NOTED ☐ AS BUILT – NO CHANGES

CONTRACTOR
NAME
SIGNATURE
TITLE DATE

PROJECT COORDINATOR
NAME
SIGNATURE
TITLE DATE

WESTCHESTER COUNTY, NEW YORK
DEPARTMENT OF PUBLIC WORKS AND TRANSPORTATION
DIVISION OF ENGINEERING

INFRASTRUCTURE REHABILITATION - PHASE 3
PLAYLAND PARK, RYE, NEW YORK
CROSS AXIS BUILDING F
MECHANICAL FIRST FLOOR CONSTRUCTION PLAN

CONTRACT NUMBER	22-523
SHEET NUMBER	CXF-M-21
DWG NO.:	369 of 664
SCALE:	AS INDICATED
DATE:	08/23/2022
DPW FILE NUMBER	1-118-M-1118-0
REV. NO.	0

GENERAL NOTES:

1. CONTRACTOR TO COORDINATE WITH FACILITY WHEN WORKING AROUND OR ABOVE THE RIDE COMPONENTS, AND PROVIDE ALL NECESSARY MEASURES TO PROTECT THESE COMPONENTS PER THE REQUIREMENTS OF THE FACILITY.
2. UPON COMPLETION, SYSTEM SHALL BE TESTED FOR PROPER OPERATION.

MECHANICAL CONSTRUCTION NOTES:

1. PROVIDE NEW OUTDOOR AIR CONDITIONER UNIT AS SHOWN. COORDINATE ELECTRICAL POWER, DISCONNECT, AND WIRING WITH ELECTRICAL CONTRACTOR. PLACE UNIT ON EQUIPMENT RAILS AS SHOWN ON CXF-M-81.
2. PROVIDE NEW EXHAUST FAN AS SCHEDULED. COORDINATE ELECTRICAL POWER AND WIRING WITH ELECTRICAL CONTRACTOR.

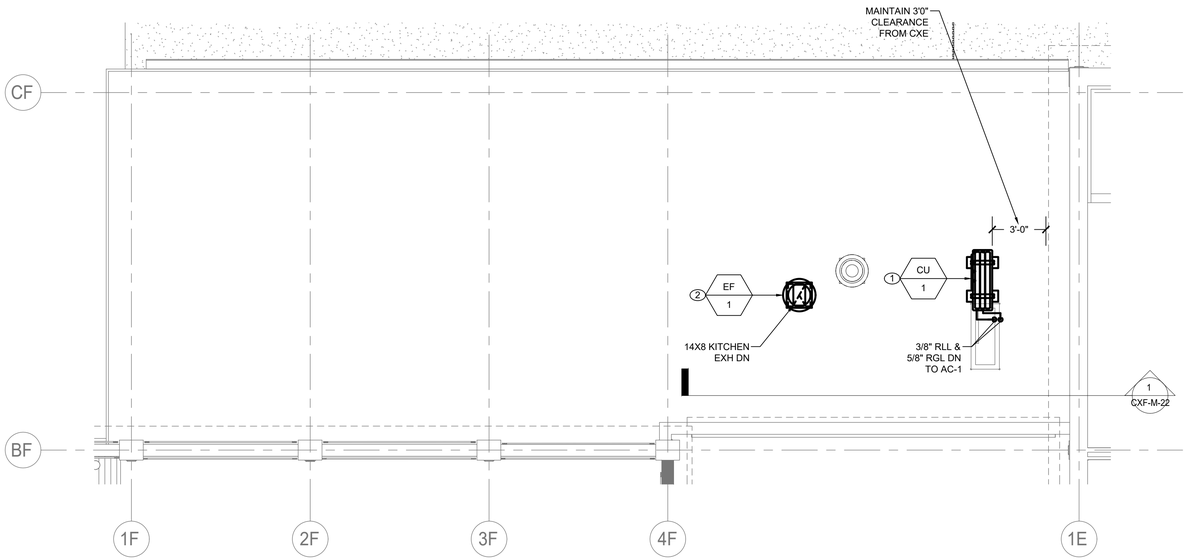

MECHANICAL ROOF CONSTRUCTION PLAN

SCALE: 1/4" = 1'-0

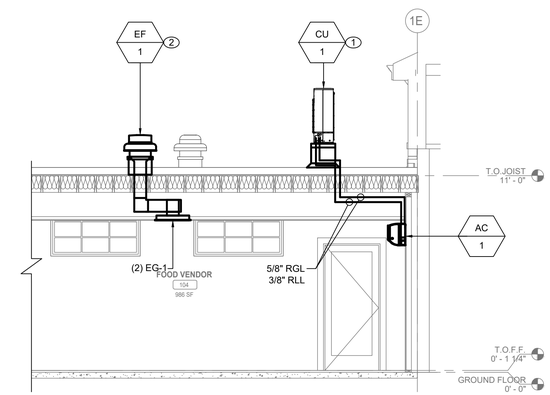

1 INTERIOR SECTION - SOUTHWEST

SCALE: 1/4" = 1'-0

CONSULTANT INFORMATION

LiRo Engineers, Inc.
A LiRo Group Company
Syosset, N.Y. 516-214-8157[T]

CONSULTANT SEAL

STATE OF NEW YORK · FRANK F. ULISSE · No. 090111-1 · LICENSED PROFESSIONAL ENGINEER

REVISION NUMBER	DATE	MADE BY	APP'D BY	REVISION

RECORD DRAWING CERTIFICATION

☐ AS BUILT – CHANGES AS NOTED ☐ AS BUILT – NO CHANGES

CONTRACTOR
NAME
SIGNATURE
TITLE DATE

PROJECT COORDINATOR
NAME
SIGNATURE
TITLE DATE

WESTCHESTER COUNTY, NEW YORK
DEPARTMENT OF PUBLIC WORKS AND TRANSPORTATION
DIVISION OF ENGINEERING

INFRASTRUCTURE REHABILITATION - PHASE 3
PLAYLAND PARK, RYE, NEW YORK
CROSS AXIS BUILDING F
MECHANICAL ROOF CONSTRUCTION PLAN

CONTRACT NUMBER: 22-523
SHEET NUMBER: CXF-M-22
DWG NO.: 370 of 664
SCALE: AS INDICATED
DATE: 08/23/2022
DPW FILE NUMBER: 1-118-M-1119-0
REV. NO.: 0

DUCTLESS SPLIT SYSTEM SCHEDULE

UNIT TAG (INDOOR)	ASSOCIATED OUTDOOR UNIT	MANUFACTURER	MODEL	LOCATION/SERVICE	REFRIGERANT	SUPPLY FAN	COOLING (ONLY)		HEATING		ELECTRICAL			WEIGHT	NOTES
						CFM	TOTAL/SENS. (MBH)	EAT DB/WB	MBH	EAT/LAT DB	V.-PH.-CY.	MCA	MOCP		
AC-1	CU-1	MITSUBISHI	PKA-A30KA7	101 FOOD VENDOR	R410A	775	30.0/30.0	80/67	-	-	208-1-60	1.00	-	46	1,2,3,4

NOTES:

1. UNIT CAPACITY INDICATED AS SIZING CRITERIA.
2. PROVIDE UNIT WITH WIRED WALL MOUNTED THERMOSTAT.
3. PROVIDE ALL INDOOR UNIT WITH CONDENSATE PUMP.
4. INSTALL AND SIZE REFRIGERANT PIPING PER MANUFACTURER'S SPECIFICATION.

DUCTLESS SPLIT SYSTEM CONDENSING UNIT SCHEDULE

UNIT TAG (OUTDOOR)	MANUFACTURER	MODEL	NOMINAL COOLING (BTU/HR)	NOMINAL HEATING (BTU/HR)	SERVICE	SEER	COP	V.-PH.-CY.	MCA	MOCP	WEIGHT	NOTES
CU-1	MITSUBISHI	PUY-A30NHA7	30000	-	101 FOOD VENDOR	19.6	-	208-1-60	19.0	26.0	151.0	1,2

NOTES:

1. UNIT CAPACITY INDICATED AS SIZING CRITERIA.
2. PROVIDE UNIT WITH 16" ROOF STAND.

FAN SCHEDULE

TAG	MANUFACTURER	MODEL	LOCATION	SERVICE	TYPE	DRIVE	AIR FLOW (CFM)	TSP (IN. WG)	ELECTRICAL				OPERATING WEIGHT (±LBS)	OPENING DIMENSIONS DxH (IN)	NOTES
									HP	BHP	RPM	V-PH-HZ			
EF-1	GREENHECK	G-90-VG	101 FOOD VENDOR	104 FOOD VENDOR	CENTRIFUGAL	DIRECT	700	0.20	0.10	0.07	1619	115-1-60	29	12.5X12.5	1,2,3,4,5

NOTES:

1. PROVIDE ALL CONTACTS, RELAYS, AND DEVICES NECESSARY FOR CONTROL OF FANS PER SEQUENCE OF OPERATIONS.
2. PROVIDE THERMAL OVERLOAD FOR ALL SINGLE PHASE MOTORS.
3. PROVIDE SALT WATER RESISTANT HI-PRO POLYESTER COATING FOR ALL FANS.
4. FAN SHALL BE FURNISHED WITH NON FUSED DISCONNECT.
5. PROVIDE 12" ROOF CURBS FOR ALL ROOF MOUNTED FANS. INCLUDE 1.5" INSULATION ON CURB.

DIFFUSER SCHEDULE

TAG	MANUFACTURER	MODEL	SERVICE	NECK SIZE (IN)	FACE SIZE (IN)	MOUNTING	CFM	MAX PD (wg)	MAX VELOCITY	MAX NC	NOTES
EG-1	TITUS	50F	GENERAL EXHAUST	8X8	24X24	LAY-IN / GYP	111-370	0.10	946	40	1, 2, 3

NOTES:

1. COORDINATE AND CONFIRM CEILING AND/OR WALL MOUNT (T-BAR, SURFACE, REINFORCEMENT, ETC) WITH ARCHITECTURAL RCP AND WALL CONSTRUCTION BEFORE ORDERING.
2. PROVIDE WITH MOLDED INSULATION BLANKET.
3. INTEGRAL VOLUME DAMPERS NOT ACCEPTABLE. VOLUME DAMPERS PROVIDED BY MECHANICAL CONTRACTOR ON ALL RUN-OUTS. EXCEPTIONS REQUIRE APPROVAL WHEN REQUIRED.

CONSULTANT INFORMATION

LiRo Engineers, Inc.
A LiRo Group Company
Syosset, N.Y. 516-214-8157[T]

CONSULTANT SEAL

STATE OF NEW YORK · FRANK F. ULISSE · No. 090111-1 · LICENSED PROFESSIONAL ENGINEER

REVISION NUMBER	DATE	MADE BY	APP'D BY	REVISION

RECORD DRAWING CERTIFICATION

☐ AS BUILT – CHANGES AS NOTED ☐ AS BUILT – NO CHANGES

CONTRACTOR
NAME
SIGNATURE
TITLE DATE

PROJECT COORDINATOR
NAME
SIGNATURE
TITLE DATE

WESTCHESTER COUNTY, NEW YORK
DEPARTMENT OF PUBLIC WORKS AND TRANSPORTATION
DIVISION OF ENGINEERING

INFRASTRUCTURE REHABILITATION - PHASE 3
PLAYLAND PARK, RYE, NEW YORK
CROSS AXIS BUILDING F
MECHANICAL SCHEDULES

CONTRACT NUMBER 22-523
SHEET NUMBER CXF-M-61
DWG NO.: 371 of 664
SCALE: AS INDICATED
DATE: 08/23/2022
DPW FILE NUMBER 1-118-M-1120-0
REV. NO. 0

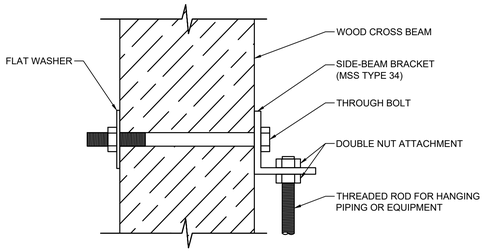

1 / M-81 MECHANICAL ANCHORING DETAIL
SCALE: NOT TO SCALE

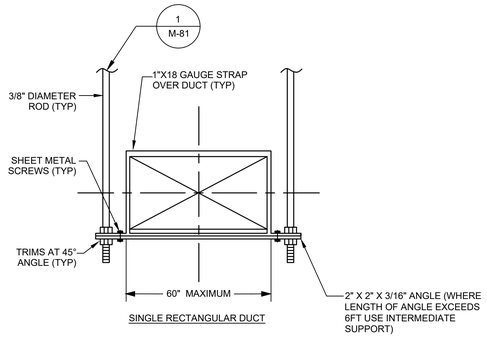

2 / M-81 MECHANICAL DUCT HANGER DETAIL
SCALE: NOT TO SCALE

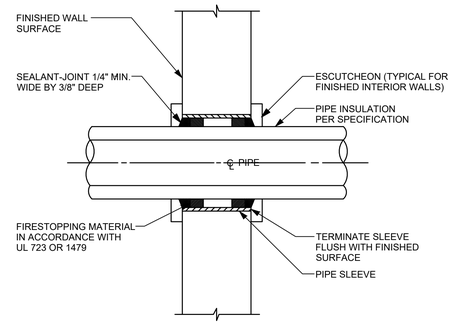

3 / M-81 WALL SLEEVED PENETRATION DETAIL
SCALE: NOT TO SCALE

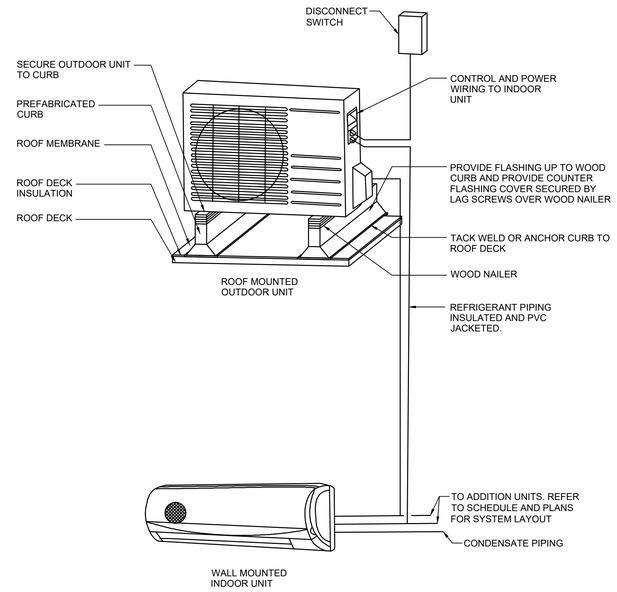

6 / M-81 MECHANICAL SPLIT PIPING DETAIL
SCALE: NOT TO SCALE

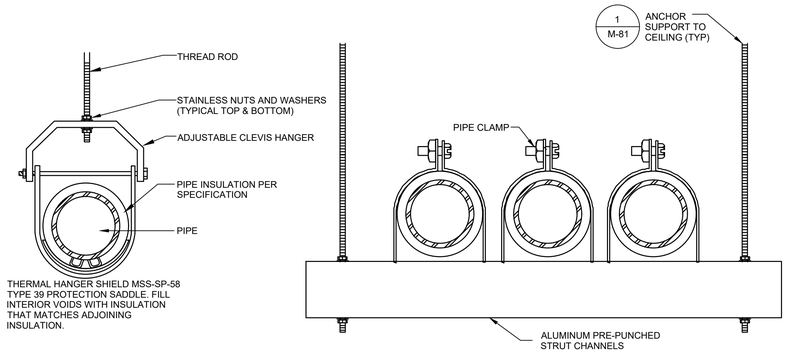

4 / M-81 MECHANICAL PIPE HANGER DETAIL
SCALE: NOT TO SCALE

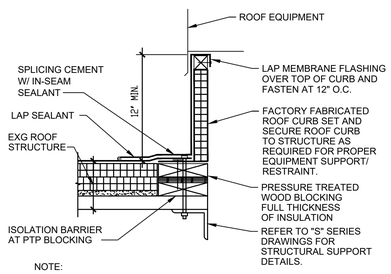

NOTE:
1. AT PENETRATIONS THROUGH EXISTING ROOF, FLASH INTO EXISTING ROOF SYSTEM AND PATCH TO MATCH AS REQUIRED BY ROOF SYSTEM MANUFACTURER.

5 / M-81 ROOF CURB DETAIL
SCALE: NOT TO SCALE

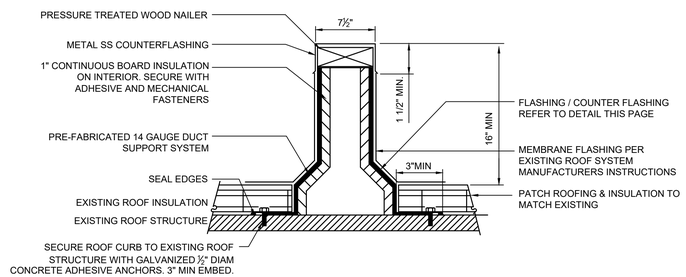

NOTE:
1. ALL EXPOSED METAL OR WELDS SUSCEPTIBLE TO RUSTING TO BE PAINTED WITH COLD GALVANIZED COATING
2. CONTRACTOR TO INSTALL MEMBRANE FLASHING PER EXISTING ROOFING SYSTEM MANUFACTURER'S INSTRUCTIONS AND TO MEET ANY EXISTING ROOF WARRANTY REQUIREMENTS.
3. CONTRACTOR TO VERIFY IN THE FIELD ALL EXISTING ROOF CONDITIONS AND DIMENSIONS PRIOR TO STARTING WORK.
4. MAINTAIN ROOF IN WEATHER TIGHT CONDITION DURING ENTIRE PROJECT.
5. CONTRACTOR TO PROVIDE TEMPORARY PROTECTION OF THE ROOF WITHIN THE AREA OF WORK THROUGHOUT CONSTRUCTION.
6. ANCHOR CONDENSER TO SUPPORTS WITH ½" STAINLESS STEEL GRADE 5 ANCHORS

9 / M-81 MECHANICAL EQUIP RAILS DETAIL
SCALE: NOT TO SCALE

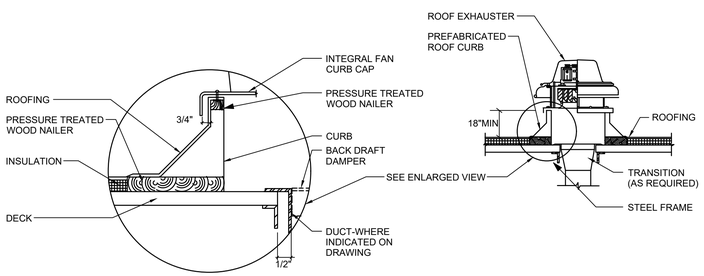

NOTES:
1. BACKDRAFT DAMPER SHALL BE FULL SIZE OF OPENING IN ROOF DECK.

7 / M-81 MECHANICAL ROOF FAN/HOOD DETAIL
SCALE: NOT TO SCALE

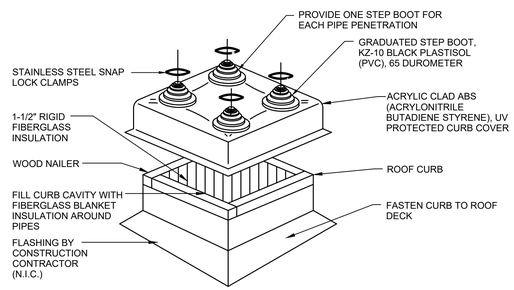

8 / M-81 MECHANICAL REFRIG. PENETRATION DETAIL
SCALE: NOT TO SCALE

CONSULTANT INFORMATION

LiRo Engineers, Inc.
A LiRo Group Company
Syosset, N.Y. 516-214-8157[T]

CONSULTANT SEAL

STATE OF NEW YORK · FRANK F. ULLISE · No. 090111 · LICENSED PROFESSIONAL ENGINEER

REVISION NUMBER	DATE	MADE BY	APP'D BY	REVISION

RECORD DRAWING CERTIFICATION

☐ AS BUILT – CHANGES AS NOTED ☐ AS BUILT – NO CHANGES

CONTRACTOR: NAME / SIGNATURE / TITLE / DATE

PROJECT COORDINATOR: NAME / SIGNATURE / TITLE / DATE

WESTCHESTER COUNTY, NEW YORK
DEPARTMENT OF PUBLIC WORKS AND TRANSPORTATION
DIVISION OF ENGINEERING

INFRASTRUCTURE REHABILITATION - PHASE 3
PLAYLAND PARK, RYE, NEW YORK
CROSS AXIS BUILDING F
MECHANICAL DETAILS

CONTRACT NUMBER	22-523
SHEET NUMBER	CXF-M-81
DWG NO.:	372 of 664
SCALE:	AS INDICATED
DATE:	08/23/2022
DPW FILE NUMBER	1-118-M-1121-0
REV. NO.	0

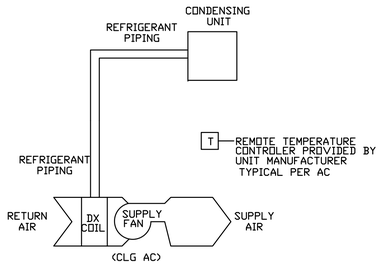

DUCTLESS SPLIT SYSTEMS - COOLING ONLY - SEQUENCE OF OPERATIONS:

1. THE SPLIT SYSTEM AIR COOLED (AC & CU) CONSISTS OF INDOOR UNIT (AC) WITH FAN AND EVAPORATOR COIL AND OUTDOOR CONDENSING UNIT (CU) WITH FAN, COMPRESSOR, AND REFRIGERATION SYSTEM CONTROL.
2. UNIT SHALL BE CONTROLLED WITH UNIT PROVIDED THERMOSTAT AND CONTROLLER.

1 / M-91

DUCTLESS SPLIT SYSTEM

SCALE: NOT TO SCALE

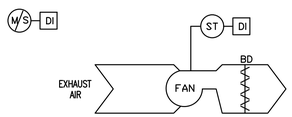

EXHAUST FAN - CONSTANT SPEED - SEQUENCE OF OPERATIONS:

GENERAL: EACH EXHAUST FAN CONSISTS OF FAN, BACKDRAFT DAMPER, AND EC MOTOR CONTROLLER

EXHAUST FAN TO BE LOCALLY CONTROLLED FROM SWITCH MOUNTED ADJACENT TO FAN.

1. OCCUPIED MODE:
   a. THE EXHAUST FAN SHALL RUN AT A CONSTANT VOLUME WHEN SWITCHED ON.
3. UNOCCUPIED MODE:
   a. THE EXHAUST FAN SHALL BE OFF WHEN SWITCHED OFF.

2 / M-91

EXHAUST FAN - CONSTANT SPEED

SCALE: NOT TO SCALE

NOTES:

1. FOR ADDITIONAL NOTES, ABBREVIATIONS AND SYMBOLS, SEE DRAWING GE–E–01.
2. CONTRACTOR IS ADVISED, CONSTRUCTION FOR THIS BUILDING SHALL BE COORDINATED WITH THE CONSTRUCTION OF CXE BUILDING. SEE DRAWING CXF–E–04 AND CXE BUILDING POWER DRAWINGS FOR ADDITIONAL INFORMATION.
3. CONTRACTOR IS ADVISED THAT ALL EXISITING DISTRIBUTION CIRCUITS (PRESENTLY USED CIRCUITS) CONNECTED TO EXISTING PANEL PP–TW 2&3 SHALL BE EXTENDED, TO THE RELOCATED PANEL POSITION. FOR BIDDING PURPOSES ASSUME 23 CIRCUITS WILL NEED TO BE EXTENDED. PROVIDE FOR A TOTAL OF 500' OF 3/4" CONDUIT WITH 3 #12AWG. REFER TO CXF–E–04 FOR INCOMING FEEDER EXTENSION.
4. DISTRIBUTION CIRCUITS FOR EACH RELAY PANEL WILL NEED TO BE EXTENDED. REFER TO CXF–E–04 FOR ADDITIONAL INFORMATION.

KEY NOTES:

(1) EXISTING 200 AMP BREAKER TO REMAIN AND BE REUSED.

(2) EXISTING PANEL PP–TW2 & 3 SHALL BE DISCONNECTED AND RELOCATED TO THE NEW ELECTRICAL ROOM LOCATED IN THE CXE BUILDING.

(2) TOWER RELAY PANELS SHALL BE DISCONNECTED AND RELOCATED TO THE NEW ELECTRICAL ROOM LOCATED IN THE CXE BUILDING.

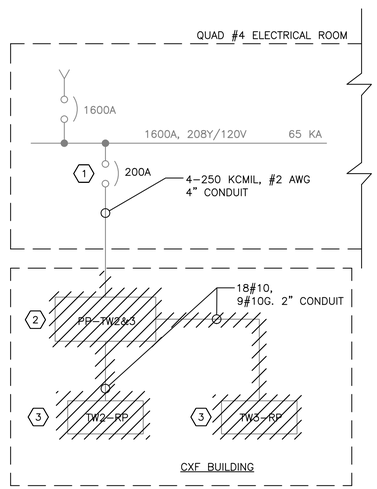

ONE LINE DIAGRAM – DEMOLITION

N.T.S.

Drawing Name: G:\SavinAutocad\2060\25–Playland–Mega–3\E\CXFE–1001.dwg
Projectname: 211001F02 Comments: ----
Printed by: MGoaby Date: 29 August 2022 7:57 AM Designed by: ----
Xrefs: [TB_24X36_WestchesterCo_3.dwg] [TSG–SVLOGO.dwg] [BCR–A–04.dwg] [BCRE–101.dwg]

CONSULTANT INFORMATION

Savin Engineers, P.C.

CONSULTANT SEAL

STATE OF NEW YORK · STEVEN A. MARTINO · 083631 · LICENSED PROFESSIONAL ENGINEER

REVISION NUMBER	DATE	MADE BY	APP'D BY	REVISION

RECORD DRAWING CERTIFICATION

☐ AS BUILT – CHANGES AS NOTED ☐ AS BUILT – NO CHANGES

CONTRACTOR: NAME / SIGNATURE / TITLE / DATE

PROJECT COORDINATOR: NAME / SIGNATURE / TITLE / DATE

WESTCHESTER COUNTY, NEW YORK
DEPARTMENT OF PUBLIC WORKS AND TRANSPORTATION
DIVISION OF ENGINEERING

INFRASTRUCTURE REHABILITATION - PHASE 3
PLAYLAND PARK, RYE, NEW YORK
CROSS AXIS BUILDING F
ONE LINE DIAGRAM - DEMOLITION

CONTRACT NUMBER	22-523
SHEET NUMBER	CXF-E-01
DWG NO.:	
SCALE:	AS SHOWN
DATE:	8/23/2022
DPW FILE NUMBER	1-118-E-1123-0
REV. NO.	0

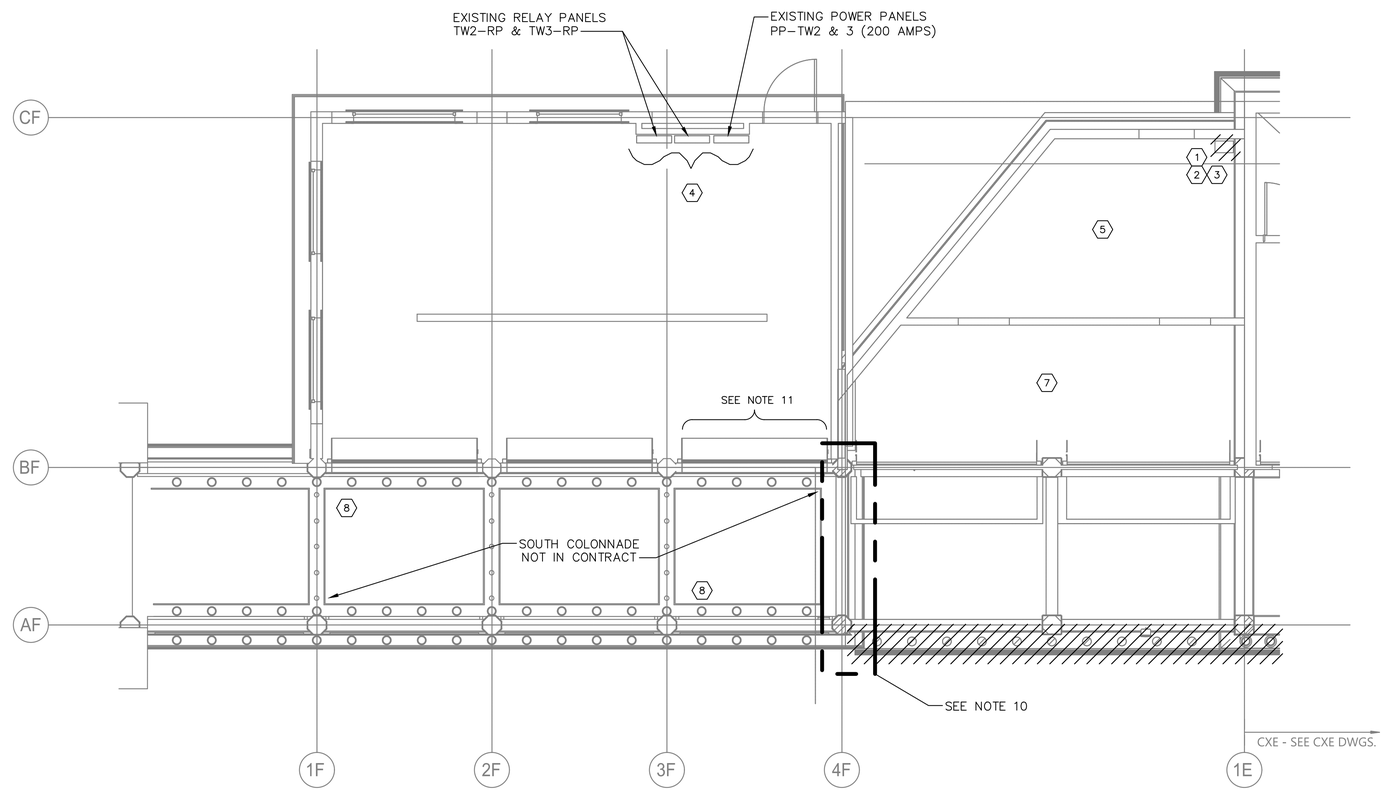

B GROUND FLOOR DEMOLITION PLAN (CXF)
SCALE = 1/4" = 1'-0"

NOTES:

1. FOR ADDITIONAL NOTES, ABBREVIATIONS AND SYMBOLS, SEE DRAWING GE-E-01.
2. ALL REMOVED EQUIPMENT SHALL BE RETURNED TO OWNER UPON REQUEST. OTHERWISE, ALL REMOVED MATERIAL SHALL BE LEGALLY DISPOSED OF.
3. DISCONNECT AND REMOVE ALL ASSOCIATED LIGHTING POWER AND CONTROL WIRE AND CONDUIT BACK TO SOURCE.
4. ALL ASSOCIATED CIRCUITING TO BE DEMOLISHED FOR ALL RECEPTACLE AND LIGHTING FIXTURES SHOWN SHALL ASSUME TO BE 3/4" CONDUIT WITH 2 #12 & 1 #12G, UNLESS OTHERWISE NOTED.
5. CONTRACTOR SHALL DEMOLISH ALL EXISTING JUNCTION BOXES AND ALL ASSOCIATED CONDUITS, WIRES AND APPURTENANCES. FOR BIDDING PURPOSES, ASSUME 1000 FEET 1"C, 3 #12 & 1 #12G.
6. EXISITING STRUCTURE BETWEEN COLUMN LINES 4F AND IE WILL BE DEMOLISHED IN ITS ENTIRETY BY OTHERS. SEE ARCHITECTURAL DRAWINGS. CONTRACTOR IS ADVISED:
   a. STORAGE SPACE IN EXTREMELY POOR CONDITION. MISCELLANEOUS KITCHEN, VENDOR AND HVAC EQUIPMENT TO BE REMOVED BY OTHERS. CONTRACTOR SHALL DISCONNECT AND REMOVE ALL POWER CONDUIT AND CABLE LOCATED IN THIS SPACE. CONTRACTOR SHALL ASSUME (2) LIGHTING FIXTURES, (5) RECEPTACLES, AND 500 FEET OF 1" CONDUIT AND ASSOCIATED WIRING TO BE DEMOLISHED.
   b. SMALL GAMES VENDOR AREA. CONTRACTOR SHALL ASSUME (6) LIGHTING FIXTURES, (3) RECEPTACLES AND 300 FEET OF 3/4" CONDUIT AND ASSOCIATED WIRING TO BE DEMOLISHED.
7. EXISITING PANEL ARRAY TO BE RELOCATED UNDER THIS CONTRACT. SEE DRAWING CXF-E-04 FOR MORE INFORMATION.
8. SOUTH COLONNADE RENOVATION COMPLETED UNDER SEPARATE CONTRACT. CARE SHALL BE TAKEN TO PROTECT EXISTING STRUCTURE, LIGHTING, ARCHITECTURAL DECORATIVE AND HISTORICAL FINISHES, ETC. REFER TO ARCHITECTURAL DRAWINGS FOR MORE INFORMATION.
9. EXISTING LIGHTING AND ALL ASSOCIATED CIRCUITING SHALL BE REMOVED. ASSUME 14 LED FIXTURES AND ASSOCIATED SWITCHING TO BE REMOVED.
10. CONTRACTOR IS ADVISED THIS AREA WILL BE EXPANDED WITH NEW LIGHTING AND WILL BE CONNECTED INTO THE EXISTING SOUTH COLONNADE LIGHTING.
11. DISCONNECT EXISTING CIRCUITS FOR 1 ROLL-UP DOOR. DOOR WILL BE TEMPORARILY REMOVED OR PROTECTED AND PLACED BACK INTO THE NEW CONSTRUCTION. EXISTING CIRCUITS WILL BE REUSED AND EXTENDED TO RELOCATED PANEL LOCATION IN THE CXE BUILDING.

DEMOLITION LEGEND ⬡	
1	RECEPTACLE
2	LIGHT SWITCH
3	36 CKT PANEL (GLEN'S GAME – 225 AMPS)
4	EXISITNG PANEL ARRAY (SEE NOTE 7)
5	SEE NOTE 6A
6	MECHANICAL EQUIPMENT (REMOVED BY OTHERS) DISCONNECT AND REMOVE POWER
7	SEE NOTE 6B
8	SEE NOTE 8
9	COMPRESSOR SWITCH
10	UNIT HEATER
11	UNIT HEATER THERMOSTAT

0 4' 8'
SCALE: 1/4" = 1'-0"

Drawing Name: G:\SavinAutocad\2060\25-Playland-Mega-3\E\CXFE-1002.dwg
Proj#: Projectname: 211001F02 Comments: ----
Printed by: MGodby Date: 29 August 2022 7:57 AM Designed by: ----
Xrefs: [TB_24X36_WestchesterCo_3.dwg] [TSG-SVL000.dwg] [CXF-A-04.dwg] [CXF-E-1002.dwg]

CONSULTANT INFORMATION
Savin Engineers, P.C.

CONSULTANT SEAL
STATE OF NEW YORK · STEVEN A. MARTINEZ · 083631 · LICENSED PROFESSIONAL ENGINEER

REVISION NUMBER	DATE	MADE BY	APP'D BY	REVISION

RECORD DRAWING CERTIFICATION
☐ AS BUILT – CHANGES AS NOTED ☐ AS BUILT – NO CHANGES

CONTRACTOR
NAME
SIGNATURE
TITLE DATE

PROJECT COORDINATOR
NAME
SIGNATURE
TITLE DATE

WESTCHESTER COUNTY, NEW YORK
DEPARTMENT OF PUBLIC WORKS AND TRANSPORTATION
DIVISION OF ENGINEERING

INFRASTRUCTURE REHABILITATION - PHASE 3
PLAYLAND PARK, RYE, NEW YORK
CROSS AXIS BUILDING F
GROUND FLOOR DEMOLITION - POWER AND LIGHTING PLAN

CONTRACT NUMBER	22-523
SHEET NUMBER	CXF-E-02
DWG NO.:	
SCALE:	AS SHOWN
DATE:	8/23/2022
DPW FILE NUMBER	1-118-E-1124-0
REV. NO.	0

NOTES:

1. FOR ADDITIONAL NOTES, ABBREVIATIONS AND SYMBOLS, SEE DRAWING GE-E-01.
2. EXISTING DUCTBANK FOR POWER TO EXISTING PANEL PP-TW2 & TW3 FOR REFERENCE. UNDERGROUND RUN HAS 2-4" CONDUITS AND 2'-2" CONDUITS. OF THE 4 INCH CONDUITS, ONE IS A SPARE AND THE OTHER IS A FEEDER CIRCUIT (4-250 KCMIL & 1#2 GND.). BOTH 4" CONDUITS STUB UP THROUGH THE FLOOR OF CXF BUILDING.
3. EXISTING PP-TW2 & 3 FEEDER SHALL REMAIN AND BE REUSED. FEEDER SHALL BE EXTENDED TO ACCOMODATE THE EXISTING PANEL RELOCATIONS.

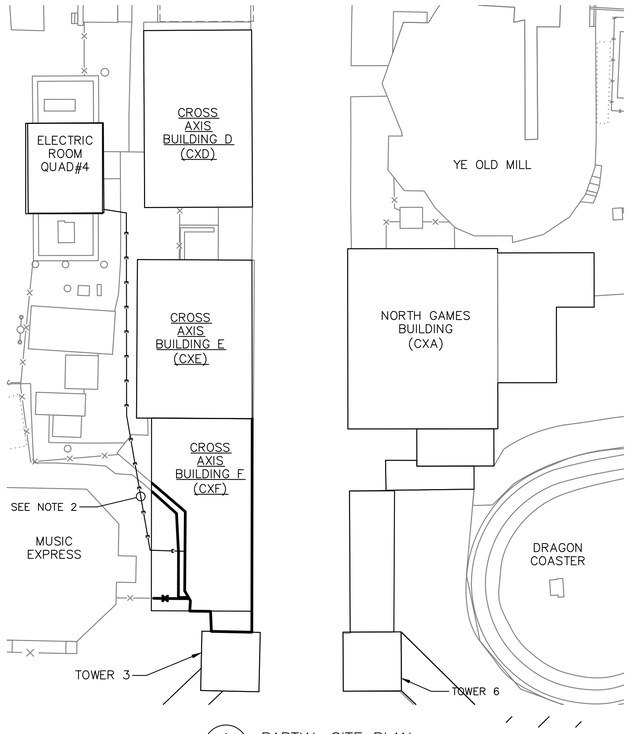

A CXF-E-03 PARTIAL SITE PLAN
SCALE: 1" = 20"

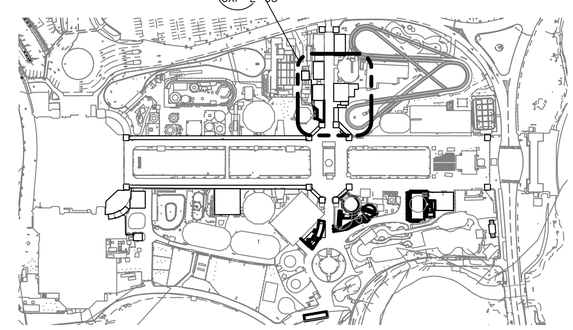

1 KEY PLAN
SCALE: 1" = 200'

0 20' 40'
SCALE: 1" = 20'-0"

0 200' 400'
SCALE: 1" = 200'-0"

Savin Engineers, P.C.

STATE OF NEW YORK · STEVEN A. MARTINO · 083631 · LICENSED PROFESSIONAL ENGINEER

REVISION NUMBER	DATE	MADE BY	APP'D BY	REVISION

RECORD DRAWING CERTIFICATION
☐ AS BUILT – CHANGES AS NOTED ☐ AS BUILT – NO CHANGES

CONTRACTOR: NAME / SIGNATURE / TITLE / DATE
PROJECT COORDINATOR: NAME / SIGNATURE / TITLE / DATE

WESTCHESTER COUNTY, NEW YORK
DEPARTMENT OF PUBLIC WORKS AND TRANSPORTATION
DIVISION OF ENGINEERING

INFRASTRUCTURE REHABILITATION - PHASE 3
PLAYLAND PARK, RYE, NEW YORK
CROSS AXIS BUILDING F
SITE DUCTBANK PLAN

CONTRACT NUMBER	22-523
SHEET NUMBER	CXF-E-03
DWG NO.:	
SCALE:	AS SHOWN
DATE:	8/23/2022
DPW FILE NUMBER	1-118-E-1125-0
REV. NO.	0

Drawing Name: G:\SavinAutocad\2060\25-Playland-Mega-3\E\CXFE-1003.dwg
Projectname: ---- Comments: ----
Printed by: MGoaby Date: 29 August 2022 7:57 AM Designed by: ----
Reref:
Xrefs: [TB_24X36_WestchesterCo_3.dwg] [TSG-SVL000.dwg] [TWS-SP0001.dwg] [TWC-SP0001.dwg] [COL-A-01.dwg] [CXF-E-1001.dwg]

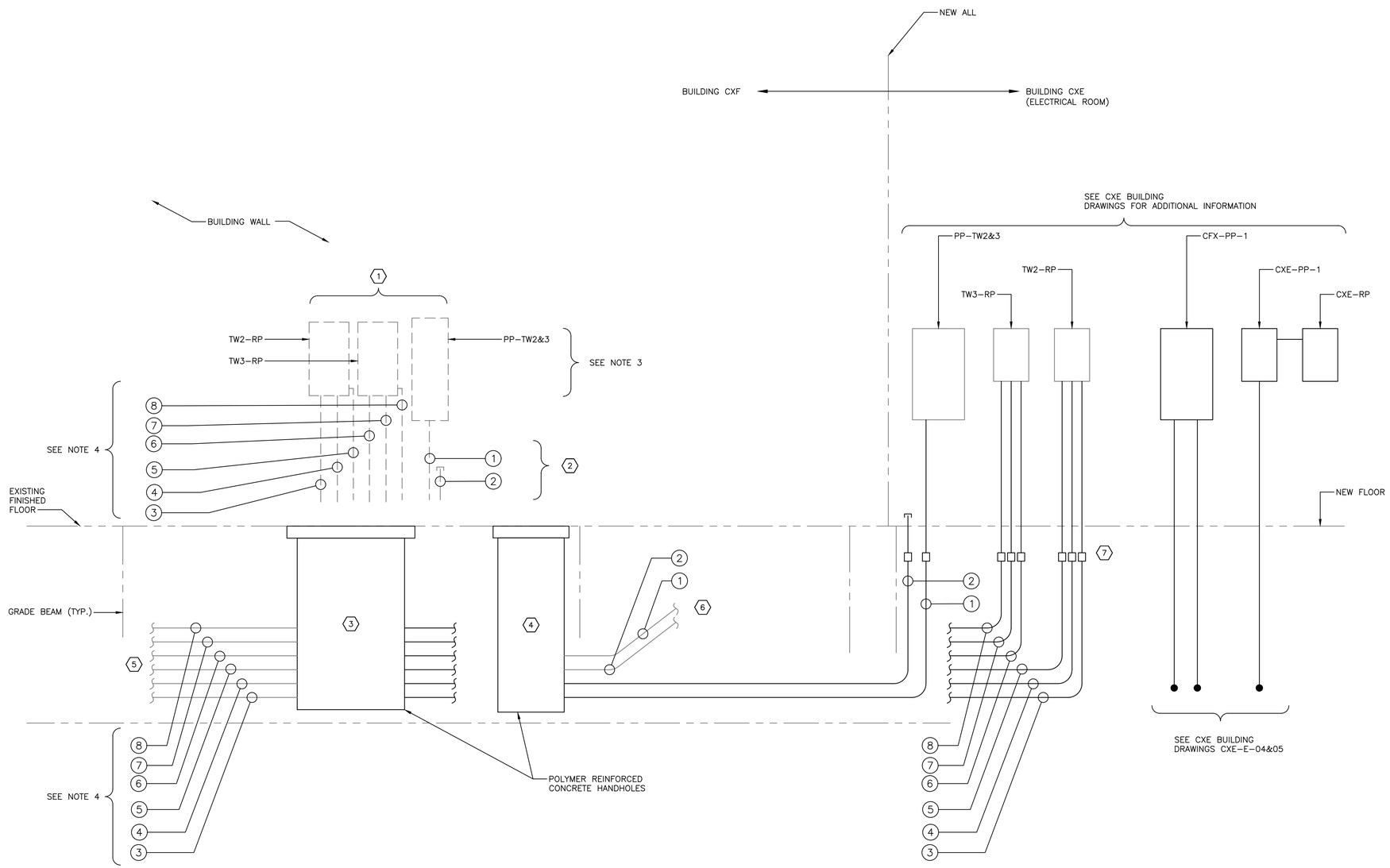

ONE LINE DIAGRAM

N.T.S.

NOTES:

1. FOR ADDITIONAL NOTES, ABBREVIATIONS AND SYMBOLS, SEE DRAWING GE-E-01.

2. CONTRACTOR IS ADVISED THAT THREE PANELS (1-POWER & 2-RELAY) SHALL BE DISCONNECTED AND RELOCATED TO ELECTRICAL ROOM LOCATED IN CXE BUILDING. THIS INCLUDES THE NEED TO EXTEND EXISITING FEEDER AND BRANCH CIRCUIT WIRING AS WELL. BRANCH CIRCUIT WIRING FOR TW2-RP AND TW3-RP WILL BE SHOWN ON ONE LINE DIAGRAM. FOR EXISITING PANEL PP-TW2 & 3 BRANCH CIRCUIT WIRING CONTRACTOR SHALL ASSUME 23 CIRCUITS WILL BE EXTENDED FOR A TOTAL OF 500' OF 3/4" CONDUIT WITH 3 #12 AWG WIRE. CONTRACTOR SHALL DETERMINE THE INTERCEPTION POINT OF EXISTING CONDUIT RUNS IN THE FIELD.

3. CONTRACTOR SHALL TRACE OUT, LABEL AND DISCONNECT ALL WIRE AND CABLE FROM THE 3 PANELS. EXISITING WIRE AND CABLES SALL BE MAINTAINED AND BE REUSED. EXISITING WIRE/CABLE SHALL BE SPLICED IN NEW RECESSED FLOOR MOUNTED HANDHOLES.

4. EXACT WIRING FOR EXISITING RELAY PANELS SHALL BE DETERMINED BY THE CONTRACTOR IN THE FIELD. CONTRACTOR SHALL ASSUME THAT EXISTING FEEDER CONDUITS AND DISTRIBUTION CONDUITS ARE BURIED 30" BELOW FINISHED FLOOR. EXISTING BUILDING CONCRETE FLOOR AND ASSOCIATED DIRT FILL WILL NEED TO BE REMOVED AND EXCAVATED TO EXPOSE EXISTING CONDUITS LOCATED UNDER THE GRADE BEAMS. NEW HANDHOLES SHALL BE INSTALLED TO INTERCEPT THE EXISTING CONDUIT AND ASSOCIATED WIRE AND CABLES. CONTRACTOR SHALL REFER TO THE STRUCTURAL DRAWINGS FOR ADDITIONAL INFORMATION. SPLICE EXISTING WIRE AND CABLE AND EXTEND TO RELOCATED POSITION OF EXISTING PANELS.

KEY NOTES:

1. OLD LOCATION FOR PP-TW2&3, TW-RP & TW3-RP.
2. PHANTOM LOCATIONS OF EXISTING CONDUIT AND WIRE TO BE REMOVED.
3. NEW RECESSED HANDHOLE ESTIMATED SIZE IS 24"X24"X30" DEEP. PROVIDE WITH BOLTED, GASKETED COVER AND SHALL BE INSTALLED FLUSH WITH NEW FLOOR. NEW FLOOR SHALL MATCH EXISTING. PROVIDE FOR ALL WATERTIGHT SPLICES AND EXTEND WITH NEW WIRE TO RELOCATED RELAY PANELS. EXACT SIZE OF HANDHOLE CAN BE ADJUSTED BY THE CONTRACTOR TO SUIT FIELD CONDITIONS AS NECESSARY. CONTRACT SHALL DETERMINE FINAL POSITIONS AS WELL.
4. NEW RECESSED HANDHOLE. ESTIMATED SIZE IS 24"X30"X30" DEEP. PROVIDE WITH BOLTED, GASKETED COVER AND SHALL BE INSTALLED FLUSH WITH NEW FLOOR. NEW FLOOR SHALL MATCH EXISTING. PROVIDE FOR ALL WATERTIGHT SPLICES AND EXTEND WITH NEW CABLE TO RELOCATED POWER PANEL. EXACT SIZE OF HANDHOLE CAN BE ADJUSTED BY THE CONTRACTOR TO SUIT FIELD CONDITIONS AS NECESSARY. CONTRACT SHALL DETERMINE FINAL POSITIONS AS WELL.
5. EXISTING CONDUITAND WIRE TO TW2 & TW3.
6. INCOMING PP-TW2&TW3 FEEDER (AND SPARE FROM QUAD #4 ELECTRICAL ROOM.
7. PVC TO METAL COUPLING.

CONDUIT AND WIRE LEGEND

NO.	DESCRIPTION
1	4"C, 4-250KCMIL & 1#2GND
2	4"C, SPARE WITH PULL ROPE
3	1 1/2"C, 16 # 10 & 8 #10GNDS.
4	1 1/2"C, SPARE WITH PULL ROPE
5	1 1/2"C, 3 #14
6	1 1/2"C, 16 # 10 & 8 #10 GNDS.
7	1 1/2"C, SPARE WITH PULL ROPE
8	1 1/2"C, 3 #14

CONSULTANT INFORMATION

Savin Engineers, P.C.

CONSULTANT SEAL

STATE OF NEW YORK · STEVEN A. MARTINO · 083631 · LICENSED PROFESSIONAL ENGINEER

REVISION NUMBER	DATE	MADE BY	APP'D BY	REVISION

RECORD DRAWING CERTIFICATION

☐ AS BUILT - CHANGES AS NOTED ☐ AS BUILT - NO CHANGES

CONTRACTOR: NAME / SIGNATURE / TITLE / DATE

PROJECT COORDINATOR: NAME / SIGNATURE / TITLE / DATE

WESTCHESTER COUNTY, NEW YORK
DEPARTMENT OF PUBLIC WORKS AND TRANSPORTATION
DIVISION OF ENGINEERING

INFRASTRUCTURE REHABILITATION - PHASE 3
PLAYLAND PARK, RYE, NEW YORK
CROSS AXIS BUILDING F
ONE LINE DIAGRAM

CONTRACT NUMBER	22-523
SHEET NUMBER	CXF-E-04
DWG NO.:	
SCALE:	AS SHOWN
DATE:	8/23/2022
DPW FILE NUMBER	1-118-E-1126-0
REV. NO.	0

Drawing Name: G:\SavinAutocad\2060\25-Playland-Mega-3\E\CXFE-1004.dwg
Reref: Projectname: 211001F02 Comments: ----
Printed by: MGodby Date: 29 August 2022 7:57 AM Designed by: ----
Xrefs: [TB_24X36_WestchesterCo_3.dwg] [TSG-SVL060.dwg

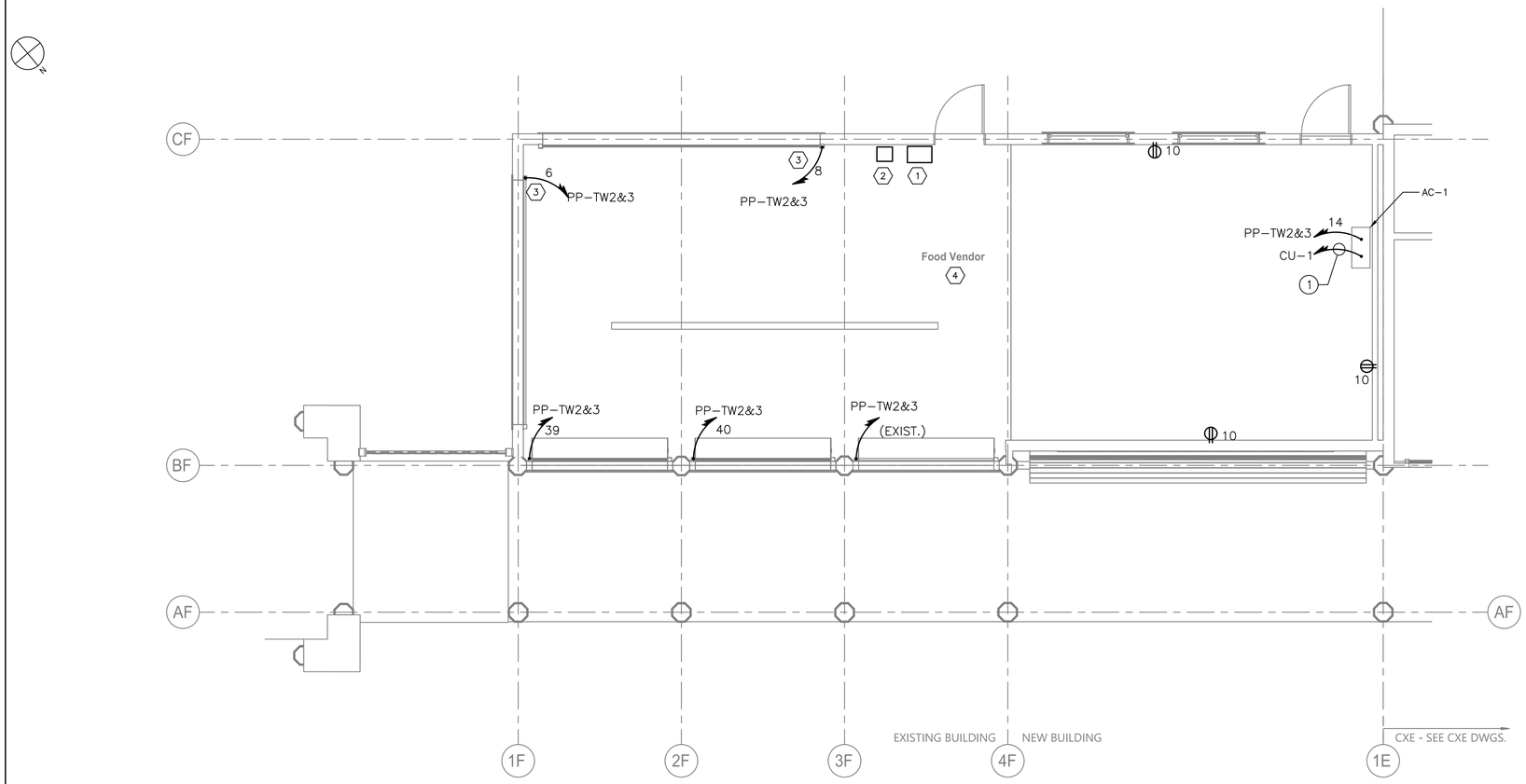

GROUND FLOOR POWER PLAN (CXF)

SCALE = 1/4" = 1'-0"

NOTES:

1. FOR ADDITIONAL NOTES, ABBREVIATIONS AND SYMBOLS, SEE DRAWING GE-E-01.
2. ALL RECEPTACLE DESIGNATORS ARE POWERED VIA PANEL PP-TWR2&3.
3. ALL CIRCUITS SHOWN ON THE DRAWING, BUT NOT SPECIFICALLY CALLED OUT ON THE CONDUIT AND WIRE LEGEND SHALL BE 3/4" CONDUIT WITH 2#12 & 1#12 GND.
4. FOR PANEL SCHEDULE, SEE DRAWING CXF-E-08

KEY NOTES:

(1) RECESSED POWER HANDHOLE. LOCATION OF FEEDER CIRCUIT AND SPARE CONDUIT. SEE DRAWING CXF-E-04 FOR ADDITIOONAL INFORMATION.

(2) RECESSED RP HANDHOLE. LOCATION OF TW2 & TW3 BRANCH CIRCUIT WIRING. SEE DRAWING CXF-E-04 FOR ADDITIONAL INFORMATION

(3) APPROXIMATE LOCATION OF MOTOR FOR NEW ROLL-DOWN DOOR. CONTRACTOR SHALL CONFIRM MOTOR LOCATION IN THE FIELD. CONTRACTOR SHALL PROVIDE 30 AMP, 2 POLE DISCONNECT SWITCH AT ROLL-UP DOOR MOTOR.

(4) EXISTING RECEPTACLES IN FOOD VENDOR AREA TO REMAIN AND BE RECIRCUITED VIA EXISTING CIRCUITS.

CONDUIT AND WIRE LEGEND

NO.	DESCRIPTION
(1)	3/4"C, FOR CONTROL WIRING

0 4' 8'

SCALE: 1/4" = 1'-0"

CONSULTANT INFORMATION

Savin Engineers, P.C.

CONSULTANT SEAL

STATE OF NEW YORK · STEVEN A. MARTINO · 083631 · LICENSED PROFESSIONAL ENGINEER

REVISION NUMBER	DATE	MADE BY	APP'D BY	REVISION

RECORD DRAWING CERTIFICATION

☐ AS BUILT - CHANGES AS NOTED ☐ AS BUILT - NO CHANGES

CONTRACTOR: NAME / SIGNATURE / TITLE / DATE

PROJECT COORDINATOR: NAME / SIGNATURE / TITLE / DATE

WESTCHESTER COUNTY, NEW YORK
DEPARTMENT OF PUBLIC WORKS AND TRANSPORTATION
DIVISION OF ENGINEERING

INFRASTRUCTURE REHABILITATION - PHASE 3
PLAYLAND PARK, RYE, NEW YORK
CROSS AXIS BUILDING F
GROUND FLOOR POWER PLAN

CONTRACT NUMBER	22-523
SHEET NUMBER	CXF-E-05
DWG NO.:	
SCALE:	AS SHOWN
DATE:	8/23/2022
DPW FILE NUMBER	1-118-E-1127-0
REV. NO.	0

Drawing Name: G:\SavinAutocad\2060\25-Playland-Mega-3\E\CXFE-1005.dwg
Projectname: 211001F02 Comments: ----
Printed by: MGadby Date: 29 August 2022 7:58 AM Designed by: ----
Xrefs: [TB_24X36_WestchesterCo_3.dwg] [TSG-SVLOGO.dwg] [CXF-A-11.dwg] [CXF-E-1010.dwg]

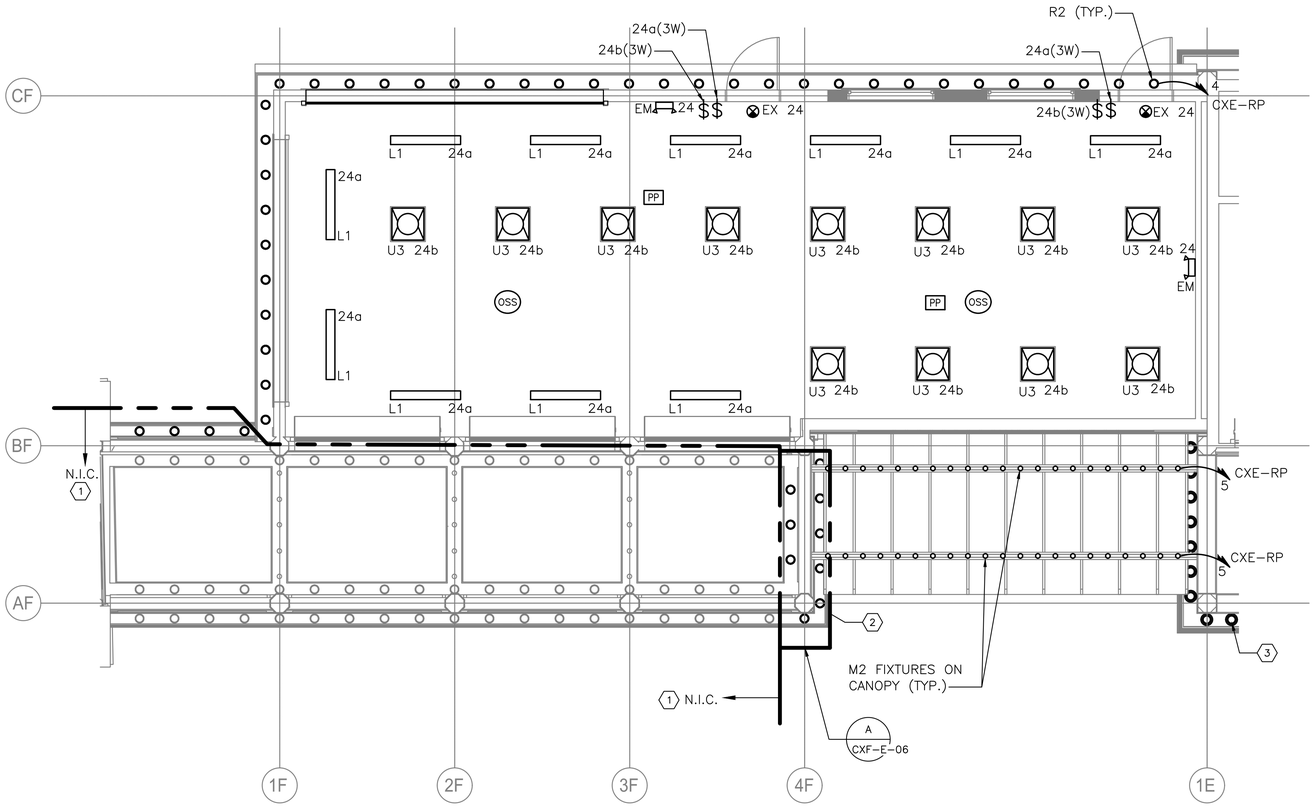

GROUND FLOOR LIGHTING PLAN

SCALE = 1/4" = 1'-0"

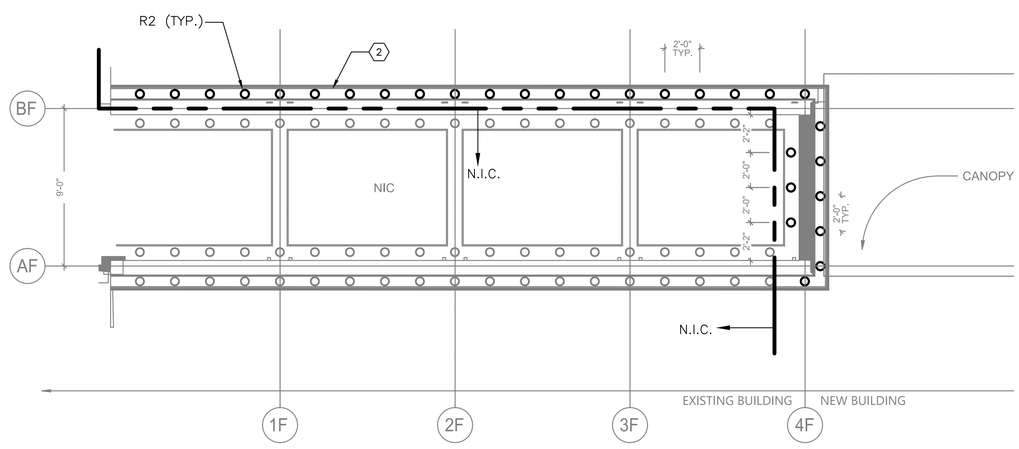

A CXF-E-06 CXF – COLONNADE RCP

SCALE = 1/4" = 1'-0"

NOTES:

1. FOR ADDITIONAL NOTES, ABBREVIATIONS AND SYMBOLS, SEE DRAWING GE-E-01.
2. ALL INTERIOR LIGHTING IS POWERED VIA PANEL PP-TW2&3, UNLESS NOTED OTHERWISE. CONTRACTOR SHALL CIRCUIT LIGHTING FIXTURES WITH 3/4" CONDUIT WITH 2#12 & 1#12GND.
3. EXIT SIGNS SHALL BE WIRED TO THE UN-SWITCHED LEG OF THE DESIGNATED CIRCUIT.
4. EMERGENCY FIXTURES SHALL BE WIRED TO THE UN-SWITCHED LEG OF THE DESIGNATED CIRCUIT.
5. ALL IN-CONTRACT EXTERIOR LIGHTING SHALL BE CIRCUITED TO RELAY PANEL CXE-RP. CONTRACTOR SHALL CIRCUIT LIGHTING FIXTURES WITH 3/4" CONDUIT WITH 2#10 & 1#10GND, UNLESS NOTED OTHERWISE. CONTRACTOR SHALL DAISY-CHAIN ALL EXTERIOR LIGHT FIXTURES WITH SAME CIRCUIT NUMBER BACK TO RELAY PANEL CXE-RP.
6. FOR LIGHTING PANEL SCHEDULE, REFER TO DRAWING CXF-E-08.
7. NUMBER DESIGNATORS NEXT TO FIXTURES AND/OR CONTROLS INDICATE CIRCUIT NUMBERS.
8. ALL LIGHTING CONTROL COMPONENTS SHALL BE FROM A SINGLE MANUFACTURER, AND MUST BE FROM THE SAME MANUFACTURER FOR ALL BUILDINGS WITHIN THE CONTRACT AND AS PROVIDED ELSEWHERE AT THE PLAYLAND FACILITY.
9. LIGHTING CONTROLS SELECTED SHALL HAVE THE CAPABILITY TO BE CONNECTED TO A MASTER HEAD-END SYSTEM (FUTURE CONTRACT).
10. SEE DRAWING CXE-E-09 FOR EXTERIOR LIGHTING CONTROL.

KEY NOTES:

1. LIGHTING IS PRESENTLY INSTALLED AND CIRCUITED. HOWEVER, DUE TO THE RELOCATION OF THE EXISTING RELAY PANELS, CONTRACTOR SHALL EXTEND CIRCUITS AS NECESSARY FOR RECONNECTION.
2. EXISTING COLONNADE IS BEING EXTENDED UNDER THIS CONTRACT. THIS REQUIRES NEW FIXTURES TO BE INSTALLED AS SHOWN ON THE COLONNADE REFLECTED CEILING PLAN. INTERCEPT EXISTING COLONNADE LIGHTING CIRCUITING AND ADD NEW FIXTURES TO SAID CIRCUIT. REFER TO ARCHITECTURAL DRAWINGS.
3. THIS LIGHTING CIRCUITING IS SHOWN ON THE CXE BUILDING DRAWINGS FOR MORE INFORMATION.

LIGHTING CONTROL LEGEND

SYMBOL	DESCRIPTION
OSS	OCCUPANCY / VACANCY SENSOR – SMALL MOTION, DUAL TECHNOLOGY (PASSIVE INFRARED/MICROPHONICS) ACUITY BRANDS, nLIGHT SYSTEM CATALOG NUMBER: nCM-PDT-9-RJB OR APPROVED EQUAL
PP 12	POWER / RELAY PACK – 120V RATED SELF CONTROLLED RELAY SWITCH, EQUIPPED WITH RJ45, PLENUM RATED, CONFIGURATIVE RELAY LOGIC ACUITY BRANDS, nLIGHT SYSTEM CATALOG NUMBER: nPP16-D-EFP-SA OR APPROVED EQUAL.
$	120V RATED LIGHTING SINGLE POLE SWITCH
RP	RELAY TIME CONTROL PANEL PROGRAMMABLE ZONE CONTROL PANEL UP TO 1 ADDRESS PER RELAY/DIMMING OUTPUT EQUIPPED WITH 0-10V DIMMING OUTPUT PER RELAY CATALOG NUMBER: ARP INTENC08NLT-16SR-MVOLT-1VB-HLK-S-DTC OR APPROVED EQUAL
PS	ANALOG PHOTOCELL – PHOTOSENSOR SUITABLE FOR OUTDOOR APPLICATIONS. CATALOG NUMBER: LSA-APS-OL OR APPROVED EQUAL
n POD	RELAY TIME CONTROL PANEL PROGRAMMABLE ZONE CONTROL PANEL UP TO 1 ADDRESS PER RELAY/DIMMING OUTPUT EQUIPPED WITH 0-10V DIMMING OUTPUT PER RELAY CATALOG NUMBER: LSA-APS-OL OR APPROVED EQUAL

0 4' 8'

SCALE: 1/4" = 1'-0"

Drawing Name: G:\SavinAutocad\2060\25-Playland-Mega-3\E\CXFE-1006.dwg
Rev#: Projectname: 211001F02 Comments: ----
Printed by: MGodby Date: 29 August 2022 7:58 AM Designed by: ----
Xrefs: [TB_24X36_WestchesterCo_3.dwg] [TSG-SVL000.dwg] [CXF-A-41.dwg] [CXF-E-1003.dwg]

CONSULTANT INFORMATION

Savin Engineers, P.C.

CONSULTANT SEAL

STATE OF NEW YORK · STEVEN A. MARTINO · 083631 · LICENSED PROFESSIONAL ENGINEER

REVISION NUMBER	DATE	MADE BY	APP'D BY	REVISION

RECORD DRAWING CERTIFICATION

☐ AS BUILT – CHANGES AS NOTED ☐ AS BUILT – NO CHANGES

CONTRACTOR: NAME / SIGNATURE / TITLE / DATE

PROJECT COORDINATOR: NAME / SIGNATURE / TITLE / DATE

WESTCHESTER COUNTY, NEW YORK
DEPARTMENT OF PUBLIC WORKS AND TRANSPORTATION
DIVISION OF ENGINEERING

INFRASTRUCTURE REHABILITATION - PHASE 3
PLAYLAND PARK, RYE, NEW YORK
CROSS AXIS BUILDING F
GROUND FLOOR - LIGHTING PLAN

CONTRACT NUMBER	22-523
SHEET NUMBER	CXF-E-06
DWG. NO.:	
SCALE:	AS SHOWN
DATE:	8/23/2022
DPW FILE NUMBER	1-118-E-1128-0
REV. NO.	0

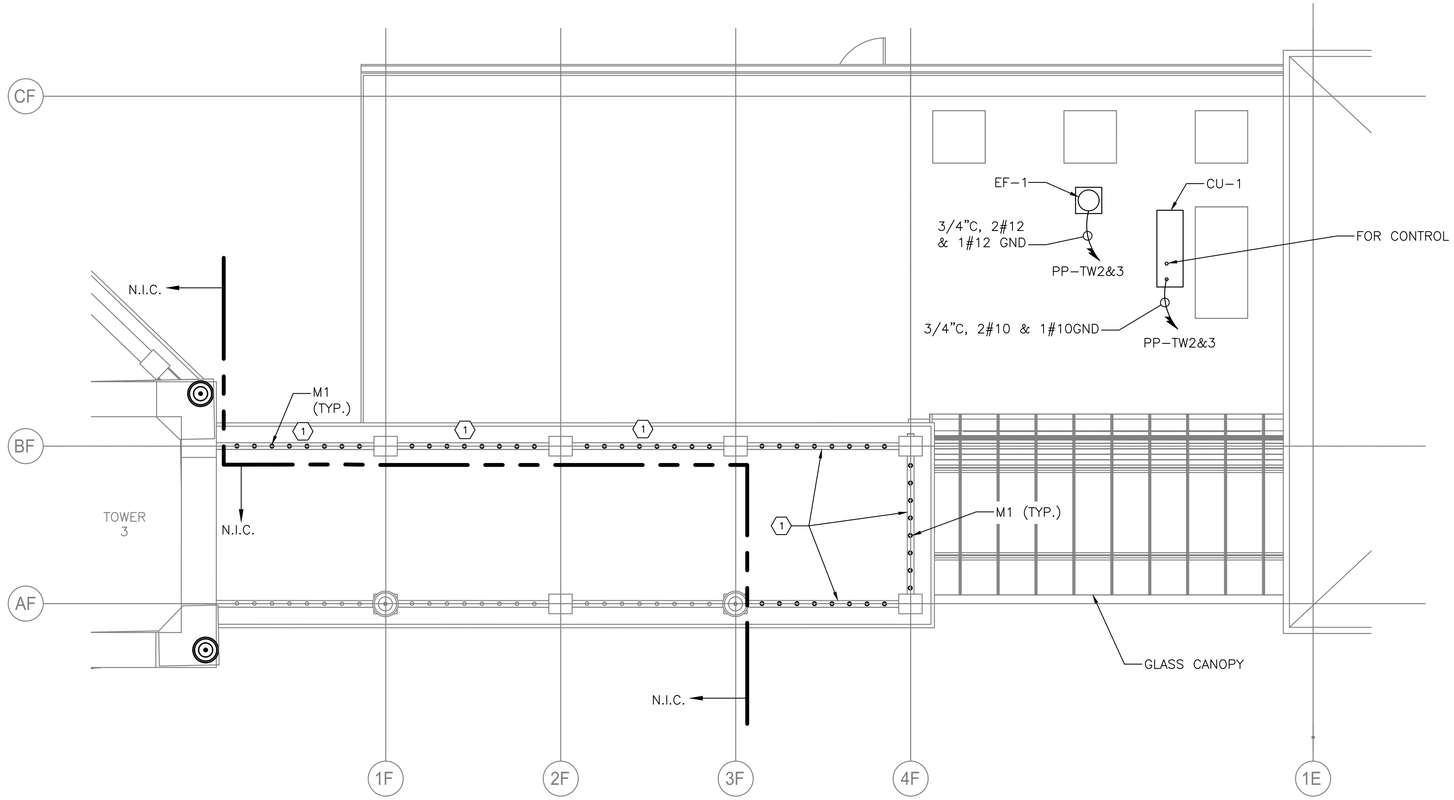

B ROOF LEVEL – POWER AND LIGHTING PLAN
SCALE = 1/4" = 1'-0"

NOTES:

1. FOR ADDITIONAL NOTES, ABBREVIATIONS AND SYMBOLS, SEE DRAWING GE-E-01.
2. ALL ROOF PENETRATIONS SHALL BE WATERPROOF. PENETRATION COMPONENTS FOR CONDUIT SHALL BE SUITABLE AND COMPATIBLE FOR INSTALLED ROOF. SEE ARCHITECTURAL AND PLUMBING DRAWINGS FOR ADDITIONAL INFORMATION.
3. CONTRACTOR SHALL COORDINATE ALL REQUIRED DISCONNECTING MEANS WITH HVAC CONTRACTOR.
4. EXHAUST FAN STARTERS SHALL BE FURNISHED BY THE EXHAUST FAN MANUFACTURER. FOR EXHAUST FAN STARTER REQUIREMENTS, SEE HVAC CONTRACT DRAWINGS AND SPECIFICATIONS.

KEY NOTES:

(1) CONNECT NEW REQUIRED M1 FIXTURES INTO EXISTING SOUTH COLONNADE LIGHTING CIRCUIT.

0 4' 8'
SCALE: 1/4" = 1'-0"

CONSULTANT INFORMATION
Savin Engineers, P.C.

CONSULTANT SEAL
STATE OF NEW YORK · STEVEN A. MARTINO · 083631 · LICENSED PROFESSIONAL ENGINEER

REVISION NUMBER	DATE	MADE BY	APP'D BY	REVISION

RECORD DRAWING CERTIFICATION
☐ AS BUILT – CHANGES AS NOTED ☐ AS BUILT – NO CHANGES

CONTRACTOR
NAME
SIGNATURE
TITLE DATE

PROJECT COORDINATOR
NAME
SIGNATURE
TITLE DATE

WESTCHESTER COUNTY, NEW YORK
DEPARTMENT OF PUBLIC WORKS AND TRANSPORTATION
DIVISION OF ENGINEERING

INFRASTRUCTURE REHABILITATION - PHASE 3
PLAYLAND PARK, RYE, NEW YORK
CROSS AXIS BUILDING F
ROOF LEVEL - POWER & LIGHTING PLAN

CONTRACT NUMBER	SHEET NUMBER
22-523	CXF-E-07

DWG NO.:
SCALE: AS SHOWN
DATE: 8/23/2022
DPW FILE NUMBER 1-118-E-1129-0 REV. NO. 0

Drawing Name: G:\SavinAutocad\2060\25-Playland-Mega-3\E\CXFE-1007.dwg
Projectname: 211001F02 Comments: ----
Printed by: MGodby Date: 29 August 2022 7:58 AM Designed by: ----
Xrefs: [TB_24X36_WestchesterCo_3.dwg] [TSG-SVL060.dwg] [CXF-A-12.dwg] [CXF-E-1009.dwg]

PANELBOARD PP-TW 2&3 — **LOCATION:** **ELECTRICAL ROOM OF CXE**

NEMA RATING — 3 **POLES** — **MOUNTING:**

225 **AMP BUS RATING** — 200 **AMP MAIN BREAKER** — 42 **KA SHORT CIRCUIT RATING**

208Y/120 **VOLTS** — 3 **PHASE** 4 **WIRE** — **ELECTRONIC GRADE :**

CIRCUIT NO.	DESCRIPTION	LOAD KVA PHASE A	LOAD KVA PHASE B	LOAD KVA PHASE C	BREAKER AMPS/ POLES	NOTES	CIRCUIT NO.	DESCRIPTION	LOAD KVA PHASE A	LOAD KVA PHASE B	LOAD KVA PHASE C	BREAKER AMPS/ POLES	NOTES
1	TW2 LTG (EXISTING CIRC.)				20/1	1	2	EXISTING RECEPTACLES				20/1	1
3	TW2 LTG (EXISTING CIRC.)				20/1	1	4	EXISTING RECEPTACLES				20/1	1
5	TW2 LTG (EXISTING CIRC.)				20/1	1	6	ROLL-UP DOOR			1	20/1	2
7	TW2 LTG (EXISTING CIRC.)				20/1	1	8	ROLL-UP DOOR	1			20/1	2
9	TW2 LTG (EXISTING CIRC.)				20/1	1	10	RECEPTACLES		0.5		20/1	2
11	TW2 LTG (EXISTING CIRC.)				20/1	1	12	SPARE				20/1	2
13	TW2 LTG (EXISTING CIRC.)				20/1	1	14	AC-1	0.1			15/2	2
15	TW2 LTG (EXISTING CIRC.)				20/1	1	16			0.1			2
17	TW2 RELAY POWER (EXISTING)				20/1	1	18	CU-1			1.5	25/2	2
19	TW3 LTG (EXISTING CIRC.)				20/1	1	20		1.5				2
21	TW3 LTG (EXISTING CIRC.)				20/1	1	22	EF-I		0.1		15/1	2
23	TW3 LTG (EXISTING CIRC.)				20/1	1	24	LIGHTING			0.5	20/1	2
25	TW3 LTG (EXISTING CIRC.)				20/1	1	26	SPACE					3
27	TW3 LTG (EXISTING CIRC.)				20/1	1	28	SPACE					3
29	TW3 LTG (EXISTING CIRC.)				20/1	1	30	SPACE					3
31	TW3 LTG (EXISTING CIRC.)				20/1	1	32	SPACE					3
33	TW3 LTG (EXISTING CIRC.)				20/1	1	34	SPACE					3
35	TW3 RELAY POWER				20/1	1	36	SPACE					3
37	EXIST ROLL-UP DOOR				20/1	1	38	SPACE					3
39	NEW ROLL-UP DOOR				20/1	1	40	SPACE					3
41	NEW ROLL-UP DOOR				20/1	1	42	SPACE					3
	TOTAL PHASE KVA THIS SIDE	0	0	0				**TOTAL PHASE KVA THIS SIDE**	2.6	0.7	3		
								TOTAL KVA PER PHASE	2.6	0.7	3		
								TOTAL THREE PHASE KVA		6.3			

NOTES:

1. EXACT CIRCUITING FOR EXISTING CIRCUITS SHALL BE DETERMINED BY THE CONTRACTOR IN THE FIELD. ODD NUMBERED CIRCUITS, AND CIRCUITS 2 & 4 SHALL USED FOR EXISTING LO/
2. ALL EVEN CIRCUITS, STARTING WITH # 6 SHALL BE CONSIDERED NEW
3. FUTURE STANDARD AMUSEMENTS LOADS

NOTES CONT.:

NOTES:

1. FOR ADDITIONAL NOTES, ABBREVIATIONS AND SYMBOLS, SEE DRAWING GE-E-01.

Drawing Name: G:\SavinAutocad\2060\25-Playland-Mega-3\E\CXFE-1008.dwg
Projectname: 211001F02 Comments: ----
Printed by: MGodby Date: 29 August 2022 7:58 AM Designed by: ----
Reqf: ----
Xrefs: [TB_24X36_WestchesterCo_3.dwg] [TSG-SVLOGO.dwg] [BCR-A-04.dwg] [BCRE-101.dwg

CONSULTANT INFORMATION

Savin Engineers, P.C.

CONSULTANT SEAL

STATE OF NEW YORK — STEVEN A. MARTINO — 083631 — LICENSED PROFESSIONAL ENGINEER

REVISION NUMBER	DATE	MADE BY	APP'D BY	REVISION

RECORD DRAWING CERTIFICATION

☐ AS BUILT - CHANGES AS NOTED ☐ AS BUILT - NO CHANGES

CONTRACTOR: NAME / SIGNATURE / TITLE / DATE

PROJECT COORDINATOR: NAME / SIGNATURE / TITLE / DATE

WESTCHESTER COUNTY, NEW YORK
DEPARTMENT OF PUBLIC WORKS AND TRANSPORTATION
DIVISION OF ENGINEERING

INFRASTRUCTURE REHABILITATION - PHASE 3
PLAYLAND PARK, RYE, NEW YORK
CROSS AXIS BUILDING F
PANEL SCHEDULES

CONTRACT NUMBER: 22-523
SHEET NUMBER: CXF-E-08
DWG NO.:
SCALE: AS SHOWN
DATE: 8/23/2022
DPW FILE NUMBER: 1-118-E-1130-0
REV. NO.: 0

FIRE ALARM GENERAL NOTES:

1. THE FIRE ALARM AND SMOKE DETECTION SYSTEM SHALL BE INSTALLED IN COMPLIANCE WITH THE NATIONAL FIRE PREVENTION CODE (NFPA 72 - 2016), NATIONAL LIFE SAFETY CODE (NFPA 101 - 2018), NATIONAL ELECTRICAL CODE (NFPA 70 - 2017), 2020 NEW YORK STATE BUILDING CODE, AND ALL LOCAL MUNICIPAL CODES HAVING JURISDICTION.
2. THE FIRE ALARM AND SMOKE DETECTION SYSTEM SHALL BE MAINTAINED AND TESTED IN COMPLIANCE WITH NFPA 72.
3. A CONTINUOUS FIRE WATCH SHALL BE PROVIDED IF THERE IS FIRE SYSTEM IMPAIRMENT.
4. ALL FIRE ALARM STROBES SHALL BE SYNCHRONIZED AND SHALL REMAIN FLASHING AFTER SYSTEM SILENCE FUNCTION.
5. CONTRACTOR TO UPDATE ALL NECESSARY CORRESPONDING FIRE ALARM SIGNALS WHEN PERFORMING ANY MODIFICATION TO THE BUILDING, WHERE APPLICABLE, MAKE SURE THE SAME UPDATES ARE COORDINATED AND TRANSMITTED TO THE CENTRAL STATION.
6. HORNS WILL SOUND A TEMPORAL 3-SIGNALING RHYTHM PER NFPA 72.
7. EXACT PLACEMENT OF DEVICES TO BE VERIFIED IN FIELD.
8. ALL SMOKE DETECTORS SHALL BE INSTALLED A MINIMUM OF 36" FROM ANY HVAC SUPPLY OR RETURN REGISTER.
9. FIRE ALARM WIRING SHALL BE INSTALLED IN A MINIMUM OF 3/4" RIGID GALVANIZED CONDUIT OR BY NEW YORK STATE BUILDING CODE APPROVED WIRING METHODS.
10. WALL MOUNTED HORNS AND VISUAL FIRE ALARMS (STROBES) SHALL BE MOUNTED NOT LESS THAN 6'-8" AND NOT GREATER THAN 8'-0" A.F.F. WHERE LOCAL CONDITIONS ARE TOO LOW TO PERMIT THE REQUIRED MINIMUM INSTALLATION HEIGHT, INSTALL THE STROBES AT 6" BELOW THE CEILING.
11. MANUAL PULL STATIONS SHALL BE MOUNTED AT 4'-0" A.F.F. AND SHALL BE INSTALLED WITHIN 5'-0" OF EXIT DOOR.
12. WIRING SHALL BE INSTALLED IN ACCORDANCE WITH NFPA 70 AND AS RECOMMENDED BY THE MANUFACTURER OF THE FIRE ALARM SYSTEM.
13. ALL EQUIPMENT AND COMPONENTS SHALL BE NEW AND SHALL BE TESTED AND LISTED BY A NATIONALLY RECOGNIZED APPROVALS AGENCY.
14. ALL EQUIPMENT SHALL BE ATTACHED TO WALLS AND CEILING/FLOOR ASSEMBLIES AND SHALL BE HELD FIRMLY IN PLACE. FASTENERS AND SUPPORTS SHALL BE ADEQUATE TO SUPPORT REQUIRED LOAD.
15. ALL FIELD WIRING SHALL BE ELECTRICALLY SUPERVISED FOR OPEN CIRCUIT AND GROUND FAULTS.
16. ALL BOXES AND CABINETS SHALL BE UL LISTED FOR THEIR USE AND PURPOSE.
17. DIALER OR ALARM COMMUNICATOR TRANSMITTER SHALL TRANSMIT ALL POINTS AS THEY ARE REPORTED TO THE HOST PANEL.
18. ALL DEVICES SHALL BE COMPATIBLE WITH EXISTING SYSTEM (EST3 BY EDWARDS). FIRE ALARM PRODUCTS SHALL BE APPROVED BY THE ENGINEER OR OWNER.
19. ALL PENETRATIONS SHALL BE FIRE PROOFED AS REQUIRED.

FIRE ALARM CONSTRUCTION NOTES:

1. ELECTRICIAN SHALL COORDINATE WITH THE FIRE ALARM VENDOR TO PRODUCE A SEPARATE FIXED PRICE TO PERFORM THE SCOPE OF WORK CONTAINED ON THESE DRAWINGS IN CONNECTION WITH THE FIRE ALARM SYSTEM. THESE DRAWINGS ARE PROVIDED FOR BID PURPOSES ONLY AND TO ILLUSTRATE THE SCOPE OF WORK INTENT OF THIS PROJECT.
2. ELECTRICIAN SHALL OBTAIN SEPARATE PERMIT FOR FIRE ALARM PRIOR TO INSTALLATION.
3. PRIOR TO SUBMISSION OF THE FIRE ALARM SYSTEM BID, THE FIRE ALARM VENDOR IS RESPONSIBLE TO REVIEW ALL DRAWINGS (I.E., MECHANICAL/HVAC, ELECTRICAL, PLUMBING, FIRE SPRINKLER, AND ARCHITECTURAL). UPON SUBMISSION OF THE FIRE ALARM BID, THE FIRE ALARM VENDOR CERTIFIES THAT ALL DRAWINGS HAVE BEEN REVIEWED, THE SITE HAS BEEN VISITED/INSPECTED (IF APPLICABLE), AND THAT ALL LOCAL FIRE DEPARTMENT REQUIRED ITEMS ARE FULLY UNDERSTOOD AND INCLUDED IN THE BID PRICE (NO CHANGE ORDERS ALLOWED).
4. FIRE ALARM VENDOR MUST ADHERE TO NFPA 72, NFPA 101, AND ALL LOCAL CODES AND AUTHORITIES HAVING JURISDICTION. THE ENTIRE SYSTEM MUST BE DESIGNED IN ACCORDANCE WITH THESE AUTHORITIES HAVING JURISDICTION.
5. FIRE ALARM VENDOR SHALL INCLUDE THE COST OF THE ENGINEERING FEE, PROGRAMMING CHARGE, NEW EQUIPMENT, CONNECTION & TESTING, TROUBLESHOOTING, ATTENDANCE AT THE FIRE ALARM INSPECTION, ETC. AS PART OF THE TOTAL PRICE.
6. FIRE ALARM VENDOR MUST SUBMIT APPROVED, SIGNED AND SEALED DESIGN/BUILD DRAWINGS TO THE ENGINEER AND OWNER, INCLUDING: FIRE ALARM RISER DIAGRAM, LAYOUT, EQUIPMENT LIST, SPECIFICATIONS PRIOR TO START OF INSTALLATION. INSTALLATION OF THE NEW FIRE ALARM SYSTEM SHALL NOT PROCEED PRIOR TO WRITTEN APPROVAL BY THE ENGINEER.
7. FIRE ALARM VENDOR SHALL SUBMIT SHOP DRAWINGS IN COMPLIANCE WITH NFPA 72, 2020 NEW YORK STATE BUILDING CODE, AND 2020 NEW YORK STATE FIRE CODE SECTION 907.1.1.
8. ALL FIRE ALARM CABLES AND WIRING MUST BE PLENUM RETURN RATED CABLES.

SCOPE OF WORK:

1. DEMOLISH EXISTING FIRE ALARM DEVICES AND ASSOCIATED WIRING BACK TO SOURCE.
2. INSTALL NEW FIRE ALARM DEVICES AS PER DRAWINGS. PROVIDE ALL NECESSARY WIRING, CONNECTIONS, CONDUIT, AND FITTINGS.
3. NEW FIRE ALARM DEVICES AND SIGNAL WIRING SHALL BE CONNECTED TO THE EXISTING "QUAD 4" FIRE ALARM PANEL.
4. NEW FIRE ALARM SYSTEM SHALL BE INSPECTED BY A THIRD PARTY INSPECTION AGENCY CERTIFIED BY WESTCHESTER COUNTY. ELECTRICIAN SHALL INCLUDE INSPECTION IN BASE BID SCOPE AND COORDINATE WITH INSPECTION AGENCY TO CERTIFY THE SYSTEM.
5. ELECTRICIAN SHALL COORDINATE WITH THE FIRE ALARM VENDOR (OPEN SYSTEMS METRO) TO RE-PROGRAM AND TEST THE CENTRAL FIRE ALARM SYSTEM IN THE PLAYLAND MAIN ADMINISTRATION BUILDING FOLLOWING THE INSTALLATION OF NEW SYSTEM AND DEVICES.
6. ELECTRICIAN SHALL COORDINATE WITH THE FIRE ALARM CENTRAL MONITORING PROVIDER (STATEWIDE MONITORING) TO TEST AND VERIFY CENTRAL MONITORING OF PARKWIDE SYSTEM FOLLOWING THE INSTALLATION OF NEW SYSTEM AND DEVICES.

FIRE ALARM SYSTEM RISER NOTES:

1. LOCATION OF DEVICES AND EQUIPMENT ARE APPROXIMATE. FINAL LOCATIONS MUST BE DETERMINED ACCORDING TO THE SITE CONDITIONS.
2. VISUAL FIRE ALARMS (STROBES) SHALL HAVE MINIMUM 5'-0" CLEARANCE FROM ANY OBSTRUCTIONS, SHALL BE FIELD ADJUSTABLE, AND SHALL BE RATED AT 75 CANDELA MINIMUM, UNLESS OTHERWISE NOTED. ALL STROBES SHALL BE SYNCHRONIZED AT LINE OF SIGHT.
3. WALL MOUNTED HORNS AND VISUAL FIRE ALARMS (STROBES) SHALL BE MOUNTED NOT LESS THAN 6'-8" AND NOT GREATER THAN 8'-0" A.F.F. WHERE LOCAL CONDITIONS ARE TOO LOW TO PERMIT THE REQUIRED MINIMUM INSTALLATION HEIGHT, INSTALL THE STROBES AT 6" BELOW THE CEILING.
4. MANUAL PULL STATIONS SHALL BE MOUNTED AT 4'-0" A.F.F. AND SHALL BE INSTALLED WITHIN 5'-0" OF EXIT DOOR.
5. FUSE CUT OUT BOX SHALL COMPLY WITH THE NATIONAL ELECTRICAL CODE AND HAVE A REMOVABLE SOLID COPPER NEUTRAL BAR.
6. ALL CONDUITS AND CONTROL PANELS SHALL BE GROUNDED TO BUILDING STEEL/GROUND GRID WITH A MINIMUM #8 CONDUCTOR.
7. RISER DIAGRAM ON THIS DRAWING IS FOR DESIGN PURPOSE ONLY. FIRE ALARM CONTRACTOR SHALL PROVIDE A COMPLETE RISER DIAGRAM WITH ACTUAL FIELD WIRING REQUIRED.
8. EACH FIRE ALARM INITIATING AND INDICATING CIRCUIT SHALL BE ELECTRICALLY SUPERVISED.
9. EACH VISUAL FIRE ALARM CIRCUIT SHALL CONTAIN AT LEAST 20% SPARE CAPACITY.
10. ALL CONTROL PANELS, FUSE CUTOUTS, TROUBLE BELLS, ALARM BELLS AND SILENCE SWITCHES SHALL BE PROPERLY LABELED WITH MINIMUM 1/4" HIGH LETTERS.
11. WIRING FOR AUDIBLE AND VISUAL ALARM NOTIFICATION DEVICES SHALL BE ARRANGED SO THAT A LOSS OF A PORTION OF THE WIRING ON A FLOOR WILL NOT RENDER MORE THAN 60% OF THE DEVICES OF EACH TYPE INOPERATIVE, AND THE DEVICES SHALL BE SO CONNECTED TO THE CIRCUITRY (i.e., BY MEANS OF ALTERNATE CIRCUITS) AS TO MAINTAIN AT LEAST PARTIAL AUDIBILITY/VISIBILITY THROUGHOUT THE ENTIRE FLOOR.
12. THE FIRE ALARM CONTROL PANEL SHALL BE PROVIDED WITH A KEY SWITCH. DURING DAILY TESTS, THE KEY SWITCH SHALL BE USED TO BYPASS THE CIRCUITS THAT CONTROL DAMPERS AND FAN SHUTDOWN.
13. THE DAMPERS AND FAN BYPASS FUNCTION SHALL BE AUTOMATICALLY RESTORED TO BE NORMAL UN-SHUNTED CONDITION WITHIN FORTY-FIVE MINUTES, IF NOT DONE SO MANUALLY BEFORE FORTY-FIVE MINUTES.
14. PERFORM FIRE ALARM SYSTEM TESTING PER THE 2020 NEW YORK STATE FIRE CODE AND NFPA 72.

FIRE ALARM LEGEND:

SYMBOL	DESCRIPTION
FA	FIRE ALARM SUB PANEL
S	SMOKE DETECTOR
H	HEAT DETECTOR
F	MANUAL FIRE ALARM PULL STATION
# H	FIRE ALARM WALL MOUNTED HORN/STROBE # = CANDELA RATING
FCO	FUSED CUT OUT SWITCH/FUSED LOCKABLE DISCONNECT SWITCH
ST #	WALL MOUNTED STROBE # = CANDELA RATING
	FLOW SWITCH CONNECTED TO FIRE ALARM SYSTEM
GV	SPRINKLER VALVE TAMPER SWITCH CONNECTED TO FIRE ALARM SYSTEM
S	DUCT MOUNTED SMOKE DETECTOR
FSR	FIRE ALARM INTERFACE RELAY FOR HVAC FAN SHUTDOWN

FIRE ALARM ABBREVIATIONS:

E	EXISTING TO REMAIN
ER	EXISTING TO BE RELOCATED
EL	EXISTING AS SHOWN IN NEW LOCATION
FACP	FIRE ALARM CONTROL PANEL
FCO	FUSED CUT OUT
FCU	FIRE ALARM CONTROL UNIT
FP	FIRE PROTECTION
N	NEW
RTU	ROOFTOP UNIT
SP	SPRINKLER
WP	WEATHERPROOF
X	EXISTING TO BE DEMOLISHED

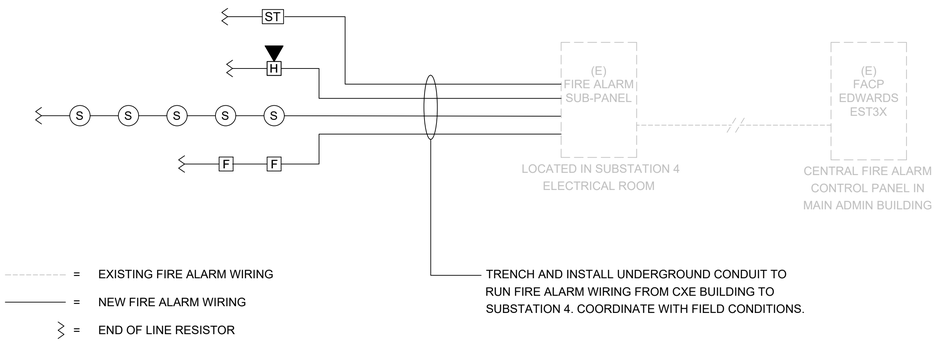

GROUND FLOOR

NOTES:
1. WIRING SHOWN ON RISER IS DIAGRAMMATICAL. PROVIDE NEW FIRE ALARM CABLE AS REQUIRED AND INSTALL WIRING LOOPS AS BEST SUITED FOR FIELD CONDITIONS.
2. THE BUILDING IS FULLY SPRINKLERED.

1 FIRE ALARM RISER DIAGRAM
SCALE: NOT TO SCALE

		SYSTEM OUTPUTS																
		Control Unit Annunciation						Notification									Supp.	
	EVENT	A ACTUATE COMMON ALARM SIGNAL	B ACTUATE AUDIBLE ALARM SIGNAL	C INDICATE COMMON SUPERVISORY STATUS	D ACTUATE AUDIBLE SUPERVISORY SIGNAL	E INDICATE COMMON TROBLE SIGNAL	F ACTUATE AUDIBLE COMMON TROUBLE SIGNAL	G ACTIVATE HORNS AND STROBES THROUGHOUT THE PROTECTED AREA	H DISPLAY/PRINT CHANGE OF STATUS	I TRANSMIT AUTOMATIC ALARM SIGNAL TO SUPERVISING STATION	J TRANSMIT MANUAL ALARM SIGNAL TO SUPERVISING STATION	K TRANSMIT WATERFLOW ALARM SIGNAL TO SUPERVISING STATION	L TRANSMIT SUPERVISORY SIGNAL TO SUPERVISING STATION	M TRANSMIT CO ALARM SIGNAL TO SUPERVISING STATION	N TRANSMIT TROUBLE SIGNAL TO SUPERVISING STATION	O ACTIVATE TEMPORAL 4 SIGNAL ON ACTIVATED CO DETECTOR SOUNDER BASES	P SHUT DOWN CO PRODUCING EQUIPMENT	Q SHUT DOWN FANS/AIR HANDLING UNITS
1	ACTIVATION OF MANUAL PULL STATION	X	X					X	X		X							
2	ACTIVATION OF SMOKE DETECTOR	X	X					X	X	X								X
3	ACTIVATION OF DUCT MOUNTED SMOKE DETECTOR	X	X					X	X	X								X
4	ACTIVATION OF HEAT DETECTOR	X	X					X	X	X								X
5	WATERFLOW SWITCH FOR FIRE SPRINKLER SYSTEM	X	X					X	X			X						X
6	ACTIVATION OF CARBON MONOXIDE DETECTOR			X	X			X	X					X		X	X	
7	SPRINKLER VALVE (TAMPER SWITCH)			X	X				X				X					
8	FIRE ALARM LOSS OF PRIMARY/SECONDARY POWER					X	X		X						X			
9	FIRE ALARM SYSTEM WIRING FAILURE					X	X		X						X			

2 FIRE ALARM SEQUENCE OF OPERATIONS MATRIX
SCALE: NOT TO SCALE

FIRE ALARM DEMOLITION NOTES:

1. ALL EXISTING FIRE ALARM DEVICES IN THE AREA OF WORK SHALL BE REMOVED, WITH ASSOCIATED WIRING DEMOLISHED BACK TO SOURCE.

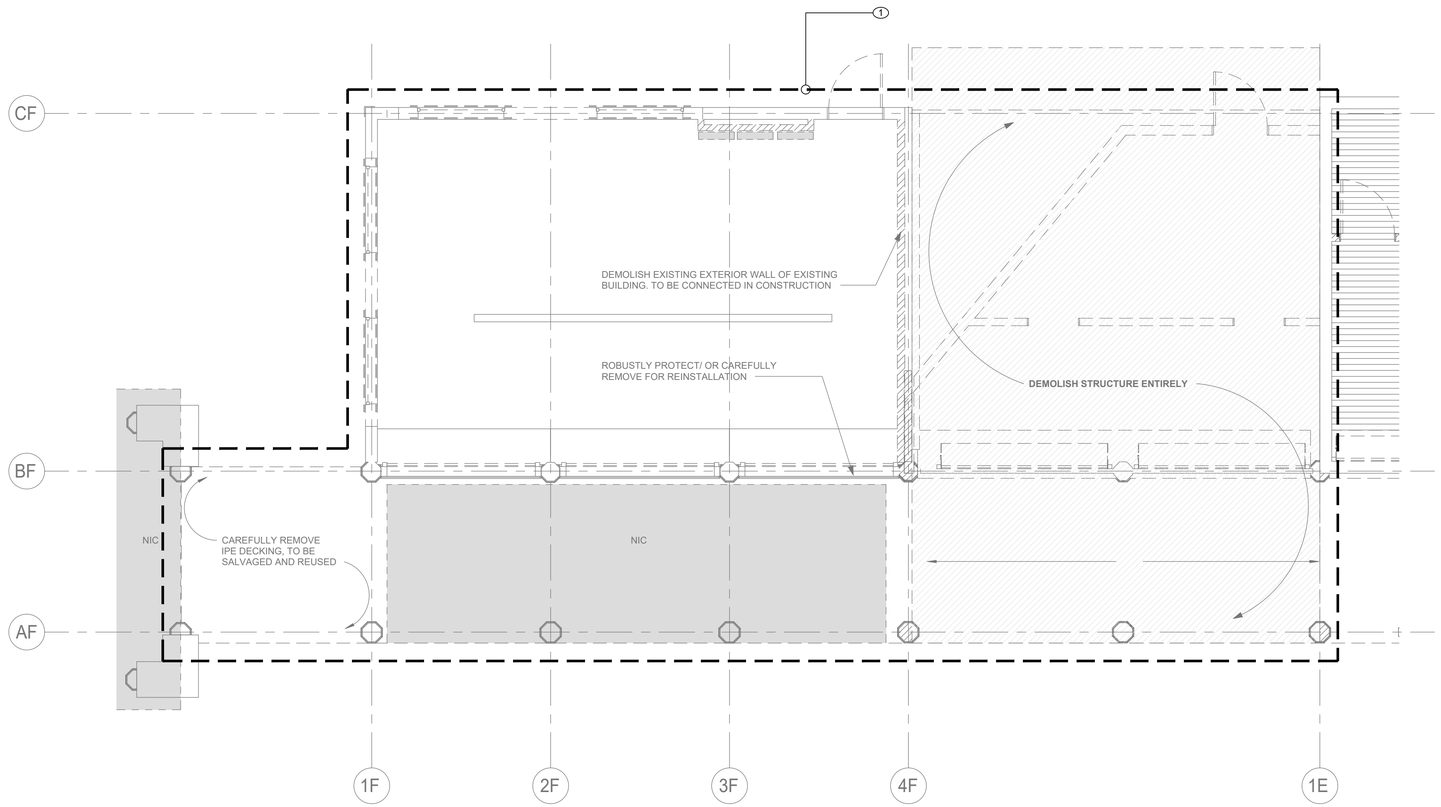

1 FIRE ALARM FIRST FLOOR DEMOLITION PLAN

SCALE: 1/4" = 1'-0"

CONSULTANT INFORMATION

LiRo Engineers, Inc.
A LiRo Group Company
Syosset, N.Y. 516-214-8157[T]

CONSULTANT SEAL

STATE OF NEW YORK · FRANK F. ULISSE · No. 090111-1 · LICENSED PROFESSIONAL ENGINEER

REVISION NUMBER	DATE	MADE BY	APP'D BY	REVISION

RECORD DRAWING CERTIFICATION

☐ AS BUILT – CHANGES AS NOTED ☐ AS BUILT – NO CHANGES

CONTRACTOR
NAME
SIGNATURE
TITLE DATE

PROJECT COORDINATOR
NAME
SIGNATURE
TITLE DATE

WESTCHESTER COUNTY, NEW YORK
DEPARTMENT OF PUBLIC WORKS AND TRANSPORTATION
DIVISION OF ENGINEERING

INFRASTRUCTURE REHABILITATION - PHASE 3
PLAYLAND PARK, RYE, NEW YORK
CROSS AXIS BUILDING F
FIRE ALARM FIRST FLOOR DEMOLITION PLAN

CONTRACT NUMBER	22-523
SHEET NUMBER	CXF-FA-11
DWG NO.:	383 of 664
SCALE:	As indicated
DATE:	08/23/2022
DPW FILE NUMBER	1-118-FA-1132-0
REV. NO.	0

FIRE ALARM CONSTRUCTION NOTES:

1. CONNECT NEW FIRE ALARM DEVICES TO EXISTING FIRE ALARM CONTROL PANEL IN SUBSTATION 4 ELECTRICAL ROOM.
2. NEW MANUAL PULL STATIONS SHALL BE INSTALLED AT 4'-0" ABOVE FINISHED FLOOR AT EACH BUILDING EXIT (MAX. DISTANCE OF 5'-0" FROM EXIT).
3. FIRE ALARM STROBES AND HORN STROBES SHALL BE FIELD ADJUSTABLE AND SET CANDELA RATING INDICATED ON PLAN. FIRE ALARM STROBES AND HORN STROBES SHALL BE INSTALLED AT 7'-4" ABOVE FINISHED FLOOR UNLESS OTHERWISE NOTED.

FIRE ALARM GENERAL NOTES:

1. REFER TO DRAWING FA-001.00 FOR SYMBOLS, ABBREVIATIONS, AND NOTES. LAYOUT OF FIRE ALARM DEVICES ON THIS PLAN IS DIAGRAMMATIC; EXACT LOCATIONS OF DEVICES AND CONDUIT SHALL BE COORDINATED WITH FIELD CONDITIONS, ARCHITECTURAL REQUIREMENTS, AND MANUFACTURER RECOMMENDATIONS.
2. ALL DEVICES AND EQUIPMENT SHOWN ON THIS PLAN ARE NEW, UNLESS OTHERWISE NOTED.
3. INSTALL NEW FIRE ALARM SYSTEM IN STRICT ACCORDANCE WITH NFPA-72 AND NFPA-90A REQUIREMENTS.
4. CONTRACTOR SHALL INSTALL NEW FIRE ALARM SYSTEM AS INDICATED AND PROVIDE ALL NECESSARY WIRING, CONDUIT, AND APPARATUSES.
5. ALL VISUAL NOTIFICATION DEVICES IN THE SAME SPACE SHALL BE SYNCHRONIZED IN ACCORDANCE WITH NFPA-72.
6. COORDINATE INSTALLATION WITH FIRE ALARM SYSTEM VENDOR AND MANUFACTURER REQUIREMENTS.
7. COORDINATE FIRE ALARM DEVICES WITH ARCHITECTURAL FINISHES. CONCEAL CONDUIT IN FINISHED WALLS AND FLUSH MOUNT DEVICES WHERE POSSIBLE.
8. CONTRACTOR SHALL TEST THE FIRE ALARM SYSTEM AFTER COMPLETION OF INSTALLATION. FIRE ALARM SYSTEM SHALL BE TESTED AND VERIFIED TO BE WORKING PROPERLY PRIOR TO INSPECTION BY THE AUTHORITY HAVING JURISDICTION.
9. FOLLOWING INSTALLATION, CONTRACTOR SHALL PATCH, PAINT, AND RESTORE ALL WALLS AND CEILINGS TO MATCH EXISTING OR DESIRED NEW CONDITION.
10. FIRESTOP ALL FIRE-RATED FLOOR OR WALL PENETRATIONS TO MAINTAIN ORIGINAL FIRE RATING TO FULL DEPTH OF OPENING.
11. CONTRACTOR SHALL PROVIDE SLEEVE FOR CONDUIT PENETRATIONS THROUGH WALL AND CEILING FLOORS.

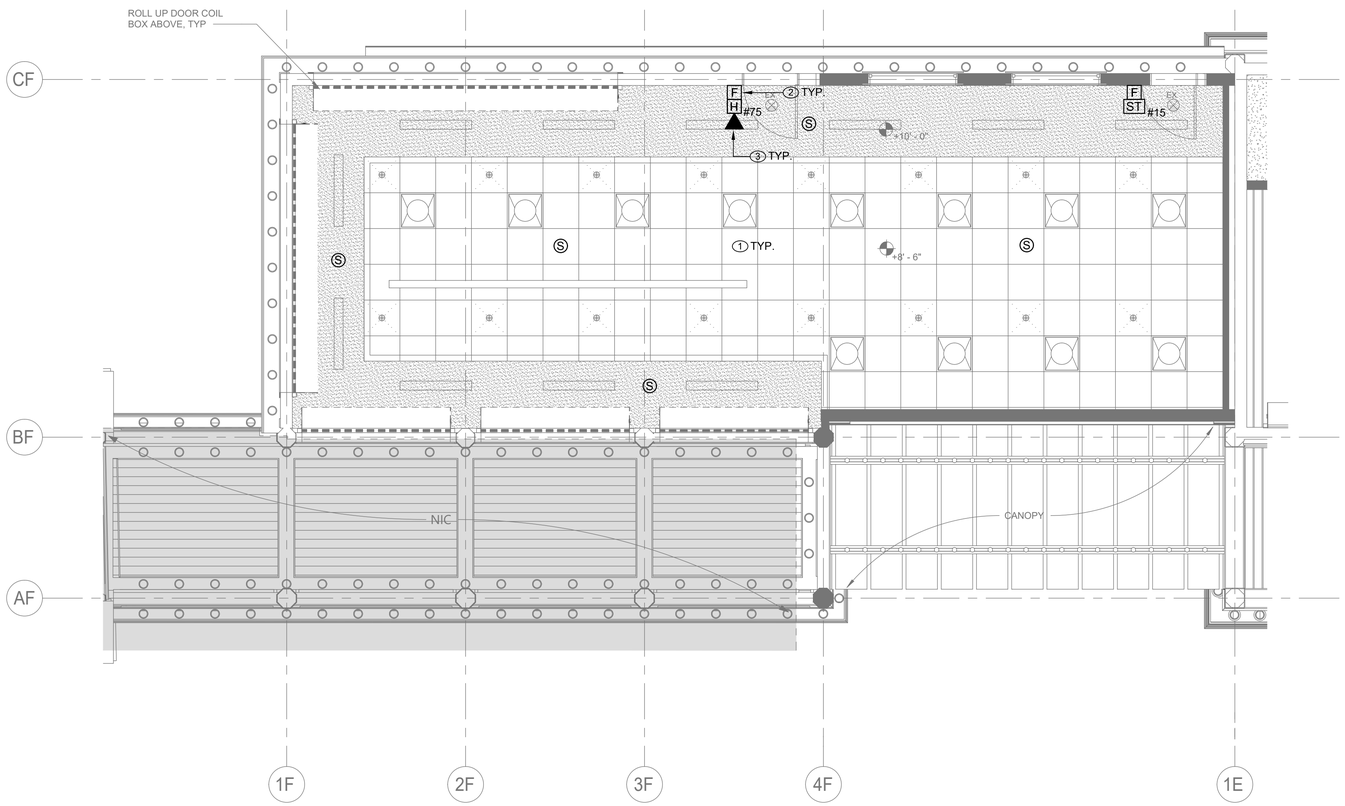

1 FIRE ALARM FIRST FLOOR CONSTRUCTION PLAN

SCALE: 1/4" = 1'-0"

CONSULTANT INFORMATION

LiRo Engineers, Inc.
A LiRo Group Company
Syosset, N.Y. 516-214-8157[T]

CONSULTANT SEAL

STATE OF NEW YORK · FRANK F. ULISSE · No. 090111-1 · LICENSED PROFESSIONAL ENGINEER

REVISION NUMBER	DATE	MADE BY	APP'D BY	REVISION

RECORD DRAWING CERTIFICATION

☐ AS BUILT – CHANGES AS NOTED ☐ AS BUILT – NO CHANGES

CONTRACTOR
NAME
SIGNATURE
TITLE DATE

PROJECT COORDINATOR
NAME
SIGNATURE
TITLE DATE

WESTCHESTER COUNTY, NEW YORK
DEPARTMENT OF PUBLIC WORKS AND TRANSPORTATION
DIVISION OF ENGINEERING

INFRASTRUCTURE REHABILITATION - PHASE 3
PLAYLAND PARK, RYE, NEW YORK
CROSS AXIS BUILDING F
FIRE ALARM FIRST FLOOR PLAN

CONTRACT NUMBER	22-523
SHEET NUMBER	CXF-FA-21
DWG NO.:	384 of 664
SCALE:	As indicated
DATE:	08/23/2022
DPW FILE NUMBER	1-118-FA-1133-0
REV. NO.	0

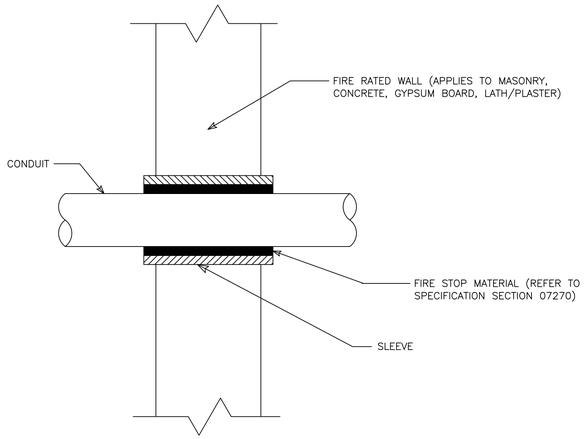

1 FA-81 CONDUIT PENETRATION THRU FIRE RATED WALL
NOT TO SCALE

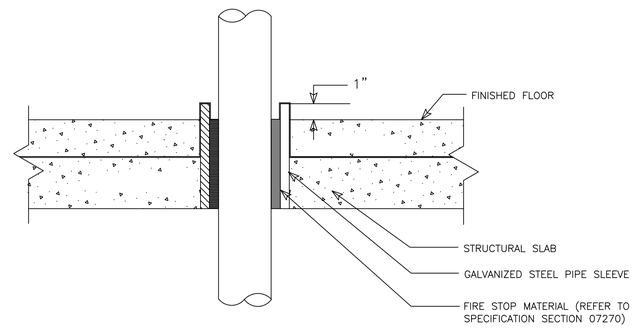

2 FA-81 CONDUIT PENETRATION THRU FLOOR SLAB
NOT TO SCALE

CONSULTANT INFORMATION

LiRo Engineers, Inc.
A LiRo Group Company
Syosset, N.Y. 516-214-8157[T]

CONSULTANT SEAL

STATE OF NEW YORK · FRANK F. ULISSE · No. 090111-1 · LICENSED PROFESSIONAL ENGINEER

REVISION NUMBER	DATE	MADE BY	APP'D BY	REVISION

RECORD DRAWING CERTIFICATION

☐ AS BUILT – CHANGES AS NOTED ☐ AS BUILT – NO CHANGES

CONTRACTOR
NAME
SIGNATURE
TITLE DATE

PROJECT COORDINATOR
NAME
SIGNATURE
TITLE DATE

WESTCHESTER COUNTY, NEW YORK
DEPARTMENT OF PUBLIC WORKS AND TRANSPORTATION
DIVISION OF ENGINEERING

INFRASTRUCTURE REHABILITATION - PHASE 3
PLAYLAND PARK, RYE, NEW YORK
CROSS AXIS BUILDING F
FIRE ALARM DETAILS

CONTRACT NUMBER 22-523
SHEET NUMBER **CXF-FA-81**
DWG NO.: 385 of 664
SCALE: **As indicated**
DATE: 08/23/2022
DPW FILE NUMBER **1-118-FA-1134-0**
REV. NO. 0

GENERAL NOTES:

1. DIMENSIONS INDICATED ON THE DRAWINGS ARE APPROXIMATE AND SUBJECT TO REVISIONS AS PER ACTUAL FIELD CONDITIONS.
2. CONTRACTOR SHALL COMPLY WITH ALL NYSDEC PERMIT REQUIREMENTS AND ANY OTHER STATE, COUNTY, CITY OR TOWN AGENCY HAVING JURISDICTION. REFER TO THE CONTRACT SPECIFICATIONS FOR PERMIT REQUIREMENTS.
3. CONTRACTOR SHALL TAKE ALL PRECAUTIONS TO MAINTAIN UTILITY SERVICE TO AND FROM BUILDINGS AND PARK AREAS.
4. ANY UTILITIES SHOWN ON THE PLANS ARE FOR INFORMATION ONLY AND HAVE BEEN OBTAINED FROM AVAILABLE SOURCES. THE EXISTENCE AND LOCATION OF ANY UTILITIES INDICATED ON THE PLANS ARE NOT GUARANTEED AND SHALL BE INVESTIGATED AND VERIFIED IN THE FIELD BY THE CONTRACTOR BEFORE STARTING WORK. THE CONTRACTOR SHALL HAVE ALL EXISTING UTILITIES FIELD STAKED BEFORE STARTING WORK BY CALLING DIG SAFELY NEW YORK AT 1-800-962-7962. EXCAVATION IN THE VICINITY OF UNDERGROUND UTILITIES SHALL BE DUG BY HAND. THE CONTRACTOR WILL BE HELD RESPONSIBLE FOR ANY DAMAGE TO EXISTING UTILITIES. NO SEPARATE PAYMENT SHALL BE MADE FOR THIS WORK.
5. THE CONTRACTOR WILL BE REQUIRED TO PROVIDE PRIVATE UTILITY MARKOUTS FOR ALL UTILITIES IN THE WORK AREAS. THE CONTRACTOR SHALL SUBMIT THE PROPOSED UTILITY SUB-CONTRACTOR FOR APPROVAL.
6. THE CONTRACTOR SHALL OBTAIN AND HAVE ON THE JOB SITE, AT ALL TIMES, ALL PERMITS AS REQUIRED BY THE STATE, COUNTY, CITY, TOWN/VILLAGE OR ANY OTHER PERMITTING AGENCY. THE CONTRACTOR SHALL BEAR ALL COSTS OF OBTAINING THESE PERMITS.
7. CONTRACTOR SHALL REMOVE ALL DEBRIS AND EXCESS CONSTRUCTION MATERIALS TO THE SATISFACTION OF THE OWNER AND ENGINEER. THE CONTRACTOR SHALL BE RESPONSIBLE FOR THE REMOVAL AND LEGAL DISPOSAL OF ALL MATERIALS RESULTING FROM THE CONTRACT.
8. CONTRACTOR SHALL COORDINATE ALL CONSTRUCTION ACTIVITIES WITH THE OWNER AND ENGINEER TO MINIMIZE INTERRUPTIONS TO NORMAL PARK OPERATIONS.
9. CONTRACTOR SHALL SUBMIT A DETAILED WORK PLAN INCLUDING SEQUENCE OF OPERATIONS PRIOR TO COMMENCING WORK AND SHALL BE SUBJECT TO APPROVAL OF THE OWNER/ENGINEER.
10. THE CONTRACTOR SHALL NOTIFY THE OWNER AND THE ENGINEER A MINIMUM OF SEVENTY-TWO (72) HOURS PRIOR TO THE START OF CONSTRUCTION. IN ADDITION, IF WORK SHOULD BE STOPPED AND RESTARTED FOR ANY REASON, THE CONTRACTOR SHALL GIVE THE ENGINEER A MINIMUM OF SEVENTY-TWO (72) HOURS NOTICE.
11. ITEMS SUSTAINING DAMAGE DURING CONSTRUCTION AS A RESULT OF THE CONTRACTOR'S OPERATIONS SHALL BE REPAIRED AND/OR REPLACED TO THE SATISFACTION AND APPROVAL OF THE OWNER AT THE CONTRACTORS EXPENSE. ANY DAMAGE SHALL BE REPAIRED AT NO ADDITIONAL COST TO THE OWNER.
12. ALL NECESSARY PRECAUTIONS SHALL BE TAKEN TO PRESERVE THE MATERIAL BELOW AND BEYOND THE LINES OF ALL EXCAVATION IN THE SOUNDEST POSSIBLE CONDITION. ANY DAMAGE TO THE WORK DUE TO THE CONTRACTOR'S OPERATIONS SHALL BE REPAIRED AT THE EXPENSE OF AND BY THE CONTRACTOR.
13. NO MATERIALS OF ANY KIND SHALL BE USED UNTIL IT HAS BEEN INSPECTED AND ACCEPTED BY THE ENGINEER; ALL MATERIALS REJECTED SHALL BE IMMEDIATELY REMOVED FROM THE WORK SITE AND SHALL NOT BE OFFERED FOR INSPECTION AGAIN.
14. ANY MATERIALS OR WORKMANSHIP FOUND AT ANY TIME TO BE DEFECTIVE SHALL BE REMEDIED AT ONCE, REGARDLESS OF PREVIOUS INSPECTION, THE INSPECTION AND OBSERVATION OF WORK BY THE ENGINEER IS INTENDED TO AID THE CONTRACTOR IN APPLYING LABOR AND MATERIAL TO AND IN ACCORDANCE WITH THE SPECIFICATION, BUT SUCH INSPECTION SHALL NOT RELEASE THE CONTRACTOR FROM ANY CONTRACT OBLIGATIONS.
15. THE CONTRACTOR SHALL CONDUCT THE WORK IN A SAFE MANNER SO AS TO POSE NO DANGER OR HAZARDS TO PERSONS OR PROPERTY. WHERE NECESSARY, TEMPORARY SHIELDS OR OTHER PROTECTIVE DEVICES MUST BE UTILIZED. THE CONTRACTOR ASSUMES FULL RESPONSIBILITY AND EXPENSE OF ANY AND ALL SAFETY MEASURES. THE USE OF EXPLOSIVES IS STRICTLY PROHIBITED. THE CONTRACTOR SHALL COMPLY WITH ALL OSHA AND NEW YORK STATE DEPARTMENT OF LABOR REQUIREMENTS.
16. RESEED ALL AREAS WHERE WORK OCCURS AND/OR WHERE CONTRACTOR DAMAGES EXISTING GRASS. COMPLY WITH THE SPECIFICATIONS. STAGING AREAS SHALL BE RESTORED TO ORIGINAL CONDITION AND SHALL BE SEEDED FOLLOWING COMPLETION OF ALL PHYSICAL WORK.
17. THE CONTRACTOR SHALL HAVE A COMPETENT REPRESENTATIVE PRESENT WHO SHALL RESPOND TO ANY QUESTIONS OR REQUESTS OF THE ENGINEER IN THE PROSECUTION AND COMPLETION OF THE WORK IN CONFORMITY WITH THIS CONTRACT, AND SHALL HAVE FULL AUTHORITY TO SUPPLY LABOR AND MATERIAL IMMEDIATELY. THE CONTRACTOR SHALL ALSO HAVE A COMPETENT REPRESENTATIVE AVAILABLE TO RECEIVE TELEPHONE MESSAGES AND PROVIDE A REASONABLE REPLY AS SOON AS POSSIBLE, BUT NO LATER THAN 24 HOURS.
18. NEITHER THE OWNER OR ENGINEER SHALL BE RESPONSIBLE FOR THE MEANS AND METHODS CHOSEN BY THE CONTRACTOR TO COMPLETE THE WORK.
19. THE CONTRACTOR SHALL HAVE FULL RESPONSIBILITY FOR SITE SAFETY AND THE SAFETY OF THE CONTRACTOR'S WORK FORCE.
20. BACKFILL AT ALL EXCAVATIONS SHALL BE PLACED IN 6" LIFTS AND SHALL ACHIEVE A COMPACTION NOT LESS THAN 95 PERCENT OF STANDARD PROCTOR MAXIMUM DENSITY. UNDER THE TERMS OF THE CONTRACT, THE CONTRACTOR SHALL PERFORM FIELD TESTS BY AN APPROVED LABORATORY TO ASSURE THIS COMPACTION RATE AT VARYING DEPTHS. THE CONTRACTOR SHALL BEAR ALL COSTS FOR TESTING AND ANY DELAYS THAT RESULT FROM SUCH TESTING.
21. THE CONTRACTOR SHALL ADJUST ALL MANHOLE FRAMES AND COVERS, VALVE COVERS, WATERVALVE BOXES, DRAINAGE INLETS, ETC. AS NECESSARY TO MEET THE SURFACE OF NEW PAVEMENT OR WALKWAY AS REQUIRED TO ALLOW POSITIVE DRAINAGE. NO SEPARATE PAYMENT WILL BE MADE FOR THIS WORK UNLESS OTHERWISE NOTED IN THE CONTRACT DOCUMENTS. THE CONTRACTOR SHALL COORDINATE THIS ACTIVITY WITH THE RELATED UTILITY COMPANIES, IF APPLICABLE. WARPING OF THE PAVEMENT SURFACE TO MEET THESE ITEMS WILL NOT BE PERMITTED.
22. ALL EXISTING SIGNS IN THE CONTRACT AREA ARE TO REMAIN INTACT. SIGNS DAMAGED SHALL BE REPLACED AT THE CONTRACTOR'S EXPENSE. ANY SIGNS THAT REQUIRE RESETTING SHALL BE PLACED IN A FINAL POSITION DETERMINED BY THE OWNER. NO SEPARATE PAYMENT SHALL BE MADE FOR THIS WORK. THE CONTRACTOR SHALL BE HELD RESPONSIBLE FOR SIGNS DAMAGED BY HIS OPERATIONS. THE CONTRACTOR SHALL BE RESPONSIBLE FOR ALL DAMAGES TO BURIED AND OVERHEAD UTILITIES LOCATED ON PUBLIC AND PRIVATE PROPERTY. THE CONTRACTOR SHALL BE RESPONSIBLE FOR ALL DAMAGES TO FACILITIES ON PUBLIC AND PRIVATE PROPERTY, SUCH AS, LANDSCAPING, DRIVEWAYS, CURBS, PAVEMENT, SIDEWALK, ETC.
23. CONTRACTOR IS RESPONSIBLE TO COORDINATE AND VERIFY THE EXTENT OF ALL DEMOLITION WITH THE ENGINEER PRIOR TO PERFORMING THE WORK.
24. CONTRACTOR SHALL RESTORE STAGING AREA BACK TO ITS ORIGINAL CONDITION INCLUDING GRADING, SEEDING ETC. EXISTING TREES, UTILITIES, LIGHT POLES, STONE, SIDEWALK, CURB, ETC. SHALL BE PROTECTED AND REPLACED IF DAMAGED. PROVIDE ELECTRICAL POWER, WATER, TELEPHONE, ETC. AS SPECIFIED FOR THE ENGINEERS TRAILER WHICH SHALL BE LOCATED IN THE STAGING AREA.

SURVEY NOTES:

1. HORIZONTAL COORDINATES SHOWN HEREON REFER TO THE NORTH AMERICAN DATUM OF 1983 (NAD83), NEW YORK STATE PLANE COORDINATE SYSTEM, NEW YORK EAST ZONE 3101.
2. VERTICAL ELEVATIONS SHOWN HEREON REFER TO THE NORTH AMERICAN VERTICAL DATUM OF 1988 (NAVD88) WHICH IS BASED ON THE UNITED STATES COAST & GEODETIC SURVEY MEAN SEA LEVEL AT SANDY HOOK, NEW JERSEY.
3. LOCATION OF UTILITIES AS SHOWN ARE BASED UPON MAP TITLED "PARTIAL TOPOGRAPHICAL AND UTILITY SURVEY OF RYE PLAYLAND PARK" BY LKB LAST UPDATED SEPTEMBER 8, 2017.
4. LOCATIONS OF UNDERGROUND UTILITIES SHOWN ON THIS SURVEY ARE APPROXIMATE. RLT ENGINEERING, GEOLOGY, AND LAND SURVEYING, P.C., CANNOT GUARANTEE THE LOCATION OF UNDERGROUND UTILITIES AND STRUCTURES. THE STANDARD OF CARE USED BY RLT ENGINEERING, GEOLOGY, AND LAND SURVEYING, P.C. TO LOCATE THE UTILITIES IS REASONABLE AND CONSISTENT WITH THE LOCAL STANDARD OF CARE USED TO LOCATE THE UNDERGROUND UTILITIES. LOCATIONS AND SIZE ARE BASED ON UTILITY MARK-OUTS, AS-BUILT MAPS AND OTHER VISIBLE SURFACE EVIDENCE OBSERVED IN THE COURSE OF THIS SURVEY. PRIOR TO EXCAVATION OR CONSTRUCTION THE LOCATION, SIZE AND TYPE OF ALL UNDERGROUND UTILITY LOCATIONS MUST BE VERIFIED BY THE RESPECTIVE UTILITY COMPANY.
5. THE SUBJECT PROPERTY OF RYE PLAYLAND PARK FALLS WITHIN FEMA FLOOD ZONES AE (EL 12), AE (EL 13), VE (EL 14), VE (EL 15), VE (EL 16), VE (EL 17) AS SHOWN ON THE FEMA FLOOD INSURANCE RATE MAP COMMUNITY PANEL #36119C0358 F EFFECTIVE DATE SEPTEMBER 28, 2007 AND FEMA FLOOD INSURANCE RATE MAP COMMUNITY PANEL #36119C0356 F EFFECTIVE DATE SEPTEMBER 28, 2007. FEMA ELEVATIONS REFER TO NAVD88."

DEMOLITION NOTES:

1. ALL REQUIRED DEMOLITION PERMITS MUST BE OBTAINED FROM ALL REQUIRED AGENCIES PRIOR TO COMMENCEMENT OF WORK.
2. ANY ASBESTOS REMOVAL MUST BE DONE BY A CERTIFIED ASBESTOS REMOVAL CONTRACTOR.
3. ALL UTILITY COMPANIES MUST BE NOTIFIED A MINIMUM OF 48 HOURS IN ADVANCE OF DEMOLITION.
4. FOR ALL UTILITIES, CONTRACTOR SHALL VERIFY DISCONNECT PRIOR TO DEMOLITION.
5. PROPER FENCING OR PUBLIC PROTECTION DEVICES MUST BE CONSTRUCTED AND MAINTAINED AROUND THE PERIMETER OF THE SITE AT ALL TIMES DURING DEMOLITION PHASE.
6. IT IS THE CONTRACTOR'S RESPONSIBILITY TO CONTROL DUST, DIRT, AND DEBRIS DURING DEMOLITION AND CONSTRUCTION PHASES.
7. IF SUSPICIOUS AND/OR HAZARDOUS MATERIAL IS ENCOUNTERED DURING DEMOLITION / CONSTRUCTION, ALL WORK SHALL STOP AND THE COUNTY DEPARTMENT OF HEALTH AND THE NEW YORK STATE DEPARTMENT OF ENVIRONMENTAL CONSERVATION SHALL BE NOTIFIED IMMEDIATELY. WORK SHALL NOT RESUME UNTIL THE CONTRACTOR HAS OUTLINED APPROPRIATE ACTION FOR DEALING WITH THE WASTE MATERIAL.
8. WHERE EXISTING CURB, GUTTER, SIDEWALK OR WALK IS TO BE REMOVED, IT SHALL BE SAW CUT OR REMOVED AT THE NEAREST JOINT.
9. THE CONTRACTOR SHALL PERFORM DAILY CLEANUP OPERATIONS WHICH INCLUDE SWEEPING OF THE ROADWAYS, REMOVAL OF DEBRIS (CUPS, PAPER BAGS, CANS, ETC.), REMOVAL OF EXCESS CONSTRUCTION MATERIALS, ALL TO THE SATISFACTION OF THE OWNER.
10. THE CONTRACTOR SHALL CONFORM TO ALL STATE AND LOCAL RULES, REGULATIONS AND LAWS WHICH SHALL GOVERN THE HAULING AND DISPOSING OF TREES, SHRUBS, STUMPS, ROOTS, RUBBISH, DEBRIS AND OTHER MATTER.
11. NO TREES , SHRUBS, ROOTS, BRANCHES, WOOD, CONCRETE OR OTHER DEBRIS SHALL BE BURIED IN FILLS, EMBANKMENTS OR STOCK PILES.
12. NO CLEARED MATTER, DEBRIS SHALL BE STORED AT THE CONSTRUCTION SITE.
13. CONTRACTOR SHALL GUARANTEE THAT WORK PERFORMED UNDER THIS CONTRACT WILL NOT PERMANENTLY DAMAGE TREES, SHRUBS, TURF OR PLANTS DESIGNATED TO REMAIN, OR OTHER ADJACENT WORK OR FACILITIES. IF DAMAGE RESULTING FROM CONTRACTOR'S OPERATIONS APPEARS DURING THE PERIOD UP TO 24 MONTHS AFTER COMPLETION OF THE PROJECT, THE CONTRACTOR SHALL REPLACE DAMAGED ITEMS AT HIS EXPENSE.
14. DAMAGE TO ANY EXISTING ITEMS, NOT SHOWN IN CONTRACT DOCUMENTS TO BE REMOVED, SUCH AS PAVEMENT, GRASSED AREAS, UTILITIES, STRUCTURES OR OTHER FACILITIES SHALL BE REPAIRED BY THE CONTRACTOR IMMEDIATELY AT HIS OWN EXPENSE TO THE SATISFACTION OF THE ENGINEER AND OWNER. ALL ASPHALT PAVEMENTS, GRASSED AREAS AND LANDSCAPING THAT ARE DAMAGED OR DISTURBED SHALL BE RESTORED IN ACCORDANCE WITH APPLICABLE SECTIONS ON THE CONTRACT SPECIFICATIONS.
15. EXCEPT AS NOTED BELOW, CONTRACTOR SHALL REMOVE FROM THE SITE AND SATISFACTORILY DISPOSE OF ALL TREES, SHRUBS, ROOTS, BRUSH, MASONRY, RUBBISH, SCRAP, DEBRIS, PAVEMENT, CURBS, FENCES AND MISCELLANEOUS OTHER ITEMS NOT COVERED UNDER OTHER SECTIONS AS SHOWN, SPECIFIED OR OTHERWISE REQUIRED TO PERMIT CONSTRUCTION OF NEW WORK.
16. BURNING OF MATERIAL IS EXPRESSLY FORBIDDEN.
17. TREES AND SHRUBS TO BE SAVED:

A. TREES AND SHRUBS WHICH ARE TO REMAIN SHALL BE PROTECTED BY FENCES, BARRICADES, WRAPPING OR OTHER MEANS OF PROTECTION. EQUIPMENT STORAGE, MATERIAL STOCKPILES, ETC., SHALL NOT BE PERMITTED WITHIN TREE BRANCH SPREAD.

B. PROTECT ALL OTHER TREES AND SHRUBS FROM DEFACEMENT, INJURY AND DESTRUCTION. PRESERVE TREES WITHIN THE CONTRACT LIMITS THAT ARE SO DELINEATED ON THE PLANS OR AS MARKED IN THE FIELD BY THE ENGINEER. ALSO, ALL TO BE SAVED SHALL BE PROTECTED IN ACCORDANCE WITH THE CONTRACT DOCUMENTS.

C. DO NOT CUT ROOTS UNNECESSARILY; HANDWORK OR OTHER METHODS SHALL BE IMPLEMENTED TO PREVENT DAMAGE TO ROOTS WHICH EXTEND INTO GRADING LIMITS OR LIMITS OF EXCAVATION. DISTURB ROOTS AS LITTLE AS POSSIBLE WHEN TUNNELING UNDER TREES. BACKFILLING AROUND TREE ROOTS SHALL BE DONE IMMEDIATELY AFTER COMPLETION OF CONSTRUCTION IN THE VICINITY OF TREES.

D. THE CONTRACTOR SHALL BE RESPONSIBLE FOR THE PROTECTION OF ALL VEGETATION FROM DAMAGE RESULTING FROM EMISSIONS FROM MOTORIZED EQUIPMENT.

E. CONTRACTOR SHALL BE VIGILANT OF ANY OVERHEAD UTILITY LINES WHEN USING AERIAL EQUIPMENT FOR TREE TRIMMING OPERATIONS.

F. DURING WORKING OPERATION, PROTECT THE TRUNK, FOLIAGE, AND ROOT SYSTEM OF ALL TREES TO BE SAVED WITH BOARDS OR OTHER GUARDS AND AS REQUIRED TO PREVENT DAMAGE, INJURY AND DEFACEMENT. DO NOT PILE EXCAVATED MATERIAL ADJACENT TO THE BASE OF ANY TREES. DO NOT ALLOW RUNOFF TO ACCUMULATE AROUND BASE OF TREES. DO NOT FASTEN OR ATTACH ROPES, CABLE OR GUY WIRES TO TREES WITHOUT PERMISSION OF THE ENGINEER. WHEN SUCH PERMISSION IS GRANTED, PROTECT THE TREE BEFORE MAKING FASTENING OR ATTACHMENTS BY PROVIDING BURLAP WRAPPING AND SOFTWOOD CLEATS. THE CONTRACTOR SHALL BE HELD RESPONSIBLE FOR DAMAGE RESULTING FROM THESE ACTIONS. USE OF AXES OR CLIMBING SPURS FOR TRIMMING WILL NOT BE PERMITTED. PROVIDE CLIMBING ROPES DURING TRIMMING.

G. REMOVE SHRUBS TO BE SAVED, TAKING A SUFFICIENT EARTH BALL AT THE ROOTS TO MAINTAIN THE SHRUB. TEMPORARILY REPLANT IF REQUIRED, AND REPLACE AT THE COMPLETION OF CONSTRUCTION IN CONDITION EQUALING THE ORIGINAL.

H. TREE AND SHRUB REPAIR WHERE REQUIRED SHALL BE PERFORMED BY A TREE SURGEON.

I. TREES AND SHRUBS INTENDED TO REMAIN WHICH ARE DAMAGED BEYOND REPAIR BY CONSTRUCTION, SHALL BE REPLACED BY THE CONTRACTOR AT NO EXPENSE TO THE OWNER.

SITE NOTES:

1. THE CONTRACTOR SHALL PERFORM ALL WORK IN COMPLIANCE WITH TITLE 29 OF FEDERAL REGULATIONS, PART 1926, SAFETY AND HEALTH REGULATIONS FOR CONSTRUCTION(OSHA).
2. HIGHWAY DRAINAGE ALONG ALL ROADS AND PRIVATE DRIVES SHALL BE KEPT CLEAN OF MUD, DEBRIS ETC. AT ALL TIMES.
3. REFER TO ARCHITECTURAL DRAWINGS FOR BUILDING INFORMATION.
4. THE CONTRACTOR SHALL CONSULT THE DESIGN ENGINEER BEFORE DEVIATING FROM THESE PLANS.
5. IN ALL TRENCH EXCAVATIONS, CONTRACTOR MUST LAY THE TRENCH SIDE SLOPES BACK TO A SAFE SLOPE, USE A TRENCH SHIELD OR PROVIDE SHEETING AND BRACING IF REQUIRED.
6. THE CONTRACTOR SHALL TAKE PRECAUTIONS TO MAINTAIN A MINIMUM OF 2' OF COVER OVER ALL EXISTING AND NEW STORM AND SANITARY PIPES DURING CONSTRUCTION.
7. ALL EXISTING SURFACE APPURTENANCES (I.E. WATER VALVES, CATCH BASIN FRAMES AND GRATES, MANHOLE COVERS) WITHIN THE PROJECT LIMITS SHALL BE ADJUSTED TO FINISHED GRADE.
8. UNLESS COVERED BY THE CONTRACT SPECIFICATIONS OR AS NOTED ON THE PLANS, ALL WORK SHALL CONFORM TO THE NEW YORK STATE DEPARTMENT OF TRANSPORTATION STANDARD SPECIFICATIONS DATED JANUARY 1, 2020 AND ANY SUBSEQUENT APPENDICES.

UTILITY NOTES:

1. APPROXIMATE LOCATION OF KNOWN UTILITY STRUCTURES AND FACILITIES THAT MAY BE ENCOUNTERED WITHIN AND ADJACENT TO THE LIMITS OF WORK ARE SHOWN ON THE PLANS. THE ACCURACY AND COMPLETENESS OF THIS INFORMATION IS NOT GUARANTEED BY THE ENGINEER. THE CONTRACTOR IS ADVISED TO VERIFY IN FIELD ALL THE FACTS CONCERNING THE UTILITY LOCATIONS AND OTHER CONSTRUCTION OBSTACLES PRIOR TO CONSTRUCTION OF ANY DISCREPANCIES WHICH MAY AFFECT PROJECT DESIGN AND/OR SCOPE.
2. ALL ABANDONED WATER LINES SHALL BE CUT AND CAPPED IN ACCORDANCE WITH WESTCHESTER COUNTY REQUIREMENTS.
3. TRENCH DETAILS ARE INTENDED TO PROVIDE INFORMATION REGARDING BACKFILLING MATERIALS AND GENERAL MATERIAL DEPTHS ONLY. THE CONTRACTOR SHALL BE RESPONSIBLE FOR THE MEANS AND METHODS OF CONSTRUCTION AND SHALL PROVIDE APPROPRIATE SAFETY MEASURES, SHEETING AND BRACING AS NECESSARY. SHEETING CONDITIONS ARE TO BE DESIGNED BY A NEW YORK STATE LICENSED PROFESSIONAL ENGINEER AND SUBMITTED TO THE DESIGN ENGINEER FOR APPROVAL. THE DESIGN ENGINEER ASSUMES NO RESPONSIBILITY OR LIABILITY FOR FIELD CONDITIONS, TRENCHING OR BACKFILLING OPERATIONS DURING CONSTRUCTION. THE CONTRACTOR SHALL COMPLY WITH ALL APPLICABLE OSHA STANDARDS AND DETAILS FOR TRENCH EXCAVATION.
4. CONTRACTOR SHALL BE RESPONSIBLE FOR DEWATERING AND PRECLUDING PONDING OF WATER IN ALL AREAS. DEWATERING OPERATIONS SHALL BE IN ACCORDANCE WITH NYSDEC REGULATIONS, THE PROJECT STORMWATER POLLUTION PREVENTION PLAN AND WESTCHESTER COUNTY.
5. THE CONTRACTOR SHALL COMPLY WITH THE LATEST OSHA CONFINED SPACE ENTRY REQUIREMENTS (29 CFR PART 1910).
6. THE CONTRACTOR SHALL COMPLY WITH THE LATEST REVISED OSHA SHEETING REQUIREMENTS (29 CFR PART 1926.650, 651, 652).
7. ALL EXISTING UTILITIES THAT ARE TO REMAIN IN SERVICE AND THAT INTERFERE WITH THE WORK SHALL BE RELOCATED UNLESS OTHERWISE SHOWN.
8. ALL ABANDONED PIPES SHALL BE PLUGGED, REMOVED, CRUSHED OR FILLED WITH A SUITABLE MATERIAL AS DIRECTED BY THE ENGINEERS, ABANDONED PIPES 12" INSIDE DIAMETER AND LARGER MUST BE REMOVED, FILLED OR CRUSHED IN PLACE. SMALLER PIPES SHALL BE PLUGGED AND ABANDONED IN PLACE UNLESS OTHERWISE DIRECTED BY THE ENGINEER.
9. THE CONTRACTOR SHALL CONTACT THE UTILITY COMPANIES TO DETERMINE THEIR SCHEDULE FOR PERFORMING UTILITY RELOCATION AND INSTALLATION WORK. THE CONTRACTOR SHALL SCHEDULE THEIR WORK ACCORDINGLY IN ORDER TO NOT INTERFERE WITH THE WORK OF THE UTILITY COMPANIES.
10. TRENCHES SHALL BE BACKFILLED WITHOUT DELAY. OPEN TRENCHES SHALL BE TEMPORARILY SUPPORTED AND STEEL PLATED WHEN WORK IS NOT IN PROGRESS. CONTRACTOR MUST ENSURE NO TRENCHES ARE LEFT OPEN OVERNIGHT. THE CONTRACTOR IS RESPONSIBLE FOR THE DESIGN AND INSTALLATION OF STEEL PLATES THAT ARE CAPABLE OF SAFELY SUPPORTING THE SUBJECTED LOADS.
11. THE CONTRACTOR SHALL BE RESPONSIBLE FOR PROVIDING TEMPORARY LIGHTING WITHIN THE LIMITS OF CONSTRUCTION AND FOR ALL AREAS WHERE WHERE EXISTING STREET AND AREA LIGHTING SHUT-DOWN IS REQUIRED TO INSTALL NEW LIGHTING AND ELECTRICAL SERVICE.
12. ALL CMP PIPES SHALL FOLLOW NYSDOT SECTION 602-2 AND 707.02, BE HELICAL BITUMINOUS COATED, SHALL HAVE GASKETED AND BANDED JOINTS AND BE OF THE FOLLOWING PIPE GAUGES UNLESS OTHERWISE SPECIFIED.

   10" TO 21" - 14 GAUGE
   24" TO 30" - 12 GAUGE
   30" TO 60" - 10 GAUGE
13. IN INSTANCES WHERE THE STORM SEWER CROSSES THE SANITARY SEWER A CRUSHED STONE ENCASEMENT SHALL BE PROVIDED AROUND THE SANITARY SEWER UP TO THE STORM SEWER-COMPACT WITH APPROVED EQUIPMENT
14. ALL CATCH BASINS AND STORM MANHOLES WITHIN PAVEMENT TO BE CONSTRUCTED TO WITHSTAND H-20 LOADING.
15. ALL EXISTING CATCH BASINS WITHIN WORK LIMITS TO BE CLEANED OF ANY DEBRIS OR SILT.

GRADING NOTES:

1. REMOVE AND STOCKPILE TOPSOIL AS DIRECTED BY THE CONSTRUCTION MANAGER. REPLACE TOPSOIL TO A MINIMUM 4" DEPTH. ALL DISTURBED AREAS TO BE HYDROSEEDED AS DIRECTED BY THE CONSTRUCTION MANAGER.
2. CONTRACTOR SHALL BE RESPONSIBLE FOR THE MAINTENANCE AND REMOVAL OF TEMPORARY SEDIMENTATION CONTROLS, INCLUDING SILT SINK AND SILT FENCE. EROSION CONTROL MEASURES SHALL NOT BE REMOVED BEFORE VEGETATION HAS OCCURRED COMPLETELY.
3. ALL SILT FENCE TO BE REPLACED WHENEVER THEY BECOME CLOGGED OR INOPERABLE AND SHALL BE REPLACED AS DIRECTED BY THE ENGINEER.
4. THE CONTRACTOR SHALL BE RESPONSIBLE FOR RESTORATION OF TOPSOIL TO ALL DISTURBED AREAS. IT IS THE CONTRACTOR'S RESPONSIBILITY TO MAINTAIN EROSION CONTROL MEASURES AT ALL TIMES.
5. EROSION CONTROL MEASURES WILL BE IMPLEMENTED IN ACCORDANCE WITH THE NEW YORK STATE GUIDELINES FOR URBAN EROSION SEDIMENT CONTROL MANUAL, WESTCHESTER COUNTY HEALTH DEPARTMENT, AND THE CITY OF RYE REQUIREMENTS.
6. ALL INLETS TO THE STORM SEWER SHALL HAVE STONE DROP INLET PROTECTION. THE CONTRACTOR SHALL BE RESPONSIBLE FOR MAINTAINING THE BEST MANAGEMENT PRACTICES (BMP'S) UNTIL GROUND COVER IS ESTABLISHED.
7. SILT FENCE, JUTE MESH, AND/OR EROSION CONTROL BLANKETS WILL BE USED ON STEEP SLOPES AND WHEREVER NECESSARY TO CONTROL EROSION AND SILTATION OF EXISTING DRAINAGE SYSTEMS AS ORDERED BY THE ENGINEER OR SPECIFIED ON PLANS.
8. THE CONTRACTOR SHALL DESIGNATE A MEMBER OF HIS/HER FIRM TO BE RESPONSIBLE TO MONITOR EROSION CONTROL, EROSION CONTROL STRUCTURES, TREE PROTECTION AND PRESERVATION THROUGHOUT CONSTRUCTION.
9. ALL DISTURBED AREAS SHALL BE PROTECTED FROM EROSION EITHER BY MULCH OR TEMPORARY SEEDING WITHIN 2 WEEKS OF DISTURBANCE.

SOIL EROSION AND SEDIMENT CONTROL NOTES:

1. ALL SOIL EROSION AND SEDIMENT CONTROL PRACTICES TO BE INSTALLED PRIOR TO ANY SOIL DISTURBANCE, OR IN THEIR PROPER SEQUENCE, AND MAINTAINED UNTIL PERMANENT PROTECTION IS ESTABLISHED. CONTRACTOR SHALL COMPLY WITH ALL REQUIREMENTS OF THE STORMWATER POLLUTION PREVENTION PLAN.
2. ANY DISTURBED AREAS THAT WILL NOT RECEIVE PERMANENT RESTORATION WITHIN TEN (10) DAYS AFTER FINAL GRADING, AND NOT SUBJECT TO CONSTRUCTION TRAFFIC, WILL IMMEDIATELY RECEIVE A TEMPORARY COVER. THE DISTURBED AREAS WILL BE MULCHED WITH STRAW, OR EQUIVALENT MATERIAL AT A RATE OF TWO (2) TONS PER ACRE, ACCORDING TO STATE STANDARDS.
3. PERMANENT VEGETATION TO BE SEEDED OR SODDED ON ALL EXPOSED AREAS WITHIN TEN (10) DAYS AFTER FINAL GRADING. MULCH WILL BE USED AS NECESSARY FOR PROTECTION UNTIL SEEDING IS ESTABLISHED.
4. ALL WORK TO BE DONE IN ACCORDANCE WITH THE STANDARDS FOR SOIL EROSION AND SEDIMENT CONTROL IN THE STATE OF NEW YORK.
5. A SUB-BASE COURSE DETAIL WILL BE APPLIED IMMEDIATELY FOLLOWING ROUGH GRADING AND INSTALLATION OF IMPROVEMENTS IN ORDER TO STABILIZE ROADS, DRIVEWAYS PARKING AREAS AND SIDEWALKS. IN AREAS WHERE NO UTILITIES ARE PRESENT, THE SUB-BASE SHALL BE INSTALLED WITHIN 15 DAYS OF THE PRELIMINARY GRADING.
6. IMMEDIATELY FOLLOWING INITIAL DISTURBANCE OR ROUGH GRADING, ALL CRITICAL AREAS SUBJECT TO EROSION (I.E.; STEEP SLOPES AND ROADWAY EMBANKMENTS) WILL RECEIVE A TEMPORARY COVER OF STRAW MULCH OR A SUITABLE EQUIVALENT AT A RATE OF TWO (2) TONS PER ACRE, ACCORDING TO NYS STANDARDS.
7. ANY STEEP SLOPES RECEIVING PIPELINE INSTALLATION WILL BE BACKFILLED AND STABILIZED DAILY, AS THE INSTALLATION PROCEEDS (I.E.; SLOPES GREATER THAN 3:1).
8. IN ACCORDANCE WITH THE STANDARDS FOR PERMANENT VEGETATIVE COVER FOR SOIL STABILIZATION, ANY SOIL HAVING A pH OF 4 OR LESS OR CONTAINING IRON SULFIDES SHALL BE COVERED WITH A MINIMUM OF 12 INCHES OF SOIL HAVING A pH OF 5 OR GREATER PRIOR TO SEEDBED PREPARATION.
9. WESTCHESTER COUNTY AND THE ENGINEER, SHALL BE NOTIFIED 72 HOURS IN ADVANCE OF ANY LAND DISTURBING ACTIVITY.
10. AT THE TIME WHEN THE SITE PREPARATION FOR PERMANENT VEGETATIVE STABILIZATION IS GOING TO BE ACCOMPLISHED, ANY SOIL THAT WILL NOT PROVIDE A SUITABLE ENVIRONMENT TO SUPPORT ADEQUATE VEGETATIVE GROUND COVER, SHALL BE REMOVED OR TREATED IN SUCH A WAY THAT WILL PERMANENTLY ADJUST THE SOIL CONDITIONS AND RENDER IT SUITABLE FOR VEGETATIVE COVER. IF THE REMOVAL OR TREATMENT OF THE SOIL WILL NOT PROVIDE SUITABLE CONDITIONS, NON-VEGETATIVE MEANS OF PERMANENT GROUND STABILIZATION WILL HAVE TO BE EMPLOYED.
11. THE CONTRACTOR SHALL TAKE NECESSARY MEASURES TO MAINTAIN DUST CONTROL. DIRT HAUL ROADS SHALL BE SPRINKLED WITH WATER OR GIVEN A SURFACE OF CRUSHED STONES OR WOOD CHIPS AS REQUIRED. VEHICLES SHALL BE CLEANED, AS NECESSARY, PRIOR TO USING PUBLIC STREETS. PAVED ROADS SHALL BE SPRINKLED WITH WATER.
12. ALL SOIL EROSION AND SEDIMENT CONTROL DEVICES SHALL BE LOCATED IN THE FIELD AS REQUIRED OR AT THE DIRECTION OF THE ENGINEER. THE CONTRACT DRAWING ARE NOT INTENDED TO SHOW THE LOCATION AND DETAILS FOR ALL SUCH DEVICES BUT ARE TO BE USED AS A REASONABLE GUIDE.
13. ANY CHANGES TO THE SOIL AND SEDIMENT CONTROL PLANS WILL REQUIRE THE SUBMISSION OF REVISED SOIL EROSION AND SEDIMENT CONTROL PLANS TO WESTCHESTER COUNTY AND THE ENGINEER. THE REVISED PLANS MUST BE PREPARED BY THE CONTRACTOR AND MUST MEET ALL CURRENT NYS SOIL EROSION AND SEDIMENT CONTROL PRACTICES.
14. CONTRACTOR SHALL OBTAIN ALL REQUIRED SEDIMENT CONTROL PERMITS.
15. UPON COMPLETION OF CONSTRUCTION WORK AND AFTER FINAL GRADING AND WHEN PERMANENT STABILIZATION HAS BEEN ESTABLISHED, STRAW BALES, SILT FENCES AND ALL OTHER SOIL PLAN APPURTENANCES WILL BE REMOVED AND DISPOSED OF BY THE CONTRACTOR, UNLESS ORDERED TO REMAIN BY THE ENGINEER.
16. ALL EXCESS EXCAVATED MATERIAL, EXCEPT FOR TOP SOIL, WILL BE REMOVED FROM THE SITE BY THE CONTRACTOR IN ACCORDANCE WITH THE CONTRACT DOCUMENTS.
17. CONDUIT OUTLETS AND CATCH BASIN INLETS MUST BE PROTECTED PRIOR TO START OF CONSTRUCTION.
18. THE CONTRACTOR SHALL PROVIDE A DETAILED SEQUENCE OF CONSTRUCTION OPERATIONS FOR REVIEW AND SUBMITTAL TO WESTCHESTER COUNTY AND THE ENGINEER.
19. THE CONTRACTOR SHALL MEET ENGINEER ON-SITE TO DEFINE THOSE AREAS WHICH WILL REQUIRE SOIL EROSION AND SEDIMENT CONTROL FACILITIES, DISCUSS THEIR CONSTRUCTION AND THEREAFTER PROVIDE DETAILED PLANS FOR REVIEW OF SUCH FACILITIES BY WESTCHESTER COUNTY AND THE ENGINEER.
20. ALL SOIL EROSION AND SEDIMENT CONTROL PRACTICES SHALL BE IN PLACE WHERE POSSIBLE PRIOR TO, OR IMMEDIATELY FOLLOWING SITE AND ACCESS CLEARING.
21. ALL SOIL EROSION AND SEDIMENT CONTROL PRACTICES SHALL BE LEFT IN PLACE AND MAINTAINED; INCLUDING SILT AND SEDIMENT REMOVAL, UNTIL CONSTRUCTION IS COMPLETED, AREA STABILIZED AND THE ENGINEER SO DIRECTS.
22. CONTRACTOR SHALL CONFINE SOIL DISTURBANCE ACTIVITY TO THE AREAS CONTAINED WITHIN THE "LIMIT OF DISTURBANCE" LINES EXCEPT AS DIRECTED BY THE ENGINEER AND IN ACCORDANCE AND COORDINATION WITH ADJACENT CONTRACTS. SUCH ACTIVITY SHALL SHALL ESSENTIALLY CONSIST OF CLEARING, GRUBBING, GRADING AND CONSTRUCTION IN AREAS DEFINED AS BUILDINGS, PIPELINE, PARKING AREAS, DRIVES AND WALKWAYS OR AS MAY BE REQUIRED DUE TO GRADE CHANGES OR RETAINING WALLS.
23. ALL DEWATERING OPERATIONS MUST DISCHARGE DIRECTLY INTO A SEDIMENT FILTER AREA. SEDIMENT FILTER SHALL BE INSTALLED IN ACCORDANCE WITH THE CONTRACT DOCUMENTS AND THE DETAILS OF DESIGN AND CONSTRUCTION SHALL PREPARED AND SUBMITTED BY THE CONTRACTOR TO THE ENGINEER, AND ALL OTHER PERTINENT AGENCIES FOR REVIEW.
24. SOIL STABILIZATION METHODS SHALL BE UNDERTAKEN COINCIDENTALLY WITH ALL SITE IMPROVEMENTS AND CONTINUE DURING THE CONSTRUCTION ACTIVITY PERIOD.
25. THE LIMITS OF FENCING FOR TREE PROTECTION WILL BE DETERMINED IN THE FIELD PRIOR TO CONSTRUCTION AND WILL INCLUDE THE TREE CANOPY.
26. COMPLY WITH GENERAL PERMIT GP-0-20-001, AS OUTLINED IN THE STORM WATER PREVENTION PLAN (SWPPP).

6/15/2022 4:10:27 PM

CONSULTANT INFORMATION
LiRo Engineers, Inc.
A LiRo Group Company
Mineola, N.Y. 516-746-2350[T]

CONSULTANT SEAL
STATE OF NEW YORK
KENNETH J. HOLMSTROM
LICENSED PROFESSIONAL ENGINEER
No. 059134

REVISION NUMBER	DATE	MADE BY	APP'D BY	REVISION

RECORD DRAWING CERTIFICATION
☐ AS BUILT - CHANGES AS NOTED ☐ AS BUILT - NO CHANGES

CONTRACTOR	PROJECT COORDINATOR
NAME ________	NAME ________
SIGNATURE ________	SIGNATURE ________
TITLE ________ DATE ________	TITLE ________ DATE ________

WESTCHESTER COUNTY, NEW YORK
DEPARTMENT OF PUBLIC WORKS AND TRANSPORTATION
DIVISION OF ENGINEERING

INFRASTRUCTURE REHABILITATION PHASE 3
PLAYLAND PARK, RYE, NEW YORK
CXF
OVERALL SITE PLAN

CONTRACT NUMBER: **22-523**	SHEET NUMBER: **CXF-C-01**
DWG NO.: 386 of 664	
SCALE: **1"=10'**	
DATE: **08/23/2022**	
DPW FILE NUMBER: **1-118-C-1135-0**	REV. NO. **0** 0

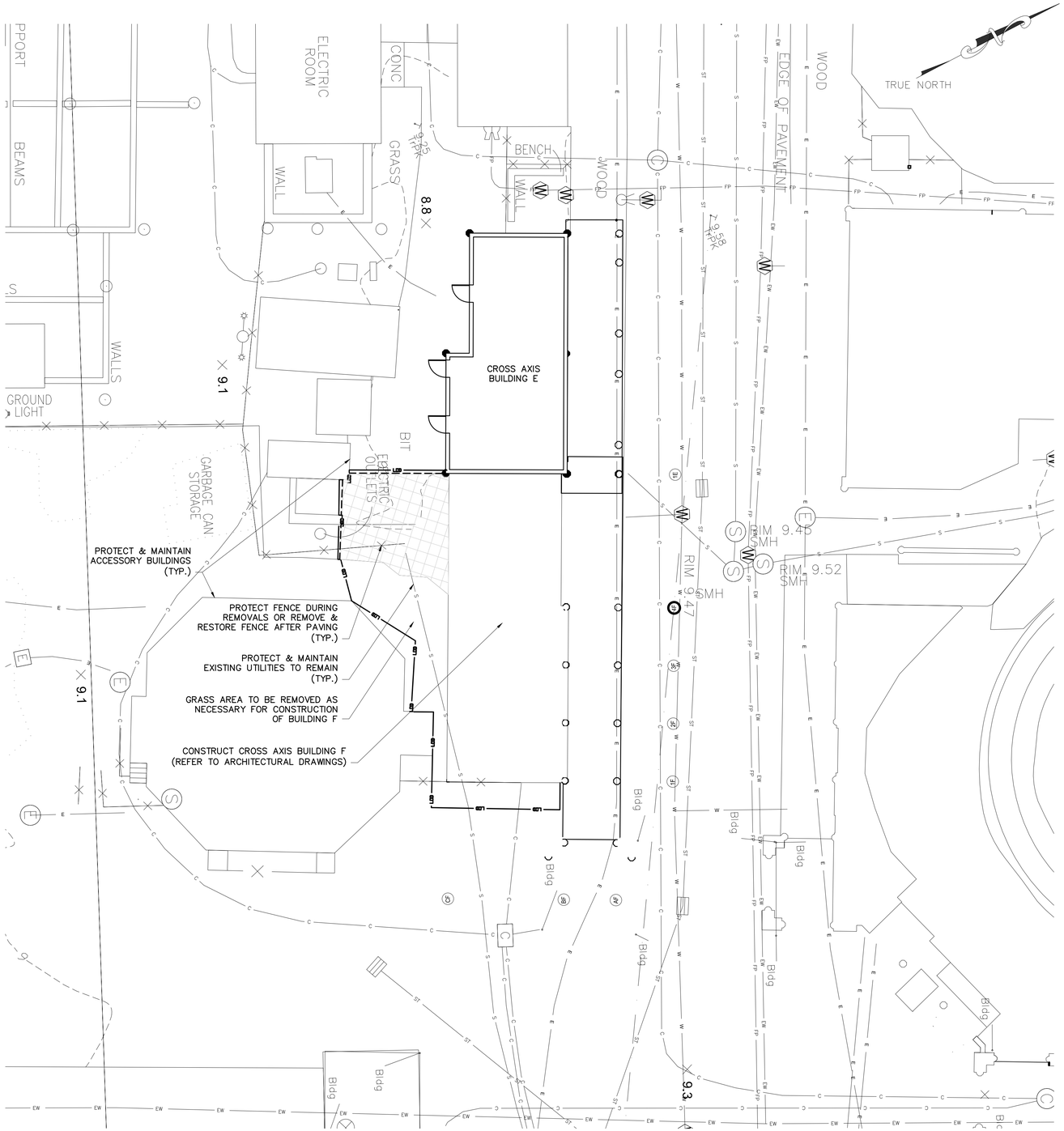

EXISTING LEGEND

- POST
- UTILITY POLE
- SIGN
- HANDICAP PARKING
- GROUND LIGHT
- LIGHT POLE
- UTILITY POLE WITH LIGHT
- LIGHT POLE (SINGLE LIGHT)
- LIGHT POLE (DOUBLE LIGHT)
- LIGHT POLE (MULTI LIGHT)
- BOAT TIE-OFF CLEAT
- CATCH BASIN
- TRENCH DRAIN
- MAILBOX
- UNKNOWN MANHOLE
- COMMUNICATIONS BOX/HAND HOLE
- ELECTRIC HAND HOLE
- ELECTRIC BOX
- GAS METER
- IRRIGATION BOX
- UNKNOWN UTILITY BOX/HAND HOLE
- COMMUNICATION MANHOLE
- DRAINAGE MANHOLE
- ELECTRIC MANHOLE
- SEWER MANHOLE
- STORM SEWER MANHOLE
- SEWER CLEANOUT
- HYDRANT
- SIAMESE CONNECTION
- UNKNOWN VALVE
- WATER VALVE
- GAS VALVE
- WATER SPIGOT OR FOUNTAIN
- MONITORING WELL
- DECIDUOUS BUSH
- EVERGREEN BUSH
- DECIDUOUS TREE
- EVERGREEN TREE
- STUMP
- HEDGE ROW
- TREELINE
- BRUSHLINE
- RETAINING WALL
- GUIDE RAIL
- STONE WALL
- WATERLINE
- FENCE
- UNDERGROUND COMMUNICATION
- UNDERGROUND PROPANE
- UNDERGROUND ELECTRICAL
- UNDERGROUND STREET LIGHTING
- UNDERGROUND ENVIRONMENTAL WASTEWATER
- UNDERGROUND SEWER
- UNDERGROUND STORM SEWER
- UNDERGROUND WATER
- UNDERGROUND FIRE PROTECTION
- EXISTING MAJOR CONTOUR
- EXISTING MINOR CONTOUR

PROPOSED LEGEND:

- SAW CUTTING ASPHALT CONCRETE
- LIMITS OF DISTURBANCE
- LIMITS OF PAVEMENT REMOVAL (FULL DEPTH & EXCAVATION)
- AREA OF ASPHALT PAVEMENT REMOVAL (FULL DEPTH & EXCAVATION)
- DRAINAGE STRUCTURE INLET PROTECTION

NOTES:

1. PAVEMENT REMOVAL, MILLING AND EXCAVATION, MATERIAL SHALL NOT BE STOCKPILED ON SITE.
2. EXISTING GRADES, PIPE LOCATIONS, SIZES, MATERIAL, INVERTS AND OTHER EXISTING CONDITIONS ARE SHOWN ON THE DRAWINGS FROM AVAILABLE AS-BUILT DRAWINGS AND FIELD SURVEY BY OTHERS. IT SHALL BE THE RESPONSIBILITY OF THE CONTRACTOR TO VERIFY ALL EXISTING CONDITIONS.
3. THE CONTRACTOR SHALL TAKE PROPER PRECAUTIONS NOT TO DAMAGE ANY EXISTING SITE CONDITIONS SPECIFICALLY EXCLUDED FROM THE CONTRACT AND WILL BE HELD SOLELY RESPONSIBLE FOR ANY DAMAGE OCCURRING DURING THE COURSE OF THE WORK DURING CONSTRUCTION. THE CONTRACTOR SHALL, AT THEIR OWN EXPENSE, MAKE ALL REPAIRS REQUIRED TO RESTORE ANY DAMAGED AREAS TO ORIGINAL CONDITIONS.

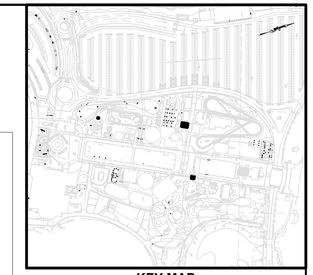

KEY MAP
NOT TO SCALE

New York 811 — Know what's below. Call before you dig.

0 10 20 30
1"=10' SCALE BAR

6/15/2022 4:10:27 PM

CONSULTANT INFORMATION
LiRo Engineers, Inc.
A LiRo Group Company
Mineola, N.Y. 516-746-2350[T]

CONSULTANT SEAL
STATE OF NEW YORK · KENNETH J. HOCHBERG · LICENSE NO. 059134 · PROFESSIONAL ENGINEER

REVISION NUMBER	DATE	MADE BY	APP'D BY	REVISION

RECORD DRAWING CERTIFICATION
☐ AS BUILT – CHANGES AS NOTED ☐ AS BUILT – NO CHANGES

CONTRACTOR: NAME / SIGNATURE / TITLE / DATE
PROJECT COORDINATOR: NAME / SIGNATURE / TITLE / DATE

WESTCHESTER COUNTY, NEW YORK
DEPARTMENT OF PUBLIC WORKS AND TRANSPORTATION
DIVISION OF ENGINEERING

INFRASTRUCTURE REHABILITATION PHASE 3
PLAYLAND PARK, RYE, NEW YORK
CROSS AXIS BUILDING F
EXISTING CONDITIONS/DEMOLITION PLAN

CONTRACT NUMBER	22-523
SHEET NUMBER	CXF-C-02
DWG NO.:	387 of 664
SCALE:	1"=10'
DATE:	08/23/2022
OPW FILE NUMBER	1-118-C-1136-0
REV. NO.	0

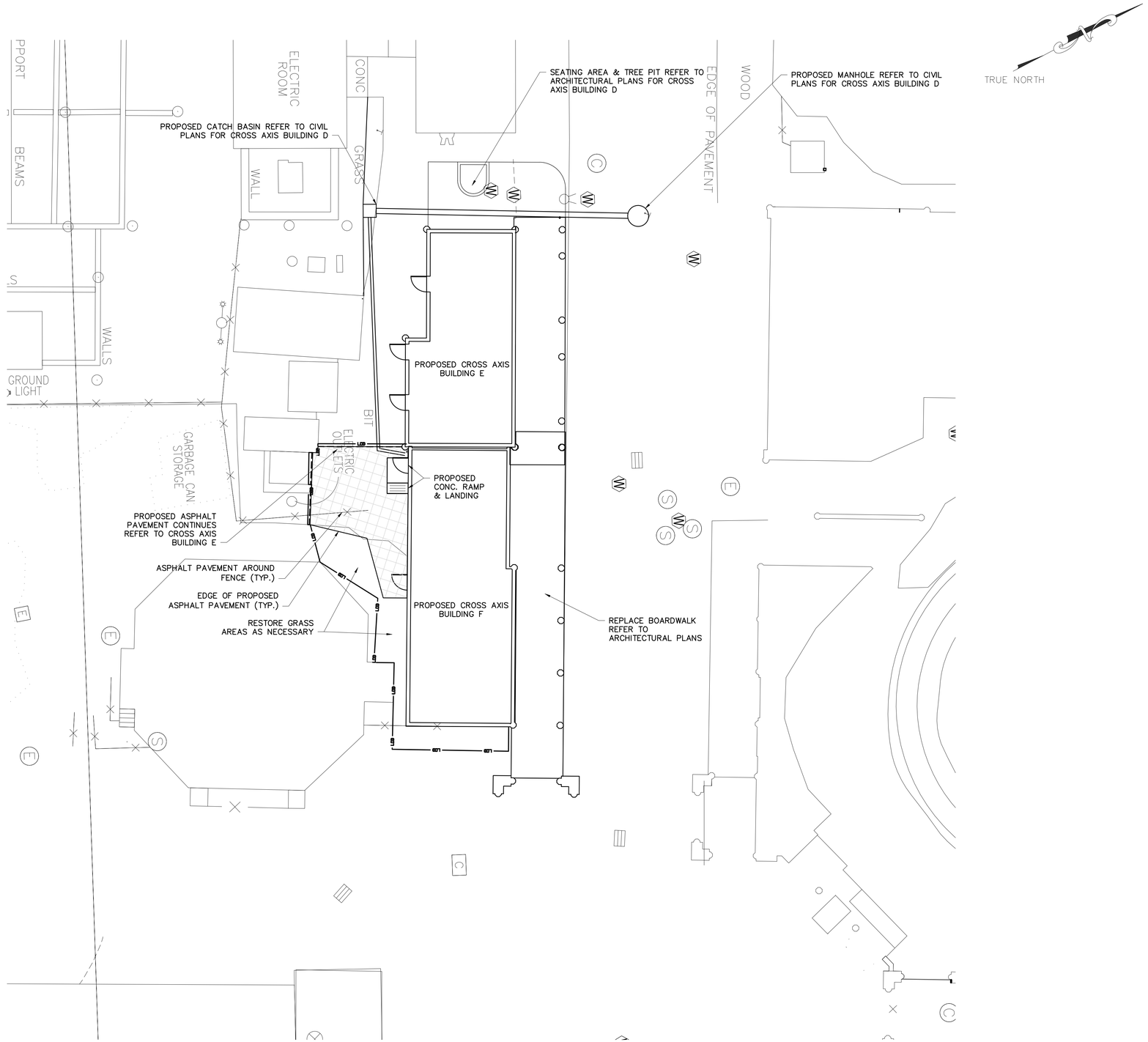

EXISTING LEGEND

- POST
- UTILITY POLE
- SIGN
- HANDICAP PARKING
- GROUND LIGHT
- LIGHT POLE
- UTILITY POLE WITH LIGHT
- LIGHT POLE (SINGLE LIGHT)
- LIGHT POLE (DOUBLE LIGHT)
- LIGHT POLE (MULTI LIGHT)
- BOAT TIE-OFF CLEAT
- CATCH BASIN
- TRENCH DRAIN
- MAILBOX
- UNKNOWN MANHOLE
- COMMUNICATIONS BOX/HAND HOLE
- ELECTRIC HAND HOLE
- ELECTRIC BOX
- GAS METER
- IRRIGATION BOX
- UNKNOWN UTILITY BOX/HAND HOLE
- COMMUNICATION MANHOLE
- DRAINAGE MANHOLE
- ELECTRIC MANHOLE
- SEWER MANHOLE
- STORM SEWER MANHOLE
- SEWER CLEANOUT
- HYDRANT
- SIAMESE CONNECTION
- UNKNOWN VALVE
- WATER VALVE
- GAS VALVE
- WATER SPIGOT OR FOUNTAIN
- MONITORING WELL
- DECIDUOUS BUSH
- EVERGREEN BUSH
- DECIDUOUS TREE
- EVERGREEN TREE
- STUMP
- HEDGE ROW
- TREELINE
- BRUSHLINE
- RETAINING WALL
- GUIDE RAIL
- STONE WALL
- WATERLINE
- FENCE
- UNDERGROUND COMMUNICATION
- UNDERGROUND PROPANE
- UNDERGROUND ELECTRICAL
- UNDERGROUND STREET LIGHTING
- UNDERGROUND ENVIRONMENTAL WASTEWATER
- UNDERGROUND SEWER
- UNDERGROUND STORM SEWER
- UNDERGROUND WATER
- UNDERGROUND FIRE PROTECTION

PROPOSED LEGEND:

- MOVABLE CONSTRUCTION FENCE
- SAW CUTTING ASPHALT CONCRETE
- LIMITS OF DISTURBANCE
- LIMITS OF PAVEMENT REMOVAL
- AREA OF FULL DEPTH ASPHALT PAVEMENT
- DRAINAGE STRUCTURE INLET PROTECTION

0 10 20 30
1"=10' SCALE BAR

6/15/2022 4:10:27 PM

CONSULTANT INFORMATION
LiRo Engineers, Inc.
A LiRo Group Company
Mineola, N.Y. 516-746-2350[T]

CONSULTANT SEAL
STATE OF NEW YORK · KENNETH J. KOLB · LICENSE NO. 059913A · PROFESSIONAL ENGINEER

REVISION NUMBER	DATE	MADE BY	APP'D BY	REVISION

RECORD DRAWING CERTIFICATION
☐ AS BUILT – CHANGES AS NOTED ☐ AS BUILT – NO CHANGES

CONTRACTOR
NAME
SIGNATURE
TITLE DATE

PROJECT COORDINATOR
NAME
SIGNATURE
TITLE DATE

WESTCHESTER COUNTY, NEW YORK
DEPARTMENT OF PUBLIC WORKS AND TRANSPORTATION
DIVISION OF ENGINEERING

INFRASTRUCTURE REHABILITATION PHASE 3
PLAYLAND PARK, RYE, NEW YORK
CROSS AXIS BUILDING F
SITE CONSTRUCTION PLAN

CONTRACT NUMBER	22-523
SHEET NUMBER	CXF-C-03
DWG NO.:	388 of 664
SCALE:	1"=10'
DATE:	08/23/2022
DPW FILE NUMBER	1-118-C-1137-0
REV. NO.	0

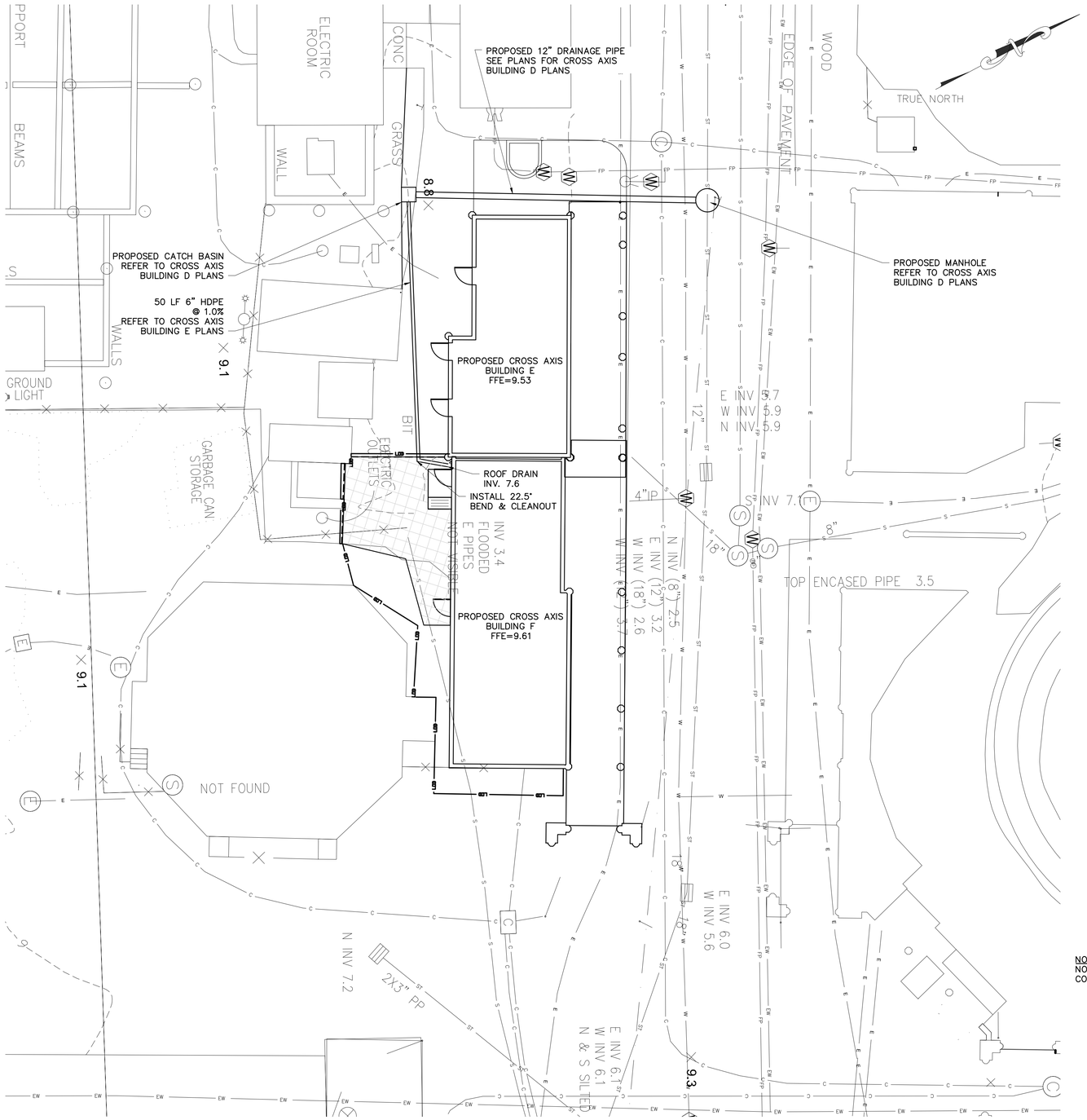

EXISTING LEGEND

- POST
- UTILITY POLE
- SIGN
- HANDICAP PARKING
- GROUND LIGHT
- LIGHT POLE
- UTILITY POLE WITH LIGHT
- LIGHT POLE (SINGLE LIGHT)
- LIGHT POLE (DOUBLE LIGHT)
- LIGHT POLE (MULTI LIGHT)
- BOAT TIE-OFF CLEAT
- CATCH BASIN
- TRENCH DRAIN
- MAILBOX
- UNKNOWN MANHOLE
- COMMUNICATIONS BOX/HAND HOLE
- ELECTRIC HAND HOLE
- ELECTRIC BOX
- GAS METER
- IRRIGATION BOX
- UNKNOWN UTILITY BOX/HAND HOLE
- COMMUNICATION MANHOLE
- DRAINAGE MANHOLE
- ELECTRIC MANHOLE
- SEWER MANHOLE
- STORM SEWER MANHOLE
- SEWER CLEANOUT
- HYDRANT
- SIAMESE CONNECTION
- UNKNOWN VALVE
- WATER VALVE
- GAS VALVE
- WATER SPIGOT OR FOUNTAIN
- MONITORING WELL
- DECIDUOUS BUSH
- EVERGREEN BUSH
- DECIDUOUS TREE
- EVERGREEN TREE
- STUMP
- HEDGE ROW
- TREELINE
- BRUSHLINE
- RETAINING WALL
- GUIDE RAIL
- STONE WALL
- WATERLINE
- FENCE
- UNDERGROUND COMMUNICATION
- UNDERGROUND PROPANE
- UNDERGROUND ELECTRICAL
- UNDERGROUND STREET LIGHTING
- UNDERGROUND ENVIRONMENTAL WASTEWATER
- UNDERGROUND SEWER
- UNDERGROUND STORM SEWER
- UNDERGROUND WATER
- UNDERGROUND FIRE PROTECTION

PROPOSED LEGEND:

- SAW CUTTING ASPHALT CONCRETE
- LIMITS OF DISTURBANCE
- LIMITS OF PAVEMENT REMOVAL (MILLING & EXCAVATION)
- PROPOSED WATER LINE
- PROPOSED CATCH BASIN
- PROPOSED STORM PIPE
- PROPOSED SANITARY MANHOLE
- PROPOSED SANITARY PIPE
- PROPOSED UNDERGROUND ELECTRIC

NOTE:
NO WATER, FIRE SUPPLY, AND SEWER SUPPLY CONNECTIONS THROUGH BUILDING E.

0 10 20 30
1"=10' SCALE BAR

6/15/2022 4:10:27 PM

CONSULTANT INFORMATION
LiRo Engineers, Inc.
A LiRo Group Company
Mineola, N.Y. 516-746-2350[T]

CONSULTANT SEAL
STATE OF NEW YORK
KENNETH J. HOLMSTROM
No. 059134
LICENSED PROFESSIONAL ENGINEER

REVISION NUMBER	DATE	MADE BY	APP'D BY	REVISION

RECORD DRAWING CERTIFICATION
AS BUILT – CHANGES AS NOTED
AS BUILT – NO CHANGES

CONTRACTOR
NAME
SIGNATURE
TITLE DATE

PROJECT COORDINATOR
NAME
SIGNATURE
TITLE DATE

WESTCHESTER COUNTY, NEW YORK
DEPARTMENT OF PUBLIC WORKS AND TRANSPORTATION
DIVISION OF ENGINEERING

INFRASTRUCTURE REHABILITATION PHASE 3
PLAYLAND PARK, RYE, NEW YORK
CROSS AXIS BUILDING F
UTILITY CONSTRUCTION PLAN

CONTRACT NUMBER	22-523
SHEET NUMBER	CXF-C-04
DWG NO.:	389 of 664
SCALE:	1"=10'
DATE:	08/23/2022
DPW FILE NUMBER	1-118-C-1138-0
REV. NO.	0

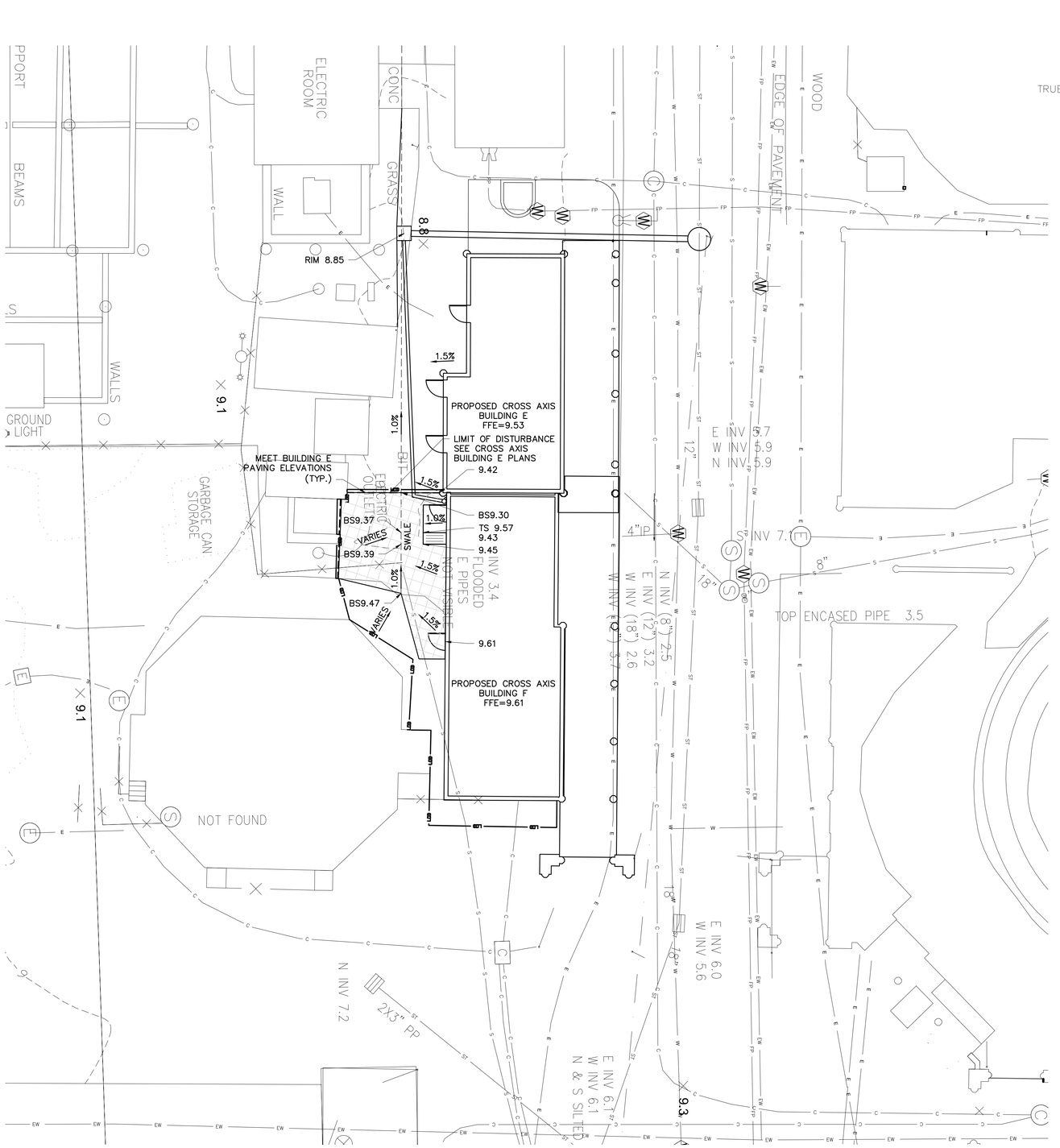

EXISTING LEGEND

- POST
- UTILITY POLE
- SIGN
- HANDICAP PARKING
- GROUND LIGHT
- LIGHT POLE
- UTILITY POLE WITH LIGHT
- LIGHT POLE (SINGLE LIGHT)
- LIGHT POLE (DOUBLE LIGHT)
- LIGHT POLE (MULTI LIGHT)
- BOAT TIE-OFF CLEAT
- CATCH BASIN
- TRENCH DRAIN
- MAILBOX
- UNKNOWN MANHOLE
- COMMUNICATIONS BOX/HAND HOLE
- ELECTRIC HAND HOLE
- ELECTRIC BOX
- GAS METER
- IRRIGATION BOX
- UNKNOWN UTILITY BOX/HAND HOLE
- COMMUNICATION MANHOLE
- DRAINAGE MANHOLE
- ELECTRIC MANHOLE
- SEWER MANHOLE
- STORM SEWER MANHOLE
- SEWER CLEANOUT
- HYDRANT
- SIAMESE CONNECTION
- UNKNOWN VALVE
- WATER VALVE
- GAS VALVE
- WATER SPIGOT OR FOUNTAIN
- MONITORING WELL
- DECIDUOUS BUSH
- EVERGREEN BUSH
- DECIDUOUS TREE
- EVERGREEN TREE
- STUMP
- HEDGE ROW
- TREELINE
- BRUSHLINE
- RETAINING WALL
- GUIDE RAIL
- STONE WALL
- WATERLINE
- FENCE
- UNDERGROUND COMMUNICATION
- UNDERGROUND PROPANE
- UNDERGROUND ELECTRICAL
- UNDERGROUND STREET LIGHTING
- UNDERGROUND ENVIRONMENTAL WASTEWATER
- UNDERGROUND SEWER
- UNDERGROUND STORM SEWER
- UNDERGROUND WATER
- UNDERGROUND FIRE PROTECTION
- X 415.50 — EXISTING SPOT ELEVATION
- TG=415.50 — EXISTING TOP OF GRATE ELEVATION

PROPOSED LEGEND:

- SAW CUTTING ASPHALT CONCRETE
- LOD — LIMITS OF DISTURBANCE
- 415 — PROPOSED MAJOR CONTOUR
- 414 — PROPOSED MINOR CONTOUR
- 9.30 — PROPOSED SPOT ELEVATION
- BS9.30 — PROPOSED BOTTOM SWALE
- TS9.30 — TOP OF SLAB
- PROPOSED INLET PROTECTION

0 10 20 30
1"=10' SCALE BAR

6/15/2022 4:10:27 PM

CONSULTANT INFORMATION

LiRo Engineers, Inc.
A LiRo Group Company
Mineola, N.Y. 516-746-2350[T]

CONSULTANT SEAL

STATE OF NEW YORK · KENNETH J. KOCH · LICENSED PROFESSIONAL ENGINEER · NO. 059134

REVISION NUMBER	DATE	MADE BY	APP'D BY	REVISION

RECORD DRAWING CERTIFICATION

☐ AS BUILT – CHANGES AS NOTED ☐ AS BUILT – NO CHANGES

CONTRACTOR
NAME
SIGNATURE
TITLE DATE

PROJECT COORDINATOR
NAME
SIGNATURE
TITLE DATE

WESTCHESTER COUNTY, NEW YORK
DEPARTMENT OF PUBLIC WORKS AND TRANSPORTATION
DIVISION OF ENGINEERING

INFRASTRUCTURE REHABILITATION PHASE 3
PLAYLAND PARK, RYE, NEW YORK
CROSS AXIS BUILDING F
GRADING AND EROSION CONTROL PLAN

CONTRACT NUMBER	22-523
SHEET NUMBER	CXF-C-05
DWG NO.:	390 of 664
SCALE:	1"=10'
DATE:	08/23/2022
DPW FILE NUMBER	1-118-C-1139-0
REV. NO.	0

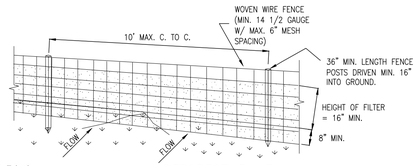

PERSPECTIVE VIEW

CONSTRUCTION SPECIFICATIONS

1. WOVEN WIRE FENCE TO BE FASTENED SECURELY TO FENCE POSTS WITH WIRE TIES OR STAPLES. POSTS SHALL BE STEEL EITHER "T" OR "U" TYPE OR HARDWOOD.
2. FILTER CLOTH TO BE TO BE FASTENED SECURELY TO WOVEN WIRE FENCE WITH TIES SPACED EVERY 24" AT TOP AND MID SECTION. FENCE SHALL BE WOVEN WIRE, 12 1/2 GAUGE, 6" MAXIMUM MESH OPENING.
3. WHEN TWO SECTIONS OF FILTER CLOTH ADJOIN EACH OTHER THEY SHALL BE OVER-LAPPED BY SIX INCHES AND FOLDED. FILTER CLOTH SHALL BE EITHER FILTER X, MIRAFI 100X, STABILINKA T140N, OR APPROVED EQUIVALENT.
4. PREFABRICATED UNITS SHALL BE GEOFAB, ENVIROFENCE, OR APPROVED EQUIVALENT.
5. MAINTENANCE SHALL BE PERFORMED AS NEEDED AND MATERIAL REMOVED WHEN "BULGES" DEVELOP IN THE SILT FENCE.

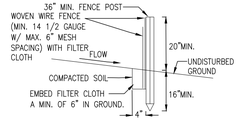

SECTION VIEW

SILT FENCE INSTALLATION DETAIL
ITEM NO. 209.13

N.T.S.

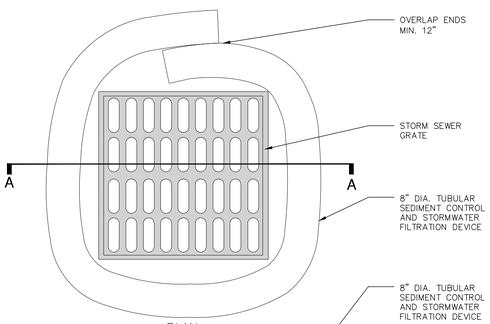

PLAN

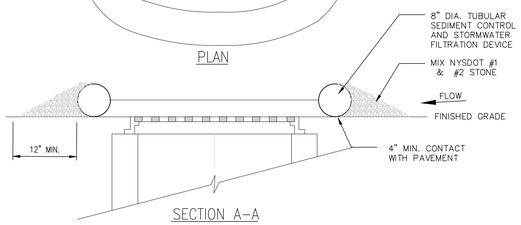

SECTION A–A

NOTES:

1. TUBULAR SEDIMENT CONTROL AND STORMWATER FILTRATION DEVICES SHALL BE FILTREXX FILTERSOXX, OR EQUIVALENT.
2. REPLACE AND DISPOSE OF PER MANUFACTURERS SPECIFICATIONS.
3. THIS PRACTICE INCLUDES SANDBAGS, COMPOST FILTER SOCKS, GEO-TUBES FILLED WITH BALLAST, AND MANUFACTURED SURFACE BARRIERS. PEA GRAVEL CAN ALSO BE USED IN CONJUNCTION WITH THESE PRACTICES TO IMPROVE PERFORMANCE. WHEN INLET IS NOT AT A LOW POINT, AND IS OFF-SET FROM THE PAVEMENT OR GUTTER LINE, PROTECTION SHOULD BE SELECTED AND INSTALLED SO THAT FLOWS ARE NOT DIVERTED AROUND INLET.
4. THE DRAINAGE AREA SHOULD BE LIMITED TO 1 ACRE AT THE DRAINAGE INLET. ALL PRACTICES WILL BE PLACED AT THE INLET PERIMETER OR BEYOND TO MAXIMIZE THE FLOW CAPACITY OF THE INLET. PRACTICES SHALL BE WEIGHTED, BRACED, TIED, OR OTHERWISE ANCHORED TO PREVENT MOVEMENT OR SHIFTING OF LOCATION ON PAVED SURFACES. TRAFFIC SAFETY SHALL BE INTEGRATED WITH THE USE OF THIS PRACTICE. ALL PRACTICES SHOULD BE MARKED WITH TRAFFIC SAFETY CONES AS APPROPRIATE. STRUCTURE HEIGHT SHALL NOT CAUSE FLOODING OR BY-PASS FLOW THAT WOULD CAUSE ADDITIONAL EROSION. THE STRUCTURE SHOULD BE INSPECTED AFTER EVERY STORM EVENT. ANY SEDIMENT SHOULD BE REMOVED AND DISPOSED OF ON THE SITE. ANY BROKEN O DAMAGED COMPONENTS SHOULD BE REPLACED. CHECK ALL MATERIALS FOR PROPER ANCHORING AND SECURE AS NECESSARY.
5. IF USING THE COMPOST FILTER SOCK, THE COMPOST INFILL SHALL BE WELL DECOMPOSED (MATURED AT LEAST 3 MONTHS), WEED-FREE, ORGANIC MATTER. IT SHALL BE AEROBICALLY COMPOSTED, POSSESS NO OBJECTIONABLE OODRS, AND CONTAIN LESS THAN 1%, BY DRY WEIGHT, OF MANMADE FOREIGN MATTER. WHEN USING COMPOST FILTER SOCKS ADJACENT TO SURFACE WATER, THE COMPOST SHOULD HAVE LOW NUTRIENT VALUE.

DRAINAGE STRUCTURE INLET PROTECTION, TEMPORARY

N.T.S.

STORM WATER POLLUTION PREVENTION PLAN NOTES:

THE CONTRACTOR SHALL BE RESPONSIBLE FOR IMPLEMENTATION AND ADHERENCE TO THE STORM WATER POLLUTION PREVENTION PLAN (SWPPP) FROM THE COMMENCEMENT OF THE PROJECT TO SITE STABILIZATION.

POLLUTION PREVENTION MEASURES:

THE CONTRACTOR SHALL TAKE THE FOLLOWING STEPS TO PREVENT LITTER, CHEMICALS AND DEBRIS FROM ENTERING STORM DRAINS AND DISCHARGES.

1. PROPERLY INSTALL AND MAINTAIN EROSION AND SEDIMENT CONTROL DEVICES AS OUTLINED IN THE PROJECT DOCUMENTS AND IN COMPLIANCE WITH THE LATEST EDITION OF THE NEW YORK STATE STANDARDS AND SPECIFICATIONS FOR EROSION AND SEDIMENT CONTROL.
2. PROPERLY CONTAIN AND DISPOSE OF ALL MATERIALS USED ON SITE.
3. CLEAN UP SPILLS IMMEDIATELY TO MINIMIZE SAFETY HAZARD AND PREVENT SPREADING.
4. ROUTINELY INSPECT AND CLEAN OUT CATCH BASINS AND STORM LINES.
5. LABEL ALL STORM INLETS AS "NO DUMPING".
6. CONTROL LITTER BY SWEEPING AND PICKING IT UP DAILY.
7. DO NOT STORE FUEL AND WASTE ON-SITE OR USE SECONDARY CONTAINMENT MEASURES.
8. IF PRACTICAL, USE ALTERNATIVE CLEANING METHODS SUCH AS WIPING DOWN OF VEHICLES AND EQUIPMENT INSTEAD OF HOSING.
9. REMOVE ALL EXCAVATED UNSUITABLE MATERIAL FROM THE SITE AS SOON AS PRACTICABLE.
10. PRACTICE GOOD HOUSEKEEPING AND EDUCATE EMPLOYEES ON POLLUTION PREVENTION MEASURES.

ON SITE MATERIAL STORAGE:

THE CONTRACTOR MAY HAVE THE FOLLOWING MATERIALS STORED ON-SITE DURING PROJECT CONSTRUCTION. THE LIST MAY NOT BE INCLUSIVE AND WILL VARY DURING THE DIFFERENT STAGES OF THE PROJECT.

1. PRE-CAST CONCRETE MANHOLES, CATCH BASINS AND OUTLET CONTROL STRUCTURE.
2. PVC PIPING AND APPURTENANCES.
3. STOCKPILED SOILS – TOP SOIL, SUB BASE MATERIAL, CUSHION MATERIAL, SELECT GRANULAR MATERIAL, GRAVEL AND CRUSHED STONE.
4. EROSION AND SEDIMENT CONTROL MATERIAL: SILT FENCE, RIP RAP AND SEED.
5. PAVING MATERIALS AND EQUIPMENT
6. SECURITY FENCE AND APPURTENANCES
7. EQUIPMENT REQUIRED TO PERFORM THE WORK.

THE CONTRACTOR SHALL UTILIZE THE POLLUTION PREVENTION MEASURES OUTLINED ABOVE TO PREVENT POLLUTANTS FROM STORED MATERIALS FROM REACHING THE STORM WATER CONVEYANCE DEVICES AND DISCHARGES.

EROSION AND SEDIMENT CONTROL PRACTICES:

TEMPORARY STORM INLET PROTECTION:
STORM INLET PROTECTION INTERCEPTS SEDIMENT LADEN RUNOFF AND TRAPS SEDIMENT TO PROTECT THE DRAINAGE SYSTEM. STORM INLET PROTECTION SHALL BE PROVIDED AT EACH NEW CATCH BASIN AS IT IS INSTALLED AND AROUND EXISTING CATCH BASINS AS SHOWN.

TEMPORARY SEDIMENT CONTROL – SILT FENCE
SILT FENCE REDUCES RUNOFF VELOCITY AND CAUSES SETTLING OF SEDIMENT. INSTALL SILT FENCE PRIOR TO BEGINNING ANY EXCAVATION OR EARTHWORK ACTIVITIES WHERE SHOWN ON THE DRAWINGS. INSTALL AROUND ANY STOCKPILED SOIL MATERIALS.

TEMPORARY STABILIZED CONSTRUCTION ENTRANCE
THE STABILIZED CONSTRUCTION ENTRANCE IS USED TO REDUCE OR ELIMINATE TRACKING OF SEDIMENT ONTO STREETS AND/OR PUBLIC RIGHT-OF-WAY.

TEMPORARY SEEDING
TEMPORARY SEEDING REDUCES EROSION AND SEDIMENT LOSS FROM THE BARE GROUND. PROVIDE TEMPORARY SEEDING TO PROVIDE TEMPORARY COVER FOR DISTURBED EARTH OR SOIL STOCKPILES HELD FOR LONGER THAN SEVEN (7) DAYS. TEMPORARY SHUT DOWN OF CONSTRUCTION OR WAITING FOR OPTIMAL PLANTING TIME. IN SPRING, SUMMER OR EARLY FALL APPLY RYE GRASS AT A RATE OF 1 LB/ 1,000 SQ. FT. IN LATE FALL APPLY CERTIFIED AROOSTOOK RYE AT 2.5 LBS / 1,000 SQ. FT. OR WOOD FIBER HYDROMULCH AT MANUFACTURE'S RECOMMENDED RATE. HAY OR STRAW SHALL BE ANCHORED.

DUST CONTROL
TEMPORARY AND PERMANENT STABILIZATION MEASURES SUCH AS SEEDING, MULCHING AND INSTALLING EROSION AND SEDIMENT CONTROL BLANKETS WILL PREVENT DUST FROM BLOWING OFF SITE. INSTALL THESE MEASURES AS SOON AS FINAL GRADES ARE REACHED AND ON SOIL STOCKPILES AND DISTURBED AREAS TO BE LEFT FOR LONGER THAN SEVEN (7) DAYS.

PHASING OF EROSION AND SEDIMENT CONTROL PRACTICES:

1. PRIOR TO COMMENCING ANY CONSTRUCTION ACTIVITIES ON THE SITE, THE CONTRACTOR SHALL MEET WITH THE OWNERS REPRESENTATIVE AND DESIGNER TO DISCUSS THE STORM WATER POLLUTION PREVENTION PLAN.
2. PRIOR TO COMMENCING ANY EXCAVATION PROCEDURES, INSTALL SILT FENCE AS SHOWN ON THE PLANS.
3. INSTALL STABILIZED CONSTRUCTION ENTRANCE.
4. AS THE NEW CATCH BASINS ARE INSTALLED, PROVIDE TEMPORARY INLET PROTECTION.
5. AS SOIL MATERIAL IS EXCAVATED OR STOCKPILED, PROVIDE A SILT FENCE ENCLOSURE AROUND THE PILE. IF THE PILE IS TO REMAIN FOR LONGER THAN SEVEN (7) DAYS, TEMPORARILY SEED THE PILE.
6. DO NOT LEAVE DISTURBED AREAS NOT TO BE COVERED BY IMPERVIOUS SURFACE BARE FOR LONGER THAN SEVEN (7) DAYS, ROUGH GRADE THE AREAS AND TEMPORARILY SEED.
7. AFTER FINAL GRADING OF VEGETATED AREAS, PROVIDE PERMANENT SEEDING.
8. UPON FINAL STABILIZATION OF THE SITE, REMOVE ALL TEMPORARY EROSION AND SEDIMENT CONTROL DEVICES. INSPECT ALL PERMANENT EROSION AND SEDIMENT CONTROL AND STORM WATER MANAGEMENT DEVICES. REPLACE ANY FAILING OR UNSATISFACTORY MEASURES. CLEAN ALL STORMWATER CATCH BASINS AND PIPING.

EROSION AND SEDIMENT CONTROL AND STORMWATER CONTROL DEVICE MAINTENANCE:

CONSTRUCTION DURATION
ALL EROSION AND SEDIMENT CONTROL DEVICES SHALL BE INSPECTED WEEKLY.

1. SILT FENCE SHALL BE REPLACED WHEN TORN, IS BULGING OR NO LONGER MEETING THE INSTALLATION DETAILS.
2. THE STABILIZED CONSTRUCTION ENTRANCE SHALL BE MAINTAINED IN A CONDITION TO PREVENT TRACKING OF SEDIMENT ON TO ROADS AND PUBLIC RIGHTS-OF-WAY. INSPECT TOP DRESSING AND PROVIDE ADDITIONAL AGGREGATE AS NECESSARY.
3. DRAINAGE STRUCTURES AND PIPING SHALL BE CHECKED FOR CLOGGING AND SEDIMENT ACCUMULATION AND CLEANED IF REQUIRED.

PROJECT COMPLETION
AT THE PROJECT COMPLETION AND PRIOR TO PROJECT CLOSE OUT, THE CONTRACTOR SHALL INSPECT ALL PERMANENT EROSION AND CONTROL AND STORMWATER MANAGEMENT PRACTICES.

1. ACCEPTABLE VEGETATION ESTABLISHMENT IN ACCORDANCE WITH SPECIFICATIONS.
2. DRAINAGE STRUCTURES AND PIPING SHALL BE CHECKED FOR CLOGGING AND SEDIMENT ACCUMULATION AND CLEANED IF REQUIRED.

MAINTENANCE OF PERMANENT STORMWATER MANAGEMENT PRACTICES

1. DRAINAGE STRUCTURES AND PIPING SHALL BE CHECKED FOR CLOGGING AND SEDIMENT ACCUMULATION AND CLEANED IF REQUIRED.

SITE ASSESSMENT AND INSPECTIONS

COMPLY WILL ALL CONDITIONS INCLUDED IN THE SPDES PERMIT, PART III.D.3 THROUGH PART III.D.5. THE REQUIREMENTS IN THESE SUBSECTIONS OF THE SPDES PERMIT TAKE PRECEDENCE OVER NOTES ON THIS DRAWING AND ON THE EROSION AND SEDIMENT CONTROL PLAN WHERE CONTRADICTIONS BETWEEN THESE DRAWINGS AND THE SPDES PERMIT MAY ARISE.

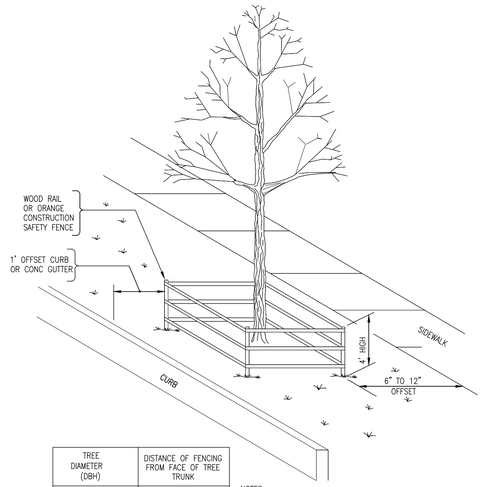

TREE DIAMETER (DBH)	DISTANCE OF FENCING FROM FACE OF TREE TRUNK
LESS THAN 10"	6'
10" – 14"	10'
15" – 19"	12'
20" OR MORE	15'

NOTES:

1. ALL TREES WITHIN THE PROJECT LIMITS THAT ARE TO REMAIN, ARE TO RECEIVE THIS TREATMENT.
2. DO NOT LEAVE CONSTRUCTION EQUIPMENT RUNNING (IDLING) UNDER TREE CANOPY.

TREE PROTECTION SYSTEM 5'–0"
ITEM NO. 611.21050009

N.T.S.

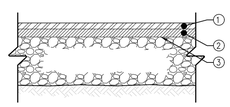

① 1" TOP COURSE, 12.5 F2 TOP COURSE HMA, 80 SERIES COMPACTION NYSDOT ITEM 402.128204

② 1" BINDER COURSE, 25 F9 BINDER COURSE HMA, 80 SERIES COMPACTION NYSDOT ITEM 402.258904

③ TACK COAT BETWEEN LAYERS, STRAIGHT TACK COAT, ITEM 407.0103

NOTES:

1. SLOPE SHALL MATCH EXISTING OR BE AS DIRECTED BY THE ENGINEER TO PROVIDE POSITIVE DRAINAGE.
2. ALL SEAMS BETWEEN EXISTING AND NEW SURFACES ARE TO BE SEALED WITH ASPHALT FILLER ITEM 633.13-CLEANING, SEALING AND/OR FILLING JOINTS.
3. SEE PLAN FOR LIMITS OF MILLING AND RESURFACING.

PAVEMENT MILLING AND RESURFACING

N.T.S.

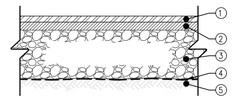

① 2" TOP COURSE, 12.5 F2 TOP COURSE HMA, 80 SERIES COMPACTION NYSDOT ITEM 402.128204

② 2" BINDER COURSE, 25 F9 BINDER COURSE HMA, 80 SERIES COMPACTION NYSDOT ITEM 402.258904

③ 4" SUBBASE COURSE, SUBBASE COURSE, TYPE 2 NYSDOT ITEM 304.12

④ GEOTEXTILE SEPARATION NYSDOT ITEM 207.21

⑤ COMPACTED SUBGRADE

NOTES:

1. COMPACT SUBGRADE TO A MODIFIED PROCTOR DENSITY OF 95%
2. SUBBASE COURSE SHALL HAVE NO MORE THAN (7%) SEVEN PERCENT BY WEIGHT FINER THAN NO. 200 SIEVE.
3. IMPRINTED PATTERN SHOWN IS FOR GRAPHICAL REPRESENTATIONS ONLY. ALL IMPRINTING/PATTERNING LAYOUTS AND POSITIONING SHALL BE APPROVED BY THE PROJECT ENGINEER PRIOR TO ACTUAL CONSTRUCTION.

ASPHALT PAVEMENT SECTION

N.T.S.

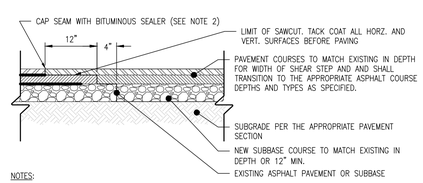

NOTES:

1. EXISTING PAVEMENT SHALL BE SAW CUT TO OBTAIN A STRAIGHT AND NEAT EDGE FOR PAVING. FINAL SAW CUT SHALL BE MADE PRIOR TO PAVING AND AFTER SUBBASE STONE IS PLACED.
2. ADD COAL TAR SEAL COAT WITH UNVULCANIZED RUBBER AT JOINT ALONG SAWCUT SEAM. SEALANT SHALL BE STRUCK OFF FLUSH WITH PAVEMENT SURFACE.
3. DEPTH OF SAWCUT SHALL BE DETERMINED ONCE THE PAVEMENT CROSS SECTION HAS BEEN EXPOSED.

SHEAR STEP DETAIL

N.T.S.

6/15/2022 4:10:27 PM

CONSULTANT INFORMATION

LiRo Engineers, Inc.
A LiRo Group Company
Mineola, N.Y. 516-746-2350[T]

CONSULTANT SEAL

STATE OF NEW YORK · KENNETH J. HOCHBERG · LICENSED PROFESSIONAL ENGINEER · NO. 059134

REVISION NUMBER	DATE	MADE BY	APP'D BY	REVISION

RECORD DRAWING CERTIFICATION

☐ AS BUILT – CHANGES AS NOTED ☐ AS BUILT – NO CHANGES

CONTRACTOR
NAME
SIGNATURE
TITLE DATE

PROJECT COORDINATOR
NAME
SIGNATURE
TITLE DATE

WESTCHESTER COUNTY, NEW YORK
DEPARTMENT OF PUBLIC WORKS AND TRANSPORTATION
DIVISION OF ENGINEERING

INFRASTRUCTURE REHABILITATION PHASE 3
PLAYLAND PARK, RYE, NEW YORK
CXF
OVERALL SITE PLAN

CONTRACT NUMBER	22-523
SHEET NUMBER	CXF-C-06
DWG NO.:	391 of 664
SCALE:	1"=10'
DATE:	08/23/2022
DPW FILE NUMBER	1-118-C-1140-0
REV. NO.	0 0

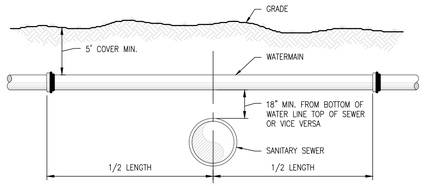

NOTE:

ALL EXCAVATIONS UNDER ANY UTILITY WILL BE BACKFILLED WITH NO. 1 CRUSHED STONE TO A POINT AT LEAST 6" OVER THE TOP OF THE UTILITY.

TYPICAL WATER LINE – SEWER LINE CROSSING

N.T.S.

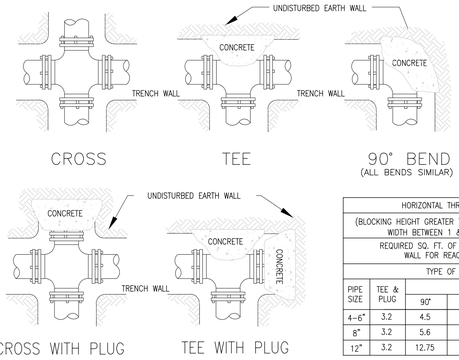

HORIZONTAL THRUST BLOCKING					
(BLOCKING HEIGHT GREATER THAN PIPE O.D.) (BLOCKING WIDTH BETWEEN 1 & 2 TIMES HEIGHT)					
REQUIRED SQ. FT. OF UNDISTURBED EARTH WALL FOR REACTION BACKING					
TYPE OF FITTINGS					
PIPE SIZE	TEE & PLUG	BENDS			
		90°	45°	22 1/2°	11 1/4°
4–6"	3.2	4.5	2.5	1.3	0.7
8"	3.2	5.6	2.5	1.3	0.7
12"	3.2	12.75	3.7	1.3	0.7

HORIZONTAL THRUST BLOCKING

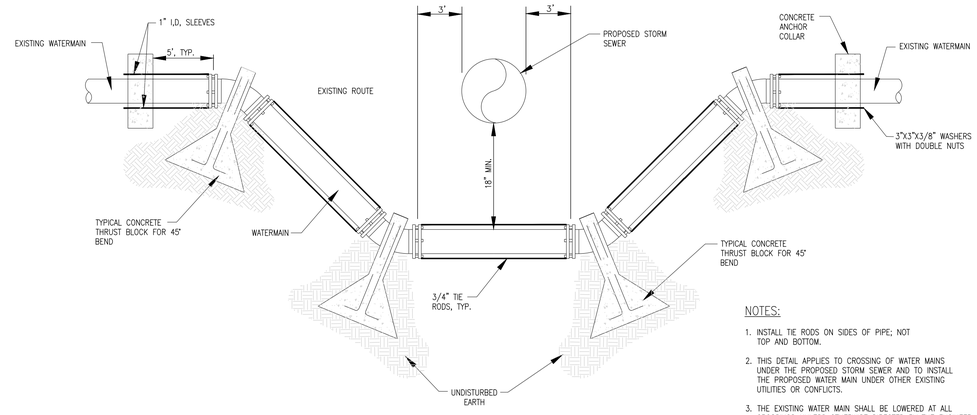

NOTES:

1. INSTALL TIE RODS ON SIDES OF PIPE; NOT TOP AND BOTTOM.
2. THIS DETAIL APPLIES TO CROSSING OF WATER MAINS UNDER THE PROPOSED STORM SEWER AND TO INSTALL THE PROPOSED WATER MAIN UNDER OTHER EXISTING UTILITIES OR CONFLICTS.
3. THE EXISTING WATER MAIN SHALL BE LOWERED AT ALL CROSSINGS UNLESS OTHERWISE DIRECTED BY THE ENGINEER IN THE FIELD.

TYPICAL WATERMAIN CROSSING DETAIL

N.T.S.

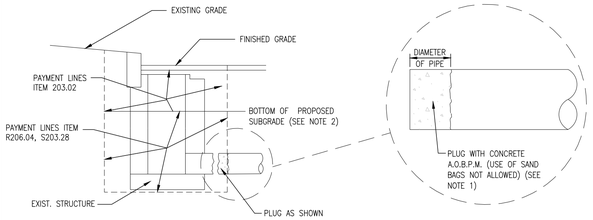

NOTES:

1. THE COST OF PLUGGING EXISTING LATERALS TO BE ABANDONED SHALL BE INCLUDED IN THE PRICE BID FOR TRENCH EXCAVATION IN THE CONTRACT. NO SEPARATE PAYMENT WILL BE MADE FOR THIS WORK.
2. UPPER PAY LIMITS FOR TRENCH AND CULVERT EXCAVATION SHALL BE TOP OF EXISTING SURFACE AT TIME OF EXCAVATION.

DETAILS FOR PLUGGING ABANDONED DRAINAGE STRUCTURES AND PIPES

N.T.S.

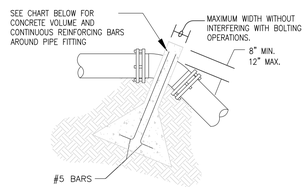

UPWARD THRUST BLOCKING

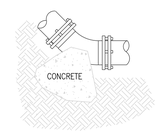

DOWNWARD THRUST BLOCKING

(SEE HORIZONTAL BLOCKING DETAIL)
(ALL BENDS SIMILAR)

UPWARD THRUST BLOCKING											
(REQUIRED REINFORCING BARS & CUBIC YARDS OF P.C. CONCRETE											
	90° BEND			45° BEND			22 1/2° BEND			11 1/4° BEND		
PIPE SIZE	CONC. C.Y.	REINF		CONC. C.Y.	REINF		CONC. C.Y.	REINF		CONC. C.Y.	REINF	
		QTY.	SIZE		QTY.	SIZE		QTY.	SIZE		QTY.	SIZE
4–6"	2.6	4	#5	2.1	4	#5	1.1	4	#5	0.6	4	#5
8"	2.9	4	#5	2.1	4	#5	1.1	4	#5	0.6	4	#5
12"	6.6	4	#5	4.7	4	#5	2.5	4	#5	1.3	4	#5

VERTICAL THRUST BLOCKING

NOTES:

1. DO NOT COVER BELLS OR FLANGES WITH CONCRETE
2. WRAP ALL FITTINGS WITH VISQUEEN.
3. BACK ALL TEES ACCORDING TO SIZE OF BRANCH.
4. BACKING FUTURE LINE EXTENSIONS SHALL BE SUCH THAT LATER REMOVAL IS POSSIBLE.
5. ALL BENDS WHERE FITTINGS ARE USED, BOTH HORIZONTAL OR VERTICAL SHALL BE BACKED.
6. REACTION BACKING TABLE IS BASED ON 150 P.S.I. AND SOIL BEARING PRESSURE OF 2,000 lb./sq.ft. ADDITIONAL BACKING MAY BE REQUIRED IN SOME AREAS AS DIRECTED BY ENGINEERS.
7. ALL CONCRETE SHALL BE 2500 P.S.I. MIN. .

THRUST BLOCKING DETAIL

N.T.S.

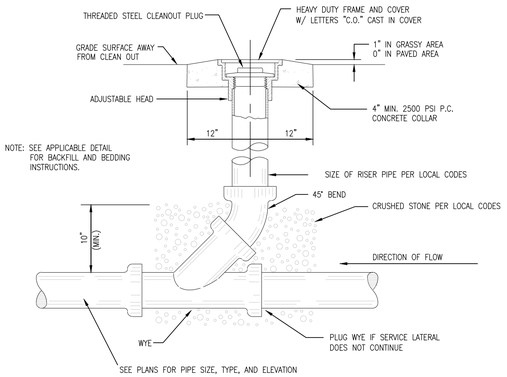

SEWER CLEAN–OUT

N.T.S.

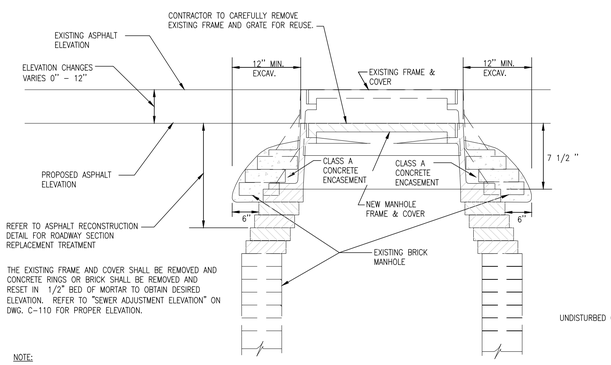

NOTE:

THE LOWER LIMIT OF THE CLASS A CONCRETE ENCASEMENT SHALL BE AT, OR BELOW, THE LOWEST PORTION OF THE BRICK AND MORTAR LEVELING COURSE. ALL BRICK SHALL BE RED, 8,000 PSI BRICK.

ADJUSTMENT AT FLEXIBLE PAVEMENT

RESETTING EXISTING DRAINAGE FRAMES ON EXISTING DRAINAGE STRUCTURES
ITEM NO. 604.07210110

N.T.S.

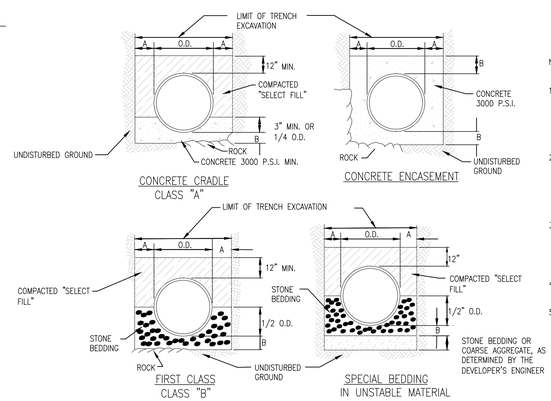

NOTES:

1. SELECT FILL SHALL BE SAND, GRAVEL, AND SIMILAR MATERIAL WHICH SHALL BE FREE FROM CLAY, LOAM, ORGANIC MATERIAL, DEBRIS, FROZEN MATERIAL AND SHALL CONTAIN ONLY SMALL AMOUNTS OF STONE, PEBBLES OR LUMPS OVER ONE INCH IN GREATEST DIMENSION BUT NONE OVER TWO INCHES IN GREATEST DIMENSION, MEETING ASTM IA,IB,OR II.
2. STONE BEDDING SHALL MEAN APPROVED IMPORTED AGGREGATE MEETING THE REQUIREMENTS OF THE NEW YORK STATE DEPARTMENT OF TRANSPORTATION, STANDARD SPECIFICATION, MAY, 2008 EDITION, AS REVISED, SUBSECTION 703–01 "FINE AGGREGATE". PRIMARY SIZE 1 OR A MIXTURE OF PRIMARY SIZES 1 AND 2. OR ASTM CLASS IA,
3. COARSE AGGREGATE SHALL MEAN APPROVED IMPORTED AGGREGATE MEETING THE REQUIREMENTS OF THE NEW YORK STATE DEPARTMENT OF TRANSPORTATION, STANDARD SPECIFICATION, MAT 2008 EDITION, AS REVISED, SUBSECTION 703–02 "COURSE AGGREGATE". PRIMARY SIZE 3 AND/OR 4
4. THIS FIGURE APPLIES TO SANITARY, STORM and COMBINED MAINLINE AND LATERAL PIPE INSTALLATIONS AS WELL AS FORCEMAINS.
5. FIRST CLASS BEDDING SHALL BE USED UNLESS OTHERWISE SHOWN ON THE DRAWINGS OR DIRECTED BY THE ENGINEER.

PIPE DIA.	DIM. A	DIM. B
UP TO 18"	1.0'	6"
21" TO 36"	1.5'	9"
OVER 36"	1.5'	12"

UTILITY BEDDING MATERIAL DETAIL

N.T.S.

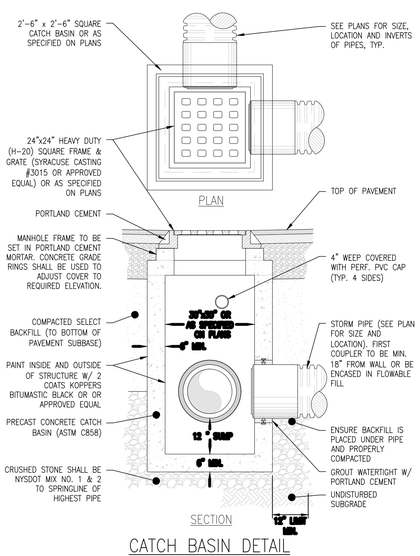

CATCH BASIN DETAIL

N.T.S.

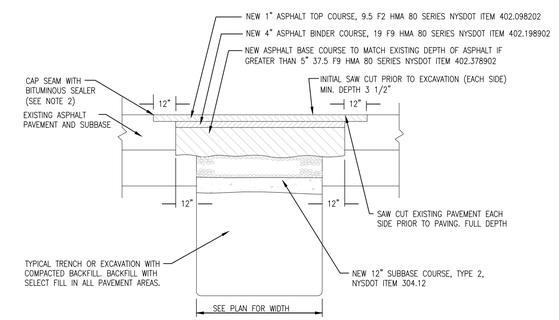

NOTES:

1. EXISTING PAVEMENT SHALL BE SAW CUT TO OBTAIN A STRAIGHT AND NEAT EDGE FOR PAVING. FINAL SAW CUT SHALL BE MADE PRIOR TO PAVING AFTER BACKFILL OF TRENCH TO BOTTOM OF NEW PAVEMENT
2. ALL SEAMS BETWEEN EXISTING AND NEW ASPHALT SURFACES SHALL BE SEALED WITH AN ASPHALT FILLER CORRESPONDING TO THE MATERIAL REQUIREMENTS OF N.Y.S.D.O.T. TABLE 702–5 MATERIAL DESIGNATION 702–3401. COST TO FURNISH AND APPLY THIS MATERIAL SHALL BE INCLUDED IN THE PRICE BID FOR ASPHALT TOP

PAVEMENT TRENCH RESTORATION DETAIL

N.T.S.

6/15/2022 4:10:27 PM

CONSULTANT INFORMATION

LiRo Engineers, Inc.
A LiRo Group Company
Mineola, N.Y. 516-746-2350[T]

CONSULTANT SEAL

STATE OF NEW YORK · KENNETH J. HOCHBERG · LICENSED PROFESSIONAL ENGINEER · No. 059134

REVISION NUMBER	DATE	MADE BY	APP'D BY	REVISION

RECORD DRAWING CERTIFICATION

☐ AS BUILT – CHANGES AS NOTED ☐ AS BUILT – NO CHANGES

CONTRACTOR
NAME
SIGNATURE
TITLE DATE

PROJECT COORDINATOR
NAME
SIGNATURE
TITLE DATE

WESTCHESTER COUNTY, NEW YORK
DEPARTMENT OF PUBLIC WORKS AND TRANSPORTATION
DIVISION OF ENGINEERING

INFRASTRUCTURE REHABILITATION PHASE 3
PLAYLAND PARK, RYE, NEW YORK
CXF
OVERALL SITE PLAN

CONTRACT NUMBER 22-523	SHEET NUMBER CXF-C-07
DWG NO.: 392 of 664	
SCALE: 1"=10'	
DATE: 08/23/2022	
DPW FILE NUMBER 1-118-C-1141-0	REV. NO. 0 0

1 DRAGON COASTER VENDORS

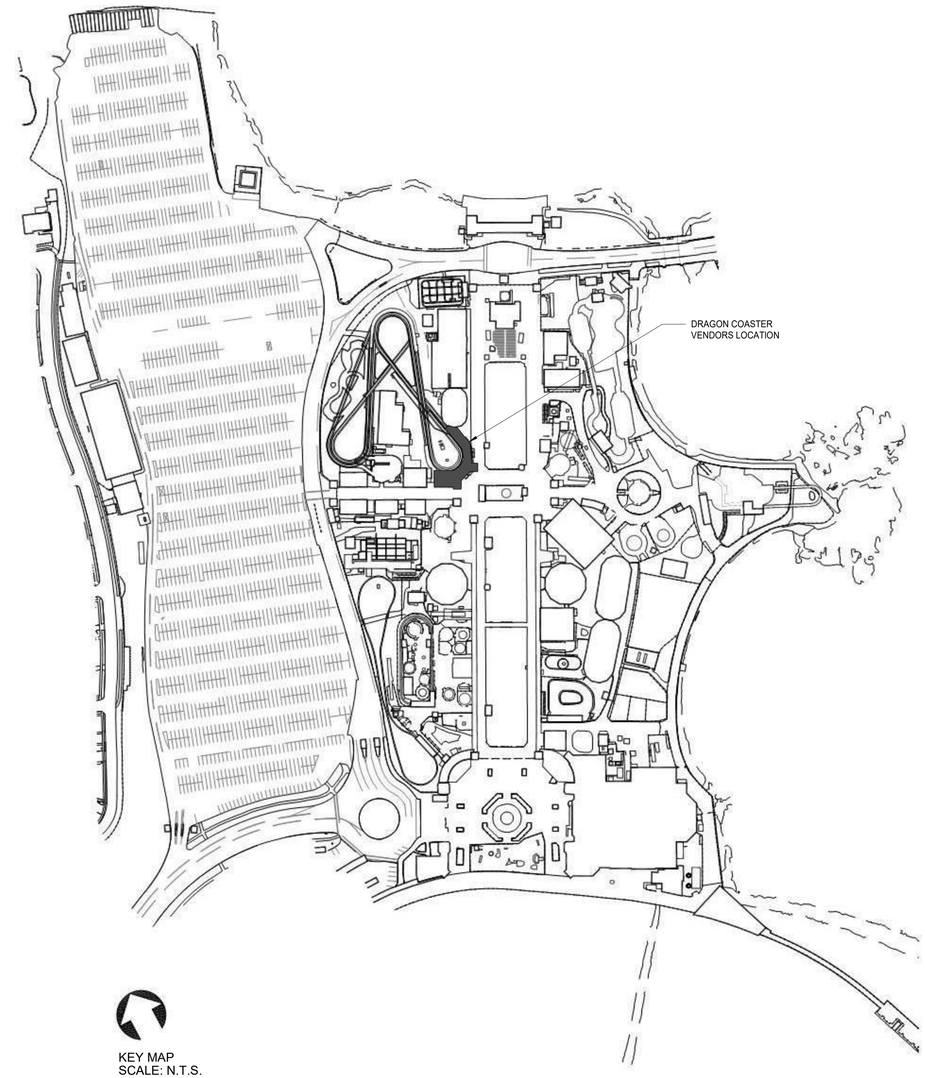

KEY MAP
SCALE: N.T.S.

8/30/2022 4:14:06 PM

CONSULTANT INFORMATION

The LiRo Group

3 Aerial Way, Syosset, New York 11791
(516) 938-5476 www.liro.com

CONSULTANT SEAL

REGISTERED ARCHITECT ROBERT D. YOUNG JR. 023290 STATE OF NEW YORK

REVISION NUMBER	DATE	MADE BY	APP'D BY	REVISION

RECORD DRAWING CERTIFICATION

☐ AS BUILT – CHANGES AS NOTED ☐ AS BUILT – NO CHANGES

CONTRACTOR
NAME
SIGNATURE
TITLE DATE

PROJECT COORDINATOR
NAME
SIGNATURE
TITLE DATE

WESTCHESTER COUNTY, NEW YORK
DEPARTMENT OF PUBLIC WORKS AND TRANSPORTATION
DIVISION OF ENGINEERING

INFRASTRUCTURE REHABILITATION - PHASE 3
PLAYLAND PARK, RYE, NEW YORK
DRAGON COASTER VENDORS
BUILDING INTRO

CONTRACT NUMBER	22-523
SHEET NUMBER	DCV-G-01
DWG NO.:	393 of 664
SCALE:	12" = 1'-0"
DATE:	08/23/2022
DPW FILE NUMBER	1-118-G-1142-0
REV. NO.	

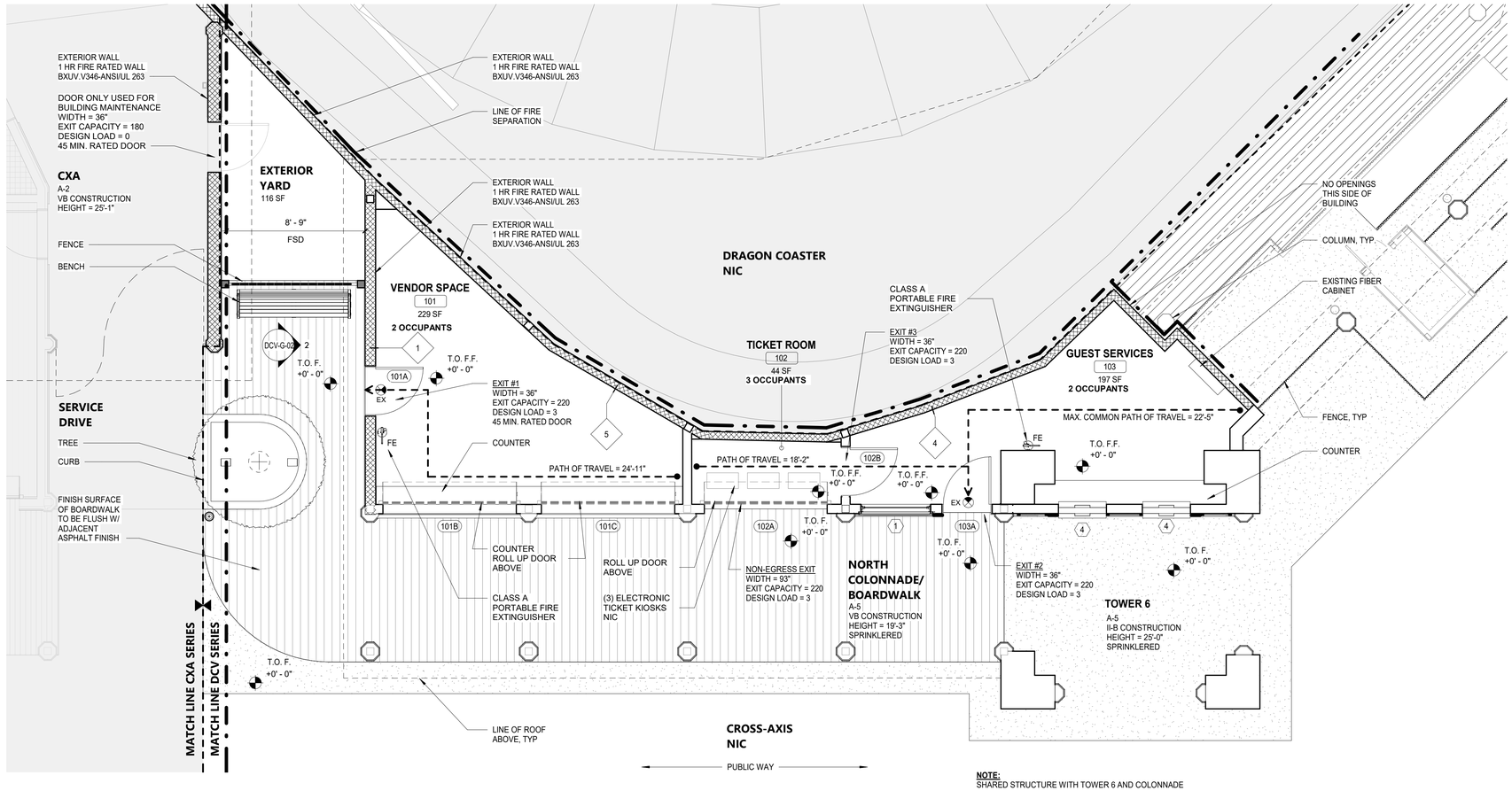

NOTE:
SHARED STRUCTURE WITH TOWER 6 AND COLONNADE

1 LIFE SAFETY PLAN - GROUND FLOOR
1/4" = 1'-0"

CODE ANALYSIS

NEW YORK STATE BUILDING CODE 2020 (BC)
NEW YORK STATE EXISTING BUILDING CODE 2020 (EBC)
ENERGY CONSERVATION CONSTRUCTION CODE OF NEW YORK STATE (ECCC)
NFPA 13 2016 (NFPA13)

CONSTRUCTION TYPE (TBL 601)	VB	(FULLY SPRINKLERED)
OCCUPANCY CLASSIFICATION	A-5	AMUSEMENT PARK STRUCTURES
NUMBER OF STORIES (TBL 504.4)	1	< 6 (MAX. ALLOWABLE)
HEIGHT (FT) (TBL 504.3)	25.75'	< UNLIMITED
BUILDING AREA (SF) (TBL 506.2)	470	< UNLIMITED
FIRE-RESISTANCE RATING REQUIREMENTS (TBL 601)	**REQUIRED**	**EXISTING**
PRIMARY STRUCTURE FRAME	0	0
BEARING WALLS		
EXTERIOR (TBL 602) 5 ≤ X < 10 FT	1 BOTH SIDES	1 BOTH SIDES
FIRE SEPARATION DISTANCE ≥ 10 FT		
INTERIOR	0	0
NON BEARING WALLS AND PARTITIONS		
EXTERIOR (TBL 602) 5 ≤ X < 10 FT	1 BOTH SIDES	1 BOTH SIDES
FIRE SEPARATION DISTANCE ≥ 10 FT	0	0
INTERIOR	0	0
FLOOR CONSTRUCTION	0	0
ROOF CONSTRUCTION	0	0
PROJECTIONS		
3. PROJECTIONS ON BUILDINGS OF TYPE V CONSTRUCTION SHALL BE PERMITTED TO BE OF TYPE V CONSTRUCTION AND SHALL NOT BE REQUIRED TO HAVE FIRE RESISTANCE RATING WHERE SPRINKLER PROJECTION IS EXTENDED TO THESE AREAS (SEE FP DRAWINGS)		
ALLOWABLE AREA OF OPENINGS (BC 705.8)		
FIRE SEPARATION DISTANCE (UNPROTECTED, SPRINKLER) 5 ≤ X < 10 FT	25%	9.3%
INTERIOR FINISHES CLASS (BC 803)		
WALL AND CEILING	C	
FLOORS - RADIANT FLUX	CLASS II	
PORTABLE FIRE EXTINGUISHERS (BC 906)	**REQUIRED**	**PROVIDED**
FIRE HAZARD	CLASS A	CLASS A
HAZARD OCCUPANCY	ORDINARY	
MINIMUM RATED SINGLE EXTINGUISHER	2-A	
MAXIMUM FLOOR AREA PER UNIT OF A	1,500 SF	
MAXIMUM FLOOR AREA FOR EXTINGUISHER	11,250 SF	
MAXIMUM DISTANCE OF TRAVEL TO EXTINGUISHER	75'	
NUMBER OF TYPE 2-A EXTINGUISHERS		
FIRST FLOOR	1	2
MEANS OF EGRESS		
MAX. FLOOR AREA ALLOWANCES PER OCCUPANT (TBL 1004.5) (SF)		
BUSINESS	150 GROSS	
OCCUPANT LOAD		
GUEST SERVICES (190 SF)	2	
TICKET ROOM (46 SF)	3	
VENDOR SPACE (244SF)	2	
EGRESS WIDTH REQUIRED (BC 1005.3.2)		
0.15 FOR SPRINKLERED BUILDINGS		
GUEST SERVICES	0.30 INCHES	72 INCHES
TICKET ROOM*	0.45 INCHES	72 INCHES
VENDOR SPACE	0.30 INCHES	72 INCHES
*NOTE: *ROLL-UP DOOR WILL BE OPEN DURING BUSINESS HOURS*		
MINIMUM NUMBER OF EXITS (TBL 1006.3.2)	**REQUIRED**	**PROVIDED**
OCCUPANT LOAD: 1 - 500	2	2
SINGLE EXITS (TBL 1006.3.3) *ROOMS, AREAS AND SPACES COMPLY WITH SECTION 1006.2.1 WITH EXITS THAT DISCHARGE DIRECTLY TO THE EXTERIOR AT THE LEVEL OF DISCHARGE, ARE PERMITTED TO HAVE ONE EXIT OR ACCESS TO A SINGLE EXIT.*		
MAXIMUM COMMON PATH OF EGRESS TRAVEL	**PERMITTED**	**PROPOSED**
(TBL1006.2.1) A OCCUPANCY WITH SPRINKLER SYSTEM	75'	SEE PLANS
MAXIMUM TRAVEL DISTANCE (BC 1017)		
A OCCUPANCY WITH SPRINKLER SYSTEM	250'	SEE PLANS

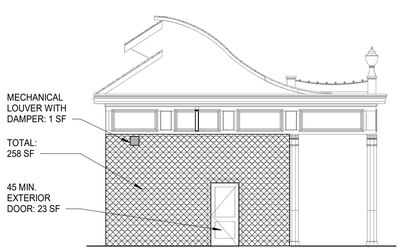

ALLOWABLE AREA OF OPENING CALCULATION
(23 SF + 1 SF) / 258 SF = 0.090 X 100 = 9.3%

2 ELEVATION A
1/8" = 1'-0"

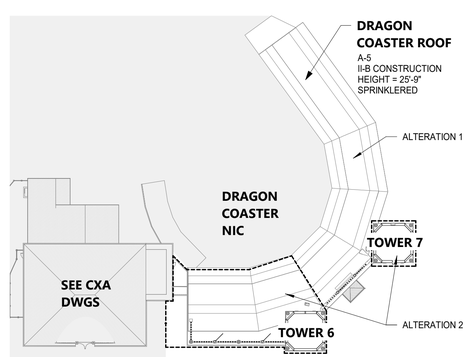

3 DRAGON COASTER VENDORS KEY PLAN
1" = 30'-0"

HISTORICAL BUILDING REGISTRY

PLAYLAND AMUSEMENT PARK IS A DESIGNATED NATIONAL HISTORIC LANDMARK AND IS LISTED ON THE NATIONAL REGISTER OF HISTORIC PLACES.

THE NATIONAL HISTORIC PLACES REGISTER REFERENCE NUMBER: 80004529_NHL NATIONAL ARCHIVE IDENTIFIER: 75316138

DRAGON COASTER VENDORS IS A CONTRIBUTING STRUCTURE OF THE LANDMARK AND THEREFORE AN HISTORIC BUILDING UNDER THE 2020 BUILDING CODE AND 2020 EXISTING BUILDING CODE OF NEW YORK STATE.

2020 NYS ENERGY CONSERVATION CODE

[NY] C501.6 HISTORIC BUILDINGS
PROVISIONS OF THIS CODE RELATING TO THE CONSTRUCTION, REPAIR, ALTERATION, RESTORATION AND MOVEMENT OF STRUCTURES, AND CHANGE OF OCCUPANCY SHALL NOT BE MANDATORY FOR HISTORIC BUILDINGS.

2020 NYS EXISTING BUILDING CODE

[NY] EBC 602.1 LEVEL 1 ALTERATIONS INCLUDE THE REMOVAL AND REPLACEMENT OR THE COVERING OF EXISTING MATERIALS, ELEMENTS, EQUIPMENT, OR FIXTURES USING NEW MATERIALS, ELEMENTS, EQUIPMENT, OR FIXTURES THAT SERVE THE SAME PURPOSE.

[NY] EBC 603.1 LEVEL 2 ALTERATIONS INCLUDE THE RECONFIGURATION OF SPACE, THE ADDITION OR ELIMINATION OF ANY DOOR OR WINDOW, THE RECONFIGURATION OR EXTENSION OF ANY SYSTEM, OR THE INSTALLATION OF ANY ADDITIONAL EQUIPMENT.

[NY] EBC 810.1 LEVEL 2 ALTERATIONS TO EXISTING BUILDINGS OR STRUCTURES ARE PERMITTED WITHOUT REQUIRING THE ENTIRE BUILDING OR STRUCTURE TO COMPLY WITH THE ENERGY REQUIREMENTS OF THE ECCC.

LEGEND:

- NOT IN CONTRACT
- APPROXIMATE LIMIT OF SCOPE
- FIRE RATED WALL/ PARTITION

8/30/2022 4:14:13 PM

CONSULTANT INFORMATION
The LiRo Group
3 Aerial Way, Syosset, New York 11791
(516) 938-5476 www.liro.com

CONSULTANT SEAL
REGISTERED ARCHITECT ROBERT D. DONINGER 023229 STATE OF NEW YORK

REVISION NUMBER	DATE	MADE BY	APP'D BY	REVISION

RECORD DRAWING CERTIFICATION
☐ AS BUILT – CHANGES AS NOTED ☐ AS BUILT – NO CHANGES

CONTRACTOR
NAME
SIGNATURE
TITLE DATE

PROJECT COORDINATOR
NAME
SIGNATURE
TITLE DATE

WESTCHESTER COUNTY, NEW YORK
DEPARTMENT OF PUBLIC WORKS AND TRANSPORTATION
DIVISION OF ENGINEERING

INFRASTRUCTURE REHABILITATION - PHASE 3
PLAYLAND PARK, RYE, NEW YORK
DRAGON COASTER VENDORS
LIFE SAFETY PLAN

CONTRACT NUMBER 22-523
SHEET NUMBER DCV-G-02
DWG NO.: 394 of 664
SCALE: As indicated
DATE: 08/23/2022
DPW FILE NUMBER 1-118-G-1143-0
REV. NO.

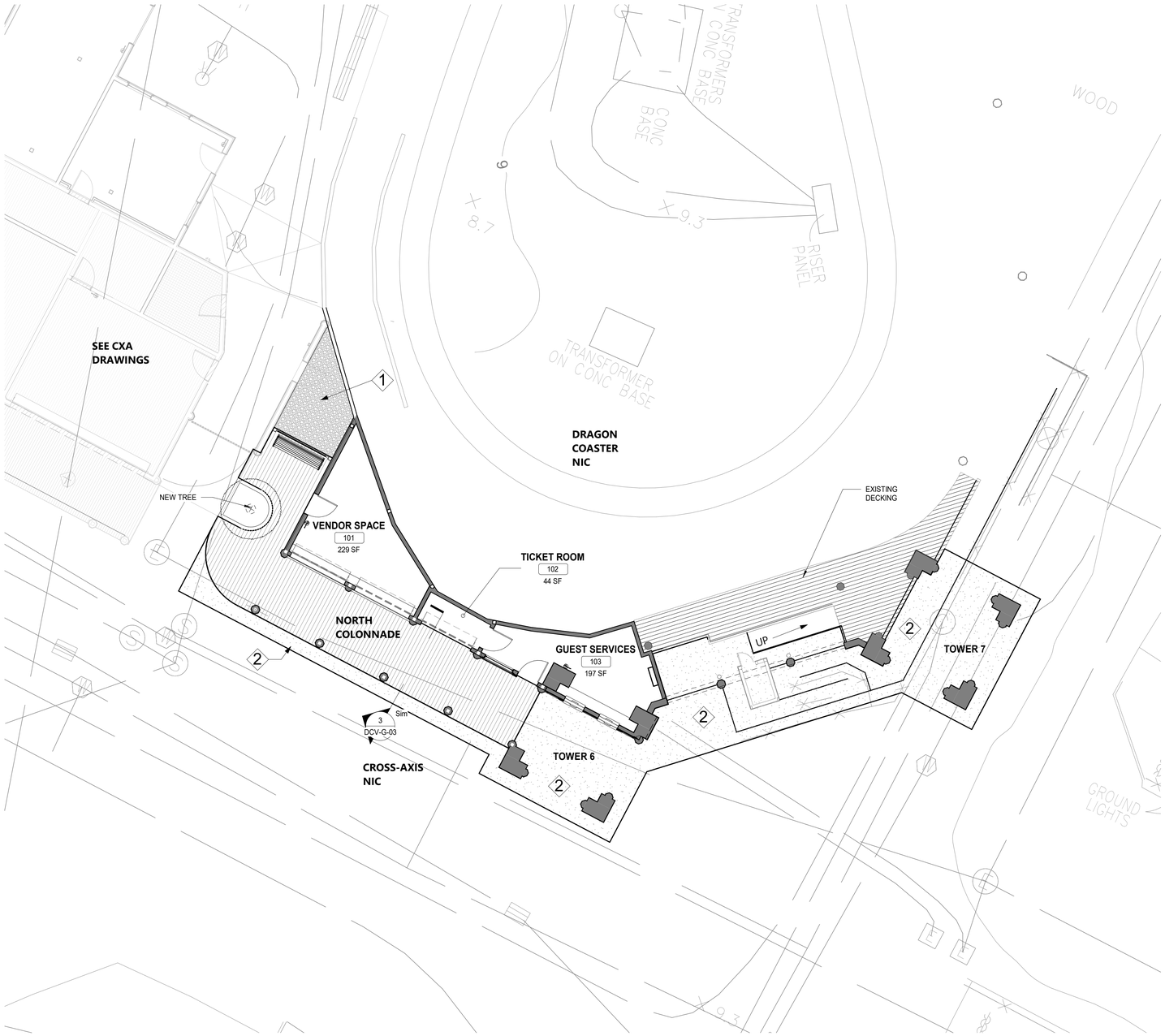

1 SITE RESTORATION PLAN
1/8" = 1'-0"

SHEET NOTES

1. PROVIDE PROTECTION FOR EXISTING FEATURES TO REMAIN. PROVIDE PROTECTION PLAN FOR APPROVAL
2. REPAIR ALL DAMAGED PARK PROPERTY INCURRED DURING CONSTRUCTION.

RESTORATION LEGEND

- ASPHALT REPAIR
- GRAVEL SURFACE IN AREA SHOWN ON 1/DCV-G-03
- WOOD DECK

RESTORATION KEY NOTES

1. NEW GRAVEL (PERMEABLE) SURFACE.
2. REPAIR ASPHALT AS REQ'D

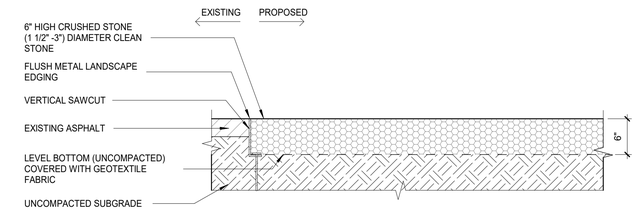

2 EXISTING ASPHALT RESTORATION DETAIL
1" = 1'-0"

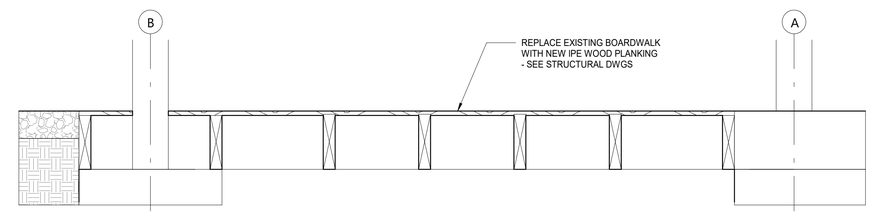

3 IPE DECKING DETAIL
1" = 1'-0"

8/30/2022 4:14:18 PM

CONSULTANT INFORMATION
The LiRo Group
3 Aerial Way, Syosset, New York 11791
(516) 938-5476 www.liro.com

CONSULTANT SEAL
REGISTERED ARCHITECT ROBERT D. YOUNG JR. 023220 STATE OF NEW YORK

REVISION NUMBER	DATE	MADE BY	APP'D BY	REVISION

RECORD DRAWING CERTIFICATION
☐ AS BUILT – CHANGES AS NOTED ☐ AS BUILT – NO CHANGES

CONTRACTOR
NAME
SIGNATURE
TITLE DATE

PROJECT COORDINATOR
NAME
SIGNATURE
TITLE DATE

WESTCHESTER COUNTY, NEW YORK
DEPARTMENT OF PUBLIC WORKS AND TRANSPORTATION
DIVISION OF ENGINEERING

INFRASTRUCTURE REHABILITATION - PHASE 3
PLAYLAND PARK, RYE, NEW YORK
DRAGON COASTER VENDORS
SITE RESTORATION PLAN

CONTRACT NUMBER	22-523
SHEET NUMBER	DCV-G-03
DWG NO.:	395 of 664
SCALE:	As indicated
DATE:	08/23/2022
DPW FILE NUMBER	1-118-G-1144-0
REV. NO.	

PLAYLAND REHABILITATION & UPGRADES
DRAGON COASTER VENDORS- ASBESTOS ABATEMENT
1 PLAYLAND PKWY, RYE, NY 10580

DETAILS:

1 DCV-H-10 — LARGE PROJECT REMOTE WORKER DECONTAMINATION UNIT
Not To Scale

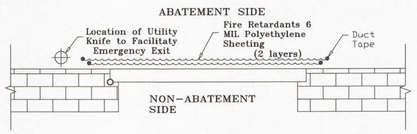

2 DCV-H-10 — TYPICAL SOFT WALL BARRIER AT OPENINGS LESS THAN 32SF
Not To Scale

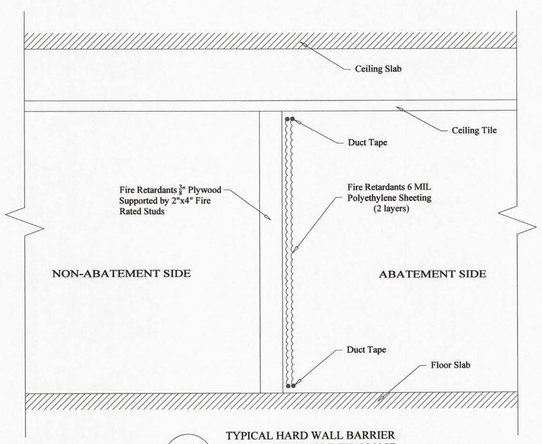

3 DCV-H-10 — TYPICAL HARD WALL BARRIER AT OPENINGS MORE THAN 32SF
Not To Scale

SCOPE OF WORK TABLE:

Work area	Location	Description of Asbestos Materials	Approximate Quantity of ACM	ICR 56 Procedure
1	DCV Dragon Coaster Vendors - Roof	Transite Panel Board	2600 SF	56.11.6
		Mastic (Bottom)		
		Flashing		
		Shingles & Felt Paper		
2	DCV Dragon Coaster Vendors - Exterior	Transite Panels	1500 SF	
3	Tower 6	Roof Flashing	400 SF	
4	Tower 7	Roof Flashing	400 SF	

KEYPLAN:

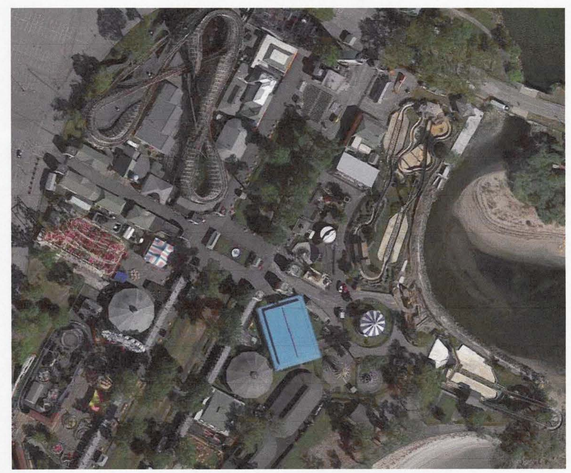

LEGEND:

- WORK AREA LIMITS
- P/W R # — REMOTE WORKER DECONTAMINATION UNIT
- WC — WASTE HOLDING AREA
- AIRLOCK
- W — TEMPORARY WATER SOURCE
- E — TEMPORARY ELECTRICAL SOURCE

PROJECT NOTES:

1. The Contractor shall be aware of all conditions of the Project and is responsible for verifying quantities and locations of all Work to be performed. Failure to do so shall not relieve the Contractor of its obligation to furnish all labor and materials necessary to perform the Work.
2. All Work shall be performed in strict accordance with the Project Documents and all governing codes, rules, and regulations. Where conflicts occur between the Project Documents and applicable codes, rules, and regulations, the more stringent shall apply.
3. All abatement work shall be coordinated with General Contractor work; Abatement may be phased with other contract work.
4. Working hours shall be as required and approved by the Owner. Asbestos abatement activities including, but not limited to, work area preparation, gross removal activities, cleaning activities, waste removal, etc. may need to be performed during 'off-hours' (including nights and weekends). In addition, multiple mobilizations may be required to perform the work identified in this project. The Contractor shall coordinate and schedule all Work with the facility and Owner's representative.
5. The Contractor shall prepare and coordinate with facility representative the posting of appropriate signage at the entranceway that redirects park occupants away from the area of the abatement.
6. The Contractor shall use barrier tape to extend the limits of the active, regulated work areas closed to the public and other non-abatement trades.
7. The Contractor shall be responsible for defining and coordinating the phases of the abatement with the facility and DPW, as well as securing any site specific variances, permits, and any necessary NYS DOL approvals.
8. The asbestos abatement Contractor shall coordinate locations of decontamination units, routes of egress, temporary water and power connections and waste container locations with the Owner and the Facility.
9. The Contractor may need to supply temporary power/water sources if they cannot be provided by facility.
10. The General Contractor shall supply any and all scaffolding for the work area(s) under this contract. Scaffolding structure and maintenance shall be in strict accordance with local, state and federal safety requirements.
11. The Contractor is to protect any and all exposed surfaces not targeted for abatement.
12. The Contractor shall request and receive in writing prior to preceding with any work info from the owner regarding surfaces/materials that require protection.
13. Regular waste generated by the abatement work of this contract shall be stored securely using a closed waste container.

5/3/2022 11:43:22 AM

CONSULTANT INFORMATION
The LiRo Group
3 Aerial Way, Syosset, New York 11791
(516) 938-5476 www.liro.com

CONSULTANT SEAL
STATE OF NEW YORK — PETER JOSEPH GERMASI — LICENSED PROFESSIONAL ENGINEER — No. 070446

REVISION NUMBER	DATE	MADE BY	APP'D BY	REVISION

RECORD DRAWING CERTIFICATION
AS BUILT – CHANGES AS NOTED
AS BUILT – NO CHANGES

CONTRACTOR: NAME / SIGNATURE / TITLE / DATE
PROJECT COORDINATOR: NAME / SIGNATURE / TITLE / DATE

WESTCHESTER COUNTY, NEW YORK
DEPARTMENT OF PUBLIC WORKS AND TRANSPORTATION
DIVISION OF ENGINEERING

INFRASTRUCTURE REHABILITATION - PHASE 3
PLAYLAND PARK, RYE, NEW YORK
DRAGON COASTER VENDORS
GENERAL ASBESTOS ABATEMENT NOTES

CONTRACT NUMBER	22-523
SHEET NUMBER	DCV-H-10
DWG NO.:	
SCALE:	NOT TO SCALE
DATE:	08/23/2022
DPW FILE NUMBER	1-118-G-1145-0
REV. NO.	0

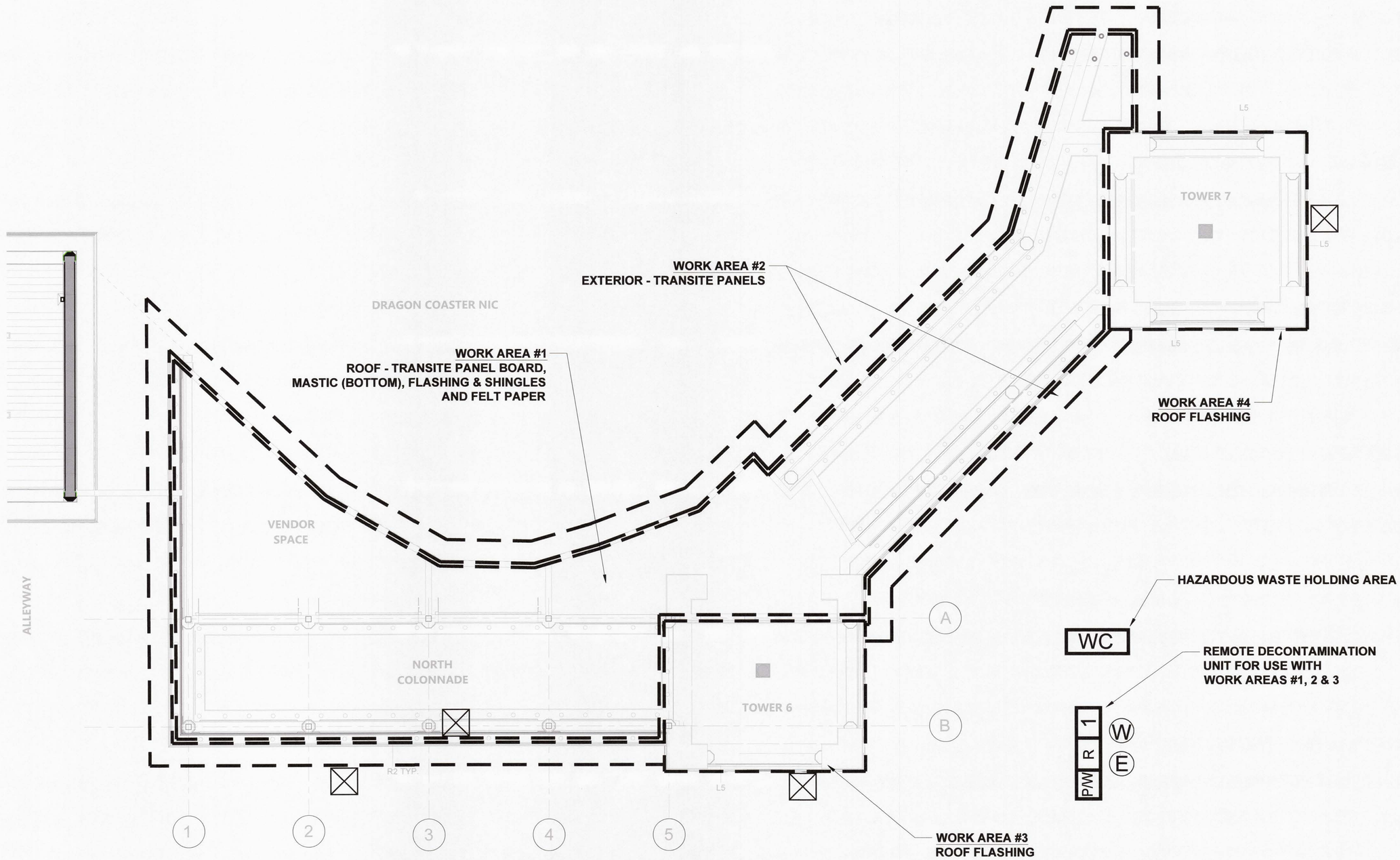

1 GROUND FLOOR - ASBESTOS ABATEMENT PLAN
NTS

5/3/2022 11:43:22 AM

CONSULTANT INFORMATION
The LiRo Group
3 Aerial Way, Syosset, New York 11791
(516) 938-5476 www.liro.com

CONSULTANT SEAL
STATE OF NEW YORK · PETER JOSEPH GORSKI · LICENSED PROFESSIONAL ENGINEER · 070446

REVISION NUMBER	DATE	MADE BY	APP'D BY	REVISION

RECORD DRAWING CERTIFICATION
AS BUILT – CHANGES AS NOTED
AS BUILT – NO CHANGES

CONTRACTOR
NAME
SIGNATURE
TITLE DATE

PROJECT COORDINATOR
NAME
SIGNATURE
TITLE DATE

WESTCHESTER COUNTY, NEW YORK
DEPARTMENT OF PUBLIC WORKS AND TRANSPORTATION
DIVISION OF ENGINEERING

INFRASTRUCTURE REHABILITATION - PHASE 3
PLAYLAND PARK, RYE, NEW YORK
DRAGON COASTER VENDORS
GROUND FLOOR - ASBESTOS ABATEMENT PLAN

CONTRACT NUMBER	22-523
SHEET NUMBER	DCV-H-11
DWG NO.:	
SCALE:	NOT TO SCALE
DATE:	08/23/2022
DPW FILE NUMBER	1-118-G-1146-0
REV. NO.	0

PLAYLAND REHABILITATION & UPGRADES
DRAGON COASTER VENDORS- LEAD REMEDIATION
1 PLAYLAND PKWY, RYE, NY 10580

DETAILS:

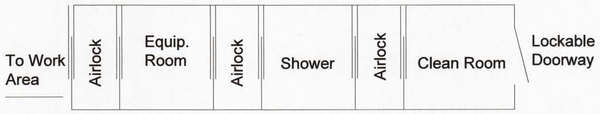

1 DCV-H-20 LARGE PROJECT REMOTE WORKER DECONTAMINATION UNIT
Not To Scale

SCOPE OF WORK TABLE:

Work area	Location	Description	Material	Quantity	Procedure
1	Exterior	Entire Building	Painted Surfaces	1000 SF	Manual Wet Scraping/Chemical Strip

PROJECT NOTES:

1. All layers of coating shall be considered as LBP and removed down to the substrates. Substrates coated with LBP and targeted for demolition may be removed and disposed of solid structure waste following TCLP testing.
2. Substrates coated with LBP and targeted for refurbish and recoating shall be abated using manual wet scraping or chemical stripping procedures, localized testing of chemical strapping products shall proceed broader use and only after approval by the DPW Environmental Consultant.
3. The abatement contractor shall separate paint chips and contaminated dust/particulate generated by the abatement from other project waste streams including worker personal protective equipment and plastic sheeting. All waste other than lead paint chips and contaminated dust/particulate shall be TCLP tested prior to disposal.
4. Waste generated by the work of this method shall be stored on site in a NYSDEC compliant Hazardous and Waste Storage Area and transported under manifest to the disposal site.
5. The contractor shall prepare a project specific work plan and project specific HASP for the work of this contract.
6. LBP remediation shall be consistent with guidelines from SSPC and work shall comply with the OSHA regulations including using of decontamination units and hand wash stations.
7. The contractor may propose alternate LBP removal procedures however, use of alternate procedures will require approval by DPW Environmental Consultant; the abatement contractor is responsible with maintaining the physical conditions and integrity of the targeted substrates, and the surrounding structures during abatement work.
8. The Contractor shall request and receive in writing prior to preceding with any work info from the owner regarding surfaces/materials that require protection.

LEGEND:

- WORK AREA LIMITS
- WS — OSHA HANDWASHING STATION
- HWSA — HAZARDOUS WASTE STORAGE AREA
- AIRLOCK
- W — TEMPORARY WATER SOURCE
- E — TEMPORARY ELECTRICAL SOURCE
- EXTERIOR PAINTED SURFACES

KEYPLAN:

5/3/2022 11:43:22 AM

CONSULTANT INFORMATION
The LiRo Group
3 Aerial Way, Syosset, New York 11791
(516) 938-5476 www.liro.com

CONSULTANT SEAL
STATE OF NEW YORK — PETER JOSEPH CARRAS — No. 070446 — LICENSED PROFESSIONAL ENGINEER

REVISION NUMBER	DATE	MADE BY	APP'D BY	REVISION

RECORD DRAWING CERTIFICATION
AS BUILT – CHANGES AS NOTED
AS BUILT – NO CHANGES

CONTRACTOR: NAME / SIGNATURE / TITLE / DATE
PROJECT COORDINATOR: NAME / SIGNATURE / TITLE / DATE

WESTCHESTER COUNTY, NEW YORK
DEPARTMENT OF PUBLIC WORKS AND TRANSPORTATION
DIVISION OF ENGINEERING

INFRASTRUCTURE REHABILITATION - PHASE 3
PLAYLAND PARK, RYE, NEW YORK
DRAGON COASTER VENDORS
GENERAL LEAD REMEDIATION NOTES

CONTRACT NUMBER	22-523
SHEET NUMBER	DCV-H-20
DWG NO.:	
SCALE:	NOT TO SCALE
DATE:	08/23/2022
DPW FILE NUMBER	1-118-G-1147-0
REV. NO.	0

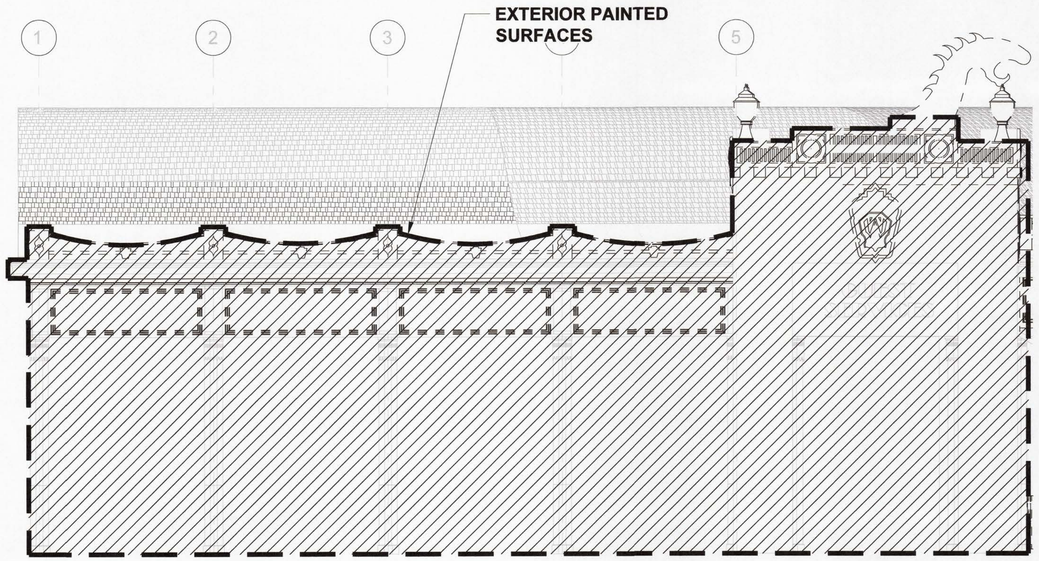

1 CROSS-AXIS NORTH COLONNADE - SOUTH ELEVATION - LEAD REMEDIATION PLAN
NTS

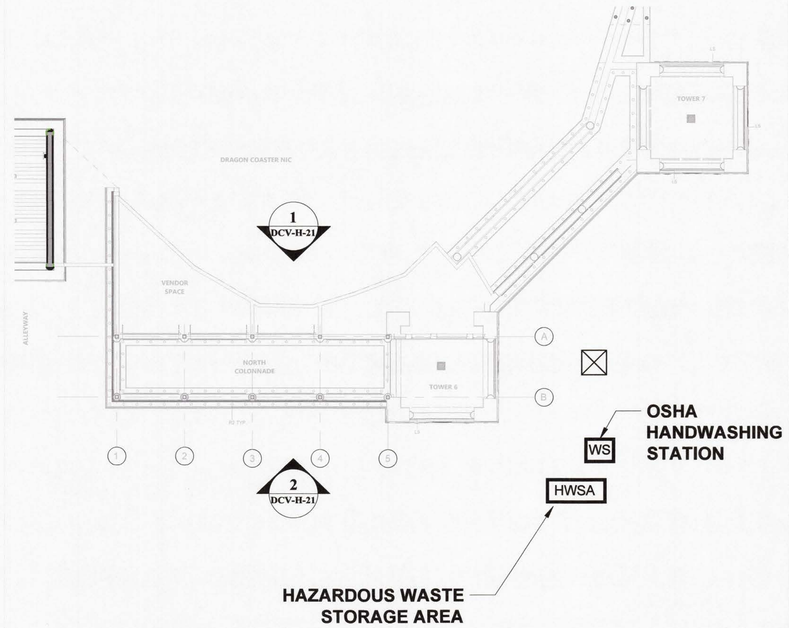

3 GROUND FLOOR - LEAD REMEDIATION PLAN
NTS

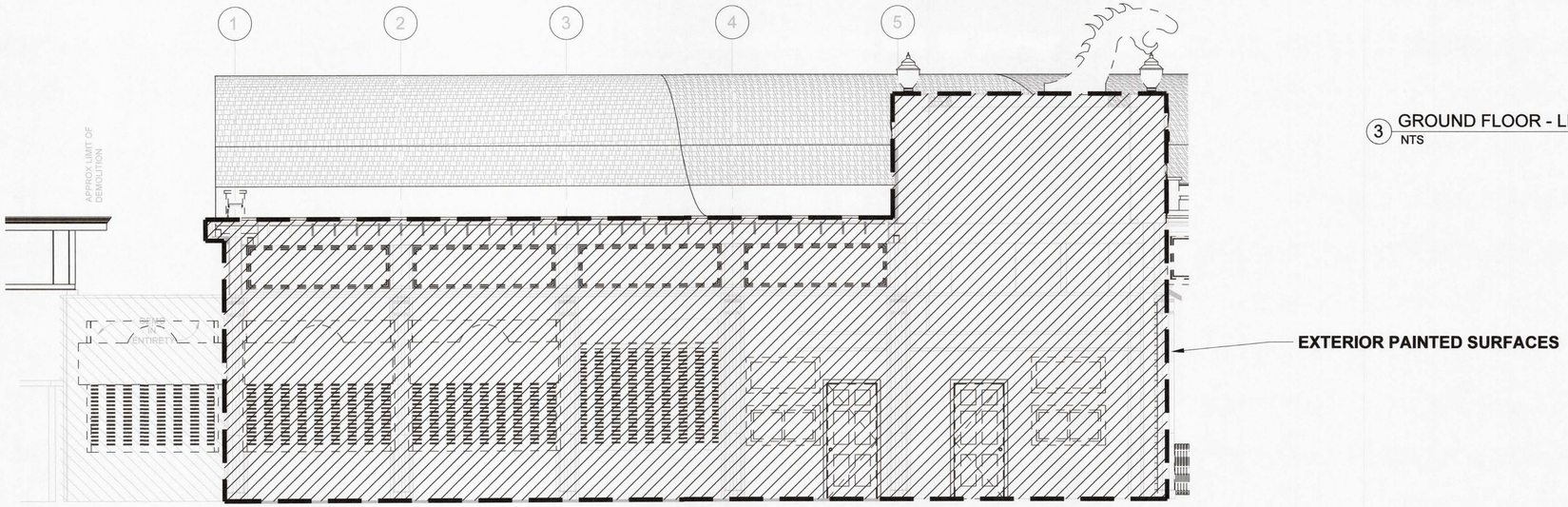

2 NORTH STOREFRONT ELEVATION - LEAD REMEDIATION PLAN
NTS

5/3/2022 11:43:22 AM

CONSULTANT INFORMATION

The LiRo Group

3 Aerial Way, Syosset, New York 11791
(516) 938-5476 www.liro.com

CONSULTANT SEAL

STATE OF NEW YORK · PETER JOSEPH LORAS · No. 070446 · LICENSED PROFESSIONAL ENGINEER

REVISION NUMBER	DATE	MADE BY	APP'D BY	REVISION

RECORD DRAWING CERTIFICATION

☐ AS BUILT – CHANGES AS NOTED ☐ AS BUILT – NO CHANGES

CONTRACTOR
NAME
SIGNATURE
TITLE DATE

PROJECT COORDINATOR
NAME
SIGNATURE
TITLE DATE

WESTCHESTER COUNTY, NEW YORK
DEPARTMENT OF PUBLIC WORKS AND TRANSPORTATION
DIVISION OF ENGINEERING

INFRASTRUCTURE REHABILITATION - PHASE 3
PLAYLAND PARK, RYE, NEW YORK
DRAGON COASTER VENDORS
NORTH AND SOUTH ELEVATION
LEAD REMEDIATION PLAN

CONTRACT NUMBER	22-523
SHEET NUMBER	DCV-H-21
DWG NO.:	
SCALE:	NOT TO SCALE
DATE:	08/23/2022
DPW FILE NUMBER	1-118-G-1148-0
REV. NO.	0

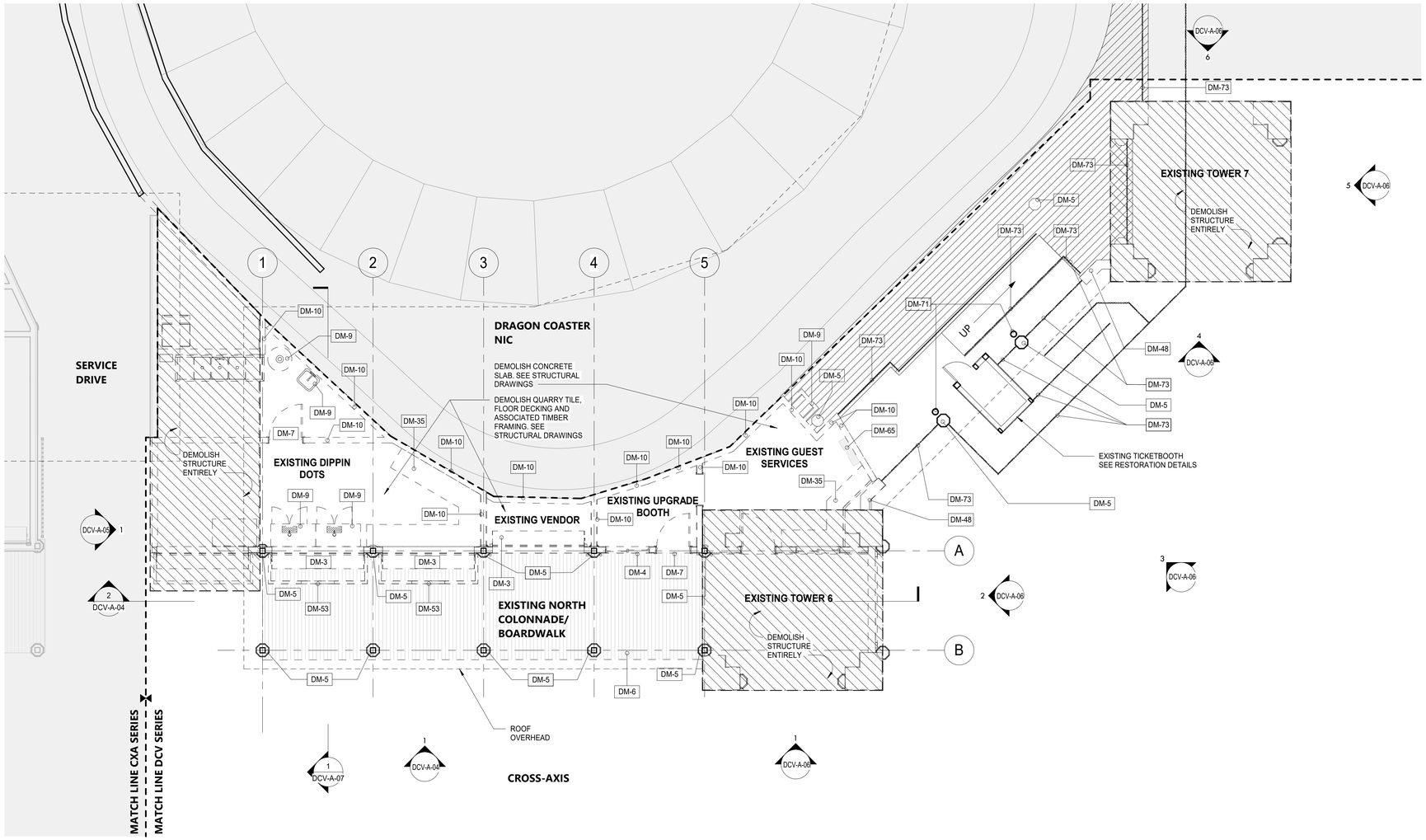

1 GROUND FLOOR - DEMOLITION PLAN
3/16" = 1'-0"

SHEET NOTES:

1. THE GC SHALL VISIT THE SITE AND FAMILIARIZE HIM/HERSELF WITH EXISTING CONDITIONS AND REQUIREMENTS OF THE WORK. THE GC SHALL FIELD VERIFY EXACT QUANTITIES OF ALL ITEMS TO BE REMOVED.

2. THE GC SHALL PHOTOGRAPH AND DOCUMENT EXISTING HISTORIC DECORATIVE TRIMS INCLUDING SIZES AND PROFILES PRIOR TO ENVIRONMENTAL REMEDIATION WORK START.

3. ITEMS TO BE REMOVED / DEMOLISHED AS INDICATED ON THE DRAWINGS ARE INTENDED TO SHOW THE GENERAL SCOPE OF THE DEMOLITION WORK. THE DRAWINGS DO NOT REPRESENT IN DETAIL ALL ITEMS OR SITUATIONS THAT MAY BE ENCOUNTERED DURING THE DEMOLITION. IT IS THE GC'S RESPONSIBILITY TO REMOVE, PROTECT, AND MAKE CORRECTIONS AS REQ'D TO ACHIEVE DRAWING INTENT. THE GC SHALL NOTIFY THE A/E OF ANY STRUCTURAL NONCONFORMITY TO PLANS AND SPECIFICATIONS.

4. PLAYLAND RESERVES THE RIGHT TO REVIEW ALL MATERIALS DESIGNATED FOR REMOVAL AND TO RETAIN OWNERSHIP OF SUCH MATERIALS. IF PLAYLAND RETAINS ANY MATERIAL THE GC SHALL MAKE ARRANGEMENTS WITH THE PLAYLAND'S SUPERINTENDENT TO HAVE THOSE MATERIALS REMOVED AND STORED OFF SITE AT NO ADDITIONAL COST.

5. DEMOLITION OF THE EXISTING BUILDING SHALL INCLUDE REMOVAL OF THE EXISTING FOUNDATIONS FOR THEIR ENTIRE DEPTH TO ACCOMMODATE INSTALLATION OF NEW FOUNDATIONS.

6. THE GC SHALL USE EXTREME CAUTION IN AREAS OF DEMOLITION WHICH MAY DISTURB EXISTING STRUCTURES. TEMPORARY SHORING, BARRICADES, DUST PARTITIONS, ETC. SHALL BE PROVIDED AS REQ'D TO PROTECT ALL EXISTING STRUCTURES AND PROPERTY.

7. SEE STRUCTURAL, ELECTRICAL, SPRINKLER, AND PLUMBING DRAWINGS FOR RELATED DEMOLITION WORK.

8. VERIFY LOCATION OF EXISTING STRUCTURES AND SHORE UP ROOF/FLOOR ABOVE AS REQ'D BEFORE REMOVING WALL

9. REMOVAL OF ALL CEILINGS AND MOUNTED ITEMS THROUGHOUT THE CONTRACT AREA INCLUDE ANCHORING HARDWARE, AND MISCELLANEOUS FASTENINGS, MECHANICAL, ELECTRICAL, PLUMBING AND FIRE PREVENTION WORKS.

10. WALLS SHALL BE REMOVED AS INDICATED ON DEMOLITION PLANS. ALL UTILITIES IN WALL SHALL BE CUT TO BELOW SLAB OR ABOVE THE CEILING.

11. REMOVE ALL EXISTING ELECTRICAL AND PLUMBING LINES NOT TO BE RE-USED. CAP PLUMBING LINES AS REQ'D. ELECTRICAL WIRING SHALL BE DISCONNECTED BACK TO THE NEAREST ACTIVE LOCATION. ALL ABANDONED COMMUNICATION CABLES (DATA, TELEPHONE, FIRE ALARM, AND AUDIO/VIDEO CABLES) SHALL BE REMOVED TO SOURCE IF NOT TAGGED FOR FUTURE USE.

12. DEMOLITION PROCEDURES ARE THE SILL RESPONSIBILITY OF THE GENERAL GC OF THIS CONTRACT. GC TO "CUT OFF" ALL NECESSARY UTILITIES REQ'D TO OBTAIN DESIRED RESULTS. GC TO OBTAIN "SHUT OFF" APPROVALS FROM PLAYLAND PRIOR TO SCHEDULED DEMOLITION.

13. THE GC SHALL PATCH AND REPAIR ALL EXISTING CONSTRUCTION DISTURBED BY THE WORK AND PREPARE FOR NEW FINISH AS SHOWN ON THE INTERIOR ELEVATIONS.

14. THE GC SHALL BE RESPONSIBLE FOR THE CLEANING UP AND HAULING AWAY OF ALL TRASH AND DEBRIS ON A REGULAR BASIS DURING THE CONSTRUCTION PERIOD.

15. ALL DEBRIS REMOVED FROM THE SITE SHALL BE DISPOSED OF IN A LEGAL MANNER.

16. EXISTING EXITS SHALL REMAIN FULLY ACCESSIBLE AND UNOBSTRUCTED DURING THE PROGRESS OF THE WORK.

DEMOLITION LEGEND

	INDICATES DEMOLITION
DM - #	DEMOLITION KEY NOTES
	INDICATES NIC
	INDICATES DEMOLITION OF SHINGLE ROOF
	INDICATES DEMOLITION OF EXISTING SBS ROOF
- - - - -	INDICATES APPROXIMATE LIMIT OF SCOPE

DEMOLITION KEYNOTES

DM-3	REMOVE ROLL DOWN DOOR AND ASSOCIATED HARDWARE.
DM-4	REMOVE EXISTING WINDOW & FRAME.
DM-5	REMOVE COLUMN ENCLOSURES. CAREFULLY REMOVE AT LEAST ONE COLUMN ENCLOSURE TO USE AS REFERENCE IN ORDER TO REPLICATE TRIMS TO MATCH LOCATION, SIZE AND SHAPE AS INDICATED. COORDINATE WITH STRUCTURAL DRAWINGS.
DM-6	REMOVE EXISTING WOOD DECKING. (COORDINATE EXTENT OF REMOVAL REQUIRED TO REPAIR FLOOR JOISTS TO REMAIN AS NEEDED - SEE STRUCTURAL DRAWINGS).
DM-7	REMOVE EXISTING DOOR & FRAME.
DM-9	CONTRACTOR TO REMOVE ANY REMAINING EQUIPMENT AND BUILDING CONTENT. CONTENT MAY INCLUDE BUT NOT LIMITED TO REFRIGERATOR, STORAGE, RACKS, AC UNITS, GAMES ETC.
DM-10	REMOVE INTERIOR PARTITION.
DM-35	REMOVE COUNTER AND ALL RELATED COMPONENTS.
DM-48	DEMOLISH WING PIER.
DM-53	REMOVE EXISTING AWNING. PROVIDE FOR DELIVERY TO THE OWNER AS DIRECTED BY THE A/E.
DM-65	EXISTING FIBER CABINET TO REMAIN AND TO BE PROTECTED.
DM-71	EXISTING STRUCTURAL COLUMNS TO REMAIN. SEE STRUCTURAL.
DM-73	CAREFULLY REMOVE AND STORE EXISTING FENCE. SAND AND PRIME FOR NEW COAT OF PAINT FOR REINSTALLATION.

8/30/2022 4:11:54 PM

CONSULTANT INFORMATION
The LiRo Group
3 Aerial Way, Syosset, New York 11791
(516) 938-5476 www.liro.com

CONSULTANT SEAL
REGISTERED ARCHITECT ROBERT D. CONNIGHT 023280 STATE OF NEW YORK

REVISION NUMBER	DATE	MADE BY	APP'D BY	REVISION

RECORD DRAWING CERTIFICATION
☐ AS BUILT – CHANGES AS NOTED ☐ AS BUILT – NO CHANGES

CONTRACTOR
NAME
SIGNATURE
TITLE DATE

PROJECT COORDINATOR
NAME
SIGNATURE
TITLE DATE

WESTCHESTER COUNTY, NEW YORK
DEPARTMENT OF PUBLIC WORKS AND TRANSPORTATION
DIVISION OF ENGINEERING

INFRASTRUCTURE REHABILITATION - PHASE 3
PLAYLAND PARK, RYE, NEW YORK
DRAGON COASTER VENDORS
DEMOLITION PLAN

CONTRACT NUMBER	22-523
SHEET NUMBER	DCV-A-01
DWG NO.:	400 of 664
SCALE:	As indicated
DATE:	08/23/2022
DPW FILE NUMBER	1-118-A-1149-0
REV. NO.	

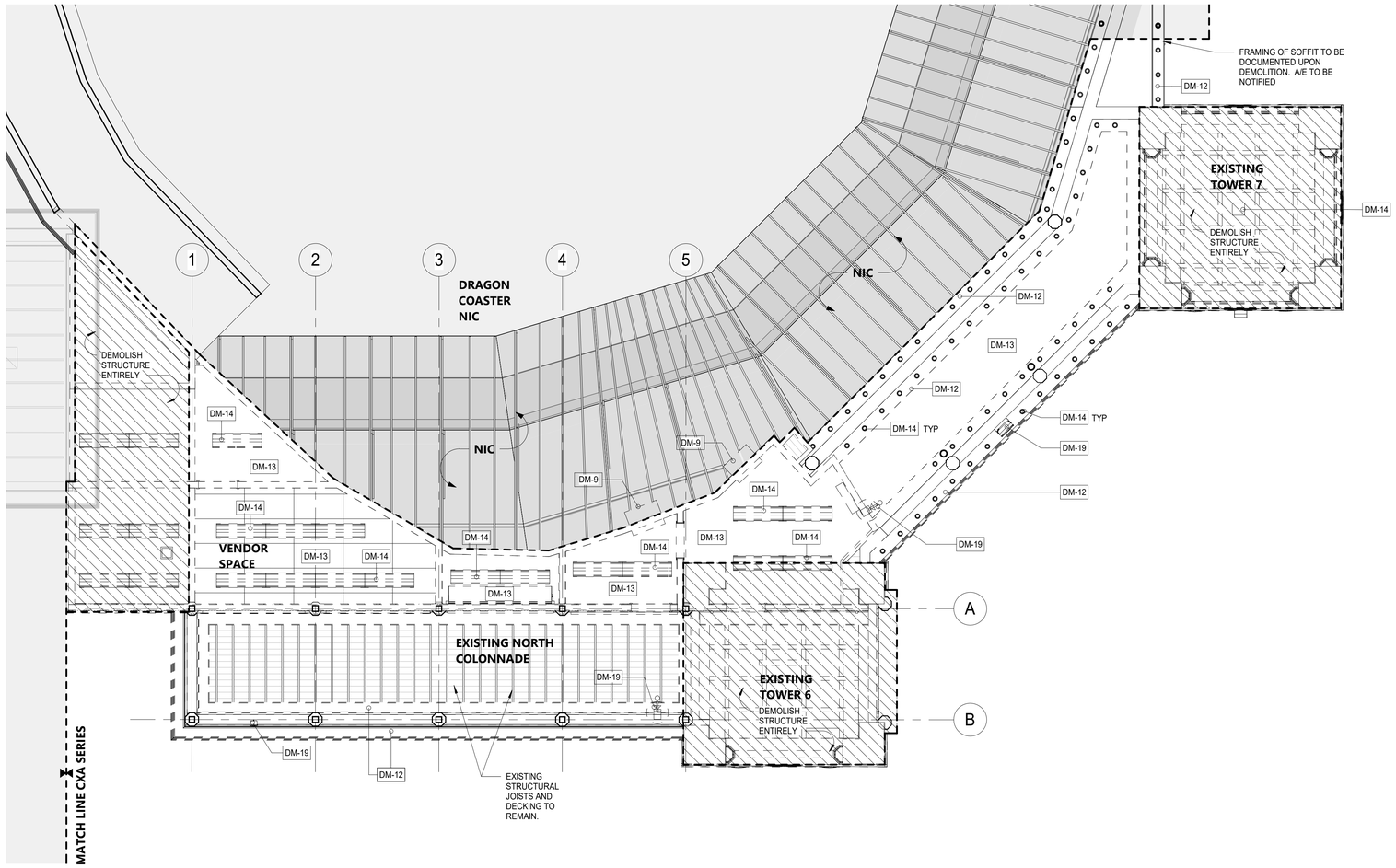

1 GROUND FLOOR - REFLECTED CEILING DEMOLITION PLAN
3/16" = 1'-0"

SHEET NOTES:

1. THE GC SHALL VISIT THE SITE AND FAMILIARIZE HIM/HERSELF WITH EXISTING CONDITIONS AND REQUIREMENTS OF THE WORK. THE GC SHALL FIELD VERIFY EXACT QUANTITIES OF ALL ITEMS TO BE REMOVED.
2. THE GC SHALL PHOTOGRAPH AND DOCUMENT EXISTING HISTORIC DECORATIVE TRIMS INCLUDING SIZES AND PROFILES PRIOR TO ENVIRONMENTAL REMEDIATION WORK START.
3. ITEMS TO BE REMOVED / DEMOLISHED AS INDICATED ON THE DRAWINGS ARE INTENDED TO SHOW THE GENERAL SCOPE OF THE DEMOLITION WORK. THE DRAWINGS DO NOT REPRESENT IN DETAIL ALL ITEMS OR SITUATIONS THAT MAY BE ENCOUNTERED DURING THE DEMOLITION. IT IS THE GC'S RESPONSIBILITY TO REMOVE, PROTECT, AND MAKE CORRECTIONS AS REQ'D TO ACHIEVE DRAWING INTENT. THE GC SHALL NOTIFY THE A/E OF ANY STRUCTURAL NONCONFORMITY TO PLANS AND SPECIFICATIONS.
4. PLAYLAND RESERVES THE RIGHT TO REVIEW ALL MATERIALS DESIGNATED FOR REMOVAL AND TO RETAIN OWNERSHIP OF SUCH MATERIALS. IF PLAYLAND RETAINS ANY MATERIAL THE GC SHALL MAKE ARRANGEMENTS WITH THE PLAYLAND'S SUPERINTENDENT TO HAVE THOSE MATERIALS REMOVED AND STORED OFF SITE AT NO ADDITIONAL COST.
5. DEMOLITION OF THE EXISTING BUILDING SHALL INCLUDE REMOVAL OF THE EXISTING FOUNDATIONS FOR THEIR ENTIRE DEPTH TO ACCOMMODATE INSTALLATION OF NEW FOUNDATIONS.
6. THE GC SHALL USE EXTREME CAUTION IN AREAS OF DEMOLITION WHICH MAY DISTURB EXISTING STRUCTURES. TEMPORARY SHORING, BARRICADES, DUST PARTITIONS, ETC. SHALL BE PROVIDED AS REQ'D TO PROTECT ALL EXISTING STRUCTURES AND PROPERTY.
7. SEE STRUCTURAL, ELECTRICAL, SPRINKLER, AND PLUMBING DRAWINGS FOR RELATED DEMOLITION WORK.
8. VERIFY LOCATION OF EXISTING STRUCTURES AND SHORE UP ROOF/FLOOR ABOVE AS REQ'D BEFORE REMOVING WALL
9. REMOVAL OF ALL CEILINGS AND MOUNTED ITEMS THROUGHOUT THE CONTRACT AREA INCLUDE ANCHORING HARDWARE, AND MISCELLANEOUS FASTENINGS, MECHANICAL, ELECTRICAL, PLUMBING AND FIRE PREVENTION WORKS.
10. WALLS SHALL BE REMOVED AS INDICATED ON DEMOLITION PLANS. ALL UTILITIES IN WALL SHALL BE CUT TO BELOW SLAB OR ABOVE THE CEILING.
11. REMOVE ALL EXISTING ELECTRICAL AND PLUMBING LINES NOT TO BE RE-USED. CAP PLUMBING LINES AS REQ'D. ELECTRICAL WIRING SHALL BE DISCONNECTED BACK TO THE NEAREST ACTIVE LOCATION. ALL ABANDONED COMMUNICATION CABLES (DATA, TELEPHONE, FIRE ALARM, AND AUDIO/VIDEO CABLES) SHALL BE REMOVED TO SOURCE IF NOT TAGGED FOR FUTURE USE.
12. DEMOLITION PROCEDURES ARE THE SILL RESPONSIBILITY OF THE GENERAL GC OF THIS CONTRACT. GC TO "CUT OFF" ALL NECESSARY UTILITIES REQ'D TO OBTAIN DESIRED RESULTS. GC TO OBTAIN "SHUT OFF" APPROVALS FROM PLAYLAND PRIOR TO SCHEDULED DEMOLITION.
13. THE GC SHALL PATCH AND REPAIR ALL EXISTING CONSTRUCTION DISTURBED BY THE WORK AND PREPARE FOR NEW FINISH AS SHOWN ON THE INTERIOR ELEVATIONS.
14. THE GC SHALL BE RESPONSIBLE FOR THE CLEANING UP AND HAULING AWAY OF ALL TRASH AND DEBRIS ON A REGULAR BASIS DURING THE CONSTRUCTION PERIOD.
15. ALL DEBRIS REMOVED FROM THE SITE SHALL BE DISPOSED OF IN A LEGAL MANNER.
16. EXISTING EXITS SHALL REMAIN FULLY ACCESSIBLE AND UNOBSTRUCTED DURING THE PROGRESS OF THE WORK.

DEMOLITION LEGEND

	INDICATES DEMOLITION
DM - #	DEMOLITION KEY NOTES
	INDICATES NIC
	INDICATES DEMOLITION OF SHINGLE ROOF
	INDICATES DEMOLITION OF EXISTING SBS ROOF
	INDICATES APPROXIMATE LIMIT OF SCOPE

DEMOLITION KEYNOTES

DM-9	CONTRACTOR TO REMOVE ANY REMAINING EQUIPMENT AND BUILDING CONTENT. CONTENT MAY INCLUDE BUT NOT LIMITED TO REFRIGERATOR, STORAGE, RACKS, AC UNITS, GAMES ETC.
DM-12	REMOVE EXTERIOR SOFFIT AS NECESSARY WHERE PERIMETER LIGHTING IS TO BE REMOVED. COORDINATE WITH ELECTRICAL DRAWINGS.
DM-13	REMOVE EXISTING CEILING AND ALL ACCESSORIES AND EQUIPMENT.
DM-14	REMOVE EXISTING LIGHTING FIXTURES AND ELECTRICAL WIRING CONNECTED TO THESE FIXTURES. SEE ELECTRICAL FOR DETAILS.
DM-19	DISCONNECT AND REMOVE EXISTING SUSPENDED EQUIPMENT SUCH AS CAMERAS, SPEAKERS, ETC. SEE ELECTRICAL DRAWINGS FOR DETAILS.

8/30/2022 4:12:01 PM

CONSULTANT INFORMATION
The LiRo Group
3 Aerial Way, Syosset, New York 11791
(516) 938-5476 www.liro.com

CONSULTANT SEAL
REGISTERED ARCHITECT ROBERT D. DONOVAN 023229 STATE OF NEW YORK

REVISION NUMBER	DATE	MADE BY	APP'D BY	REVISION

RECORD DRAWING CERTIFICATION
☐ AS BUILT – CHANGES AS NOTED ☐ AS BUILT – NO CHANGES

CONTRACTOR
NAME
SIGNATURE
TITLE DATE

PROJECT COORDINATOR
NAME
SIGNATURE
TITLE DATE

WESTCHESTER COUNTY, NEW YORK
DEPARTMENT OF PUBLIC WORKS AND TRANSPORTATION
DIVISION OF ENGINEERING

INFRASTRUCTURE REHABILITATION - PHASE 3
PLAYLAND PARK, RYE, NEW YORK
DRAGON COASTER VENDORS
DEMOLITION REFLECTED CEILING PLAN

CONTRACT NUMBER 22-523
SHEET NUMBER DCV-A-02
DWG NO.: 401 of 664
SCALE: As indicated
DATE: 08/23/2022
DPW FILE NUMBER 1-118-A-1150-0
REV. NO.

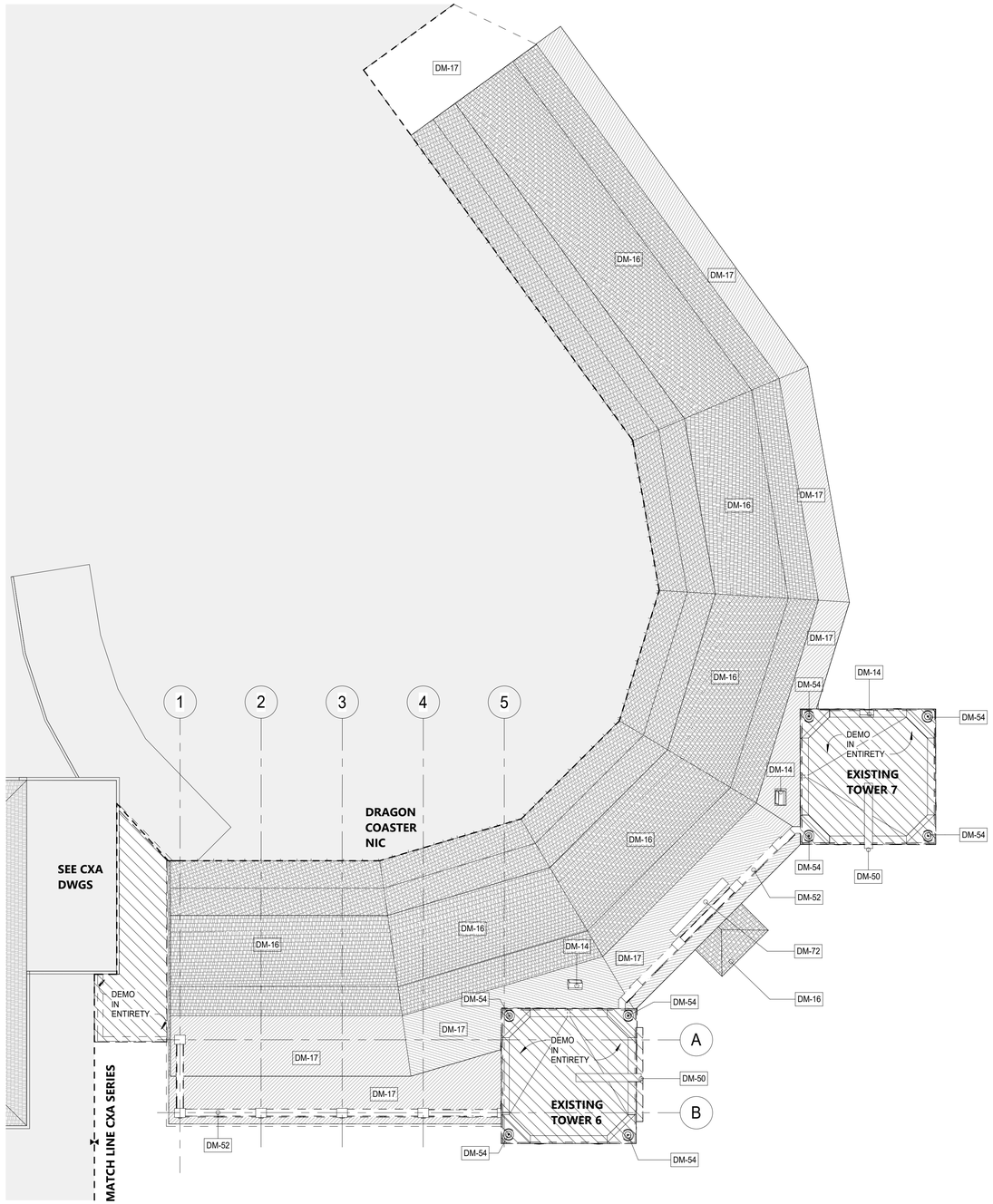

1 ROOF DEMOLITION PLAN
1/8" = 1'-0"

SHEET NOTES:

1. THE GC SHALL VISIT THE SITE AND FAMILIARIZE HIM/HERSELF WITH EXISTING CONDITIONS AND REQUIREMENTS OF THE WORK. THE GC SHALL FIELD VERIFY EXACT QUANTITIES OF ALL ITEMS TO BE REMOVED.

2. THE GC SHALL PHOTOGRAPH AND DOCUMENT EXISTING HISTORIC DECORATIVE TRIMS INCLUDING SIZES AND PROFILES PRIOR TO ENVIRONMENTAL REMEDIATION WORK START.

3. ITEMS TO BE REMOVED / DEMOLISHED AS INDICATED ON THE DRAWINGS ARE INTENDED TO SHOW THE GENERAL SCOPE OF THE DEMOLITION WORK. THE DRAWINGS DO NOT REPRESENT IN DETAIL ALL ITEMS OR SITUATIONS THAT MAY BE ENCOUNTERED DURING THE DEMOLITION. IT IS THE GC'S RESPONSIBILITY TO REMOVE, PROTECT, AND MAKE CORRECTIONS AS REQ'D TO ACHIEVE DRAWING INTENT. THE GC SHALL NOTIFY THE A/E OF ANY STRUCTURAL NONCONFORMITY TO PLANS AND SPECIFICATIONS.

4. PLAYLAND RESERVES THE RIGHT TO REVIEW ALL MATERIALS DESIGNATED FOR REMOVAL AND TO RETAIN OWNERSHIP OF SUCH MATERIALS. IF PLAYLAND RETAINS ANY MATERIAL THE GC SHALL MAKE ARRANGEMENTS WITH THE PLAYLAND'S SUPERINTENDENT TO HAVE THOSE MATERIALS REMOVED AND STORED OFF SITE AT NO ADDITIONAL COST.

5. DEMOLITION OF THE EXISTING BUILDING SHALL INCLUDE REMOVAL OF THE EXISTING FOUNDATIONS FOR THEIR ENTIRE DEPTH TO ACCOMMODATE INSTALLATION OF NEW FOUNDATIONS.

6. THE GC SHALL USE EXTREME CAUTION IN AREAS OF DEMOLITION WHICH MAY DISTURB EXISTING STRUCTURES. TEMPORARY SHORING, BARRICADES, DUST PARTITIONS, ETC. SHALL BE PROVIDED AS REQ'D TO PROTECT ALL EXISTING STRUCTURES AND PROPERTY.

7. SEE STRUCTURAL, ELECTRICAL, SPRINKLER, AND PLUMBING DRAWINGS FOR RELATED DEMOLITION WORK.

8. VERIFY LOCATION OF EXISTING STRUCTURES AND SHORE UP ROOF/FLOOR ABOVE AS REQ'D BEFORE REMOVING WALL

9. REMOVAL OF ALL CEILINGS AND MOUNTED ITEMS THROUGHOUT THE CONTRACT AREA INCLUDE ANCHORING HARDWARE, AND MISCELLANEOUS FASTENINGS, MECHANICAL, ELECTRICAL, PLUMBING AND FIRE PREVENTION WORKS.

10. WALLS SHALL BE REMOVED AS INDICATED ON DEMOLITION PLANS. ALL UTILITIES IN WALL SHALL BE CUT TO BELOW SLAB OR ABOVE THE CEILING.

11. REMOVE ALL EXISTING ELECTRICAL AND PLUMBING LINES NOT TO BE RE-USED. CAP PLUMBING LINES AS REQ'D. ELECTRICAL WIRING SHALL BE DISCONNECTED BACK TO THE NEAREST ACTIVE LOCATION. ALL ABANDONED COMMUNICATION CABLES (DATA, TELEPHONE, FIRE ALARM, AND AUDIO/VIDEO CABLES) SHALL BE REMOVED TO SOURCE IF NOT TAGGED FOR FUTURE USE.

12. DEMOLITION PROCEDURES ARE THE SILL RESPONSIBILITY OF THE GENERAL GC OF THIS CONTRACT. GC TO "CUT OFF" ALL NECESSARY UTILITIES REQ'D TO OBTAIN DESIRED RESULTS. GC TO OBTAIN "SHUT OFF" APPROVALS FROM PLAYLAND PRIOR TO SCHEDULED DEMOLITION.

13. THE GC SHALL PATCH AND REPAIR ALL EXISTING CONSTRUCTION DISTURBED BY THE WORK AND PREPARE FOR NEW FINISH AS SHOWN ON THE INTERIOR ELEVATIONS.

14. THE GC SHALL BE RESPONSIBLE FOR THE CLEANING UP AND HAULING AWAY OF ALL TRASH AND DEBRIS ON A REGULAR BASIS DURING THE CONSTRUCTION PERIOD.

15. ALL DEBRIS REMOVED FROM THE SITE SHALL BE DISPOSED OF IN A LEGAL MANNER.

16. EXISTING EXITS SHALL REMAIN FULLY ACCESSIBLE AND UNOBSTRUCTED DURING THE PROGRESS OF THE WORK.

DEMOLITION LEGEND

- INDICATES DEMOLITION
- DM - # — DEMOLITION KEY NOTES
- INDICATES NIC
- INDICATES DEMOLITION OF SHINGLE ROOF
- INDICATES DEMOLITION OF EXISTING SBS ROOF
- INDICATES APPROXIMATE LIMIT OF SCOPE

DEMOLITION KEYNOTES

DM-14	REMOVE EXISTING LIGHTING FIXTURES AND ELECTRICAL WIRING CONNECTED TO THESE FIXTURES. SEE ELECTRICAL FOR DETAILS.
DM-16	REMOVE EXISTING ROOFING SHINGLES, UNDERLAYMENT AND ANY ROTTED WOOD SHEATHING. REPLACE DAMAGED SHEATHING TO MATCH EXISTING. COORDINATE WITH A/E.
DM-17	REMOVE EXISTING ROOFING MEMBRANES, UNDERLAYMENT AND ANY ROTTED WOOD SHEATHING. REPLACE EXISTING DAMAGED SHEATHING TO MATCH EXISTING. COORDINATE WITH A/E.
DM-50	CAREFULLY REMOVE EXISTING DRAGON HEADS FOR REFURBISHMENT AND REINSTALLATION. COORDINATE WITH PLUMBING AND ELECTRICAL DRAWINGS.
DM-52	DEMOLISH ROOF BALUSTRADE.
DM-54	CONTRACTOR TO CAREFULLY REMOVE, STORE AND CATALOG EXISTING "LANTERN" STYLE FIXTURE FOR REPLICATION. (TO BE UPDATED)
DM-72	EXISTING ROOF MOUNTED DIGITAL SCREEN TO REMAIN AND BE PROTECTED DURING CONSTRUCTION.

8/30/2022 4:12:05 PM

CONSULTANT INFORMATION
The LiRo Group
3 Aerial Way, Syosset, New York 11791
(516) 938-5476 www.liro.com

CONSULTANT SEAL
REGISTERED ARCHITECT ROBERT D. YOUNG JR. 023280 STATE OF NEW YORK

REVISION NUMBER	DATE	MADE BY	APP'D BY	REVISION

RECORD DRAWING CERTIFICATION
☐ AS BUILT – CHANGES AS NOTED ☐ AS BUILT – NO CHANGES

CONTRACTOR
NAME
SIGNATURE
TITLE DATE

PROJECT COORDINATOR
NAME
SIGNATURE
TITLE DATE

WESTCHESTER COUNTY, NEW YORK
DEPARTMENT OF PUBLIC WORKS AND TRANSPORTATION
DIVISION OF ENGINEERING

INFRASTRUCTURE REHABILITATION - PHASE 3
PLAYLAND PARK, RYE, NEW YORK
DRAGON COASTER VENDORS
DEMOLITION ROOF PLAN

CONTRACT NUMBER	22-523
SHEET NUMBER	DCV-A-03
DWG NO.:	402 of 664
SCALE:	As indicated
DATE:	08/23/2022
DPW FILE NUMBER	1-118-A-1151-0
REV. NO.	

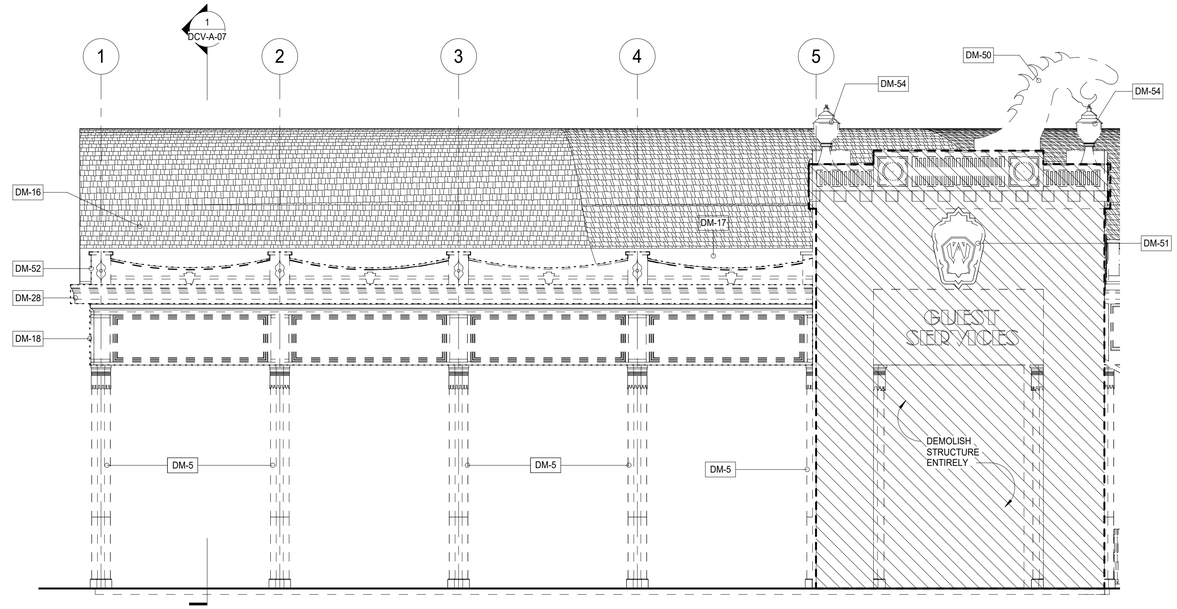

1 CROSS-AXIS NORTH COLONNADE - SOUTH ELEVATION DEMO
1/4" = 1'-0"

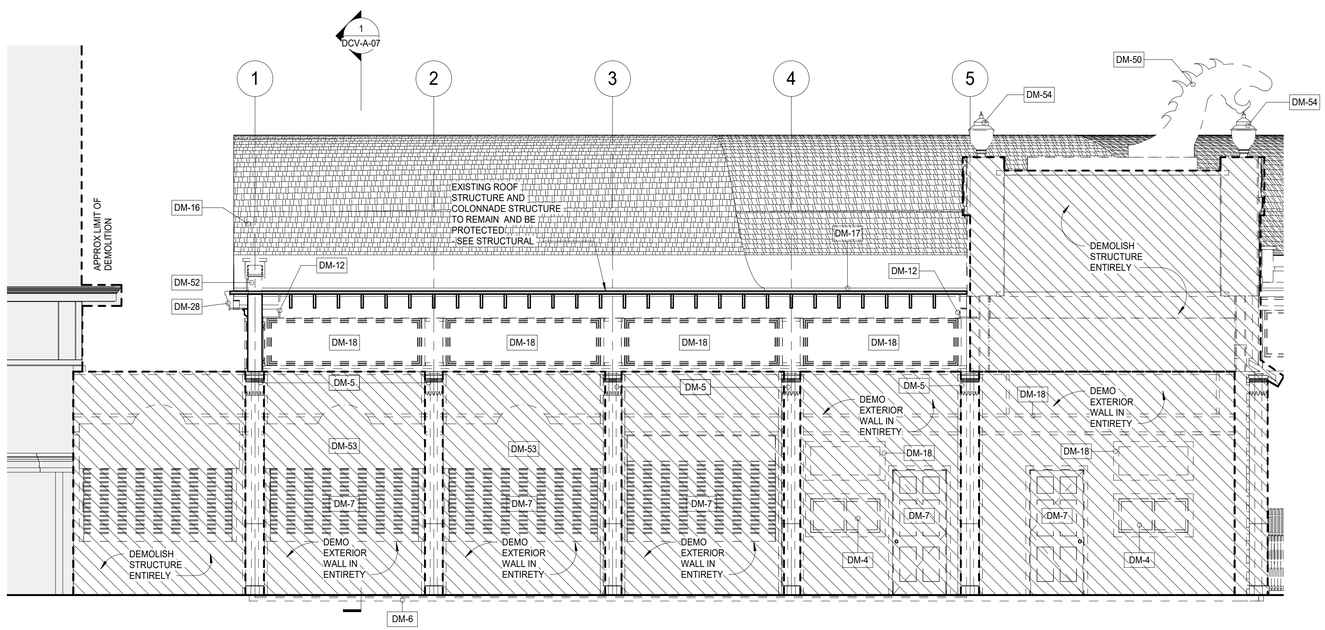

2 NORTH STOREFRONT ELEVATION DEMO
1/4" = 1'-0"

SHEET NOTES:

1. THE GC SHALL VISIT THE SITE AND FAMILIARIZE HIM/HERSELF WITH EXISTING CONDITIONS AND REQUIREMENTS OF THE WORK. THE GC SHALL FIELD VERIFY EXACT QUANTITIES OF ALL ITEMS TO BE REMOVED.

2. THE GC SHALL PHOTOGRAPH AND DOCUMENT EXISTING HISTORIC DECORATIVE TRIMS INCLUDING SIZES AND PROFILES PRIOR TO ENVIRONMENTAL REMEDIATION WORK START.

3. ITEMS TO BE REMOVED / DEMOLISHED AS INDICATED ON THE DRAWINGS ARE INTENDED TO SHOW THE GENERAL SCOPE OF THE DEMOLITION WORK. THE DRAWINGS DO NOT REPRESENT IN DETAIL ALL ITEMS OR SITUATIONS THAT MAY BE ENCOUNTERED DURING THE DEMOLITION. IT IS THE GC'S RESPONSIBILITY TO REMOVE, PROTECT, AND MAKE CORRECTIONS AS REQ'D TO ACHIEVE DRAWING INTENT. THE GC SHALL NOTIFY THE A/E OF ANY STRUCTURAL NONCONFORMITY TO PLANS AND SPECIFICATIONS.

4. PLAYLAND RESERVES THE RIGHT TO REVIEW ALL MATERIALS DESIGNATED FOR REMOVAL AND TO RETAIN OWNERSHIP OF SUCH MATERIALS. IF PLAYLAND RETAINS ANY MATERIAL THE GC SHALL MAKE ARRANGEMENTS WITH THE PLAYLAND'S SUPERINTENDENT TO HAVE THOSE MATERIALS REMOVED AND STORED OFF SITE AT NO ADDITIONAL COST.

5. DEMOLITION OF THE EXISTING BUILDING SHALL INCLUDE REMOVAL OF THE EXISTING FOUNDATIONS FOR THEIR ENTIRE DEPTH TO ACCOMMODATE INSTALLATION OF NEW FOUNDATIONS.

6. THE GC SHALL USE EXTREME CAUTION IN AREAS OF DEMOLITION WHICH MAY DISTURB EXISTING STRUCTURES. TEMPORARY SHORING, BARRICADES, DUST PARTITIONS, ETC. SHALL BE PROVIDED AS REQ'D TO PROTECT ALL EXISTING STRUCTURES AND PROPERTY.

7. SEE STRUCTURAL, ELECTRICAL, SPRINKLER, AND PLUMBING DRAWINGS FOR RELATED DEMOLITION WORK.

8. VERIFY LOCATION OF EXISTING STRUCTURES AND SHORE UP ROOF/FLOOR ABOVE AS REQ'D BEFORE REMOVING WALL

9. REMOVAL OF ALL CEILINGS AND MOUNTED ITEMS THROUGHOUT THE CONTRACT AREA INCLUDE ANCHORING HARDWARE, AND MISCELLANEOUS FASTENINGS, MECHANICAL, ELECTRICAL, PLUMBING AND FIRE PREVENTION WORKS.

10. WALLS SHALL BE REMOVED AS INDICATED ON DEMOLITION PLANS. ALL UTILITIES IN WALL SHALL BE CUT TO BELOW SLAB OR ABOVE THE CEILING.

11. REMOVE ALL EXISTING ELECTRICAL AND PLUMBING LINES NOT TO BE RE-USED. CAP PLUMBING LINES AS REQ'D. ELECTRICAL WIRING SHALL BE DISCONNECTED BACK TO THE NEAREST ACTIVE LOCATION. ALL ABANDONED COMMUNICATION CABLES (DATA, TELEPHONE, FIRE ALARM, AND AUDIO/VIDEO CABLES) SHALL BE REMOVED TO SOURCE IF NOT TAGGED FOR FUTURE USE.

12. DEMOLITION PROCEDURES ARE THE SILL RESPONSIBILITY OF THE GENERAL GC OF THIS CONTRACT. GC TO "CUT OFF" ALL NECESSARY UTILITIES REQ'D TO OBTAIN DESIRED RESULTS. GC TO OBTAIN "SHUT OFF" APPROVALS FROM PLAYLAND PRIOR TO SCHEDULED DEMOLITION.

13. THE GC SHALL PATCH AND REPAIR ALL EXISTING CONSTRUCTION DISTURBED BY THE WORK AND PREPARE FOR NEW FINISH AS SHOWN ON THE INTERIOR ELEVATIONS.

14. THE GC SHALL BE RESPONSIBLE FOR THE CLEANING UP AND HAULING AWAY OF ALL TRASH AND DEBRIS ON A REGULAR BASIS DURING THE CONSTRUCTION PERIOD.

15. ALL DEBRIS REMOVED FROM THE SITE SHALL BE DISPOSED OF IN A LEGAL MANNER.

16. EXISTING EXITS SHALL REMAIN FULLY ACCESSIBLE AND UNOBSTRUCTED DURING THE PROGRESS OF THE WORK.

DEMOLITION LEGEND

- INDICATES DEMOLITION
- DM - # — DEMOLITION KEY NOTES
- INDICATES NIC
- INDICATES DEMOLITION OF SHINGLE ROOF
- INDICATES DEMOLITION OF EXISTING SBS ROOF
- INDICATES APPROXIMATE LIMIT OF SCOPE

DEMOLITION KEYNOTES

DM-4	REMOVE EXISTING WINDOW & FRAME.
DM-5	REMOVE COLUMN ENCLOSURES. CAREFULLY REMOVE AT LEAST ONE COLUMN ENCLOSURE TO USE AS REFERENCE IN ORDER TO REPLICATE TRIMS TO MATCH LOCATION, SIZE AND SHAPE AS INDICATED. COORDINATE WITH STRUCTURAL DRAWINGS.
DM-6	REMOVE EXISTING WOOD DECKING. (COORDINATE EXTENT OF REMOVAL REQUIRED TO REPAIR FLOOR JOISTS TO REMAIN AS NEEDED - SEE STRUCTURAL DRAWINGS).
DM-7	REMOVE EXISTING DOOR & FRAME.
DM-12	REMOVE EXTERIOR SOFFIT AS NECESSARY WHERE PERIMETER LIGHTING IS TO BE REMOVED. COORDINATE WITH ELECTRICAL DRAWINGS.
DM-16	REMOVE EXISTING ROOFING SHINGLES, UNDERLAYMENT AND ANY ROTTED WOOD SHEATHING. REPLACE DAMAGED SHEATHING TO MATCH EXISTING. COORDINATE WITH A/E.
DM-17	REMOVE EXISTING ROOFING MEMBRANES, UNDERLAYMENT AND ANY ROTTED WOOD SHEATHING. REPLACE EXISTING DAMAGED SHEATHING TO MATCH EXISTING. COORDINATE WITH A/E.
DM-18	REMOVE EXISTING PANELS & TRIMS.
DM-28	REMOVE EXISTING GUTTER, FASCIA, AND SOFFITS.
DM-50	CAREFULLY REMOVE EXISTING DRAGON HEADS FOR REFURBISHMENT AND REINSTALLATION. COORDINATE WITH PLUMBING AND ELECTRICAL DRAWINGS.
DM-51	CAREFULLY REMOVE FACADE EMBLEM. CATALOG AND STORE FOR REPLICATION.
DM-52	DEMOLISH ROOF BALUSTRADE.
DM-53	REMOVE EXISTING AWNING. PROVIDE FOR DELIVERY TO THE OWNER AS DIRECTED BY THE A/E.
DM-54	CONTRACTOR TO CAREFULLY REMOVE, STORE AND CATALOG EXISTING "LANTERN" STYLE FIXTURE FOR REPLICATION. (TO BE UPDATED)

8/30/2022 4:12:09 PM

CONSULTANT INFORMATION
The LiRo Group
3 Aerial Way, Syosset, New York 11791
(516) 938-5476 www.liro.com

CONSULTANT SEAL
REGISTERED ARCHITECT ROBERT D. TOWNSEND 023280 STATE OF NEW YORK

REVISION NUMBER	DATE	MADE BY	APP'D BY	REVISION

RECORD DRAWING CERTIFICATION
☐ AS BUILT – CHANGES AS NOTED ☐ AS BUILT – NO CHANGES

CONTRACTOR
NAME
SIGNATURE
TITLE DATE

PROJECT COORDINATOR
NAME
SIGNATURE
TITLE DATE

WESTCHESTER COUNTY, NEW YORK
DEPARTMENT OF PUBLIC WORKS AND TRANSPORTATION
DIVISION OF ENGINEERING

INFRASTRUCTURE REHABILITATION - PHASE 3
PLAYLAND PARK, RYE, NEW YORK
DRAGON COASTER VENDORS
DEMOLITION ELEVATIONS 1 OF 3

CONTRACT NUMBER	22-523
SHEET NUMBER	DCV-A-04
DWG NO.:	403 of 664
SCALE:	As indicated
DATE:	08/23/2022
DPW FILE NUMBER	1-118-A-1152-0
REV. NO.	

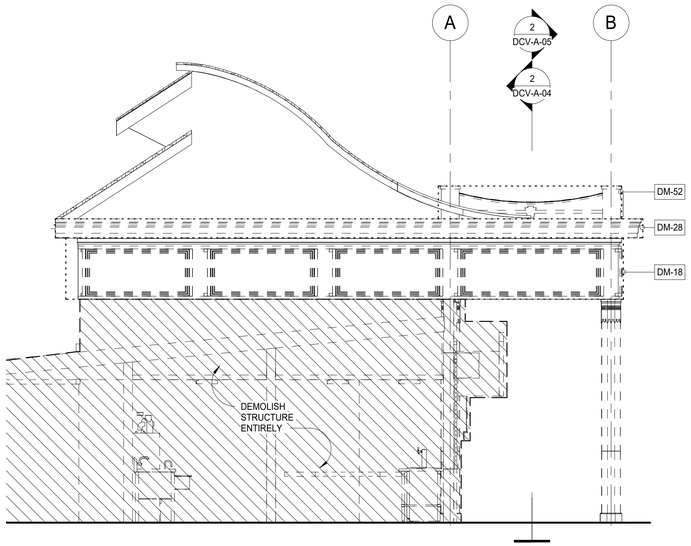

1 NORTH COLONNADE - WEST ELEVATION DEMOLITION SECTION AT EXISTING DIPPIN DOTS
1/4" = 1'-0"

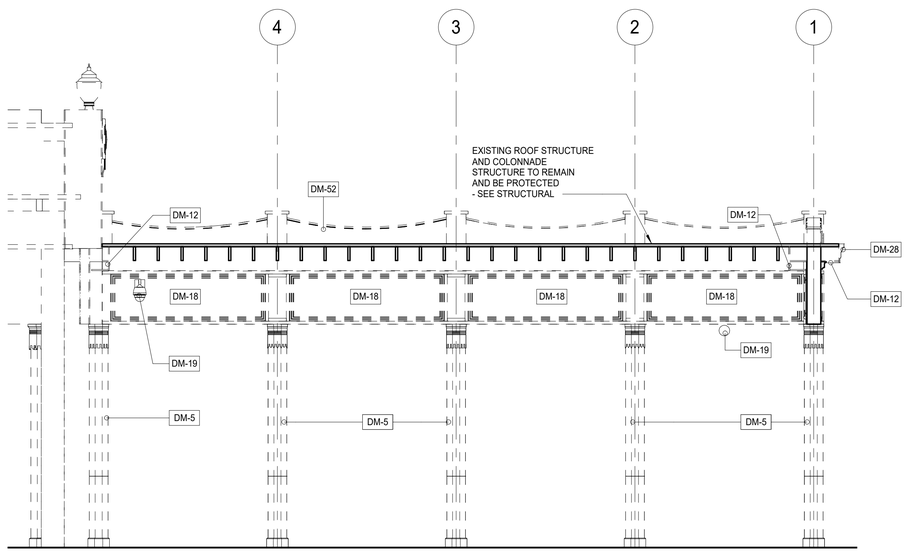

2 NORTH COLONNADE - INTERIOR DEMOLITION SECTION
1/4" = 1'-0"

SHEET NOTES:

1. THE GC SHALL VISIT THE SITE AND FAMILIARIZE HIM/HERSELF WITH EXISTING CONDITIONS AND REQUIREMENTS OF THE WORK. THE GC SHALL FIELD VERIFY EXACT QUANTITIES OF ALL ITEMS TO BE REMOVED.
2. THE GC SHALL PHOTOGRAPH AND DOCUMENT EXISTING HISTORIC DECORATIVE TRIMS INCLUDING SIZES AND PROFILES PRIOR TO ENVIRONMENTAL REMEDIATION WORK START.
3. ITEMS TO BE REMOVED / DEMOLISHED AS INDICATED ON THE DRAWINGS ARE INTENDED TO SHOW THE GENERAL SCOPE OF THE DEMOLITION WORK. THE DRAWINGS DO NOT REPRESENT IN DETAIL ALL ITEMS OR SITUATIONS THAT MAY BE ENCOUNTERED DURING THE DEMOLITION. IT IS THE GC'S RESPONSIBILITY TO REMOVE, PROTECT, AND MAKE CORRECTIONS AS REQ'D TO ACHIEVE DRAWING INTENT. THE GC SHALL NOTIFY THE A/E OF ANY STRUCTURAL NONCONFORMITY TO PLANS AND SPECIFICATIONS.
4. PLAYLAND RESERVES THE RIGHT TO REVIEW ALL MATERIALS DESIGNATED FOR REMOVAL AND TO RETAIN OWNERSHIP OF SUCH MATERIALS. IF PLAYLAND RETAINS ANY MATERIAL THE GC SHALL MAKE ARRANGEMENTS WITH THE PLAYLAND'S SUPERINTENDENT TO HAVE THOSE MATERIALS REMOVED AND STORED OFF SITE AT NO ADDITIONAL COST.
5. DEMOLITION OF THE EXISTING BUILDING SHALL INCLUDE REMOVAL OF THE EXISTING FOUNDATIONS FOR THEIR ENTIRE DEPTH TO ACCOMMODATE INSTALLATION OF NEW FOUNDATIONS.
6. THE GC SHALL USE EXTREME CAUTION IN AREAS OF DEMOLITION WHICH MAY DISTURB EXISTING STRUCTURES. TEMPORARY SHORING, BARRICADES, DUST PARTITIONS, ETC. SHALL BE PROVIDED AS REQ'D TO PROTECT ALL EXISTING STRUCTURES AND PROPERTY.
7. SEE STRUCTURAL, ELECTRICAL, SPRINKLER, AND PLUMBING DRAWINGS FOR RELATED DEMOLITION WORK.
8. VERIFY LOCATION OF EXISTING STRUCTURES AND SHORE UP ROOF/FLOOR ABOVE AS REQ'D BEFORE REMOVING WALL
9. REMOVAL OF ALL CEILINGS AND MOUNTED ITEMS THROUGHOUT THE CONTRACT AREA INCLUDE ANCHORING HARDWARE, AND MISCELLANEOUS FASTENINGS, MECHANICAL, ELECTRICAL, PLUMBING AND FIRE PREVENTION WORKS.
10. WALLS SHALL BE REMOVED AS INDICATED ON DEMOLITION PLANS. ALL UTILITIES IN WALL SHALL BE CUT TO BELOW SLAB OR ABOVE THE CEILING.
11. REMOVE ALL EXISTING ELECTRICAL AND PLUMBING LINES NOT TO BE RE-USED. CAP PLUMBING LINES AS REQ'D. ELECTRICAL WIRING SHALL BE DISCONNECTED BACK TO THE NEAREST ACTIVE LOCATION. ALL ABANDONED COMMUNICATION CABLES (DATA, TELEPHONE, FIRE ALARM, AND AUDIO/VIDEO CABLES) SHALL BE REMOVED TO SOURCE IF NOT TAGGED FOR FUTURE USE.
12. DEMOLITION PROCEDURES ARE THE SILL RESPONSIBILITY OF THE GENERAL GC OF THIS CONTRACT. GC TO "CUT OFF" ALL NECESSARY UTILITIES REQ'D TO OBTAIN DESIRED RESULTS. GC TO OBTAIN "SHUT OFF" APPROVALS FROM PLAYLAND PRIOR TO SCHEDULED DEMOLITION.
13. THE GC SHALL PATCH AND REPAIR ALL EXISTING CONSTRUCTION DISTURBED BY THE WORK AND PREPARE FOR NEW FINISH AS SHOWN ON THE INTERIOR ELEVATIONS.
14. THE GC SHALL BE RESPONSIBLE FOR THE CLEANING UP AND HAULING AWAY OF ALL TRASH AND DEBRIS ON A REGULAR BASIS DURING THE CONSTRUCTION PERIOD.
15. ALL DEBRIS REMOVED FROM THE SITE SHALL BE DISPOSED OF IN A LEGAL MANNER.
16. EXISTING EXITS SHALL REMAIN FULLY ACCESSIBLE AND UNOBSTRUCTED DURING THE PROGRESS OF THE WORK.

DEMOLITION LEGEND

	INDICATES DEMOLITION
DM - #	DEMOLITION KEY NOTES
	INDICATES NIC
	INDICATES DEMOLITION OF SHINGLE ROOF
	INDICATES DEMOLITION OF EXISTING SBS ROOF
- - - - -	INDICATES APPROXIMATE LIMIT OF SCOPE

DEMOLITION KEYNOTES

DM-5	REMOVE COLUMN ENCLOSURES. CAREFULLY REMOVE AT LEAST ONE COLUMN ENCLOSURE TO USE AS REFERENCE IN ORDER TO REPLICATE TRIMS TO MATCH LOCATION, SIZE AND SHAPE AS INDICATED. COORDINATE WITH STRUCTURAL DRAWINGS.
DM-12	REMOVE EXTERIOR SOFFIT AS NECESSARY WHERE PERIMETER LIGHTING IS TO BE REMOVED. COORDINATE WITH ELECTRICAL DRAWINGS.
DM-18	REMOVE EXISTING PANELS & TRIMS.
DM-19	DISCONNECT AND REMOVE EXISTING SUSPENDED EQUIPMENT SUCH AS CAMERAS, SPEAKERS, ETC. SEE ELECTRICAL DRAWINGS FOR DETAILS.
DM-28	REMOVE EXISTING GUTTER, FASCIA, AND SOFFITS.
DM-52	DEMOLISH ROOF BALUSTRADE.

8/30/2022 4:12:12 PM

CONSULTANT INFORMATION
The LiRo Group
3 Aerial Way, Syosset, New York 11791
(516) 938-5476 www.liro.com

CONSULTANT SEAL
REGISTERED ARCHITECT ROBERT D. CONNOLLY 023292 STATE OF NEW YORK

REVISION NUMBER	DATE	MADE BY	APP'D BY	REVISION

RECORD DRAWING CERTIFICATION
☐ AS BUILT – CHANGES AS NOTED ☐ AS BUILT – NO CHANGES

CONTRACTOR
NAME
SIGNATURE
TITLE DATE

PROJECT COORDINATOR
NAME
SIGNATURE
TITLE DATE

WESTCHESTER COUNTY, NEW YORK
DEPARTMENT OF PUBLIC WORKS AND TRANSPORTATION
DIVISION OF ENGINEERING

INFRASTRUCTURE REHABILITATION - PHASE 3
PLAYLAND PARK, RYE, NEW YORK
DRAGON COASTER VENDORS
DEMOLITION ELEVATIONS 2 OF 3

CONTRACT NUMBER	22-523
SHEET NUMBER	DCV-A-05
DWG NO.:	404 of 664
SCALE:	As indicated
DATE:	08/23/2022
DPW FILE NUMBER	1-118-A-1153-0
REV. NO.	

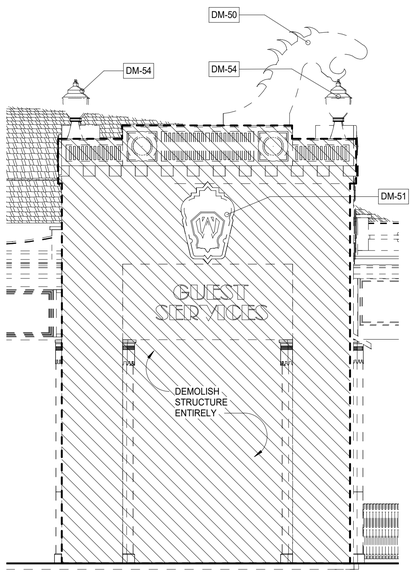

1 TOWER 6 - SOUTH DEMOLITION ELEVATION
1/4" = 1'-0"

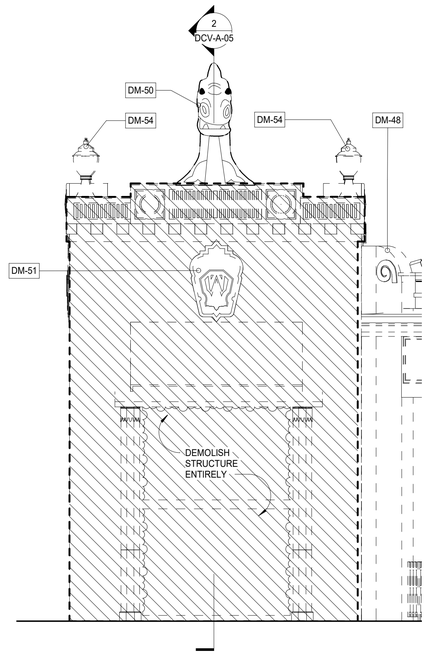

2 TOWER 6 - EAST DEMOLITION ELEVATION
1/4" = 1'-0"

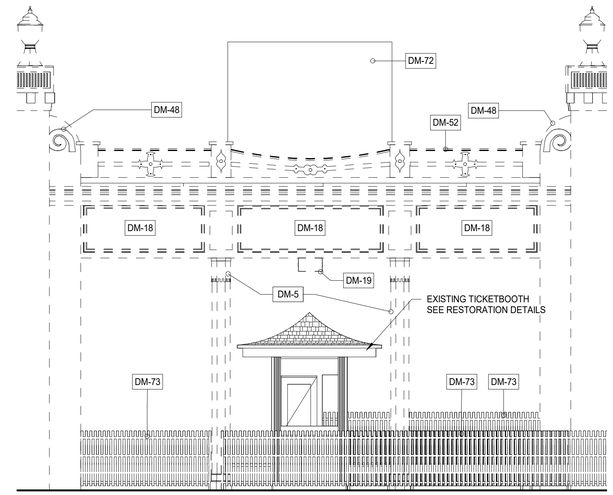

3 TOWER 6 & 7 DIAGONAL COLONNADE DEMOLITION ELEVATION
1/4" = 1'-0"

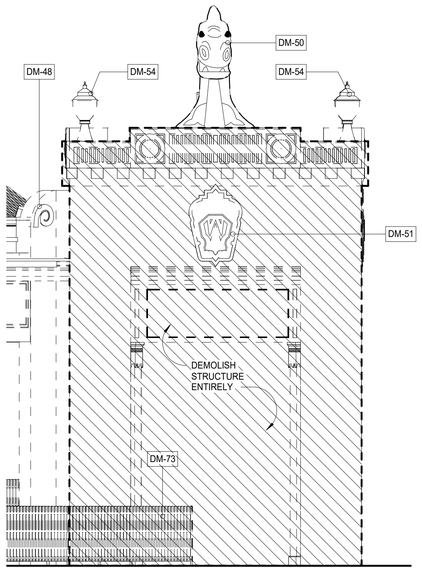

4 TOWER 7 - SOUTH DEMOLITION ELEVATION
1/4" = 1'-0"

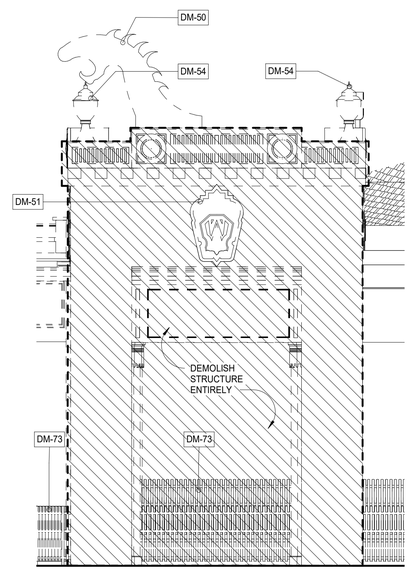

5 TOWER 7 - EAST DEMOLITION ELEVATION
1/4" = 1'-0"

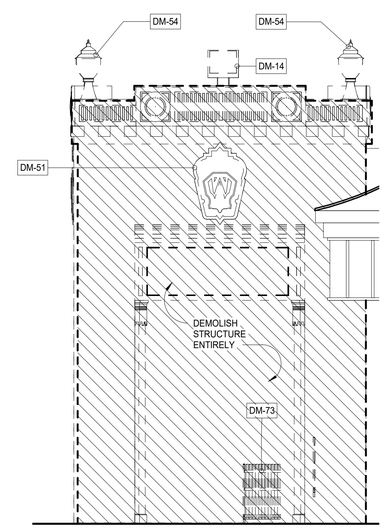

6 TOWER 7 - NORTH DEMOLITION ELEVATION
1/4" = 1'-0"

SHEET NOTES:

1. THE GC SHALL VISIT THE SITE AND FAMILIARIZE HIM/HERSELF WITH EXISTING CONDITIONS AND REQUIREMENTS OF THE WORK. THE GC SHALL FIELD VERIFY EXACT QUANTITIES OF ALL ITEMS TO BE REMOVED.
2. THE GC SHALL PHOTOGRAPH AND DOCUMENT EXISTING HISTORIC DECORATIVE TRIMS INCLUDING SIZES AND PROFILES PRIOR TO ENVIRONMENTAL REMEDIATION WORK START.
3. ITEMS TO BE REMOVED / DEMOLISHED AS INDICATED ON THE DRAWINGS ARE INTENDED TO SHOW THE GENERAL SCOPE OF THE DEMOLITION WORK. THE DRAWINGS DO NOT REPRESENT IN DETAIL ALL ITEMS OR SITUATIONS THAT MAY BE ENCOUNTERED DURING THE DEMOLITION. IT IS THE GC'S RESPONSIBILITY TO REMOVE, PROTECT, AND MAKE CORRECTIONS AS REQ'D TO ACHIEVE DRAWING INTENT. THE GC SHALL NOTIFY THE A/E OF ANY STRUCTURAL NONCONFORMITY TO PLANS AND SPECIFICATIONS.
4. PLAYLAND RESERVES THE RIGHT TO REVIEW ALL MATERIALS DESIGNATED FOR REMOVAL AND TO RETAIN OWNERSHIP OF SUCH MATERIALS. IF PLAYLAND RETAINS ANY MATERIAL THE GC SHALL MAKE ARRANGEMENTS WITH THE PLAYLAND'S SUPERINTENDENT TO HAVE THOSE MATERIALS REMOVED AND STORED OFF SITE AT NO ADDITIONAL COST.
5. DEMOLITION OF THE EXISTING BUILDING SHALL INCLUDE REMOVAL OF THE EXISTING FOUNDATIONS FOR THEIR ENTIRE DEPTH TO ACCOMMODATE INSTALLATION OF NEW FOUNDATIONS.
6. THE GC SHALL USE EXTREME CAUTION IN AREAS OF DEMOLITION WHICH MAY DISTURB EXISTING STRUCTURES. TEMPORARY SHORING, BARRICADES, DUST PARTITIONS, ETC. SHALL BE PROVIDED AS REQ'D TO PROTECT ALL EXISTING STRUCTURES AND PROPERTY.
7. SEE STRUCTURAL, ELECTRICAL, SPRINKLER, AND PLUMBING DRAWINGS FOR RELATED DEMOLITION WORK.
8. VERIFY LOCATION OF EXISTING STRUCTURES AND SHORE UP ROOF/FLOOR ABOVE AS REQ'D BEFORE REMOVING WALL
9. REMOVAL OF ALL CEILINGS AND MOUNTED ITEMS THROUGHOUT THE CONTRACT AREA INCLUDE ANCHORING HARDWARE, AND MISCELLANEOUS FASTENINGS, MECHANICAL, ELECTRICAL, PLUMBING AND FIRE PREVENTION WORKS.
10. WALLS SHALL BE REMOVED AS INDICATED ON DEMOLITION PLANS. ALL UTILITIES IN WALL SHALL BE CUT TO BELOW SLAB OR ABOVE THE CEILING.
11. REMOVE ALL EXISTING ELECTRICAL AND PLUMBING LINES NOT TO BE RE-USED. CAP PLUMBING LINES AS REQ'D. ELECTRICAL WIRING SHALL BE DISCONNECTED BACK TO THE NEAREST ACTIVE LOCATION. ALL ABANDONED COMMUNICATION CABLES (DATA, TELEPHONE, FIRE ALARM, AND AUDIO/VIDEO CABLES) SHALL BE REMOVED TO SOURCE IF NOT TAGGED FOR FUTURE USE.
12. DEMOLITION PROCEDURES ARE THE SILL RESPONSIBILITY OF THE GENERAL GC OF THIS CONTRACT. GC TO "CUT OFF" ALL NECESSARY UTILITIES REQ'D TO OBTAIN DESIRED RESULTS. GC TO OBTAIN "SHUT OFF" APPROVALS FROM PLAYLAND PRIOR TO SCHEDULED DEMOLITION.
13. THE GC SHALL PATCH AND REPAIR ALL EXISTING CONSTRUCTION DISTURBED BY THE WORK AND PREPARE FOR NEW FINISH AS SHOWN ON THE INTERIOR ELEVATIONS.
14. THE GC SHALL BE RESPONSIBLE FOR THE CLEANING UP AND HAULING AWAY OF ALL TRASH AND DEBRIS ON A REGULAR BASIS DURING THE CONSTRUCTION PERIOD.
15. ALL DEBRIS REMOVED FROM THE SITE SHALL BE DISPOSED OF IN A LEGAL MANNER.
16. EXISTING EXITS SHALL REMAIN FULLY ACCESSIBLE AND UNOBSTRUCTED DURING THE PROGRESS OF THE WORK.

DEMOLITION LEGEND

	INDICATES DEMOLITION
DM - #	DEMOLITION KEY NOTES
	INDICATES NIC
	INDICATES DEMOLITION OF SHINGLE ROOF
	INDICATES DEMOLITION OF EXISTING SBS ROOF
	INDICATES APPROXIMATE LIMIT OF SCOPE

DEMOLITION KEYNOTES

DM-5	REMOVE COLUMN ENCLOSURES. CAREFULLY REMOVE AT LEAST ONE COLUMN ENCLOSURE TO USE AS REFERENCE IN ORDER TO REPLICATE TRIMS TO MATCH LOCATION, SIZE AND SHAPE AS INDICATED. COORDINATE WITH STRUCTURAL DRAWINGS.
DM-14	REMOVE EXISTING LIGHTING FIXTURES AND ELECTRICAL WIRING CONNECTED TO THESE FIXTURES. SEE ELECTRICAL FOR DETAILS.
DM-18	REMOVE EXISTING PANELS & TRIMS.
DM-19	DISCONNECT AND REMOVE EXISTING SUSPENDED EQUIPMENT SUCH AS CAMERAS, SPEAKERS, ETC. SEE ELECTRICAL DRAWINGS FOR DETAILS.
DM-48	DEMOLISH WING PIER.
DM-50	CAREFULLY REMOVE EXISTING DRAGON HEADS FOR REFURBISHMENT AND REINSTALLATION. COORDINATE WITH PLUMBING AND ELECTRICAL DRAWINGS.
DM-51	CAREFULLY REMOVE FACADE EMBLEM. CATALOG AND STORE FOR REPLICATION.
DM-52	DEMOLISH ROOF BALUSTRADE.
DM-54	CONTRACTOR TO CAREFULLY REMOVE, STORE AND CATALOG EXISTING "LANTERN" STYLE FIXTURE FOR REPLICATION. (TO BE UPDATED)
DM-72	EXISTING ROOF MOUNTED DIGITAL SCREEN TO REMAIN AND BE PROTECTED DURING CONSTRUCTION.
DM-73	CAREFULLY REMOVE AND STORE EXISTING FENCE. SAND AND PRIME FOR NEW COAT OF PAINT FOR REINSTALLATION.

8/30/2022 4:12:19 PM

CONSULTANT INFORMATION
The LiRo Group
3 Aerial Way, Syosset, New York 11791
(516) 938-5476 www.liro.com

CONSULTANT SEAL
REGISTERED ARCHITECT ROBERT D. YOUNG JR. 023280 STATE OF NEW YORK

REVISION NUMBER	DATE	MADE BY	APP'D BY	REVISION

RECORD DRAWING CERTIFICATION
☐ AS BUILT – CHANGES AS NOTED ☐ AS BUILT – NO CHANGES

CONTRACTOR
NAME
SIGNATURE
TITLE DATE

PROJECT COORDINATOR
NAME
SIGNATURE
TITLE DATE

WESTCHESTER COUNTY, NEW YORK
DEPARTMENT OF PUBLIC WORKS AND TRANSPORTATION
DIVISION OF ENGINEERING

INFRASTRUCTURE REHABILITATION - PHASE 3
PLAYLAND PARK, RYE, NEW YORK
DRAGON COASTER VENDORS
DEMOLITION ELEVATIONS 3 OF 3

CONTRACT NUMBER	22-523
SHEET NUMBER	DCV-A-06
DWG NO.:	405 of 664
SCALE:	As indicated
DATE:	08/23/2022
DPW FILE NUMBER	1-118-A-1154-0
REV. NO.	

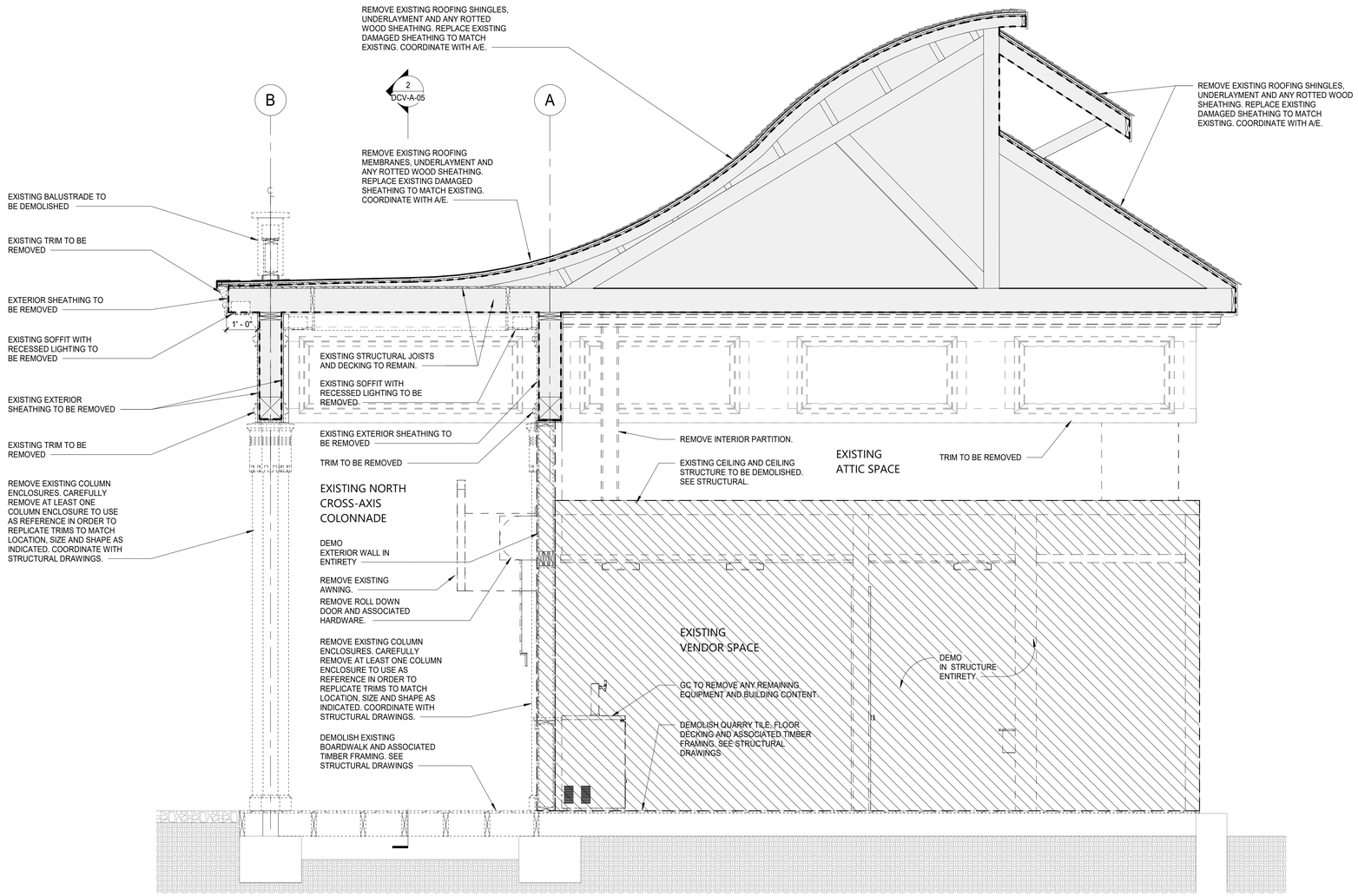

1 SECTION AT END WALL - DEMOLITION
1/2" = 1'-0"

SHEET NOTES:

1. THE GC SHALL VISIT THE SITE AND FAMILIARIZE HIM/HERSELF WITH EXISTING CONDITIONS AND REQUIREMENTS OF THE WORK. THE GC SHALL FIELD VERIFY EXACT QUANTITIES OF ALL ITEMS TO BE REMOVED.

2. THE GC SHALL PHOTOGRAPH AND DOCUMENT EXISTING HISTORIC DECORATIVE TRIMS INCLUDING SIZES AND PROFILES PRIOR TO ENVIRONMENTAL REMEDIATION WORK START.

3. ITEMS TO BE REMOVED / DEMOLISHED AS INDICATED ON THE DRAWINGS ARE INTENDED TO SHOW THE GENERAL SCOPE OF THE DEMOLITION WORK. THE DRAWINGS DO NOT REPRESENT IN DETAIL ALL ITEMS OR SITUATIONS THAT MAY BE ENCOUNTERED DURING THE DEMOLITION. IT IS THE GC'S RESPONSIBILITY TO REMOVE, PROTECT, AND MAKE CORRECTIONS AS REQ'D TO ACHIEVE DRAWING INTENT. THE GC SHALL NOTIFY THE A/E OF ANY STRUCTURAL NONCONFORMITY TO PLANS AND SPECIFICATIONS.

4. PLAYLAND RESERVES THE RIGHT TO REVIEW ALL MATERIALS DESIGNATED FOR REMOVAL AND TO RETAIN OWNERSHIP OF SUCH MATERIALS. IF PLAYLAND RETAINS ANY MATERIAL THE GC SHALL MAKE ARRANGEMENTS WITH THE PLAYLAND'S SUPERINTENDENT TO HAVE THOSE MATERIALS REMOVED AND STORED OFF SITE AT NO ADDITIONAL COST.

5. DEMOLITION OF THE EXISTING BUILDING SHALL INCLUDE REMOVAL OF THE EXISTING FOUNDATIONS FOR THEIR ENTIRE DEPTH TO ACCOMMODATE INSTALLATION OF NEW FOUNDATIONS.

6. THE GC SHALL USE EXTREME CAUTION IN AREAS OF DEMOLITION WHICH MAY DISTURB EXISTING STRUCTURES. TEMPORARY SHORING, BARRICADES, DUST PARTITIONS, ETC. SHALL BE PROVIDED AS REQ'D TO PROTECT ALL EXISTING STRUCTURES AND PROPERTY.

7. SEE STRUCTURAL, ELECTRICAL, SPRINKLER, AND PLUMBING DRAWINGS FOR RELATED DEMOLITION WORK.

8. VERIFY LOCATION OF EXISTING STRUCTURES AND SHORE UP ROOF/FLOOR ABOVE AS REQ'D BEFORE REMOVING WALL

9. REMOVAL OF ALL CEILINGS AND MOUNTED ITEMS THROUGHOUT THE CONTRACT AREA INCLUDE ANCHORING HARDWARE, AND MISCELLANEOUS FASTENINGS, MECHANICAL, ELECTRICAL, PLUMBING AND FIRE PREVENTION WORKS.

10. WALLS SHALL BE REMOVED AS INDICATED ON DEMOLITION PLANS. ALL UTILITIES IN WALL SHALL BE CUT TO BELOW SLAB OR ABOVE THE CEILING.

11. REMOVE ALL EXISTING ELECTRICAL AND PLUMBING LINES NOT TO BE RE-USED. CAP PLUMBING LINES AS REQ'D. ELECTRICAL WIRING SHALL BE DISCONNECTED BACK TO THE NEAREST ACTIVE LOCATION. ALL ABANDONED COMMUNICATION CABLES (DATA, TELEPHONE, FIRE ALARM, AND AUDIO/VIDEO CABLES) SHALL BE REMOVED TO SOURCE IF NOT TAGGED FOR FUTURE USE.

12. DEMOLITION PROCEDURES ARE THE SILL RESPONSIBILITY OF THE GENERAL GC OF THIS CONTRACT. GC TO "CUT OFF" ALL NECESSARY UTILITIES REQ'D TO OBTAIN DESIRED RESULTS. GC TO OBTAIN "SHUT OFF" APPROVALS FROM PLAYLAND PRIOR TO SCHEDULED DEMOLITION.

13. THE GC SHALL PATCH AND REPAIR ALL EXISTING CONSTRUCTION DISTURBED BY THE WORK AND PREPARE FOR NEW FINISH AS SHOWN ON THE INTERIOR ELEVATIONS.

14. THE GC SHALL BE RESPONSIBLE FOR THE CLEANING UP AND HAULING AWAY OF ALL TRASH AND DEBRIS ON A REGULAR BASIS DURING THE CONSTRUCTION PERIOD.

15. ALL DEBRIS REMOVED FROM THE SITE SHALL BE DISPOSED OF IN A LEGAL MANNER.

16. EXISTING EXITS SHALL REMAIN FULLY ACCESSIBLE AND UNOBSTRUCTED DURING THE PROGRESS OF THE WORK.

DEMOLITION LEGEND

	INDICATES DEMOLITION
DM - #	DEMOLITION KEY NOTES
	INDICATES NIC
	INDICATES DEMOLITION OF SHINGLE ROOF
	INDICATES DEMOLITION OF EXISTING SBS ROOF
- - - -	INDICATES APPROXIMATE LIMIT OF SCOPE

8/30/2022 4:12:21 PM

CONSULTANT INFORMATION

The LiRo Group
3 Aerial Way, Syosset, New York 11791
(516) 938-5476 www.liro.com

CONSULTANT SEAL
REGISTERED ARCHITECT ROBERT D. YOUNG JR. 023280 STATE OF NEW YORK

REVISION NUMBER	DATE	MADE BY	APP'D BY	REVISION

RECORD DRAWING CERTIFICATION
☐ AS BUILT – CHANGES AS NOTED ☐ AS BUILT – NO CHANGES

CONTRACTOR
NAME
SIGNATURE
TITLE DATE

PROJECT COORDINATOR
NAME
SIGNATURE
TITLE DATE

WESTCHESTER COUNTY, NEW YORK
DEPARTMENT OF PUBLIC WORKS AND TRANSPORTATION
DIVISION OF ENGINEERING

INFRASTRUCTURE REHABILITATION - PHASE 3
PLAYLAND PARK, RYE, NEW YORK
DRAGON COASTER VENDORS
DEMOLITION SECTION

CONTRACT NUMBER	22-523
SHEET NUMBER	DCV-A-07
DWG NO.:	406 of 664
SCALE:	As indicated
DATE:	08/23/2022
DPW FILE NUMBER	1-118-A-1155-0
REV. NO.	

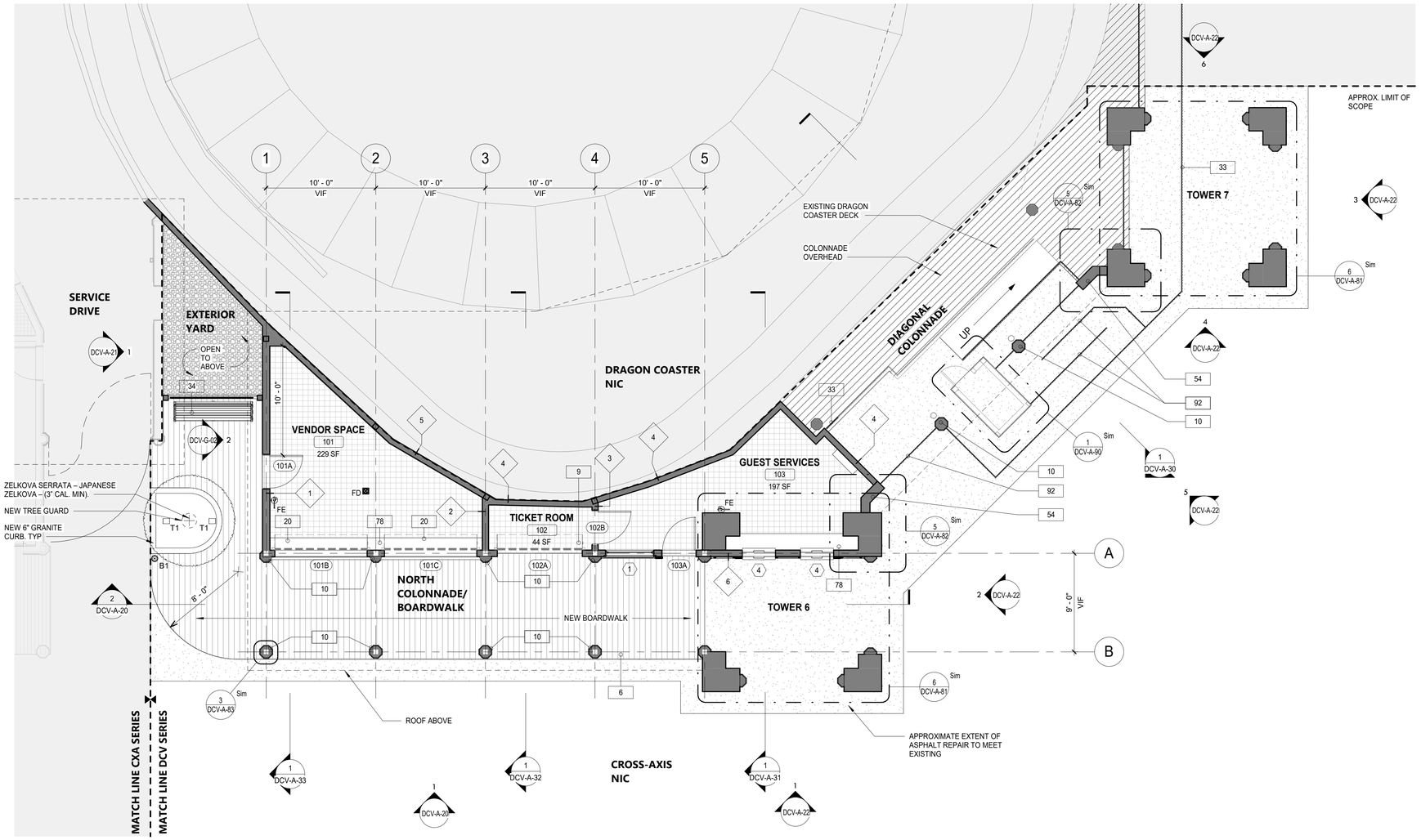

1 GROUND FLOOR - CONSTRUCTION PLAN
3/16" = 1'-0"

SHEET NOTES:

1. DIMENSIONS ARE TO FACE OF WALL FINISH, GRID LINES, OR CENTERLINE OF COLUMN. ALL ELEVATIONS ARE NOTED FROM FINISH FLOOR ELEVATIONS.

2. PROVIDE DRYWALL TRIM AT ALL EXPOSED EDGES AND CORNERS.

3. MINIMUM DIMENSION FROM ANY CORNER OR WALL TO FRAMING STUD AT DOOR JAMB OPENING SHALL BE 4" UNO.

4. PROVIDE FIRE RETARDANT WOOD BLOCKING FOR ANY WALL MOUNTED EQUIPMENT OR ACCESSORIES. COORDINATE ALL BLOCKING REQUIREMENTS NECESSARY WITH OTHER TRADES.

5. THE GC SHALL VERIFY DIMENSIONS OF THE EXISTING SPACE AND OF ANY EXISTING CONSTRUCTION TO REMAIN BY ACTUAL MEASUREMENT BEFORE ANY WORK IS PERFORMED. IF ANY MEASUREMENTS DIFFER FROM DIMENSIONS SHOWN ON PLAN, GC IS TO NOTIFY THE A/E IMMEDIATELY. THE GC SHALL BE RESPONSIBLE FOR CORRECTING ANY AND ALL DISCREPANCIES FOUND AFTER THE WORK IS PERFORMED, AT NO ADDITIONAL EXPENSE TO THE OWNER.

6. THE GC SHALL BE RESPONSIBLE FOR COORDINATING WITH OWNER ON ALL WORK TO BE PERFORMED BY THE OWNER. ANY POTENTIAL CONFLICTS OR DELAYS CAUSED BY THE OWNER'S SUBCONSTRACTORS MUST BE DOCUMENTED IN WRITING TO THE OWNER BEFORE THE DELAY IS ACTUALLY INCURRED FOR IT TO BE CONSIDERED. OTHERWISE THE GC WILL BE RESPONSIBLE FOR MEETING THE SCHEDULE AS OUTLINED IN THE CONTRACT.

7. THE GC TO VERIFY ALL FINISHED DIMENSIONS. FIELD CONDITIONS ALTERING ANY DIMENSIONS SHOULD BE BROUGHT TO THE ATTENTION OF THE A/E.

8. THE GC SHALL SUPPLY ALL MATERIAL, LABOR, AND COORDINATION REQ'D FOR THE INSTALLATION OF ALL OWNER-SUPPLIED ITEMS AS DESCRIBED IN THE DOCUMENTS, UNO.

9. THE GC IS RESPONSIBLE FOR ALL FLOOR AND WALL PENETRATIONS FOR ELECTRICAL AND MECHANICAL WORK. ALL SUCH OPENING SHALL BE FRAMED AND REINFORCED.

10. FLOOR SURFACES SHALL BE LEVELED TO ASSURE SMOOTH SURFACE FOR FINISH FLOOR INSTALLATION.

11. THE GC TO COORDINATE ALL UTILITY STUB-UPS AND LOCATION OF ALL EQUIPMENT PRIOR TO INSTALLING ANY ONE ITEM.

12.PROVIDE PAINTED ACCESS PANELS IN WALLS & CEILING AT CONCEALED ITEMS SUCH AS VALVES, CONTROLS, SWITCHES OR ANY OTHER ITEMS THAT REQUIRES ACCESS. GC TO DETERMINE ACCESS PANEL LOCATION W/ A/E PRIOR TO INSTALLATION.

LEGEND:

	NEW IPE WOOD DECK	#	DOOR TAG
	QUARRY TILE FLOOR	#	WINDOW TAG
	ASPHALT REPAIR	FE	FIRE EXTINGUISHER
	GRAVEL SURFACE	FD	FLOOR DRAIN
	NOT IN CONTRACT	#	WALL TAG
	APPROXIMATE LIMIT OF SCOPE	B1	BOLLARD LIGHT
		T1	TREE KNUCKLE LIGHT
		?	KEY NOTES

CONSTRUCTION KEYNOTES

6	INSTALL NEW IPE DECKING. SEE STRUCTURAL FOR DETAILS.
9	PROVIDE AND INSTALL ROLL DOWN DOOR. SEE DETAILS AND SCHEDULE.
10	PROVIDE AND INSTALL COLUMN ENCLOSURES. SEE DETAILS.
20	NEW COUNTER ROLL DOWN DOOR LOCATED AT INTERIOR AND ASSOCIATED HARDWARE. REFER TO SCHEDULE FOR MORE DETAILS. CONTRACTOR TO V.I.F. ALL DIMENSIONS BEFORE ORDERING (TYPICAL THROUGHOUT.)
33	NEW WOOD FENCE. SEE DETAILS.
34	PROVIDE NEW BENCH.
54	RECONSTRUCT WING PIER. SEE STRUCTURAL DRAWINGS.
78	CONSTRUCT NEW MILLWORK. SEE DCV-A-86 FOR DETAILS.
92	REINSTALL EXISTING FENCE.

8/30/2022 4:12:25 PM

CONSULTANT INFORMATION
The LiRo Group
3 Aerial Way, Syosset, New York 11791
(516) 938-5476 www.liro.com

CONSULTANT SEAL
REGISTERED ARCHITECT ROBERT D. YOUNG JR. 023280 STATE OF NEW YORK

REVISION NUMBER	DATE	MADE BY	APP'D BY	REVISION

RECORD DRAWING CERTIFICATION
☐ AS BUILT – CHANGES AS NOTED ☐ AS BUILT – NO CHANGES

CONTRACTOR
NAME
SIGNATURE
TITLE DATE

PROJECT COORDINATOR
NAME
SIGNATURE
TITLE DATE

WESTCHESTER COUNTY, NEW YORK
DEPARTMENT OF PUBLIC WORKS AND TRANSPORTATION
DIVISION OF ENGINEERING

INFRASTRUCTURE REHABILITATION - PHASE 3
PLAYLAND PARK, RYE, NEW YORK
DRAGON COASTER VENDORS
GROUND FLOOR - CONSTRUCTION PLAN

CONTRACT NUMBER	22-523
SHEET NUMBER	DCV-A-10
DWG NO.:	407 of 664
SCALE:	As indicated
DATE:	08/23/2022
DPW FILE NUMBER	1-118-A-1156-0
REV. NO.	

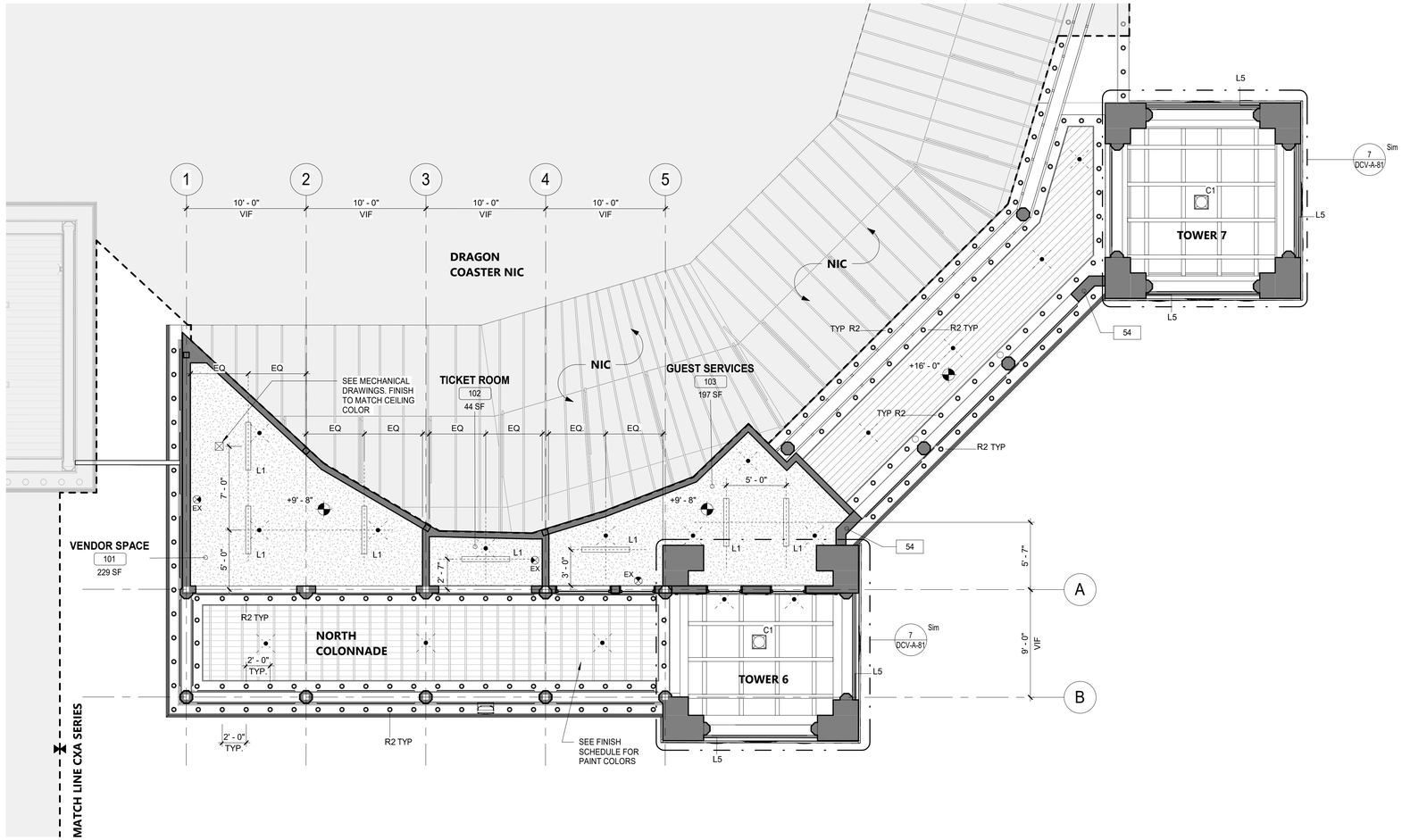

1 GROUND FLOOR - REFLECTED CEILING PLAN
3/16" = 1'-0"

SHEET NOTES

1. GC SHALL PROVIDE THE NECESSARY FRAMING OR BRIDGING FOR ALL LIGHT FIXTURES, DIFFUSERS, RETURNS, ETC., AS WELL AS REQ'D CUTOUTS.
2. GC SHALL NOTIFY THE A/E OF ANY POSSIBLE INTERFERENCES BEFORE PROCEEDING WITH CEILING INSTALLATION.
3. CEILING CONSTRUCTION SHALL NOT BE CLOSED IN UNTIL THE CONSTRUCTION MANAGER AND AUTHORITIES HAVING JURISDICTION HAVE HAD AN OPPORTUNITY TO INSPECT THE AREA AND ASCERTAIN THAT ALL DUCTWORK, PLUMBING, ELECTRICAL CONDUITS AND LINES HAVE BEEN INSTALLED PROPERLY.
4. FASCIAS OR ANY BREAK IN THE CEILING HEIGHTS CREATED BY THE INSTALLATION AND/OR ALTERATION OF HEATING, VENTILATING, A/C OR MECHANICAL DUCTS, PIPING OR OTHER EQUIPMENT SHALL BE FORMED OF GYPSUM WALLBOARD ON FURRING CHANNELS.
5. THE CEILING PANEL JOINTS SHALL BE ALIGNED PERFECTLY WITH LIGHTING FIXTURES.
6. ALL JOINTS IN THE PANEL SHALL BE SQUARE, LEVEL AND PERFECTLY ALIGNED WITH EACH OTHER AND WITH BUILDING FIXTURES.
7. GC SHALL PROVIDE CUTOUTS AND OTHER SPECIAL PROVISIONS IN ACOUSTICAL WORK AS REQ'D FOR LIGHTING FIXTURES, REGISTERS, DIFFUSERS AND OTHER INSERTED ITEMS. GENERAL CONSTRUCTION GC SHALL INSTALL ACCESS PANELS IN GYPSUM DRYWALL CEILINGS FOR ACCESS TO AIR CONDITIONING, PLUMBING, TELEPHONE & ELECTRICAL CONTROL EQUIPMENT REQUIRING ACCESS.
8. IN GENERAL, WITHIN EACH AREA, CEILING WORK REQUIREMENTS SHALL BE EXECUTED IN SUCH A MANNER AS TO PROVIDE CONT. MATCHED AND ALIGNED CEILINGS. THE FINAL CEILING INSTALLATION SHALL BE FREE OF ALL VISUAL DEFECTS.

LEGEND

- INDICATES SCOPE NOT IN CONTRACT
- INDICATES T1-11 CEILING
- INDICATES GYPSUM CEILING
- INDICATES WOOD DECK CEILING
- R2 — R2 RECESSED CAN LIGHT IN SOFFIT. SEE ELEC. DWGS
- L5 — L5 LINEAR LIGHT (SEE ELEC. DWGS)
- L1 — L1 LINEAR LIGHT (SEE ELEC. DWGS)
- M2 — M2 MARQUEE LIGHTING AT BALUSTRADE (1'-0" SPACING)
- M2A — M2A MARQUEE LIGHTING AT BALUSTRADE (6" SPACING)
- C1 — C1 SURFACE MOUNTED LIGHT
- SPRINKLER (SEE FIRE PROTECTION DWGS)
- SUPPLY DIFFUSER. SEE MECHANICAL DRAWINGS
- EXHAUST GRILL. SEE MECHANICAL DRAWINGS
- EX — EX- EXIT SIGN

8/30/2022 4:12:31 PM

CONSULTANT INFORMATION
The LiRo Group
3 Aerial Way, Syosset, New York 11791
(516) 938-5476 www.liro.com

CONSULTANT SEAL
REGISTERED ARCHITECT ROBERT D. YOUNG JR. 023280 STATE OF NEW YORK

REVISION NUMBER	DATE	MADE BY	APP'D BY	REVISION

RECORD DRAWING CERTIFICATION
AS BUILT – CHANGES AS NOTED
AS BUILT – NO CHANGES

CONTRACTOR
NAME
SIGNATURE
TITLE DATE

PROJECT COORDINATOR
NAME
SIGNATURE
TITLE DATE

WESTCHESTER COUNTY, NEW YORK
DEPARTMENT OF PUBLIC WORKS AND TRANSPORTATION
DIVISION OF ENGINEERING

INFRASTRUCTURE REHABILITATION - PHASE 3
PLAYLAND PARK, RYE, NEW YORK
DRAGON COASTER VENDORS
GROUND FLOOR - REFLECTED CEILING PLAN

CONTRACT NUMBER	22-523
SHEET NUMBER	DCV-A-11
DWG NO.:	408 of 664
SCALE:	As indicated
DATE:	08/23/2022
DPW FILE NUMBER	1-118-A-1157-0
REV. NO.	

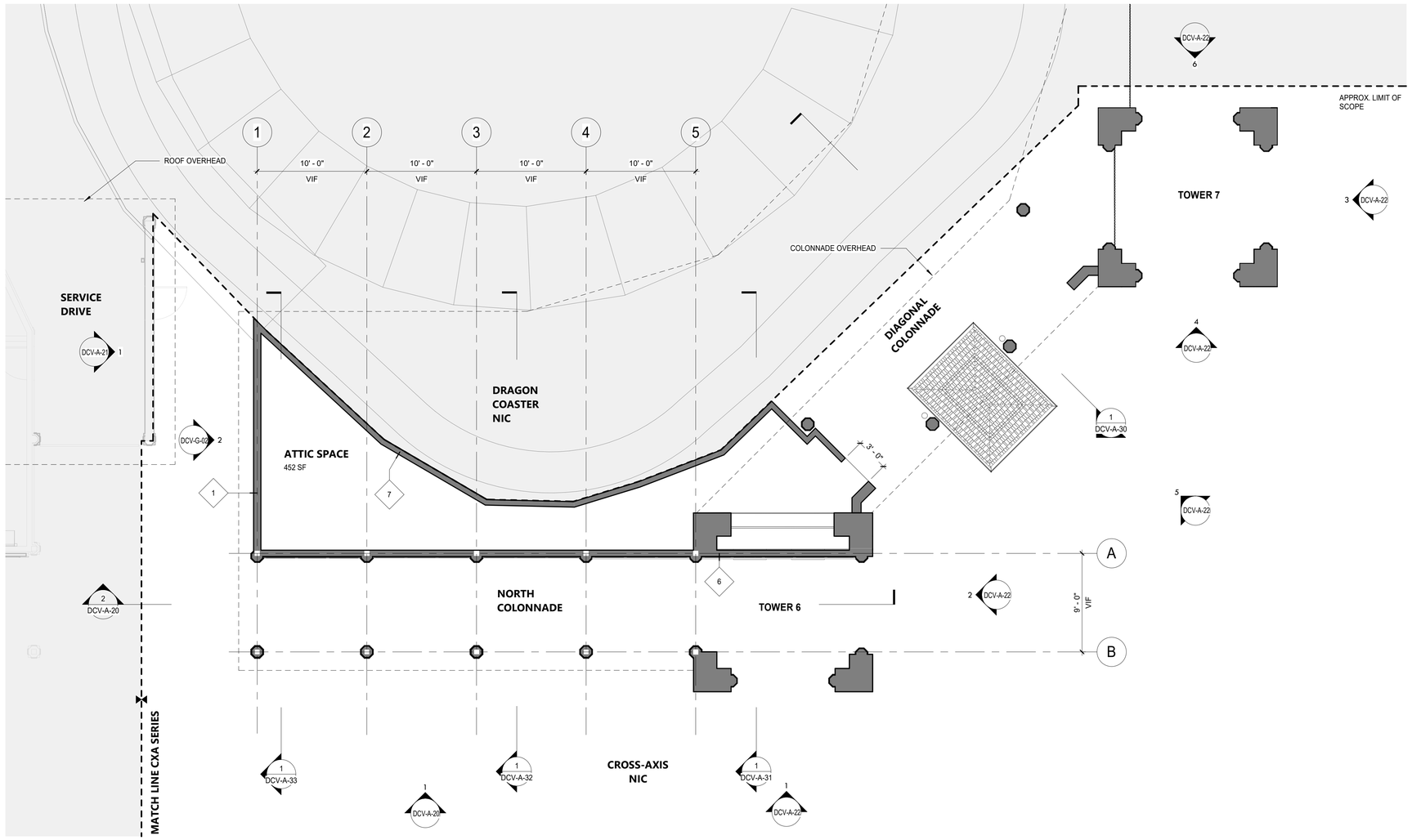

1 ATTIC PLAN
3/16" = 1'-0"

SHEET NOTES:

1. DIMENSIONS ARE TO FACE OF WALL FINISH, GRID LINES, OR CENTERLINE OF COLUMN. ALL ELEVATIONS ARE NOTED FROM FINISH FLOOR ELEVATIONS.

2. PROVIDE DRYWALL TRIM AT ALL EXPOSED EDGES AND CORNERS.

3. MINIMUM DIMENSION FROM ANY CORNER OR WALL TO FRAMING STUD AT DOOR JAMB OPENING SHALL BE 4" UNO.

4. PROVIDE FIRE RETARDANT WOOD BLOCKING FOR ANY WALL MOUNTED EQUIPMENT OR ACCESSORIES. COORDINATE ALL BLOCKING REQUIREMENTS NECESSARY WITH OTHER TRADES.

5. THE GC SHALL VERIFY DIMENSIONS OF THE EXISTING SPACE AND OF ANY EXISTING CONSTRUCTION TO REMAIN BY ACTUAL MEASUREMENT BEFORE ANY WORK IS PERFORMED. IF ANY MEASUREMENTS DIFFER FROM DIMENSIONS SHOWN ON PLAN, GC IS TO NOTIFY THE A/E IMMEDIATELY. THE GC SHALL BE RESPONSIBLE FOR CORRECTING ANY AND ALL DISCREPANCIES FOUND AFTER THE WORK IS PERFORMED, AT NO ADDITIONAL EXPENSE TO THE OWNER.

6. THE GC SHALL BE RESPONSIBLE FOR COORDINATING WITH OWNER ON ALL WORK TO BE PERFORMED BY THE OWNER. ANY POTENTIAL CONFLICTS OR DELAYS CAUSED BY THE OWNER'S SUBCONSTRACTORS MUST BE DOCUMENTED IN WRITING TO THE OWNER BEFORE THE DELAY IS ACTUALLY INCURRED FOR IT TO BE CONSIDERED. OTHERWISE THE GC WILL BE RESPONSIBLE FOR MEETING THE SCHEDULE AS OUTLINED IN THE CONTRACT.

7. THE GC TO VERIFY ALL FINISHED DIMENSIONS. FIELD CONDITIONS ALTERING ANY DIMENSIONS SHOULD BE BROUGHT TO THE ATTENTION OF THE A/E.

8. THE GC SHALL SUPPLY ALL MATERIAL, LABOR, AND COORDINATION REQ'D FOR THE INSTALLATION OF ALL OWNER-SUPPLIED ITEMS AS DESCRIBED IN THE DOCUMENTS, UNO.

9. THE GC IS RESPONSIBLE FOR ALL FLOOR AND WALL PENETRATIONS FOR ELECTRICAL AND MECHANICAL WORK. ALL SUCH OPENING SHALL BE FRAMED AND REINFORCED.

10. FLOOR SURFACES SHALL BE LEVELED TO ASSURE SMOOTH SURFACE FOR FINISH FLOOR INSTALLATION.

11. THE GC TO COORDINATE ALL UTILITY STUB-UPS AND LOCATION OF ALL EQUIPMENT PRIOR TO INSTALLING ANY ONE ITEM.

12.PROVIDE PAINTED ACCESS PANELS IN WALLS & CEILING AT CONCEALED ITEMS SUCH AS VALVES, CONTROLS, SWITCHES OR ANY OTHER ITEMS THAT REQUIRES ACCESS. GC TO DETERMINE ACCESS PANEL LOCATION W/ A/E PRIOR TO INSTALLATION.

LEGEND:

	NEW IPE WOOD DECK	#	DOOR TAG
	QUARRY TILE FLOOR	#	WINDOW TAG
	ASPHALT REPAIR	FE	FIRE EXTINGUISHER
	GRAVEL SURFACE	FD	FLOOR DRAIN
	NOT IN CONTRACT	#	WALL TAG
	APPROXIMATE LIMIT OF SCOPE	B1	BOLLARD LIGHT
		T1	TREE KNUCKLE LIGHT
		?	KEY NOTES

8/30/2022 4:12:33 PM

CONSULTANT INFORMATION
The LiRo Group
3 Aerial Way, Syosset, New York 11791
(516) 938-5476 www.liro.com

CONSULTANT SEAL
REGISTERED ARCHITECT ROBERT D. YOUNG JR. 023290 STATE OF NEW YORK

REVISION NUMBER	DATE	MADE BY	APP'D BY	REVISION

RECORD DRAWING CERTIFICATION
☐ AS BUILT – CHANGES AS NOTED ☐ AS BUILT – NO CHANGES

CONTRACTOR
NAME
SIGNATURE
TITLE DATE

PROJECT COORDINATOR
NAME
SIGNATURE
TITLE DATE

WESTCHESTER COUNTY, NEW YORK
DEPARTMENT OF PUBLIC WORKS AND TRANSPORTATION
DIVISION OF ENGINEERING

INFRASTRUCTURE REHABILITATION - PHASE 3
PLAYLAND PARK, RYE, NEW YORK
DRAGON COASTER VENDORS
ATTIC PLAN

CONTRACT NUMBER	22-523
SHEET NUMBER	DCV-A-12
DWG NO.:	409 of 664
SCALE:	As indicated
DATE:	08/23/2022
DPW FILE NUMBER	1-118-A-1158-0
REV. NO.	

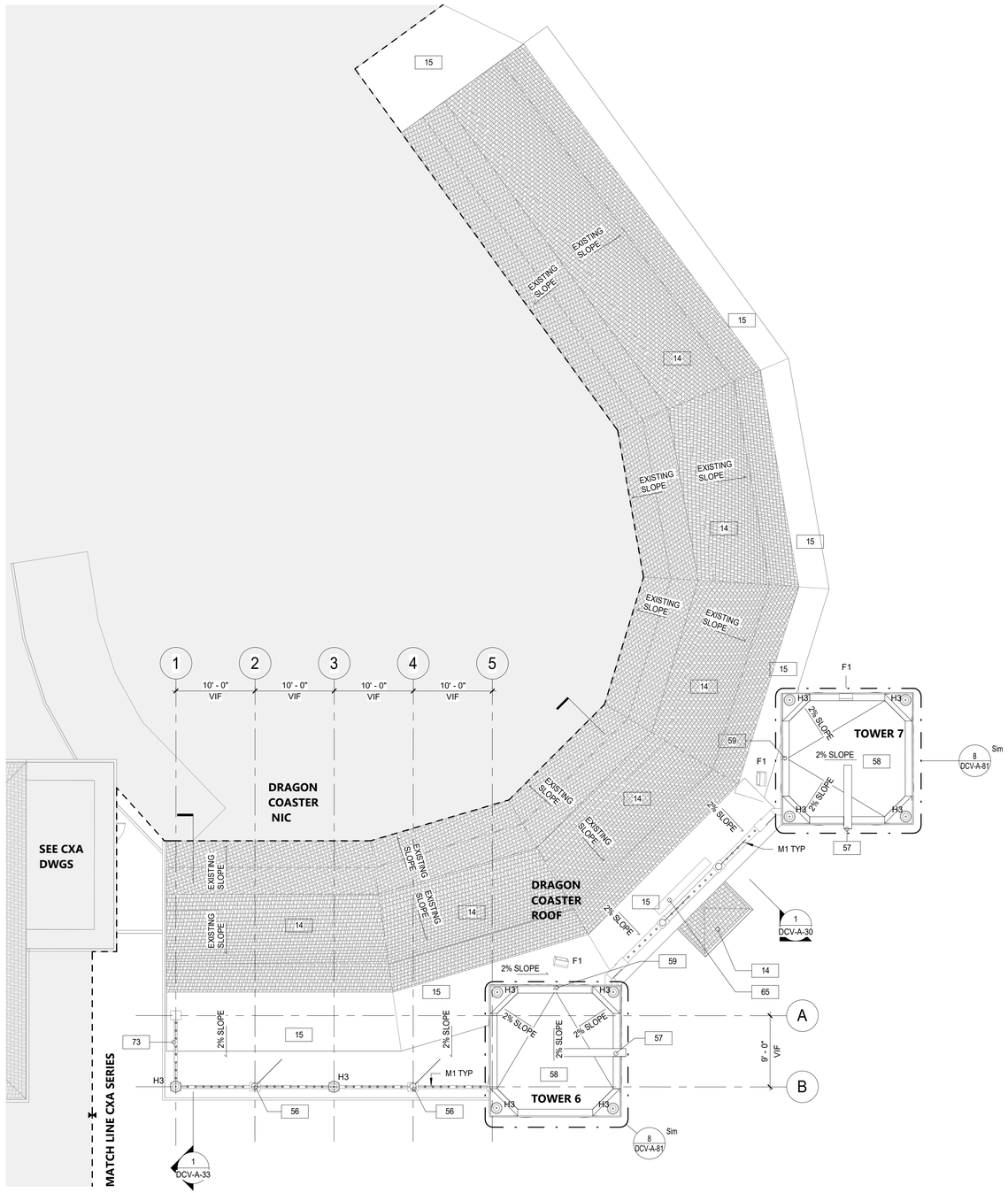

1 DRAGON COASTER VENDORS - ROOF PLAN
1/8" = 1'-0"

SHEET NOTES:

1. DIMENSIONS ARE TO FACE OF WALL FINISH, GRID LINES, OR CENTERLINE OF COLUMN. ALL ELEVATIONS ARE NOTED FROM FINISH FLOOR ELEVATIONS.

2. PROVIDE DRYWALL TRIM AT ALL EXPOSED EDGES AND CORNERS.

3. MINIMUM DIMENSION FROM ANY CORNER OR WALL TO FRAMING STUD AT DOOR JAMB OPENING SHALL BE 4" UNO.

4. PROVIDE FIRE RETARDANT WOOD BLOCKING FOR ANY WALL MOUNTED EQUIPMENT OR ACCESSORIES. COORDINATE ALL BLOCKING REQUIREMENTS NECESSARY WITH OTHER TRADES.

5. THE GC SHALL VERIFY DIMENSIONS OF THE EXISTING SPACE AND OF ANY EXISTING CONSTRUCTION TO REMAIN BY ACTUAL MEASUREMENT BEFORE ANY WORK IS PERFORMED. IF ANY MEASUREMENTS DIFFER FROM DIMENSIONS SHOWN ON PLAN, GC IS TO NOTIFY THE A/E IMMEDIATELY. THE GC SHALL BE RESPONSIBLE FOR CORRECTING ANY AND ALL DISCREPANCIES FOUND AFTER THE WORK IS PERFORMED, AT NO ADDITIONAL EXPENSE TO THE OWNER.

6. THE GC SHALL BE RESPONSIBLE FOR COORDINATING WITH OWNER ON ALL WORK TO BE PERFORMED BY THE OWNER. ANY POTENTIAL CONFLICTS OR DELAYS CAUSED BY THE OWNER'S SUBCONSTRACTORS MUST BE DOCUMENTED IN WRITING TO THE OWNER BEFORE THE DELAY IS ACTUALLY INCURRED FOR IT TO BE CONSIDERED. OTHERWISE THE GC WILL BE RESPONSIBLE FOR MEETING THE SCHEDULE AS OUTLINED IN THE CONTRACT.

7. THE GC TO VERIFY ALL FINISHED DIMENSIONS. FIELD CONDITIONS ALTERING ANY DIMENSIONS SHOULD BE BROUGHT TO THE ATTENTION OF THE A/E.

8. THE GC SHALL SUPPLY ALL MATERIAL, LABOR, AND COORDINATION REQ'D FOR THE INSTALLATION OF ALL OWNER-SUPPLIED ITEMS AS DESCRIBED IN THE DOCUMENTS, UNO.

9. THE GC IS RESPONSIBLE FOR ALL FLOOR AND WALL PENETRATIONS FOR ELECTRICAL AND MECHANICAL WORK. ALL SUCH OPENING SHALL BE FRAMED AND REINFORCED.

10. FLOOR SURFACES SHALL BE LEVELED TO ASSURE SMOOTH SURFACE FOR FINISH FLOOR INSTALLATION.

11. THE GC TO COORDINATE ALL UTILITY STUB-UPS AND LOCATION OF ALL EQUIPMENT PRIOR TO INSTALLING ANY ONE ITEM.

12.PROVIDE PAINTED ACCESS PANELS IN WALLS & CEILING AT CONCEALED ITEMS SUCH AS VALVES, CONTROLS, SWITCHES OR ANY OTHER ITEMS THAT REQUIRES ACCESS. GC TO DETERMINE ACCESS PANEL LOCATION W/ A/E PRIOR TO INSTALLATION.

PLAN LEGEND:

	NEW IPE WOOD DECK	#	DOOR TAG
	QUARRY TILE FLOOR	#	WINDOW TAG
	ASPHALT REPAIR	FE	FIRE EXTINGUISHER
	GRAVEL SURFACE	FD	FLOOR DRAIN
	SHINGLE ROOF	1i	WALL TAG
	NOT IN CONTRACT	B1	BOLLARD LIGHT
		T1	TREE KNUCKLE LIGHT
		?	KEY NOTES
		?% SLOPE	SLOPE ARROW
		M1	M1 MARQUEE LIGHTING AT BALUSTRADE (1'-0" SPACING)
		H3	H3 HISTORIC ACORN LIGHT

CONSTRUCTION KEYNOTES

57	INSTALL EXISTING DRAGON HEADS UPON CONSTRUCTION COMPLETION. COORDINATE WITH PLUMBNG.

8/30/2022 4:12:38 PM

CONSULTANT INFORMATION
The LiRo Group
3 Aerial Way, Syosset, New York 11791
(516) 938-5476 www.liro.com

CONSULTANT SEAL
REGISTERED ARCHITECT ROBERT D. YOUNG JR. 023280 STATE OF NEW YORK

REVISION NUMBER	DATE	MADE BY	APP'D BY	REVISION

RECORD DRAWING CERTIFICATION
☐ AS BUILT – CHANGES AS NOTED ☐ AS BUILT – NO CHANGES

CONTRACTOR
NAME
SIGNATURE
TITLE DATE

PROJECT COORDINATOR
NAME
SIGNATURE
TITLE DATE

WESTCHESTER COUNTY, NEW YORK
DEPARTMENT OF PUBLIC WORKS AND TRANSPORTATION
DIVISION OF ENGINEERING

INFRASTRUCTURE REHABILITATION - PHASE 3
PLAYLAND PARK, RYE, NEW YORK
DRAGON COASTER VENDORS
ROOF PLAN

CONTRACT NUMBER	22-523
SHEET NUMBER	DCV-A-13
DWG NO.:	410 of 664
SCALE:	As indicated
DATE:	08/23/2022
DPW FILE NUMBER	1-118-A-1159-0
REV. NO.	

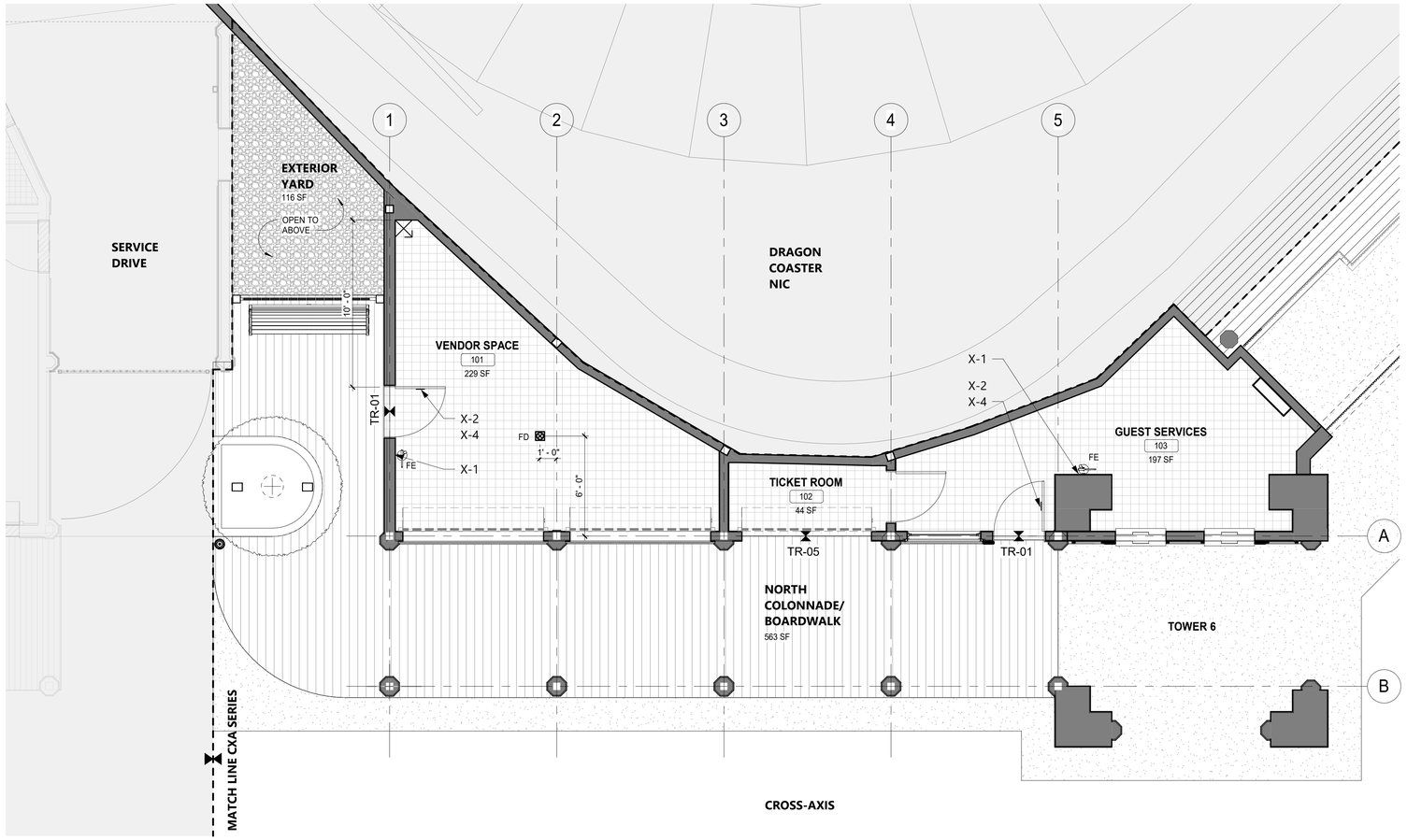

1 GROUND FLOOR - FINISH PLAN
1/4" = 1'-0"

SHEET NOTES

1. ALL FLOORING COVERING MATERIALS TO BE INSTALLED PER MANUFACTURER'S STANDARD DETAILS AND SPECIFICATIONS. VERIFY WITH MANUFACTURER PRIOR INSTALLATION.
2. THE GC IS RESPONSIBLE FOR PROVIDING A SMOOTH LEVEL FLOOR SURFACE THAT MEETS MANUFACTURERS INSTALLATION SPECIFICATIONS PRIOR TO THE INSTALLATION OF ALL FLOORING MATERIALS.
3. THE GC IS RESPONSIBLE FOR VERIFYING THAT THE CONDITION OF THE BASE FLOOR MEETS THE INSTALLATION SPECIFICATIONS PRIOR TO THE INSTALLATION OF THE NEW FLOORING MATERIAL.
4. ALL MATERIAL TRANSITIONS AND DOOR THRESHOLDS TO TAKE PLACE AT DOOR CENTERLINE UNO.
5. ALL DIMENSIONS ARE TO CENTERLINE OF TRANSITION BETWEEN FLOORING MATERIALS OR FINISH COLOR OF SAME MATERIAL. PLANS DO NOT SHOW ALL TILES OF SAME MATERIALS. GC TO START TILES AT POINT AS INDICATED ON PLANS.
6. THE GC SHALL BE RESPONSIBLE FOR PROPER PREPARATION OF ALL NEW AND EXISTING SURFACES IN A SATISFACTORY MANNER TO RECEIVE NEW FINISHES. THIS INCLUDES THE DEMOLITION AND REMOVAL OF NECESSARY ITEMS. TOUCH-UP AND/ OR REFINISH OF SURFACES DAMAGED BY SUBSEQUENT WORK SHALL BE PERFORMED IN CONFORMANCE WITH THE MANUFACTURER'S RECOMMENDED INSTALLATION METHODS.
7. ALL SURFACES WHICH ARE TO RECEIVE A PAINT FINISH SHALL BE PRIMED AND FINISHED IN ACCORDANCE WITH THE WRITTEN SPECIFICATIONS.
8. ALL JOINTS IN WALLS SHALL BE FINISHED WITH PAPER TAPE 2" WIDE AND THREE COATS OF VINYL, DRY OR PREMIXED JOINT COMPOUND. ALL OUTSIDE CORNERS SHALL BE FINISHED WITH METAL CORNER BEADS, TAPED AND SPACKLED. ALL AREAS TO BE PAINTED SHALL BE SANDED SMOOTH. JUST PRIOR TO THE APPLICATION OF THE FIRST COAT OF PAINT, WIPE SANDED SURFACES WITH A DAMP CLOTH IN ORDER TO LAY FLAT ANY NAP WHICH MAY HAVE FORMED IN SANDING.
9. THE GC SHALL REMOVE ALL HARDWARE, SWITCH COVERS, ETC. PRIOR TO PAINTING AND BE RESPONSIBLE FOR THE REINSTALLATION AFTER PAINTING IS COMPLETED.
10. FINISH FLOORING INSTALLATION SHALL BE IN CONFORMANCE WITH THE MANUFACTURER'S RECOMMENDED INSTALLATION GUIDELINES. COORDINATE THE INSTALLATION WITH OTHER TRADES, SUCH AS ELECTRICAL.
11. ALL JOINTS BETWEEN MATERIALS TO BE TIGHT AND CONSTRUCTED IN A NEAT WORKMANLIKE MANNER.
12. ALL FINISHES SHALL BE TOUCHED UP TO CORRECT ANY IMPERFECTIONS AFTER INSTALLATION. GC SHALL PROVIDE ALL MATERIALS FOR TOUCH UP WORK.
13. THE INTENT OF THE FINISH SPECIFICATIONS IS TO PROVIDE A SATISFACTORY FINISH TO ALL PARTS OF THE WORK. COVER ALL SURFACES THOROUGHLY. IF THE SPECIFIED NUMBER OF COATS DOES NOT ACCOMPLISH THE INTENT, THE GC SHALL BE RESPONSIBLE FOR THE APPLICATION OF ADDITIONAL COATS OF THE SPECIFIED MATERIAL TO GIVE SATISFACTORY COVERAGE, AT NO ADDITIONAL COST TO OWNER.
14. CLEAN ALL GLASS SURFACES WITH LIQUID GLASS CLEANER AT PROJECT COMPLETION.
15. REFERENCE SPECIFICATIONS FOR COMPLETE FINISH DOCUMENTATION AND MANUFACTURER INSTALLATION AND MAINTENANCE DOCUMENTATION.
16. REFER TO DCV-A-20 AND 21 FOR SIGNAGE ELEVATIONS. REFER TO DCV-A-94 FOR DETAILS.

LEGEND

	NOT IN CONTRACT	FE	FIRE EXTINGUISHER
	QUARRY TILE	FD	FLOOR DRAIN
	NEW IPE WOOD DECK		FLOORING STARTING POINT
TR-??	THRESHOLD	X-?	SIGNAGE IDENTIFICATION SYMBOL SEE SIGNAGE DETAILS ON SHEET DCV-A-94

PAINTING KEY

KEY	COLOR	MANUFACTURER	REMARKS
P- 1	MYSTICAL POWERS #901	BENJAMIN MOORE	
P- 2	HERITAGE RED #HC-181	BENJAMIN MOORE	
P- 3	NEW YORK STATE OF MIND #805	BENJAMIN MOORE	
P- 4	LAZY SUNDAY #803	BENJAMIN MOORE	
P- 5	DEEP JUNGLE #595	BENJAMIN MOORE	
P- 6	LUCK OF THE IRISH #588	BENJAMIN MOORE	
P- 7	MAJOLICA GREEN #0013	SHERWIN WILLIAMS	
P- 8	ANTELOPE CANYON #125	BENJAMIN MOORE	
P- 9	FORSYTHIA #6907	SHERWIN WILLIAMS	
P- 10	CAPE BLUE #1642	BENJAMIN MOORE	
P- 11	WHITE SNOW #9541	SHERWIN WILLIAMS	
P- 12	TRICORN BLACK #6258	SHERWIN WILLIAMS	
P- 13	READY MIX WHITE	BENJAMIN MOORE	INTERIOR USE ONLY
P- 14	STUCCO PAINT TO MATCH P-1	-	
P- 15	VAN DEUSEN BLUE #HC-156	BENJAMIN MOORE	
P- 16	#RAL9001	-	
P- 17	FLORIDA BEACHES #900	BENJAMIN MOORE	
P- 18	PIRATES COVE PEACH #903	BENJAMIN MOORE	
P- 19	JADITE #6459	SHERWIN WILLIAMS	
P- 20	DECISIVE YELLOW #6902	SHERWIN WILLIAMS	
P- 21	#RAL9010	-	

FINISH SCHEDULE

ROOM #	ROOM NAME	FLOORS	WALLS	CEILING	DOORS AND TRIM	WALL BASE
101	VENDOR SPACE	QT-1	FRP	GYP, P-13	SEE DOOR SCHEDULE	WB-2
102	TICKET ROOM	QT-1	GYP, P-13	GYP, P-13	SEE DOOR SCHEDULE	WB-2
103	GUEST SERVICES	QT-1	GYP, P-13	GYP, P-13	SEE DOOR SCHEDULE	WB-2
-	ATTIC	WD-3	-	-	-	-
-	NORTH COLONNADE	WD-1	-	EXISTING, P-10	-	WB-3
-	EXTERIOR YARD	GRAVEL	-	-	-	

WALL	(FOR PAINT TYPE AND SYSTEMS, SEE PAINTING KEY)
GYP	GYPSUM BOARD - **SIZE:** 5/8"
FRP	**FINISH/ COLOR:** EMBOSSED TEXTURE, 0.090" ; WHITE
CEILING	
GYP	GYPSUM BOARD - **SIZE:** 5/8"
T1-11	PREMIUM GRADE PLYWOOD SIDING - **SIZE:** 4' X 8' X 11/32" - **COMMENTS:** GROOVED 2" O.C.
FLOORING	
QT-1	**MFR:** DATILE, QUARRY TEXTURES - **COLOR:** SAHARA SAND 0T08 (2) - **SIZE:** 6" X 6" X 1/2" - **COMMENTS:** COVE BASE TO MATCH WALL BASE (WB-2)
WD-1	IPE DECKING 2X6
WD-3	PLYWOOD FLOORING - **FINISH:** EXTERIOR GRADE PLYWOOD SHEATHING 3/4" THICK - **COMMENTS:** MOISTURE/MOLD RESISTANT
WALL BASE	(FOR WALL BASE DETAILS, SEE DCV-A-97)
WB-2	QUARRY TILE BASE 6"
WB-3	PVC - **SIZE:** 1X6
THRESHOLD	(FOR THRESHOLD DETAILS, SEE DCV-A-95)
TR-01	EXTERIOR DOOR SILL
TR-05	IPE TO QUARRY

8/30/2022 4:12:41 PM

CONSULTANT INFORMATION
The LiRo Group
3 Aerial Way, Syosset, New York 11791
(516) 938-5476 www.liro.com

CONSULTANT SEAL
REGISTERED ARCHITECT ROBERT D. YOUNG JR. 023280 STATE OF NEW YORK

REVISION NUMBER	DATE	MADE BY	APP'D BY	REVISION

RECORD DRAWING CERTIFICATION
☐ AS BUILT – CHANGES AS NOTED ☐ AS BUILT – NO CHANGES

CONTRACTOR
NAME
SIGNATURE
TITLE DATE

PROJECT COORDINATOR
NAME
SIGNATURE
TITLE DATE

WESTCHESTER COUNTY, NEW YORK
DEPARTMENT OF PUBLIC WORKS AND TRANSPORTATION
DIVISION OF ENGINEERING

INFRASTRUCTURE REHABILITATION - PHASE 3
PLAYLAND PARK, RYE, NEW YORK
DRAGON COASTER VENDORS
FINISH PLAN

CONTRACT NUMBER	22-523
SHEET NUMBER	DCV-A-14
DWG NO.:	411 of 664
SCALE:	As indicated
DATE:	08/23/2022
DPW FILE NUMBER	1-118-A-1160-0
REV. NO.	

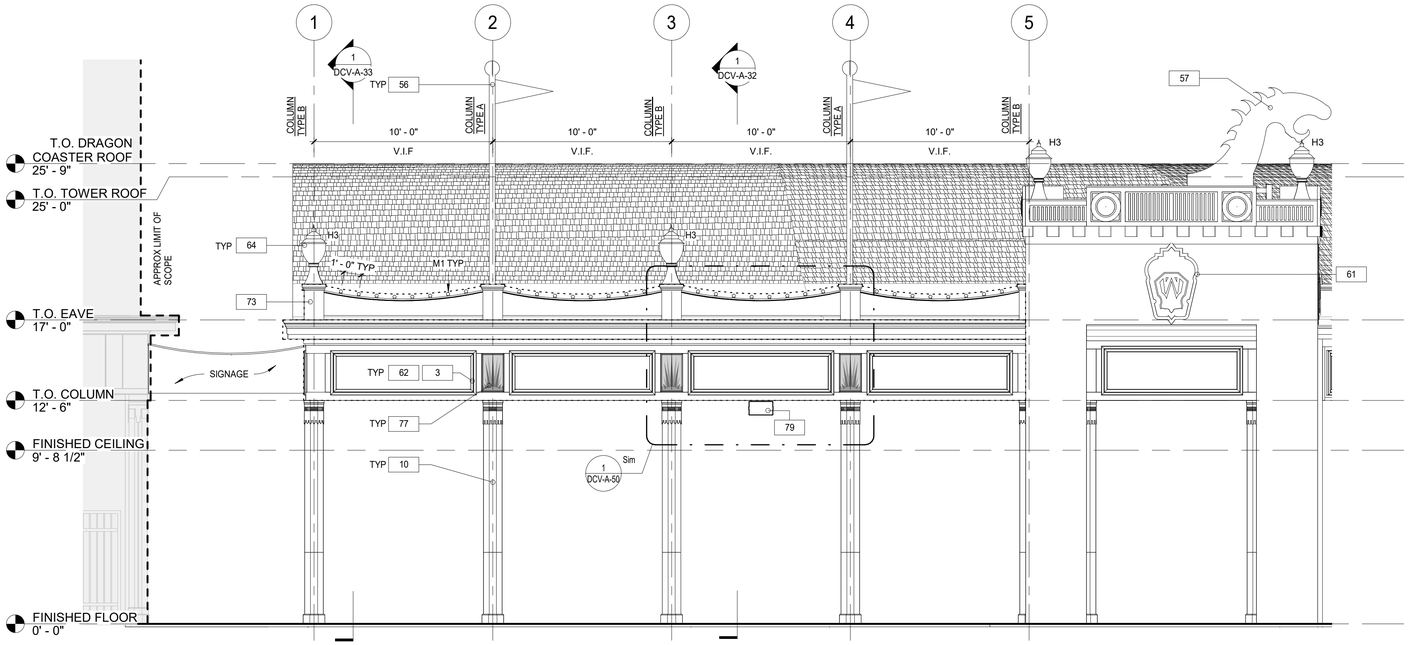

1 SOUTH ELEVATION - NORTH COLONNADE - FRONT OF PORCH
1/4" = 1'-0"

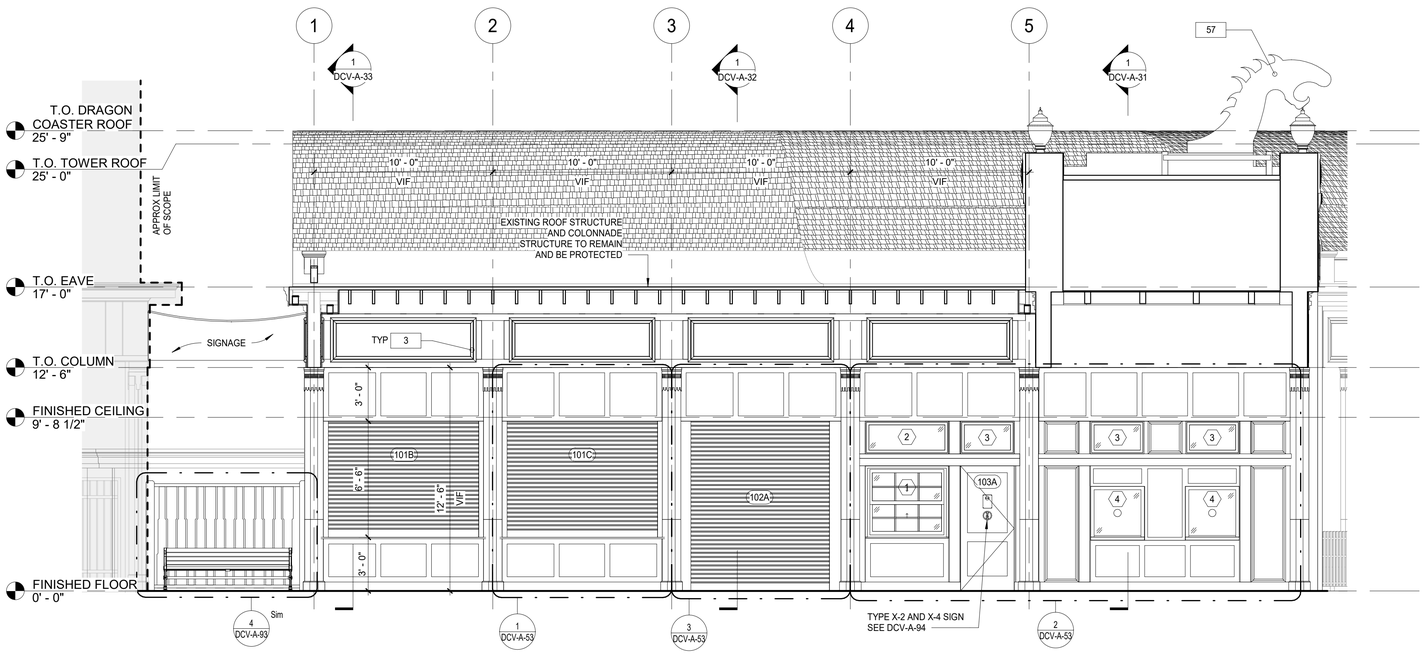

2 NORTH COLONNADE VENDOR ELEVATION - INSIDE PORCH
1/4" = 1'-0"

SHEET NOTES:

1. DIMENSIONS ARE TO FACE OF WALL FINISH, GRID LINES, OR CENTERLINE OF COLUMN. ALL ELEVATIONS ARE NOTED FROM FINISH FLOOR ELEVATIONS.

2. PROVIDE DRYWALL TRIM AT ALL EXPOSED EDGES AND CORNERS.

3. MINIMUM DIMENSION FROM ANY CORNER OR WALL TO FRAMING STUD AT DOOR JAMB OPENING SHALL BE 4" UNO.

4. PROVIDE FIRE RETARDANT WOOD BLOCKING FOR ANY WALL MOUNTED EQUIPMENT OR ACCESSORIES. COORDINATE ALL BLOCKING REQUIREMENTS NECESSARY WITH OTHER TRADES.

5. THE GC SHALL VERIFY DIMENSIONS OF THE EXISTING SPACE AND OF ANY EXISTING CONSTRUCTION TO REMAIN BY ACTUAL MEASUREMENT BEFORE ANY WORK IS PERFORMED. IF ANY MEASUREMENTS DIFFER FROM DIMENSIONS SHOWN ON PLAN, GC IS TO NOTIFY THE A/E IMMEDIATELY. THE GC SHALL BE RESPONSIBLE FOR CORRECTING ANY AND ALL DISCREPANCIES FOUND AFTER THE WORK IS PERFORMED, AT NO ADDITIONAL EXPENSE TO THE OWNER.

6. THE GC SHALL BE RESPONSIBLE FOR COORDINATING WITH OWNER ON ALL WORK TO BE PERFORMED BY THE OWNER. ANY POTENTIAL CONFLICTS OR DELAYS CAUSED BY THE OWNER'S SUBCONSTRACTORS MUST BE DOCUMENTED IN WRITING TO THE OWNER BEFORE THE DELAY IS ACTUALLY INCURRED FOR IT TO BE CONSIDERED. OTHERWISE THE GC WILL BE RESPONSIBLE FOR MEETING THE SCHEDULE AS OUTLINED IN THE CONTRACT.

7. THE GC TO VERIFY ALL FINISHED DIMENSIONS. FIELD CONDITIONS ALTERING ANY DIMENSIONS SHOULD BE BROUGHT TO THE ATTENTION OF THE A/E.

8. THE GC SHALL SUPPLY ALL MATERIAL, LABOR, AND COORDINATION REQ'D FOR THE INSTALLATION OF ALL OWNER-SUPPLIED ITEMS AS DESCRIBED IN THE DOCUMENTS, UNO.

9. THE GC IS RESPONSIBLE FOR ALL FLOOR AND WALL PENETRATIONS FOR ELECTRICAL AND MECHANICAL WORK. ALL SUCH OPENING SHALL BE FRAMED AND REINFORCED.

10. FLOOR SURFACES SHALL BE LEVELED TO ASSURE SMOOTH SURFACE FOR FINISH FLOOR INSTALLATION.

11. THE GC TO COORDINATE ALL UTILITY STUB-UPS AND LOCATION OF ALL EQUIPMENT PRIOR TO INSTALLING ANY ONE ITEM.

12.PROVIDE PAINTED ACCESS PANELS IN WALLS & CEILING AT CONCEALED ITEMS SUCH AS VALVES, CONTROLS, SWITCHES OR ANY OTHER ITEMS THAT REQUIRES ACCESS. GC TO DETERMINE ACCESS PANEL LOCATION W/ A/E PRIOR TO INSTALLATION.

LEGEND:

	NOT IN CONTRACT	#	DOOR TAG
	NEW CONSTRUCTION WALLS	#	WINDOW TAG
	NEW IPE WOOD DECK	FE	FIRE EXTINGUISHER
	QUARRY TILE FLOOR	FD	FLOOR DRAIN
	ASPHALT REPAIR	#	WALL TAG
	GRAVEL SURFACE	B1	BOLLARD LIGHT
	APPROXIMATE LIMIT OF SCOPE	T1	TREE KNUCKLE LIGHT
		?	KEY NOTES
		X-?	SIGNAGE IDENTIFICATION SYMBOL SEE SIGNAGE DETAILS ON SHEET DCV-A-94
		H3	H3 HISTORIC ACORN LIGHT

CONSTRUCTION KEYNOTES

3	REPLICATE TRIMS TO MATCH DOCUMENTED TRIM, LOCATIONS, SIZE AND SHAPE. FINISH PAINT COLORS AS SCHEDULED.
10	PROVIDE AND INSTALL COLUMN ENCLOSURES. SEE DETAILS.
56	INSTALL FLAG POLE AND ALL REQUIRED MOUNTING HARDWARE AS SPECIFIED.
57	INSTALL EXISTING DRAGON HEADS UPON CONSTRUCTION COMPLETION. COORDINATE WITH PLUMBNG.
61	CONSTRUCT FACADE COMPONENTS WITH FIBERGLASS REINFORCED PLASTIC. SEE DCV-A-80 FOR DETAILS AND COORDINATION.
62	CONSTRUCT MURAL PANELS. CONTRACTOR TO PRINT AND INSTALL MURAL ARTWORK AS SPECIFIED.
64	INSTALL "ACORN" HISTORICAL LIGHTS. SEE ELECTRICAL DRAWINGS.
73	CONSTRUCT NEW ROOF BALUSTRADE. SEE DETAILS.
77	CONSTRUCT SUNBURST MURAL PANELS. CONTRACTOR TO PRINT AND INSTALL MURAL ARTWORK AS SPECIFIED.
79	INSTALL NEW SPEAKER. SEE ELECTRICAL DRAWINGS.

8/30/2022 4:12:47 PM

CONSULTANT INFORMATION
The LiRo Group
3 Aerial Way, Syosset, New York 11791
(516) 938-5476 www.liro.com

CONSULTANT SEAL
REGISTERED ARCHITECT ROBERT D. DONNO JR. 023229 STATE OF NEW YORK

REVISION NUMBER	DATE	MADE BY	APP'D BY	REVISION

RECORD DRAWING CERTIFICATION
☐ AS BUILT – CHANGES AS NOTED ☐ AS BUILT – NO CHANGES

CONTRACTOR
NAME
SIGNATURE
TITLE DATE

PROJECT COORDINATOR
NAME
SIGNATURE
TITLE DATE

WESTCHESTER COUNTY, NEW YORK
DEPARTMENT OF PUBLIC WORKS AND TRANSPORTATION
DIVISION OF ENGINEERING

INFRASTRUCTURE REHABILITATION - PHASE 3
PLAYLAND PARK, RYE, NEW YORK
DRAGON COASTER VENDORS
EXTERIOR ELEVATIONS 1 OF 3

CONTRACT NUMBER	22-523
SHEET NUMBER	DCV-A-20
DWG NO.:	412 of 664
SCALE:	1/4" = 1'-0"
DATE:	08/23/2022
DPW FILE NUMBER	1-118-A-1161-0
REV. NO.	

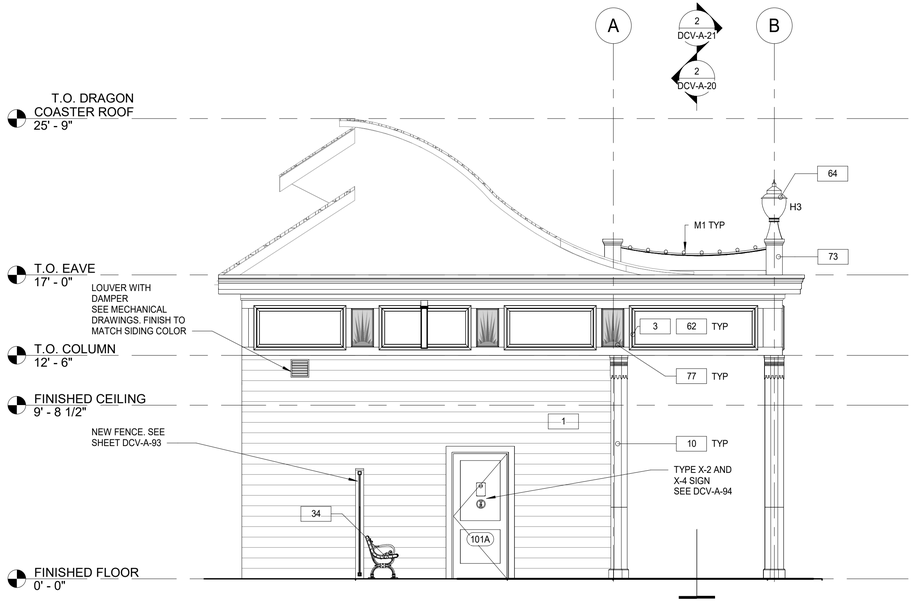

1 WEST ELEVATION - NORTH COLONNADE
1/4" = 1'-0"

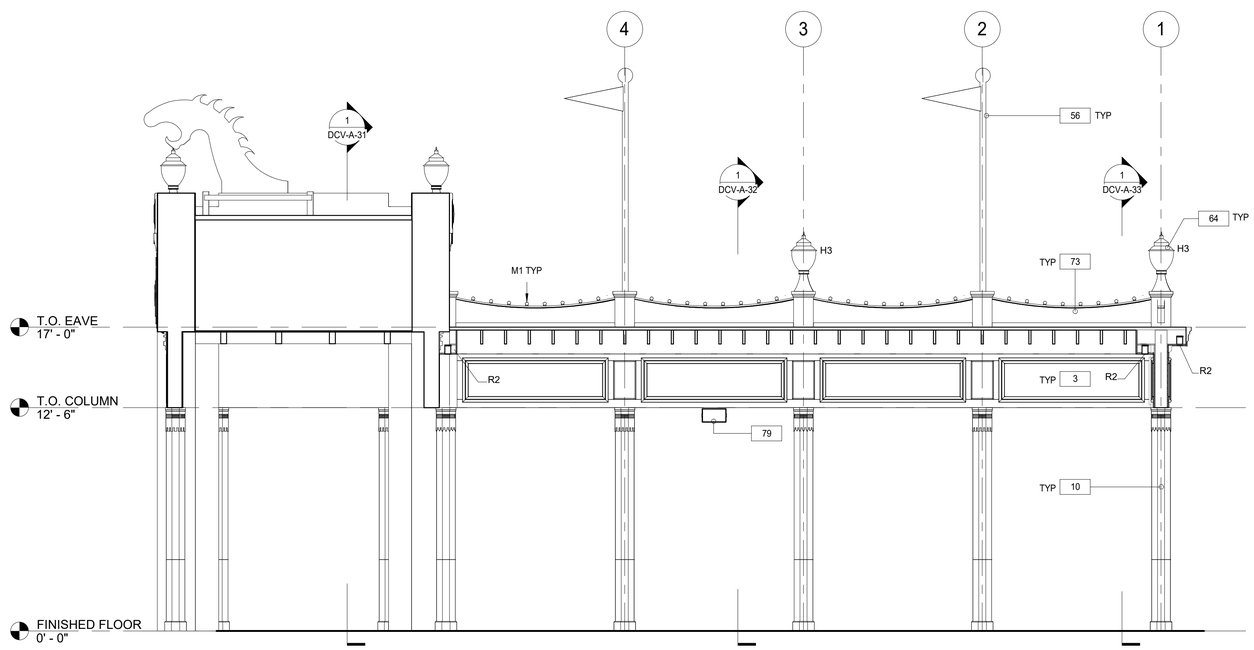

2 INTERIOR SECTION - NORTH COLONNADE
1/4" = 1'-0"

SHEET NOTES:

1. DIMENSIONS ARE TO FACE OF WALL FINISH, GRID LINES, OR CENTERLINE OF COLUMN. ALL ELEVATIONS ARE NOTED FROM FINISH FLOOR ELEVATIONS.

2. PROVIDE DRYWALL TRIM AT ALL EXPOSED EDGES AND CORNERS.

3. MINIMUM DIMENSION FROM ANY CORNER OR WALL TO FRAMING STUD AT DOOR JAMB OPENING SHALL BE 4" UNO.

4. PROVIDE FIRE RETARDANT WOOD BLOCKING FOR ANY WALL MOUNTED EQUIPMENT OR ACCESSORIES. COORDINATE ALL BLOCKING REQUIREMENTS NECESSARY WITH OTHER TRADES.

5. THE GC SHALL VERIFY DIMENSIONS OF THE EXISTING SPACE AND OF ANY EXISTING CONSTRUCTION TO REMAIN BY ACTUAL MEASUREMENT BEFORE ANY WORK IS PERFORMED. IF ANY MEASUREMENTS DIFFER FROM DIMENSIONS SHOWN ON PLAN, GC IS TO NOTIFY THE A/E IMMEDIATELY. THE GC SHALL BE RESPONSIBLE FOR CORRECTING ANY AND ALL DISCREPANCIES FOUND AFTER THE WORK IS PERFORMED, AT NO ADDITIONAL EXPENSE TO THE OWNER.

6. THE GC SHALL BE RESPONSIBLE FOR COORDINATING WITH OWNER ON ALL WORK TO BE PERFORMED BY THE OWNER. ANY POTENTIAL CONFLICTS OR DELAYS CAUSED BY THE OWNER'S SUBCONSTRACTORS MUST BE DOCUMENTED IN WRITING TO THE OWNER BEFORE THE DELAY IS ACTUALLY INCURRED FOR IT TO BE CONSIDERED. OTHERWISE THE GC WILL BE RESPONSIBLE FOR MEETING THE SCHEDULE AS OUTLINED IN THE CONTRACT.

7. THE GC TO VERIFY ALL FINISHED DIMENSIONS. FIELD CONDITIONS ALTERING ANY DIMENSIONS SHOULD BE BROUGHT TO THE ATTENTION OF THE A/E.

8. THE GC SHALL SUPPLY ALL MATERIAL, LABOR, AND COORDINATION REQ'D FOR THE INSTALLATION OF ALL OWNER-SUPPLIED ITEMS AS DESCRIBED IN THE DOCUMENTS, UNO.

9. THE GC IS RESPONSIBLE FOR ALL FLOOR AND WALL PENETRATIONS FOR ELECTRICAL AND MECHANICAL WORK. ALL SUCH OPENING SHALL BE FRAMED AND REINFORCED.

10. FLOOR SURFACES SHALL BE LEVELED TO ASSURE SMOOTH SURFACE FOR FINISH FLOOR INSTALLATION.

11. THE GC TO COORDINATE ALL UTILITY STUB-UPS AND LOCATION OF ALL EQUIPMENT PRIOR TO INSTALLING ANY ONE ITEM.

12.PROVIDE PAINTED ACCESS PANELS IN WALLS & CEILING AT CONCEALED ITEMS SUCH AS VALVES, CONTROLS, SWITCHES OR ANY OTHER ITEMS THAT REQUIRES ACCESS. GC TO DETERMINE ACCESS PANEL LOCATION W/ A/E PRIOR TO INSTALLATION.

LEGEND:

	NOT IN CONTRACT	#	DOOR TAG
	NEW CONSTRUCTION WALLS	#	WINDOW TAG
	NEW IPE WOOD DECK	FE	FIRE EXTINGUISHER
	QUARRY TILE FLOOR	FD	FLOOR DRAIN
	ASPHALT REPAIR	#	WALL TAG
	GRAVEL SURFACE	B1	BOLLARD LIGHT
	APPROXIMATE LIMIT OF SCOPE	T1	TREE KNUCKLE LIGHT
		?	KEY NOTES

X-? SIGNAGE IDENTIFICATION SYMBOL SEE SIGNAGE DETAILS ON SHEET DCV-A-94

H3 H3 HISTORIC ACORN LIGHT

CONSTRUCTION KEYNOTES

1	PROVIDE AND INSTALL NEW 1x8 MILLED YELLOW PINE - TONGUE AND GROOVE - NO BEVEL
3	REPLICATE TRIMS TO MATCH DOCUMENTED TRIM, LOCATIONS, SIZE AND SHAPE. FINISH PAINT COLORS AS SCHEDULED.
10	PROVIDE AND INSTALL COLUMN ENCLOSURES. SEE DETAILS.
34	PROVIDE NEW BENCH.
56	INSTALL FLAG POLE AND ALL REQUIRED MOUNTING HARDWARE AS SPECIFIED.
62	CONSTRUCT MURAL PANELS. CONTRACTOR TO PRINT AND INSTALL MURAL ARTWORK AS SPECIFIED.
64	INSTALL "ACORN" HISTORICAL LIGHTS. SEE ELECTRICAL DRAWINGS.
73	CONSTRUCT NEW ROOF BALUSTRADE. SEE DETAILS.
77	CONSTRUCT SUNBURST MURAL PANELS. CONTRACTOR TO PRINT AND INSTALL MURAL ARTWORK AS SPECIFIED.
79	INSTALL NEW SPEAKER. SEE ELECTRICAL DRAWINGS.

8/30/2022 4:12:50 PM

CONSULTANT INFORMATION
The LiRo Group
3 Aerial Way, Syosset, New York 11791
(516) 938-5476 www.liro.com

CONSULTANT SEAL
REGISTERED ARCHITECT ROBERT D. YOUNG 023280 STATE OF NEW YORK

REVISION NUMBER	DATE	MADE BY	APP'D BY	REVISION

RECORD DRAWING CERTIFICATION
☐ AS BUILT – CHANGES AS NOTED ☐ AS BUILT – NO CHANGES

CONTRACTOR
NAME
SIGNATURE
TITLE DATE

PROJECT COORDINATOR
NAME
SIGNATURE
TITLE DATE

WESTCHESTER COUNTY, NEW YORK
DEPARTMENT OF PUBLIC WORKS AND TRANSPORTATION
DIVISION OF ENGINEERING

INFRASTRUCTURE REHABILITATION - PHASE 3
PLAYLAND PARK, RYE, NEW YORK
DRAGON COASTER VENDORS
EXTERIOR ELEVATIONS 2 OF 3

CONTRACT NUMBER	22-523
SHEET NUMBER	DCV-A-21
DWG NO.:	413 of 664
SCALE:	1/4" = 1'-0"
DATE:	08/23/2022
DPW FILE NUMBER	1-118-A-1162-0
REV. NO.	

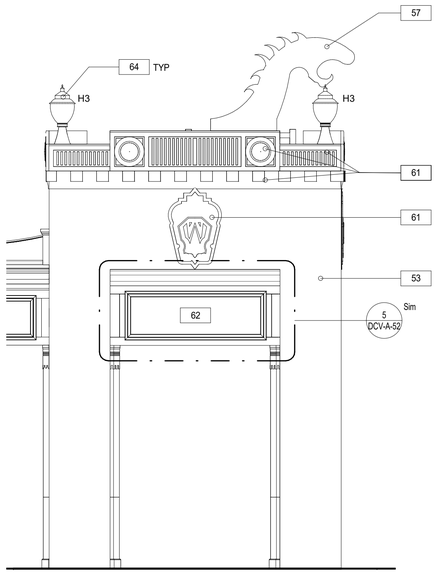

1 TOWER 6 - SOUTH ELEVATION
1/4" = 1'-0"

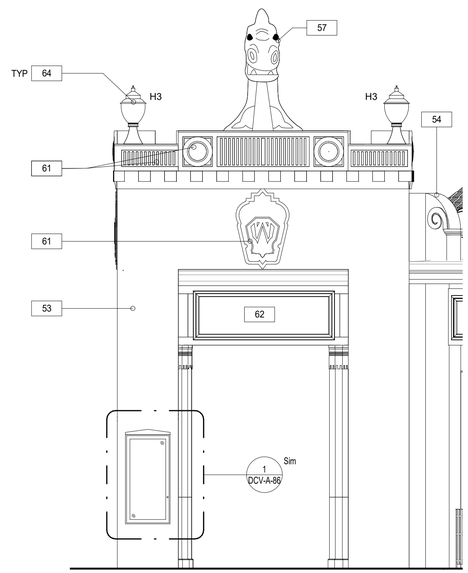

2 TOWER 6 - EAST ELEVATION
1/4" = 1'-0"

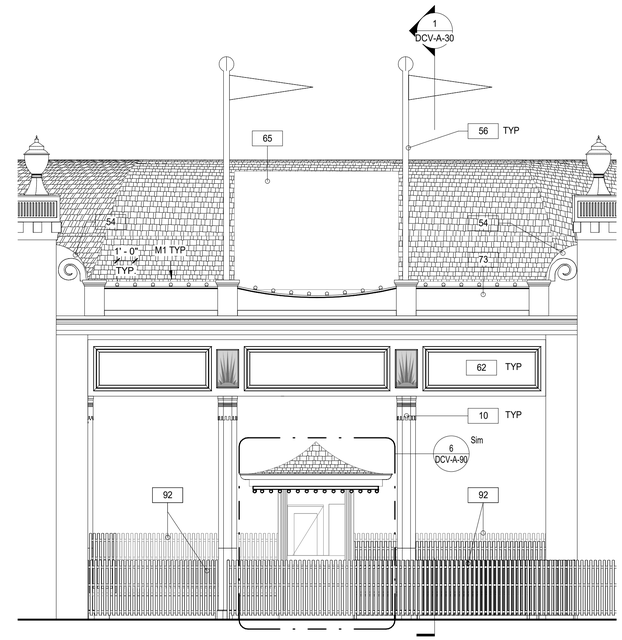

5 TOWER 6 & 7 COLONADE ELEVATIONS
1/4" = 1'-0"

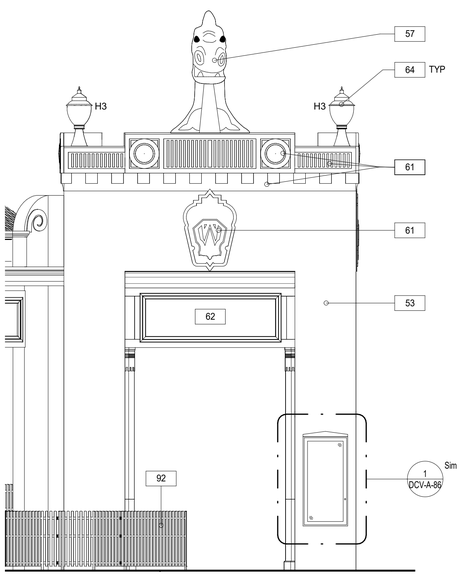

4 TOWER 7 - SOUTH ELEVATION
1/4" = 1'-0"

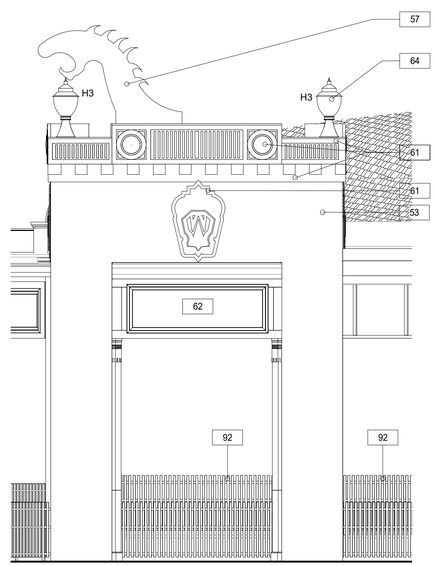

3 TOWER 7 - EAST ELEVATION
1/4" = 1'-0"

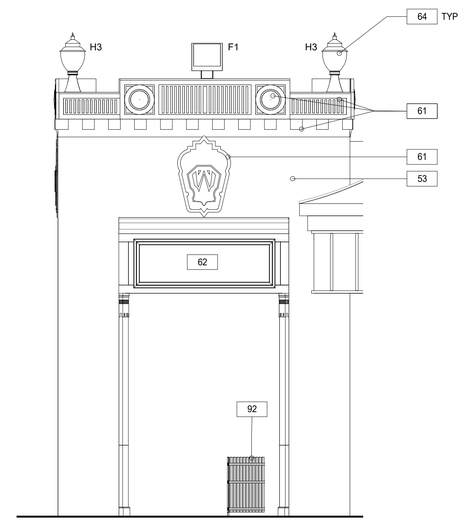

6 TOWER 7 - NORTH ELEVATION
1/4" = 1'-0"

SHEET NOTES:

1. DIMENSIONS ARE TO FACE OF WALL FINISH, GRID LINES, OR CENTERLINE OF COLUMN. ALL ELEVATIONS ARE NOTED FROM FINISH FLOOR ELEVATIONS.

2. PROVIDE DRYWALL TRIM AT ALL EXPOSED EDGES AND CORNERS.

3. MINIMUM DIMENSION FROM ANY CORNER OR WALL TO FRAMING STUD AT DOOR JAMB OPENING SHALL BE 4" UNO.

4. PROVIDE FIRE RETARDANT WOOD BLOCKING FOR ANY WALL MOUNTED EQUIPMENT OR ACCESSORIES. COORDINATE ALL BLOCKING REQUIREMENTS NECESSARY WITH OTHER TRADES.

5. THE GC SHALL VERIFY DIMENSIONS OF THE EXISTING SPACE AND OF ANY EXISTING CONSTRUCTION TO REMAIN BY ACTUAL MEASUREMENT BEFORE ANY WORK IS PERFORMED. IF ANY MEASUREMENTS DIFFER FROM DIMENSIONS SHOWN ON PLAN, GC IS TO NOTIFY THE A/E IMMEDIATELY. THE GC SHALL BE RESPONSIBLE FOR CORRECTING ANY AND ALL DISCREPANCIES FOUND AFTER THE WORK IS PERFORMED, AT NO ADDITIONAL EXPENSE TO THE OWNER.

6. THE GC SHALL BE RESPONSIBLE FOR COORDINATING WITH OWNER ON ALL WORK TO BE PERFORMED BY THE OWNER. ANY POTENTIAL CONFLICTS OR DELAYS CAUSED BY THE OWNER'S SUBCONSTRACTORS MUST BE DOCUMENTED IN WRITING TO THE OWNER BEFORE THE DELAY IS ACTUALLY INCURRED FOR IT TO BE CONSIDERED. OTHERWISE THE GC WILL BE RESPONSIBLE FOR MEETING THE SCHEDULE AS OUTLINED IN THE CONTRACT.

7. THE GC TO VERIFY ALL FINISHED DIMENSIONS. FIELD CONDITIONS ALTERING ANY DIMENSIONS SHOULD BE BROUGHT TO THE ATTENTION OF THE A/E.

8. THE GC SHALL SUPPLY ALL MATERIAL, LABOR, AND COORDINATION REQ'D FOR THE INSTALLATION OF ALL OWNER-SUPPLIED ITEMS AS DESCRIBED IN THE DOCUMENTS, UNO.

9. THE GC IS RESPONSIBLE FOR ALL FLOOR AND WALL PENETRATIONS FOR ELECTRICAL AND MECHANICAL WORK. ALL SUCH OPENING SHALL BE FRAMED AND REINFORCED.

10. FLOOR SURFACES SHALL BE LEVELED TO ASSURE SMOOTH SURFACE FOR FINISH FLOOR INSTALLATION.

11. THE GC TO COORDINATE ALL UTILITY STUB-UPS AND LOCATION OF ALL EQUIPMENT PRIOR TO INSTALLING ANY ONE ITEM.

12.PROVIDE PAINTED ACCESS PANELS IN WALLS & CEILING AT CONCEALED ITEMS SUCH AS VALVES, CONTROLS, SWITCHES OR ANY OTHER ITEMS THAT REQUIRES ACCESS. GC TO DETERMINE ACCESS PANEL LOCATION W/ A/E PRIOR TO INSTALLATION.

LEGEND:

	NOT IN CONTRACT	#	DOOR TAG
	NEW CONSTRUCTION WALLS	#	WINDOW TAG
	NEW IPE WOOD DECK	FE	FIRE EXTINGUISHER
	QUARRY TILE FLOOR	FD	FLOOR DRAIN
	ASPHALT REPAIR	#	WALL TAG
	GRAVEL SURFACE	B1	BOLLARD LIGHT
	APPROXIMATE LIMIT OF SCOPE	T1	TREE KNUCKLE LIGHT
		?	KEY NOTES

X-? SIGNAGE IDENTIFICATION SYMBOL SEE SIGNAGE DETAILS ON SHEET DCV-A-94

H3 H3 HISTORIC ACORN LIGHT

CONSTRUCTION KEYNOTES

10	PROVIDE AND INSTALL COLUMN ENCLOSURES. SEE DETAILS.
25	NEW ROOF WITH ASPHALT SHINGLE ROOFING WITH TWO LAYERS OF UNDERLAYMENT, AND SHEATHING.
53	RECONSTRUCT TOWER AS SPECIFIED. SEE STRUCTURAL DRAWINGS.
54	RECONSTRUCT WING PIER. SEE STRUCTURAL DRAWINGS.
56	INSTALL FLAG POLE AND ALL REQUIRED MOUNTING HARDWARE AS SPECIFIED.
57	INSTALL EXISTING DRAGON HEADS UPON CONSTRUCTION COMPLETION. COORDINATE WITH PLUMBNG.
61	CONSTRUCT FACADE COMPONENTS WITH FIBERGLASS REINFORCED PLASTIC. SEE DCV-A-80 FOR DETAILS AND COORDINATION.
62	CONSTRUCT MURAL PANELS. CONTRACTOR TO PRINT AND INSTALL MURAL ARTWORK AS SPECIFIED.
64	INSTALL "ACORN" HISTORICAL LIGHTS. SEE ELECTRICAL DRAWINGS.
65	REINSTALL EXISTING ROOF MOUNTED DIGITAL SCREEN. SEE ELECTRICAL DRAWINGS.
73	CONSTRUCT NEW ROOF BALUSTRADE. SEE DETAILS.
92	REINSTALL EXISTING FENCE.

8/30/2022 4:12:55 PM

CONSULTANT INFORMATION
The LiRo Group
3 Aerial Way, Syosset, New York 11791
(516) 938-5476 www.liro.com

CONSULTANT SEAL
REGISTERED ARCHITECT ROBERT D. YOUNG JR. 023220 STATE OF NEW YORK

REVISION NUMBER	DATE	MADE BY	APP'D BY	REVISION

RECORD DRAWING CERTIFICATION
☐ AS BUILT – CHANGES AS NOTED ☐ AS BUILT – NO CHANGES

CONTRACTOR
NAME
SIGNATURE
TITLE DATE

PROJECT COORDINATOR
NAME
SIGNATURE
TITLE DATE

WESTCHESTER COUNTY, NEW YORK
DEPARTMENT OF PUBLIC WORKS AND TRANSPORTATION
DIVISION OF ENGINEERING

INFRASTRUCTURE REHABILITATION - PHASE 3
PLAYLAND PARK, RYE, NEW YORK
DRAGON COASTER VENDORS
EXTERIOR ELEVATIONS 3 OF 3

CONTRACT NUMBER	22-523
SHEET NUMBER	DCV-A-22
DWG NO.:	414 of 664
SCALE:	1/4" = 1'-0"
DATE:	08/23/2022
DPW FILE NUMBER	1-118-A-1163-0
REV. NO.	

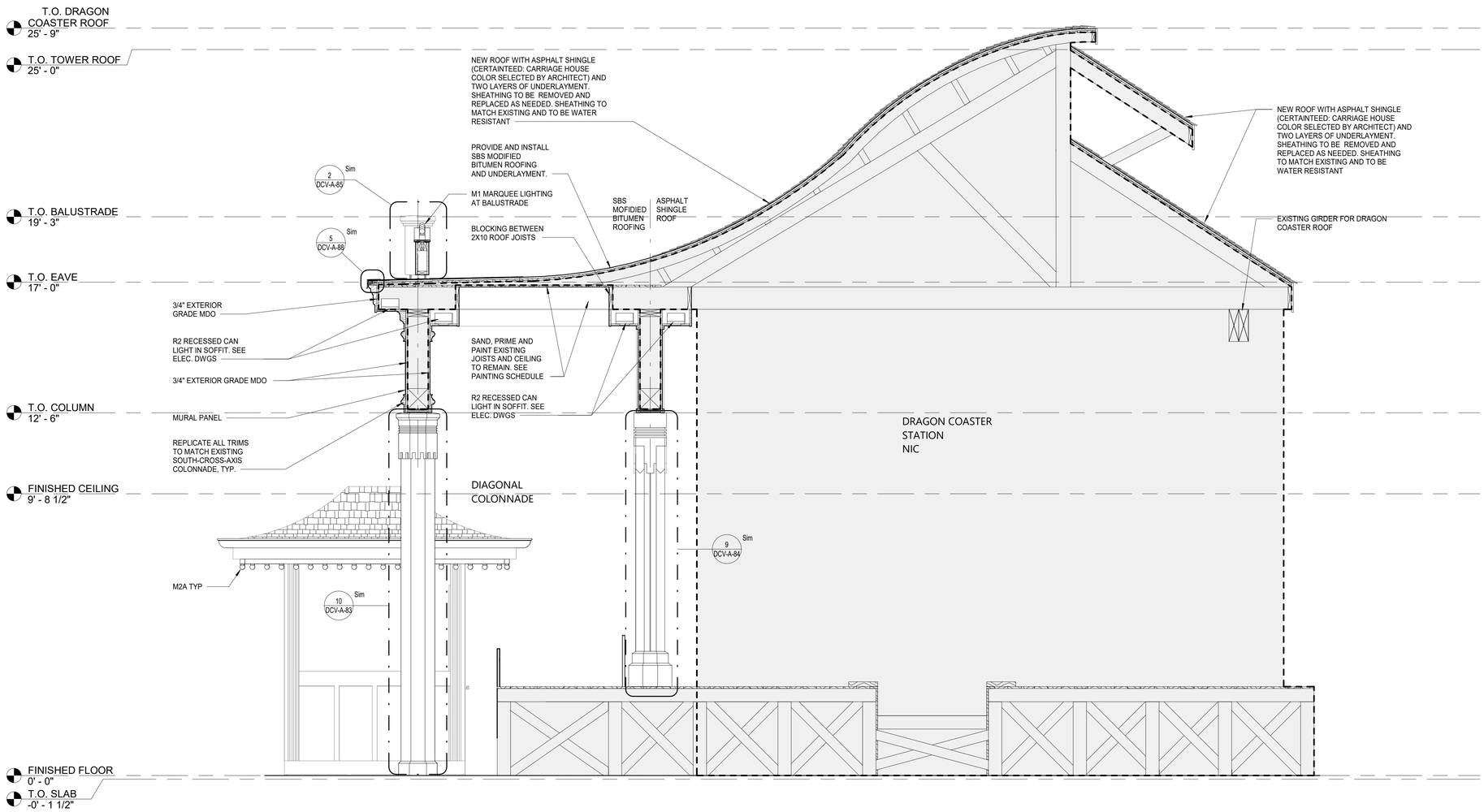

1 SECTION AT DIAGONAL COLONNADE AND DRAGON COASTER STATION
1/2" = 1'-0"

SHEET NOTES:

1. DIMENSIONS ARE TO FACE OF WALL FINISH, GRID LINES, OR CENTERLINE OF COLUMN. ALL ELEVATIONS ARE NOTED FROM FINISH FLOOR ELEVATIONS.

2. PROVIDE DRYWALL TRIM AT ALL EXPOSED EDGES AND CORNERS.

3. MINIMUM DIMENSION FROM ANY CORNER OR WALL TO FRAMING STUD AT DOOR JAMB OPENING SHALL BE 4" UNO.

4. PROVIDE FIRE RETARDANT WOOD BLOCKING FOR ANY WALL MOUNTED EQUIPMENT OR ACCESSORIES. COORDINATE ALL BLOCKING REQUIREMENTS NECESSARY WITH OTHER TRADES.

5. THE GC SHALL VERIFY DIMENSIONS OF THE EXISTING SPACE AND OF ANY EXISTING CONSTRUCTION TO REMAIN BY ACTUAL MEASUREMENT BEFORE ANY WORK IS PERFORMED. IF ANY MEASUREMENTS DIFFER FROM DIMENSIONS SHOWN ON PLAN, GC IS TO NOTIFY THE A/E IMMEDIATELY. THE GC SHALL BE RESPONSIBLE FOR CORRECTING ANY AND ALL DISCREPANCIES FOUND AFTER THE WORK IS PERFORMED, AT NO ADDITIONAL EXPENSE TO THE OWNER.

6. THE GC SHALL BE RESPONSIBLE FOR COORDINATING WITH OWNER ON ALL WORK TO BE PERFORMED BY THE OWNER. ANY POTENTIAL CONFLICTS OR DELAYS CAUSED BY THE OWNER'S SUBCONSTRACTORS MUST BE DOCUMENTED IN WRITING TO THE OWNER BEFORE THE DELAY IS ACTUALLY INCURRED FOR IT TO BE CONSIDERED. OTHERWISE THE GC WILL BE RESPONSIBLE FOR MEETING THE SCHEDULE AS OUTLINED IN THE CONTRACT.

7. THE GC TO VERIFY ALL FINISHED DIMENSIONS. FIELD CONDITIONS ALTERING ANY DIMENSIONS SHOULD BE BROUGHT TO THE ATTENTION OF THE A/E.

8. THE GC SHALL SUPPLY ALL MATERIAL, LABOR, AND COORDINATION REQ'D FOR THE INSTALLATION OF ALL OWNER-SUPPLIED ITEMS AS DESCRIBED IN THE DOCUMENTS, UNO.

9. THE GC IS RESPONSIBLE FOR ALL FLOOR AND WALL PENETRATIONS FOR ELECTRICAL AND MECHANICAL WORK. ALL SUCH OPENING SHALL BE FRAMED AND REINFORCED.

10. FLOOR SURFACES SHALL BE LEVELED TO ASSURE SMOOTH SURFACE FOR FINISH FLOOR INSTALLATION.

11. THE GC TO COORDINATE ALL UTILITY STUB-UPS AND LOCATION OF ALL EQUIPMENT PRIOR TO INSTALLING ANY ONE ITEM.

12.PROVIDE PAINTED ACCESS PANELS IN WALLS & CEILING AT CONCEALED ITEMS SUCH AS VALVES, CONTROLS, SWITCHES OR ANY OTHER ITEMS THAT REQUIRES ACCESS. GC TO DETERMINE ACCESS PANEL LOCATION W/ A/E PRIOR TO INSTALLATION.

LEGEND:

	NOT IN CONTRACT	#	DOOR TAG
	NEW CONSTRUCTION WALLS	#	WINDOW TAG
	NEW IPE WOOD DECK	FE	FIRE EXTINGUISHER
	QUARRY TILE FLOOR	FD	FLOOR DRAIN
	ASPHALT REPAIR	#	WALL TAG
	GRAVEL SURFACE	B1	BOLLARD LIGHT
	APPROXIMATE LIMIT OF SCOPE	T1	TREE KNUCKLE LIGHT
		?	KEY NOTES
		X-?	SIGNAGE IDENTIFICATION SYMBOL SEE SIGNAGE DETAILS ON SHEET DCV-A-94
		H3	H3 HISTORIC ACORN LIGHT

8/30/2022 4:12:59 PM

CONSULTANT INFORMATION
The LiRo Group
3 Aerial Way, Syosset, New York 11791
(516) 938-5476 www.liro.com

CONSULTANT SEAL
REGISTERED ARCHITECT ROBERT D. YOUNG 023290 STATE OF NEW YORK

REVISION NUMBER	DATE	MADE BY	APP'D BY	REVISION

RECORD DRAWING CERTIFICATION
☐ AS BUILT – CHANGES AS NOTED ☐ AS BUILT – NO CHANGES

CONTRACTOR
NAME
SIGNATURE
TITLE DATE

PROJECT COORDINATOR
NAME
SIGNATURE
TITLE DATE

WESTCHESTER COUNTY, NEW YORK
DEPARTMENT OF PUBLIC WORKS AND TRANSPORTATION
DIVISION OF ENGINEERING

INFRASTRUCTURE REHABILITATION - PHASE 3
PLAYLAND PARK, RYE, NEW YORK
DRAGON COASTER VENDORS
SECTION AT DIAGONAL COLONNADE AND DRAGON COASTER STATION

CONTRACT NUMBER	22-523
SHEET NUMBER	DCV-A-30
DWG NO.:	415 of 664
SCALE:	As indicated
DATE:	08/23/2022
DPW FILE NUMBER	1-118-A-1164-0
REV. NO.	

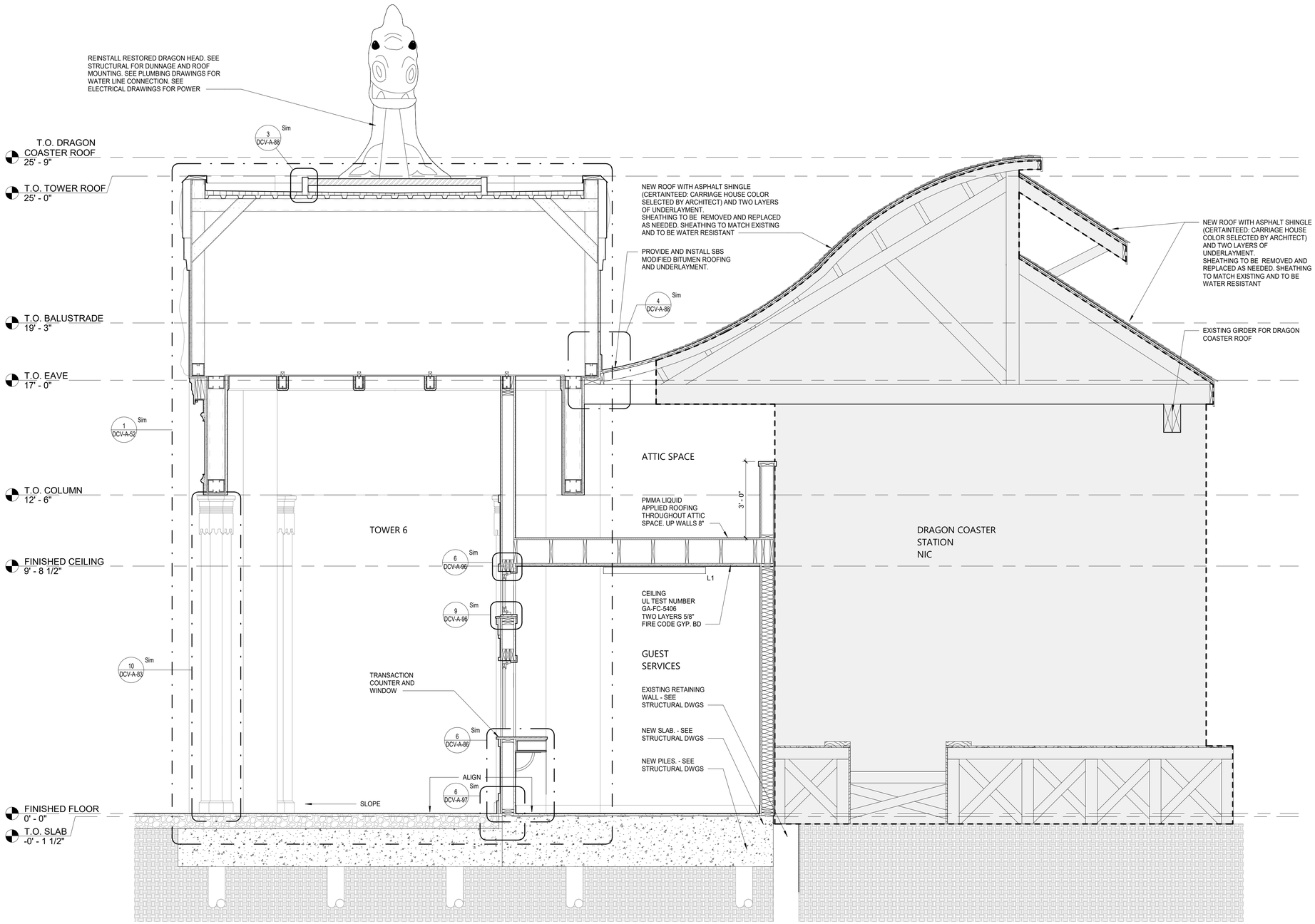

1 SECTION AT NORTH COLONNADE AND TOWER 6
1/2" = 1'-0"

SHEET NOTES:

1. DIMENSIONS ARE TO FACE OF WALL FINISH, GRID LINES, OR CENTERLINE OF COLUMN. ALL ELEVATIONS ARE NOTED FROM FINISH FLOOR ELEVATIONS.

2. PROVIDE DRYWALL TRIM AT ALL EXPOSED EDGES AND CORNERS.

3. MINIMUM DIMENSION FROM ANY CORNER OR WALL TO FRAMING STUD AT DOOR JAMB OPENING SHALL BE 4" UNO.

4. PROVIDE FIRE RETARDANT WOOD BLOCKING FOR ANY WALL MOUNTED EQUIPMENT OR ACCESSORIES. COORDINATE ALL BLOCKING REQUIREMENTS NECESSARY WITH OTHER TRADES.

5. THE GC SHALL VERIFY DIMENSIONS OF THE EXISTING SPACE AND OF ANY EXISTING CONSTRUCTION TO REMAIN BY ACTUAL MEASUREMENT BEFORE ANY WORK IS PERFORMED. IF ANY MEASUREMENTS DIFFER FROM DIMENSIONS SHOWN ON PLAN, GC IS TO NOTIFY THE A/E IMMEDIATELY. THE GC SHALL BE RESPONSIBLE FOR CORRECTING ANY AND ALL DISCREPANCIES FOUND AFTER THE WORK IS PERFORMED, AT NO ADDITIONAL EXPENSE TO THE OWNER.

6. THE GC SHALL BE RESPONSIBLE FOR COORDINATING WITH OWNER ON ALL WORK TO BE PERFORMED BY THE OWNER. ANY POTENTIAL CONFLICTS OR DELAYS CAUSED BY THE OWNER'S SUBCONSTRACTORS MUST BE DOCUMENTED IN WRITING TO THE OWNER BEFORE THE DELAY IS ACTUALLY INCURRED FOR IT TO BE CONSIDERED. OTHERWISE THE GC WILL BE RESPONSIBLE FOR MEETING THE SCHEDULE AS OUTLINED IN THE CONTRACT.

7. THE GC TO VERIFY ALL FINISHED DIMENSIONS. FIELD CONDITIONS ALTERING ANY DIMENSIONS SHOULD BE BROUGHT TO THE ATTENTION OF THE A/E.

8. THE GC SHALL SUPPLY ALL MATERIAL, LABOR, AND COORDINATION REQ'D FOR THE INSTALLATION OF ALL OWNER-SUPPLIED ITEMS AS DESCRIBED IN THE DOCUMENTS, UNO.

9. THE GC IS RESPONSIBLE FOR ALL FLOOR AND WALL PENETRATIONS FOR ELECTRICAL AND MECHANICAL WORK. ALL SUCH OPENING SHALL BE FRAMED AND REINFORCED.

10. FLOOR SURFACES SHALL BE LEVELED TO ASSURE SMOOTH SURFACE FOR FINISH FLOOR INSTALLATION.

11. THE GC TO COORDINATE ALL UTILITY STUB-UPS AND LOCATION OF ALL EQUIPMENT PRIOR TO INSTALLING ANY ONE ITEM.

12.PROVIDE PAINTED ACCESS PANELS IN WALLS & CEILING AT CONCEALED ITEMS SUCH AS VALVES, CONTROLS, SWITCHES OR ANY OTHER ITEMS THAT REQUIRES ACCESS. GC TO DETERMINE ACCESS PANEL LOCATION W/ A/E PRIOR TO INSTALLATION.

LEGEND:

	NOT IN CONTRACT	#	DOOR TAG
	NEW CONSTRUCTION WALLS	#	WINDOW TAG
	NEW IPE WOOD DECK	FE	FIRE EXTINGUISHER
	QUARRY TILE FLOOR	FD	FLOOR DRAIN
	ASPHALT REPAIR	#	WALL TAG
	GRAVEL SURFACE	B1	BOLLARD LIGHT
	APPROXIMATE LIMIT OF SCOPE	T1	TREE KNUCKLE LIGHT
		?	KEY NOTES
		X-?	SIGNAGE IDENTIFICATION SYMBOL SEE SIGNAGE DETAILS ON SHEET DCV-A-94
		H3	H3 HISTORIC ACORN LIGHT

8/30/2022 4:13:01 PM

CONSULTANT INFORMATION
The LiRo Group
3 Aerial Way, Syosset, New York 11791
(516) 938-5476 www.liro.com

CONSULTANT SEAL
REGISTERED ARCHITECT ROBERT D. TOMASULO 023280 STATE OF NEW YORK

REVISION NUMBER	DATE	MADE BY	APP'D BY	REVISION

RECORD DRAWING CERTIFICATION
☐ AS BUILT – CHANGES AS NOTED ☐ AS BUILT – NO CHANGES

CONTRACTOR
NAME
SIGNATURE
TITLE DATE

PROJECT COORDINATOR
NAME
SIGNATURE
TITLE DATE

WESTCHESTER COUNTY, NEW YORK
DEPARTMENT OF PUBLIC WORKS AND TRANSPORTATION
DIVISION OF ENGINEERING

INFRASTRUCTURE REHABILITATION - PHASE 3
PLAYLAND PARK, RYE, NEW YORK
DRAGON COASTER VENDORS
SECTION AT TOWER 6 AND GUEST SERVICES

CONTRACT NUMBER	22-523
SHEET NUMBER	DCV-A-31
DWG NO.:	416 of 664
SCALE:	As indicated
DATE:	08/23/2022
DPW FILE NUMBER	1-118-A-1165-0
REV. NO.	

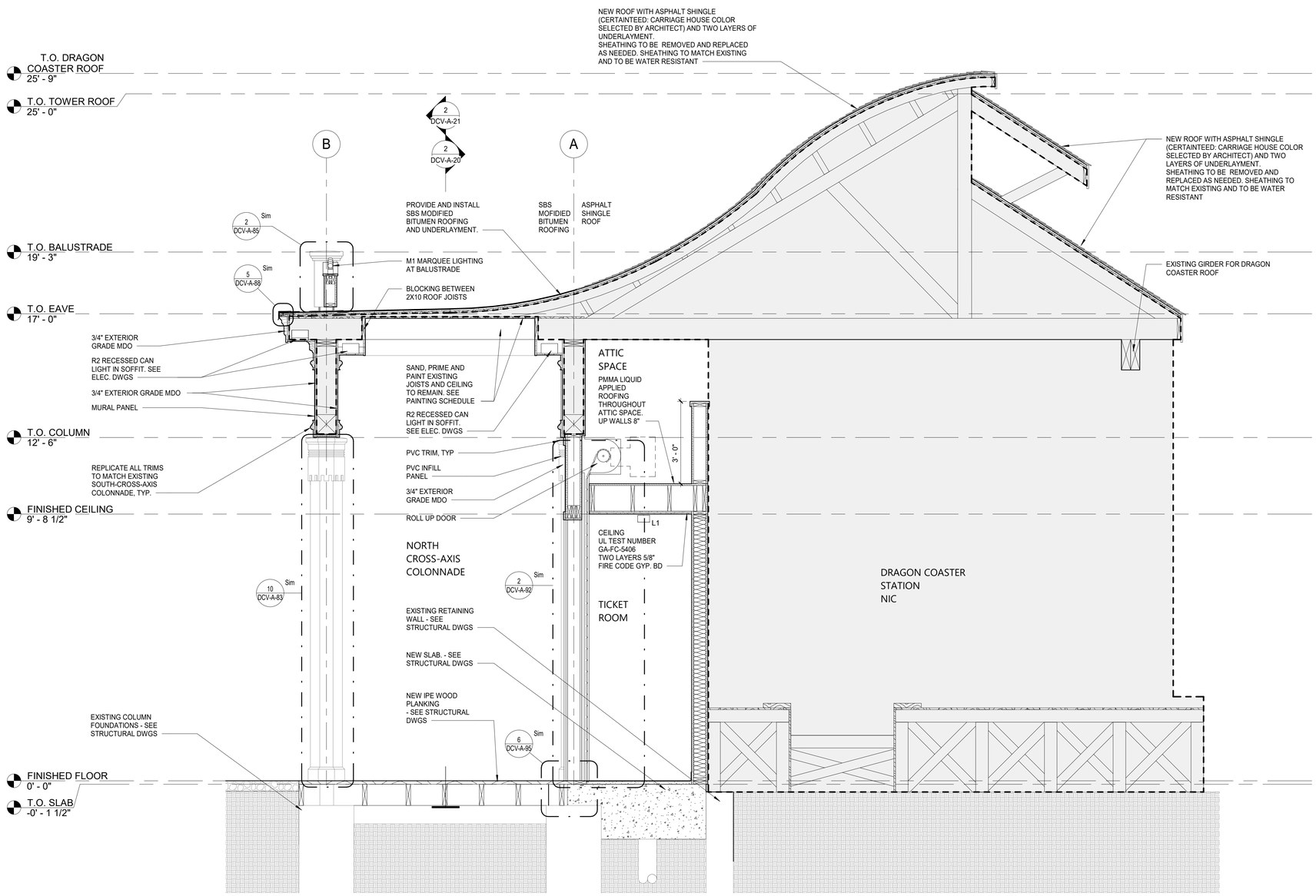

1 SECTION AT TICKET ROOM
1/2" = 1'-0"

SHEET NOTES:

1. DIMENSIONS ARE TO FACE OF WALL FINISH, GRID LINES, OR CENTERLINE OF COLUMN. ALL ELEVATIONS ARE NOTED FROM FINISH FLOOR ELEVATIONS.

2. PROVIDE DRYWALL TRIM AT ALL EXPOSED EDGES AND CORNERS.

3. MINIMUM DIMENSION FROM ANY CORNER OR WALL TO FRAMING STUD AT DOOR JAMB OPENING SHALL BE 4" UNO.

4. PROVIDE FIRE RETARDANT WOOD BLOCKING FOR ANY WALL MOUNTED EQUIPMENT OR ACCESSORIES. COORDINATE ALL BLOCKING REQUIREMENTS NECESSARY WITH OTHER TRADES.

5. THE GC SHALL VERIFY DIMENSIONS OF THE EXISTING SPACE AND OF ANY EXISTING CONSTRUCTION TO REMAIN BY ACTUAL MEASUREMENT BEFORE ANY WORK IS PERFORMED. IF ANY MEASUREMENTS DIFFER FROM DIMENSIONS SHOWN ON PLAN, GC IS TO NOTIFY THE A/E IMMEDIATELY. THE GC SHALL BE RESPONSIBLE FOR CORRECTING ANY AND ALL DISCREPANCIES FOUND AFTER THE WORK IS PERFORMED, AT NO ADDITIONAL EXPENSE TO THE OWNER.

6. THE GC SHALL BE RESPONSIBLE FOR COORDINATING WITH OWNER ON ALL WORK TO BE PERFORMED BY THE OWNER. ANY POTENTIAL CONFLICTS OR DELAYS CAUSED BY THE OWNER'S SUBCONSTRACTORS MUST BE DOCUMENTED IN WRITING TO THE OWNER BEFORE THE DELAY IS ACTUALLY INCURRED FOR IT TO BE CONSIDERED. OTHERWISE THE GC WILL BE RESPONSIBLE FOR MEETING THE SCHEDULE AS OUTLINED IN THE CONTRACT.

7. THE GC TO VERIFY ALL FINISHED DIMENSIONS. FIELD CONDITIONS ALTERING ANY DIMENSIONS SHOULD BE BROUGHT TO THE ATTENTION OF THE A/E.

8. THE GC SHALL SUPPLY ALL MATERIAL, LABOR, AND COORDINATION REQ'D FOR THE INSTALLATION OF ALL OWNER-SUPPLIED ITEMS AS DESCRIBED IN THE DOCUMENTS, UNO.

9. THE GC IS RESPONSIBLE FOR ALL FLOOR AND WALL PENETRATIONS FOR ELECTRICAL AND MECHANICAL WORK. ALL SUCH OPENING SHALL BE FRAMED AND REINFORCED.

10. FLOOR SURFACES SHALL BE LEVELED TO ASSURE SMOOTH SURFACE FOR FINISH FLOOR INSTALLATION.

11. THE GC TO COORDINATE ALL UTILITY STUB-UPS AND LOCATION OF ALL EQUIPMENT PRIOR TO INSTALLING ANY ONE ITEM.

12.PROVIDE PAINTED ACCESS PANELS IN WALLS & CEILING AT CONCEALED ITEMS SUCH AS VALVES, CONTROLS, SWITCHES OR ANY OTHER ITEMS THAT REQUIRES ACCESS. GC TO DETERMINE ACCESS PANEL LOCATION W/ A/E PRIOR TO INSTALLATION.

LEGEND:

	NOT IN CONTRACT	#	DOOR TAG
	NEW CONSTRUCTION WALLS	#	WINDOW TAG
	NEW IPE WOOD DECK	FE	FIRE EXTINGUISHER
	QUARRY TILE FLOOR	FD	FLOOR DRAIN
	ASPHALT REPAIR	#	WALL TAG
	GRAVEL SURFACE	B1	BOLLARD LIGHT
	APPROXIMATE LIMIT OF SCOPE	T1	TREE KNUCKLE LIGHT
		?	KEY NOTES
		X-?	SIGNAGE IDENTIFICATION SYMBOL SEE SIGNAGE DETAILS ON SHEET DCV-A-94
		H3	H3 HISTORIC ACORN LIGHT

8/30/2022 4:13:02 PM

CONSULTANT INFORMATION
The LiRo Group
3 Aerial Way, Syosset, New York 11791
(516) 938-5476 www.liro.com

CONSULTANT SEAL
REGISTERED ARCHITECT ROBERT D. JOHNSON 023220 STATE OF NEW YORK

REVISION NUMBER	DATE	MADE BY	APP'D BY	REVISION

RECORD DRAWING CERTIFICATION
☐ AS BUILT – CHANGES AS NOTED ☐ AS BUILT – NO CHANGES

CONTRACTOR
NAME
SIGNATURE
TITLE DATE

PROJECT COORDINATOR
NAME
SIGNATURE
TITLE DATE

WESTCHESTER COUNTY, NEW YORK
DEPARTMENT OF PUBLIC WORKS AND TRANSPORTATION
DIVISION OF ENGINEERING

INFRASTRUCTURE REHABILITATION - PHASE 3
PLAYLAND PARK, RYE, NEW YORK
DRAGON COASTER VENDORS
SECTION AT TICKET ROOM

CONTRACT NUMBER	22-523
SHEET NUMBER	DCV-A-32
DWG NO.:	417 of 664
SCALE:	As indicated
DATE:	08/23/2022
DPW FILE NUMBER	1-118-A-1166-0
REV. NO.	

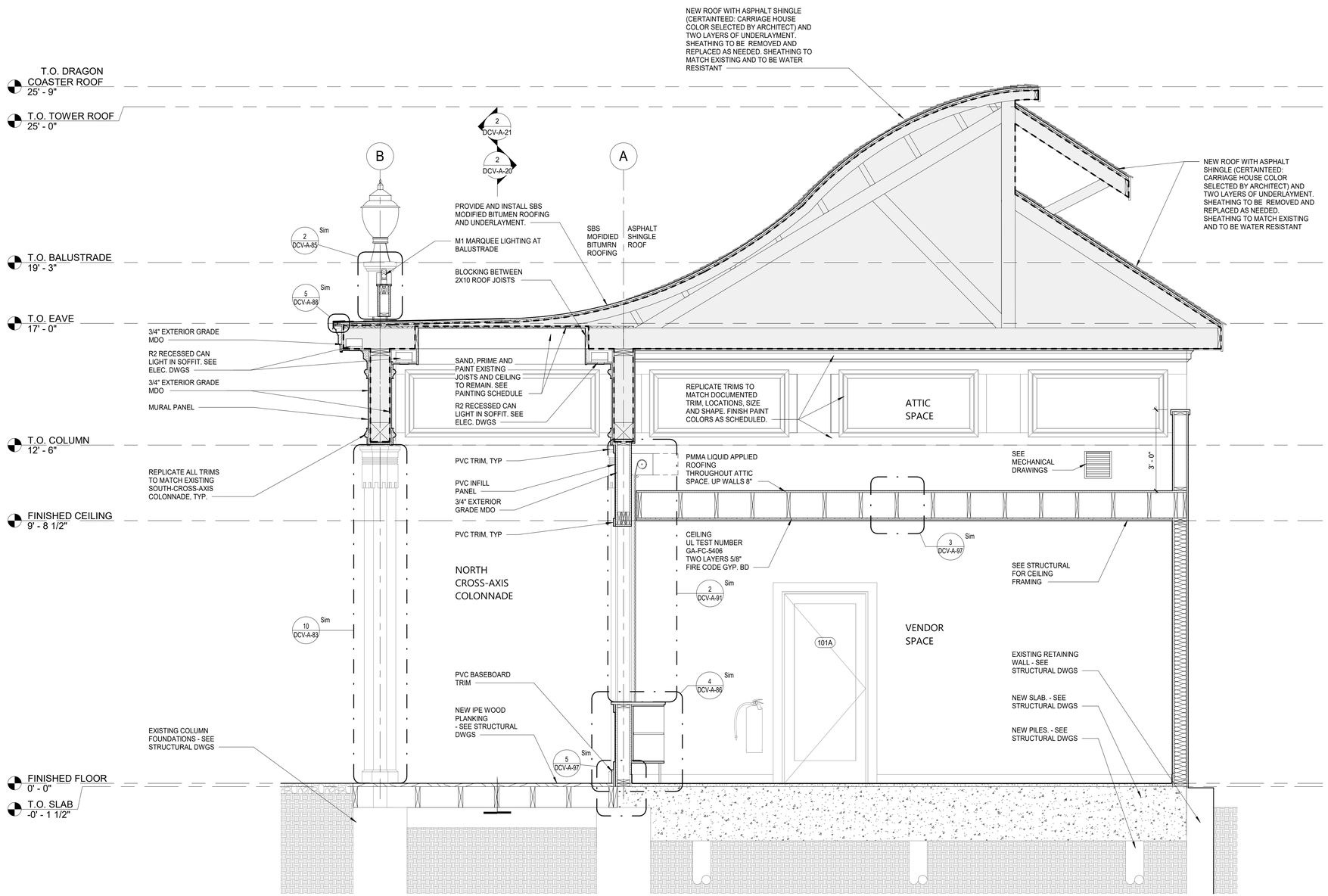

1 SECTION AT VENDOR SPACE
1/2" = 1'-0"

SHEET NOTES:

1. DIMENSIONS ARE TO FACE OF WALL FINISH, GRID LINES, OR CENTERLINE OF COLUMN. ALL ELEVATIONS ARE NOTED FROM FINISH FLOOR ELEVATIONS.

2. PROVIDE DRYWALL TRIM AT ALL EXPOSED EDGES AND CORNERS.

3. MINIMUM DIMENSION FROM ANY CORNER OR WALL TO FRAMING STUD AT DOOR JAMB OPENING SHALL BE 4" UNO.

4. PROVIDE FIRE RETARDANT WOOD BLOCKING FOR ANY WALL MOUNTED EQUIPMENT OR ACCESSORIES. COORDINATE ALL BLOCKING REQUIREMENTS NECESSARY WITH OTHER TRADES.

5. THE GC SHALL VERIFY DIMENSIONS OF THE EXISTING SPACE AND OF ANY EXISTING CONSTRUCTION TO REMAIN BY ACTUAL MEASUREMENT BEFORE ANY WORK IS PERFORMED. IF ANY MEASUREMENTS DIFFER FROM DIMENSIONS SHOWN ON PLAN, GC IS TO NOTIFY THE A/E IMMEDIATELY. THE GC SHALL BE RESPONSIBLE FOR CORRECTING ANY AND ALL DISCREPANCIES FOUND AFTER THE WORK IS PERFORMED, AT NO ADDITIONAL EXPENSE TO THE OWNER.

6. THE GC SHALL BE RESPONSIBLE FOR COORDINATING WITH OWNER ON ALL WORK TO BE PERFORMED BY THE OWNER. ANY POTENTIAL CONFLICTS OR DELAYS CAUSED BY THE OWNER'S SUBCONSTRACTORS MUST BE DOCUMENTED IN WRITING TO THE OWNER BEFORE THE DELAY IS ACTUALLY INCURRED FOR IT TO BE CONSIDERED. OTHERWISE THE GC WILL BE RESPONSIBLE FOR MEETING THE SCHEDULE AS OUTLINED IN THE CONTRACT.

7. THE GC TO VERIFY ALL FINISHED DIMENSIONS. FIELD CONDITIONS ALTERING ANY DIMENSIONS SHOULD BE BROUGHT TO THE ATTENTION OF THE A/E.

8. THE GC SHALL SUPPLY ALL MATERIAL, LABOR, AND COORDINATION REQ'D FOR THE INSTALLATION OF ALL OWNER-SUPPLIED ITEMS AS DESCRIBED IN THE DOCUMENTS, UNO.

9. THE GC IS RESPONSIBLE FOR ALL FLOOR AND WALL PENETRATIONS FOR ELECTRICAL AND MECHANICAL WORK. ALL SUCH OPENING SHALL BE FRAMED AND REINFORCED.

10. FLOOR SURFACES SHALL BE LEVELED TO ASSURE SMOOTH SURFACE FOR FINISH FLOOR INSTALLATION.

11. THE GC TO COORDINATE ALL UTILITY STUB-UPS AND LOCATION OF ALL EQUIPMENT PRIOR TO INSTALLING ANY ONE ITEM.

12.PROVIDE PAINTED ACCESS PANELS IN WALLS & CEILING AT CONCEALED ITEMS SUCH AS VALVES, CONTROLS, SWITCHES OR ANY OTHER ITEMS THAT REQUIRES ACCESS. GC TO DETERMINE ACCESS PANEL LOCATION W/ A/E PRIOR TO INSTALLATION.

LEGEND:

	NOT IN CONTRACT	#	DOOR TAG
	NEW CONSTRUCTION WALLS	#	WINDOW TAG
	NEW IPE WOOD DECK	FE	FIRE EXTINGUISHER
	QUARRY TILE FLOOR	FD	FLOOR DRAIN
	ASPHALT REPAIR	#	WALL TAG
	GRAVEL SURFACE	B1	BOLLARD LIGHT
	APPROXIMATE LIMIT OF SCOPE	T1	TREE KNUCKLE LIGHT
		?	KEY NOTES
		X-?	SIGNAGE IDENTIFICATION SYMBOL SEE SIGNAGE DETAILS ON SHEET DCV-A-94
		H3	H3 HISTORIC ACORN LIGHT

8/30/2022 4:13:04 PM

CONSULTANT INFORMATION
The LiRo Group
3 Aerial Way, Syosset, New York 11791
(516) 938-5476 www.liro.com

CONSULTANT SEAL
REGISTERED ARCHITECT ROBERT D. YOUNG JR. 023220 STATE OF NEW YORK

REVISION NUMBER	DATE	MADE BY	APP'D BY	REVISION

RECORD DRAWING CERTIFICATION
☐ AS BUILT – CHANGES AS NOTED ☐ AS BUILT – NO CHANGES

CONTRACTOR
NAME
SIGNATURE
TITLE DATE

PROJECT COORDINATOR
NAME
SIGNATURE
TITLE DATE

WESTCHESTER COUNTY, NEW YORK
DEPARTMENT OF PUBLIC WORKS AND TRANSPORTATION
DIVISION OF ENGINEERING

INFRASTRUCTURE REHABILITATION - PHASE 3
PLAYLAND PARK, RYE, NEW YORK
DRAGON COASTER VENDORS
SECTION AT VENDOR SPACE

CONTRACT NUMBER	22-523
SHEET NUMBER	DCV-A-33
DWG NO.:	418 of 664
SCALE:	As indicated
DATE:	08/23/2022
DPW FILE NUMBER	1-118-A-1167-0
REV. NO.	

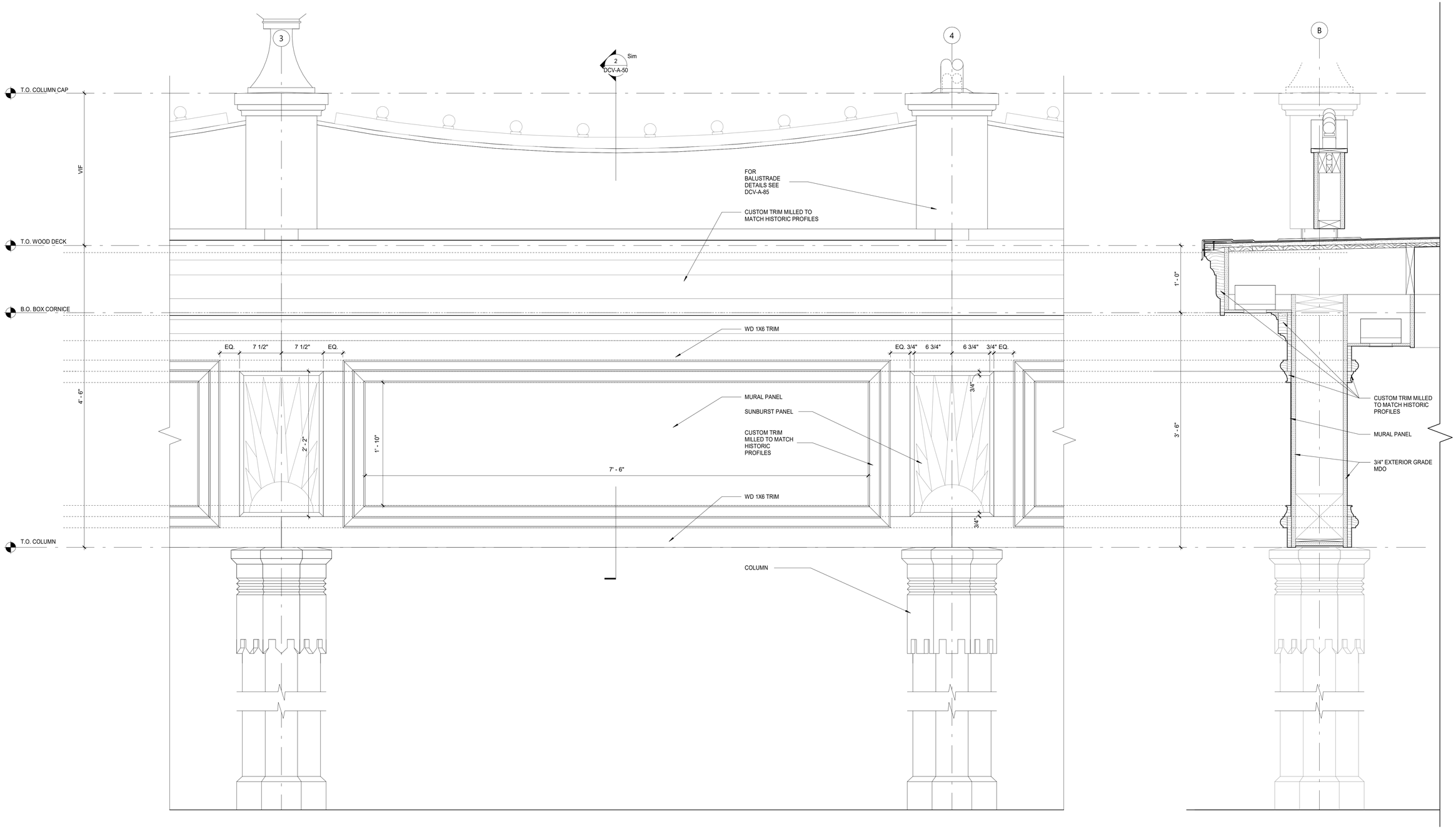

1 TYPICAL COLONNADE ELEVATION
1 1/2" = 1'-0"

2 TYPICAL COLONNADE SECTION
1 1/2" = 1'-0"

8/30/2022 4:13:04 PM

CONSULTANT INFORMATION

The LiRo Group
3 Aerial Way, Syosset, New York 11791
(516) 938-5476 www.liro.com

CONSULTANT SEAL

REGISTERED ARCHITECT ROBERT D. YOUNG JR. 023220 STATE OF NEW YORK

REVISION NUMBER	DATE	MADE BY	APP'D BY	REVISION

RECORD DRAWING CERTIFICATION

☐ AS BUILT – CHANGES AS NOTED ☐ AS BUILT – NO CHANGES

CONTRACTOR
NAME
SIGNATURE
TITLE DATE

PROJECT COORDINATOR
NAME
SIGNATURE
TITLE DATE

WESTCHESTER COUNTY, NEW YORK
DEPARTMENT OF PUBLIC WORKS AND TRANSPORTATION
DIVISION OF ENGINEERING

INFRASTRUCTURE REHABILITATION - PHASE 3
PLAYLAND PARK, RYE, NEW YORK
DRAGON COASTER VENDORS
ENLARGED COLONNADE SECTION AND ELEVATION - EXTERIOR

CONTRACT NUMBER	22-523
SHEET NUMBER	**DCV-A-50**
DWG NO.:	419 of 664
SCALE:	**1 1/2" = 1'-0"**
DATE:	**08/23/2022**
DPW FILE NUMBER	**1-118-A-1168-0**
REV. NO.	

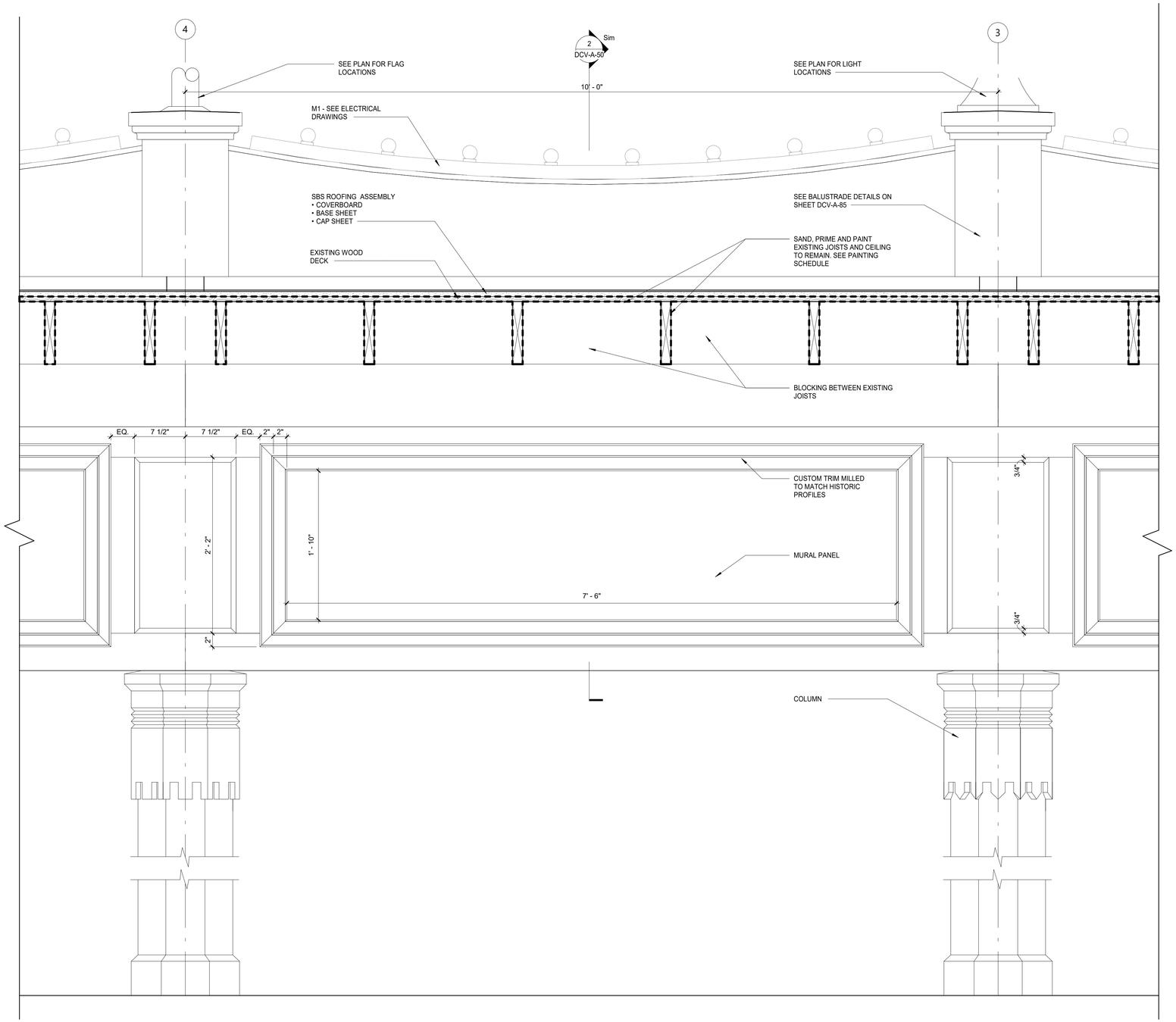

1 TYPICAL COLONNADE LONGITUDINAL SECTION
1 1/2" = 1'-0"

8/30/2022 4:13:05 PM

CONSULTANT INFORMATION

The LiRo Group

3 Aerial Way, Syosset, New York 11791
(516) 938-5476 www.liro.com

CONSULTANT SEAL

REGISTERED ARCHITECT ROBERT D. YOUNG JR. 023280 STATE OF NEW YORK

REVISION NUMBER	DATE	MADE BY	APP'D BY	REVISION

RECORD DRAWING CERTIFICATION

☐ AS BUILT – CHANGES AS NOTED ☐ AS BUILT – NO CHANGES

CONTRACTOR
NAME
SIGNATURE
TITLE DATE

PROJECT COORDINATOR
NAME
SIGNATURE
TITLE DATE

WESTCHESTER COUNTY, NEW YORK
DEPARTMENT OF PUBLIC WORKS AND TRANSPORTATION
DIVISION OF ENGINEERING

INFRASTRUCTURE REHABILITATION - PHASE 3
PLAYLAND PARK, RYE, NEW YORK
DRAGON COASTER VENDORS
ENLARGED COLONNADE SECTION - INTERIOR

CONTRACT NUMBER	22-523
SHEET NUMBER	DCV-A-51
DWG NO.:	420 of 664
SCALE:	1 1/2" = 1'-0"
DATE:	08/23/2022
DPW FILE NUMBER	1-118-A-1169-0
REV. NO.	

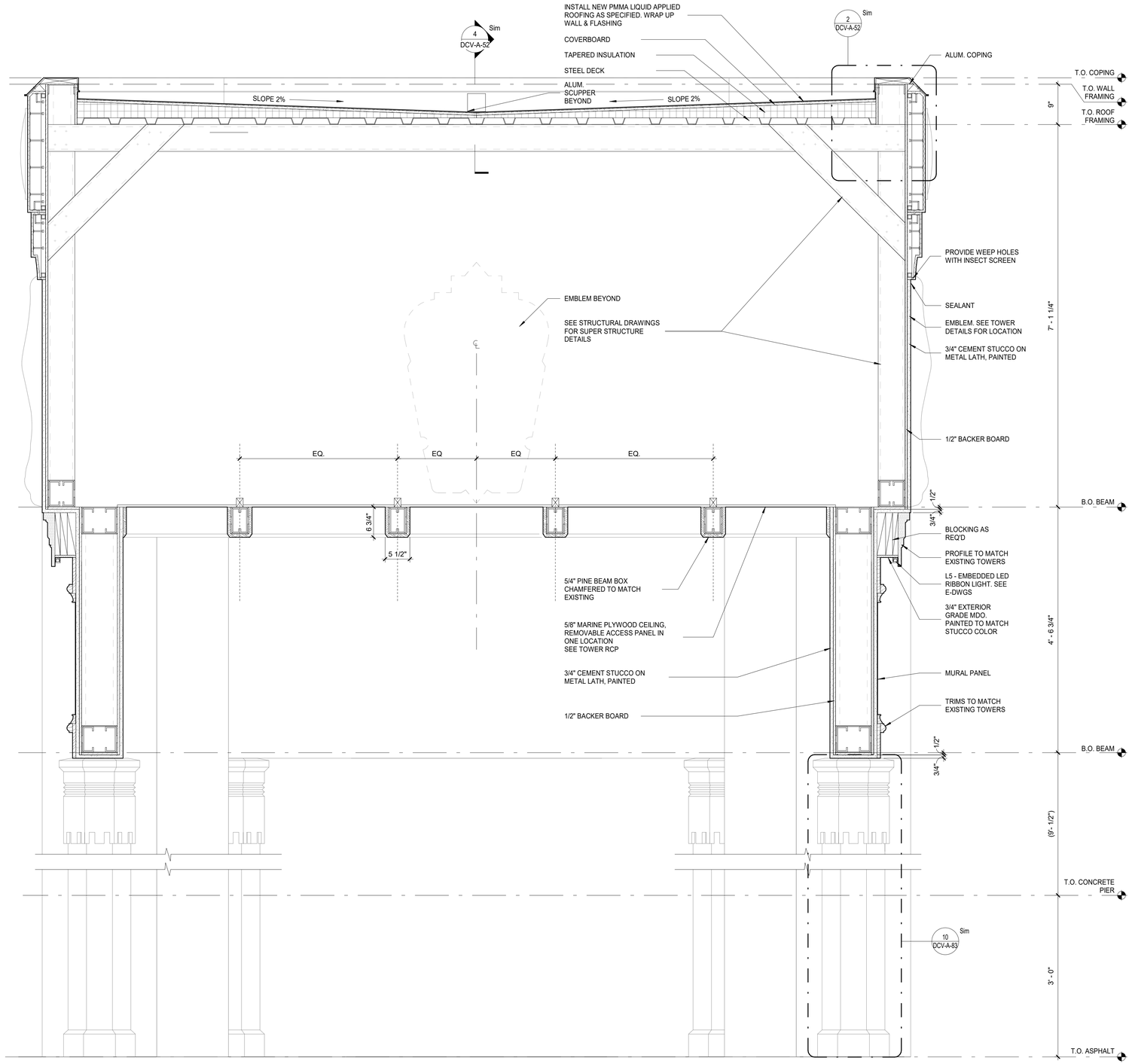

1 TYPICAL TOWER CENTERLINE SECTION
1" = 1'-0"

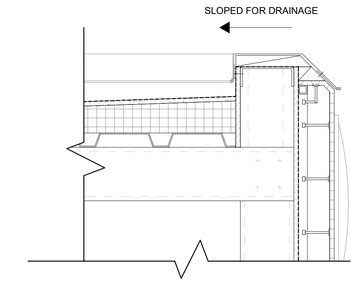

2 SECTION AT TOWER PARAPET
1 1/2" = 1'-0"

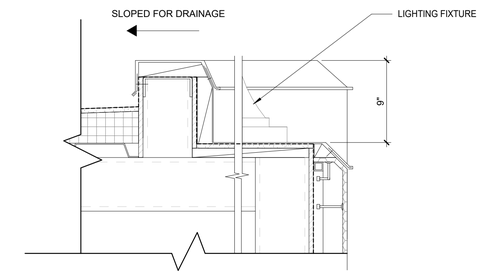

3 SECTION AT TOWER DIAGONAL PARAPET
1 1/2" = 1'-0"

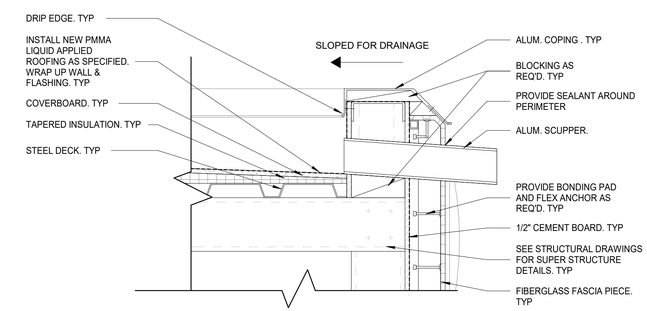

4 SECTION AT TOWER PARAPET AND SCUPPER
1 1/2" = 1'-0"

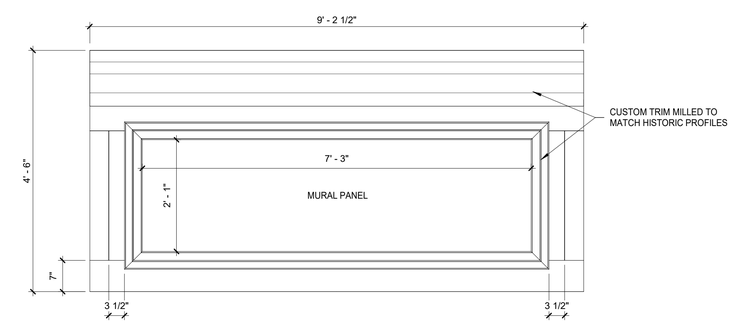

5 TOWER MURAL ELEVATION
3/4" = 1'-0"

8/30/2022 4:13:06 PM

CONSULTANT INFORMATION

The LiRo Group
3 Aerial Way, Syosset, New York 11791
(516) 938-5476 www.liro.com

CONSULTANT SEAL
REGISTERED ARCHITECT ROBERT D. TOMASULO 023280 STATE OF NEW YORK

REVISION NUMBER	DATE	MADE BY	APP'D BY	REVISION

RECORD DRAWING CERTIFICATION
☐ AS BUILT – CHANGES AS NOTED ☐ AS BUILT – NO CHANGES

CONTRACTOR
NAME
SIGNATURE
TITLE DATE

PROJECT COORDINATOR
NAME
SIGNATURE
TITLE DATE

WESTCHESTER COUNTY, NEW YORK
DEPARTMENT OF PUBLIC WORKS AND TRANSPORTATION
DIVISION OF ENGINEERING

INFRASTRUCTURE REHABILITATION - PHASE 3
PLAYLAND PARK, RYE, NEW YORK
DRAGON COASTER VENDORS
ENLARGED TOWER SECTIONS

CONTRACT NUMBER	22-523
SHEET NUMBER	DCV-A-52
DWG NO.:	421 of 664
SCALE:	As indicated
DATE:	08/23/2022
DPW FILE NUMBER	1-118-A-1170-0
REV. NO.	

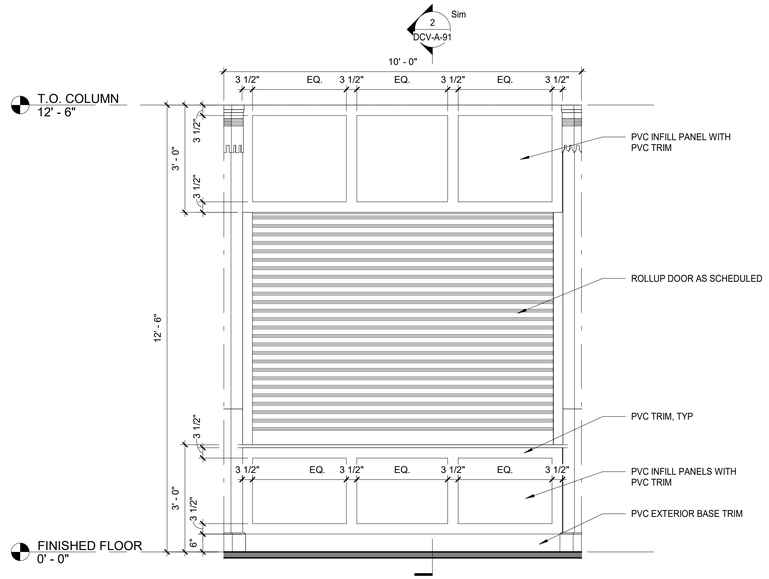

1 NORTH ELEVATION - VENDOR SPACE WITH COUNTER TYP
1/2" = 1'-0"

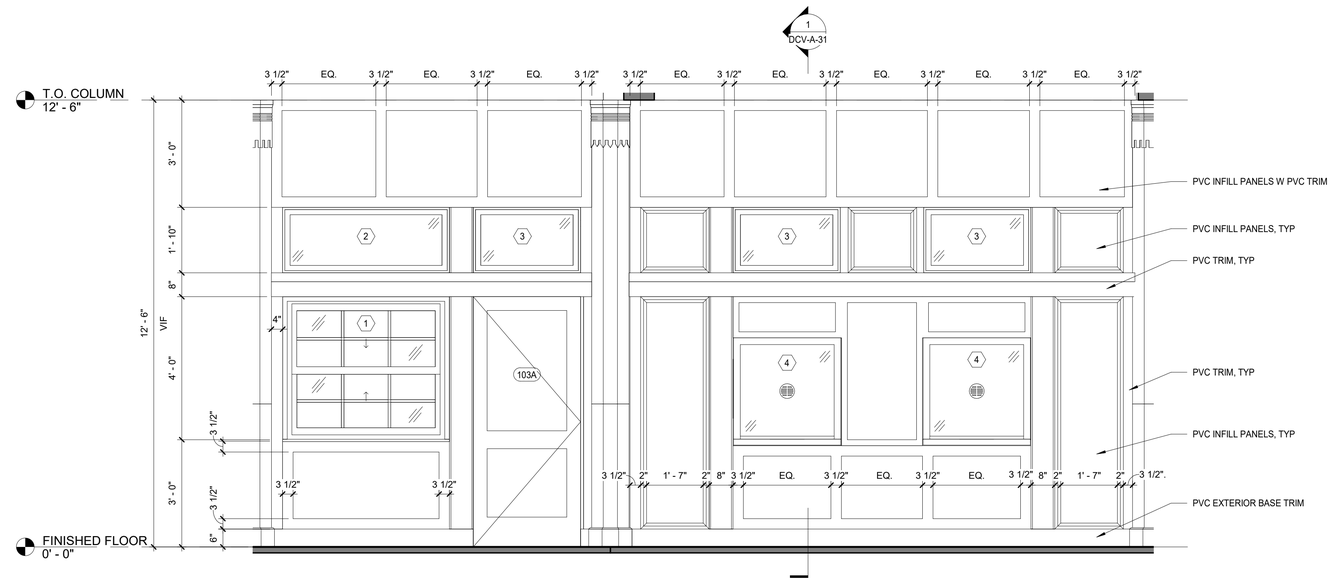

2 NORTH ELEVATION - STOREFRONT
1/2" = 1'-0"

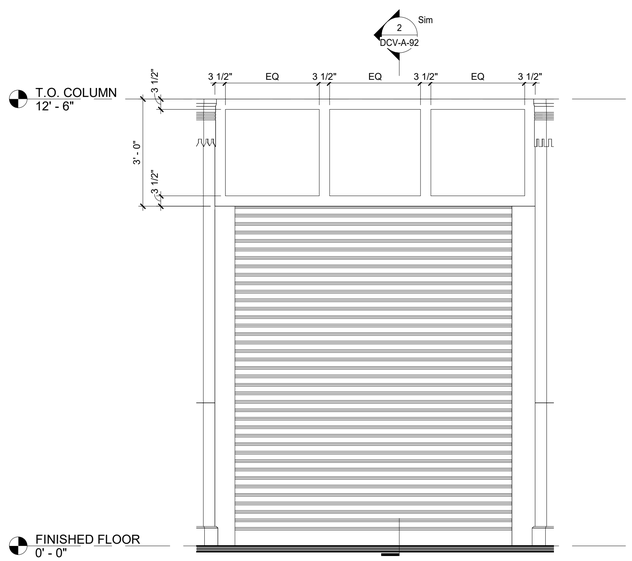

3 NORTH ELEVATION - VENDOR SPACE WITH ROLL UP DOOR
1/2" = 1'-0"

LEGEND:

- NOT IN CONTRACT
- NEW CONSTRUCTION WALLS
- NEW IPE WOOD DECK
- QUARRY TILE FLOOR
- ASPHALT REPAIR
- GRAVEL SURFACE
- APPROXIMATE LIMIT OF SCOPE
- # DOOR TAG
- # WINDOW TAG
- FE FIRE EXTINGUISHER
- FD FLOOR DRAIN
- # WALL TAG
- B1 BOLLARD LIGHT
- T1 TREE KNUCKLE LIGHT
- ? KEY NOTES
- X-? SIGNAGE IDENTIFICATION SYMBOL SEE SIGNAGE DETAILS ON SHEET DCV-A-94
- H3 H3 HISTORIC ACORN LIGHT

8/30/2022 4:13:09 PM

CONSULTANT INFORMATION

The LiRo Group
3 Aerial Way, Syosset, New York 11791
(516) 938-5476 www.liro.com

CONSULTANT SEAL

REGISTERED ARCHITECT ROBERT D. YOUNG JR. 023280 STATE OF NEW YORK

REVISION NUMBER	DATE	MADE BY	APP'D BY	REVISION

RECORD DRAWING CERTIFICATION

☐ AS BUILT – CHANGES AS NOTED ☐ AS BUILT – NO CHANGES

CONTRACTOR
NAME
SIGNATURE
TITLE DATE

PROJECT COORDINATOR
NAME
SIGNATURE
TITLE DATE

WESTCHESTER COUNTY, NEW YORK
DEPARTMENT OF PUBLIC WORKS AND TRANSPORTATION
DIVISION OF ENGINEERING

INFRASTRUCTURE REHABILITATION - PHASE 3
PLAYLAND PARK, RYE, NEW YORK
DRAGON COASTER VENDORS
ENLARGED EXTERIOR ELEVATIONS

CONTRACT NUMBER	22-523
SHEET NUMBER	**DCV-A-53**
DWG NO.:	422 of 664
SCALE:	**As indicated**
DATE:	**08/23/2022**
DPW FILE NUMBER	**1-118-A-1171-0**
REV. NO.	

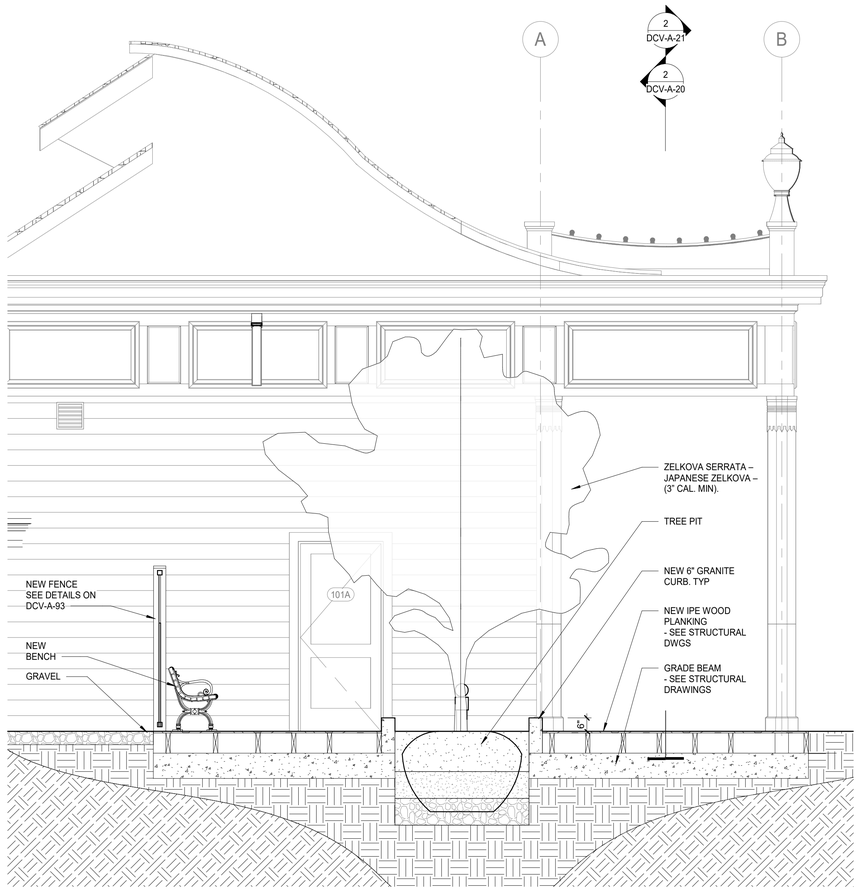

1 SECTION AT COURTYARD PLANTER AND BOARDWALK
3/8" = 1'-0"

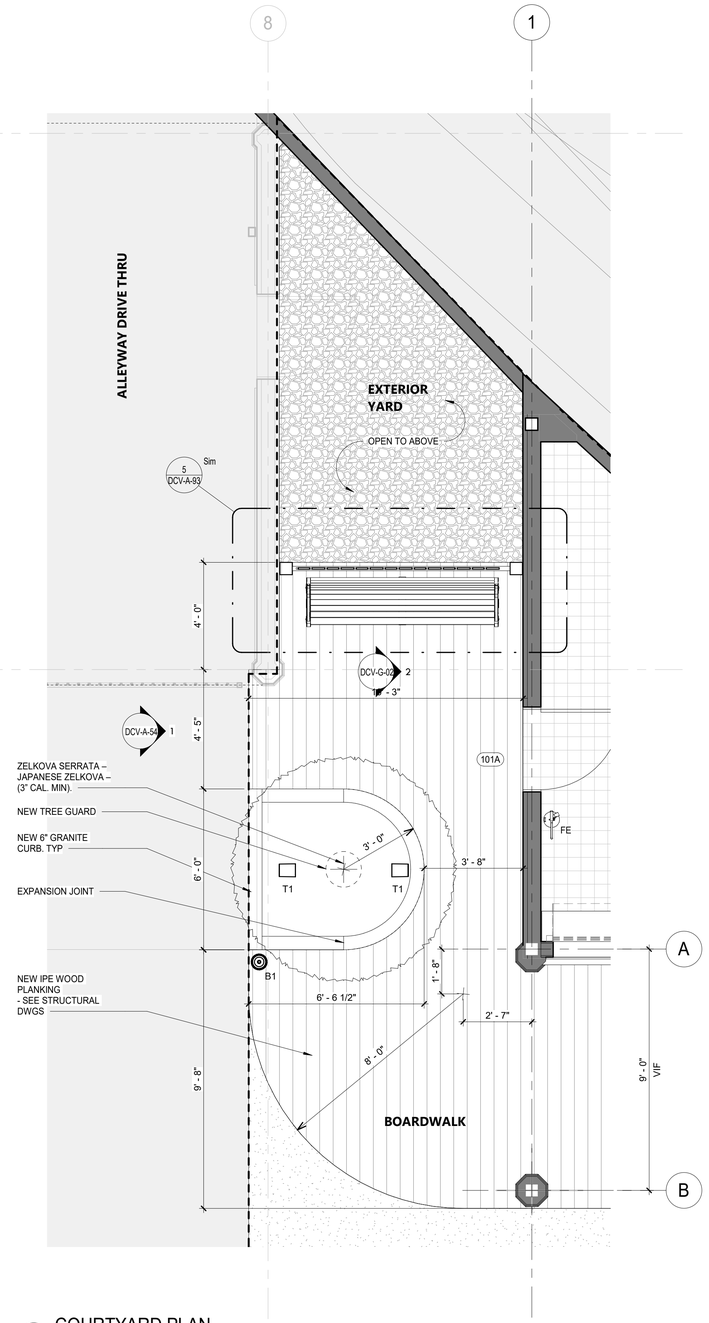

2 COURTYARD PLAN
3/8" = 1'-0"

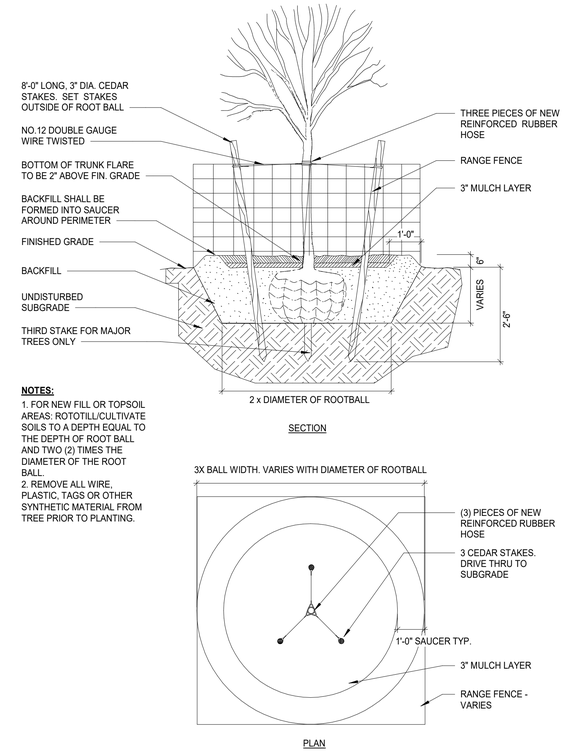

NOTES:
1. FOR NEW FILL OR TOPSOIL AREAS: ROTOTILL/CULTIVATE SOILS TO A DEPTH EQUAL TO THE DEPTH OF ROOT BALL AND TWO (2) TIMES THE DIAMETER OF THE ROOT BALL.
2. REMOVE ALL WIRE, PLASTIC, TAGS OR OTHER SYNTHETIC MATERIAL FROM TREE PRIOR TO PLANTING.

3 TYPICAL TREE PLANTING DETAIL
3/8" = 1'-0"

LEGEND:

	NOT IN CONTRACT	#	DOOR TAG
	NEW CONSTRUCTION WALLS	#	WINDOW TAG
	NEW IPE WOOD DECK	FE	FIRE EXTINGUISHER
	QUARRY TILE FLOOR	FD	FLOOR DRAIN
	ASPHALT REPAIR	#	WALL TAG
	GRAVEL SURFACE	B1	BOLLARD LIGHT
	APPROXIMATE LIMIT OF SCOPE	T1	TREE KNUCKLE LIGHT
		?	KEY NOTES
		X-?	SIGNAGE IDENTIFICATION SYMBOL SEE SIGNAGE DETAILS ON SHEET DCV-A-94
		H3	H3 HISTORIC ACORN LIGHT

8/30/2022 4:13:12 PM

CONSULTANT INFORMATION
The LiRo Group
3 Aerial Way, Syosset, New York 11791
(516) 938-5476 www.liro.com

CONSULTANT SEAL
REGISTERED ARCHITECT ROBERT D. YOUNG JR. 023220 STATE OF NEW YORK

REVISION NUMBER	DATE	MADE BY	APP'D BY	REVISION

RECORD DRAWING CERTIFICATION
☐ AS BUILT – CHANGES AS NOTED ☐ AS BUILT – NO CHANGES

CONTRACTOR
NAME
SIGNATURE
TITLE DATE

PROJECT COORDINATOR
NAME
SIGNATURE
TITLE DATE

WESTCHESTER COUNTY, NEW YORK
DEPARTMENT OF PUBLIC WORKS AND TRANSPORTATION
DIVISION OF ENGINEERING

INFRASTRUCTURE REHABILITATION - PHASE 3
PLAYLAND PARK, RYE, NEW YORK
DRAGON COASTER VENDORS
ENLARGED PLANS AT COURTYARD

CONTRACT NUMBER	22-523
SHEET NUMBER	DCV-A-54
DWG NO.:	423 of 664
SCALE:	As indicated
DATE:	08/23/2022
DPW FILE NUMBER	1-118-A-1172-0
REV. NO.	

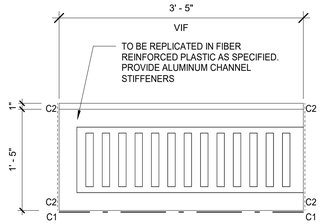

1 LEFT FASCIA
1" = 1'-0"

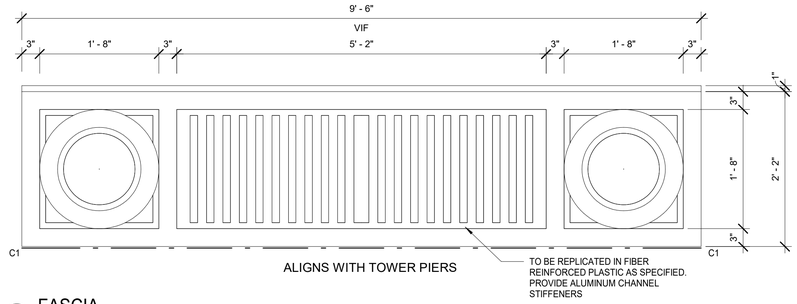

2 FASCIA
1" = 1'-0"

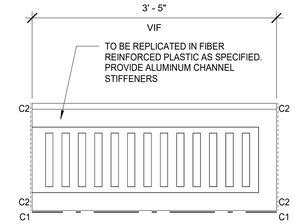

3 RIGHT FASCIA
1" = 1'-0"

NOTE:
1. PROVIDE ALUMINUM CHANNEL STIFFENERS
2. GRANITIC FINISH COATING ALL SURFACES EXCEPT BACK SURFACES
3. SEALANT AROUND PERIMETER

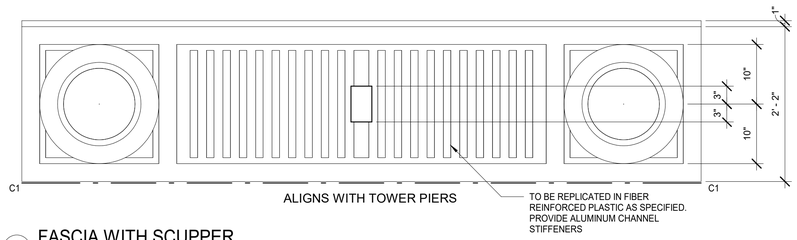

4 FASCIA WITH SCUPPER
1" = 1'-0"

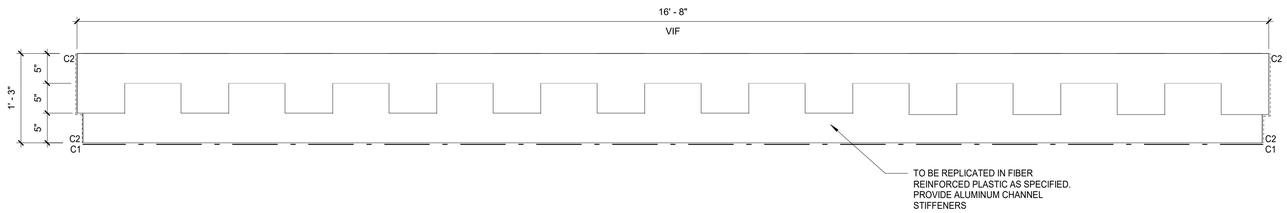

5 DENTIL COURSE
1" = 1'-0"

LEGEND

P →	DISPLAY BOX LOCATION ON TOWER PIER. TO MATCH EXISTING HEIGHT
W	'W' EMBLEM. TO MATCH EXISTING
S	ROOF DRAINAGE SCUPPERS
Q	WING CURLICUE
M →	ART MURAL
SB →	SUNBURST MURAL

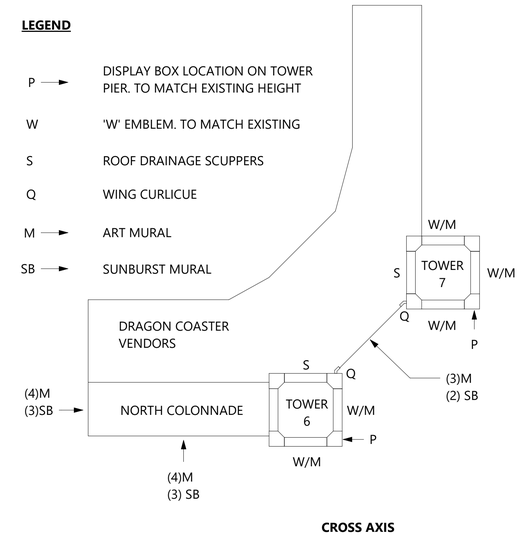

12 TOWER KEY & COMPONENT PLAN
1/16" = 1'-0"

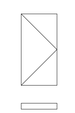

6 HALF PEDESTAL CAP
1" = 1'-0"

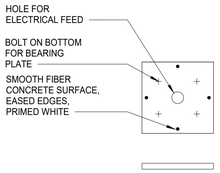

7 LAMP PEDESTAL
1" = 1'-0"

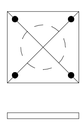

8 FLAG PEDESTAL
1" = 1'-0"

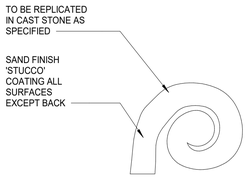

9 WING CURLICUE
1" = 1'-0"

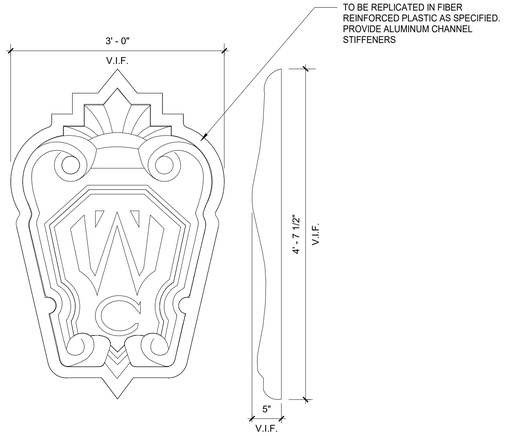

10 WESTCHESTER EMBLEM
1" = 1'-0"

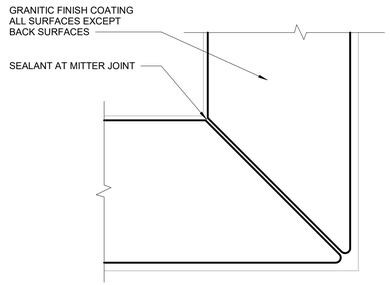

11 JOINT DETAIL
1" = 1'-0"

PRE MANUFACTURED COMPONENT SCHEDULE			
COMPONENT	COLOR	MANUFACTURER	REMARKS
LEFT HALF FASCIA	WHITE	TBD	
CENTER FASCIA	WHITE	TBD	
RIGHT HALF FASCIA	WHITE	TBD	
DENTIL COURSE	WHITE	TBD	
(Q) WING CURLICUE	TBD	TBD	
(W) EMBLEM	TBD	TBD	
(P) DISPLAY BOX	WHITE	TBD	
(M) ART MURAL	TBD	TBD	
(SB) SUNBURST MURAL	TBD	TBD	

SEALANT (C1)	URETHANE SEALANT, CUSTOM COLOR "OFF WHITE" TO MATCH PAINT.
SEALANT (C2)	URETHANE SEALANT, CUSTOM COLOR "PRECAST STONE" TO MATCH CAST STONE GRANITIC FINISHES.

DIMENSION NOTES:
1. VERIFY THESE COMPONENTS ON THE BASIS OF ACTUAL FIELD MEASUREMENTS AND APPROVED SUBMISSIONS, DIMENSIONS MAY VARY FROM PIECE TO PIECE.

2. ORIGINAL CAST STONE AND STUCCO COMPONENTS ARE AVAILABLE AT THE SITE FOR MEASUREMENT FOR REPLICATION. DESIGNS SHOWN ARE APPROXIMATE AND FINAL DESIGN MUST MATCH EXISTING.

8/30/2022 4:13:15 PM

CONSULTANT INFORMATION
The LiRo Group
3 Aerial Way, Syosset, New York 11791
(516) 938-5476 www.liro.com

CONSULTANT SEAL
REGISTERED ARCHITECT ROBERT D. CORNIGLIA 023229 STATE OF NEW YORK

REVISION NUMBER	DATE	MADE BY	APP'D BY	REVISION

RECORD DRAWING CERTIFICATION
☐ AS BUILT – CHANGES AS NOTED ☐ AS BUILT – NO CHANGES

CONTRACTOR
NAME
SIGNATURE
TITLE DATE

PROJECT COORDINATOR
NAME
SIGNATURE
TITLE DATE

WESTCHESTER COUNTY, NEW YORK
DEPARTMENT OF PUBLIC WORKS AND TRANSPORTATION
DIVISION OF ENGINEERING

INFRASTRUCTURE REHABILITATION - PHASE 3
PLAYLAND PARK, RYE, NEW YORK
DRAGON COASTER VENDORS
CUSTOM FABRICATIONS

CONTRACT NUMBER 22-523
SHEET NUMBER **DCV-A-80**
DWG NO.: 424 of 664
SCALE: **As indicated**
DATE: **08/23/2022**
DPW FILE NUMBER **1-118-A-1173-0**
REV. NO.

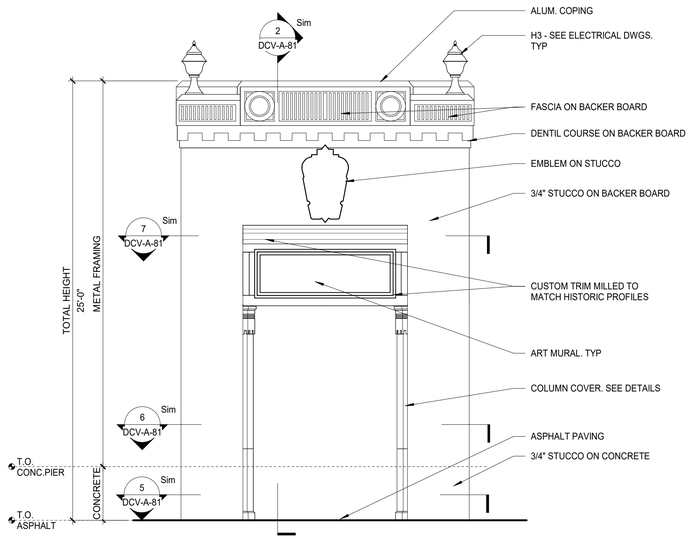

1 TYPICAL TOWER ELEVATION
1/4" = 1'-0"

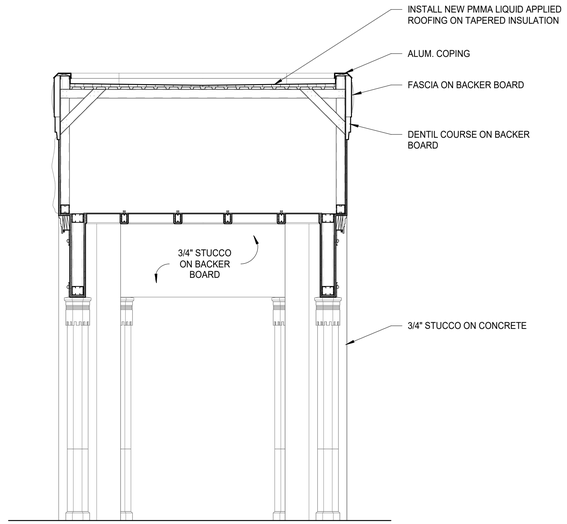

2 SECTION - TOWER
1/4" = 1'-0"

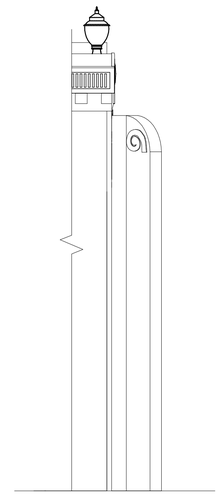

3 ELEVATION - WING PIER
1/4" = 1'-0"

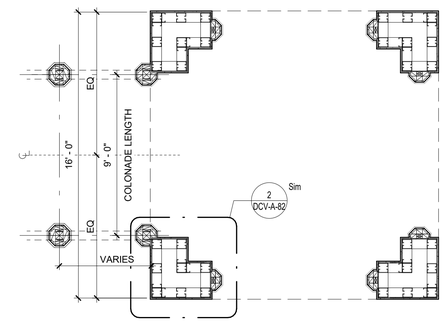

4 TOWER PLAN AT COLONNADE CONNECTION
1/4" = 1'-0"

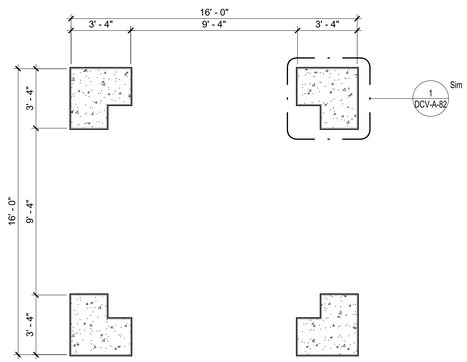

5 TOWER CONCRETE BASE PLAN
1/4" = 1'-0"

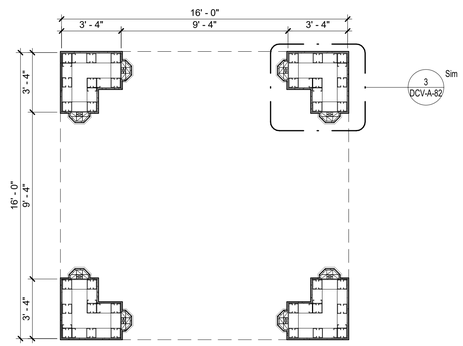

6 TOWER STRUCTURAL FRAMING PLAN
1/4" = 1'-0"

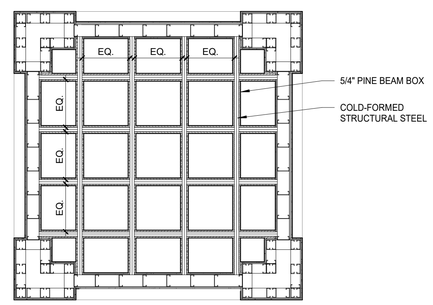

7 TOWER REFLECTED CEILING PLAN
1/4" = 1'-0"

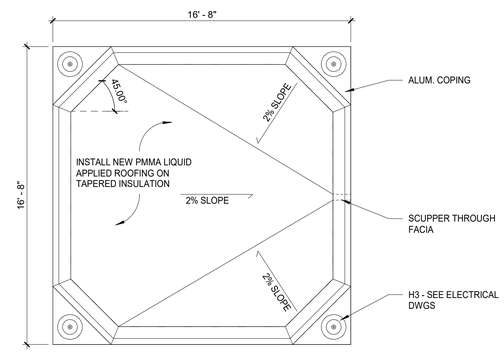

8 TOWER ROOF PLAN
1/4" = 1'-0"

8/30/2022 4:13:18 PM

CONSULTANT INFORMATION
The LiRo Group
3 Aerial Way, Syosset, New York 11791
(516) 938-5476 www.liro.com

CONSULTANT SEAL
REGISTERED ARCHITECT ROBERT D. JOHNSON 023220 STATE OF NEW YORK

REVISION NUMBER	DATE	MADE BY	APP'D BY	REVISION

RECORD DRAWING CERTIFICATION
☐ AS BUILT – CHANGES AS NOTED ☐ AS BUILT – NO CHANGES

CONTRACTOR
NAME
SIGNATURE
TITLE DATE

PROJECT COORDINATOR
NAME
SIGNATURE
TITLE DATE

WESTCHESTER COUNTY, NEW YORK
DEPARTMENT OF PUBLIC WORKS AND TRANSPORTATION
DIVISION OF ENGINEERING

INFRASTRUCTURE REHABILITATION - PHASE 3
PLAYLAND PARK, RYE, NEW YORK
DRAGON COASTER VENDORS
TOWER DETAILS

CONTRACT NUMBER	22-523
SHEET NUMBER	DCV-A-81
DWG NO.:	425 of 664
SCALE:	1/4" = 1'-0"
DATE:	08/23/2022
DPW FILE NUMBER	1-118-A-1174-0
REV. NO.	

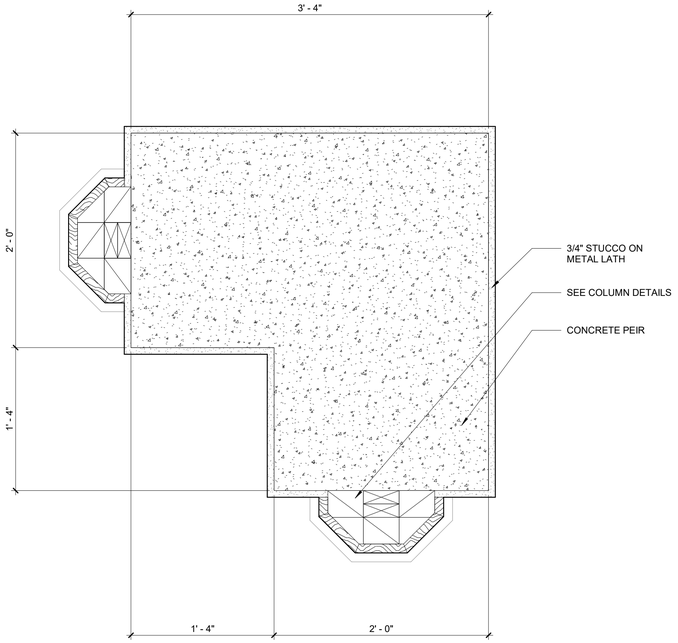

1 TOWER PIER- PLAN
1 1/2" = 1'-0"

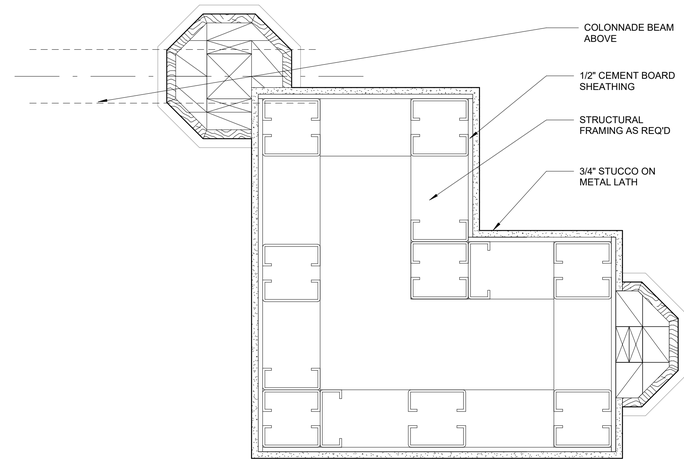

2 TOWER FRAMING AT COLONNADE CONNECTION - PLAN
1 1/2" = 1'-0"

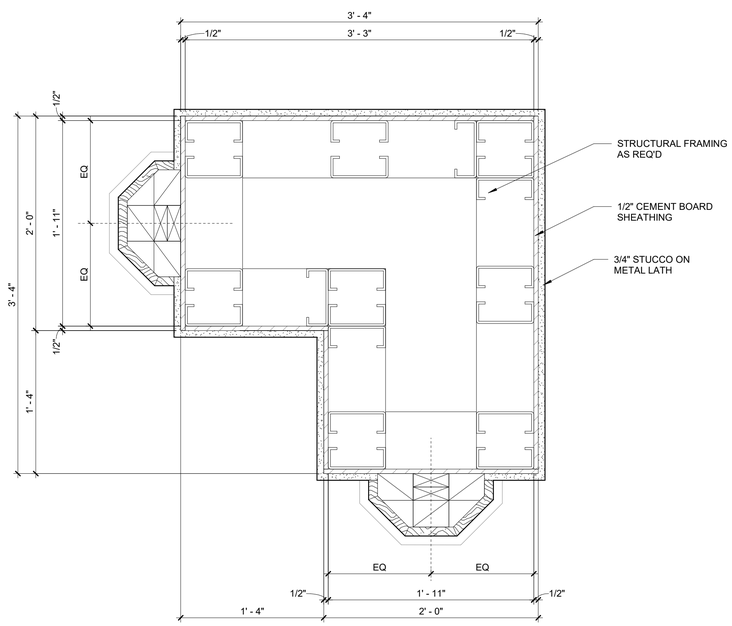

3 TOWER FRAMING- PLAN
1 1/2" = 1'-0"

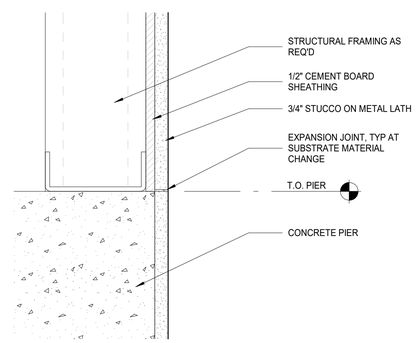

4 TOWER PIER SECTION AT CONCRETE BASE
3" = 1'-0"

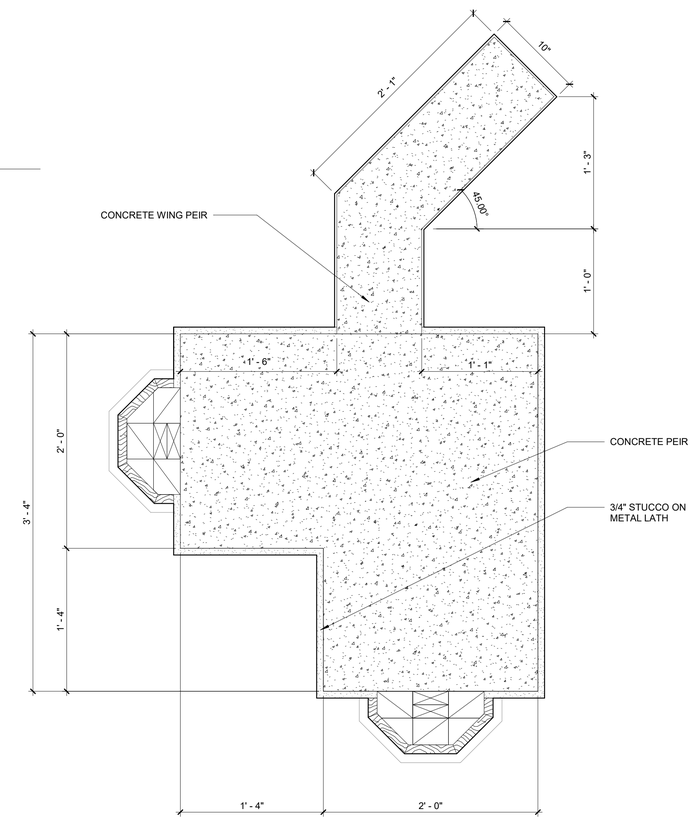

5 TOWER PIER AND WING - PLAN
1 1/2" = 1'-0"

8/30/2022 4:13:19 PM

CONSULTANT INFORMATION

The LiRo Group
3 Aerial Way, Syosset, New York 11791
(516) 938-5476 www.liro.com

CONSULTANT SEAL

REGISTERED ARCHITECT ROBERT D. YOUNG JR. 023220 STATE OF NEW YORK

REVISION NUMBER	DATE	MADE BY	APP'D BY	REVISION

RECORD DRAWING CERTIFICATION

☐ AS BUILT – CHANGES AS NOTED ☐ AS BUILT – NO CHANGES

CONTRACTOR
NAME
SIGNATURE
TITLE DATE

PROJECT COORDINATOR
NAME
SIGNATURE
TITLE DATE

WESTCHESTER COUNTY, NEW YORK
DEPARTMENT OF PUBLIC WORKS AND TRANSPORTATION
DIVISION OF ENGINEERING

INFRASTRUCTURE REHABILITATION - PHASE 3
PLAYLAND PARK, RYE, NEW YORK
DRAGON COASTER VENDORS
TOWER PIER DETAILS

CONTRACT NUMBER	22-523
SHEET NUMBER	DCV-A-82
DWG NO.:	426 of 664
SCALE:	As indicated
DATE:	08/23/2022
DPW FILE NUMBER	1-118-A-1175-0
REV. NO.	

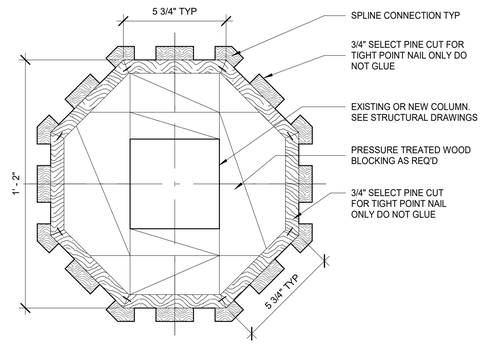

1 COLUMN A&B CAPITAL PLAN
3" = 1'-0"

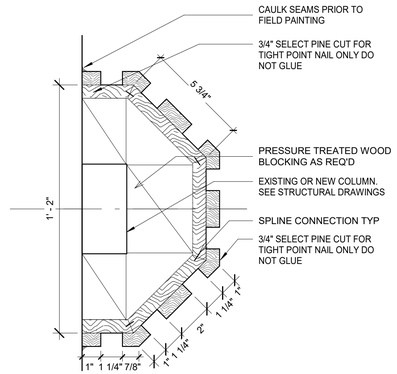

4 HALF COLUMN A&B CAPITAL PLAN
3" = 1'-0"

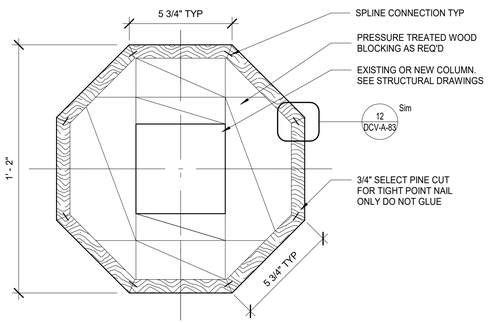

2 COLUMN A&B SHAFT PLAN
3" = 1'-0"

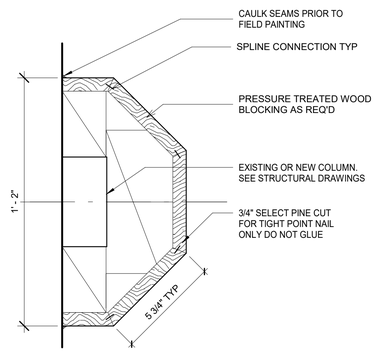

5 HALF COLUMN A&B SHAFT PLAN
3" = 1'-0"

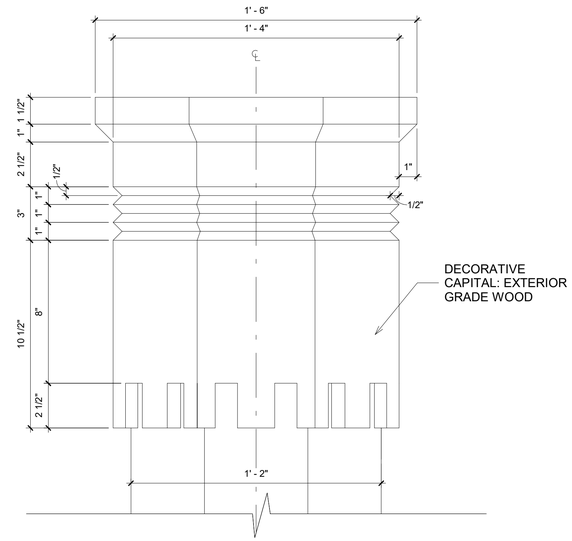

7 COLUMN CAPITAL DETAIL TYPE A
3" = 1'-0"

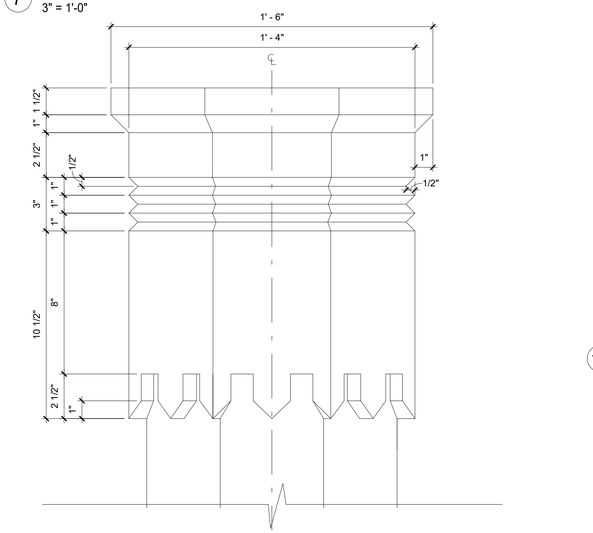

8 COLUMN CAPITAL DETAIL TYPE B
3" = 1'-0"

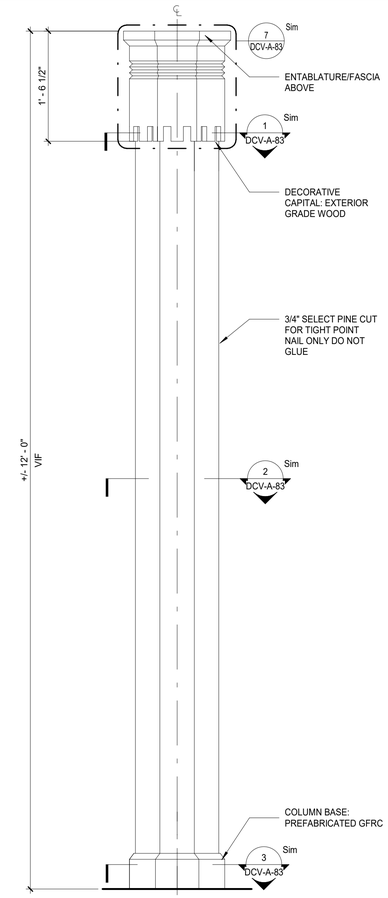

10 COLUMN DETAIL TYPE A
1" = 1'-0"

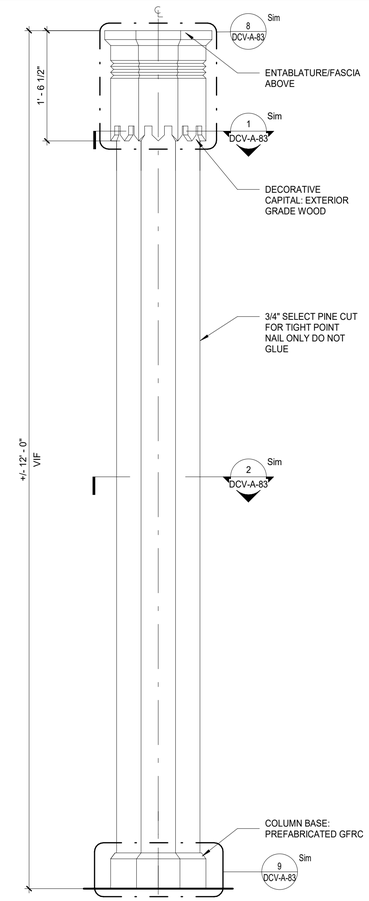

13 COLUMN DETAIL TYPE B
1" = 1'-0"

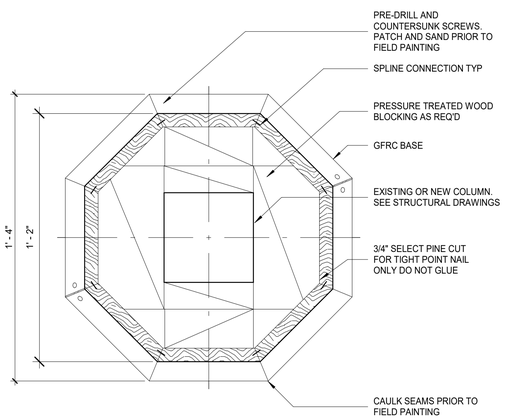

3 COLUMN A&B BASE PLAN
3" = 1'-0"

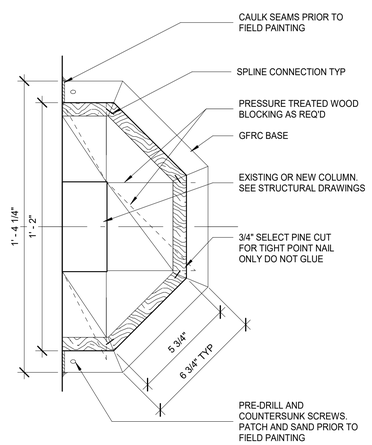

6 HALF COLUMN A&B BASE PLAN
3" = 1'-0"

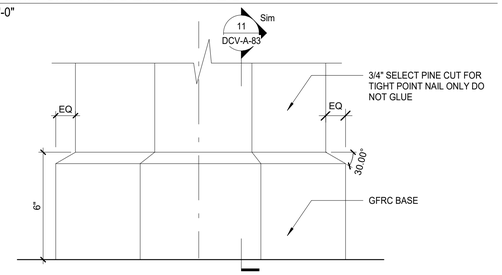

9 COLUMN A&B ELEVATION - FULL COLUMN BASE
3" = 1'-0"

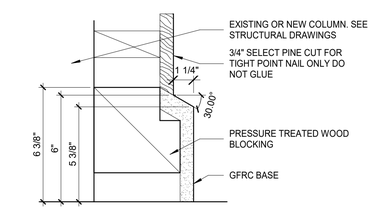

11 COLUMN A&B SECTION AT COLUMN BASE
3" = 1'-0"

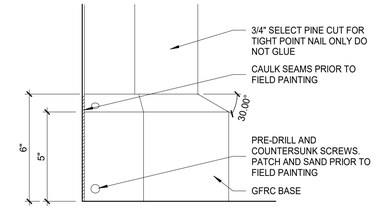

14 COLUMN A&B ELEVATION - HALF COLUMN BASE
3" = 1'-0"

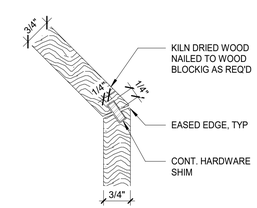

12 SPLINE CONNECTION DETAIL TYPE A&B
6" = 1'-0"

SHEET NOTES

1. KILN DRIED WOOD IS TO BE USED FOR COLUMN CLADDINGS.
2. PRESSURE-TREATED WOOD ARE TO BE USED FOR BLOCKING SUBSTRATE AS REQ'D BY CLADDING INSTALLATIONS.
3. STAINLESS STEEL NAILS FASTENERS ARE TO BE USED FOR CLADDDING, BLOCKING INSTALLATIONS.
4. HARDWOOD IS TO BE USED FOR SPLINE SHIM CLADDIING CONNECTION.
5. SPLICE WOOD CLADDING PANEL OF INDIVIDUAL PIECES WHEN PANEL WIDTH EXCEEDS WIDTH OF WOOD PLANK AVAILABLE
6. ALL DIMENSIONS TO BE VERIFIED IN FIELD

8/30/2022 4:13:23 PM

CONSULTANT INFORMATION
The LiRo Group
3 Aerial Way, Syosset, New York 11791
(516) 938-5476 www.liro.com

CONSULTANT SEAL
REGISTERED ARCHITECT ROBERT D. DONOVAN 023220 STATE OF NEW YORK

REVISION NUMBER	DATE	MADE BY	APP'D BY	REVISION

RECORD DRAWING CERTIFICATION
☐ AS BUILT – CHANGES AS NOTED ☐ AS BUILT – NO CHANGES

CONTRACTOR
NAME
SIGNATURE
TITLE DATE

PROJECT COORDINATOR
NAME
SIGNATURE
TITLE DATE

WESTCHESTER COUNTY, NEW YORK
DEPARTMENT OF PUBLIC WORKS AND TRANSPORTATION
DIVISION OF ENGINEERING

INFRASTRUCTURE REHABILITATION - PHASE 3
PLAYLAND PARK, RYE, NEW YORK
DRAGON COASTER VENDORS
COLUMN DETAILS 1 OF 2

CONTRACT NUMBER 22-523	SHEET NUMBER DCV-A-83
DWG NO.: 427 of 664	
SCALE: As indicated	
DATE: 08/23/2022	
DPW FILE NUMBER 1-118-A-1176-0	REV. NO.

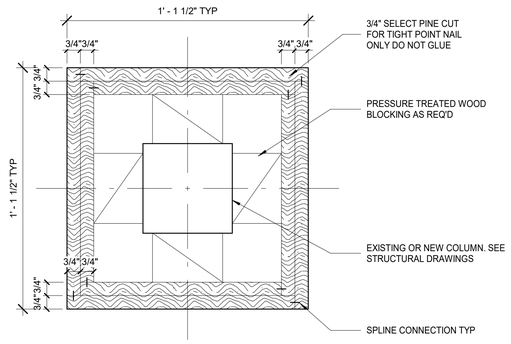

1 COLUMN C CAPITAL 3
3" = 1'-0"

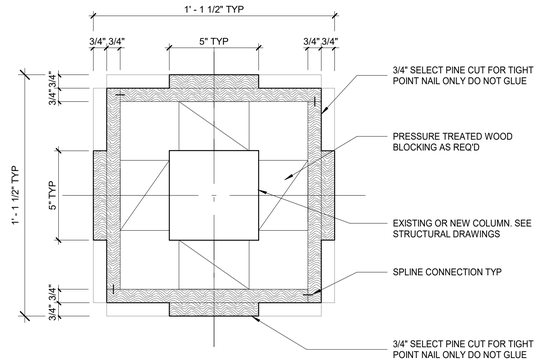

4 COLUMN C CAPITAL 2
3" = 1'-0"

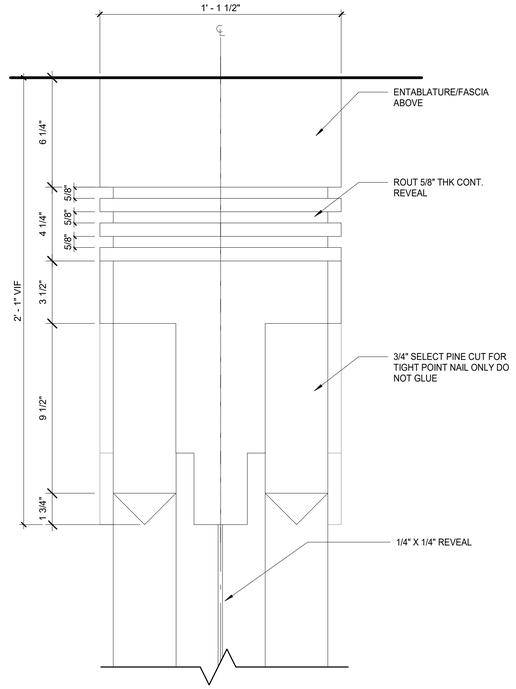

7 COLUMN CAPITAL DETAIL TYPE C
3" = 1'-0"

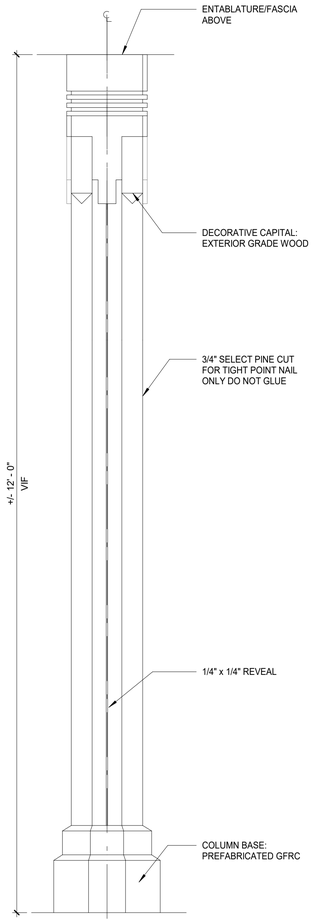

9 COLUMN DETAIL TYPE C
1" = 1'-0"

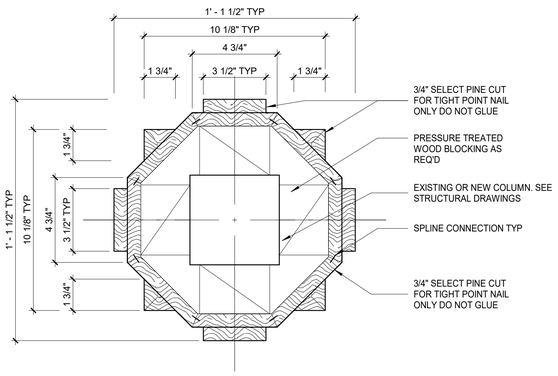

2 COLUMN C CAPITAL 1
3" = 1'-0"

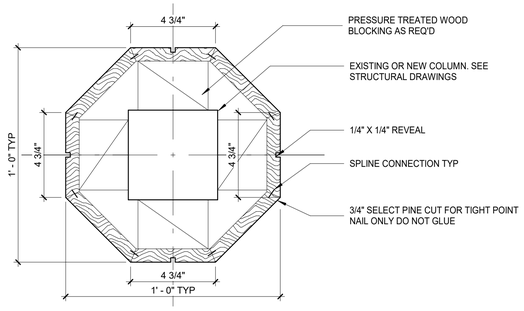

5 COLUMN C SHAFT
3" = 1'-0"

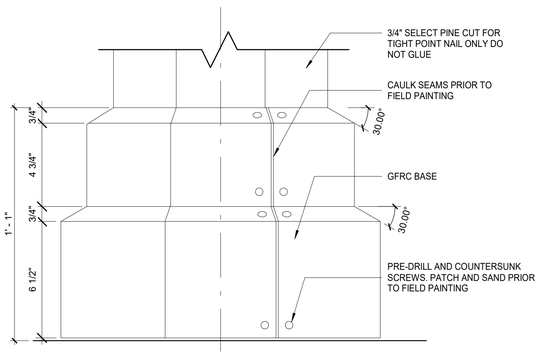

8 COLUMN TYPE C SECTION - COLUMN BASE
3" = 1'-0"

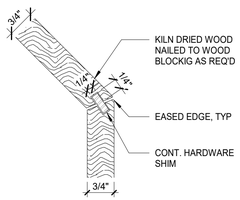

10 SPLINE CONNECTION DETAIL TYPE C
6" = 1'-0"

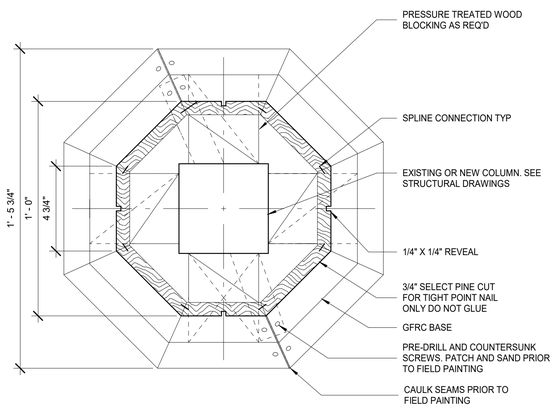

3 COLUMN C BASE PLAN
3" = 1'-0"

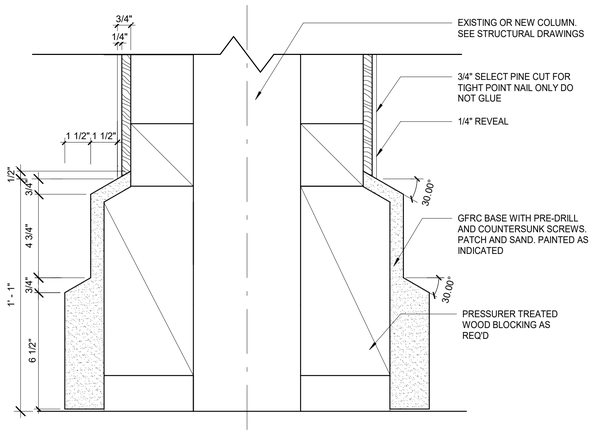

6 COLUMN C ELEVATION - COLUMN BASE
3" = 1'-0"

SHEET NOTES

1. KILN DRIED WOOD IS TO BE USED FOR COLUMN CLADDINGS.
2. PRESSURE-TREATED WOOD ARE TO BE USED FOR BLOCKING SUBSTRATE AS REQ'D BY CLADDING INSTALLATIONS.
3. STAINLESS STEEL NAILS FASTENERS ARE TO BE USED FOR CLADDDING, BLOCKING INSTALLATIONS.
4. HARDWOOD IS TO BE USED FOR SPLINE SHIM CLADDIING CONNECTION.
5. SPLICE WOOD CLADDING PANEL OF INDIVIDUAL PIECES WHEN PANEL WIDTH EXCEEDS WIDTH OF WOOD PLANK AVAILABLE
6. ALL DIMENSIONS TO BE VERIFIED IN FIELD

8/30/2022 4:13:25 PM

CONSULTANT INFORMATION

The LiRo Group
3 Aerial Way, Syosset, New York 11791
(516) 938-5476 www.liro.com

CONSULTANT SEAL
REGISTERED ARCHITECT ROBERT D. YOUNGLIN 023280 STATE OF NEW YORK

REVISION NUMBER	DATE	MADE BY	APP'D BY	REVISION

RECORD DRAWING CERTIFICATION
☐ AS BUILT – CHANGES AS NOTED ☐ AS BUILT – NO CHANGES

CONTRACTOR
NAME
SIGNATURE
TITLE DATE

PROJECT COORDINATOR
NAME
SIGNATURE
TITLE DATE

WESTCHESTER COUNTY, NEW YORK
DEPARTMENT OF PUBLIC WORKS AND TRANSPORTATION
DIVISION OF ENGINEERING

INFRASTRUCTURE REHABILITATION - PHASE 3
PLAYLAND PARK, RYE, NEW YORK
DRAGON COASTER VENDORS
COLUMN DETAILS 2 OF 2

CONTRACT NUMBER	22-523
SHEET NUMBER	**DCV-A-84**
DWG NO.:	428 of 664
SCALE:	**As indicated**
DATE:	**08/23/2022**
DPW FILE NUMBER	**1-118-A-1177-0**
REV. NO.	

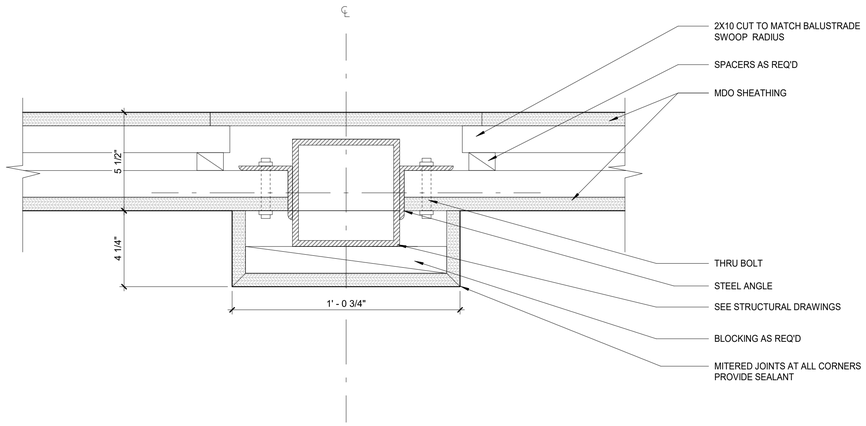

1 BALUSTRADE SECTION AT PEDESTAL
3" = 1'-0"

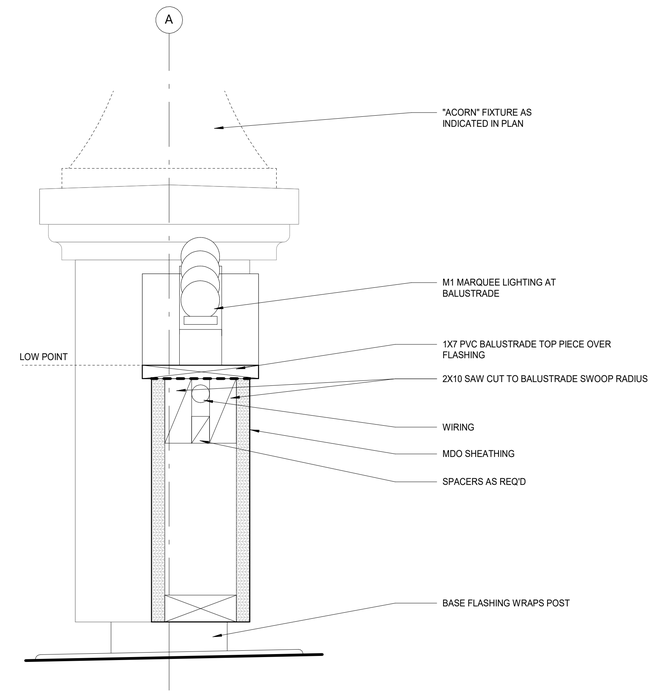

2 BALUSTRADE SECTION AT RAIL
3" = 1'-0"

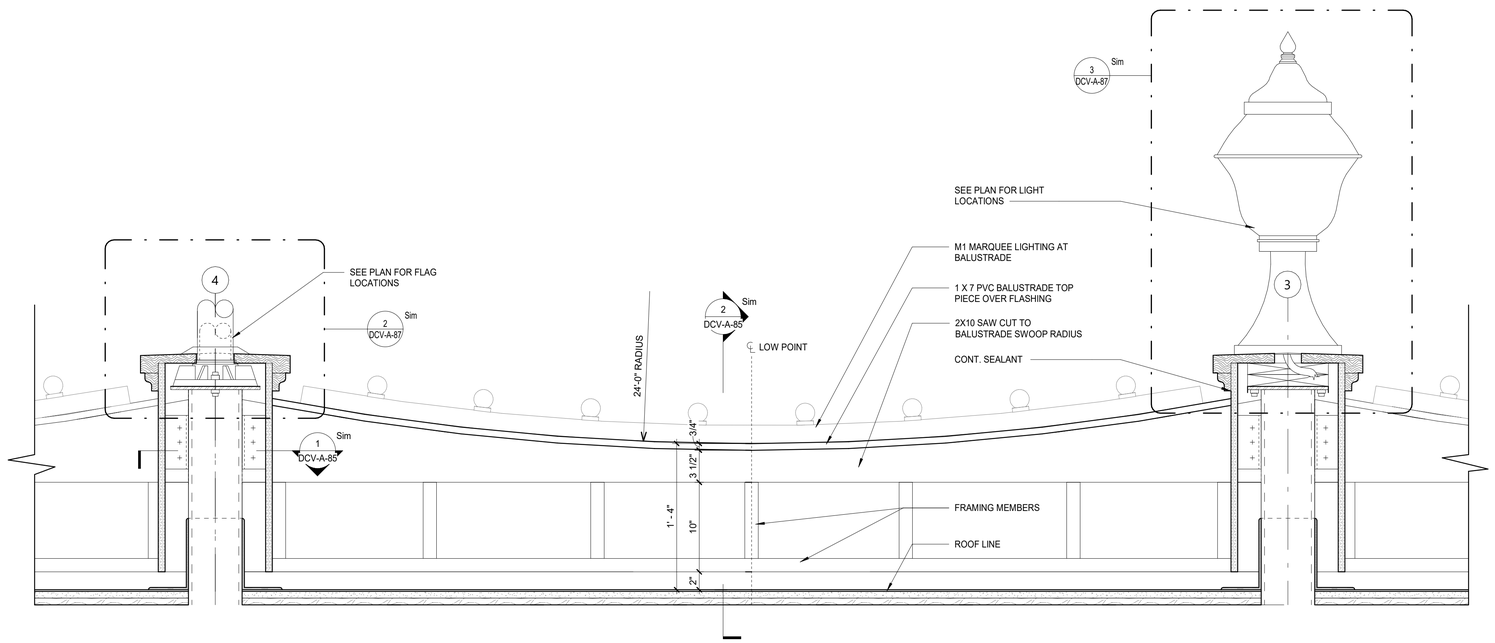

3 TYPICAL BALUSTRADE ELEVATION SECTION
1 1/2" = 1'-0"

8/30/2022 4:13:26 PM

CONSULTANT INFORMATION
The LiRo Group
3 Aerial Way, Syosset, New York 11791
(516) 938-5476 www.liro.com

CONSULTANT SEAL
REGISTERED ARCHITECT ROBERT D. JOHNSON 023220 STATE OF NEW YORK

REVISION NUMBER	DATE	MADE BY	APP'D BY	REVISION

RECORD DRAWING CERTIFICATION
☐ AS BUILT – CHANGES AS NOTED ☐ AS BUILT – NO CHANGES

CONTRACTOR
NAME
SIGNATURE
TITLE DATE

PROJECT COORDINATOR
NAME
SIGNATURE
TITLE DATE

WESTCHESTER COUNTY, NEW YORK
DEPARTMENT OF PUBLIC WORKS AND TRANSPORTATION
DIVISION OF ENGINEERING

INFRASTRUCTURE REHABILITATION - PHASE 3
PLAYLAND PARK, RYE, NEW YORK
DRAGON COASTER VENDORS
BALUSTRADE AND MOUNTING DETAILS

CONTRACT NUMBER	22-523
SHEET NUMBER	DCV-A-85
DWG NO.:	429 of 664
SCALE:	As indicated
DATE:	08/23/2022
DPW FILE NUMBER	1-118-A-1178-0
REV. NO.	

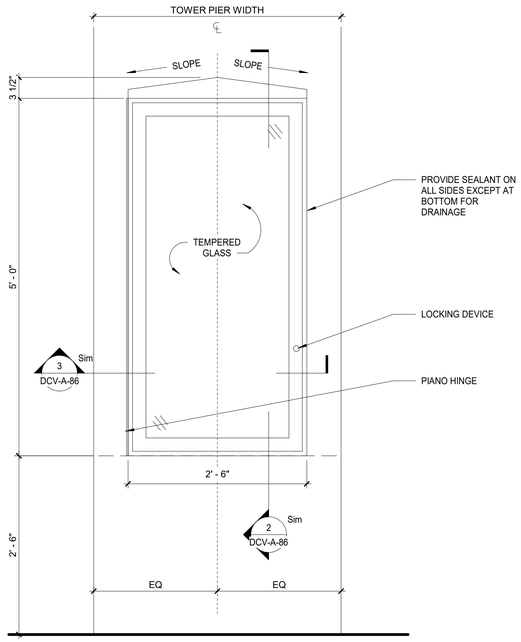

1 DISPLAY BOX ELEVATION DETAIL
1" = 1'-0"

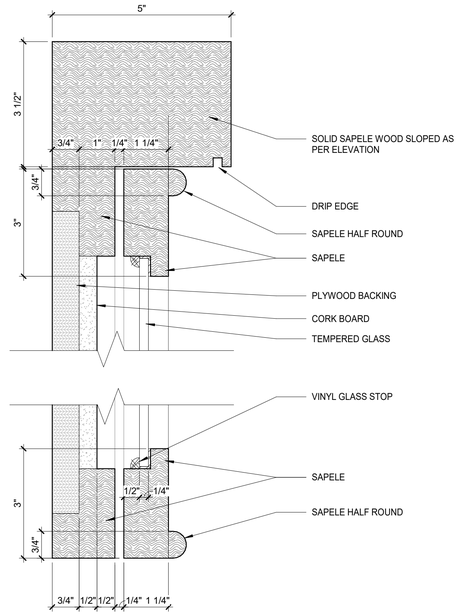

2 DETAIL SECTION AT DISPLAY BOX
6" = 1'-0"

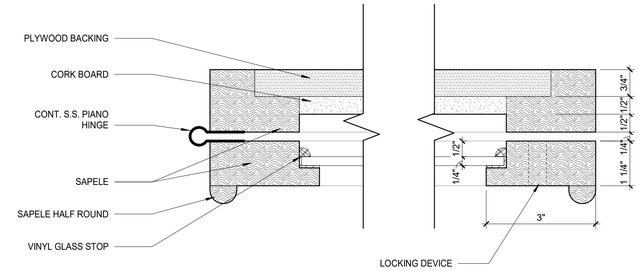

3 DETAIL PLAN SECTION AT DISPLAY BOX
6" = 1'-0"

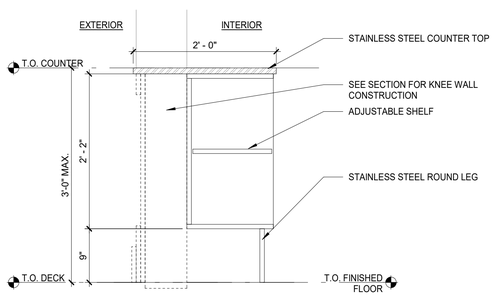

4 SECTION AT MILLWORK COUNTER AT VENDOR SPACE
1" = 1'-0"

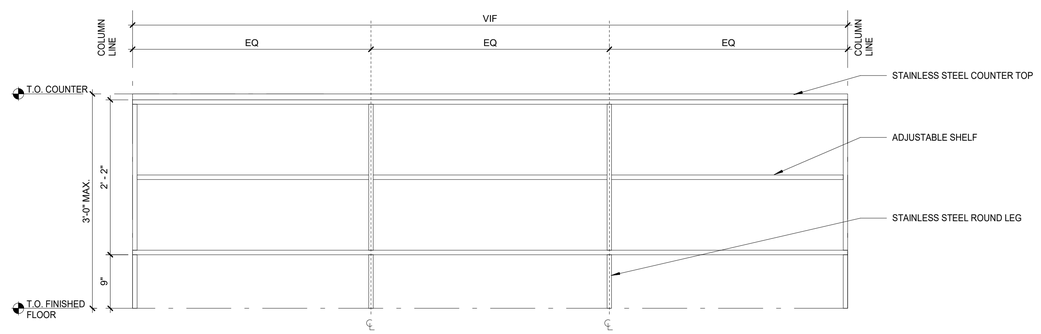

5 ELEVATION AT COUNTER MILL WORK AT VENDOR SPACE
1" = 1'-0"

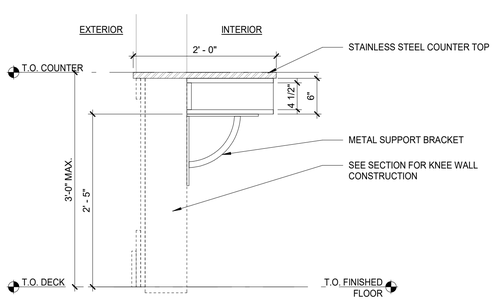

6 SECTION AT MILLWORK COUNTER AT TICKET WINDOW
1" = 1'-0"

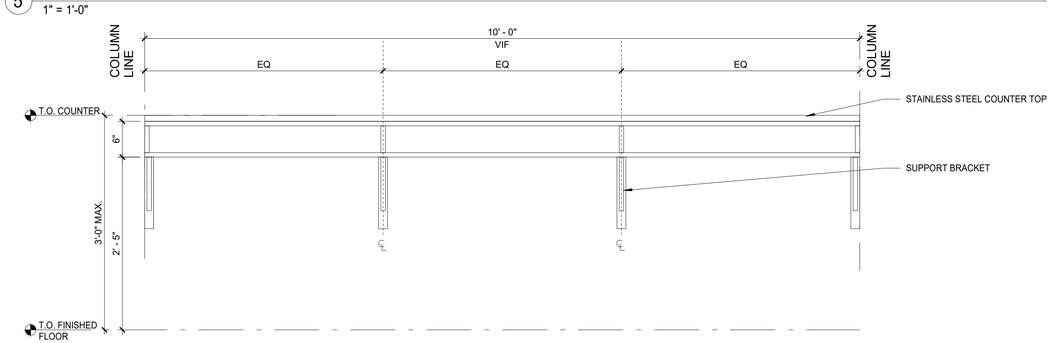

7 ELEVATION AT COUNTER MILL WORK AT TICKET WINDOWS
1" = 1'-0"

SHEET NOTES:

COUNTER AND MILLWORK MATERIAL TO BE PLYWOOD WITH WHITE MELAMINE AND EDGE BANDING.

8/30/2022 4:13:28 PM

CONSULTANT INFORMATION

The LiRo Group
3 Aerial Way, Syosset, New York 11791
(516) 938-5476 www.liro.com

CONSULTANT SEAL

REGISTERED ARCHITECT ROBERT D. YOUNG JR. 023290 STATE OF NEW YORK

REVISION NUMBER	DATE	MADE BY	APP'D BY	REVISION

RECORD DRAWING CERTIFICATION
☐ AS BUILT – CHANGES AS NOTED ☐ AS BUILT – NO CHANGES

CONTRACTOR
NAME
SIGNATURE
TITLE DATE

PROJECT COORDINATOR
NAME
SIGNATURE
TITLE DATE

WESTCHESTER COUNTY, NEW YORK
DEPARTMENT OF PUBLIC WORKS AND TRANSPORTATION
DIVISION OF ENGINEERING

INFRASTRUCTURE REHABILITATION - PHASE 3
PLAYLAND PARK, RYE, NEW YORK
DRAGON COASTER VENDORS
MILLWORK DETAILS

CONTRACT NUMBER	22-523
SHEET NUMBER	DCV-A-86
DWG NO.:	430 of 664
SCALE:	As indicated
DATE:	08/23/2022
DPW FILE NUMBER	1-118-A-1179-0
REV. NO.	

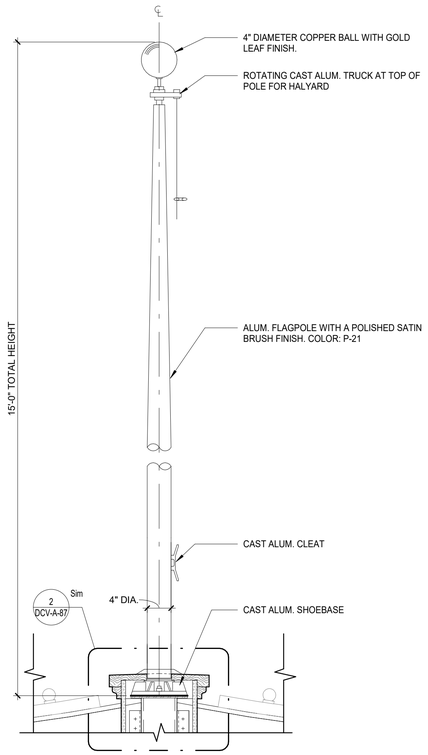

1 TYPICAL FLAG ELEVATION DETAIL
1" = 1'-0"

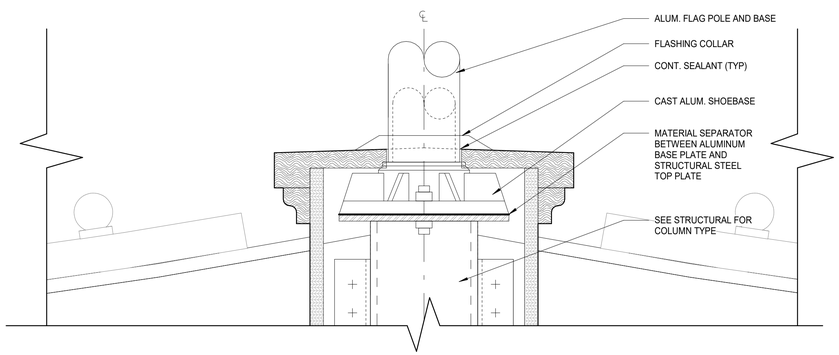

2 FLAGPOLE MOUNTING TO STRUCTURAL TOP PLATE IN PEDESTAL
3" = 1'-0"

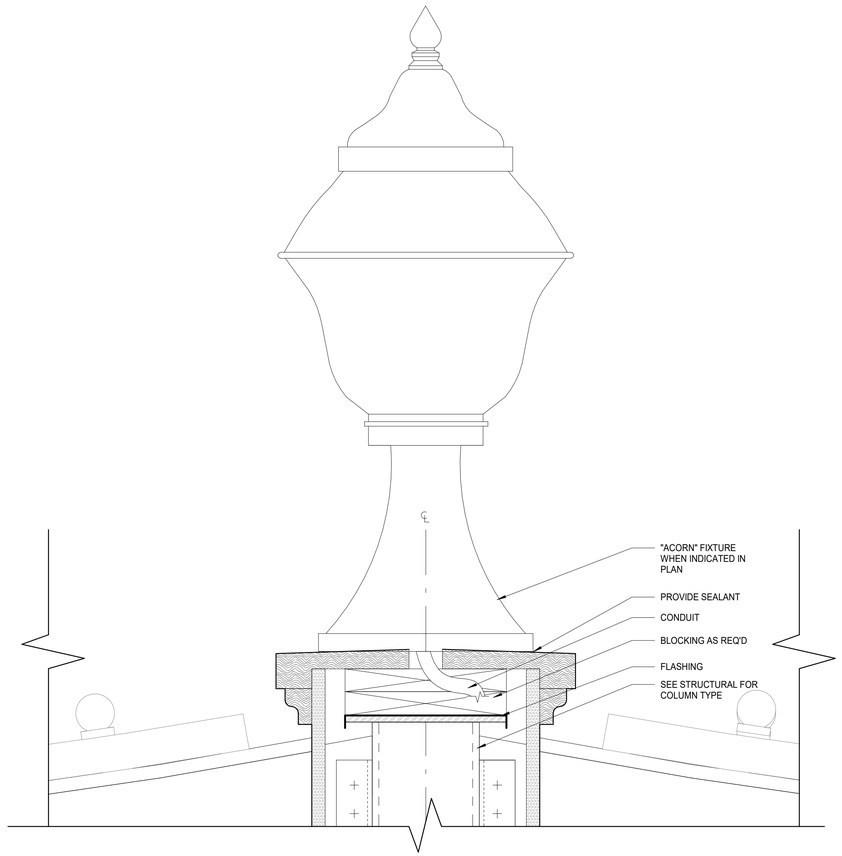

3 LIGHT FIXTURE MOUNTING TO STRUCTURAL TOP PLATE IN PEDESTAL
3" = 1'-0"

PAINTING KEY

KEY	COLOR	MANUFACTURER	REMARKS
P- 1	MYSTICAL POWERS #901	BENJAMIN MOORE	
P- 2	HERITAGE RED #HC-181	BENJAMIN MOORE	
P- 3	NEW YORK STATE OF MIND #805	BENJAMIN MOORE	
P- 4	LAZY SUNDAY #803	BENJAMIN MOORE	
P- 5	DEEP JUNGLE #595	BENJAMIN MOORE	
P- 6	LUCK OF THE IRISH #588	BENJAMIN MOORE	
P- 7	MAJOLICA GREEN #0013	SHERWIN WILLIAMS	
P- 8	ANTELOPE CANYON #125	BENJAMIN MOORE	
P- 9	FORSYTHIA #6907	SHERWIN WILLIAMS	
P- 10	CAPE BLUE #1642	BENJAMIN MOORE	
P- 11	WHITE SNOW #9541	SHERWIN WILLIAMS	
P- 12	TRICORN BLACK #6258	SHERWIN WILLIAMS	
P- 13	READY MIX WHITE	BENJAMIN MOORE	INTERIOR USE ONLY
P- 14	STUCCO PAINT TO MATCH P-1	-	
P- 15	VAN DEUSEN BLUE #HC-156	BENJAMIN MOORE	
P- 16	#RAL9001	-	
P- 17	FLORIDA BEACHES #900	BENJAMIN MOORE	
P- 18	PIRATES COVE PEACH #903	BENJAMIN MOORE	
P- 19	JADITE #6459	SHERWIN WILLIAMS	
P- 20	DECISIVE YELLOW #6902	SHERWIN WILLIAMS	
P- 21	#RAL9010	-	

8/30/2022 4:13:30 PM

CONSULTANT INFORMATION
The LiRo Group
3 Aerial Way, Syosset, New York 11791
(516) 938-5476 www.liro.com

CONSULTANT SEAL
REGISTERED ARCHITECT ROBERT D. YOUNG JR. 023290 STATE OF NEW YORK

REVISION NUMBER	DATE	MADE BY	APP'D BY	REVISION

RECORD DRAWING CERTIFICATION
☐ AS BUILT – CHANGES AS NOTED ☐ AS BUILT – NO CHANGES

CONTRACTOR
NAME
SIGNATURE
TITLE DATE

PROJECT COORDINATOR
NAME
SIGNATURE
TITLE DATE

WESTCHESTER COUNTY, NEW YORK
DEPARTMENT OF PUBLIC WORKS AND TRANSPORTATION
DIVISION OF ENGINEERING

INFRASTRUCTURE REHABILITATION - PHASE 3
PLAYLAND PARK, RYE, NEW YORK
DRAGON COASTER VENDORS
LIGHTING AND FLAG MOUNTING DETAILS AT BALUSTRADE

CONTRACT NUMBER 22-523
SHEET NUMBER DCV-A-87
DWG NO.: 431 of 664
SCALE: As indicated
DATE: 08/23/2022
DPW FILE NUMBER 1-118-A-1180-0
REV. NO.

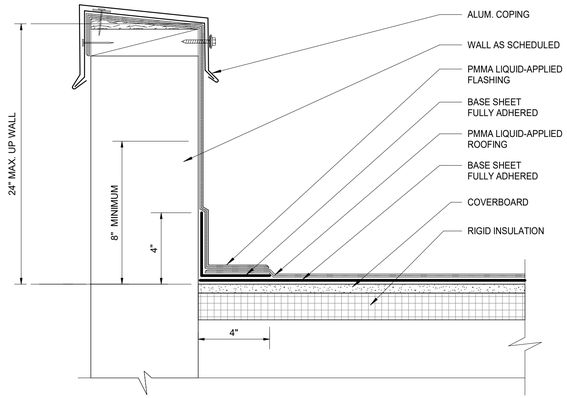

1 PARAPET WALL W/ PARAPRO FLASHING AND ROOFING
3" = 1'-0"

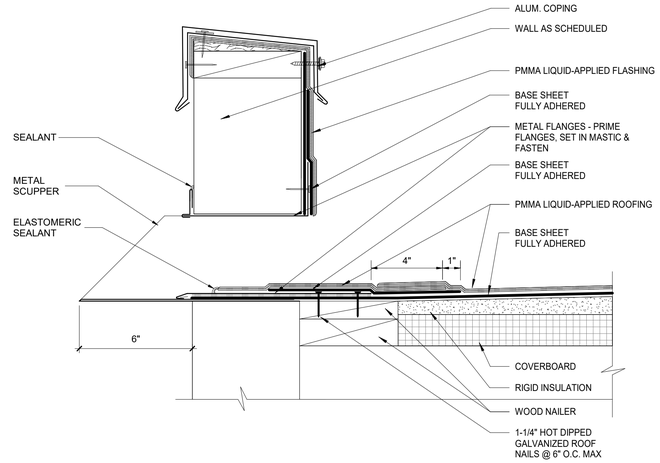

2 SCUPPER W/ PARAPRO FLASHING AND ROOFING
3" = 1'-0"

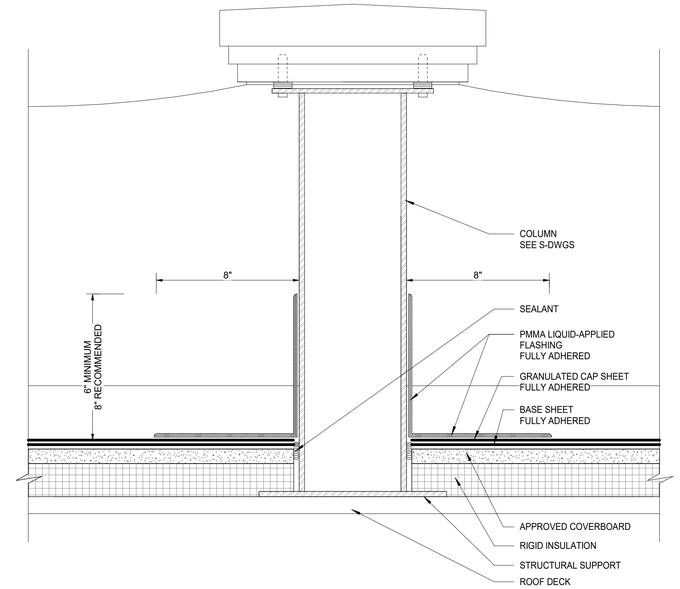

6 BALUSTRADE PENETRATION DETAIL
3" = 1'-0"

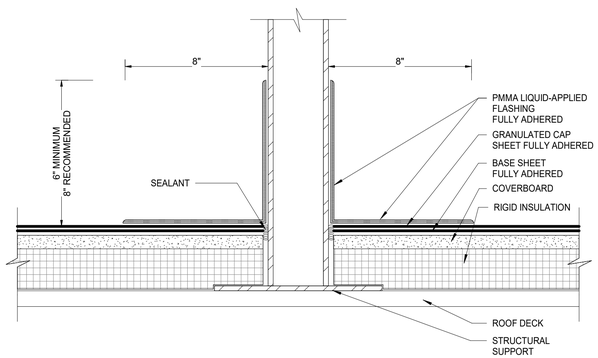

3 PENETRATION W/ PARAPRO FLASHING
3" = 1'-0"

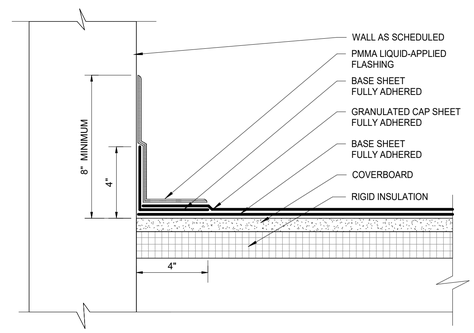

4 WALL W/ SELF TERMINATING PARAPRO FLASHING
3" = 1'-0"

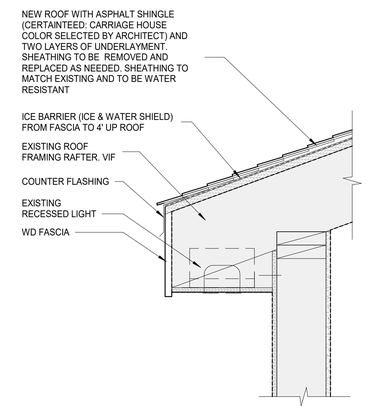

7 ROOF EAVE DETAIL
1 1/2" = 1'-0"

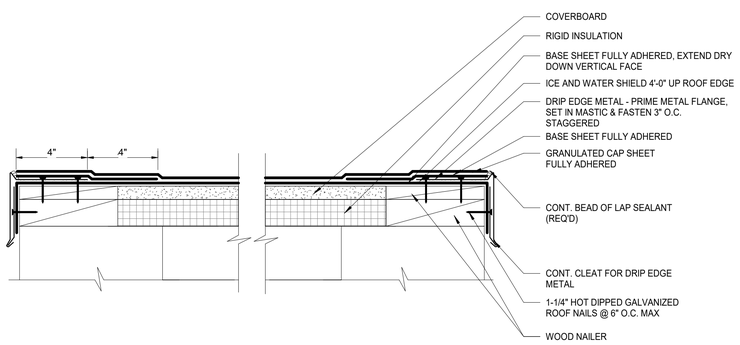

5 ROOF EDGE DETAIL
3" = 1'-0"

8/30/2022 4:13:32 PM

CONSULTANT INFORMATION
The LiRo Group
3 Aerial Way, Syosset, New York 11791
(516) 938-5476 www.liro.com

CONSULTANT SEAL
REGISTERED ARCHITECT ROBERT D. YOUNG JR. 023280 STATE OF NEW YORK

REVISION NUMBER	DATE	MADE BY	APP'D BY	REVISION

RECORD DRAWING CERTIFICATION
☐ AS BUILT – CHANGES AS NOTED ☐ AS BUILT – NO CHANGES

CONTRACTOR
NAME
SIGNATURE
TITLE DATE

PROJECT COORDINATOR
NAME
SIGNATURE
TITLE DATE

WESTCHESTER COUNTY, NEW YORK
DEPARTMENT OF PUBLIC WORKS AND TRANSPORTATION
DIVISION OF ENGINEERING

INFRASTRUCTURE REHABILITATION - PHASE 3
PLAYLAND PARK, RYE, NEW YORK
DRAGON COASTER VENDORS
ROOF DETAILS

CONTRACT NUMBER	22-523
SHEET NUMBER	DCV-A-88
DWG NO.:	432 of 664
SCALE:	As indicated
DATE:	08/23/2022
DPW FILE NUMBER	1-118-A-1181-0
REV. NO.	

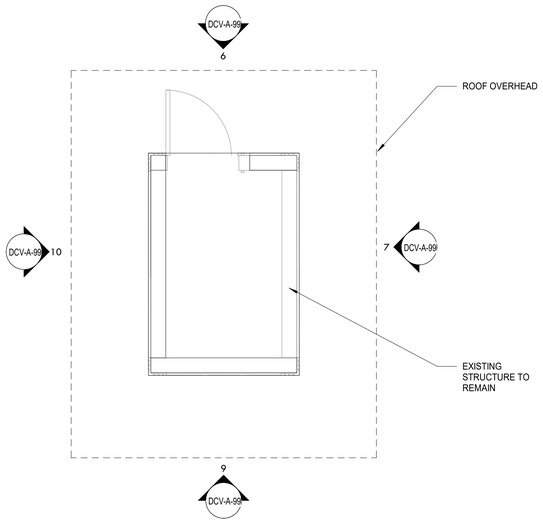

1 GROUND FLOOR PLAN - TICKET BOOTH
1/2" = 1'-0"

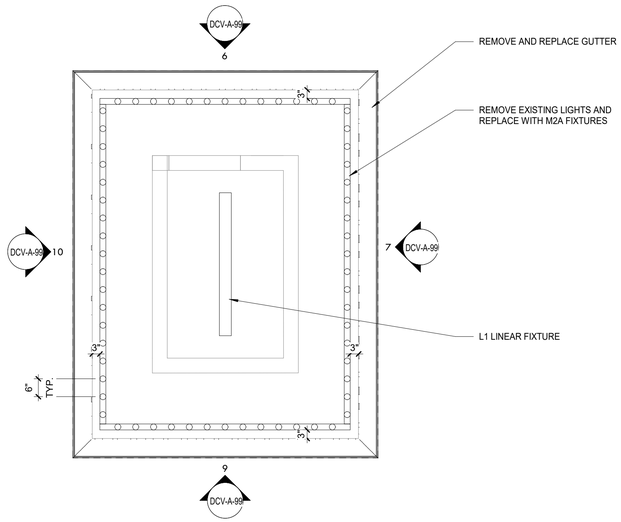

2 REFLECTED CEILING PLAN - TICKET BOOTH
1/2" = 1'-0"

SHEET NOTES

1. ALL INTERIOR EQUIPMENT TO REMAIN AND TO BE TEMPORARILY SUPPORTED DURING CONSTRUCTION AND REINSTALLED UPON COMPLETION.
2. EXTERIOR EQUIPMENT TO BE TEMPORARILY REMOVED. ALL EQUIPMENT MUST BE REINSTALLED IN FULL WOKRING ORDER.
3. ALL EXISTING SIGNAGE TO BE REMOVED AND REINSTALLED IN FULL WORKING ORDER.
4. PROVIDE PROTECTION FOR EXISTING FEATURES TO REMAIN.

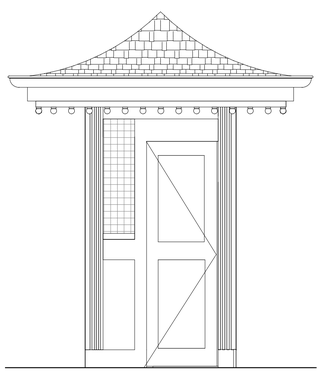

3 EAST ELEVATION - TICKET BOOTH
1/2" = 1'-0"

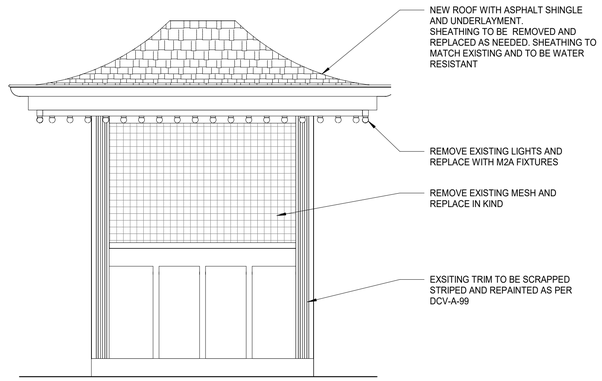

4 NORTH ELEVATION - TICKET BOOTH
1/2" = 1'-0"

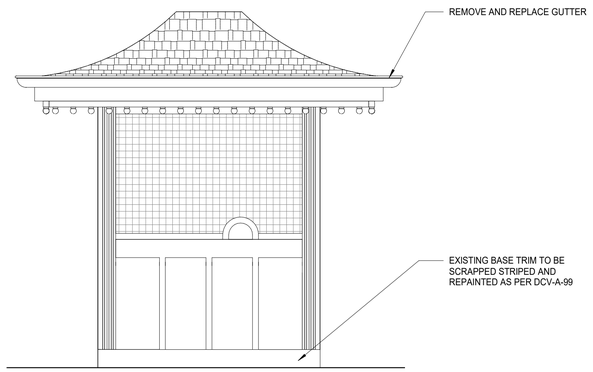

5 SOUTH ELEVATION - TICKET BOOTH
1/2" = 1'-0"

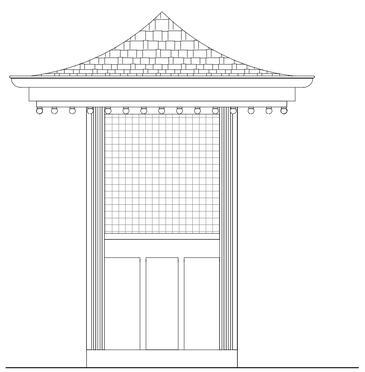

6 WEST ELEVATION - TICKET BOOTH
1/2" = 1'-0"

8/30/2022 4:13:35 PM

CONSULTANT INFORMATION
The LiRo Group
3 Aerial Way, Syosset, New York 11791
(516) 938-5476 www.liro.com

CONSULTANT SEAL
REGISTERED ARCHITECT ROBERT D. JOHNSON 023220 STATE OF NEW YORK

REVISION NUMBER	DATE	MADE BY	APP'D BY	REVISION

RECORD DRAWING CERTIFICATION
☐ AS BUILT – CHANGES AS NOTED ☐ AS BUILT – NO CHANGES

CONTRACTOR
NAME
SIGNATURE
TITLE DATE

PROJECT COORDINATOR
NAME
SIGNATURE
TITLE DATE

WESTCHESTER COUNTY, NEW YORK
DEPARTMENT OF PUBLIC WORKS AND TRANSPORTATION
DIVISION OF ENGINEERING

INFRASTRUCTURE REHABILITATION - PHASE 3
PLAYLAND PARK, RYE, NEW YORK
DRAGON COASTER VENDORS
DRAGON COASTER TICKET BOOTH DETAILS

CONTRACT NUMBER 22-523
SHEET NUMBER **DCV-A-90**
DWG NO.: 433 of 664
SCALE: **1/2" = 1'-0"**
DATE: **08/23/2022**
DPW FILE NUMBER **1-118-A-1182-0**
REV. NO.

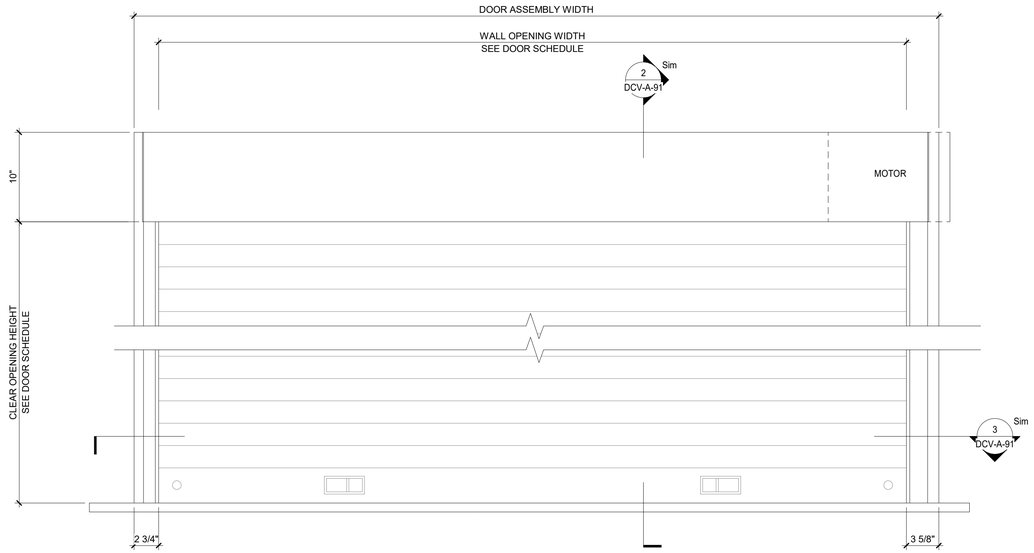

1 COUNTER ROLL UP DOOR ELEVATION
1 1/2" = 1'-0"

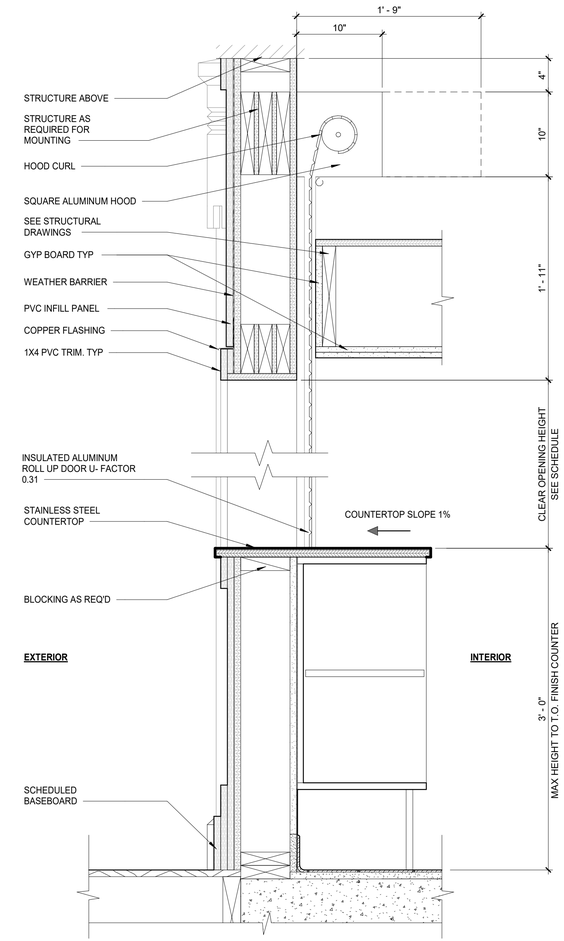

2 COUNTER ROLL UP DOOR SECTION DETAIL
1 1/2" = 1'-0"

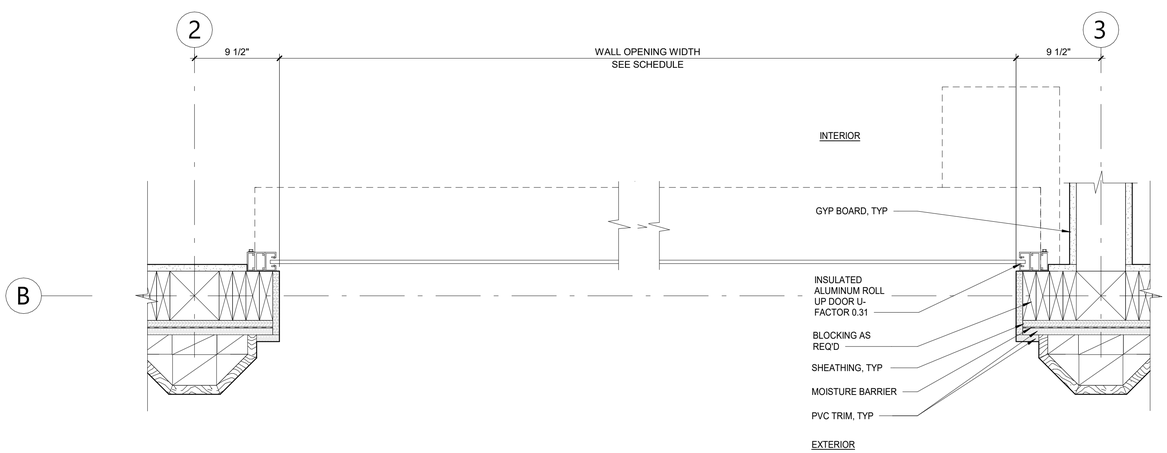

3 COUNTER GUIDE PLAN DETAIL
1 1/2" = 1'-0"

8/30/2022 4:13:36 PM

CONSULTANT INFORMATION
The LiRo Group
3 Aerial Way, Syosset, New York 11791
(516) 938-5476 www.liro.com

CONSULTANT SEAL
REGISTERED ARCHITECT
ROBERT D. YOUNG JR.
023290
STATE OF NEW YORK

REVISION NUMBER	DATE	MADE BY	APP'D BY	REVISION

RECORD DRAWING CERTIFICATION
☐ AS BUILT – CHANGES AS NOTED ☐ AS BUILT – NO CHANGES

CONTRACTOR
NAME
SIGNATURE
TITLE DATE

PROJECT COORDINATOR
NAME
SIGNATURE
TITLE DATE

WESTCHESTER COUNTY, NEW YORK
DEPARTMENT OF PUBLIC WORKS AND TRANSPORTATION
DIVISION OF ENGINEERING

INFRASTRUCTURE REHABILITATION - PHASE 3
PLAYLAND PARK, RYE, NEW YORK
DRAGON COASTER VENDORS
COUNTER DOOR DETAILS

CONTRACT NUMBER	22-523
SHEET NUMBER	DCV-A-91
DWG NO.:	434 of 664
SCALE:	1 1/2" = 1'-0"
DATE:	08/23/2022
DPW FILE NUMBER	1-118-A-1183-0
REV. NO.	

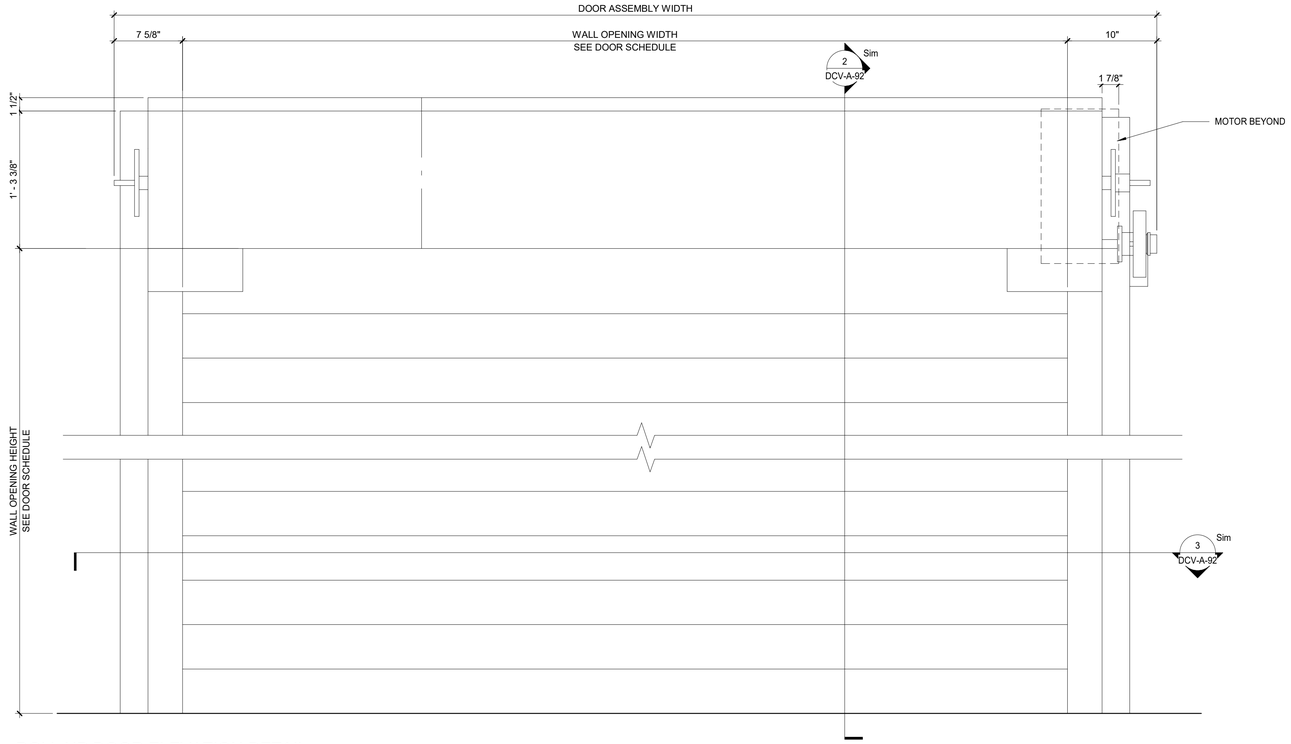

1 ROLL UP DOOR ELEVATION DETAIL
1 1/2" = 1'-0"

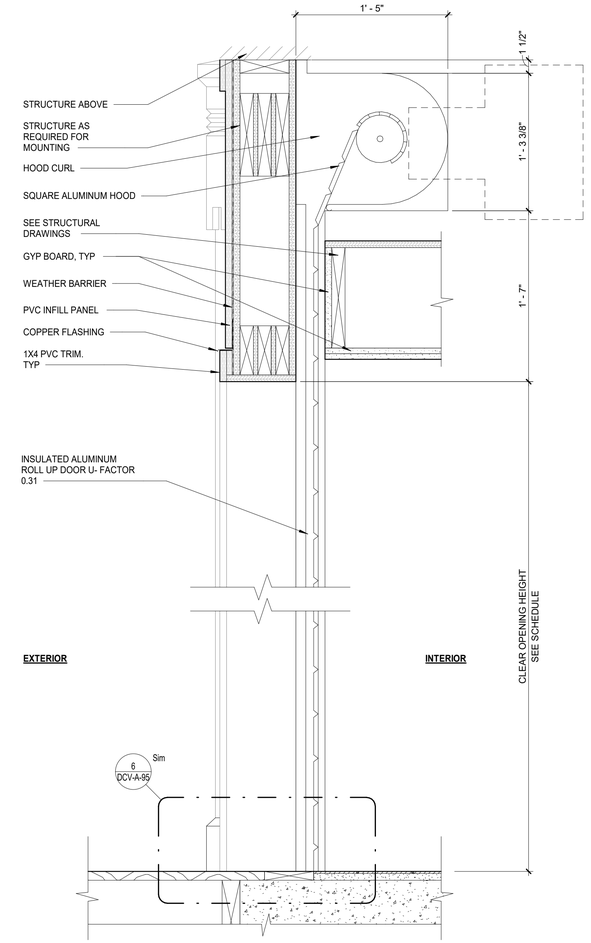

2 ROLL UP DOOR SECTION DETAIL
1 1/2" = 1'-0"

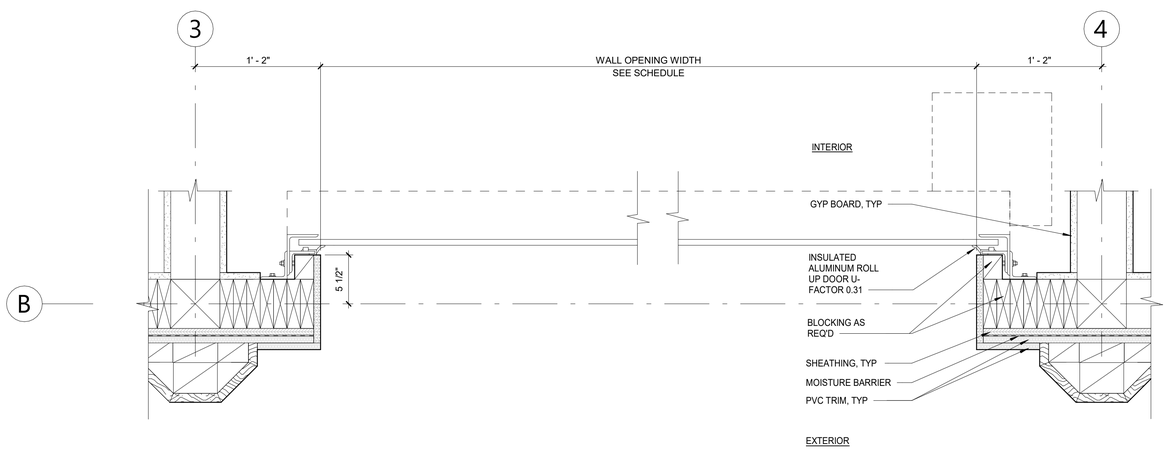

3 DRIVE SIDE PLAN DETAIL
1 1/2" = 1'-0"

8/30/2022 4:13:37 PM

CONSULTANT INFORMATION
The LiRo Group
3 Aerial Way, Syosset, New York 11791
(516) 938-5476 www.liro.com

CONSULTANT SEAL
REGISTERED ARCHITECT ROBERT D. VOLANTE 023290 STATE OF NEW YORK

REVISION NUMBER	DATE	MADE BY	APP'D BY	REVISION

RECORD DRAWING CERTIFICATION
☐ AS BUILT – CHANGES AS NOTED ☐ AS BUILT – NO CHANGES

CONTRACTOR
NAME
SIGNATURE
TITLE DATE

PROJECT COORDINATOR
NAME
SIGNATURE
TITLE DATE

WESTCHESTER COUNTY, NEW YORK
DEPARTMENT OF PUBLIC WORKS AND TRANSPORTATION
DIVISION OF ENGINEERING

INFRASTRUCTURE REHABILITATION - PHASE 3
PLAYLAND PARK, RYE, NEW YORK
DRAGON COASTER VENDORS
ROLL UP DOOR DETAILS

CONTRACT NUMBER	SHEET NUMBER
22-523	DCV-A-92
DWG NO.: 435 of 664	
SCALE: 1 1/2" = 1'-0"	
DATE: 08/23/2022	
DPW FILE NUMBER 1-118-A-1184-0	REV. NO.

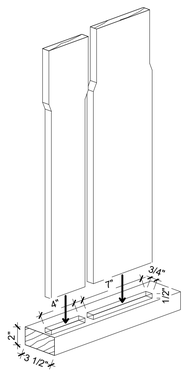

1 RAIL NOTCH DETAIL
1 1/2" = 1'-0"

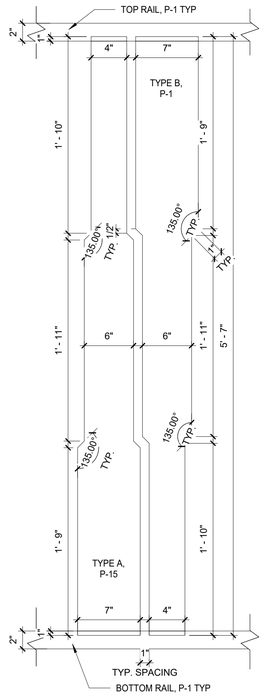

2 FENCE BALLUSTER DETAIL
1 1/2" = 1'-0"

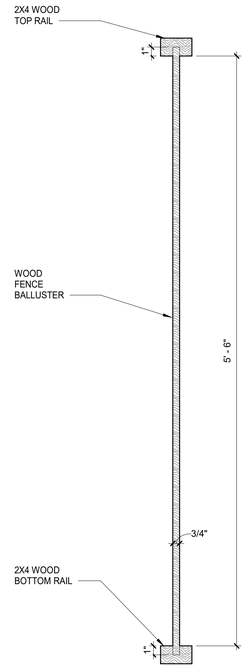

3 SECTION - FENCE BALLUSTER DETAIL
1 1/2" = 1'-0"

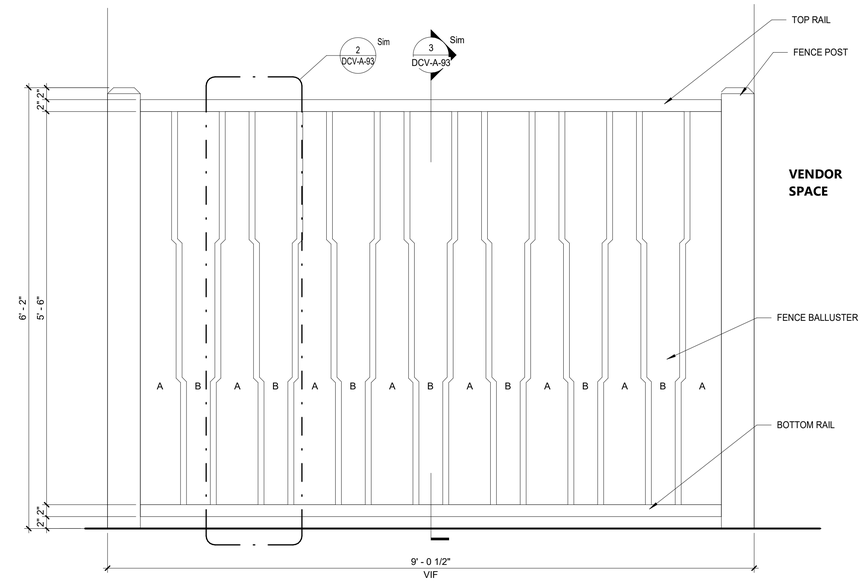

4 FENCE ELEVATION
1" = 1'-0"

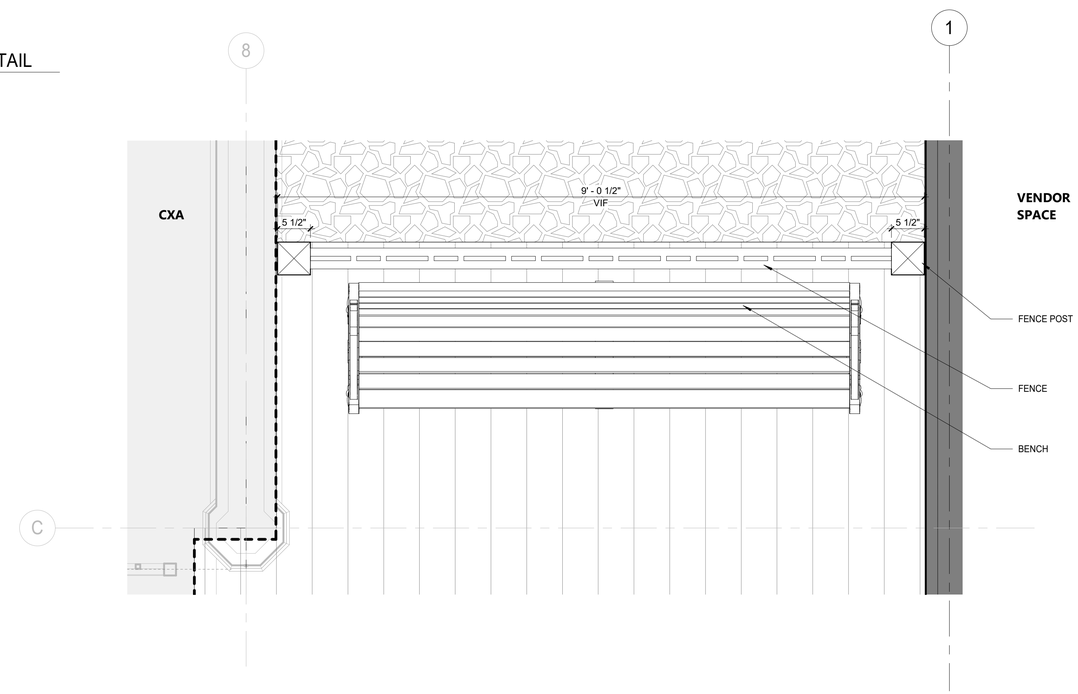

5 FENCE PLAN
1" = 1'-0"

PAINTING KEY

KEY	COLOR	MANUFACTURER	REMARKS
P- 1	MYSTICAL POWERS #901	BENJAMIN MOORE	
P- 2	HERITAGE RED #HC-181	BENJAMIN MOORE	
P- 3	NEW YORK STATE OF MIND #805	BENJAMIN MOORE	
P- 4	LAZY SUNDAY #803	BENJAMIN MOORE	
P- 5	DEEP JUNGLE #595	BENJAMIN MOORE	
P- 6	LUCK OF THE IRISH #588	BENJAMIN MOORE	
P- 7	MAJOLICA GREEN #0013	SHERWIN WILLIAMS	
P- 8	ANTELOPE CANYON #125	BENJAMIN MOORE	
P- 9	FORSYTHIA #6907	SHERWIN WILLIAMS	
P- 10	CAPE BLUE #1642	BENJAMIN MOORE	
P- 11	WHITE SNOW #9541	SHERWIN WILLIAMS	
P- 12	TRICORN BLACK #6258	SHERWIN WILLIAMS	
P- 13	READY MIX WHITE	BENJAMIN MOORE	INTERIOR USE ONLY
P- 14	STUCCO PAINT TO MATCH P-1	-	
P- 15	VAN DEUSEN BLUE #HC-156	BENJAMIN MOORE	
P- 16	#RAL9001	-	
P- 17	FLORIDA BEACHES #900	BENJAMIN MOORE	
P- 18	PIRATES COVE PEACH #903	BENJAMIN MOORE	
P- 19	JADITE #6459	SHERWIN WILLIAMS	
P- 20	DECISIVE YELLOW #6902	SHERWIN WILLIAMS	
P- 21	#RAL9010	-	

FENCE & GATE PAINTING SCHEDULE

COMPONENTS	COLOR
POSTS	P- 7
RAILS	P- 1
BALLUSTER, A	P- 15
BALLUSTER, B	P- 1

8/30/2022 4:13:40 PM

CONSULTANT INFORMATION
The LiRo Group
3 Aerial Way, Syosset, New York 11791
(516) 938-5476 www.liro.com

CONSULTANT SEAL
REGISTERED ARCHITECT ROBERT D. YOUNG JR. 023290 STATE OF NEW YORK

REVISION NUMBER	DATE	MADE BY	APP'D BY	REVISION

RECORD DRAWING CERTIFICATION
☐ AS BUILT – CHANGES AS NOTED ☐ AS BUILT – NO CHANGES

CONTRACTOR
NAME
SIGNATURE
TITLE DATE

PROJECT COORDINATOR
NAME
SIGNATURE
TITLE DATE

WESTCHESTER COUNTY, NEW YORK
DEPARTMENT OF PUBLIC WORKS AND TRANSPORTATION
DIVISION OF ENGINEERING

INFRASTRUCTURE REHABILITATION - PHASE 3
PLAYLAND PARK, RYE, NEW YORK
DRAGON COASTER VENDORS
FENCE DETAILS

CONTRACT NUMBER 22-523
SHEET NUMBER **DCV-A-93**
DWG NO.: 436 of 664
SCALE: **As indicated**
DATE: **08/23/2022**
DPW FILE NUMBER **1-118-A-1185-0**
REV. NO.

FIRE EXTINGUISHER IDENTIFICATION SIGN ARROW

STYLE NO. 91148

POLISHED PLASTIC MATERIAL WITH A SELF- ADHESIVE BACKING

WHITE ON RED

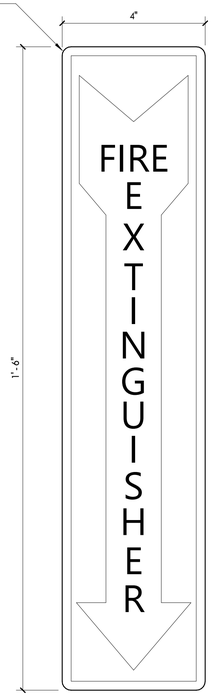

1 TYPE X-1 - FIRE EXTINGUISHER SIGN
6" = 1'-0"

1/4" TH. ACRYLIC SIGN PANEL FRONT FACE AND SIDES PAINTED FINISH.

WHITE ON BLACK WITH MATTE FINISH

SYMBOL:
RAISED 1/32" (0.8MM) MINIMUM ABOVE BACKGROUND MATCH RAISED TACTILE CHARACTERS FOR COLOR FINISH

ALL TYPOGRAPHY RAISED TACTILE CHARACTERS FONT:CENTER IN WIDTH
COLOR:___
FINISH:___
1/32" (0.5MM) MINIMUM ABOVE THEIR BACKGROUND TYPEFACE RAISED CHARACTERS WITHIN A MESSAGE. EXCLUDING WORD SPACES. SHALL BE SPACED 1/3" MINIMUM APART.

GRADE 2 BRAILLE MATCH COLOR AND FINISH OF SIGN'S FACE GRADE 2 BRAILLE TO COMPLY WITH U.S. ACCESS BOARD CHAPTER 7. 703.3.1. BRAILLE DIMENSIONS. GC RESPONSIBLE FOR CORRECT GRADE 2 BRAILLE TRANSLATION

2 TYPE X-2 STAFF ONLY
6" = 1'-0"

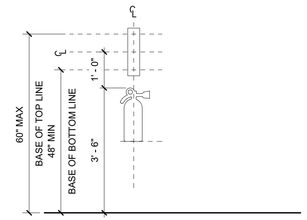

3 FIRE EXTINGUISHER SIGN LOCATION ELEVATION
1/2" = 1'-0"

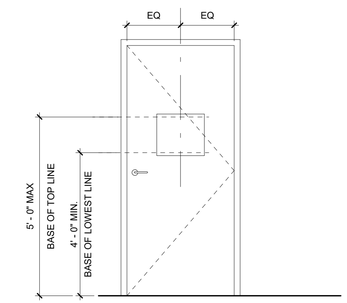

5 SIGN LOCATION ELEVATION TYPICAL DOOR CONDITION 2
1/2" = 1'-0"

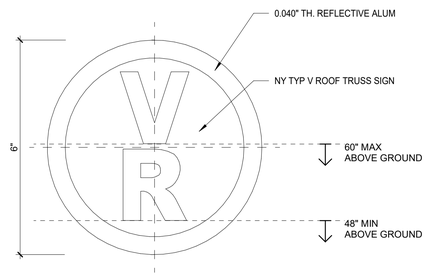

4 TYPE X-4 TRUSS SIGNAGE CLASS VR
6" = 1'-0"

8/30/2022 4:13:41 PM

CONSULTANT INFORMATION

The LiRo Group

3 Aerial Way, Syosset, New York 11791
(516) 938-5476 www.liro.com

CONSULTANT SEAL

REGISTERED ARCHITECT ROBERT D. YOUNG JR. 023220 STATE OF NEW YORK

REVISION NUMBER	DATE	MADE BY	APP'D BY	REVISION

RECORD DRAWING CERTIFICATION

☐ AS BUILT – CHANGES AS NOTED ☐ AS BUILT – NO CHANGES

CONTRACTOR
NAME
SIGNATURE
TITLE DATE

PROJECT COORDINATOR
NAME
SIGNATURE
TITLE DATE

WESTCHESTER COUNTY, NEW YORK
DEPARTMENT OF PUBLIC WORKS AND TRANSPORTATION
DIVISION OF ENGINEERING

INFRASTRUCTURE REHABILITATION - PHASE 3
PLAYLAND PARK, RYE, NEW YORK
DRAGON COASTER VENDORS
SIGNAGE DETAILS

CONTRACT NUMBER	22-523
SHEET NUMBER	DCV-A-94
DWG NO.:	437 of 664
SCALE:	As indicated
DATE:	08/23/2022
DPW FILE NUMBER	1-118-A-1186-0
REV. NO.	

DOOR SCHEDULE - DCV

BUILDING	DOOR NUMBER	DOOR DOOR TYPE	DOOR WIDTH	DOOR HEIGHT	DOOR DOOR THICKNESS	DOOR DOOR MATERIAL	DOOR GLASS	DOOR EXTERIOR FINISH	DOOR INTERIOR FINISH	FRAME FRAME TYPE	FRAME MATERIAL	FRAME EXTERIOR	FRAME INTERIOR	FIRE RATING	HDWR SET	REMARKS
DCV	101A	E	3' - 0"	7'-0"	1 3/4"	HM	NO	PAINT 1	PAINT 1	1	HM	PAINT 1	PAINT 1	45 MIN.	9.0	STOREFRONT LOCKSET.
DCV	101B	C	8' - 5"	9'-6"		ALUM.	NO	PAINT 16	PAINT 16	-	-	-	PAINT 16		4.0	MOTOR OPERATED
DCV	101C	C	8' - 5"	9'-6"		ALUM.	NO	PAINT 16	PAINT 16	-	-	-	PAINT 16		4.0	MOTOR OPERATED
DCV	102A	C	7' - 9"	9'-6"		ALUM.	NO	PAINT 16	PAINT 16	-	-	-	PAINT 16		4.0	MOTOR OPERATED
DCV	102B	A	3' - 0"	7'-0"	1 3/4"	HM	NO	PAINT 1	PAINT 1	1	HM	PAINT 1	PAINT 1		9.0	STOREFRONT LOCKSET
DCV	103A	B	3' - 0"	7'-0"	1 3/4"	WOOD	NO	PAINT 1	PAINT 1	2	WOOD	PAINT 1	PAINT 1		14.0	STOREFRONT LOCKSET. SAPELE WOOD CONSTRUCTION

GENERAL DOOR SCHEDULE NOTES:

1. REFER TO THIS SHEET FOR DOOR & FRAME TYPES.
2. REFER TO THIS SHEET FOR DOOR JAMB, HEAD, & FRAME DETAILS.
3. REFER TO THIS SHEET FOR DOOR SILL & TRANSITION DETAILS. SILL TRANSITION INFORMATION IS INDICATED ON FINISH PLAN UNLESS OTHERWISE NOTED.
4. THE GC SHALL EXAMINE THE DRAWINGS, SCHEDULE AND SPECIFICATIONS AND FURNISH PROPER HARDWARE FOR ALL OPENINGS WHETHER LISTED OR NOT. COMPLETE SHOP DRAWINGS SHALL BE PROVIDED FOR APPROVAL PRIOR TO PURCHASE.
5. VERIFY DIMENSIONS OF EXISTING OPENING AND DOORS BEFORE ORDERING.
6. THE GC SHALL COORDINATE & VERIFY LOCATION OF RECESSED FLOOR CLOSERS, PIVOTS, ETC WITH EXISTING FLOOR SLABS AND OTHER FIELD CONDITIONS PRIOR TO ORDERING TO ENSURE PROPER CLEARANCES & DEPTHS ARE ALLOWED.

NOTE: GC TO CONFIRM DOOR SIZES IN FIELD PRIOR TO ORDERING

PAINTING KEY

KEY	COLOR	MANUFACTURER	REMARKS
P- 1	MYSTICAL POWERS #901	BENJAMIN MOORE	
P- 2	HERITAGE RED #HC-181	BENJAMIN MOORE	
P- 3	NEW YORK STATE OF MIND #805	BENJAMIN MOORE	
P- 4	LAZY SUNDAY #803	BENJAMIN MOORE	
P- 5	DEEP JUNGLE #595	BENJAMIN MOORE	
P- 6	LUCK OF THE IRISH #588	BENJAMIN MOORE	
P- 7	MAJOLICA GREEN #0013	SHERWIN WILLIAMS	
P- 8	ANTELOPE CANYON #125	BENJAMIN MOORE	
P- 9	FORSYTHIA #6907	SHERWIN WILLIAMS	
P- 10	CAPE BLUE #1642	BENJAMIN MOORE	
P- 11	WHITE SNOW #9541	SHERWIN WILLIAMS	
P- 12	TRICORN BLACK #6258	SHERWIN WILLIAMS	
P- 13	READY MIX WHITE	BENJAMIN MOORE	INTERIOR USE ONLY
P- 14	STUCCO PAINT TO MATCH P-1	-	
P- 15	VAN DEUSEN BLUE #HC-156	BENJAMIN MOORE	
P- 16	#RAL9001	-	
P- 17	FLORIDA BEACHES #900	BENJAMIN MOORE	
P- 18	PIRATES COVE PEACH #903	BENJAMIN MOORE	
P- 19	JADITE #6459	SHERWIN WILLIAMS	
P- 20	DECISIVE YELLOW #6902	SHERWIN WILLIAMS	
P- 21	#RAL9010	-	

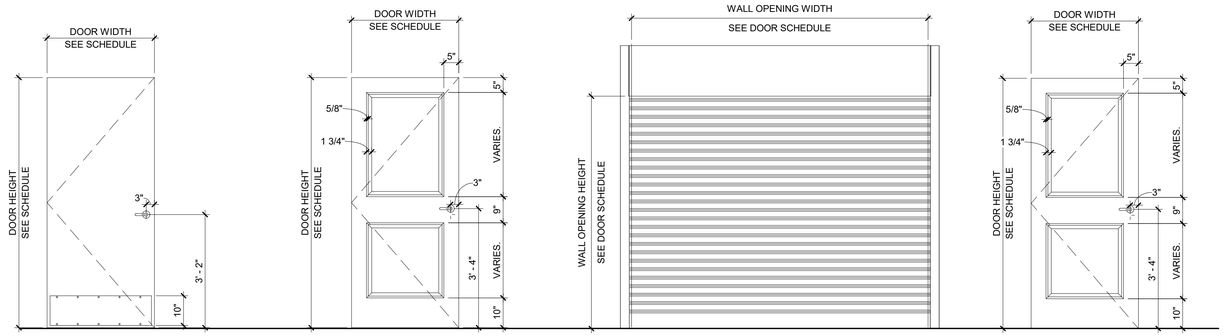

TYPE A — SINGLE H.M. DOOR

TYPE B — SINGLE WOOD DOOR

TYPE C — OVERHEAD ROLL-UP DOOR

TYPE E — SINGLE HM DOOR

DOOR AND FRAME TYPES

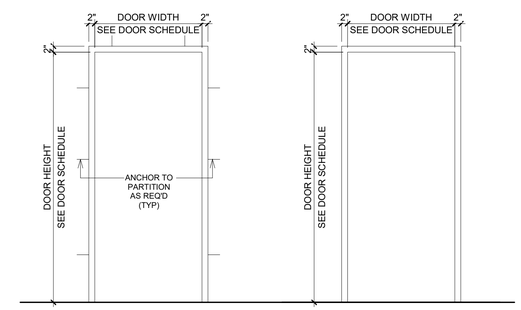

TYPE 1 — H.M. FRAME

TYPE 2 — WOOD FRAME

FRAME TYPES

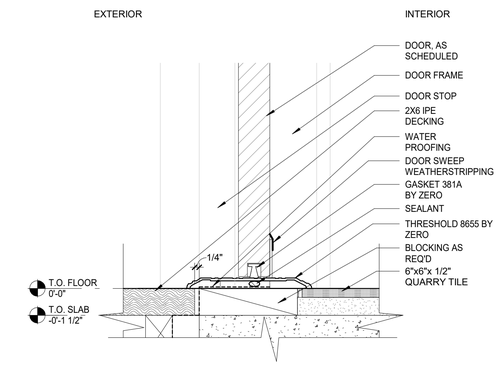

1 EXTERIOR DOOR SILL DETAIL - TR-01
3" = 1'-0"

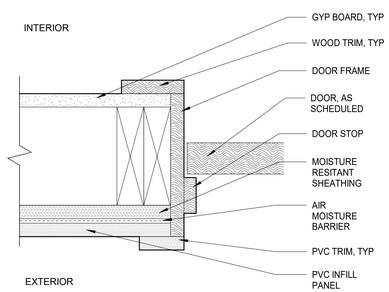

2 WOOD DOOR JAMB DETAIL - EXTERIOR
3" = 1'-0"

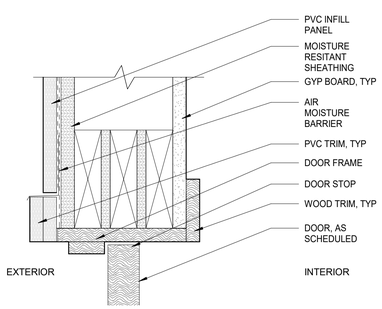

3 WOOD DOOR HEAD DETAIL - EXTERIOR
3" = 1'-0"

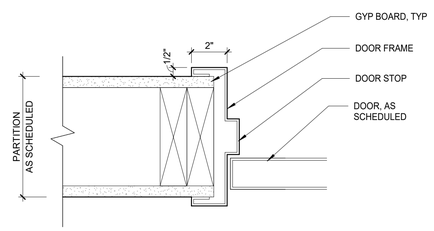

4 HM DOOR JAMB DETAIL - INTERIOR
3" = 1'-0"

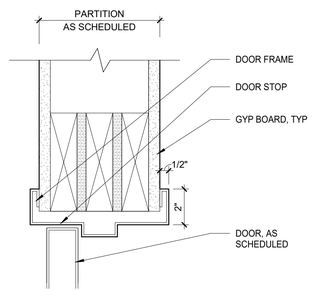

5 HM DOOR HEAD DETAIL - INTERIOR
3" = 1'-0"

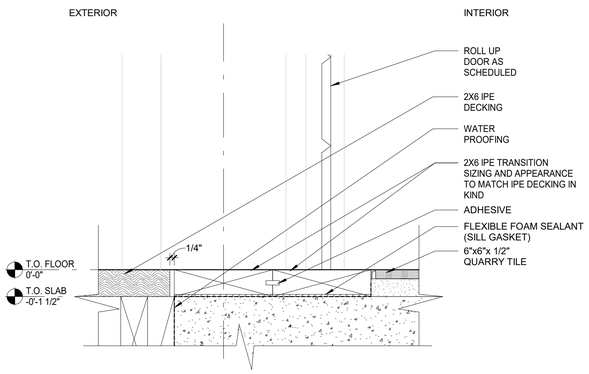

6 IPE TO QUARRY TRANSTION - TR-05
3" = 1'-0"

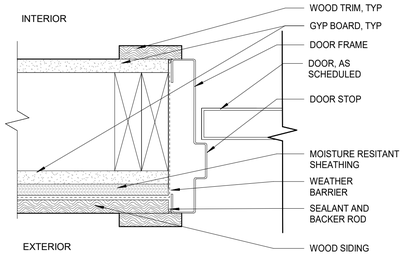

7 HM DOOR JAMB DETAIL - EXTERIOR
3" = 1'-0"

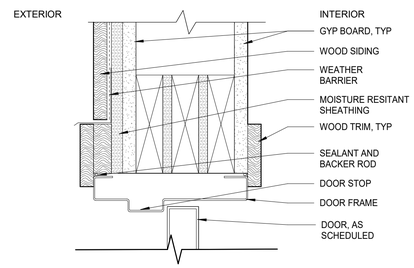

8 HM DOOR HEAD DETAIL - EXTERIOR
3" = 1'-0"

8/30/2022 4:13:46 PM

CONSULTANT INFORMATION

The LiRo Group
3 Aerial Way, Syosset, New York 11791
(516) 938-5476 www.liro.com

CONSULTANT SEAL

REGISTERED ARCHITECT ROBERT D. CORNINO 023209 STATE OF NEW YORK

REVISION NUMBER	DATE	MADE BY	APP'D BY	REVISION

RECORD DRAWING CERTIFICATION

☐ AS BUILT – CHANGES AS NOTED ☐ AS BUILT – NO CHANGES

CONTRACTOR
NAME
SIGNATURE
TITLE DATE

PROJECT COORDINATOR
NAME
SIGNATURE
TITLE DATE

WESTCHESTER COUNTY, NEW YORK
DEPARTMENT OF PUBLIC WORKS AND TRANSPORTATION
DIVISION OF ENGINEERING

INFRASTRUCTURE REHABILITATION - PHASE 3
PLAYLAND PARK, RYE, NEW YORK
DRAGON COASTER VENDORS
DOOR AND HARDWARE SCHEDULE

CONTRACT NUMBER	SHEET NUMBER
22-523	DCV-A-95

DWG NO.: 438 of 664
SCALE: **As indicated**
DATE: **08/23/2022**
DPW FILE NUMBER **1-118-A-1187-0** REV. NO.

WINDOW SCHEDULE - DCV									
BUILDING	MARK	WINDOW TYPE	ROUGH WIDTH	ROUGH HEIGHT	SILL HEIGHT	WINDOW MATERIAL	EXTERIOR TRIM	INTERIOR TRIM	REMARKS
DCV	W1	1	4' - 6"	3' - 11 1/2"	3' - 0"	ALUM. P-1	WOOD, P-1	WOOD, BLACK	
DCV	W2	2	4' - 6"	4' - 0"	6' - 2"	ALUM. P-1	WOOD, P-1	WOOD, BLACK	
DCV	W6	3	3' - 0"	1' - 10"	6' - 2"	ALUM. P-1	WOOD, P-1	WOOD, BLACK	
DCV	W7	3	3' - 0"	1' - 10"	6' - 2"	ALUM. P-1	WOOD, P-1	WOOD, BLACK	
DCV	W8	3	3' - 0"	1' - 10"	6' - 2"	ALUM. P-1	WOOD, P-1	WOOD, BLACK	
DCV	W9	4	3' - 0 1/2"	3' - 0 1/2"	2' - 10"	ALUM. P-1	WOOD, P-1	WOOD, BLACK	
DCV	W10	4	3' - 0 1/2"	3' - 0 1/2"	2' - 10"	ALUM. P-1	WOOD, P-1	WOOD, BLACK	

PAINTING KEY

KEY	COLOR	MANUFACTURER	REMARKS
P- 1	MYSTICAL POWERS #901	BENJAMIN MOORE	
P- 2	HERITAGE RED #HC-181	BENJAMIN MOORE	
P- 3	NEW YORK STATE OF MIND #805	BENJAMIN MOORE	
P- 4	LAZY SUNDAY #803	BENJAMIN MOORE	
P- 5	DEEP JUNGLE #595	BENJAMIN MOORE	
P- 6	LUCK OF THE IRISH #588	BENJAMIN MOORE	
P- 7	MAJOLICA GREEN #0013	SHERWIN WILLIAMS	
P- 8	ANTELOPE CANYON #125	BENJAMIN MOORE	
P- 9	FORSYTHIA #6907	SHERWIN WILLIAMS	
P- 10	CAPE BLUE #1642	BENJAMIN MOORE	
P- 11	WHITE SNOW #9541	SHERWIN WILLIAMS	
P- 12	TRICORN BLACK #6258	SHERWIN WILLIAMS	
P- 13	READY MIX WHITE	BENJAMIN MOORE	INTERIOR USE ONLY
P- 14	STUCCO PAINT TO MATCH P-1	-	
P- 15	VAN DEUSEN BLUE #HC-156	BENJAMIN MOORE	
P- 16	#RAL9001	-	
P- 17	FLORIDA BEACHES #900	BENJAMIN MOORE	
P- 18	PIRATES COVE PEACH #903	BENJAMIN MOORE	
P- 19	JADITE #6459	SHERWIN WILLIAMS	
P- 20	DECISIVE YELLOW #6902	SHERWIN WILLIAMS	
P- 21	#RAL9010	-	

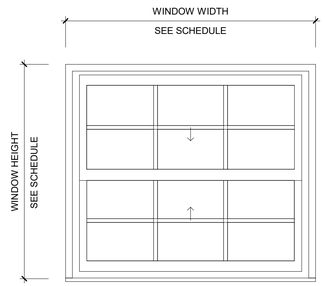

1 TYPE 1 - ELEVATION
3/4" = 1'-0"

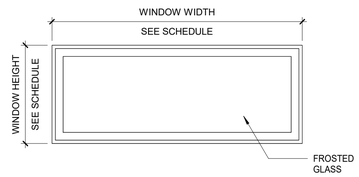

2 TYPE 2 - ELEVATION
3/4" = 1'-0"

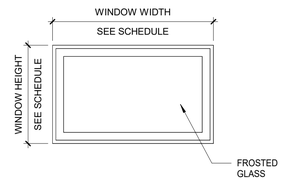

3 TYPE 3 - ELEVATION
3/4" = 1'-0"

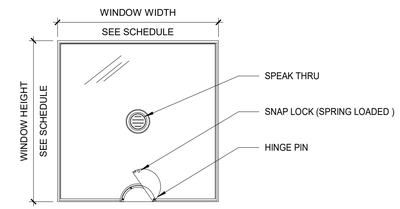

4 TYPE 4 - ELEVATION
3/4" = 1'-0"

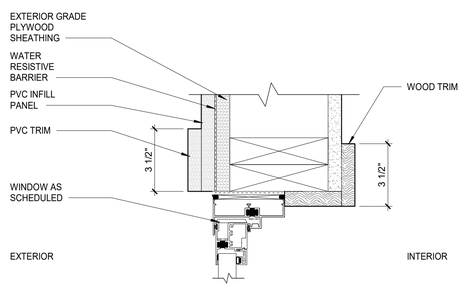

5 FIXED WINDOW JAMB DETAIL
3" = 1'-0"

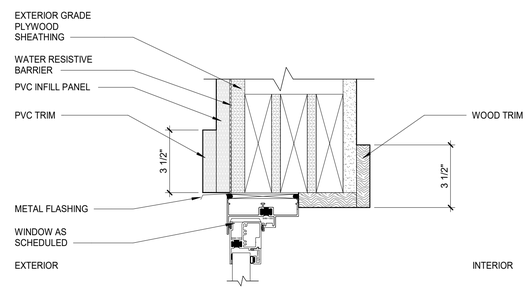

6 FIXED WINDOW HEAD DETAIL
3" = 1'-0"

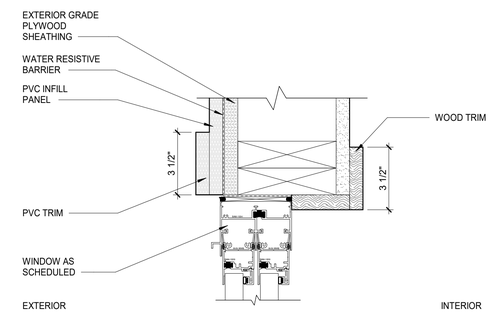

7 DOUBLE HUNG WINDOW JAMB DETAIL
3" = 1'-0"

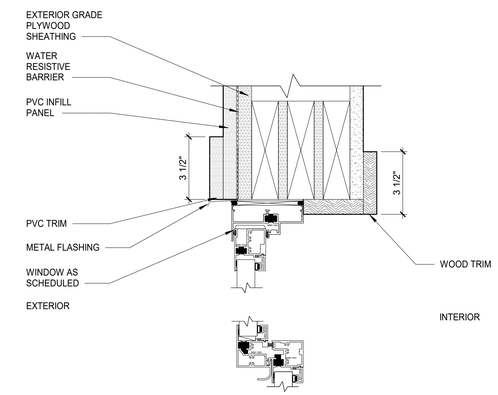

8 DOUBLE HUNG WINDOW HEAD DETAIL
3" = 1'-0"

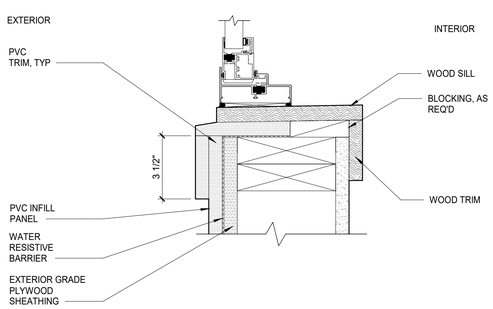

9 FIXED WINDOW SILL DETAIL
3" = 1'-0"

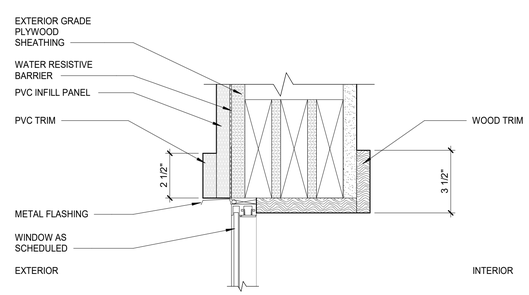

10 FIXED WINDOW HEAD DETAIL - TICKETING
3" = 1'-0"

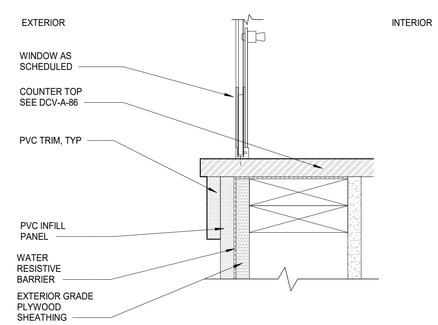

11 FIXED WINDOW SILL DETAIL - TICKETING
3" = 1'-0"

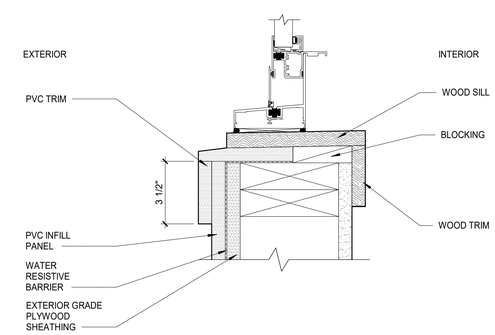

12 DOUBLE HUNG WINDOW SILL DETAIL
3" = 1'-0"

8/30/2022 4:13:50 PM

CONSULTANT INFORMATION

The LiRo Group

3 Aerial Way, Syosset, New York 11791
(516) 938-5476 www.liro.com

CONSULTANT SEAL

REGISTERED ARCHITECT ROBERT D. TOWNSEND 023280 STATE OF NEW YORK

REVISION NUMBER	DATE	MADE BY	APP'D BY	REVISION

RECORD DRAWING CERTIFICATION

☐ AS BUILT – CHANGES AS NOTED ☐ AS BUILT – NO CHANGES

CONTRACTOR
NAME
SIGNATURE
TITLE DATE

PROJECT COORDINATOR
NAME
SIGNATURE
TITLE DATE

WESTCHESTER COUNTY, NEW YORK
DEPARTMENT OF PUBLIC WORKS AND TRANSPORTATION
DIVISION OF ENGINEERING

INFRASTRUCTURE REHABILITATION - PHASE 3
PLAYLAND PARK, RYE, NEW YORK
DRAGON COASTER VENDORS
WINDOW SCHEDULE AND WINDOW DETAILS

CONTRACT NUMBER	22-523
SHEET NUMBER	DCV-A-96
DWG NO.:	439 of 664
SCALE:	As indicated
DATE:	08/23/2022
DPW FILE NUMBER	1-118-A-1188-0
REV. NO.	

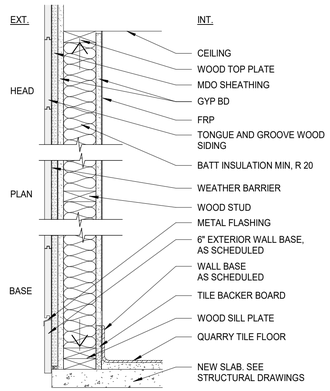

1 **EXTERIOR WALL - 1 HR RATED - BXUV.V346-ANSI/UL 263**

FRP FINISH. 5/8" GWB-X , M-BLOC – MOISTURE RESISTANT, 2X6 WOOD STUD, 5/8" GWB-X, M-BLOC , ¾" FIRE-RETARDANT SHEATHING, 1/8" DRAINAGE TYPE WEATHER BARRIER ,WOOD SIDING

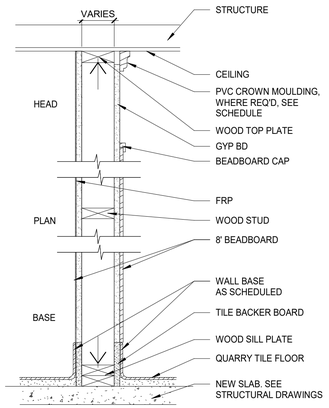

2 **NO RATING**

1 LAYER 5/8" IMPACT & MOLD-RESISTANT GYP BD UP TO 8' A.F.F. AND 5/8" MOLD-RESISTANT GYP BD TO CEILING, BEADBOARD FINISH. 1 LAYER 5/8" IMPACT & MOLD-RESISTANT GYP BD TO CEILING. FRP FINISH

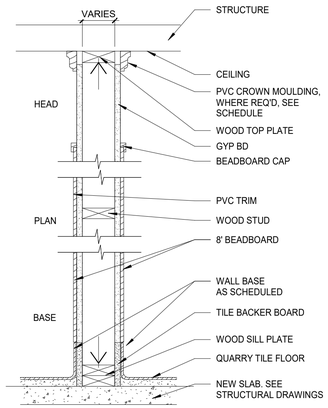

3 **NO RATING**

1 LAYER 5/8" IMPACT & MOLD-RESISTANT GYP BD UP TO 8' A.F.F. AND 5/8" MOLD-RESISTANT GYP BD TO CEILING, ON BOTH SIDES. BEADBOARD FINISH

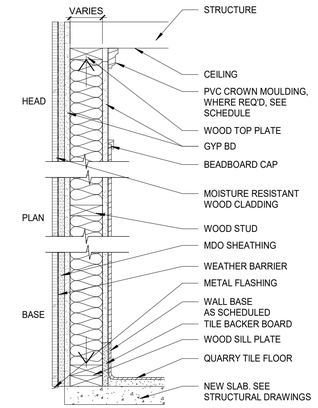

4 **EXTERIOR WALL - 1 HR RATED - BXUV.V346-ANSI/UL 263**

BEADBOARD FINISH. 5/8" GWB-X , M-BLOC – MOISTURE RESISTANT, 2X6 WOOD STUD, 5/8" GWB-X, M-BLOC , ¾" FIRE-RETARDANT SHEATHING, 1/8" DRAINAGE TYPE WEATHER BARRIER ,1 LAYER MOLD/ MOISTURE RESISTANT WOOD CLADDING

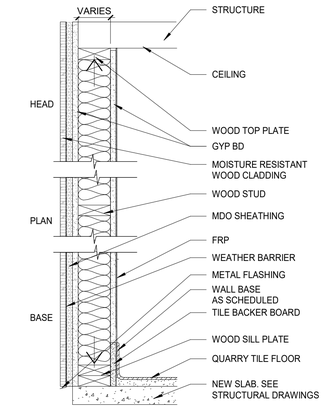

5 **EXTERIOR WALL - 1 HR RATED - BXUV.V346-ANSI/UL 263**

FRP FINISH. 5/8" GWB-X , M-BLOC – MOISTURE RESISTANT, 2X6 WOOD STUD, 5/8" GWB-X, M-BLOC , ¾" FIRE-RETARDANT SHEATHING, 1/8" DRAINAGE TYPE WEATHER BARRIER , 1 LAYER MOLD/ MOISTURE RESISTANT WOOD CLADDING

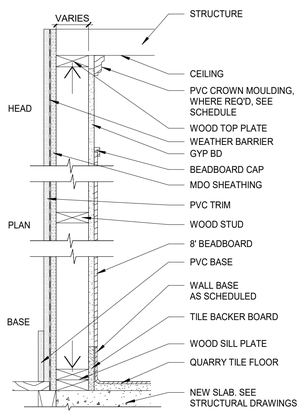

6 **NO RATING**

1 LAYER 5/8" IMPACT & MOLD-RESISTANT GYP BD UP TO 8' A.F.F. AND 5/8" MOLD-RESISTANT GYP BD TO CEILING. FRP FINISH

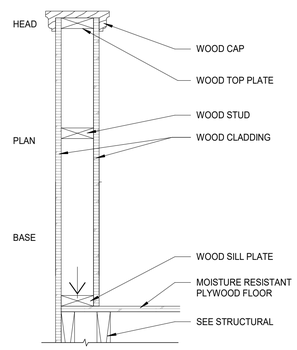

7 **NO RATING**

1 LAYER MOLD/ MOISTURE RESISTANT WOOD CLADDING ON EACH SIDE.

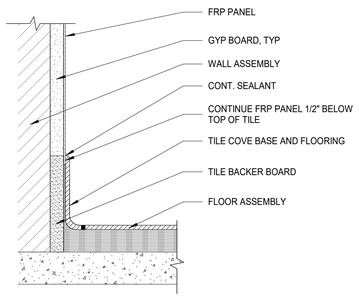

1 TILE BASE
3" = 1'-0"

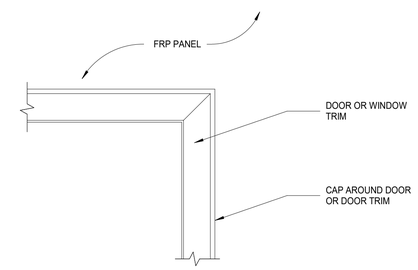

2 DOOR/ WINDOW TRIM DETAIL
3" = 1'-0"

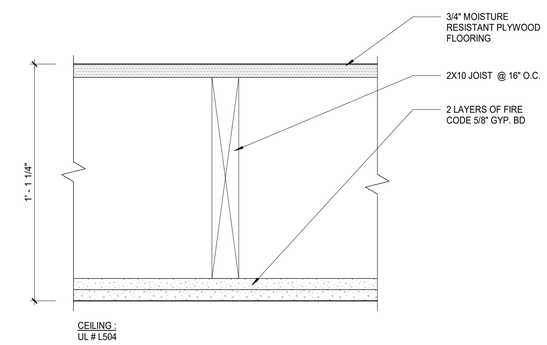

3 CEILING DETAIL
3" = 1'-0"

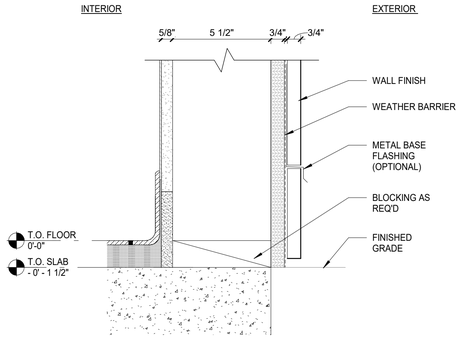

4 EXTERIOR WALL SILL DETAIL
3" = 1'-0"

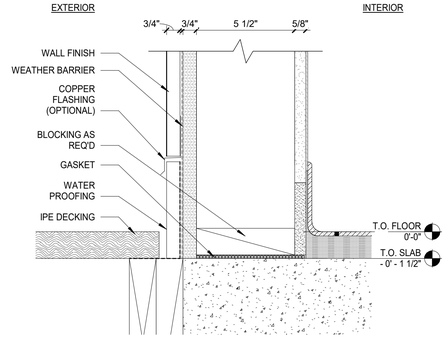

5 EXTERIOR WALL SILL DETAIL AT BOARDWALK
3" = 1'-0"

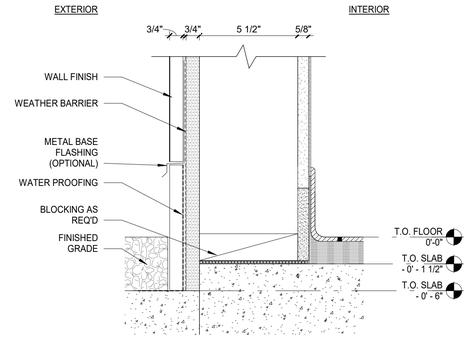

6 EXTERIOR WALL SILL DETAIL AT ASPHALT
3" = 1'-0"

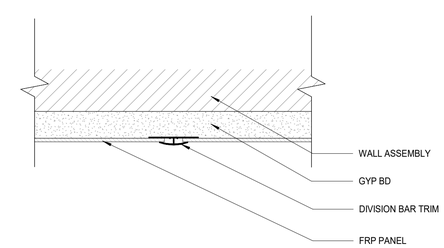

7 VERTICAL SEAM TRIM DETAIL
6" = 1'-0"

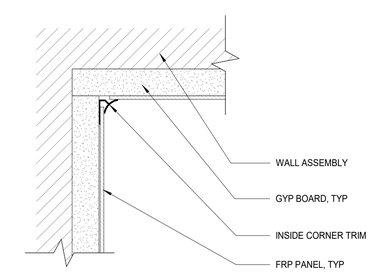

8 FRP PANEL INSIDE CORNER TRIM
6" = 1'-0"

8/30/2022 4:13:53 PM

CONSULTANT INFORMATION

The LiRo Group
3 Aerial Way, Syosset, New York 11791
(516) 938-5476 www.liro.com

CONSULTANT SEAL

REGISTERED ARCHITECT ROBERT D. YOUNG JR. 023280 STATE OF NEW YORK

REVISION NUMBER	DATE	MADE BY	APP'D BY	REVISION

RECORD DRAWING CERTIFICATION

☐ AS BUILT – CHANGES AS NOTED ☐ AS BUILT – NO CHANGES

CONTRACTOR
NAME
SIGNATURE
TITLE DATE

PROJECT COORDINATOR
NAME
SIGNATURE
TITLE DATE

WESTCHESTER COUNTY, NEW YORK
DEPARTMENT OF PUBLIC WORKS AND TRANSPORTATION
DIVISION OF ENGINEERING

INFRASTRUCTURE REHABILITATION - PHASE 3
PLAYLAND PARK, RYE, NEW YORK
DRAGON COASTER VENDORS
WALL PARTITION SCHEDULE

CONTRACT NUMBER	SHEET NUMBER
22-523	DCV-A-97

DWG NO.: 440 of 664
SCALE: **As indicated**
DATE: **08/23/2022**
DPW FILE NUMBER **1-118-A-1189-0** REV. NO.

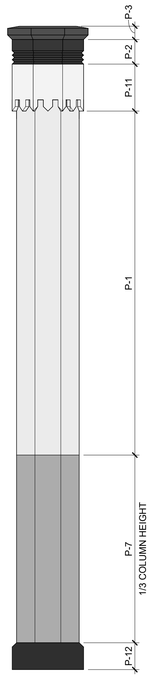

1 COLUMN PAINT ELEVATION
3/4" = 1'-0"

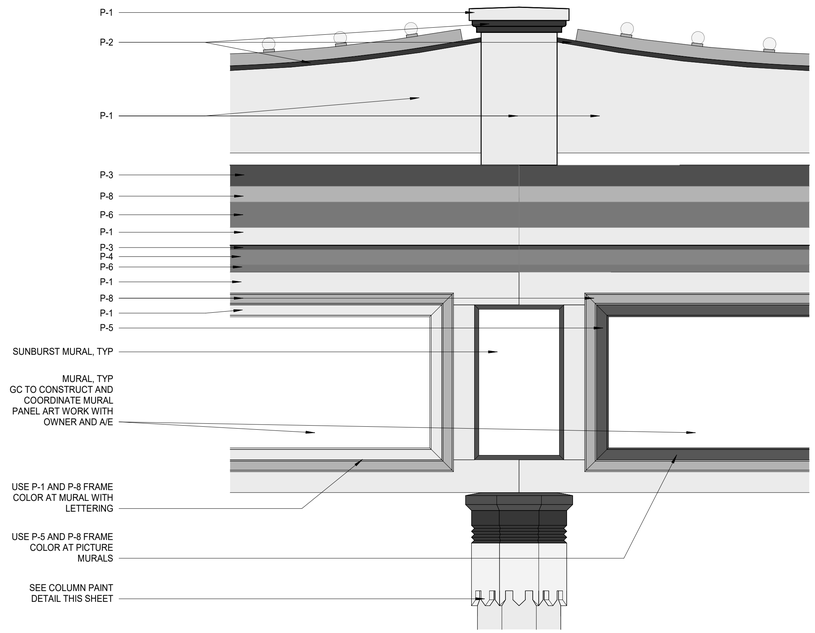

2 COLONNADE PAINT ELEVATION
1" = 1'-0"

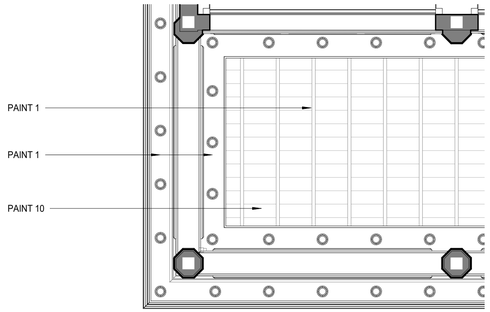

3 TYPICAL COLONNADE - REFLECTED CEILING PLAN PAINT DETAIL
3/8" = 1'-0"

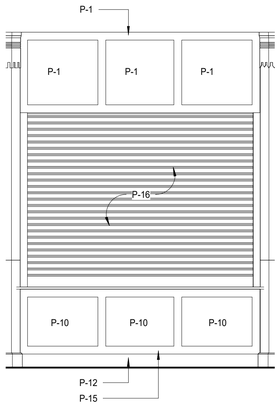

4 TYPICAL VENDOR SPACE PAINT DETAIL
3/8" = 1'-0"

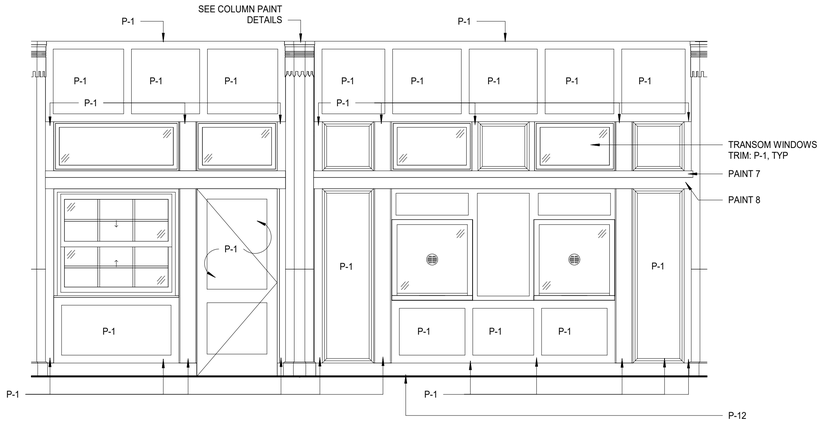

5 NORTH STOREFRONT PAINT DETAIL
3/8" = 1'-0"

PAINTING KEY

KEY	COLOR	MANUFACTURER	REMARKS
P- 1	MYSTICAL POWERS #901	BENJAMIN MOORE	
P- 2	HERITAGE RED #HC-181	BENJAMIN MOORE	
P- 3	NEW YORK STATE OF MIND #805	BENJAMIN MOORE	
P- 4	LAZY SUNDAY #803	BENJAMIN MOORE	
P- 5	DEEP JUNGLE #595	BENJAMIN MOORE	
P- 6	LUCK OF THE IRISH #588	BENJAMIN MOORE	
P- 7	MAJOLICA GREEN #0013	SHERWIN WILLIAMS	
P- 8	ANTELOPE CANYON #125	BENJAMIN MOORE	
P- 9	FORSYTHIA #6907	SHERWIN WILLIAMS	
P- 10	CAPE BLUE #1642	BENJAMIN MOORE	
P- 11	WHITE SNOW #9541	SHERWIN WILLIAMS	
P- 12	TRICORN BLACK #6258	SHERWIN WILLIAMS	
P- 13	READY MIX WHITE	BENJAMIN MOORE	INTERIOR USE ONLY
P- 14	STUCCO PAINT TO MATCH P-1	-	
P- 15	VAN DEUSEN BLUE #HC-156	BENJAMIN MOORE	
P- 16	#RAL9001	-	
P- 17	FLORIDA BEACHES #900	BENJAMIN MOORE	
P- 18	PIRATES COVE PEACH #903	BENJAMIN MOORE	
P- 19	JADITE #6459	SHERWIN WILLIAMS	
P- 20	DECISIVE YELLOW #6902	SHERWIN WILLIAMS	
P- 21	#RAL9010	-	

NOTE: ALL EXPOSED SURFACES OF COLUMNS, FRIEZE, SOFFITS, ROOF UNDERSIDE, RAILS, PIERS, AND TICKET BOOTH TO BE PAINTED IN ENTIRETY

8/30/2022 4:13:57 PM

CONSULTANT INFORMATION
The LiRo Group
3 Aerial Way, Syosset, New York 11791
(516) 938-5476 www.liro.com

CONSULTANT SEAL
REGISTERED ARCHITECT ROBERT D. JOHNSON 023220 STATE OF NEW YORK

REVISION NUMBER	DATE	MADE BY	APP'D BY	REVISION

RECORD DRAWING CERTIFICATION
☐ AS BUILT – CHANGES AS NOTED ☐ AS BUILT – NO CHANGES

CONTRACTOR
NAME
SIGNATURE
TITLE DATE

PROJECT COORDINATOR
NAME
SIGNATURE
TITLE DATE

WESTCHESTER COUNTY, NEW YORK
DEPARTMENT OF PUBLIC WORKS AND TRANSPORTATION
DIVISION OF ENGINEERING

INFRASTRUCTURE REHABILITATION - PHASE 3
PLAYLAND PARK, RYE, NEW YORK
DRAGON COASTER VENDORS
EXTERIOR PAINT FINISH SCHEDULE 1 OF 2

CONTRACT NUMBER 22-523
SHEET NUMBER **DCV-A-98**
DWG NO.: 441 of 664
SCALE: **As indicated**
DATE: **08/23/2022**
DPW FILE NUMBER **1-118-A-1190-0**
REV. NO.

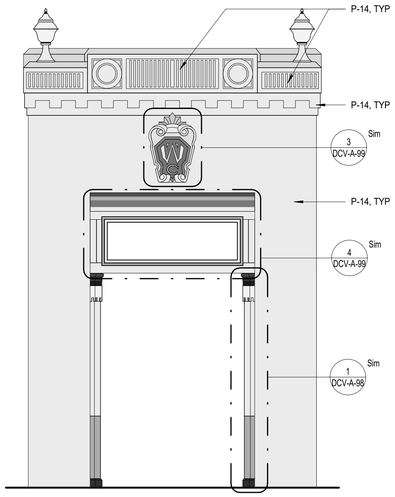

1 PAINT ELEVATION - TOWER
1/4" = 1'-0"

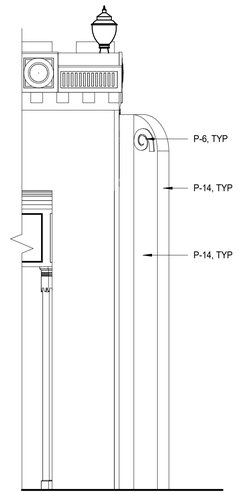

2 ELEVATION - WING PIER PAINT DETAIL
1/4" = 1'-0"

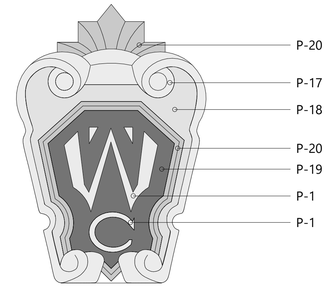

3 EMBLEM PAINT DETAIL
1" = 1'-0"

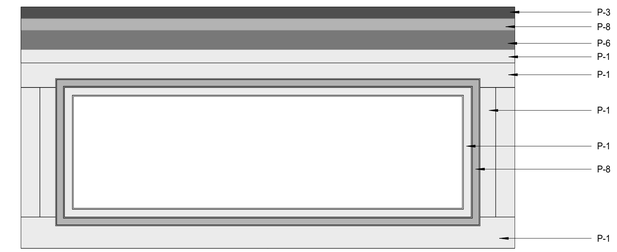

4 TOWER MURAL PAINT ELEVATION
3/4" = 1'-0"

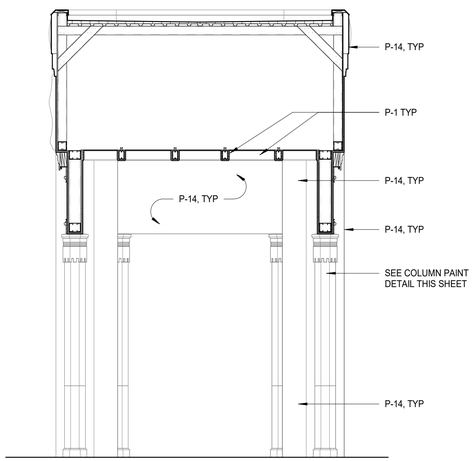

5 PAINT SECTION - TOWER
1/4" = 1'-0"

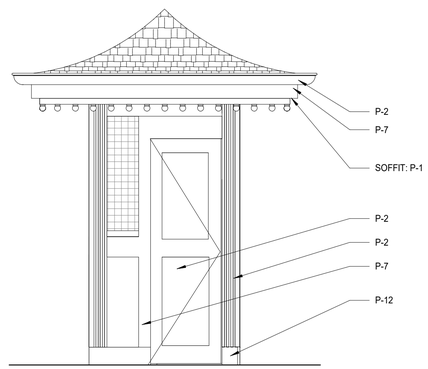

6 EAST PAINT ELEVATION - TICKET BOOTH
1/2" = 1'-0"

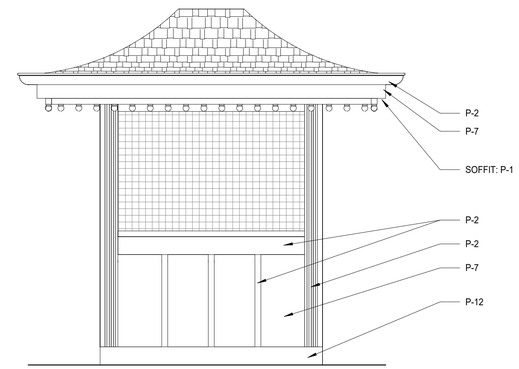

7 NORTH PAINT ELEVATION - TICKET BOOTH
1/2" = 1'-0"

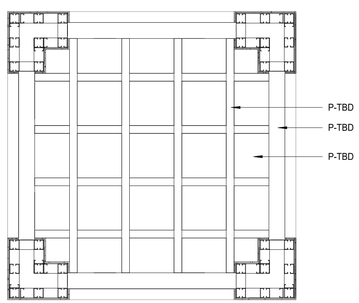

8 REFLECTED CEILING PAINT PLAN - TOWER
1/4" = 1'-0"

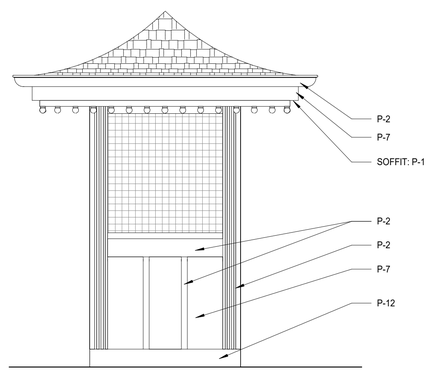

9 WEST PAINT ELEVATION - TICKET BOOTH
1/2" = 1'-0"

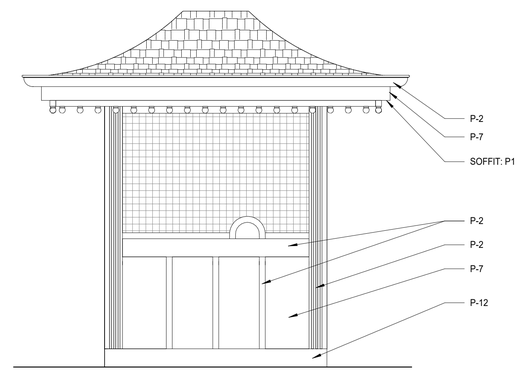

10 SOUTH PAINT ELEVATION - TICKET BOOTH
1/2" = 1'-0"

PAINTING KEY

KEY	COLOR	MANUFACTURER	REMARKS
P- 1	MYSTICAL POWERS #901	BENJAMIN MOORE	
P- 2	HERITAGE RED #HC-181	BENJAMIN MOORE	
P- 3	NEW YORK STATE OF MIND #805	BENJAMIN MOORE	
P- 4	LAZY SUNDAY #803	BENJAMIN MOORE	
P- 5	DEEP JUNGLE #595	BENJAMIN MOORE	
P- 6	LUCK OF THE IRISH #588	BENJAMIN MOORE	
P- 7	MAJOLICA GREEN #0013	SHERWIN WILLIAMS	
P- 8	ANTELOPE CANYON #125	BENJAMIN MOORE	
P- 9	FORSYTHIA #6907	SHERWIN WILLIAMS	
P- 10	CAPE BLUE #1642	BENJAMIN MOORE	
P- 11	WHITE SNOW #9541	SHERWIN WILLIAMS	
P- 12	TRICORN BLACK #6258	SHERWIN WILLIAMS	
P- 13	READY MIX WHITE	BENJAMIN MOORE	INTERIOR USE ONLY
P- 14	STUCCO PAINT TO MATCH P-1	-	
P- 15	VAN DEUSEN BLUE #HC-156	BENJAMIN MOORE	
P- 16	#RAL9001	-	
P- 17	FLORIDA BEACHES #900	BENJAMIN MOORE	
P- 18	PIRATES COVE PEACH #903	BENJAMIN MOORE	
P- 19	JADITE #6459	SHERWIN WILLIAMS	
P- 20	DECISIVE YELLOW #8902	SHERWIN WILLIAMS	
P- 21	#RAL9010	-	

NOTE: ALL EXPOSED SURFACES OF COLUMNS, FRIEZE, SOFFITS, ROOF UNDERSIDE, RAILS, PIERS, AND TICKET BOOTH TO BE PAINTED IN ENTIRETY

8/30/2022 4:14:01 PM

CONSULTANT INFORMATION
The LiRo Group
3 Aerial Way, Syosset, New York 11791
(516) 938-5476 www.liro.com

CONSULTANT SEAL
REGISTERED ARCHITECT ROBERT D. YOUNG JR. 023280 STATE OF NEW YORK

REVISION NUMBER	DATE	MADE BY	APP'D BY	REVISION

RECORD DRAWING CERTIFICATION
☐ AS BUILT – CHANGES AS NOTED ☐ AS BUILT – NO CHANGES

CONTRACTOR
NAME
SIGNATURE
TITLE DATE

PROJECT COORDINATOR
NAME
SIGNATURE
TITLE DATE

WESTCHESTER COUNTY, NEW YORK
DEPARTMENT OF PUBLIC WORKS AND TRANSPORTATION
DIVISION OF ENGINEERING

INFRASTRUCTURE REHABILITATION - PHASE 3
PLAYLAND PARK, RYE, NEW YORK
DRAGON COASTER VENDORS
EXTERIOR PAINT FINISH SCHEDULE 2 OF 2

CONTRACT NUMBER 22-523
SHEET NUMBER **DCV-A-99**
DWG NO.: 442 of 664
SCALE: **As indicated**
DATE: **08/23/2022**
DPW FILE NUMBER **1-118-A-1191-0**
REV. NO.

STRUCTURAL NOTES

GENERAL

G-1 THESE NOTES ARE GENERAL AND SUPPLEMENTAL TO THE SPECIFICATIONS. THESE NOTES APPLY TO THE ENTIRE PROJECT UNLESS MODIFIED OR NOTED OTHERWISE IN THE CONTRACT DOCUMENTS.

G-2 STANDARD DETAILS, SHOWN ON DRAWINGS DS-S-12 THRU DS-S-14 SHALL BE USED WHEN REFERRED TO OR WHEN NO MORE RESTRICTIVE OR DIFFERENT DETAILS ARE SHOWN ON THE DRAWINGS.

G-3 DESIGN WAS IN ACCORDANCE WITH AND CONSTRUCTION SHALL COMPLY WITH THE PROVISIONS OF THE NEW YORK STATE BUILDING CODE (NYSBC). THE DESIGN LOADS AND OTHER DESIGN VALUES GIVEN BELOW WERE USED FOR DESIGN OF STRUCTURES UON ON THE DRAWINGS.

G-4 DESIGN LOADS FOR NEW ELEMENTS:

LIVE LOADS:

DRAGON COASTER VENDORS:

FLOOR.:	60 PSF

SNOW LOADS:

GROUND SNOW LOAD,	Pg = 30 PSF
ROOF SNOW LOAD,	Pf= 21 PSF
SNOW EXPOSURE FACTOR,	Ce = 0.9
SNOW LOAD IMPORTANCE FACTOR,	I = 1.1
THERMAL FACTOR,	Ct = 1.0

WIND DESIGN:

BASIC WIND SPEED,	V = 126 MPH
BUILDING CATEGORY:	II
WIND EXPOSURE CATEGORY:	D
INTERNAL PRESSURE COEFFICIENT,	GCpi = ±0.18

SEISMIC DESIGN:

SPECTRAL RESPONSE COEFFICIENTS:	
SDS =	0.296
SD1 =	0.096
SITE CLASS:	B
SEISMIC DESIGN CATEGORY:	C
SEISMIC IMPORTANCE FACTOR:	I = 1.25

BASIC SEISMIC FORCE RESISTING SYSTEM IS AS SHOWN ON DRAWINGS

DESIGN BASE SHEAR, V = AS SHOWN ON DRAWINGS

ANALYSIS PROCEDURE IS EQUIVALENT LATERAL FORCE METHOD, UON.

RESPONSE MODIFICATION FACTOR, R:

DRAGON COASTER VENDORS: R = 7

LOADS INDICATED ABOVE REFLECT DESIGN LOADS FOR ANY NEW OR REHABILITATED STRUCTURAL ELEMENTS. THEY SHOULD NOT BE TAKEN AS DESIGN LOADS FOR THE STRUCTURE AS A WHOLE.

G-5 ALL DIMENSIONS INDICATED (*) ARE TO BE VERIFIED EITHER BY FIELD MEASUREMENTS FOR EXISTING STRUCTURES OR BY SHOP DRAWINGS FOR EQUIPMENT FURNISHED. STRUCTURAL DIMENSIONS NOT SHOWN BUT CONTROLLED BY OR RELATED TO EQUIPMENT SHALL BE VERIFIED BY THE CONTRACTOR WITH THE MANUFACTURER PRIOR TO CONSTRUCTION.

G-6 STRUCTURAL DRAWINGS SHALL BE USED IN COORDINATION WITH THE DRAWINGS OF ALL OTHER DISCIPLINES AND MANUFACTURER'S SHOP DRAWINGS.

G-7 IF A CONFLICT IS FOUND BETWEEN DIFFERENT PORTIONS OF THE CONTRACT DOCUMENTS, THE CONTRACTOR SHALL NOTIFY THE ENGINEER IMMEDIATELY. CONTINUED CONSTRUCTION OF THE AREA IN CONFLICT SHALL BE AT THE CONTRACTOR'S OWN RISK UNTIL THE CONFLICT IS RESOLVED BY THE ENGINEER.

G-8 WHENEVER ONE MEMBER IS FASTENED TO ANOTHER WITH FASTENINGS (BOLTS, WELDS, ETC.) SET AT A UNIFORM SPACING, THERE SHALL BE A MINIMUM OF TWO FASTENINGS PER PIECE CONNECTED AND THE FIRST AND LAST FASTENINGS SHALL BE LOCATED NOT TO EXCEED 0.25 OF FASTENER SPACING FROM EACH END.

G-9 STRUCTURES HAVE BEEN DESIGNED FOR OPERATIONAL LOADS ON THE COMPLETED STRUCTURE. DURING CONSTRUCTION, THE STRUCTURES SHALL BE PROTECTED BY BRACING AND TEMPORARY SUPPORTS WHEREVER EXCESSIVE CONSTRUCTION LOADS MAY OCCUR. OVERSTRESSING OF ANY STRUCTURAL ELEMENT IS PROHIBITED.

G-10 NO BACKFILL SHALL BE PLACED AGAINST ANY WALL UNLESS ALL SUPPORTING ELEMENTS OF THE STRUCTURE HAVE BEEN CONSTRUCTED AND HAVE REACHED THE SPECIFIED MINIMUM CONCRETE STRENGTH.

G-11 THE CONTRACTOR IS RESPONSIBLE FOR VERIFYING ALL EXISTING INFORMATION IN THE FIELD AS REQUIRED FOR NEW WORK.

FOUNDATIONS

F-1 DESIGN ASSUMPTIONS:

A) ALLOWABLE BEARING PRESSURE: 1. SOUND ROCK – 8 TSF, 2. OVERBURDEN – 1 TSF.

B) GROUNDWATER: EXISTING GROUNDWATER ELEVATIONS VARY ACROSS SITE.

F-2 GRAVITY UNDER DRAINS SHALL BE PROVIDED TO PERMANENTLY LOWER GROUNDWATER.

F-3 CONCRETE GENERAL NOTES APPLY TO FOUNDATIONS.

F-4 MINIMUM DEPTH FROM ADJACENT FINISHED GRADE TO BOTTOM OF FOUNDATION, 4'-0"

F-5 FOUNDATIONS BEARING ON ROCK SHALL BE CONSTRUCTED SUCH THAT ROCK SURFACE IS LEVEL, UNLESS APPROVED BY ENGINEER.

F-6 COMPACTED SELECT GRANULAR FILL 12 INCHES THICK MINIMUM, SHALL BE PLACED BELOW ALL CONCRETE FOUNDATIONS UNLESS DIRECTLY BEARING ON SOUND ROCK.

STRUCTURAL METALS

S-1 DETAIL, FABRICATE, AND ERECT STRUCTURAL STEEL IN ACCORDANCE WITH AISC SPECIFICATION FOR STRUCTURAL STEEL BUILDINGS, ALLOWABLE STRESS DESIGN AND LRFD DESIGN (LRFD MANUAL OF STEEL CONSTRUCTION, CURRENT EDITION).

S-2 STEEL MATERIAL:

A) STRUCTURAL TUBING, ASTM A 500, GRADE B.
B) STRUCTURAL PIPE, ASTM A 53, GRADE B.
C) PLATES AND ANGLES, ASTM A 36 UNO.
D) STRUCTURAL W SHAPES, ASTM A 992 (MIN. YIELD STRENGTH OF 50 KSI).
E) STRUCTURAL S, M, & H SHAPES ASTM A572 GRADE 50.
F) COLD FORMED STEEL.

S-3 PROVIDE MIN 3/4" DIAMETER ASTM A 325 HIGH STRENGTH BOLTS WITH FULLY TIGHTENED TYPE N CONNECTIONS FOR STRUCTURAL STEEL UON.

S-4 PROVIDE TYPICAL STEEL BEAM CONNECTIONS FOR A CAPACITY NOT LESS THAN THE TOTAL UNIFORM LOAD CAPACITY TABULATED IN THE AISC TABLES FOR ALLOWABLE LOADS OF BEAMS UNLESS NOTED OTHERWISE.

S-5 CAST IN PLACE ANCHOR BOLTS FOR STRUCTURAL STEEL SHALL CONFORM TO ASTM A307 UON.

S-6 DO NOT PAINT STEEL SURFACES WHICH ARE TO BE WELDED OR ARE TO BE ENCASED IN CONCRETE.

S-7 STAINLESS STEEL SHALL BE TYPE 316 FOR BOLTED CONSTRUCTIONS AND 316L FOR WELDED CONSTRUCTIONS.

S-8 ALUMINUM SHALL BE ALLOY 6061-T6.

S-9 ALL GROOVE AND BUTT WELDS SHALL BE FULL PENETRATION.

S-10 FILLET WELD SIZES SHALL BE THE MINIMUM SIZE REQUIRED BY AISC CODE FOR PLATE SIZES TO BE CONNECTED AND SHALL BE APPLIED TO THE ENTIRE JOINT CONTACT LENGTH, BUT NOT LESS THAN 3/16".

S-11 DETAIL, FABRICATE, AND ERECT ALUMINUM IN ACCORDANCE WITH THE ALUMINUM ASSOCIATION CONSTRUCTION MANUAL CURRENT EDITION.

S-12 ALL BOLTS, ANCHOR BOLTS, AND CONCRETE ANCHORS CONNECTING ALUMINUM SHALL BE TYPE 316 STAINLESS STEEL UON.

S-13 ALUMINUM SHALL BE ISOLATED FROM CONTACT WITH CONCRETE OR DISSIMILAR METALS.

EXCAVATION

E-1 CONTRACTOR SHALL PERFORM ALL EXCAVATION IN ACCORDANCE WITH STATE, LOCAL AND FEDERAL REQUIREMENTS INCLUDING OSHA BRACING AND EXCAVATION REQUIREMENTS.

E-2 TEMPORARY SHEETING AND BRACING IS NOT SHOWN ON CONTRACT DRAWINGS. ALL EXCAVATIONS WITH A POTENTIAL FOR CAVE-IN SHALL BE PROVIDED WITH EXCAVATION PROTECTION SYSTEMS IN ACCORDANCE WITH OSHA 1926. SLOPING AND BENCHING WHICH WILL ENCROACH ON AREAS SLATED TO REMAIN ACCESSIBLE OR THAT MAY ENCROACH ON EXISTING FOOTINGS AND STRUCTURES SHALL NOT BE PERMITTED.

E-3 CONTRACTOR SHALL ENGAGE THE SERVICES OF A LICENSED PROFESSIONAL ENGINEER REGISTERED IN THE STATE OF NEW YORK TO DESIGN ALL TEMPORARY SHEETING AND BRACING AND RELATED APPURTENANCES. CONTRACTOR TO SUBMIT SUCH PLANS TO ENGINEER FOR INFORMATION.

E-4 CONTRACTOR SHALL BE RESPONSIBLE FOR DEWATERING OF OPEN EXCAVATIONS.

E-5 ALL EXCAVATED MATERIALS SHALL BE REMOVED FROM SITE TO A FACILITY AS REQUIRED BY STATE, LOCAL FEDERAL LAW.

TIMBER

T-1 ALL WOOD FRAMING MEMBERS INCLUDING, BUT NOT LIMITED TO, WALL STUDS AND JOISTS, ARE INTENDED TO ACT AS A SYSTEM AS DETAILED IN THE STRUCTURAL DRAWINGS AND ONCE CONSTRUCTION IS COMPLETE. IT IS THE RESPONSIBILITY OF THE CONTRACTOR TO ENSURE SAFETY AND STABILITY OF WOOD FRAMING SYSTEMS (I.E. TEMPORARY BRACING IF REQUIRED) DURING CONSRTUCTION AS A RESULT OF CONSTRUCTION METHODS AND SEQUENCES.

T-2 ALL TIMBER BELOW FLOOR DECKING SHALL BE PRESSURE-TREATED SOUTHERN PINE LUMBER.

T-3 STORAGE OF ALL LUMBER AND TIMBER ON SITE SHALL BE KEPT OFF GROUND, UNDER COVER AND PROTECTED FROM DAMAGE.

T-4 ALL DIMENSIONAL LUMBER SHALL BE CERTIFIED BY THE SUPPLIER IN WRITING TO BE KILN DRIED.

T-5 STRUCTURE SHALL NOT BE ENCLOSED UNLESS LUMBER MOISTURE CONTENT HAS BEEN VERIFIED TO BE AT OR BELOW 15%. ANY SIGNS OF MOLD SHALL BE REMOVED AND TREATED IN ACCORDANCE WITH PROJECT SPECIFICATIONS OR INDUSTRY STANDARDS.

T-6 ALL LUMBER IN CONTACT WITH THE GROUND OR CONCRETE SHALL BE PRESSURE TREATED.

T-7 FASTENERS FOR PRESERVATIVE TREATED AND FIRE RETARDANT TREATED WOOD SHALL BE OF HOT DIPPED ZINC COATED GALVANIZED STEEL OR STAINLESS STEEL AND SHALL FOLLOW CURRENT SIMPSON GUIDELINES BASED ON WEATHER EXPOSURE. WHERE STAINLESS STEEL CONNECTORS OR HOT DIPPED GALVANIZED CONNECTORS ARE SPECIFIED IN THE DRAWINGS, STAINLESS STEEL OR HOT DIPPED GALVANIZED FASTENERS SHALL BE USED TO MATCH CONNECTOR TYPE.

T-8 ALL PLATES AND LEDGERS SHALL BE FASTENED WITH A MINIMUM (3) ANCHORS PER PIECE UNLESS NOTED OTHERWISE.

T-9 ALL METAL HARDWARE AND FRAMING ACCESSORIES SHALL BE MANUFACTURED BY SIMPSON STRONG-TIE COMPANY. ALL ITEMS SHALL BE INSTALLED PER THE SIMPSON'S INSTALLATION REQUIREMENTS. ALL NAIL HOLES SHALL BE FILLED WITH THE RECOMMENDED FASTENER UNLESS NOTED OTHERWISE ON THE DRAWING.

T-10 HOLES FOR BOLTS SHALL BE DRILLED WITH A BIT OF THE SAME NOMIMAL DIAMETER AS THE BOLT + 1/16". LEAD HOLES FOR LAG SCREWS SHALL BE BORED PER NDS 11.1.3.

T-11 ALL BOLTS, CARRIAGE BOLTS, LAG SCREWS, EXPANSION BOLTS AND EPOXY BOLTS SHALL BE INSTALLED WITH STANDARD CUT WASHERS UNDER THE BOLT HEAD AND NUTS THAT BEAR DIRECTLY ON THE WOOD. ALL NUTS SHALL BE TIGHTENED AT THE TIME OF INSTALLATION AND RE-TIGHTENED IF NECESSARY, DUE TO WOOD SHRINKAGE, PRIOR TO CLOSE OUT OR COMPLETION OF THE PROJECT. BOLTS AND LAG SCREWS SHALL CONFORM TO ANSI/ASME STANDARD B18.2.1. WOOD SCREWS SHALL CONFORM TO B18.6.1. ALL BOLTS SHALL CONFORM TO ASTM A307 GRADE A UNLESS NOTED OTHERWISE.

T-12 CUTTING AND NOTCHING OF SAWN LUMBER RAFTERS AND STUDS SHALL BE IN CONFORMANCE WITH THE FOLLOWING CRITERIA:

A. JOISTS NOTCHES AT THE ENDS OF JOISTS SHALL NOT EXCEED 1/5 OF THE JOIST DEPTH. HOLES IN JOISTS SHALL NOT BE WITHIN 2½ INCHES OF THE TOP OR BOTTOM OF THE JOIST, AND THE DIAMETER OF ANY SUCH HOLE SHALL NOT EXCEED 1/4 THE DEPTH OF THE JOIST. NOTCHES IN THE TOP OR BOTTOM OF THE JOISTS SHALL NOT EXCEED 1/6 THE DEPTH AND SHALL NOT BE LOCATED IN THE MIDDLE OF THE THIRD SPAN.

B. RAFTERS NOTCHES AT THE ENDS OF RAFTERS OR CEILING JOISTS SHALL NOT EXCEED 1/5 OF THE DEPTH. NOTCHES IN THE TOP OR BOTTOM OF THE RAFTER OR CEILING JOIST SHALL NOT EXCEED 1/6 THE DEPTH AND SHALL NOT BE LOCATED IN THE MIDDLE 1/3 OF THE SPAN. EXCEPT THAT A NOTCH NOT EXCEEDING 1/3 OF THE DEPTH IS PERMITTED IN THE TOP OF THE RAFTERS OR CEILING JOIST NOT FURTHER FROM THE FACE OF THE SUPPORT THAN THE DEPTH OF THE MEMBER. HOLES BORED IN RAFTERS OR CEILING JOISTS SHALL NOT BE WITHIN 2½" INCHES OF THE TOP AND BOTTOM AND THEIR DIAMETER SHALL NOT EXCEED 1/4 THE DEPTH OF THE MEMBER.

C. WALL STUDS A MAXIMUM OF 2¼" DIAMETER NEATLY BORED HOLE MAY BE PLACED IN THE CENTER OF ALL BEARING 2x6 STUDS WITH NO ADDITIONAL REINFORCEMENT REQUIRED.

SPECIAL INSPECTIONS

S-1 SPECIAL INSPECTION SHALL COMPLY WITH SPECIFICATIONS.

S-2 SPECIAL INSPECTION WILL BE PERFORMED IN ACCORDANCE WITH CHAPTER 17 OF THE NYS BUILDING CODE.

S-3 SPECIAL INSPECTION WILL BE PERFORMED ON THE FOLLOWING STRUCTURAL SYSTEMS:

A) STRUCTURAL STEEL CONSTRUCTION (1705.2).

B) WOOD CONSTRUCTION (1705.4).

C) CONCRETE CONSTRUCTION (1705.3).

D) DRIVEN DEEP FOUNDATIONS (1705.7).

E) SOILS (1705.6).

F) WIND RESISTANCE (1705.11).

G) SEISMIC RESISTANCE (1705.12).

CONCRETE (EXCEPT PRECAST)

C-1 CONCRETE STRENGTH CLASSES (28-DAY COMPRESSIVE STRENGTH): CLASS A (5000 PSI) STRUCTURES, REINFORCED DUCT BANKS, AND PIPE ENCASEMENT. FOR CONCRETE WALLS GREATER THAN 2 FEET THICK FOLLOW ACI RECOMMENDATIONS FOR MASS CONCRETE. CLASS D (2500 PSI) SIDEWALKS, CURBS AND GUTTERS, CONCRETE FILL, THRUST BLOCKS, UNREINFORCED DUCT BANKS AND PIPE ENCASEMENT, FENCE POST EMBEDMENT.

C-2 REINFORCEMENT: ASTM A615, GRADE 60, OR ASTM A706, GRADE 60 WHERE REINFORCEMENT IS TO BE WELDED.

C-3 CONCRETE COVER FOR REINFORCING:

A) SURFACES CAST AGAINST SUBGRADE 3" MIN.
B) FORMED SURFACES IN CONTACT WITH SOIL OR LIQUID 2" MIN.
C) SURFACES NOT IN CONTACT WITH WEATHER, SOIL, OR LIQUID 1 1/2" MIN.

C-4 CONSTRUCTION JOINTS & CONTROL JOINTS SHALL BE LOCATED AS SHOWN ON THE DRAWINGS. WHERE NOT SHOWN, CONSTRUCTION JOINTS SHALL BE LOCATED AT NO MORE THAN 30 FEET ON CENTER. JOINT LOCATIONS SHALL BE AS APPROVED BY THE ENGINEER.

C-5 EQUIPMENT SUPPORTS, ANCHORAGES, OPENINGS, RECESSES AND REVEALS NOT SHOWN ON THE STRUCTURAL DRAWINGS BUT REQUIRED BY OTHER DISCIPLINES, SHALL BE PROVIDED FOR PRIOR TO PLACING CONCRETE.

C-6 SPLICES SHALL BE CLASS 'B' CONFORMING TO THE PROVISIONS OF ACI 318 UNLESS NOTED OTHERWISE.

C-7 AT ALL TYPICAL CURBS, EQUIPMENT PADS, AND PIPE SUPPORT PIERS, REINFORCING DOWELS SHOWN MAY BE REPLACED WITH MATCHING DOWELS SET IN EPOXY IN DRILLED HOLES AS SPECIFIED. DOWELS LOCATED CLOSER THAN 3" FROM ANY EDGE OF CONCRETE SHALL NOT BE REPLACED WITH DRILLED DOWELS.

C-8 DRILLED EPOXY DOWELS (WHERE DOWELS ARE SHOWN TO BE PLACED INTO HARDENED CONCRETE):

A) THE HOLE DIAMETER SHALL BE NO LARGER THAN 1/8" GREATER THAN THE DIAMETER OF THE REINFORCING BAR AT THE DEFORMATIONS.
B) THE DEPTH OF EMBEDMENT SHALL BE 12 BAR DIAMETERS, UNLESS SHOWN OTHERWISE.
C) ADJUST THE DOWEL LOCATIONS AS NEEDED TO AVOID DRILLING THROUGH ANY REINFORCING BARS.IF THE DOWEL LOCATION NEEDS TO BE MODIFIED, CONTACT THE ENGINEER.

C-9 SLABS WITH SLOPING SURFACES SHALL HAVE THE INDICATED SLAB THICKNESS MAINTAINED AS THE MINIMUM. SLAB BOTTOMS CAN EITHER SLOPE WITH THE TOP SURFACE OR BE LEVEL. REINFORCEMENT IN SLABS WITH SLOPING SURFACES SHALL BE PLACED AT THE REQUIRED CLEARANCE FROM THE SLAB SURFACE.

C-10 SLOPES SHOWN ON SLAB SURFACES BY FLOW ARROWS SHALL BE 1.0 PERCENT UNLESS NOTED OTHERWISE.

C-11 WHERE HORIZONTAL CONSTRUCTION JOINTS, LOCATED ABOVE THE FOUNDATION SLAB, EXTEND BEYOND WHERE NEEDED, THEY SHALL BE TERMINATED AT A VERTICAL CONSTRUCTION JOINT APPROVED BY THE ENGINEER.

C-12 DOWELS, ANCHOR BOLTS, PIPES, WATERSTOPS AND OTHER EMBEDDED ITEMS SHALL BE HELD SECURELY IN POSITION WHILE CONCRETE IS BEING PLACED.

C-13 CONDUITS AND OTHER SIMILAR ITEMS EMBEDDED IN OR PENETRATING THROUGH CONCRETE SHALL BE SPACED ON CENTER NOT LESS THAN 3 TIMES THEIR OUTSIDE DIMENSION, BUT NOT LESS THAN 2 1/2" CLEAR IN CLASS 45F CONCRETE OR 2" CLEAR IN CLASS 45 CONCRETE. SUCH ITEMS SHALL NOT EXCEED 1/3 OF THE MEMBER THICKNESS.

C-14 REINFORCING BARS AND ACCESSORIES SHALL NOT BE IN CONTACT WITH ANY METAL PIPE, PIPE FLANGE, METAL CONDUIT, OR OTHER METAL PARTS EMBEDDED IN CONCRETE. A MINIMUM CLEARANCE OF 2 INCHES SHALL BE PROVIDED.

C-15 ALL JOINTS WHICH ARE IN MEMBERS IN CONTACT WITH LIQUID OR BELOW GRADE SHALL HAVE A WATERSTOP. CONSTRUCTION JOINTS SHALL HAVE A 6" PVC FLATSTRIP WATERSTOP. EXPANSION JOINTS SHALL HAVE A 9" PVC CENTERBULB WATERSTOP.

C-16 IN VERTICAL JOINTS, WATERSTOP SHALL STOP NO LESS THAN 18" ABOVE THE MAXIMUM WATER SURFACE OR 18" ABOVE GRADE, WHICHEVER IS HIGHER.

C-17 AT JOINT INTERSECTIONS, WATERSTOPS SHALL BE CONNECTED SO AS TO FORM A COMPLETE SEAL USING CONNECTION PIECES AS NEEDED.

C-18 ALL EXPOSED CORNERS SHALL HAVE A 3/4" CHAMFER OR A 1/2" RADIUS TOOLED CORNER.

DEMOLITION

LEGEND

EXISTING REINFORCED CONCRETE WALL OR STRUCTURE TO BE DEMOLISHED

SAW CUT LINE – FULL DEPTH UNLESS NOTED OTHERWISE

D-1 CONTRACTOR IS ALERTED THAT LIMITS OF DEMOLITION SHOWN IS APPROXIMATE. ACTUAL LIMITS SHALL BETHE MINIMUM REQUIRED FOR NEW STRUCTURE. CONTRACTOR TO CO-ORDINATE AND SUBMIT DEMOLITION PROCEDURE PER SPECIFICATIONS.

D-2 ALL ITEMS SHOWN ARE EXISTING TO REMAIN UNLESS NOTED OTHERWISE.

D-3 FOR ADDITIONAL DEMOLITION REQUIREMENTS SEE SPECIFICATIONS (024116).

D-4 ALL EXISTING CONCRETE TO BE DEMOLISHED IS STEEL REINFORCED UNLESS NOTED OTHERWISE. REINFORCING STEEL NOT SHOWN FOR CLARITY.

D-5 FOR ADDITIONAL DEMOLITION NOT SHOWN, SEE G, A, M, E, H, AND P DRAWINGS.

PILE NOTES

P-1 PILES SHALL BE DESIGNED AND INSTALLED BY A QUALIFIED PILE CONTRACTOR IN ACCORDANCE WITH THE BORED-IN PILE SPECIFICATIONS AND SUBJECT TO THE REQUIREMENTS LISTED HEREIN.

P-2 THE CONTRACTOR SHALL ENGAGE A LICENSED PROFESSIONAL ENGINEER REGISTERED IN THE STATE OF NEW YORK TO DESIGN PILE AND SUBMIT THE DESIGN TO THE ENGINEER FOR APPROVAL.

P-3 THE BORED-IN PILE SHALL BE MINIMUM 9 5/8"ø WITH 0,545" WALL THICKNESS AND DESIGNED AND INSTALLED FOR ULTIMATE LOAD IN COMPRESSION = 60 TONS ALLOWABLE LOAD IN COMPRESSION = 30 TONS.

P-4 ALL BORED-IN PILES SHALL BE GROUTED WITH A MINIMUM 28 DAY COMPRESSIVE STRENGTH OF 4000 PSI.

P-5 ALL BORED-IN PILES SHALL HAVE FULL LENGTH 1-1/4" ø THREADBARS. THE THREADBARS SHALL CONFORM TO THE REQUIREMENTS OF ASTM A722, GRADE 150 AS MANUFACTURED BY DYWIDAG OR APPROVED EQUAL, UNLESS NOTED OTHERWISE. PROVIDE BEARING PLATES AND NUTS IN ACCORDANCE WITH THE THREADBAR MANUFACTURER'S RECOMMENDATIONS.

P-6 PROVIDE CENTRALIZERS FOR THREADBARS AT 10 FEET MAXIMUM VERTICAL SPACING.

P-7 CUT OFF THE ELEVATIONS OF THE BORED-IN PILES AS SHOWN ON DRAWINGS.

P-8 ALL BORED-IN PILES SHALL BE INSTALLED WITH A MAXIMUM LATERAL TOLERANCE OF THREE INCHES.

P-9 DRILLING OPERATION SHALL BE PERFORMED IN THE PRESENCE OF THE ENGINEER.

P-10 ONE (1) STATIC AXIAL COMPRESSION LOAD TEST WILL BE REQUIRED.

P-11 THE INSTALLATION METHOD USED FOR THE SUCCESSFUL COMPLETION OF LOAD TESTING SHALL BE USED FOR ALL THE PRODUCTION PILES.

P-12 THE CONTRACTOR SHALL SUBMIT A STATIC AXIAL LOAD TESTING PROGRAM CONSISTING OF ONE (1) COMPRESSION TEST SHOWING PROPOSED PILE LOAD TEST LOCATIONS FOR APPROVAL OF THE ENGINEER.

P-13 COMPRESSION LOAD TESTING SHALL CONFORM TO ASTM D1143 AND THE PROJECT SPECIFICATIONS. UPLIFT LOAD TESTING SHALL CONFORM TO THE PROJECT SPECIFICATIONS AND ASTM D3689.

P-14 A MINIMUM PERIOD OF TWO (2) WEEKS SHALL ELAPSE FROM THE INSTALLATION OF THE TEST PILE TO THE COMMENCEMENT OF THE LOAD TEST.

P-15 TWO (2) TELLTALE RODS SHALL BE INSTALLED IN THE LOAD TEST PILE. THE BOTTOM END OF ONE TELLTALE ROD SHALL BE AT THE BOTTOM OF THE TEST PILE, AND THE BOTTOM END OF THE OTHER ROD SHALL BE TERMINATED MIDWAY BETWEEN PILE CUT-OFF AND PILE TIP. THE TELLTALE SHALL CONSIST OF A STEEL SOUNDING ROD EXTENDED TO AN ELEVATION DESIGNATED BY THE ENGINEER. THE TELLTALES SHALL BE PROTECTED BY A STEEL TUBE EMBEDDED IN GROUT. THE TELLTALE SHALL BE CENTERED IN THE TUBE IN A MANNER TO AVOID FRICTION BETWEEN THE TELLTALE AND THE TUBE.

P-16 THE LOADING PROCEDURE FOR STATIC AXIAL COMPRESSION TEST SHALL BE IN ACCORDANCE WITH NEW YORK STATE BUILDING CODE.

P-17 MEASUREMENTS OF MOVEMENT OF THE PILE BUTT, TELLTALES, REFERENCE BEAMS, ETC. SHALL BE TAKEN BY LICENSED SURVEYOR (REGISTERED IN THE STATE OF NEW YORK) ENGAGED BY THE OWNER.

P-18 MONITORING OF LOAD TEST SHALL BE PERFORMED BY A PROFESSIONAL ENGINEER REGISTERED IN THE STATE OF NEW YORK AND HIRED BY THE OWNER.

P-19 THE DIAL GAUGES FOR MONITORING THE MOVEMENT OF THE PILE SHALL HAVE A MINIMUM TRAVEL OF THREE (3) INCHES AND SHALL BE AT LEAST THREE (3) INCHES IN DIAMETER.

STRUCTURAL ABBREVIATIONS

AB	ANCHOR BOLT
ADDL	ADDITIONAL
ADH	ADHESIVE
ADJ	ADJUSTABLE/ADJACENT
AFF	ABOVE FINISHED FLOOR
AGG	AGGREGATE
AL	ALUMINUM
ALT	ALTERNATE
APPROX	APPROXIMATE
ARCH	ARCHITECTURAL
AVG	AVERAGE
B	BORING
BLDG	BUILDING
BM	BEAM/BENCH MARK
BOF	BOTTOM OF FOOTING
BOS	BOTTOM OF STEEL
BOT	BOTTOM
BRG	BEARING
BT	BOLT
C	CHANNEL
C TO C	CENTER TO CENTER
CANT	CANTILEVER
CJ	CONSTRUCTION JOINT
CL	CENTER LINE
CLR	CLEAR
CMU	CONCRETE MASONRY UNIT
CO	CLEAN OUT
COL	COLUMN
CONC	CONCRETE
CONST	CONSTRUCTION
CONT	CONTINUOUS
CONTR	CONTRACTOR
CP	CONCRETE PLANK
CLJ	CONTROL JOINT
CTR	CENTER
CY	CUBIC YARD
DET	DETAIL
DIA (ø)	DIAMETER
DIAG	DIAGONAL
DIM	DIMENSION
DIST	DISTANCE
DN	DOWN
DO	DITTO
DP	DEEP
DWG	DRAWING
DWL	DOWEL
E	EAST
EA	EACH
EF	EACH FACE
EL	ELEVATION
ELEV	ELEVATOR
ENGR	ENGINEER
EMB	EMBEDMENT
ENCL	ENCLOSURE
ENT	ENTRANCE
EQ	EQUAL
EQPT	EQUIPMENT
EW	EACH WAY
EXIST	EXISTING
EXP	EXPANSION
EXP JT	EXPANSION JOINT
EXT	EXTERIOR
FAB	FABRICATE
FD	FLOOR DRAIN
FDN	FOUNDATION
FFL	FINISH FLOOR
FIN	FINISH
FLR	FLOOR
FT	FEET
FTG	FOOTING
F&C	FRAME&COVER
F&G	FRAME&GRATE

GA	GAUGE
GALV	GALVANIZE
GB	GRADE BEAM
GR	GRADE
GRTG	GRATING
HGT	HEIGHT
HORZ	HORIZONTAL
HP	HIGH POINT
HSS	HOLLOW STRUCTURAL STEEL
ID	INSIDE DIAMETER
IF	INSIDE FACE
IN	INCH
INCL	INCLUDE
INT	INTERIOR
INV	INVERT
J	JOIST
JB	JUNCTION BOX
JCT	JUNCTION
JT	JOINT
L	LENGTH/ANGLE
LF	LINEAR FEET
LG	LONG
LL	LIVE LOAD
LLH	LONG LEG HORIZONTAL
LLV	LONG LEG VERTICAL
LOC	LOCATION
LP	LOW POINT
LVR	LOUVER
LWL	LOW WATER LEVEL
MAS	MASONRY
MATL	MATERIAL
MAX	MAXIMUM
MECH	MECHANICAL
MET	METAL
MFR	MANUFACTURER
MG	MILLION GALLONS
MGD	MILLION GALLONS PER DAY
MH	MANHOLE
MIN	MINIMUM
MISC	MISCELLANEOUS
MO	MASONRY OPENING
MOD	MODIFY/MODIFIED
MTD	MOUNTED
N	NORTH
NA	NOT APPLICABLE
NIC	NOT IN CONTRACT
NO	NUMBER
NOM	NOMINAL
NTS	NOT TO SCALE
OC	ON CENTER
OD	OUTSIDE DIAMETER
OF	OUTSIDE FACE
OPNG	OPENING
OPP	OPPOSITE
OT	OPEN TRUSS
OVHD	OVERHEAD
PAR	PARALLEL
PC	POINT OF CURVE/PIECE
PCO	PILE CUT OFF
PI	POINT OF INTERSECTION
PL	PLATE/PROPERTY LINE
PREFAB	PREFABRICATED
PSF	POUNDS PER SQUARE FOOT
PSI	POUNDS PER SQUARE INCH
PT	POINT OF TANGENCY
PTN	PARTITION
PVMT	PAVEMENT
QTY	QUANTITY

R	RISER
RAD	RADIUS
RCP	REINFORCED CONCRETE PIPE
RD	ROOF DRAIN
REINF	REINFORCEMENT
RECT	RECTANGULAR
REM	REMOVE
REQD	REQUIRED
RF	ROOF
RO	ROUGH OPENING
S	SOUTH
SCHED	SCHEDULE
SECT	SECTION
SF	SQUARE FEET
SHT	SHEET
SIM	SIMILAR
SJ	STEEL JOIST
SPEC	SPECIFICATION
SQ	SQUARE
SS	STAINLESS STEEL
STA	STATION
STD	STANDARD
STR	STAIR
STIF	STIFFENER
STIR	STIRRUP
STL	STEEL
STRUC	STRUCTURAL
SUB	SUBSTITUTE
SYM	SYMMETRICAL
T	TREAD
T&B	TOP AND BOTTOM
T&G	TOUNGE AND GROOVE
TAN	TANGENT
TEMP	TEMPERATURE
THK	THICK
TOC	TOP OF CURB/CONCRETE
TOD	TOP OF DECK
TOF	TOP OF FOOTING
TOM	TOP OF MASONRY/MANHOLE
TOS	TOP OF SLAB/STEEL
TOW	TOP OF WALL
TYP	TYPICAL
UNO	UNLESS NOTED OTHERWISE
VERT	VERTICAL
W	WEST/WIDTH/WIDE FLANGE
W/	WITH
W/O	WITHOUT
WL	WATER LEVEL
WP	WATERPROOF/WALL PIPE
WPT	WALL PENETRATING TYPE
WS	WATER SURFACE
WT	WEIGHT
WWF	WELDED WIRE FABRIC
YD	YARD
YR	YEAR

SYMBOLS

- UNDISTURBED EARTH
- COMPACTED BACKFILL
- SELECT GRANULAR FILL MATERIAL
- CONCRETE BLOCK
- BRICK
- FINISHED WOOD
- CONCRETE
- ROUGH WOOD
- RIGID INSULATION
- REINFORCED STEEL IN CONCRETE
- WELDED WIRE FABRIC
- BLANKET INSULATION
- STEEL
- DENOTES MOMENT CONNECTION

Drawing Name: G:\SavinAutocad\2060\25-Playland-Mega-3\S\DCVS-1002.dwg
Rev#: Projectname: ---- Comments: All inquiries regarding this drawing(s) or project should be made to NYC Environmental Protection, Bureau of Engineering Design and Construction.
Printed by: ---- Date: 3/16/2022 Time: 3:15 PM Designed by: ----

CONSULTANT INFORMATION

Savin Engineers, P.C.

CONSULTANT SEAL

STATE OF NEW YORK — LICENSED PROFESSIONAL ENGINEER — No. 065362

REVISION NUMBER	DATE	MADE BY	APP'D BY	REVISION

RECORD DRAWING CERTIFICATION

☐ AS BUILT – CHANGES AS NOTED ☐ AS BUILT – NO CHANGES

CONTRACTOR: NAME / SIGNATURE / TITLE / DATE

PROJECT COORDINATOR: NAME / SIGNATURE / TITLE / DATE

WESTCHESTER COUNTY, NEW YORK
DEPARTMENT OF PUBLIC WORKS AND TRANSPORTATION
DIVISION OF ENGINEERING

INFRASTRUCTURE REHABILITATION - PHASE 3
PLAYLAND PARK, RYE, NEW YORK
DRAGON COASTER VENDORS
STRUCTURAL ABBREVIATIONS AND SYMBOLS

CONTRACT NUMBER	22-523
SHEET NUMBER	DCV-S-02
DWG NO.:	
SCALE:	AS SHOWN
DATE:	8/23/2022
DPW FILE NUMBER	1-118-S-1193-0
REV. NO.	0

NOTES:

1. FOR STRUCTURAL NOTES, SEE DRAWING DCV–S–01.
2. FOR STRUCTURAL ABBREVIATIONS AND SYMBOLS, SEE DRAWING DCV–S–02.
3. SEE SHORING PLAN AND SEQUENCE OF CONSTRUCTION ON DCV–S–05.

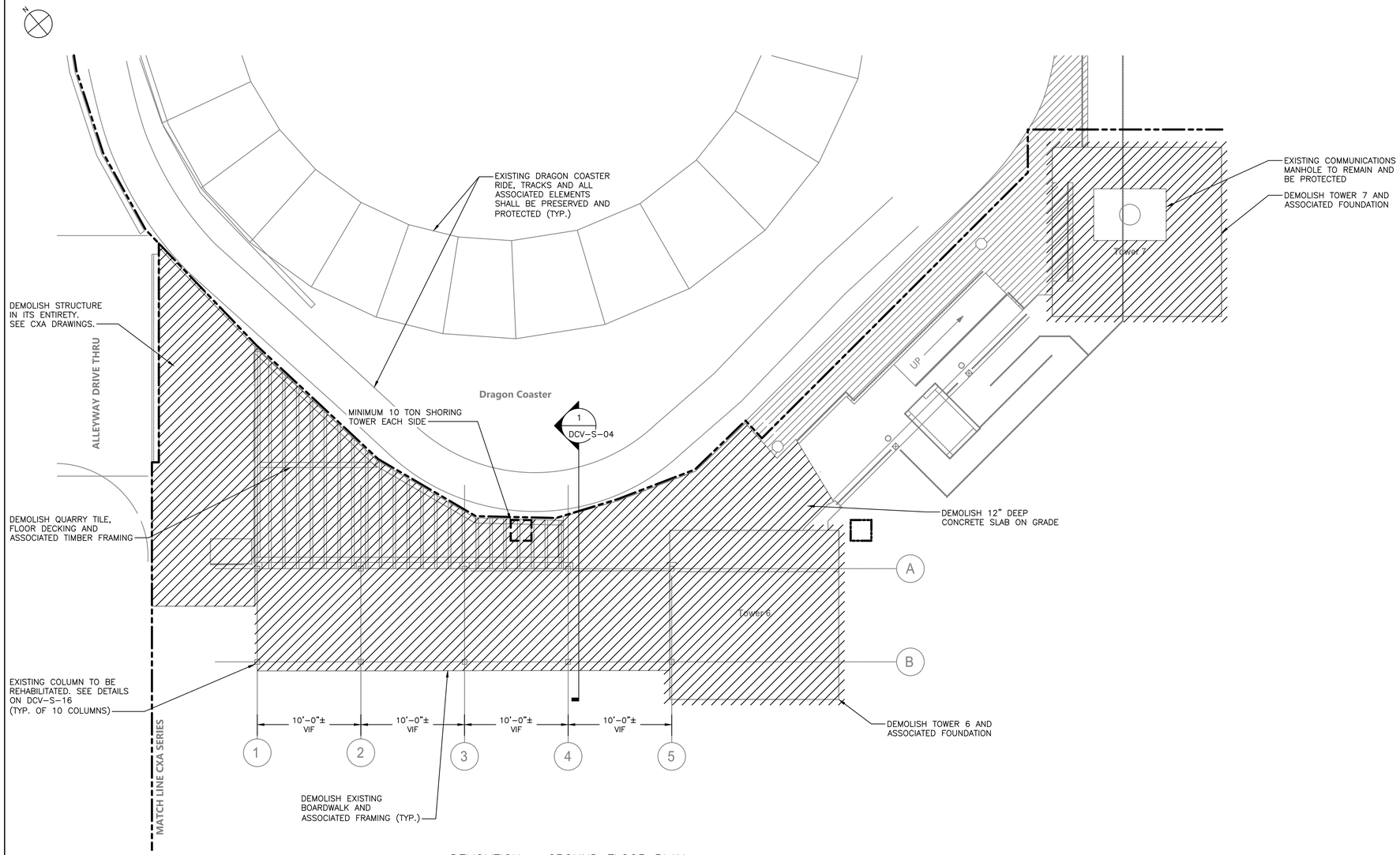

DEMOLITION – GROUND FLOOR PLAN

SCALE: 3/16" = 1'–0"

0 4' 8'

SCALE: 3/16" = 1'–0"

Drawing Name: G:\SavinAutocad\2060\25-Playland-Mega-3\S\DCVS-1003.dwg
Projectname: 211001F02 Comments: ----
Printed by: GNicolais Date: 19 August 2022 4:15 PM Designed by: ----
Reqf: ----
Xrefs: [TB_24X36_WestchesterCo_3.dwg] [TSG-SVLOGO.dwg] [DCV-A-01.dwg] [DCV-S-1001.dwg]

CONSULTANT INFORMATION

Savin Engineers, P.C.

CONSULTANT SEAL

STATE OF NEW YORK · LICENSED PROFESSIONAL ENGINEER · No. 065364

REVISION NUMBER	DATE	MADE BY	APP'D BY	REVISION

RECORD DRAWING CERTIFICATION

☐ AS BUILT – CHANGES AS NOTED ☐ AS BUILT – NO CHANGES

CONTRACTOR
NAME
SIGNATURE
TITLE DATE

PROJECT COORDINATOR
NAME
SIGNATURE
TITLE DATE

WESTCHESTER COUNTY, NEW YORK
DEPARTMENT OF PUBLIC WORKS AND TRANSPORTATION
DIVISION OF ENGINEERING

INFRASTRUCTURE REHABILITATION - PHASE 3
PLAYLAND PARK, RYE, NEW YORK
DRAGON COASTER VENDORS
DEMOLITION - GROUND FLOOR PLAN

CONTRACT NUMBER	22-523
SHEET NUMBER	DCV-S-03
DWG NO.:	
SCALE:	AS SHOWN
DATE:	8/23/2022
DPW FILE NUMBER	1-118-S-1194-0
REV. NO.	0

NOTES:

1. FOR STRUCTURAL NOTES, SEE DRAWING DCV–S–01.
2. FOR STRUCTURAL ABBREVIATIONS AND SYMBOLS, SEE DRAWING DCV–S–02.
3. SEE SHORING PLAN AND SEQUENCE OF CONSTRUCTION ON DCV–S–05.

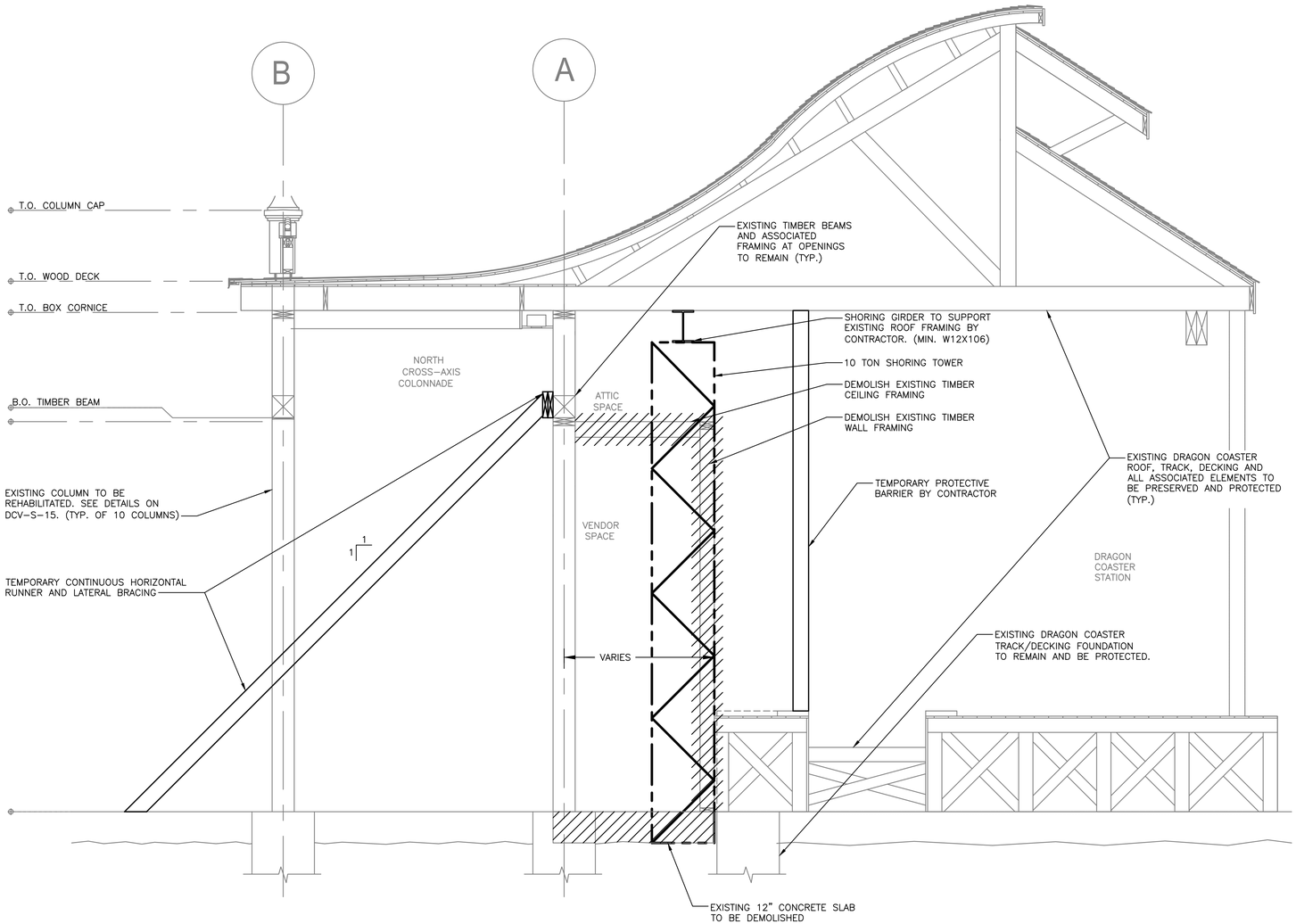

1 DCV–S–03 DEMOLITION – SECTION
SCALE: 1/2" = 1'–0"

0 2' 4'
SCALE: 1/2" = 1'–0"

CONSULTANT INFORMATION

Savin Engineers, P.C.

CONSULTANT SEAL

REVISION NUMBER	DATE	MADE BY	APP'D BY	REVISION

RECORD DRAWING CERTIFICATION

☐ AS BUILT – CHANGES AS NOTED ☐ AS BUILT – NO CHANGES

CONTRACTOR
NAME
SIGNATURE
TITLE DATE

PROJECT COORDINATOR
NAME
SIGNATURE
TITLE DATE

WESTCHESTER COUNTY, NEW YORK
DEPARTMENT OF PUBLIC WORKS AND TRANSPORTATION
DIVISION OF ENGINEERING

INFRASTRUCTURE REHABILITATION - PHASE 3
PLAYLAND PARK, RYE, NEW YORK
DRAGON COASTER VENDORS
DEMOLITION - SECTION

CONTRACT NUMBER	SHEET NUMBER
22-523	DCV-S-04
DWG NO.:	
SCALE: AS SHOWN	
DATE: 8/23/2022	
DPW FILE NUMBER 1-118-S-1195-0	REV. NO. 0

Drawing Name: G:\SavinAutocad\2060\25-Playland-Mega-3\S\DCVS-1005.dwg
Projectname: 211001T02 Comments: ----
Printed by: GNicolais Date: 19 August 2022 4:15 PM Designed by: ----
Xrefs: [TB_24X36_WestchesterCo_3.dwg] [TSG-SVLOGO.dwg] [DCV-S-1004.dwg]

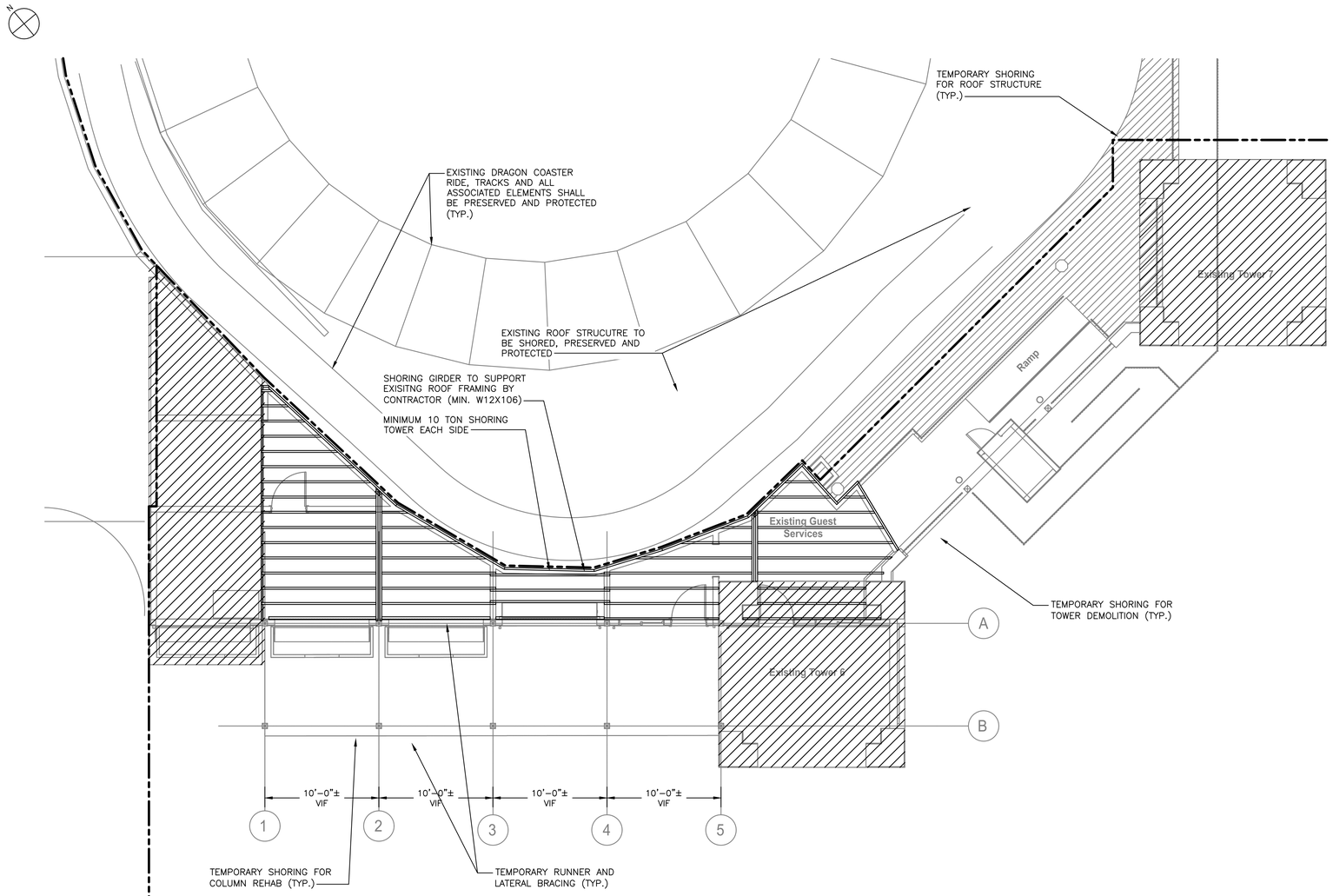

SHORING PLAN
SCALE: 3/16" = 1'-0"

NOTES:

1. FOR STRUCTURAL NOTES, SEE DRAWING DCV-S-01.
2. FOR STRUCTURAL ABBREVIATIONS AND SYMBOLS, SEE DRAWING DCV-S-02.
3. TEMPORARY SHORING SHALL BEAR ON ASPHALT, CONCRETE, OR SUBSURFACE. BEARING ON TIMBER DECKING IS NOT PERMITTED.

SEQUENCE OF CONSTRUCTION:

1. CONSTRUCT TEMPORARY PROTECTIVE BARRIER.
2. INSTALL TEMPORARY SHORING AND BRACING ALONG EXISTING WALL ALONG COLUMN LINE A.
3. DEMOLISH TIMBER CEILING AND WALLS PER PLAN.
4. DEMOLISH TIMBER AND CONCRETE FLOOR PER PLAN.
5. INSTALL TEMPORARY 10 TON SHORING TOWER, ASSOCIATED GIRDER AND ADDITONAL SHORING AROUND TOWERS 6 AND 7 AS SHOWN.
6. DEMOLISH TOWER 6 AND 7 AND COMPLETE REMAINDER OF DEMOLITION WORK PER PLANS.
7. INSTALL ALL DRILLED MICROPILES AS SHOWN.
8. CONSTRUCT REINFORCED CONCRETE FOUNDATIONS WITH EXCEPTION OF THE CONCRETE BETWEEN COLUMN LINES 3 AND 4.
9. CONSTRUCT TOWERS 6 & 7 PER DRAWINGS.
10. RECONNECT EXISTING ROOF FRAMING ASSOCIATED WITH TOWERS 6 AND 7.
11. REMOVE SHORING ASSOCIATED WITH TOWERS 6 & 7.
12. COMPLETE CONCRETE CONSTRUCTION BETWEEN COLUMN LINES 3 AND 4.
13. CONSTRUCT REMAINDER OF TIMBER FRAMING ELEMENTS.
14. REMOVE TEMPORARY SHORING FOR WALL ALONG COLUMN LINE A.
15. COMPLETE REMAINDER OF CONTRACT WORK.

0 4' 8'
SCALE: 3/16" = 1'-0"

Drawing Name: G:\SavinAutocad\2060\25-Playland-Mega-3\S\DCVS-1014.dwg
Rev#: Projectname: 211001F02 Comments: ----
Printed by: GNicolais Date: 19 August 2022 4:16 PM Designed by: ----
Xrefs: [TB_24X36_WestchesterCo_3.dwg] [TSG-SVLOGO.dwg] [DCV-A-01.dwg] [DCV-S-1010.dwg]

CONSULTANT INFORMATION
Savin Engineers, P.C.

CONSULTANT SEAL

REVISION NUMBER	DATE	MADE BY	APP'D BY	REVISION

RECORD DRAWING CERTIFICATION
☐ AS BUILT – CHANGES AS NOTED ☐ AS BUILT – NO CHANGES

CONTRACTOR
NAME
SIGNATURE
TITLE DATE

PROJECT COORDINATOR
NAME
SIGNATURE
TITLE DATE

WESTCHESTER COUNTY, NEW YORK
DEPARTMENT OF PUBLIC WORKS AND TRANSPORTATION
DIVISION OF ENGINEERING

INFRASTRUCTURE REHABILITATION - PHASE 3
PLAYLAND PARK, RYE, NEW YORK
DRAGON COASTER VENDORS
SHORING PLAN

CONTRACT NUMBER 22-523
SHEET NUMBER DCV-S-05
DWG NO.:
SCALE: AS SHOWN
447 of 664
DATE: 8/23/2022
DPW FILE NUMBER 1-118-S-1196-0
REV. NO. 0

NOTES:

1. FOR STRUCTURAL NOTES, SEE DRAWING DCV-S-01.
2. FOR STRUCTURAL ABBREVIATIONS AND SYMBOLS, SEE DRAWING DCV-S-02.
3. CONTRACTOR SHALL ENGAGE A THIRD PARTY VIBRATION MONITORING COMPANY TO MONITOR THE DRAGON COASTER TRACKS AND ASSOCIATED FRAMING PRIOR TO, DURING AND AFTER PILE DRIVING OPERATIONS. AT COMPLETION OF PILE DRIVING, MONITORING RESULTS SHALL BE SUBMITTED TO THE ENGINEER FOR REVIEW. SEE SPECIFICATIONS.

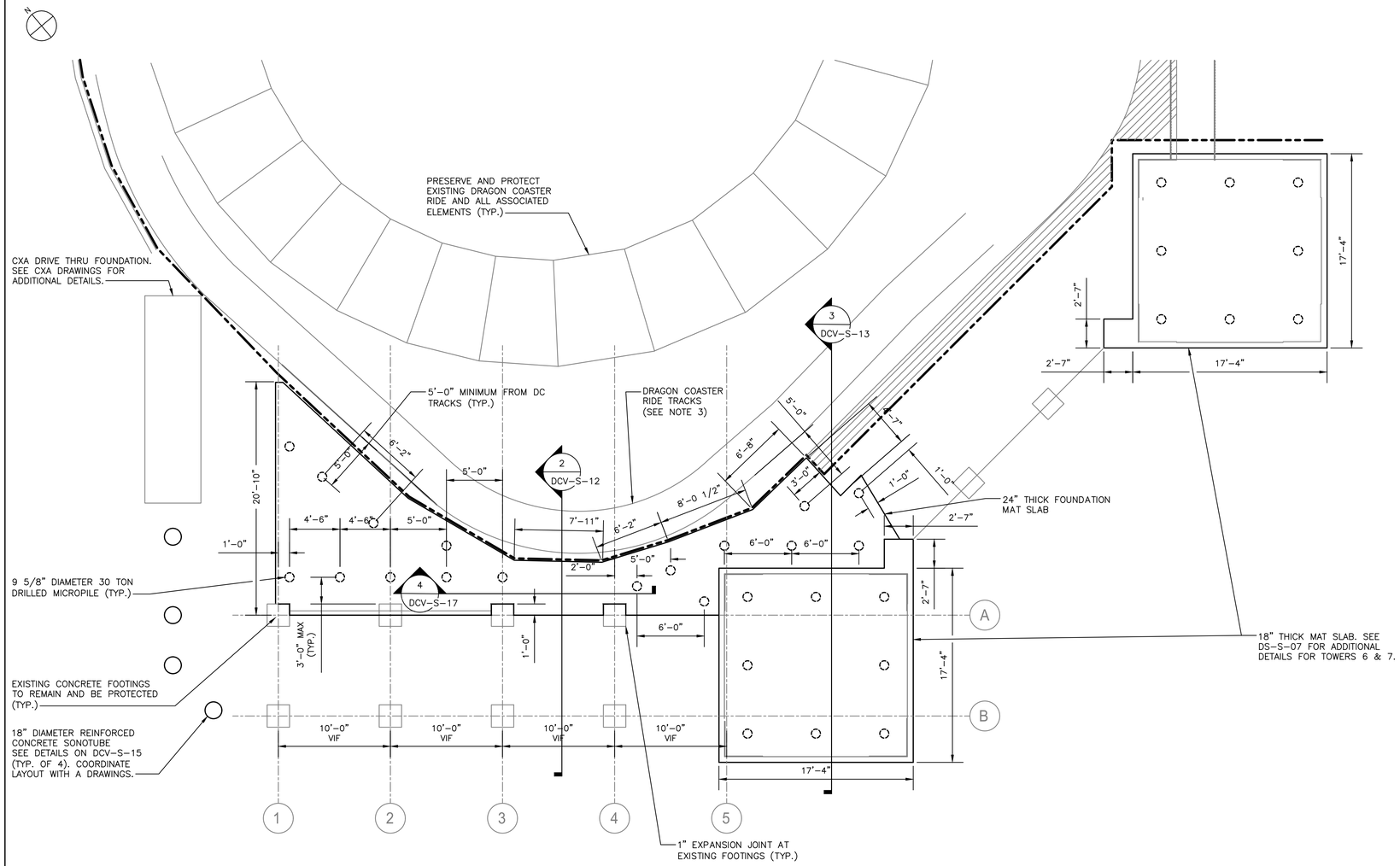

FOUNDATION PLAN
SCALE: 3/16" = 1'-0"

SCALE: 3/16" = 1'-0"

CONSULTANT INFORMATION	CONSULTANT SEAL	REVISION NUMBER	DATE	MADE BY	APP'D BY	REVISION
Savin Engineers, P.C.	STATE OF NEW YORK LICENSED PROFESSIONAL ENGINEER					

RECORD DRAWING CERTIFICATION
☐ AS BUILT – CHANGES AS NOTED ☐ AS BUILT – NO CHANGES

CONTRACTOR: NAME / SIGNATURE / TITLE / DATE
PROJECT COORDINATOR: NAME / SIGNATURE / TITLE / DATE

WESTCHESTER COUNTY, NEW YORK
DEPARTMENT OF PUBLIC WORKS AND TRANSPORTATION
DIVISION OF ENGINEERING

INFRASTRUCTURE REHABILITATION - PHASE 3
PLAYLAND PARK, RYE, NEW YORK
DRAGON COASTER VENDORS
FOUNDATION PLAN

CONTRACT NUMBER	22-523
SHEET NUMBER	DCV-S-06
DWG NO.:	
SCALE:	AS SHOWN
DATE:	8/23/2022
DPW FILE NUMBER	1-118-S-1197-0
REV. NO.	0

Drawing Name: G:\SavinAutocad\2060\25-Playland-Mega-3\S\DCVS-1011.dwg
Rev#:
Projectname: 211001F02 Comments: ----
Printed by: GNicolais Date: 19 August 2022 4:16 PM Designed by: ----
Xrefs: [TB_24X36_WestchesterCo_3.dwg] [TSG-SVL060.dwg] [DCV-A-01.dwg] [DCV-S-1011.dwg]

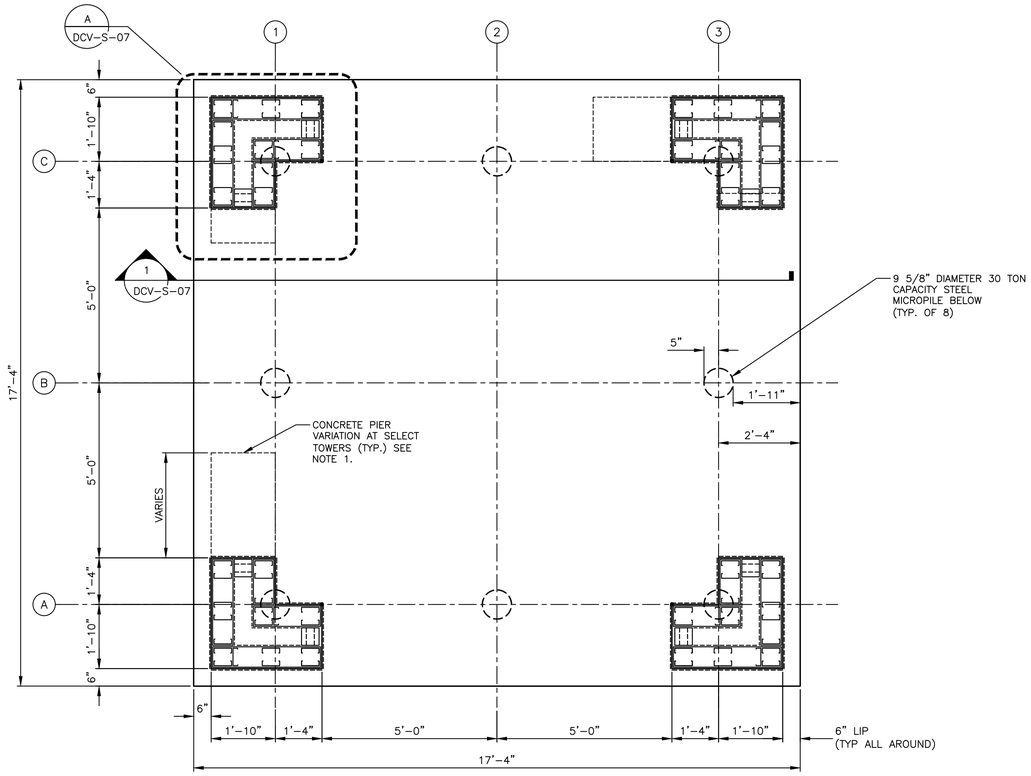

TYPICAL TOWER FOUNDATION PLAN
SCALE: 1/2 = 1'-0"

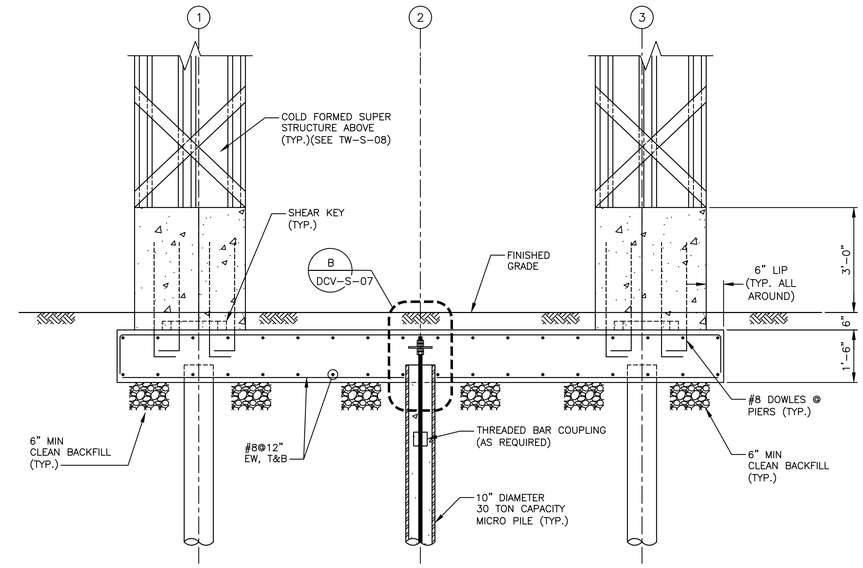

1 SECTION
DCV-S-07 SCALE: 1/2 = 1'-0"

NOTES:

1. CONTRACTOR IS ALERTED TOWER 6 INCLUDES VARIATIONS IN CONCRETE PIER DIMENSIONS AND CONCRETE CURBS FOR NEW COLD FORMED METAL WALLS. CONTRACTOR TO COORDINATE REQUIRED DIMENSIONS WITH EXISTING CONDITIONS AND ARCHITECTURAL DRAWINGS.
2. SEE A-DRAWINGS FOR HEIGHT, LOCATION AND QUAINTYS.

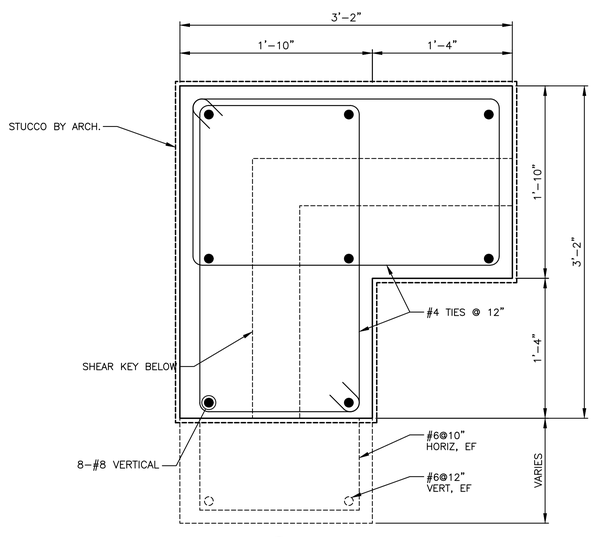

A DETAIL
DCV-S-07 SCALE: 1 1/2 = 1'-0"

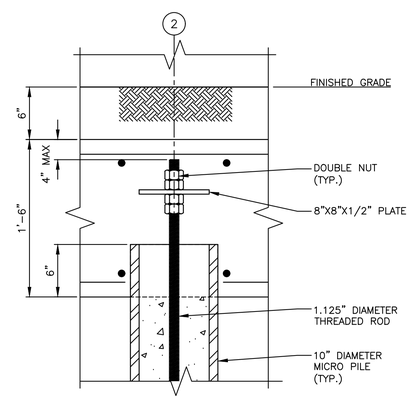

B TYPICAL PILE HEAD DETAIL
DCV-S-07 SCALE: 1 1/2 = 1'-0"

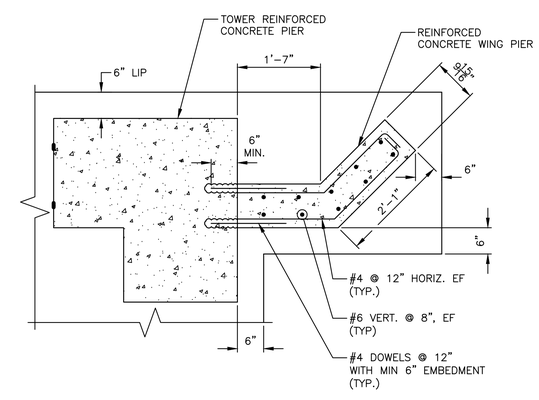

WING PIER TO TOWER PLAN
SCALE: 3/4" = 1'-0"

SCALE: 3/4" = 1'-0"
SCALE: 1 1/2" = 1'-0"
SCALE: 1/2" = 1'-0"

Drawing Name: G:\SavinAutocad\2060\25-Playland-Mega-3\S\DCVS-1013.dwg
Rev#: Projectname: ---- Comments: ----
Printed by: GNicolais Date: 19 August 2022 4:16 PM Designed by: ----
Xrefs: [TB_24X36_WestchesterCo_3.dwg] [TSG-SVLOGO.dwg] [DCV-NPO001.dwg] [DCV-SECT0001.dwg]

CONSULTANT INFORMATION
Savin Engineers, P.C.

CONSULTANT SEAL

REVISION NUMBER	DATE	MADE BY	APP'D BY	REVISION

RECORD DRAWING CERTIFICATION
AS BUILT - CHANGES AS NOTED
AS BUILT - NO CHANGES

CONTRACTOR
NAME
SIGNATURE
TITLE DATE

PROJECT COORDINATOR
NAME
SIGNATURE
TITLE DATE

WESTCHESTER COUNTY, NEW YORK
DEPARTMENT OF PUBLIC WORKS AND TRANSPORTATION
DIVISION OF ENGINEERING

INFRASTRUCTURE REHABILITATION - PHASE 3
PLAYLAND PARK, RYE, NEW YORK
DRAGON COASTER VENDORS
TOWER FOUNDATION PLAN, SECTION AND DETAILS

CONTRACT NUMBER 22-523
SHEET NUMBER DCV-S-07
DWG NO.: ----
SCALE: AS SHOWN
DATE: 8/23/2022
DPW FILE NUMBER 1-118-S-1198-0
REV. NO. 0

NOTES:

1. FOR STRUCTURAL NOTES, SEE DRAWING DCV-S-01.
2. FOR STRUCTURAL ABBREVIATIONS AND SYMBOLS, SEE DRAWING DCV-S-02.
3. SEE SHORING PLAN AND SEQUENCE OF CONSTRUCTION ON DCV-S-05.

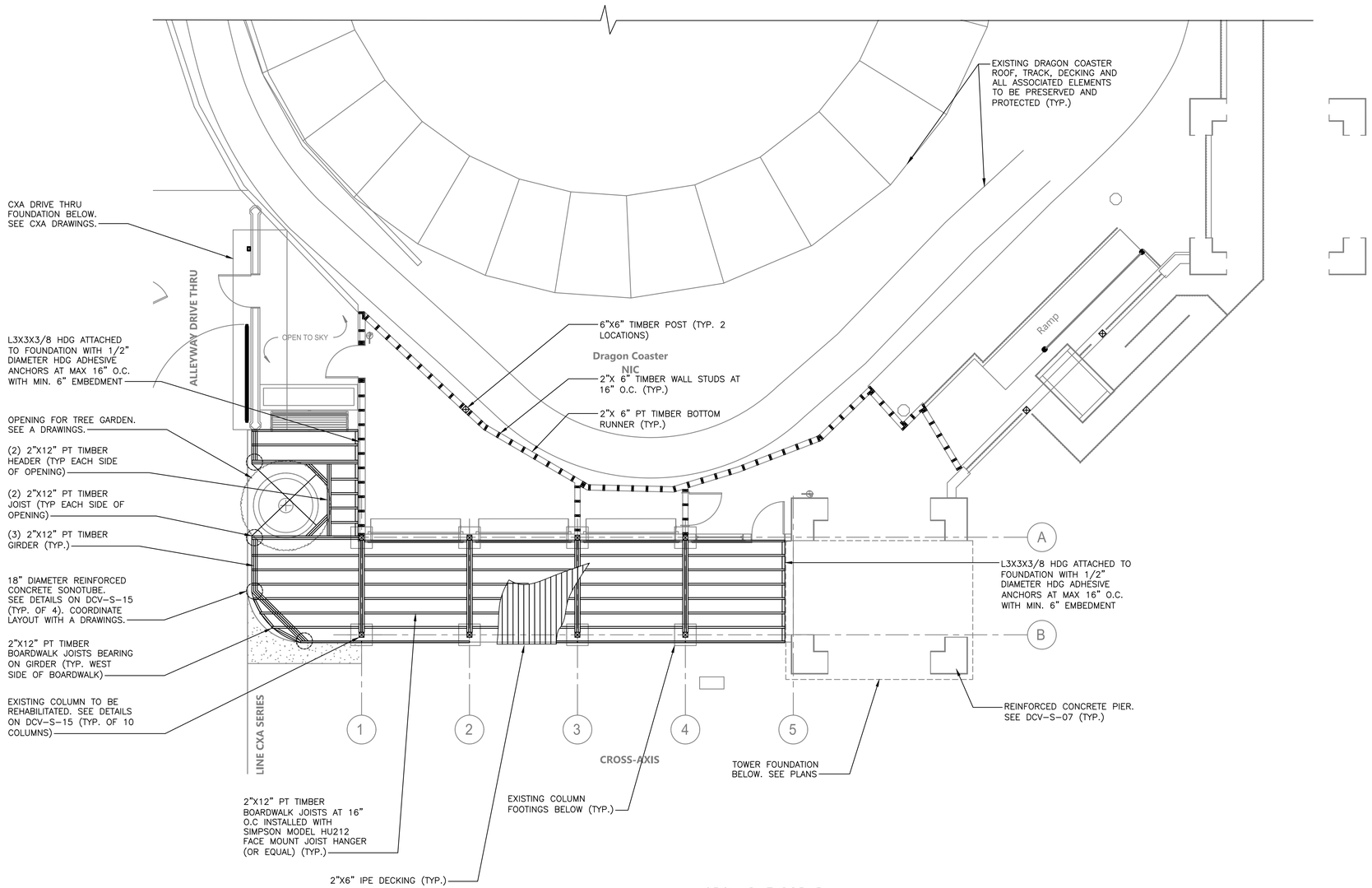

GROUND FLOOR PLAN
SCALE: 3/16" = 1'-0"

Drawing Name: G:\SavinAutocad\2060\25-Playland-Mega-3\S\DCVS-1010.dwg
Reref: Projectname: 211001F02 Comments: ----
Printed by: GNicolais Date: 19 August 2022 4:16 PM Designed by: ----
Xrefs: [TB_24X36_WestchesterCo_3.dwg] [TSG-SVL000.dwg] [DCV-A-10.dwg] [DCV-S-1002.dwg]

CONSULTANT INFORMATION

Savin Engineers, P.C.

CONSULTANT SEAL

STATE OF NEW YORK · MICHAEL JOHN GIRARDI · 081 065864 · LICENSED PROFESSIONAL ENGINEER

REVISION NUMBER	DATE	MADE BY	APP'D BY	REVISION

RECORD DRAWING CERTIFICATION

☐ AS BUILT – CHANGES AS NOTED ☐ AS BUILT – NO CHANGES

CONTRACTOR
NAME
SIGNATURE
TITLE DATE

PROJECT COORDINATOR
NAME
SIGNATURE
TITLE DATE

WESTCHESTER COUNTY, NEW YORK
DEPARTMENT OF PUBLIC WORKS AND TRANSPORTATION
DIVISION OF ENGINEERING

INFRASTRUCTURE REHABILITATION - PHASE 3
PLAYLAND PARK, RYE, NEW YORK
DRAGON COASTER VENDORS
GROUND FLOOR PLAN

CONTRACT NUMBER	SHEET NUMBER
22-523	DCV-S-08

DWG NO.:
SCALE: AS SHOWN
DATE: 8/23/2022
DPW FILE NUMBER 1-118-S-1199-0 REV. NO. 0

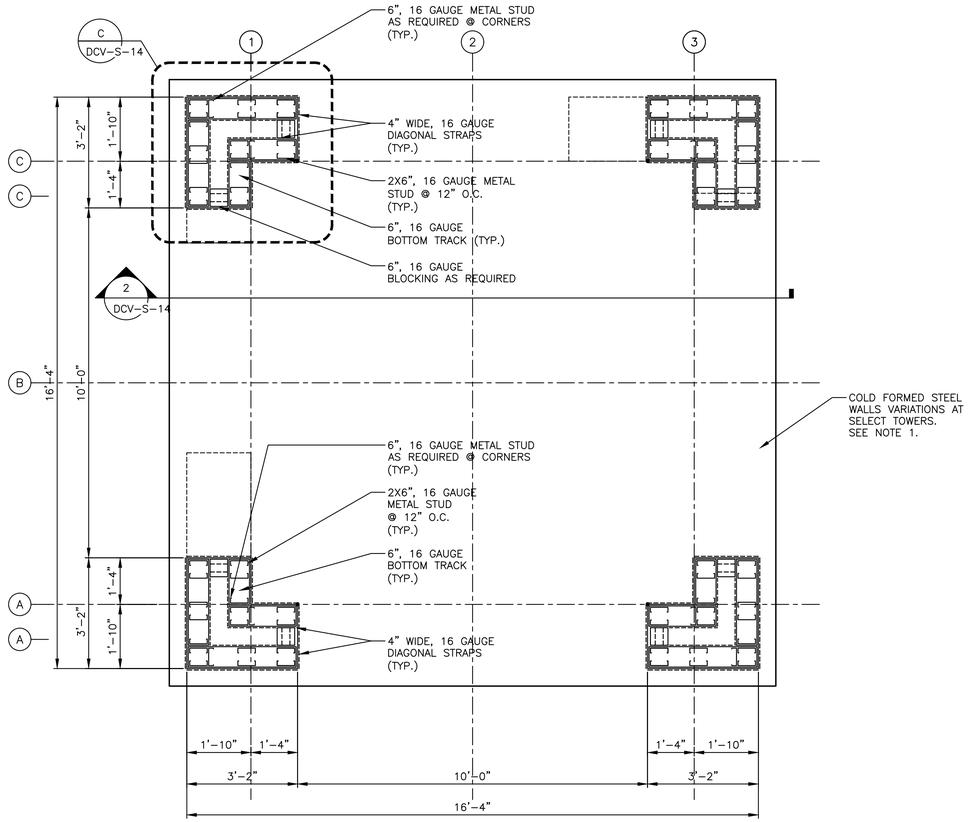

LOWER PLAN
SCALE: 1/2 = 1'-0"

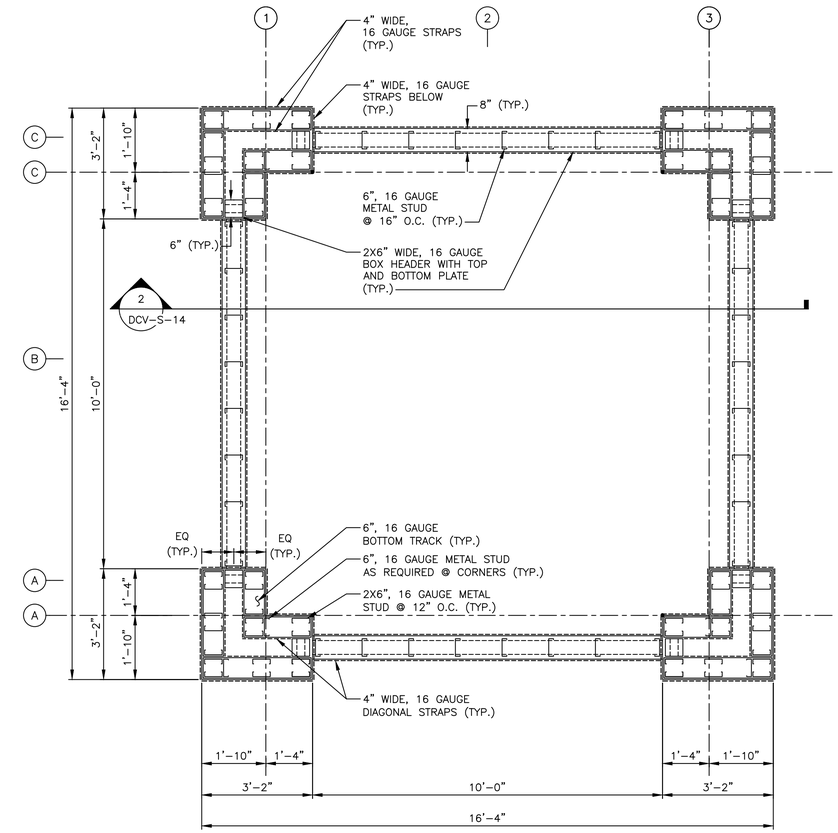

INTERMEDIATE PLAN @ EL. 13'-0"
SCALE: 1/2 = 1'-0"

NOTES:

1. CONTRACTOR IS ALERTED TOWER 6 INCLUDES VARIATIONS IN CONCRETE PIER DIMENSIONS AND CONCRETE CURBS FOR NEW COLD FORMED METAL WALLS. CONTRACTOR TO COORDINATE REQUIRED DIMENSIONS WITH EXISTING CONDITIONS AND ARCHITECTURAL DRAWINGS.

0 2' 4'
SCALE: 1/2" = 1'-0"

Drawing Name: G:\SavinAutocad\2060\25-Playland-Mega-3\S\DCVS-1015.dwg
Rev#: Projectname: ---- Comments: ----
Printed by: GNicolais Date: 19 August 2022 4:16 PM Designed by: ----
Xrefs: [TB_24X36_WestchesterCo_3.dwg] [TSG-SVLOGO.dwg] [DCV-NP0001.dwg] [DCV-IPEL13'-0".dwg

CONSULTANT INFORMATION
Savin Engineers, P.C.

CONSULTANT SEAL

REVISION NUMBER	DATE	MADE BY	APP'D BY	REVISION

RECORD DRAWING CERTIFICATION
☐ AS BUILT – CHANGES AS NOTED ☐ AS BUILT – NO CHANGES

CONTRACTOR
NAME
SIGNATURE
TITLE DATE

PROJECT COORDINATOR
NAME
SIGNATURE
TITLE DATE

WESTCHESTER COUNTY, NEW YORK
DEPARTMENT OF PUBLIC WORKS AND TRANSPORTATION
DIVISION OF ENGINEERING

INFRASTRUCTURE REHABILITATION - PHASE 3
PLAYLAND PARK, RYE, NEW YORK
DRAGON COASTER VENDORS
TOWER SUPERSTRUCTURE - PLANS

CONTRACT NUMBER	22-523
SHEET NUMBER	DCV-S-09
DWG NO.:	----
SCALE:	AS SHOWN
DATE:	8/23/2022
DPW FILE NUMBER	1-118-S-1200-0
REV. NO.	0

NOTES:

1. FOR STRUCTURAL NOTES, SEE DRAWING DCV–S–01.
2. FOR STRUCTURAL ABBREVIATIONS AND SYMBOLS, SEE DRAWING DCV–S–02.
3. SEE SHORING PLAN AND SEQUENCE OF CONSTRUCTION ON DCV–S–05.

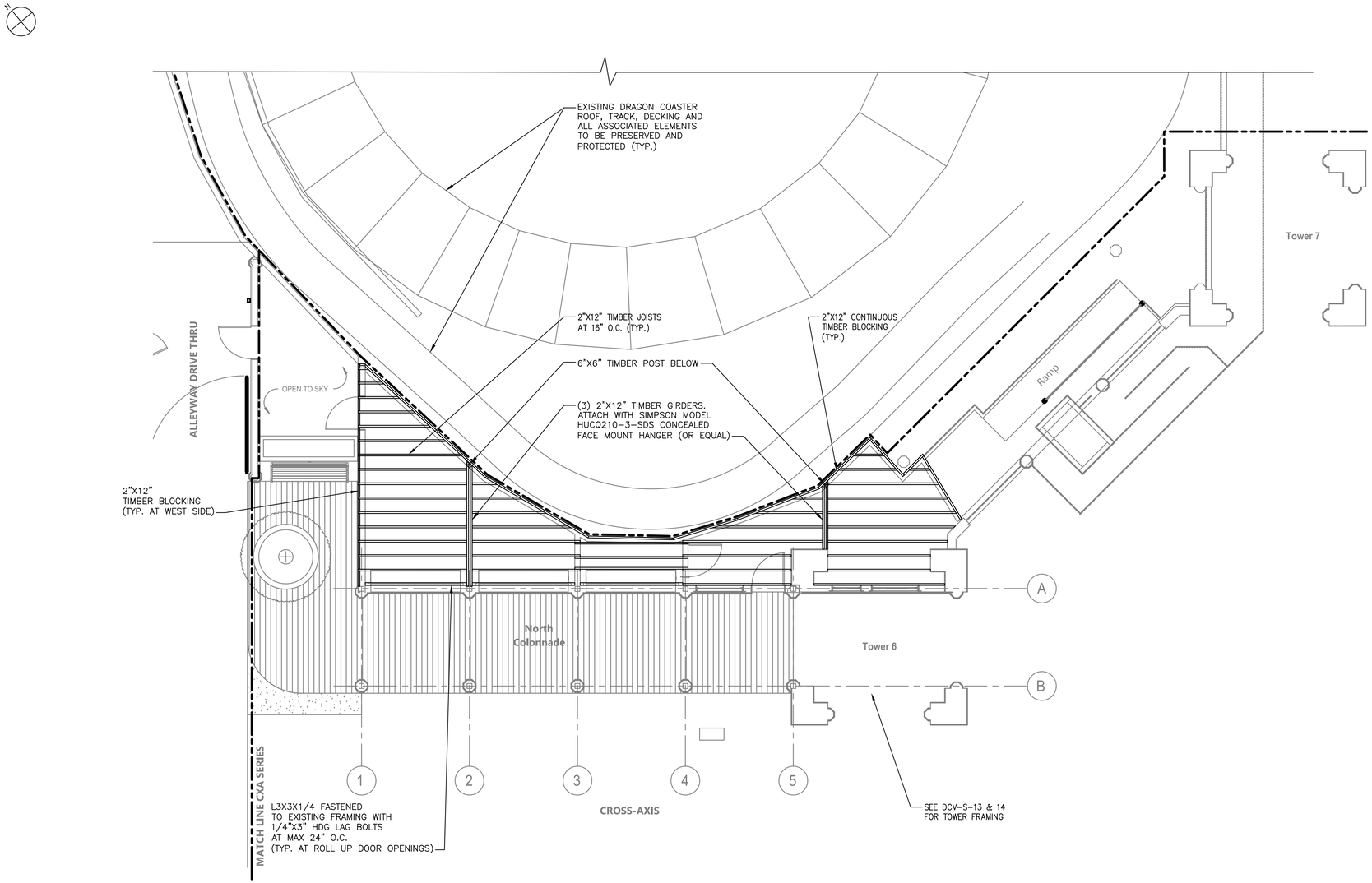

CEILING FRAMING PLAN
SCALE: 3/16" = 1'–0"

CONSULTANT INFORMATION	CONSULTANT SEAL	REVISION NUMBER	DATE	MADE BY	APP'D BY	REVISION
Savin Engineers, P.C.	STATE OF NEW YORK LICENSED PROFESSIONAL ENGINEER					

RECORD DRAWING CERTIFICATION
☐ AS BUILT – CHANGES AS NOTED ☐ AS BUILT – NO CHANGES

CONTRACTOR: NAME / SIGNATURE / TITLE / DATE
PROJECT COORDINATOR: NAME / SIGNATURE / TITLE / DATE

WESTCHESTER COUNTY, NEW YORK
DEPARTMENT OF PUBLIC WORKS AND TRANSPORTATION
DIVISION OF ENGINEERING

INFRASTRUCTURE REHABILITATION - PHASE 3
PLAYLAND PARK, RYE, NEW YORK
DRAGON COASTER VENDORS
CEILING FRAMING PLAN

CONTRACT NUMBER	22-523
SHEET NUMBER	DCV-S-10
DWG NO.:	
SCALE:	AS SHOWN
DATE:	8/23/2022
DPW FILE NUMBER	1-118-S-1201-0
REV. NO.	0

Drawing Name: G:\SavinAutocad\2060\25-Playland-Mega-3\S\DCVS-1012.dwg
Ref#: Projectname: 211001F02 Comments: ----
Printed by: GNicolais Date: 19 August 2022 4:17 PM Designed by: ----
Xrefs: [TB_24X36_WestchesterCo_3.dwg] [TSG-SVL000.dwg] [DCV-A-10A.dwg] [DCV-S-1010.dwg]

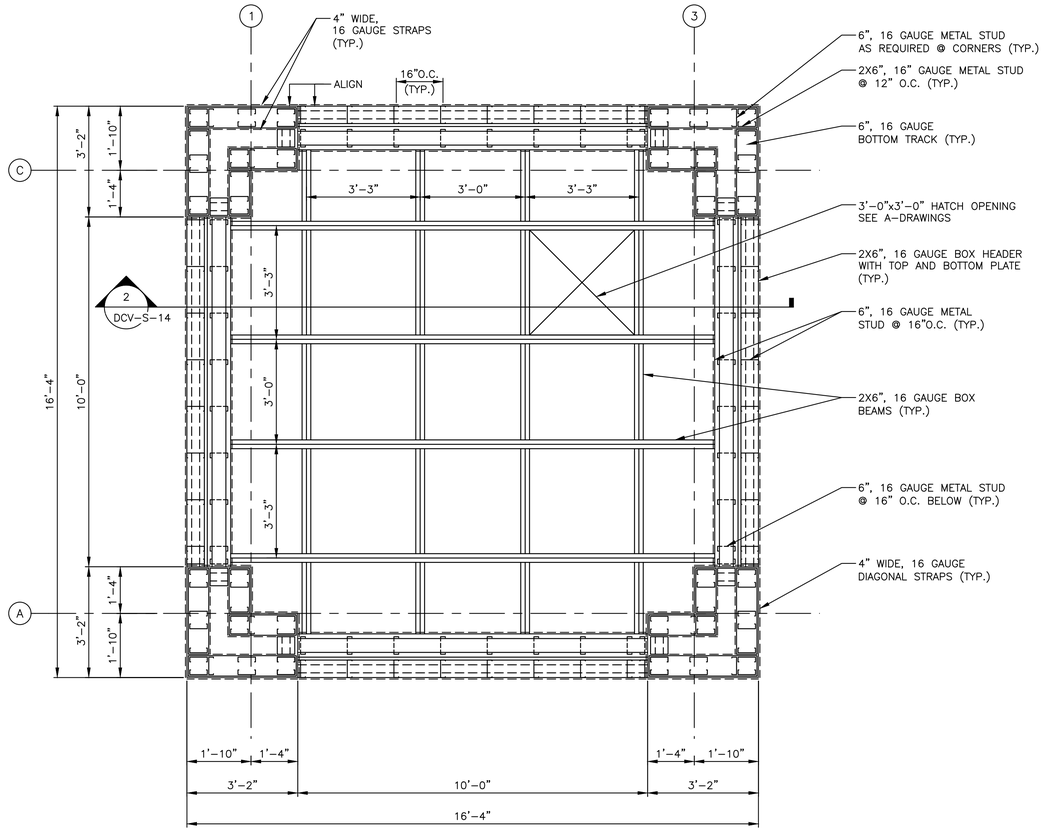

INTERMEDIATE PLAN @ EL. 17'-5"
SCALE: 1/2 = 1'-0"

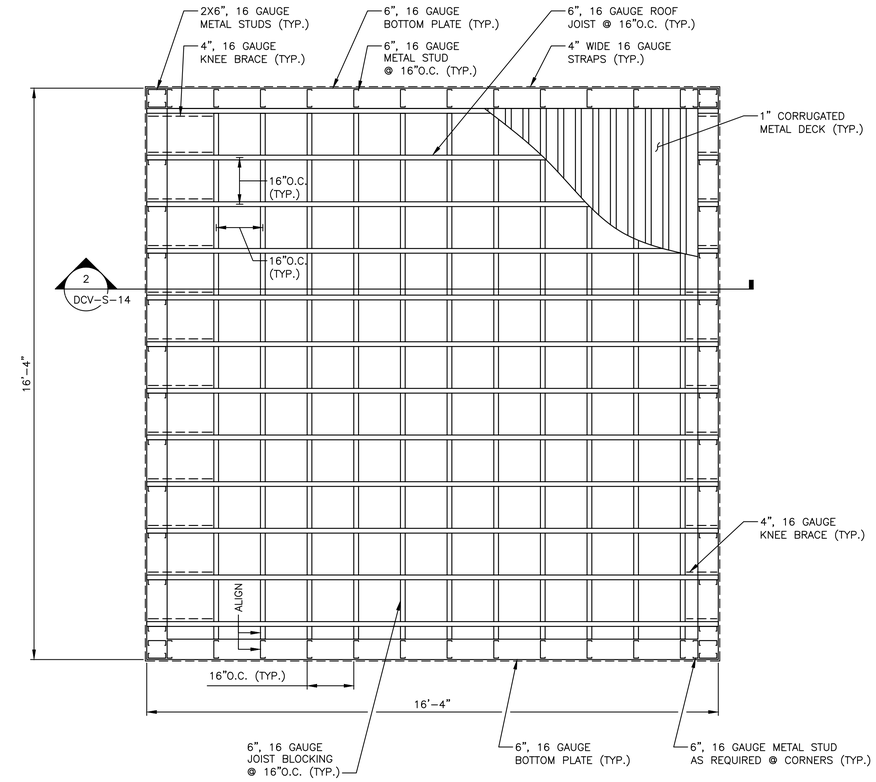

ROOF PLAN
SCALE: 1/2 = 1'-0"

0 2' 4'
SCALE: 1/2" = 1'-0"

CONSULTANT INFORMATION

Savin Engineers, P.C.

CONSULTANT SEAL

STATE OF NEW YORK · COUNTY OF WESTCHESTER · LICENSED PROFESSIONAL ENGINEER · No. 085354

REVISION NUMBER	DATE	MADE BY	APP'D BY	REVISION

RECORD DRAWING CERTIFICATION

☐ AS BUILT – CHANGES AS NOTED ☐ AS BUILT – NO CHANGES

CONTRACTOR
NAME
SIGNATURE
TITLE DATE

PROJECT COORDINATOR
NAME
SIGNATURE
TITLE DATE

WESTCHESTER COUNTY, NEW YORK
DEPARTMENT OF PUBLIC WORKS AND TRANSPORTATION
DIVISION OF ENGINEERING

INFRASTRUCTURE REHABILITATION - PHASE 3
PLAYLAND PARK, RYE, NEW YORK
DRAGON COASTER VENDORS
TOWER SUPERSTRUCTURE - PLANS II

CONTRACT NUMBER	22-523
SHEET NUMBER	DCV-S-11
DWG NO.:	----
SCALE:	AS SHOWN
DATE:	8/23/2022
DPW FILE NUMBER	1-118-S-1202-0
REV. NO.	0

Drawing Name: G:\SavinAutocad\2060\25-Playland-Mega-3\S\DCVS-1017.dwg
Projectname: ---- Comments: ----
Printed by: GNicolais Date: 19 August 2022 4:17 PM Designed by: ----
Xrefs: [TB_24X36_WestchesterCo_3.dwg] [TSG-SVLOGO.dwg] [DCV-IPEL17-5".dwg] [DCV-RP0001.dwg

NOTES:

1. FOR STRUCTURAL NOTES, SEE DRAWING DCV-S-01.
2. FOR STRUCTURAL ABBREVIATIONS AND SYMBOLS, SEE DRAWING DCV-S-02.
3. SEE SHORING PLAN AND SEQUENCE OF CONSTRUCTION ON DCV-S-05.

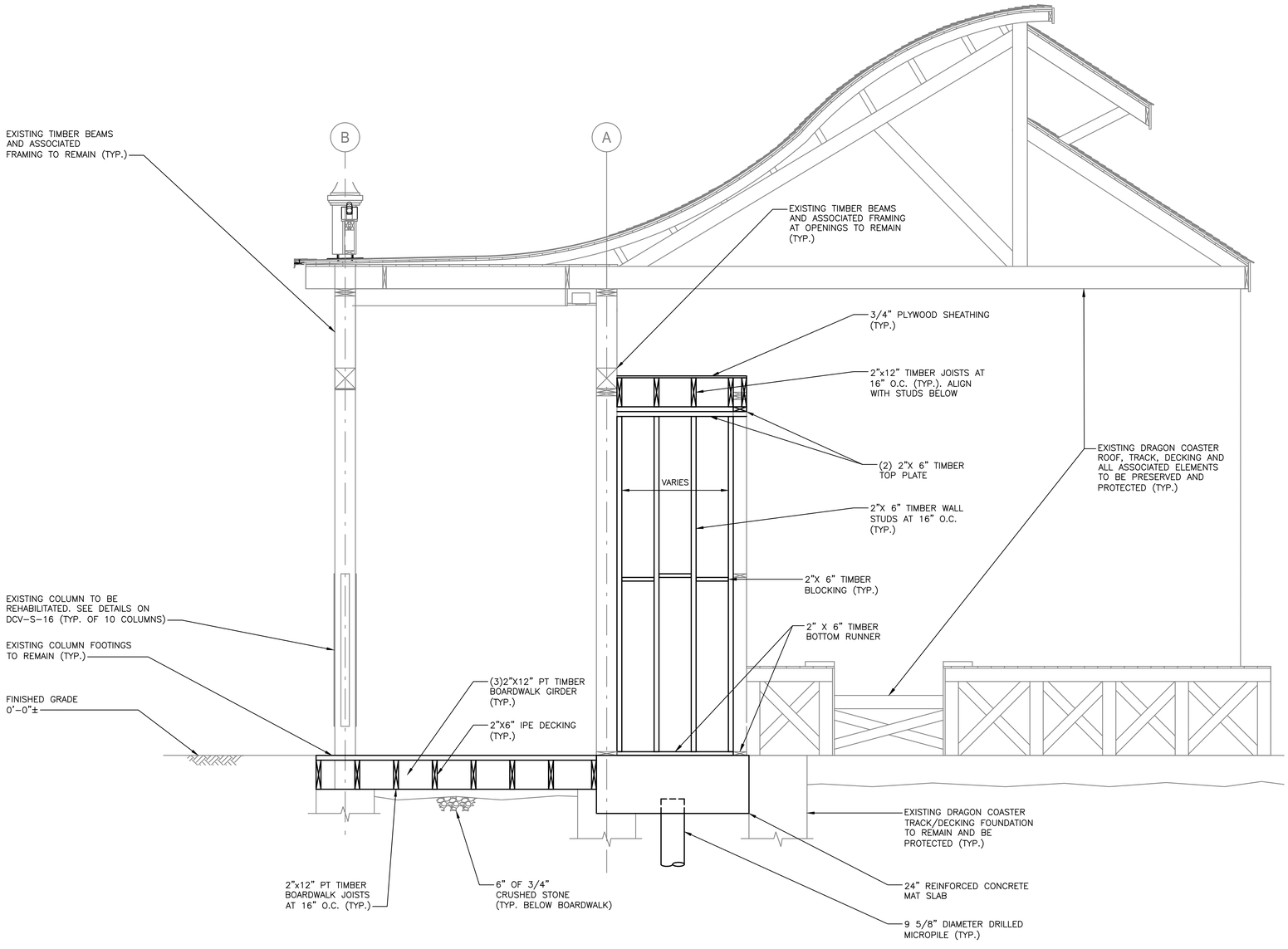

2 SECTION
DCV-S-06 SCALE: 1/2" = 1'-0"

Drawing Name: G:\SavinAutocad\2060\25-Playland-Mega-3\S\DCVS-1008.dwg
Rev#: Projectname: 211001F02 Comments: ----
Printed by: GNicolais Date: 19 August 2022 4:17 PM Designed by: ----
Xrefs: [TB_24X36_WestchesterCo_3.dwg] [TSG-SVLOGO.dwg] [DCV-S-1005.dwg]

CONSULTANT INFORMATION

Savin Engineers, P.C.

CONSULTANT SEAL

REVISION NUMBER	DATE	MADE BY	APP'D BY	REVISION

RECORD DRAWING CERTIFICATION

☐ AS BUILT – CHANGES AS NOTED ☐ AS BUILT – NO CHANGES

CONTRACTOR
NAME
SIGNATURE
TITLE DATE

PROJECT COORDINATOR
NAME
SIGNATURE
TITLE DATE

WESTCHESTER COUNTY, NEW YORK
DEPARTMENT OF PUBLIC WORKS AND TRANSPORTATION
DIVISION OF ENGINEERING

INFRASTRUCTURE REHABILITATION - PHASE 3
PLAYLAND PARK, RYE, NEW YORK
DRAGON COASTER VENDORS
SECTION

CONTRACT NUMBER	22-523
SHEET NUMBER	DCV-S-12
DWG NO.:	
SCALE:	AS SHOWN
DATE:	8/23/2022
DPW FILE NUMBER	1-118-S-1203-0
REV. NO.	0

NOTES:

1. FOR STRUCTURAL NOTES, SEE DRAWING SA-S-01.
2. FOR STRUCTURAL ABBREVIATIONS AND SYMBOLS, SEE DRAWING SA-S-02.
3. SEE SHORING PLAN AND SEQUENCE OF CONSTRUCTION ON DCV-S-06.

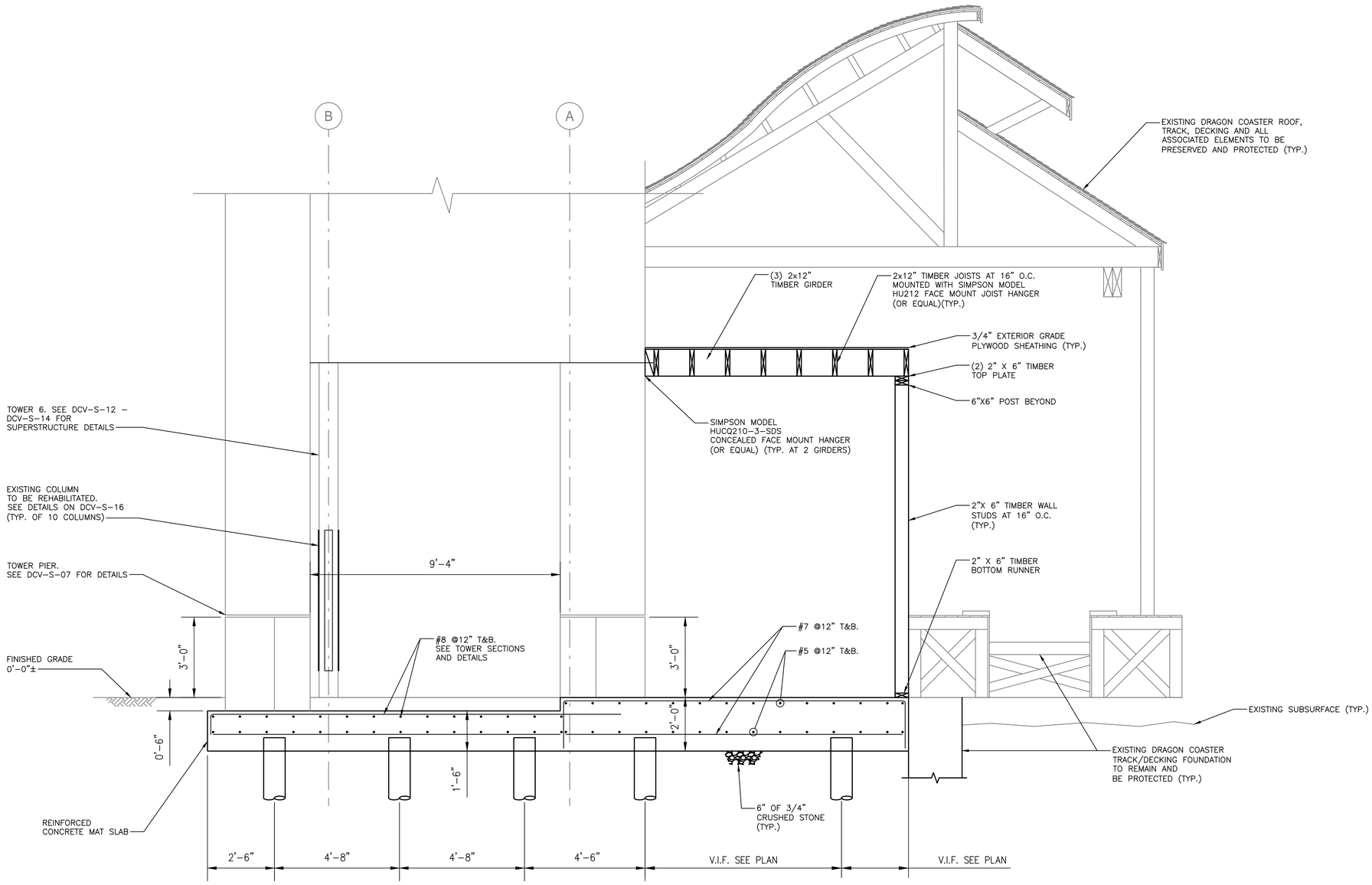

3 SECTION
DCV-S-06

SCALE: 1/2" = 1'-0"

Drawing Name: G:\SavinAutocad\2060\25-Playland-Mega-3\S\DCVS-1009.dwg
Rev#: Projectname: 211001F02 Comments: ----
Printed by: GNicolais Date: 19 August 2022 4:17 PM Designed by: ----
Xrefs: [TB_24X36_WestchesterCo_3.dwg] [TSG-SVL000.dwg] [DCV-S-1006.dwg]

CONSULTANT INFORMATION

Savin Engineers, P.C.

CONSULTANT SEAL

STATE OF NEW YORK · LICENSED PROFESSIONAL ENGINEER · No. 085364

REVISION NUMBER	DATE	MADE BY	APP'D BY	REVISION

RECORD DRAWING CERTIFICATION

☐ AS BUILT – CHANGES AS NOTED ☐ AS BUILT – NO CHANGES

CONTRACTOR
NAME
SIGNATURE
TITLE DATE

PROJECT COORDINATOR
NAME
SIGNATURE
TITLE DATE

WESTCHESTER COUNTY, NEW YORK
DEPARTMENT OF PUBLIC WORKS AND TRANSPORTATION
DIVISION OF ENGINEERING

INFRASTRUCTURE REHABILITATION - PHASE 3
PLAYLAND PARK, RYE, NEW YORK
DRAGON COASTER VENDORS
SECTION

CONTRACT NUMBER	22-523
SHEET NUMBER	DCV-S-13
DWG. NO.:	
SCALE:	AS SHOWN
DATE:	8/23/2022
DPW FILE NUMBER	1-118-S-1204-0
REV. NO.	0

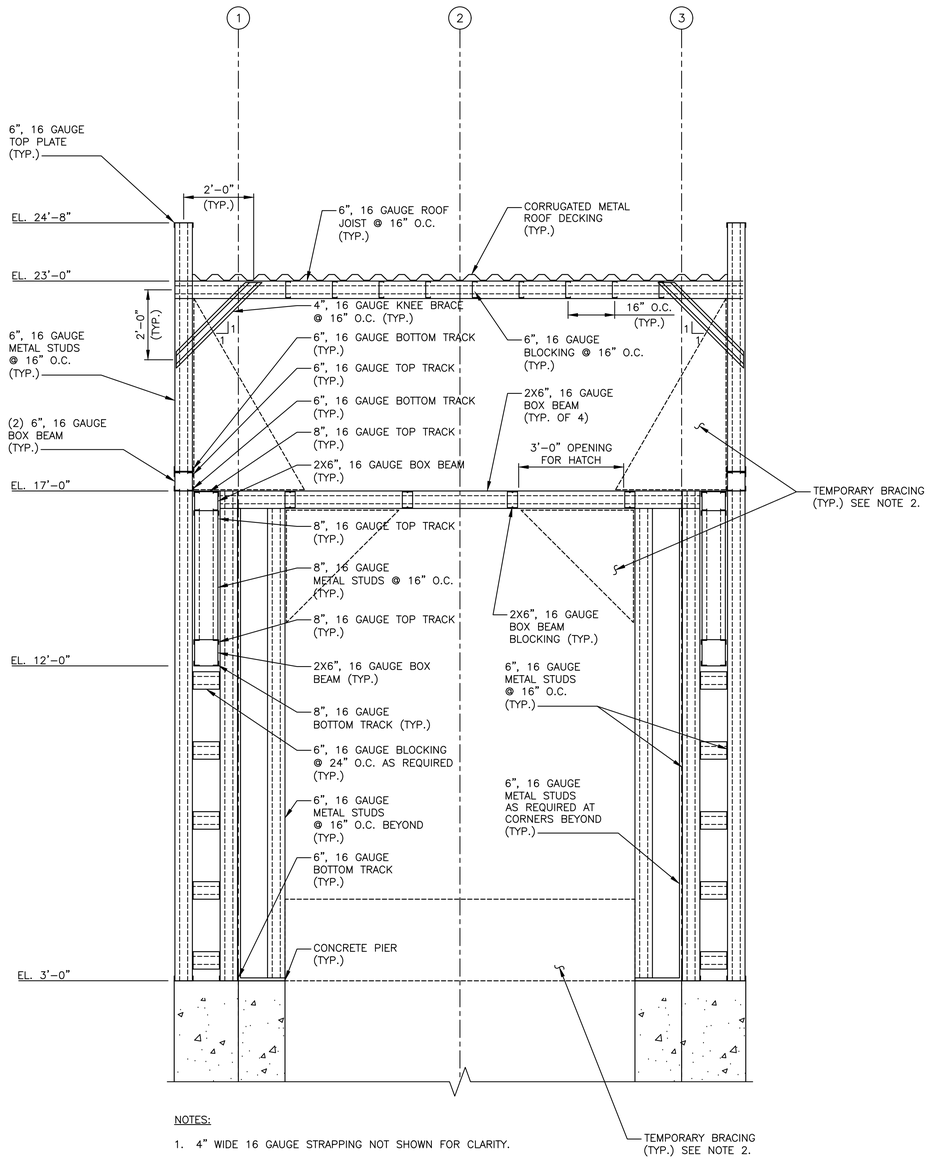

NOTES:

1. 4" WIDE 16 GAUGE STRAPPING NOT SHOWN FOR CLARITY.

2 SECTION
DCV-S-09 SCALE: 1/2 = 1'-0"

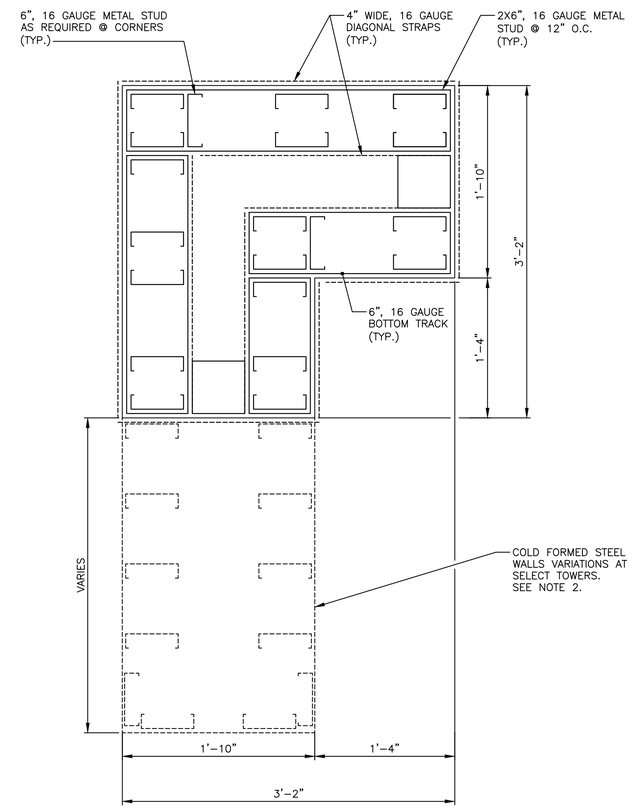

C DETAIL
DCV-S-09 SCALE: 1 1/2 = 1'-0"

NOTES:

1. CONTRACTOR IS ALERTED TOWER 6 INCLUDES VARIATIONS IN CONCRETE PIER DIMENSIONS AND CONCRETE CURBS FOR NEW COLD FORMED METAL WALLS. CONTRACTOR TO COORDINATE REQUIRED DIMENSIONS WITH EXISTING CONDITIONS AND ARCHITECTURAL DRAWINGS.
2. IF CONTRACTOR ELECTS TO PRE-ASSEMBLE/PRE-FABRICATE TOWER SUPERSTRUCTURE/CFMS FRAMING, CONTRACTOR SHALL INSTALL TEMPORARY BRACING AS SHOWN AT A MINIMUM IN ORDER TO PROTECT AND MAINTAIN PLUMBNESS OF FINISHED FRAMING FROM ANY TEMPORARY LIFTING/HANDLING LOADS.

0 6" 1'
SCALE: 1 1/2" = 1'-0"

0 2' 4'
SCALE: 1/2" = 1'-0"

CONSULTANT INFORMATION
Savin Engineers, P.C.

CONSULTANT SEAL
STATE OF NEW YORK · LICENSED PROFESSIONAL ENGINEER · No. 085362

REVISION NUMBER	DATE	MADE BY	APP'D BY	REVISION

RECORD DRAWING CERTIFICATION
☐ AS BUILT – CHANGES AS NOTED ☐ AS BUILT – NO CHANGES

CONTRACTOR
NAME
SIGNATURE
TITLE DATE

PROJECT COORDINATOR
NAME
SIGNATURE
TITLE DATE

WESTCHESTER COUNTY, NEW YORK
DEPARTMENT OF PUBLIC WORKS AND TRANSPORTATION
DIVISION OF ENGINEERING

INFRASTRUCTURE REHABILITATION - PHASE 3
PLAYLAND PARK, RYE, NEW YORK
TOWERS, COLONNADES, AND FOOD VENDOR SPACES
TOWER SUPERSTRUCTURE - SECTIONS AND DETAILS

CONTRACT NUMBER	SHEET NUMBER
22-523	DCV-S-14
DWG NO.: ----	
SCALE: AS SHOWN	
DATE: 8/23/2022	
DPW FILE NUMBER 1-118-S-1205-0	REV. NO. 0

Drawing Name: G:\SavinAutocad\2060\25-Playland-Mega-3\S\DCVS-1016.dwg
Rev#: Projectname: ---- Comments: ----
Printed by: GNicolais Date: 19 August 2022 4:18 PM Designed by: ----
Xrefs: [TB_24X36_WestchesterCo_3.dwg] [TSG-SVL000.dwg] [DCV-SECT0001.dwg] [DCV-LLP0001.dwg

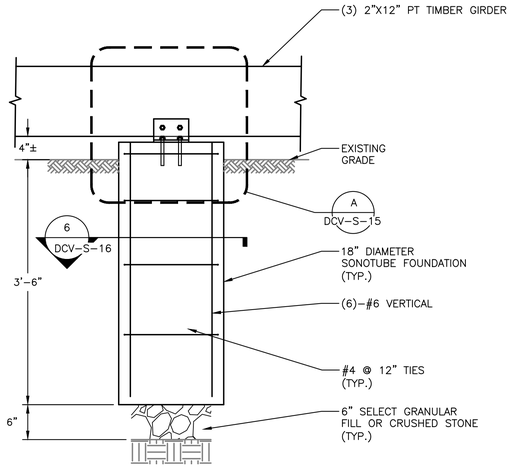

TYPICAL BOARWALK SONOTUBE SECTION
N.T.S.

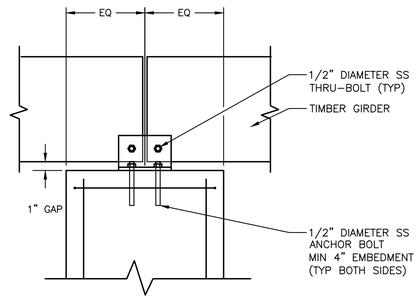

A DETAIL
DCV-S-15 1/2" = 1'-0"

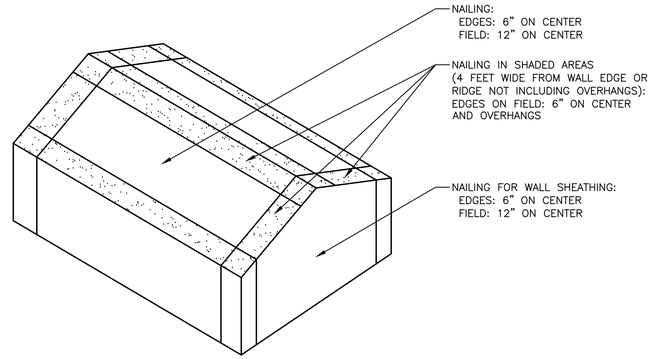

ROOF SHEATHING AND WALL SHEATHING ATTACHMENT DIAGRAMS
N.T.S.

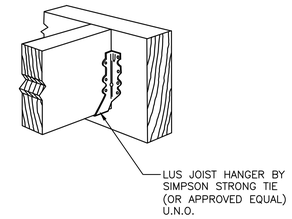

FACE MOUNTED JOIST HANGER
SCALE: N.T.S.

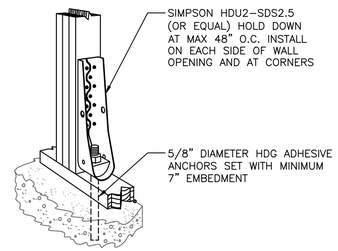

HOLD DOWN/TENSION TIE
SCALE: N.T.S.

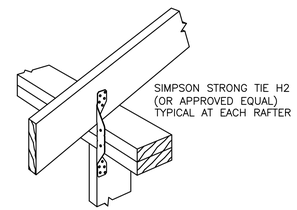

HURRICANE TIE
SCALE: N.T.S.

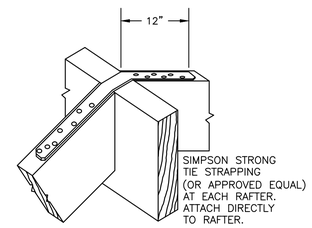

RIDGE STRAPPING
SCALE: N.T.S.

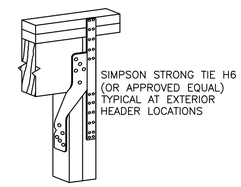

HEADER TO JACK STUD CONNECTION
SCALE: N.T.S.

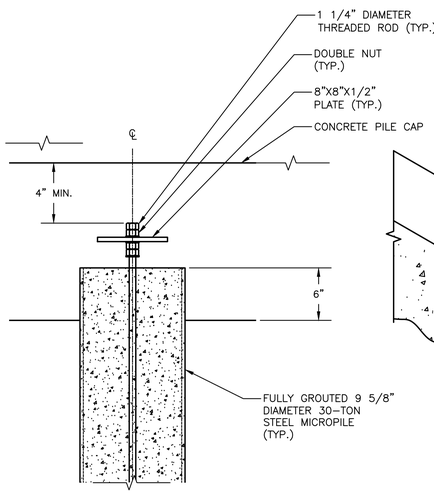

TYPICAL PILE HEAD DETAIL
SCALE: N.T.S.

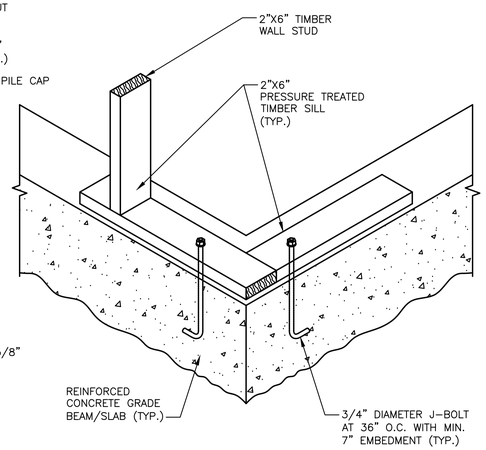

TYPICAL FLOOR FRAMING DETAIL
N.T.S.

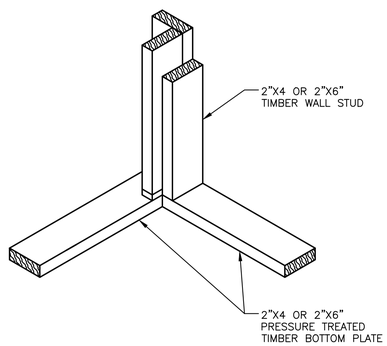

TYPICAL STUDS AT CORNERS DETAIL
N.T.S.

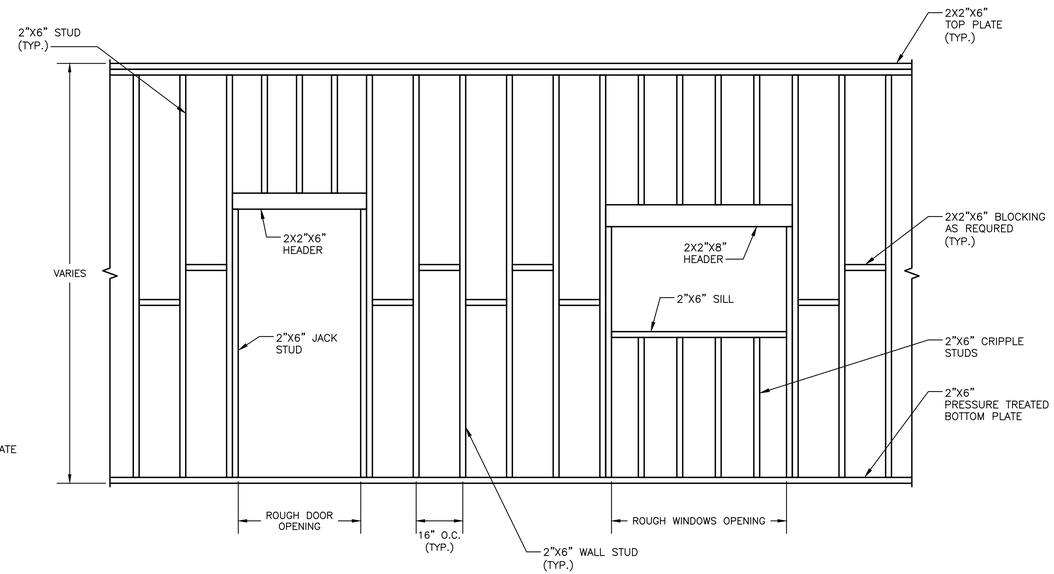

DETAIL WALL ELEVATION
N.T.S.

CONSULTANT INFORMATION
Savin Engineers, P.C.

CONSULTANT SEAL

REVISION NUMBER	DATE	MADE BY	APP'D BY	REVISION

RECORD DRAWING CERTIFICATION
☐ AS BUILT – CHANGES AS NOTED ☐ AS BUILT – NO CHANGES

CONTRACTOR
NAME
SIGNATURE
TITLE DATE

PROJECT COORDINATOR
NAME
SIGNATURE
TITLE DATE

WESTCHESTER COUNTY, NEW YORK
DEPARTMENT OF PUBLIC WORKS AND TRANSPORTATION
DIVISION OF ENGINEERING

INFRASTRUCTURE REHABILITATION - PHASE 3
PLAYLAND PARK, RYE, NEW YORK
DRAGON COASTER VENDORS
TYPICAL SECTIONS AND DETAILS

CONTRACT NUMBER	22-523
SHEET NUMBER	DCV-S-15
DWG NO.:	
SCALE:	AS SHOWN
DATE:	8/23/2022
DPW FILE NUMBER	1-118-S-1206-0
REV. NO.	0

Drawing Name: G:\SavinAutocad\2060\25-Playland-Mega-3\S\DCVS-1007.dwg
Projectname: 211001F02 Comments: ----
Printed by: GNicolais Date: 19 August 2022 4:18 PM Designed by: ----
Xrefs: [TB_24X36_WestchesterCo_3.dwg] [TSG-SYLOGO.dwg] [DCV-A-013.dwg]

NOTES:

CONTRACTOR SHALL SUBMIT A COLUMN REPAIR SEQUENCE OF CONSTRUCTION TO ENGINEER FOR REVIEW. THE FOLLOWING SHALL BE THE MINIMUM REQUIRED.

1. TEMPORARY SHORING AT EACH COLUMN LOCATION SHALL HAVE A MINIMUM 10-TON CAPACITY.
2. COLUMN REPAIR SHALL BE LIMITED TO MAXIMUM 2 COLUMNS AT A TIME. COLUMNS UNDER REPAIR MUST NOT BE ADJACENT TO EACH OTHER.
3. ALL HARDWARE SHALL BE TYPE 316 STAINLESS STEEL, UNLESS OTHERWISE NOTED.

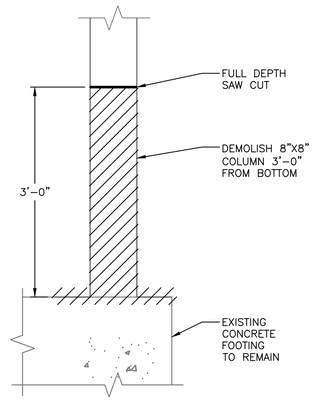

DEMOLITION
N.T.S.

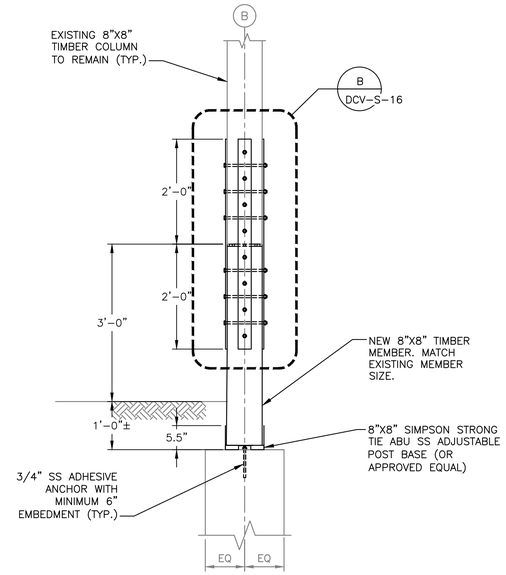

SECTION
SCALE: 3/4 = 1'-0"

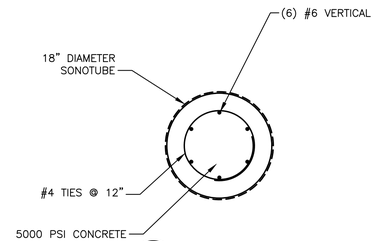

6 SECTION
DCV-S-15 SCALE: 1" = 1'-0"

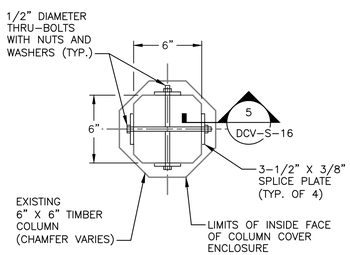

2 SECTION
DCV-S-16 SCALE: 1 1/2 = 1'-0"

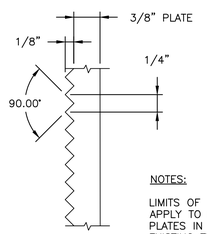

NOTES:

LIMITS OF KNURLING SHALL APPLY TO FACE OF ALL SPLICE PLATES IN CONTACT WITH EXISTING TIMBER COLUMN. KNURLING SHALL RUN AXIALLY AND HORIZONTALLY.

5 SECTION
DCV-S-16 SCALE: N.T.S.

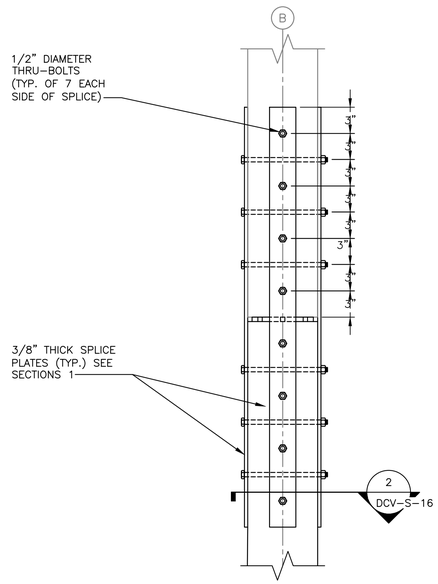

B DETAIL
DCV-S-16 SCALE: 1 1/2 = 1'-0"

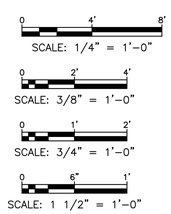

Drawing Name: G:\SavinAutocad\2060\25-Playland-Mega-3\S\DCVS-1018.dwg
Rev#: Projectname: ---- Comments: ----
Printed by: GNicolais Date: 19 August 2022 4:18 PM Designed by: ----
Xrefs: [TSG-SVLOGO.dwg] [TB_24X36_WestchesterCo_3.dwg

CONSULTANT INFORMATION

Savin Engineers, P.C.

CONSULTANT SEAL

REVISION NUMBER	DATE	MADE BY	APP'D BY	REVISION

RECORD DRAWING CERTIFICATION

☐ AS BUILT – CHANGES AS NOTED ☐ AS BUILT – NO CHANGES

CONTRACTOR
NAME
SIGNATURE
TITLE DATE

PROJECT COORDINATOR
NAME
SIGNATURE
TITLE DATE

WESTCHESTER COUNTY, NEW YORK
DEPARTMENT OF PUBLIC WORKS AND TRANSPORTATION
DIVISION OF ENGINEERING

INFRASTRUCTURE REHABILITATION - PHASE 3
PLAYLAND PARK, RYE, NEW YORK
DRAWING TITLE: CONTRACT DRAWINGS
SECTIONS AND DETAILS

CONTRACT NUMBER	22-523
SHEET NUMBER	DCV-S-16
DWG NO.:	
SCALE:	AS SHOWN
DATE:	8/23/2022
DPW FILE NUMBER	1-118-S-1207-0
REV. NO.	0

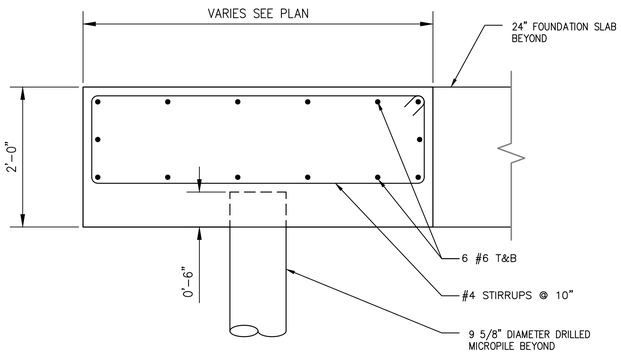

1 DCV-S-17 SECTION 1"=1'-0"

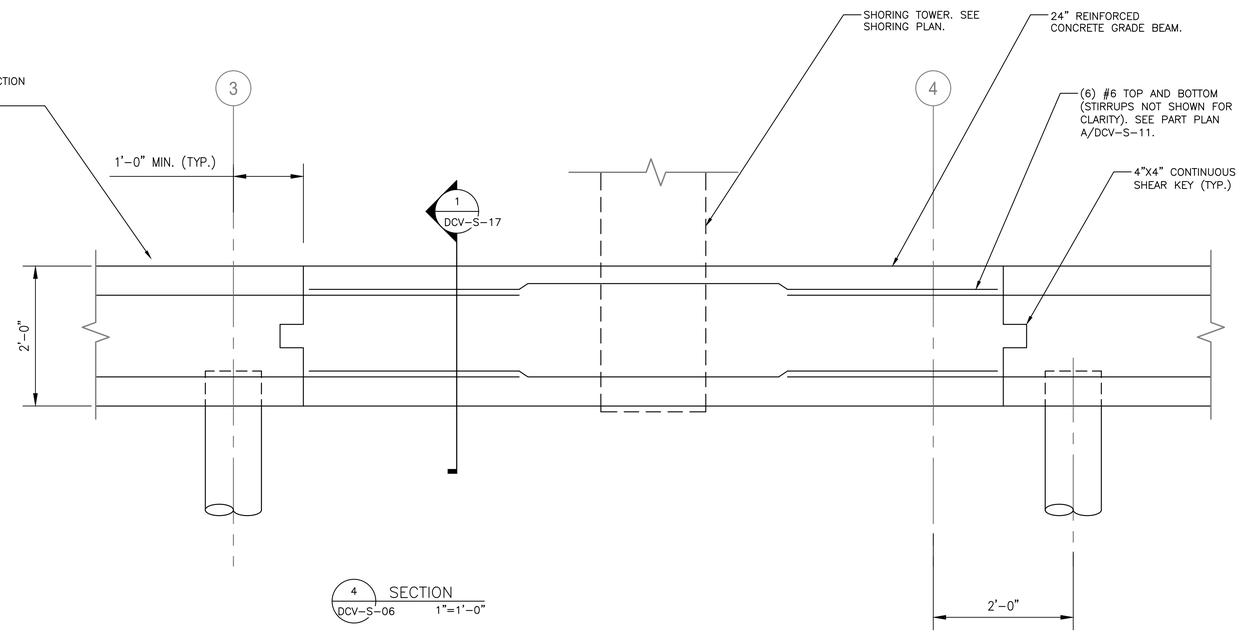

4 DCV-S-06 SECTION 1"=1'-0"

NOTES:

1. FOR STRUCTURAL NOTES, SEE DRAWING SA-S-01.
2. FOR STRUCTURAL ABBREVIATIONS AND SYMBOLS, SEE DRAWING SA-S-02.
3. SEE SHORING PLAN AND SEQUENCE OF CONSTRUCTION ON DCV-S-06.

BASIC DEVELOPMENT LENGTH AND SPLICE LENGTH

FOR BARS IN TENSION

fy = 60,000 psi fc = 4000 psi OR GREATER, NORMAL WEIGHT CONCRETE

BASIC DEVELOPMENT LENGTH ** l d				BAR SIZE	CLASS B SPLICE LENGTH ** 1.3 x l d			
CLEAR SPACING > 3"		CLEAR SPACING < 3"			CLEAR SPACING > 3"		CLEAR SPACING < 3"	
BASIC	TOP *	BASIC	TOP *		BASIC	TOP *	BASIC	TOP *
1'-0"	1'-4"	1'-9"	2'-2"	#3	1'-4"	1'-9"	2'-2"	2'-11"
1'-4"	1'-8"	2'-2"	2'-9"	#4	1'-8"	2'-2"	2'-9"	3'-7"
1'-8"	2'-2"	2'-10"	3'-7"	#5	2'-2"	2'-10"	3'-7"	4'-8"
2'-0"	2'-6"	3'-3"	4'-2"	#6	2'-6"	3'-3"	4'-2"	5'-5"
3'-6"	4'-7"	5'-11"	7'-7"	#7	4'-7"	5'-11"	7'-7"	9'-11"
4'-0"	5'-2"	6'-9"	8'-8"	#8	5'-2"	6'-9"	8'-8"	11'-4"
4'-6"	5'-10"	7'-7"	9'-10"	#9	5'-10"	7'-7"	9'-9"	12'-9"
5'-0"	6'-5"	8'-6"	11'-10"	#10	6'-5"	8'-6"	11'-0"	13'-7"
5'-7"	7'-4"	9'-5"	12'-6"	#11	7'-4"	9'-5"	12'-6"	14'-9"

NOTES:

* TOP REINFORCEMENT IS HORIZONTAL REINFORCEMENT SO PLACED THAT MORE THAN 12 INCHES OF FRESH CONCRETE IS CAST IN THE MEMBER BELOW THE REINFORCEMENT

** LENGTHS SHOWN IN CHART SHALL BE MODIFIED WHERE REQUIRED TO CONFORM TO THE PROVISIONS OF ACI 318, SECTION 12.2

*** UNCOATED REINFORCEMENT

DEVELOPMENT LENGTH OF STANDARD HOOKS

FOR BARS IN TENSION

fy = 60,000 psi fc = 4000 psi OR GREATER, NORMAL WEIGHT CONCRETE

BAR SIZE	DEVELOPMENT LENGTH, l dh	
	BASIC	W/CONC. COVER *
#3	8"	6"
#4	10"	7"
#5	1'-0"	9"
#6	1'-3"	11"
#7	1'-5"	1'-0"
#8	1'-7"	1'-2"
#9	1'-10"	1'-4"
#10	2'-1"	1'-6"
#11	2'-3"	1'-7"

NOTES:

* SIDE COVER NORMAL TO PLANE OF HOOK AT LEAST 2 1/2"; AND FOR 90° HOOK, END COVER BEYOND OUTSIDE END OF HOOK AT LEAST 2".

** UNCOATED REINFORCEMENT

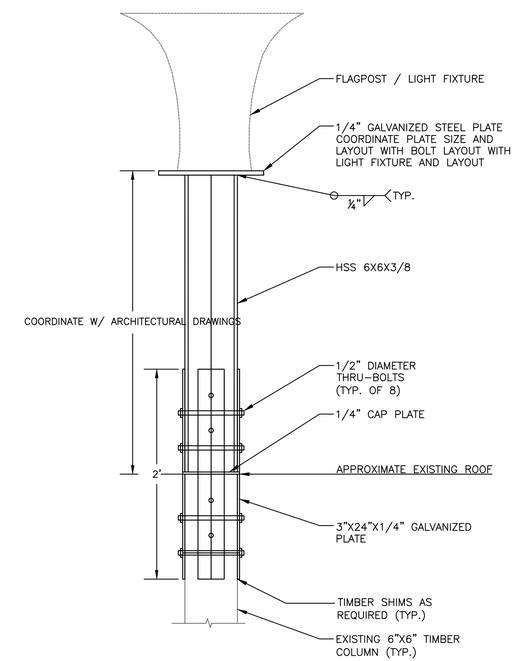

B DCV-S-17 DETAIL SCALE: 1 1/2" = 1'-0"

CONSULTANT INFORMATION

Savin Engineers, P.C.

CONSULTANT SEAL

REVISION NUMBER	DATE	MADE BY	APP'D BY	REVISION

RECORD DRAWING CERTIFICATION

☐ AS BUILT – CHANGES AS NOTED ☐ AS BUILT – NO CHANGES

CONTRACTOR: NAME / SIGNATURE / TITLE / DATE

PROJECT COORDINATOR: NAME / SIGNATURE / TITLE / DATE

WESTCHESTER COUNTY, NEW YORK
DEPARTMENT OF PUBLIC WORKS AND TRANSPORTATION
DIVISION OF ENGINEERING

INFRASTRUCTURE REHABILITATION - PHASE 3
PLAYLAND PARK, RYE, NEW YORK
DRAGON COASTER VENDORS
PART PLAN AND SECTIONS

CONTRACT NUMBER	22-523
SHEET NUMBER	DCV-S-17
DWG NO.:	
SCALE:	AS SHOWN
DATE:	8/23/2022
DPW FILE NUMBER	1-118-S-1208-0
REV. NO.	0

Drawing Name: G:\SavinAutocad\2060\25-Playland-Mega-3\S\DCVS-1004.dwg
Reref: Projectname: 211001F02 Comments: ----
Printed by: GNicolais Date: 19 August 2022 4:18 PM Designed by: ----
Xrefs: [TB_24X36_WestchesterCo_3.dwg] [TSG-SVLOGO.dwg] [TW-DM-08.dwg] [DCV-A-013.dwg]

FIRE PROTECTION SAFETY NOTES:

1. SPECIAL PRECAUTION SHALL BE TAKEN BY THE CONTRACTOR SO THAT EQUIPMENT OF THIS APPLICATION AND ITS INSTALLATION WILL NOT AFFECT THE FOLLOWING: EGRESS TO AND FROM THE BUILDING. FIRE SAFETY OR CREATE A FIRE HAZARD. STRUCTURAL SAFETY OF THE BUILDING. ACCUMULATION OF DUST AND DEBRIS. (THE CONTRACTOR SHALL LEAVE THE SITE BROOM CLEANED EACH DAY.)

FIRE PROTECTION GENERAL NOTES:

1. DIMENSIONS, LOCATIONS AND SIZES INDICATED ON THE PLANS AND THE ELEVATION ARE APPROXIMATE AND SHALL BE VERIFIED BY FIELD INSPECTION BY THE CONTRACTOR.

2. SOME EXISTING PIPE AND EQUIPMENT IS SHOWN FOR CLARIFICATION OF THIS CONTRACT, BUT MUST BE PROTECTED BY THE CONTRACTOR.

3. NO WORK SHALL BE INITIATED UNTIL A WORK PERMIT IS OBTAINED BY THE CONTRACTOR AND A SAFETY PLAN IS SUBMITTED AND IS APPROVED.

4. CONTRACTOR IS RESPONSIBLE FOR OBTAINING ALL PERMITS, EQUIPMENT USE PERMITS, ALL INSPECTION APPROVALS, AND LETTER OF COMPLETION FROM THE DEPARTMENT OF BUILDINGS FOR WORK UNDER THIS CONTRACT AS APPLICABLE.

5. ANY EXISTING MATERIALS, PIPING, ETC., NOT INDICATED FOR DEMOLITION WHICH ARE REMOVED BY THE CONTRACTOR IN ORDER TO INSTALL NEW WORK SHALL BE REINSTALLED BY THE CONTRACTOR. IF EXISTING WORK IS DAMAGED IT SHALL BE REPLACED AT THE CONTRACTOR'S EXPENSE. ALL SURFACES OR FINISHES THAT ARE DAMAGED OR OTHERWISE AFFECTED BY WORK OF THIS CONTRACT SHALL BE PATCHED, REPAIRED, PAINTED OR REPLACED TO MATCH THE PRE-EXISTING CONDITION AND THE NEW WORK.

6. CONTRACTOR MAY PROPOSE ALTERNATE ROUTING IN DIFFICULT AREAS WHERE REPLACEMENT IN KIND IS NOT PRACTICAL. ANY AND ALL ALTERNATE ROUTING IS SUBJECT TO PRIOR REVIEW AND APPROVAL BY THE ENGINEER.

7. A FIRE WATCH SHALL BE PROVIDED WHEN SPRINKLER COVERAGE IS IMPACTED TO MAINTAIN BUILDING OPERATIONS OR AS REQUIRED.

FIRE PROTECTION SYMBOL LIST

— — — — — FS DRY— —	NEW DRY SPRINKLER PIPING
— — — — — DRY(E) —	EXISTING TO REMAIN DRY SPRINKLER PIPING
○	NEW UPRIGHT SPRINKLER HEAD
○E	EXISTING UPRIGHT SPRINKLER HEAD
●	NEW CONCEALED PENDENT SPRINKLER HEAD-ORDINARY TEMPERATURE
◀	NEW SIDEWALL SPRINKLER HEAD-ORDINARY TEMPERATURE
	SPRINKLER DRY PIPE VALVE
	FIRE HOSE CABINET
	SIAMESE CONNECTION
	CHECK VALVE
	CHECK VALVE W/ ALARM
	WATER MOTOR ALARM BELL
⊗	PIPE RISER
	PIPE DROP
	PIPE UP
	POINT OF CONNECTION
	POINT OF DISCONNECTION
	PREACTION 6" BELL
	SOLENOID VALVE
	OS & Y VALVE
#	REVISION SYMBOL
F#	REFER TO SUPPLEMENTAL FIGURE INDICATED BY NUMBER (I.E. F2 REFERS TO FIGURE 2)
XXX / X	EQUIPMENT TAG / EQUIPMENT NUMBER
X / X-XXX	DETAIL TAG/ CALL OUT TAG / FIRE PROTECTION SHEET NUMBER

SHOP DWGS/EQUIPMENT SUBMITTALS

THE CONTRACTOR MUST SUBMIT ANY EQUIPMENT ALTERNATES 2 WEEKS PRIOR TO BIDS DUE FOR REVIEW AND COMMENTS. ALTERNATES MUST BE ACCEPTED BY LIRO ENGINEERS, INC., THE ARCHITECT, AND THE OWNER PRIOR TO INCLUSION IN BID. THE CONTRACTOR IS RESPONSIBLE TO COORDINATE EQUIPMENT ALTERNATES WITH OTHER TRADES AND MAKE ADJUSTMENTS TO THE MECHANICAL SYSTEMS, AS REQUIRED, TO ACCOMMODATE THESE NEW ALTERNATES.

THE CONTRACTOR IS RESPONSIBLE TO SUBMIT ALL OF THE FOLLOWING ITEMS FOR REVIEW/APPROVAL BY NO MORE THAN 3 WEEKS AFTER THE CONTRACTOR'S CONTRACT/BID HAS BEEN AWARDED. ALL SUBMITTALS MUST BE SENT TOGETHER AS A **SINGLE PACKAGE** WITH MANUFACTURER'S SPECIFIC MODELS AND SPECIFICATIONS OUTLINED TO MATCH THE SCHEDULED REQUIREMENTS. EACH SUBMITTAL MUST BE LABELED WITH THE UNIT DESIGNATION USED WITHIN THIS DRAWING SET. IF THE SUBMITTAL PACKAGE IS FOUND TO BE INCOMPLETE UPON RECEIPT, THE PACKAGE WILL BE HELD AND WILL NOT BE REVIEWED UNTIL THE REMAINDER OF THE PACKAGE IS RECEIVED. SIX (6) HARD COPIES OF THE SUBMITTAL PACKAGE MUST BE SENT TO LIRO ENGINEERS, INC. DIGITAL SHOP DRAWING SUBMISSIONS ARE ACCEPTABLE.

SCOPE OF WORK:

1. THE INSTALLATION OF NEW DRY FS EQUIPMENT.

2. PROPOSED FIRE SPRINKLER HEAD LOCATIONS AND PIPING ARE AS NOTED ON PLANS. EXACT PIPING FROM THE FIRE SPRINKLER MAIN TO ALL HEADS IS TO BE COORDINATED AND HYDRAULICALLY CALCULATED BY THE F.S.C. & SUBMITTED TO THE ENGINEER FOR APPROVAL.

NOTE: THIS SCOPE OF WORK DESCRIPTION IS PROVIDED TO GIVE AN OVERALL "MACRO" DESCRIPTION OF THIS PROJECT. F.S.C. IS RESPONSIBLE TO REVIEW ALL ENGINEERING AND ARCHITECTURAL DRAWINGS AND VISIT THE SITE IF NEEDED, PRIOR TO SUBMISSION OF BID.

SPRINKLER HEAD SCHEDULE

	MANUFACTURER	MODEL	DESCRIPTION	K-FACTOR	QUANTITY
●	RELIABLE	F1FR	DRY ORDINARY CONCEALED SPRINKLE HEAD	5.6	8
▶	TYCO	SW-20	DRY ORDINARY SIDEWALL SPRINKLER HEAD	11.2	2

ABBREVIATION

ACV	ALARM CHECK VALVE
B.O.P	BOTTOM OF PIPE
(E)	EXISTING TO REMAIN
F.S.C.	FIRE SPRINKLER CONTRACTOR
P.C	PLUMBING CONTRACTOR
TYP	TYPICAL
W/	WITH
NYS	NEW YORK STATE
U/P	UNDERGROUND PIPING
W	WATER

DRAWING NOTATIONS

	DRAWING NOTE TAB
	RISER DESIGNATION
	POINT OF CONNECTION
	POINT OF DISCONNECTION

DESIGN CRITERIA

1. AREA OF APPLICATION = 1950 SQ. FT

2. OCCUPANCY CLASSIFICATION = ORDINARY HAZARD GROUP 2

3. MAXIMUM COVERAGE PER SPRINKLER HEAD = 130 SQ. FT

4. DESIGN DENSITY = 0.20 GPM/SQ. FT

5. NUMBER OF SPRINKLER HEADS WITHIN AREA OF APPLICATION = 26

6. "K" FACTOR OF SPRINKLER HEADS = 5.6

7. DESIGN CRITERIA REQUIREMENTS BASED ON:
   - 2020 BUILDING CODE OF NEW YORK STATE
   - 2016 NFPA 13

ORDINARY HAZARD PIPE SCHEDULE

STEEL		COPPER	
1IN.	2 SPRINKLERS	1IN.	2 SPRINKLERS
1 1/4 IN.	3 SPRINKLERS	1 1/4 IN.	3 SPRINKLERS
1 1/2IN.	5 SPRINKLERS	1 1/2IN.	5 SPRINKLERS
2 IN.	10 SPRINKLERS	2 IN.	12 SPRINKLERS
2 1/2 IN.	20 SPRINKLERS	2 1/2 IN.	25 SPRINKLERS
3 IN.	40 SPRINKLERS	3 IN.	45 SPRINKLERS
3 1/2 IN.	65 SPRINKLERS	3 1/2 IN.	75 SPRINKLERS
4 IN.	100 SPRINKLERS	4 IN.	115 SPRINKLERS
5 IN.	160 SPRINKLERS	5 IN.	180 SPRINKLERS
6 IN.	275 SPRINKLERS	6 IN.	300 SPRINKLERS
8 IN.	SEE SECTION 8.2	8 IN.	SEE SECTION 8.2

FOR SI UNITS, 1 IN. = 25.4 MM.

MAX DISTANCE BETWEEN HANGERS (FT.-IN.)

	NOMINAL PIPE SIZE (IN.)											
	3/4	1	1 1/4	1 1/2	2	2 1/2	3	3 1/2	4	5	6	8
STEEL PIPE EXCEPT THREADED LIGHTWALL	N/A	12-0	12-0	15-0	15-0	15-0	15-0	15-0	15-0	15-0	15-0	15-0
THREADED LIGHTWALL STEEL PIPE	N/A	12-0	12-0	12-0	12-0	12-0	12-0	N/A	N/A	N/A	N/A	N/A
COPPER TUBE	8-0	8-0	10-0	10-0	12-0	12-0	12-0	15-0	15-0	15-0	15-0	15-0

CODE REFERENCE

2020 NEW YORK STATE BUILDING CODE
2016 NFPA 13

FIRE PROTECTION NOTES

1. THE DRAWINGS SHOW THE LAYOUT OF THE SYSTEM AND INDICATE THE APPROXIMATE LOCATIONS OF EQUIPMENT AND PIPING. CONTRACTOR IS CAUTIONED NOT TO SCALE THE DRAWINGS. THE PIPING SHALL BE RUN APPROXIMATELY IN THE AREAS AS INDICATED ON THE DRAWINGS, [HOWEVER, TO THE ARRANGEMENT OF THE PIPING SYSTEMS AS MAY BE REFERENCED WITH WORK OF OTHER TRADES]. CONTRACTOR SHALL REVIEW AND COORDINATE WITH STRUCTURAL, ELECTRICAL AND MECHANICAL DRAWINGS, PARTITIONS, STRUCTURAL MEMBERS, ETC. ARE DESIGNED TO BE FURRED OR CLOSED IN AND TO INCLUDE ROUGH-IN PIPING. CONTRACTOR SHALL FURNISH ALL OFFSETS, ADDITIONAL FITTINGS, ETC. WHETHER SHOWN ON DRAWINGS OR NOT, AS REQUIRED TO MEET INSTALLATION CONDITIONS.

2. CONTRACTOR IS TO COMPLY WITH LATEST NFPA AND N.Y.S. CODES, AND COORDINATE HIS WORK WITH OTHER TRADES AND MAKE NECESSARY ADJUSTMENTS.

3. CONTRACTOR IS TO PREPARE SHOP DRAWINGS FOR ENGINEERS REVIEW AFTER MAKING A COMPLETE FIELD SURVEY.

4. CONTRACTOR IS TO REPORT ANY CONDITION REQUIRING CHANGES FROM PLANS TO ENGINEER PRIOR TO STARTING WORK.

5. BRANCH LINES AND MAINS (1 1/2" OR LESS) - SCHEDULE 40 FM APPROVED

6. BRANCH LINES AND MAINS (2" OR LARGER) - THINWALL (THICKNESS LESS THEN SCHEDULE 40 MORE THEN SCHEDULE 10 & FM APPROVED)

7. CONTRACTOR IS TO PERFORM A HYDROSTATIC TEST FOR 2 HRS. @ 200 PSI WITH NO LEAKAGE AND PROVIDE A TEST CERTIFICATE TO ENGINEER

8. CONTRACTOR IS TO EMPLOY EXPERIENCED WORKMEN WHO ARE TO FAMILIARIZE THEMSELVES WITH THE BUILDING AND OBSERVE SAFETY REQUIREMENTS.

9. CONTRACTOR TO ADJUST HEAD LOCATION TO COORDINATE WITH LIGHTS, DUCTS, ETC.

10. PERMIT FROM LOCAL AUTHORITY, TO BE OBTAINED BY CONTRACTOR.

11. ALL WORK TO BE APPROVED BY OWNERS ENGINEER, STATE AUTHORITIES HAVING JURISDICTION AND MUNICIPAL FIRE, PLUMBING, BUILDING AND WATER DEPARTMENTS.

12. U.L. AND/OR FM APPROVED EQUIPMENT TO BE USED.

13. WORK TO BE IN ACCORDANCE WITH MUNICIPAL WATER DEPT. RULES

14. SYSTEM IS TO BE MAINTAINED AND TESTED BY THE OWNER OR HIS AGENT IN ACCORDANCE WITH APPLICABLE LOCAL AND STATE CODES AND IN CONFORMANCE WITH NFPA 13A, LATEST EDITION.

15. IF BUILDING OCCUPANCY OR CONSTRUCTION CHANGES, THE SPRINKLER SYSTEM IS TO BE UPDATED ACCORDINGLY BY THE OWNER OR HIS AGENT.

16. CONTRACTOR IS TO NEATLY CUT AND PATCH IN A FIRST CLASS WORKMANLIKE MANNER, ALL HOLES AND PENETRATIONS IN WALLS, CEILINGS, FLOORS, PARTITIONS, ETC.

17. THE ENGINEER IS NOT RETAINED FOR SUPERVISION.

18. THE INSTALLATION OF THIS SYSTEM WILL REQUIRE THE CLOSING OF ONE OR MORE FIRE PROTECTION CONTROL VALVES. THESE VALVE CLOSURES SHOULD BE CLOSELY COORDINATED WITH THE OWNERS WHO SHOULD CONTACT THE LOCAL FIRE DEPARTMENT, INSURANCE INTERESTS, ETC. PRIOR TO VALVE CLOSURES.

19. ACTUAL DESIGN DENSITY MAY EXCEED STANDARDS, HOWEVER, IT IS A MINIMUM TO BE USED BY THE CONTRACTOR.

20. ALL ALARMS RELATING TO THE SPRINKLER SYSTEM SHOULD BE ACTIVATED UPON PLACING THE SPRINKLER SYSTEM IN SERVICE.

21. THE INSTALLATION COMPONENTS, SIZING, SPACING, MATERIALS LOCATION CLEARANCES, POSITION AND TYPE OF SYSTEM SHALL CONFORM TO NFPA 13 AND NYS UNIFORM FIRE PREVENTION BUILDING CODE LATEST EDITION.

22. SPRINKLERS SHALL BE PROTECTED AGAINST FREEZING AND INJURY AS PER NFPA CODE.

23. INSPECTION AND TESTS OF SPRINKLER SYSTEM SHALL BE CONDUCTED AS SPECIFIED IN NFPA CODE.

24. WATER SUPPLY TEST PIPES AND GAUGES SHALL BE PROVIDED AS SPECIFIED IN CHAPTER 2-9 OF NPPA 13.

25. PIPING SPECIFICATIONS, PIPE SCHEDULES, SYSTEM TEST PIPES, PROTECTION AGAINST CORROSION, DAMAGE FITTINGS, VALVES, HANGERS, SPRINKLERS, GUARDS AND SHIELDS SHALL BE IN ACCORDANCE WITH CHAPTER 3 AND CHAPTER 8 OF NFPA 13, LATEST EDITION. PIPING SHALL BE PAINTED TO PREVENT CORROSION.

26. STOCK OF EXTRA SPRINKLERS WILL BE FURNISHED AS PER CHAPTER 3 OF NFPA 13 (REQUIRED FOR EACH TEMPERATURE RATING).

27. SPRINKLER ALARMS WILL BE IN ACCORDANCE WITH NFPA 13.

28. SPACING, LOCATION AND POSITION OF SPRINKLERS SHALL BE IN ACCORDANCE WITH CHAPTER 4 OF NFPA 13.

29. ALL PIPING PASSING THROUGH WALLS SHALL COMPLY WITH NFPA FOR FIRE PROOFING.

30. DISTANCE OF SPRINKLERS FROM HEAT SOURCES SHALL BE IN ACCORDANCE WITH TABLE 3-16.6.3 OF NFPA 13.

31. PROVIDE WATER SUPPLY LETTER WITH FLOW TEST DATA.

32. ALL PIPES PASSING THROUGH FOUNDATION WALLS TO BE PROTECTED.

33. ALL VALVES SHALL BE IDENTIFIED AS REQUIRED BY NFPA 13.

34. DRAINAGE TO CONFORM TO CHAPTER 3-11 OF NFPA 13.

35. A ONE PIECE REDUCING FITTING OF GOOD DESIGN SHOULD BE USED WHEREVER A CHANGE IS MADE IN THE SIZE OF PIPE AS PER SECTION 3-12.2.7 OF NFPA 13.

36. ALL VALVES ON CONNECTIONS TO WATER SUPPLIES AND IN SUPPLY TO SPRINKLERS SHALL BE APPROVED O.S. &Y. OR APPROVED INDICATOR TYPE WITH TAMPER SWITCHES.

37. DRAIN VALVES AND TEST VALVES SHALL BE APPROVED TYPE AS PER SECTION 3-14.1.2 OF NFPA 13.

38. HANGERS SHALL BE OF A TYPE APPROVED FOR USE WITH THE PIPE OR TUBE INVOLVED, SPRINKLER PIPING SHOULD BE SUPPORTED BY ADJUSTABLE HANGERS PER NFPA 13, SECTION 3-15.

39. PROVISIONS SHOULD BE MADE TO FACILITATE FLUSHING SYSTEM PIPING BY PROVIDING FLUSHING CONNECTIONS CONSISTING OF A CAPPED NIPPLE 4" LONG ON THE END OF THE CROSS MAIN, AS PER SECTION 3- 8.2 OF NFPA 13.

40. SPRINKLER SHALL BE AN APPROVED TYPE AS PER SECTION 3-16 OF NFPA 13.

41. TEMPERATURE RATING SHALL COMPLY WITH SEC. 3-16.6 OF NFPA 13.

42. CLEARANCES BETWEEN SPRINKLERS AND STORAGE OR PARTITIONS AS PER NFPA 13, SECTION 4-2.5

43. SPACING AND LOCATION OF SPRINKLER SHALL COMPLY WITH CHAPTER 4 NFPA 13.

44. CONTRACTOR TO COORDINATE HIS WORK WITH OTHER TRADES.

45. ONLY EXPERIENCED SPRINKLER MECHANICS TO WORK ON THE SYSTEM.

46. ALL PIPING TO BE A MINIMUM OF 1" UNLESS OTHERWISE NOTED.

47. PROVIDE SHOP DRAWINGS WITH HYDRAULIC CALCULATIONS FOR REVIEW TO LOCAL FIRE MARSHALL AND INSURANCE UNDERWRITER AND ENGINEER FOR APPROVAL PRIOR TO INSTALLATION.

48. ALL FIRE PROTECTION EQUIPMENT SHALL BE INSTALLED PER MANUFACTURER'S REQUIREMENTS/SPECIFICATIONS.

49. ALL FIRE PROTECTION EQUIPMENT SHALL BE MOUNTED ON MINIMUM 6" HIGH CONCRETE PAD UNLESS OTHERWISE NOTED (PAVER AND CINDER BLOCK IS NOT ACCEPTABLE).

50. PERMIT IS REQUIRED PRIOR TO INSTALLATION, TO INCLUDE SIGNED AND SEALED SHOP DRAWINGS, HYDRAULIC CALCULATION, SHOP DRAWINGS, MANUFACTURERS INFORMATION ON HEADS AND APPLIANCES, COMPLIANCE WITH NFPA 13 AND SECTION 903 2020 NYSBC/FC.

FIRE PROTECTION DRAWING LIST

SHEET NO.	SHEET NAME	REVISON NO.	REVISION DATE
DCV-FP-01	FIRE PROTECTION NOTES, SYMBOLS, ABBREVIATIONS, AND DRAWING LIST	0	-
DCV-FP-11	FIRE PROTECTION GROUND FLOOR DEMOLITION RCP	0	-
DCV-FP-21	FIRE PROTECTION GROUND FLOOR CONSTRUCTION RCP	0	-
DCV-FP-81	FIRE PROTECTION DETAILS	0	-

CONSULTANT INFORMATION

LiRo Engineers, Inc.
A LiRo Group Company
Syosset, N.Y. 516-214-8157[T]

CONSULTANT SEAL

STATE OF NEW YORK · FRANK F. ULLISE · No. 090111 · LICENSED PROFESSIONAL ENGINEER

REVISION NUMBER	DATE	MADE BY	APP'D BY	REVISION

RECORD DRAWING CERTIFICATION

☐ AS BUILT – CHANGES AS NOTED ☐ AS BUILT – NO CHANGES

CONTRACTOR
NAME
SIGNATURE
TITLE DATE

PROJECT COORDINATOR
NAME
SIGNATURE
TITLE DATE

WESTCHESTER COUNTY, NEW YORK
DEPARTMENT OF PUBLIC WORKS AND TRANSPORTATION
DIVISION OF ENGINEERING

INFRASTRUCTURE REHABILITATION - PHASE 3
PLAYLAND PARK, RYE, NEW YORK
DRAGON COASTER VENDORS
FIRE PROTECTION NOTES, SYMBOLS, ABBREVIATIONS & DWG LIST

CONTRACT NUMBER 22-523
SHEET NUMBER **DCV-FP-01**
DWG NO.: 460 of 664
SCALE: **AS INDICATED**
DATE: 08/23/2022
DPW FILE NUMBER **1-118-FP-1209-0**
REV. NO. 0

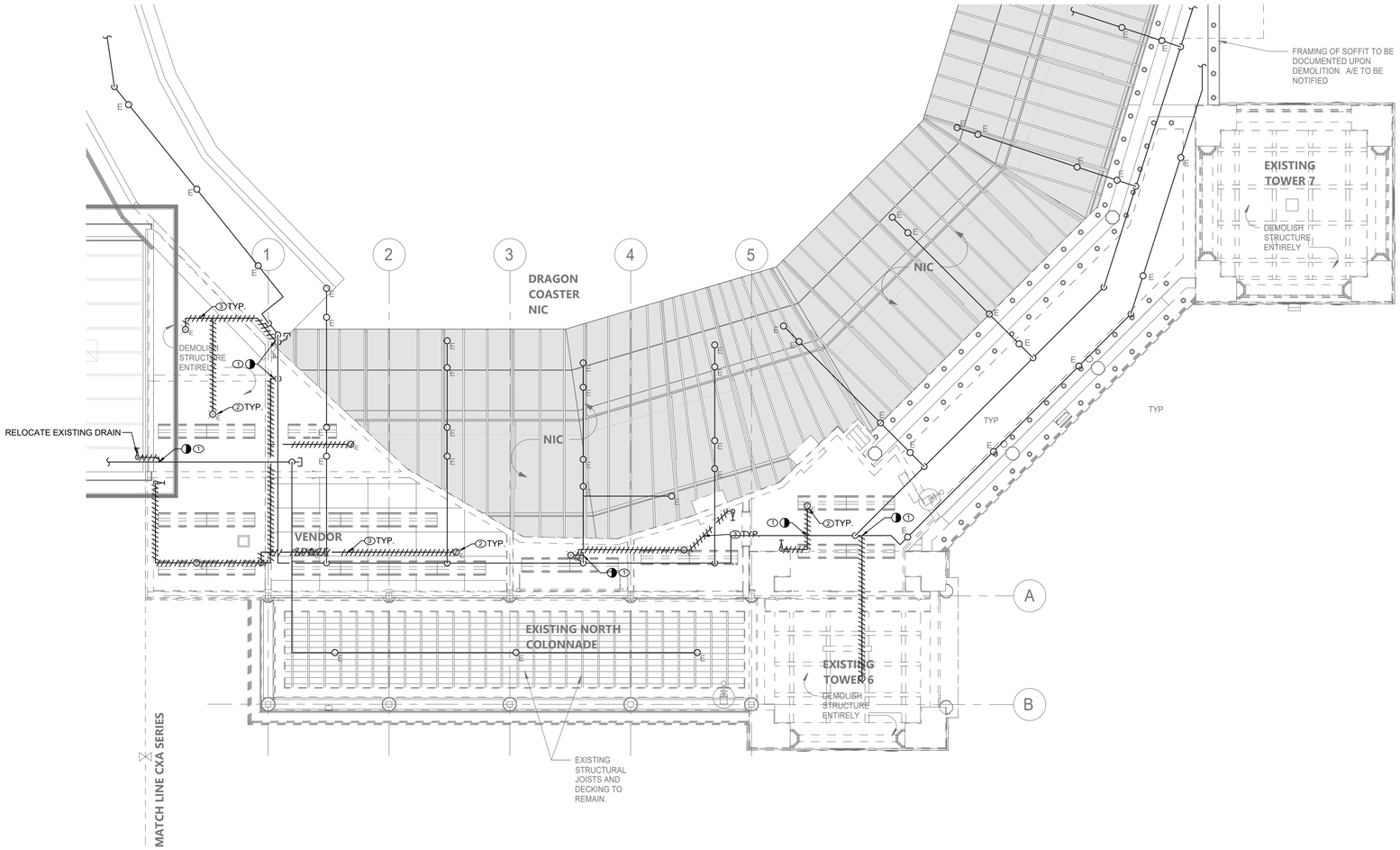

FIRE PROTECTION GROUND FLOOR DEMOLITION RCP

SCALE: 3/16" = 1'-0

SPRINKLER DEMOLITION NOTES:

1. CUT AND TEMPORARY CAP EXISTING DRY SPRINKLER PIPE FOR FUTURE CONNECTION.
2. DEMOLISH EXISTING SPRINKLER HEADS WITHIN THE DCV BUILDING AS INDICATED.
3. DEMOLISH EXISTING DRY SPRINKLER PIPING WITHIN THE DCV BUILDING AND DRAIN VALVES AS INDICATED. FIRE SERVICE PIPING, DISTRIBUTION PIPING TO DRAGON COASTER AND ACCESSORIES TO REMAIN

GENERAL NOTES:

1. COORDINATE WITH FACILITY PRIOR TO SHUTDOWN OF FIRE PROTECTION SYSTEM FOR ANY DEMOLITION AND CONSTRUCTION WORK.

2. CONTRACTOR SHALL PROVIDE FIRE WATCH AS NEEDED FOR BUILDINGS WHERE SPRINKLER COVERAGE IS IMPACTED.

3. CONTRACTOR TO COORDINATE WITH FACILITY WHEN WORKING AROUND OR ABOVE THE RIDE COMPONENTS, AND PROVIDE ALL NECESSARY MEASURES TO PROTECT THESE COMPONENTS PER THE REQUIREMENTS OF THE FACILITY.

4. CONTRACTOR SHALL PROVIDE PROTECTION OF EXISTING PIPING AND SPRINKLERS DURING RENOVATION WORK FOR DCV BUILDING. PROVIDE TEMPORARY SUPPORT AS NECESSARY TO ACCOMMODATE WORK PERFORMED BY OTHER TRADES.

CONSULTANT INFORMATION

LiRo Engineers, Inc.
A LiRo Group Company
Syosset, N.Y. 516-214-8157[T]

CONSULTANT SEAL

STATE OF NEW YORK · FRANK F. ULISSE · No. 090111-1 · LICENSED PROFESSIONAL ENGINEER

REVISION NUMBER	DATE	MADE BY	APP'D BY	REVISION

RECORD DRAWING CERTIFICATION

☐ AS BUILT – CHANGES AS NOTED ☐ AS BUILT – NO CHANGES

CONTRACTOR
NAME
SIGNATURE
TITLE DATE

PROJECT COORDINATOR
NAME
SIGNATURE
TITLE DATE

WESTCHESTER COUNTY, NEW YORK
DEPARTMENT OF PUBLIC WORKS AND TRANSPORTATION
DIVISION OF ENGINEERING

INFRASTRUCTURE REHABILITATION - PHASE 3
PLAYLAND PARK, RYE, NEW YORK
DRAGON COASTER VENDORS
FIRE PROTECTION FIRST FLOOR DEMOLITION RCP

CONTRACT NUMBER	22-523
SHEET NUMBER	DCV-FP-11
DWG NO.:	461 of 664
SCALE:	AS INDICATED
DATE:	08/23/2022
DPW FILE NUMBER	1-118-FP-1210-0
REV. NO.	0

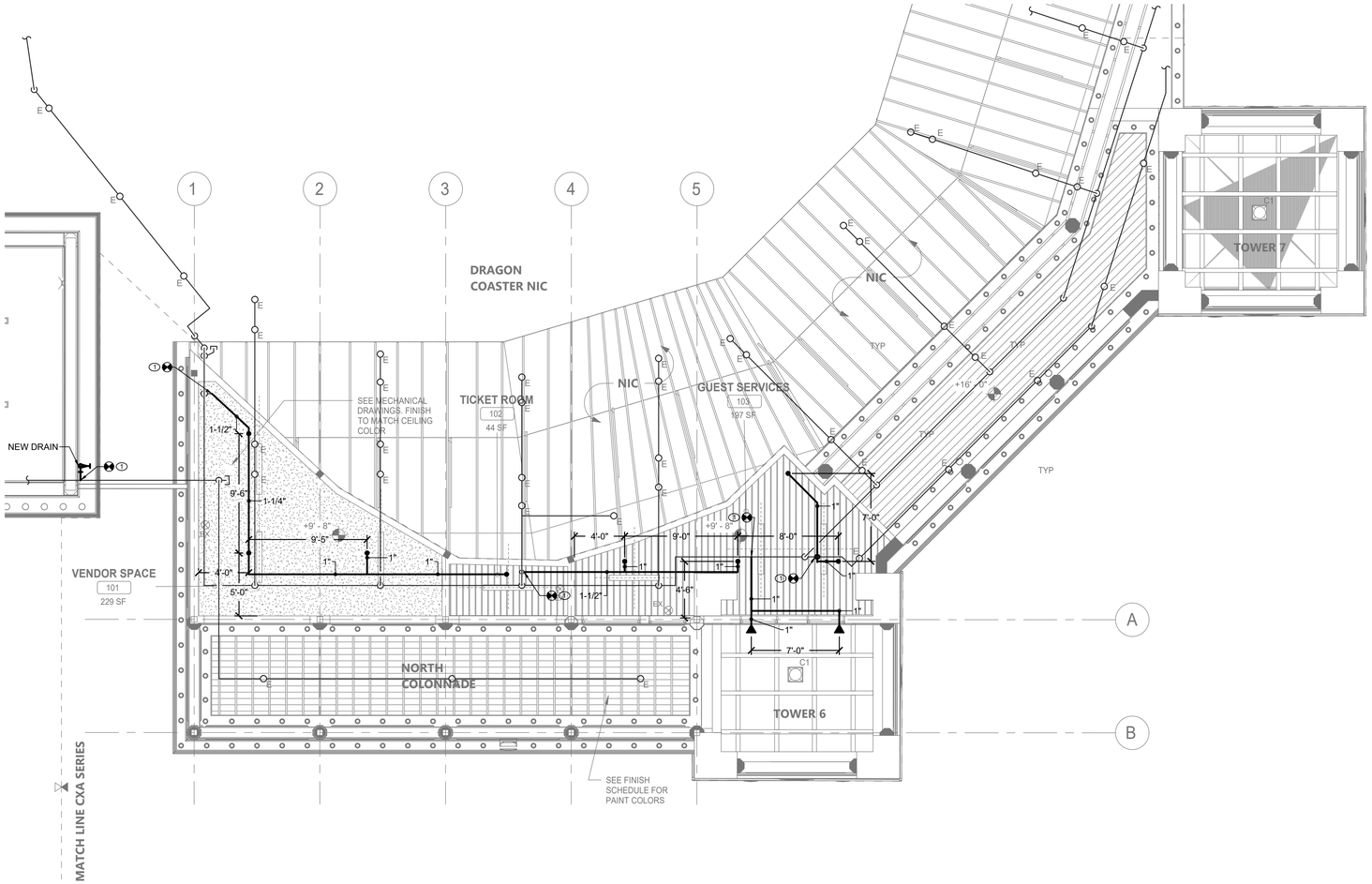

FIRE PROTECTION GROUND FLOOR CONSTRUCTION RCP

SCALE: 3/16" = 1'-0

FIRE PROTECTION CONSTRUCTION NOTES:

1. RECONNECT EXISTING DRY SPRINKLER PIPE WITH NEW.

GENERAL NOTES:

1. ALL DISTRIBUTION PIPING, SHALL BE PAINTED AS DIRECTED BY ARCHITECT. REFER TO SPECIFICATION FOR PAINT TYPE AND APPLICATION PROCEDURE.
2. COORDINATE WITH FACILITY PRIOR TO SHUTDOWN OF FIRE PROTECTION SYSTEM FOR ANY DEMOLITION AND CONSTRUCTION WORK.
3. CONTRACTOR SHALL PROVIDE FIRE WATCH AS NEEDED FOR ALL AFFECTED BUILDINGS WHILE SPRINKLER COVERAGE IS IMPACTED.
4. CONTRACTOR TO COORDINATE WITH FACILITY WHEN WORKING AROUND OR ABOVE THE RIDE COMPONENTS, AND PROVIDE ALL NECESSARY MEASURES TO PROTECT THESE COMPONENTS PER THE REQUIREMENTS OF THE FACILITY.
5. UPON COMPLETION, SYSTEM SHALL BE TESTED FOR PROPER OPERATION.
6. CONTRACTOR SHALL PROVIDE PROTECTION OF EXISTING PIPING AND SPRINKLERS DURING RENOVATION WORK FOR DCV BUILDING. PROVIDE TEMPORARY SUPPORT AS NECESSARY TO ACCOMMODATE WORK PERFORMED BY OTHER TRADES.

CONSULTANT INFORMATION

LiRo Engineers, Inc.
A LiRo Group Company
Syosset, N.Y. 516-214-8157[T]

CONSULTANT SEAL

STATE OF NEW YORK · FRANK F. ULISSE · No. 090111-1 · LICENSED PROFESSIONAL ENGINEER

REVISION NUMBER	DATE	MADE BY	APP'D BY	REVISION

RECORD DRAWING CERTIFICATION

☐ AS BUILT – CHANGES AS NOTED ☐ AS BUILT – NO CHANGES

CONTRACTOR
NAME
SIGNATURE
TITLE DATE

PROJECT COORDINATOR
NAME
SIGNATURE
TITLE DATE

WESTCHESTER COUNTY, NEW YORK
DEPARTMENT OF PUBLIC WORKS AND TRANSPORTATION
DIVISION OF ENGINEERING

INFRASTRUCTURE REHABILITATION - PHASE 3
PLAYLAND PARK, RYE, NEW YORK
DRAGON COASTER VENDORS
FIRE PROTECTION FIRST FLOOR CONSTRUCTION RCP

CONTRACT NUMBER	22-523
SHEET NUMBER	DCV-FP-21
DWG NO.:	462 of 664
SCALE:	AS INDICATED
DATE:	08/23/2022
DPW FILE NUMBER	1-118-FP-1211-0
REV. NO.	0

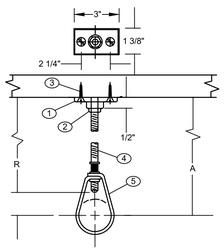

COMPONENTS

1. CLIP (CEILING FLANGE)
2. HEX NUT
3. WOOD SCREW
4. HANGER ROD
5. ADJUSTABLE HANGER RING

NFPA REQUIREMENTS / LIMITATIONS

1. NFPA 13 PERMITS THE USE OF 2 SCREW CEILING FLANGES ONLY
2. HAVING DIMENSIONS NOT LESS THAN THOSE OF NO. 18 X 1 1/2" WOOD SCREWS. DRIVE SCREWS AND NAILS ARE NOT ACCEPTABLE FASTENERS AND WOOD SCREWS ARE NOT TO BE DRIVEN.
3. FOR PIPE SIZES UP TO 2" AND IT CALLS FOR THE USE OF SCREWS

DESIGN DATA FOR CLIP HANGERS

NOMINAL PIPE SIZE	MINIMUM A DIMENSION	HANGER TAKEOUT	ROD DIAMETER	FASTENERS	
	INCHES	INCHES	INCHES	QTY	ITEMS
1/2	3 3/4	-1 1/4	3/8	1 2 1	3/8" CEILING FLANGE (CLIP) NO. 18 X 1 1/2" FLAT HEAD WOOD SCREWS 3/8" HEX NUT
3/4	3 3/4	-1 1/4	"		SEE ABOVE
1	3 3/4	-1 1/4	"		" "
1 1/4	4	-1 1/2	"		" "
1 1/2	4	-1 1/2	"		" "
2	4 1/4	-1 3/4	"		" "

1 / FP-81 PIPE HANGER DETAIL

SCALE: NOT TO SCALE

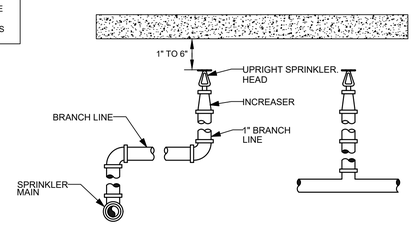

2 / FP-81 UPRIGHT SPRINKLER DETAIL

SCALE: NOT TO SCALE

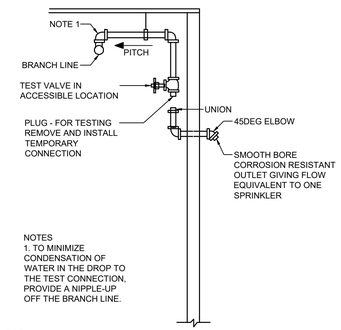

NOTES
1. TO MINIMIZE CONDENSATION OF WATER IN THE DROP TO THE TEST CONNECTION, PROVIDE A NIPPLE-UP OFF THE BRANCH LINE.

3 / FP-81 DRY PIPE TEST CONNECTION

SCALE: NOT TO SCALE

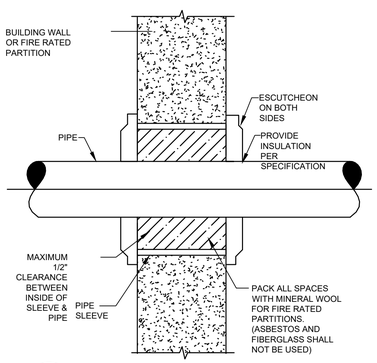

4 / FP-81 PIPE PENETRATION

SCALE: NOT TO SCALE

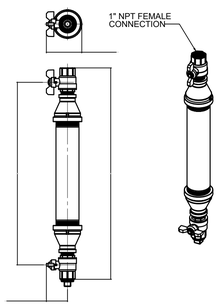

5 / FP-81 DRY SYSTEM AUXILIARY DRAIN

SCALE: NOT TO SCALE

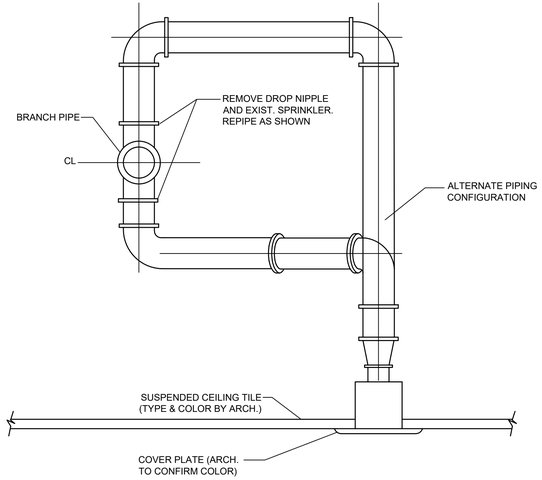

6 / FP-81 TYPICAL SPRINKLER HEAD RELOCATION

SCALE: NOT TO SCALE

CONSULTANT INFORMATION

LiRo Engineers, Inc.
A LiRo Group Company
Syosset, N.Y. 516-214-8157[T]

CONSULTANT SEAL

STATE OF NEW YORK · FRANK F. ULLOSE · No. 090111 · LICENSED PROFESSIONAL ENGINEER

REVISION NUMBER	DATE	MADE BY	APP'D BY	REVISION

RECORD DRAWING CERTIFICATION

☐ AS BUILT – CHANGES AS NOTED ☐ AS BUILT – NO CHANGES

CONTRACTOR
NAME
SIGNATURE
TITLE DATE

PROJECT COORDINATOR
NAME
SIGNATURE
TITLE DATE

WESTCHESTER COUNTY, NEW YORK
DEPARTMENT OF PUBLIC WORKS AND TRANSPORTATION
DIVISION OF ENGINEERING

INFRASTRUCTURE REHABILITATION - PHASE 3
PLAYLAND PARK, RYE, NEW YORK
DRAGON COASTER VENDORS
FIRE PROTECTION DETAILS

CONTRACT NUMBER	22-523
SHEET NUMBER	DCV-FP-81
DWG NO.:	463 of 664
SCALE:	AS INDICATED
DATE:	08/23/2022
DPW FILE NUMBER	1-118-FP-1212-0
REV. NO.	0

PLUMBING SYMBOL LIST

IDENTIFIER	DESCRIPTION
——— – ——CW	DOMESTIC COLD WATER
——— W ———	WASTE PIPING (ABOVE SLAB)
— — — - W - — — — —	WASTE PIPING (UNDER SLAB)
——— S ———	SANITARY PIPING (ABOVE SLAB)
— — — - S - — — — —	SANITARY PIPING (UNDER SLAB)
--------- V -----------	SANITARY VENT PIPING
	FIELD CONNECT
	FIELD DISCONNECT
F#	REFER TO SUPPLEMENTAL FIGURE INDICATED BY NUMBER (I.E. F2 REFERS TO FIGURE 2)
XXX / XX	EQUIPMENT TAG EQUIPMENT NUMBER
XXX / X-XXX	DETAIL TAG/CALL OUT TAG PLUMBING SHEET NUMBER

PIPING ELEMENTS/VALVING

- BACKFLOW PREVENTER (DOUBLE CHECK VALVE ASSEMBLY)
- BALL VALVE
- CAP ON END OF PIPE
- CO / CO — CLEANOUT
- FD — FLOOR DRAIN
- GATE VALVE
- HB — HOSE BIBB
- VALVE IN VALVE BOX
- PIPE DROPPING DOWN
- PIPE RISING UP
- TEE OUTLET DOWN
- TEE OUTLET UP
- VALVE IN RISE OR DROP
- NFHB — NON FREEZE HOSE BIBB IN BOX W/VACUUM BREAKER

SCOPE OF WORK

PLUMBING SCOPE OF WORK INCLUDES, BUT IS NOT LIMITED TO:

1. REMOVAL OF EXISTING WATER PIPING AND KITCHEN EQUIPMENT.

2. THE INSTALLATION OF NEW PLUMBING FIXTURES AND ALL ASSOCIATED PIPING AND ACCESSORIES.

3. THE INSTALLATION OF NEW SANITARY AND DOMESTIC WATER FUTURE CONNECTIONS.

NOTE: THIS SCOPE OF WORK DESCRIPTION IS PROVIDED TO GIVE AN OVERALL "MACRO" DESCRIPTION OF THIS PROJECT .P.C. IS RESPONSIBLE TO REVIEW ALL ENGINEERING & ARCHITECTURAL DRAWINGS & VISIT THE SITE IF NEEDED, PRIOR TO SUBMISSION OF BID.

CODE REFERENCE

2020 NEW YORK STATE BUILDING CODE
2020 NEW YORK STATE MECHANICAL CODE
2020 NEW YORK STATE PLUMBING CODE
2020 NEW YORK STATE ENERGY CONSERVATION CODE

SECTION 704
DRAINAGE PIPING INSTALLATION

704.1 SLOPE OF HORIZONTAL DRAINAGE PIPING.

HORIZONTAL DRAINAGE PIPING SHALL BE INSTALLED IN UNIFORM ALIGNMENT AT UNIFORM SLOPES. THE MINIMUM SLOPE OF HORIZONTAL DRAINAGE PIPE SHALL BE IN ACCORDANCE WITH TABLE 704.1.

TABLE 704.1
SLOPE OF HORIZONTAL DRAINAGE PIPE

SIZE (INCHES)	MINIMUM SLOPE (INCH PER FOOT)
2 1/2 OR LESS	1/4
3 TO 6	1/8
8 OR LARGER	1/16

LEED NOTES

1. ALL ADHESIVES, SEALANTS, PAINTS & COATINGS APPLIED TO THE INTERIOR OF THE BUILDING (WITHIN THE WEATHER PROOFING SYSTEM, INCLUDING WALL CAVITIES) MUST NOT EXCEED THE LEED VOC LIMITS. PROVIDE A VOC SUBMITTAL AND MSDS FOR ALL ADHESIVES, SEALANTS, PAINTS AND COATINGS TO BE APPLIED.

PLUMBING GENERAL NOTES:

1. ALL PLUMBING WORK UNDER THIS CONTRACT SHALL CONFORM TO THE LATEST EDITION OF THE PLUMBING CODE OF NEW YORK STATE (PC-NYS), THE NEW YORK STATE ENERGY CODE, AND THE REQUIREMENTS OF THE UTILITY AND THE LOCAL WATER COMPANY.
2. ALL MATERIALS SHALL BE NEW UNLESS NOTED OTHERWISE.
3. THE PLUMBING CONTRACTOR SHALL ASSUME RESPONSIBILITY FOR ALL LABOR AND MATERIALS SUPPLIED AND INSTALLED UNDER THIS CONTRACT AND SHALL GUARANTEE THE WORK PERFORMED UNDER THIS CONTRACT FOR A PERIOD OF ONE (1) YEAR FROM THE DATE OF ACCEPTANCE OF THIS WORK.
4. PLUMBING CONTRACTOR SHALL CONSULT WITH, COOPERATE AND COORDINATE WITH THE GENERAL CONTRACTOR, MECHANICAL CONTRACTOR, SPRINKLER CONTRACTOR, ELECTRICAL CONTRACTOR, ETC. IN ORDER TO MINIMIZE INTERFERENCES BETWEEN TRADES DURING PERFORMANCE OF THIS WORK.
5. THE PLUMBING CONTRACTOR SHALL PREPARE AND FILE ALL REQUIRED PLANS AND PERMITS WITH THE LOCAL AUTHORITIES. PC SHALL PAY THE FILING FEES AS REQUIRED. PC SHALL OBTAIN ALL APPROVALS AND SHALL PAY FOR ALL WORK PERMITS, INSPECTIONS AND SIGN-OFFS AS REQUIRED TO EXECUTE THIS WORK IN A MANNER IN CONFORMANCE WITH THE CODES AND AUTHORITIES HAVING JURISDICTION.
6. THE PLUMBING CONTRACTOR SHALL PERFORM ALL TESTS AND ARRANGE FOR ALL INSPECTIONS FOR WORK UNDER HIS CONTRACT AS REQUIRED BY LAW AND SHALL SUPPLY ALL CERTIFICATES OF INSURANCE AS REQUIRED BY THE LAW AND THE OWNER. REFER TO SECTION 107 (INSPECTIONS) OF THE PC-NYS.
7. THE PLUMBING CONTRACTOR SHALL MAKE ALL FINAL CONNECTIONS TO ALL PLUMBING EQUIPMENT REGARDLESS WHETHER ILLUSTRATED HEREIN WITHOUT ANY ADDITIONAL COSTS TO THE OWNER.
8. PLUMBING CONTRACTOR SHALL VISIT THE SITE & BECOME FAMILIAR WITH THE EXISTING CONDITIONS, INCLUDING THE SIZE OF CONNECTIONS, ROUGHING DIMENSIONS, ETC. BEFORE SUBMITTING A QUOTATION FOR THE WORK.
9. PLUMBING CONTRACTOR SHALL PERFORM ALL CUTTING, EXCAVATION, BACKFILLING, ROUGH & FINISH PATCHING AS PER THE SPECIFICATIONS AS REQUIRED FOR THE INSTALLATION OF THE WORK, UNLESS NOTED OTHERWISE.
10. ALL CONNECTIONS TO NEW AND/OR EXISTING EQUIPMENT SHALL BE SIZED AND INSTALLED IN ACCORDANCE WITH THE MANUFACTURER'S INSTRUCTIONS.
11. IT IS THE INTENT OF THIS CONTRACT THAT THE COMPLETED WORK BE FULLY OPERATIONAL.
12. ALL PIPE HANGERS AND SUPPORTS SHALL BE INSTALLED AT INTERVALS AND BE FABRICATED OF MATERIALS AS REQUIRED BY THE PC-NYS.
13. ALL NEW PLUMBING FIXTURES SHALL BE INSTALLED WITH ANGLE STOP VALVES IN THE SUPPLY LINES SERVING THE FIXTURE.
14. ALL NEW EXPOSED WATER AND WASTE PIPING SERVING THE FIXTURES SHALL BE CHROME PLATED AND SHALL HAVE CHROME PLATED ESCUTCHEONS RIGIDLY ATTACHED TO THE PIPING AT THE POINT OF WALL OR FLOOR PENETRATIONS.
15. PLUMBING CONTRACTOR SHALL SUBMIT SHOP DRAWINGS FOR ALL NEW PLUMBING FIXTURES AND EQUIPMENT TO BE SUPPLIED AND INSTALLED UNDER THIS CONTRACT FOR APPROVAL BEFORE INSTALLATION OF SAME.
16. WATERPROOF PIPE SLEEVES SHALL BE INSTALLED AT ALL PENETRATIONS THROUGH EXTERIOR WALLS. PIPE SLEEVES SHALL BE INSTALLED AT ALL WALL PENETRATIONS THROUGH INTERIOR WALLS AND FLOORS.
17. WATER HAMMER ELIMINATORS (APPROVED - FIELD FABRICATED OR MANUFACTURED) SHALL BE INSTALLED AT ALL RUN OUTS IN HOT AND/OR COLD WATER LINES SERVING TOILET ROOMS AND OTHER AREAS WHICH INCORPORATE "RAPID - ACTION" VALVES SUCH AS FLUSHOMETERS, SOLENOID VALVES, ETC.
18. ALL PIPING SHALL BE TESTED AT A MINIMUM PRESSURE OF 1-1/2 TIMES THE MAXIMUM OPERATING PRESSURE UNLESS OTHERWISE NOTED ON THE DOCUMENTS OR THE PLUMBING CODE AND IN ACCORDANCE WITH THE UTILITY REQUIREMENTS.
19. ALL REMOVALS PERFORMED UNDER THIS CONTRACT SHALL INCLUDE REMOVAL OF ALL DEBRIS AND DISPOSAL AT AN APPROPRIATE SITE.
20. ALL LAVATORIES DESIGNED FOR USE BY PERSONS CONFINED TO WHEELCHAIRS SHALL HAVE THE HOT & COLD WATER SERVICES, AS WELL AS THE TRAP, RECESSED & INSULATED IN ACCORDANCE WITH ADA REQUIREMENTS.
21. REFER TO THE ARCHITECTURAL PLANS FOR ALL STRUCTURAL DIMENSIONS.
22. ALL WORK TO BE COORDINATED WITH OTHER TRADES.
23. ALL PIPING PENETRATIONS TO BE SEALED AROUND WITH "NELSON" FIRE SEAL.
24. ALL WATER SERVICE PIPING WITHIN THE BUILDING IS TO BE INSULATED IN ACCORDANCE WITH ALL NEW YORK STATE PLUMBING CODE (NYS-PC) AND NYS ENERGY CODES.
25. ALL PLUMBING FIXTURES TO BE INSTALLED AS PER FACTORY RECOMMENDATIONS.
26. ALL PLUMBING FIXTURES TO BE TRAPPED, VENTED AND PROVIDED WITH AIR SHOCKS WHEN REQUIRED.
27. PLUMBING FIXTURES SHALL COMPLY WITH "WATER CONSERVATION" REQUIREMENT AS DETAILED IN THE NYS-PC.
28. GC IS RESPONSIBLE TO SUBMIT APPLICATION AND TAP FEES TO LOCAL WATER AUTHORITY AND HAVE OWNER FILL OUT APPLICATION UPON COMPLETION OF PLUMBING ROUGH-IN INSPECTION.
29. ALL WATER AND HORIZONTAL STORM DRAIN PIPING INCLUDING ROOF DRAIN BODY SHALL BE INSULATED.
30. FLOOR DRAINS AND FLOOR CLEAN-OUTS SHALL BE SET LEVEL WITH FINISHED FLOORS.
31. ALL PIPE DIMENSIONS ARE INSIDE CLEAR.
32. ALL PLUMBING FIXTURES TO HAVE ISOLATION VALVES.
33. P.C. IS RESPONSIBLE TO ADJUST HOT WATER HEATER (WH) TEMPERATURE TO ENSURE A TEMPERATURE RANGE OF 110°F TO 120°F AT THE INDIVIDUAL FIXTURE OUTPUT. P.C. MUST ENSURE A TEMPERATURE OF 120° F MAXIMUM AT THE FIXTURES TO PREVENT SCALDING.
34. BUILDING DOMESTIC WATER DEMAND & SIZING IS CALCULATED FROM NYS-PC SECTION 603, 604 & APPENDIX E.
35. BUILDING SANITARY DEMAND & SIZING IS CALCULATED FROM NYS-PC SECTIONS 709 AND 710.
36. ALL DFU CALCULATIONS ARE BASED OFF OF TABLE 709.1 OF THE NYS-PC.
37. ALL SANITARY WATER PIPING SHALL BE PITCHED IN ACCORDANCE WITH NYS-PC SECTION 704 BASED ON TABLE 704.1 SLOPE OF HORIZONTAL DRAINAGE PIPE.
38. ALL VENT SIZING IS BASED OFF OF SECTION 916 OF THE NYS PLUMBING CODE.
39. ALL PLUMBING EQUIPMENT SHALL BE INSTALLED PER MANUFACTURER'S REQUIREMENTS/SPECIFICATIONS.

ABBREVIATIONS:

AD	ACCESS DOOR
BFP	BACKFLOW PREVENTER
CO	CLEAN OUT
CW	COLD WATER
DCV	DOUBLE CHECK VALVE
DFU	DRAINAGE FIXTURE UNIT
DPCO	DECK PLATE CLEAN OUT
FC	FIELD CONNECT
FD	FLOOR DRAIN
FFD	FUNNEL FLOOR DRAIN
FU	FIXTURE UNIT
HW	HOT WATER
HWR	HOT WATER RETURN
IAW	IN ACCORDANCE WITH
IWFD	INDIRECT WASTE FUNNEL DRAIN
LAV	LAVATORY
JS	JANITOR'S SINK
NC	NORMALLY CLOSED
NO	NORMALLY OPEN
NYS-PC	NEW YORK STATE PLUMBING CODE
RD	ROOF DRAIN
S	SANITARY
SD	STORM DRAIN
TMV	THERMOSTATIC MIXING VALVE
U.O.N.	UNLESS OTHERWISE NOTED
UR	URINAL
V	VENT
WC	WATER CLOSET
PC	PLUMBING CONTRACTOR
MC	MECHANICAL CONTRACTOR
TYP.	TYPICAL
VIF	VERIFY IN FIELD
WCO	WALL CLEAN OUT
WFU	WATER FIXTURE UNITS
(N)	NEW
(E)	EXISTING
(D)	DEMO

THE ABBREVIATIONS ARE SHOWN FOR GENERAL REFERENCE ONLY. THE PRESENCE OF AN ABBREVIATION ON THIS LIST DOES NOT IMPLY ITS USE ON THIS PROJECT. REFER TO DRAWINGS FOR SPECIFIC ABBREVIATIONS USED.

FLOOR DRAIN SCHEDULE

TAG	TYPE	MANUFACTURER	MODEL	SERVICE
FD-1	ADJUSTABLE	ZURN	FD-2320-R5	ALL SPACES

NOTES:
1. PROVIDE THE FOLLOWING FOR FD-1; CHORME PLATED STRAINER ASSEMBLY, 6" NICKEL HEAD ASSEMBLY, AND VANDAL PROOF.
2. PROVIDE BARRIER-TYPE TRAP SEAL PROTECTION DEVICE ZURN Z1072 OR APPROVED EQUAL.

CLEANOUT SCHEDULE

TAG	TYPE	MANUFACTURER	MODEL
CO	ADJUSTABLE DECK PLATE CLEAN OUT	WATTS	CO-1200-R

REDUCED PRESSURE ZONE VALVE SCHEDULE

TAG	MANUFACTURER	MODEL	LOCATION	SIZE (INCH)	PRESSURE DROP (PSI)
RPZ-1	WATTS	009LF	FOOD VENDOR CXF BLDG	3/4	N/A

NOTES: LEAD FREE
PROVIDE AIR GAP AND DRAINAGE PIPING FOR RELIEF VALVE AND DIRRECT TO OUTSIDE.

PLUMBING DRAWING LIST

SHEET NO.	SHEET NAME	REVISON NO.	REVISION DATE
DCV-P-01	PLUMBING NOTES, SYMBOLS, ABBREVIATIONS AND DRAWING LIST	0	-
DCV-P-11	PLUMBING FIRST FLOOR AND ROOF DEMOLITION PLANS	0	-
DCV-P-21	PLUMBING FIRST FLOOR AND ROOF CONSTRUCTION PLAN	0	-
DCV-P-81	PLUMBING DETAILS	0	-

CONSULTANT INFORMATION

LiRo Engineers, Inc.
A LiRo Group Company
Syosset, N.Y. 516-214-8157[T]

CONSULTANT SEAL

STATE OF NEW YORK · FRANK F. ULISSE · No. 090111-1 · LICENSED PROFESSIONAL ENGINEER

REVISION NUMBER	DATE	MADE BY	APP'D BY	REVISION

RECORD DRAWING CERTIFICATION
☐ AS BUILT – CHANGES AS NOTED ☐ AS BUILT – NO CHANGES

CONTRACTOR
NAME
SIGNATURE
TITLE DATE

PROJECT COORDINATOR
NAME
SIGNATURE
TITLE DATE

WESTCHESTER COUNTY, NEW YORK
DEPARTMENT OF PUBLIC WORKS AND TRANSPORTATION
DIVISION OF ENGINEERING

INFRASTRUCTURE REHABILITATION - PHASE 3
PLAYLAND PARK, RYE, NEW YORK
DRAGON COASTER VENDORS
PLUMBING NOTES, SYMBOLS, ABBREVIATIONS AND DRAWING LIST

CONTRACT NUMBER: 22-523
SHEET NUMBER: **DCV-P-01**
DWG NO.: 464 of 664
SCALE: **AS INDICATED**
DATE: 08/23/2022
DPW FILE NUMBER: **1-118-P-1213-0**
REV. NO.: 0

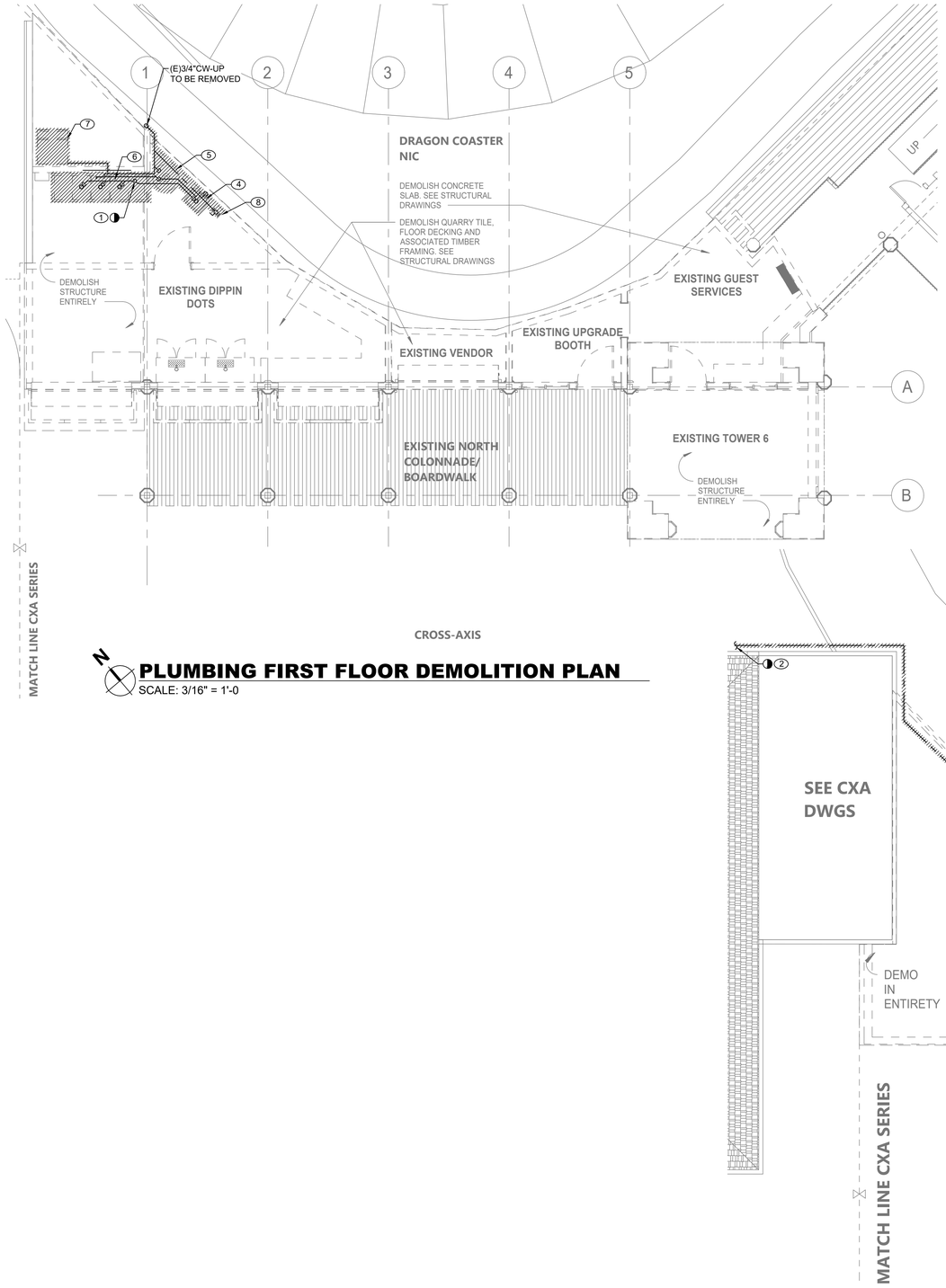

PLUMBING FIRST FLOOR DEMOLITION PLAN

SCALE: 3/16" = 1'-0

PLUMBING DEMOLITION NOTES:

1. CONTRACTOR TEMPORARILY CUT AND CAP EXISTING SANITARY PIPING BELOW SLAB. REMOVE ALL SANITARY, VENT, COLD, AND HOT WATER PIPING FROM ABANDONED PLUMBING FIXTURES. EXACT LOCATION VERIFY ON FIELD.
2. CONTRACTOR REMOVE EXISTING 3/4" DOMESTIC WATER LINE BACK TO SERVICE. REFER TO CXA BUILDING FOR CONTINUATION OF PIPING REMOVAL.
3. DISCONNECT COLD WATER LINE AND REMOVE ALL ASSOCIATED PIPING WITH SUPPORTS FOR DRAGON HEADS LOCATED ABOVE TOWERS.
4. CONTRACTOR TO REMOVE EXISTING HAND SINK AND FUNNEL DRAIN WITH ALL ASSOCIATED PIPING.
5. DISCONNECT FROM POWER, COLD AND HOT WATER LINES AND REMOVE EXISTING ELECTRIC WATER HEATER WITH ALL ASSOCIATED PIPING.
6. CONTRACTOR TO REMOVE EXISTING 3-COMPARTMENT SINK WITH ALL ASSOCIATED PIPING.
7. DISCONNECT COLD WATER LINE AND REMOVE ALL ASSOCIATED PIPING WITH SUPPORTS FOR ICEMAKER.
8. CONTRACTOR TO REMOVE EXISTING VACUUM BREAKER WITH WATER MANIFOLD AND ALL ASSOCIATED PIPING AND TUBING.

GENERAL NOTES:

1. ALL EXISTING PIPING ARE SHOWN AS A REFERENCE ONLY. CONTRACTOR SHALL FIELD VERIFY LOCATIONS AND SIZES FOR ALL EXISTING SERVICES PRIOR TO DEMOLITION.
2. COORDINATE WITH FACILITY PRIOR TO SHUTDOWN OF DOMESTIC WATER SYSTEM FOR ANY DEMOLITION AND CONSTRUCTION WORK.

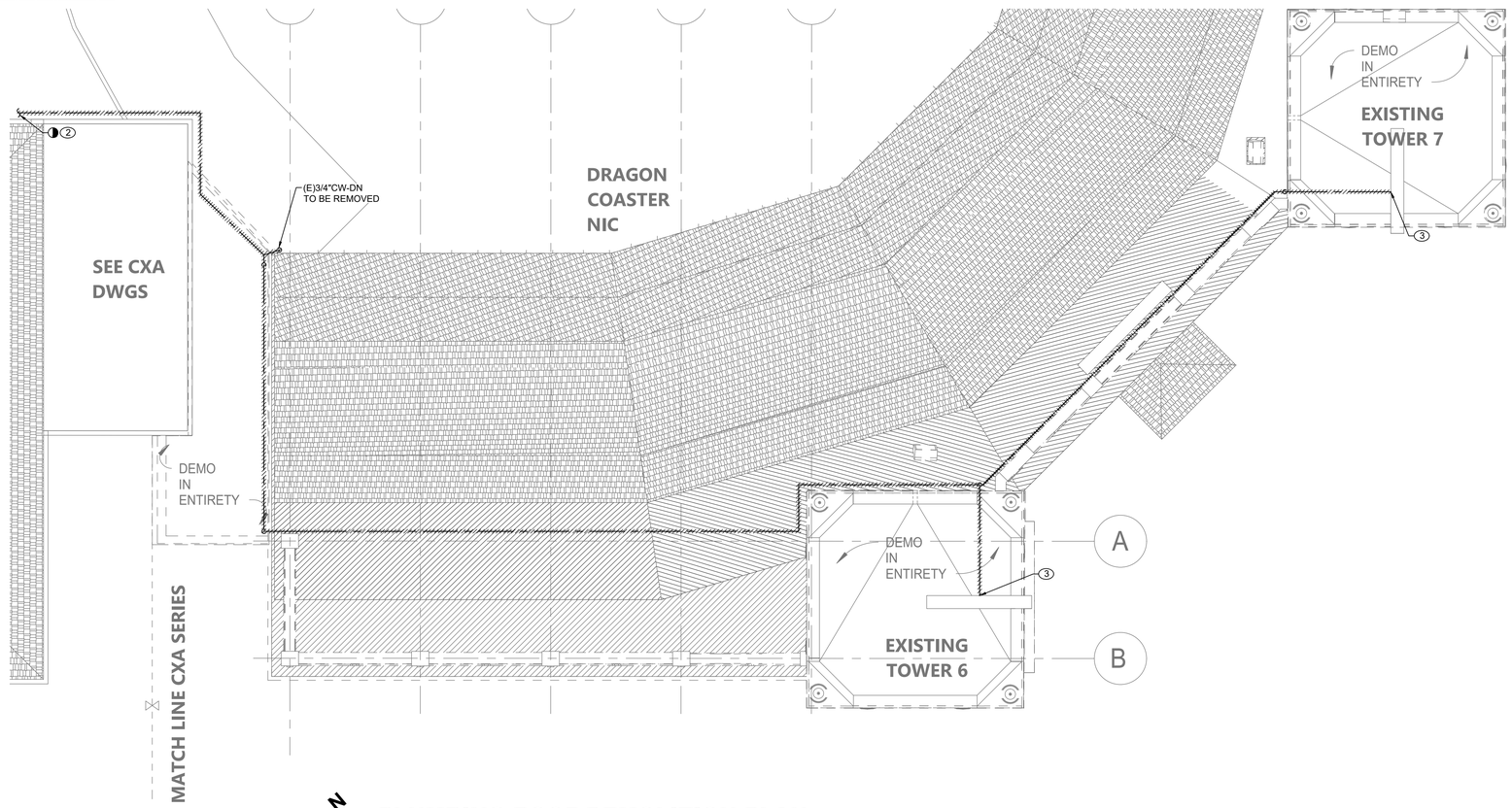

PLUMBING ROOF DEMOLITION PLAN

SCALE: 3/16" = 1'-0

CONSULTANT INFORMATION	CONSULTANT SEAL	REVISION NUMBER	DATE	MADE BY	APP'D BY	REVISION
LiRo Engineers, Inc. A LiRo Group Company Syosset, N.Y. 516-214-8157[T]	STATE OF NEW YORK FRANK F. ULIASSE No. 090111 LICENSED PROFESSIONAL ENGINEER					

RECORD DRAWING CERTIFICATION

☐ AS BUILT – CHANGES AS NOTED ☐ AS BUILT – NO CHANGES

CONTRACTOR: NAME ____ SIGNATURE ____ TITLE ____ DATE ____

PROJECT COORDINATOR: NAME ____ SIGNATURE ____ TITLE ____ DATE ____

WESTCHESTER COUNTY, NEW YORK
DEPARTMENT OF PUBLIC WORKS AND TRANSPORTATION
DIVISION OF ENGINEERING

INFRASTRUCTURE REHABILITATION - PHASE 3
PLAYLAND PARK, RYE, NEW YORK
DRAGON COASTER VENDORS
PLUMBING FIRST FLOOR AND ROOF DEMOLITION PLANS

CONTRACT NUMBER	22-523
SHEET NUMBER	DCV-P-11
DWG NO.:	465 of 664
SCALE:	AS INDICATED
DATE:	08/23/2022
DPW FILE NUMBER	1-118-P-1214-0
REV. NO.	0

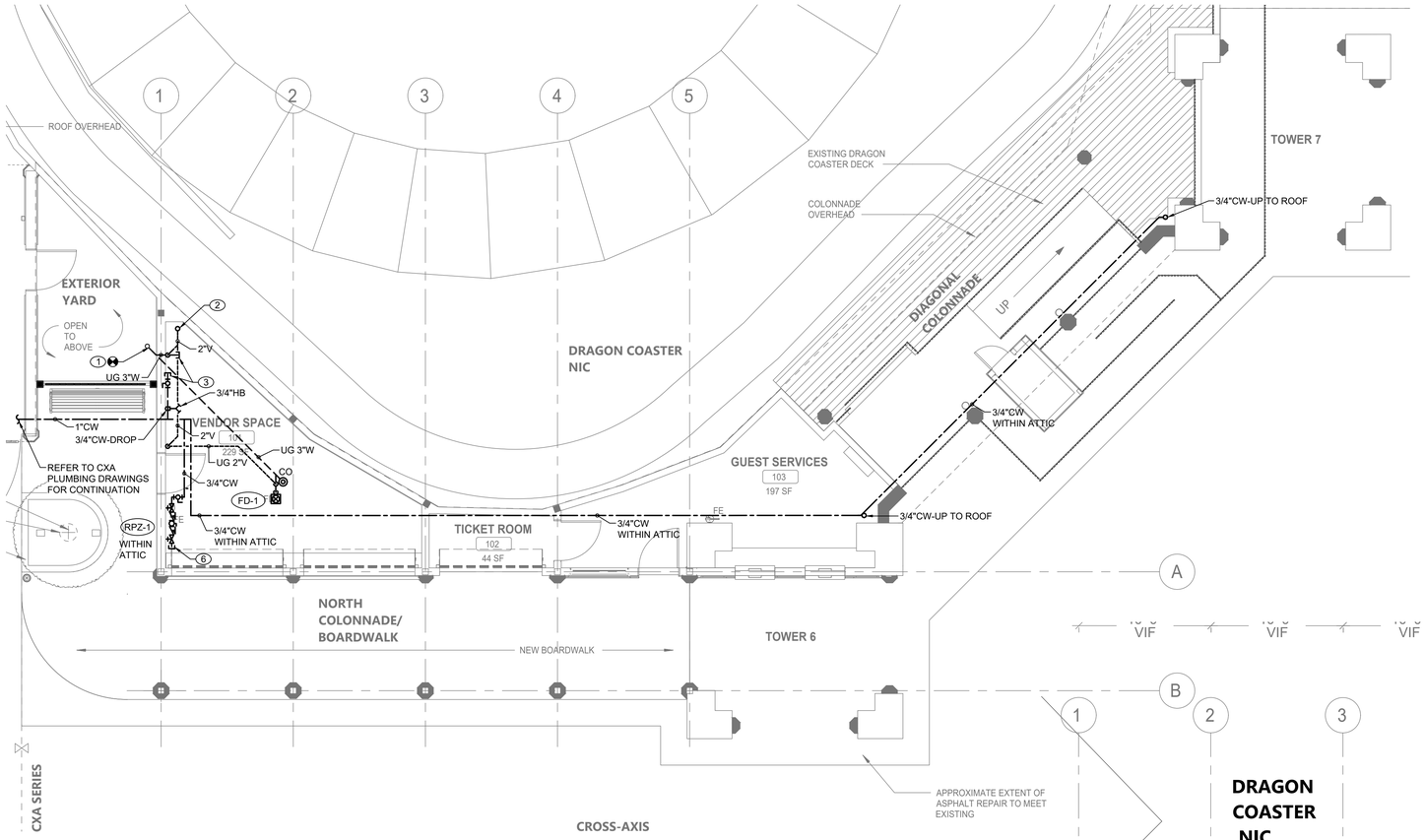

PLUMBING FIRST FLOOR CONSTRUCTION PLAN

SCALE: 3/16" = 1'-0

PLUMBING CONSTRUCTION NOTES:

1. RECONNECT NEW 3" WASTE LINE TO EXISTING SHOWN ON THE DRAWINGS. EXACT LOCATION VERIFY IN FIELD.
2. PROVIDE NEW 3" VENT THRU ROOF TO OPEN TO OUTDOOR ATTIC SPACE.
3. CONTRACTOR TO PROVIDE 3/4" COLD WATER ABOVE CEILING WITHIN ATTIC SPACE AND 3" VENTED SANITARY STUB-OUT FOR FUTURE CONNECTION OF PLUMBING FIXTURES BY FUTURE TENANT.
4. CONNECT NEW 3/4"CW LINE TO EXISTING REINSTALLED DRAGON HEADS. PROVIDE ISOLATION VALVE AND UNION. PROVIDE ALL REQUIRED SUPPORTS AND INSULATION OF COLD WATER PIPING.
5. PROVIDE SEAL AND WATERTIGHT NEW PENETRATIONS THRU ROOF AS PER ROOF MANUFACTURER REQUIREMENTS.
6. CONTRACTOR TO INSTALL 3/4" RPZ ABOVE CEILING WITHIN ATTIC SPACE FOR IRRIGATION SYSTEM PROVIDED AND INSTALLED FOR PLANTER AREA AND TREE (REFER TO ARCHITECTURAL DCV DRAWINGS FOR LOCATION). CONTRACTOR TO SUBMIT IRRIGATION SYSTEM DESIGN AND COMPONENTS FOR AOR AND EOR REVIEW. PROVIDE DRAINAGE PIPING AND AIR GAP FOR RPZ'S RELIEF VALVE AND DIRECT IT TO OUTSIDE.

GENERAL NOTES:

1. COORDINATE WITH FACILITY PRIOR TO SHUTDOWN OF WATER DISTRIBUTION SYSTEM FOR ANY DEMOLITION AND CONSTRUCTION WORK.
2. PROVIDE DRAIN VALVES AT BOTTOM FOR EACH BRANCH. PROVIDE ACCESS PANELS TO ALL VALVES ABOVE CEILING AND BEHIND WALLS.
3. INSTALL NEW WATER PIPING WITH PROPER SLOPES TO AVOID WATER TRAPS DURING WINTER SEASON.
4. CONTRACTOR TO COORDINATE WITH FACILITY WHEN WORKING AROUND OR ABOVE THE RIDE COMPONENTS , AND PROVIDE ALL NECESSARY MEASURES TO PROTECT THESE COMPONENTS PER THE REQUIREMENTS OF THE FACILITY.
5. UPON COMPLETION, SYSTEM SHALL BE TESTED FOR PROPER OPERATION.
6. SEWER CROSSING WATER MAINS, CONDUITS, OR OTHER UTILITY SHALL BE MINIMUM 18" CLEARANCE BETWEEN THE OUTSIDE OF THE UTILITY AND OUTSIDE OF THE SEWER. THE CROSSINGS SHALL BE ARRANGED SO THAT THE SEWER JOINTS WILL BE EQUIDISTANT AND AS FAR AS POSSIBLE FROM THE WATER MAIN JOINTS.

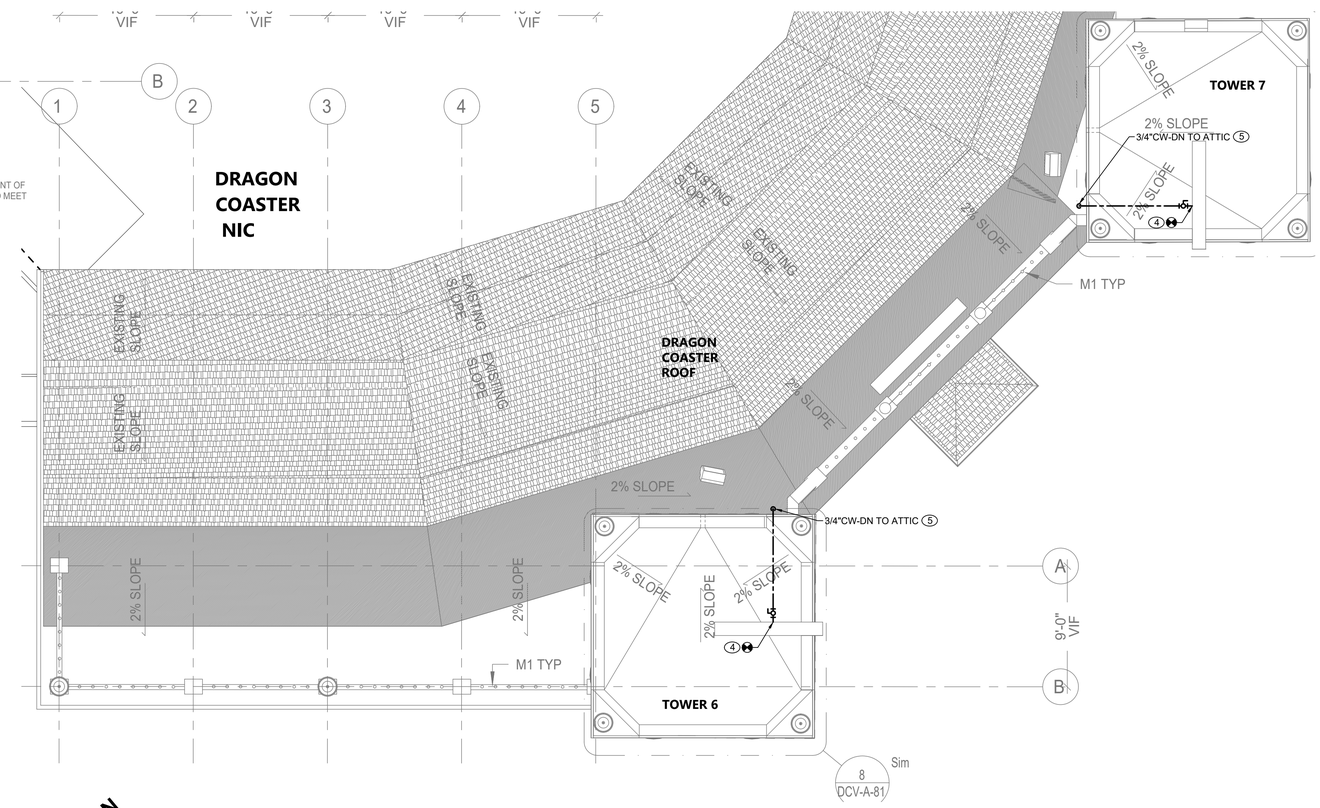

PLUMBING ROOF CONSTRUCTION PLAN

SCALE: 3/16" = 1'-0

CONSULTANT INFORMATION

LiRo Engineers, Inc.
A LiRo Group Company
Syosset, N.Y. 516-214-8157[T]

CONSULTANT SEAL

STATE OF NEW YORK · FRANK F. ULLISE · No. 090111 · LICENSED PROFESSIONAL ENGINEER

REVISION NUMBER	DATE	MADE BY	APP'D BY	REVISION

RECORD DRAWING CERTIFICATION

☐ AS BUILT – CHANGES AS NOTED ☐ AS BUILT – NO CHANGES

CONTRACTOR: NAME / SIGNATURE / TITLE / DATE

PROJECT COORDINATOR: NAME / SIGNATURE / TITLE / DATE

WESTCHESTER COUNTY, NEW YORK
DEPARTMENT OF PUBLIC WORKS AND TRANSPORTATION
DIVISION OF ENGINEERING

INFRASTRUCTURE REHABILITATION - PHASE 3
PLAYLAND PARK, RYE, NEW YORK
DRAGON COASTER VENDORS
PLUMBING FIRST FLOOR AND ROOF CONSTRUCTION PLAN

CONTRACT NUMBER	22-523
SHEET NUMBER	DCV-P-21
DWG NO.:	466 of 664
SCALE:	AS INDICATED
DATE:	08/23/2022
DPW FILE NUMBER	1-118-P-1215-0
REV. NO.	0

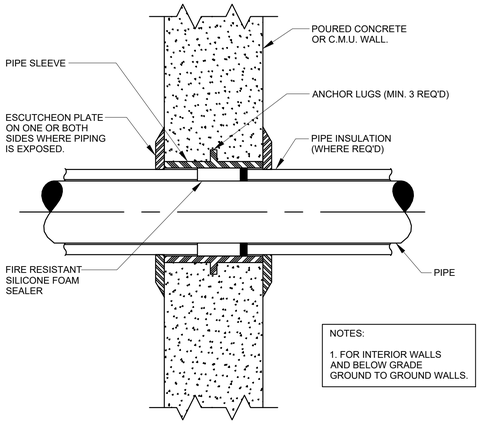

1 / P-81 **PIPE SLEEVE THROUGH WALL DETAIL**
SCALE: NOT TO SCALE

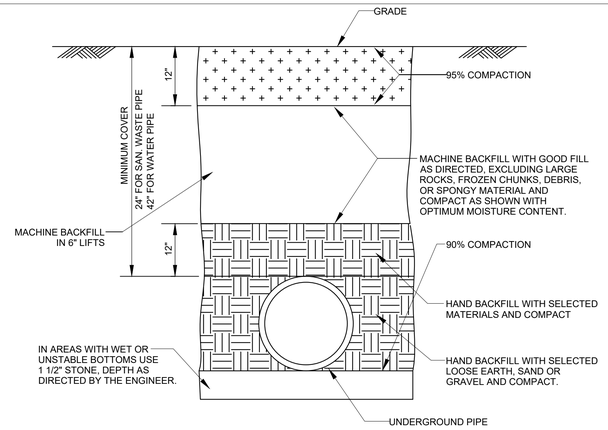

2 / P-81 **PIPE TRENCH DETAIL**
SCALE: NOT TO SCALE

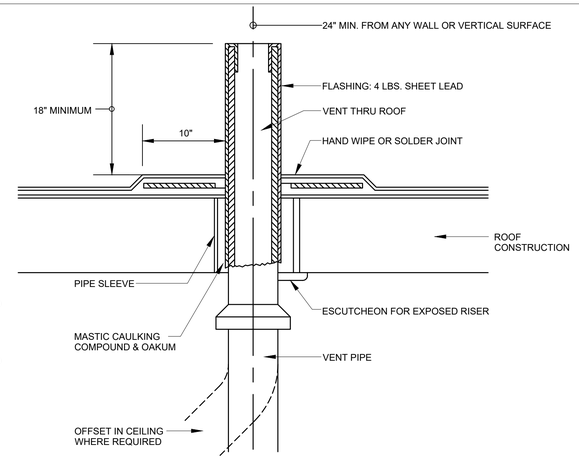

3 / P-81 **VENT THRU ROOF DETAIL**
SCALE: NOT TO SCALE

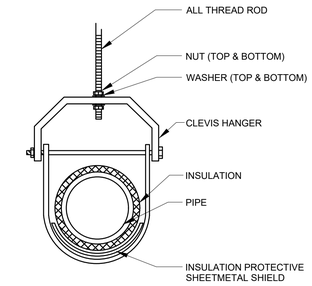

4 / P-81 **TYPICAL CLEVIS HANGER DETAIL**
SCALE: NOT TO SCALE

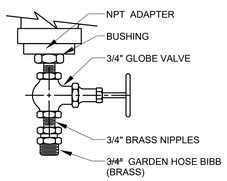

5 / P-81 **DRAIN VALVE DETAIL**
SCALE: NOT TO SCALE

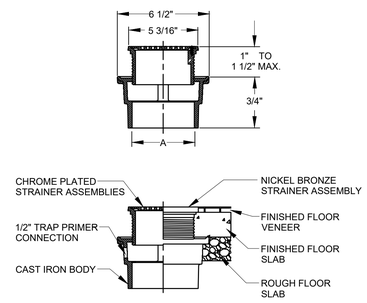

6 / P-81 **FLOOR DRAIN DETAIL**
SCALE: NOT TO SCALE

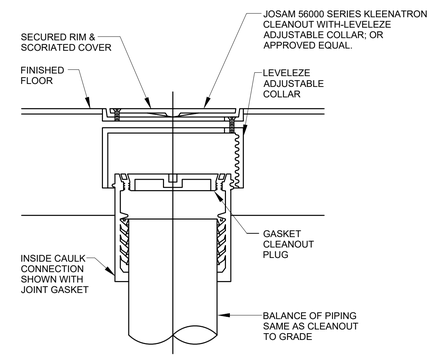

7 / P-81 **FLOOR CLEANOUT DETAIL**
SCALE: NOT TO SCALE

CONSULTANT INFORMATION
LiRo Engineers, Inc.
A LiRo Group Company
Syosset, N.Y. 516-214-8157[T]

CONSULTANT SEAL
STATE OF NEW YORK · FRANK F. ULISSE · No. 090111 · LICENSED PROFESSIONAL ENGINEER

REVISION NUMBER	DATE	MADE BY	APP'D BY	REVISION

RECORD DRAWING CERTIFICATION
☐ AS BUILT – CHANGES AS NOTED ☐ AS BUILT – NO CHANGES

CONTRACTOR
NAME
SIGNATURE
TITLE DATE

PROJECT COORDINATOR
NAME
SIGNATURE
TITLE DATE

WESTCHESTER COUNTY, NEW YORK
DEPARTMENT OF PUBLIC WORKS AND TRANSPORTATION
DIVISION OF ENGINEERING

INFRASTRUCTURE REHABILITATION PHASE - 3
PLAYLAND PARK, RYE, NEW YORK
DRAGON COASTER VENDORS
PLUMBING DETAILS

CONTRACT NUMBER 22-523
SHEET NUMBER **DCV-P-81**
DWG NO.: 467 of 664
SCALE: **AS INDICATED**
DATE: 08/23/2022
DPW FILE NUMBER **1-118-P-1216-0**
REV. NO. 0

MECHANICAL GENERAL NOTES

1. ALL WORK AND MATERIALS SHALL BE PURCHASED AND INSTALLED IN ACCORDANCE WITH ALL NATIONAL & NEW YORK STATE CODES AND REGULATIONS (AS WELL AS ALL APPLICABLE LOCAL CODES & REGULATIONS). THE CONTRACTOR SHALL BE RESPONSIBLE TO ENSURE THAT ALL HVAC WORK IS PROVIDED AND INSTALLED IN STRICT ACCORDANCE WITH SEISMIC REQUIREMENTS.
2. DO NOT SCALE FROM THESE DRAWINGS.
3. THE EXACT MOUNTING HEIGHTS AND LOCATIONS OF ALL HVAC EQUIPMENT SHALL BE FIELD VERIFIED AND COORDINATED WITH ALL OTHER MECHANICAL, ELECTRICAL, PLUMBING, FIRE SPRINKLER, ARCHITECTURAL AND STRUCTURAL SYSTEMS. DURING SHOP DRAWINGS SUBMISSIONS, SHOW ALL MOUNTING HEIGHTS OF DUCTWORK, UNITS, ETC.
4. VERIFY ALL EQUIPMENT VOLTAGES WITH THE ELECTRICAL DESIGN PRIOR TO ORDERING EQUIPMENT.
5. PROVIDE PHASE LOSS PROTECTION FOR ALL POLY-PHASE MOTOR DEVICES.
6. DUCTWORK SHALL BE CONSTRUCTED OF GALVANIZED SHEET STEEL IN STRICT COMPLIANCE WITH THE LATEST EDITION OF THE ASHRAE, NFPA, AND SMACNA GUIDE RECOMMENDATIONS. ALL DUCTS TO HAVE PITTSBURGH TYPE LOCK FOR LONGITUDINAL SEAMS AND DRIVE SLIP / "S" SLIP FOR TRANSVERSE JOINTS. "DUCT-MATE" JOINT SYSTEM IS ACCEPTABLE IN LIEU OF PRIOR SEAM SYSTEMS. SIZES ASHOWN INDICATE INSIDE CLEAR DIMENSIONS OF THE AIR PASSAGE. DUCTWORK SHALL BE FULLY INSULATED AS PER APPLICABLE CODES AND WRITTEN SPECIFICATIONS.
7. DUCT SIZES MUST BE VERIFIED FOR CLEARANCES AT THE JOB SITE PRIOR TO FABRICATION. DIMENSIONS MAY BE CHANGED TO ACCOMMODATE CONSTRUCTION AS LONG AS EFFECTIVE CROSS-SECTIONAL AREA IS MAINTAINED. DUCT TRANSITIONS SHALL BE CONSTRUCTED WITH A SLOPE OF 1" TO 4". ALL DEVIATIONS FROM ORIGINAL CONTRACT DRAWINGS SHALL BE REVIEWED BY ENGINEER DURING THE SHOP DRAWING PROCESS.
8. PROVIDE MANUAL BALANCING DAMPERS AS REQUIRED TO PROPERLY BALANCE EACH INDIVIDUAL AIR DISTRIBUTION SYSTEM. IF THE LOCATION OF THE BALANCING DAMPER IS NOT DEFINED ON THE DRAWINGS, THE FOLLOWING MINIMUMS STANDARDS SHALL GOVERN. ALL SUPPLY, RETURN, AND EXHAUST MAIN BRANCHES FROM TRUNKS, EACH SPLIT AND ALL SUB- BRANCHES FROM MAIN SHALL INCORPORATE BALANCING DAMPERS.
9. PROVIDE FLEXIBLE CONNECTORS AT ALL DUCT CONNECTIONS TO VIBRATING EQUIPMENT. THESE CONNECTORS SHALL BE INSTALLED IN CLOSE PROXIMITY TO SUCH EQUIPMENT.
10. PROVIDE FIRE DAMPERS WITH RATED ACCESS DOORS AT ALL DUCT PENETRATIONS THROUGH FIRE RATED WALLS, SMOKE AND FIRE STOPPING, SHAFT, FLOORS, RATED CEILINGS AND PARTITIONS AS REQUIRED TO MAINTAIN ARCHITECTURAL FIRE RATINGS. REFER TO THE ARCHITECTURAL PLANS AND SPECIFICATIONS FOR LOCATIONS AND FIRE RATING REQUIREMENTS. CONTRACTOR MUST FULLY REVIEW ALL ARCHITECTURAL AND ENGINEERING DRAWINGS AND VISIT THE SITE PRIOR TO SUBMITTING THE BID. NO EXTRAS WILL BE ALLOWED.
11. ALL ACCESS DOORS REQUIRED IN GENERAL CONSTRUCTION ARE TO BE PROVIDED AND INSTALLED BY THE CONTRACTOR. IT IS THE RESPONSIBILITY OF THE CONTRACTOR TO IDENTIFY SIZE, TYPE AND LOCATION OF SUCH DOORS FOR PROPER ACCESS TO ALL CONCEALED HVAC EQUIPMENT, VALVES AND OTHER RELATED EQUIPMENT. THE CONTRACTOR SHALL IDENTIFY THESE REQUIREMENTS ON A COORDINATED SHOP DRAWING PRIOR TO SYSTEM FABRICATION AND INSTALLATION.
12. ALL CEILING MOUNTED EQUIPMENT MUST BE SUPPORTED DIRECTLY FROM BUILDING STRUCTURE WITH COMBINATION SPRING AND NEOPRENE-IN-SHEAR HANGERS AND ROD. PROVIDE SUPPLEMENTARY STEEL AS REQUIRED TO ADEQUATELY SUPPORT THE LOAD.
13. THE CONTRACTOR MUST CONTRACT AN INDEPENDENT NEBB CERTIFIED AIR BALANCING & TESTING COMPANY TO PERFORM THE AIR BALANCING WORK AND ASSOCIATED SYSTEM AIR BALANCING REPORT. ALL WORK SHALL BE PERFORMED IN STRICT COMPLIANCE WITH ALL APPLICABLE CODES, REGULATIONS, PLANS AND WRITTEN SPECIFICATIONS. SUBMIT THE FINAL AIR BALANCE REPORT TO THE ENGINEER FOR REVIEW AND APPROVAL PRIOR TO SUBSTANTIAL COMPLETION OF THE PROJECT, AS DETERMINED BY THE AND OWNER/CLIENT. THE AIR BALANCE REPORT MUST INCLUDE ALL SUPPLY, RETURN, & EXHAUST AIR TERMINALS, FRESH AIR (OUTSIDE AIR) INTAKE AND VENTILATION EXHAUST CFM RATES FOR ALL UNITS. ALSO INCLUDE ACTUAL SUPPLY & RETURN AIR VELOCITY & STATIC PRESSURE READINGS ALONG WITH ALL MOTOR AMPERAGES FOR ALL UNITS.
14. THE CONTRACTOR IS TO INCLUDE IN THEIR BID ALL LOW VOLTAGE CONTROL WIRING, THERMOSTATS, RELAYS, TRANSFORMERS, STARTERS ETC FOR A COMPLETE OPERATING CONTROL SYSTEM AS DESCRIBED IN THE SEQUENCE OF OPERATIONS, THE CONTRACTOR IS ALSO RESPONSIBLE FOR LINE VOLTAGE CONTROL FOR EXHAUST FANS CONTROLLED FROM LIGHT SWITCH AND THERMOSTATS. ALL CONTROL WIRING IN THE AREAS THAT DO NOT HAVE DROPPED CEILINGS THE CONTRACTOR MUST PROVIDE ALL CONTROL WIRING CONDUIT. IN AREAS OF DROPPED CEILING PLENUM RATED CONTROL WIRING CAN BE RUN EXPOSED ABOVE CEILING.
15. ALL MECHANICAL EQUIPMENT SHALL BE INSTALLED PER MANUFACTURER'S REQUIREMENTS/SPECIFICATIONS.

CODE REFERENCE

2020 NEW YORK STATE BUILDING CODE
2020 NEW YORK STATE MECHANICAL CODE
2020 NEW YORK STATE ENERGY CONSERVATION CODE

MECHANICAL DEMOLITION NOTES

1. CONTRACTOR SHALL BE RESPONSIBLE FOR DEMOLITION OF MECHANICAL EQUIPMENT AND MATERIAL RELATING TO THEIR RESPECTIVE TRADE.

2. THE CONTRACTOR SHALL REMOVE, RELOCATE, REPLACE, ADJUST, ADAPT AND MODIFY EXISTING EQUIPMENT AND/OR SYSTEMS AS REQUIRED WHEN SUCH WORK IS UNCOVERED AND FOUND TO INTERFERE WITH COMPLETION OF WORK IN THIS CONTRACT OR OTHER CONTRACT WORK.

3. EXECUTE THE DEMOLITION IN CAREFUL AND ORDERLY MANNER WITH THE LEAST POSSIBLE DISTURBANCE TO THE PUBLIC, EGRESS OR THE FUNCTIONING OF THE EXISTING BUILDING.

4. TAKE NECESSARY PRECAUTIONS TO PREVENT DUST AND DIRT FROM RISING BY WETTING DEMOLISHED DEBRIS. EXCESSIVE USE OF WATER WILL NOT BE PERMITTED.

5. PRIOR TO DEMOLITION, CONTRACTOR SHALL REVIEW WITH OWNER ALL MATERIALS TO BE REMOVED, SHOULD THE OWNER WANT TO KEEP ANY MATERIALS THE CONTRACTOR SHALL REMOVE AND DELIVER THE PARTS TO THE OWNER ON THE SITE WHERE SO DIRECTED. OTHERWISE ALL DEMOLISHED OR REMOVED MATERIALS SHALL BECOME THE PROPERTY OF THE CONTRACTOR AND SHALL BE REMOVED FROM THE SITE AND BE DISPOSED OF IN A LEGAL MANNER.

6. DEMOLITION SHALL INCLUDE REMOVAL OF ALL PARTS AND PIECES IN THEIR ENTIRETY BACK TO POINTS INDICATED OR IF NOT INDICATED BACK TO THEIR POINT OF SOURCE.

7. WHERE CONDITIONS PROHIBIT TOTAL REMOVAL OF THE WORK, THE REMAINING PORTION SHALL BE CUT FLUSH WITH THE SURROUNDING SURFACE AND BE CAPPED, PLUGGED OR SEALED AND THE SURROUNDING SURFACE SHALL BE REFINISHED IN AN APPROVED MANNER.

9. DO NOT REMOVE EXISTING STRUCTURAL WORK. DO NOT REMOVE OPERATIONAL ELEMENTS AND SAFETY-RELATED COMPONENTS IN A MANNER RESULTING IN A REDUCTION OF CAPACITIES TO PERFORM IN THE MANNER INTENDED OR RESULTING IN DECREASED OPERATIONAL LIFE, INCREASED MAINTENANCE, OR DECREASED SAFETY.

10. REMOVALS, DISCONNECTIONS, AND RELOCATIONS SHALL BE PERFORMED BY WORKMEN SKILLED IN THE TRADE INVOLVED AND SHALL BE EMPLOYED BY A CONTRACTOR LICENSED IN THE TRADE INVOLVED. ALL WORK SHALL BE DONE IN ACCORDANCE WITH ACCEPTED TRADE PRACTICES.

11. PROVIDE ADEQUATE TEMPORARY SUPPORT FOR WORK TO REMAIN, TO PREVENT FAILURE. DO NOT ENDANGER OTHER WORK.

12. PROTECTION: PROVIDE ADEQUATE PROTECTION WHERE REQUIRED FOR THE PRESENT BUILDING AND ITS CONTENTS. TEMPORARY DUSTPROOF BARRIERS AND BARRICADES SHALL BE ERECTED WHERE REQUIRED FOR PROTECTION OF PERSONNEL, PROTECTION FROM DUST AND DIRT, FOR SECURITY, FIRE AND WEATHER PROTECTIVE REASONS.

13. CONTRACTOR SHALL TAKE EVERY PRECAUTION AGAINST FIRE BY EMPLOYING FIRE DEPARTMENT TYPE HOSES AND PORTABLE FIRE EXTINGUISHERS AS REQUIRED BY OSHA AND/OR THE OWNER'S INSURANCE UNDERWRITER.

14. BEFORE STARTING DEMOLITION OPERATIONS, PROVIDE THE NECESSARY PROTECTIVE DEVICES, WHERE REQUIRED, AND IN STRICT ACCORDANCE WITH OSHA RULES AND REGULATIONS.

14. USE TEMPORARY ENCLOSURES, OR OTHER SUITABLE METHODS TO LIMIT DUST AND DIRT RISING AND SCATTERING TO LOWEST PRACTICAL LEVEL. COMPLY WITH GOVERNING REGULATIONS PERTAINING TO ENVIRONMENTAL PROTECTION.

15. FIELD VERIFY DEMOLITION REQUIREMENTS AND EXISTING CONDITIONS. DEMOLITION NOTES ARE INDICATED IN NOTE FORM.

16. CONTRACTOR SHALL ESTABLISH A PATH OF TRAVEL AND TIME SCHEDULE FOR THE REMOVAL OF ALL DEBRIS AND WASTE, AND HAVE THIS APPROVED BY OWNER. CONTRACTOR IS TO ENSURE THAT ALL CORRIDORS AND PUBLIC AREAS BE KEPT FREE OF OBSTRUCTIONS, DEBRIS, AND ARE TO BE BROOM SWEPT CLEAN AT ALL TIMES.

17. CONTRACTOR SHALL VISIT THE SITE AND BECOME INFORMED AS TO THE CONDITION OF THE PREMISES AND THE EXTENT AND CHARACTER OF WORK REQUIRED. NO ADDITIONAL COMPENSATION WILL BE APPROVED DUE TO FIELD CONDITIONS.

NYSECC ENERGY COMPLIANCE STATEMENT:

PER SECTION C101.7 OF THE 2020 NYSECC HISTORIC BUILDINGS ARE EXEMPT FROM THE REQUIREMENTS OF THE ENERGY CODE.

HVAC SYMBOL LIST

IDENTIFIER	DESCRIPTION
	NEW DUCTWORK OR PIPING
	EXISTING DUCTWORK OR PIPING TO BE REMOVED
	EXISTING DUCTWORK OR PIPING TO REMAIN
24X12 / 24X12	DOUBLE-LINE AND SINGLE-LINE RECTANGULAR DUCT, FIRST NUMBER INDICATES SIDE IN VIEW IN INCHES, SECOND NUMBER INDICATES SIDE IN DEPTH IN INCHES
	FLEXIBLE DUCTWORK
	REGULAR SUPPLY AIR DUCT (UP AND DOWN)
	REGULAR RETURN AIR DUCT (UP AND DOWN)
	REGULAR EXHAUST AIR DUCT (UP AND DOWN)
	REGULAR OUTSIDE AIR DUCT (UP AND DOWN)
VD	VOLUME DAMPER
BD	BACKDRAFT DAMPER
	MOTOR OPERATED DAMPER
XXX / XX	EQUIPMENT TAG EQUIPMENT NUMBER
XXX / X-XXX	DETAIL TAG/CALL OUT TAG MECHANICAL SHEET NUMBER
T	THERMOSTAT
	EXHAUST GRILLE
F#	REFER TO SUPPLEMENTAL FIGURE INDICATED BY NUMBER (I.E. F2 REFERS TO FIGURE 2)

HVAC ABBREVIATIONS

IDENTIFIER	DESCRIPTION
AC	DIRECT EXPANSION AIR CONDITION UNIT
CFM	CUBIC FEET PER MINUTE
COND	CONDENSATE
CU	CONDENSING UNIT
CUH	CABINET UNIT HEATER
DB	DRY BULB
DN	DOWN
EA	EXHAUST AIR
EF	EXHAUST FAN
EG	EXHAUST GRILLE
EUH	ELECTRIC UNIT HEATER
EER	ENERGY EFFICIENCY RATIO
EG	EXHAUST GRILLE
FAI	FRESH AIR INTAKE
GC	GENERAL CONTRACTOR
MBH	THOUSAND BTU PER HOUR
PC	PLUMBING CONTRACTOR
RG	RETURN GRILLE
RTU	ROOFTOP UNIT
SA	SUPPLY AIR
SD	SUPPLY DIFFUSER
TYP.	TYPICAL
VIF	VERIFY IN FIELD

SCOPE OF WORK

DEMOLITION

1. REMOVE TWO (2) EXISTING THRU WALL AC UNITS AS INDICATED.
2. REMOVE ONE (1) EXISTING ROOFTOP FAN AND ASSOCIATED DUCTWORK, CONTROLS AND ACCESSORIES.
3. REMOVE TWO (2) EXISTING LOUVERS AS INDICATED.
4. REMOVE ONE (1) EXISTING GRAVITY VENTILATOR AS INDICATED.

CONSTRUCTION

1. PROVIDE ONE (1) EXHAUST FAN AS INDICATED.
2. PROVIDE ONE (1) NEW RAIN RESISTANT LOUVER AS INDICATED.

MECHANICAL DRAWING LIST

SHEET NO.	SHEET NAME	REVISON NO.	REVISION DATE
DCV-M-01	MECHANICAL NOTES, SYMBOLS & LEGENDS	0	-
DCV-M-11	MECHANICAL 1ST FLOOR DEMOLITION PLAN	0	-
DCV-M-12	MECHANICAL ROOF DEMOLITION PLAN	0	-
DCV-M-21	MECHANICAL 1ST FLOOR CONSTRUCTION PLAN	0	-
DCV-M-22	MECHANICAL ATTIC CONSTRUCTION PLAN	0	-
DCV-M-61	MECHANICAL SCHEDULES	0	-
DCV-M-81	MECHANICAL DETAILS & CONTROLS	0	-

NATURAL VENTILATION SCHEDULE

SPACE DETAILS			DESIGN			NOTES
ROOM	AREA (SF)	4% FLOOR AREA (SF)	WINDOW FREE AREA (SF)	DOOR AREA (SF)	TOTAL OPENABLE AREA (SF)	
101 VENDOR SPACE	244	10	-	78	78	1,2
103 GUEST SERVICES	208	8	7	21	28	1,2

NOTES:
1. NEW YORK STATE MECHANICAL CODE.
2. NATURAL VENTILATION OF AN OCCUPIED SPACE SHALL BE THROUGH WINDOWS, DOORS, LOUVERS, AND OTHER OPENINGS TO THE OUTDOORS. THE MINIMUM OPENABLE AREA TO THE OUTDOORS SHALL BE 4 PERCENT OF THE FLOOR AREA BEING VENTILATED.

TABLE 1: ENERGY CODE ANALYSIS TABLE FOR MECHANICAL SYSTEMS

(PER 2020 NYS ENERGY CODE)

ITEM DESCRIPTION			PROPOSED VALUE	MINIMUM EFFECIENCY	CODE PRECRIBED VALUE AND CITATION	CITATION	SUPPORTING DOCUMENTATION
	UNIT TAG	EQUIPMENT TYPE					
SHUTOFF DAMPERS			GRAVITY/BACKDRAFT DAMPERS PROVIDED IN LIEU OF MOTORIZED DAMPER MOTORIZED DAMPERS PER EXCEPTIONS 1 AND 3	-	BACDRAFT DAMPER INSTALLED AT EXHAUST OPENINGS	C403.7.7	MECHANICAL SCHEDULES AND PLANS
DUCT LEAKAGE			SMACNA HVAC DUCT LEAKAGE TEST	-	SMACNA HVAC DUCT LEAKAGE TEST	PER C403	MECHANICAL DWGS. & SPECS

TABLE 2: ENERGY CODE COMPLIANCE INSPECTIONS FOR MECHANICAL SYSTEMS

(IIB - MECHANICAL AND SERVICE WATER HEATING INSPECTIONS)

	INSPECTION TEST	FREQUENCY	REFERENCE STANDARDS	INSPECTION DESCRIPTION	ECC CITATION
IIB2	SHUT-OFF DAMPERS	AS REQUIRED DURING INSTALLATION	APPROVED CONSTRUCTION DOCUMENTS	DAMPERS FOR STAIR AND ELEVATOR SHAFT VENTS AND OTHER OUTDOOR AIR INTAKES AND EXHAUST OPENINGS INTEGRAL TO THE BUILDING ENVELOPE SHALL BE VISUALLY INSPECTED TO VERIFY THAT SUCH DAMPERS, EXCEPT WHERE PERMITTED TO BE GRAVITY DAMPERS, COMPLY WITH APPROVED CONSTRUCTION DRAWINGS. MANUFACTURER'S LITERATURE SHALL BE REVIEWED TO VERIFY THAT THE PRODUCT HAS BEEN TESTED AND FOUND TO MEET THE STANDARD.	NYSECC C403.2.4.4, OR ASHRAE 90.1-6.4.3.4
IIB3	HVAC AND SERVICE WATER HEATING EQUIPMENT	PRIOR TO FINAL MECHANICAL AND CONSTRUCTION INSPECTION	APPROVED CONSTRUCTION DOCUMENTS	EQUIPMENT SIZING, EFFICIENCIES AND OTHER PERFORMANCE FACTORS OF ALL MAJOR EQUIPMENT UNITS, AS DETERMINED BY THE APPLICANT OF RECORD, AND NO LESS THAN 15% OF MINOR EQUIPMENT UNITS, SHALL BE VERIFIED BY VISUAL INSPECTION AND, WHERE NECESSARY, REVIEW OF MANUFACTURER'S DATA. POOL HEATERS AND COVERS SHALL BE VERIFIED BY VISUAL INSPECTION	NYSECC C403.2, C404.2, C404.7, C406.2
IIB4	HVAC AND SERVICE WATER HEATING SYSTEM CONTROLS	AFTER INSTALLATION AND PRIOR TO FINAL ELECTRICAL AND CONSTRUCTION INSPECTION, EXCEPT THAT FOR CONTROLS WITH SEASONALLY DEPENDENT FUNCTIONALITY, SUCH TESTING SHALL BE PERFORMED BEFORE SIGN-OFF FOR ISSUANCE OF A FINAL CERTIFICATE OF OCCUPANCY	APPROVED CONSTRUCTION DOCUMENTS INCLUDING CONTROL SYSTEM NARRATIVES	NO LESS THAN 20% OF EACH TYPE OF REQUIRED CONTROLS AND ECONOMIZERS SHALL BE VERIFIED BY VISUAL INSPECTION AND TESTED FOR FUNCTIONALITY AND PROPER OPERATION. SUCH CONTROLS SHALL INCLUDE, BUT ARE NOT LIMITED TO, THERMOSTATIC AND ECONOMIZER CONTROLS	NYSECC C403.2.4, C403.2.5.1, C403.2.11, C403.3, C403.4, C404.3, C404.6, C404.7

CONSULTANT INFORMATION

LiRo Engineers, Inc.
A LiRo Group Company
Syosset, N.Y. 516-214-8157[T]

CONSULTANT SEAL

STATE OF NEW YORK · FRANK F. ULISSE · No. 090111 · LICENSED PROFESSIONAL ENGINEER

REVISION NUMBER	DATE	MADE BY	APP'D BY	REVISION

RECORD DRAWING CERTIFICATION

☐ AS BUILT – CHANGES AS NOTED ☐ AS BUILT – NO CHANGES

CONTRACTOR
NAME
SIGNATURE
TITLE DATE

PROJECT COORDINATOR
NAME
SIGNATURE
TITLE DATE

WESTCHESTER COUNTY, NEW YORK
DEPARTMENT OF PUBLIC WORKS AND TRANSPORTATION
DIVISION OF ENGINEERING

INFRASTRUCTURE REHABILITATION - PHASE 3
PLAYLAND PARK, RYE, NEW YORK
DRAGON COASTER VENDORS
MECHANICAL NOTES, SYMBOLS & LEGENDS

CONTRACT NUMBER 22-523
SHEET NUMBER DCV-M-01
DWG NO.: 468 of 664
SCALE: AS INDICATED
DATE: 08/23/2022
DPW FILE NUMBER 1-118-M-1217-0
REV. NO. 0

GENERAL NOTES:

1. RETURN REMOVED EXISTING EQUIPMENT TO OWNER IF IT IS IN WORKING CONDITION.
2. CONTRACTOR TO COORDINATE WITH FACILITY WHEN WORKING AROUND OR ABOVE THE RIDE COMPONENTS, AND PROVIDE ALL NECESSARY MEASURES TO PROTECT THESE COMPONENTS PER THE REQUIREMENTS OF THE FACILITY.

MECHANICAL DEMOLITION NOTES:

(1) REMOVE EXISTING THRU WALL AC UNIT. IF NO LONGER IN WORKING CONDITION, DISPOSAL SHALL BE IN ACCORDANCE WITH EPA REQUIREMENTS.

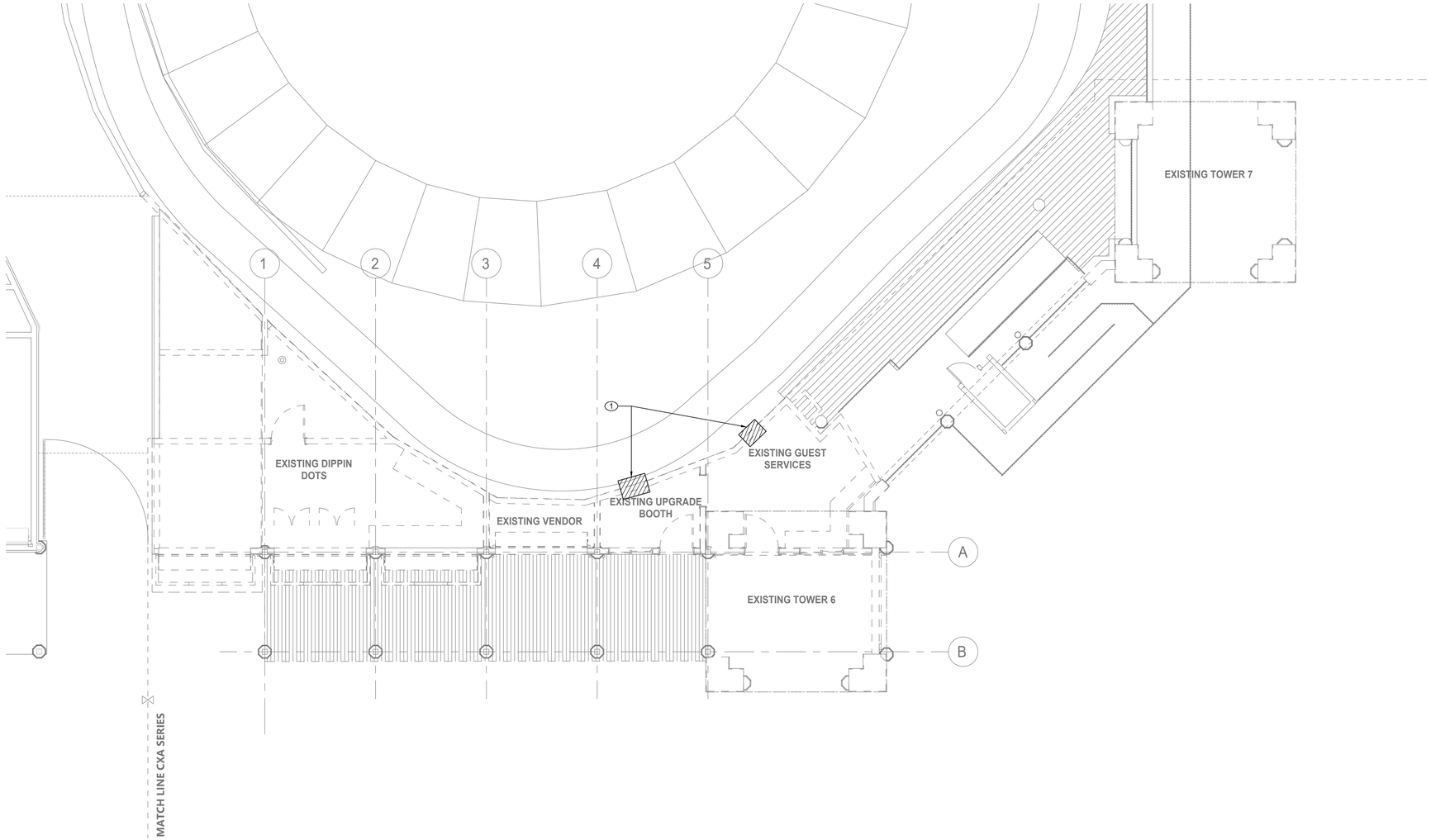

N

MECHANICAL FIRST FLOOR DEMOLITION PLAN

SCALE: 3/16" = 1'-0

CONSULTANT INFORMATION	CONSULTANT SEAL	REVISION NUMBER	DATE	MADE BY	APP'D BY	REVISION
LiRo Engineers, Inc. *A LiRo Group Company* Syosset, N.Y. 516-214-8157[T]	STATE OF NEW YORK FRANK F. ULLISE No. 090111-1 LICENSED PROFESSIONAL ENGINEER					

RECORD DRAWING CERTIFICATION

☐ AS BUILT – CHANGES AS NOTED ☐ AS BUILT – NO CHANGES

CONTRACTOR	PROJECT COORDINATOR
NAME	NAME
SIGNATURE	SIGNATURE
TITLE DATE	TITLE DATE

WESTCHESTER COUNTY, NEW YORK
DEPARTMENT OF PUBLIC WORKS AND TRANSPORTATION
DIVISION OF ENGINEERING

INFRASTRUCTURE REHABILITATION - PHASE 3
PLAYLAND PARK, RYE, NEW YORK
DRAGON COASTER VENDORS
MECHANICAL FIRST FLOOR DEMOLITION PLAN

CONTRACT NUMBER	22-523
SHEET NUMBER	DCV-M-11
DWG NO.:	469 of 664
SCALE:	AS INDICATED
DATE:	08/23/2022
DPW FILE NUMBER	1-118-M-1218-0
REV. NO.	0

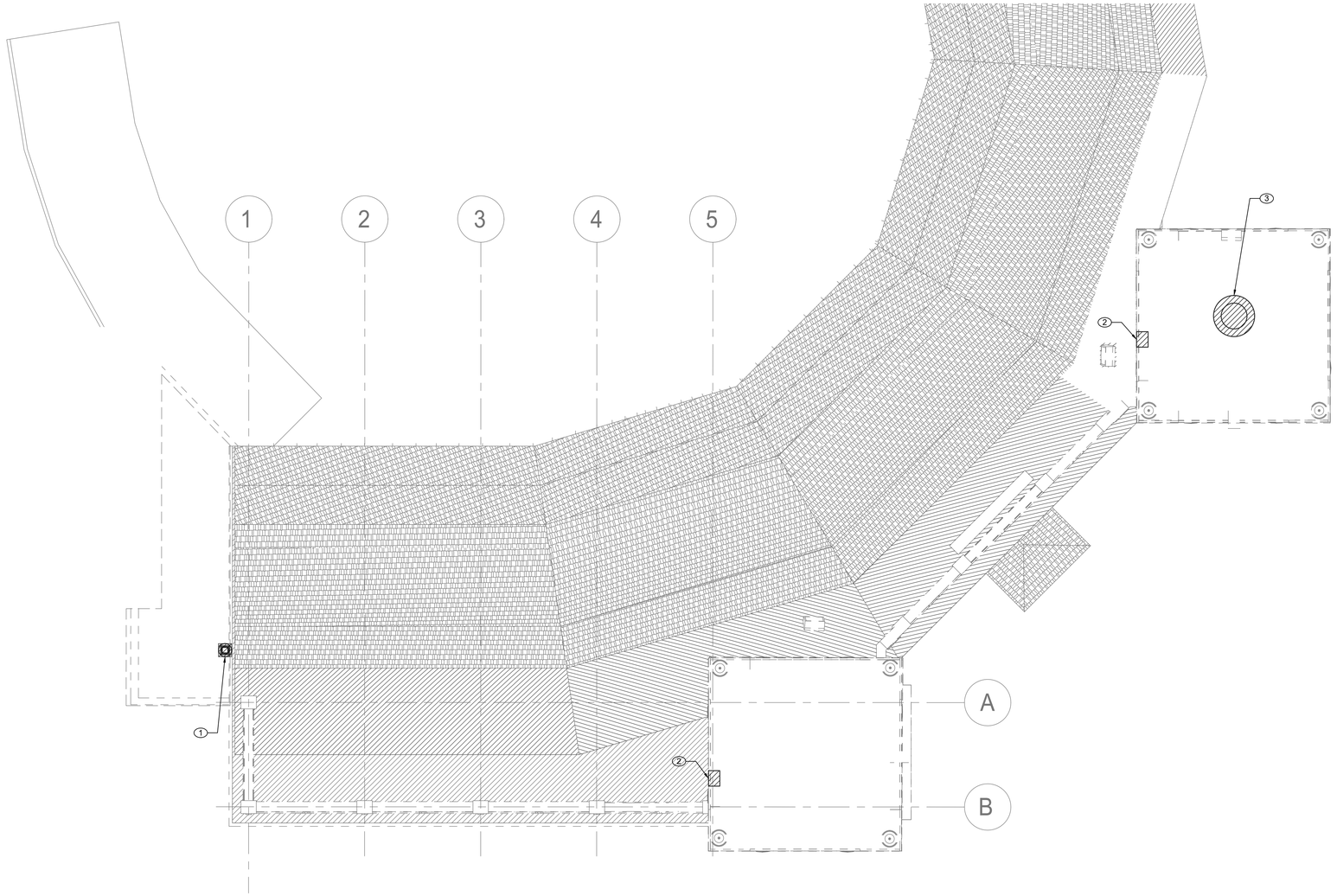

GENERAL NOTES:

1. RETURN REMOVED EXISTING EQUIPMENT TO OWNER IF IT IS IN WORKING CONDITION.
2. CONTRACTOR TO COORDINATE WITH FACILITY WHEN WORKING AROUND OR ABOVE THE RIDE COMPONENTS, AND PROVIDE ALL NECESSARY MEASURES TO PROTECT THESE COMPONENTS PER THE REQUIREMENTS OF THE FACILITY.

MECHANICAL DEMOLITION NOTES:

1. DEMOLISH EXISTING ROOF MOUNTED EXHAUST FAN AND ASSOCIATED DUCTWORK. COORDINATE REMOVAL OF ELECTRICAL POWER AND WIRING WITH ELECTRICAL CONTRACTOR.
2. DEMOLISH EXISTING LOUVER.
3. DEMOLISH EXISTING GRAVITY VENTILATOR.

N

MECHANICAL ROOF DEMOLITION PLAN

SCALE: 3/16" = 1'-0

CONSULTANT INFORMATION

LiRo Engineers, Inc.
A LiRo Group Company
Syosset, N.Y. 516-214-8157[T]

CONSULTANT SEAL

STATE OF NEW YORK · FRANK F. ULISSE · No. 090111-1 · LICENSED PROFESSIONAL ENGINEER

REVISION NUMBER	DATE	MADE BY	APP'D BY	REVISION

RECORD DRAWING CERTIFICATION

☐ AS BUILT – CHANGES AS NOTED ☐ AS BUILT – NO CHANGES

CONTRACTOR
NAME
SIGNATURE
TITLE DATE

PROJECT COORDINATOR
NAME
SIGNATURE
TITLE DATE

WESTCHESTER COUNTY, NEW YORK
DEPARTMENT OF PUBLIC WORKS AND TRANSPORTATION
DIVISION OF ENGINEERING

INFRASTRUCTURE REHABILITATION - PHASE 3
PLAYLAND PARK, RYE, NEW YORK
DRAGON COASTER VENDORS
MECHANICAL ROOF DEMOLITION PLAN

CONTRACT NUMBER	22-523
SHEET NUMBER	DCV-M-12
DWG NO.:	470 of 664
SCALE:	AS INDICATED
DATE:	08/23/2022
DPW FILE NUMBER	1-118-M-1219-0
REV. NO.	0

GENERAL NOTES:

1. CONTRACTOR TO COORDINATE WITH FACILITY WHEN WORKING AROUND OR ABOVE THE RIDE COMPONENTS, AND PROVIDE ALL NECESSARY MEASURES TO PROTECT THESE COMPONENTS PER THE REQUIREMENTS OF THE FACILITY.
2. UPON COMPLETION, SYSTEM SHALL BE TESTED FOR PROPER OPERATION.

MECHANICAL CONSTRUCTION NOTES:

(1) PROVIDE EXHAUST GRILLE AS INDICATED.

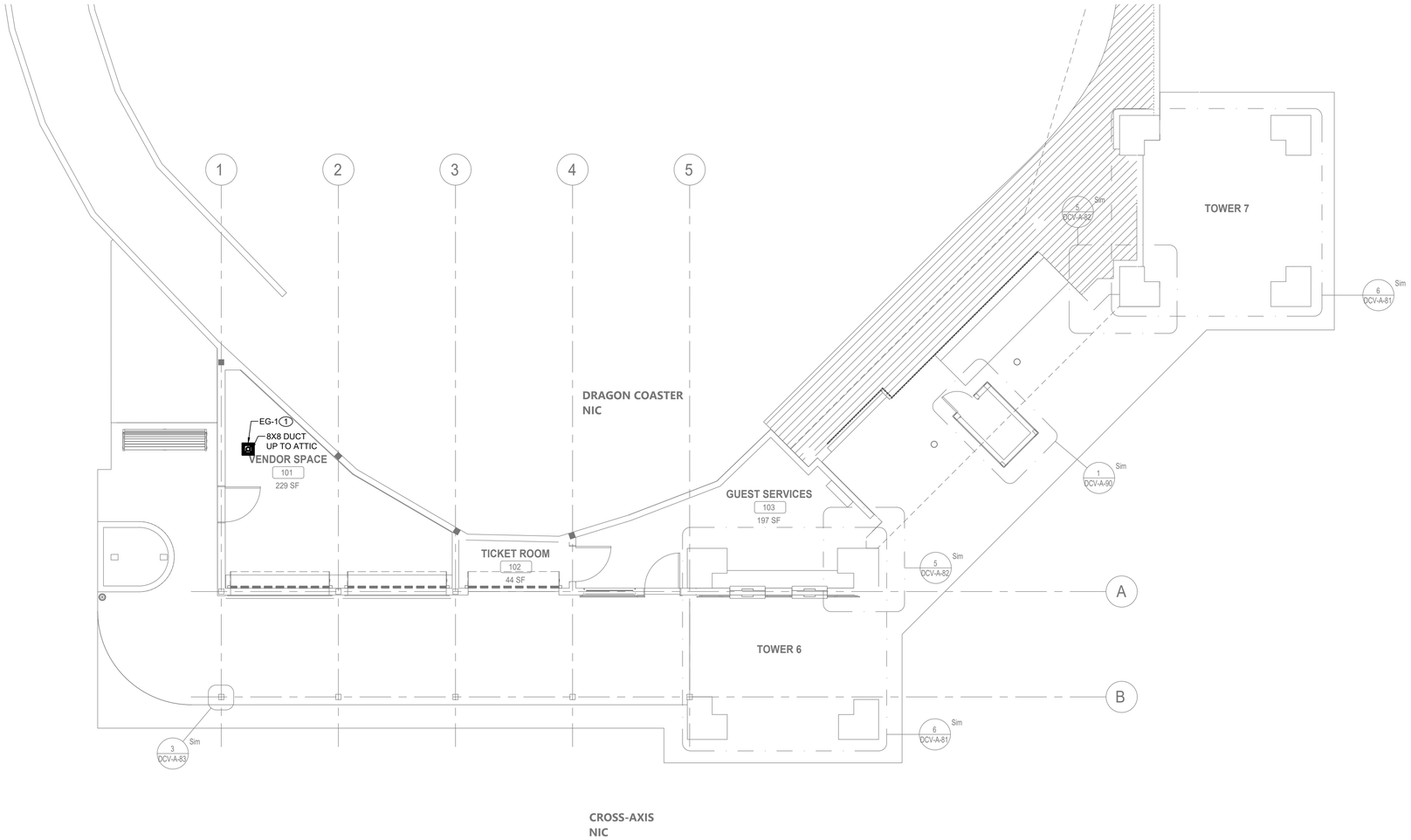

N

MECHANICAL FIRST FLOOR CONSTRUCTION PLAN

SCALE: 3/16" = 1'-0

CONSULTANT INFORMATION

LiRo Engineers, Inc.
A LiRo Group Company
Syosset, N.Y. 516-214-8157[T]

CONSULTANT SEAL

STATE OF NEW YORK · FRANK F. ULISSE · No. 090111-1 · LICENSED PROFESSIONAL ENGINEER

REVISION NUMBER	DATE	MADE BY	APP'D BY	REVISION

RECORD DRAWING CERTIFICATION

☐ AS BUILT – CHANGES AS NOTED ☐ AS BUILT – NO CHANGES

CONTRACTOR
NAME
SIGNATURE
TITLE DATE

PROJECT COORDINATOR
NAME
SIGNATURE
TITLE DATE

WESTCHESTER COUNTY, NEW YORK
DEPARTMENT OF PUBLIC WORKS AND TRANSPORTATION
DIVISION OF ENGINEERING

INFRASTRUCTURE REHABILITATION - PHASE 3
PLAYLAND PARK, RYE, NEW YORK
DRAGON COASTER VENDORS
MECHANICAL FIRST FLOOR CONSTRUCTION PLAN

CONTRACT NUMBER	22-523
SHEET NUMBER	DCV-M-21
DWG NO.:	471 of 664
SCALE:	AS INDICATED
DATE:	08/23/2022
DPW FILE NUMBER	1-118-M-1220-0
REV. NO.	0

GENERAL NOTES:

1. CONTRACTOR TO COORDINATE WITH FACILITY WHEN WORKING AROUND OR ABOVE THE RIDE COMPONENTS, AND PROVIDE ALL NECESSARY MEASURES TO PROTECT THESE COMPONENTS PER THE REQUIREMENTS OF THE FACILITY.
2. UPON COMPLETION, SYSTEM SHALL BE TESTED FOR PROPER OPERATION.

MECHANICAL CONSTRUCTION NOTES:

(1) PROVIDE NEW EXHAUST FAN AND ASSOCIATED DUCTWORK AS SCHEDULED. COORDINATE ELECTRICAL POWER AND WIRING WITH ELECTRICAL DRAWINGS.

(2) PROVIDE NEW RAIN RESISTANT LOUVER AS SCHEDULED. REFER TO INSTALLATION DETAIL ON DVC-M-61.

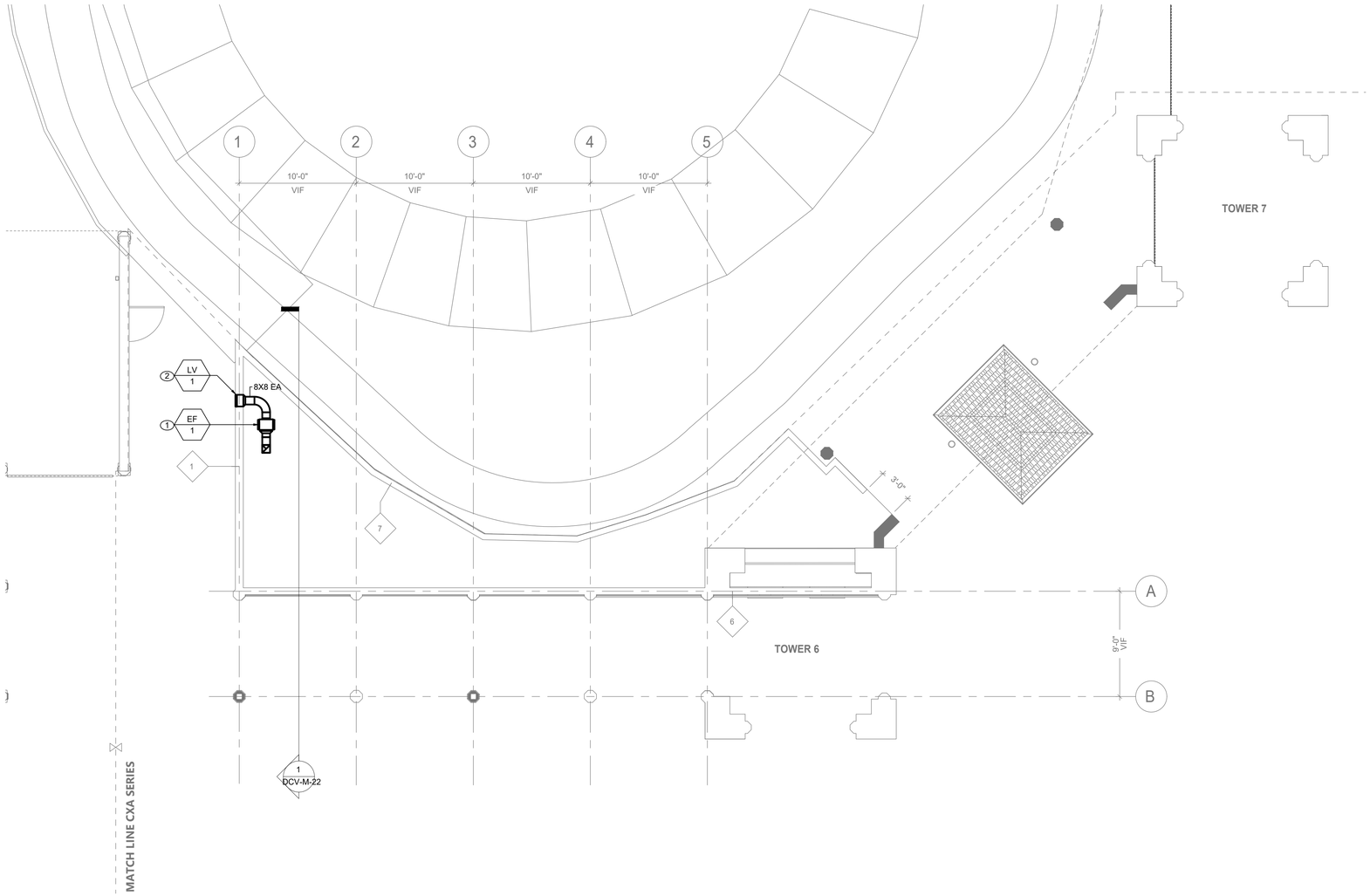

N

MECHANICAL ATTIC CONSTRUCTION PLAN

SCALE: 3/16" = 1'-0

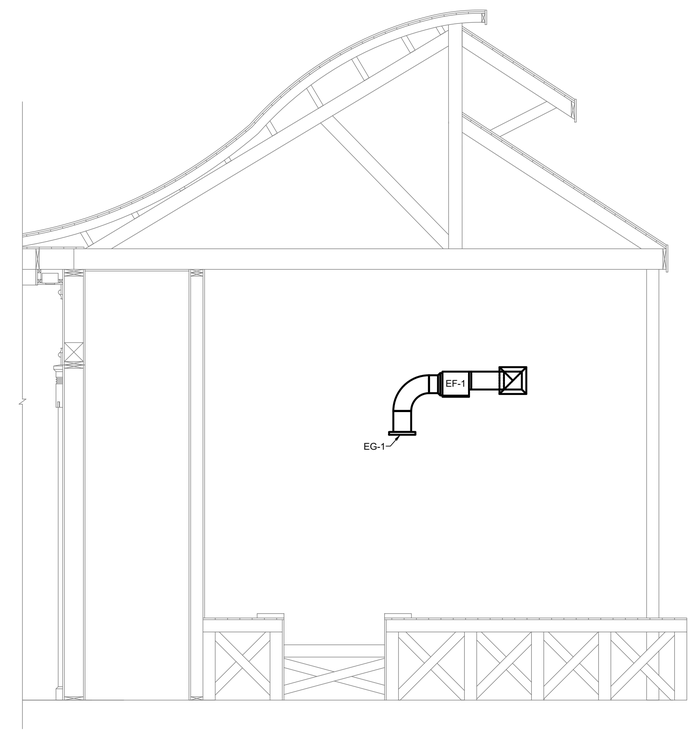

(1) **INTERIOR SECTION - NORTH**

SCALE: 3/8" = 1'-0

CONSULTANT INFORMATION	CONSULTANT SEAL	REVISION NUMBER	DATE	MADE BY	APP'D BY	REVISION
LiRo Engineers, Inc. A LiRo Group Company Syosset, N.Y. 516-214-8157[T]	STATE OF NEW YORK FRANK F. ULIASSE No. 090111 LICENSED PROFESSIONAL ENGINEER					

RECORD DRAWING CERTIFICATION

☐ AS BUILT – CHANGES AS NOTED ☐ AS BUILT – NO CHANGES

CONTRACTOR: NAME / SIGNATURE / TITLE / DATE

PROJECT COORDINATOR: NAME / SIGNATURE / TITLE / DATE

WESTCHESTER COUNTY, NEW YORK
DEPARTMENT OF PUBLIC WORKS AND TRANSPORTATION
DIVISION OF ENGINEERING

INFRASTRUCTURE REHABILITATION - PHASE 3
PLAYLAND PARK, RYE, NEW YORK
DRAGON COASTER VENDORS
MECHANICAL ATTIC CONSTRUCTION PLAN

CONTRACT NUMBER	22-523
SHEET NUMBER	DCV-M-22
DWG NO.:	472 of 664
SCALE:	AS INDICATED
DATE:	08/23/2022
DPW FILE NUMBER	1-118-M-1221-0
REV. NO.	0

FAN SCHEDULE

TAG	MANUFACTURER	MODEL	LOCATION	SERVICE	TYPE	DRIVE	AIR FLOW (CFM)	TSP (IN. WG)	ELECTRICAL				OPERATING WEIGHT (±LBS)	DIMENSIONS DxWxH (IN)	NOTES
									HP	BHP	RPM	V-PH-HZ			
EF-1	GREENHECK	CSP-A390-VG	VENDOR SPACE 101 ATTIC	VENDOR SPACE 101	CENTRIFUGAL	DIRECT	200	0.20	0.07	0.03	887	115-1-60	24	12X14X11	1-5

NOTES:

1. PROVIDE ALL CONTACTS, RELAYS, AND DEVICES NECESSARY FOR BMS CONTROL OF FANS PER SEQUENCE OF OPERATIONS.
2. PROVIDE WALL MOUNT SWITCH FOR EF-1, REFER TO CONTROLS.
3. PROVIDE THERMAL OVERLOAD FOR ALL SINGLE PHASE MOTORS.
4. PROVIDE SALT WATER RESISTANT HI-PRO POLYESTER COATING FOR ALL FANS.
5. FAN SHALL BE FURNISHED WITH NON FUSED DISCONNECT.

LOUVER SCHEDULE

TAG	MANUFACTURER	MODEL	SERVICE	LOCATION	MATERIAL	FINISH TYPE	WIDTH (INCH)	HEIGHT (INCH)	FREE AIR VELOCITY (FPM)	PRESSURE DROP (IN. WG)	MINIMUM FREE AREA (SQUARE FEET)	NOTES
LV-1	GREENHECK	ESD-635	EXHAUST	VENDOR SPACE ATTIC	ALUMINUM	BAKED ENAMEL	12	12	1053	0.14	0.19	1

NOTES:

1. PROVIDE WITH ALUMINUM BIRD SCREEN AND BACKDRAFT DAMPERS.

DIFFUSER SCHEDULE

TAG	MANUFACTURER	MODEL	SERVICE	NECK SIZE (IN)	FACE SIZE (IN)	MOUNTING	CFM	MAX PD (wg)	MAX VELOCITY (FPM)	MAX NC	NOTES
EG-1	TITUS	50F	GENERAL EXHAUST	8X8	11.75X11.75	LAY-IN / GYP	177-354	0.05	600	20	1, 3, 4

NOTES:

1. COORDINATE AND CONFIRM CEILING AND/OR WALL MOUNT (T-BAR, SURFACE, REINFORCEMENT, ETC) WITH ARCHITECTURAL RCP AND WALL CONSTRUCTION BEFORE ORDERING.
2. PROVIDE WITH MOLDED INSULATION BLANKET.
3. INTEGRAL VOLUME DAMPERS NOT ACCEPTABLE. VOLUME DAMPERS PROVIDED BY MECHANICAL CONTRACTOR ON ALL RUN-OUTS. EXCEPTIONS REQUIRE APPROVAL WHEN REQUIRED.
4. PROVIDE ALL ALUMINUM CONSTRUCTION VERSION FOR GRDS LOCATED IN GYM, BATHROOM, LOCKER, SHOWER AREAS, AND IMAGING/MRI ROOMS.

CONSULTANT INFORMATION

LiRo Engineers, Inc.
A LiRo Group Company
Syosset, N.Y. 516-214-8157[T]

CONSULTANT SEAL

STATE OF NEW YORK · FRANK F. ULISSE · No. 090111-1 · LICENSED PROFESSIONAL ENGINEER

REVISION NUMBER	DATE	MADE BY	APP'D BY	REVISION

RECORD DRAWING CERTIFICATION

☐ AS BUILT – CHANGES AS NOTED ☐ AS BUILT – NO CHANGES

CONTRACTOR
NAME
SIGNATURE
TITLE DATE

PROJECT COORDINATOR
NAME
SIGNATURE
TITLE DATE

WESTCHESTER COUNTY, NEW YORK
DEPARTMENT OF PUBLIC WORKS AND TRANSPORTATION
DIVISION OF ENGINEERING

INFRASTRUCTURE REHABILITATION - PHASE 3
PLAYLAND PARK, RYE, NEW YORK
DRAGON COASTER VENDORS
MECHANICAL SCHEDULES

CONTRACT NUMBER 22-523
SHEET NUMBER DCV-M-61
DWG NO.: 473 of 664
SCALE: AS INDICATED
DATE: 08/23/2022
DPW FILE NUMBER 1-118-M-1222-0
REV. NO. 0

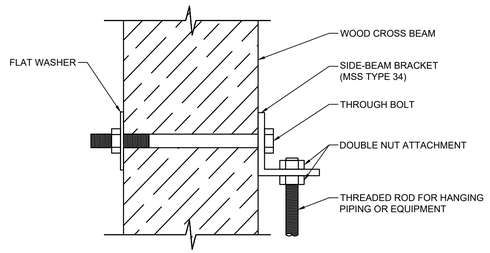

1 / M-81 MECHANICAL ANCHORING DETAIL

SCALE: NOT TO SCALE

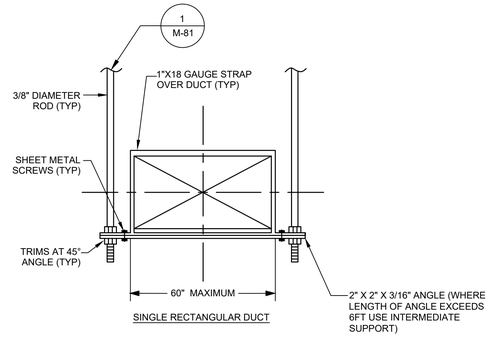

SINGLE RECTANGULAR DUCT

2 / M-81 MECHANICAL DUCT HANGER DETAIL

SCALE: NOT TO SCALE

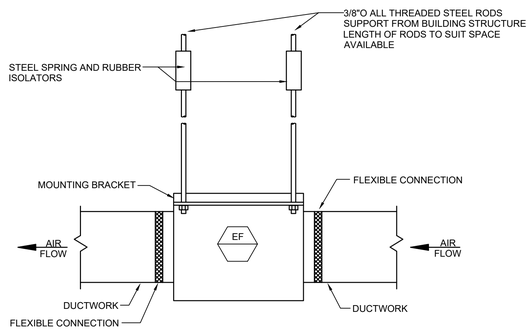

3 / M-81 MECHANICAL FAN HANGING DETAIL

SCALE: NOT TO SCALE

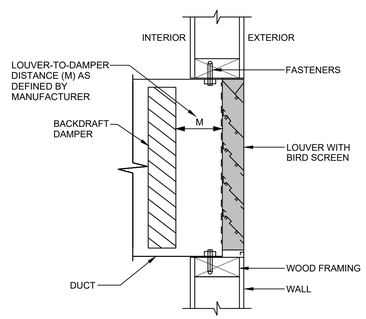

4 / M-81 MECHANICAL LOUVER

SCALE: NOT TO SCALE

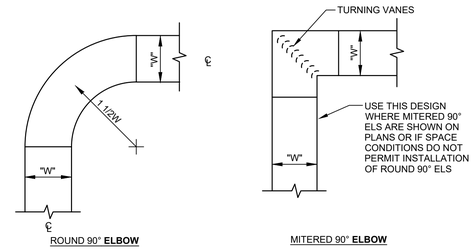

ROUND 90° **ELBOW** MITERED 90° **ELBOW**

CONSTRUCTION OF 90° **ELBOWS**

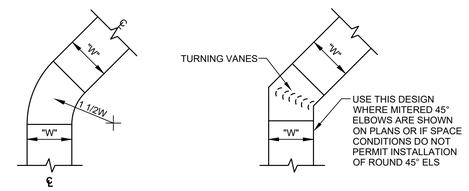

ROUND 45° **ELBOW** MITERED 45° ELBOW

CONSTRUCTION OF 45° ELBOWS

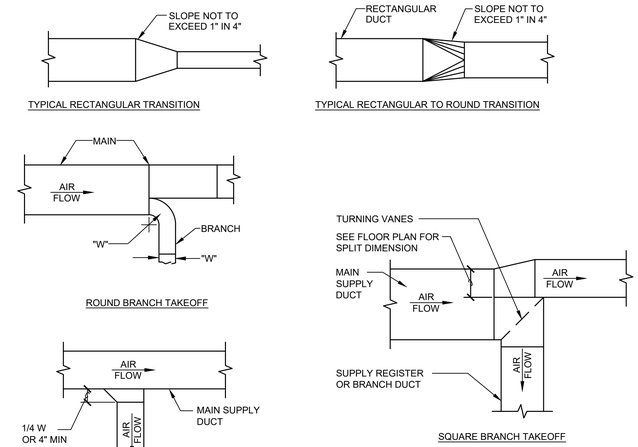

CONSTRUCTION OF TAKEOFFS

INSTALLATION NOTES:

1. ALL DUCT TRANSITIONS SHALL BE CONSTRUCTED AND INSTALLED AS DETAILED BY SMACNA.
2. ALL DUCTS SHALL BE CONSTRUCTED AND ERECTED IN A NEAT AND WORKABLE MANNER.
3. DUCTS SHALL BE CONSTRUCTED OF THE WEIGHTS, GAUGES AND MATERIAL SPECIFIED.
4. THE DIMENSION SHOWN FOR ALL DUCTS SHOWN IN PLAN GIVE THE WIDTH FIRST AND THEN THE HEIGHT.
5. DUCT RISERS SHOULD BE SUPPORTED BY ANGLES AT EVERY FLOOR.
6. AIR TURN SHALL BE INSTALLED IN ALL ABRUPT ELBOWS TO PREVENT TURBULENCE.
7. DUCTS SHALL BE SECURELY ATTACHED TO THE BUILDING CONSTRUCTION IN AN APPROVED MANNER.
8. DIVERGING TRANSITION PIECES SHALL BE MADE AS GRADUAL AS POSSIBLE.
9. INSTALL FIRE DAMPERS IN ACCORDANCE WITH UL 555.
10. ACCESS PANELS SHOULD BE PLACED BEFORE AND/OR AFTER EQUIPMENT INSTALLED IN THE DUCT.
11. DUCT AREA SHOULD NOT BE DECREASED MORE THAN 10 PERCENT WHEN OBSTRUCTIONS CANNOT BE AVOIDED, AND THEN A STREAMLINED FITTING SHOULD BE USED.
12. FLEXIBLE FABRIC CONNECTIONS (OR EQUAL) SHOULD BE USED ON BOTH INLETS AND OUTLETS OF ALL FANS AND AIR HANDLING UNIT.
13. JOINTS AND SEAMS OF SUPPLY DUCTS SHALL BE FASTENED SECURELY AND MADE AIR TIGHT.
14. VANES SHORTER THAN 36" SHALL BE SINGLE WALL, WITH A 2" RADIUS AND 1 1/2" SPACING. VANES LARGER THAN 36" AND SHORTER THAN 48" SHALL BE DOUBLE WALL, WITH A 2" OUTER RADIUS, 1" INNER RADIUS, AND 2 1/8" SPACING. VANES LONGER THAN 48" SHALL BE DOUBLE WALL, WITH A 4 1/2" OUTER RADIUS, 2 1/4" INNER RADIUS, AND 3 1/4" SPACING. NO TURNING VANES SHALL INCLUDE A TRAILING EDGE.

5 / M-81 MECHANICAL DUCT CONSTRUCTION DETAIL

SCALE: NOT TO SCALE

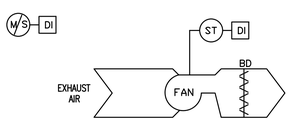

EXHAUST FAN - CONSTANT SPEED - SEQUENCE OF OPERATIONS:

GENERAL: EACH EXHAUST FAN CONSISTS OF FAN, BACKDRAFT DAMPER, AND EC MOTOR CONTROLLER

EXHAUST FAN TO BE LOCALLY CONTROLLED FROM SWITCH MOUNTED ADJACENT TO FAN.

1. OCCUPIED MODE:
   a. THE EXHAUST FAN SHALL RUN AT A CONSTANT VOLUME WHEN SWITCHED ON.
3. UNOCCUPIED MODE:
   a. THE EXHAUST FAN SHALL BE OFF WHEN SWITCHED OFF.

6 / M-81 EXHAUST FAN - CONSTANT SPEED

SCALE: NOT TO SCALE

CONSULTANT INFORMATION

LiRo Engineers, Inc.
A LiRo Group Company
Syosset, N.Y. 516-214-8157[T]

CONSULTANT SEAL

STATE OF NEW YORK · FRANK F. ULLISE · No. 090111-1 · LICENSED PROFESSIONAL ENGINEER

REVISION NUMBER	DATE	MADE BY	APP'D BY	REVISION

RECORD DRAWING CERTIFICATION

☐ AS BUILT – CHANGES AS NOTED ☐ AS BUILT – NO CHANGES

CONTRACTOR
NAME
SIGNATURE
TITLE DATE

PROJECT COORDINATOR
NAME
SIGNATURE
TITLE DATE

WESTCHESTER COUNTY, NEW YORK
DEPARTMENT OF PUBLIC WORKS AND TRANSPORTATION
DIVISION OF ENGINEERING

INFRASTRUCTURE REHABILITATION - PHASE 3
PLAYLAND PARK, RYE, NEW YORK
DRAGON COASTER VENDORS
MECHANICAL DETAILS AND CONTROLS

CONTRACT NUMBER	22-523
SHEET NUMBER	DCV-M-81
DWG NO.:	474 of 664
SCALE:	AS INDICATED
DATE:	08/23/2022
DPW FILE NUMBER	1-118-M-1223-0
REV. NO.	0

PANELBOARD: EXISTING PANEL - NORTH CROSS AXIS VENDOR SPACES
1 **NEMA RATING**
XXX **AMP BUS RATING** 200 **AMP MAIN BREAKER**
208Y/120 **VOLTS** 3 **PHASE** 4 **WIRE**
3 **POLES**
42 **KA SHORT CIRCUIT RATING**
LOCATION: VENDOR SPACE MAINTENANCE AREA BEHIND DIPPIN DOTS
MOUNTING: SURFACE
ELECTRONIC GRADE: NO

CIRCUIT NO	DESCRIPTION	LOAD KVA PHASE A	PHASE B	PHASE C	BREAKER AMPS POLES	NOTES	CIRCUIT NO	DESCRIPTION	LOAD KVA PHASE A	PHASE B	PHASE C	BREAKER AMPS POLES	NOTES
1	BACK ROOM LIGHTS				20/1		2	OUTLET				20/1	
3	OUTLET				20/1		4	OUTLET				20/1	
5	OUTLET				20/1		6	OUTLET				20/1	
7	OUTLET				20/1		8	OUTLET				20/1	
9	OUTLET BY ICE DROPS				20/1		10	OUTLET				20/1	
11	OVEN				60/2		12	OUTLET				40/2	
13							14						
15	ICE MACHINE				30/2		16	ICE DROP B				30/2	
17							18						
19	ICE DROP A				30/2		20	HOT WATER HEATER				20/2	
21							22						
23	AWNING LIGHTS				20/1		24	BLANK					
25	FRONT ROOM LIGHTS				20/1		26	BLANK					
27	BLANK						28	BLANK					
29	PANEL OF OUTLET				20/1		30	BLANK					
	TOTAL PHASE KVA THIS SIDE	0	0	0				TOTAL PHASE KVA THIS SIDE	0	0	0		
								TOTAL KVA PER PHASE	0	0	0		
								TOTAL THREE PHASE KVA		0			

NOTES:
1
2
3
4

NOTES CONT.
5
6
7
8

PANELBOARD: EXISTING - UPGRADE BOOTH PANEL
1 **NEMA RATING**
125 **AMP BUS RATING** 100 **AMP MAIN BREAKER**
208Y/120 **VOLTS** 3 **PHASE** 4 **WIRE**
3 **POLES**
42 **KA SHORT CIRCUIT RATING**
LOCATION: GUEST RELATIONS UPGRADE BOOTH
MOUNTING: SURFACE
ELECTRONIC GRADE: NO

CIRCUIT NO	DESCRIPTION	LOAD KVA PHASE A	PHASE B	PHASE C	BREAKER AMPS POLES	NOTES	CIRCUIT NO	DESCRIPTION	LOAD KVA PHASE A	PHASE B	PHASE C	BREAKER AMPS POLES	NOTES
1	LIGHTS				15/1		2	SOUND SYSTEM OUTLETS					
3	LIGHTS				15/1		4	SOUND SYSTEM OUTLETS					
5	AIR CONDITIONING						6	SOUND SYSTEM OUTLETS					
7	OUTLETS BELOW PANEL				20/1		8	WALL OUTLETS - NAXIS OFFICE					
9	PA SYSTEM GRAND OUTLETS				20/1		10	GUEST BOOTH					
11	BLANK						12	BLANK					
	TOTAL PHASE KVA THIS SIDE	0	0	0				TOTAL PHASE KVA THIS SIDE	0	0	0		
								TOTAL KVA PER PHASE	0	0	0		
								TOTAL THREE PHASE KVA		0			

NOTES:
1
2
3
4

NOTES CONT.
5
6
7
8

NOTES:

1. FOR ADDITIONAL NOTES, ABBREVIATIONS AND SYMBOLS, SEE DRAWING GE–E–01.

KEY NOTES:

1. INCOMING SERVICE SOURCE: QUAD #3 ELECTRICAL ROOM.
2. EXISTING CIRCUIT BREAKERS TO REMAIN AND BE REUSED. CONTRACTOR IS ADVISED THAT NEW UNDERGROUND CONDUIT SHALL BE PROVIDED AND INSTALLED.
3. DISCONNECT AND REMOVE EXISTING CABLE FROM MAIN OUTDOOR PANEL TO PANELBOARDS LOCATED IN THE DCV SPACES. SEE DRAWING DCV–E–02, DCV–E–05 & DCV–E–06 FOR ADDITIONAL INFORMATION.

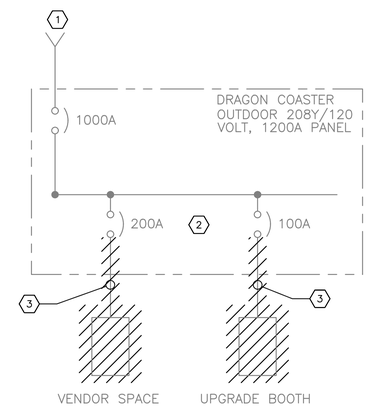

ONE LINE DIAGRAM – DEMOLITION
N.T.S.

Drawing Name: G:\SavinAutocad\2060\25-Playland-Mega-3\E\DCVE-1001.dwg
Projectname: 211001F02 Comments: ----
Printed by: MGoodby Date: 29 August 2022 4:00 PM Designed by: ----
Xrefs: [TB_24X36_WestchesterCo_3.dwg] [TSG-SVL060.dwg] [BCR-A-04.dwg] [BCRE-101.dwg]

CONSULTANT INFORMATION
Savin Engineers, P.C.

CONSULTANT SEAL
STATE OF NEW YORK · STEVEN A. MARTINO · 093631 · LICENSED PROFESSIONAL ENGINEER

REVISION NUMBER	DATE	MADE BY	APP'D BY	REVISION

RECORD DRAWING CERTIFICATION
☐ AS BUILT – CHANGES AS NOTED ☐ AS BUILT – NO CHANGES

CONTRACTOR
NAME
SIGNATURE
TITLE DATE

PROJECT COORDINATOR
NAME
SIGNATURE
TITLE DATE

WESTCHESTER COUNTY, NEW YORK
DEPARTMENT OF PUBLIC WORKS AND TRANSPORTATION
DIVISION OF ENGINEERING

INFRASTRUCTURE REHABILITATION - PHASE 3
PLAYLAND PARK, RYE, NEW YORK
DRAGON COASTER VENDORS
ONE LINE DIAGRAM - DEMOLITION

CONTRACT NUMBER **22-523**
SHEET NUMBER **DCV-E-01**
DWG NO.:
SCALE: **AS SHOWN**
DATE: **8/23/2022**
DPW FILE NUMBER **1-118-E-1224-0**
REV. NO. **0**

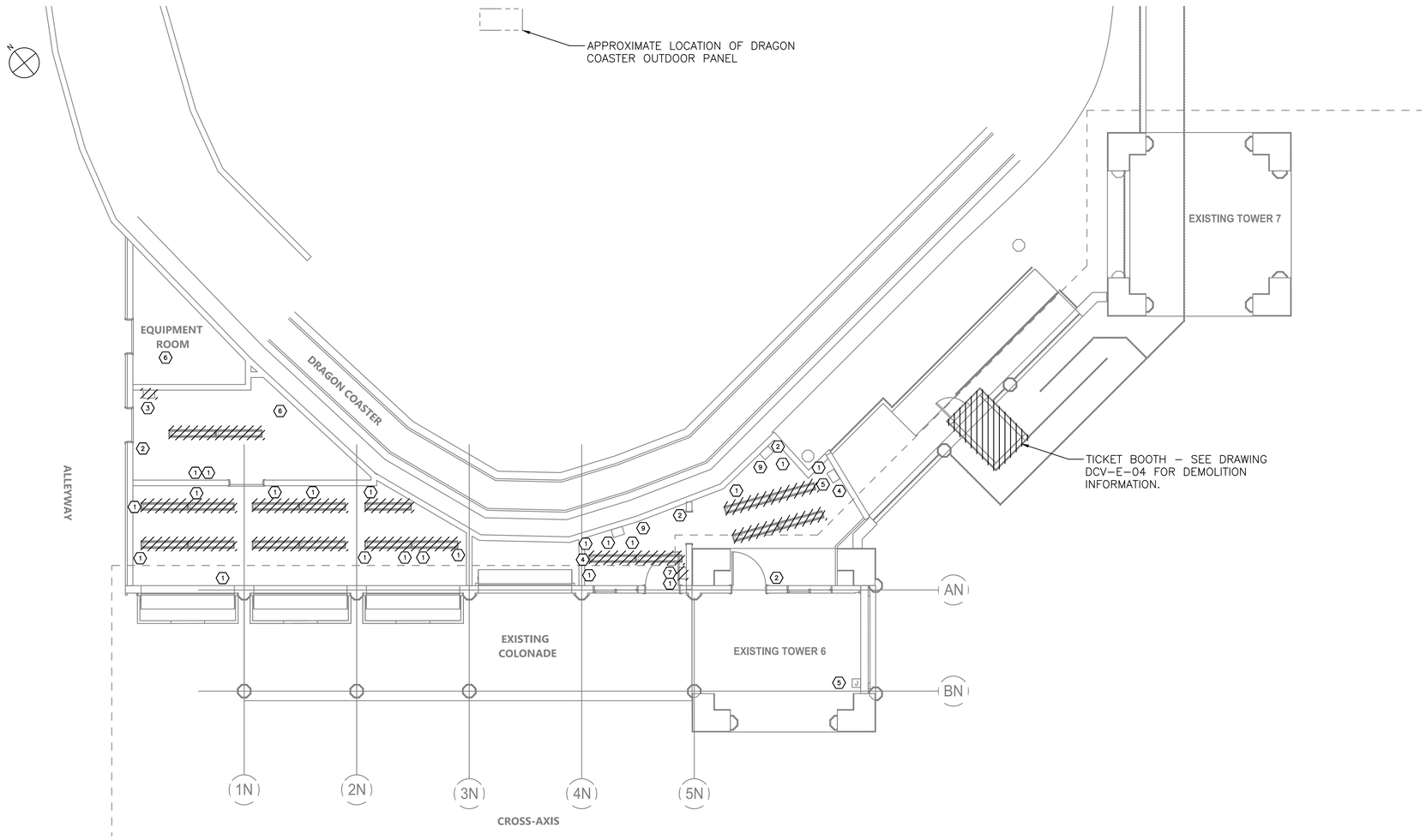

DRAGON COASTER VENDORS GROUND FLOOR – DEMOLITION PLAN

SCALE: 3/16" = 1'–0"

NOTES:

1. FOR ADDITIONAL NOTES, ABBREVIATIONS AND SYMBOLS, SEE DRAWING GE–E–01.
2. ALL EXISTING CABLE AND CONDUIT SHALL BE DOCUMENTED PRIOR TO REMOVAL.
3. DATA PORTS TO BE REMOVED BY OTHERS.
4. DISPOSITION OF EXISTING CCTV/DATA/COMMUNICATIONS SHALL BE BY OTHERS. THIS INCLUDES BOTH INCOMING AND OUTGOING CONDUIT AND CABLES.
5. WIRE ASSOCIATED WITH THESE PANELBOARDS SHALL BE DISCONNECTED AND REMOVED BACK TO DRAGON COASTER OUTDOOR PANEL VIA EXISTING UNDERGROUND CONDUIT. REMOVE CONDUIT TO 18" BELOW GROUND. ABANDON REMAINDER IN PLACE.
6. DISCONNECT AND REMOVE ALL CONDUIT AND WIRE IN EXISTING GUEST SERVICES AND VENDOR SPACES. ASSUME 200' OF 3/4" CONDUIT WITH 4#10 WIRE.
7. DISCONNECT AND REMOVE ALL LIGHTING FIXTURES AND ASSOCIATED SWITCHING. DISCONNECT AND REMOVE ALL WIRING DEVICES.

DEMOLITION LEGEND ⬡	
1	RECEPTACLE
2	LIGHT SWITCH
3	30 CKT PANEL (SEE NOTE 6)(VENDOR SPACE)
4	DATA PORTS (SEE NOTE 4)
5	COMMUNICATIONS HUB (SEE NOTE 5)
6	MECHANICAL EQUIPMENT (REMOVED BY OTHERS)
7	12 CKT PANEL (SEE NOTE 6)(UPGRADE BOOTH)
8	GENERAL DUTY SAFETY SWITCH
9	AIR CONDITIONING UNIT
10	UNIT HEATER
11	
12	
13	
14	
15	
16	
17	
18	
19	

0 4' 8'

SCALE: 3/16" = 1'–0"

CONSULTANT INFORMATION

Savin Engineers, P.C.

CONSULTANT SEAL

STATE OF NEW YORK · STEVEN A. MARTINO · 083631 · LICENSED PROFESSIONAL ENGINEER

REVISION NUMBER	DATE	MADE BY	APP'D BY	REVISION

RECORD DRAWING CERTIFICATION

☐ AS BUILT – CHANGES AS NOTED ☐ AS BUILT – NO CHANGES

CONTRACTOR: NAME ____ SIGNATURE ____ TITLE ____ DATE ____

PROJECT COORDINATOR: NAME ____ SIGNATURE ____ TITLE ____ DATE ____

WESTCHESTER COUNTY, NEW YORK
DEPARTMENT OF PUBLIC WORKS AND TRANSPORTATION
DIVISION OF ENGINEERING

INFRASTRUCTURE REHABILITATION - PHASE 3
PLAYLAND PARK, RYE, NEW YORK
DRAGON COASTER VENDORS
VENDORS GROUND FLOOR - DEMOLITION

CONTRACT NUMBER	22-523
SHEET NUMBER	DCV-E-02
DWG NO.:	----
SCALE:	AS SHOWN
DATE:	8/23/2022
DPW FILE NUMBER	1-118-E-1225-0
REV. NO.	0

Drawing Name: G:\SavinAutocad\2060\25-Playland-Mega-3\E\DCVE-1002.dwg
Projectname: ---- Comments: ----
Printed by: MGadby Date: 29 August 2022 4:00 PM Designed by: ----
Xrefs: [TSC-SVLOGO.dwg] [TB_24X36_WestchesterCo_3.dwg] [TW-DM-08.dwg] [DCV-E-1006.dwg]

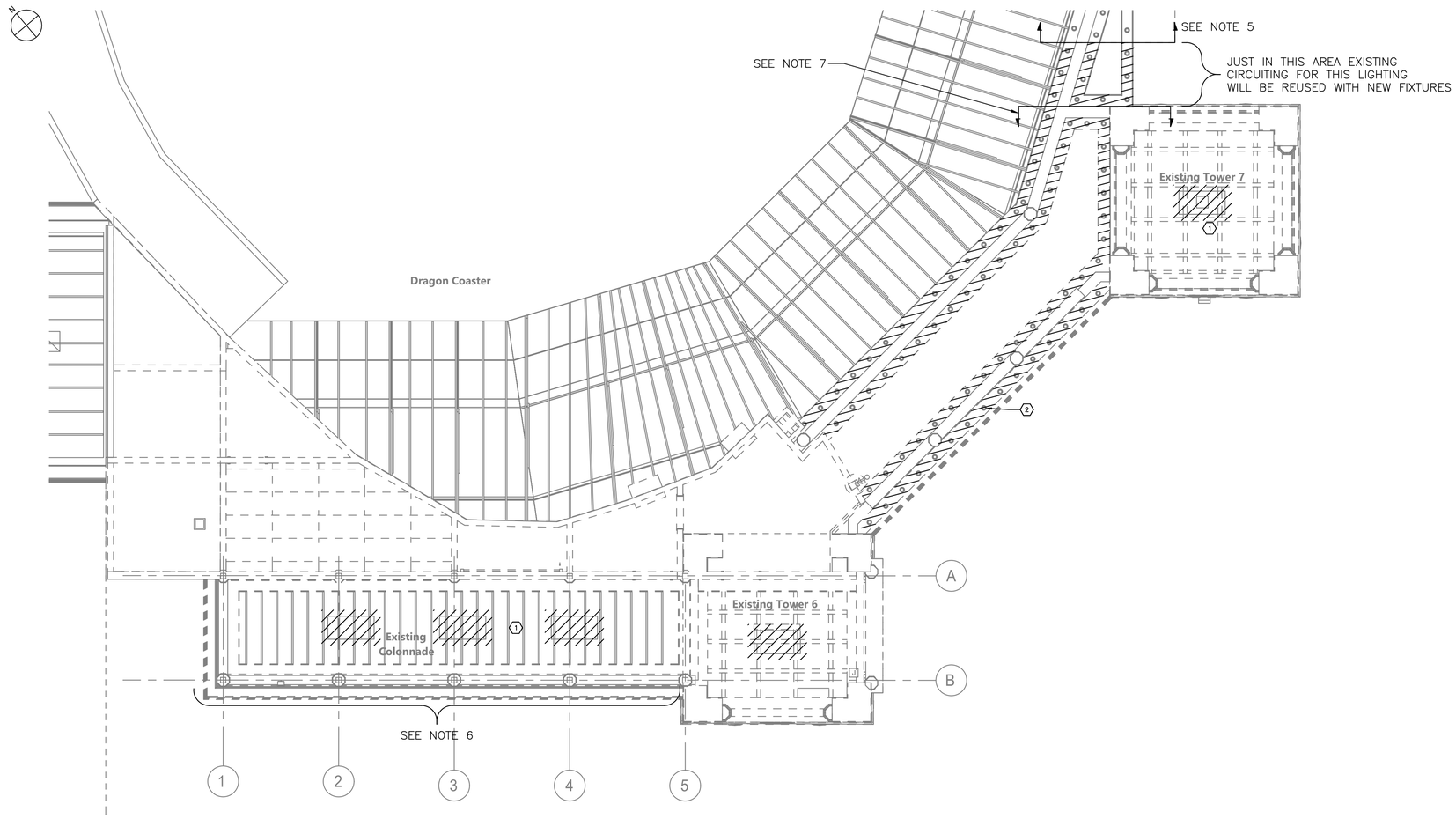

NORTH COLONNADE AND TOWER 6 & 7 – DEMOLITION PLAN

SCALE: 3/16" = 1'-0"

NOTES:

1. FOR ADDITIONAL NOTES, ABBREVIATIONS AND SYMBOLS, SEE DRAWING GE-E-01.
2. ALL EXISTING CABLE AND CONDUIT SHALL BE DOCUMENTED PRIOR TO REMOVAL.
3. DISCONNECT AND REMOVE ALL FLUORESCENT LIGHTING FIXTURES. REMOVE POWER WIRING BACK TO POWER SOURCE.
4. CONTRACTOR TO TRACE OUT POWER CIRCUIT FOR EXISTING COVE LIGHTING. DISCONNECT AND REMOVE EXISTING WIRING (FOR AREA SHOWN AS CROSS HATCHED) BACK TO POWER SOURCE.
5. ALL EXISTING COVE LIGHTING FIXTURES NORTH OF ARROW MARKING SHALL REMAIN AND BE REUSED VIA EXISTING CIRCUITING AND ASSOCIATED LIGHTING CONTROL.
6. EXISTING COVE LIGHTING LOCATED AT THIS COLONNADE HAS BEEN REMOVED UNDER A DIFFERENT CONTRACT. UNDER THIS CONTRACT, ALL OLD WIRING SHALL BE REMOVED BACK TO POWER SOURCE.
7. ALL NEW CIRCUITING SHALL BE USED IN THIS AREA SOUTH OF THIS LINE.

DEMOLITION LEGEND ⬡	
1	FLUORESCENT FIXTURES (SEE NOTE 3)
2	COVE LIGHT FIXTURES (SEE NOTE 4)
3	
4	
5	
6	
7	
8	
9	
10	
11	
12	
13	
14	
15	
16	
17	
18	
19	

0 4' 8'

SCALE: 3/16" = 1'-0"

CONSULTANT INFORMATION

Savin Engineers, P.C.

CONSULTANT SEAL

STATE OF NEW YORK · STEVEN A. MARTINO · 083631 · LICENSED PROFESSIONAL ENGINEER

REVISION NUMBER	DATE	MADE BY	APP'D BY	REVISION

RECORD DRAWING CERTIFICATION

☐ AS BUILT – CHANGES AS NOTED ☐ AS BUILT – NO CHANGES

CONTRACTOR

NAME
SIGNATURE
TITLE DATE

PROJECT COORDINATOR

NAME
SIGNATURE
TITLE DATE

WESTCHESTER COUNTY, NEW YORK
DEPARTMENT OF PUBLIC WORKS AND TRANSPORTATION
DIVISION OF ENGINEERING

INFRASTRUCTURE REHABILITATION - PHASE 3
PLAYLAND PARK, RYE, NEW YORK
DRAGON COASTER VENDORS
COLONNADE & TOWERS DEMOLITION

CONTRACT NUMBER	22-523
SHEET NUMBER	DCV-E-03
DWG NO.:	---
SCALE:	AS SHOWN
DATE:	8/23/2022
DPW FILE NUMBER	1-118-E-1226-0
REV. NO.	0

Drawing Name: G:\SavinAutocad\2060\25-Playland-Mega-3\E\DCVE-1008.dwg
Rev#: Projectname: ---- Comments: ----
Printed by: MGodby Date: 29 August 2022 4:00 PM Designed by: ----
Xrefs: [TSC-SVL060.dwg] [TB_24X36_WestchesterCo_3.dwg] [DCV-E-1007.dwg] [DCV-A-02.dwg]

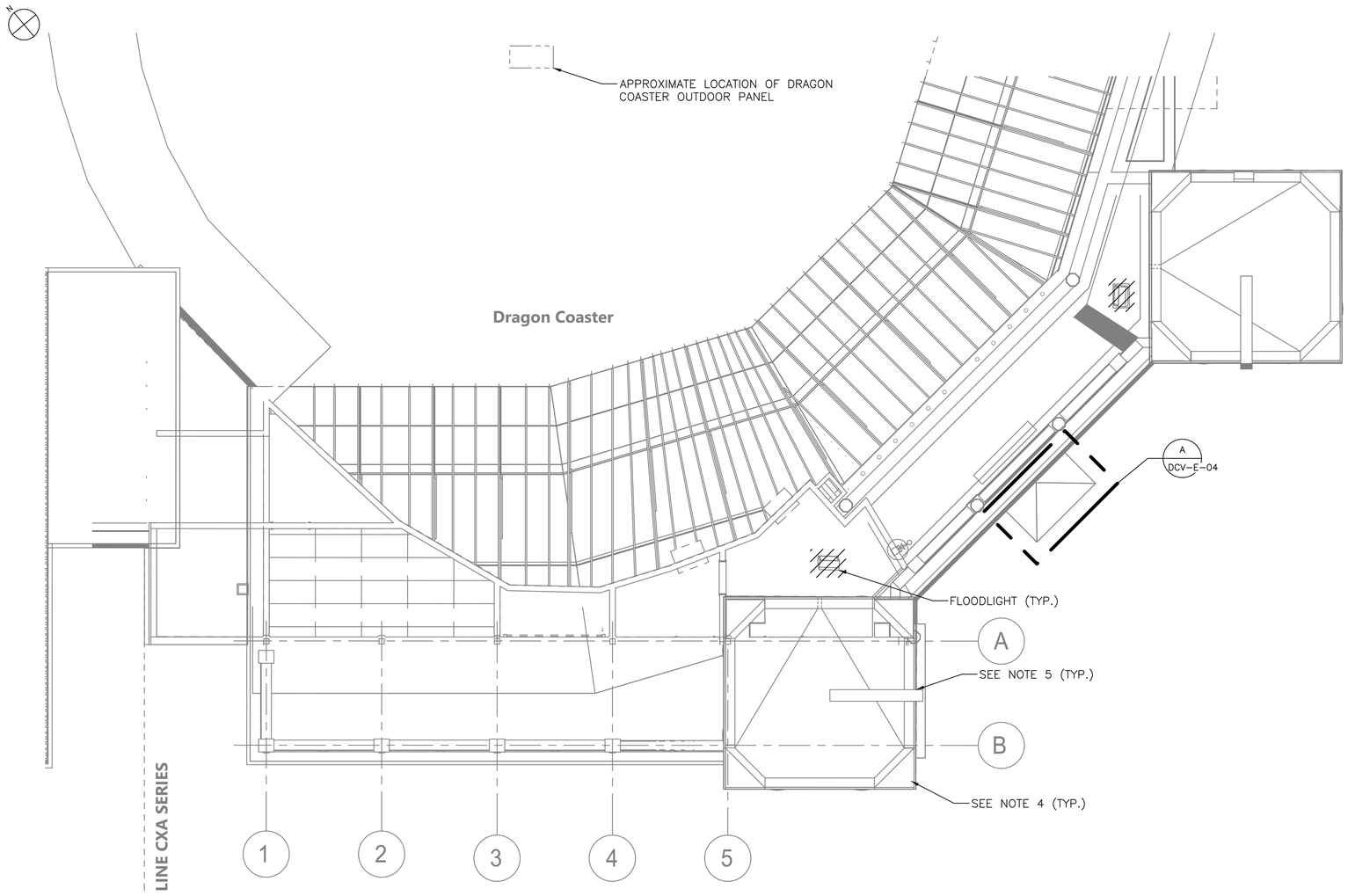

2 DCV-E-04 ROOF PLAN DEMOLITION
SCALE: 3/16" = 1'-0"

NOTES:

1. FOR ADDITIONAL NOTES, ABBREVIATIONS AND SYMBOLS, SEE DRAWING GE-E-01.
2. ALL EXISTING CABLE AND CONDUIT SHALL BE DOCUMENTED PRIOR TO REMOVAL.
3. DISCONNECT AND REMOVE TWO FLOODLIGHTS. REMOVE WIRE BACK TO POWER SOURCE.
4. CONTRACTOR IS ADVISED, ALL HISTORIC ACORN AND TORCHIERE FIXTURES HAVE BEEN REMOVED BY OTHERS. FIXTURES HAVE BEEN SENT OUT FOR REFURBISHMENT AND WILL BE RETURNED AT A LATER DATE. CONTRACTOR, UNDER THIS CONTRACT, WILL REINSTALL AND POWER HISTORIC FIXTURES. ASSUME TEN UNITS TO BE INSTALLED.
5. CONTRACTOR IS ADVISED THAT THERE ARE TWO DRAGON HEADS THAT SPRAY WATER. THE POWER TO THE SPRAY PUMPS HAVE BEEN REMOVED BY OTHERS. CONTRACTOR SHALL RE-ESTABLISH POWER TO BOTH PUMPS. ASSUME 20 AMP CIRCUIT AND 3#10 & 1#10 GND. REUSE EXISTING CONDUIT. REUSE EXISTING POWER SOURCE AND ASSOCIATED CONTROLS.
6. DISCONNECT AND REMOVE FLUORESCENT FIXTURES ASSOCIATED WITH THE TICKET BOOTH. EXISTING POWER TO BOOTH TO REMAIN AND BE REUSED.

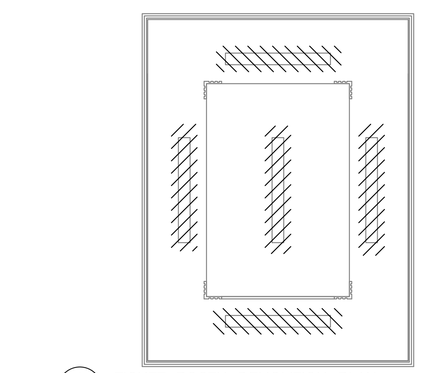

A DCV-E-04 TICKET BOOTH DEMOLITION PLAN
SCALE: 1/2" = 1'-0"

(SEE NOTE 6)

0 4' 8'
SCALE: 3/16" = 1'-0"

Drawing Name: G:\SavinAutocad\2060\25-Playland-Mega-3\E\DCVE-1009.dwg
Proj#: Projectname: ---- Comments: ----
Printed by: MGoaby Date: 29 August 2022 4:01 PM Designed by: ----
Xrefs: [TSG-SVLOGO.dwg] [TB_24X36_WestchesterCo_3.dwg] [DCV-E-1008.dwg] [DCV-A-03.dwg]

CONSULTANT INFORMATION

Savin Engineers, P.C.

CONSULTANT SEAL

STATE OF NEW YORK · STEVEN A. MARTINEZ · 083631 · LICENSED PROFESSIONAL ENGINEER

REVISION NUMBER	DATE	MADE BY	APP'D BY	REVISION

RECORD DRAWING CERTIFICATION

☐ AS BUILT – CHANGES AS NOTED ☐ AS BUILT – NO CHANGES

CONTRACTOR
NAME
SIGNATURE
TITLE DATE

PROJECT COORDINATOR
NAME
SIGNATURE
TITLE DATE

WESTCHESTER COUNTY, NEW YORK
DEPARTMENT OF PUBLIC WORKS AND TRANSPORTATION
DIVISION OF ENGINEERING

INFRASTRUCTURE REHABILITATION - PHASE 3
PLAYLAND PARK, RYE, NEW YORK
DRAGON COASTER VENDORS
ROOF PLAN DEMOLITION

CONTRACT NUMBER	22-523
SHEET NUMBER	DCV-E-04
DWG NO.:	----
SCALE:	AS SHOWN
DATE:	8/23/2022
DPW FILE NUMBER	1-118-E-1227-0
REV. NO.	0

PANELBOARD: PP-V — **LOCATION:** EXTERIOR - VENDOR SPACE

3R **NEMA RATING** — 3 **POLES** — **MOUNTING:** SURFACE

225 **AMP BUS RATING** — 200 **AMP MAIN BREAKER** — 42 **KA SHORT CIRCUIT RATING**

208Y/120 **VOLTS** — 3 **PHASE** 4 **WIRE** — **ELECTRONIC GRADE :** NO

CIRCUIT NO.	DESCRIPTION	LOAD KVA PHASE A	LOAD KVA PHASE B	LOAD KVA PHASE C	BREAKER AMPS / POLES	NOTES	CIRCUIT NO.	DESCRIPTION	LOAD KVA PHASE A	LOAD KVA PHASE B	LOAD KVA PHASE C	BREAKER AMPS / POLES	NOTES
1	RECEPTACLES	0.5			20/1		2	ROLL UP DOOR #1	1			20/1	
3	RECEPTACLES		0.2		20/1		4	ROLL UP DOOR #2		1		20/1	
5	EF-1			0.2	15/1		6	POWER TO RELAY PANEL VS-RP (120V)			0.1	20/1	
7	NORTH COLONNADE SOFFITS	0.8			20/1		8	LIGHTING	0.5			20/1	
9	NORTH COLONNADE ROOF LTG		0.8		20/1		10	SPARE		-		20/1	
11	COURTYARD LTG			0.5	20/1		12	SPARE			-	20/1	
13	VS-RP SPARE	-			20/1		14	SPACE					
15	SPARE		-		20/1		16	SPACE					
17	SPARE			-	20/1		18	SPACE					
19	SPACE						20	SPACE					
21	SPACE						22	SPACE					
23	SPACE						24	SPACE					
25	SPACE						26	SPACE					
27	SPACE						28	SPACE					
29	SPACE						30	SPACE					
31	SPACE						32	SPACE					
33	SPACE						34	SPACE					
35	SPACE						36	SPACE					
37	SPACE						38	SPACE					
39	SPACE						40	SPACE					
41	SPACE						42	SPACE					
	TOTAL PHASE KVA THIS SIDE	1.3	1	0.7				**TOTAL PHASE KVA THIS SIDE**	1.5	1	0.1		
								TOTAL KVA PER PHASE	2.8	2	0.8		
								TOTAL THREE PHASE KVA	5.6				

NOTES:
1. PANEL FOR VENDOR SPACE FIT-OUT.
2.
3.
4.

NOTES CONT.:
5.
6.
7.
8.

PANELBOARD: PP-GS — **LOCATION:** GUEST SERVICES

1 **NEMA RATING** — 3 **POLES** — **MOUNTING:** SURFACE

125 **AMP BUS RATING** — 100 **AMP MAIN BREAKER** — 42 **KA SHORT CIRCUIT RATING**

208Y/120 **VOLTS** — 3 **PHASE** 4 **WIRE** — **ELECTRONIC GRADE :** NO

CIRCUIT NO.	DESCRIPTION	LOAD KVA PHASE A	LOAD KVA PHASE B	LOAD KVA PHASE C	BREAKER AMPS / POLES	NOTES	CIRCUIT NO.	DESCRIPTION	LOAD KVA PHASE A	LOAD KVA PHASE B	LOAD KVA PHASE C	BREAKER AMPS / POLES	NOTES
1	RECEPTACLES	0.7			20/1		2	DRAGON COASTER SOFFITS	0.8			20/1	
3	RECEPTACLES		0.7		20/1		4	DRAGON COASTER ROOF LTG.		0.6		20/1	
5	POWER TO RELAY PANEL DCV-RP (120V)			0.2	20/1		6	DRAGON COASTER FLOODLIGHTS			1.2	20/1	
7	SPARE	-			20/1		8	TWR 6 - CEILING, MURAL, ROOF LTG	0.4			20/1	
9	SPARE		-		20/1		10	TWR 7 - CEILING, MURAL, ROOF LTG		0.4		20/1	
11	SPARE			-	20/1		12	DCV-RP SPARE			-	20/1	
13	RECEPTACLE - TICKET	0.5			20/1		14	LIGHTING	0.2			20/1	
15	RECEPTACLE - TICKET		0.5		20/1		16	SPARE		-		20/1	
17	RECEPTACLE - TICKET			0.5	20/1		18	SPARE			-	20/1	
19	DRAGON PUMP MOTOR #1	1.5			30/1		20	ROLL UP DOOR	1.2			20/1	
21	DRAGON PUMP MOTOR #2		1.5		30/1		22	DATA CABINET		0.2		20/1	
23	VIDEO SCREEN RECEPTACLE (GFI)			0.5	20/1		24	SPARE			-	20/1	
25	SPARE	-			20/1		26	SPACE					
27	SPARE		-		20/1		28	SPACE					
29	SPARE			-	20/1		30	SPACE					
31	SPACE						32	SPACE					
33	SPACE						34	SPACE					
35	SPACE						36	SPACE					
37	SPACE						38	SPACE					
39	SPACE						40	SPACE					
41	SPACE						42	SPACE					
	TOTAL PHASE KVA THIS SIDE	2.7	2.7	1.2				**TOTAL PHASE KVA THIS SIDE**	2.6	1.2	1.2		
								TOTAL KVA PER PHASE	5.3	3.9	2.4		
								TOTAL THREE PHASE KVA	11.6				

NOTES:
1. PANEL FOR GUESET SERVICES FIT-OUT.
2.
3.
4.

NOTES CONT.:
5.
6.
7.
8.

NOTES:

1. FOR ADDITIONAL NOTES, ABBREVIATIONS AND SYMBOLS, SEE DRAWING GE-E-01.

KEY NOTES:

1. REUSE EXISTING 100 AMP & 200 AMP CIRCUIT BREAKERS. PROVIDE NEW UNDERGROUND CONDUIT RUNS TO NEW PANELS.
2. NEW PANEL PP-V, 208Y/120 VOLTS, WITH 225 AMP MAINS AND 200 AMP MAIN CIRCUIT BREAKER. PROVIDE NEMA 3R ENCLOSURE.
3. NEW PANEL PP-GS, 208Y/120 VOLTS WITH 125 AMP MAINS AND 100 AMP CIRCUIT BREAKER.
4. NEW 10 CIRCUIT RELAY PANEL. RELAY PANEL TO MATCH EXISTING INSTALLED IN BUILDING CXA.

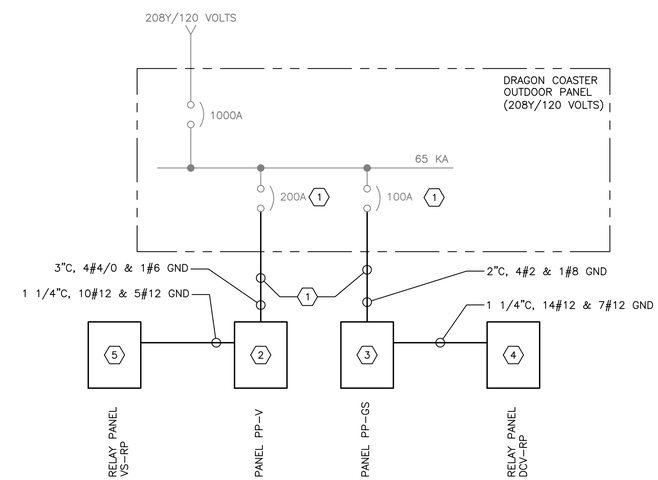

Drawing Name: G:\SavinAutocad\2060\25-Playland-Mega-3\E\DCVE-1004.dwg
Reref: Projectname: 211001F02 Comments: ----
Printed by: MGodby Date: 31 August 2022 8:13 AM Designed by: ----
Xrefs: [TB_24X36_WestchesterCo_3.dwg] [TSC-SVL060.dwg] [BCR-A-04.dwg] [BCRE-101.dwg]

CONSULTANT INFORMATION

Savin Engineers, P.C.

CONSULTANT SEAL

STATE OF NEW YORK — STEVEN A. MARINO — 083631 — LICENSED PROFESSIONAL ENGINEER

REVISION NUMBER	DATE	MADE BY	APP'D BY	REVISION

RECORD DRAWING CERTIFICATION

☐ AS BUILT - CHANGES AS NOTED ☐ AS BUILT - NO CHANGES

CONTRACTOR: NAME / SIGNATURE / TITLE / DATE

PROJECT COORDINATOR: NAME / SIGNATURE / TITLE / DATE

WESTCHESTER COUNTY, NEW YORK
DEPARTMENT OF PUBLIC WORKS AND TRANSPORTATION
DIVISION OF ENGINEERING

INFRASTRUCTURE REHABILITATION - PHASE 3
PLAYLAND PARK, RYE, NEW YORK
DRAGON COASTER VENDORS
ONE LINE DIAGRAM AND PANEL SCHEDULES

CONTRACT NUMBER	22-523
SHEET NUMBER	DCV-E-05
DWG NO.:	
SCALE:	AS SHOWN
DATE:	8/23/2022
DPW FILE NUMBER	1-118-E-1228-0
REV. NO.	0

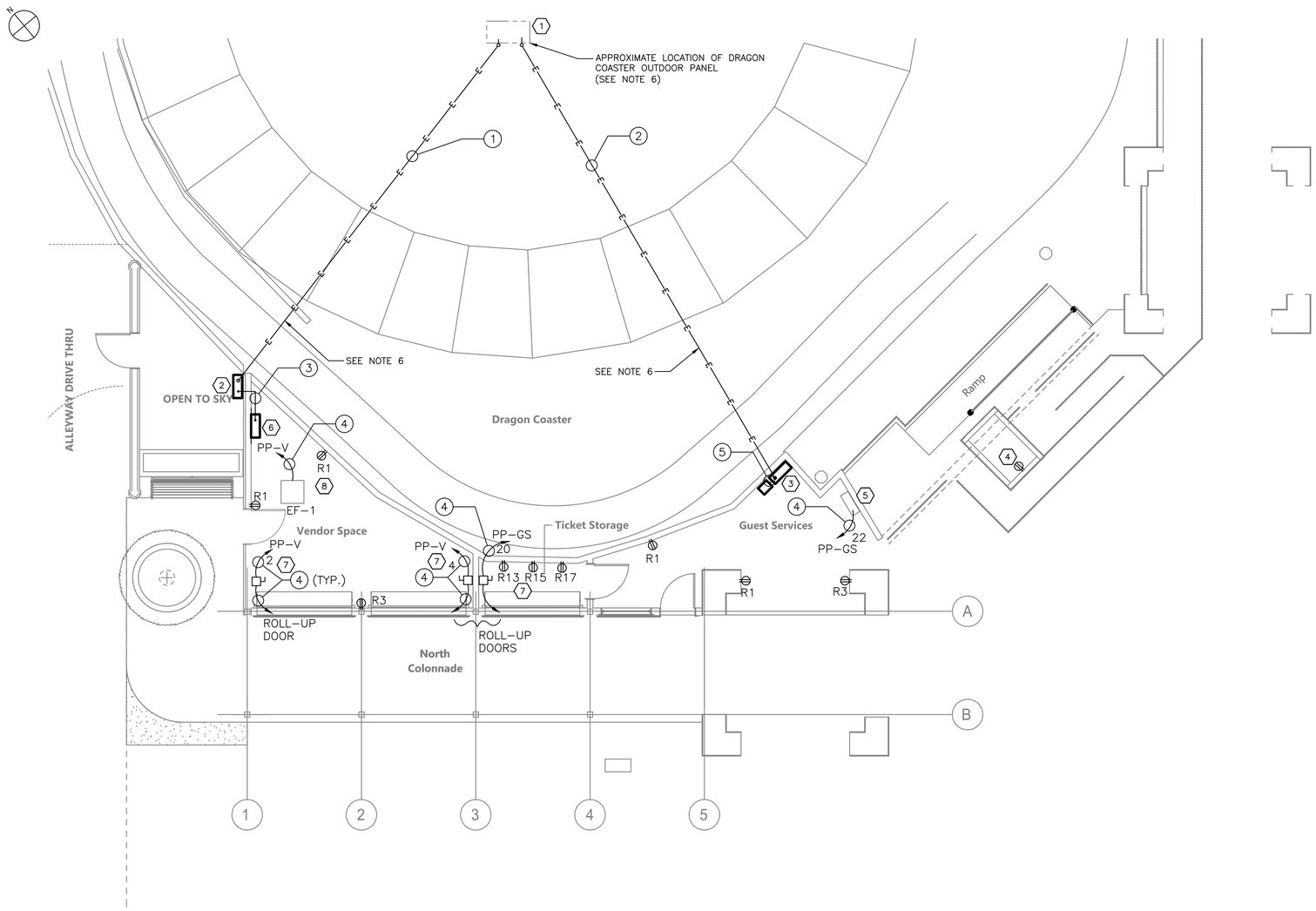

DRAGON COASTER VENDORS GROUND FLOOR – POWER PLAN

SCALE: 3/16" = 1'-0"

NOTES:

1. FOR ADDITIONAL NOTES, ABBREVIATIONS AND SYMBOLS, SEE DRAWING GE-E-01.
2. NEW CABLE AND CONDUIT SHALL BE INSTALLED CONCEALED AS MUCH AS PRACTICAL.
3. REFER TO DRAWING DCV-E-05 FOR ONE LINE DIAGRAM.
4. ALL UNDERGROUND RUN CONDUIT SHALL BE PVC. ANY EXTERIOR MOUNTED CONDUIT SHALL BE RMC. BURY NEW CONDUIT 18" BELOW FINISHED GRADE.
5. CONTRACTOR IS ADVISED, NEW CONDUIT SHALL BE "JACKED" UNDER EXISTING ROLLER COASTER TRACKS. EXTREME CARE SHALL BE TAKEN SO AS NOT TO UNDERMINE AND/OR DAMAGE EXISTING TRACKS. COORDINATE WITH THE OWNER AND ENGINEER DURING CONSTRUCTION.
6. ACTUAL PHYSICAL LOCATION(S) OF NEW UNDERGROUND RUNS SHALL BE DETERMINED BY THE CONTRACTOR IN THE FIELD AND COORDINATED WITH THE OWNER AND ENGINEER.
7. RECEPTACLE LOCATED IN THE VENDOR SPACE SHALL BE POWERED VIA PP-V. ALL RECEPTACLES IN GUEST SERVICES SHALL BE VIA PP-GS. POWER RECEPTACLES VIA 3/4"C, 2#12 & 1#12 GND.

KEY NOTES:

1. MODIFY EXISTING PANEL TO INSTALL NEW CONDUIT AND WIRE. ALL NEW CONDUIT CONNECTOINS SHALL BE WITH WATERTIGHT HUBS.
2. NEW 208Y/120 VOLT PANEL PP-V WITH 225 AMP MAINS AND 200 AMP MAIN CIRCUIT BREAKER MOUNTED TO OUTSIDE WALL IN NEMA 3R ENCLOSURE.
3. NEW 208Y/120 VOLT PANEL PP-GS WITH 125 AMP MAINS AND 100 AMP MAIN CIRCUIT BREAKER AND ASSOCIATED LIGHTING RELAY PANEL DCV-RP.
4. REPOWER NEW TICKET BOOTH VIA EXISTING 120 VOLT CIRCUIT(S).
5. DISPOSITION OF EXISTING COMMUNICATIONS HUB BY OTHERS. CONTRACTOR SHALL SUPPLY 120 VOLT POWER TO CABINET VIA PANEL PP-GS.
6. NEW VENDOR SPACE RELAY PANEL VS-RP.
7. ROLL-UP DOOR MOTOR. PROVIDE 30 AMP, 2-POLE DISCONNECT SWITCH, NEMA 12 ENCLOSURE.
8. EXHAUST FANS EF-1 AND EF-2. PROVIDE 2-POLE DISCONNECT SWITCH EACH FAN.

CONDUIT AND WIRE LEGEND

NO.	DESCRIPTION
1	3"C, 4#4/0 & 1#6 GND (UNDERGROUND)
2	2"C, 4#2 & 1#8 GND (UNDERGROUND)
3	1 1/4"C, 10#12 & 5#12 GNDS
4	3/4"C, 2#12 & 1#12 GND
5	1 1/4"C, 14#12 & 7#12 GNDS

0 4' 8'

SCALE: 3/16" = 1'-0"

CONSULTANT INFORMATION

Savin Engineers, P.C.

CONSULTANT SEAL

STATE OF NEW YORK · STEVEN A. MARTINO · 083631 · LICENSED PROFESSIONAL ENGINEER

REVISION NUMBER	DATE	MADE BY	APP'D BY	REVISION

RECORD DRAWING CERTIFICATION

☐ AS BUILT – CHANGES AS NOTED ☐ AS BUILT – NO CHANGES

CONTRACTOR: NAME / SIGNATURE / TITLE / DATE

PROJECT COORDINATOR: NAME / SIGNATURE / TITLE / DATE

WESTCHESTER COUNTY, NEW YORK
DEPARTMENT OF PUBLIC WORKS AND TRANSPORTATION
DIVISION OF ENGINEERING

INFRASTRUCTURE REHABILITATION - PHASE 3
PLAYLAND PARK, RYE, NEW YORK
DRAGON COASTER VENDORS
GROUND FLOOR POWER PLAN

CONTRACT NUMBER	22-523
SHEET NUMBER	DCV-E-06
DWG NO.:	
SCALE:	AS SHOWN
DATE:	8/23/2022
DPW FILE NUMBER	1-118-E-1229-0
REV. NO.	0

Drawing Name: G:\SavinAutocad\2060\25-Playland-Mega-3\E\DCVE-1005.dwg
Projectname: ---- Comments: ----
Printed by: MGoaby Date: 29 August 2022 4:01 PM Designed by: ----
Xrefs: [TSC-SVL060.dwg] [TB_24X36_WestchesterCo_3.dwg] [DCV-A-10.dwg] [DCV-E-1001.dwg]

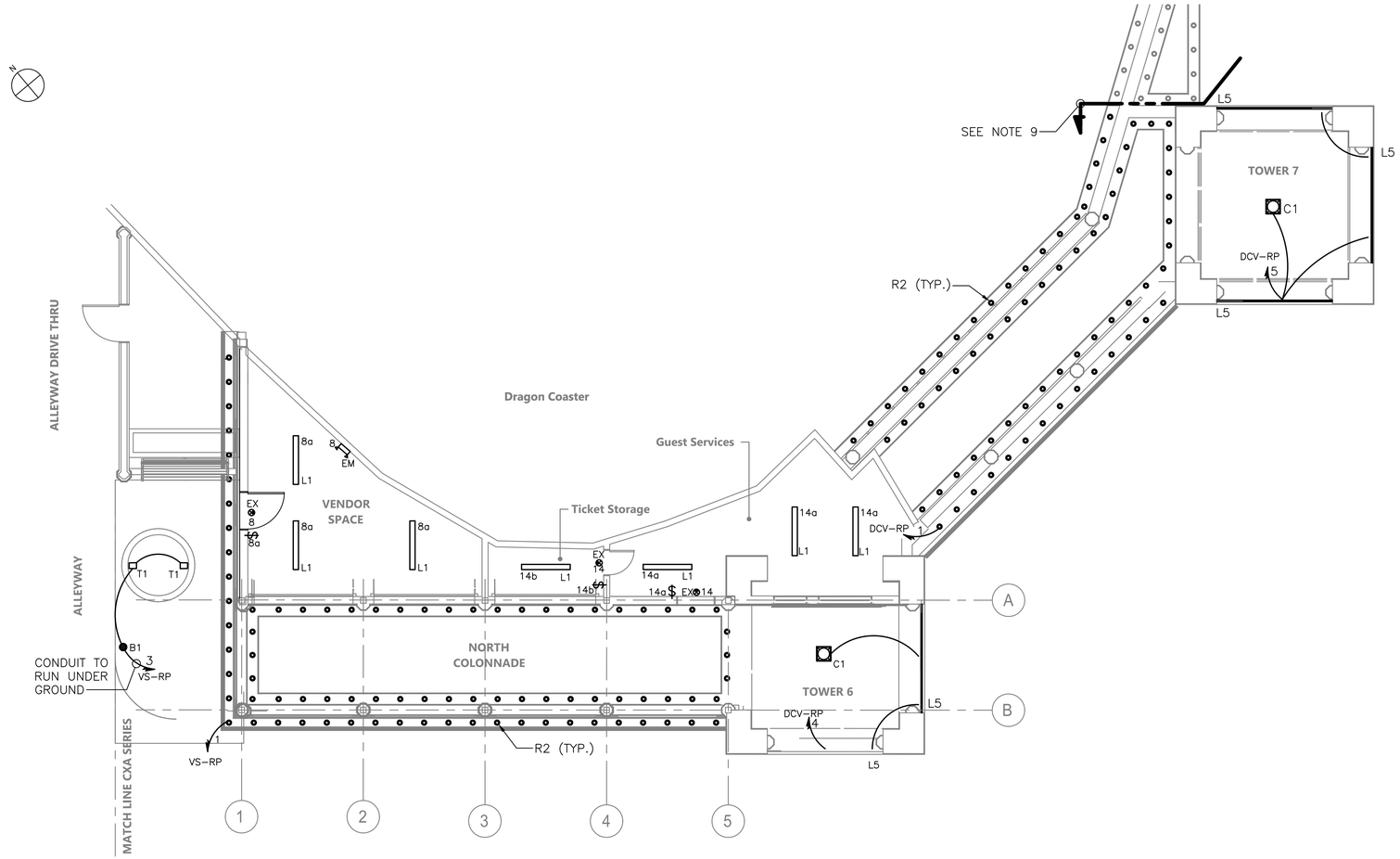

DRAGON COASTER VENDORS – GROUND FLOOR LIGHTING PLAN

SCALE: 3/16" = 1'-0"

NOTES:

1. FOR ADDITIONAL NOTES, ABBREVIATIONS AND SYMBOLS, SEE DRAWING GE-E-01.
2. FOR ADDITIONAL INFORMATION, SEE LIGHTING FIXTURE SCHEDULE ON DRAWING GE-E-03 AND PANEL SCHEDULE ON DRAWING DCV-E-05.
3. NEW CABLE AND CONDUIT SHALL BE INSTALLED CONCEALED AS MUCH AS PRACTICAL.
4. NUMBER DESIGNATORS NEXT TO FIXTURES AND/OR CONTROLS INDICATE CIRCUIT NUMBERS. CONTRACTOR IS ADVISED, THE LIGHTING IS POWERED AS FOLLOWS:

A. ALL INTERIOR AND EXTERIOR LIGHTING AND ASSOCIATED CONTROLS LOCATED IN THE VENDOR SPACE SHALL BE CIRCUITED FROM NEW PANEL PP-V (OR VIA VS-RP).

B. ALL INTERIOR AND EXTERIOR LIGHTING AND ASSOCIATED CONTROLS LOCATED IN TICKET STORAGE GUEST SERVICES AND TOWERS SHALL BE CIRCUITED FROM NEW PANEL PP-GS (OR VIA DCV-RP).

5. ALL LIGHTING CONTROL COMPONENTS SHALL BE FROM A SINGLE MANUFACTURER, AND MUST BE FROM THE SAME MANUFACTURER AS ALL BUILDINGS WITHIN THE CONTRACT AND AS PROVIDED ELSEWHERE AT THE PLAYLAND FACILITY.
6. LIGHTING CONTROLS SELECTED SHALL HAVE THE CAPABILITY TO BE CONNECTED TO A MASTER HEAD-END SYSTEM (FUTURE CONTRACT)
7. ALL OUTDOOR LIGHTING SHALL BE POWERED VIA RELAY PANELS DCV-RP AND VS-RP AS INDICATED ON THE DRAWINGS. RELAY PANELS SHALL BE EQUIPPED WITH BOTH A BUILT-IN TIME CLOCK AND A PHTOSENSOR CONTROLLED. FOR EXTERIOR LIGHTING CONTROL WIRING INFORMATION SEE EXTERIOR TOWER 6 & 7 WIRING DETAILS ON DRAWING DCV-E-05.
8. ALL HOMERUNS SHOWN ON DRAWINGS SHALL BE CIRCUITED VIA 3/4" CONDUIT WITH 2#12, 1#12G, UNLESS NOTED OTHERWISE.
9. ALL TYPE R2 FIXTURES SOUTH OF THIS LINE SHALL BE CIRCUITED FROM RELAY PANEL DCV-RP. ALL NEW TYPE R2 FIXTURES AND REMAINING COVE LIGHTING NORTH OF THIS LINE SHALL REUSE EXISTING CIRCUIT AND ASSOCIATED CONTROLS. CONTRACTOR SHALL TRACE EXISTING CIRCUIT AND PROVIDE NEW CONDUIT AND WIRE AS NEEDED. ASSUME 50' OF 3/4" CONDUIT WITH 2#10 AND 1#10 GND.

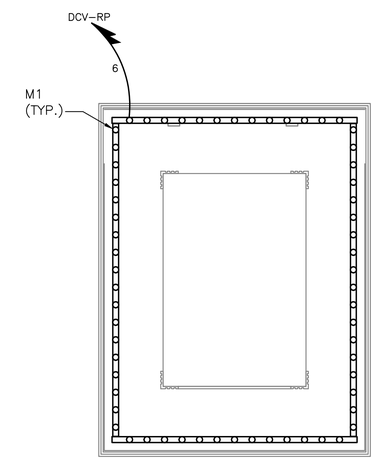

TICKET BOOTH LIGHTING PLAN

SCALE: 1/2" = 1'-0"

LIGHTING CONTROL LEGEND	
SYMBOL	DESCRIPTION
$	120V RATED LIGHTING SINGLE POLE SWITCH
RP	RELAY TIME CONTROL PANEL PROGRAMMABLE ZONE CONTROL PANEL UP TO 1 ADDRESS PER RELAY/DIMMING OUTPUT EQUIPPED WITH 0-10V DIMMING OUTPUT PER RELAY CATALOG NUMBER: ARP INTENCO8NLT-16SR-MVOLT-1VB-HLK-S-DTC OR APPROVED EQUAL
PS	ANALOG PHOTOCELL – PHOTOSENSOR SUITABLE FOR OUTDOOR APPLICATIONS. CATALOG NUMBER: LSA-APS-OL OR APPROVED EQUAL

0 2' 4'
SCALE: 1/2" = 1'-0"

0 4' 8'
SCALE: 3/16" = 1'-0"

Drawing Name: G:\SavinAutocad\2060\25-Playland-Mega-3\E\DCVE-1006.dwg
Reref: Projectname: ---- Comments: ----
Printed by: MGodby Date: 29 August 2022 4:01 PM Designed by: ----
Xrefs: [TSG-SVLOGO.dwg] [TB_24X36_WestchesterCo_3.dwg] [DCV-A-11.dwg] [DCV-E-1005.dwg]

CONSULTANT INFORMATION

Savin Engineers, P.C.

CONSULTANT SEAL

STATE OF NEW YORK · STEVEN A. MARTINO · 083631 · LICENSED PROFESSIONAL ENGINEER

REVISION NUMBER	DATE	MADE BY	APP'D BY	REVISION

RECORD DRAWING CERTIFICATION

☐ AS BUILT – CHANGES AS NOTED ☐ AS BUILT – NO CHANGES

CONTRACTOR: NAME ____ SIGNATURE ____ TITLE ____ DATE ____

PROJECT COORDINATOR: NAME ____ SIGNATURE ____ TITLE ____ DATE ____

WESTCHESTER COUNTY, NEW YORK
DEPARTMENT OF PUBLIC WORKS AND TRANSPORTATION
DIVISION OF ENGINEERING

INFRASTRUCTURE REHABILITATION - PHASE 3
PLAYLAND PARK, RYE, NEW YORK
DRAGON COASTER VENDORS
GROUND FLOOR LIGHTING PLAN

CONTRACT NUMBER	22-523
SHEET NUMBER	DCV-E-07
DWG NO.:	
SCALE:	AS SHOWN
DATE:	8/23/2022
DPW FILE NUMBER	1-118-E-1230-0
REV. NO.	0

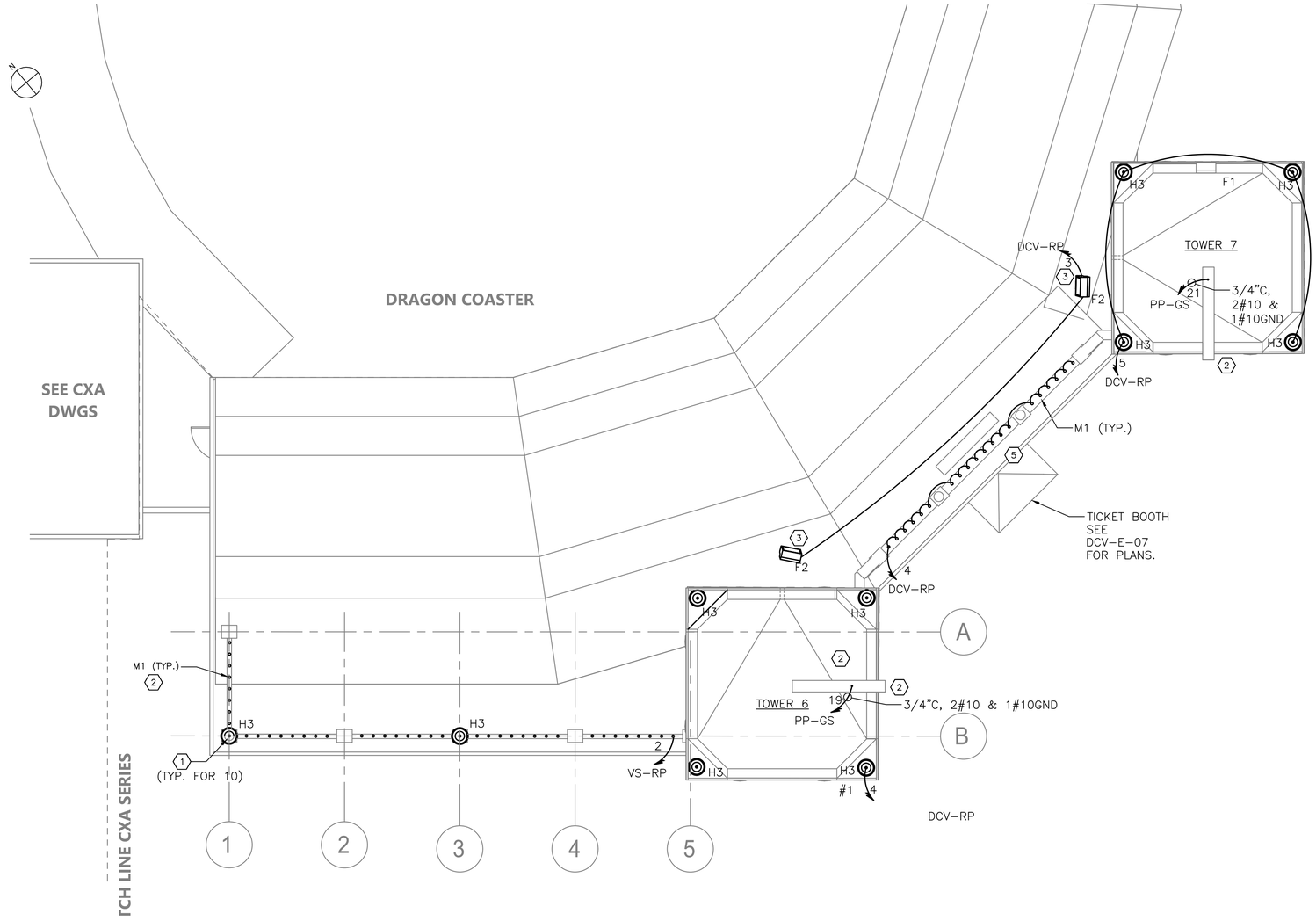

ROOF PLAN – POWER, LIGHTING AND LIGHTNING PROTECTION

SCALE: 3/16" = 1'-0"

NOTES:

1. FOR ADDITIONAL NOTES, ABBREVIATIONS AND SYMBOLS, SEE DRAWING GE-E-01.
2. FOR ADDITIONAL INFORMATION, SEE LIGHTING FIXTURE SCHEDULE ON DRAWING GE-E-03 AND PANEL SCHEDULE ON DRAWINGS DCV-E-05.
3. NEW CABLE AND CONDUIT SHALL BE INSTALLED CONCEALED AS MUCH AS PRACTICAL.
4. NUMBER DESIGNATORS NEXT TO FIXTURES AND/OR CONTROLS INDICATE CIRCUIT NUMBERS ASSOCIATED WITH TOWER RELAY PANEL.
5. FOR EXTERIOR LIGHTING CONTROL WIRING INFORMATION SEE EXTERIOR TOWER 6 & 7 WIRING DETAILS ON DRAWING DCV-E-05.
6. PHOTOCELL SHALL BE SUITABLE FOR OUTDOOR APPLICATIONS AND SHALL BE ACQUITY BRANDS : LSA-APS-OL OR APPROVED EQUAL. FINAL LOCATION OF PHOTOCELL SHALL BE DETERMINED DURING CONSTRUCTION BY THE LIGHTING MANUFACTURER.
7. ALL HOMERUNS SHOWN ON DRAWINGS SHALL BE CIRCUITED VIA 3/4" CONDUIT WITH 2#10, 1#10G, UNLESS NOTED OTHERWISE

KEY NOTES:

(1) EXISTING FIXTURES WERE REFURBISHED UNDER A SEPARATE CONTRACT. UNDER THIS CONTRACT, CONTRACTOR SHALL OBTAIN REFURBISHED FIXTURE AND INSTALL IN LOCATIONS AS SHOWN. SEE ARCHITECTURAL DRAWINGS FOR ADDITIONAL INFORMATION.

(2) DRAGON HEAD PUMP. EXISTING EQUIPMENT / PUMP SHALL BE MADE OPERATIONAL. PROVIDE NEW CONDUIT AND WIRE. CONTRACTOR SHALL PROVIDE FOR NEW PUMP CONTROLS TO MATCH EXISTING.

(3) PROVIDE FLOOD LIGHT LED FIXTURE. COORDINATE WITH STANDARD AMUSEMENTS FOR REQUIRED AIMING ANGLE.

(4) PROVIDE MARQUEE SKYWARD FACING LED LIGHT FIXTURE ON BALUSTRADE COPING 1' APART.

(5) PROVIDE GFI RECEPTACLE IN NEMA 4X ENCLOSURE FOR TV MONITOR. REFER TO ARCHITECTURAL DRAWINGS FOR LOCATION. PROVIDE 3/4"C, 2#12 AND 1#12GND TO PP-GS FOR POWER.

0 4' 8'
SCALE: 3/16" = 1'-0"

Drawing Name: G:\SavinAutocad\2060\25-Playland-Mega-3\E\DCVE-1007.dwg
Projectname: ---- Comments: ----
Printed by: MGodby Date: 29 August 2022 4:02 PM Designed by: ----
Xrefs: [TSG-SVLOGO.dwg] [TB_24X36_WestchesterCo_3.dwg] [DCV-A-12.dwg] [DCV-E-1004.dwg]

CONSULTANT INFORMATION

Savin Engineers, P.C.

CONSULTANT SEAL

STATE OF NEW YORK · STEVEN A. MARTINO · 083931 · LICENSED PROFESSIONAL ENGINEER

REVISION NUMBER	DATE	MADE BY	APP'D BY	REVISION

RECORD DRAWING CERTIFICATION

☐ AS BUILT – CHANGES AS NOTED ☐ AS BUILT – NO CHANGES

CONTRACTOR: NAME / SIGNATURE / TITLE / DATE

PROJECT COORDINATOR: NAME / SIGNATURE / TITLE / DATE

WESTCHESTER COUNTY, NEW YORK
DEPARTMENT OF PUBLIC WORKS AND TRANSPORTATION
DIVISION OF ENGINEERING

INFRASTRUCTURE REHABILITATION - PHASE 3
PLAYLAND PARK, RYE, NEW YORK
DRAGON COASTER VENDORS
ROOF PLAN - POWER, LIGHTING & LIGHTNING PROTECTION

CONTRACT NUMBER	22-523
SHEET NUMBER	DCV-E-08
DWG NO.:	
SCALE:	AS SHOWN
DATE:	8/23/2022
DPW FILE NUMBER	1-118-E-1231-0
REV. NO.	0

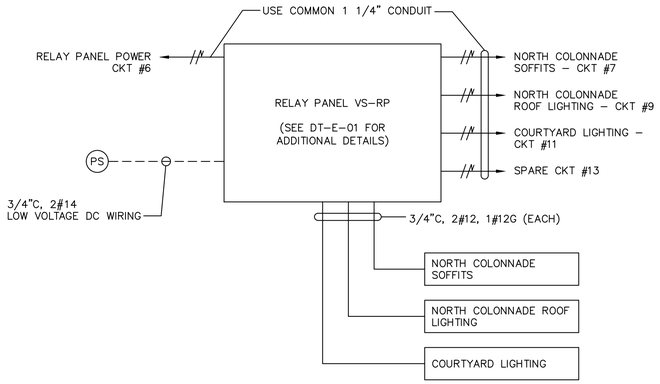

1 VENDOR SPACE – EXTERIOR LIGHTING WIRING DETAIL
DCV-E-09

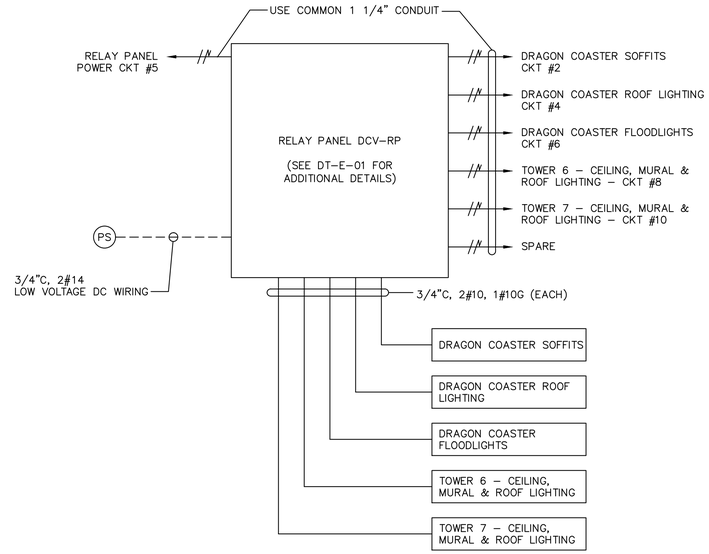

2 TOWERS #6 & #7 – EXTERIOR LIGHTING WIRING DETAIL
DCV-E-09

VS-RP	LOCATION: VENDOR SPACES ELECTRICAL CLOSET	
CKT NO	DESCRIPTION	NOTES
1	NORTH COLONNADE SOFFITS	
2	NORTH COLONNADE ROOF LIGHTING	
3	COURTYARD LIGHTING	

DCV-RP	LOCATION:	
CKT NO	DESCRIPTION	NOTES
1	DRAGON COASTER SOFFITS	
2	DRAGON COASTER ROOF LIGHTING	
3	DRAGON COASTER FLOODLIGHTS	
4	TOWER 6 - CEILING, MURAL & ROOF LIGHTING	
5	TOWER 7 - CEILING, MURAL & ROOF LIGHTING	
6	TICKET BOOTH LIGHTING	

Drawing Name: G:\SavinAutocad\2060\25-Playland-Mega-3\E\DCVE-1010.dwg
Ref#: Projectname: 211001F02 Comments: ----
Printed by: MGadby Date: 31 August 2022 8:14 AM Designed by: ----
Xrefs: [TB_24X36_WestchesterCo_3.dwg] [TSG-SVLOGO.dwg] [BCR-A-04.dwg] [BCRE-101.dwg]

CONSULTANT INFORMATION
Savin Engineers, P.C.

CONSULTANT SEAL
STATE OF NEW YORK · STEVEN A. MARTINO · 083631 · LICENSED PROFESSIONAL ENGINEER

REVISION NUMBER	DATE	MADE BY	APP'D BY	REVISION

RECORD DRAWING CERTIFICATION
☐ AS BUILT – CHANGES AS NOTED ☐ AS BUILT – NO CHANGES

CONTRACTOR
NAME
SIGNATURE
TITLE DATE

PROJECT COORDINATOR
NAME
SIGNATURE
TITLE DATE

WESTCHESTER COUNTY, NEW YORK
DEPARTMENT OF PUBLIC WORKS AND TRANSPORTATION
DIVISION OF ENGINEERING

INFRASTRUCTURE REHABILITATION - PHASE 3
PLAYLAND PARK, RYE, NEW YORK
DRAGON COASTER VENDORS
EXTERIOR LIGHTING CONTROLS

CONTRACT NUMBER 22-523
SHEET NUMBER DCV-E-09
DWG NO.:
SCALE: AS SHOWN
DATE: 8/23/2022
DPW FILE NUMBER 1-118-E-1232-0
REV. NO. 0

FIRE ALARM GENERAL NOTES:

1. THE FIRE ALARM AND SMOKE DETECTION SYSTEM SHALL BE INSTALLED IN COMPLIANCE WITH THE NATIONAL FIRE PREVENTION CODE (NFPA 72 - 2016), NATIONAL LIFE SAFETY CODE (NFPA 101 - 2018), NATIONAL ELECTRICAL CODE (NFPA 70 - 2017), 2020 NEW YORK STATE BUILDING CODE, AND ALL LOCAL MUNICIPAL CODES HAVING JURISDICTION.
2. THE FIRE ALARM AND SMOKE DETECTION SYSTEM SHALL BE MAINTAINED AND TESTED IN COMPLIANCE WITH NFPA 72.
3. A CONTINUOUS FIRE WATCH SHALL BE PROVIDED IF THERE IS FIRE SYSTEM IMPAIRMENT.
4. ALL FIRE ALARM STROBES SHALL BE SYNCHRONIZED AND SHALL REMAIN FLASHING AFTER SYSTEM SILENCE FUNCTION.
5. CONTRACTOR TO UPDATE ALL NECESSARY CORRESPONDING FIRE ALARM SIGNALS WHEN PERFORMING ANY MODIFICATION TO THE BUILDING, WHERE APPLICABLE, MAKE SURE THE SAME UPDATES ARE COORDINATED AND TRANSMITTED TO THE CENTRAL STATION.
6. HORNS WILL SOUND A TEMPORAL 3-SIGNALING RHYTHM PER NFPA 72.
7. EXACT PLACEMENT OF DEVICES TO BE VERIFIED IN FIELD.
8. ALL SMOKE DETECTORS SHALL BE INSTALLED A MINIMUM OF 36" FROM ANY HVAC SUPPLY OR RETURN REGISTER.
9. FIRE ALARM WIRING SHALL BE INSTALLED IN A MINIMUM OF 3/4" RIGID GALVANIZED CONDUIT OR BY NEW YORK STATE BUILDING CODE APPROVED WIRING METHODS.
10. WALL MOUNTED HORNS AND VISUAL FIRE ALARMS (STROBES) SHALL BE MOUNTED NOT LESS THAN 6'-8" AND NOT GREATER THAN 8'-0" A.F.F. WHERE LOCAL CONDITIONS ARE TOO LOW TO PERMIT THE REQUIRED MINIMUM INSTALLATION HEIGHT, INSTALL THE STROBES AT 6" BELOW THE CEILING.
11. MANUAL PULL STATIONS SHALL BE MOUNTED AT 4'-0" A.F.F. AND SHALL BE INSTALLED WITHIN 5'-0" OF EXIT DOOR.
12. WIRING SHALL BE INSTALLED IN ACCORDANCE WITH NFPA 70 AND AS RECOMMENDED BY THE MANUFACTURER OF THE FIRE ALARM SYSTEM.
13. ALL EQUIPMENT AND COMPONENTS SHALL BE NEW AND SHALL BE TESTED AND LISTED BY A NATIONALLY RECOGNIZED APPROVALS AGENCY.
14. ALL EQUIPMENT SHALL BE ATTACHED TO WALLS AND CEILING/FLOOR ASSEMBLIES AND SHALL BE HELD FIRMLY IN PLACE. FASTENERS AND SUPPORTS SHALL BE ADEQUATE TO SUPPORT REQUIRED LOAD.
15. ALL FIELD WIRING SHALL BE ELECTRICALLY SUPERVISED FOR OPEN CIRCUIT AND GROUND FAULTS.
16. ALL BOXES AND CABINETS SHALL BE UL LISTED FOR THEIR USE AND PURPOSE.
17. DIALER OR ALARM COMMUNICATOR TRANSMITTER SHALL TRANSMIT ALL POINTS AS THEY ARE REPORTED TO THE HOST PANEL.
18. ALL DEVICES SHALL BE COMPATIBLE WITH EXISTING SYSTEM (EST3 BY EDWARDS). FIRE ALARM PRODUCTS SHALL BE APPROVED BY THE ENGINEER OR OWNER.
19. ALL PENETRATIONS SHALL BE FIRE PROOFED AS REQUIRED.

FIRE ALARM CONSTRUCTION NOTES:

1. ELECTRICIAN SHALL COORDINATE WITH THE FIRE ALARM VENDOR TO PRODUCE A SEPARATE FIXED PRICE TO PERFORM THE SCOPE OF WORK CONTAINED ON THESE DRAWINGS IN CONNECTION WITH THE FIRE ALARM SYSTEM. THESE DRAWINGS ARE PROVIDED FOR BID PURPOSES ONLY AND TO ILLUSTRATE THE SCOPE OF WORK INTENT OF THIS PROJECT.
2. ELECTRICIAN SHALL OBTAIN SEPARATE PERMIT FOR FIRE ALARM PRIOR TO INSTALLATION.
3. PRIOR TO SUBMISSION OF THE FIRE ALARM SYSTEM BID, THE FIRE ALARM VENDOR IS RESPONSIBLE TO REVIEW ALL DRAWINGS (I.E., MECHANICAL/HVAC, ELECTRICAL, PLUMBING, FIRE SPRINKLER, AND ARCHITECTURAL). UPON SUBMISSION OF THE FIRE ALARM BID, THE FIRE ALARM VENDOR CERTIFIES THAT ALL DRAWINGS HAVE BEEN REVIEWED, THE SITE HAS BEEN VISITED/INSPECTED (IF APPLICABLE), AND THAT ALL LOCAL FIRE DEPARTMENT REQUIRED ITEMS ARE FULLY UNDERSTOOD AND INCLUDED IN THE BID PRICE (NO CHANGE ORDERS ALLOWED).
4. FIRE ALARM VENDOR MUST ADHERE TO NFPA 72, NFPA 101, AND ALL LOCAL CODES AND AUTHORITIES HAVING JURISDICTION. THE ENTIRE SYSTEM MUST BE DESIGNED IN ACCORDANCE WITH THESE AUTHORITIES HAVING JURISDICTION.
5. FIRE ALARM VENDOR SHALL INCLUDE THE COST OF THE ENGINEERING FEE, PROGRAMMING CHARGE, NEW EQUIPMENT, CONNECTION & TESTING, TROUBLESHOOTING, ATTENDANCE AT THE FIRE ALARM INSPECTION, ETC. AS PART OF THE TOTAL PRICE.
6. FIRE ALARM VENDOR MUST SUBMIT APPROVED, SIGNED AND SEALED DESIGN/BUILD DRAWINGS TO THE ENGINEER AND OWNER, INCLUDING: FIRE ALARM RISER DIAGRAM, LAYOUT, EQUIPMENT LIST, SPECIFICATIONS PRIOR TO START OF INSTALLATION. INSTALLATION OF THE NEW FIRE ALARM SYSTEM SHALL NOT PROCEED PRIOR TO WRITTEN APPROVAL BY THE ENGINEER.
7. FIRE ALARM VENDOR SHALL SUBMIT SHOP DRAWINGS IN COMPLIANCE WITH NFPA 72, 2020 NEW YORK STATE BUILDING CODE, AND 2020 NEW YORK STATE FIRE CODE SECTION 907.1.1.
8. ALL FIRE ALARM CABLES AND WIRING MUST BE PLENUM RETURN RATED CABLES.

SCOPE OF WORK:

1. DEMOLISH EXISTING FIRE ALARM DEVICES AND ASSOCIATED WIRING BACK TO SOURCE.
2. PROVIDE NEW FIRE ALARM DEVICES AS PER DRAWINGS. PROVIDE ALL NECESSARY WIRING, CONNECTIONS, CONDUIT, AND FITTINGS.
3. CONNECT FIRE ALARM DEVICES AND SIGNAL TO NEW FIRE ALARM SUBPANEL IN CXA BUILDING (REFER TO CXA FA DRAWINGS). CXA BUILDING SUBPANEL SHALL CONNECT TO CENTRAL FIRE ALARM CONTROL PANEL IN MAIN ADMINISTRATION BUILDING VIA QUAD 4. PROVIDE ALL REQUIRED PROGRAMMING.
4. NEW FIRE ALARM SYSTEM SHALL BE INSPECTED BY A THIRD PARTY INSPECTION AGENCY CERTIFIED BY WESTCHESTER COUNTY. ELECTRICIAN SHALL INCLUDE INSPECTION IN BASE BID SCOPE AND COORDINATE WITH INSPECTION AGENCY TO CERTIFY THE SYSTEM.
5. ELECTRICIAN SHALL COORDINATE WITH THE FIRE ALARM VENDOR (OPEN SYSTEMS METRO) TO RE-PROGRAM AND TEST THE CENTRAL FIRE ALARM SYSTEM IN THE PLAYLAND MAIN ADMINISTRATION BUILDING FOLLOWING THE INSTALLATION OF NEW SYSTEM AND DEVICES.
6. ELECTRICIAN SHALL COORDINATE WITH THE FIRE ALARM CENTRAL MONITORING PROVIDER (STATEWIDE MONITORING) TO TEST AND VERIFY CENTRAL MONITORING OF PARKWIDE SYSTEM FOLLOWING THE INSTALLATION OF NEW SYSTEM AND DEVICES.

FIRE ALARM SYSTEM RISER NOTES:

1. LOCATION OF DEVICES AND EQUIPMENT ARE APPROXIMATE. FINAL LOCATIONS MUST BE DETERMINED ACCORDING TO THE SITE CONDITIONS.
2. VISUAL FIRE ALARMS (STROBES) SHALL HAVE MINIMUM 5'-0" CLEARANCE FROM ANY OBSTRUCTIONS, SHALL BE FIELD ADJUSTABLE, AND SHALL BE RATED AT 75 CANDELA MINIMUM, UNLESS OTHERWISE NOTED. ALL STROBES SHALL BE SYNCHRONIZED AT LINE OF SIGHT.
3. WALL MOUNTED HORNS AND VISUAL FIRE ALARMS (STROBES) SHALL BE MOUNTED NOT LESS THAN 6'-8" AND NOT GREATER THAN 8'-0" A.F.F. WHERE LOCAL CONDITIONS ARE TOO LOW TO PERMIT THE REQUIRED MINIMUM INSTALLATION HEIGHT, INSTALL THE STROBES AT 6" BELOW THE CEILING.
4. MANUAL PULL STATIONS SHALL BE MOUNTED AT 4'-0" A.F.F. AND SHALL BE INSTALLED WITHIN 5'-0" OF EXIT DOOR.
5. FUSE CUT OUT BOX SHALL COMPLY WITH THE NATIONAL ELECTRICAL CODE AND HAVE A REMOVABLE SOLID COPPER NEUTRAL BAR.
6. ALL CONDUITS AND CONTROL PANELS SHALL BE GROUNDED TO BUILDING STEEL/GROUND GRID WITH A MINIMUM #8 CONDUCTOR.
7. RISER DIAGRAM ON THIS DRAWING IS FOR DESIGN PURPOSE ONLY. FIRE ALARM CONTRACTOR SHALL PROVIDE A COMPLETE RISER DIAGRAM WITH ACTUAL FIELD WIRING REQUIRED.
8. EACH FIRE ALARM INITIATING AND INDICATING CIRCUIT SHALL BE ELECTRICALLY SUPERVISED.
9. EACH VISUAL FIRE ALARM CIRCUIT SHALL CONTAIN AT LEAST 20% SPARE CAPACITY.
10. ALL CONTROL PANELS, FUSE CUTOUTS, TROUBLE BELLS, ALARM BELLS AND SILENCE SWITCHES SHALL BE PROPERLY LABELED WITH MINIMUM 1/4" HIGH LETTERS.
11. WIRING FOR AUDIBLE AND VISUAL ALARM NOTIFICATION DEVICES SHALL BE ARRANGED SO THAT A LOSS OF A PORTION OF THE WIRING ON A FLOOR WILL NOT RENDER MORE THAN 60% OF THE DEVICES OF EACH TYPE INOPERATIVE, AND THE DEVICES SHALL BE SO CONNECTED TO THE CIRCUITRY (i.e., BY MEANS OF ALTERNATE CIRCUITS) AS TO MAINTAIN AT LEAST PARTIAL AUDIBILITY/VISIBILITY THROUGHOUT THE ENTIRE FLOOR.
12. THE FIRE ALARM CONTROL PANEL SHALL BE PROVIDED WITH A KEY SWITCH. DURING DAILY TESTS, THE KEY SWITCH SHALL BE USED TO BYPASS THE CIRCUITS THAT CONTROL DAMPERS AND FAN SHUTDOWN.
13. THE DAMPERS AND FAN BYPASS FUNCTION SHALL BE AUTOMATICALLY RESTORED TO BE NORMAL UN-SHUNTED CONDITION WITHIN FORTY-FIVE MINUTES, IF NOT DONE SO MANUALLY BEFORE FORTY-FIVE MINUTES.
14. PERFORM FIRE ALARM SYSTEM TESTING PER THE 2020 NEW YORK STATE FIRE CODE AND NFPA 72.

FIRE ALARM LEGEND:

SYMBOL	DESCRIPTION
FA	FIRE ALARM SUB PANEL
S	SMOKE DETECTOR
H	HEAT DETECTOR
F	MANUAL FIRE ALARM PULL STATION
# H	FIRE ALARM WALL MOUNTED HORN/STROBE # = CANDELA RATING
FCO	FUSED CUT OUT SWITCH/FUSED LOCKABLE DISCONNECT SWITCH
ST #	WALL MOUNTED STROBE # = CANDELA RATING
	FLOW SWITCH CONNECTED TO FIRE ALARM SYSTEM
GV	SPRINKLER VALVE TAMPER SWITCH CONNECTED TO FIRE ALARM SYSTEM
S	DUCT MOUNTED SMOKE DETECTOR
FSR	FIRE ALARM INTERFACE RELAY FOR HVAC FAN SHUTDOWN

FIRE ALARM ABBREVIATIONS:

E	EXISTING TO REMAIN
ER	EXISTING TO BE RELOCATED
EL	EXISTING AS SHOWN IN NEW LOCATION
FACP	FIRE ALARM CONTROL PANEL
FCO	FUSED CUT OUT
FCU	FIRE ALARM CONTROL UNIT
FP	FIRE PROTECTION
N	NEW
RTU	ROOFTOP UNIT
SP	SPRINKLER
WP	WEATHERPROOF
X	EXISTING TO BE DEMOLISHED

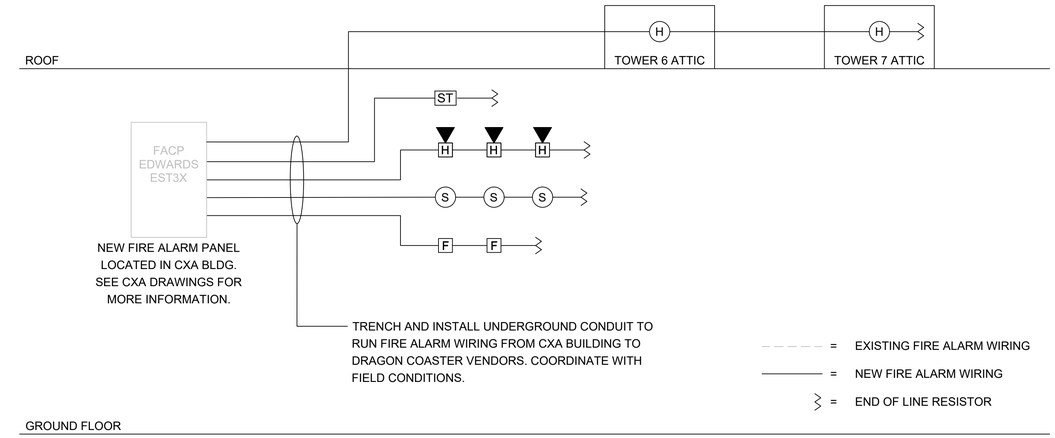

NOTES:
1. WIRING SHOWN ON RISER IS DIAGRAMMATICAL. PROVIDE NEW FIRE ALARM CABLE AS REQUIRED AND INSTALL WIRING LOOPS AS BEST SUITED FOR FIELD CONDITIONS.
2. THE BUILDING IS FULLY SPRINKLERED.

1 FIRE ALARM RISER DIAGRAM
SCALE: NOT TO SCALE

		SYSTEM OUTPUTS																
		Control Unit Annunciation						Notification									Supp.	
	EVENT	A ACTUATE COMMON ALARM SIGNAL	B ACTUATE AUDIBLE ALARM SIGNAL	C INDICATE COMMON SUPERVISORY STATUS	D ACTUATE AUDIBLE SUPERVISORY SIGNAL	E INDICATE COMMON TROBLE SIGNAL	F ACTUATE AUDIBLE COMMON TROUBLE SIGNAL	G ACTIVATE HORNS AND STROBES THROUGHOUT THE PROTECTED AREA	H DISPLAY/PRINT CHANGE OF STATUS	I TRANSMIT AUTOMATIC ALARM SIGNAL TO SUPERVISING STATION	J TRANSMIT MANUAL ALARM SIGNAL TO SUPERVISING STATION	K TRANSMIT WATERFLOW ALARM SIGNAL TO SUPERVISING STATION	L TRANSMIT SUPERVISORY SIGNAL TO SUPERVISING STATION	M TRANSMIT CO ALARM SIGNAL TO SUPERVISING STATION	N TRANSMIT TROUBLE SIGNAL TO SUPERVISING STATION	O ACTIVATE TEMPORAL 4 SIGNAL ON ACTIVATED CO DETECTOR SOUNDER BASES	P SHUT DOWN CO PRODUCING EQUIPMENT	Q SHUT DOWN FANS/AIR HANDLING UNITS
1	ACTIVATION OF MANUAL PULL STATION	X	X					X	X		X							
2	ACTIVATION OF SMOKE DETECTOR	X	X					X	X	X								X
3	ACTIVATION OF DUCT MOUNTED SMOKE DETECTOR	X	X					X	X	X								X
4	ACTIVATION OF HEAT DETECTOR	X	X					X	X	X								X
5	WATERFLOW SWITCH FOR FIRE SPRINKLER SYSTEM	X	X					X	X			X						X
6	ACTIVATION OF CARBON MONOXIDE DETECTOR			X	X			X	X					X		X	X	
7	SPRINKLER VALVE (TAMPER SWITCH)			X	X				X				X					
8	FIRE ALARM LOSS OF PRIMARY/SECONDARY POWER					X	X		X						X			
9	FIRE ALARM SYSTEM WIRING FAILURE					X	X		X						X			

2 FIRE ALARM SEQUENCE OF OPERATIONS MATRIX
SCALE: NOT TO SCALE

CONSULTANT INFORMATION

LiRo Engineers, Inc.
A LiRo Group Company
Syosset, N.Y. 516-214-8157[T]

CONSULTANT SEAL

STATE OF NEW YORK · FRANK F. ULLISE · No. 090111 · LICENSED PROFESSIONAL ENGINEER

REVISION NUMBER	DATE	MADE BY	APP'D BY	REVISION

RECORD DRAWING CERTIFICATION

☐ AS BUILT – CHANGES AS NOTED ☐ AS BUILT – NO CHANGES

CONTRACTOR: NAME / SIGNATURE / TITLE / DATE

PROJECT COORDINATOR: NAME / SIGNATURE / TITLE / DATE

WESTCHESTER COUNTY, NEW YORK
DEPARTMENT OF PUBLIC WORKS AND TRANSPORTATION
DIVISION OF ENGINEERING

INFRASTRUCTURE REHABILITATION - PHASE 3
PLAYLAND PARK, RYE, NEW YORK
DRAGON COASTER VENDORS
FIRE ALARM NOTES, SYMBOLS, LEGEND, AND RISER DIAGRAM

CONTRACT NUMBER: 22-523
SHEET NUMBER: **DCV-FA-01**
DWG NO.: 484 of 664
SCALE: **As indicated**
DATE: 08/23/2022
DPW FILE NUMBER: **1-118-FA-1233-0**
REV. NO.: 0

FIRE ALARM DEMOLITION NOTES:

1. NO EXISTING FIRE ALARM DEVICES WERE NOTED DURING BUILDING SURVEY. ANY ABANDONED DEVICES OR WIRING DISCOVERED DURING THE COURSE OF DEMOLITION SHALL BE REMOVED.

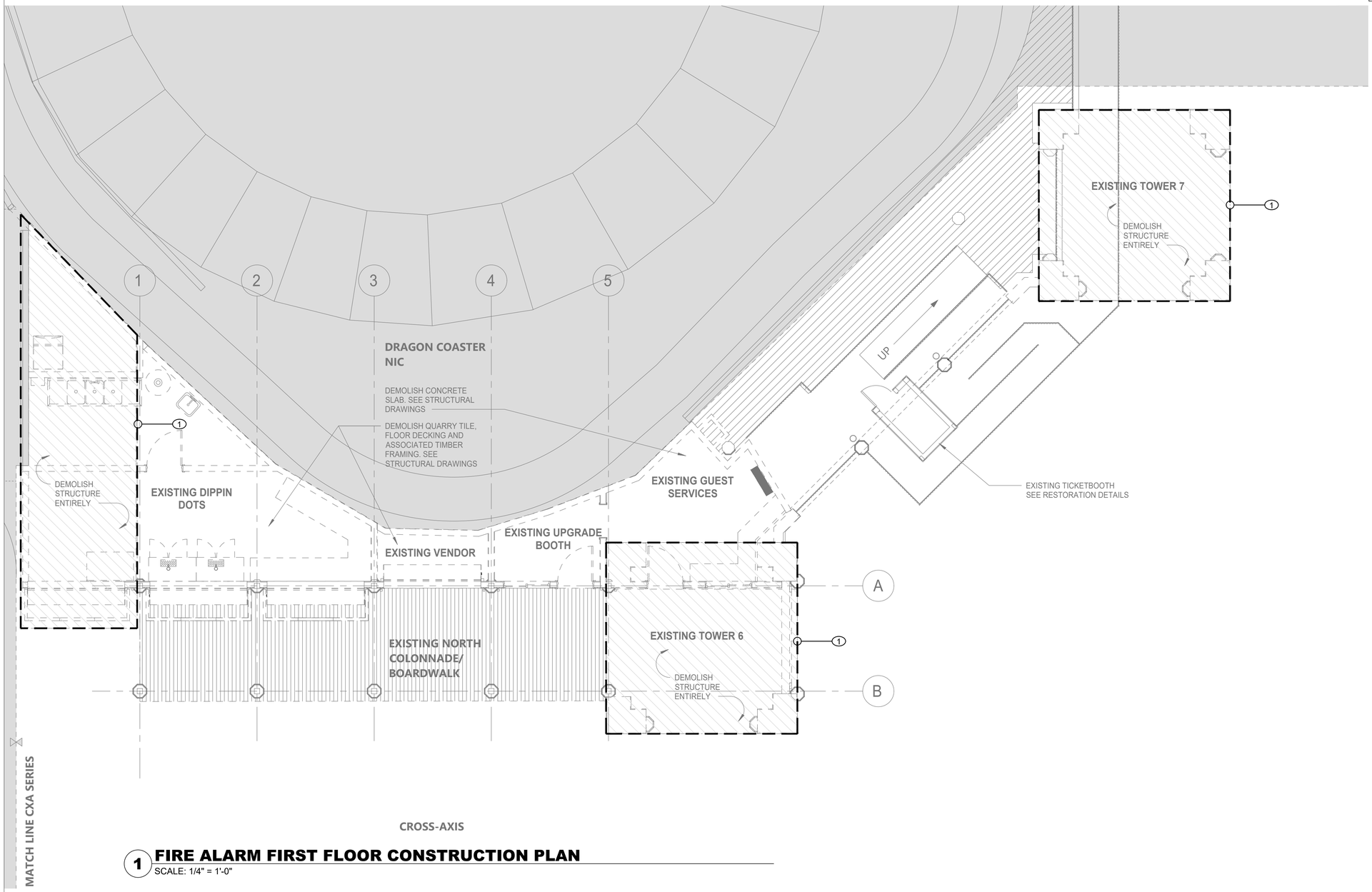

1 FIRE ALARM FIRST FLOOR CONSTRUCTION PLAN

SCALE: 1/4" = 1'-0"

CONSULTANT INFORMATION	CONSULTANT SEAL					
LiRo Engineers, Inc. *A LiRo Group Company* Syosset, N.Y. 516-214-8157[T]	STATE OF NEW YORK FRANK F. ULISSE No. 090111-1 LICENSED PROFESSIONAL ENGINEER	REVISION NUMBER	DATE	MADE BY	APP'D BY	REVISION

RECORD DRAWING CERTIFICATION

☐ AS BUILT – CHANGES AS NOTED ☐ AS BUILT – NO CHANGES

CONTRACTOR	PROJECT COORDINATOR
NAME	NAME
SIGNATURE	SIGNATURE
TITLE DATE	TITLE DATE

WESTCHESTER COUNTY, NEW YORK
DEPARTMENT OF PUBLIC WORKS AND TRANSPORTATION
DIVISION OF ENGINEERING

INFRASTRUCTURE REHABILITATION - PHASE 3
PLAYLAND PARK, RYE, NEW YORK
DRAGON COASTER VENDORS
FIRE ALARM FIRST FLOOR DEMOLITION PLAN

CONTRACT NUMBER	22-523
SHEET NUMBER	DCV-FA-11
DWG NO.:	485 of 664
SCALE:	As indicated
DATE:	08/23/2022
DPW FILE NUMBER	1-118-FA-1234-0
REV. NO.	0

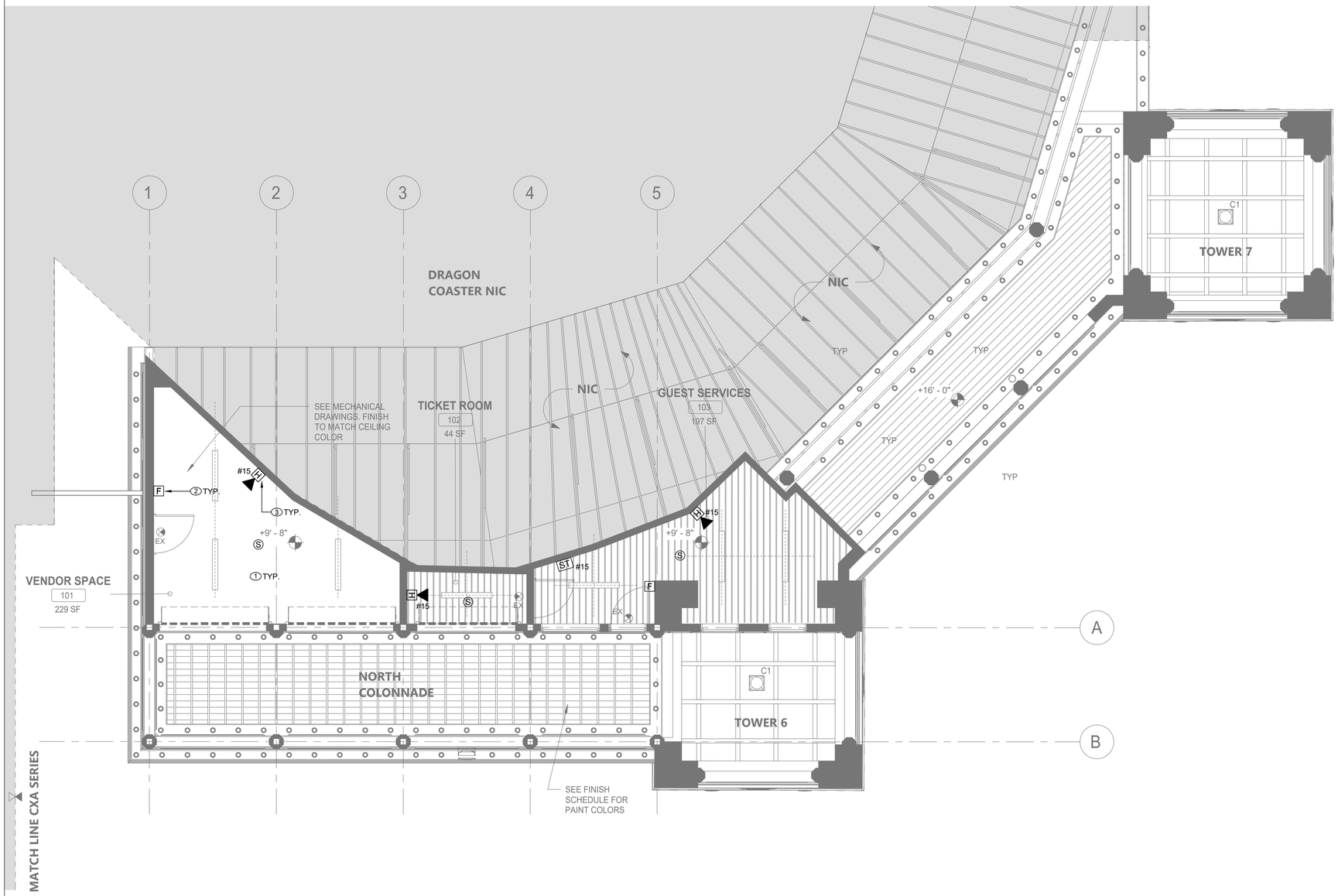

1 FIRE ALARM FIRST FLOOR CONSTRUCTION PLAN

SCALE: 1/4" = 1'-0"

FIRE ALARM CONSTRUCTION NOTES:

1. CONNECT NEW FIRE ALARM DEVICES TO NEW FIRE ALARM CONTROL PANEL IN CXA BUILDING. REFER TO CXA DRAWINGS FOR MORE INFORMATION.
2. NEW MANUAL PULL STATIONS SHALL BE INSTALLED AT 4'-0" ABOVE FINISHED FLOOR AT EACH BUILDING EXIT (MAX. DISTANCE OF 5'-0" FROM EXIT).
3. FIRE ALARM STROBES AND HORN STROBES SHALL BE FIELD ADJUSTABLE AND SET CANDELA RATING INDICATED ON PLAN. FIRE ALARM STROBES AND HORN STROBES SHALL BE INSTALLED AT 7'-4" ABOVE FINISHED FLOOR UNLESS OTHERWISE NOTED.

FIRE ALARM GENERAL NOTES:

1. REFER TO DRAWING FA-001.00 FOR SYMBOLS, ABBREVIATIONS, AND NOTES. LAYOUT OF FIRE ALARM DEVICES ON THIS PLAN IS DIAGRAMMATIC; EXACT LOCATIONS OF DEVICES AND CONDUIT SHALL BE COORDINATED WITH FIELD CONDITIONS, ARCHITECTURAL REQUIREMENTS, AND MANUFACTURER RECOMMENDATIONS.
2. ALL DEVICES AND EQUIPMENT SHOWN ON THIS PLAN ARE NEW, UNLESS OTHERWISE NOTED.
3. INSTALL NEW FIRE ALARM SYSTEM IN STRICT ACCORDANCE WITH NFPA-72 AND NFPA-90A REQUIREMENTS.
4. CONTRACTOR SHALL INSTALL NEW FIRE ALARM SYSTEM AS INDICATED AND PROVIDE ALL NECESSARY WIRING, CONDUIT, AND APPARATUSES.
5. ALL VISUAL NOTIFICATION DEVICES IN THE SAME SPACE SHALL BE SYNCHRONIZED IN ACCORDANCE WITH NFPA-72.
6. COORDINATE INSTALLATION WITH FIRE ALARM SYSTEM VENDOR AND MANUFACTURER REQUIREMENTS.
7. COORDINATE FIRE ALARM DEVICES WITH ARCHITECTURAL FINISHES. CONCEAL CONDUIT IN FINISHED WALLS AND FLUSH MOUNT DEVICES WHERE POSSIBLE.
8. CONTRACTOR SHALL TEST THE FIRE ALARM SYSTEM AFTER COMPLETION OF INSTALLATION. FIRE ALARM SYSTEM SHALL BE TESTED AND VERIFIED TO BE WORKING PROPERLY PRIOR TO INSPECTION BY THE AUTHORITY HAVING JURISDICTION.
9. FOLLOWING INSTALLATION, CONTRACTOR SHALL PATCH, PAINT, AND RESTORE ALL WALLS AND CEILINGS TO MATCH EXISTING OR DESIRED NEW CONDITION.
10. FIRESTOP ALL FIRE-RATED FLOOR OR WALL PENETRATIONS TO MAINTAIN ORIGINAL FIRE RATING TO FULL DEPTH OF OPENING.
11. CONTRACTOR SHALL PROVIDE SLEEVE FOR CONDUIT PENETRATIONS THROUGH WALL AND CEILING FLOORS.

CONSULTANT INFORMATION

LiRo Engineers, Inc.
A LiRo Group Company
Syosset, N.Y. 516-214-8157[T]

CONSULTANT SEAL

STATE OF NEW YORK · FRANK F. ULYSSE · No. 090111-1 · LICENSED PROFESSIONAL ENGINEER

REVISION NUMBER	DATE	MADE BY	APP'D BY	REVISION

RECORD DRAWING CERTIFICATION

☐ AS BUILT – CHANGES AS NOTED ☐ AS BUILT – NO CHANGES

CONTRACTOR: NAME / SIGNATURE / TITLE / DATE

PROJECT COORDINATOR: NAME / SIGNATURE / TITLE / DATE

WESTCHESTER COUNTY, NEW YORK
DEPARTMENT OF PUBLIC WORKS AND TRANSPORTATION
DIVISION OF ENGINEERING

INFRASTRUCTURE REHABILITATION - PHASE 3
PLAYLAND PARK, RYE, NEW YORK
DRAGON COASTER VENDORS
FIRE ALARM GROUND FLOOR PLAN

CONTRACT NUMBER	22-523
SHEET NUMBER	DCV-FA-21
DWG NO.:	486 of 664
SCALE:	As indicated
DATE:	08/23/2022
DPW FILE NUMBER	1-118-FA-1235-0
REV. NO.	0

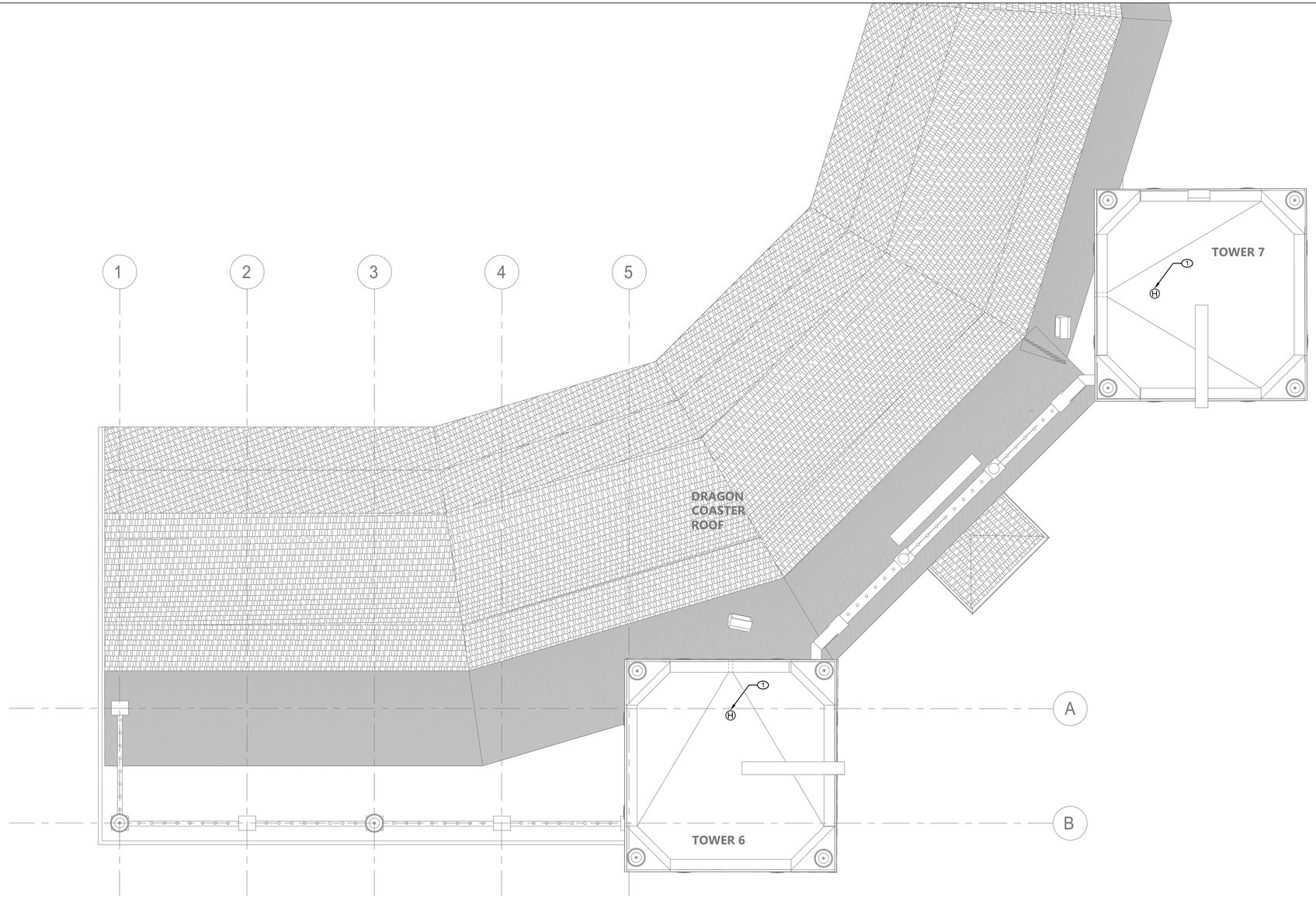

1 FIRE ALARM ROOF CONSTRUCTION PLAN

SCALE: 1/4" = 1'-0"

FIRE ALARM CONSTRUCTION NOTES:

1. INSTALL CEILING MOUNTED HEAT DETECTORS IN THE ATTIC/CRAWL SPACE OF TOWERS 6 AND 7. COORDINATE MOUNTING AND DETECTOR LOCATION WITH CEILING CONDITIONS. MOUNT DETECTORS AS CLOSE AS PRACTICAL TO HIGH POINT OF CEILING. CONNECT TO NEW FIRE ALARM CONTROL PANEL IN CXA BUILDING.

FIRE ALARM GENERAL NOTES:

1. REFER TO DRAWING FA-001.00 FOR SYMBOLS, ABBREVIATIONS, AND NOTES. LAYOUT OF FIRE ALARM DEVICES ON THIS PLAN IS DIAGRAMMATIC; EXACT LOCATIONS OF DEVICES AND CONDUIT SHALL BE COORDINATED WITH FIELD CONDITIONS, ARCHITECTURAL REQUIREMENTS, AND MANUFACTURER RECOMMENDATIONS.
2. ALL DEVICES AND EQUIPMENT SHOWN ON THIS PLAN ARE NEW, UNLESS OTHERWISE NOTED.
3. INSTALL NEW FIRE ALARM SYSTEM IN STRICT ACCORDANCE WITH NFPA-72 AND NFPA-90A REQUIREMENTS.
4. CONTRACTOR SHALL INSTALL NEW FIRE ALARM SYSTEM AS INDICATED AND PROVIDE ALL NECESSARY WIRING, CONDUIT, AND APPARATUSES.
5. ALL VISUAL NOTIFICATION DEVICES IN THE SAME SPACE SHALL BE SYNCHRONIZED IN ACCORDANCE WITH NFPA-72.
6. COORDINATE INSTALLATION WITH FIRE ALARM SYSTEM VENDOR AND MANUFACTURER REQUIREMENTS.
7. COORDINATE FIRE ALARM DEVICES WITH ARCHITECTURAL FINISHES. CONCEAL CONDUIT IN FINISHED WALLS AND FLUSH MOUNT DEVICES WHERE POSSIBLE.
8. CONTRACTOR SHALL TEST THE FIRE ALARM SYSTEM AFTER COMPLETION OF INSTALLATION. FIRE ALARM SYSTEM SHALL BE TESTED AND VERIFIED TO BE WORKING PROPERLY PRIOR TO INSPECTION BY THE AUTHORITY HAVING JURISDICTION.
9. FOLLOWING INSTALLATION, CONTRACTOR SHALL PATCH, PAINT, AND RESTORE ALL WALLS AND CEILINGS TO MATCH EXISTING OR DESIRED NEW CONDITION.
10. FIRESTOP ALL FIRE-RATED FLOOR OR WALL PENETRATIONS TO MAINTAIN ORIGINAL FIRE RATING TO FULL DEPTH OF OPENING.
11. CONTRACTOR SHALL PROVIDE SLEEVE FOR CONDUIT PENETRATIONS THROUGH WALL AND CEILING FLOORS.

CONSULTANT INFORMATION

LiRo Engineers, Inc.
A LiRo Group Company
Syosset, N.Y. 516-214-8157[T]

CONSULTANT SEAL

STATE OF NEW YORK · FRANK F. ULISSE · No. 090111-1 · LICENSED PROFESSIONAL ENGINEER

REVISION NUMBER	DATE	MADE BY	APP'D BY	REVISION

RECORD DRAWING CERTIFICATION

☐ AS BUILT – CHANGES AS NOTED ☐ AS BUILT – NO CHANGES

CONTRACTOR
NAME
SIGNATURE
TITLE DATE

PROJECT COORDINATOR
NAME
SIGNATURE
TITLE DATE

WESTCHESTER COUNTY, NEW YORK
DEPARTMENT OF PUBLIC WORKS AND TRANSPORTATION
DIVISION OF ENGINEERING

INFRASTRUCTURE REHABILITATION - PHASE 3
PLAYLAND PARK, RYE, NEW YORK
DRAGON COASTER VENDORS
FIRE ALARM ROOF PLAN

CONTRACT NUMBER 22-523
SHEET NUMBER DCV-FA-22
DWG NO.: 487 of 664
SCALE: As indicated
DATE: 08/23/2022
DPW FILE NUMBER 1-118-FA-1236-0
REV. NO. 0

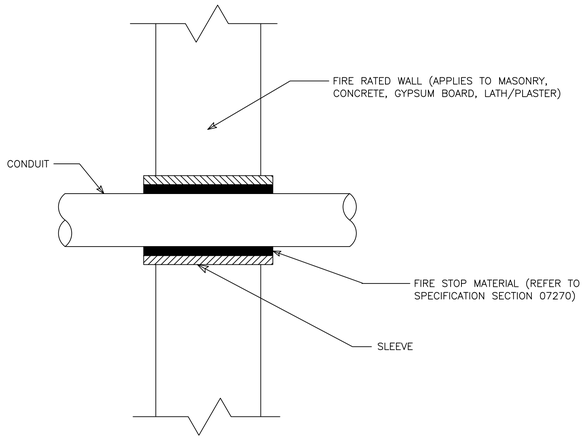

1 FA-81 CONDUIT PENETRATION THRU FIRE RATED WALL
NOT TO SCALE

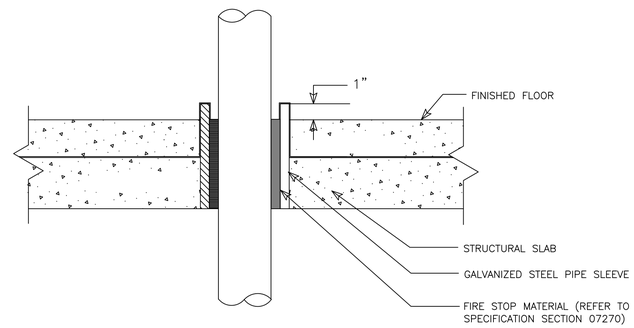

2 FA-81 CONDUIT PENETRATION THRU FLOOR SLAB
NOT TO SCALE

CONSULTANT INFORMATION

LiRo Engineers, Inc.
A LiRo Group Company
Syosset, N.Y. 516-214-8157[T]

CONSULTANT SEAL

STATE OF NEW YORK · FRANK F. ULISSE · No. 090111-1 · LICENSED PROFESSIONAL ENGINEER

REVISION NUMBER	DATE	MADE BY	APP'D BY	REVISION

RECORD DRAWING CERTIFICATION

☐ AS BUILT – CHANGES AS NOTED ☐ AS BUILT – NO CHANGES

CONTRACTOR
NAME
SIGNATURE
TITLE DATE

PROJECT COORDINATOR
NAME
SIGNATURE
TITLE DATE

WESTCHESTER COUNTY, NEW YORK
DEPARTMENT OF PUBLIC WORKS AND TRANSPORTATION
DIVISION OF ENGINEERING

INFRASTRUCTURE REHABILITATION - PHASE 3
PLAYLAND PARK, RYE, NEW YORK
DRAGON COASTER VENDORS
FIRE ALARM DETAILS

CONTRACT NUMBER 22-523
SHEET NUMBER **DCV-FA-81**
DWG NO.: 488 of 664
SCALE: **As indicated**
DATE: 08/23/2022
DPW FILE NUMBER **1-118-FA-1237-0**
REV. NO. 0

GENERAL NOTES:

1. DIMENSIONS INDICATED ON THE DRAWINGS ARE APPROXIMATE AND SUBJECT TO REVISIONS AS PER ACTUAL FIELD CONDITIONS.
2. CONTRACTOR SHALL COMPLY WITH ALL NYSDEC PERMIT REQUIREMENTS AND ANY OTHER STATE, COUNTY, CITY OR TOWN AGENCY HAVING JURISDICTION. REFER TO THE CONTRACT SPECIFICATIONS FOR PERMIT REQUIREMENTS.
3. CONTRACTOR SHALL TAKE ALL PRECAUTIONS TO MAINTAIN UTILITY SERVICE TO AND FROM BUILDINGS AND PARK AREAS.
4. ANY UTILITIES SHOWN ON THE PLANS ARE FOR INFORMATION ONLY AND HAVE BEEN OBTAINED FROM AVAILABLE SOURCES. THE EXISTENCE AND LOCATION OF ANY UTILITIES INDICATED ON THE PLANS ARE NOT GUARANTEED AND SHALL BE INVESTIGATED AND VERIFIED IN THE FIELD BY THE CONTRACTOR BEFORE STARTING WORK. THE CONTRACTOR SHALL HAVE ALL EXISTING UTILITIES FIELD STAKED BEFORE STARTING WORK BY CALLING DIG SAFELY NEW YORK AT 1-800-962-7962. EXCAVATION IN THE VICINITY OF UNDERGROUND UTILITIES SHALL BE DUG BY HAND. THE CONTRACTOR WILL BE HELD RESPONSIBLE FOR ANY DAMAGE TO EXISTING UTILITIES. NO SEPARATE PAYMENT SHALL BE MADE FOR THIS WORK.
5. THE CONTRACTOR WILL BE REQUIRED TO PROVIDE PRIVATE UTILITY MARKOUTS FOR ALL UTILITIES IN THE WORK AREAS. THE CONTRACTOR SHALL SUBMIT THE PROPOSED UTILITY SUB-CONTRACTOR FOR APPROVAL.
6. THE CONTRACTOR SHALL OBTAIN AND HAVE ON THE JOB SITE, AT ALL TIMES, ALL PERMITS AS REQUIRED BY THE STATE, COUNTY, CITY, TOWN/VILLAGE OR ANY OTHER PERMITTING AGENCY. THE CONTRACTOR SHALL BEAR ALL COSTS OF OBTAINING THESE PERMITS.
7. CONTRACTOR SHALL REMOVE ALL DEBRIS AND EXCESS CONSTRUCTION MATERIALS TO THE SATISFACTION OF THE OWNER AND ENGINEER. THE CONTRACTOR SHALL BE RESPONSIBLE FOR THE REMOVAL AND LEGAL DISPOSAL OF ALL MATERIALS RESULTING FROM THE CONTRACT.
8. CONTRACTOR SHALL COORDINATE ALL CONSTRUCTION ACTIVITIES WITH THE OWNER AND ENGINEER TO MINIMIZE INTERRUPTIONS TO NORMAL PARK OPERATIONS.
9. CONTRACTOR SHALL SUBMIT A DETAILED WORK PLAN INCLUDING SEQUENCE OF OPERATIONS PRIOR TO COMMENCING WORK AND SHALL BE SUBJECT TO APPROVAL OF THE OWNER/ENGINEER.
10. THE CONTRACTOR SHALL NOTIFY THE OWNER AND THE ENGINEER A MINIMUM OF SEVENTY-TWO (72) HOURS PRIOR TO THE START OF CONSTRUCTION. IN ADDITION, IF WORK SHOULD BE STOPPED AND RESTARTED FOR ANY REASON, THE CONTRACTOR SHALL GIVE THE ENGINEER A MINIMUM OF SEVENTY-TWO (72) HOURS NOTICE.
11. ITEMS SUSTAINING DAMAGE DURING CONSTRUCTION AS A RESULT OF THE CONTRACTOR'S OPERATIONS SHALL BE REPAIRED AND/OR REPLACED TO THE SATISFACTION AND APPROVAL OF THE OWNER AT THE CONTRACTORS EXPENSE. ANY DAMAGE SHALL BE REPAIRED AT NO ADDITIONAL COST TO THE OWNER.
12. ALL NECESSARY PRECAUTIONS SHALL BE TAKEN TO PRESERVE THE MATERIAL BELOW AND BEYOND THE LINES OF ALL EXCAVATION IN THE SOUNDEST POSSIBLE CONDITION. ANY DAMAGE TO THE WORK DUE TO THE CONTRACTOR'S OPERATIONS SHALL BE REPAIRED AT THE EXPENSE OF AND BY THE CONTRACTOR.
13. NO MATERIALS OF ANY KIND SHALL BE USED UNTIL IT HAS BEEN INSPECTED AND ACCEPTED BY THE ENGINEER; ALL MATERIALS REJECTED SHALL BE IMMEDIATELY REMOVED FROM THE WORK SITE AND SHALL NOT BE OFFERED FOR INSPECTION AGAIN.
14. ANY MATERIALS OR WORKMANSHIP FOUND AT ANY TIME TO BE DEFECTIVE SHALL BE REMEDIED AT ONCE, REGARDLESS OF PREVIOUS INSPECTION, THE INSPECTION AND OBSERVATION OF WORK BY THE ENGINEER IS INTENDED TO AID THE CONTRACTOR IN APPLYING LABOR AND MATERIAL TO AND IN ACCORDANCE WITH THE SPECIFICATION, BUT SUCH INSPECTION SHALL NOT RELEASE THE CONTRACTOR FROM ANY CONTRACT OBLIGATIONS.
15. THE CONTRACTOR SHALL CONDUCT THE WORK IN A SAFE MANNER SO AS TO POSE NO DANGER OR HAZARDS TO PERSONS OR PROPERTY. WHERE NECESSARY, TEMPORARY SHIELDS OR OTHER PROTECTIVE DEVICES MUST BE UTILIZED. THE CONTRACTOR ASSUMES FULL RESPONSIBILITY AND EXPENSE OF ANY AND ALL SAFETY MEASURES. THE USE OF EXPLOSIVES IS STRICTLY PROHIBITED. THE CONTRACTOR SHALL COMPLY WITH ALL OSHA AND NEW YORK STATE DEPARTMENT OF LABOR REQUIREMENTS.
16. RESEED ALL AREAS WHERE WORK OCCURS AND/OR WHERE CONTRACTOR DAMAGES EXISTING GRASS. COMPLY WITH THE SPECIFICATIONS. STAGING AREAS SHALL BE RESTORED TO ORIGINAL CONDITION AND SHALL BE SEEDED FOLLOWING COMPLETION OF ALL PHYSICAL WORK.
17. THE CONTRACTOR SHALL HAVE A COMPETENT REPRESENTATIVE PRESENT WHO SHALL RESPOND TO ANY QUESTIONS OR REQUESTS OF THE ENGINEER IN THE PROSECUTION AND COMPLETION OF THE WORK IN CONFORMITY WITH THIS CONTRACT, AND SHALL HAVE FULL AUTHORITY TO SUPPLY LABOR AND MATERIAL IMMEDIATELY. THE CONTRACTOR SHALL ALSO HAVE A COMPETENT REPRESENTATIVE AVAILABLE TO RECEIVE TELEPHONE MESSAGES AND PROVIDE A REASONABLE REPLY AS SOON AS POSSIBLE, BUT NO LATER THAN 24 HOURS.
18. NEITHER THE OWNER OR ENGINEER SHALL BE RESPONSIBLE FOR THE MEANS AND METHODS CHOSEN BY THE CONTRACTOR TO COMPLETE THE WORK.
19. THE CONTRACTOR SHALL HAVE FULL RESPONSIBILITY FOR SITE SAFETY AND THE SAFETY OF THE CONTRACTOR'S WORK FORCE.
20. BACKFILL AT ALL EXCAVATIONS SHALL BE PLACED IN 6" LIFTS AND SHALL ACHIEVE A COMPACTION NOT LESS THAN 95 PERCENT OF STANDARD PROCTOR MAXIMUM DENSITY. UNDER THE TERMS OF THE CONTRACT, THE CONTRACTOR SHALL PERFORM FIELD TESTS BY AN APPROVED LABORATORY TO ASSURE THIS COMPACTION RATE AT VARYING DEPTHS. THE CONTRACTOR SHALL BEAR ALL COSTS FOR TESTING AND ANY DELAYS THAT RESULT FROM SUCH TESTING.
21. THE CONTRACTOR SHALL ADJUST ALL MANHOLE FRAMES AND COVERS, VALVE COVERS, WATERVALVE BOXES, DRAINAGE INLETS, ETC. AS NECESSARY TO MEET THE SURFACE OF NEW PAVEMENT OR WALKWAY AS REQUIRED TO ALLOW POSITIVE DRAINAGE. NO SEPARATE PAYMENT WILL BE MADE FOR THIS WORK UNLESS OTHERWISE NOTED IN THE CONTRACT DOCUMENTS. THE CONTRACTOR SHALL COORDINATE THIS ACTIVITY WITH THE RELATED UTILITY COMPANIES, IF APPLICABLE. WARPING OF THE PAVEMENT SURFACE TO MEET THESE ITEMS WILL NOT BE PERMITTED.
22. ALL EXISTING SIGNS IN THE CONTRACT AREA ARE TO REMAIN INTACT. SIGNS DAMAGED SHALL BE REPLACED AT THE CONTRACTOR'S EXPENSE. ANY SIGNS THAT REQUIRE RESETTING SHALL BE PLACED IN A FINAL POSITION DETERMINED BY THE OWNER. NO SEPARATE PAYMENT SHALL BE MADE FOR THIS WORK. THE CONTRACTOR SHALL BE HELD RESPONSIBLE FOR SIGNS DAMAGED BY HIS OPERATIONS. THE CONTRACTOR SHALL BE RESPONSIBLE FOR ALL DAMAGES TO BURIED AND OVERHEAD UTILITIES LOCATED ON PUBLIC AND PRIVATE PROPERTY. THE CONTRACTOR SHALL BE RESPONSIBLE FOR ALL DAMAGES TO FACILITIES ON PUBLIC AND PRIVATE PROPERTY, SUCH AS, LANDSCAPING, DRIVEWAYS, CURBS, PAVEMENT, SIDEWALK, ETC.
23. CONTRACTOR IS RESPONSIBLE TO COORDINATE AND VERIFY THE EXTENT OF ALL DEMOLITION WITH THE ENGINEER PRIOR TO PERFORMING THE WORK.
24. CONTRACTOR SHALL RESTORE STAGING AREA BACK TO ITS ORIGINAL CONDITION INCLUDING GRADING, SEEDING ETC. EXISTING TREES, UTILITIES, LIGHT POLES, STONE, SIDEWALK, CURB, ETC. SHALL BE PROTECTED AND REPLACED IF DAMAGED. PROVIDE ELECTRICAL POWER, WATER, TELEPHONE, ETC. AS SPECIFIED FOR THE ENGINEERS TRAILER WHICH SHALL BE LOCATED IN THE STAGING AREA.

SURVEY NOTES:

1. HORIZONTAL COORDINATES SHOWN HEREON REFER TO THE NORTH AMERICAN DATUM OF 1983 (NAD83), NEW YORK STATE PLANE COORDINATE SYSTEM, NEW YORK EAST ZONE 3101.
2. VERTICAL ELEVATIONS SHOWN HEREON REFER TO THE NORTH AMERICAN VERTICAL DATUM OF 1988 (NAVD88) WHICH IS BASED ON THE UNITED STATES COAST & GEODETIC SURVEY MEAN SEA LEVEL AT SANDY HOOK, NEW JERSEY.
3. LOCATION OF UTILITIES AS SHOWN ARE BASED UPON MAP TITLED "PARTIAL TOPOGRAPHICAL AND UTILITY SURVEY OF RYE PLAYLAND PARK" BY LKB LAST UPDATED SEPTEMBER 8, 2017.
4. LOCATIONS OF UNDERGROUND UTILITIES SHOWN ON THIS SURVEY ARE APPROXIMATE. RLT ENGINEERING, GEOLOGY, AND LAND SURVEYING, P.C., CANNOT GUARANTEE THE LOCATION OF UNDERGROUND UTILITIES AND STRUCTURES. THE STANDARD OF CARE USED BY RLT ENGINEERING, GEOLOGY, AND LAND SURVEYING, P.C. TO LOCATE THE UTILITIES IS REASONABLE AND CONSISTENT WITH THE LOCAL STANDARD OF CARE USED TO LOCATE THE UNDERGROUND UTILITIES. LOCATIONS AND SIZE ARE BASED ON UTILITY MARK-OUTS, AS-BUILT MAPS AND OTHER VISIBLE SURFACE EVIDENCE OBSERVED IN THE COURSE OF THIS SURVEY. PRIOR TO EXCAVATION OR CONSTRUCTION THE LOCATION, SIZE AND TYPE OF ALL UNDERGROUND UTILITY LOCATIONS MUST BE VERIFIED BY THE RESPECTIVE UTILITY COMPANY.
5. THE SUBJECT PROPERTY OF RYE PLAYLAND PARK FALLS WITHIN FEMA FLOOD ZONES AE (EL 12), AE (EL 13), VE (EL 14), VE (EL 15), VE (EL 16), VE (EL 17) AS SHOWN ON THE FEMA FLOOD INSURANCE RATE MAP COMMUNITY PANEL #36119C0358 F EFFECTIVE DATE SEPTEMBER 28, 2007 AND FEMA FLOOD INSURANCE RATE MAP COMMUNITY PANEL #36119C0356 F EFFECTIVE DATE SEPTEMBER 28, 2007. FEMA ELEVATIONS REFER TO NAVD88."

DEMOLITION NOTES:

1. ALL REQUIRED DEMOLITION PERMITS MUST BE OBTAINED FROM ALL REQUIRED AGENCIES PRIOR TO COMMENCEMENT OF WORK.
2. ANY ASBESTOS REMOVAL MUST BE DONE BY A CERTIFIED ASBESTOS REMOVAL CONTRACTOR.
3. ALL UTILITY COMPANIES MUST BE NOTIFIED A MINIMUM OF 48 HOURS IN ADVANCE OF DEMOLITION.
4. FOR ALL UTILITIES, CONTRACTOR SHALL VERIFY DISCONNECT PRIOR TO DEMOLITION.
5. PROPER FENCING OR PUBLIC PROTECTION DEVICES MUST BE CONSTRUCTED AND MAINTAINED AROUND THE PERIMETER OF THE SITE AT ALL TIMES DURING DEMOLITION PHASE.
6. IT IS THE CONTRACTOR'S RESPONSIBILITY TO CONTROL DUST, DIRT, AND DEBRIS DURING DEMOLITION AND CONSTRUCTION PHASES.
7. IF SUSPICIOUS AND/OR HAZARDOUS MATERIAL IS ENCOUNTERED DURING DEMOLITION / CONSTRUCTION, ALL WORK SHALL STOP AND THE COUNTY DEPARTMENT OF HEALTH AND THE NEW YORK STATE DEPARTMENT OF ENVIRONMENTAL CONSERVATION SHALL BE NOTIFIED IMMEDIATELY. WORK SHALL NOT RESUME UNTIL THE CONTRACTOR HAS OUTLINED APPROPRIATE ACTION FOR DEALING WITH THE WASTE MATERIAL.
8. WHERE EXISTING CURB, GUTTER, SIDEWALK OR WALK IS TO BE REMOVED, IT SHALL BE SAW CUT OR REMOVED AT THE NEAREST JOINT.
9. THE CONTRACTOR SHALL PERFORM DAILY CLEANUP OPERATIONS WHICH INCLUDE SWEEPING OF THE ROADWAYS, REMOVAL OF DEBRIS (CUPS, PAPER BAGS, CANS, ETC.), REMOVAL OF EXCESS CONSTRUCTION MATERIALS, ALL TO THE SATISFACTION OF THE OWNER.
10. THE CONTRACTOR SHALL CONFORM TO ALL STATE AND LOCAL RULES, REGULATIONS AND LAWS WHICH SHALL GOVERN THE HAULING AND DISPOSING OF TREES, SHRUBS, STUMPS, ROOTS, RUBBISH, DEBRIS AND OTHER MATTER.
11. NO TREES , SHRUBS, ROOTS, BRANCHES, WOOD, CONCRETE OR OTHER DEBRIS SHALL BE BURIED IN FILLS, EMBANKMENTS OR STOCK PILES.
12. NO CLEARED MATTER, DEBRIS SHALL BE STORED AT THE CONSTRUCTION SITE.
13. CONTRACTOR SHALL GUARANTEE THAT WORK PERFORMED UNDER THIS CONTRACT WILL NOT PERMANENTLY DAMAGE TREES, SHRUBS, TURF OR PLANTS DESIGNATED TO REMAIN, OR OTHER ADJACENT WORK OR FACILITIES. IF DAMAGE RESULTING FROM CONTRACTOR'S OPERATIONS APPEARS DURING THE PERIOD UP TO 24 MONTHS AFTER COMPLETION OF THE PROJECT, THE CONTRACTOR SHALL REPLACE DAMAGED ITEMS AT HIS EXPENSE.
14. DAMAGE TO ANY EXISTING ITEMS, NOT SHOWN IN CONTRACT DOCUMENTS TO BE REMOVED, SUCH AS PAVEMENT, GRASSED AREAS, UTILITIES, STRUCTURES OR OTHER FACILITIES SHALL BE REPAIRED BY THE CONTRACTOR IMMEDIATELY AT HIS OWN EXPENSE TO THE SATISFACTION OF THE ENGINEER AND OWNER. ALL ASPHALT PAVEMENTS, GRASSED AREAS AND LANDSCAPING THAT ARE DAMAGED OR DISTURBED SHALL BE RESTORED IN ACCORDANCE WITH APPLICABLE SECTIONS ON THE CONTRACT SPECIFICATIONS.
15. EXCEPT AS NOTED BELOW, CONTRACTOR SHALL REMOVE FROM THE SITE AND SATISFACTORILY DISPOSE OF ALL TREES, SHRUBS, ROOTS, BRUSH, MASONRY, RUBBISH, SCRAP, DEBRIS, PAVEMENT, CURBS, FENCES AND MISCELLANEOUS OTHER ITEMS NOT COVERED UNDER OTHER SECTIONS AS SHOWN, SPECIFIED OR OTHERWISE REQUIRED TO PERMIT CONSTRUCTION OF NEW WORK.
16. BURNING OF MATERIAL IS EXPRESSLY FORBIDDEN.
17. TREES AND SHRUBS TO BE SAVED:

A. TREES AND SHRUBS WHICH ARE TO REMAIN SHALL BE PROTECTED BY FENCES, BARRICADES, WRAPPING OR OTHER MEANS OF PROTECTION. EQUIPMENT STORAGE, MATERIAL STOCKPILES, ETC., SHALL NOT BE PERMITTED WITHIN TREE BRANCH SPREAD.

B. PROTECT ALL OTHER TREES AND SHRUBS FROM DEFACEMENT, INJURY AND DESTRUCTION. PRESERVE TREES WITHIN THE CONTRACT LIMITS THAT ARE SO DELINEATED ON THE PLANS OR AS MARKED IN THE FIELD BY THE ENGINEER. ALSO, ALL TO BE SAVED SHALL BE PROTECTED IN ACCORDANCE WITH THE CONTRACT DOCUMENTS.

C. DO NOT CUT ROOTS UNNECESSARILY; HANDWORK OR OTHER METHODS SHALL BE IMPLEMENTED TO PREVENT DAMAGE TO ROOTS WHICH EXTEND INTO GRADING LIMITS OR LIMITS OF EXCAVATION. DISTURB ROOTS AS LITTLE AS POSSIBLE WHEN TUNNELING UNDER TREES. BACKFILLING AROUND TREE ROOTS SHALL BE DONE IMMEDIATELY AFTER COMPLETION OF CONSTRUCTION IN THE VICINITY OF TREES.

D. THE CONTRACTOR SHALL BE RESPONSIBLE FOR THE PROTECTION OF ALL VEGETATION FROM DAMAGE RESULTING FROM EMISSIONS FROM MOTORIZED EQUIPMENT.

E. CONTRACTOR SHALL BE VIGILANT OF ANY OVERHEAD UTILITY LINES WHEN USING AERIAL EQUIPMENT FOR TREE TRIMMING OPERATIONS.

F. DURING WORKING OPERATION, PROTECT THE TRUNK, FOLIAGE, AND ROOT SYSTEM OF ALL TREES TO BE SAVED WITH BOARDS OR OTHER GUARDS AND AS REQUIRED TO PREVENT DAMAGE, INJURY AND DEFACEMENT. DO NOT PILE EXCAVATED MATERIAL ADJACENT TO THE BASE OF ANY TREES. DO NOT ALLOW RUNOFF TO ACCUMULATE AROUND BASE OF TREES. DO NOT FASTEN OR ATTACH ROPES, CABLE OR GUY WIRES TO TREES WITHOUT PERMISSION OF THE ENGINEER. WHEN SUCH PERMISSION IS GRANTED, PROTECT THE TREE BEFORE MAKING FASTENING OR ATTACHMENTS BY PROVIDING BURLAP WRAPPING AND SOFTWOOD CLEATS. THE CONTRACTOR SHALL BE HELD RESPONSIBLE FOR DAMAGE RESULTING FROM THESE ACTIONS. USE OF AXES OR CLIMBING SPURS FOR TRIMMING WILL NOT BE PERMITTED. PROVIDE CLIMBING ROPES DURING TRIMMING.

G. REMOVE SHRUBS TO BE SAVED, TAKING A SUFFICIENT EARTH BALL AT THE ROOTS TO MAINTAIN THE SHRUB. TEMPORARILY REPLANT IF REQUIRED, AND REPLACE AT THE COMPLETION OF CONSTRUCTION IN CONDITION EQUALING THE ORIGINAL.

H. TREE AND SHRUB REPAIR WHERE REQUIRED SHALL BE PERFORMED BY A TREE SURGEON.

I. TREES AND SHRUBS INTENDED TO REMAIN WHICH ARE DAMAGED BEYOND REPAIR BY CONSTRUCTION, SHALL BE REPLACED BY THE CONTRACTOR AT NO EXPENSE TO THE OWNER.

SITE NOTES:

1. THE CONTRACTOR SHALL PERFORM ALL WORK IN COMPLIANCE WITH TITLE 29 OF FEDERAL REGULATIONS, PART 1926, SAFETY AND HEALTH REGULATIONS FOR CONSTRUCTION(OSHA).
2. HIGHWAY DRAINAGE ALONG ALL ROADS AND PRIVATE DRIVES SHALL BE KEPT CLEAN OF MUD, DEBRIS ETC. AT ALL TIMES.
3. REFER TO ARCHITECTURAL DRAWINGS FOR BUILDING INFORMATION.
4. THE CONTRACTOR SHALL CONSULT THE DESIGN ENGINEER BEFORE DEVIATING FROM THESE PLANS.
5. IN ALL TRENCH EXCAVATIONS, CONTRACTOR MUST LAY THE TRENCH SIDE SLOPES BACK TO A SAFE SLOPE, USE A TRENCH SHIELD OR PROVIDE SHEETING AND BRACING IF REQUIRED.
6. THE CONTRACTOR SHALL TAKE PRECAUTIONS TO MAINTAIN A MINIMUM OF 2' OF COVER OVER ALL EXISTING AND NEW STORM AND SANITARY PIPES DURING CONSTRUCTION.
7. ALL EXISTING SURFACE APPURTENANCES (I.E. WATER VALVES, CATCH BASIN FRAMES AND GRATES, MANHOLE COVERS) WITHIN THE PROJECT LIMITS SHALL BE ADJUSTED TO FINISHED GRADE.
8. UNLESS COVERED BY THE CONTRACT SPECIFICATIONS OR AS NOTED ON THE PLANS, ALL WORK SHALL CONFORM TO THE NEW YORK STATE DEPARTMENT OF TRANSPORTATION STANDARD SPECIFICATIONS DATED JANUARY 1, 2020 AND ANY SUBSEQUENT APPENDICES.

UTILITY NOTES:

1. APPROXIMATE LOCATION OF KNOWN UTILITY STRUCTURES AND FACILITIES THAT MAY BE ENCOUNTERED WITHIN AND ADJACENT TO THE LIMITS OF WORK ARE SHOWN ON THE PLANS. THE ACCURACY AND COMPLETENESS OF THIS INFORMATION IS NOT GUARANTEED BY THE ENGINEER. THE CONTRACTOR IS ADVISED TO VERIFY IN FIELD ALL THE FACTS CONCERNING THE UTILITY LOCATIONS AND OTHER CONSTRUCTION OBSTACLES PRIOR TO CONSTRUCTION OF ANY DISCREPANCIES WHICH MAY AFFECT PROJECT DESIGN AND/OR SCOPE.
2. ALL ABANDONED WATER LINES SHALL BE CUT AND CAPPED IN ACCORDANCE WITH WESTCHESTER COUNTY REQUIREMENTS.
3. TRENCH DETAILS ARE INTENDED TO PROVIDE INFORMATION REGARDING BACKFILLING MATERIALS AND GENERAL MATERIAL DEPTHS ONLY. THE CONTRACTOR SHALL BE RESPONSIBLE FOR THE MEANS AND METHODS OF CONSTRUCTION AND SHALL PROVIDE APPROPRIATE SAFETY MEASURES, SHEETING AND BRACING AS NECESSARY. SHEETING CONDITIONS ARE TO BE DESIGNED BY A NEW YORK STATE LICENSED PROFESSIONAL ENGINEER AND SUBMITTED TO THE DESIGN ENGINEER FOR APPROVAL. THE DESIGN ENGINEER ASSUMES NO RESPONSIBILITY OR LIABILITY FOR FIELD CONDITIONS, TRENCHING OR BACKFILLING OPERATIONS DURING CONSTRUCTION. THE CONTRACTOR SHALL COMPLY WITH ALL APPLICABLE OSHA STANDARDS AND DETAILS FOR TRENCH EXCAVATION.
4. CONTRACTOR SHALL BE RESPONSIBLE FOR DEWATERING AND PRECLUDING PONDING OF WATER IN ALL AREAS. DEWATERING OPERATIONS SHALL BE IN ACCORDANCE WITH NYSDEC REGULATIONS, THE PROJECT STORMWATER POLLUTION PREVENTION PLAN AND WESTCHESTER COUNTY.
5. THE CONTRACTOR SHALL COMPLY WITH THE LATEST OSHA CONFINED SPACE ENTRY REQUIREMENTS (29 CFR PART 1910).
6. THE CONTRACTOR SHALL COMPLY WITH THE LATEST REVISED OSHA SHEETING REQUIREMENTS (29 CFR PART 1926.650, 651, 652).
7. ALL EXISTING UTILITIES THAT ARE TO REMAIN IN SERVICE AND THAT INTERFERE WITH THE WORK SHALL BE RELOCATED UNLESS OTHERWISE SHOWN.
8. ALL ABANDONED PIPES SHALL BE PLUGGED, REMOVED, CRUSHED OR FILLED WITH A SUITABLE MATERIAL AS DIRECTED BY THE ENGINEERS, ABANDONED PIPES 12" INSIDE DIAMETER AND LARGER MUST BE REMOVED, FILLED OR CRUSHED IN PLACE. SMALLER PIPES SHALL BE PLUGGED AND ABANDONED IN PLACE UNLESS OTHERWISE DIRECTED BY THE ENGINEER.
9. THE CONTRACTOR SHALL CONTACT THE UTILITY COMPANIES TO DETERMINE THEIR SCHEDULE FOR PERFORMING UTILITY RELOCATION AND INSTALLATION WORK. THE CONTRACTOR SHALL SCHEDULE THEIR WORK ACCORDINGLY IN ORDER TO NOT INTERFERE WITH THE WORK OF THE UTILITY COMPANIES.
10. TRENCHES SHALL BE BACKFILLED WITHOUT DELAY. OPEN TRENCHES SHALL BE TEMPORARILY SUPPORTED AND STEEL PLATED WHEN WORK IS NOT IN PROGRESS. CONTRACTOR MUST ENSURE NO TRENCHES ARE LEFT OPEN OVERNIGHT. THE CONTRACTOR IS RESPONSIBLE FOR THE DESIGN AND INSTALLATION OF STEEL PLATES THAT ARE CAPABLE OF SAFELY SUPPORTING THE SUBJECTED LOADS.
11. THE CONTRACTOR SHALL BE RESPONSIBLE FOR PROVIDING TEMPORARY LIGHTING WITHIN THE LIMITS OF CONSTRUCTION AND FOR ALL AREAS WHERE WHERE EXISTING STREET AND AREA LIGHTING SHUT-DOWN IS REQUIRED TO INSTALL NEW LIGHTING AND ELECTRICAL SERVICE.
12. ALL CMP PIPES SHALL FOLLOW NYSDOT SECTION 602-2 AND 707.02, BE HELICAL BITUMINOUS COATED, SHALL HAVE GASKETED AND BANDED JOINTS AND BE OF THE FOLLOWING PIPE GAUGES UNLESS OTHERWISE SPECIFIED.

    10" TO 21" - 14 GAUGE
    24" TO 30" - 12 GAUGE
    30" TO 60" - 10 GAUGE
13. IN INSTANCES WHERE THE STORM SEWER CROSSES THE SANITARY SEWER A CRUSHED STONE ENCASEMENT SHALL BE PROVIDED AROUND THE SANITARY SEWER UP TO THE STORM SEWER-COMPACT WITH APPROVED EQUIPMENT
14. ALL CATCH BASINS AND STORM MANHOLES WITHIN PAVEMENT TO BE CONSTRUCTED TO WITHSTAND H-20 LOADING.
15. ALL EXISTING CATCH BASINS WITHIN WORK LIMITS TO BE CLEANED OF ANY DEBRIS OR SILT.

GRADING NOTES:

1. REMOVE AND STOCKPILE TOPSOIL AS DIRECTED BY THE CONSTRUCTION MANAGER. REPLACE TOPSOIL TO A MINIMUM 4" DEPTH. ALL DISTURBED AREAS TO BE HYDROSEEDED AS DIRECTED BY THE CONSTRUCTION MANAGER.
2. CONTRACTOR SHALL BE RESPONSIBLE FOR THE MAINTENANCE AND REMOVAL OF TEMPORARY SEDIMENTATION CONTROLS, INCLUDING SILT SINK AND SILT FENCE. EROSION CONTROL MEASURES SHALL NOT BE REMOVED BEFORE VEGETATION HAS OCCURRED COMPLETELY.
3. ALL SILT FENCE TO BE REPLACED WHENEVER THEY BECOME CLOGGED OR INOPERABLE AND SHALL BE REPLACED AS DIRECTED BY THE ENGINEER.
4. THE CONTRACTOR SHALL BE RESPONSIBLE FOR RESTORATION OF TOPSOIL TO ALL DISTURBED AREAS. IT IS THE CONTRACTOR'S RESPONSIBILITY TO MAINTAIN EROSION CONTROL MEASURES AT ALL TIMES.
5. EROSION CONTROL MEASURES WILL BE IMPLEMENTED IN ACCORDANCE WITH THE NEW YORK STATE GUIDELINES FOR URBAN EROSION SEDIMENT CONTROL MANUAL, WESTCHESTER COUNTY HEALTH DEPARTMENT, AND THE CITY OF RYE REQUIREMENTS.
6. ALL INLETS TO THE STORM SEWER SHALL HAVE STONE DROP INLET PROTECTION. THE CONTRACTOR SHALL BE RESPONSIBLE FOR MAINTAINING THE BEST MANAGEMENT PRACTICES (BMP'S) UNTIL GROUND COVER IS ESTABLISHED.
7. SILT FENCE, JUTE MESH, AND/OR EROSION CONTROL BLANKETS WILL BE USED ON STEEP SLOPES AND WHEREVER NECESSARY TO CONTROL EROSION AND SILTATION OF EXISTING DRAINAGE SYSTEMS AS ORDERED BY THE ENGINEER OR SPECIFIED ON PLANS.
8. THE CONTRACTOR SHALL DESIGNATE A MEMBER OF HIS/HER FIRM TO BE RESPONSIBLE TO MONITOR EROSION CONTROL, EROSION CONTROL STRUCTURES, TREE PROTECTION AND PRESERVATION THROUGHOUT CONSTRUCTION.
9. ALL DISTURBED AREAS SHALL BE PROTECTED FROM EROSION EITHER BY MULCH OR TEMPORARY SEEDING WITHIN 2 WEEKS OF DISTURBANCE.

SOIL EROSION AND SEDIMENT CONTROL NOTES:

1. ALL SOIL EROSION AND SEDIMENT CONTROL PRACTICES TO BE INSTALLED PRIOR TO ANY SOIL DISTURBANCE, OR IN THEIR PROPER SEQUENCE, AND MAINTAINED UNTIL PERMANENT PROTECTION IS ESTABLISHED. CONTRACTOR SHALL COMPLY WITH ALL REQUIREMENTS OF THE STORMWATER POLLUTION PREVENTION PLAN.
2. ANY DISTURBED AREAS THAT WILL NOT RECEIVE PERMANENT RESTORATION WITHIN TEN (10) DAYS AFTER FINAL GRADING, AND NOT SUBJECT TO CONSTRUCTION TRAFFIC, WILL IMMEDIATELY RECEIVE A TEMPORARY COVER. THE DISTURBED AREAS WILL BE MULCHED WITH STRAW, OR EQUIVALENT MATERIAL AT A RATE OF TWO (2) TONS PER ACRE, ACCORDING TO STATE STANDARDS.
3. PERMANENT VEGETATION TO BE SEEDED OR SODDED ON ALL EXPOSED AREAS WITHIN TEN (10) DAYS AFTER FINAL GRADING. MULCH WILL BE USED AS NECESSARY FOR PROTECTION UNTIL SEEDING IS ESTABLISHED.
4. ALL WORK TO BE DONE IN ACCORDANCE WITH THE STANDARDS FOR SOIL EROSION AND SEDIMENT CONTROL IN THE STATE OF NEW YORK.
5. A SUB-BASE COURSE DETAIL WILL BE APPLIED IMMEDIATELY FOLLOWING ROUGH GRADING AND INSTALLATION OF IMPROVEMENTS IN ORDER TO STABILIZE ROADS, DRIVEWAYS PARKING AREAS AND SIDEWALKS. IN AREAS WHERE NO UTILITIES ARE PRESENT, THE SUB-BASE SHALL BE INSTALLED WITHIN 15 DAYS OF THE PRELIMINARY GRADING.
6. IMMEDIATELY FOLLOWING INITIAL DISTURBANCE OR ROUGH GRADING, ALL CRITICAL AREAS SUBJECT TO EROSION (I.E.; STEEP SLOPES AND ROADWAY EMBANKMENTS) WILL RECEIVE A TEMPORARY COVER OF STRAW MULCH OR A SUITABLE EQUIVALENT AT A RATE OF TWO (2) TONS PER ACRE, ACCORDING TO NYS STANDARDS.
7. ANY STEEP SLOPES RECEIVING PIPELINE INSTALLATION WILL BE BACKFILLED AND STABILIZED DAILY, AS THE INSTALLATION PROCEEDS (I.E.; SLOPES GREATER THAN 3:1).
8. IN ACCORDANCE WITH THE STANDARDS FOR PERMANENT VEGETATIVE COVER FOR SOIL STABILIZATION, ANY SOIL HAVING A pH OF 4 OR LESS OR CONTAINING IRON SULFIDES SHALL BE COVERED WITH A MINIMUM OF 12 INCHES OF SOIL HAVING A pH OF 5 OR GREATER PRIOR TO SEEDBED PREPARATION.
9. WESTCHESTER COUNTY AND THE ENGINEER, SHALL BE NOTIFIED 72 HOURS IN ADVANCE OF ANY LAND DISTURBING ACTIVITY.
10. AT THE TIME WHEN THE SITE PREPARATION FOR PERMANENT VEGETATIVE STABILIZATION IS GOING TO BE ACCOMPLISHED, ANY SOIL THAT WILL NOT PROVIDE A SUITABLE ENVIRONMENT TO SUPPORT ADEQUATE VEGETATIVE GROUND COVER, SHALL BE REMOVED OR TREATED IN SUCH A WAY THAT WILL PERMANENTLY ADJUST THE SOIL CONDITIONS AND RENDER IT SUITABLE FOR VEGETATIVE COVER. IF THE REMOVAL OR TREATMENT OF THE SOIL WILL NOT PROVIDE SUITABLE CONDITIONS, NON-VEGETATIVE MEANS OF PERMANENT GROUND STABILIZATION WILL HAVE TO BE EMPLOYED.
11. THE CONTRACTOR SHALL TAKE NECESSARY MEASURES TO MAINTAIN DUST CONTROL. DIRT HAUL ROADS SHALL BE SPRINKLED WITH WATER OR GIVEN A SURFACE OF CRUSHED STONES OR WOOD CHIPS AS REQUIRED. VEHICLES SHALL BE CLEANED, AS NECESSARY, PRIOR TO USING PUBLIC STREETS. PAVED ROADS SHALL BE SPRINKLED WITH WATER.
12. ALL SOIL EROSION AND SEDIMENT CONTROL DEVICES SHALL BE LOCATED IN THE FIELD AS REQUIRED OR AT THE DIRECTION OF THE ENGINEER. THE CONTRACT DRAWING ARE NOT INTENDED TO SHOW THE LOCATION AND DETAILS FOR ALL SUCH DEVICES BUT ARE TO BE USED AS A REASONABLE GUIDE.
13. ANY CHANGES TO THE SOIL AND SEDIMENT CONTROL PLANS WILL REQUIRE THE SUBMISSION OF REVISED SOIL EROSION AND SEDIMENT CONTROL PLANS TO WESTCHESTER COUNTY AND THE ENGINEER. THE REVISED PLANS MUST BE PREPARED BY THE CONTRACTOR AND MUST MEET ALL CURRENT NYS SOIL EROSION AND SEDIMENT CONTROL PRACTICES.
14. CONTRACTOR SHALL OBTAIN ALL REQUIRED SEDIMENT CONTROL PERMITS.
15. UPON COMPLETION OF CONSTRUCTION WORK AND AFTER FINAL GRADING AND WHEN PERMANENT STABILIZATION HAS BEEN ESTABLISHED, STRAW BALES, SILT FENCES AND ALL OTHER SOIL PLAN APPURTENANCES WILL BE REMOVED AND DISPOSED OF BY THE CONTRACTOR, UNLESS ORDERED TO REMAIN BY THE ENGINEER.
16. ALL EXCESS EXCAVATED MATERIAL, EXCEPT FOR TOP SOIL, WILL BE REMOVED FROM THE SITE BY THE CONTRACTOR IN ACCORDANCE WITH THE CONTRACT DOCUMENTS.
17. CONDUIT OUTLETS AND CATCH BASIN INLETS MUST BE PROTECTED PRIOR TO START OF CONSTRUCTION.
18. THE CONTRACTOR SHALL PROVIDE A DETAILED SEQUENCE OF CONSTRUCTION OPERATIONS FOR REVIEW AND SUBMITTAL TO WESTCHESTER COUNTY AND THE ENGINEER.
19. THE CONTRACTOR SHALL MEET ENGINEER ON-SITE TO DEFINE THOSE AREAS WHICH WILL REQUIRE SOIL EROSION AND SEDIMENT CONTROL FACILITIES, DISCUSS THEIR CONSTRUCTION AND THEREAFTER PROVIDE DETAILED PLANS FOR REVIEW OF SUCH FACILITIES BY WESTCHESTER COUNTY AND THE ENGINEER.
20. ALL SOIL EROSION AND SEDIMENT CONTROL PRACTICES SHALL BE IN PLACE WHERE POSSIBLE PRIOR TO, OR IMMEDIATELY FOLLOWING SITE AND ACCESS CLEARING.
21. ALL SOIL EROSION AND SEDIMENT CONTROL PRACTICES SHALL BE LEFT IN PLACE AND MAINTAINED; INCLUDING SILT AND SEDIMENT REMOVAL, UNTIL CONSTRUCTION IS COMPLETED, AREA STABILIZED AND THE ENGINEER SO DIRECTS.
22. CONTRACTOR SHALL CONFINE SOIL DISTURBANCE ACTIVITY TO THE AREAS CONTAINED WITHIN THE "LIMIT OF DISTURBANCE" LINES EXCEPT AS DIRECTED BY THE ENGINEER AND IN ACCORDANCE AND COORDINATION WITH ADJACENT CONTRACTS. SUCH ACTIVITY SHALL SHALL ESSENTIALLY CONSIST OF CLEARING, GRUBBING, GRADING AND CONSTRUCTION IN AREAS DEFINED AS BUILDINGS, PIPELINE, PARKING AREAS, DRIVES AND WALKWAYS OR AS MAY BE REQUIRED DUE TO GRADE CHANGES OR RETAINING WALLS.
23. ALL DEWATERING OPERATIONS MUST DISCHARGE DIRECTLY INTO A SEDIMENT FILTER AREA. SEDIMENT FILTER SHALL BE INSTALLED IN ACCORDANCE WITH THE CONTRACT DOCUMENTS AND THE DETAILS OF DESIGN AND CONSTRUCTION SHALL PREPARED AND SUBMITTED BY THE CONTRACTOR TO THE ENGINEER, AND ALL OTHER PERTINENT AGENCIES FOR REVIEW.
24. SOIL STABILIZATION METHODS SHALL BE UNDERTAKEN COINCIDENTALLY WITH ALL SITE IMPROVEMENTS AND CONTINUE DURING THE CONSTRUCTION ACTIVITY PERIOD.
25. THE LIMITS OF FENCING FOR TREE PROTECTION WILL BE DETERMINED IN THE FIELD PRIOR TO CONSTRUCTION AND WILL INCLUDE THE TREE CANOPY.
26. COMPLY WITH GENERAL PERMIT GP-0-20-001, AS OUTLINED IN THE STORM WATER PREVENTION PLAN (SWPPP).

6/15/2022 4:10:27 PM

CONSULTANT INFORMATION

LiRo Engineers, Inc.
A LiRo Group Company
Mineola, N.Y. 516-746-2350[T]

CONSULTANT SEAL

STATE OF NEW YORK · KENNETH J. HOLMSTROM · LICENSED PROFESSIONAL ENGINEER · No. 059134

REVISION NUMBER	DATE	MADE BY	APP'D BY	REVISION

RECORD DRAWING CERTIFICATION

☐ AS BUILT - CHANGES AS NOTED ☐ AS BUILT - NO CHANGES

CONTRACTOR
NAME ______
SIGNATURE ______
TITLE ______ DATE ______

PROJECT COORDINATOR
NAME ______
SIGNATURE ______
TITLE ______ DATE ______

WESTCHESTER COUNTY, NEW YORK
DEPARTMENT OF PUBLIC WORKS AND TRANSPORTATION
DIVISION OF ENGINEERING

INFRASTRUCTURE REHABILITATION PHASE 3
PLAYLAND PARK, RYE, NEW YORK
DRAGON COASTER VENDOR
GENERAL NOTES

CONTRACT NUMBER: 22-523
SHEET NUMBER: DCV-C-01
DWG NO.: 489 of 664
SCALE: -
DATE: 08/23/2022
DPW FILE NUMBER: 1-118-C-1238-0
REV. NO.: 0

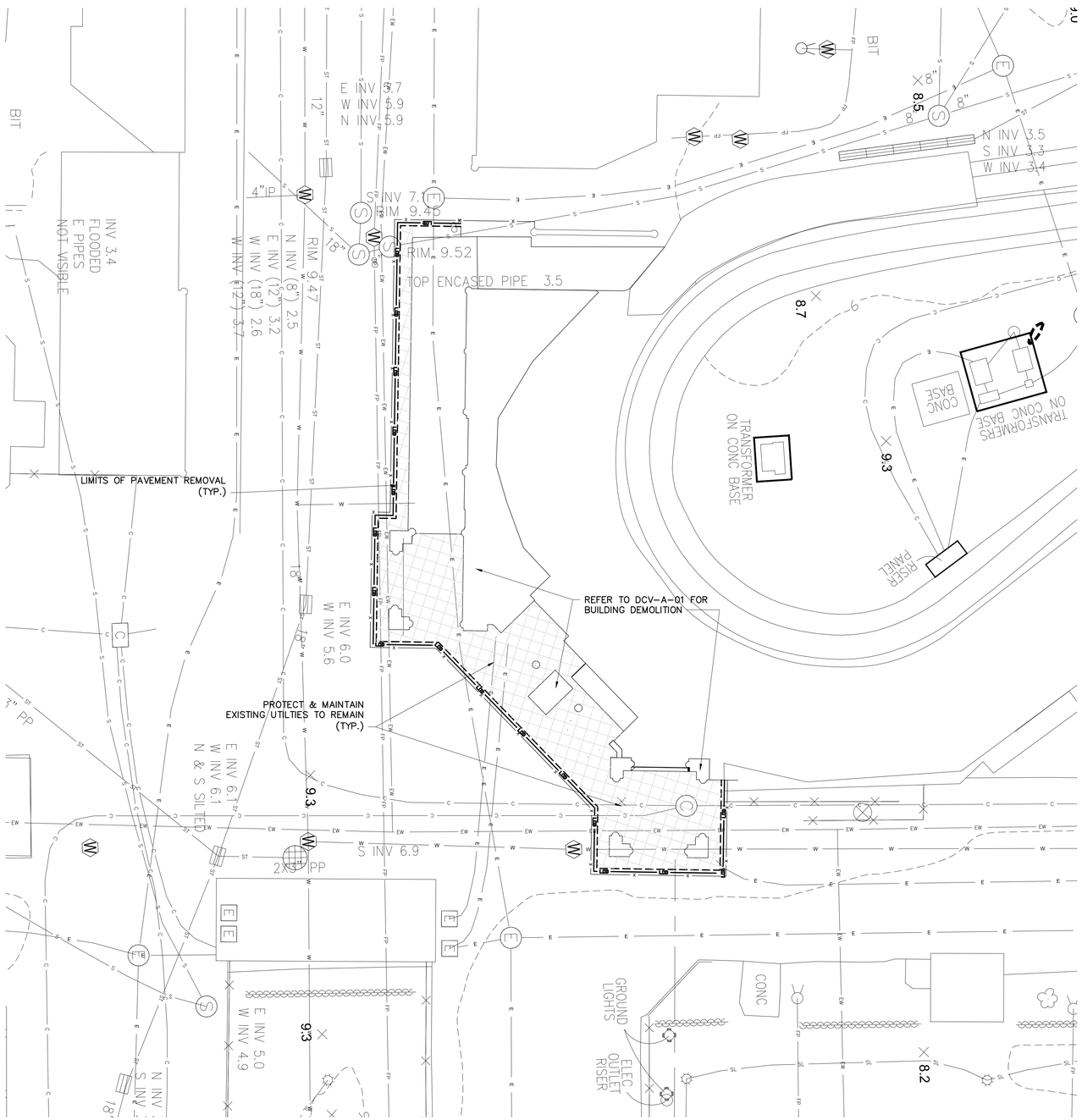

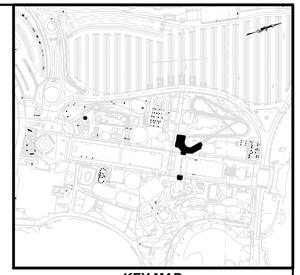

KEY MAP
NOT TO SCALE

EXISTING LEGEND

	POST
	UTILITY POLE
OR	SIGN
	HANDICAP PARKING
	GROUND LIGHT
	LIGHT POLE
	UTILITY POLE WITH LIGHT
	LIGHT POLE (SINGLE LIGHT)
	LIGHT POLE (DOUBLE LIGHT)
	LIGHT POLE (MULTI LIGHT)
	BOAT TIE-OFF CLEAT
OR OR	CATCH BASIN
	TRENCH DRAIN
	MAILBOX
	UNKNOWN MANHOLE
C OR C	COMMUNICATIONS BOX/HAND HOLE
E	ELECTRIC HAND HOLE
EB	ELECTRIC BOX
GM	GAS METER
IB	IRRIGATION BOX
U	UNKNOWN UTILITY BOX/HAND HOLE
C	COMMUNICATION MANHOLE
D OR D	DRAINAGE MANHOLE
E	ELECTRIC MANHOLE
S OR S	SEWER MANHOLE
ST	STORM SEWER MANHOLE
	SEWER CLEANOUT
	HYDRANT
	SIAMESE CONNECTION
V OR V	UNKNOWN VALVE
WV	WATER VALVE
GV	GAS VALVE
WS	WATER SPIGOT OR FOUNTAIN
	MONITORING WELL
	DECIDUOUS BUSH
	EVERGREEN BUSH
	DECIDUOUS TREE
	EVERGREEN TREE
	STUMP
	HEDGE ROW
	TREELINE
	BRUSHLINE
	RETAINING WALL
	GUIDE RAIL
	STONE WALL
	WATERLINE
	FENCE
C	UNDERGROUND COMMUNICATION
P	UNDERGROUND PROPANE
E	UNDERGROUND ELECTRICAL
SL	UNDERGROUND STREET LIGHTING
EW	UNDERGROUND ENVIRONMENTAL WASTEWATER
S	UNDERGROUND SEWER
ST	UNDERGROUND STORM SEWER
W	UNDERGROUND WATER
FP	UNDERGROUND FIRE PROTECTION
10	EXISTING MAJOR CONTOUR
9	EXISTING MINOR CONTOUR

PROPOSED LEGEND:

- **SAW CUTTING ASPHALT CONCRETE**
- LOD — LIMITS OF DISTURBANCE
- LIMITS OF PAVEMENT REMOVAL (MILLING & EXCAVATION)
- **AREA OF ASPHALT PAVEMENT REMOVAL (FULL DEPTH & EXCAVATION)**
- **DRAINAGE STRUCTURE INLET PROTECTION**

NOTES:

1. PAVEMENT REMOVAL, MILLING AND EXCAVATION, MATERIAL SHALL NOT BE STOCKPILED ON SITE.
2. EXISTING GRADES, PIPE LOCATIONS, SIZES, MATERIAL, INVERTS AND OTHER EXISTING CONDITIONS ARE SHOWN ON THE DRAWINGS FROM AVAILABLE AS-BUILT DRAWINGS AND FIELD SURVEY BY OTHERS. IT SHALL BE THE RESPONSIBILITY OF THE CONTRACTOR TO VERIFY ALL EXISTING CONDITIONS.
3. THE CONTRACTOR SHALL TAKE PROPER PRECAUTIONS NOT TO DAMAGE ANY EXISTING SITE CONDITIONS SPECIFICALLY EXCLUDED FROM THE CONTRACT AND WILL BE HELD SOLELY RESPONSIBLE FOR ANY DAMAGE OCCURRING DURING THE COURSE OF THE WORK DURING CONSTRUCTION. THE CONTRACTOR SHALL, AT THEIR OWN EXPENSE, MAKE ALL REPAIRS REQUIRED TO RESTORE ANY DAMAGED AREAS TO ORIGINAL CONDITIONS.

New York 811 — Know what's below. Call before you dig.

0 10 20 30
1"=10' SCALE BAR

6/15/2022 4:10:27 PM

CONSULTANT INFORMATION
LiRo Engineers, Inc.
A LiRo Group Company
Mineola, N.Y. 516-746-2350[T]

CONSULTANT SEAL
STATE OF NEW YORK — KENNETH J. ROURKE — LICENSED PROFESSIONAL ENGINEER — NO. 089134

REVISION NUMBER	DATE	MADE BY	APP'D BY	REVISION

RECORD DRAWING CERTIFICATION
☐ AS BUILT – CHANGES AS NOTED ☐ AS BUILT – NO CHANGES

CONTRACTOR
NAME
SIGNATURE
TITLE DATE

PROJECT COORDINATOR
NAME
SIGNATURE
TITLE DATE

WESTCHESTER COUNTY, NEW YORK
DEPARTMENT OF PUBLIC WORKS AND TRANSPORTATION
DIVISION OF ENGINEERING

INFRASTRUCTURE REHABILITATION PHASE 3
PLAYLAND PARK, RYE, NEW YORK
DRAGON COASTER VENDOR
EXISTING CONDITIONS/DEMOLITION PLAN

CONTRACT NUMBER	22-523
SHEET NUMBER	DCV-C-02
DWG NO.:	490 of 664
SCALE:	1"=10'
DATE:	08/23/2022
DPW FILE NUMBER	1-118-C-1239-0
REV. NO.:	0

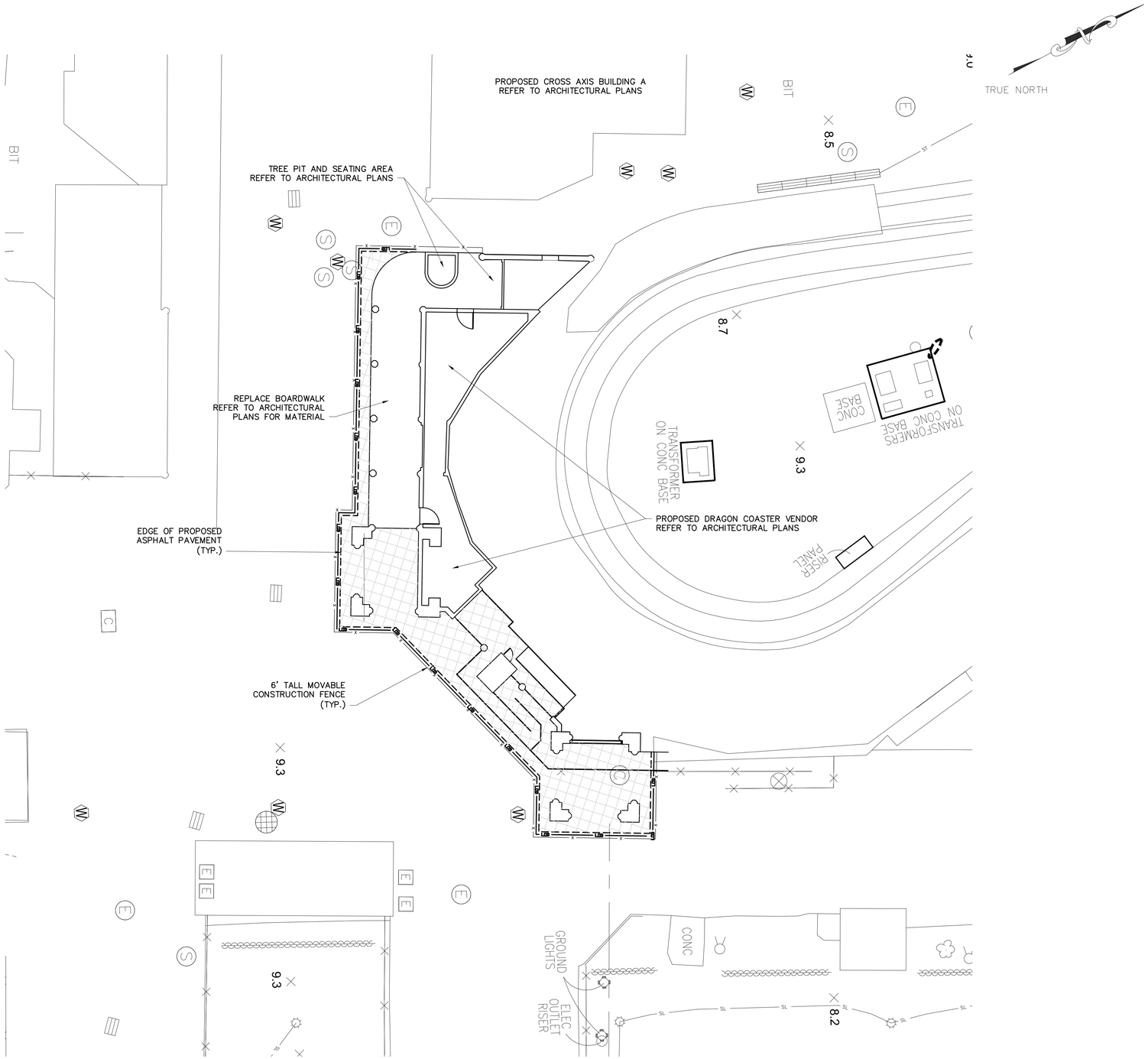

EXISTING LEGEND

- POST
- UTILITY POLE
- SIGN OR
- HANDICAP PARKING
- GROUND LIGHT
- LIGHT POLE
- UTILITY POLE WITH LIGHT
- LIGHT POLE (SINGLE LIGHT)
- LIGHT POLE (DOUBLE LIGHT)
- LIGHT POLE (MULTI LIGHT)
- BOAT TIE-OFF CLEAT
- CATCH BASIN OR OR
- TRENCH DRAIN
- MAILBOX
- UNKNOWN MANHOLE
- COMMUNICATIONS BOX/HAND HOLE OR
- ELECTRIC HAND HOLE
- ELECTRIC BOX
- GAS METER
- IRRIGATION BOX
- UNKNOWN UTILITY BOX/HAND HOLE
- COMMUNICATION MANHOLE
- DRAINAGE MANHOLE OR
- ELECTRIC MANHOLE
- SEWER MANHOLE OR
- STORM SEWER MANHOLE
- SEWER CLEANOUT
- HYDRANT
- SIAMESE CONNECTION
- UNKNOWN VALVE OR
- WATER VALVE
- GAS VALVE
- WATER SPIGOT OR FOUNTAIN
- MONITORING WELL
- DECIDUOUS BUSH
- EVERGREEN BUSH
- DECIDUOUS TREE
- EVERGREEN TREE
- STUMP
- HEDGE ROW
- TREELINE
- BRUSHLINE
- RETAINING WALL
- GUIDE RAIL
- STONE WALL
- FENCE

PROPOSED LEGEND:

- **MOVABLE CONSTRUCTION FENCE**
- **SAW CUTTING ASPHALT CONCRETE**
- LIMITS OF DISTURBANCE
- LIMITS OF PAVEMENT REMOVAL
- **AREA OF FULL DEPTH ASPHALT PAVEMENT**
- **DRAINAGE STRUCTURE INLET PROTECTION**

0 10 20 30
1"=10' SCALE BAR

6/15/2022 4:10:27 PM

CONSULTANT INFORMATION

LiRo Engineers, Inc.
A LiRo Group Company
Mineola, N.Y. 516-746-2350[T]

CONSULTANT SEAL

STATE OF NEW YORK · KENNETH J. HOLDEN · LICENSED PROFESSIONAL ENGINEER · 059134

REVISION NUMBER	DATE	MADE BY	APP'D BY	REVISION

RECORD DRAWING CERTIFICATION

☐ AS BUILT – CHANGES AS NOTED ☐ AS BUILT – NO CHANGES

CONTRACTOR
NAME
SIGNATURE
TITLE DATE

PROJECT COORDINATOR
NAME
SIGNATURE
TITLE DATE

WESTCHESTER COUNTY, NEW YORK
DEPARTMENT OF PUBLIC WORKS AND TRANSPORTATION
DIVISION OF ENGINEERING

INFRASTRUCTURE REHABILITATION PHASE 3
PLAYLAND PARK, RYE, NEW YORK
DRAGON COASTER VENDOR
SITE CONSTRUCTION PLAN

CONTRACT NUMBER	22-523
SHEET NUMBER	DCV-C-03
DWG NO.:	491 of 664
SCALE:	1"=10'
DATE:	08/23/2022
DPW FILE NUMBER	1-118-C-1240-0
REV. NO.	0

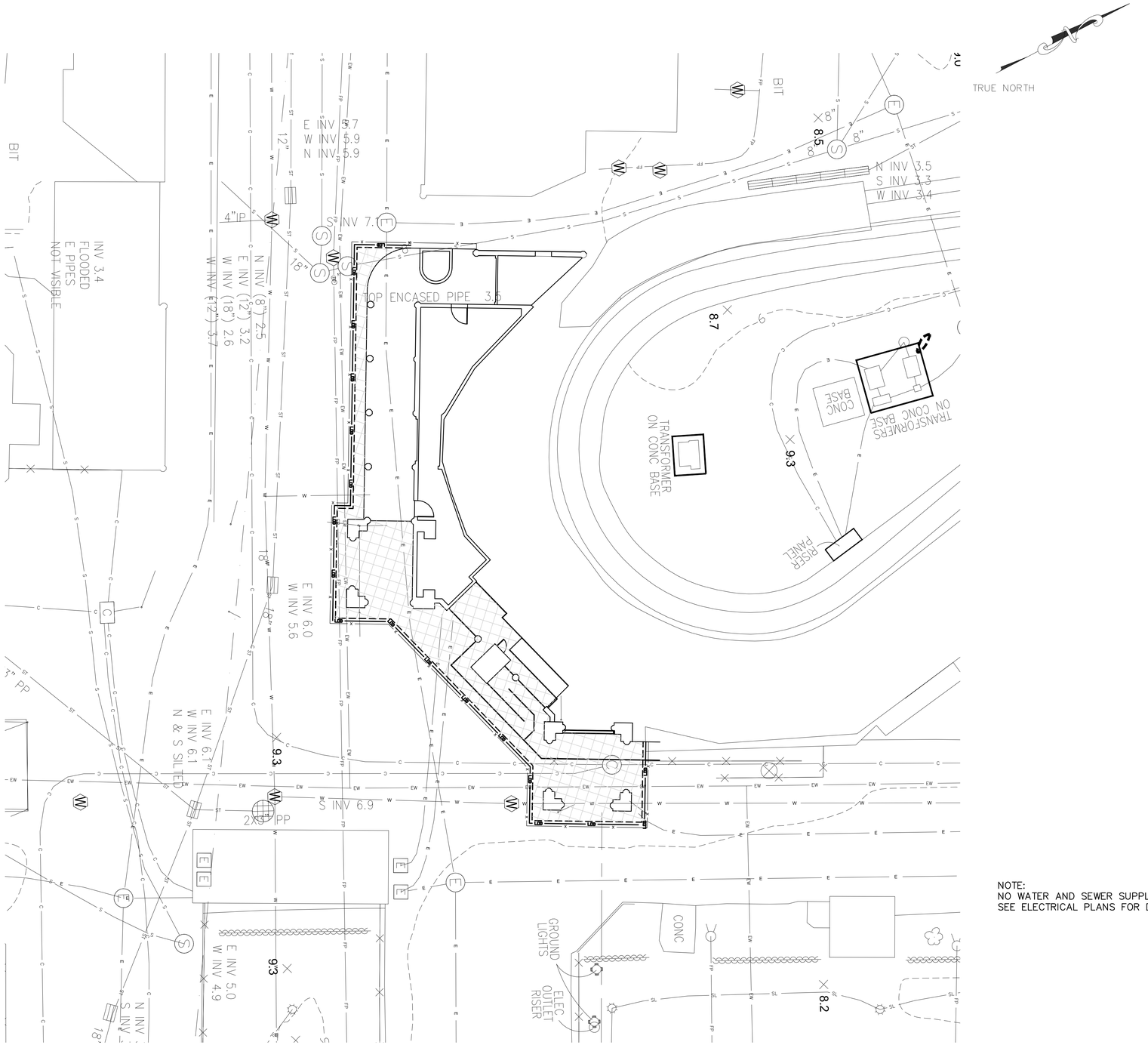

EXISTING LEGEND

- POST
- UTILITY POLE
- SIGN
- HANDICAP PARKING
- GROUND LIGHT
- LIGHT POLE
- UTILITY POLE WITH LIGHT
- LIGHT POLE (SINGLE LIGHT)
- LIGHT POLE (DOUBLE LIGHT)
- LIGHT POLE (MULTI LIGHT)
- BOAT TIE-OFF CLEAT
- CATCH BASIN
- TRENCH DRAIN
- MAILBOX
- UNKNOWN MANHOLE
- COMMUNICATIONS BOX/HAND HOLE
- ELECTRIC HAND HOLE
- ELECTRIC BOX
- GAS METER
- IRRIGATION BOX
- UNKNOWN UTILITY BOX/HAND HOLE
- COMMUNICATION MANHOLE
- DRAINAGE MANHOLE
- ELECTRIC MANHOLE
- SEWER MANHOLE
- STORM SEWER MANHOLE
- SEWER CLEANOUT
- HYDRANT
- SIAMESE CONNECTION
- UNKNOWN VALVE
- WATER VALVE
- GAS VALVE
- WATER SPIGOT OR FOUNTAIN
- MONITORING WELL
- DECIDUOUS BUSH
- EVERGREEN BUSH
- DECIDUOUS TREE
- EVERGREEN TREE
- STUMP
- HEDGE ROW
- TREELINE
- BRUSHLINE
- RETAINING WALL
- GUIDE RAIL
- STONE WALL
- WATERLINE
- FENCE
- UNDERGROUND COMMUNICATION
- UNDERGROUND PROPANE
- UNDERGROUND ELECTRICAL
- UNDERGROUND STREET LIGHTING
- UNDERGROUND ENVIRONMENTAL WASTEWATER
- UNDERGROUND SEWER
- UNDERGROUND STORM SEWER
- UNDERGROUND WATER
- UNDERGROUND FIRE PROTECTION

PROPOSED LEGEND:

- SAW CUTTING ASPHALT CONCRETE
- LIMITS OF DISTURBANCE
- LIMITS OF PAVEMENT REMOVAL (MILLING & EXCAVATION)
- PROPOSED WATER LINE
- PROPOSED CATCH BASIN
- PROPOSED STORM PIPE
- PROPOSED SANITARY MANHOLE
- PROPOSED SANITARY PIPE
- PROPOSED UNDERGROUND ELECTRIC

NOTE:
NO WATER AND SEWER SUPPLY NEEDED FOR THIS BUILDING
SEE ELECTRICAL PLANS FOR DETAILS

0 10 20 30
1"=10' SCALE BAR

6/15/2022 4:10:27 PM

CONSULTANT INFORMATION
LiRo Engineers, Inc.
A LiRo Group Company
Mineola, N.Y. 516-746-2350[T]

CONSULTANT SEAL
STATE OF NEW YORK
KENNETH J. HOLLISTON
No. 059134
LICENSED PROFESSIONAL ENGINEER

REVISION NUMBER	DATE	MADE BY	APP'D BY	REVISION

RECORD DRAWING CERTIFICATION
AS BUILT – CHANGES AS NOTED
AS BUILT – NO CHANGES

CONTRACTOR
NAME
SIGNATURE
TITLE DATE

PROJECT COORDINATOR
NAME
SIGNATURE
TITLE DATE

WESTCHESTER COUNTY, NEW YORK
DEPARTMENT OF PUBLIC WORKS AND TRANSPORTATION
DIVISION OF ENGINEERING

INFRASTRUCTURE REHABILITATION PHASE 3
PLAYLAND PARK, RYE, NEW YORK
DRAGON COASTER VENDOR
UTILITY CONSTRUCTION PLAN

CONTRACT NUMBER: 22-523
SHEET NUMBER: DCV-C-04
DWG NO.: 492 of 664
SCALE: 1"=10'
DATE: 08/23/2022
DPW FILE NUMBER: 1-118-C-1241-0
REV. NO.: 0

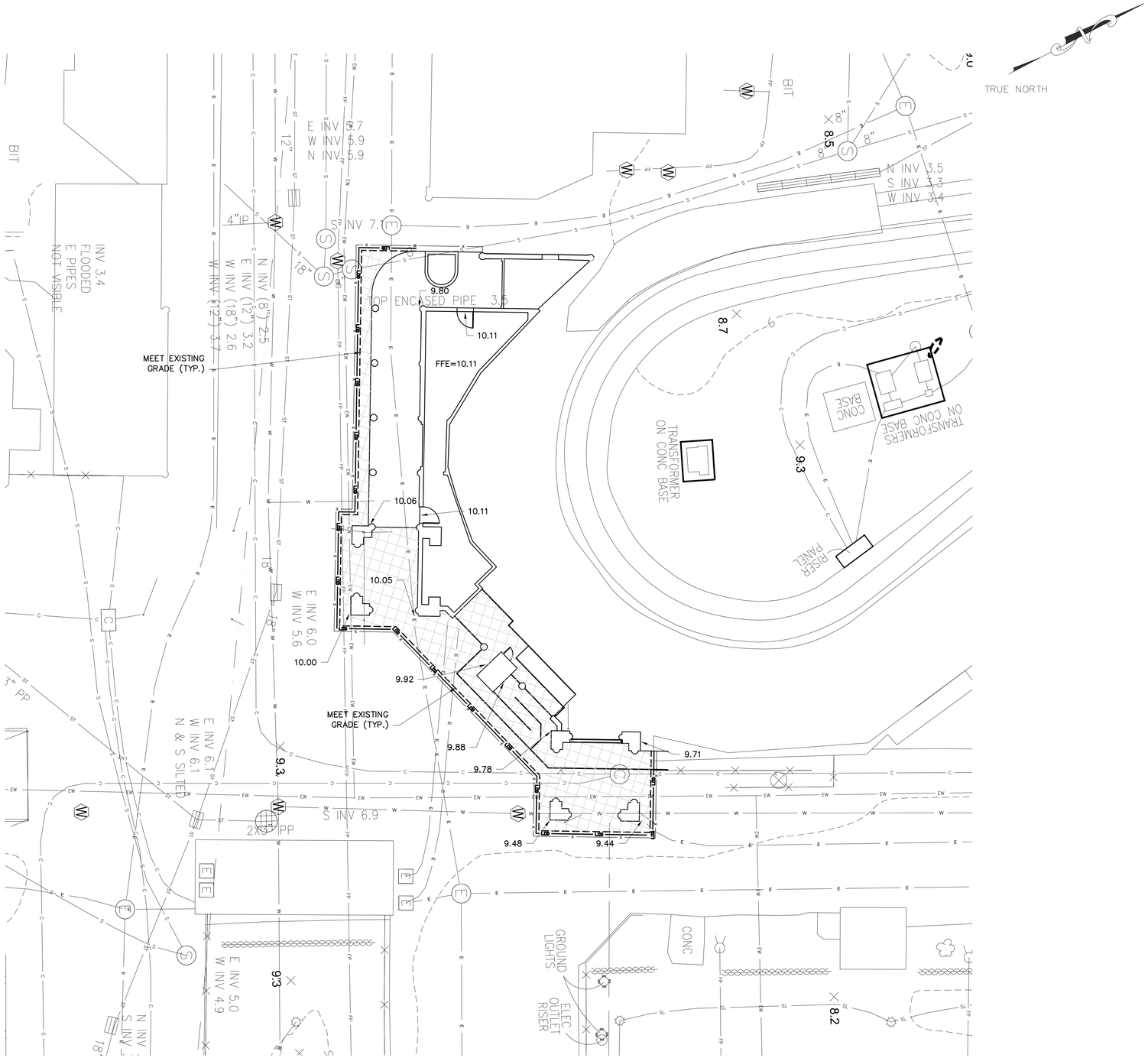

EXISTING LEGEND

- POST
- UTILITY POLE
- SIGN
- HANDICAP PARKING
- GROUND LIGHT
- LIGHT POLE
- UTILITY POLE WITH LIGHT
- LIGHT POLE (SINGLE LIGHT)
- LIGHT POLE (DOUBLE LIGHT)
- LIGHT POLE (MULTI LIGHT)
- BOAT TIE-OFF CLEAT
- CATCH BASIN
- TRENCH DRAIN
- MAILBOX
- UNKNOWN MANHOLE
- COMMUNICATIONS BOX/HAND HOLE
- ELECTRIC HAND HOLE
- ELECTRIC BOX
- GAS METER
- IRRIGATION BOX
- UNKNOWN UTILITY BOX/HAND HOLE
- COMMUNICATION MANHOLE
- DRAINAGE MANHOLE
- ELECTRIC MANHOLE
- SEWER MANHOLE
- STORM SEWER MANHOLE
- SEWER CLEANOUT
- HYDRANT
- SIAMESE CONNECTION
- UNKNOWN VALVE
- WATER VALVE
- GAS VALVE
- WATER SPIGOT OR FOUNTAIN
- MONITORING WELL
- DECIDUOUS BUSH
- EVERGREEN BUSH
- DECIDUOUS TREE
- EVERGREEN TREE
- STUMP
- HEDGE ROW
- TREELINE
- BRUSHLINE
- RETAINING WALL
- GUIDE RAIL
- STONE WALL
- WATERLINE
- FENCE
- UNDERGROUND COMMUNICATION
- UNDERGROUND PROPANE
- UNDERGROUND ELECTRICAL
- UNDERGROUND STREET LIGHTING
- UNDERGROUND ENVIROMENTAL WASTEWATER
- UNDERGROUND SEWER
- UNDERGROUND STORM SEWER
- UNDERGROUND WATER
- UNDERGROUND FIRE PROTECTION
- X 415.50 — EXISTING SPOT ELEVATION
- TG=415.50 — EXISTING TOP OF GRATE ELEVATION

PROPOSED LEGEND:

- LOD — LIMITS OF DISTURBANCE
- 485 — PROPOSED MAJOR CONTOUR
- 484 — PROPOSED MINOR CONTOUR
- 9.66 — PROPOSED SPOT ELEVATION
- PROPOSED INLET PROTECTION

0 10 20 30
1'=10' SCALE BAR

6/15/2022 4:10:27 PM

CONSULTANT INFORMATION

LiRo Engineers, Inc.
A LiRo Group Company
Mineola, N.Y. 516-746-2350[T]

CONSULTANT SEAL

STATE OF NEW YORK · KENNETH J. HOUSTON · LICENSE NO. 059134 · PROFESSIONAL ENGINEER

REVISION NUMBER	DATE	MADE BY	APP'D BY	REVISION

RECORD DRAWING CERTIFICATION

☐ AS BUILT – CHANGES AS NOTED ☐ AS BUILT – NO CHANGES

CONTRACTOR: NAME / SIGNATURE / TITLE / DATE

PROJECT COORDINATOR: NAME / SIGNATURE / TITLE / DATE

WESTCHESTER COUNTY, NEW YORK
DEPARTMENT OF PUBLIC WORKS AND TRANSPORTATION
DIVISION OF ENGINEERING

INFRASTRUCTURE REHABILITATION PHASE 3
PLAYLAND PARK, RYE, NEW YORK
DRAGON COASTER VENDOR
GRADING AND EROSION CONTROL PLAN

CONTRACT NUMBER	22-523
SHEET NUMBER	DCV-C-05
DWG NO.	493 of 664
SCALE:	1"=10'
DATE:	08/23/2022
DPW FILE NUMBER	1-118-C-1242-0
REV. NO.	0

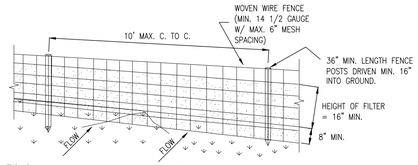

PERSPECTIVE VIEW

CONSTRUCTION SPECIFICATIONS

1. WOVEN WIRE FENCE TO BE FASTENED SECURELY TO FENCE POSTS WITH WIRE TIES OR STAPLES. POSTS SHALL BE STEEL EITHER "T" OR "U" TYPE OR HARDWOOD.
2. FILTER CLOTH TO BE TO BE FASTENED SECURELY TO WOVEN WIRE FENCE WITH TIES SPACED EVERY 24" AT TOP AND MID SECTION. FENCE SHALL BE WOVEN WIRE, 12 1/2 GAUGE, 6" MAXIMUM MESH OPENING.
3. WHEN TWO SECTIONS OF FILTER CLOTH ADJOIN EACH OTHER THEY SHALL BE OVER-LAPPED BY SIX INCHES AND FOLDED. FILTER CLOTH SHALL BE EITHER FILTER X, MIRAFI 100X, STABILINKA T140N, OR APPROVED EQUIVALENT.
4. PREFABRICATED UNITS SHALL BE GEOFAB, ENVIROFENCE, OR APPROVED EQUIVALENT.
5. MAINTENANCE SHALL BE PERFORMED AS NEEDED AND MATERIAL REMOVED WHEN "BULGES" DEVELOP IN THE SILT FENCE.

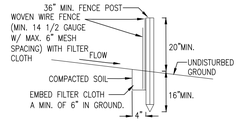

SECTION VIEW

SILT FENCE INSTALLATION DETAIL
ITEM NO. 209.13

N.T.S.

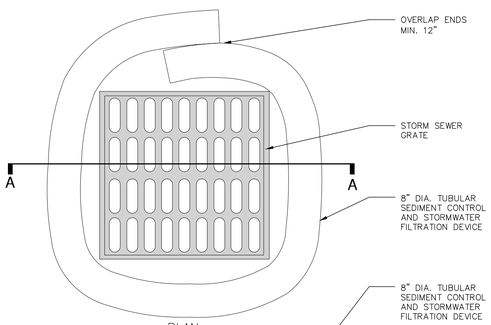

PLAN

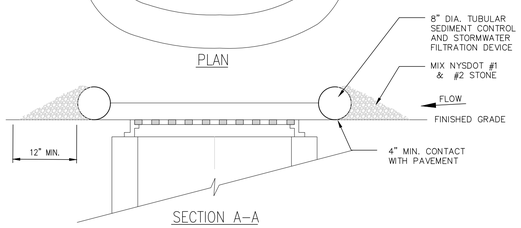

SECTION A–A

NOTES:

1. TUBULAR SEDIMENT CONTROL AND STORMWATER FILTRATION DEVICES SHALL BE FILTREXX FILTERSOXX, OR EQUIVALENT.
2. REPLACE AND DISPOSE OF PER MANUFACTURERS SPECIFICATIONS.
3. THIS PRACTICE INCLUDES SANDBAGS, COMPOST FILTER SOCKS, GEO-TUBES FILLED WITH BALLAST, AND MANUFACTURED SURFACE BARRIERS. PEA GRAVEL CAN ALSO BE USED IN CONJUNCTION WITH THESE PRACTICES TO IMPROVE PERFORMANCE. WHEN INLET IS NOT AT A LOW POINT, AND IS OFF-SET FROM THE PAVEMENT OR GUTTER LINE, PROTECTION SHOULD BE SELECTED AND INSTALLED SO THAT FLOWS ARE NOT DIVERTED AROUND INLET.
4. THE DRAINAGE AREA SHOULD BE LIMITED TO 1 ACRE AT THE DRAINAGE INLET. ALL PRACTICES WILL BE PLACED AT THE INLET PERIMETER OR BEYOND TO MAXIMIZE THE FLOW CAPACITY OF THE INLET. PRACTICES SHALL BE WEIGHTED, BRACED, TIED, OR OTHERWISE ANCHORED TO PREVENT MOVEMENT OR SHIFTING OF LOCATION ON PAVED SURFACES. TRAFFIC SAFETY SHALL BE INTEGRATED WITH THE USE OF THIS PRACTICE. ALL PRACTICES SHOULD BE MARKED WITH TRAFFIC SAFETY CONES AS APPROPRIATE. STRUCTURE HEIGHT SHALL NOT CAUSE FLOODING OR BY-PASS FLOW THAT WOULD CAUSE ADDITIONAL EROSION. THE STRUCTURE SHOULD BE INSPECTED AFTER EVERY STORM EVENT. ANY SEDIMENT SHOULD BE REMOVED AND DISPOSED OF ON THE SITE. ANY BROKEN O DAMAGED COMPONENTS SHOULD BE REPLACED. CHECK ALL MATERIALS FOR PROPER ANCHORING AND SECURE AS NECESSARY.
5. IF USING THE COMPOST FILTER SOCK, THE COMPOST INFILL SHALL BE WELL DECOMPOSED (MATURED AT LEAST 3 MONTHS), WEED-FREE, ORGANIC MATTER. IT SHALL BE AEROBICALLY COMPOSTED, POSSESS NO OBJECTIONABLE ODORS, AND CONTAIN LESS THAN 1%, BY DRY WEIGHT, OF MANMADE FOREIGN MATTER. WHEN USING COMPOST FILTER SOCKS ADJACENT TO SURFACE WATER, THE COMPOST SHOULD HAVE LOW NUTRIENT VALUE.

DRAINAGE STRUCTURE INLET PROTECTION, TEMPORARY

N.T.S.

STORM WATER POLLUTION PREVENTION PLAN NOTES:

THE CONTRACTOR SHALL BE RESPONSIBLE FOR IMPLEMENTATION AND ADHERENCE TO THE STORM WATER POLLUTION PREVENTION PLAN (SWPPP) FROM THE COMMENCEMENT OF THE PROJECT TO SITE STABILIZATION.

POLLUTION PREVENTION MEASURES:

THE CONTRACTOR SHALL TAKE THE FOLLOWING STEPS TO PREVENT LITTER, CHEMICALS AND DEBRIS FROM ENTERING STORM DRAINS AND DISCHARGES.

1. PROPERLY INSTALL AND MAINTAIN EROSION AND SEDIMENT CONTROL DEVICES AS OUTLINED IN THE PROJECT DOCUMENTS AND IN COMPLIANCE WITH THE LATEST EDITION OF THE NEW YORK STATE STANDARDS AND SPECIFICATIONS FOR EROSION AND SEDIMENT CONTROL.
2. PROPERLY CONTAIN AND DISPOSE OF ALL MATERIALS USED ON SITE.
3. CLEAN UP SPILLS IMMEDIATELY TO MINIMIZE SAFETY HAZARD AND PREVENT SPREADING.
4. ROUTINELY INSPECT AND CLEAN OUT CATCH BASINS AND STORM LINES.
5. LABEL ALL STORM INLETS AS "NO DUMPING".
6. CONTROL LITTER BY SWEEPING AND PICKING IT UP DAILY.
7. DO NOT STORE FUEL AND WASTE ON-SITE OR USE SECONDARY CONTAINMENT MEASURES.
8. IF PRACTICAL, USE ALTERNATIVE CLEANING METHODS SUCH AS WIPING DOWN OF VEHICLES AND EQUIPMENT INSTEAD OF HOSING.
9. REMOVE ALL EXCAVATED UNSUITABLE MATERIAL FROM THE SITE AS SOON AS PRACTICABLE.
10. PRACTICE GOOD HOUSEKEEPING AND EDUCATE EMPLOYEES ON POLLUTION PREVENTION MEASURES.

ON SITE MATERIAL STORAGE:

THE CONTRACTOR MAY HAVE THE FOLLOWING MATERIALS STORED ON-SITE DURING PROJECT CONSTRUCTION. THE LIST MAY NOT BE INCLUSIVE AND WILL VARY DURING THE DIFFERENT STAGES OF THE PROJECT.

1. PRE-CAST CONCRETE MANHOLES, CATCH BASINS AND OUTLET CONTROL STRUCTURE.
2. PVC PIPING AND APPURTENANCES.
3. STOCKPILED SOILS – TOP SOIL, SUB BASE MATERIAL, CUSHION MATERIAL, SELECT GRANULAR MATERIAL, GRAVEL AND CRUSHED STONE.
4. EROSION AND SEDIMENT CONTROL MATERIAL: SILT FENCE, RIP RAP AND SEED.
5. PAVING MATERIALS AND EQUIPMENT
6. SECURITY FENCE AND APPURTENANCES
7. EQUIPMENT REQUIRED TO PERFORM THE WORK.

THE CONTRACTOR SHALL UTILIZE THE POLLUTION PREVENTION MEASURES OUTLINED ABOVE TO PREVENT POLLUTANTS FROM STORED MATERIALS FROM REACHING THE STORM WATER CONVEYANCE DEVICES AND DISCHARGES.

EROSION AND SEDIMENT CONTROL PRACTICES:

TEMPORARY STORM INLET PROTECTION:
STORM INLET PROTECTION INTERCEPTS SEDIMENT LADEN RUNOFF AND TRAPS SEDIMENT TO PROTECT THE DRAINAGE SYSTEM. STORM INLET PROTECTION SHALL BE PROVIDED AT EACH NEW CATCH BASIN AS IT IS INSTALLED AND AROUND EXISTING CATCH BASINS AS SHOWN.

TEMPORARY SEDIMENT CONTROL – SILT FENCE
SILT FENCE REDUCES RUNOFF VELOCITY AND CAUSES SETTLING OF SEDIMENT. INSTALL SILT FENCE PRIOR TO BEGINNING ANY EXCAVATION OR EARTHWORK ACTIVITIES WHERE SHOWN ON THE DRAWINGS. INSTALL AROUND ANY STOCKPILED SOIL MATERIALS.

TEMPORARY STABILIZED CONSTRUCTION ENTRANCE
THE STABILIZED CONSTRUCTION ENTRANCE IS USED TO REDUCE OR ELIMINATE TRACKING OF SEDIMENT ONTO STREETS AND/OR PUBLIC RIGHT-OF-WAY.

TEMPORARY SEEDING
TEMPORARY SEEDING REDUCES EROSION AND SEDIMENT LOSS FROM THE BARE GROUND. PROVIDE TEMPORARY SEEDING TO PROVIDE TEMPORARY COVER FOR DISTURBED EARTH OR SOIL STOCKPILES HELD FOR LONGER THAN SEVEN (7) DAYS. TEMPORARY SHUT DOWN OF CONSTRUCTION OR WAITING FOR OPTIMAL PLANTING TIME. IN SPRING, SUMMER OR EARLY FALL APPLY RYE GRASS AT A RATE OF 1 LB/ 1,000 SQ. FT. IN LATE FALL APPLY CERTIFIED AROOSTOOK RYE AT 2.5 LBS / 1,000 SQ. FT. OR WOOD FIBER HYDROMULCH AT MANUFACTURE'S RECOMMENDED RATE. HAY OR STRAW SHALL BE ANCHORED.

DUST CONTROL
TEMPORARY AND PERMANENT STABILIZATION MEASURES SUCH AS SEEDING, MULCHING AND INSTALLING EROSION AND SEDIMENT CONTROL BLANKETS WILL PREVENT DUST FROM BLOWING OFF SITE. INSTALL THESE MEASURES AS SOON AS FINAL GRADES ARE REACHED AND ON SOIL STOCKPILES AND DISTURBED AREAS TO BE LEFT FOR LONGER THAN SEVEN (7) DAYS.

PHASING OF EROSION AND SEDIMENT CONTROL PRACTICES:

1. PRIOR TO COMMENCING ANY CONSTRUCTION ACTIVITIES ON THE SITE, THE CONTRACTOR SHALL MEET WITH THE OWNERS REPRESENTATIVE AND DESIGNER TO DISCUSS THE STORM WATER POLLUTION PREVENTION PLAN.
2. PRIOR TO COMMENCING ANY EXCAVATION PROCEDURES, INSTALL SILT FENCE AS SHOWN ON THE PLANS.
3. INSTALL STABILIZED CONSTRUCTION ENTRANCE.
4. AS THE NEW CATCH BASINS ARE INSTALLED, PROVIDE TEMPORARY INLET PROTECTION.
5. AS SOIL MATERIAL IS EXCAVATED OR STOCKPILED, PROVIDE A SILT FENCE ENCLOSURE AROUND THE PILE. IF THE PILE IS TO REMAIN FOR LONGER THAN SEVEN (7) DAYS, TEMPORARILY SEED THE PILE.
6. DO NOT LEAVE DISTURBED AREAS NOT TO BE COVERED BY IMPERVIOUS SURFACE BARE FOR LONGER THAN SEVEN (7) DAYS, ROUGH GRADE THE AREAS AND TEMPORARILY SEED.
7. AFTER FINAL GRADING OF VEGETATED AREAS, PROVIDE PERMANENT SEEDING.
8. UPON FINAL STABILIZATION OF THE SITE, REMOVE ALL TEMPORARY EROSION AND SEDIMENT CONTROL DEVICES. INSPECT ALL PERMANENT EROSION AND SEDIMENT CONTROL AND STORM WATER MANAGEMENT DEVICES. REPLACE ANY FAILING OR UNSATISFACTORY MEASURES. CLEAN ALL STORMWATER CATCH BASINS AND PIPING.

EROSION AND SEDIMENT CONTROL AND STORMWATER CONTROL DEVICE MAINTENANCE:

CONSTRUCTION DURATION
ALL EROSION AND SEDIMENT CONTROL DEVICES SHALL BE INSPECTED WEEKLY.

1. SILT FENCE SHALL BE REPLACED WHEN TORN, IS BULGING OR NO LONGER MEETING THE INSTALLATION DETAILS.
2. THE STABILIZED CONSTRUCTION ENTRANCE SHALL BE MAINTAINED IN A CONDITION TO PREVENT TRACKING OF SEDIMENT ON TO ROADS AND PUBLIC RIGHTS-OF-WAY. INSPECT TOP DRESSING AND PROVIDE ADDITIONAL AGGREGATE AS NECESSARY.
3. DRAINAGE STRUCTURES AND PIPING SHALL BE CHECKED FOR CLOGGING AND SEDIMENT ACCUMULATION AND CLEANED IF REQUIRED.

PROJECT COMPLETION
AT THE PROJECT COMPLETION AND PRIOR TO PROJECT CLOSE OUT, THE CONTRACTOR SHALL INSPECT ALL PERMANENT EROSION AND CONTROL AND STORMWATER MANAGEMENT PRACTICES.

1. ACCEPTABLE VEGETATION ESTABLISHMENT IN ACCORDANCE WITH SPECIFICATIONS.
2. DRAINAGE STRUCTURES AND PIPING SHALL BE CHECKED FOR CLOGGING AND SEDIMENT ACCUMULATION AND CLEANED IF REQUIRED.

MAINTENANCE OF PERMANENT STORMWATER MANAGEMENT PRACTICES

1. DRAINAGE STRUCTURES AND PIPING SHALL BE CHECKED FOR CLOGGING AND SEDIMENT ACCUMULATION AND CLEANED IF REQUIRED.

SITE ASSESSMENT AND INSPECTIONS

COMPLY WILL ALL CONDITIONS INCLUDED IN THE SPDES PERMIT, PART III.D.3 THROUGH PART III.D.5. THE REQUIREMENTS IN THESE SUBSECTIONS OF THE SPDES PERMIT TAKE PRECEDENCE OVER NOTES ON THIS DRAWING AND ON THE EROSION AND SEDIMENT CONTROL PLAN WHERE CONTRADICTIONS BETWEEN THESE DRAWINGS AND THE SPDES PERMIT MAY ARISE.

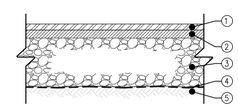

1. 2" TOP COURSE, 12.5 F2 TOP COURSE HMA, 80 SERIES COMPACTION NYSDOT ITEM 402.128204
2. 2" BINDER COURSE, 25 F9 BINDER COURSE HMA, 80 SERIES COMPACTION NYSDOT ITEM 402.258904
3. 4" SUBBASE COURSE, SUBBASE COURSE, TYPE 2 NYSDOT ITEM 304.12
4. GEOTEXTILE SEPARATION NYSDOT ITEM 207.21
5. COMPACTED SUBGRADE

NOTES:

1. COMPACT SUBGRADE TO A MODIFIED PROCTOR DENSITY OF 95%
2. SUBBASE COURSE SHALL HAVE NO MORE THAN (7%) SEVEN PERCENT BY WEIGHT FINER THAN NO. 200 SIEVE.
3. IMPRINTED PATTERN SHOWN IS FOR GRAPHICAL REPRESENTATIONS ONLY. ALL IMPRINTING/PATTERNING LAYOUTS AND POSITIONING SHALL BE APPROVED BY THE PROJECT ENGINEER PRIOR TO ACTUAL CONSTRUCTION.

ASPHALT PAVEMENT SECTION

N.T.S.

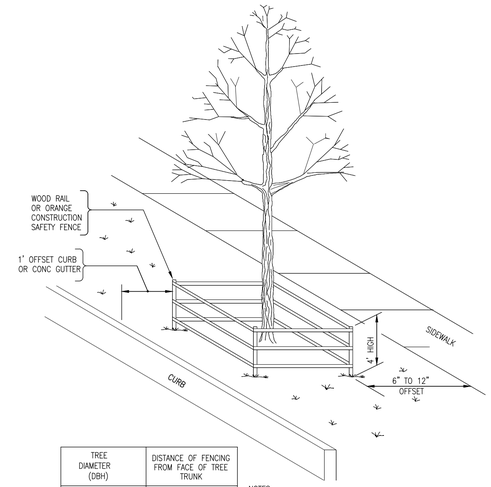

TREE DIAMETER (DBH)	DISTANCE OF FENCING FROM FACE OF TREE TRUNK
LESS THAN 10"	6'
10" – 14"	10'
15" – 19"	12'
20" OR MORE	15'

NOTES:

1. ALL TREES WITHIN THE PROJECT LIMITS THAT ARE TO REMAIN, ARE TO RECEIVE THIS TREATMENT.
2. DO NOT LEAVE CONSTRUCTION EQUIPMENT RUNNING (IDLING) UNDER TREE CANOPY.

TREE PROTECTION SYSTEM 5'–0"
ITEM NO. 611.21050009

N.T.S.

6/15/2022 4:10:27 PM

CONSULTANT INFORMATION

LiRo Engineers, Inc.
A LiRo Group Company
Mineola, N.Y. 516-746-2350[T]

CONSULTANT SEAL

STATE OF NEW YORK · KENNETH J. HOUSTON · LICENSED PROFESSIONAL ENGINEER · No. 059134

REVISION NUMBER	DATE	MADE BY	APP'D BY	REVISION

RECORD DRAWING CERTIFICATION

☐ AS BUILT – CHANGES AS NOTED ☐ AS BUILT – NO CHANGES

CONTRACTOR
NAME
SIGNATURE
TITLE DATE

PROJECT COORDINATOR
NAME
SIGNATURE
TITLE DATE

WESTCHESTER COUNTY, NEW YORK
DEPARTMENT OF PUBLIC WORKS AND TRANSPORTATION
DIVISION OF ENGINEERING

INFRASTRUCTURE REHABILITATION PHASE 3
PLAYLAND PARK, RYE, NEW YORK
DRAGON COASTER VENDOR
CIVIL DETAILS 1

CONTRACT NUMBER 22-523
SHEET NUMBER DCV-C-06
DWG NO.: 494 of 664
SCALE: 1"=10'
DATE: 08/23/2022
DPW FILE NUMBER 1-118-C-1243-0
REV. NO.: 0

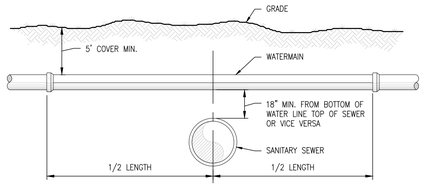

NOTE:

ALL EXCAVATIONS UNDER ANY UTILITY WILL BE BACKFILLED WITH NO. 1 CRUSHED STONE TO A POINT AT LEAST 6" OVER THE TOP OF THE UTILITY.

TYPICAL WATER LINE – SEWER LINE CROSSING

N.T.S.

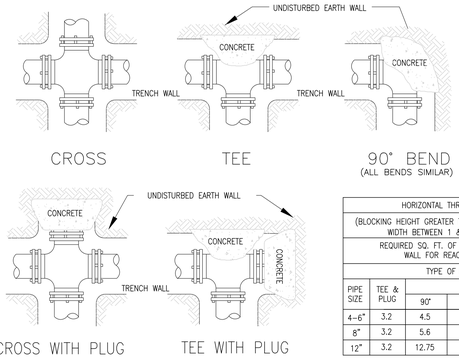

HORIZONTAL THRUST BLOCKING					
(BLOCKING HEIGHT GREATER THAN PIPE O.D.) (BLOCKING WIDTH BETWEEN 1 & 2 TIMES HEIGHT)					
REQUIRED SQ. FT. OF UNDISTURBED EARTH WALL FOR REACTION BACKING					
TYPE OF FITTINGS					
PIPE SIZE	TEE & PLUG	BENDS			
		90°	45°	22 1/2°	11 1/4°
4–6"	3.2	4.5	2.5	1.3	0.7
8"	3.2	5.6	2.5	1.3	0.7
12"	3.2	12.75	3.7	1.3	0.7

HORIZONTAL THRUST BLOCKING

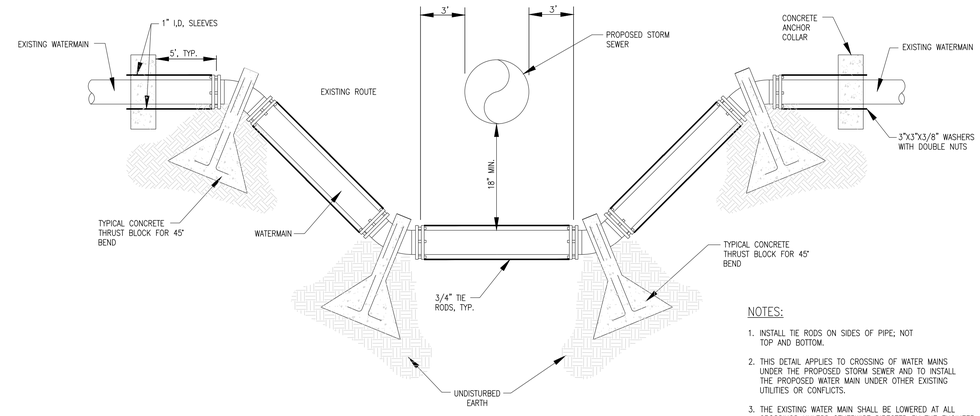

NOTES:

1. INSTALL TIE RODS ON SIDES OF PIPE; NOT TOP AND BOTTOM.
2. THIS DETAIL APPLIES TO CROSSING OF WATER MAINS UNDER THE PROPOSED STORM SEWER AND TO INSTALL THE PROPOSED WATER MAIN UNDER OTHER EXISTING UTILITIES OR CONFLICTS.
3. THE EXISTING WATER MAIN SHALL BE LOWERED AT ALL CROSSINGS UNLESS OTHERWISE DIRECTED BY THE ENGINEER IN THE FIELD.

TYPICAL WATERMAIN CROSSING DETAIL

N.T.S.

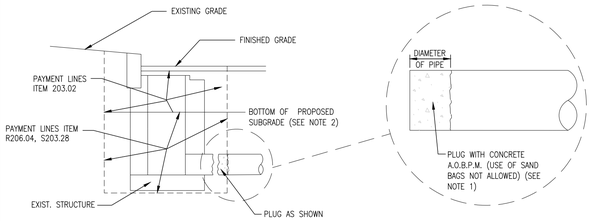

NOTES:

1. THE COST OF PLUGGING EXISTING LATERALS TO BE ABANDONED SHALL BE INCLUDED IN THE PRICE BID FOR TRENCH EXCAVATION IN THE CONTRACT. NO SEPARATE PAYMENT WILL BE MADE FOR THIS WORK.
2. UPPER PAY LIMITS FOR TRENCH AND CULVERT EXCAVATION SHALL BE TOP OF EXISTING SURFACE AT TIME OF EXCAVATION.

DETAILS FOR PLUGGING ABANDONED DRAINAGE STRUCTURES AND PIPES

N.T.S.

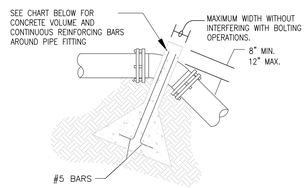

UPWARD THRUST BLOCKING

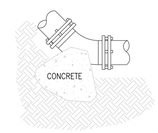

DOWNWARD THRUST BLOCKING

(SEE HORIZONTAL BLOCKING DETAIL)
(ALL BENDS SIMILAR)

UPWARD THRUST BLOCKING												
(REQUIRED REINFORCING BARS & CUBIC YARDS OF P.C. CONCRETE												
PIPE SIZE	90° BEND			45° BEND			22 1/2° BEND			11 1/4° BEND		
	CONC. C.Y.	REINF		CONC. C.Y.	REINF		CONC. C.Y.	REINF		CONC. C.Y.	REINF	
		QTY.	SIZE		QTY.	SIZE		QTY.	SIZE		QTY.	SIZE
4–6"	2.6	4	#5	2.1	4	#5	1.1	4	#5	0.6	4	#5
8"	2.9	4	#5	2.1	4	#5	1.1	4	#5	0.6	4	#5
12"	6.6	4	#5	4.7	4	#5	2.5	4	#5	1.3	4	#5

VERTICAL THRUST BLOCKING

NOTES:

1. DO NOT COVER BELLS OR FLANGES WITH CONCRETE
2. WRAP ALL FITTINGS WITH VISQUEEN.
3. BACK ALL TEES ACCORDING TO SIZE OF BRANCH.
4. BACKING FUTURE LINE EXTENSIONS SHALL BE SUCH THAT LATER REMOVAL IS POSSIBLE.
5. ALL BENDS WHERE FITTINGS ARE USED, BOTH HORIZONTAL OR VERTICAL SHALL BE BACKED.
6. REACTION BACKING TABLE IS BASED ON 150 P.S.I. AND SOIL BEARING PRESSURE OF 2,000 lb./sq.ft. ADDITIONAL BACKING MAY BE REQUIRED IN SOME AREAS AS DIRECTED BY ENGINEERS.
7. ALL CONCRETE SHALL BE 2500 P.S.I. MIN. .

THRUST BLOCKING DETAIL

N.T.S.

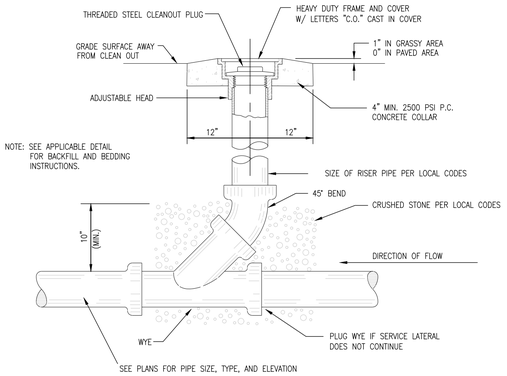

SEWER CLEAN–OUT

N.T.S.

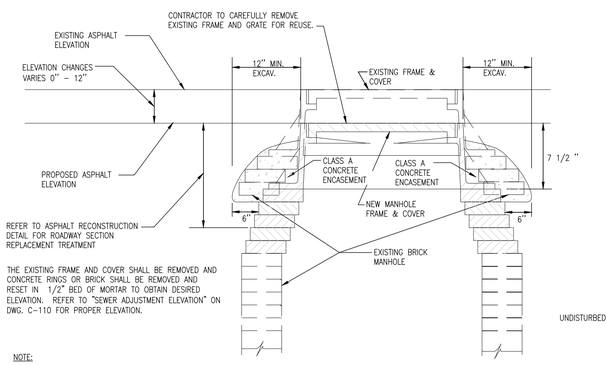

NOTE:

THE LOWER LIMIT OF THE CLASS A CONCRETE ENCASEMENT SHALL BE AT, OR BELOW, THE LOWEST PORTION OF THE BRICK AND MORTAR LEVELING COURSE. ALL BRICK SHALL BE RED, 8,000 PSI BRICK.

ADJUSTMENT AT FLEXIBLE PAVEMENT

RESETTING EXISTING DRAINAGE FRAMES ON EXISTING DRAINAGE STRUCTURES
ITEM NO. 604.07210110

N.T.S.

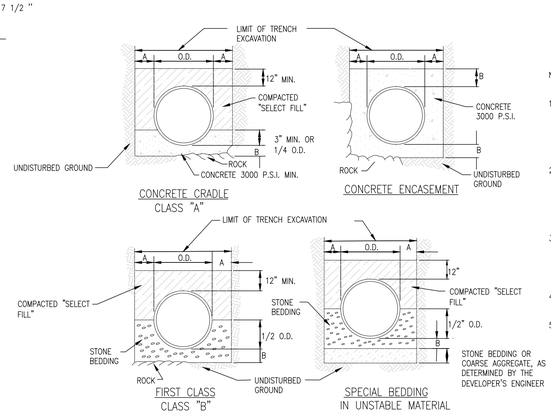

UTILITY BEDDING MATERIAL DETAIL

N.T.S.

NOTES:

1. SELECT FILL SHALL BE SAND, GRAVEL, AND SIMILAR MATERIAL WHICH SHALL BE FREE FROM CLAY, LOAM, ORGANIC MATERIAL, DEBRIS, FROZEN MATERIAL AND SHALL CONTAIN ONLY SMALL AMOUNTS OF STONE, PEBBLES OR LUMPS OVER ONE INCH IN GREATEST DIMENSION BUT NONE OVER TWO INCHES IN GREATEST DIMENSION, MEETING ASTM IA,IB,OR II.
2. STONE BEDDING SHALL MEAN APPROVED IMPORTED AGGREGATE MEETING THE REQUIREMENTS OF THE NEW YORK STATE DEPARTMENT OF TRANSPORTATION, STANDARD SPECIFICATION, MAY, 2008 EDITION, AS REVISED, SUBSECTION 703–01 "FINE AGGREGATE". PRIMARY SIZE 1 OR A MIXTURE OF PRIMARY SIZES 1 AND 2. OR ASTM CLASS IA,
3. COARSE AGGREGATE SHALL MEAN APPROVED IMPORTED AGGREGATE MEETING THE REQUIREMENTS OF THE NEW YORK STATE DEPARTMENT OF TRANSPORTATION, STANDARD SPECIFICATION, MAT 2008 EDITION, AS REVISED, SUBSECTION 703–02 "COURSE AGGREGATE". PRIMARY SIZE 3 AND/OR 4
4. THIS FIGURE APPLIES TO SANITARY, STORM and COMBINED MAINLINE AND LATERAL PIPE INSTALLATIONS AS WELL AS FORCEMAINS.
5. FIRST CLASS BEDDING SHALL BE USED UNLESS OTHERWISE SHOWN ON THE DRAWINGS OR DIRECTED BY THE ENGINEER.

PIPE DIA.	DIM. A	DIM. B
UP TO 18"	1.0'	6"
21" TO 36"	1.5'	9"
OVER 36"	1.5'	12"

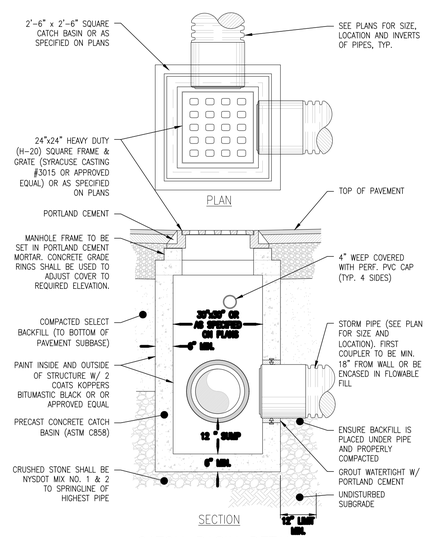

CATCH BASIN DETAIL

N.T.S.

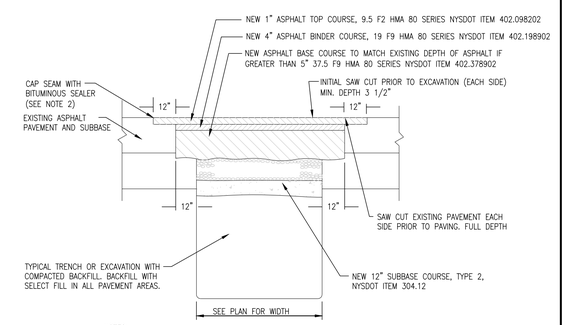

NOTES:

1. EXISTING PAVEMENT SHALL BE SAW CUT TO OBTAIN A STRAIGHT AND NEAT EDGE FOR PAVING. FINAL SAW CUT SHALL BE MADE PRIOR TO PAVING AFTER BACKFILL OF TRENCH TO BOTTOM OF NEW PAVEMENT
2. ALL SEAMS BETWEEN EXISTING AND NEW ASPHALT SURFACES SHALL BE SEALED WITH AN ASPHALT FILLER CORRESPONDING TO THE MATERIAL REQUIREMENTS OF N.Y.S.D.O.T. TABLE 702–5 MATERIAL DESIGNATION 702–3401. COST TO FURNISH AND APPLY THIS MATERIAL SHALL BE INCLUDED IN THE PRICE BID FOR ASPHALT TOP

PAVEMENT TRENCH RESTORATION DETAIL

N.T.S.

6/15/2022 4:10:27 PM

CONSULTANT INFORMATION

LiRo Engineers, Inc.
A LiRo Group Company
Mineola, N.Y. 516-746-2350[T]

CONSULTANT SEAL

STATE OF NEW YORK · KENNETH J. HOCHSTRASSER · LICENSED PROFESSIONAL ENGINEER · NO. 059134

REVISION NUMBER	DATE	MADE BY	APP'D BY	REVISION

RECORD DRAWING CERTIFICATION

☐ AS BUILT – CHANGES AS NOTED ☐ AS BUILT – NO CHANGES

CONTRACTOR
NAME
SIGNATURE
TITLE DATE

PROJECT COORDINATOR
NAME
SIGNATURE
TITLE DATE

WESTCHESTER COUNTY, NEW YORK
DEPARTMENT OF PUBLIC WORKS AND TRANSPORTATION
DIVISION OF ENGINEERING

INFRASTRUCTURE REHABILITATION PHASE 3
PLAYLAND PARK, RYE, NEW YORK
DRAGON COASTER VENDOR
CIVIL DETAILS 2

CONTRACT NUMBER	22-523
SHEET NUMBER	DCV-C-07
DWG NO.:	495 of 664
SCALE:	AS NOTED
DATE:	08/23/2022
DPW FILE NUMBER	1-118-C-1244-0
REV. NO.:	0

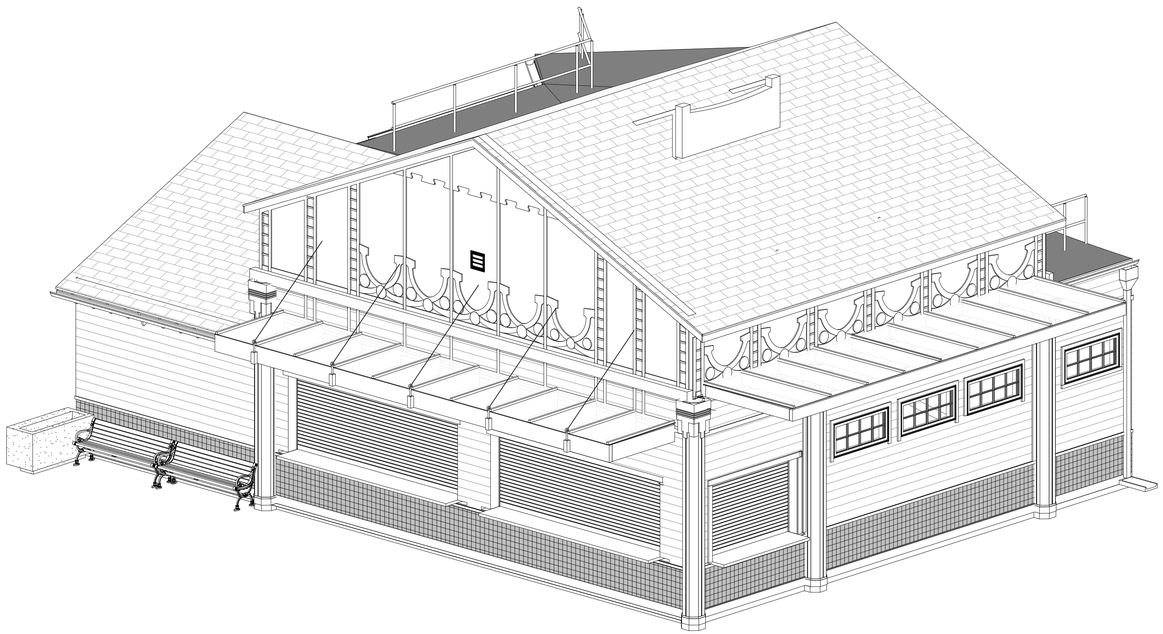

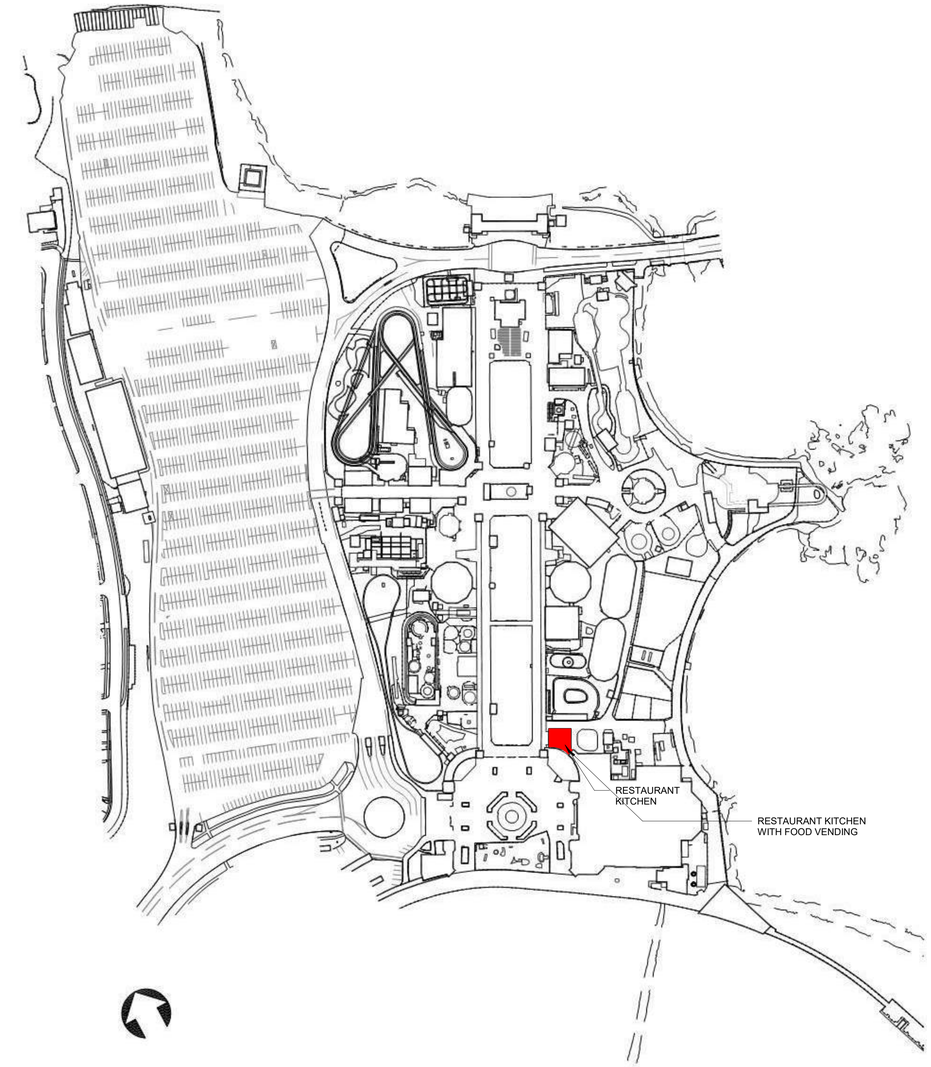

RESTAURANT KITCHEN

8/30/2022 2:52:14 PM

CONSULTANT INFORMATION

The LiRo Group

1 State Street Plaza, New York, NY, 10004
(516) 938-5476 www.liro.com

CONSULTANT SEAL

REGISTERED ARCHITECT ROBERT D. JOHNSON 023280 STATE OF NEW YORK

REVISION NUMBER	DATE	MADE BY	APP'D BY	REVISION

RECORD DRAWING CERTIFICATION

☐ AS BUILT – CHANGES AS NOTED ☐ AS BUILT – NO CHANGES

CONTRACTOR
NAME
SIGNATURE
TITLE DATE

PROJECT COORDINATOR
NAME
SIGNATURE
TITLE DATE

WESTCHESTER COUNTY, NEW YORK
DEPARTMENT OF PUBLIC WORKS AND TRANSPORTATION
DIVISION OF ENGINEERING

INFRASTRUCTURE REHABILITATION
PLAYLAND PARK, RYE, NEW YORK
RESTAURANT KITCHEN WITH FOOD VENDING
BUILDING 3D VIEW

CONTRACT NUMBER	22-523
SHEET NUMBER	K-G-01
DWG NO.:	496 of 664
SCALE:	12" = 1'-0"
DATE:	8/23/20223
DPW FILE NUMBER	1-118-G-1247-0
REV. NO.	0

OPENING / TOTAL AREA = % OPENING
68 SQ FT / 613 SQ FT = 11.09% < 25% (BC 705.8)

2 WEST CODE ELEVATION
3/32" = 1'-0"

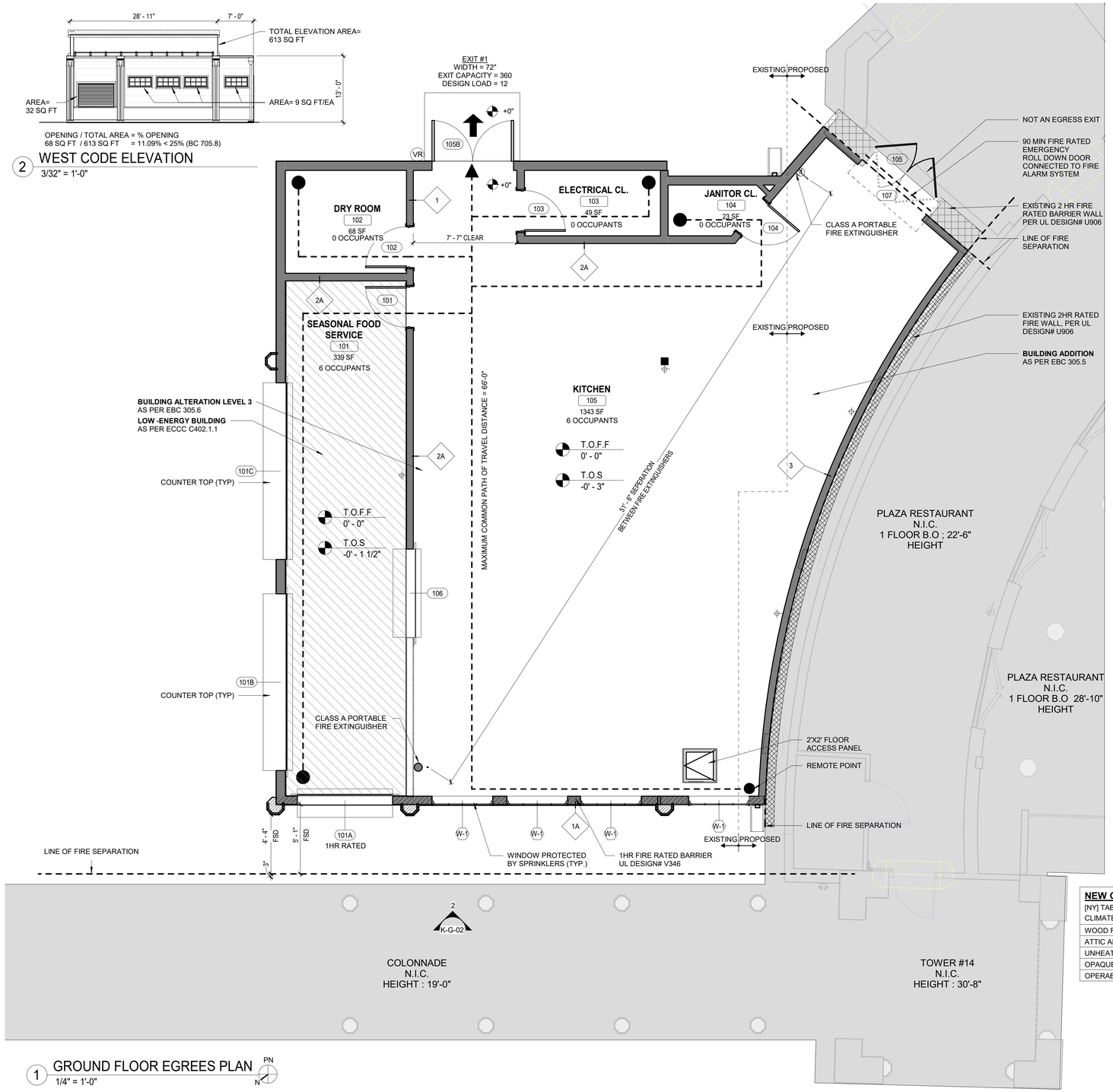

1 GROUND FLOOR EGREES PLAN
1/4" = 1'-0"

PN N

LIFE SAFETY DIAGRAM LEGEND

- 1 HR RATED FIRE SEPERATION BARRIER
- 2 HR RATED FIRE WALL
- MAXIMUM PATH OF EGRESS
- NOT IN CONTRACT (NIC) — NIC
- LOW ENERGY BUILDING
- STUB UP
- TRUSS SIGNAGE — VR

LIFE SAFETY NOTES :

1. BUILDING IS FULLY SPRINKLERED
2. ALL EXISTING FIRE RATED WALLS ARE TO BE VERIFIED IN THE FIELD.
3. SEE SHEET K-A-84 FOR RATED COLUMN DETAILS.

HISTORICAL BUILDING REGISTRY

PLAYLAND AMUSEMENT PARK IS A DESIGNATED NATIONAL HISTORIC LANDMARK AND IS LISTED ON THE NATIONAL REGISTER OF HISTORIC PLACES.

THE NATIONAL HISTORIC PLACES REGISTER
REFERENCE NUMBER: 80004529_NHL
NATIONAL ARCHIVE IDENTIFIER: 75323175

RESTAURANT KITCHEN BUILDING A IS A CONTRIBUTING STRUCTURE OF THE LANDMARK AND THEREFORE AN HISTORIC BUILDING UNDER THE 2020 BUILDING CODE AND 2020 EXISTING BUILDING CODE OF NEW YORK STATE

ADDITION TO MEET PRESCRIPTIVE METHOD C502.2 IN 2020 ENERGY CONSERVATION CONSTRUCTION CODE OF NEW YORK STATE

NEW CONSTRUCTION MIN R-VALUE

[NY] TABLE C402.1.3/4
CLIMATE ZONE - MARINE 4

WOOD FRAME WALLS, ABOVE GROUND	MIN R-20
ATTIC AND OTHER ROOFS	MIN R-38
UNHEATED SLABS	MIN R-10 FOR 24" BELOW
OPAQUE SWINGING DOOR	MAX U-0.37
OPERABLE FENESTRATION	MAX U-0.45

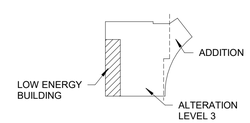

3 BUILDING KEYPLAN
PN N

CODE ANALYSIS

APPLICABLE CODES:

NEW YORK STATE BUILDING CODE 2020	(BC)	
NEW YORK STATE EXISTING BUILDING CODE 2020	(EBC)	
ENERGY CONSERVATION CONSTRUCTION CODE OF NEW YORK STATE	(ECCC)	
NFPA 13 2013	(NFPA 13)	
CONSTRUCTION TYPE (TBL 601)	VB	FULLY SPRINKLERED
OCCUPANCY CLASSIFICATION	A-2	COMMERCIAL KITCHENS
	ALLOWABLE / REQUIRED	**PROPOSED**
NUMBER OF STORIES (TBL 504.4)	< 2	1
HEIGHT (FT) (TBL 504.3)	< 60'	25'-4"
BUILDING AREA (SF) (TBL 506.2)	< 24,000	1,882
ALLOWABLE AREA, SINGLE-OCC. ONE STORY	<24,579	1,882
FIRE-RESISTANCE RATING REQUIREMENTS (TBL 601)		
PRIMARY STRUCTURE FRAME	0	0
BEARING WALLS		
EXTERIOR		
0 < 10 FT	1 BOTH SIDES	1
≥ 10 FT	0	0
INTERIOR	0	0
NONBEARING WALLS		
EXTERIOR (TBL 601)		
0 < 10 FT	1 BOTH SIDES	1
≥ 10 FT	0	0
INTERIOR	0	0
FLOOR CONSTRUCTION	0	0
ROOF CONSTRUCTION	0	0

PROJECTIONS (BC 705.2.3.1 EXCEPTIONS)
3. PROJECTIONS ON BUILDINGS OF TYPE V CONSTRUCTION SHALL BE PERMITTED TO BE OF TYPE V CONSTRUCTION AND SHALL NOT BE REQUIRED TO HAVE A FIRE RESISTANCE RATING WHERE SPRINKLER PROTECTION IS EXTENDED TO THESE AREAS.

EXTERIOR PROJECTIONS NFPA 13; SECTION 8.15.7.3
SPRINKLERS SHALL BE PERMITTED TO BE OMITTED FROM BELOW THE EXTERIOR PROJECTS OF COMBUSTIBLE CONSTRUCTION, PROVIDED THE EXPOSED FINISH MATERIAL ON THE EXTERIOR PROJECTS ARE NON COMBUSTIBLE, LIMITED-COMBUSTIBLE, OR FIRE RETARDANT-TREATED WOOD AS DEFINED IN NFPA 703.

ALLOWABLE AREA OF OPENINGS (BC 705.8)		
FSD 5 FT < 10 FT; UNPROTECTED; SPRINKLERED	25%	11.09%
FSD > 20 FT; UNPROTECTED; SPRINKLERED	NO LIMIT	
FIRE WALL FIRE RESISTANCE RATINGS (TBL 706.4)		
GROUP A (?TYPE V CONSTRUCTION)	2 HR[2]	
INTERIOR FINISHES CLASS (BC 803)		
WALL AND CEILING; SPRINKLERED (TBL 803.13)	CLASS C	
FLOORS; GROUP A (BC 804.4.2)	CLASS II	
PORTABLE FIRE EXTINGUISHERS (BC 906)		
FIRE HAZARD OCCUPANCY	CLASS K	
MIN-RATING SINGLE EXTINGUISHER	ORDINARY	
MAX FLOOR AREA	2-A	
MAX DISTANCE OF TRAVEL TO EXTINGUISHER	1,500 SF	2,399 SF
MAX DISTANCE OF TRAVEL TO EXTINGUISHER	11,250 SF	X
	30 FT	
NUMBER OF EXTINGUISHERS REQUIRED	COMMERCIAL KITCHENS	
FIRST FLOOR	1.6	2
MEANS OF EGRESS (BC 10)		
MAX FLOOR AREA ALLOWANCE PER OCCUPANT (TBL 1004.1.2)(SF)		SEE PLANS
ACCESSORY STORAGE AREAS		
KITCHENS, COMMERCIAL	300 GROSS	
CONCENTRATED BUSINESS USE	200 GROSS	
	50 GROSS	
DESIGN OCCUPANT LOAD	12 OCCUPANTS	12 OCCUPANTS
EGRESS WIDTH PER OCCUPANT (IN)(BC 1005)		
KITCHENS	0.15 / OCCUPANT	
MAX COMMON PATH OF EGRESS OF TRAVEL DISTANCE (TBL 1006.2.1)	1.8"	72"
OCCUPANCY A; X<30; SPRINKLER SYSTEM	75 FT	SEE PLANS
MINIMUM NUMBER OF EXITS (TBL 1006.3.2)		
OCCUPANT LOAD: 1-500	2	1*
SINGLE EXITS (TBL 1006.3.3)*		SINGLE EXITS (BELOW)

ROOMS, AREAS AND SPACES COMPLY WITH SECTION 1006.2.1 WITH EXITS THAT DISCHARGE DIRECTLY TO THE EXTERIOR AT THE LEVEL OF DISCHARGE, ARE PERMITTED TO HAVE ONE EXIT OR ACCESS TO A SINGLE EXIT.

MAX TRAVEL DISTANCE (BC 1017)		
A-2 OCCUPANCY; SPRINKLER SYSTEM	250'	SEE PLANS

EXISTING MATERIALS (EBC 302.4)
MATERIALS ALREADY IN USE IN A BUILDING IN COMPLIANCE WITH REQUIREMENTS OR APPROVALS IN EFFECT AT THE TIME OF THEIR ERECTION OR INSTALLATION SHALL BE PERMITTED TO REMAIN IN USE UNLESS DETERMINED BY BUILDING OFFICIAL TO BE UNSAFE.

NEW AND REPLACEMENT MATERIALS (EBC 302.5)
MATERIALS PERMITTED BY THE APPLICABLE CODE FOR NEW CONSTRUCTION SHALL BE USED. LIKE MATERIALS SHALL BE PERMITTED FOR REPAIRS AND ALTERATIONS, PROVIDED THAT UNSAFE CONDITIONS ARE NOT CREATED.

ADDITIONS AND ALTERATIONS
(EBC 305.5, 305.6, AND 305.7)
WHERE AN ALTERATION (AND ADDITIONS) AFFECTS THE ACCESSIBILITY TO, OR CONTAINS AN AREA OF PRIMARY FUNCTION, THE ROUTE TO THE PRIMARY FUNCTION AREA SHALL BE ACCESSIBLE.

ALTERATION 3
(EBC 604.1)
WHERE THE WORK AREA EXCEEDS 50% OF THE BUILDING AREA

EBC 907.1 LEVEL 3 ALTERATIONS TO EXISTING BUILDINGS ARE PERMITTED WITHOUT REQUIRING THE ENTIRE BUILDING TO COMPLY WITH THE ENERGY REQUIREMENTS OF ECCC.

CLIMATE ZONE (ECCC TBL C301.1) 4A (MARINE)

OPENING THERMAL ENVELOPE MIN REQ'S (C303.1.3)	**ALLOWABLE / REQUIRED**	**PROPOSED**
GLAZING - NON-METAL FRAME (U-FACTOR)	0.95	0.95
OPAQUE DOOR - UNINSULATED METAL (U-FACTOR)	1.20	1.20
GLAZED FENESTRATION SGHC	0.8 CLEAR	0.8
GLAZED FENESTRATION VT	0.6 CLEAR	0.6

LOW ENERGY BUILDINGS (ECCC C402.1.1)
PORTIONS THEREOF SEPARATED FROM THE REMAINDER OF THE BUILDING THERMAL ENVELOPE ASSEMBLIES COMPLY WITH THIS SECTION SHALL BE EXEMPT FROM BUILDING THERMAL ENVELOPE PROVISIONS.
2. THOSE THAT DO NOT CONTAIN CONDITIONED SPACE.

OPAQUE THERMAL ENVELOPE MIN REQ'S (ECCC TBL C402.1.3 AND 4)		
ABOVE ROOF DECK	R-30ci / U-0.032	MEAN R-43.35ci
ATTIC AND OTHER ROOF ELEMENT	R-38 / U-0.027	R-38
WOOD FRAMED AND OTHER WALLS ABOVE GRADE	R-13+R-3.8ci OR R-20 / U-0.064	R-13+R-3.8ci
JOIST/FRAMING FLOOR	R-30 / U-0.033	R-30
UNHEATED SLAB-ON-GRADE	R-10 FOR BELOW 24" / F-0.54	R-10
OPAQUE DOORS - NONSWINGING	R-4.75	R-4.75
OPAQUE SWINGING DOOR	U-0.37	U-0.37
GARAGE DOOR	U-0.31	U-0.31

BUILDING ENVELOPE FENESTRATION MAX U-FACTOR REQ'S (ECCC C402.4)
OPERABLE FENESTRATION (U-FACTOR) 0.45

8/30/2022 2:52:18 PM

CONSULTANT INFORMATION
The LiRo Group
1 State Street Plaza, New York, NY, 10004
(516) 938-5476 www.liro.com

CONSULTANT SEAL
REGISTERED ARCHITECT ROBERT D. VOLKING 023220 STATE OF NEW YORK

REVISION NUMBER	DATE	MADE BY	APP'D BY	REVISION

RECORD DRAWING CERTIFICATION
☐ AS BUILT – CHANGES AS NOTED ☐ AS BUILT – NO CHANGES

CONTRACTOR
NAME
SIGNATURE
TITLE DATE

PROJECT COORDINATOR
NAME
SIGNATURE
TITLE DATE

WESTCHESTER COUNTY, NEW YORK
DEPARTMENT OF PUBLIC WORKS AND TRANSPORTATION
DIVISION OF ENGINEERING

INFRASTRUCTURE REHABILITATION
PLAYLAND PARK, RYE, NEW YORK
RESTAURANT KITCHEN WITH FOOD VENDING
CODE PLAN

CONTRACT NUMBER	22-523
SHEET NUMBER	K-G-02
DWG NO.:	497 of 664
SCALE:	As indicated
DATE:	8/23/20223
DPW FILE NUMBER	1-118-G-1248-0
REV. NO.	0

PLAYLAND REHABILITATION & UPGRADES
RESTAURANT KITCHEN - ASBESTOS ABATEMENT
1 PLAYLAND PKWY, RYE, NY 10580

DETAILS:

1 / K-H-10 — LARGE PROJECT REMOTE WORKER DECONTAMINATION UNIT
Not To Scale

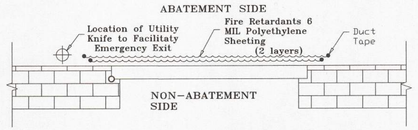

2 / K-H-10 — TYPICAL SOFT WALL BARRIER AT OPENINGS LESS THAN 32SF
Not To Scale

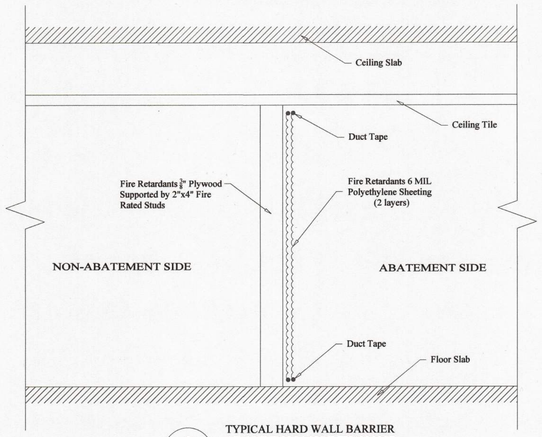

3 / K-H-10 — TYPICAL HARD WALL BARRIER AT OPENINGS MORE THAN 32SF
Not To Scale

SCOPE OF WORK TABLE:

Work area	Location	Description of Asbestos Materials	Approximate Quantity of ACM	ICR 56 Procedure
1	K - Restaurant Kitchen Exterior - North	Transite Siding	440 SF	56.11.6
2	K - Restaurant Kitchen Exterior - East	Transite Siding	440 SF	56.11.6

KEYPLAN:

LEGEND:

- WORK AREA LIMITS
- P/W R # — REMOTE WORKER DECONTAMINATION UNIT
- WC — WASTE HOLDING AREA
- AIRLOCK
- W — TEMPORARY WATER SOURCE
- E — TEMPORARY ELECTRICAL SOURCE

PROJECT NOTES:

1. The Contractor shall be aware of all conditions of the Project and is responsible for verifying quantities and locations of all Work to be performed. Failure to do so shall not relieve the Contractor of its obligation to furnish all labor and materials necessary to perform the Work.
2. All Work shall be performed in strict accordance with the Project Documents and all governing codes, rules, and regulations. Where conflicts occur between the Project Documents and applicable codes, rules, and regulations, the more stringent shall apply.
3. All abatement work shall be coordinated with General Contractor work; Abatement may be phased with other contract work.
4. Working hours shall be as required and approved by the Owner. Asbestos abatement activities including, but not limited to, work area preparation, gross removal activities, cleaning activities, waste removal, etc. may need to be performed during 'off-hours' (including nights and weekends). In addition, multiple mobilizations may be required to perform the work identified in this project. The Contractor shall coordinate and schedule all Work with the facility and Owner's representative.
5. The Contractor shall prepare and coordinate with facility representative the posting of appropriate signage at the entranceway that redirects park occupants away from the area of the abatement.
6. The Contractor shall use barrier tape to extend the limits of the active, regulated work areas closed to the public and other non-abatement trades.
7. The Contractor shall be responsible for defining and coordinating the phases of the abatement with the facility and DPW, as well as securing any site specific variances, permits, and any necessary NYS DOL approvals.
8. The asbestos abatement Contractor shall coordinate locations of decontamination units, routes of egress, temporary water and power connections and waste container locations with the Owner and the Facility.
9. The Contractor may need to supply temporary power/water sources if they cannot be provided by facility.
10. The General Contractor shall supply any and all scaffolding for the work area(s) under this contract. Scaffolding structure and maintenance shall be in strict accordance with local, state and federal safety requirements.
11. The Contractor is to protect any and all exposed surfaces not targeted for abatement.
12. The Contractor shall request and receive in writing prior to preceding with any work info from the owner regarding surfaces/materials that require protection.
13. Regular waste generated by the abatement work of this contract shall be stored securely using a closed waste container.

5/3/2022 11:43:22 AM

CONSULTANT INFORMATION
The LiRo Group
3 Aerial Way, Syosset, New York 11791
(516) 938-5476 www.liro.com

CONSULTANT SEAL
STATE OF NEW YORK — PETER JOSEPH GERASI — LICENSED PROFESSIONAL ENGINEER — No. 070446

REVISION NUMBER	DATE	MADE BY	APP'D BY	REVISION

RECORD DRAWING CERTIFICATION
AS BUILT – CHANGES AS NOTED
AS BUILT – NO CHANGES
CONTRACTOR: NAME / SIGNATURE / TITLE / DATE
PROJECT COORDINATOR: NAME / SIGNATURE / TITLE / DATE

WESTCHESTER COUNTY, NEW YORK
DEPARTMENT OF PUBLIC WORKS AND TRANSPORTATION
DIVISION OF ENGINEERING
INFRASTRUCTURE REHABILITATION - PHASE 3
PLAYLAND PARK, RYE, NEW YORK
RESTAURANT KITCHEN
GENERAL ASBESTOS ABATEMENT NOTES

CONTRACT NUMBER	22-523
SHEET NUMBER	K-H-10
DWG NO.:	
SCALE:	NOT TO SCALE
DATE:	08/23/2022
DPW FILE NUMBER	1-118-G-1247-0
REV. NO.	0

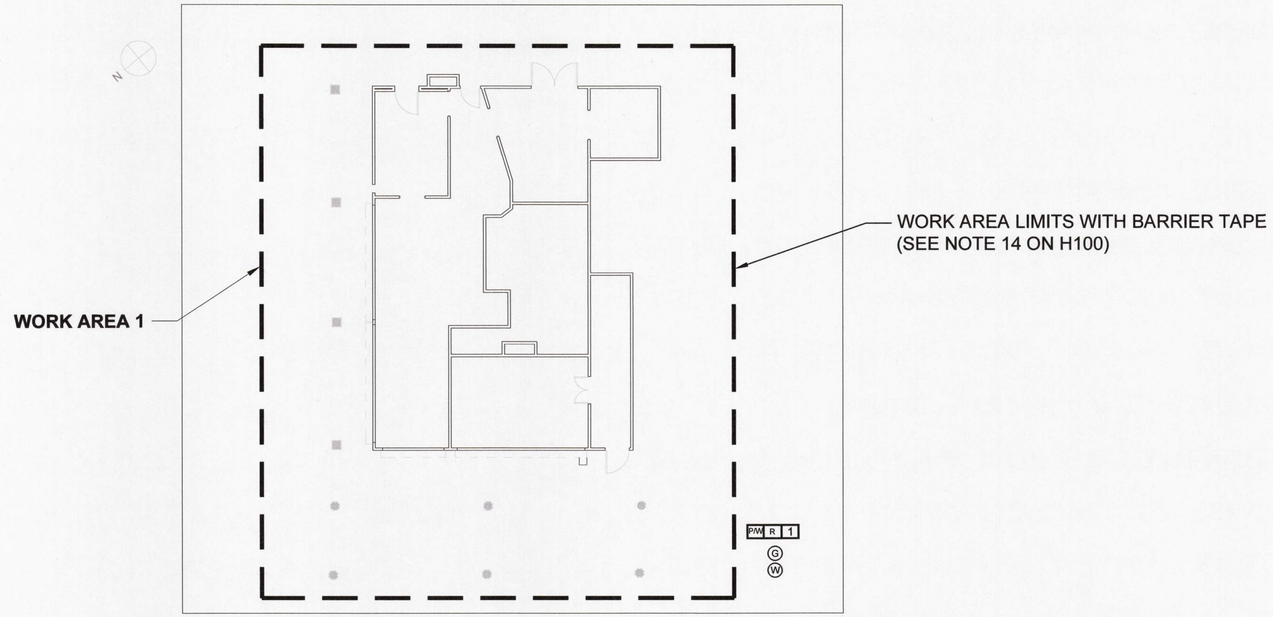

3 NATHANS- GROUND FLOOR PLAN
NOT TO SCALE

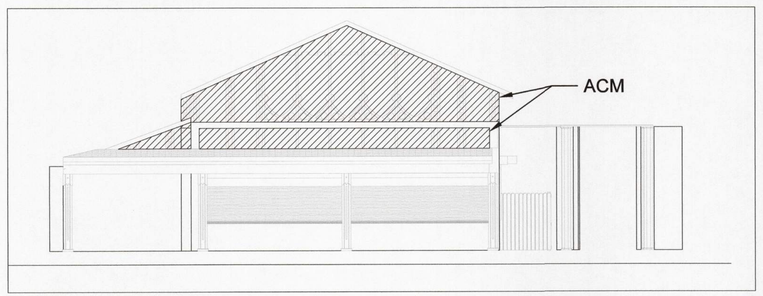

2 NATHANS- WEST ELEVATION
NOT TO SCALE

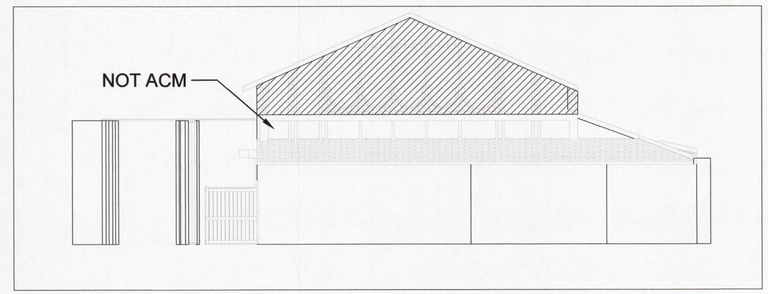

3 NATHANS- EAST ELEVATION
NOT TO SCALE

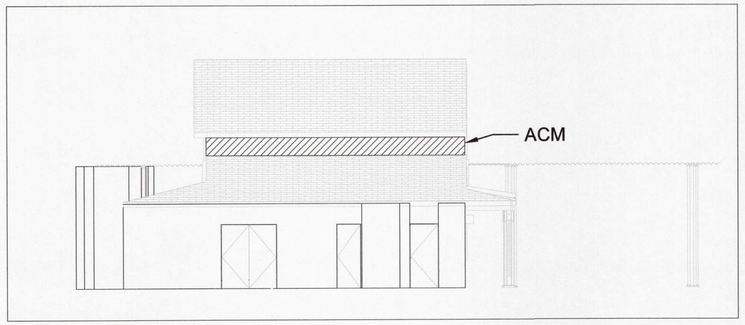

4 NATHANS- NORTH ELEVATION
NOT TO SCALE

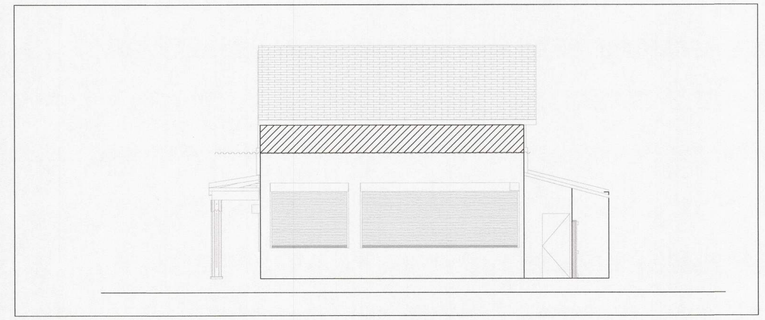

5 NATHANS- SOUTH ELEVATION
NOT TO SCALE

5/3/2022 11:43:22 AM

CONSULTANT INFORMATION
The LiRo Group
3 Aerial Way, Syosset, New York 11791
(516) 938-5476 www.liro.com

CONSULTANT SEAL
STATE OF NEW YORK · PETER JOSEPH LEGASI · LICENSED PROFESSIONAL ENGINEER · No. 070446

REVISION NUMBER	DATE	MADE BY	APP'D BY	REVISION

RECORD DRAWING CERTIFICATION
☐ AS BUILT – CHANGES AS NOTED ☐ AS BUILT – NO CHANGES

CONTRACTOR
NAME
SIGNATURE
TITLE DATE

PROJECT COORDINATOR
NAME
SIGNATURE
TITLE DATE

WESTCHESTER COUNTY, NEW YORK
DEPARTMENT OF PUBLIC WORKS AND TRANSPORTATION
DIVISION OF ENGINEERING

INFRASTRUCTURE REHABILITATION - PHASE 3
PLAYLAND PARK, RYE, NEW YORK
RESTAURANT KITCHEN
GROUND FLOOR AND ELEVATIONS ASBESTOS REMOVAL PLAN

CONTRACT NUMBER	22-523
SHEET NUMBER	K-H-11
DWG NO.:	
SCALE:	NOT TO SCALE
DATE:	08/23/2022
DPW FILE NUMBER	1-118-G-1248-0
REV. NO.	0

PLAYLAND REHABILITATION & UPGRADES
RESTAURANT KITCHEN - LEAD REMEDIATION
1 PLAYLAND PKWY, RYE, NY 10580

DETAILS:

1 K-H-20 LARGE PROJECT REMOTE WORKER DECONTAMINATION UNIT
Not To Scale

SCOPE OF WORK TABLE:

Work Area	Location	Description	Material	Quantity	Procedure
1	Main Nathan's	West Elevation	Soffit (Beige Coating)	90 SF	Manual Wet Scrape / Chemical Strip
			Wood Columns (Beige, Orange & Green Coating)	48 SF (4 at 12 SF each)	
		East Elevation	Wall Paint (Beige Coating)	300 SF	
			Soffit (Beige Coating)	50 SF	
			Window Frame (Beige Coating)	30 LF	
			Wood Pilaster (Beige, Orange & Green Coating)	48 SF (4 at 12 SF each)	
		North, South, West East Elevation	Eave (Beige Coating)	168 SF	

PROJECT NOTES:

1. All layers of coating shall be considered as LBP and removed down to the substrates. Substrates coated with LBP and targeted for demolition may be removed and disposed of solid structure waste following TCLP testing.
2. Substrates coated with LBP and targeted for refurbish and recoating shall be abated using manual wet scraping or chemical stripping procedures, localized testing of chemical strapping products shall proceed broader use and only after approval by the DPW Environmental Consultant.
3. The abatement contractor shall separate paint chips and contaminated dust/particulate generated by the abatement from other project waste streams including worker personal protective equipment and plastic sheeting. All waste other than lead paint chips and contaminated dust/particulate shall be TCLP tested prior to disposal.
4. Waste generated by the work of this method shall be stored on site in a NYSDEC compliant Hazardous and Waste Storage Area and transported under manifest to the disposal site.
5. The contractor shall prepare a project specific work plan and project specific HASP for the work of this contract.
6. LBP remediation shall be consistent with guidelines from SSPC and work shall comply with the OSHA regulations including using of decontamination units and hand wash stations.
7. The contractor may propose alternate LBP removal procedures however, use of alternate procedures will require approval by DPW Environmental Consultant; the abatement contractor is responsible with maintaining the physical conditions and integrity of the targeted substrates, and the surrounding structures during abatement work.
8. The Contractor shall request and receive in writing prior to preceding with any work info from the owner regarding surfaces/materials that require protection.

LEGEND:

- WORK AREA LIMITS
- WS — OSHA HANDWASHING STATION
- HWSA — HAZARDOUS WASTE STORAGE AREA
- AIRLOCK
- W — TEMPORARY WATER SOURCE
- E — TEMPORARY ELECTRICAL SOURCE
- CORNICE / FASCIA ELEMENTS
- WALL CLADDING / TRIM ELEMENTS
- COLUMNS

KEYPLAN:

CONSULTANT INFORMATION
The LiRo Group
3 Aerial Way, Syosset, New York 11791
(516) 938-5476 www.liro.com

CONSULTANT SEAL
STATE OF NEW YORK · PETER JOSEPH BERBASI · No. 070446 · LICENSED PROFESSIONAL ENGINEER

REVISION NUMBER	DATE	MADE BY	APP'D BY	REVISION

RECORD DRAWING CERTIFICATION
AS BUILT – CHANGES AS NOTED
AS BUILT – NO CHANGES

CONTRACTOR
NAME
SIGNATURE
TITLE DATE

PROJECT COORDINATOR
NAME
SIGNATURE
TITLE DATE

WESTCHESTER COUNTY, NEW YORK
DEPARTMENT OF PUBLIC WORKS AND TRANSPORTATION
DIVISION OF ENGINEERING

INFRASTRUCTURE REHABILITATION - PHASE 3
PLAYLAND PARK, RYE, NEW YORK
RESTAURANT KITCHEN
GENERAL LEAD REMEDIATION NOTES

CONTRACT NUMBER 22-523
SHEET NUMBER K-H-20
DWG NO.:
SCALE: NOT TO SCALE
DATE: 08/23/2022
DPW FILE NUMBER 1-118-G-1249-0
REV. NO. 0

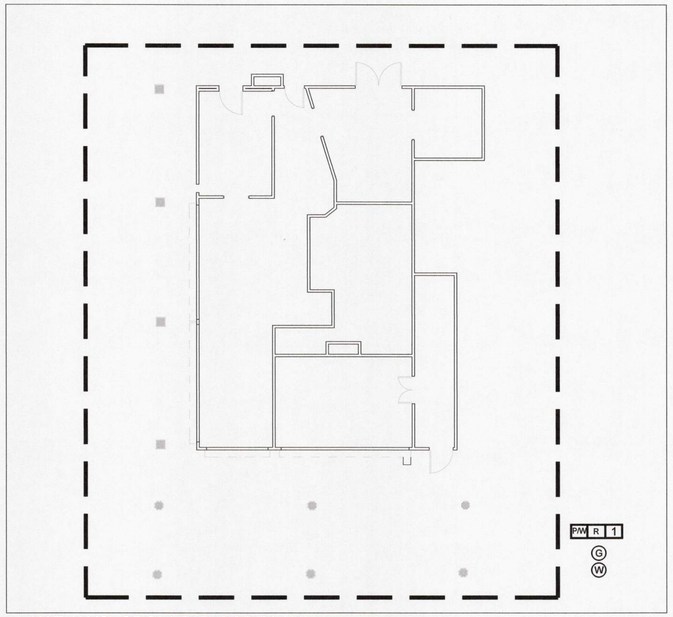

3 NATHANS- GROUND FLOOR PLAN
NOT TO SCALE

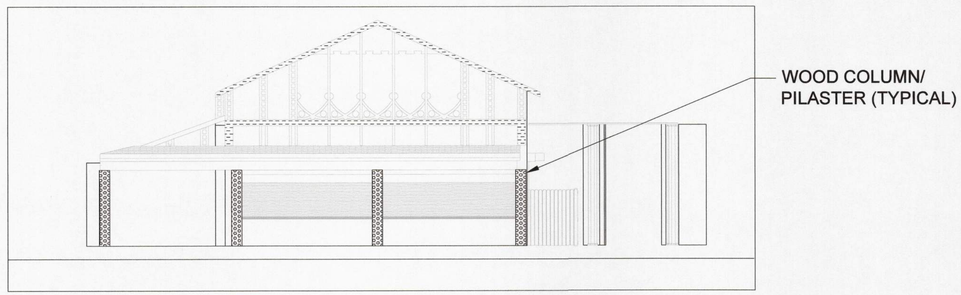

2 NATHANS- WEST ELEVATION
NOT TO SCALE

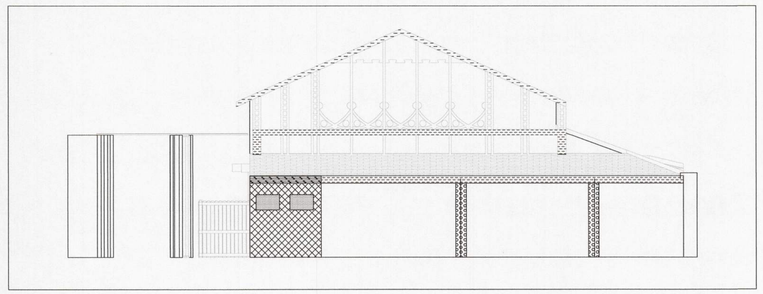

3 NATHANS- EAST ELEVATION
NOT TO SCALE

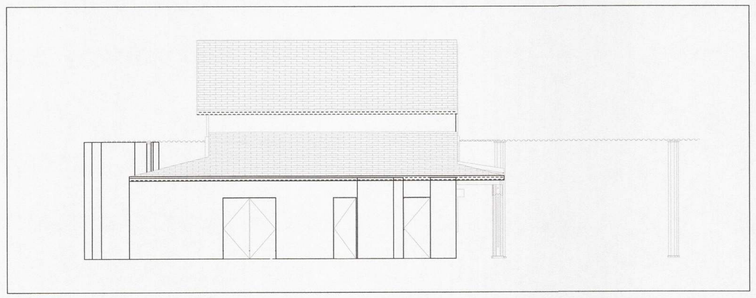

4 NATHANS- NORTH ELEVATION
NOT TO SCALE

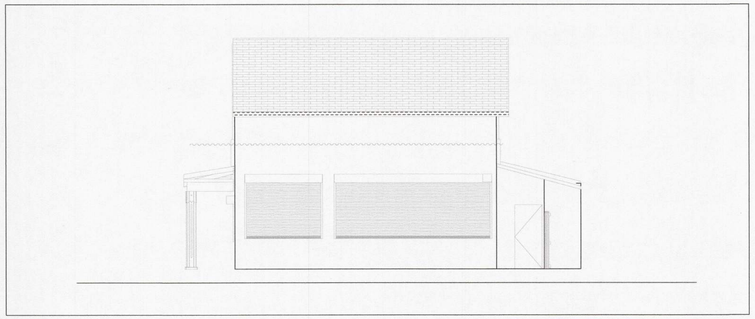

5 NATHANS- SOUTH ELEVATION
NOT TO SCALE

CONSULTANT INFORMATION

The LiRo Group

3 Aerial Way, Syosset, New York 11791
(516) 938-5476 www.liro.com

CONSULTANT SEAL

STATE OF NEW YORK · PETER JOSEPH GERBASI · LICENSED PROFESSIONAL ENGINEER · No. 079446

REVISION NUMBER	DATE	MADE BY	APP'D BY	REVISION

RECORD DRAWING CERTIFICATION

☐ AS BUILT – CHANGES AS NOTED ☐ AS BUILT – NO CHANGES

CONTRACTOR
NAME
SIGNATURE
TITLE DATE

PROJECT COORDINATOR
NAME
SIGNATURE
TITLE DATE

WESTCHESTER COUNTY, NEW YORK
DEPARTMENT OF PUBLIC WORKS AND TRANSPORTATION
DIVISION OF ENGINEERING

INFRASTRUCTURE REHABILITATION - PHASE 3
PLAYLAND PARK, RYE, NEW YORK
RESTAURANT KITCHEN
GROUND FLOOR AND ELEVATION LEAD REMEDIATION PLAN

CONTRACT NUMBER	22-523
SHEET NUMBER	K-H-21
DWG NO.:	
SCALE:	NOT TO SCALE
DATE:	08/23/2022
DPW FILE NUMBER	1-118-G-1250-0
REV. NO.	0

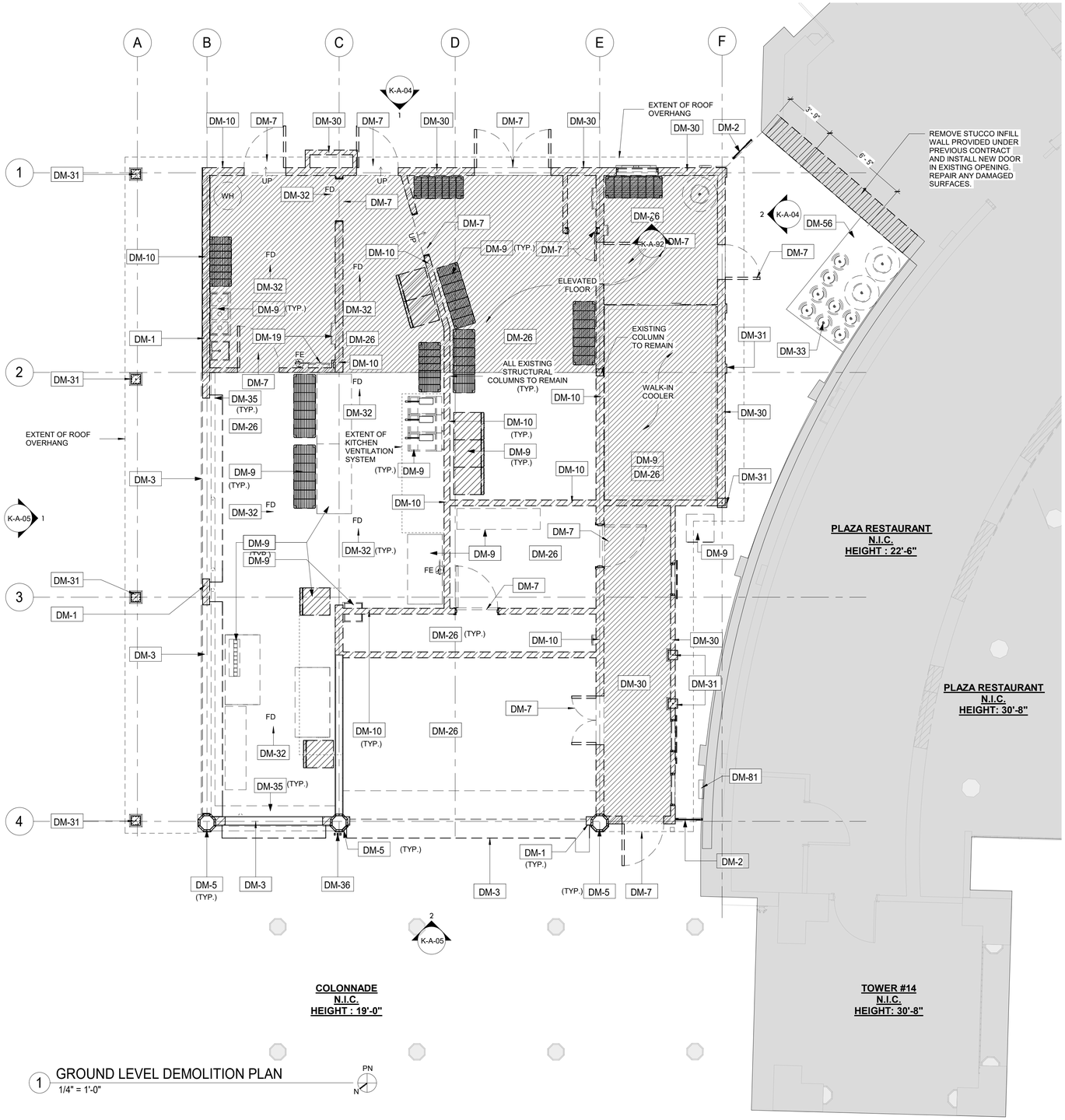

1 GROUND LEVEL DEMOLITION PLAN
1/4" = 1'-0"

PN N

DEMOLITION GENERAL NOTES

1. ALL DEMOLITION AND REMOVAL WORK INCLUDES, BUT IS NOT LIMITED TO THE WORK INDICATED, NOTED, SPECIFIED, AND COORDINATED WITH WORK OF ALL OTHER TRADES, AS INDICATED ELSEWHERE, AND AS REQUIRED TO ACCOMODATE CONSTRUCTION.
2. PRIOR TO STARTING WORK, CONTRACTOR TO MAKE A THOROUGH EXAMINATION OF THE PORTIONS OF THE STRUCTURE IN WHICH THE WORK IS TO BE PERFORMED INCLUDING, BUT NOT LIMITED TO THE WORK AT ADJOINING OR UNDERLYING LOCATIONS. REPORT TO THE ARCHITECT ANY AND ALL CONDITIONS WHICH MAY INTERFERE WITH OR OTHERWISE PREVENT THE PROPER EXECUTION AND COMPLETION OF THE WORK. WORK SHALL NOT START UNTIL SUCH CONDITIONS HAVE BEEN EXAMINED AND MUTUALLY AGREED UPON WITH THE ARCHITECT.
3. DASHED LINES INDICATE WALLS, FIXTURES, EQUIPMENT, ETC. TO BE REMOVED AND DISPOSED OF BY G.C.
4. ANY QUESTIONS ON SCOPE OF DEMOLITION MUST BE DIRECTED TO THE ARCHITECT PRIOR TO BID. SHOULD QUESTIONS OR DISCREPANCIES ARISE, THE CONTRACTOR SHALL NOTIFY THE ARCHITECT, IN WRITING, PRIOR TO PROCEEDING WITH DEMOLITION.
5. ALL DIMENSIONS, LOCATIONS AND/OR ELEVATIONS OF EXISTING CONSTRUCTION CONDITIONS ARE APPROXOMATE. CONTRACTOR TO VERIFIED EXISTING CONDITIONS PRIOR TO THE START OF WORK.
6. CONTRACTOR(S) ARE RESPONSIBLE FOR SHORING, BRACING AND UNDERPINNING RELATED TO THE DEMOLITION, REMOVAL OR CUTTING OF AN WALL, PARTITION, OR ANY OTHER LOAD-BEARING OR STRUCTURAL ELEMENT.
7. ALTER AND RESTORE EXISTING WALLS, PARTITIONS, COLUMNS, CEILING AND FLOORS, AND THEIR RESPECTIVE FINISHED SURFACES TO ACCOMMODATE NEW CONSTRUCTION AND FINISHES, IN ACCORDANCE WITH DRAWINGS AND SPECIFICATIONS.
8. IMMEDIATELY NOTIFY THE OWNER'S REPRESENTATIVES OF ANY HAZARDOUS MATERIALS ENCOUNTERED DURING DEMOLITION/REMOVAL.
9. CONTAINERIZED DEMOLITION DEBRIS SHALL BE TCLP TESTED TO CONFIRM WASTE MAY BE DISPOSED OF AS NON-HAZARDOUS.
10. ALL ITEMS SCHEDULED FOR DEMOLITION SHALL BE REMOVED FROM THE SITE UNLESS OTHERWISE NOTED. CONTRACTOR SHALL BE RESPONSIBLE FOR CLEANING OF SITE ON A DAILY BASIS.
11. REFER TO ELECTRICAL, MECHANICAL, STRUCTURAL, PLUMBING, ETC. DEMOLITION DRAWINGS FOR ADDITIONAL ITEMS.
12. PATCH AND REPAIR SURFACES (FLOOR, WALL, CEILING) DAMAGED IN PREPARATION FOR NEW EQUIPMENT AND FINISHES.

DEMOLITION LEGEND

INDICATES REMOVAL

N.I.C — NOT IN CONTRACT

Key Value	Keynote Text
DM-1	REMOVE EXISTING WOOD SIDING.
DM-2	REMOVE EXISTING GATE.
DM-3	REMOVE ROLL DOWN DOOR AND ASSOCIATED HARDWARE.
DM-5	REMOVE COLUMN ENCLOSURES. CAREFULLY REMOVE AT LEAST ONE COLUMN ENCLOSURE TO USE AS REFERENCE IN ORDER TO REPLICATE TRIMS TO MATCH LOCATION, SIZE AND SHAPE AS INDICATED. COORDINATE WITH STRUCTURAL DRAWINGS.
DM-7	REMOVE EXISTING DOOR & FRAME.
DM-9	CONTRACTOR TO REMOVE ANY REMAINING EQUIPMENT AND BUILDING CONTENT. CONTENT MAY INCLUDE BUT NOT LIMITED TO REFRIGERATOR, STORAGE, RACKS, AC UNITS, GAMES ETC.
DM-10	REMOVE INTERIOR PARTITION.
DM-19	DISCONNECT AND REMOVE EXISTING SUSPENDED EQUIPMENT SUCH AS CAMERAS, SPEAKERS, ETC. SEE ELECTRICAL DRAWINGS FOR DETAILS.
DM-26	REMOVE EXISTING FLOOR AND CONCRETE SLAB ON GRADE. SEE STRUCTURAL DRAWINGS.
DM-30	EXISTING STRUCTURE TO BE REMOVED IN ITS ENTIRETY. SEE PLANS FOR EXTENT OF REMOVAL.
DM-31	REMOVE EXISTING COLUMN.
DM-32	REMOVE EXISTING FLOOR DRAIN. REFER TO PLUMBING DRAWINGS.
DM-33	REMOVE GAS SERVICE TO BUILDING. EXISTING TANKS TO BE REMOVED.
DM-35	REMOVE COUNTER AND ALL RELATED COMPONENTS.
DM-36	CAREFULLY REMOVE AND RELOCATE EXISTING WIRING, CONDUITS. SEE ELECTRICAL DRAWINGS.
DM-56	REMOVE EXISTING CONCRETE PAD.
DM-81	EXISTING DATA/ TELEPHONE COMMUNICATION CABLES TO BE SUPPORTED DURING CONSTRUCTION AND RELOCATED AS INDICATED.

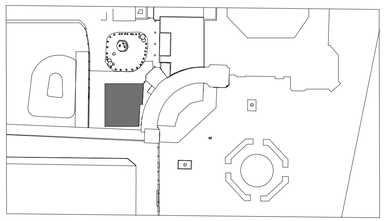

DEMO KEY PLAN

PN N

8/30/2022 2:50:56 PM

CONSULTANT INFORMATION

The LiRo Group

1 State Street Plaza, New York, NY, 10004
(516) 938-5476 www.liro.com

CONSULTANT SEAL

REGISTERED ARCHITECT ROBERT D. VOLKINGS 023220 STATE OF NEW YORK

REVISION NUMBER	DATE	MADE BY	APP'D BY	REVISION

RECORD DRAWING CERTIFICATION

☐ AS BUILT – CHANGES AS NOTED ☐ AS BUILT – NO CHANGES

CONTRACTOR
NAME
SIGNATURE
TITLE DATE

PROJECT COORDINATOR
NAME
SIGNATURE
TITLE DATE

WESTCHESTER COUNTY, NEW YORK
DEPARTMENT OF PUBLIC WORKS AND TRANSPORTATION
DIVISION OF ENGINEERING

INFRASTRUCTURE REHABILITATION
PLAYLAND PARK, RYE, NEW YORK
RESTAURANT KITCHEN WITH FOOD VENDING
GROUND FLOOR DEMOLITION PLAN

CONTRACT NUMBER	22-523
SHEET NUMBER	K-A-01
DWG NO.:	502 of 664
SCALE:	As indicated
DATE:	8/23/2022
DPW FILE NUMBER	1-118-A-1251-0
REV. NO.	0

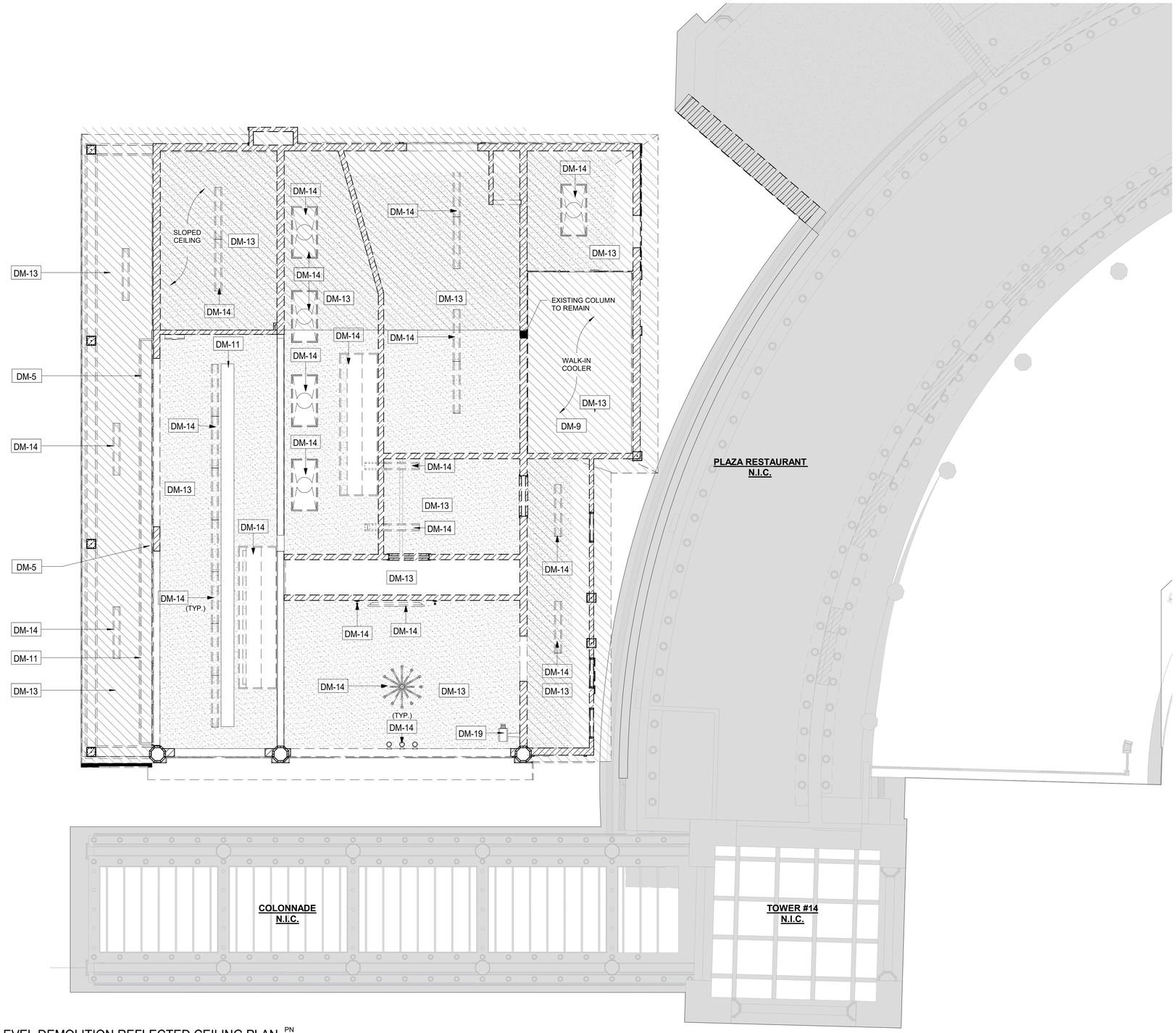

1 GROUND LEVEL DEMOLITION REFLECTED CEILING PLAN
1/4" = 1'-0"

DEMOLITION RCP GENERAL NOTES

1. ALL DEMOLITION AND REMOVAL WORK INCLUDES, BUT IS NOT LIMITED TO THE WORK INDICATED, NOTED, SPECIFIED, AND COORDINATED WITH WORK OF ALL OTHER TRADES, AS INDICATED ELSEWHERE, AND AS REQUIRED TO ACCOMODATE CONSTRUCTION.
2. PRIOR TO STARTING WORK, CONTRACTOR TO MAKE A THOROUGH EXAMINATION OF THE PORTIONS OF THE STRUCTURE IN WHICH THE WORK IS TO BE PERFORMED INCLUDING, BUT NOT LIMITED TO THE WORK AT ADJOINING OR UNDERLYING LOCATIONS. REPORT TO THE ARCHITECT ANY AND ALL CONDITIONS WHICH MAY INTERFERE WITH OR OTHERWISE PREVENT THE PROPER EXECUTION AND COMPLETION OF THE WORK. WORK SHALL NOT START UNTIL SUCH CONDITIONS HAVE BEEN EXAMINED AND MUTUALLY AGREED UPON WITH THE ARCHITECT.
3. DASHED LINES INDICATE WALLS, FIXTURES, EQUIPMENT, ETC. TO BE REMOVED AND DISPOSED OF BY G.C.
4. ANY QUESTIONS ON SCOPE OF DEMOLITION MUST BE DIRECTED TO THE ARCHITECT PRIOR TO BID. SHOULD QUESTIONS OR DISCREPANCIES ARISE, THE CONTRACTOR SHALL NOTIFY THE ARCHITECT, IN WRITING, PRIOR TO PROCEEDING WITH DEMOLITION.
5. ALL DIMENSIONS, LOCATIONS AND/OR ELEVATIONS OF EXISTING CONSTRUCTION CONDITIONS ARE APPROXOMATE. CONTRACTOR TO VERIFIED EXISTING CONDITIONS PRIOR TO THE START OF WORK.
6. CONTRACTOR(S) ARE RESPONSIBLE FOR SHORING, BRACING AND UNDERPINNING RELATED TO THE DEMOLITION, REMOVAL OR CUTTING OF AN WALL, PARTITION, OR ANY OTHER LOAD-BEARING OR STRUCTURAL ELEMENT.
7. ALTER AND RESTORE EXISTING WALLS, PARTITIONS, COLUMNS, CEILING AND FLOORS, AND THEIR RESPECTIVE FINISHED SURFACES TO ACCOMMODATE NEW CONSTRUCTION AND FINISHES, IN ACCORDANCE WITH DRAWINGS AND SPECIFICATIONS.
8. IMMEDIATELY NOTIFY THE OWNER'S REPRESENTATIVES OF ANY HAZARDOUS MATERIALS ENCOUNTERED DURING DEMOLITION/REMOVAL.
9. CONTAINERIZED DEMOLITION DEBRIS SHALL BE TCLP TESTED TO CONFIRM WASTE MAY BE DISPOSED OF AS NON-HAZARDOUS.
10. ALL ITEMS SCHEDULED FOR DEMOLITION SHALL BE REMOVED FROM THE SITE UNLESS OTHERWISE NOTED. CONTRACTOR SHALL BE RESPONSIBLE FOR CLEANING OF SITE ON A DAILY BASIS.
11. REFER TO ELECTRICAL, MECHANICAL, STRUCTURAL, PLUMBING, ETC. DEMOLITION DRAWINGS FOR ADDITIONAL ITEMS.
12. PATCH AND REPAIR SURFACES (FLOOR, WALL, CEILING) DAMAGED IN PREPARATION FOR NEW EQUIPMENT AND FINISHES.

DEMOLITION LEGEND

INDICATES REMOVAL

N.I.C — NOT IN CONTRACT

Key Value	Keynote Text
DM-5	REMOVE COLUMN ENCLOSURES. CAREFULLY REMOVE AT LEAST ONE COLUMN ENCLOSURE TO USE AS REFERENCE IN ORDER TO REPLICATE TRIMS TO MATCH LOCATION, SIZE AND SHAPE AS INDICATED. COORDINATE WITH STRUCTURAL DRAWINGS.
DM-9	CONTRACTOR TO REMOVE ANY REMAINING EQUIPMENT AND BUILDING CONTENT. CONTENT MAY INCLUDE BUT NOT LIMITED TO REFRIGERATOR, STORAGE, RACKS, AC UNITS, GAMES ETC.
DM-11	CAREFULLY REMOVE AND RETURN TO OWNER ALL EXISTING SIGNAGE AND LETTERING. COORDINATE SIGNAGE REMOVAL WITH OWNER PRIOR TO REMOVAL OF ANY SIGNAGE.
DM-13	REMOVE EXISTING CEILING AND ALL ACCESSORIES AND EQUIPMENT.
DM-14	REMOVE EXISTING LIGHTING FIXTURES AND ELECTRICAL WIRING CONNECTED TO THESE FIXTURES. SEE ELECTRICAL FOR DETAILS.
DM-19	DISCONNECT AND REMOVE EXISTING SUSPENDED EQUIPMENT SUCH AS CAMERAS, SPEAKERS, ETC. SEE ELECTRICAL DRAWINGS FOR DETAILS.
DM-54	CONTRACTOR TO CAREFULLY REMOVE, STORE AND CATALOG EXISTING "LANTERN" STYLE FIXTURE FOR REPLICATION. (TO BE UPDATED)

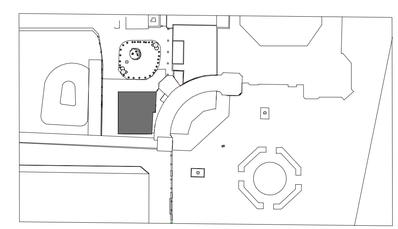

DEMO KEY PLAN

8/30/2022 2:51:05 PM

CONSULTANT INFORMATION
The LiRo Group
1 State Street Plaza, New York, NY, 10004
(516) 938-5476 www.liro.com

CONSULTANT SEAL
REGISTERED ARCHITECT ROBERT D. YOUNG 023290 STATE OF NEW YORK

REVISION NUMBER	DATE	MADE BY	APP'D BY	REVISION

RECORD DRAWING CERTIFICATION
☐ AS BUILT – CHANGES AS NOTED ☐ AS BUILT – NO CHANGES

CONTRACTOR
NAME
SIGNATURE
TITLE DATE

PROJECT COORDINATOR
NAME
SIGNATURE
TITLE DATE

WESTCHESTER COUNTY, NEW YORK
DEPARTMENT OF PUBLIC WORKS AND TRANSPORTATION
DIVISION OF ENGINEERING

INFRASTRUCTURE REHABILITATION
PLAYLAND PARK, RYE, NEW YORK
RESTAURANT KITCHEN WITH FOOD VENDING
GROUND FLOOR DEMOLITION- REFLECTED CEILING PLANS

CONTRACT NUMBER	22-523
SHEET NUMBER	K-A-02
DWG NO.:	503 of 664
SCALE:	As indicated
DATE:	8/23/20223
DPW FILE NUMBER	1-118-A-1252-0
REV. NO.	0

1 ROOF LEVEL DEMOLITION PLAN
1/4" = 1'-0"

PN
N

DEMOLITION GENERAL NOTES

1. ALL DEMOLITION AND REMOVAL WORK INCLUDES, BUT IS NOT LIMITED TO THE WORK INDICATED, NOTED, SPECIFIED, AND COORDINATED WITH WORK OF ALL OTHER TRADES, AS INDICATED ELSEWHERE, AND AS REQUIRED TO ACCOMODATE CONSTRUCTION.
2. PRIOR TO STARTING WORK, CONTRACTOR TO MAKE A THOROUGH EXAMINATION OF THE PORTIONS OF THE STRUCTURE IN WHICH THE WORK IS TO BE PERFORMED INCLUDING, BUT NOT LIMITED TO THE WORK AT ADJOINING OR UNDERLYING LOCATIONS. REPORT TO THE ARCHITECT ANY AND ALL CONDITIONS WHICH MAY INTERFERE WITH OR OTHERWISE PREVENT THE PROPER EXECUTION AND COMPLETION OF THE WORK. WORK SHALL NOT START UNTIL SUCH CONDITIONS HAVE BEEN EXAMINED AND MUTUALLY AGREED UPON WITH THE ARCHITECT.
3. DASHED LINES INDICATE WALLS, FIXTURES, EQUIPMENT, ETC. TO BE REMOVED AND DISPOSED OF BY G.C.
4. ANY QUESTIONS ON SCOPE OF DEMOLITION MUST BE DIRECTED TO THE ARCHITECT PRIOR TO BID. SHOULD QUESTIONS OR DISCREPANCIES ARISE, THE CONTRACTOR SHALL NOTIFY THE ARCHITECT, IN WRITING, PRIOR TO PROCEEDING WITH DEMOLITION.
5. ALL DIMENSIONS, LOCATIONS AND/OR ELEVATIONS OF EXISTING CONSTRUCTION CONDITIONS ARE APPROXOMATE. CONTRACTOR TO VERIFIED EXISTING CONDITIONS PRIOR TO THE START OF WORK.
6. CONTRACTOR(S) ARE RESPONSIBLE FOR SHORING, BRACING AND UNDERPINNING RELATED TO THE DEMOLITION, REMOVAL OR CUTTING OF AN WALL, PARTITION, OR ANY OTHER LOAD-BEARING OR STRUCTURAL ELEMENT.
7. ALTER AND RESTORE EXISTING WALLS, PARTITIONS, COLUMNS, CEILING AND FLOORS, AND THEIR RESPECTIVE FINISHED SURFACES TO ACCOMMODATE NEW CONSTRUCTION AND FINISHES, IN ACCORDANCE WITH DRAWINGS AND SPECIFICATIONS.
8. IMMEDIATELY NOTIFY THE OWNER'S REPRESENTATIVES OF ANY HAZARDOUS MATERIALS ENCOUNTERED DURING DEMOLITION/REMOVAL.
9. CONTAINERIZED DEMOLITION DEBRIS SHALL BE TCLP TESTED TO CONFIRM WASTE MAY BE DISPOSED OF AS NON-HAZARDOUS.
10. ALL ITEMS SCHEDULED FOR DEMOLITION SHALL BE REMOVED FROM THE SITE UNLESS OTHERWISE NOTED. CONTRACTOR SHALL BE RESPONSIBLE FOR CLEANING OF SITE ON A DAILY BASIS.
11. REFER TO ELECTRICAL, MECHANICAL, STRUCTURAL, PLUMBING, ETC. DEMOLITION DRAWINGS FOR ADDITIONAL ITEMS.
12. PATCH AND REPAIR SURFACES (FLOOR, WALL, CEILING) DAMAGED IN PREPARATION FOR NEW EQUIPMENT AND FINISHES.

DEMOLITION LEGEND

INDICATES REMOVAL

N.I.C — NOT IN CONTRACT

Key Value	Keynote Text
DM-11	CAREFULLY REMOVE AND RETURN TO OWNER ALL EXISTING SIGNAGE AND LETTERING. COORDINATE SIGNAGE REMOVAL WITH OWNER PRIOR TO REMOVAL OF ANY SIGNAGE.
DM-16	REMOVE EXISTING ROOFING SHINGLES, UNDERLAYMENT AND ANY ROTTED WOOD SHEATHING. REPLACE DAMAGED SHEATHING TO MATCH EXISTING. COORDINATE WITH A/E.
DM-20	ROOFTOP EQUIPMENT TO BE REMOVED. SEE MECHANICAL & STRUCTURAL DRAWINGS. CONTRACTOR SHALL PATCH EXISTING ROOF PENETRATION TO MATCH EXISTING ROOF.
DM-24	REMOVE EXISTING EXHAUST. SEE MECHANICAL DRAWINGS.
DM-30	EXISTING STRUCTURE TO BE REMOVED IN ITS ENTIRETY. SEE PLANS FOR EXTENT OF REMOVAL.
DM-33	REMOVE GAS SERVICE TO BUILDING. EXISTING TANKS TO BE REMOVED.
DM-36	CAREFULLY REMOVE AND RELOCATE EXISTING WIRING, CONDUITS. SEE ELECTRICAL DRAWINGS.
DM-53	REMOVE EXISTING AWNING. PROVIDE FOR DELIVERY TO THE OWNER AS DIRECTED BY THE A/E.

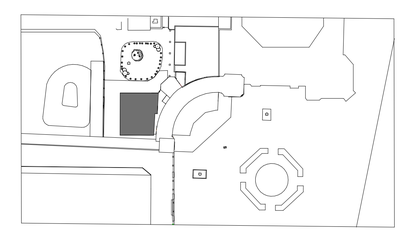

DEMO KEY PLAN

PN
N

8/30/2022 2:51:09 PM

CONSULTANT INFORMATION
The LiRo Group
1 State Street Plaza, New York, NY, 10004
(516) 938-5476 www.liro.com

CONSULTANT SEAL
REGISTERED ARCHITECT ROBERT D. YOUNG JR. 023280 STATE OF NEW YORK

REVISION NUMBER	DATE	MADE BY	APP'D BY	REVISION

RECORD DRAWING CERTIFICATION
☐ AS BUILT – CHANGES AS NOTED ☐ AS BUILT – NO CHANGES

CONTRACTOR
NAME
SIGNATURE
TITLE DATE

PROJECT COORDINATOR
NAME
SIGNATURE
TITLE DATE

WESTCHESTER COUNTY, NEW YORK
DEPARTMENT OF PUBLIC WORKS AND TRANSPORTATION
DIVISION OF ENGINEERING

INFRASTRUCTURE REHABILITATION
PLAYLAND PARK, RYE, NEW YORK
RESTAURANT KITCHEN WITH FOOD VENDING
ROOF DEMOLITION PLAN

CONTRACT NUMBER **22-523**
SHEET NUMBER **K-A-03**
DWG NO.: 504 of 664
SCALE: **As indicated**
DATE: **8/23/20223**
DPW FILE NUMBER **1-118-A-1253-0**
REV. NO. 0

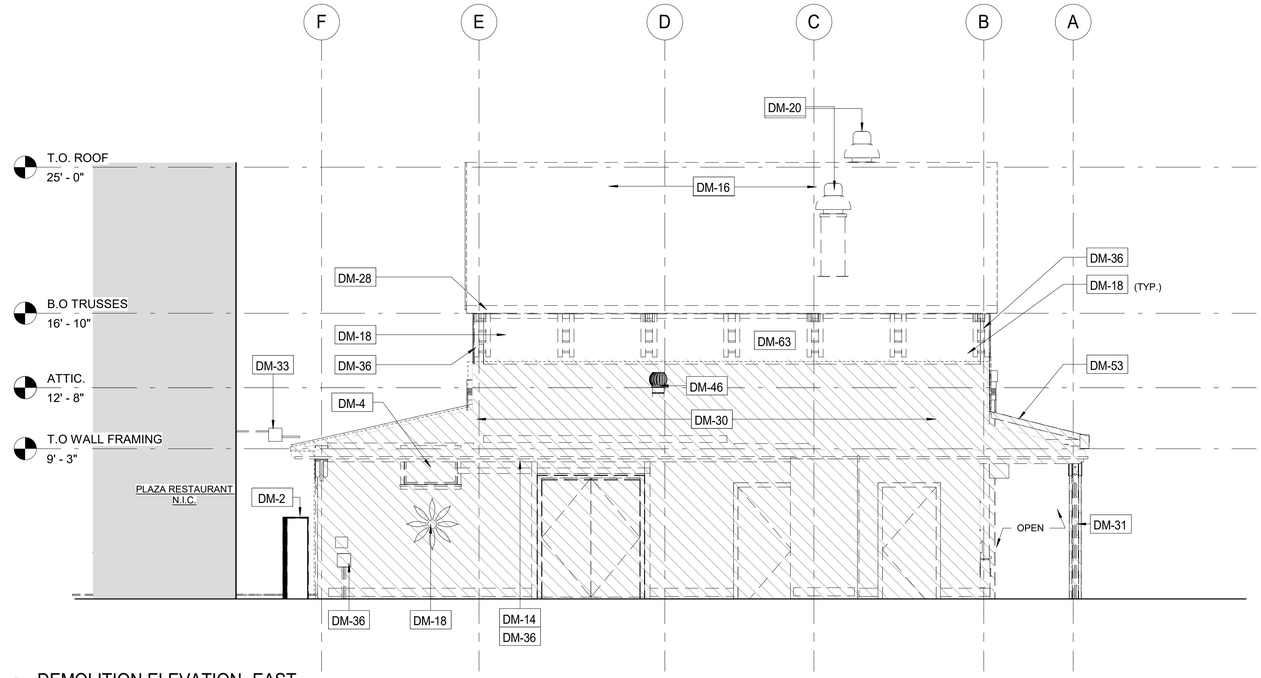

1 DEMOLITION ELEVATION- EAST
1/4" = 1'-0"

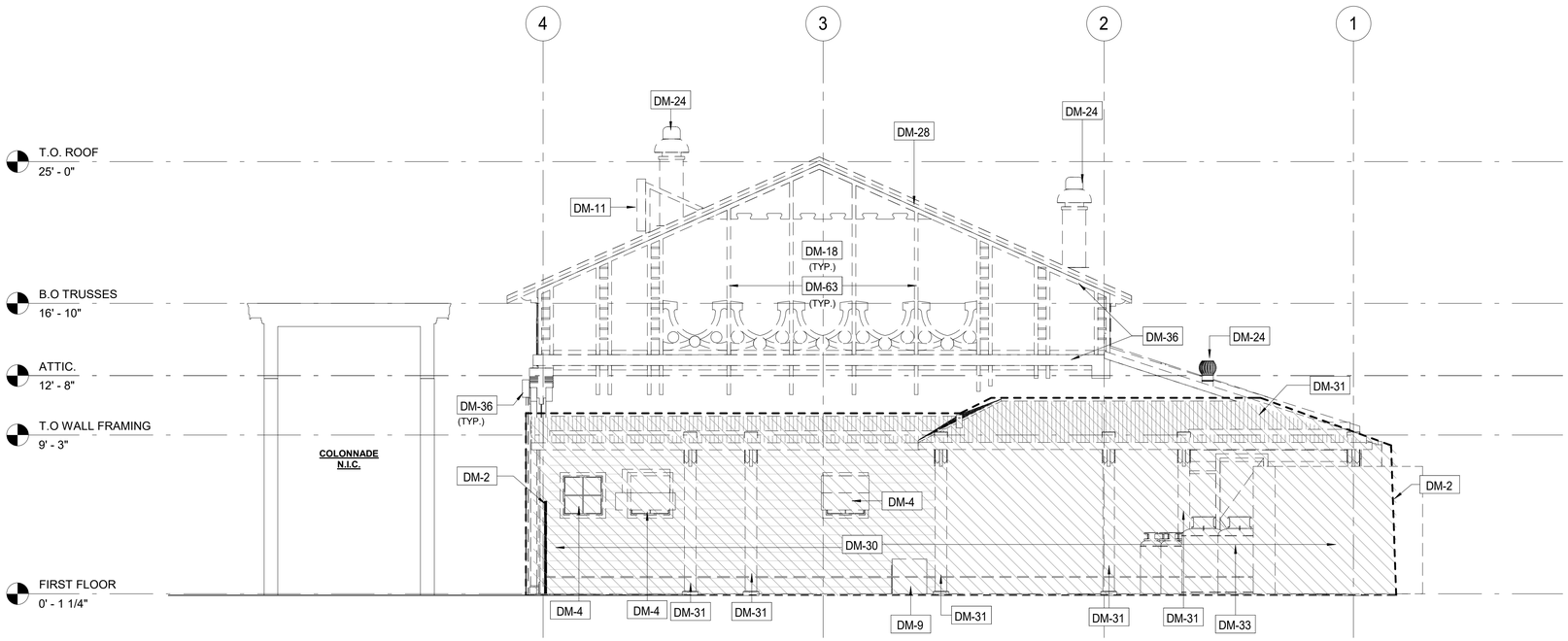

2 DEMOLITION ELEVATION- SOUTH
1/4" = 1'-0"

DEMOLITION GENERAL NOTES

1. ALL DEMOLITION AND REMOVAL WORK INCLUDES, BUT IS NOT LIMITED TO THE WORK INDICATED, NOTED, SPECIFIED, AND COORDINATED WITH WORK OF ALL OTHER TRADES, AS INDICATED ELSEWHERE, AND AS REQUIRED TO ACCOMODATE CONSTRUCTION.
2. PRIOR TO STARTING WORK, CONTRACTOR TO MAKE A THOROUGH EXAMINATION OF THE PORTIONS OF THE STRUCTURE IN WHICH THE WORK IS TO BE PERFORMED INCLUDING, BUT NOT LIMITED TO THE WORK AT ADJOINING OR UNDERLYING LOCATIONS. REPORT TO THE ARCHITECT ANY AND ALL CONDITIONS WHICH MAY INTERFERE WITH OR OTHERWISE PREVENT THE PROPER EXECUTION AND COMPLETION OF THE WORK. WORK SHALL NOT START UNTIL SUCH CONDITIONS HAVE BEEN EXAMINED AND MUTUALLY AGREED UPON WITH THE ARCHITECT.
3. DASHED LINES INDICATE WALLS, FIXTURES, EQUIPMENT, ETC. TO BE REMOVED AND DISPOSED OF BY G.C.
4. ANY QUESTIONS ON SCOPE OF DEMOLITION MUST BE DIRECTED TO THE ARCHITECT PRIOR TO BID. SHOULD QUESTIONS OR DISCREPANCIES ARISE, THE CONTRACTOR SHALL NOTIFY THE ARCHITECT, IN WRITING, PRIOR TO PROCEEDING WITH DEMOLITION.
5. ALL DIMENSIONS, LOCATIONS AND/OR ELEVATIONS OF EXISTING CONSTRUCTION CONDITIONS ARE APPROXOMATE. CONTRACTOR TO VERIFIED EXISTING CONDITIONS PRIOR TO THE START OF WORK.
6. CONTRACTOR(S) ARE RESPONSIBLE FOR SHORING, BRACING AND UNDERPINNING RELATED TO THE DEMOLITION, REMOVAL OR CUTTING OF AN WALL, PARTITION, OR ANY OTHER LOAD-BEARING OR STRUCTURAL ELEMENT.
7. ALTER AND RESTORE EXISTING WALLS, PARTITIONS, COLUMNS, CEILING AND FLOORS, AND THEIR RESPECTIVE FINISHED SURFACES TO ACCOMMODATE NEW CONSTRUCTION AND FINISHES, IN ACCORDANCE WITH DRAWINGS AND SPECIFICATIONS.
8. IMMEDIATELY NOTIFY THE OWNER'S REPRESENTATIVES OF ANY HAZARDOUS MATERIALS ENCOUNTERED DURING DEMOLITION/REMOVAL.
9. CONTAINERIZED DEMOLITION DEBRIS SHALL BE TCLP TESTED TO CONFIRM WASTE MAY BE DISPOSED OF AS NON-HAZARDOUS.
10. ALL ITEMS SCHEDULED FOR DEMOLITION SHALL BE REMOVED FROM THE SITE UNLESS OTHERWISE NOTED. CONTRACTOR SHALL BE RESPONSIBLE FOR CLEANING OF SITE ON A DAILY BASIS.
11. REFER TO ELECTRICAL, MECHANICAL, STRUCTURAL, PLUMBING, ETC. DEMOLITION DRAWINGS FOR ADDITIONAL ITEMS.
12. PATCH AND REPAIR SURFACES (FLOOR, WALL, CEILING) DAMAGED IN PREPARATION FOR NEW EQUIPMENT AND FINISHES.

DEMOLITION LEGEND

INDICATES REMOVAL

N.I.C — NOT IN CONTRACT

Key Value	Keynote Text
DM-2	REMOVE EXISTING GATE.
DM-4	REMOVE EXISTING WINDOW & FRAME.
DM-9	CONTRACTOR TO REMOVE ANY REMAINING EQUIPMENT AND BUILDING CONTENT. CONTENT MAY INCLUDE BUT NOT LIMITED TO REFRIGERATOR, STORAGE, RACKS, AC UNITS, GAMES ETC.
DM-11	CAREFULLY REMOVE AND RETURN TO OWNER ALL EXISTING SIGNAGE AND LETTERING. COORDINATE SIGNAGE REMOVAL WITH OWNER PRIOR TO REMOVAL OF ANY SIGNAGE.
DM-14	REMOVE EXISTING LIGHTING FIXTURES AND ELECTRICAL WIRING CONNECTED TO THESE FIXTURES. SEE ELECTRICAL FOR DETAILS.
DM-16	REMOVE EXISTING ROOFING SHINGLES, UNDERLAYMENT AND ANY ROTTED WOOD SHEATHING. REPLACE DAMAGED SHEATHING TO MATCH EXISTING. COORDINATE WITH A/E.
DM-18	REMOVE EXISTING PANELS & TRIMS.
DM-20	ROOFTOP EQUIPMENT TO BE REMOVED. SEE MECHANICAL & STRUCTURAL DRAWINGS. CONTRACTOR SHALL PATCH EXISTING ROOF PENETRATION TO MATCH EXISTING ROOF.
DM-24	REMOVE EXISTING EXHAUST. SEE MECHANICAL DRAWINGS.
DM-28	REMOVE EXISTING GUTTER, FASCIA, AND SOFFITS.
DM-30	EXISTING STRUCTURE TO BE REMOVED IN ITS ENTIRETY. SEE PLANS FOR EXTENT OF REMOVAL.
DM-31	REMOVE EXISTING COLUMN.
DM-33	REMOVE GAS SERVICE TO BUILDING. EXISTING TANKS TO BE REMOVED.
DM-36	CAREFULLY REMOVE AND RELOCATE EXISTING WIRING, CONDUITS. SEE ELECTRICAL DRAWINGS.
DM-46	EXISTING ELECTRICAL EQUIPMENT TO BE PROTECTED DURING CONSTRUCTION.
DM-53	REMOVE EXISTING AWNING. PROVIDE FOR DELIVERY TO THE OWNER AS DIRECTED BY THE A/E.
DM-63	CONTRACTOR TO CAREFULLY DOCUMENT AND REMOVE ALL EXISTING FACADE MATERIALS AND TRIM.

8/30/2022 2:51:11 PM

CONSULTANT INFORMATION

The LiRo Group

1 State Street Plaza, New York, NY, 10004
(516) 938-5476 www.liro.com

CONSULTANT SEAL

REGISTERED ARCHITECT ROBERT D. CORNING 023220 STATE OF NEW YORK

REVISION NUMBER	DATE	MADE BY	APP'D BY	REVISION

RECORD DRAWING CERTIFICATION

☐ AS BUILT – CHANGES AS NOTED ☐ AS BUILT – NO CHANGES

CONTRACTOR
NAME
SIGNATURE
TITLE DATE

PROJECT COORDINATOR
NAME
SIGNATURE
TITLE DATE

WESTCHESTER COUNTY, NEW YORK
DEPARTMENT OF PUBLIC WORKS AND TRANSPORTATION
DIVISION OF ENGINEERING

INFRASTRUCTURE REHABILITATION
PLAYLAND PARK, RYE, NEW YORK
RESTAURANT KITCHEN WITH FOOD VENDING
EXTERIOR DEMOLITION ELEVATIONS

CONTRACT NUMBER	22-523
SHEET NUMBER	K-A-04
DWG NO.:	505 of 664
SCALE:	1/4" = 1'-0"
DATE:	8/23/20223
DPW FILE NUMBER	1-118-A-1254-0
REV. NO.	0

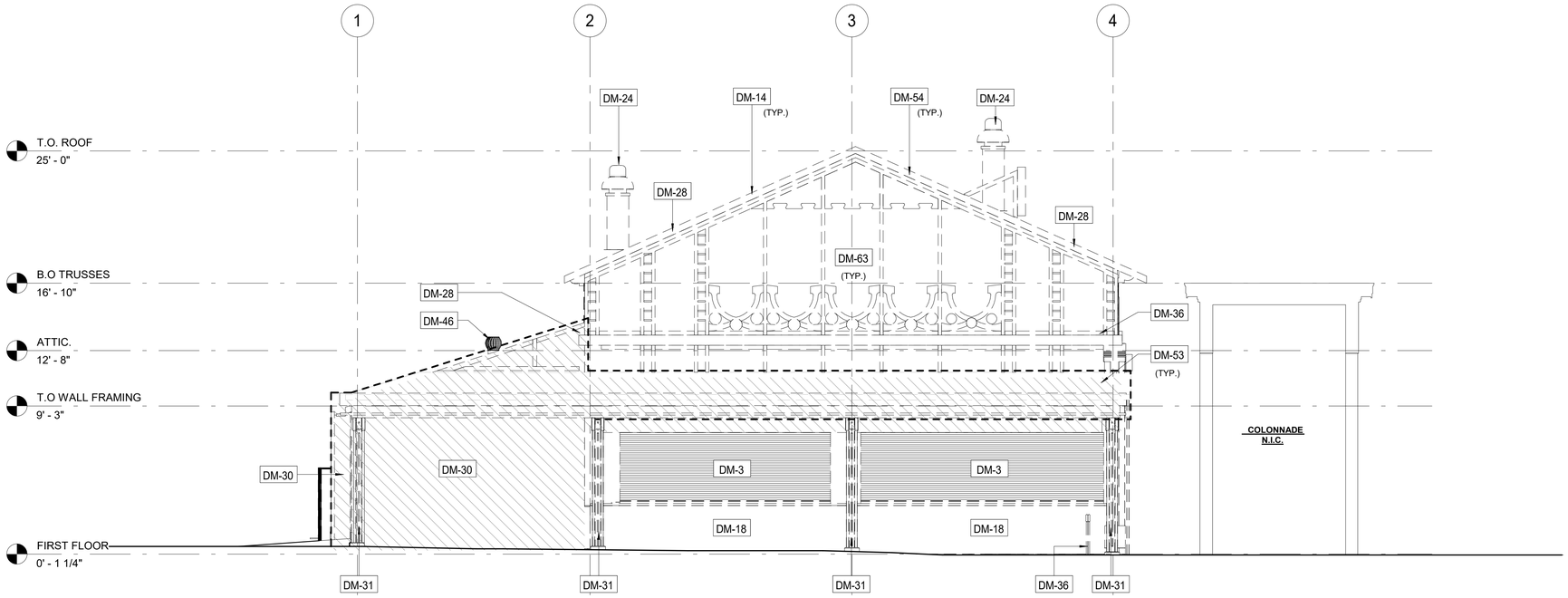

1 DEMOLITION ELEVATION- NORTH
1/4" = 1'-0"

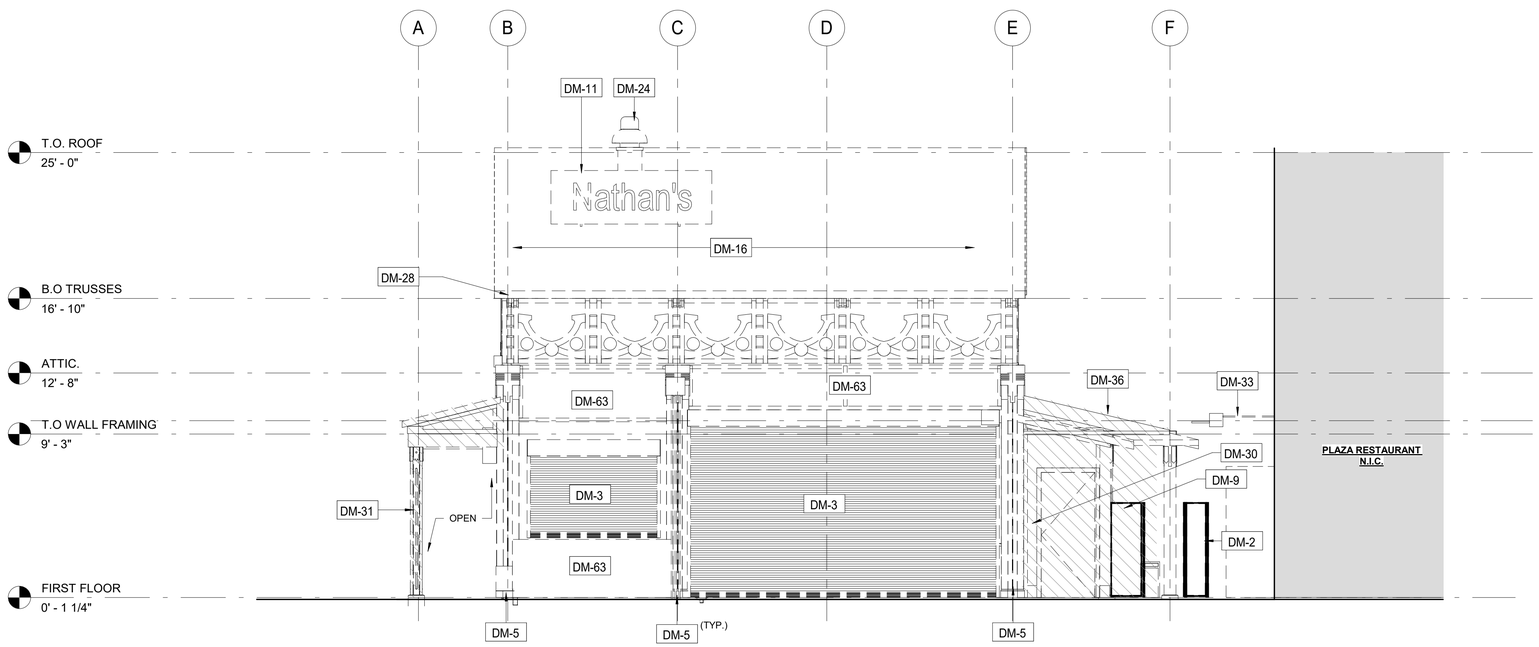

2 DEMOLITION ELEVATION- WEST
1/4" = 1'-0"

DEMOLITION GENERAL NOTES

1. ALL DEMOLITION AND REMOVAL WORK INCLUDES, BUT IS NOT LIMITED TO THE WORK INDICATED, NOTED, SPECIFIED, AND COORDINATED WITH WORK OF ALL OTHER TRADES, AS INDICATED ELSEWHERE, AND AS REQUIRED TO ACCOMODATE CONSTRUCTION.
2. PRIOR TO STARTING WORK, CONTRACTOR TO MAKE A THOROUGH EXAMINATION OF THE PORTIONS OF THE STRUCTURE IN WHICH THE WORK IS TO BE PERFORMED INCLUDING, BUT NOT LIMITED TO THE WORK AT ADJOINING OR UNDERLYING LOCATIONS. REPORT TO THE ARCHITECT ANY AND ALL CONDITIONS WHICH MAY INTERFERE WITH OR OTHERWISE PREVENT THE PROPER EXECUTION AND COMPLETION OF THE WORK. WORK SHALL NOT START UNTIL SUCH CONDITIONS HAVE BEEN EXAMINED AND MUTUALLY AGREED UPON WITH THE ARCHITECT.
3. DASHED LINES INDICATE WALLS, FIXTURES, EQUIPMENT, ETC. TO BE REMOVED AND DISPOSED OF BY G.C.
4. ANY QUESTIONS ON SCOPE OF DEMOLITION MUST BE DIRECTED TO THE ARCHITECT PRIOR TO BID. SHOULD QUESTIONS OR DISCREPANCIES ARISE, THE CONTRACTOR SHALL NOTIFY THE ARCHITECT, IN WRITING, PRIOR TO PROCEEDING WITH DEMOLITION.
5. ALL DIMENSIONS, LOCATIONS AND/OR ELEVATIONS OF EXISTING CONSTRUCTION CONDITIONS ARE APPROXOMATE. CONTRACTOR TO VERIFIED EXISTING CONDITIONS PRIOR TO THE START OF WORK.
6. CONTRACTOR(S) ARE RESPONSIBLE FOR SHORING, BRACING AND UNDERPINNING RELATED TO THE DEMOLITION, REMOVAL OR CUTTING OF AN WALL, PARTITION, OR ANY OTHER LOAD-BEARING OR STRUCTURAL ELEMENT.
7. ALTER AND RESTORE EXISTING WALLS, PARTITIONS, COLUMNS, CEILING AND FLOORS, AND THEIR RESPECTIVE FINISHED SURFACES TO ACCOMMODATE NEW CONSTRUCTION AND FINISHES, IN ACCORDANCE WITH DRAWINGS AND SPECIFICATIONS.
8. IMMEDIATELY NOTIFY THE OWNER'S REPRESENTATIVES OF ANY HAZARDOUS MATERIALS ENCOUNTERED DURING DEMOLITION/REMOVAL.
9. CONTAINERIZED DEMOLITION DEBRIS SHALL BE TCLP TESTED TO CONFIRM WASTE MAY BE DISPOSED OF AS NON-HAZARDOUS.
10. ALL ITEMS SCHEDULED FOR DEMOLITION SHALL BE REMOVED FROM THE SITE UNLESS OTHERWISE NOTED. CONTRACTOR SHALL BE RESPONSIBLE FOR CLEANING OF SITE ON A DAILY BASIS.
11. REFER TO ELECTRICAL, MECHANICAL, STRUCTURAL, PLUMBING, ETC. DEMOLITION DRAWINGS FOR ADDITIONAL ITEMS.
12. PATCH AND REPAIR SURFACES (FLOOR, WALL, CEILING) DAMAGED IN PREPARATION FOR NEW EQUIPMENT AND FINISHES.

DEMOLITION LEGEND

INDICATES REMOVAL

N.I.C — NOT IN CONTRACT

Key Value	Keynote Text
DM-2	REMOVE EXISTING GATE.
DM-3	REMOVE ROLL DOWN DOOR AND ASSOCIATED HARDWARE.
DM-5	REMOVE COLUMN ENCLOSURES. CAREFULLY REMOVE AT LEAST ONE COLUMN ENCLOSURE TO USE AS REFERENCE IN ORDER TO REPLICATE TRIMS TO MATCH LOCATION, SIZE AND SHAPE AS INDICATED. COORDINATE WITH STRUCTURAL DRAWINGS.
DM-9	CONTRACTOR TO REMOVE ANY REMAINING EQUIPMENT AND BUILDING CONTENT. CONTENT MAY INCLUDE BUT NOT LIMITED TO REFRIGERATOR, STORAGE, RACKS, AC UNITS, GAMES ETC.
DM-11	CAREFULLY REMOVE AND RETURN TO OWNER ALL EXISTING SIGNAGE AND LETTERING. COORDINATE SIGNAGE REMOVAL WITH OWNER PRIOR TO REMOVAL OF ANY SIGNAGE.
DM-14	REMOVE EXISTING LIGHTING FIXTURES AND ELECTRICAL WIRING CONNECTED TO THESE FIXTURES. SEE ELECTRICAL FOR DETAILS.
DM-16	REMOVE EXISTING ROOFING SHINGLES, UNDERLAYMENT AND ANY ROTTED WOOD SHEATHING. REPLACE DAMAGED SHEATHING TO MATCH EXISTING. COORDINATE WITH A/E.
DM-18	REMOVE EXISTING PANELS & TRIMS.
DM-24	REMOVE EXISTING EXHAUST. SEE MECHANICAL DRAWINGS.
DM-28	REMOVE EXISTING GUTTER, FASCIA, AND SOFFITS.
DM-30	EXISTING STRUCTURE TO BE REMOVED IN ITS ENTIRETY. SEE PLANS FOR EXTENT OF REMOVAL.
DM-31	REMOVE EXISTING COLUMN.
DM-33	REMOVE GAS SERVICE TO BUILDING. EXISTING TANKS TO BE REMOVED.
DM-36	CAREFULLY REMOVE AND RELOCATE EXISTING WIRING, CONDUITS. SEE ELECTRICAL DRAWINGS.
DM-46	EXISTING ELECTRICAL EQUIPMENT TO BE PROTECTED DURING CONSTRUCTION.
DM-53	REMOVE EXISTING AWNING. PROVIDE FOR DELIVERY TO THE OWNER AS DIRECTED BY THE A/E.
DM-54	CONTRACTOR TO CAREFULLY REMOVE, STORE AND CATALOG EXISTING "LANTERN" STYLE FIXTURE FOR REPLICATION. (TO BE UPDATED)
DM-63	CONTRACTOR TO CAREFULLY DOCUMENT AND REMOVE ALL EXISTING FACADE MATERIALS AND TRIM.

8/30/2022 2:51:13 PM

CONSULTANT INFORMATION

The LiRo Group

1 State Street Plaza, New York, NY, 10004
(516) 938-5476 www.liro.com

CONSULTANT SEAL

REGISTERED ARCHITECT ROBERT D. YOUNG 023280 STATE OF NEW YORK

REVISION NUMBER	DATE	MADE BY	APP'D BY	REVISION

RECORD DRAWING CERTIFICATION

☐ AS BUILT – CHANGES AS NOTED ☐ AS BUILT – NO CHANGES

CONTRACTOR
NAME
SIGNATURE
TITLE DATE

PROJECT COORDINATOR
NAME
SIGNATURE
TITLE DATE

WESTCHESTER COUNTY, NEW YORK
DEPARTMENT OF PUBLIC WORKS AND TRANSPORTATION
DIVISION OF ENGINEERING

INFRASTRUCTURE REHABILITATION
PLAYLAND PARK, RYE, NEW YORK
RESTAURANT KITCHEN WITH FOOD VENDING
EXTERIOR DEMOLITION ELEVATIONS

CONTRACT NUMBER **22-523**
SHEET NUMBER **K-A-05**
DWG NO.: 506 of 664
SCALE: **1/4" = 1'-0"**
DATE: **8/23/20223**
DPW FILE NUMBER **1-118-A-1255-0**
REV. NO. 0

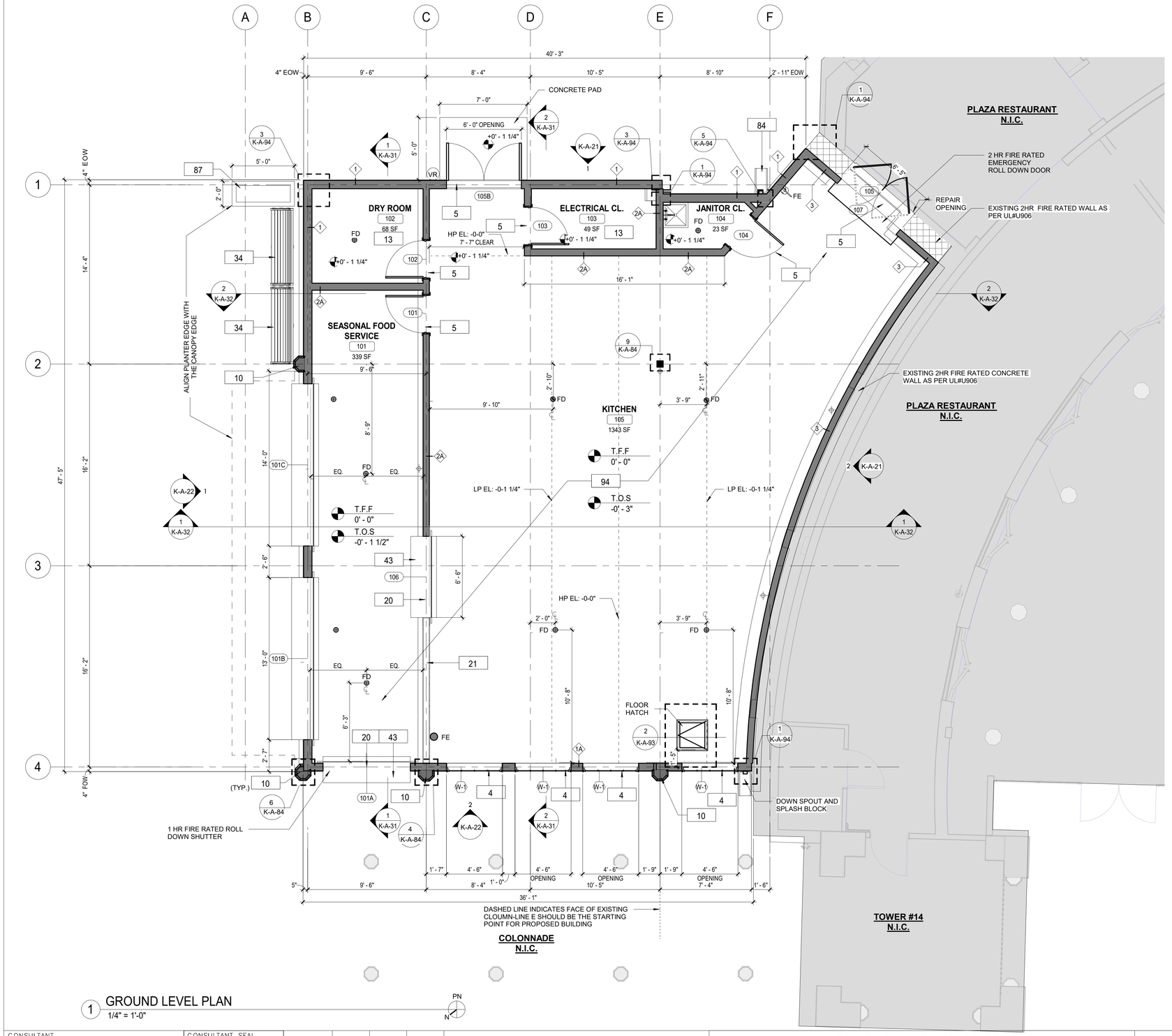

1 GROUND LEVEL PLAN
1/4" = 1'-0"

FLOOR PLAN GENERAL NOTES

1. DIMENSIONS ARE TO FACE OF GYPSUM WALL BOARD, FACE OF EXISTING WALL, GRID LINES, OR CENTERLINE OF COLUMN. ALL ELEVATIONS ARE NOTED FROM FINISH FLOOR ELEVATIONS.
2. PROVIDE DRYWALL TRIM AT ALL EXPOSED EDGES AND CORNERS.
3. PROVIDE METAL BLOCKING FOR ANY WALL MOUNTED EQUIPMENT OR ACCESSORIES. COORDINATE ALL BLOCKING REQUIREMENTS NECESSARY WITH OTHER TRADES.
4. THE G.C. SHALL VERIFY DIMENSIONS OF THE EXISTING SPACE AND OF ANY EXISTING CONSTRUCTION TO REMAIN BY ACTUAL MEASUREMENT BEFORE ANY WORK IS PERFORMED. IF ANY MEASUREMENTS DIFFER FROM DIMENSIONS SHOWN ON PLAN, G.C. IS TO NOTIFY THE ARCHITECT IMMEDIATELY. THE G.C. SHALL BE RESPONSIBLE FOR CORRECTING ANY AND ALL DISCREPANCIES FOUND AFTER THE WORK IS PERFORMED, AT NO ADDITIONAL EXPENSE TO THE OWNER.
5. G.C. TO VERIFY ALL FINISHED DIMENSIONS. FIELD CONDITIONS ALTERING ANY DIMENSIONS SHOULD BE BROUGHT TO THE ATTENTION OF THE OWNER AND ARCHITECT.
6. THE G.C. SHALL PROVIDE CAULK JOINTS WHERE GYP. BD. MEETS THE FLOOR OR ROOF DECK.
7. THE G.C. SHALL BE RESPONSIBLE FOR COORDINATING WITH OWNER ON ALL WORK TO BE PERFORMED BY THE OWNER. ANY POTENTIAL CONFLICTS OR DELAYS CAUSED BY THE OWNER'S SUBCONTRACTORS MUST BE DOCUMENTED IN WRITING TO THE OWNER BEFORE THE DELAY IS ACTUALLY INCURRED FOR IT TO BE CONSIDERED. OTHERWISE THE G.C. WILL BE RESPONSIBLE FOR MEETING THE SCHEDULE AS OUTLINED IN THE CONTRACT.
8. THE G.C. SHALL SUPPLY ALL MATERIAL, LABOR, AND COORDINATION REQUIRED FOR THE INSTALLATION OF ALL OWNER-SUPPLIED ITEMS AS DESCRIBED IN THE DOCUMENTS, U.N.O.
9. THE G.C. IS RESPONSIBLE FOR ALL FLOOR AND WALL PENETRATIONS FOR ELECTRICAL AND MECHANICAL WORK. ALL SUCH OPENING SHALL BE FRAMED AND REINFORCED.
10. FLOOR SURFACES SHALL BE LEVELED TO ASSURE SMOOTH SURFACE FOR FINISH FLOOR INSTALLATION. G.C. SHALL ALSO PAY SPECIAL ATTENTION THAT ALL WALL SURFACES ARE SMOOTH WHERE MURALS WILL BE DIRECTLY APPLIED TO WALL.
11. G.C. TO COORDINATE ALL UTILITY STUB-UPS AND LOCATION OF ALL EQUIPMENT PRIOR TO INSTALLING ANY ONE ITEM.
12. REFER TO SHEET K-A-94 FOR PARTITION TYPE INFORMATION.
13. PROVIDE PAINTED ACCESS PANELS IN WALLS & CEILING AT CONCEALED ITEMS. SUCH AS VALVES, CONTROLS, SWITCHES OR ANY OTHER ITEMS THAT REQUIRES ACCESS. G.C. TO DETERMINE ACCESS PANEL LOCATION W/ ARCHITECT PRIOR TO INSTALLATION.

CONSTRUCTION LEGEND

	NOT IN CONTRACT		NEW CONSTRUCTION	101	DOOR TAG
?	KEY NOTES	?	PLUMBING FIXTURE	FE	FIRE EXTINGUISHER
1t	WINDOW TAG	FD	FLOOR DRAIN		STUB UP
1i	WALL TAG		ROOF GUARD RAIL		SBS 1/4" / 12"
TR-1	MATERIAL / TRIM TAG		ROOF CRICKET, 1/2" / 12"		ASPHALT SHINGLE

KEYNOTE LEGEND CONST.

Key Value	Keynote Text
4	NEW WINDOWS. SEE WINDOW SCHEDULE.
5	PROVIDE AND INSTALL DOOR INCLUDING FRAME, SILL, LINTEL AND ANY ASSOCIATE HARDWARE. SEE DOOR SCHEDULE.
10	PROVIDE AND INSTALL COLUMN ENCLOSURES. SEE DETAILS.
13	PROVIDE CONCRETE SLAB. REFER TO STRUCTURAL DRAWINGS.
20	NEW COUNTER ROLL DOWN DOOR LOCATED AT INTERIOR AND ASSOCIATED HARDWARE. REFER TO SCHEDULE FOR MORE DETAILS. CONTRACTOR TO V.I.F. ALL DIMENSIONS BEFORE ORDERING (TYPICAL THROUGHOUT.)
21	NEW INTERIOR WALL. SEE WALL SCHEDULE.
34	PROVIDE NEW BENCH.
43	NEW COUNTERS & SERVING WINDOWS.
84	HALF ROUND ALUMINUM GUTTER AND DOWNSPOUT.
87	NEW PRECAST CONCRETE PLANTER BOX.
94	NEW QUARRY TILE. SUPRESS CONCRETE SLAB AS SHOWN IN 9/K-A-81. SLOPE TOWARDS DRAIN.

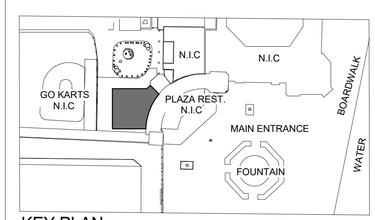

KEY PLAN

8/30/2022 2:51:19 PM

CONSULTANT INFORMATION
The LiRo Group
1 State Street Plaza, New York, NY, 10004
(516) 938-5476 www.liro.com

CONSULTANT SEAL
REGISTERED ARCHITECT ROBERT D. LOMBARDI 023230 STATE OF NEW YORK

REVISION NUMBER	DATE	MADE BY	APP'D BY	REVISION

RECORD DRAWING CERTIFICATION
☐ AS BUILT – CHANGES AS NOTED ☐ AS BUILT – NO CHANGES

CONTRACTOR
NAME
SIGNATURE
TITLE DATE

PROJECT COORDINATOR
NAME
SIGNATURE
TITLE DATE

WESTCHESTER COUNTY, NEW YORK
DEPARTMENT OF PUBLIC WORKS AND TRANSPORTATION
DIVISION OF ENGINEERING

INFRASTRUCTURE REHABILITATION
PLAYLAND PARK, RYE, NEW YORK
RESTAURANT KITCHEN WITH FOOD VENDING
GROUND FLOOR CONSTRUCTION PLAN

CONTRACT NUMBER	22-523
SHEET NUMBER	K-A-11
DWG NO.:	507 of 664
SCALE:	As indicated
DATE:	8/23/20223
DPW FILE NUMBER	1-118-A-1256-0
REV. NO.	0

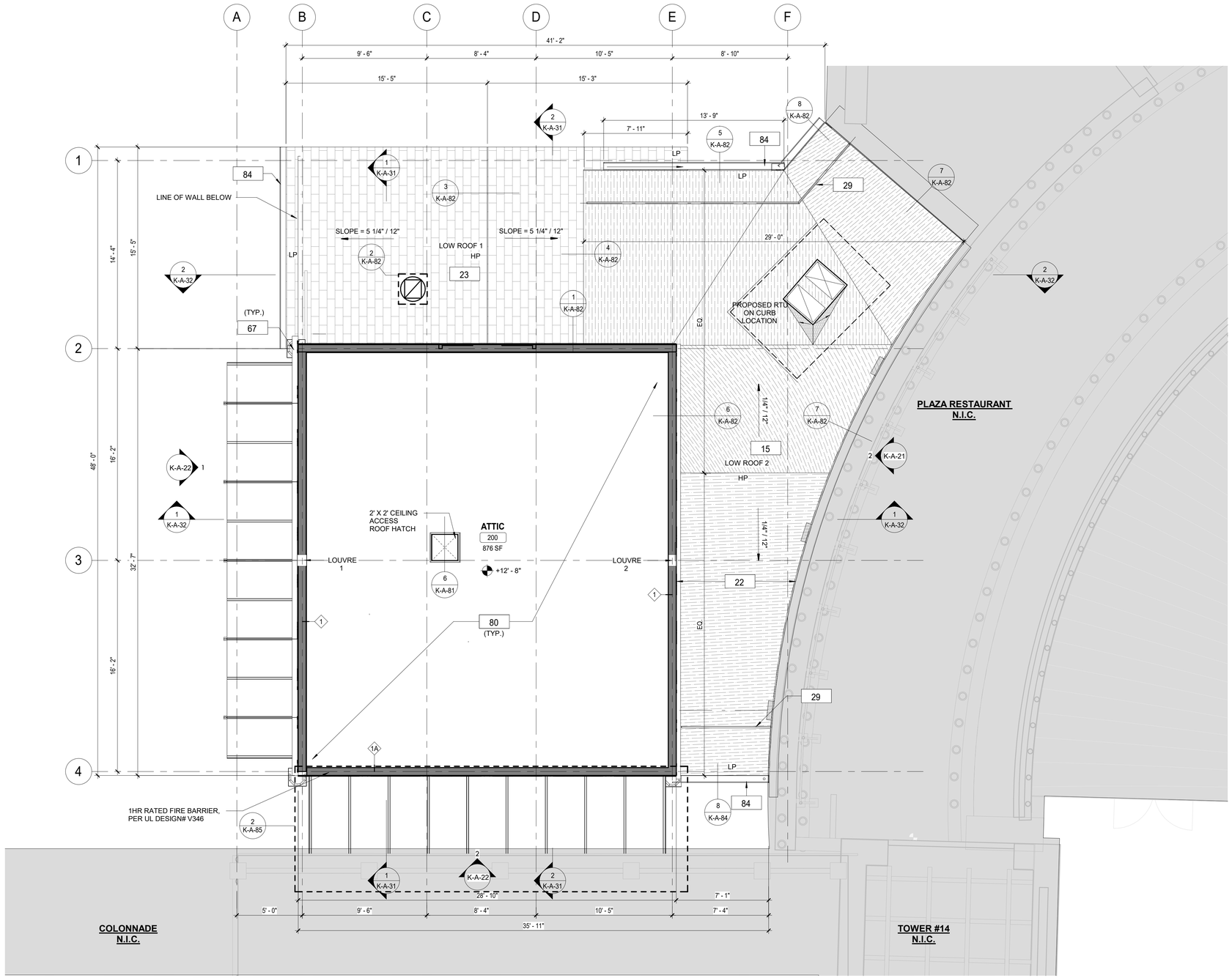

1 ATTIC AND LOW ROOF PLAN
1/4" = 1'-0"

FLOOR PLAN GENERAL NOTES

1. ALL METAL STUDS 20 GA- TYPICAL NON-LOAD BEARING PARTITIONS. SEE USG STEEL- FRAMED DRYWALL SYSTEMS " LIMITING HEIGHT"- STEEL STUD ASSEMBLIES CHART. USE THE L/240 ALLOWABLE DEFLECTION FIGURES ONLY.
2. DIMENSIONS ARE TO FACE OF GYPSUM WALL BOARD, EXISTING WALL, GRID LINES, OR CENTERLINE OF COLUMN. ALL ELEVATIONS ARE NOTED FROM FINISH FLOOR ELEVATIONS.
3. PROVIDE DRYWALL TRIM AT ALL EXPOSED EDGES AND CORNERS.
4. MINIMUM DIMENSION FROM ANY CORNER OR WALL TO FRAMING STUD AT DOOR JAMB OPENING SHALL BE 4" (U.O.N.).
5. PROVIDE METAL BLOCKING FOR ANY WALL MOUNTED EQUIPMENT OR ACCESSORIES. COORDINATE ALL BLOCKING REQUIREMENTS NECESSARY WITH OTHER TRADES.
6. THE G.C. SHALL VERIFY DIMENSIONS OF THE EXISTING SPACE AND OF ANY EXISTING CONSTRUCTION TO REMAIN BY ACTUAL MEASUREMENT BEFORE ANY WORK IS PERFORMED. IF ANY MEASUREMENTS DIFFER FROM DIMENSIONS SHOWN ON PLAN, G.C. IS TO NOTIFY THE ARCHITECT IMMEDIATELY. THE G.C. SHALL BE RESPONSIBLE FOR CORRECTING ANY AND ALL DISCREPANCIES FOUND AFTER THE WORK IS PERFORMED, AT NO ADDITIONAL EXPENSE TO THE OWNER.
7. G.C. TO VERIFY ALL FINISHED DIMENSIONS. FIELD CONDITIONS ALTERING ANY DIMENSIONS SHOULD BE BROUGHT TO THE ATTENTION OF THE OWNER AND ARCHITECT.
8. THE G.C. SHALL PROVIDE CAULK JOINTS WHERE GYP. BD. MEETS THE FLOOR OR ROOF DECK.
9. THE G.C. SHALL BE RESPONSIBLE FOR COORDINATING WITH OWNER ON ALL WORK TO BE PERFORMED BY THE OWNER. ANY POTENTIAL CONFLICTS OR DELAYS CAUSED BY THE OWNER'S SUBCONTRACTORS MUST BE DOCUMENTED IN WRITING TO THE OWNER BEFORE THE DELAY IS ACTUALLY INCURRED FOR IT TO BE CONSIDERED. OTHERWISE THE G.C. WILL BE RESPONSIBLE FOR MEETING THE SCHEDULE AS OUTLINED IN THE CONTRACT.
10. THE G.C. SHALL SUPPLY ALL MATERIAL, LABOR, AND COORDINATION REQUIRED FOR THE INSTALLATION OF ALL OWNER-SUPPLIED ITEMS AS DESCRIBED IN THE DOCUMENTS, U.N.O.
11. THE G.C. IS RESPONSIBLE FOR ALL FLOOR AND WALL PENETRATIONS FOR ELECTRICAL AND MECHANICAL WORK. ALL SUCH OPENING SHALL BE FRAMED AND REINFORCED.
12. FLOOR SURFACES SHALL BE LEVELED TO ASSURE SMOOTH SURFACE FOR FINISH FLOOR INSTALLATION. G.C. SHALL ALSO PAY SPECIAL ATTENTION THAT ALL WALL SURFACES ARE SMOOTH WHERE MURALS WILL BE DIRECTLY APPLIED TO WALL.
13. G.C. TO COORDINATE ALL UTILITY STUB-UPS AND LOCATION OF ALL EQUIPMENT PRIOR TO INSTALLING ANY ONE ITEM.
14. REFER TO SHEET K-A-94 FOR PARTITION TYPE INFORMATION.
15. PROVIDE PAINTED ACCESS PANELS IN WALLS & CEILING AT CONCEALED ITEMS. SUCH AS VALVES, CONTROLS, SWITCHES OR ANY OTHER ITEMS THAT REQUIRES ACCESS. G.C. TO DETERMINE ACCESS PANEL LOCATION W/ ARCHITECT PRIOR TO INSTALLATION.

CONSTRUCTION LEGEND

	NOT IN CONTRACT		NEW CONSTRUCTION	101	DOOR TAG
?	KEY NOTES	?	PLUMBING FIXTURE	FE	FIRE EXTINGUISHER
1t	WINDOW TAG	FD	FLOOR DRAIN		STUB UP
1i	WALL TAG		ROOF GUARD RAIL		SBS 1/4" / 12"
TR-1	MATERIAL / TRIM TAG		ROOF CRICKET, 1/2" / 12"		ASPHALT SHINGLE

KEYNOTE LEGEND CONST.

Key Value	Keynote Text
15	PROVIDE AND INSTALL SBS MODIFIED BITUMEN ROOFING AND UNDERLAYMENT.
22	PROVIDE NEW FLASHING ALONG EXISTING WALL AND ROOF CONNECTION.
23	NEW ROOF WITH BATT INSULATION (R-38 MIN) PACKED BETWEEN JOISTS. PROVIDE AND INSTALL SHINGLES, UNDERLAYMENT SHEATHING AND FLASHING SYSTEM.
29	PROVIDE AND INSTALL NEW OSHA COMPLIANT GUARD RAIL.
80	NEW 3/4" PLYWOOD FLOOR
84	HALF ROUND ALUMINUM GUTTER AND DOWNSPOUT.

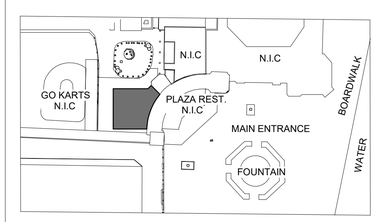

KEY PLAN

8/30/2022 2:51:22 PM

CONSULTANT INFORMATION

The LiRo Group
1 State Street Plaza, New York, NY, 10004
(516) 938-5476 www.liro.com

CONSULTANT SEAL

REGISTERED ARCHITECT ROBERT D. YOUNG JR. 023290 STATE OF NEW YORK

REVISION NUMBER	DATE	MADE BY	APP'D BY	REVISION

RECORD DRAWING CERTIFICATION

☐ AS BUILT – CHANGES AS NOTED ☐ AS BUILT – NO CHANGES

CONTRACTOR
NAME
SIGNATURE
TITLE DATE

PROJECT COORDINATOR
NAME
SIGNATURE
TITLE DATE

WESTCHESTER COUNTY, NEW YORK
DEPARTMENT OF PUBLIC WORKS AND TRANSPORTATION
DIVISION OF ENGINEERING

INFRASTRUCTURE REHABILITATION
PLAYLAND PARK, RYE, NEW YORK
RESTAURANT KITCHEN WITH FOOD VENDING
ATTIC AND LOW ROOF CONSTRUCTION PLAN

CONTRACT NUMBER	22-523
SHEET NUMBER	K-A-12
DWG NO.:	508 of 664
SCALE:	As indicated
DATE:	8/23/20223
DPW FILE NUMBER	1-118-A-1257-0
REV. NO.	0

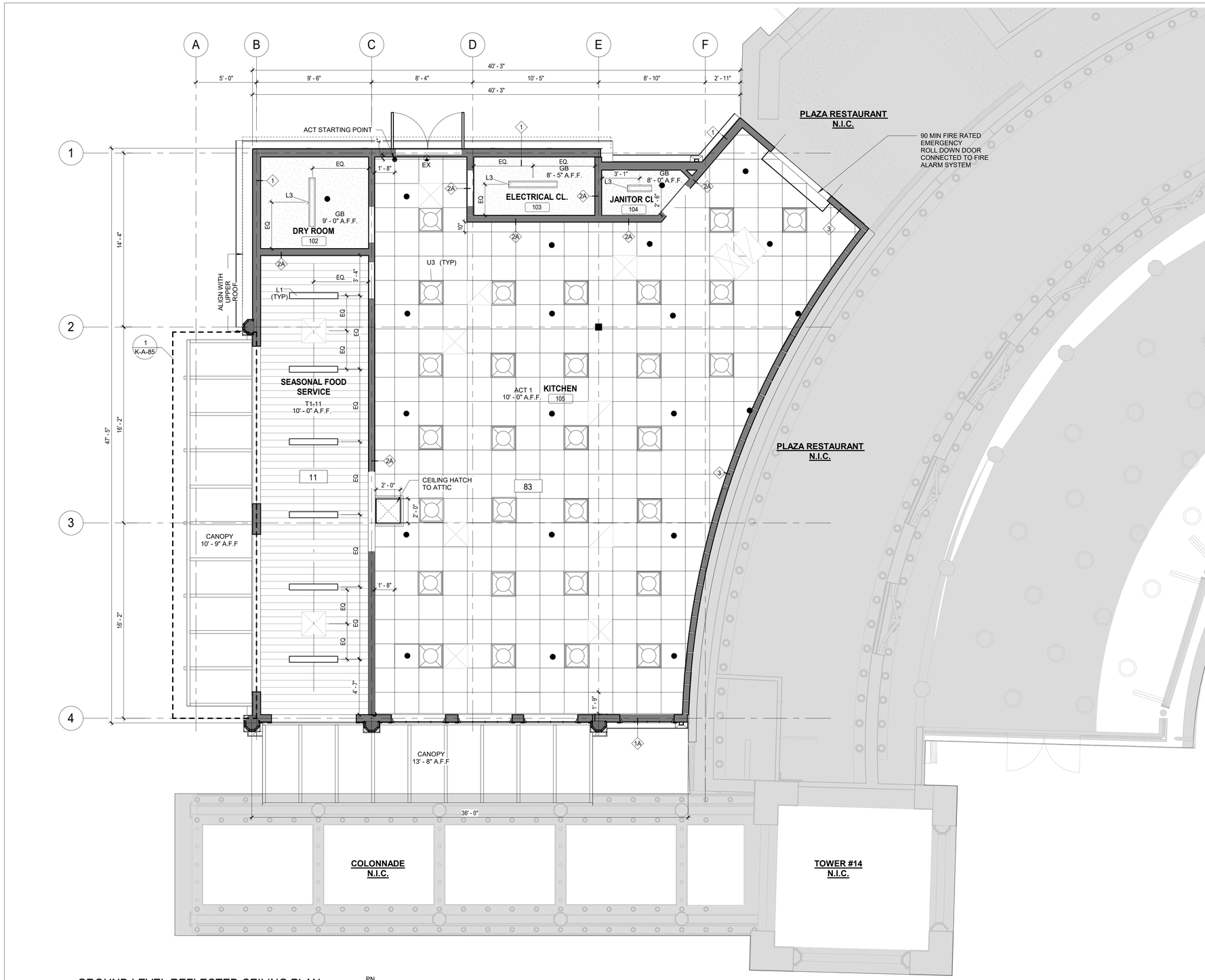

1 GROUND LEVEL REFLECTED CEILING PLAN
1/4" = 1'-0"

RCP GENERAL NOTES

1. CEILING TILES TO BE CENTERED BOTH WAYS IN EACH OR UNLESS DIMENSIONED OTHERWISE.
2. ALL DIMENSIONS ARE TO THE CENTER OF LIGHT FIXTURE, U.N.O.
3. FIXTURES LOCATED WITHIN THE CEILING GRID, ARE NOT NECESSARILY CENTERED IN EACH CEILING TILE. FOLLOW DIMENSIONS ON PLAN. IF NO DIMENSION IS PRESENT CONTACT ARCHITECT TO VERIFY LOCATION.
4. LIGHT FIXTURES TO BE LOCATED AS INDICATED ON THIS PLAN. REFER TO ELECTRICAL DRAWINGS FOR EXACT NUMBER AND TYPE OF LIGHT FIXTURE. CONTACT ARCHITECT/ ENGINEER IMMEDIATELY IF THERE ARE ANY DISCREPANCIES.
5. REFER TO MECHANICAL DRAWINGS FOR MECHANICAL DUCT DISTRIBUTION SYSTEM.
6. THE G.C. SHALL SET ALL CEILING AND SOFFITS USING A LASER LEVEL TO ACHIEVE A CEILING THAT IS PLUMBING, LEVEL, AND SQUARE TO ALL WALLS AND SOFFITS.
7. ALL NOTED CEILING DIMENSIONS ARE INDICATED AS CLEAR ABOVE FINISHED FLOOR DIMENSIONS. VERIFY THICKNESS OF FLOOR CONSTRUCTION WITH FLOOR SUBCONTRACTOR PRIOR TO THE INSTALLATION OF ANY NEW CEILING CONSTRUCTION IN ORDER TO ACHIEVE NOTED REQUIRED DIMENSIONS.
8. ALL SOFFIT DIMENSIONS ARE TO FINISH FACE, U.N.O.
9. ALL EXTERIOR DIMENSIONS ARE TO THE FACE OF EXTERIOR FINISH, U.N.O.
10. G.C. TO PROVIDE ADEQUATE CLEARANCES FOR FIXTURES, DUCTS, CEILINGS, AND PERTINENT ITEMS NECESSARY TO MAINTAIN THE SPECIFIC HEIGHTS ABOVE FINISH FLOOR. COORDINATE MECHANICAL, ELECTRICAL AND PLUMBING AS REQUIRED.
11. ADDITIONAL HANGER AND SAFETY WIRES FOR LIGHT FIXTURES AND AIR SUPPLY/ RETURN DIFFUSERS AS REQUIRED BY LOCAL CODES TO BE THE RESPONSIBILITY OF THE SUB-CONTRACTOR. ALL WIRING SUPPORT TO BE "CEILING GRADE" AS CONCURRENT WITH ELECTRICAL CODE ADOPTED FOR JURISDICTION OF PROJECT.
12. ALL CEILING ELEVATIONS DIMENSIONED FROM FINISH FLOOR BELOW.

CONSTRUCTION LEGEND

- NOT IN CONTRACT
- ? KEY NOTES
- SPRINKLER
- SUPPLY DIFFUSER. SEE MECHANICAL DWGS.
- L-1 LINEAR LIGHT FIXTURE
- L-3 LIGHT FIXTURE
- EX EXIT LIGHT
- U-3 INTERIOR TROFFER LIGHT WITH LENS
- M-2 MARQUEE LIGHTING
- EXHAUST GRILL. SEE MECHANICAL DWGS.

KEYNOTE LEGEND CONST.

Key Value	Keynote Text
11	PROVIDE AND INSTALL T1-11 CEILING.
83	FDA AND USDA COMPLIANT SQUARE LAY IN CEILING TILES.

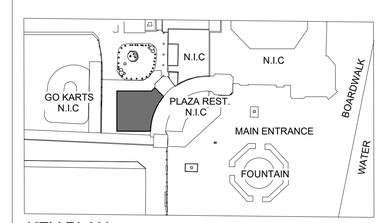

KEY PLAN

8/30/2022 2:51:31 PM

CONSULTANT INFORMATION
The LiRo Group
1 State Street Plaza, New York, NY, 10004
(516) 938-5476 www.liro.com

CONSULTANT SEAL
REGISTERED ARCHITECT ROBERT D. CORNING 023220 STATE OF NEW YORK

REVISION NUMBER	DATE	MADE BY	APP'D BY	REVISION

RECORD DRAWING CERTIFICATION
AS BUILT – CHANGES AS NOTED
AS BUILT – NO CHANGES

CONTRACTOR
NAME
SIGNATURE
TITLE DATE

PROJECT COORDINATOR
NAME
SIGNATURE
TITLE DATE

WESTCHESTER COUNTY, NEW YORK
DEPARTMENT OF PUBLIC WORKS AND TRANSPORTATION
DIVISION OF ENGINEERING

INFRASTRUCTURE REHABILITATION
PLAYLAND PARK, RYE, NEW YORK
RESTAURANT KITCHEN WITH FOOD VENDING
GROUND FLOOR - REFLECTED CEILING PLANS

CONTRACT NUMBER	22-523
SHEET NUMBER	K-A-13
DWG NO.:	509 of 664
SCALE:	As indicated
DATE:	8/23/20223
DPW FILE NUMBER	1-118-A-1258-0
REV. NO.	0

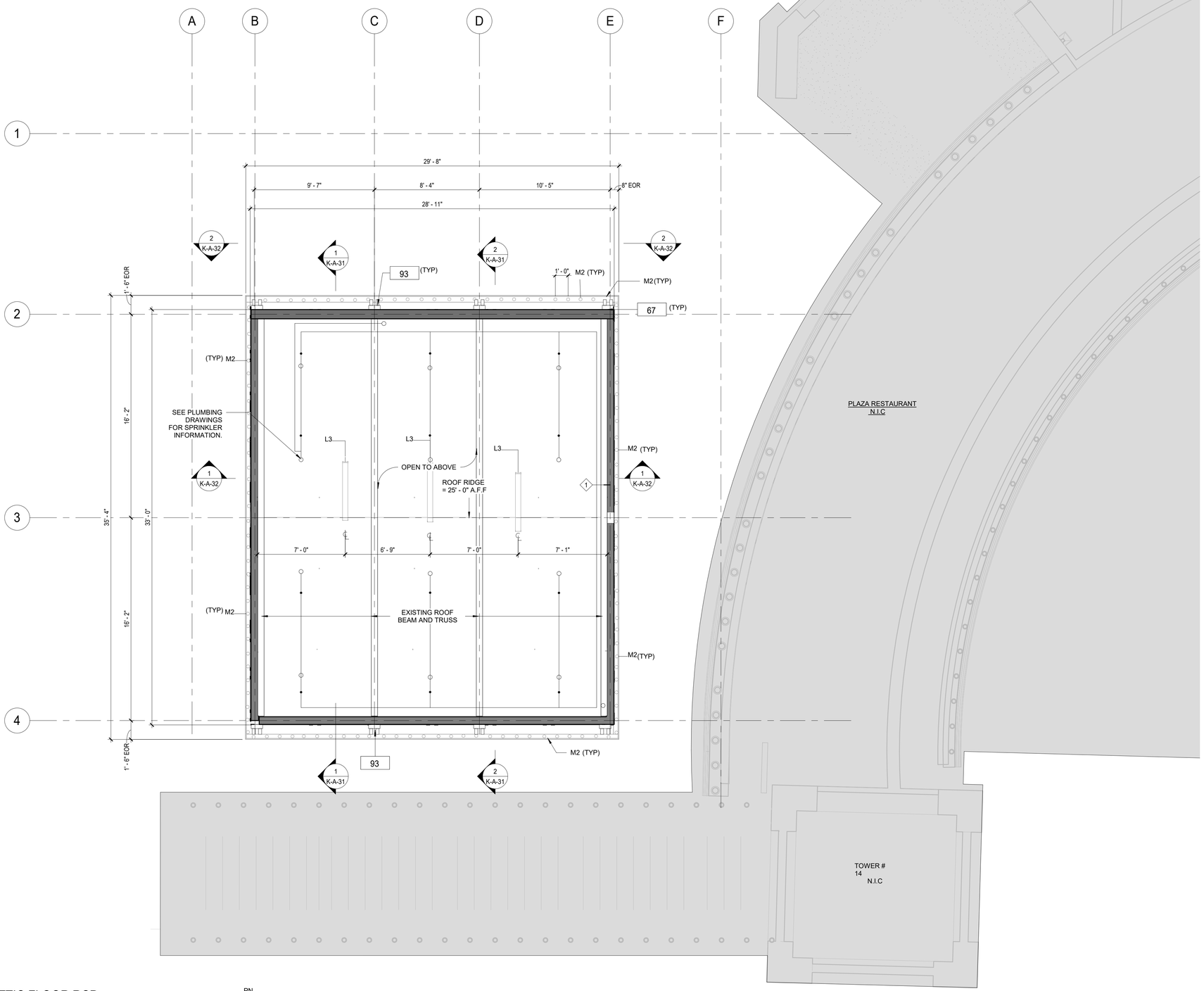

1 ATTIC FLOOR RCP
1/4" = 1'-0"

PN
N

RCP GENERAL NOTES

1. CEILING TILES TO BE CENTERED BOTH WAYS IN EACH OR UNLESS DIMENSIONED OTHERWISE.
2. ALL DIMENSIONS ARE TO THE CENTER OF LIGHT FIXTURE, U.N.O.
3. FIXTURES LOCATED WITHIN THE CEILING GRID, ARE NOT NECESSARILY CENTERED IN EACH CEILING TILE. FOLLOW DIMENSIONS ON PLAN. IF NO DIMENSION IS PRESENT CONTACT ARCHITECT TO VERIFY LOCATION.
4. LIGHT FIXTURES TO BE LOCATED AS INDICATED ON THIS PLAN. REFER TO ELECTRICAL DRAWINGS FOR EXACT NUMBER AND TYPE OF LIGHT FIXTURE. CONTACT ARCHITECT/ ENGINEER IMMEDIATELY IF THERE ARE ANY DISCREPANCIES.
5. REFER TO MECHANICAL DRAWINGS FOR MECHANICAL DUCT DISTRIBUTION SYSTEM.
6. THE G.C. SHALL SET ALL CEILING AND SOFFITS USING A LASER LEVEL TO ACHIEVE A CEILING THAT IS PLUMBING, LEVEL, AND SQUARE TO ALL WALLS AND SOFFITS.
7. ALL NOTED CEILING DIMENSIONS ARE INDICATED AS CLEAR ABOVE FINISHED FLOOR DIMENSIONS. VERIFY THICKNESS OF FLOOR CONSTRUCTION WITH FLOOR SUBCONTRACTOR PRIOR TO THE INSTALLATION OF ANY NEW CEILING CONSTRUCTION IN ORDER TO ACHIEVE NOTED REQUIRED DIMENSIONS.
8. ALL SOFFIT DIMENSIONS ARE TO FINISH FACE, U.N.O.
9. ALL EXTERIOR DIMENSIONS ARE TO THE FACE OF EXTERIOR FINISH, U.N.O.
10. G.C. TO PROVIDE ADEQUATE CLEARANCES FOR FIXTURES, DUCTS, CEILINGS, AND PERTINENT ITEMS NECESSARY TO MAINTAIN THE SPECIFIC HEIGHTS ABOVE FINISH FLOOR. COORDINATE MECHANICAL, ELECTRICAL AND PLUMBING AS REQUIRED.
11. ADDITIONAL HANGER AND SAFETY WIRES FOR LIGHT FIXTURES AND AIR SUPPLY/ RETURN DIFFUSERS AS REQUIRED BY LOCAL CODES TO BE THE RESPONSIBILITY OF THE SUB-CONTRACTOR. ALL WIRING SUPPORT TO BE "CEILING GRADE" AS CONCURRENT WITH ELECTRICAL CODE ADOPTED FOR JURISDICTION OF PROJECT.
12. ALL CEILING ELEVATIONS DIMENSIONED FROM FINISH FLOOR BELOW.

CONSTRUCTION LEGEND

- NOT IN CONTRACT
- ? KEY NOTES
- SPRINKLER
- SUPPLY DIFFUSER. SEE MECHANICAL DWGS.
- L-1 LINEAR LIGHT FIXTURE
- L-3 LIGHT FIXTURE
- EX EXIT LIGHT
- U-3 INTERIOR TROFFER LIGHT WITH LENS
- M-2 MARQUEE LIGHTING
- EXHAUST GRILL. SEE MECHANICAL DWGS.

KEYNOTE LEGEND CONST.

Key Value	Keynote Text
67	NEW FASCIA BOARD AND SOFFIT.
93	REPLICATE EVE SUPPORT TO MATCH DOCUMENTED EVE, LOCATIONS, SIZE AND SHAPE. FINISH PAINT COLORS AS SCHEDULED.

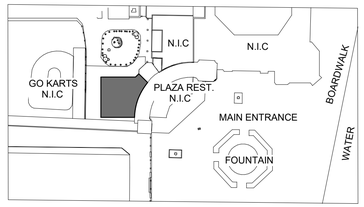

KEY PLAN

PN
N

8/30/2022 2:51:40 PM

CONSULTANT INFORMATION

The LiRo Group
1 State Street Plaza, New York, NY, 10004
(516) 938-5476 www.liro.com

CONSULTANT SEAL

REGISTERED ARCHITECT ROBERT D. YOUNG JR. 023290 STATE OF NEW YORK

REVISION NUMBER	DATE	MADE BY	APP'D BY	REVISION

RECORD DRAWING CERTIFICATION

☐ AS BUILT – CHANGES AS NOTED ☐ AS BUILT – NO CHANGES

CONTRACTOR
NAME
SIGNATURE
TITLE DATE

PROJECT COORDINATOR
NAME
SIGNATURE
TITLE DATE

WESTCHESTER COUNTY, NEW YORK
DEPARTMENT OF PUBLIC WORKS AND TRANSPORTATION
DIVISION OF ENGINEERING

INFRASTRUCTURE REHABILITATION
PLAYLAND PARK, RYE, NEW YORK
RESTAURANT KITCHEN WITH FOOD VENDING
ATTIC REFLECTED CEILING PLAN

CONTRACT NUMBER	22-523
SHEET NUMBER	K-A-14
DWG NO.:	510 of 664
SCALE:	As indicated
DATE:	8/23/20223
DPW FILE NUMBER	1-118-A-1259-0
REV. NO.	0

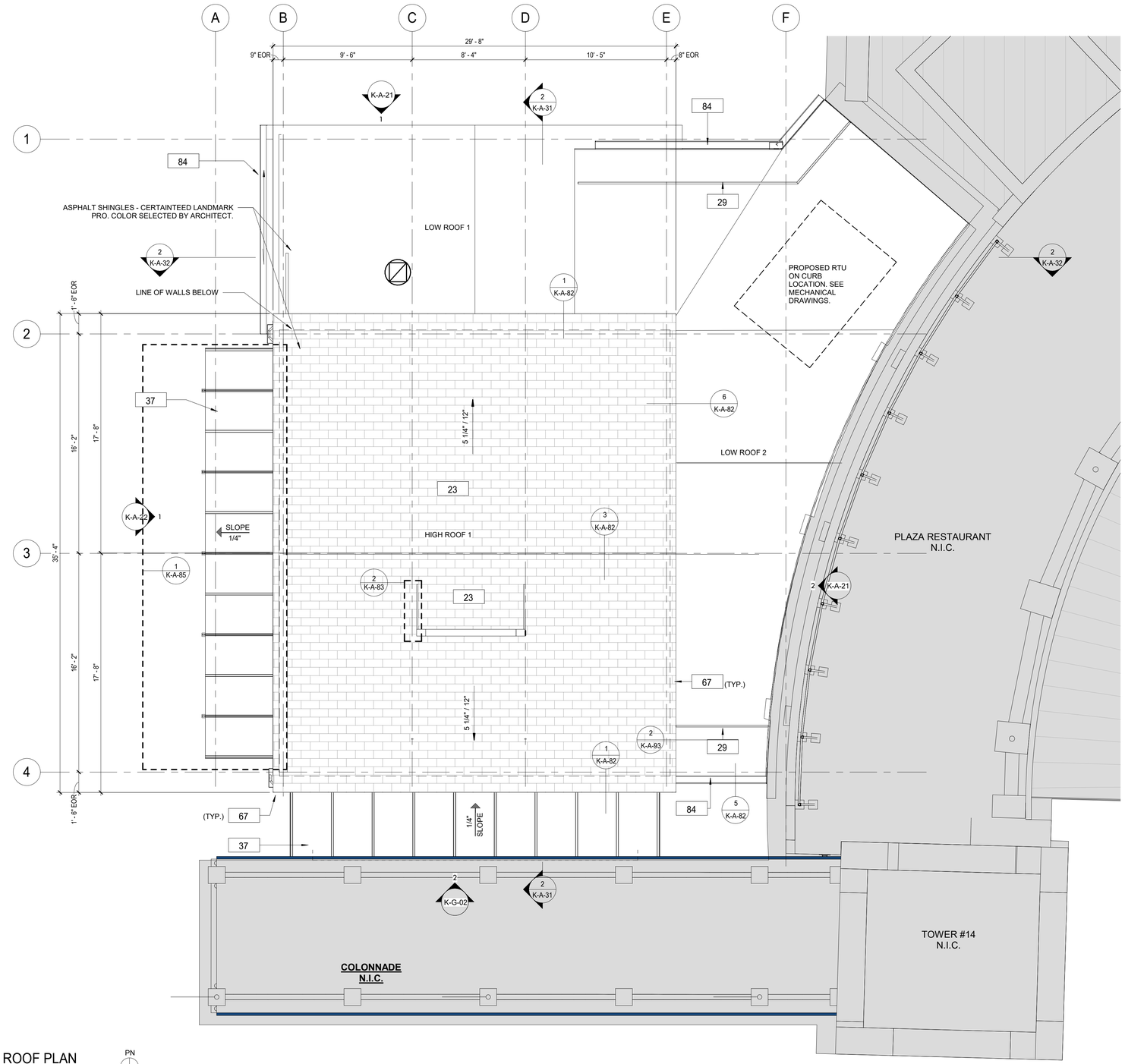

4 ROOF PLAN
1/4" = 1'-0"

CONSTRUCTION GENERAL NOTES

1. PROVIDE LEVEL ROOF CURB FOR ALL MECHANICAL EQUIPMENT 8 INCHES ABOVE HIGHEST FINISHED ROOF SURFACE.
3. REFER TO MECHANICAL DRAWINGS FOR ALL ROOF TOP MOUNTED EQUIPMENT LOCATIONS, SIZE & SPECIFICATIONS.
4. REFER TO PLUMBING, MECHANICAL, & ELECTRICAL DRAWINGS FOR ANY ADDITIONAL ROOF PENERATIONS AND DETAILS.
5. ROOFING SYSTEM AND ACCESSORIES INSTALLATION AND DETAILS ARE FOR DESIGN INTENT. ROOF INSTALLATION SHALL BE IN CONFORMANCE WITH MANUFACTURERS.
6. REFER TO SHEET K-A-82FOR TYPICAL ROOF DETAILS.
7. SEE STRUCTURAL DRAWINGS FOR RTU OPENING FRAMING & REINFORCING.
9. LOW ROOF 1 AND LOW ROOF 2 REFER TO SHEET K-A-12.

CONSTRUCTION LEGEND

	NOT IN CONTRACT		NEW CONSTRUCTION	101	DOOR TAG
?	KEY NOTES	?	PLUMBING FIXTURE	FE	FIRE EXTINGUISHER
1t	WINDOW TAG	FD	FLOOR DRAIN		STUB UP
1i	WALL TAG		ROOF GUARD RAIL		SBS 1/4" / 12"
TR-1	MATERIAL / TRIM TAG		ROOF CRICKET, 1/2" / 12"		ASPHALT SHINGLE

KEYNOTE LEGEND CONST.

Key Value	Keynote Text
23	NEW ROOF WITH BATT INSULATION (R-38 MIN) PACKED BETWEEN JOISTS. PROVIDE AND INSTALL SHINGLES, UNDERLAYMENT SHEATHING AND FLASHING SYSTEM.
29	PROVIDE AND INSTALL NEW OSHA COMPLIANT GUARD RAIL.
37	NEW CANOPY, SEE DETAILS.
67	NEW FASCIA BOARD AND SOFFIT.
84	HALF ROUND ALUMINUM GUTTER AND DOWNSPOUT.

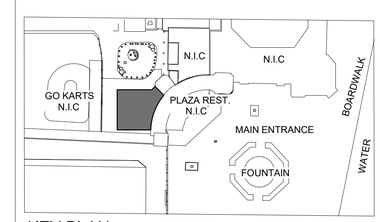

KEY PLAN

8/30/2022 2:51:43 PM

CONSULTANT INFORMATION

The LiRo Group
1 State Street Plaza, New York, NY, 10004
(516) 938-5476 www.liro.com

CONSULTANT SEAL

REGISTERED ARCHITECT ROBERT D. YOUNG JR. 023230 STATE OF NEW YORK

REVISION NUMBER	DATE	MADE BY	APP'D BY	REVISION

RECORD DRAWING CERTIFICATION

☐ AS BUILT – CHANGES AS NOTED ☐ AS BUILT – NO CHANGES

CONTRACTOR
NAME
SIGNATURE
TITLE DATE

PROJECT COORDINATOR
NAME
SIGNATURE
TITLE DATE

WESTCHESTER COUNTY, NEW YORK
DEPARTMENT OF PUBLIC WORKS AND TRANSPORTATION
DIVISION OF ENGINEERING

INFRASTRUCTURE REHABILITATION
PLAYLAND PARK, RYE, NEW YORK
RESTAURANT KITCHEN WITH FOOD VENDING
ROOF CONSTRUCTION PLAN

CONTRACT NUMBER	22-523
SHEET NUMBER	K-A-15
DWG NO.:	511 of 664
SCALE:	As indicated
DATE:	8/23/20223
DPW FILE NUMBER	1-118-A-1260-0
REV. NO.	0

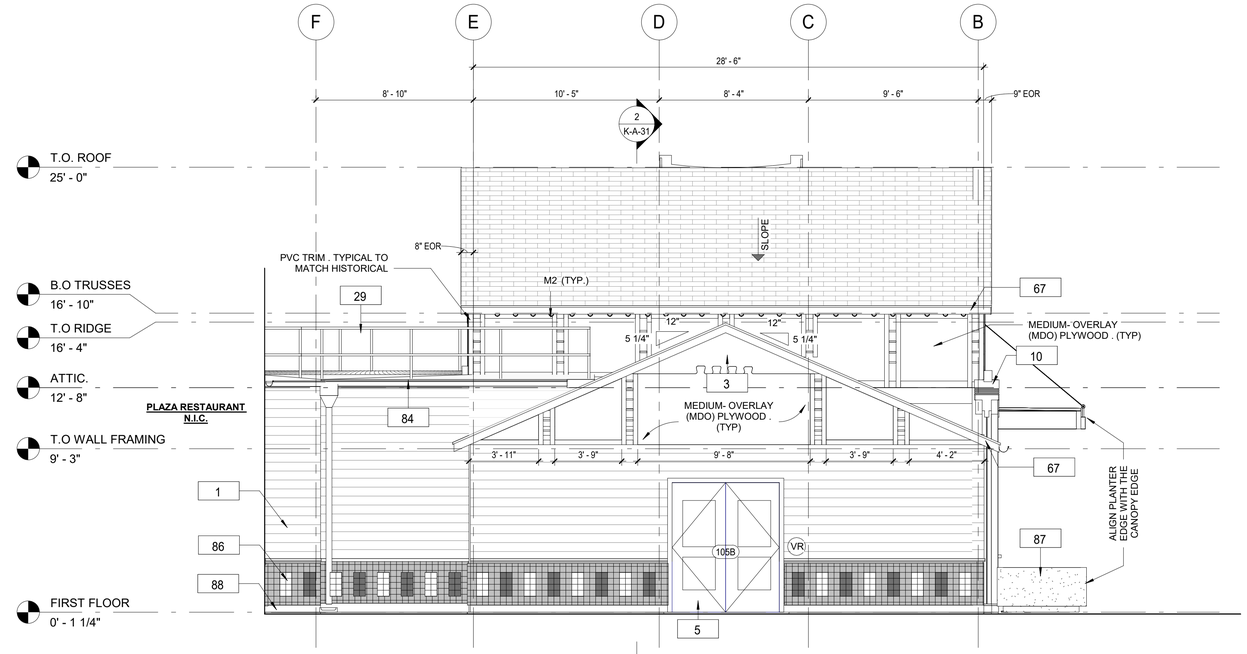

1 PROPOSED ELEVATION- EAST
1/4" = 1'-0"

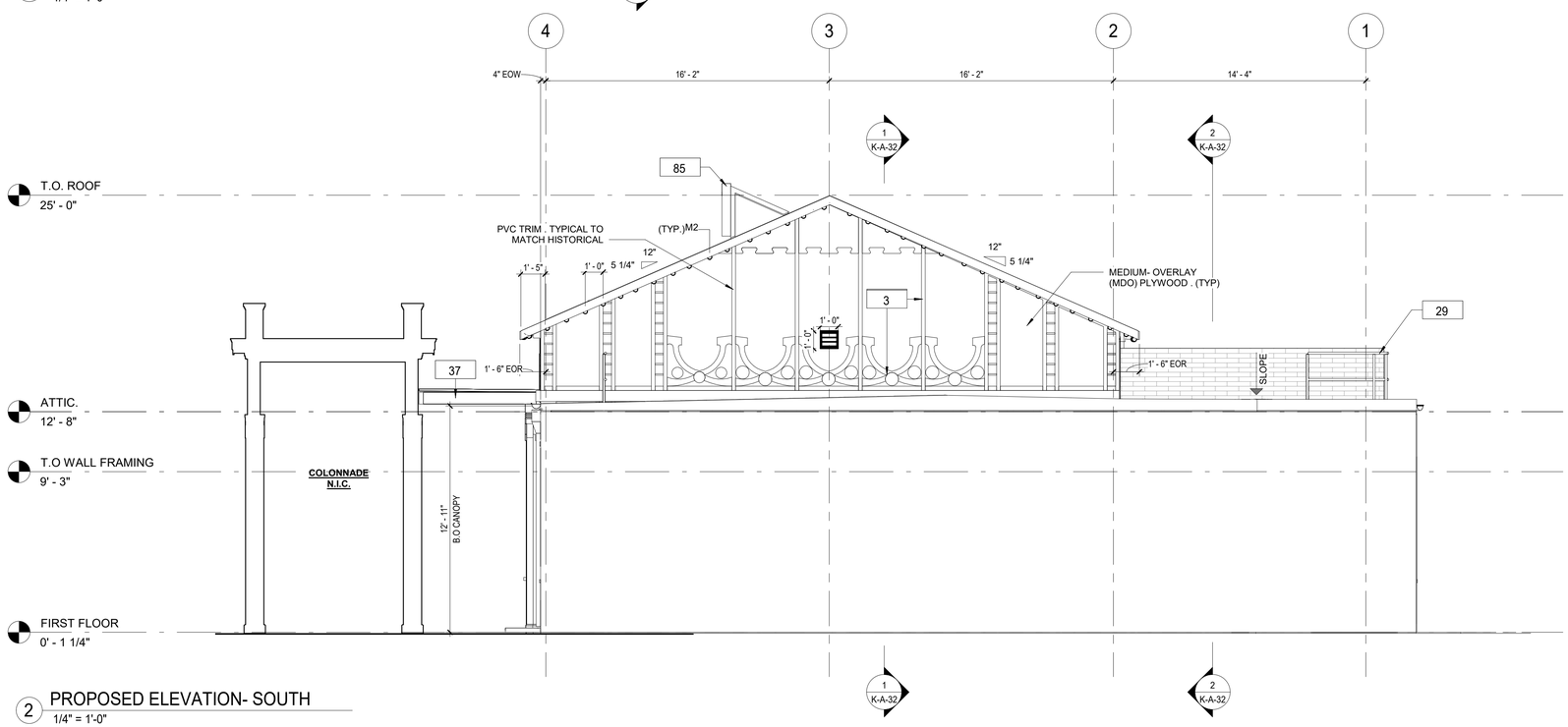

2 PROPOSED ELEVATION- SOUTH
1/4" = 1'-0"

CONSTRUCTION GENERAL NOTES

1. THE ARCHITECT DOES NOT CERTIFY DIMENSIONS OR CONDITIONS OF EXISTING CONSTRUCTION. GENERAL CONTRACTOR SHALL NOTIFY ARCHITECT IMMEDIATELY OF ANY DISCREPANCY BETWEEN DRAWINGS AND EXISTING CONDITIONS. IN ADDITION, CONTRACTOR SHALL NOTIFY THE ARCHITECT OF ANY DEFECTIVE CONSTRUCTION UNCOVERED DURING CONSTRUCTION.
2. CONTRACTOR SHALL KEEP WORK SITE FREE FROM DEBRIS AND ACCUMULATED REFUSE, AND SHALL HAVE SOLE RESPONSIBILITY FOR PROTECTING ALL DANGEROUS AREAS FROM ENTRY BY UNAUTHORIZED PARTIES. ALL CONSTRUCTION SCRAPS, DIRT, AND DEBRIS SHALL BE REMOVED FROM THE PREMISES DAILY. SITE SHALL BE LEFT BROOM CLEAN AT THE END OF EACH WORKING DAY. AT THE COMPLETION OF THE WORK, HE PREMISES SHALL BE LEFT IN A BROOM CLEAN CONDITION.
3. MATERIALS UTILIZED SHALL BE AS SPECIFIED ON THE DRAWINGS OR IN THE JOB SPECIFICATIONS, OR, IF GENERIC, IN COMPLIANCE WITH ASTM, NEW YORK CODE, OR OTHER GENERALLY ACCEPTED STANDARDS.
4. ALL EXITS SHALL BE KEPT READILY ACCESSIBLE AND UNOBSTRUCTED AT ALL TIMES.
5. THE G.C. SHALL VERIFY DIMENSIONS OF THE EXISTING SPACE AND OF ANY EXISTING CONSTRUCTION TO REMAIN BY ACTUAL MEASUREMENT BEFORE ANY WORK IS PERFORMED. IF ANY MEASUREMENTS DIFFER FROM DIMENSIONS SHOWN ON PLAN, G.C. IS TO NOTIFY THE ARCHITECT IMMEDIATELY. THE G.C. SHALL BE RESPONSIBLE FOR CORRECTING ANY AND ALL DISCREPANCIES FOUND AFTER THE WORK IS PERFORMED, AT NO ADDITIONAL EXPENSE TO THE OWNER.
6. G.C. TO VERIFY ALL FINISHED DIMENSIONS. FIELD CONDITIONS ALTERING ANY DIMENSIONS SHOULD BE BROUGHT TO THE ATTENTION OF THE OWNER AND ARCHITECT.
7. THE G.C. SHALL BE RESPONSIBLE FOR COORDINATING WITH OWNER ON ALL WORK TO BE PERFORMED BY THE OWNER. ANY POTENTIAL CONFLICTS OR DELAYS CAUSED BY THE OWNER'S SUBCONTRACTORS MUST BE DOCUMENTED IN WRITING TO THE OWNER BEFORE THE DELAY IS ACTUALLY INCURRED FOR IT TO BE CONSIDERED. OTHERWISE THE G.C. WILL BE RESPONSIBLE FOR MEETING THE SCHEDULE AS OUTLINED IN THE CONTRACT.

CONSTRUCTION LEGEND

	NOT IN CONTRACT		NEW CONSTRUCTION	101	DOOR TAG
?	KEY NOTES	?	PLUMBING FIXTURE	FE	FIRE EXTINGUISHER
1t	WINDOW TAG	FD	FLOOR DRAIN		STUB UP
1i	WALL TAG		ROOF GUARD RAIL		SBS 1/4" / 12"
TR-1	MATERIAL / TRIM TAG		ROOF CRICKET, 1/2" / 12"		ASPHALT SHINGLE

KEYNOTE LEGEND CONST.

Key Value	Keynote Text
1	PROVIDE AND INSTALL NEW 1x8 MILLED YELLOW PINE - TONGUE AND GROOVE - NO BEVEL
3	REPLICATE TRIMS TO MATCH DOCUMENTED TRIM, LOCATIONS, SIZE AND SHAPE. FINISH PAINT COLORS AS SCHEDULED.
5	PROVIDE AND INSTALL DOOR INCLUDING FRAME, SILL, LINTEL AND ANY ASSOCIATE HARDWARE. SEE DOOR SCHEDULE.
10	PROVIDE AND INSTALL COLUMN ENCLOSURES. SEE DETAILS.
29	PROVIDE AND INSTALL NEW OSHA COMPLIANT GUARD RAIL.
37	NEW CANOPY, SEE DETAILS.
67	NEW FASCIA BOARD AND SOFFIT.
84	HALF ROUND ALUMINUM GUTTER AND DOWNSPOUT.
85	NEW ROOF MOUNTED SIGN. SEE DETAILS
86	NEW CERAMIC TILES.
87	NEW PRECAST CONCRETE PLANTER BOX.
88	NEW PVC BASEBOARD.

8/30/2022 2:51:44 PM

CONSULTANT INFORMATION

The LiRo Group
1 State Street Plaza, New York, NY, 10004
(516) 938-5476 www.liro.com

CONSULTANT SEAL

REGISTERED ARCHITECT ROBERT D. LIRO JR. 023220 STATE OF NEW YORK

REVISION NUMBER	DATE	MADE BY	APP'D BY	REVISION

RECORD DRAWING CERTIFICATION

☐ AS BUILT – CHANGES AS NOTED ☐ AS BUILT – NO CHANGES

CONTRACTOR
NAME
SIGNATURE
TITLE DATE

PROJECT COORDINATOR
NAME
SIGNATURE
TITLE DATE

WESTCHESTER COUNTY, NEW YORK
DEPARTMENT OF PUBLIC WORKS AND TRANSPORTATION
DIVISION OF ENGINEERING

INFRASTRUCTURE REHABILITATION
PLAYLAND PARK, RYE, NEW YORK
RESTAURANT KITCHEN WITH FOOD VENDING
EXTERIOR BUILDING ELEVATIONS - EAST AND SOUTH

CONTRACT NUMBER	22-523
SHEET NUMBER	K-A-21
DWG NO.:	512 of 664
SCALE:	1/4" = 1'-0"
DATE:	8/23/20223
DPW FILE NUMBER	1-118-A-1261-0
REV. NO.	0

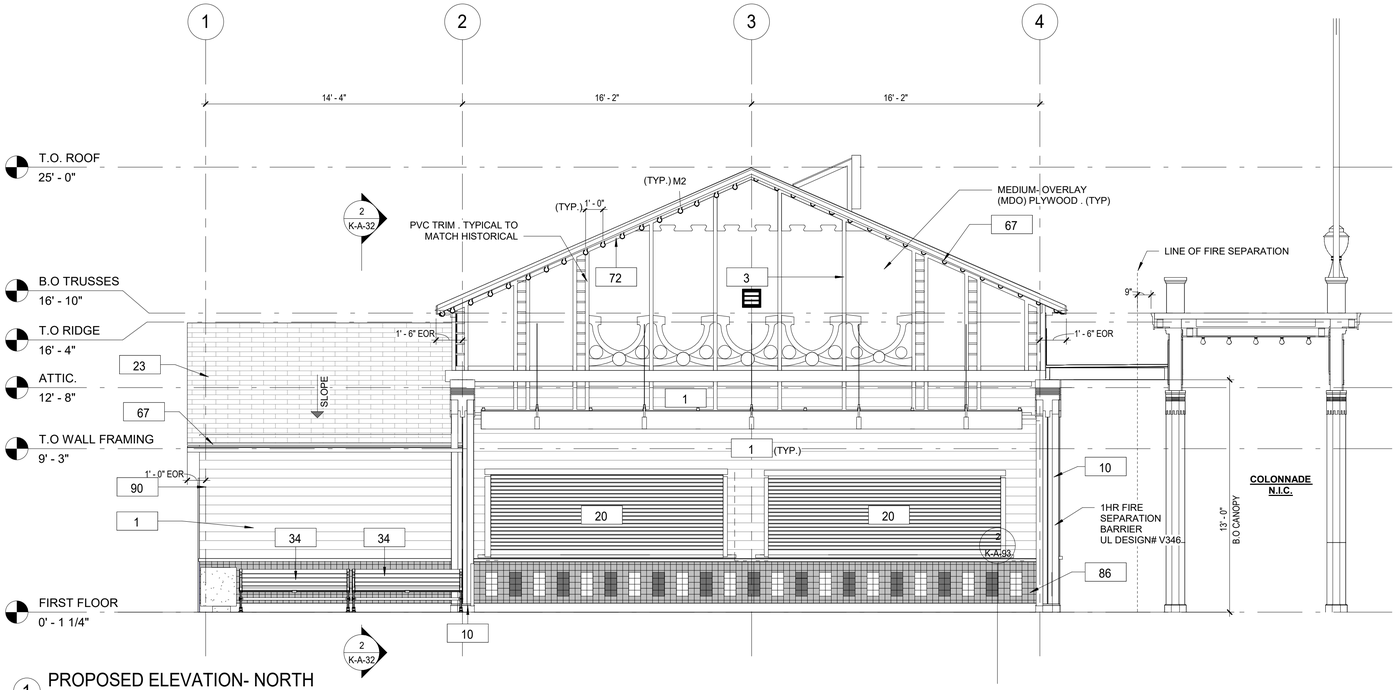

1 PROPOSED ELEVATION- NORTH
1/4" = 1'-0"

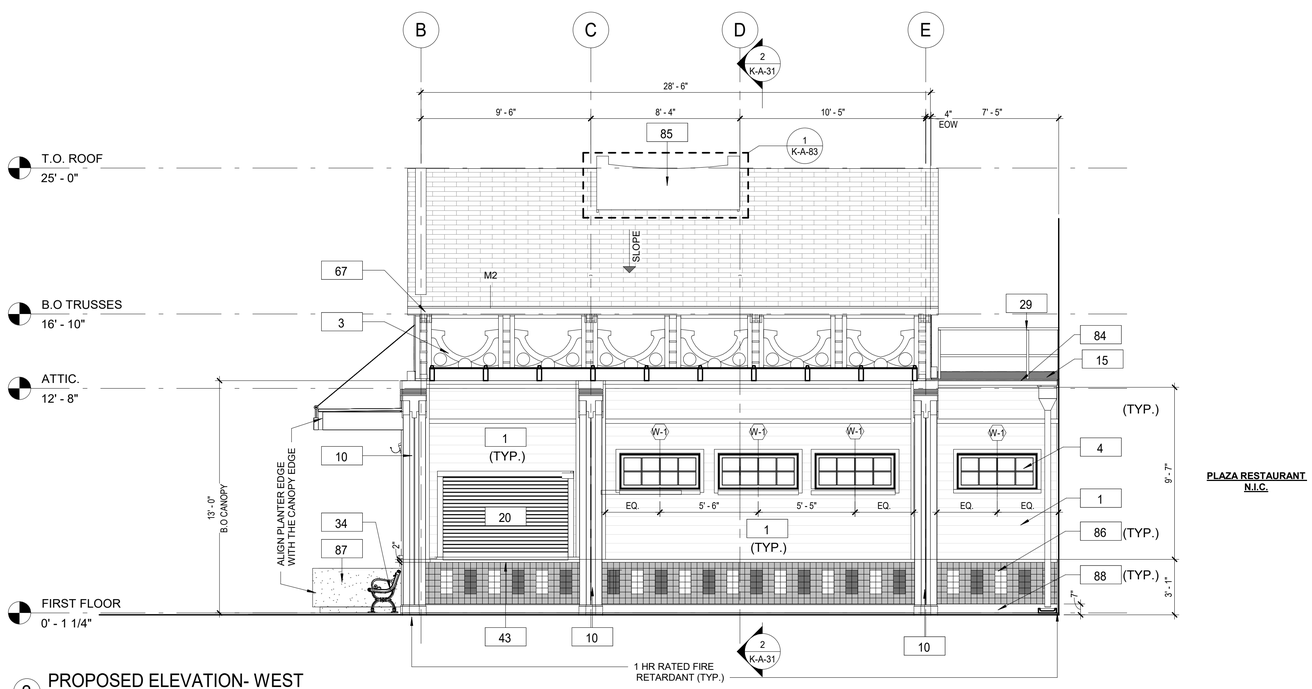

2 PROPOSED ELEVATION- WEST
1/4" = 1'-0"

CONSTRUCTION GENERAL NOTES

1. THE ARCHITECT DOES NOT CERTIFY DIMENSIONS OR CONDITIONS OF EXISTING CONSTRUCTION. CONTRACTOR SHALL NOTIFY ARCHITECT IMMEDIATELY OF ANY DISCREPANCY BETWEEN DRAWINGS AND EXISTING CONDITIONS. IN ADDITION, CONTRACTOR SHALL NOTIFY THE ARCHITECT OF ANY DEFECTIVE CONSTRUCTION UNCOVERED DURING CONSTRUCTION.
2. CONTRACTOR SHALL KEEP WORK SITE FREE FROM DEBRIS AND ACCUMULATED REFUSE, AND SHALL HAVE SOLE RESPONSIBILITY FOR PROTECTING ALL DANGEROUS AREAS FROM ENTRY BY UNAUTHORIZED PARTIES. ALL CONSTRUCTION SCRAPS, DIRT, AND DEBRIS SHALL BE REMOVED FROM THE PREMISES DAILY. SITE SHALL BE LEFT BROOM CLEAN AT THE END OF EACH WORKING DAY. AT THE COMPLETION OF THE WORK, HE PREMISES SHALL BE LEFT IN A BROOM CLEAN CONDITION.
3. ALL WORK TO BE PERFORMED IN A WORKMANLIKE FASHION. MATERIALS UTILIZED SHALL BE AS SPECIFIED ON THE DRAWINGS OR IN THE JOB SPECIFICATIONS, OR, IF GENERIC, IN COMPLIANCE WITH ASTM, NEW YORK CODE, OR OTHER GENERALLY ACCEPTED STANDARDS.
4. WHERE EXISTING EQUIPMENT OR CONSTRUCTION IS REMOVED OR ALTERED, ALL REMAINING SURFACES AND FINISHES AFFECTED SHALL BE PATCHED AND FINISHED TO MATCH ADJACENT CONSTRUCTION/PRE- EXISTING CONDITION.
5. ALL EXITS SHALL BE KEPT READILY ACCESSIBLE AND UNOBSTRUCTED AT ALL TIMES. ALL EXITS SHALL BE KEPT READILY ACCESSIBLE AND UNOBSTRUCTED AT ALL TIMES.
6. ALL INFILLED OPENINGS TO BE FLUSH WITH EXISTING MASONRY WALL SURFACES, EXTERIOR OF NEW AND OLD TO BE FLUSH AND MATCH WITH EXISTING ADJACENT WALL SYSTEM.
7. THE G.C. SHALL VERIFY DIMENSIONS OF THE EXISTING SPACE AND OF ANY EXISTING CONSTRUCTION TO REMAIN BY ACTUAL MEASUREMENT BEFORE ANY WORK IS PERFORMED. IF ANY MEASUREMENTS DIFFER FROM DIMENSIONS SHOWN ON PLAN, G.C. IS TO NOTIFY THE ARCHITECT IMMEDIATELY. THE G.C. SHALL BE RESPONSIBLE FOR CORRECTING ANY AND ALL DISCREPANCIES FOUND AFTER THE WORK IS PERFORMED, AT NO ADDITIONAL EXPENSE TO THE OWNER.
8. G.C. TO VERIFY ALL FINISHED DIMENSIONS. FIELD CONDITIONS ALTERING ANY DIMENSIONS SHOULD BE BROUGHT TO THE ATTENTION OF THE OWNER AND ARCHITECT.
9. THE G.C. SHALL BE RESPONSIBLE FOR COORDINATING WITH OWNER ON ALL WORK TO BE PERFORMED BY THE OWNER. ANY POTENTIAL CONFLICTS OR DELAYS CAUSED BY THE OWNER'S SUBCONTRACTORS MUST BE DOCUMENTED IN WRITING TO THE OWNER BEFORE THE DELAY IS ACTUALLY INCURRED FOR IT TO BE CONSIDERED. OTHERWISE THE G.C. WILL BE RESPONSIBLE FOR MEETING THE SCHEDULE AS OUTLINED IN THE CONTRACT.

CONSTRUCTION LEGEND

	NOT IN CONTRACT		NEW CONSTRUCTION	101	DOOR TAG
?	KEY NOTES	?	PLUMBING FIXTURE	FE	FIRE EXTINGUISHER
1t	WINDOW TAG	FD	FLOOR DRAIN		STUB UP
1i	WALL TAG		ROOF GUARD RAIL		SBS 1/4" / 12"
TR-1	MATERIAL / TRIM TAG		ROOF CRICKET, 1/2" / 12"		ASPHALT SHINGLE

KEYNOTE LEGEND CONST.

Key Value	Keynote Text
1	PROVIDE AND INSTALL NEW 1x8 MILLED YELLOW PINE - TONGUE AND GROOVE - NO BEVEL
3	REPLICATE TRIMS TO MATCH DOCUMENTED TRIM, LOCATIONS, SIZE AND SHAPE. FINISH PAINT COLORS AS SCHEDULED.
4	NEW WINDOWS. SEE WINDOW SCHEDULE.
10	PROVIDE AND INSTALL COLUMN ENCLOSURES. SEE DETAILS.
15	PROVIDE AND INSTALL SBS MODIFIED BITUMEN ROOFING AND UNDERLAYMENT.
20	NEW COUNTER ROLL DOWN DOOR LOCATED AT INTERIOR AND ASSOCIATED HARDWARE. REFER TO SCHEDULE FOR MORE DETAILS. CONTRACTOR TO V.I.F. ALL DIMENSIONS BEFORE ORDERING (TYPICAL THROUGHOUT.)
23	NEW ROOF WITH BATT INSULATION (R-38 MIN) PACKED BETWEEN JOISTS. PROVIDE AND INSTALL SHINGLES, UNDERLAYMENT SHEATHING AND FLASHING SYSTEM.
29	PROVIDE AND INSTALL NEW OSHA COMPLIANT GUARD RAIL.
34	PROVIDE NEW BENCH.
43	NEW COUNTERS & SERVING WINDOWS.
67	NEW FASCIA BOARD AND SOFFIT.
72	NEW LIGHT FIXTURES TO BE INSTALLED (SEE ELECTRICAL DRAWINGS).
84	HALF ROUND ALUMINUM GUTTER AND DOWNSPOUT.
85	NEW ROOF MOUNTED SIGN. SEE DETAILS
86	NEW CERAMIC TILES.
87	NEW PRECAST CONCRETE PLANTER BOX.
88	NEW PVC BASEBOARD.
90	NEW OUTSIDE CORNER MOULDING.

8/30/2022 2:51:48 PM

CONSULTANT INFORMATION

The LiRo Group

1 State Street Plaza, New York, NY, 10004
(516) 938-5476 www.liro.com

CONSULTANT SEAL

REGISTERED ARCHITECT ROBERT D. YOUNG JR. 023280 STATE OF NEW YORK

REVISION NUMBER	DATE	MADE BY	APP'D BY	REVISION

RECORD DRAWING CERTIFICATION

☐ AS BUILT – CHANGES AS NOTED ☐ AS BUILT – NO CHANGES

CONTRACTOR
NAME
SIGNATURE
TITLE DATE

PROJECT COORDINATOR
NAME
SIGNATURE
TITLE DATE

WESTCHESTER COUNTY, NEW YORK
DEPARTMENT OF PUBLIC WORKS AND TRANSPORTATION
DIVISION OF ENGINEERING

INFRASTRUCTURE REHABILITATION
PLAYLAND PARK, RYE, NEW YORK
RESTAURANT KITCHEN WITH FOOD VENDING
EXTERIOR BUILDING ELEVATIONS - NORTH AND WEST

CONTRACT NUMBER	22-523
SHEET NUMBER	K-A-22
DWG NO.:	513 of 664
SCALE:	1/4" = 1'-0"
DATE:	8/23/20223
DPW FILE NUMBER	1-118-A-1262-0
REV. NO.	0

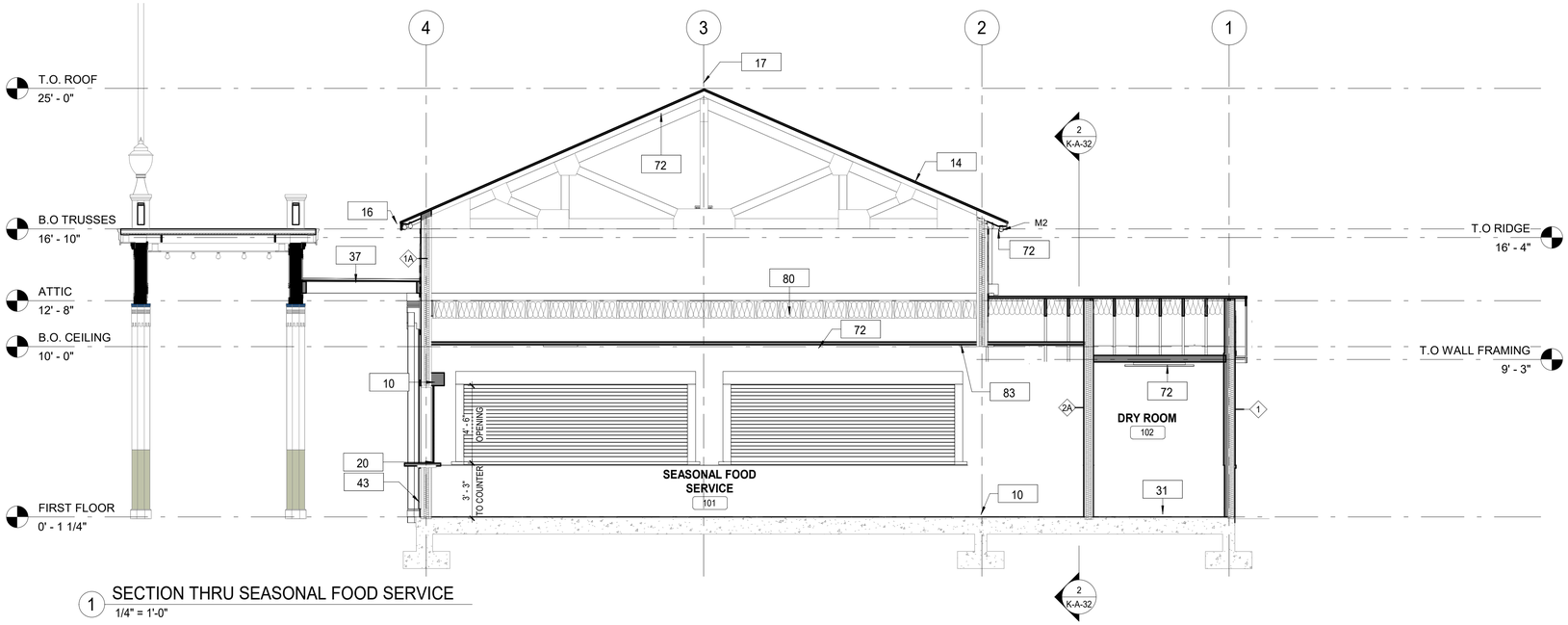

1 SECTION THRU SEASONAL FOOD SERVICE
1/4" = 1'-0"

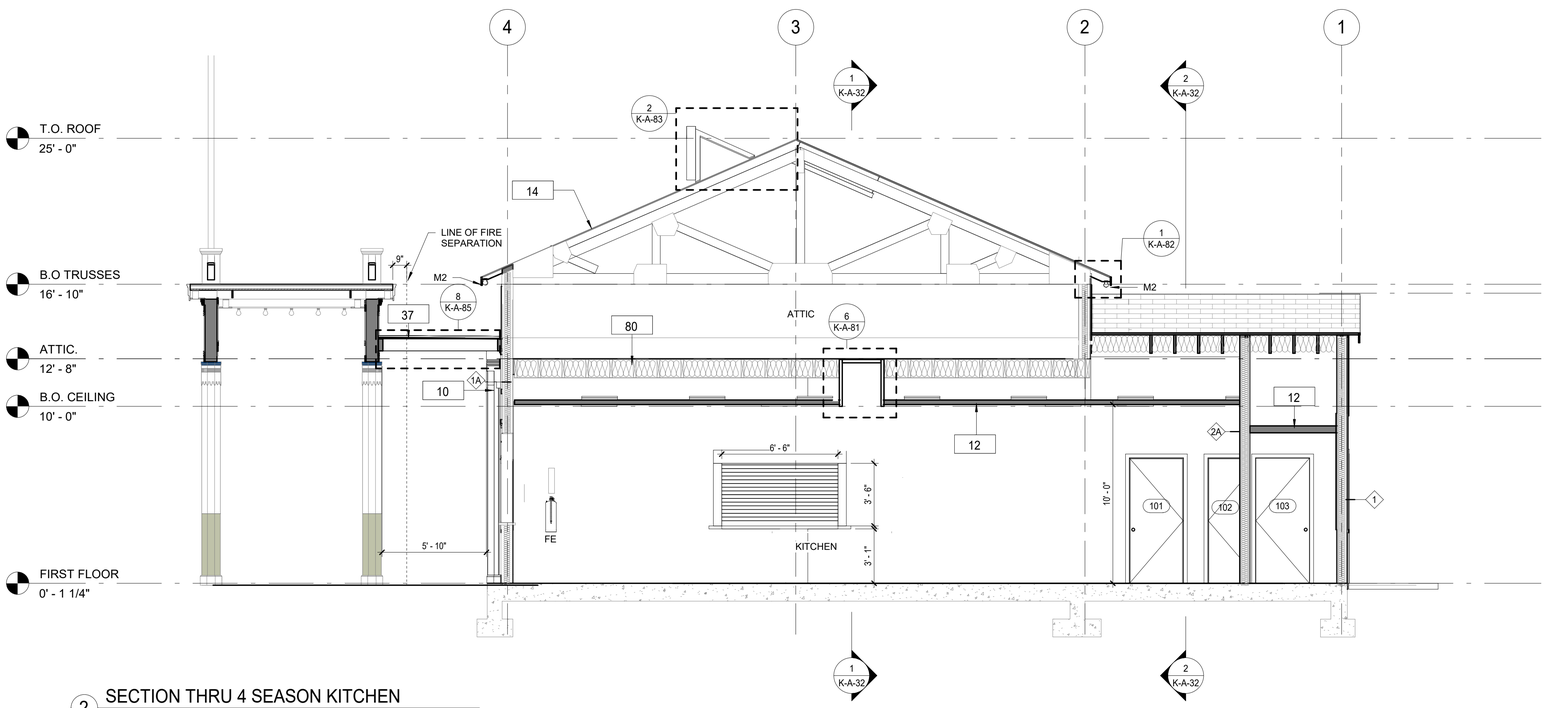

2 SECTION THRU 4 SEASON KITCHEN
1/4" = 1'-0"

CONSTRUCTION GENERAL NOTES

1. THE ARCHITECT DOES NOT CERTIFY DIMENSIONS OR CONDITIONS OF EXISTING CONSTRUCTION. CONTRACTOR SHALL NOTIFY ARCHITECT IMMEDIATELY OF ANY DISCREPANCY BETWEEN DRAWINGS AND EXISTING CONDITIONS. IN ADDITION, CONTRACTOR SHALL NOTIFY THE ARCHITECT OF ANY DEFECTIVE CONSTRUCTION UNCOVERED DURING CONSTRUCTION.
2. CONTRACTOR SHALL KEEP WORK SITE FREE FROM DEBRIS AND ACCUMULATED REFUSE, AND SHALL HAVE SOLE RESPONSIBILITY FOR PROTECTING ALL DANGEROUS AREAS FROM ENTRY BY UNAUTHORIZED PARTIES. ALL CONSTRUCTION SCRAPS, DIRT, AND DEBRIS SHALL BE REMOVED FROM THE PREMISES DAILY. SITE SHALL BE LEFT BROOM CLEAN AT THE END OF EACH WORKING DAY. AT THE COMPLETION OF THE WORK, HE PREMISES SHALL BE LEFT IN A BROOM CLEAN CONDITION.
3. ALL WORK TO BE PERFORMED IN A WORKMANLIKE FASHION. MATERIALS UTILIZED SHALL BE AS SPECIFIED ON THE DRAWINGS OR IN THE JOB SPECIFICATIONS, OR, IF GENERIC, IN COMPLIANCE WITH ASTM, NEW YORK CODE, OR OTHER GENERALLY ACCEPTED STANDARDS.
4. WHERE EXISTING EQUIPMENT OR CONSTRUCTION IS REMOVED OR ALTERED, ALL REMAINING SURFACES AND FINISHES AFFECTED SHALL BE PATCHED AND FINISHED TO MATCH ADJACENT CONSTRUCTION/PRE- EXISTING CONDITION.
5. ALL EXITS SHALL BE KEPT READILY ACCESSIBLE AND UNOBSTRUCTED AT ALL TIMES. ALL EXITS SHALL BE KEPT READILY ACCESSIBLE AND UNOBSTRUCTED AT ALL TIMES.
6. ALL INFILLED OPENINGS TO BE FLUSH WITH EXISTING MASONRY WALL SURFACES, EXTERIOR OF NEW AND OLD TO BE FLUSH AND MATCH WITH EXISTING ADJACENT WALL SYSTEM.
7. THE G.C. SHALL VERIFY DIMENSIONS OF THE EXISTING SPACE AND OF ANY EXISTING CONSTRUCTION TO REMAIN BY ACTUAL MEASUREMENT BEFORE ANY WORK IS PERFORMED. IF ANY MEASUREMENTS DIFFER FROM DIMENSIONS SHOWN ON PLAN, G.C. IS TO NOTIFY THE ARCHITECT IMMEDIATELY. THE G.C. SHALL BE RESPONSIBLE FOR CORRECTING ANY AND ALL DISCREPANCIES FOUND AFTER THE WORK IS PERFORMED, AT NO ADDITIONAL EXPENSE TO THE OWNER.
8. G.C. TO VERIFY ALL FINISHED DIMENSIONS. FIELD CONDITIONS ALTERING ANY DIMENSIONS SHOULD BE BROUGHT TO THE ATTENTION OF THE OWNER AND ARCHITECT.
9. THE G.C. SHALL BE RESPONSIBLE FOR COORDINATING WITH OWNER ON ALL WORK TO BE PERFORMED BY THE OWNER. ANY POTENTIAL CONFLICTS OR DELAYS CAUSED BY THE OWNER'S SUBCONTRACTORS MUST BE DOCUMENTED IN WRITING TO THE OWNER BEFORE THE DELAY IS ACTUALLY INCURRED FOR IT TO BE CONSIDERED. OTHERWISE THE G.C. WILL BE RESPONSIBLE FOR MEETING THE SCHEDULE AS OUTLINED IN THE CONTRACT.

CONSTRUCTION LEGEND

	NOT IN CONTRACT
?	KEY NOTES
1t	WINDOW TAG
101	DOOR TAG

KEYNOTE LEGEND CONST.

Key Value	Keynote Text
10	PROVIDE AND INSTALL COLUMN ENCLOSURES. SEE DETAILS.
12	PROVIDE DROP CEILING AND ALL HANGERS/ ACCESSORIES.
14	PROVIDE NEW ASPHALT SHINGLE ROOFING,UNDERLAYMENT, AND REPLACE IN KIND EXISTING DECKING AS REQUIRED (COORDINATE WITH STRUCTURAL).
16	PROVIDE AND INSTALL ALUMINUM METAL DRIP EDGE, DOWNSPOUT AND GUTTER AT PERIMETER OF ROOF.
17	PROVIDE AND INSTALL RIDGE VENT AT ROOF HIPS.
20	NEW COUNTER ROLL DOWN DOOR LOCATED AT INTERIOR AND ASSOCIATED HARDWARE. REFER TO SCHEDULE FOR MORE DETAILS. CONTRACTOR TO V.I.F. ALL DIMENSIONS BEFORE ORDERING (TYPICAL THROUGHOUT.)
31	NEW CONCRETE PAD FOUNDATION. SEE STRUCTURAL DRAWINGS.
37	NEW CANOPY, SEE DETAILS.
43	NEW COUNTERS & SERVING WINDOWS.
72	NEW LIGHT FIXTURES TO BE INSTALLED (SEE ELECTRICAL DRAWINGS).
80	NEW 3/4" PLYWOOD FLOOR
83	FDA AND USDA COMPLIANT SQUARE LAY IN CEILING TILES.

8/30/2022 2:51:50 PM

CONSULTANT INFORMATION

The LiRo Group
1 State Street Plaza, New York, NY, 10004
(516) 938-5476 www.liro.com

CONSULTANT SEAL

REGISTERED ARCHITECT ROBERT D. YOUNG JR. 023290 STATE OF NEW YORK

REVISION NUMBER	DATE	MADE BY	APP'D BY	REVISION

RECORD DRAWING CERTIFICATION

☐ AS BUILT – CHANGES AS NOTED ☐ AS BUILT – NO CHANGES

CONTRACTOR
NAME
SIGNATURE
TITLE DATE

PROJECT COORDINATOR
NAME
SIGNATURE
TITLE DATE

WESTCHESTER COUNTY, NEW YORK
DEPARTMENT OF PUBLIC WORKS AND TRANSPORTATION
DIVISION OF ENGINEERING

INFRASTRUCTURE REHABILITATION
PLAYLAND PARK, RYE, NEW YORK
RESTAURANT KITCHEN WITH FOOD VENDING
BUILDING SECTIONS

CONTRACT NUMBER	22-523
SHEET NUMBER	K-A-31
DWG NO.:	514 of 664
SCALE:	1/4" = 1'-0"
DATE:	8/23/20223
DPW FILE NUMBER	1-118-A-1263-0
REV. NO.	0

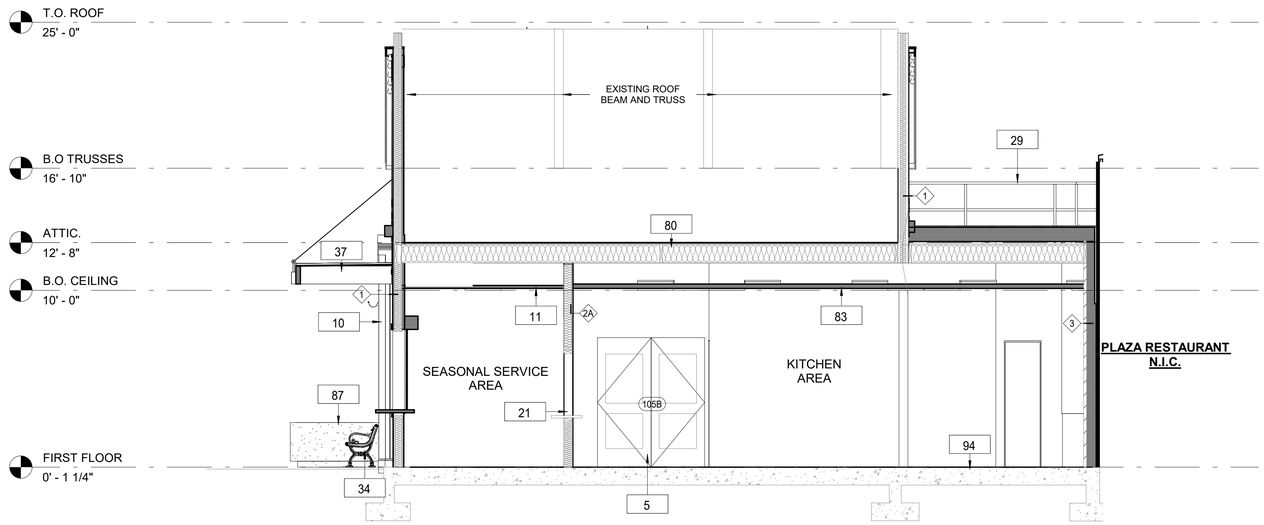

1 SECTION THROUGH SERVICE AND KITCHEN AREA
1/4" = 1'-0"

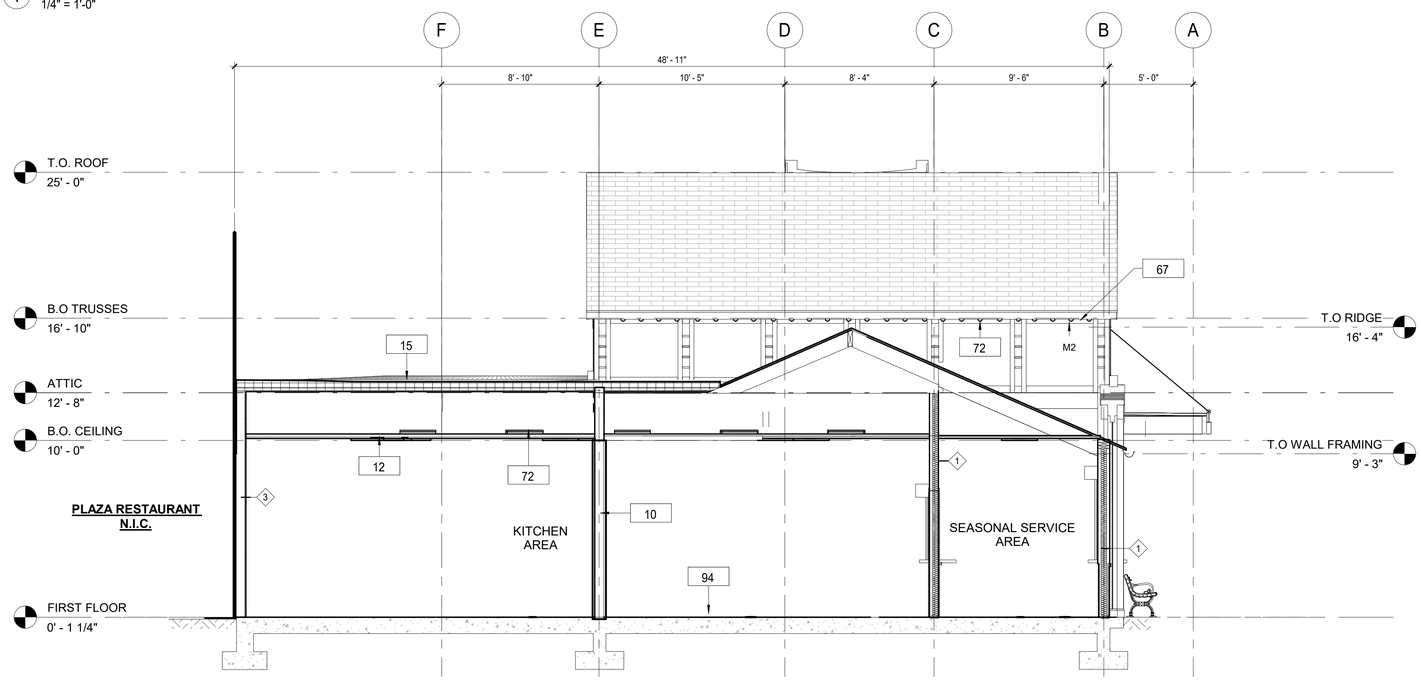

2 SECTION THROUGH EAST KITCHEN AREA
1/4" = 1'-0"

CONSTRUCTION GENERAL NOTES

1. THE ARCHITECT DOES NOT CERTIFY DIMENSIONS OR CONDITIONS OF EXISTING CONSTRUCTION. CONTRACTOR SHALL NOTIFY ARCHITECT IMMEDIATELY OF ANY DISCREPANCY BETWEEN DRAWINGS AND EXISTING CONDITIONS. IN ADDITION, CONTRACTOR SHALL NOTIFY THE ARCHITECT OF ANY DEFECTIVE CONSTRUCTION UNCOVERED DURING CONSTRUCTION.
2. CONTRACTOR SHALL KEEP WORK SITE FREE FROM DEBRIS AND ACCUMULATED REFUSE, AND SHALL HAVE SOLE RESPONSIBILITY FOR PROTECTING ALL DANGEROUS AREAS FROM ENTRY BY UNAUTHORIZED PARTIES. ALL CONSTRUCTION SCRAPS, DIRT, AND DEBRIS SHALL BE REMOVED FROM THE PREMISES DAILY. SITE SHALL BE LEFT BROOM CLEAN AT THE END OF EACH WORKING DAY. AT THE COMPLETION OF THE WORK, HE PREMISES SHALL BE LEFT IN A BROOM CLEAN CONDITION.
3. ALL WORK TO BE PERFORMED IN A WORKMANLIKE FASHION. MATERIALS UTILIZED SHALL BE AS SPECIFIED ON THE DRAWINGS OR IN THE JOB SPECIFICATIONS, OR, IF GENERIC, IN COMPLIANCE WITH ASTM, NEW YORK CODE, OR OTHER GENERALLY ACCEPTED STANDARDS.
4. WHERE EXISTING EQUIPMENT OR CONSTRUCTION IS REMOVED OR ALTERED, ALL REMAINING SURFACES AND FINISHES AFFECTED SHALL BE PATCHED AND FINISHED TO MATCH ADJACENT CONSTRUCTION/PRE- EXISTING CONDITION.
5. ALL EXITS SHALL BE KEPT READILY ACCESSIBLE AND UNOBSTRUCTED AT ALL TIMES. ALL EXITS SHALL BE KEPT READILY ACCESSIBLE AND UNOBSTRUCTED AT ALL TIMES.
6. ALL INFILLED OPENINGS TO BE FLUSH WITH EXISTING MASONRY WALL SURFACES, EXTERIOR OF NEW AND OLD TO BE FLUSH AND MATCH WITH EXISTING ADJACENT WALL SYSTEM.
7. THE G.C. SHALL VERIFY DIMENSIONS OF THE EXISTING SPACE AND OF ANY EXISTING CONSTRUCTION TO REMAIN BY ACTUAL MEASUREMENT BEFORE ANY WORK IS PERFORMED. IF ANY MEASUREMENTS DIFFER FROM DIMENSIONS SHOWN ON PLAN, G.C. IS TO NOTIFY THE ARCHITECT IMMEDIATELY. THE G.C. SHALL BE RESPONSIBLE FOR CORRECTING ANY AND ALL DISCREPANCIES FOUND AFTER THE WORK IS PERFORMED, AT NO ADDITIONAL EXPENSE TO THE OWNER.
8. G.C. TO VERIFY ALL FINISHED DIMENSIONS. FIELD CONDITIONS ALTERING ANY DIMENSIONS SHOULD BE BROUGHT TO THE ATTENTION OF THE OWNER AND ARCHITECT.
9. THE G.C. SHALL BE RESPONSIBLE FOR COORDINATING WITH OWNER ON ALL WORK TO BE PERFORMED BY THE OWNER. ANY POTENTIAL CONFLICTS OR DELAYS CAUSED BY THE OWNER'S SUBCONTRACTORS MUST BE DOCUMENTED IN WRITING TO THE OWNER BEFORE THE DELAY IS ACTUALLY INCURRED FOR IT TO BE CONSIDERED. OTHERWISE THE G.C. WILL BE RESPONSIBLE FOR MEETING THE SCHEDULE AS OUTLINED IN THE CONTRACT.

CONSTRUCTION LEGEND

	NOT IN CONTRACT
?	KEY NOTES
1t	WINDOW TAG
101	DOOR TAG

KEYNOTE LEGEND CONST.

Key Value	Keynote Text
5	PROVIDE AND INSTALL DOOR INCLUDING FRAME, SILL, LINTEL AND ANY ASSOCIATE HARDWARE. SEE DOOR SCHEDULE.
10	PROVIDE AND INSTALL COLUMN ENCLOSURES. SEE DETAILS.
11	PROVIDE AND INSTALL T1-11 CEILING.
12	PROVIDE DROP CEILING AND ALL HANGERS/ ACCESSORIES.
15	PROVIDE AND INSTALL SBS MODIFIED BITUMEN ROOFING AND UNDERLAYMENT.
21	NEW INTERIOR WALL. SEE WALL SCHEDULE.
29	PROVIDE AND INSTALL NEW OSHA COMPLIANT GUARD RAIL.
34	PROVIDE NEW BENCH.
37	NEW CANOPY, SEE DETAILS.
67	NEW FASCIA BOARD AND SOFFIT.
72	NEW LIGHT FIXTURES TO BE INSTALLED (SEE ELECTRICAL DRAWINGS).
80	NEW 3/4" PLYWOOD FLOOR
83	FDA AND USDA COMPLIANT SQUARE LAY IN CEILING TILES.
87	NEW PRECAST CONCRETE PLANTER BOX.
94	NEW QUARRY TILE. SUPRESS CONCRETE SLAB AS SHOWN IN 9/K-A-81. SLOPE TOWARDS DRAIN.

8/30/2022 2:51:52 PM

CONSULTANT INFORMATION
The LiRo Group
1 State Street Plaza, New York, NY, 10004
(516) 938-5476 www.liro.com

CONSULTANT SEAL
REGISTERED ARCHITECT ROBERT D. LIRO 023239 STATE OF NEW YORK

REVISION NUMBER	DATE	MADE BY	APP'D BY	REVISION

RECORD DRAWING CERTIFICATION
☐ AS BUILT – CHANGES AS NOTED ☐ AS BUILT – NO CHANGES

CONTRACTOR
NAME
SIGNATURE
TITLE DATE

PROJECT COORDINATOR
NAME
SIGNATURE
TITLE DATE

WESTCHESTER COUNTY, NEW YORK
DEPARTMENT OF PUBLIC WORKS AND TRANSPORTATION
DIVISION OF ENGINEERING

INFRASTRUCTURE REHABILITATION
PLAYLAND PARK, RYE, NEW YORK
RESTAURANT KITCHEN WITH FOOD VENDING
BUILDING SECTIONS 2

CONTRACT NUMBER 22-523
SHEET NUMBER K-A-32
DWG NO.: 515 of 664
SCALE: 1/4" = 1'-0"
DATE: 8/23/20223
DPW FILE NUMBER 1-118-A-1264-0
REV. NO. 0

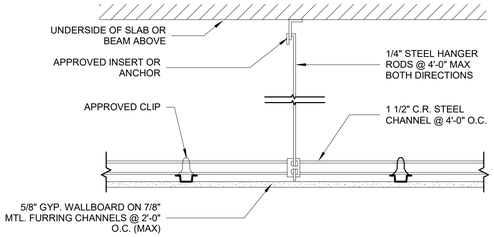

1 TYP. GYPSUM BD CEILING DETAIL
1 1/2" = 1'-0"

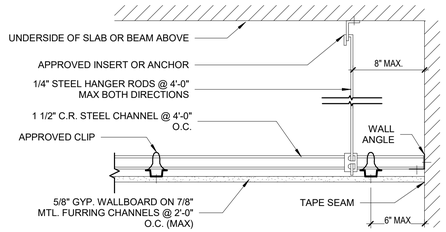

2 TYP. GYPSUM BD MAIN RUNNER AT PERIMETER DETAIL
1 1/2" = 1'-0"

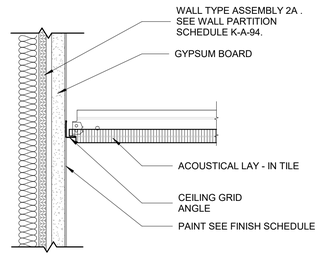

3 ACOUSTICAL CEILING DETAIL
3" = 1'-0"

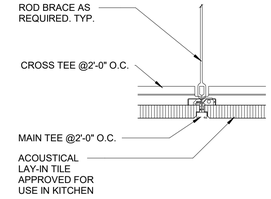

4 ACOUSTICAL TILE CONNECTION DETAIL
3" = 1'-0"

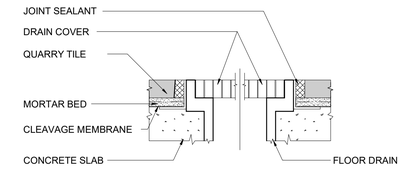

12 TILE FLOORING - CHANNEL DRAIN DETAIL
6" = 1'-0"

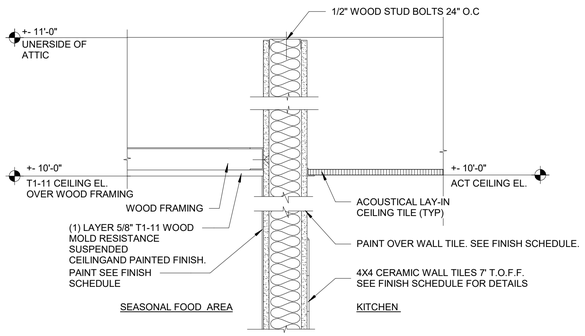

5 CEILING SECTION DETAIL THROUGH SEASONAL FOOD AREA AND KITCHEN
1 1/2" = 1'-0"

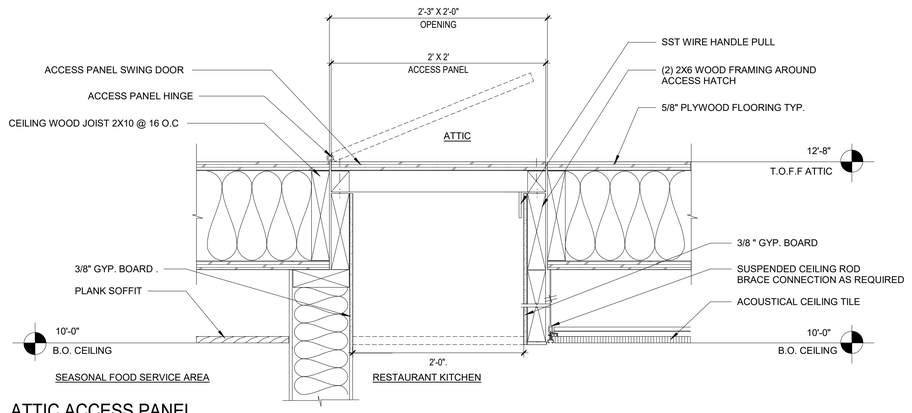

6 ATTIC ACCESS PANEL
1 1/2" = 1'-0"

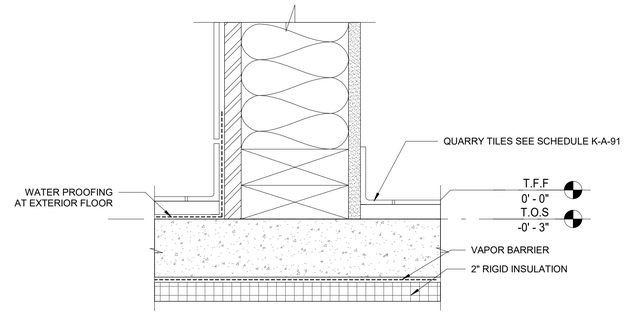

9 TYPICAL QUARRY TILE ON CONCRETE DETAIL
3" = 1'-0"

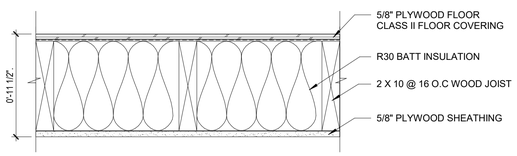

7 TYPICAL WOOD FLOOR DETAIL - WD-3
1 1/2" = 1'-0"

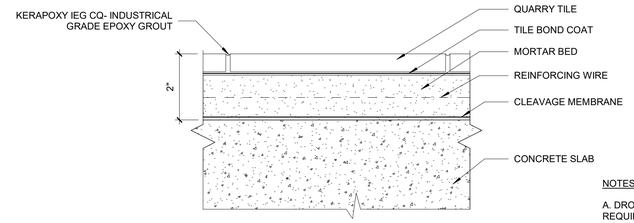

11 TILE FLOOR TYPICAL DETAIL AT INTERIOR FLOOR
6" = 1'-0"

NOTES:

A. DROP CLIPS SHALL BE OF LENGTH REQUIRED TO PROVIDE CLEARANCE FOR LIGHTING FIXTURES AND OTHER ITEMS ABOVE CEILING. WHERE CLEARANCE IS LIMITED PROVIDE CLIPS THAT CONNECT RUNNER TIGHT TO THE BOTTOM OF CARRYING CHANNELS.

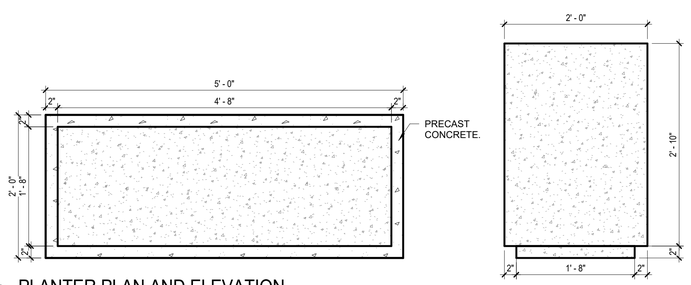

10 PLANTER PLAN AND ELEVATION
1" = 1'-0"

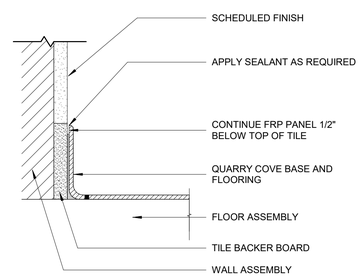

13 QUARRY TILE BASE DETAIL
3" = 1'-0"

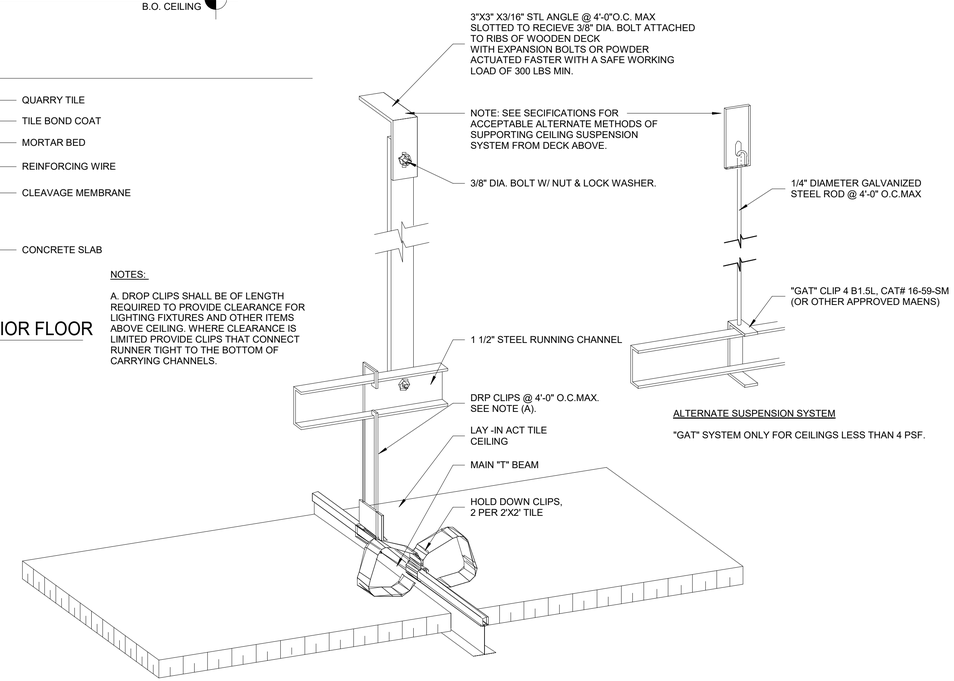

8 TYPICAL ACT CEILING DETAIL
3" = 1'-0"

8/30/2022 2:51:54 PM

CONSULTANT INFORMATION

The LiRo Group

1 State Street Plaza, New York, NY, 10004
(516) 938-5476 www.liro.com

CONSULTANT SEAL

REGISTERED ARCHITECT ROBERT D. TOWNSEND 023230 STATE OF NEW YORK

REVISION NUMBER	DATE	MADE BY	APP'D BY	REVISION

RECORD DRAWING CERTIFICATION

☐ AS BUILT – CHANGES AS NOTED ☐ AS BUILT – NO CHANGES

CONTRACTOR
NAME
SIGNATURE
TITLE DATE

PROJECT COORDINATOR
NAME
SIGNATURE
TITLE DATE

WESTCHESTER COUNTY, NEW YORK
DEPARTMENT OF PUBLIC WORKS AND TRANSPORTATION
DIVISION OF ENGINEERING

INFRASTRUCTURE REHABILITATION
PLAYLAND PARK, RYE, NEW YORK
RESTAURANT KITCHEN WITH FOOD VENDING
CEILING, FLOOR, AND PLANTER DETAILS

CONTRACT NUMBER	22-523
SHEET NUMBER	K-A-81
DWG NO.:	516 of 664
SCALE:	As indicated
DATE:	8/23/20223
DPW FILE NUMBER	1-118-A-1265-0
REV. NO.	0

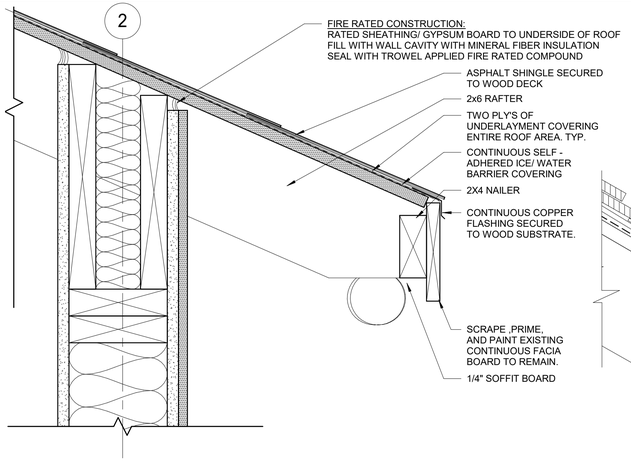

1 ROOFING DETAIL AT GUTTER
3" = 1'-0"

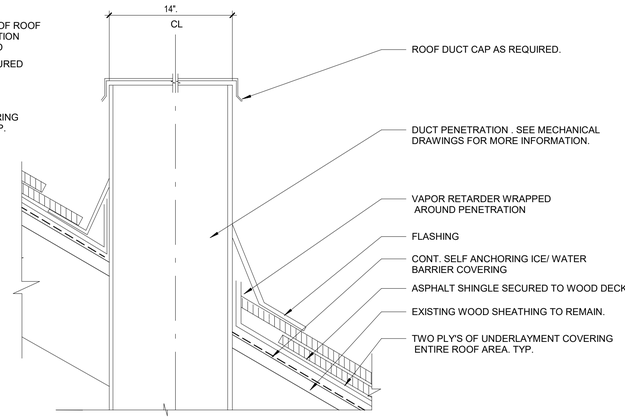

2 TYPICAL FLASHING AT DUCT DETAIL

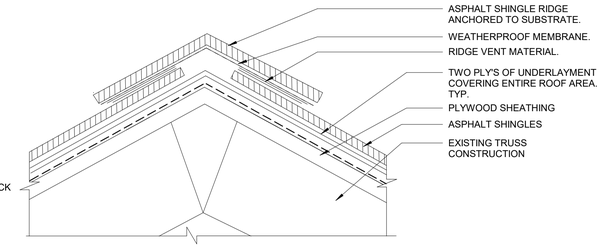

3 TYPICAL DETAIL AT RIDGE

GENERAL ROOF DETAIL NOTES

1. INSTALL FELT UNDERLAYMENTS ON ALL PARTS OF THE ROOF DECK NOT COVERED BY ICE/ WATER BARRIERS. LAP EDGES OF FELT OVER SELF - ADHEARING ICE AND WATER BARRIER NOT LESS THAN 3" IN DIRECTION TO SHED WATER. LAP EDGES OF FELT NOT LESS THAN 6" OVER ICE/ WATER BARRIER. FELT UNDERLAYMENT SHOULD NOT BE PLACED UNDER ICE/ WATER BARRIER AND SHOULD OVERLAP IN 3". SIDE LAPS SHOULD NOT BE LESS THAN 6".

2. INSTALL STARTER SLATE AND FIELD SLATE AS RECOMMENDED BY MANUFATURE FOR CURRENT PROJECT ROOF CONDITIONS.

3. INSTALL 36" (MIN.) CONTINUOUS WIDE ICE/WATER SHIELD THROUGHOUT ENTIRE ROOF AREA CENTERED AT ALL VALLEYS, SIDEWALLS, HEADWALLS, AND PENETRATIONS . SLATES MUST COVER VALLEY FLASHING BY A MIN. 4" . DO NOT FASTEN SLATES INTO METAL VALLEY FLASHING.

4. UNDERLAYMENT REFER TO SPEC SECTION 073140.

5. FLASHING - REFER TO SPEC 073140.

6. FASTNERS - REFER TO SPEC SECTION 073140.

7.REFER TO SPECIFICATION SECTION 073113 ASPHALT SLATE SHINGLES FOR BALANCE OF INFORMATION.

8. WOOD DECK REPAIR WOOD DECK AS EXISTING CONDITIONS REQUIRED BY ROOFING MANUFACTURE IN ORDER TO OBTAIN MANUFACTURER'S WARRANTY. CONSIDER 5% OF THE ENTIRE WOOD DECK AREA REPAIRS UNDER ALLOWANCE NO.1 PRIOR INSPECTION ON EXISTING WOOD DECK REQUIRED BEFORE STARTING ANY ROOFING WORK .

9.PREPARE EXISTING WOOD FOR NEW COATING SYSTEM AS REQUIRED BY THE COATING SYSTEM MANUFACTURE. PRIME AND PAINT. REFER TO SPECIFICATION SECTION 09900.

10. PROVIDE PRE- FABRICATED ASPHALT SHINGLE CAP AT ALL HIPS.

11. ROOF BARRIER FENCES SECURED TO THE ROOF DECK SHALL NOT BE WITHIN 2'-6" OF THE ROOF'S EXTERIOR EDGE.

12. ALL STEEL TUBE TO STEEL TUBE CONNECTIONS SHALL BE FULLY WELDED. REPAIR ANY GALVANIZING DAMAGED DUE TO FIELD WELDING.

13. CONTRACTOR TO PROVIDE ICE WATER SHIELD AT ROOF EAVE , RIDGE, HIP, RAKE, LOW PITCH, VENT STACK AS REQUIRED. GRACE ICE & WATER SHIELD PRODUCT SHOULD BE INCLUDED IN THE SPEC'S AS BASIS OF DESIGN, UNLESS NOT COVERED ALREADY.

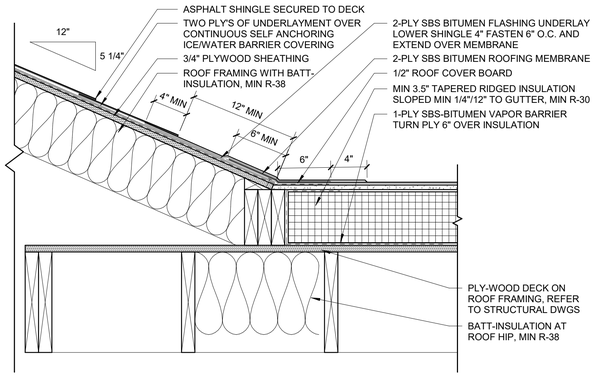

4 TYP ASPHALT AND SBS HIP ROOF CONNECTION DETAIL
1 1/2" = 1'-0"

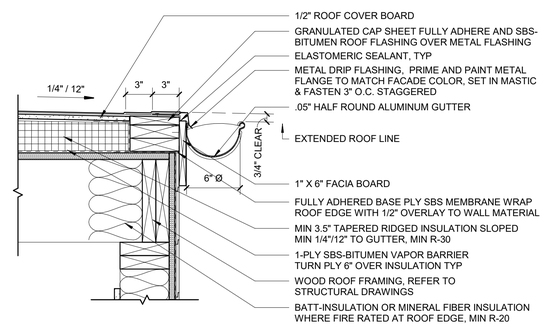

5 TYPICAL SBS ROOF RIDGE DETAIL
1 1/2" = 1'-0"

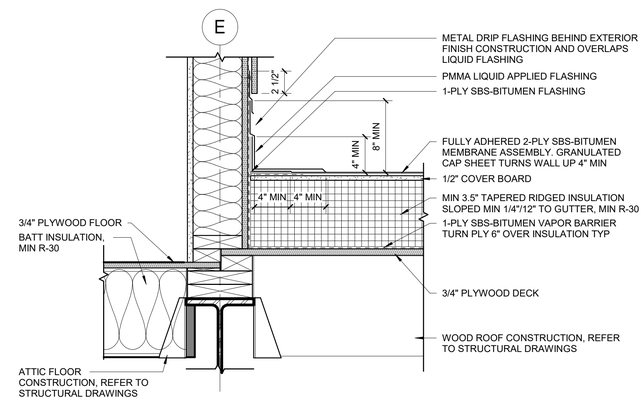

6 TYPICAL FLASHING DETAIL AT SBS ROOF AND EXTERIOR WALL
1 1/2" = 1'-0"

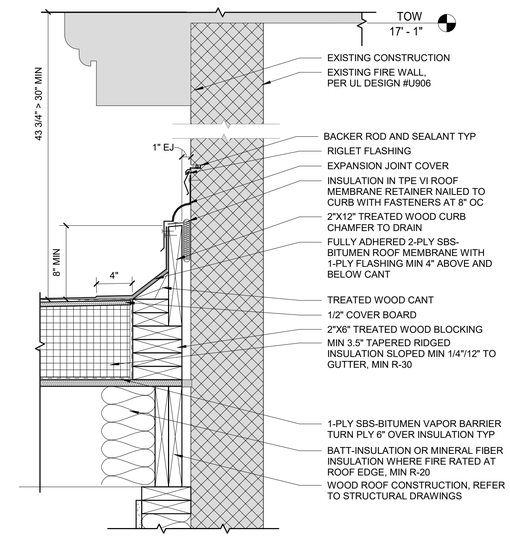

7 TYPICAL SBS ROOF TO EXISTING EXTERIOR WALL FLASHING DETAIL
1 1/2" = 1'-0"

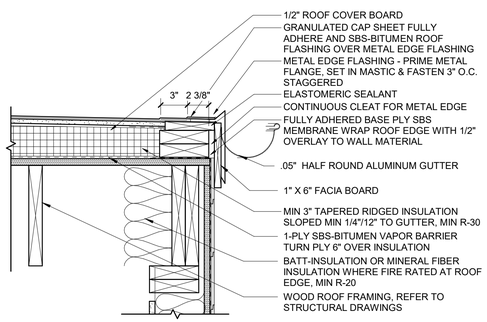

8 TYPICAL SBS ROOF EDGE DETAIL

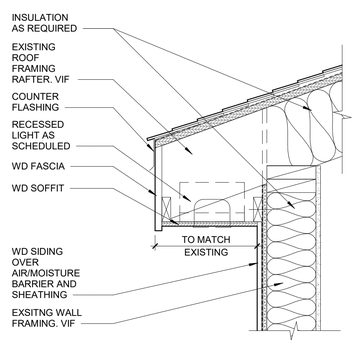

9 TYPICAL INSULATED EXTERIOR SOFFIT DETAIL
1 1/2" = 1'-0"

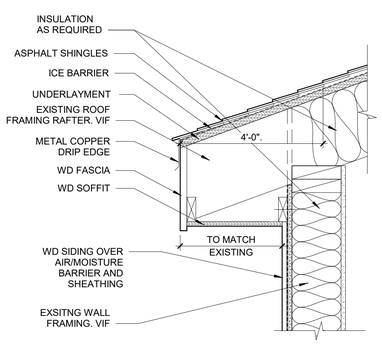

10 TYPICAL ROOF EAVE SECTION DETAIL
1 1/2" = 1'-0"

8/30/2022 2:51:56 PM

CONSULTANT INFORMATION
The LiRo Group
1 State Street Plaza, New York, NY, 10004
(516) 938-5476 www.liro.com

CONSULTANT SEAL
REGISTERED ARCHITECT ROBERT D. YOUNG JR. 023290 STATE OF NEW YORK

REVISION NUMBER	DATE	MADE BY	APP'D BY	REVISION

RECORD DRAWING CERTIFICATION
☐ AS BUILT – CHANGES AS NOTED ☐ AS BUILT – NO CHANGES

CONTRACTOR
NAME
SIGNATURE
TITLE DATE

PROJECT COORDINATOR
NAME
SIGNATURE
TITLE DATE

WESTCHESTER COUNTY, NEW YORK
DEPARTMENT OF PUBLIC WORKS AND TRANSPORTATION
DIVISION OF ENGINEERING

INFRASTRUCTURE REHABILITATION
PLAYLAND PARK, RYE, NEW YORK
RESTAURANT KITCHEN WITH FOOD VENDING
ROOF DETAILS

CONTRACT NUMBER **22-523**
SHEET NUMBER **K-A-82**
DWG NO.: 517 of 664
SCALE: **As indicated**
DATE: **8/23/20223**
DPW FILE NUMBER **1-118-A-1266-0**
REV. NO. 0

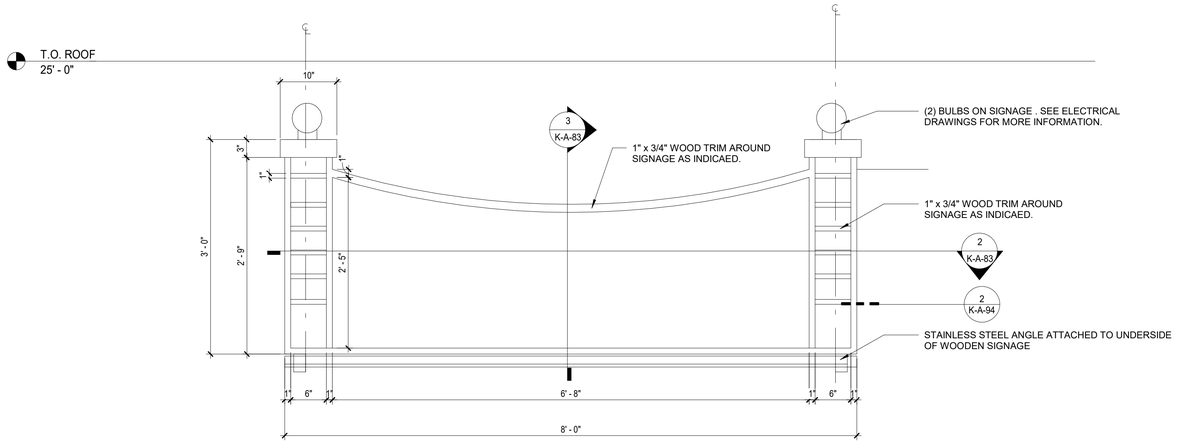

1 ROOF SIGNAGE ELEVATION
1" = 1'-0"

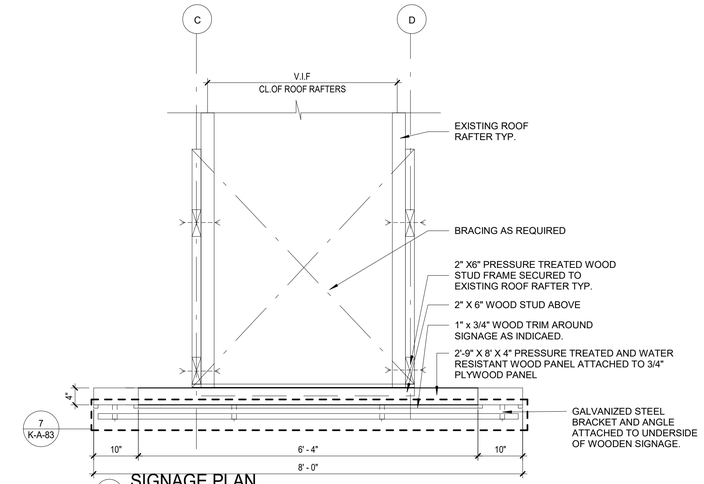

2 SIGNAGE PLAN
3/4" = 1'-0"

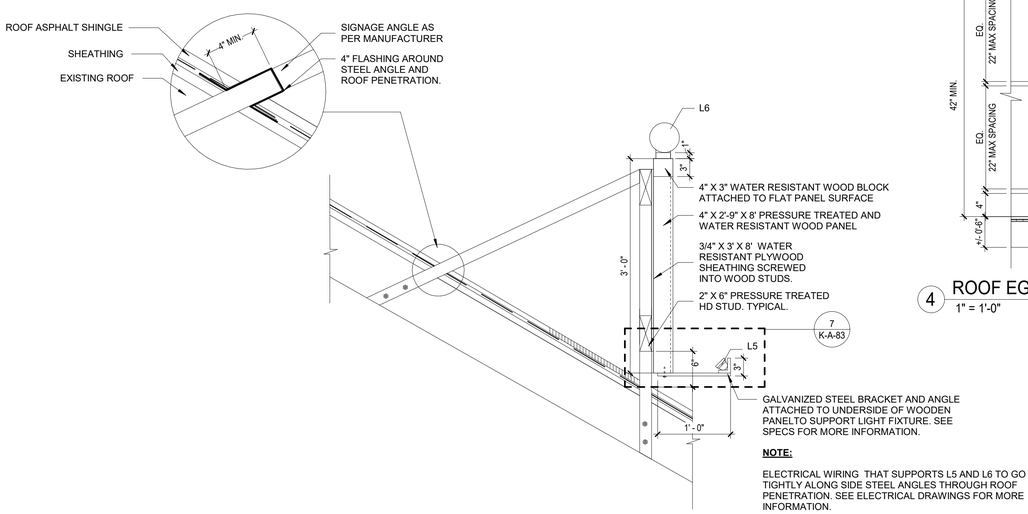

NOTE:

ELECTRICAL WIRING THAT SUPPORTS L5 AND L6 TO GO TIGHTLY ALONG SIDE STEEL ANGLES THROUGH ROOF PENETRATION. SEE ELECTRICAL DRAWINGS FOR MORE INFORMATION.

3 ROOF SIGNAGE SECTION DETAIL
1" = 1'-0"

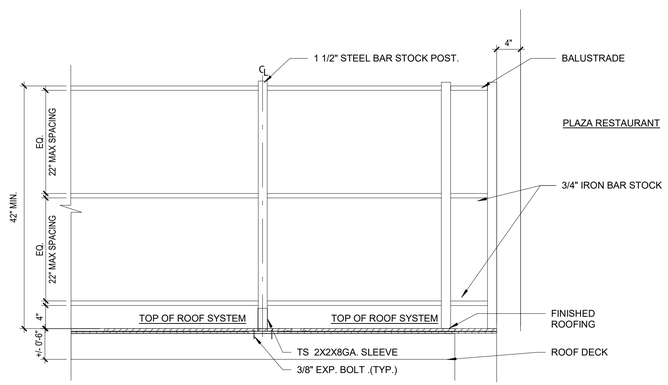

4 ROOF EGDE RAILING ELEVATION
1" = 1'-0"

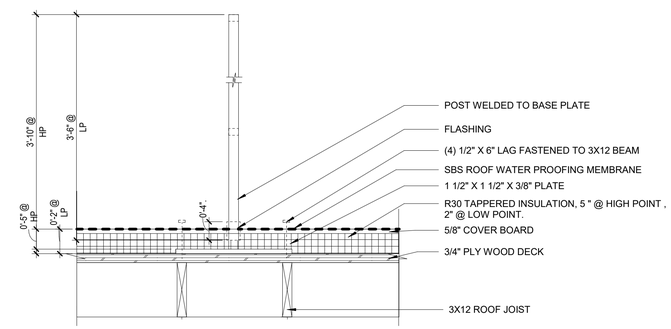

5 RAILING POST SECTION DETAIL
1 1/2" = 1'-0"

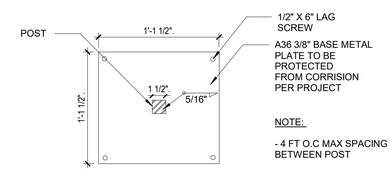

NOTE:

- 4 FT O.C MAX SPACING BETWEEN POST

6 RAILING PLATE PLAN DETAIL
1 1/2" = 1'-0"

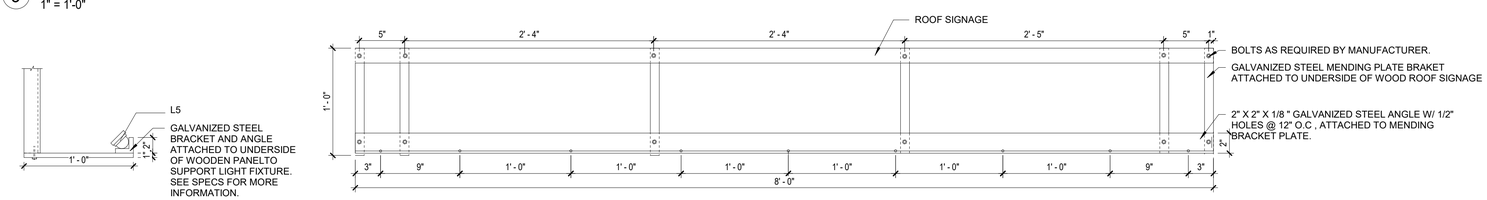

7 GALVANIZED STEEL BRACKET AND ANGLE DETAILS
1 1/2" = 1'-0"

8/30/2022 2:51:57 PM

CONSULTANT INFORMATION

The LiRo Group

1 State Street Plaza, New York, NY, 10004
(516) 938-5476 www.liro.com

CONSULTANT SEAL

REGISTERED ARCHITECT ROBERT D. CONNOR 023230 STATE OF NEW YORK

REVISION NUMBER	DATE	MADE BY	APP'D BY	REVISION

RECORD DRAWING CERTIFICATION

☐ AS BUILT – CHANGES AS NOTED ☐ AS BUILT – NO CHANGES

CONTRACTOR
NAME
SIGNATURE
TITLE DATE

PROJECT COORDINATOR
NAME
SIGNATURE
TITLE DATE

WESTCHESTER COUNTY, NEW YORK
DEPARTMENT OF PUBLIC WORKS AND TRANSPORTATION
DIVISION OF ENGINEERING

INFRASTRUCTURE REHABILITATION
PLAYLAND PARK, RYE, NEW YORK
RESTAURANT KITCHEN WITH FOOD VENDING
ROOF SIGNAGE DETAILS

CONTRACT NUMBER	22-523
SHEET NUMBER	K-A-83
DWG NO.:	518 of 664
SCALE:	As indicated
DATE:	8/23/20223
DPW FILE NUMBER	1-118-A-1267-0
REV. NO.	0

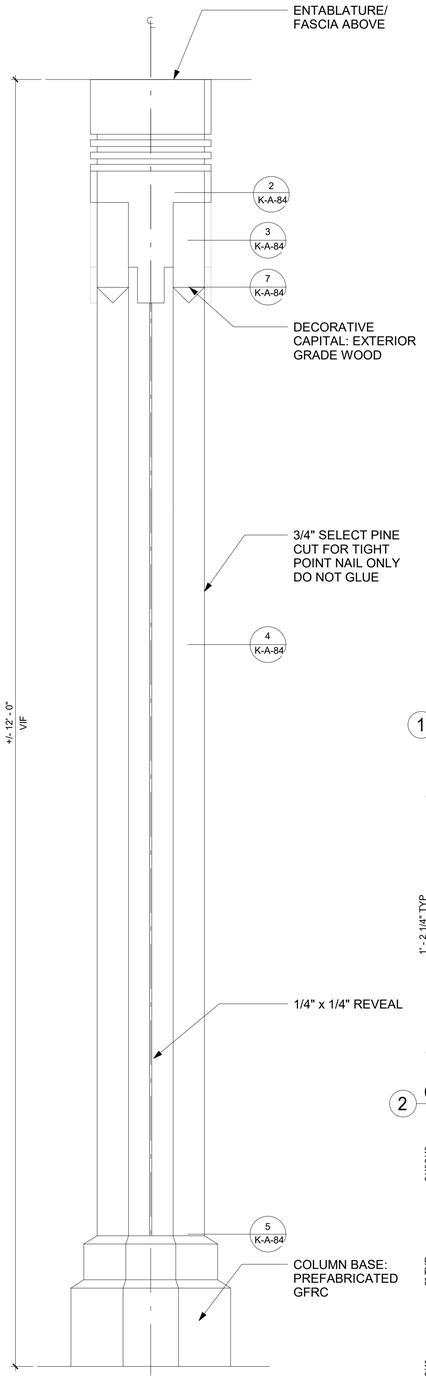

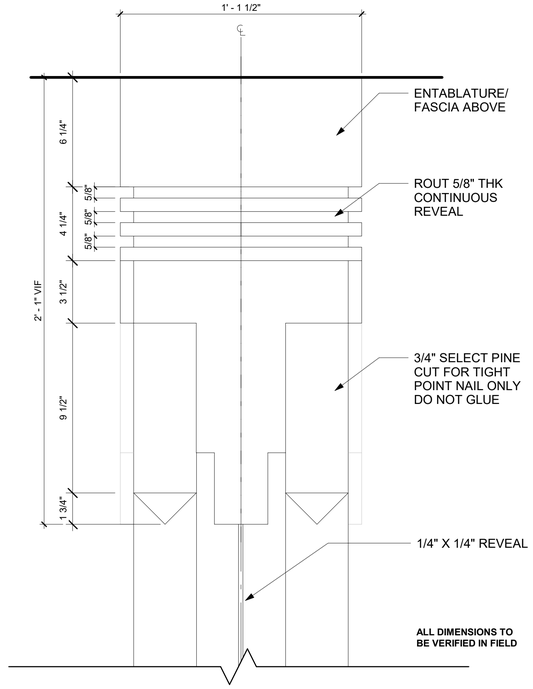

1 COLUMN CAPITAL DETAIL TYPE C
3" = 1'-0"

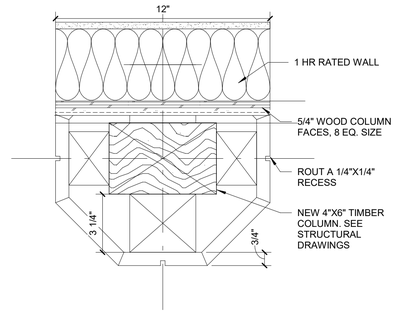

4 TYPE 1 - COLUMN DETAIL AT SHAFT
3" = 1'-0"

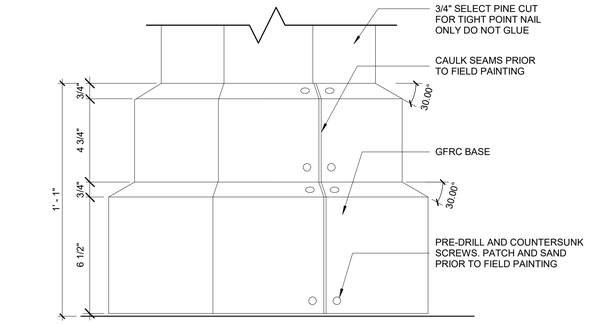

7 COLUMN C ELEVATION - COLUMN BASE
3" = 1'-0"

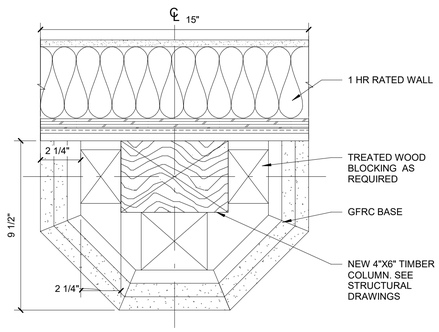

5 TYPE 1 - COLUMN DETAIL AT BASE
3" = 1'-0"

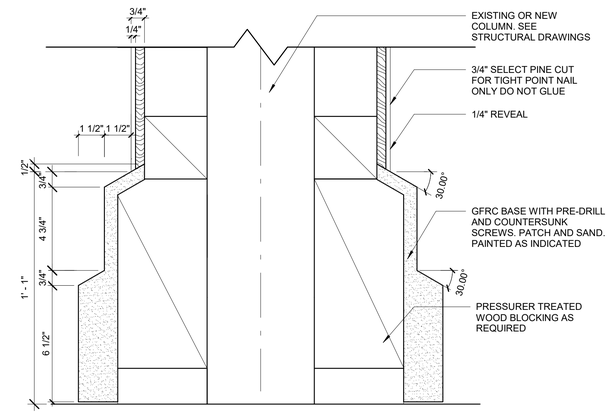

8 COLUMN C SECTION - COLUMN BASE
3" = 1'-0"

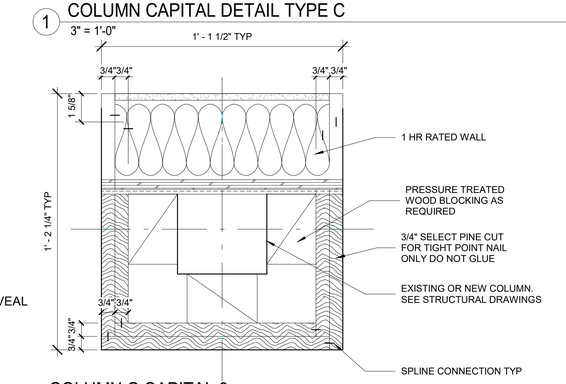

2 COLUMN C CAPITAL 3
3" = 1'-0"

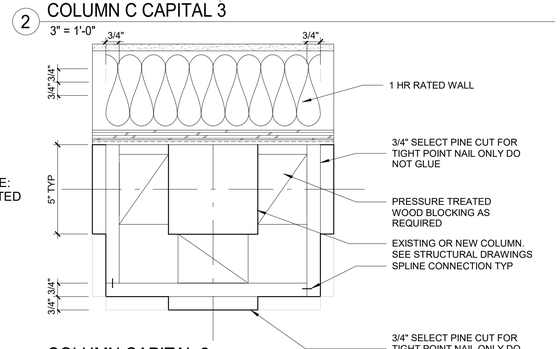

3 COLUMN CAPITAL 2
3" = 1'-0"

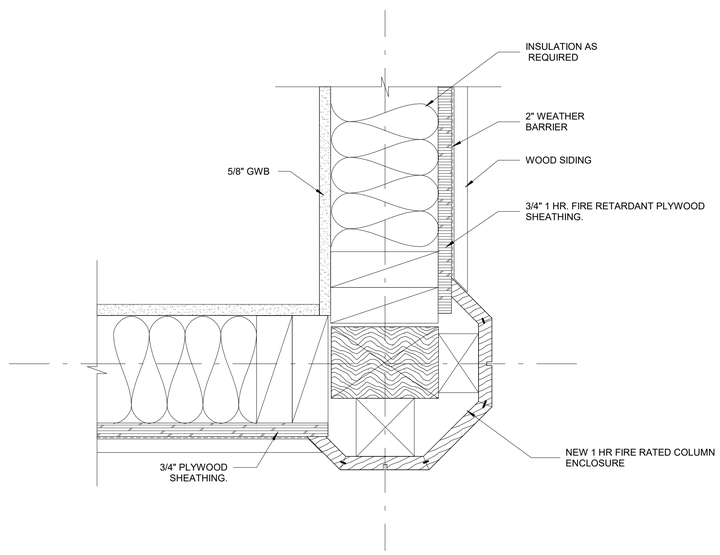

6 EXTERIOR CORNER COLUMN CONNECTION PLAN DETAIL
3" = 1'-0"

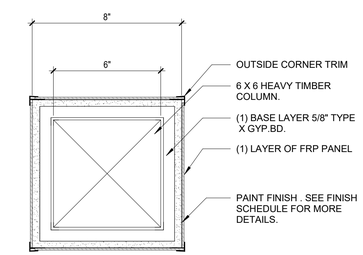

9 INTERIOR COLUMN ENCLOSURE DETAIL
3" = 1'-0"

NOTES:
1. KILN DRIED WOOD IS TO BE USED FOR COLUMN CLADDINGS.
2. PRESSURE-TREATED WOOD ARE TO BE USED FOR BLOCKING SUBSTRATE AS REQUIRED BY CLADDING INSTALLATIONS.
3. STAINLESS STEEL NAILS FASTENERS ARE TO BE USED FOR CLADDDING, BLOCKING INSTALLATIONS.
4. HARDWOOD IS TO BE USED FOR SPLINE SHIM CLADDIING CONNECTION.
5. SPLICE WOOD CLADDING PANEL OF INDIVIDUAL PIECES WHEN PANEL WIDTH EXCEEDS WIDTH OF WOOD PLANK AVAILABLE
6. **ALL DIMENSIONS TO BE VERIFIED IN FIELD**

8/30/2022 2:51:58 PM

CONSULTANT INFORMATION
The LiRo Group
1 State Street Plaza, New York, NY, 10004
(516) 938-5476 www.liro.com

CONSULTANT SEAL
REGISTERED ARCHITECT ROBERT D. LORINO 023230 STATE OF NEW YORK

REVISION NUMBER	DATE	MADE BY	APP'D BY	REVISION

RECORD DRAWING CERTIFICATION
☐ AS BUILT – CHANGES AS NOTED ☐ AS BUILT – NO CHANGES

CONTRACTOR
NAME
SIGNATURE
TITLE DATE

PROJECT COORDINATOR
NAME
SIGNATURE
TITLE DATE

WESTCHESTER COUNTY, NEW YORK
DEPARTMENT OF PUBLIC WORKS AND TRANSPORTATION
DIVISION OF ENGINEERING

INFRASTRUCTURE REHABILITATION
PLAYLAND PARK, RYE, NEW YORK
RESTAURANT KITCHEN WITH FOOD VENDING
COLUMN DETAILS

CONTRACT NUMBER	22-523
SHEET NUMBER	K-A-84
DWG NO.:	519 of 664
SCALE:	As indicated
DATE:	8/23/20223
DPW FILE NUMBER	1-118-A-1268-0
REV. NO.	0

POLYCARBONATE GLAZING SYSTEM
POLYCARBONATE PANELS:
5/32" (4MM) THICK
23.625" (600MM) PANEL WIDTH
TRANSPARENT (LIGHT BLUE TINT)
70% LIGHT TRANSMISSION

EXTRUDED ALUMINUM MULLION SYSTEM

BASIS OF DESIGN: PALRAM SUNGLAZE™ 4/600 SYSTEM

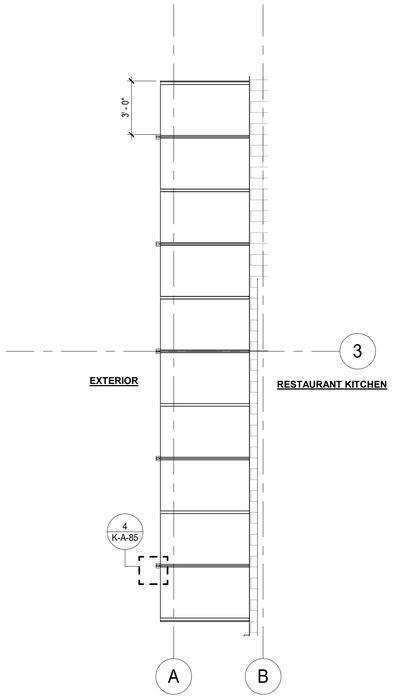

1 OVER HUNG CANOPY PARTIAL PLAN
1/4" = 1'-0"

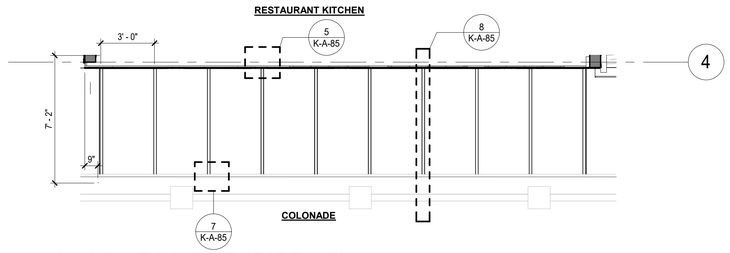

2 CANOPY AT COLONADE PARTIAL PLAN
1/4" = 1'-0"

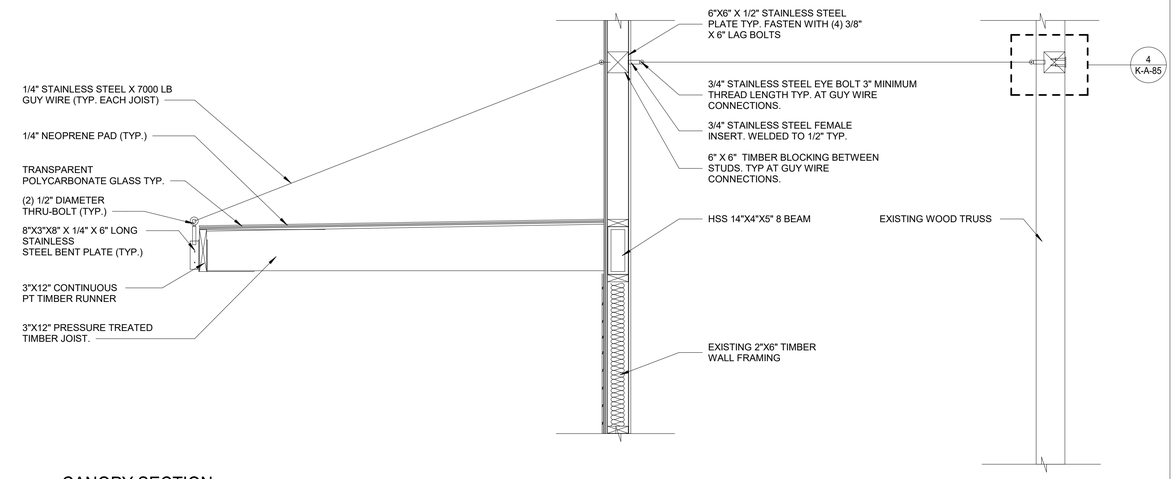

3 CANOPY SECTION
3/8" = 1'-0"

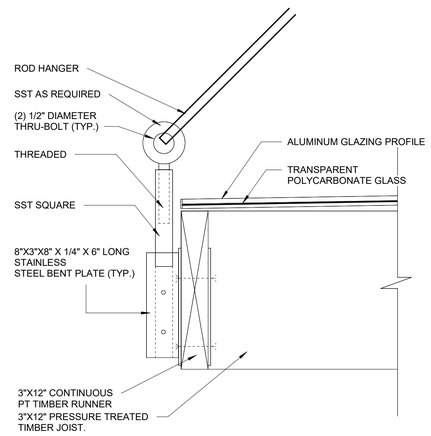

4 GUY WIRE EYE BOLT CONNECTION AT TIMBER RUNNER
3/8" = 1'-0"

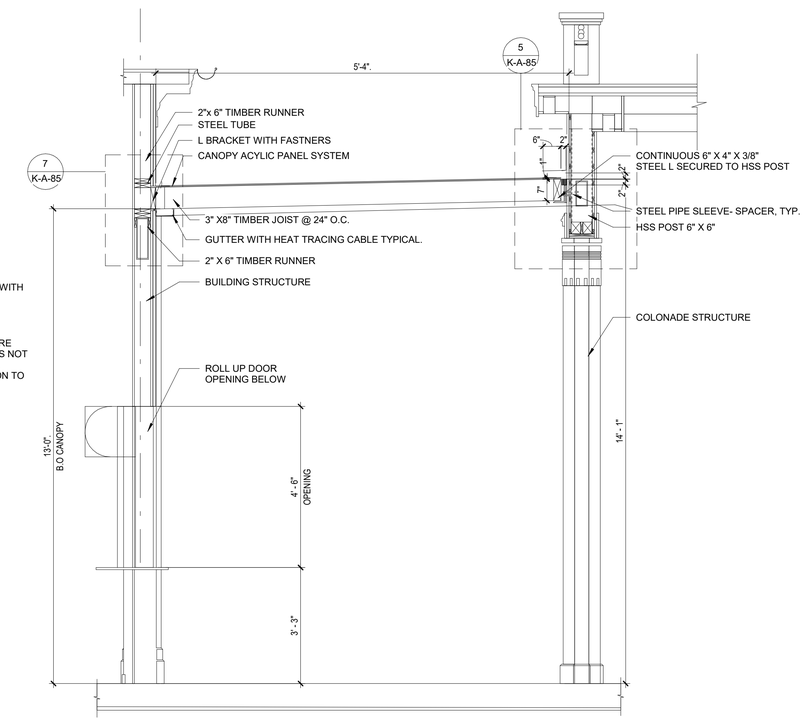

8 CANOPY TO COLONADE SECTION
1/2" = 1'-0"

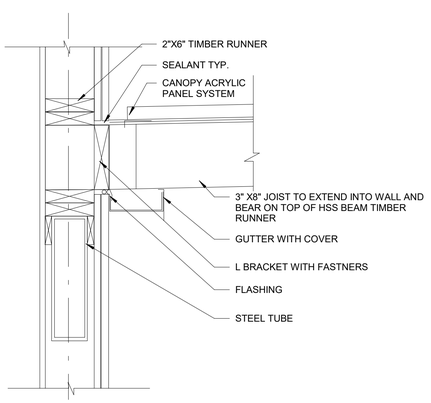

5 BUILDING TO CANOPY CONNECTION DETAIL
1 1/2" = 1'-0"

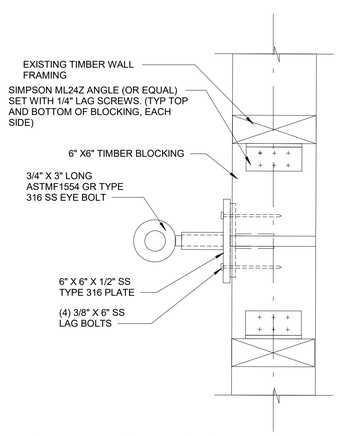

6 GUY WIRE CONNECTION AT TIMBER WALL
3/8" = 1'-0"

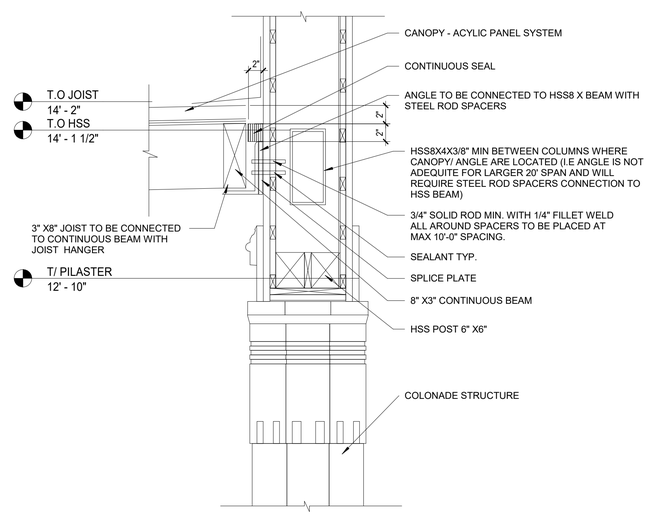

7 CANOPY TO COLONADE CONNECTION DETAIL
1 1/2" = 1'-0"

8/30/2022 2:51:59 PM

CONSULTANT INFORMATION
The LiRo Group
1 State Street Plaza, New York, NY, 10004
(516) 938-5476 www.liro.com

CONSULTANT SEAL
REGISTERED ARCHITECT ROBERT D. LIORIO JR. 023220 STATE OF NEW YORK

REVISION NUMBER	DATE	MADE BY	APP'D BY	REVISION

RECORD DRAWING CERTIFICATION
☐ AS BUILT – CHANGES AS NOTED ☐ AS BUILT – NO CHANGES

CONTRACTOR
NAME
SIGNATURE
TITLE DATE

PROJECT COORDINATOR
NAME
SIGNATURE
TITLE DATE

WESTCHESTER COUNTY, NEW YORK
DEPARTMENT OF PUBLIC WORKS AND TRANSPORTATION
DIVISION OF ENGINEERING

INFRASTRUCTURE REHABILITATION
PLAYLAND PARK, RYE, NEW YORK
RESTAURANT KITCHEN WITH FOOD VENDING
CANOPY DETAILS

CONTRACT NUMBER	22-523
SHEET NUMBER	K-A-85
DWG NO.:	520 of 664
SCALE:	As indicated
DATE:	8/23/20223
DPW FILE NUMBER	1-118-A-1269-0
REV. NO.	0

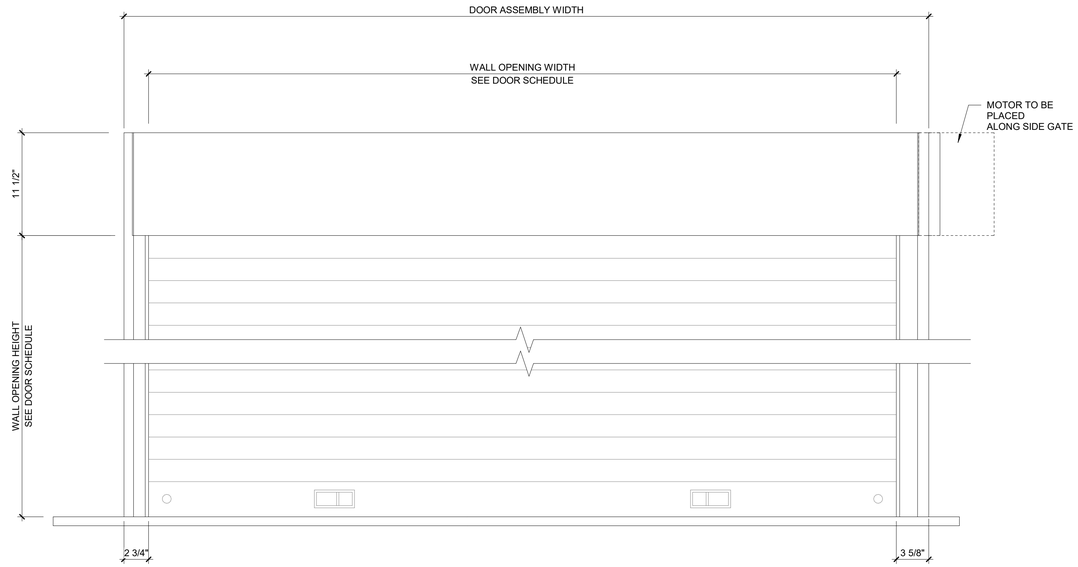

1 COUNTER ROLL UP ELEVATION
1 1/2" = 1'-0"

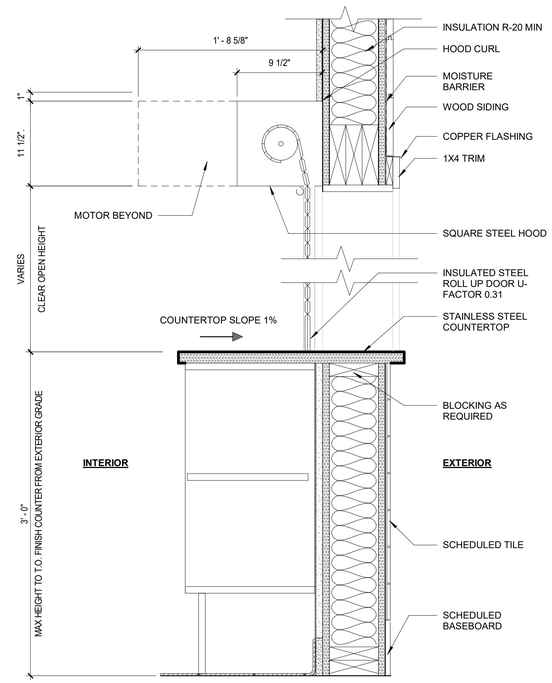

2 COUNTER ROLL UP DOOR SECTION
1 1/2" = 1'-0"

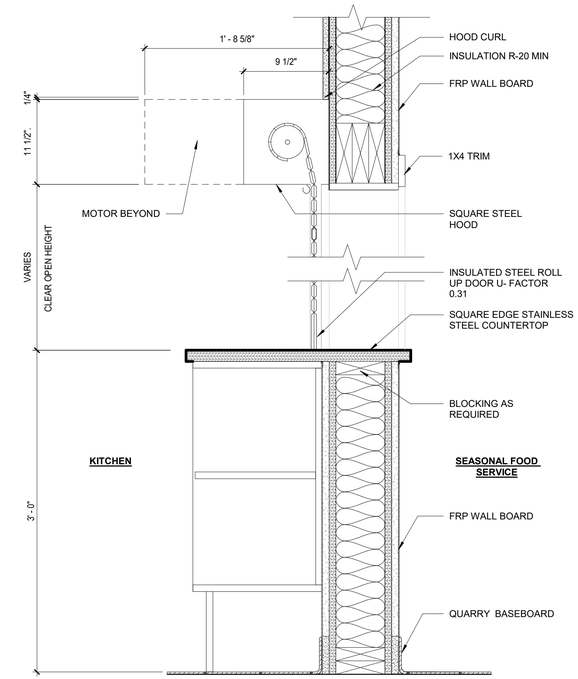

5 COUNTER ROLL UP DOOR SECTION B
1 1/2" = 1'-0"

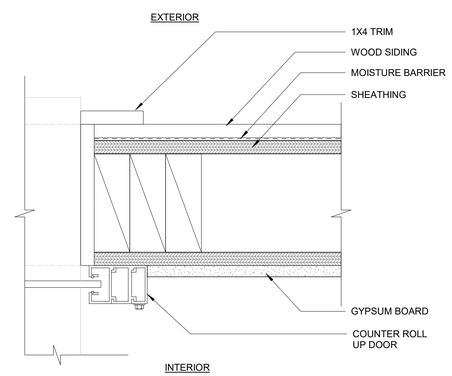

6 ROLL UP JAMB DETAIL
3" = 1'-0"

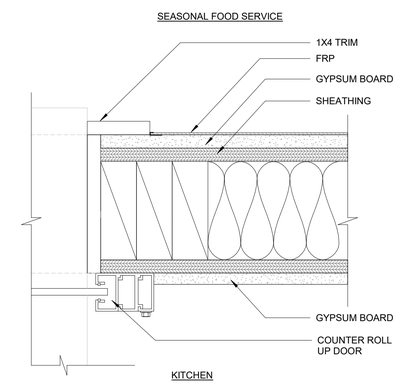

7 ROLL UP JAMB DETAIL B
3" = 1'-0"

8/30/2022 2:52:00 PM

CONSULTANT INFORMATION

The LiRo Group
1 State Street Plaza, New York, NY, 10004
(516) 938-5476 www.liro.com

CONSULTANT SEAL

REGISTERED ARCHITECT ROBERT D. COMINO 023220 STATE OF NEW YORK

REVISION NUMBER	DATE	MADE BY	APP'D BY	REVISION

RECORD DRAWING CERTIFICATION

☐ AS BUILT – CHANGES AS NOTED ☐ AS BUILT – NO CHANGES

CONTRACTOR
NAME
SIGNATURE
TITLE DATE

PROJECT COORDINATOR
NAME
SIGNATURE
TITLE DATE

WESTCHESTER COUNTY, NEW YORK
DEPARTMENT OF PUBLIC WORKS AND TRANSPORTATION
DIVISION OF ENGINEERING

INFRASTRUCTURE REHABILITATION
PLAYLAND PARK, RYE, NEW YORK
RESTAURANT KITCHEN WITH FOOD VENDING
COUNTER ROLL UP DOOR DETAILS

CONTRACT NUMBER	22-523
SHEET NUMBER	K-A-86
DWG NO.:	521 of 664
SCALE:	As indicated
DATE:	8/23/20223
DPW FILE NUMBER	1-118-A-1270-0
REV. NO.	0

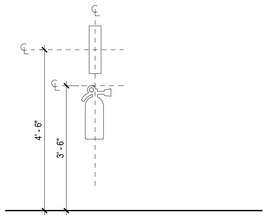

1 FIRE EXTINGUISHER SIGN LOCATION
1/2" = 1'-0"

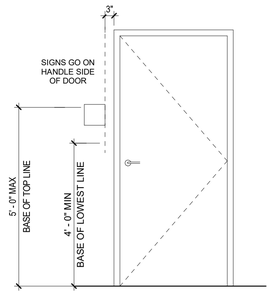

2 SIGN LOCATION ELEVATION TYPICAL DOOR CONDITION
1/2" = 1'-0"

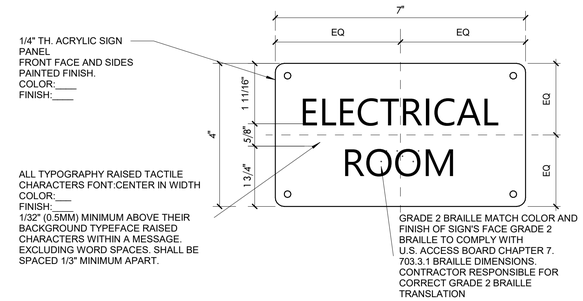

3 TYPE A-1 ELECTRICAL CLOSET SIGN
6" = 1'-0"

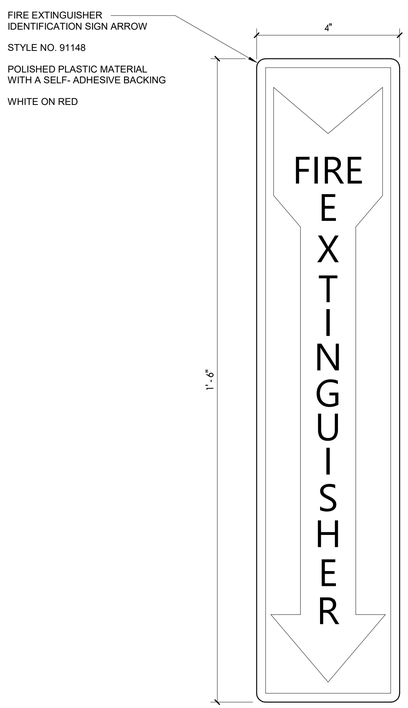

4 TYPE X-1 FIRE EXTINGUISHER SIGN
6" = 1'-0"

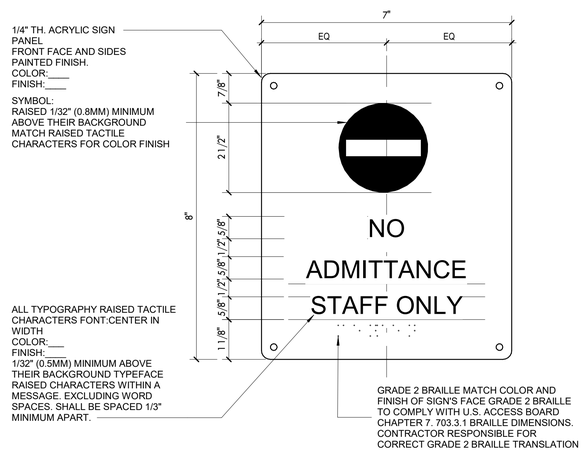

5 TYPE X-2 STAFF ONLY (RESTRICTED AREA) SIGN
6" = 1'-0"

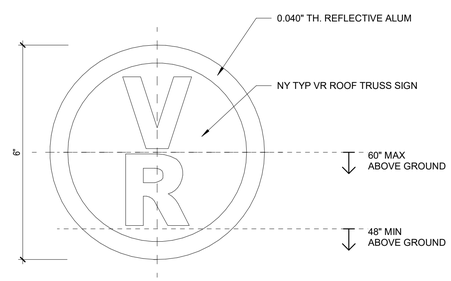

7 TYPICAL TYPE-X 4 TRUSS SIGNAGE CLASS VR
6" = 1'-0"

8/30/2022 2:52:00 PM

CONSULTANT INFORMATION

The LiRo Group

1 State Street Plaza, New York, NY, 10004
(516) 938-5476 www.liro.com

CONSULTANT SEAL

REGISTERED ARCHITECT ROBERT D. LIRO JR. 023220 STATE OF NEW YORK

REVISION NUMBER	DATE	MADE BY	APP'D BY	REVISION

RECORD DRAWING CERTIFICATION

☐ AS BUILT – CHANGES AS NOTED ☐ AS BUILT – NO CHANGES

CONTRACTOR
NAME
SIGNATURE
TITLE DATE

PROJECT COORDINATOR
NAME
SIGNATURE
TITLE DATE

WESTCHESTER COUNTY, NEW YORK
DEPARTMENT OF PUBLIC WORKS AND TRANSPORTATION
DIVISION OF ENGINEERING

INFRASTRUCTURE REHABILITATION
PLAYLAND PARK, RYE, NEW YORK
RESTAURANT KITCHEN WITH FOOD VENDING
SIGNAGE DETAILS

CONTRACT NUMBER	22-523
SHEET NUMBER	K-A-87
DWG NO.:	522 of 664
SCALE:	As indicated
DATE:	8/23/20223
DPW FILE NUMBER	1-118-A-1271-0
REV. NO.	0

WINDOW SCHEDULE													
Mark	WINDOW TYPE	BUILDING	LEVEL	WIDTH	ROUGH WIDTH	HEIGHT	ROUGH HEIGHT	SILL HEIGHT	WINDOW MATERIAL	Finish	EXTERIOR TRIM	INTERIOR TRIM	REMARKS
005	W-1	RESTAURANT KITCHEN	FIRST FLOOR	4' - 6"	4' - 6 3/4"	2' - 0"	2' - 0 3/4"	6' - 11"	ALUMINUM	Black Powder Coat	P-2	P-13	1" INSULATED GLASS UNIT
006	W-1	RESTAURANT KITCHEN	FIRST FLOOR	4' - 6"	4' - 6 3/4"	2' - 0"	2' - 0 3/4"	6' - 11"	ALUMINUM	Black Powder Coat	P-2	P-13	1" INSULATED GLASS UNIT
007	W-1	RESTAURANT KITCHEN	FIRST FLOOR	4' - 6"	4' - 6 3/4"	2' - 0"	2' - 0 3/4"	6' - 11"	ALUMINUM	Black Powder Coat	P-2	P-13	1" INSULATED GLASS UNIT
008	W-1	RESTAURANT KITCHEN	FIRST FLOOR	4' - 6"	4' - 6 3/4"	2' - 0"	2' - 0 3/4"	6' - 11"	ALUMINUM	Black Powder Coat	P-2	P-13	1" INSULATED GLASS UNIT

NOTES:
- ALL COLOR TO BE APPROVED BY ARCHITECT
- ALL DIMENSIONS TO BE VERIFIED IN FIELD PRIOR TO FABRICATION

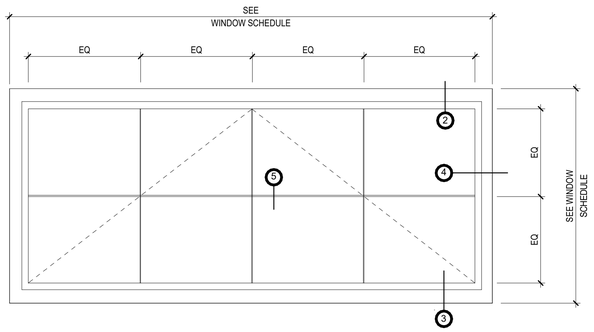

1 AWNING WINDOW ELEVATION W-1
1 1/2" = 1'-0"

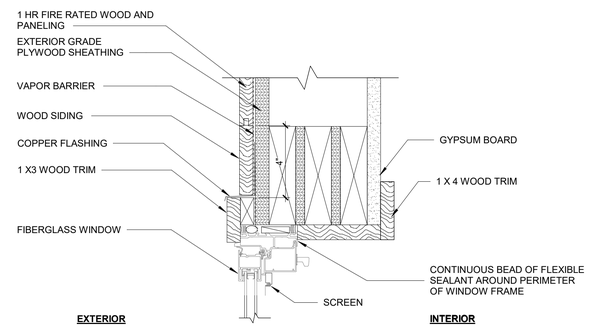

2 AWNING WINDOW HEAD DEATIL
3" = 1'-0"

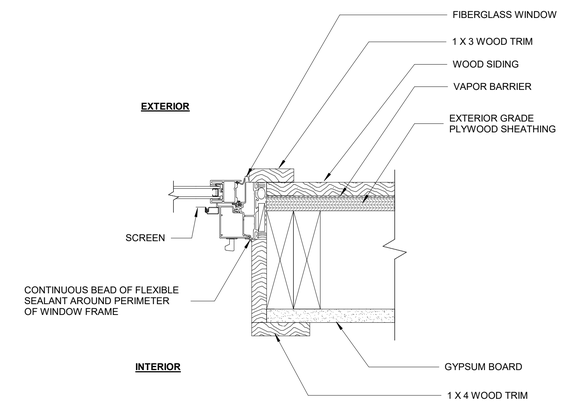

4 AWNING WINDOW JAMB DETAIL
3" = 1'-0"

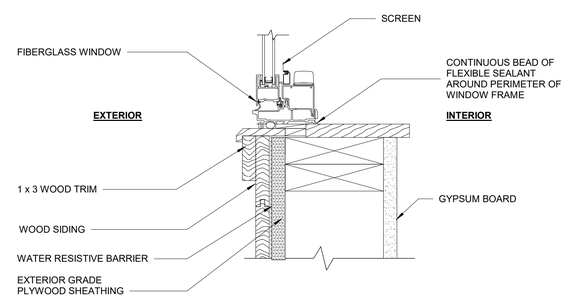

3 AWNING WINDOW SILL DETAIL
3" = 1'-0"

8/30/2022 2:52:01 PM

CONSULTANT INFORMATION
The LiRo Group
1 State Street Plaza, New York, NY, 10004
(516) 938-5476 www.liro.com

CONSULTANT SEAL
REGISTERED ARCHITECT ROBERT D. LONGO 023280 STATE OF NEW YORK

REVISION NUMBER	DATE	MADE BY	APP'D BY	REVISION

RECORD DRAWING CERTIFICATION
☐ AS BUILT – CHANGES AS NOTED ☐ AS BUILT – NO CHANGES

CONTRACTOR
NAME
SIGNATURE
TITLE DATE

PROJECT COORDINATOR
NAME
SIGNATURE
TITLE DATE

WESTCHESTER COUNTY, NEW YORK
DEPARTMENT OF PUBLIC WORKS AND TRANSPORTATION
DIVISION OF ENGINEERING

INFRASTRUCTURE REHABILITATION
PLAYLAND PARK, RYE, NEW YORK
RESTAURANT KITCHEN WITH FOOD VENDING
WINDOW SCHEDULES & DETAILS

CONTRACT NUMBER **22-523**
SHEET NUMBER **K-A-88**
DWG NO.: 523 of 664
SCALE: **As indicated**
DATE: **8/23/20223**
DPW FILE NUMBER **1-118-A-1272-0**
REV. NO. 0

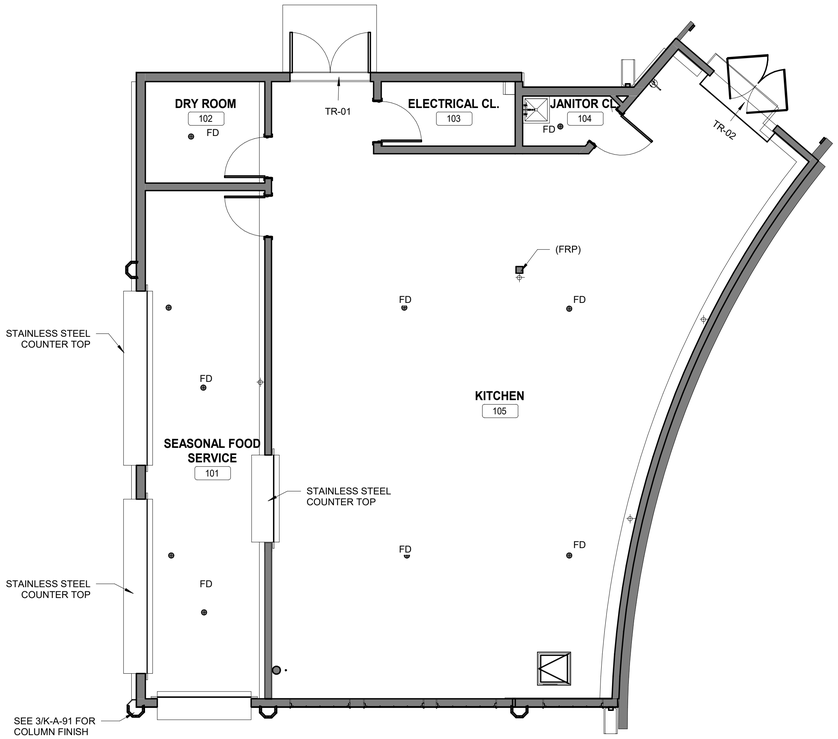

1 GROUND LEVEL FINISH FLOOR PLAN
3/16" = 1'-0"

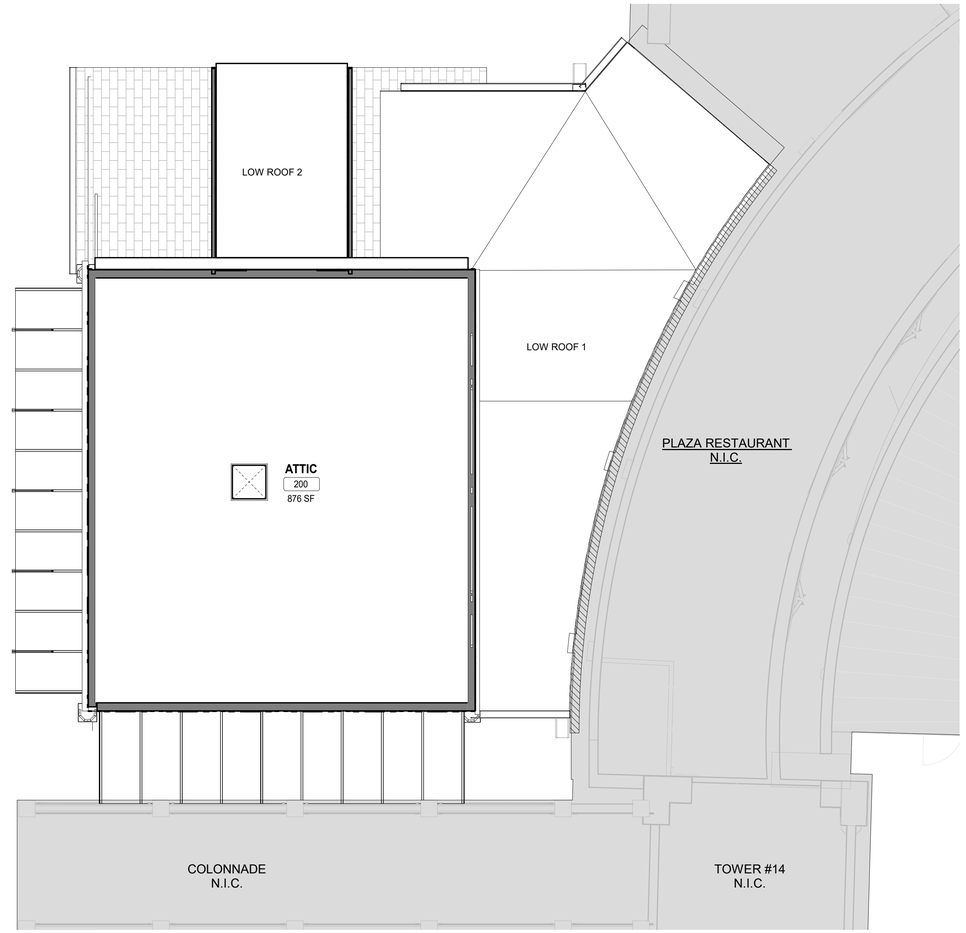

2 ATTIC FINISH PLAN
3/16" = 1'-0"

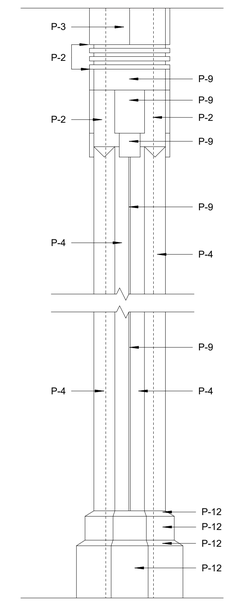

3 COLUMN FINISH
1" = 1'-0"

PAINTING SCHEDULE

KEY	COLOR	MANUFACTURER	REMARKS
P- 1	MYSTICAL POWERS #901	BENJAMIN MOORE	
P- 2	HERITAGE RED #HC-181	BENJAMIN MOORE	
P- 3	NEW YORK STATE OF MIND #805	BENJAMIN MOORE	
P- 4	LAZY SUNDAY #803	BENJAMIN MOORE	
P- 5	DEEP JUNGLE #595	BENJAMIN MOORE	
P- 6	LUCK OF THE IRISH #588	BENJAMIN MOORE	
P- 7	MAJOLICA GREEN #0013	SHERWIN WILLIAMS	
P- 8	ANTELOPE CANYON #125	BENJAMIN MOORE	
P- 9	FORSYTHIA #6907	SHERWIN WILLIAMS	
P- 10	CAPE BLUE #1642	BENJAMIN MOORE	
P- 11	WHITE SNOW #9541	SHERWIN WILLIAMS	
P- 12	TRICORN BLACK #6258	SHERWIN WILLIAMS	
P- 13	READY MIX WHITE	BENJAMIN MOORE	INTERIOR USE ONLY
P- 14	STUCCO PAINT TO MATCH P-1	KEIM	
P- 15	VAN DEUSEN BLUE #HC-156	BENJAMIN MOORE	
P- 16	#RAL9001	-	TYP. ROLL UP DOOR
P- 17	FLORIDA BEACHES #900	BENJAMIN MOORE	
P- 18	PIRATES COVE PEACH #903	BENJAMIN MOORE	
P- 19	JADITE #6459	SHERWIN WILLIAMS	
P- 20	DECISIVE YELLOW #6902	SHERWIN WILLIAMS	

(FOR PAINT TYPE AND SYSTEMS, SEE SPECIFICATIONS)

FINISH SCHEDULE

ROOM #	ROOM NAME	FLOORS	WALLS	CEILING	DOORS AND TRIM	WALL BASE
101	SEASONAL SERVICE AREA	QT-1	FRP	T1-11	SEE DOOR SCHEDULE (K-A-93)	WB-2
102	DRY ROOM	QT-1	FRP	GYP	SEE DOOR SCHEDULE (K-A-93)	WB-2
103	ELECTRICAL CLOSET	QT-1	GYP/P-13	GYP	SEE DOOR SCHEDULE (K-A-93)	WB-2
104	JANITORS CLOSET	QT-1	GYP-P-13/ CT-4	GYP	SEE DOOR SCHEDULE (K-A-93)	WB-2
105	KITCHEN	QT-1	FRP	ACT	SEE DOOR SCHEDULE (K-A-93)	WB-2
201	ATTIC	WD-3	-	-	SEE DOOR SCHEDULE (K-A-93)	-

MATERIAL SCHEDULE

	KEY	MATERIAL	MANUFACTURER	FINISH COLOR	SIZE	REMARKS
WALLS	CT-1	CERAMIC TILE	DATILE; LINEAR COLOR WHEEL	AZURE -QH44	4" X 4"	
	CT-2	CERAMIC TILE	DATILE; LINEAR COLOR WHEEL	ATLANTIS -QH43	4" X 4"	
	CT-3	CERAMIC TILE	DATILE; LINEAR COLOR WHEEL	ALMOND - QH02	4" X 4"	
	CT-4	CERAMIC TILE	DATILE; LINEAR COLOR WHEEL	ARCTIC WHITE -GLOSSY	6" X 18"	PROVIDE EDGE PROTECTION ON ALL OUTSIDE WALL CORNERS
	FRP	FIBERGLASS REINFORCED PANEL	-	WHITE		
FLOORING	QT-1	QUARRY TILE	SAHARA SAND-0T08(2)	6"X6"X1/2"	COVE BASE TO MATCH ON WALL BASE (WB-2)	
	WD-3	PLYWOOD PANEL	-	EXTERIOR GRADE		
CEILING	ACT	ACOUSTICAL CEILING TILE	-	-	24"X24"X3/4"	FDA AND USDA COMPLIANT SQUARE LAY IN TILES.
	GYP	GYPSUM BOARD	-	-	5/8"	
	T1-11	T1-11 PLYWOOD SIDING	-	PREMIUM GRADE SIDING	4'X8'X11/32"	
WALLBASE	WB-2	QUARRY TILE COVE BASE	DATILE; QUARRY TEXTURES	SAHARA SAND-0T08(2)	6"X6"X1/2"	
THRESHOLD	TR-01	EXTERIOR DOOR SILL	-	-		
	TR-02	QUARRY TO CONCRETE	-	-		
GROUT	GR-01	GROUT	MAPEI; TRADITIONAL	27- SILVER		
RAILING	R-01	PAINT	IVPPAINTS; RAL 7004	SIGNAL GREY		

FINISH LEGEND:

ITEMS NOT IN CONTRACT

QUARRY TILE FLOORING

FINISH PLAN NOTES:

1. INDICATES TYPICAL FINISHES WITHIN ROOM, U.O.N. SEE FINISH SCHEDULE FOR MORE INFORMATION.
2. ALL FLOORING COVERING MATERIALS TO BE INSTALLED PER MANUFACTURER'S STANDARD DETAILS AND SPECIFICATIONS. VERIFY WITH MANUFACTURER PRIOR INSTALLATION.
3. THE G.C. IS RESPONSIBLE FOR PROVIDING A SMOOTH LEVEL FLOOR SURFACE THAT MEETS MANUFACTURERS INSTALLATION SPECIFICATIONS PRIOR TO THE INSTALLATION OF ALL FLOORING MATERIALS.
4. THE FLOORING SUB-CONTRACTOR IS RESPONSIBLE FOR VERIFYING THAT THE CONDITION OF THE BASE FLOOR MEETS THE INSTALLATION SPECIFICATIONS PRIOR TO THE INSTALLATION OF THE NEW FLOORING MATERIAL.
5. ALL MATERIAL TRANSITIONS AN DOOR THRESHOLDS TO TAKE PLACE AT DOOR CENTERLINE U.N.O.
6. ALL DIMENSIONS ARE TO CENTERLINE OF TRANSITION BETWEEN FLOORING MATERIALS OR FINISH COLOR OF SAME MATERIAL. PLANS DO NOT SHOW ALL TILES OF SAME MATERIALS. CONTRACTOR TO START TILES AT POINT AS INDICATED ON PLANS.
7. THE GENERAL CONTRACTOR SHALL BE RESPONSIBLE FOR PROPER PREPARATION OF ALL NEW AND EXISTING SURFACES IN A SATISFACTORY MANNER TO RECEIVE NEW FINISHES. THIS INCLUDES THE DEMOLITION AND REMOVAL OF NECESSARY ITEMS. TOUCH- UP AND/ OR REFINISH OF SURFACES DAMAGED BY SUBSEQUENT WORK SHALL BE PERFORMED IN CONFORMANCE WITH THE MANUFACTURER'S RECOMMENDED INSTALLATION METHODS.
8. ALL SURFACES WHICH ARE TO RECEIVE A PAINT FINISH SHALL BE PRIMED AND FINISHED IN ACCORDANCE WITH THE WRITTEN SPECIFICATIONS.
9. ALL JOINTS IN GYPSUM BOARD WALLS SHALL BE FINISHED WITH PAPER TAPE 2" WIDE AND THREE COATS OF VINYL, DRY OR PREMIXED JOINT COMPOUND. ALL OUTSIDE CORNERS SHALL BE FINISHED WITH METAL CORNER BEADS, TAPED AND SPACKLED. ALL AREAS TO BE PAINTED SHALL BE SANDED SMOOTH. JUST PRIOR TO THE APPLICATION OF THE FIRST COAT OF PAINT, WIPE SANDED SURFACES WITH A DAMP CLOTH IN ORDER TO LAY FLAT ANY NAP WHICH MAY HAVE FORMED IN SANDING.
10. THE PAINT CONTRACTOR SHALL REMOVE ALL HARDWARE, SWITCH COVERS, ETC. PRIOR TO PAINTING AND BE RESPONSIBLE FOR THE REINSTALLATION AFTER PAINTING IS COMPLETED.
11. FINISH FLOORING INSTALLATION SHALL BE IN CONFORMANCE WITH THE MANUFACTURER'S RECOMMENDED INSTALLATION GUIDELINES. COORDINATE THE INSTALLATION WITH OTHER TRADES, SUCH AS ELECTRICAL.
12. ALL JOINTS BETWEEN MATERIALS TO BE TIGHT AND CONSTRUCTED IN A NEAT WORKMANLIKE MANNER.
13. ALL FINISHES SHALL BE TOUCHED UP TO CORRECT ANY IMPERFECTIONS AFTER INSTALLATION. FIXTURE CONTRACTOR SHALL PROVIDE TO THE GENERAL CONTRACTOR ALL MATERIALS FOR TOUCH UP WORK.
14. THE INTENT OF THE FINISH SPECIFICATIONS IS TO PROVIDE A SATISFACTORY FINISH TO ALL PARTS OF THE WORK. COVER ALL SURFACES THOROUGHLY. IF THE SPECIFIED NUMBER OF COATS DOES NOT ACCOMPLISH THE INTENT, THE GENERAL CONTRACTOR SHALL BE RESPONSIBLE FOR THE APPLICATION OF ADDITIONAL COATS OF THE SPECIFIED MATERIAL TO GIVE SATISFACTORY COVERAGE, AT NO ADDITIONAL COST TO OWNER.
15. CLEAN ALL GLASS SURFACES WITH LIQUID GLASS CLEANER AT PROJECT COMPLETION.
16. REFERENCE SPECIFICATIONS FOR COMPLETE FINISH DOCUMENTATION AND MANUFACTURER INSTALLATION AND MAINTENANCE DOCUMENTATION.

8/30/2022 2:52:05 PM

CONSULTANT INFORMATION
The LiRo Group
1 State Street Plaza, New York, NY, 10004
(516) 938-5476 www.liro.com

CONSULTANT SEAL
REGISTERED ARCHITECT PROBERT D. COMINGS 023220 STATE OF NEW YORK

REVISION NUMBER	DATE	MADE BY	APP'D BY	REVISION

RECORD DRAWING CERTIFICATION
☐ AS BUILT – CHANGES AS NOTED ☐ AS BUILT – NO CHANGES

CONTRACTOR
NAME
SIGNATURE
TITLE DATE

PROJECT COORDINATOR
NAME
SIGNATURE
TITLE DATE

WESTCHESTER COUNTY, NEW YORK
DEPARTMENT OF PUBLIC WORKS AND TRANSPORTATION
DIVISION OF ENGINEERING

INFRASTRUCTURE REHABILITATION
PLAYLAND PARK, RYE, NEW YORK
RESTAURANT KITCHEN WITH FOOD VENDING
FINISHES & MATERIAL SCHEDULE

CONTRACT NUMBER	22-523
SHEET NUMBER	K-A-91
DWG NO.:	524 of 664
SCALE:	As indicated
DATE:	8/23/20223
DPW FILE NUMBER	1-118-A-1273-0
REV. NO.	0

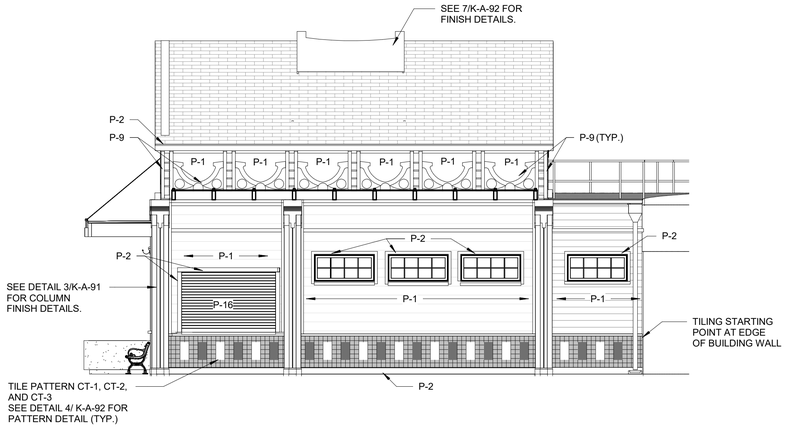

1 PROPOSED WEST ELEVATION FINISH
3/16" = 1'-0"

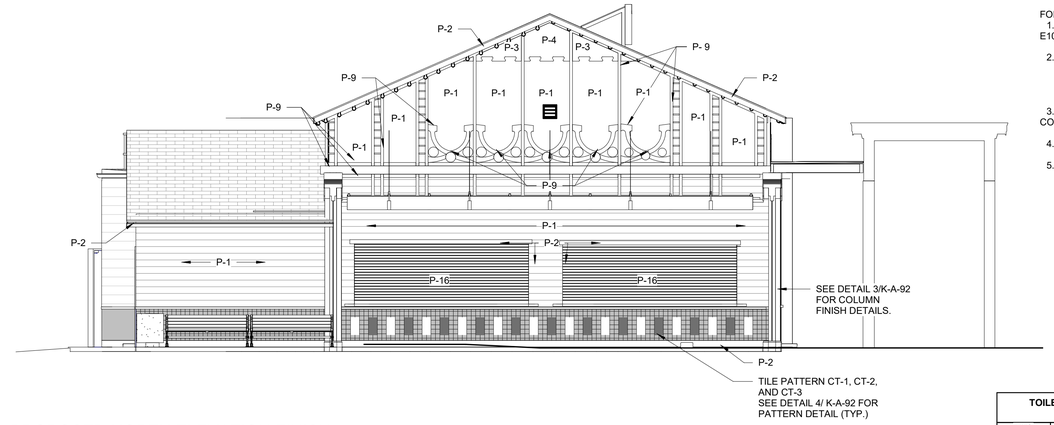

2 PROPOSED NORTH ELEVATION FINISH
3/16" = 1'-0"

GENERAL NOTES:

FOR CERAMIC TILE PATTERNS & STAINLESS STEEL EDGE (TYPICAL FOR ALL CERAMIC TILE WALLS):

1. STAINLESS STEEL EDGE (BOTH FOR WALLS & FLOORS WHERE NECESSARY SHALL BE SS 304 E100 SCHLUTER- SCHIENE OR APPROVED EQUAL
2. BEFORE INSTALLATION OF CERAMIC TILE WALLS CONTRACTOR TO BUILK MOCK- UPS AS LISTED BELOW FOR ARCHITECT'S REVIEW & APPROVAL:
   - (1) FOR SS EDGE/ CERAMIC TILE TRANSITION
   - (1) FOR CERAMIC PATTERN
3. ALL WALL CORNERS/ EDGE CERAMIC TILES TO BE BULLNOSE AS SPECIFIED, TYP. FOR ALL CORNERS
4. ALL CERAMIC TILE SPACING SHALL BE 1/8".
5. ALL GROUTS SHALL BE EPOXY BASE. SEE SPECIFICATION, TYPICAL FOR ALL AREAS

TOILET ACCESSORIES SCHEDULE - "TA"

TAG	DESCRIPTION
TA-7	4 POLE MOP HOLDER
TA-10	18"X 36" HEAVY DUTY WALL SHELF

PLUMBING FIXTURE SCHEDULE - "PF"

TAG	DESCRIPTION	REMARKS
PF-5	SERVICE SINK	COMPATIABLE STAINLESS STEEL WALL GUARDS
PF-14	SERVICE SINK FAUCET	

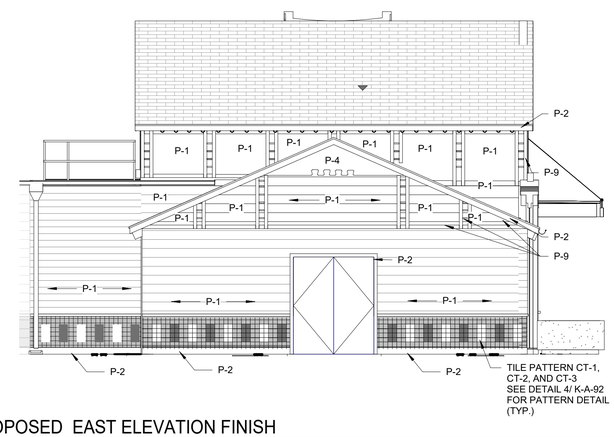

3 PROPOSED EAST ELEVATION FINISH
3/16" = 1'-0"

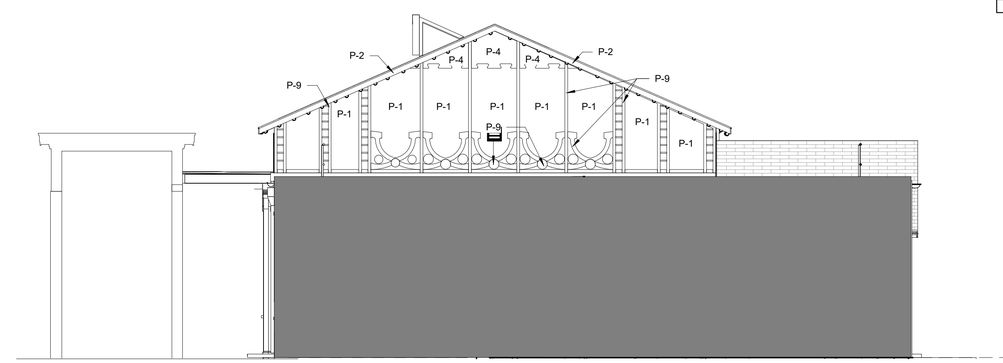

4 PROPOSED SOUTH ELEVATION FINISH
3/16" = 1'-0"

PAINTING SCHEDULE

KEY	COLOR	MANUFACTURER	REMARKS
P- 1	MYSTICAL POWERS #901	BENJAMIN MOORE	
P- 2	HERITAGE RED #HC-181	BENJAMIN MOORE	
P- 3	NEW YORK STATE OF MIND #805	BENJAMIN MOORE	
P- 4	LAZY SUNDAY #803	BENJAMIN MOORE	
P- 5	DEEP JUNGLE #595	BENJAMIN MOORE	
P- 6	LUCK OF THE IRISH #588	BENJAMIN MOORE	
P- 7	MAJOLICA GREEN #0013	SHERWIN WILLIAMS	
P- 8	ANTELOPE CANYON #125	BENJAMIN MOORE	
P- 9	FORSYTHIA #6907	SHERWIN WILLIAMS	
P- 10	CAPE BLUE #1642	BENJAMIN MOORE	
P- 11	WHITE SNOW #9541	SHERWIN WILLIAMS	
P- 12	TRICORN BLACK #6258	SHERWIN WILLIAMS	
P- 13	READY MIX WHITE	BENJAMIN MOORE	INTERIOR USE ONLY
P- 14	STUCCO PAINT TO MATCH P-1	KEIM	
P- 15	VAN DEUSEN BLUE #HC-156	BENJAMIN MOORE	
P- 16	#RAL9001	-	TYP. ROLL UP DOOR
P- 17	FLORIDA BEACHES #900	BENJAMIN MOORE	
P- 18	PIRATES COVE PEACH #903	BENJAMIN MOORE	
P- 19	JADITE #6459	SHERWIN WILLIAMS	
P- 20	DECISIVE YELLOW #6902	SHERWIN WILLIAMS	

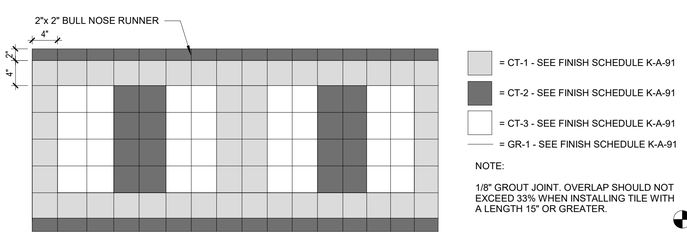

5 EXTERIOR TILE PATTERN
1" = 1'-0"

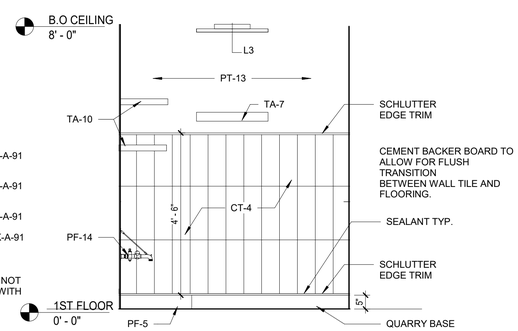

6 JANITORS CLOSET INTERIOR ELEVATION
1/2" = 1'-0"

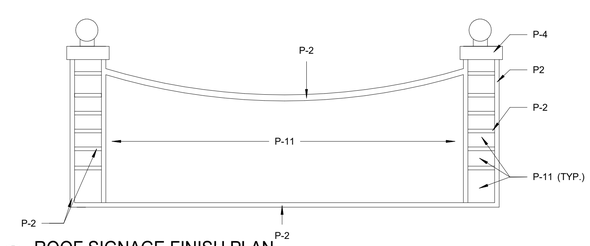

7 ROOF SIGNAGE FINISH PLAN
3/4" = 1'-0"

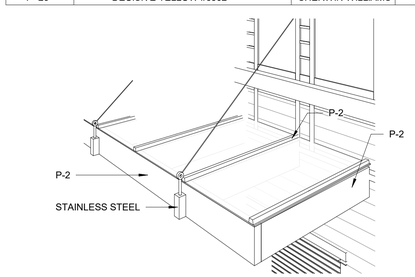

8 TYPICAL CANOPY FINISH

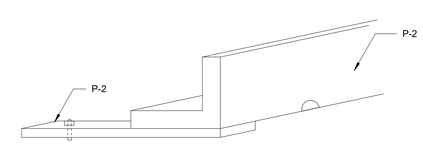

9 ROOF SIGNAGE LIGHT FIXTURE STEEL ANGLE SUPPORT FINISH
6" = 1'-0"

8/30/2022 2:52:09 PM

CONSULTANT INFORMATION
The LiRo Group
1 State Street Plaza, New York, NY, 10004
(516) 938-5476 www.liro.com

CONSULTANT SEAL
REGISTERED ARCHITECT ROBERT D. YOUNG JR. 023280 STATE OF NEW YORK

REVISION NUMBER	DATE	MADE BY	APP'D BY	REVISION

RECORD DRAWING CERTIFICATION
☐ AS BUILT – CHANGES AS NOTED ☐ AS BUILT – NO CHANGES

CONTRACTOR
NAME
SIGNATURE
TITLE DATE

PROJECT COORDINATOR
NAME
SIGNATURE
TITLE DATE

WESTCHESTER COUNTY, NEW YORK
DEPARTMENT OF PUBLIC WORKS AND TRANSPORTATION
DIVISION OF ENGINEERING

INFRASTRUCTURE REHABILITATION
PLAYLAND PARK, RYE, NEW YORK
RESTAURANT KITCHEN WITH FOOD VENDING
EXTERIOR FINISH ELEVATIONS & DETAILS

CONTRACT NUMBER **22-523**
SHEET NUMBER **K-A-92**
DWG NO.: 525 of 664
SCALE: **As indicated**
DATE: **8/23/20223**
DPW FILE NUMBER **1-118-A-1274-0**
REV. NO. 0

DOOR SCHEDULE

DOOR NUMBER	LOCATION FROM	LOCATION TO	PANEL DOOR TYPE	PANEL WIDTH	PANEL HEIGHT	PANEL THICKNESS	PANEL MATL	PANEL FINISH EXTERIOR	PANEL FINISH INTERIOR	FRAME Frame Type	FRAME MATL	FRAME FINISH EXTERIOR	FRAME FINISH INTERIOR	HW SET	R-VALUE	U-VALUE	FIRE RATING	Comments
101	SEASONAL FOOD SERVICE	KITCHEN	A	3' - 0"	7' - 0"	1 3/4"	HM	Paint - P-11	Paint - P-11	2	HM	Paint - P-11	Paint - P-11	7		-		
101A	EXTERIOR	SEASONAL FOOD	B	7' - 0"	7'-9 3/4"	3/8 "	STEEL	Paint -P-16	Paint -P-16	3	STEEL	Paint -P-16	Paint -P-16	4		0.31	45 MIN	MOTORIZED ROLL DOWN COUNTER DOOR
101B	EXTERIOR	SEASONAL FOOD	B	13' - 0"	7'-9 3/4"	3/8 "	STEEL	Paint -P-16	Paint -P-16	3	STEEL	Paint -P-16	Paint -P-16	4		0.31		MOTORIZED ROLL DOWN COUNTER TOP
101C	EXTERIOR	SEASONAL FOOD	B	13' - 0"	7'-9 3/4"	3/8 "	STEEL	Paint -P-16	Paint -P-16	3	STEEL	Paint -P-16	Paint -P-16	4		0.31		MOTORIZED ROLL DOWN COUNTER TOP
102	DRY ROOM	KITCHEN	A	3' - 0"	7' - 0"	1 3/4"	HM	Paint - P-11	Paint - P-11	2	HM	Paint - P-11	Paint - P-11	9		-		
103	ELECTRICAL CL.	KITCHEN	A	3' - 0"	7' - 0"	1 3/4"	HM	Paint - P-11	Paint - P-11	2	HM	Paint - P-11	Paint - P-11	12		-		
104	JANITOR CL.	KITCHEN	A	3' - 0"	7' - 0"	1 3/4"	HM	Paint - P-11	Paint - P-11	2	HM	Paint - P-11	Paint - P-11	9		-		
105	PLAZA REST.	KITCHEN	D	6' - 5"	7' - 3"	1 3/4"	STEEL	Paint - P-11	Paint - P-11	4	HM	Paint - P-11	Paint - P-11	2		-		
105B	EXTERIOR	KITCHEN	C	6' - 0"	7' - 3"	1 3/4"	WD	Paint - P-11	Paint - P-11	1	WD	Paint - P-11	Paint - P-11	6		-		
106	SEASONAL FOOD	KITCHEN	B	6' - 6"	3' -6" "	3/8 "	STEEL	Paint -P-16	Paint -P-16	2	STEEL	Paint -P-16	Paint -P-16	4		-		MOTORIZED ROLL DOWN COUNTER TOP
107	KITCHEN	KITCHEN	E	6' - 2"	7' - 0"	3/8 "	STEEL	Paint -P-16	Paint -P-16	3	STEEL	Paint -P-16	Paint -P-16	4	R-4.75	-	1 HR	MOTORIZED INSULATED ROLL DOWN COUNTER TOP
108				2' - 0"	1' - 0 5/8"													

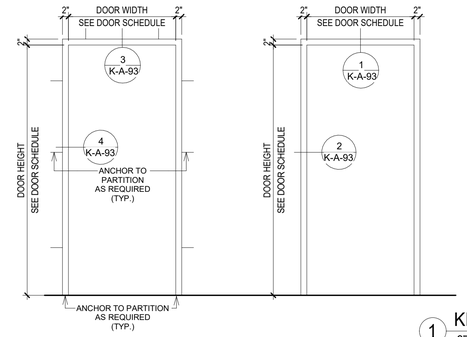

TYPE 1

TYPE 2
WOOD FRAME

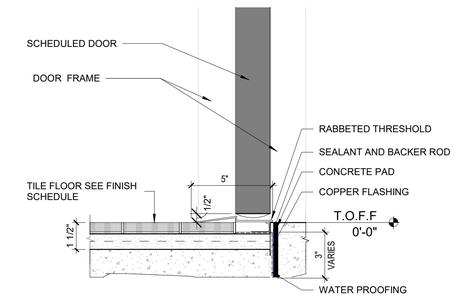

1 KITCHEN QUARRY TILE TO EXTERIOR CONCRETE THRESHOLD DETAIL
3" = 1'-0"

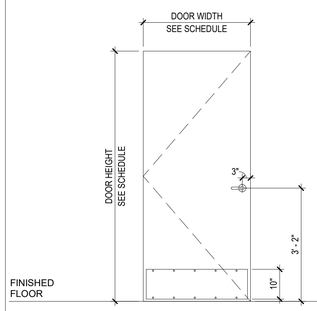

TYPE A
SINGLE H.M. DOOR

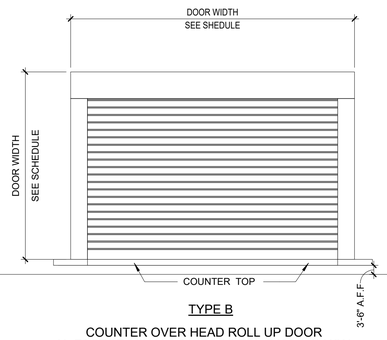

TYPE B
COUNTER OVER HEAD ROLL UP DOOR
U- FACTOR MIN U-0.31 (ECCC TBL C402.1.4) UON

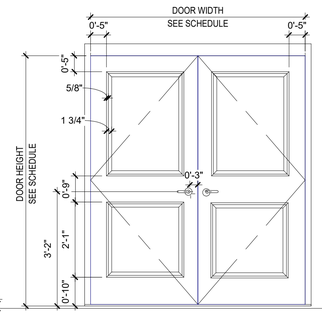

TYPE C
DOUBLE SOLID WOOD DOOR
U-FACTOR MIN U-0.37 (ECCC TBL C402.1.4) UON

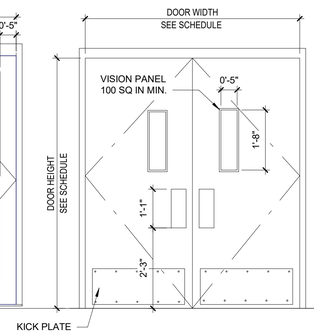

TYPE D
DOUBLE H.M. ACTING DOOR

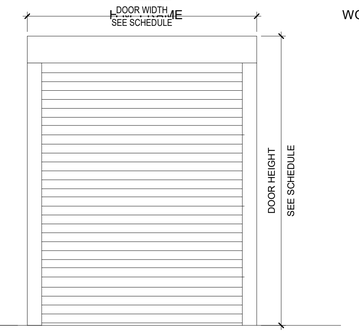

TYPE E
FULL HEIGHT FIRE BARRIER ROLL UP DOOR
R-4.75 , FIRE RATING 90 MIN

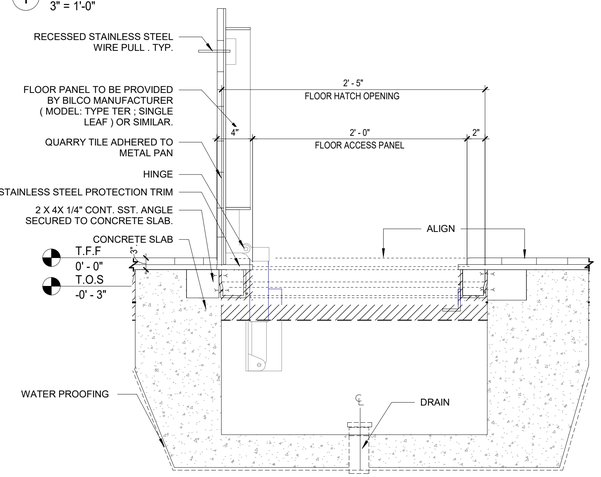

2 FLOOR ACCESS PANEL SECTION DETAIL
1 1/2" = 1'-0"

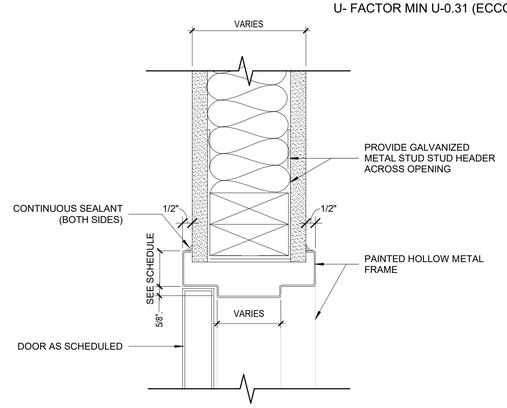

3 H.M. FRAME HEAD DETAIL
3" = 1'-0"

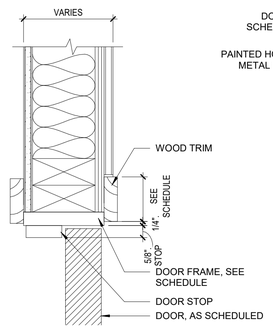

4 WOOD DOOR HEAD DETAIL
3" = 1'-0"

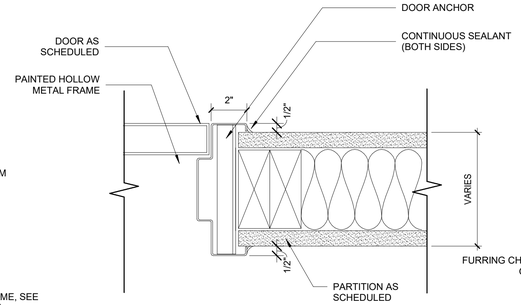

5 H.M. FRAME JAMB DETAIL
3" = 1'-0"

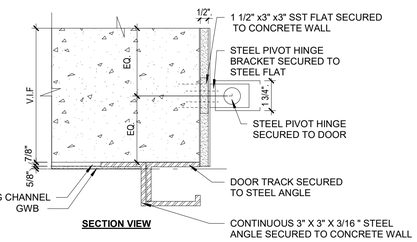

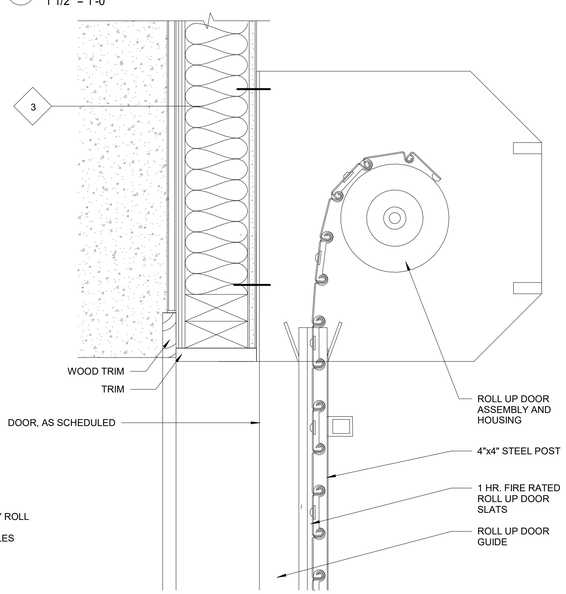

7 MOUNTED FIRE RATED ROLL UP DOOR
3" = 1'-0"

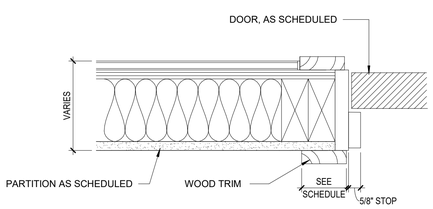

8 WOOD DOOR JAMB DETAIL
3" = 1'-0"

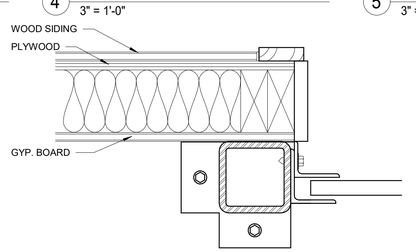

9 ROLL-UP DOOR JAMB DETAIL
3" = 1'-0"

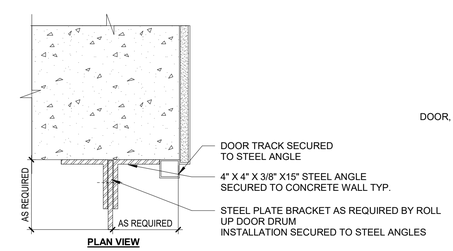

6 DOUBLE ACTING DOOR HINGE DETAILS
3/4" = 1'-0"

8/30/2022 2:52:11 PM

CONSULTANT INFORMATION
The LiRo Group
1 State Street Plaza, New York, NY, 10004
(516) 938-5476 www.liro.com

CONSULTANT SEAL
REGISTERED ARCHITECT ROBERT D. LIRO JR. 023220 STATE OF NEW YORK

REVISION NUMBER	DATE	MADE BY	APP'D BY	REVISION

RECORD DRAWING CERTIFICATION
AS BUILT – CHANGES AS NOTED
AS BUILT – NO CHANGES

CONTRACTOR
NAME
SIGNATURE
TITLE DATE

PROJECT COORDINATOR
NAME
SIGNATURE
TITLE DATE

WESTCHESTER COUNTY, NEW YORK
DEPARTMENT OF PUBLIC WORKS AND TRANSPORTATION
DIVISION OF ENGINEERING

INFRASTRUCTURE REHABILITATION
PLAYLAND PARK, RYE, NEW YORK
RESTAURANT KITCHEN WITH FOOD VENDING
DOOR & FRAME DETAILS

CONTRACT NUMBER	22-523
SHEET NUMBER	K-A-93
DWG NO.:	526 of 664
SCALE:	As indicated
DATE:	8/23/20223
DPW FILE NUMBER	1-118-A-1275-0
REV. NO.	0

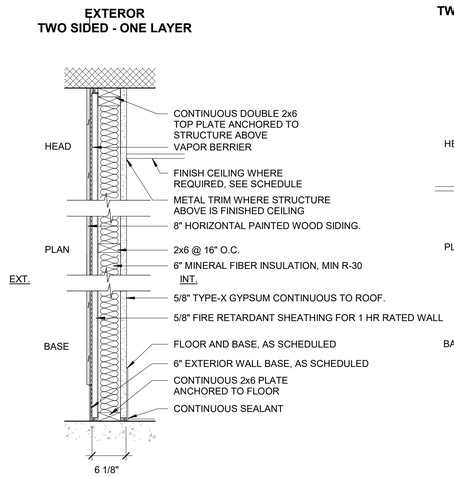

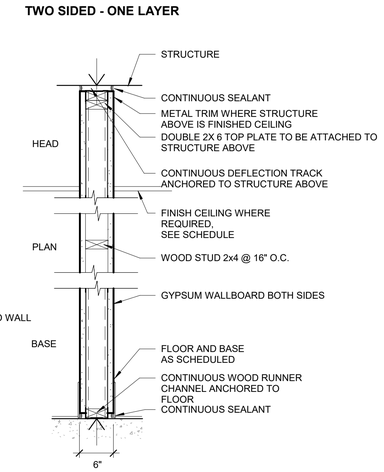

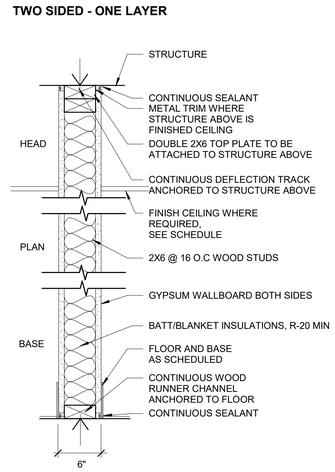

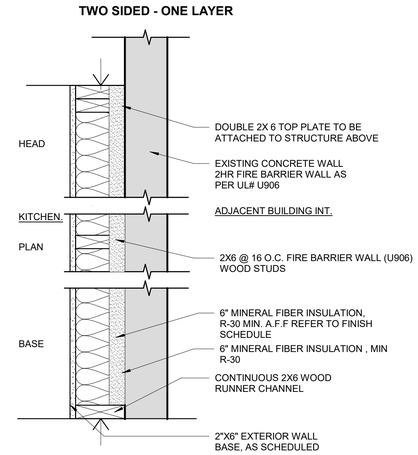

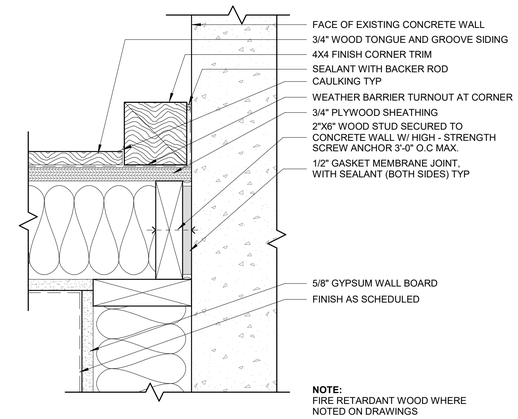

1 TYP WOOD FRAMING TO EXISTING CONC. WALL DETAIL
3" = 1'-0"

1 EXTERIOR WALL TYPE
1 LAYER. 5/8" GWB MOISTURE RESISTANT, 2x6 WOOD STUD, ¼" MOISTURE RESISTANT SHEATHING, 1/8" DRAINAGE TYPE OF AIR /MOISTURE BARRIER, WOOD SIDING UPTO 8' A.F.F

1A EXTERIOR WALL TYPE 1 HR FIRE RESISTANCE RATED
1 LAYER 5/8" 5/8" GWB-X , M-Bloc – MOISTURE RESISTANT, 2x6 WOOD STUD, 5/8" GBW-X, M-Bloc , ¾" FIRE RETARDANT SHEATHING, 1/8" DRAINAGE TYPE AIR/MOISTURE BARRIER ,WOOD SIDING WITH TEST NUMBER: BXUV.V346-ANSI/UL 263

2 1 HR. RATING
1 LAYER 5/8" IMPACT & MOLD-RESISTANT GYP. BD. UPTO 8' A.F.F. AND 5/8" MOLD-RESISTANT GYP. BD. TO CEILING, ON EACH SIDE

2A INTERIOR PARTITION WALL TYPE - NO RATING
5-1/2" WOOD STUDS
1 LAYER 5/8" GYP. BD. EACH SIDE. INSULATION R-20 MIN

2B 1 HR. RATING
5-1/2" WOOD STUDS
1 LAYER 5/8" GYP. BD. EACH SIDE WITH R-30 BATT INSULATION

3 EXTERIOR FURING WALL ON EXISTING WALL CONSTRUCTION
6" WOOD STUDS
1 LAYER 5/8" GYP. BD.

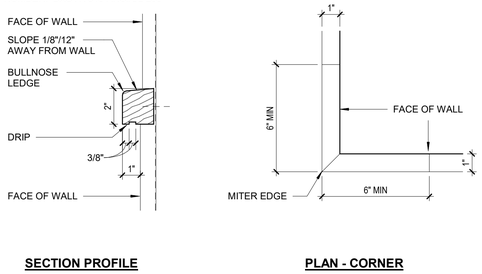

2 TYPICAL WOOD TRIM DETAIL
3" = 1'-0"

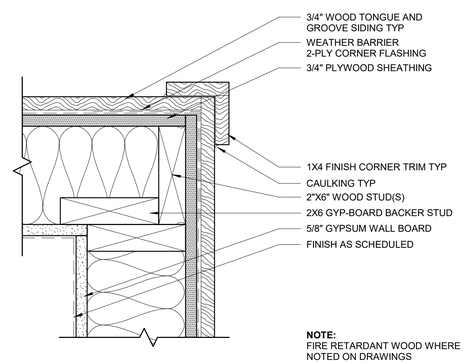

3 TYP WOOD FRAMING CORNER DETAIL
3" = 1'-0"

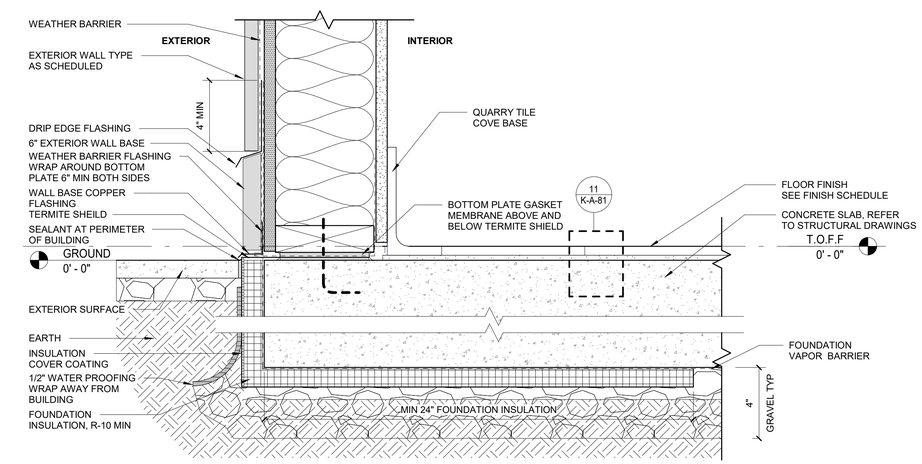

4 TYPICAL CONCRETE SLAB-ON-GRADE DETAIL
3" = 1'-0"

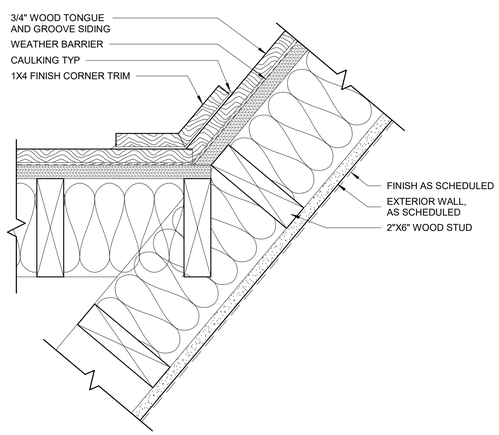

5 TYP WOOD FRAMING ANGLED WALL DETAIL
3" = 1'-0"

8/30/2022 2:52:12 PM

CONSULTANT INFORMATION
The LiRo Group
1 State Street Plaza, New York, NY, 10004
(516) 938-5476 www.liro.com

CONSULTANT SEAL
REGISTERED ARCHITECT ROBERT D. CORNIGA 023230 STATE OF NEW YORK

REVISION NUMBER	DATE	MADE BY	APP'D BY	REVISION

RECORD DRAWING CERTIFICATION
☐ AS BUILT – CHANGES AS NOTED ☐ AS BUILT – NO CHANGES

CONTRACTOR
NAME
SIGNATURE
TITLE DATE

PROJECT COORDINATOR
NAME
SIGNATURE
TITLE DATE

WESTCHESTER COUNTY, NEW YORK
DEPARTMENT OF PUBLIC WORKS AND TRANSPORTATION
DIVISION OF ENGINEERING

INFRASTRUCTURE REHABILITATION
PLAYLAND PARK, RYE, NEW YORK
RESTAURANT KITCHEN WITH FOOD VENDING
WALL PARTITION SCHEDULE

CONTRACT NUMBER	22-523
SHEET NUMBER	K-A-94
DWG NO.:	527 of 664
SCALE:	As indicated
DATE:	8/23/20223
DPW FILE NUMBER	1-118-A-1276-0
REV. NO.	0

STRUCTURAL NOTES

GENERAL

G-1 THESE NOTES ARE GENERAL AND SUPPLEMENTAL TO THE SPECIFICATIONS. THESE NOTES APPLY TO THE ENTIRE PROJECT UNLESS MODIFIED OR NOTED OTHERWISE IN THE CONTRACT DOCUMENTS.

G-2 STANDARD DETAILS, SHOWN ON DRAWINGS K-S-11 AND K-S-12 SHALL BE USED WHEN REFERRED TO OR WHEN NO MORE RESTRICTIVE OR DIFFERENT DETAILS ARE SHOWN ON THE DRAWINGS.

G-3 DESIGN WAS IN ACCORDANCE WITH AND CONSTRUCTION SHALL COMPLY WITH THE PROVISIONS OF THE NEW YORK STATE BUILDING CODE (NYSBC). THE DESIGN LOADS AND OTHER DESIGN VALUES GIVEN BELOW WERE USED FOR DESIGN OF STRUCTURES UON ON THE DRAWINGS.

G-4 DESIGN LOADS FOR NEW ELEMENTS:
LIVE LOADS:
RESTAURANT KITCHEN WITH FOOD VENDING:

ALL FLOORS U.O.N.:	100 PSF
FLOOR.:	60 PSF

SNOW LOADS:

GROUND SNOW LOAD,	Pg = 30 PSF
ROOF SNOW LOAD,	Pf= 21 PSF
SNOW EXPOSURE FACTOR,	Ce = 0.9
SNOW LOAD IMPORTANCE FACTOR,	I = 1.1
THERMAL FACTOR,	Ct = 1.0

WIND DESIGN:

BASIC WIND SPEED,	V = 126 MPH
BUILDING CATEGORY:	II
WIND EXPOSURE CATEGORY:	D
INTERNAL PRESSURE COEFFICIENT,	GCpi = ±0.18

SEISMIC DESIGN:

SPECTRAL RESPONSE COEFFICIENTS:	
SDS =	0.296
SD1 =	0.096
SITE CLASS:	B
SEISMIC DESIGN CATEGORY:	C
SEISMIC IMPORTANCE FACTOR:	I = 1.25

BASIC SEISMIC FORCE RESISTING SYSTEM IS AS SHOWN ON DRAWINGS
DESIGN BASE SHEAR, V = AS SHOWN ON DRAWINGS
ANALYSIS PROCEDURE IS EQUIVALENT LATERAL FORCE METHOD, UON.
RESPONSE MODIFICATION FACTOR, R:
RESTAURANT KITCHEN WITH FOOD VENDING: R = 7

LOADS INDICATED ABOVE REFLECT DESIGN LOADS FOR ANY NEW OR REHABILITATED STRUCTURAL ELEMENTS. THEY SHOULD NOT BE TAKEN AS DESIGN LOADS FOR THE STRUCTURE AS A WHOLE.

G-5 ALL DIMENSIONS INDICATED (*) ARE TO BE VERIFIED EITHER BY FIELD MEASUREMENTS FOR EXISTING STRUCTURES OR BY SHOP DRAWINGS FOR EQUIPMENT FURNISHED. STRUCTURAL DIMENSIONS NOT SHOWN BUT CONTROLLED BY OR RELATED TO EQUIPMENT SHALL BE VERIFIED BY THE CONTRACTOR WITH THE MANUFACTURER PRIOR TO CONSTRUCTION.

G-6 STRUCTURAL DRAWINGS SHALL BE USED IN COORDINATION WITH THE DRAWINGS OF ALL OTHER DISCIPLINES AND MANUFACTURER'S SHOP DRAWINGS.

G-7 IF A CONFLICT IS FOUND BETWEEN DIFFERENT PORTIONS OF THE CONTRACT DOCUMENTS, THE CONTRACTOR SHALL NOTIFY THE ENGINEER IMMEDIATELY. CONTINUED CONSTRUCTION OF THE AREA IN CONFLICT SHALL BE AT THE CONTRACTOR'S OWN RISK UNTIL THE CONFLICT IS RESOLVED BY THE ENGINEER.

G-8 WHENEVER ONE MEMBER IS FASTENED TO ANOTHER WITH FASTENINGS (BOLTS, WELDS, ETC.) SET AT A UNIFORM SPACING, THERE SHALL BE A MINIMUM OF TWO FASTENINGS PER PIECE CONNECTED AND THE FIRST AND LAST FASTENINGS SHALL BE LOCATED NOT TO EXCEED 0.25 OF FASTENER SPACING FROM EACH END.

G-9 STRUCTURES HAVE BEEN DESIGNED FOR OPERATIONAL LOADS ON THE COMPLETED STRUCTURE. DURING CONSTRUCTION, THE STRUCTURES SHALL BE PROTECTED BY BRACING AND TEMPORARY SUPPORTS WHEREVER EXCESSIVE CONSTRUCTION LOADS MAY OCCUR. OVERSTRESSING OF ANY STRUCTURAL ELEMENT IS PROHIBITED.

G-10 NO BACKFILL SHALL BE PLACED AGAINST ANY WALL UNLESS ALL SUPPORTING ELEMENTS OF THE STRUCTURE HAVE BEEN CONSTRUCTED AND HAVE REACHED THE SPECIFIED MINIMUM CONCRETE STRENGTH.

G-11 THE CONTRACTOR IS RESPONSIBLE FOR VERIFYING ALL EXISTING INFORMATION IN THE FIELD AS REQUIRED FOR NEW WORK.

FOUNDATIONS

F-1 DESIGN ASSUMPTIONS:
A) ALLOWABLE BEARING PRESSURE: 1. SOUND ROCK – 8 TSF, 2. OVERBURDEN – 1 TSF.
B) GROUNDWATER: EXISTING GROUNDWATER ELEVATIONS VARY ACROSS SITE.

F-2 GRAVITY UNDER DRAINS SHALL BE PROVIDED TO PERMANENTLY LOWER GROUNDWATER.

F-3 CONCRETE GENERAL NOTES APPLY TO FOUNDATIONS.

F-4 MINIMUM DEPTH FROM ADJACENT FINISHED GRADE TO BOTTOM OF FOUNDATION, 4'-0"

F-5 FOUNDATIONS BEARING ON ROCK SHALL BE CONSTRUCTED SUCH THAT ROCK SURFACE IS LEVEL, UNLESS APPROVED BY ENGINEER.

F-6 COMPACTED SELECT GRANULAR FILL 12 INCHES THICK MINIMUM, SHALL BE PLACED BELOW ALL CONCRETE FOUNDATIONS UNLESS DIRECTLY BEARING ON SOUND ROCK.

STRUCTURAL METALS

S-1 DETAIL, FABRICATE, AND ERECT STRUCTURAL STEEL IN ACCORDANCE WITH AISC SPECIFICATION FOR STRUCTURAL STEEL BUILDINGS, ALLOWABLE STRESS DESIGN AND LRFD DESIGN (LRFD MANUAL OF STEEL CONSTRUCTION, CURRENT EDITION).

S-2 STEEL MATERIAL:
A) STRUCTURAL TUBING, ASTM A 500, GRADE B.
B) STRUCTURAL PIPE, ASTM A 53, GRADE B.
C) PLATES AND ANGLES, ASTM A 36 UNO.
D) STRUCTURAL W SHAPES, ASTM A 992 (MIN. YIELD STRENGTH OF 50 KSI).
E) STRUCTURAL S, M, & H SHAPES ASTM A572 GRADE 50.
F) F) COLD FORMED STEEL.

S-3 PROVIDE MIN 3/4" DIAMETER ASTM A 325 HIGH STRENGTH BOLTS WITH FULLY TIGHTENED TYPE N CONNECTIONS FOR STRUCTURAL STEEL UON.

S-4 PROVIDE TYPICAL STEEL BEAM CONNECTIONS FOR A CAPACITY NOT LESS THAN THE TOTAL UNIFORM LOAD CAPACITY TABULATED IN THE AISC TABLES FOR ALLOWABLE LOADS OF BEAMS UNLESS NOTED OTHERWISE.

S-5 CAST IN PLACE ANCHOR BOLTS FOR STRUCTURAL STEEL SHALL CONFORM TO ASTM A307 UON.

S-6 DO NOT PAINT STEEL SURFACES WHICH ARE TO BE WELDED OR ARE TO BE ENCASED IN CONCRETE.

S-7 STAINLESS STEEL SHALL BE TYPE 316 FOR BOLTED CONSTRUCTIONS AND 316L FOR WELDED CONSTRUCTIONS.

S-8 ALUMINUM SHALL BE ALLOY 6061-T6.

S-9 ALL GROOVE AND BUTT WELDS SHALL BE FULL PENETRATION.

S-10 FILLET WELD SIZES SHALL BE THE MINIMUM SIZE REQUIRED BY AISC CODE FOR PLATE SIZES TO BE CONNECTED AND SHALL BE APPLIED TO THE ENTIRE JOINT CONTACT LENGTH, BUT NOT LESS THAN 3/16".

S-11 DETAIL, FABRICATE, AND ERECT ALUMINUM IN ACCORDANCE WITH THE ALUMINUM ASSOCIATION CONSTRUCTION MANUAL CURRENT EDITION.

S-12 ALL BOLTS, ANCHOR BOLTS, AND CONCRETE ANCHORS CONNECTING ALUMINUM SHALL BE TYPE 316 STAINLESS STEEL UON.

S-13 ALUMINUM SHALL BE ISOLATED FROM CONTACT WITH CONCRETE OR DISSIMILAR METALS.

EXCAVATION

E-1 CONTRACTOR SHALL PERFORM ALL EXCAVATION IN ACCORDANCE WITH STATE, LOCAL AND FEDERAL REQUIREMENTS INCLUDING OSHA BRACING AND EXCAVATION REQUIREMENTS.

E-2 TEMPORARY SHEETING AND BRACING IS NOT SHOWN ON CONTRACT DRAWINGS. ALL EXCAVATIONS WITH A POTENTIAL FOR CAVE-IN SHALL BE PROVIDED WITH EXCAVATION PROTECTION SYSTEMS IN ACCORDANCE WITH OSHA 1926. SLOPING AND BENCHING WHICH WILL ENCROACH ON AREAS SLATED TO REMAIN ACCESSIBLE OR THAT MAY ENCROACH ON EXISTING FOOTINGS AND STRUCTURES SHALL NOT BE PERMITTED.

E-3 CONTRACTOR SHALL ENGAGE THE SERVICES OF A LICENSED PROFESSIONAL ENGINEER REGISTERED IN THE STATE OF NEW YORK TO DESIGN ALL TEMPORARY SHEETING AND BRACING AND RELATED APPURTENANCES. CONTRACTOR TO SUBMIT SUCH PLANS TO ENGINEER FOR INFORMATION.

E-4 CONTRACTOR SHALL BE RESPONSIBLE FOR DEWATERING OF OPEN EXCAVATIONS.

E-5 ALL EXCAVATED MATERIALS SHALL BE REMOVED FROM SITE TO A FACILITY AS REQUIRED BY STATE, LOCAL FEDERAL LAW.

TIMBER

T-1 ALL WOOD FRAMING MEMBERS INCLUDING, BUT NOT LIMITED TO, WALL STUDS AND JOISTS, ARE INTENDED TO ACT AS A SYSTEM AS DETAILED IN THE STRUCTURAL DRAWINGS AND ONCE CONSTRUCTION IS COMPLETE. IT IS THE RESPONSIBILITY OF THE CONTRACTOR TO ENSURE SAFETY AND STABILITY OF WOOD FRAMING SYSTEMS (I.E. TEMPORARY BRACING IF REQUIRED) DURING CONSRTUCTION AS A RESULT OF CONSTRUCTION METHODS AND SEQUENCES.

T-2 ALL TIMBER BELOW FLOOR DECKING SHALL BE PRESSURE-TREATED SOUTHERN PINE LUMBER.

T-3 STORAGE OF ALL LUMBER AND TIMBER ON SITE SHALL BE KEPT OFF GROUND, UNDER COVER AND PROTECTED FROM DAMAGE.

T-4 ALL DIMENSIONAL LUMBER SHALL BE CERTIFIED BY THE SUPPLIER IN WRITING TO BE KILN DRIED.

T-5 STRUCTURE SHALL NOT BE ENCLOSED UNLESS LUMBER MOISTURE CONTENT HAS BEEN VERIFIED TO BE AT OR BELOW 15%. ANY SIGNS OF MOLD SHALL BE REMOVED AND TREATED IN ACCORDANCE WITH PROJECT SPECIFICATIONS OR INDUSTRY STANDARDS.

T-6 ALL LUMBER IN CONTACT WITH THE GROUND OR CONCRETE SHALL BE PRESSURE TREATED.

T-7 FASTENERS FOR PRESERVATIVE TREATED AND FIRE RETARDANT TREATED WOOD SHALL BE OF HOT DIPPED ZINC COATED GALVANIZED STEEL OR STAINLESS STEEL AND SHALL FOLLOW CURRENT SIMPSON GUIDELINES BASED ON WEATHER EXPOSURE. WHERE STAINLESS STEEL CONNECTORS OR HOT DIPPED GALVANIZED CONNECTORS ARE SPECIFIED IN THE DRAWINGS, STAINLESS STEEL OR HOT DIPPED GALVANIZED FASTENERS SHALL BE USED TO MATCH CONNECTOR TYPE.

T-8 ALL PLATES AND LEDGERS SHALL BE FASTENED WITH A MINIMUM (3) ANCHORS PER PIECE UNLESS NOTED OTHERWISE.

T-9 ALL METAL HARDWARE AND FRAMING ACCESSORIES SHALL BE MANUFACTURED BY SIMPSON STRONG-TIE COMPANY. ALL ITEMS SHALL BE INSTALLED PER THE SIMPSON'S INSTALLATION REQUIREMENTS. ALL NAIL HOLES SHALL BE FILLED WITH THE RECOMMENDED FASTENER UNLESS NOTED OTHERWISE ON THE DRAWING.

T-10 HOLES FOR BOLTS SHALL BE DRILLED WITH A BIT OF THE SAME NOMIMAL DIAMETER AS THE BOLT + 1/16". LEAD HOLES FOR LAG SCREWS SHALL BE BORED PER NDS 11.1.3.

T-11 ALL BOLTS, CARRIAGE BOLTS, LAG SCREWS, EXPANSION BOLTS AND EPOXY BOLTS SHALL BE INSTALLED WITH STANDARD CUT WASHERS UNDER THE BOLT HEAD AND NUTS THAT BEAR DIRECTLY ON THE WOOD. ALL NUTS SHALL BE TIGHTENED AT THE TIME OF INSTALLATION AND RE-TIGHTENED IF NECESSARY, DUE TO WOOD SHRINKAGE, PRIOR TO CLOSE OUT OR COMPLETION OF THE PROJECT. BOLTS AND LAG SCREWS SHALL CONFORM TO ANSI/ASME STANDARD B18.2.1. WOOD SCREWS SHALL CONFORM TO B18.6.1. ALL BOLTS SHALL CONFORM TO ASTM A307 GRADE A UNLESS NOTED OTHERWISE.

T-12 CUTTING AND NOTCHING OF SAWN LUMBER RAFTERS AND STUDS SHALL BE IN CONFORMANCE WITH THE FOLLOWING CRITERIA:

A. JOISTS NOTCHES AT THE ENDS OF JOISTS SHALL NOT EXCEED 1/5 OF THE JOIST DEPTH. HOLES IN JOISTS SHALL NOT BE WITHIN 2½ INCHES OF THE TOP OR BOTTOM OF THE JOIST, AND THE DIAMETER OF ANY SUCH HOLE SHALL NOT EXCEED 1/4 THE DEPTH OF THE JOIST. NOTCHES IN THE TOP OR BOTTOM OF THE JOISTS SHALL NOT EXCEED 1/6 THE DEPTH AND SHALL NOT BE LOCATED IN THE MIDDLE OF THE THIRD SPAN.

B. RAFTERS NOTCHES AT THE ENDS OF RAFTERS OR CEILING JOISTS SHALL NOT EXCEED 1/5 OF THE DEPTH. NOTCHES IN THE TOP OR BOTTOM OF THE RAFTER OR CEILING JOIST SHALL NOT EXCEED 1/6 THE DEPTH AND SHALL NOT BE LOCATED IN THE MIDDLE 1/3 OF THE SPAN. EXCEPT THAT A NOTCH NOT EXCEEDING 1/3 OF THE DEPTH IS PERMITTED IN THE TOP OF THE RAFTERS OR CEILING JOIST NOT FURTHER FROM THE FACE OF THE SUPPORT THAN THE DEPTH OF THE MEMBER. HOLES BORED IN RAFTERS OR CEILING JOISTS SHALL NOT BE WITHIN 2½" INCHES OF THE TOP AND BOTTOM AND THEIR DIAMETER SHALL NOT EXCEED 1/4 THE DEPTH OF THE MEMBER.

C. WALL STUDS A MAXIMUM OF 2¼" DIAMETER NEATLY BORED HOLE MAY BE PLACED IN THE CENTER OF ALL BEARING 2x6 STUDS WITH NO ADDITIONAL REINFORCEMENT REQUIRED.

SPECIAL INSPECTIONS–RESTAURANT KITCHEN WITH FOOD VENDING

S-1 SPECIAL INSPECTION SHALL COMPLY WITH SPECIFICATIONS.

S-2 SPECIAL INSPECTION WILL BE PERFORMED IN ACCORDANCE WITH CHAPTER 17 OF THE NYS BUILDING CODE.

S-3 SPECIAL INSPECTION WILL BE PERFORMED ON THE FOLLOWING STRUCTURAL SYSTEMS:

A) STRUCTURAL STEEL CONSTRUCTION (1705.5).

B) WOOD CONSTRUCTION (1705.4).

C) CONCRETE CONSTRUCTION (1705.3).

D) SOILS (1705.6).

E) DRIVEN DEEP FOUNDATIONS (1705.7)

F) WIND RESISTANCE (1705.11).

G) SEISMIC RESISTANCE (1705.12).

CONCRETE (EXCEPT PRECAST)

C-1 CONCRETE STRENGTH CLASSES (28-DAY COMPRESSIVE STRENGTH): CLASS A (5000 PSI) STRUCTURES, REINFORCED DUCT BANKS, AND PIPE ENCASEMENT. FOR CONCRETE WALLS GREATER THAN 2 FEET THICK FOLLOW ACI RECOMMENDATIONS FOR MASS CONCRETE. CLASS D (2500 PSI) SIDEWALKS, CURBS AND GUTTERS, CONCRETE FILL, THRUST BLOCKS, UNREINFORCED DUCT BANKS AND PIPE ENCASEMENT, FENCE POST EMBEDMENT.

C-2 REINFORCEMENT: ASTM A615, GRADE 60, OR ASTM A706, GRADE 60 WHERE REINFORCEMENT IS TO BE WELDED.

C-3 CONCRETE COVER FOR REINFORCING:
A) SURFACES CAST AGAINST SUBGRADE 3" MIN.
B) FORMED SURFACES IN CONTACT WITH SOIL OR LIQUID 2" MIN.
C) SURFACES NOT IN CONTACT WITH WEATHER, SOIL, OR LIQUID 1 1/2" MIN.

C-4 CONSTRUCTION JOINTS & CONTROL JOINTS SHALL BE LOCATED AS SHOWN ON THE DRAWINGS. WHERE NOT SHOWN, CONSTRUCTION JOINTS SHALL BE LOCATED AT NO MORE THAN 30 FEET ON CENTER. JOINT LOCATIONS SHALL BE AS APPROVED BY THE ENGINEER.

C-5 EQUIPMENT SUPPORTS, ANCHORAGES, OPENINGS, RECESSES AND REVEALS NOT SHOWN ON THE STRUCTURAL DRAWINGS BUT REQUIRED BY OTHER DISCIPLINES, SHALL BE PROVIDED FOR PRIOR TO PLACING CONCRETE.

C-6 SPLICES SHALL BE CLASS 'B' CONFORMING TO THE PROVISIONS OF ACI 318 UNLESS NOTED OTHERWISE.

C-7 AT ALL TYPICAL CURBS, EQUIPMENT PADS, AND PIPE SUPPORT PIERS, REINFORCING DOWELS SHOWN MAY BE REPLACED WITH MATCHING DOWELS SET IN EPOXY IN DRILLED HOLES AS SPECIFIED. DOWELS LOCATED CLOSER THAN 3" FROM ANY EDGE OF CONCRETE SHALL NOT BE REPLACED WITH DRILLED DOWELS.

C-8 DRILLED EPOXY DOWELS (WHERE DOWELS ARE SHOWN TO BE PLACED INTO HARDENED CONCRETE):
A) THE HOLE DIAMETER SHALL BE NO LARGER THAN 1/8" GREATER THAN THE DIAMETER OF THE REINFORCING BAR AT THE DEFORMATIONS.
B) THE DEPTH OF EMBEDMENT SHALL BE 12 BAR DIAMETERS, UNLESS SHOWN OTHERWISE.
C) ADJUST THE DOWEL LOCATIONS AS NEEDED TO AVOID DRILLING THROUGH ANY REINFORCING BARS.IF THE DOWEL LOCATION NEEDS TO BE MODIFIED, CONTACT THE ENGINEER.

C-9 SLABS WITH SLOPING SURFACES SHALL HAVE THE INDICATED SLAB THICKNESS MAINTAINED AS THE MINIMUM. SLAB BOTTOMS CAN EITHER SLOPE WITH THE TOP SURFACE OR BE LEVEL. REINFORCEMENT IN SLABS WITH SLOPING SURFACES SHALL BE PLACED AT THE REQUIRED CLEARANCE FROM THE SLAB SURFACE.

C-10 SLOPES SHOWN ON SLAB SURFACES BY FLOW ARROWS SHALL BE 1.0 PERCENT UNLESS NOTED OTHERWISE.

C-11 WHERE HORIZONTAL CONSTRUCTION JOINTS, LOCATED ABOVE THE FOUNDATION SLAB, EXTEND BEYOND WHERE NEEDED, THEY SHALL BE TERMINATED AT A VERTICAL CONSTRUCTION JOINT APPROVED BY THE ENGINEER.

C-12 DOWELS, ANCHOR BOLTS, PIPES, WATERSTOPS AND OTHER EMBEDDED ITEMS SHALL BE HELD SECURELY IN POSITION WHILE CONCRETE IS BEING PLACED.

C-13 CONDUITS AND OTHER SIMILAR ITEMS EMBEDDED IN OR PENETRATING THROUGH CONCRETE SHALL BE SPACED ON CENTER NOT LESS THAN 3 TIMES THEIR OUTSIDE DIMENSION, BUT NOT LESS THAN 2 1/2" CLEAR IN CLASS 45F CONCRETE OR 2" CLEAR IN CLASS 45 CONCRETE. SUCH ITEMS SHALL NOT EXCEED 1/3 OF THE MEMBER THICKNESS.

C-14 REINFORCING BARS AND ACCESSORIES SHALL NOT BE IN CONTACT WITH ANY METAL PIPE, PIPE FLANGE, METAL CONDUIT, OR OTHER METAL PARTS EMBEDDED IN CONCRETE. A MINIMUM CLEARANCE OF 2 INCHES SHALL BE PROVIDED.

C-15 ALL JOINTS WHICH ARE IN MEMBERS IN CONTACT WITH LIQUID OR BELOW GRADE SHALL HAVE A WATERSTOP. CONSTRUCTION JOINTS SHALL HAVE A 6" PVC FLATSTRIP WATERSTOP. EXPANSION JOINTS SHALL HAVE A 9" PVC CENTERBULB WATERSTOP.

C-16 IN VERTICAL JOINTS, WATERSTOP SHALL STOP NO LESS THAN 18" ABOVE THE MAXIMUM WATER SURFACE OR 18" ABOVE GRADE, WHICHEVER IS HIGHER.

C-17 AT JOINT INTERSECTIONS, WATERSTOPS SHALL BE CONNECTED SO AS TO FORM A COMPLETE SEAL USING CONNECTION PIECES AS NEEDED.

C-18 ALL EXPOSED CORNERS SHALL HAVE A 3/4" CHAMFER OR A 1/2" RADIUS TOOLED CORNER.

DEMOLITION

LEGEND

EXISTING REINFORCED CONCRETE WALL OR STRUCTURE TO BE DEMOLISHED

SAW CUT LINE – FULL DEPTH UNLESS NOTED OTHERWISE

D-1 CONTRACTOR IS ALERTED THAT LIMITS OF DEMOLITION SHOWN IS APPROXIMATE. ACTUAL LIMITS SHALL BETHE MINIMUM REQUIRED FOR NEW STRUCTURE. CONTRACTOR TO CO-ORDINATE AND SUBMIT DEMOLITION PROCEDURE PER SPECIFICATIONS.

D-2 ALL ITEMS SHOWN ARE EXISTING TO REMAIN UNLESS NOTED OTHERWISE.

D-3 FOR ADDITIONAL DEMOLITION REQUIREMENTS SEE SPECIFICATIONS (024116).

D-4 ALL EXISTING CONCRETE TO BE DEMOLISHED IS STEEL REINFORCED UNLESS NOTED OTHERWISE. REINFORCING STEEL NOT SHOWN FOR CLARITY.

D-5 FOR ADDITIONAL DEMOLITION NOT SHOWN, SEE G, A, M, E, H, AND P DRAWINGS.

PILE NOTES

P-1 PILES SHALL BE DESIGNED AND INSTALLED BY A QUALIFIED PILE CONTRACTOR IN ACCORDANCE WITH THE BORED-IN PILE SPECIFICATIONS AND SUBJECT TO THE REQUIREMENTS LISTED HEREIN.

P-2 THE CONTRACTOR SHALL ENGAGE A LICENSED PROFESSIONAL ENGINEER REGISTERED IN THE STATE OF NEW YORK TO DESIGN PILE AND SUBMIT THE DESIGN TO THE ENGINEER FOR APPROVAL.

P-3 THE BORED-IN PILE SHALL BE MINIMUM 9 5/8"ø WITH 0,545" WALL THICKNESS AND DESIGNED AND INSTALLED FOR ULTIMATE LOAD IN COMPRESSION = 60 TONS ALLOWABLE LOAD IN COMPRESSION = 30 TONS.

P-4 ALL BORED-IN PILES SHALL BE GROUTED WITH A MINIMUM 28 DAY COMPRESSIVE STRENGTH OF 4000 PSI.

P-5 ALL BORED-IN PILES SHALL HAVE FULL LENGTH 1-1/4" ø THREADBARS. THE THREADBARS SHALL CONFORM TO THE REQUIREMENTS OF ASTM A722, GRADE 150 AS MANUFACTURED BY DYWIDAG OR APPROVED EQUAL, UNLESS NOTED OTHERWISE. PROVIDE BEARING PLATES AND NUTS IN ACCORDANCE WITH THE THREADBAR MANUFACTURER'S RECOMMENDATIONS.

P-6 PROVIDE CENTRALIZERS FOR THREADBARS AT 10 FEET MAXIMUM VERTICAL SPACING.

P-7 CUT OFF THE ELEVATIONS OF THE BORED-IN PILES AS SHOWN ON DRAWINGS.

P-8 ALL BORED-IN PILES SHALL BE INSTALLED WITH A MAXIMUM LATERAL TOLERANCE OF THREE INCHES.

P-9 DRILLING OPERATION SHALL BE PERFORMED IN THE PRESENCE OF THE ENGINEER.

P-10 ONE (1) STATIC AXIAL COMPRESSION LOAD TEST WILL BE REQUIRED.

P-11 THE INSTALLATION METHOD USED FOR THE SUCCESSFUL COMPLETION OF LOAD TESTING SHALL BE USED FOR ALL THE PRODUCTION PILES.

P-12 THE CONTRACTOR SHALL SUBMIT A STATIC AXIAL LOAD TESTING PROGRAM CONSISTING OF ONE (1) COMPRESSION TEST SHOWING PROPOSED PILE LOAD TEST LOCATIONS FOR APPROVAL OF THE ENGINEER.

P-13 COMPRESSION LOAD TESTING SHALL CONFORM TO ASTM D1143 AND THE PROJECT SPECIFICATIONS. UPLIFT LOAD TESTING SHALL CONFORM TO THE PROJECT SPECIFICATIONS AND ASTM D3689.

P-14 A MINIMUM PERIOD OF TWO (2) WEEKS SHALL ELAPSE FROM THE INSTALLATION OF THE TEST PILE TO THE COMMENCEMENT OF THE LOAD TEST.

P-15 TWO (2) TELLTALE RODS SHALL BE INSTALLED IN THE LOAD TEST PILE. THE BOTTOM END OF ONE TELLTALE ROD SHALL BE AT THE BOTTOM OF THE TEST PILE, AND THE BOTTOM END OF THE OTHER ROD SHALL BE TERMINATED MIDWAY BETWEEN PILE CUT-OFF AND PILE TIP. THE TELLTALE SHALL CONSIST OF A STEEL SOUNDING ROD EXTENDED TO AN ELEVATION DESIGNATED BY THE ENGINEER. THE TELLTALES SHALL BE PROTECTED BY A STEEL TUBE EMBEDDED IN GROUT. THE TELLTALE SHALL BE CENTERED IN THE TUBE IN A MANNER TO AVOID FRICTION BETWEEN THE TELLTALE AND THE TUBE.

P-16 THE LOADING PROCEDURE FOR STATIC AXIAL COMPRESSION TEST SHALL BE IN ACCORDANCE WITH NEW YORK STATE BUILDING CODE.

P-17 MEASUREMENTS OF MOVEMENT OF THE PILE BUTT, TELLTALES, REFERENCE BEAMS, ETC. SHALL BE TAKEN BY LICENSED SURVEYOR (REGISTERED IN THE STATE OF NEW YORK) ENGAGED BY THE OWNER.

P-18 MONITORING OF LOAD TEST SHALL BE PERFORMED BY A PROFESSIONAL ENGINEER REGISTERED IN THE STATE OF NEW YORK AND HIRED BY THE OWNER.

P-19 THE DIAL GAUGES FOR MONITORING THE MOVEMENT OF THE PILE SHALL HAVE A MINIMUM TRAVEL OF THREE (3) INCHES AND SHALL BE AT LEAST THREE (3) INCHES IN DIAMETER.

CONSULTANT INFORMATION
Savin Engineers, P.C.

CONSULTANT SEAL
STATE OF NEW YORK · HUSSEIN MOHAMED ELDEREBY · No. 065364 · LICENSED PROFESSIONAL ENGINEER

REVISION NUMBER	DATE	MADE BY	APP'D BY	REVISION

RECORD DRAWING CERTIFICATION
☐ AS BUILT – CHANGES AS NOTED ☐ AS BUILT – NO CHANGES

CONTRACTOR
NAME ____ SIGNATURE ____ TITLE ____ DATE ____

PROJECT COORDINATOR
NAME ____ SIGNATURE ____ TITLE ____ DATE ____

WESTCHESTER COUNTY, NEW YORK
DEPARTMENT OF PUBLIC WORKS AND TRANSPORTATION
DIVISION OF ENGINEERING

INFRASTRUCTURE REHABILITATION - PHASE 3
PLAYLAND PARK, RYE, NEW YORK
RESTAURANT KITCHEN WITH FOOD VENDING
STRUCTURAL NOTES

CONTRACT NUMBER **22-523** SHEET NUMBER **K-S-01**
DWG NO.:
SCALE: **AS SHOWN**
DATE: **8/23/2022**
DPW FILE NUMBER 1-118-S-1277-0 REV. NO. **0**

Drawing Name: G:\SavinAutocad\2060\25-Playland-Mega-3\S\KS-1001.dwg
Rev#: Projectname: 211001F02 Comments: ----
Printed by: JCastro Date: 19 August 2022 1:06 PM Designed by: ----
Xrefs: [TB_24X36_WestchesterCo_3.dwg] [TSG-SVLOGO.dwg] [BCR-A-04.dwg] [BCRE-101.dwg]

STRUCTURAL ABBREVIATIONS

AB	ANCHOR BOLT
ADDL	ADDITIONAL
ADH	ADHESIVE
ADJ	ADJUSTABLE/ADJACENT
AFF	ABOVE FINISHED FLOOR
AGG	AGGREGATE
AL	ALUMINUM
ALT	ALTERNATE
APPROX	APPROXIMATE
ARCH	ARCHITECTURAL
AVG	AVERAGE
B	BORING
BLDG	BUILDING
BM	BEAM/BENCH MARK
BOF	BOTTOM OF FOOTING
BOS	BOTTOM OF STEEL
BOT	BOTTOM
BRG	BEARING
BT	BOLT
C	CHANNEL
C TO C	CENTER TO CENTER
CANT	CANTILEVER
CJ	CONSTRUCTION JOINT
CL	CENTER LINE
CLR	CLEAR
CMU	CONCRETE MASONRY UNIT
CO	CLEAN OUT
COL	COLUMN
CONC	CONCRETE
CONST	CONSTRUCTION
CONT	CONTINUOUS
CONTR	CONTRACTOR
CP	CONCRETE PLANK
CLJ	CONTROL JOINT
CTR	CENTER
CY	CUBIC YARD
DET	DETAIL
DIA (ø)	DIAMETER
DIAG	DIAGONAL
DIM	DIMENSION
DIST	DISTANCE
DN	DOWN
DO	DITTO
DP	DEEP
DWG	DRAWING
DWL	DOWEL
E	EAST
EA	EACH
EF	EACH FACE
EL	ELEVATION
ELEV	ELEVATOR
ENGR	ENGINEER
EMB	EMBEDMENT
ENCL	ENCLOSURE
ENT	ENTRANCE
EQ	EQUAL
EQPT	EQUIPMENT
EW	EACH WAY
EXIST	EXISTING
EXP	EXPANSION
EXP JT	EXPANSION JOINT
EXT	EXTERIOR
FAB	FABRICATE
FD	FLOOR DRAIN
FDN	FOUNDATION
FFL	FINISH FLOOR
FIN	FINISH
FLR	FLOOR
FT	FEET
FTG	FOOTING
F&C	FRAME&COVER
F&G	FRAME&GRATE

GA	GAUGE
GALV	GALVANIZE
GB	GRADE BEAM
GR	GRADE
GRTG	GRATING
HGT	HEIGHT
HORZ	HORIZONTAL
HP	HIGH POINT
HSS	HOLLOW STRUCTURAL STEEL
ID	INSIDE DIAMETER
IF	INSIDE FACE
IN	INCH
INCL	INCLUDE
INT	INTERIOR
INV	INVERT
J	JOIST
JB	JUNCTION BOX
JCT	JUNCTION
JT	JOINT
L	LENGTH/ANGLE
LF	LINEAR FEET
LG	LONG
LL	LIVE LOAD
LLH	LONG LEG HORIZONTAL
LLV	LONG LEG VERTICAL
LOC	LOCATION
LP	LOW POINT
LVR	LOUVER
LWL	LOW WATER LEVEL
MAS	MASONRY
MATL	MATERIAL
MAX	MAXIMUM
MECH	MECHANICAL
MET	METAL
MFR	MANUFACTURER
MG	MILLION GALLONS
MGD	MILLION GALLONS PER DAY
MH	MANHOLE
MIN	MINIMUM
MISC	MISCELLANEOUS
MO	MASONRY OPENING
MOD	MODIFY/MODIFIED
MTD	MOUNTED
N	NORTH
NA	NOT APPLICABLE
NIC	NOT IN CONTRACT
NO	NUMBER
NOM	NOMINAL
NTS	NOT TO SCALE
OC	ON CENTER
OD	OUTSIDE DIAMETER
OF	OUTSIDE FACE
OPNG	OPENING
OPP	OPPOSITE
OT	OPEN TRUSS
OVHD	OVERHEAD
PAR	PARALLEL
PC	POINT OF CURVE/PIECE
PCO	PILE CUT OFF
PI	POINT OF INTERSECTION
PL	PLATE/PROPERTY LINE
PREFAB	PREFABRICATED
PSF	POUNDS PER SQUARE FOOT
PSI	POUNDS PER SQUARE INCH
PT	POINT OF TANGENCY
PTN	PARTITION
PVMT	PAVEMENT
QTY	QUANTITY

R	RISER
RAD	RADIUS
RCP	REINFORCED CONCRETE PIPE
RD	ROOF DRAIN
REINF	REINFORCEMENT
RECT	RECTANGULAR
REM	REMOVE
REQD	REQUIRED
RF	ROOF
RO	ROUGH OPENING
S	SOUTH
SCHED	SCHEDULE
SECT	SECTION
SF	SQUARE FEET
SHT	SHEET
SIM	SIMILAR
SJ	STEEL JOIST
SPEC	SPECIFICATION
SQ	SQUARE
SS	STAINLESS STEEL
STA	STATION
STD	STANDARD
STR	STAIR
STIF	STIFFENER
STIR	STIRRUP
STL	STEEL
STRUC	STRUCTURAL
SUB	SUBSTITUTE
SYM	SYMMETRICAL
T	TREAD
T&B	TOP AND BOTTOM
T&G	TOUNGE AND GROOVE
TAN	TANGENT
TEMP	TEMPERATURE
THK	THICK
TOC	TOP OF CURB/CONCRETE
TOD	TOP OF DECK
TOF	TOP OF FOOTING
TOM	TOP OF MASONRY/MANHOLE
TOS	TOP OF SLAB/STEEL
TOW	TOP OF WALL
TYP	TYPICAL
UNO	UNLESS NOTED OTHERWISE
VERT	VERTICAL
W	WEST/WIDTH/WIDE FLANGE
W/	WITH
W/O	WITHOUT
WL	WATER LEVEL
WP	WATERPROOF/WALL PIPE
WPT	WALL PENETRATING TYPE
WS	WATER SURFACE
WT	WEIGHT
WWF	WELDED WIRE FABRIC
YD	YARD
YR	YEAR

SYMBOLS

- UNDISTURBED EARTH
- COMPACTED BACKFILL
- SELECT GRANULAR FILL MATERIAL
- CONCRETE BLOCK
- BRICK
- FINISHED WOOD
- CONCRETE
- ROUGH WOOD
- RIGID INSULATION
- REINFORCED STEEL IN CONCRETE
- WELDED WIRE FABRIC
- BLANKET INSULATION
- STEEL
- DENOTES MOMENT CONNECTION

Drawing Name: G:\SavinAutocad\2060\25-Playland-Mega-3\S\KS-1007.dwg
Rev#: Projectname: ---- Comments: All inquiries regarding this drawing(s) or project should be made to NYC Environmental Protection, Bureau of Engineering Design and Construction.
Printed by: ---- Date: 8/19/2022 4:06 PM Designed by: ----

CONSULTANT INFORMATION

Savin Engineers, P.C.

CONSULTANT SEAL

STATE OF NEW YORK — LICENSED PROFESSIONAL ENGINEER — No. 065362

REVISION NUMBER	DATE	MADE BY	APP'D BY	REVISION

RECORD DRAWING CERTIFICATION

☐ AS BUILT – CHANGES AS NOTED ☐ AS BUILT – NO CHANGES

CONTRACTOR
NAME
SIGNATURE
TITLE DATE

PROJECT COORDINATOR
NAME
SIGNATURE
TITLE DATE

WESTCHESTER COUNTY, NEW YORK
DEPARTMENT OF PUBLIC WORKS AND TRANSPORTATION
DIVISION OF ENGINEERING

INFRASTRUCTURE REHABILITATION - PHASE 3
PLAYLAND PARK, RYE, NEW YORK
RESTAURANT KITCHEN WITH FOOD VENDING
STRUCTURAL ABBREVIATIONS AND SYMBOLS

CONTRACT NUMBER	22-523
SHEET NUMBER	K-S-02
DWG NO.:	
SCALE:	AS SHOWN
DATE:	8/23/2022
DPW FILE NUMBER	1-118-S-1278-0
REV. NO.	0

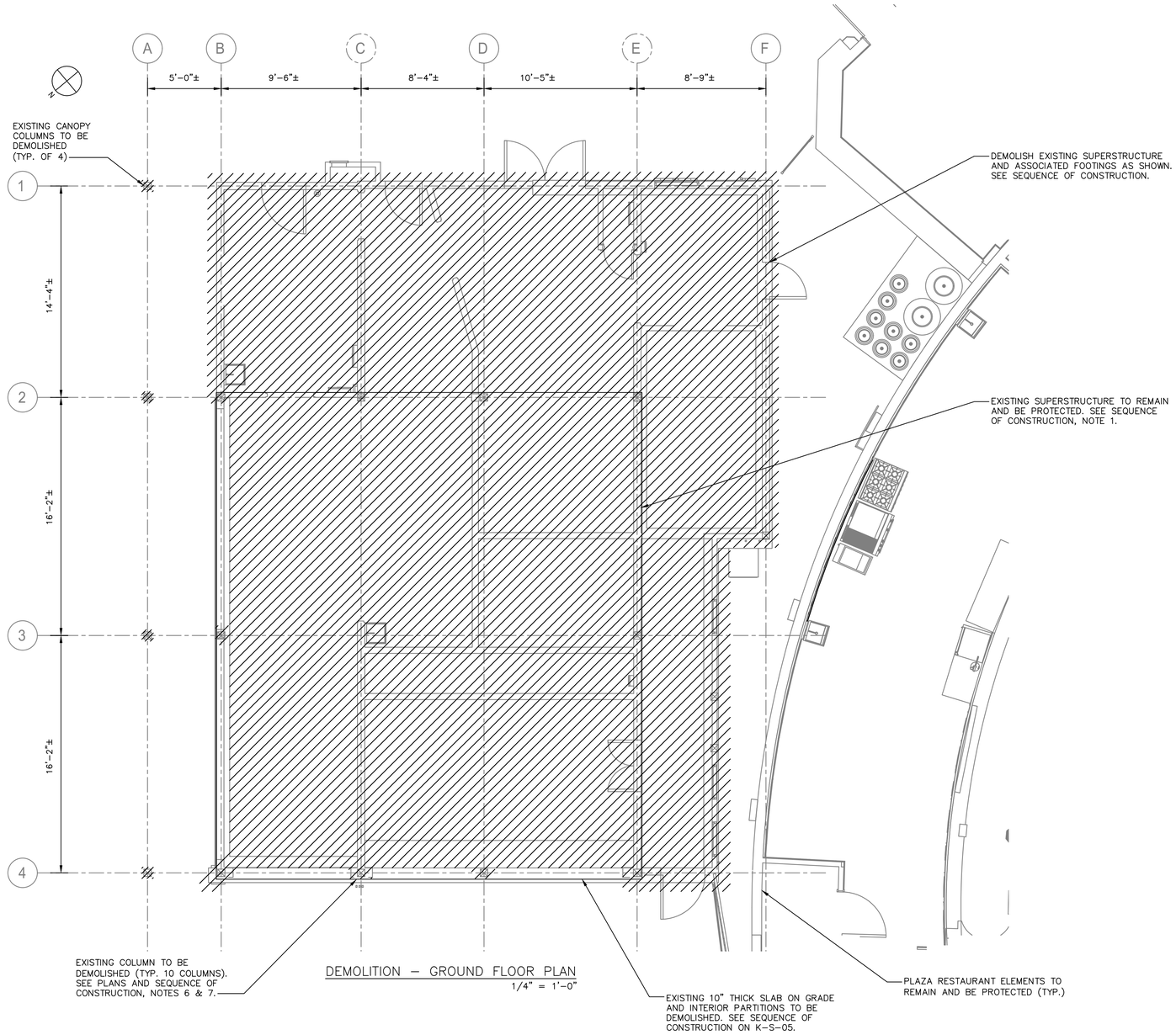

DEMOLITION – GROUND FLOOR PLAN
1/4" = 1'-0"

NOTES:

1. FOR STRUCTURAL NOTES, SEE DRAWING K-S-01.
2. FOR STRUCTURAL ABBREVIATIONS AND SYMBOLS, SEE DRAWING K-S-02.
3. SEE K-S-05 FOR SHORING PLAN AND SEQUENCE OF CONSTRUCTION.

Drawing Name: G:\SavinAutocad\2060\25-Playland-Mega-3\S\KS-1002.dwg
Projectname: 211001F02 Comments: ----
Printed by: JCastro Date: 19 August 2022 1:07 PM Designed by: ----
Rev#:
Xrefs: [TB_24X36_WestchesterCo_3.dwg] [TSG-SVL000.dwg] [K-A-01.dwg] [K-S-1001.dwg]

CONSULTANT INFORMATION

Savin Engineers, P.C.

CONSULTANT SEAL

STATE OF NEW YORK
LICENSED PROFESSIONAL ENGINEER

REVISION NUMBER	DATE	MADE BY	APP'D BY	REVISION

RECORD DRAWING CERTIFICATION

☐ AS BUILT – CHANGES AS NOTED ☐ AS BUILT – NO CHANGES

CONTRACTOR
NAME
SIGNATURE
TITLE DATE

PROJECT COORDINATOR
NAME
SIGNATURE
TITLE DATE

WESTCHESTER COUNTY, NEW YORK
DEPARTMENT OF PUBLIC WORKS AND TRANSPORTATION
DIVISION OF ENGINEERING

INFRASTRUCTURE REHABILITATION - PHASE 3
PLAYLAND PARK, RYE, NEW YORK
RESTAURANT KITCHEN WITH FOOD VENDING
DEMOLITION - GROUND FLOOR PLAN

CONTRACT NUMBER	22-523
SHEET NUMBER	K-S-03
DWG NO.:	
SCALE:	AS SHOWN
DATE:	8/23/2022
DPW FILE NUMBER	1-118-S-1279-0
REV. NO.	0

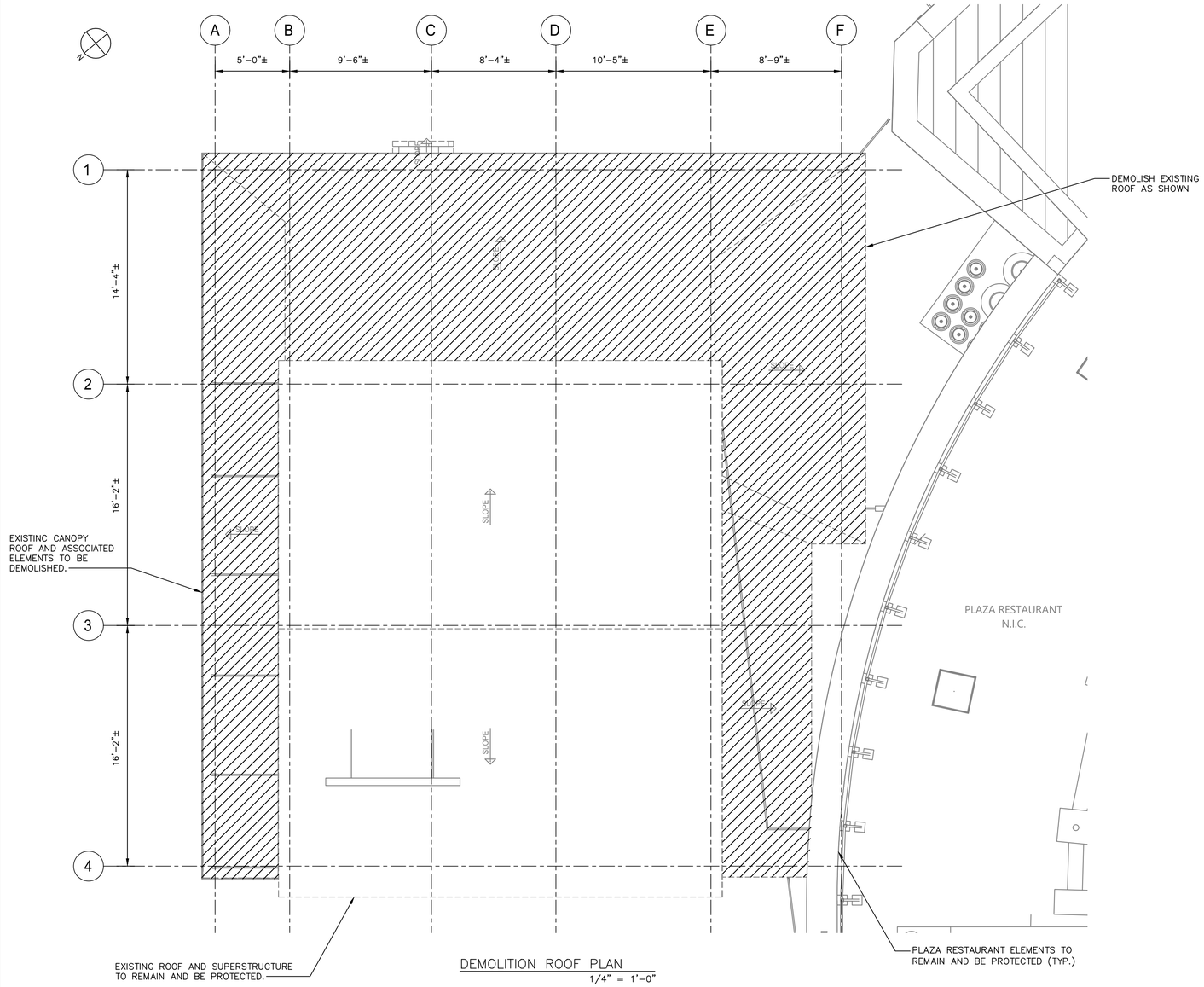

DEMOLITION ROOF PLAN

1/4" = 1'-0"

NOTES:

1. FOR STRUCTURAL NOTES, SEE DRAWING K-S-01.
2. FOR STRUCTURAL ABBREVIATIONS AND SYMBOLS, SEE DRAWING K-S-02.

Drawing Name: G:\SavinAutocad\2060\25-Playland-Mega-3\S\KS-1003.dwg
Reref: Projectname: 211001F02 Comments: ----
Printed by: JCastro Date: 19 August 2022 1:07 PM Designed by: ----
Xrefs: [TB_24X36_WestchesterCo_3.dwg] [TSC-SVL060.dwg] [K-A-03.dwg] [K-S-1002.dwg]

CONSULTANT INFORMATION

Savin Engineers, P.C.

CONSULTANT SEAL

STATE OF NEW YORK — MICHAEL J. CASTRO — No. 085396 — LICENSED PROFESSIONAL ENGINEER

REVISION NUMBER	DATE	MADE BY	APP'D BY	REVISION

RECORD DRAWING CERTIFICATION

☐ AS BUILT – CHANGES AS NOTED ☐ AS BUILT – NO CHANGES

CONTRACTOR

NAME
SIGNATURE
TITLE DATE

PROJECT COORDINATOR

NAME
SIGNATURE
TITLE DATE

WESTCHESTER COUNTY, NEW YORK
DEPARTMENT OF PUBLIC WORKS AND TRANSPORTATION
DIVISION OF ENGINEERING

INFRASTRUCTURE REHABILITATION - PHASE 3
PLAYLAND PARK, RYE, NEW YORK
RESTAURANT KITCHEN WITH FOOD VENDING
DEMOLITION - ROOF PLAN

CONTRACT NUMBER	SHEET NUMBER
22-523	K-S-04

DWG NO.:
SCALE: AS SHOWN
DATE: 8/23/2022
DPW FILE NUMBER 1-118-S-1280-0 REV. NO. 0

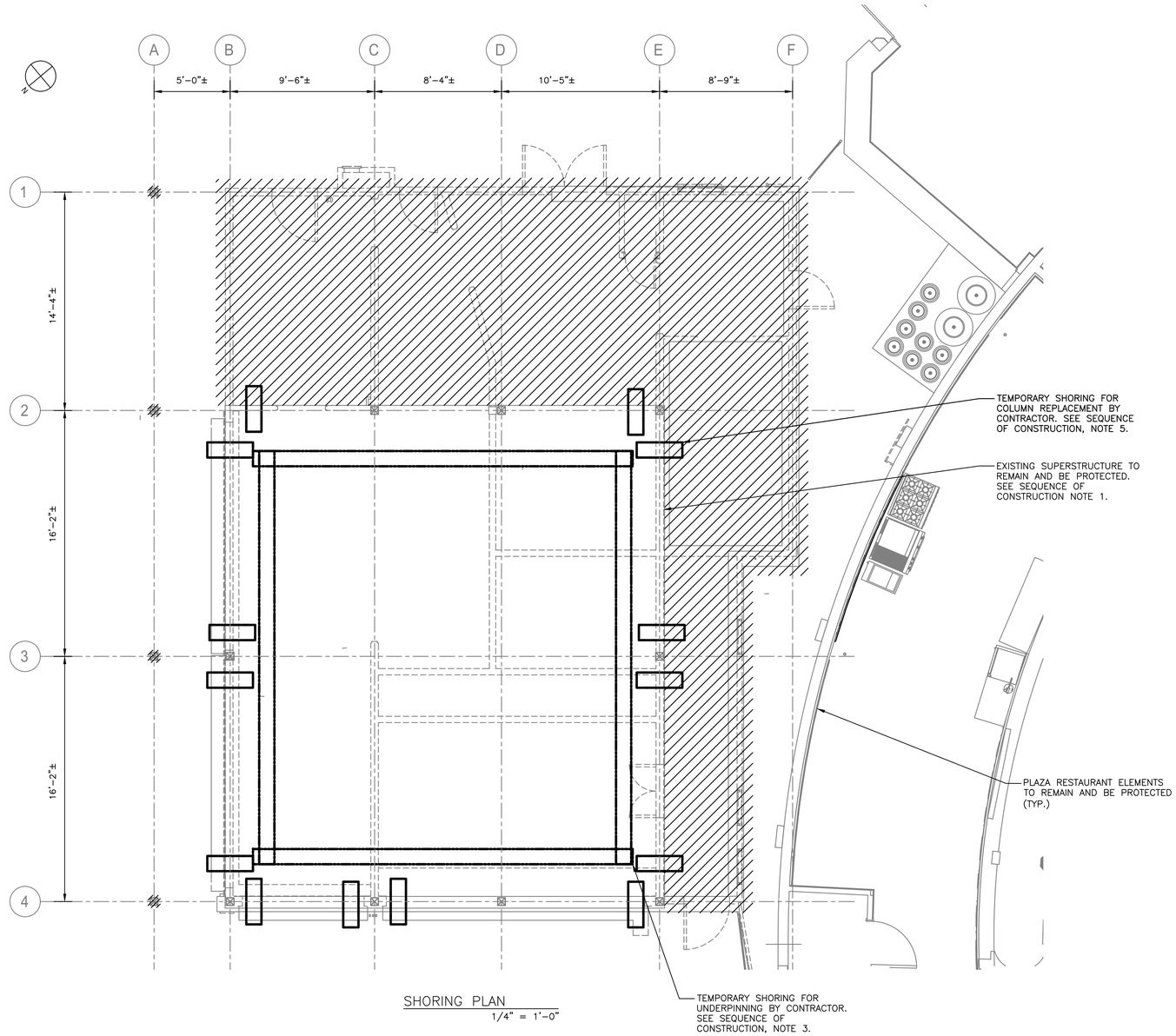

SHORING PLAN
1/4" = 1'-0"

NOTES:

1. FOR STRUCTURAL NOTES, SEE DRAWING K-S-01.
2. FOR STRUCTURAL ABBREVIATIONS AND SYMBOLS, SEE DRAWING K-S-02.
3. TEMPORARY SHORING SHALL BEAR ON ASPHALT, CONCRETE OR SUBSURFACE.

SEQUENCE OF CONSTRUCTION:

1. DEMOLISH EXISTING SUPERSTRUCTURE AS SHOWN AND EXISTING INTERIOR SLAB ON GRADE. SEE K-S-03 AND K-S-04.
2. INSTALL ALL MICROPILES AS SHOWN ON K-S-06. CONTRACTOR IS ALERTED OF SPACE RESTRICTIONS AND SHALL INCLUDE IN THEIR BID THE USE OF A SMALL PROFILE MICROPILE DRILL RIG.
3. INSTALL TEMPORARY SHORING AROUND PERIMETER OF SUPERSTRUCTURE TO REMAIN.
4. EXCAVATE AND COMPLETE FOUNDATION WORK AND UNDERPINNING.
5. INSTALL TEMPORARY SHORING FOR COLUMN REPLACEMENT.
6. DEMOLISH EXISTING COLUMNS.
7. INSTALL NEW COLUMNS AND COMPLETE INSTALLATION OF STRUCTURAL STEEL FRAMING. SEE PLANS.
8. REMOVE ALL TEMPORARY SHORING.
9. COMPLETE INSTALLATION OF SLAB ON GRADE FOR EXISTING SUPERSTRUCTURE.
10. COMPLETE REMAINDER OF CONTRACT WORK.

0 4' 8'
SCALE: 1/4" = 1'-0"

Drawing Name: G:\SavinAutocad\2060\25-Playland-Mega-3\S\KS-1008.dwg
Rev#: Projectname: 211001F02 Comments: ----
Printed by: JCastro Date: 19 August 2022 1:07 PM Designed by: ----
Xrefs: [TB_24X36_WestchesterCo_3.dwg] [TSG-SVLOGO.dwg] [K-A-01.dwg] [K-S-1003.dwg

CONSULTANT INFORMATION
Savin Engineers, P.C.

CONSULTANT SEAL

REVISION NUMBER	DATE	MADE BY	APP'D BY	REVISION

RECORD DRAWING CERTIFICATION
☐ AS BUILT – CHANGES AS NOTED ☐ AS BUILT – NO CHANGES

CONTRACTOR
NAME
SIGNATURE
TITLE DATE

PROJECT COORDINATOR
NAME
SIGNATURE
TITLE DATE

WESTCHESTER COUNTY, NEW YORK
DEPARTMENT OF PUBLIC WORKS AND TRANSPORTATION
DIVISION OF ENGINEERING

INFRASTRUCTURE REHABILITATION - PHASE 3
PLAYLAND PARK, RYE, NEW YORK
RESTAURANT KITCHEN WITH FOOD VENDING
SHORING PLAN

CONTRACT NUMBER: 22-523
SHEET NUMBER: K-S-05
DWG NO.:
SCALE: AS SHOWN

DATE: 8/23/2022
DPW FILE NUMBER: 1-118-S-1281-0
REV. NO.: 0

NOTES:

1. FOR STRUCTURAL NOTES, SEE DRAWING K-S-01.
2. FOR STRUCTURAL ABBREVIATIONS AND SYMBOLS, SEE DRAWING K-S-02.
3. CONTRACTOR SHALL FIELD VERIFY LOCATION IF EXISTING SANITARY LINE PRIOR TO PILE DRILLING OPERATIONS AND SURVEY EXISTING ELEVATIONS. SEE PLUMBING DRAWINGS.

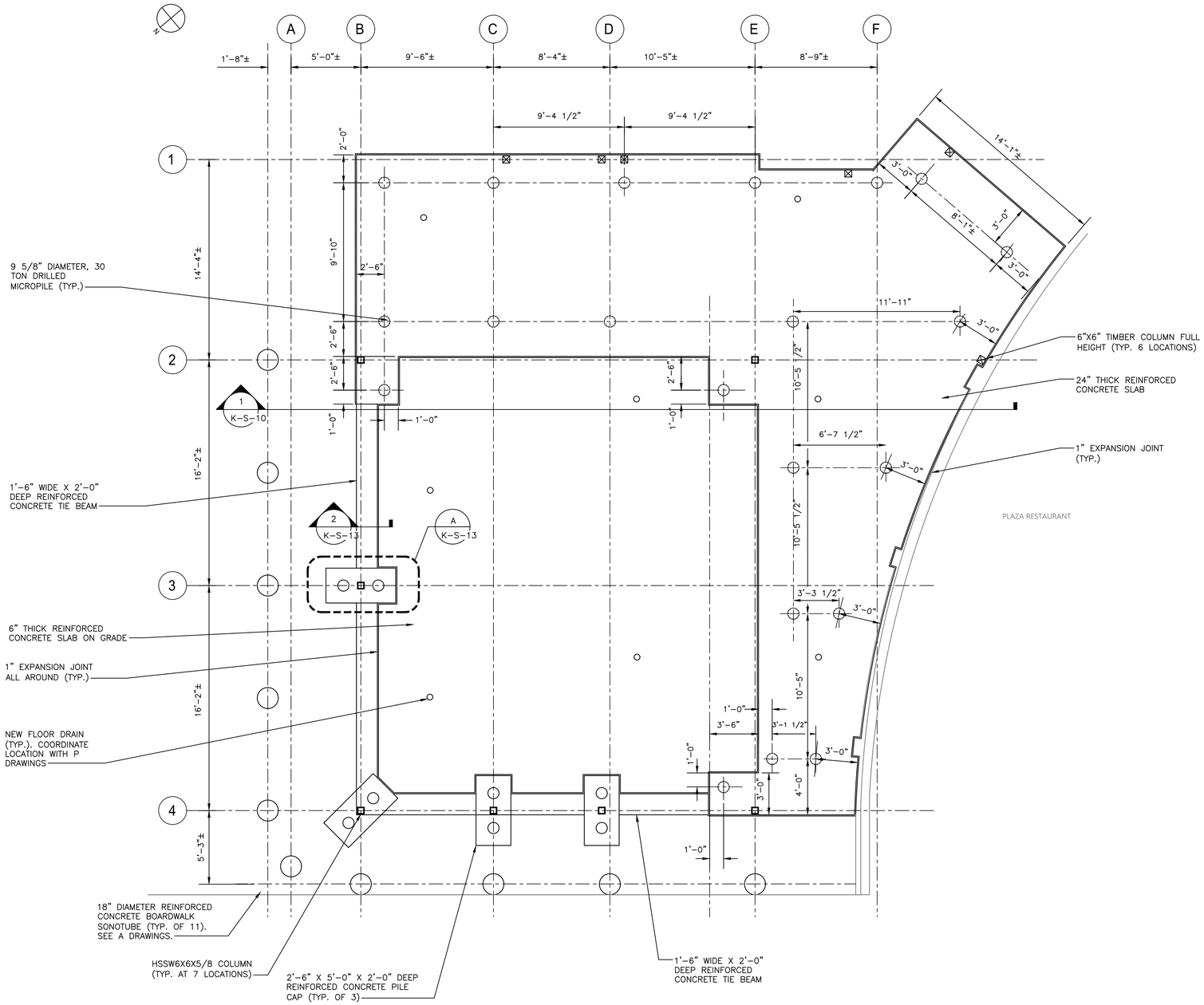

FOUNDATION PLAN
1/4" = 1'-0"

Drawing Name: G:\SavinAutocad\2060\25-Playland-Mega-3\S\KS-1009.dwg
Rev#: Projectname: 211001F02 Comments: ----
Printed by: JCastro Date: 19 August 2022 1:07 PM Designed by: ----
Xrefs: [TB_24X36_WestchesterCo_3.dwg] [TSG-SVLOGO.dwg] [K-A-11.dwg] [K-S-1006.dwg]

CONSULTANT INFORMATION
Savin Engineers, P.C.

CONSULTANT SEAL

REVISION NUMBER	DATE	MADE BY	APP'D BY	REVISION

RECORD DRAWING CERTIFICATION
☐ AS BUILT – CHANGES AS NOTED ☐ AS BUILT – NO CHANGES

CONTRACTOR
NAME
SIGNATURE
TITLE DATE

PROJECT COORDINATOR
NAME
SIGNATURE
TITLE DATE

WESTCHESTER COUNTY, NEW YORK
DEPARTMENT OF PUBLIC WORKS AND TRANSPORTATION
DIVISION OF ENGINEERING

INFRASTRUCTURE REHABILITATION - PHASE 3
PLAYLAND PARK, RYE, NEW YORK
RESTAURANT KITCHEN WITH FOOD VENDING
FOUNDATION PLAN

CONTRACT NUMBER: 22-523
SHEET NUMBER: K-S-06
DWG NO.:
SCALE: AS SHOWN
523 of 664
DATE: 8/23/2022
DPW FILE NUMBER: 1-118-S-1282-0
REV. NO.: 0

NOTES:

1. FOR STRUCTURAL NOTES, SEE DRAWING K-S-01.
2. FOR STRUCTURAL ABBREVIATIONS AND SYMBOLS, SEE DRAWING K-S-02.

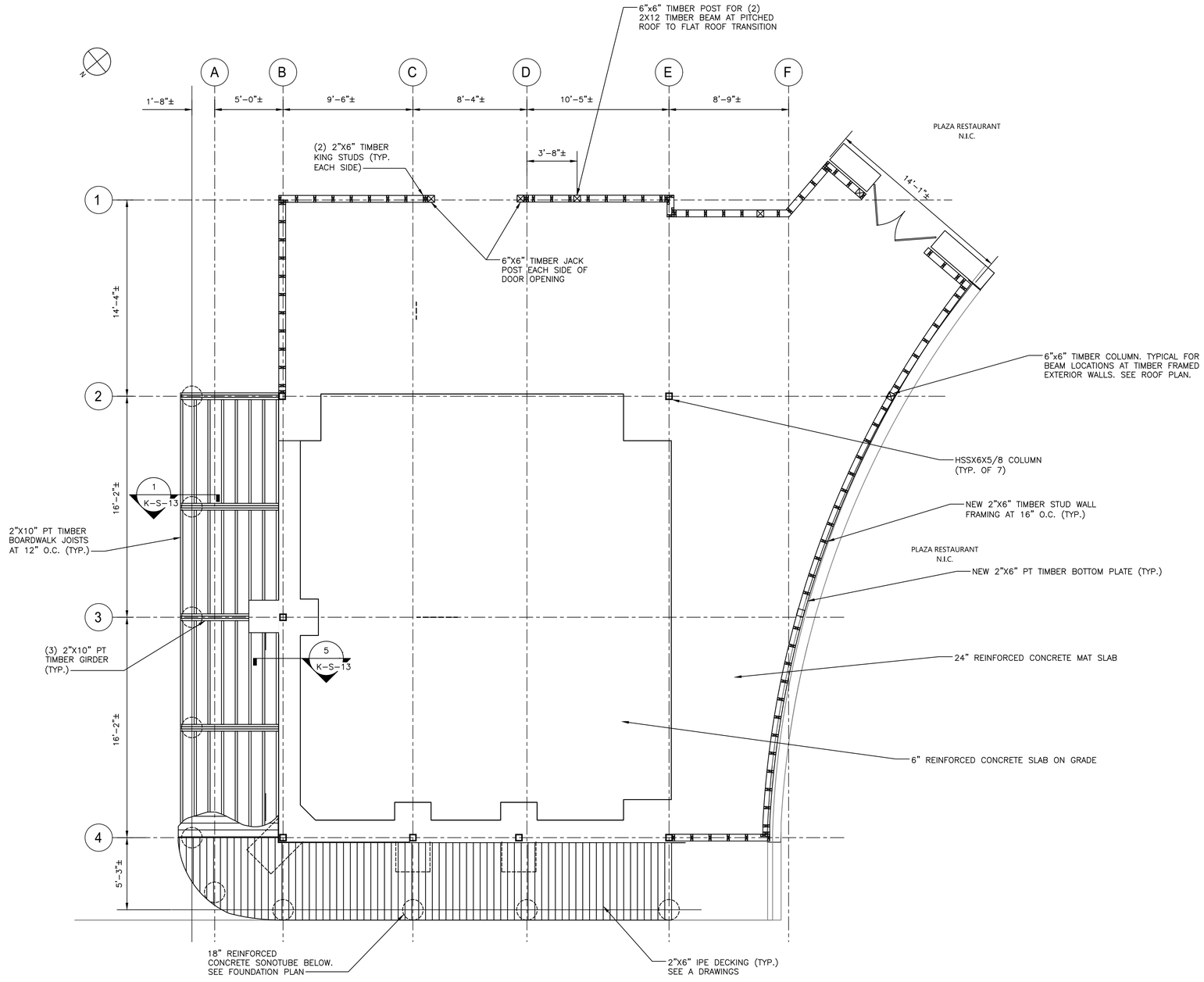

GROUND FLOOR PLAN
1/4" = 1'-0"

Drawing Name: G:\SavinAutocad\2060\25-Playland-Mega-3\S\KS-1015.dwg
Rev#: Projectname: 211001F02 Comments: ----
Printed by: JCastro Date: 19 August 2022 1:07 PM Designed by: ----
Xrefs: [TB_24X36_WestchesterCo_3.dwg] [TSG-SVLOGO.dwg] [K-A-11.dwg] [K-S-1009.dwg

CONSULTANT INFORMATION
Savin Engineers, P.C.

CONSULTANT SEAL

REVISION NUMBER	DATE	MADE BY	APP'D BY	REVISION

RECORD DRAWING CERTIFICATION
☐ AS BUILT – CHANGES AS NOTED ☐ AS BUILT – NO CHANGES

CONTRACTOR
NAME
SIGNATURE
TITLE DATE

PROJECT COORDINATOR
NAME
SIGNATURE
TITLE DATE

WESTCHESTER COUNTY, NEW YORK
DEPARTMENT OF PUBLIC WORKS AND TRANSPORTATION
DIVISION OF ENGINEERING

INFRASTRUCTURE REHABILITATION - PHASE 3
PLAYLAND PARK, RYE, NEW YORK
RESTAURANT KITCHEN WITH FOOD VENDING
GROUND FLOOR PLAN

CONTRACT NUMBER	22-523
SHEET NUMBER	K-S-07
DWG NO.:	
SCALE:	AS SHOWN
DATE:	8/23/2022
DPW FILE NUMBER	1-118-S-1283-0
REV. NO.	0

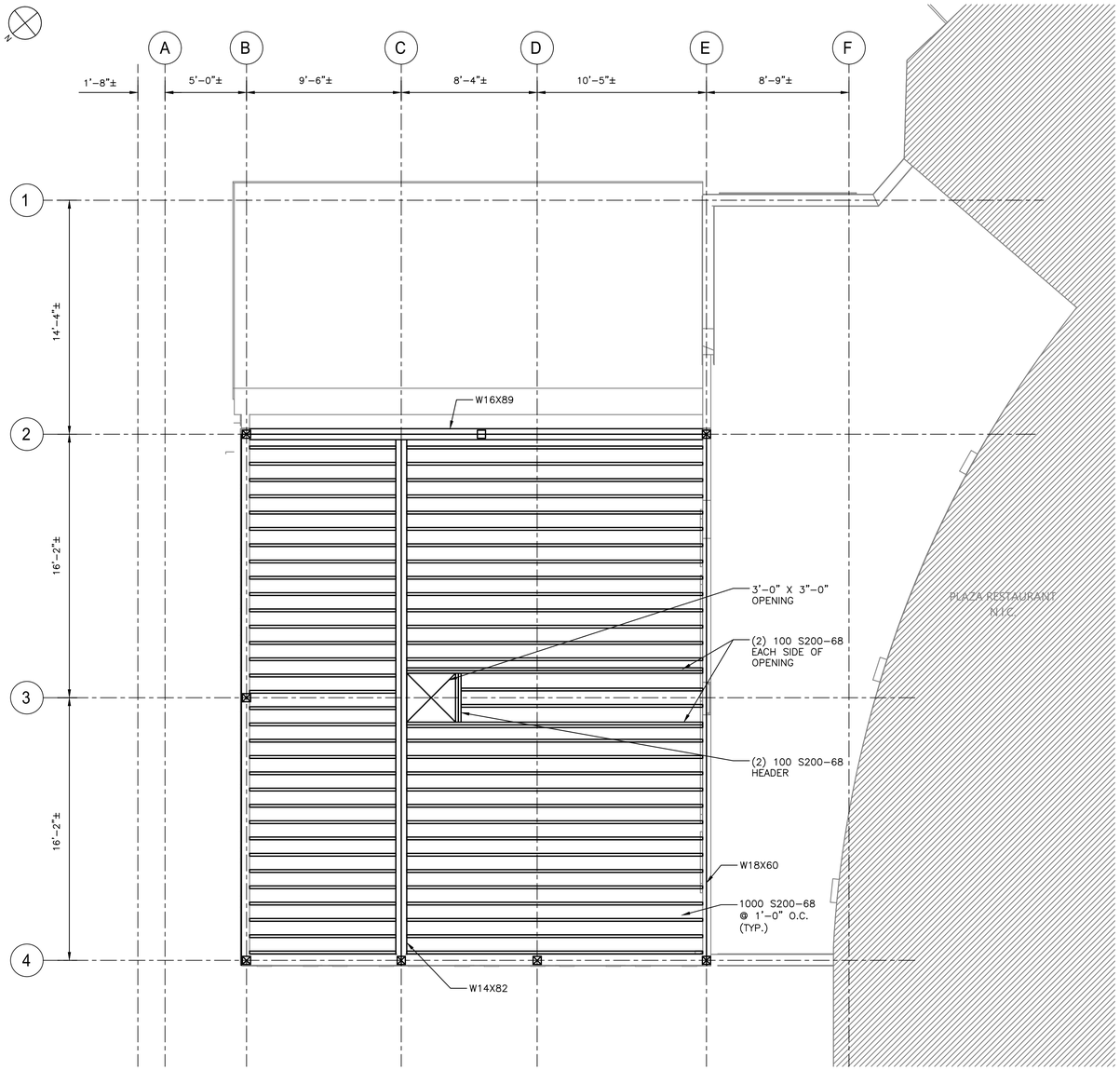

CEILING FRAMING PLAN
1/4" = 1'-0"

NOTES:

1. FOR STRUCTURAL NOTES, SEE DRAWING K-S-01.
2. FOR STRUCTURAL ABBREVIATIONS AND SYMBOLS, SEE DRAWING K-S-02.

Drawing Name: G:\SavinAutocad\2060\25-Playland-Mega-3\S\KS-1011.dwg
Rev#: Projectname: 211001F02 Comments: ----
Printed by: JCastro Date: 19 August 2022 1:08 PM Designed by: ----
Xrefs: [TB_24X36_WestchesterCo_3.dwg] [TSG-SVLOGO.dwg] [K-A-12.dwg] [K-S-1007.dwg]

CONSULTANT INFORMATION

Savin Engineers, P.C.

CONSULTANT SEAL

REVISION NUMBER	DATE	MADE BY	APP'D BY	REVISION

RECORD DRAWING CERTIFICATION

☐ AS BUILT – CHANGES AS NOTED ☐ AS BUILT – NO CHANGES

CONTRACTOR
NAME
SIGNATURE
TITLE DATE

PROJECT COORDINATOR
NAME
SIGNATURE
TITLE DATE

WESTCHESTER COUNTY, NEW YORK
DEPARTMENT OF PUBLIC WORKS AND TRANSPORTATION
DIVISION OF ENGINEERING

INFRASTRUCTURE REHABILITATION - PHASE 3
PLAYLAND PARK, RYE, NEW YORK
RESTAURANT KITCHEN WITH FOOD VENDING
CEILING FRAMING PLAN

CONTRACT NUMBER	22-523
SHEET NUMBER	K-S-08
DWG NO.:	
SCALE:	AS SHOWN
DATE:	8/23/2022
DPW FILE NUMBER	1-118-S-1284-0
REV. NO.	0

NOTES:

1. FOR STRUCTURAL NOTES, SEE DRAWING K–S–01.
2. FOR STRUCTURAL ABBREVIATIONS AND SYMBOLS, SEE DRAWING K–S–02.

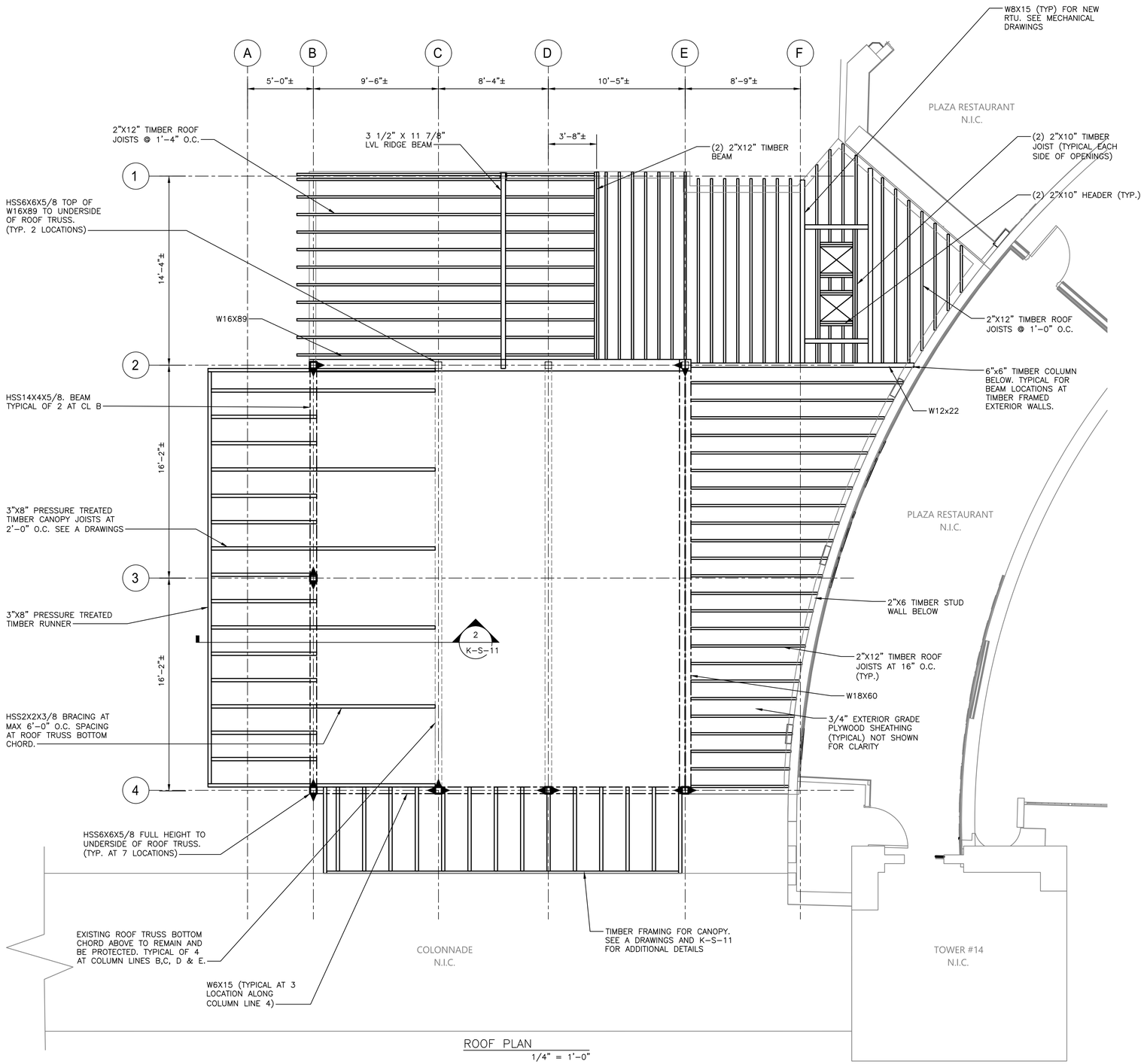

ROOF PLAN
1/4" = 1'–0"

CONSULTANT INFORMATION

Savin Engineers, P.C.

CONSULTANT SEAL

REVISION NUMBER	DATE	MADE BY	APP'D BY	REVISION

RECORD DRAWING CERTIFICATION

☐ AS BUILT – CHANGES AS NOTED ☐ AS BUILT – NO CHANGES

CONTRACTOR
NAME
SIGNATURE
TITLE DATE

PROJECT COORDINATOR
NAME
SIGNATURE
TITLE DATE

WESTCHESTER COUNTY, NEW YORK
DEPARTMENT OF PUBLIC WORKS AND TRANSPORTATION
DIVISION OF ENGINEERING

INFRASTRUCTURE REHABILITATION - PHASE 3
PLAYLAND PARK, RYE, NEW YORK
RESTAURANT KITCHEN WITH FOOD VENDING
ROOF PLAN

CONTRACT NUMBER	22-523
SHEET NUMBER	K-S-09
DWG NO.:	
SCALE:	AS SHOWN
DATE:	8/23/2022
DPW FILE NUMBER	1-118-S-1285-0
REV. NO.	0

Drawing Name: G:\SavinAutocad\2060\25-Playland-Mega-3\S\KS-1013.dwg
Projectname: 211001F02 Comments: ----
Printed by: JCastro Date: 19 August 2022 1:08 PM Designed by: ----
Reref: [TB_24X36_WestchesterCo_3.dwg] [TSG-SVL000.dwg] [K-A-11.dwg] [K-S-1003.dwg] [K-S-1018.dwg
Xrefs:

NOTES:

1. FOR STRUCTURAL NOTES, SEE DRAWING K-S-01.
2. FOR STRUCTURAL ABBREVIATIONS AND SYMBOLS, SEE DRAWING K-S-02.

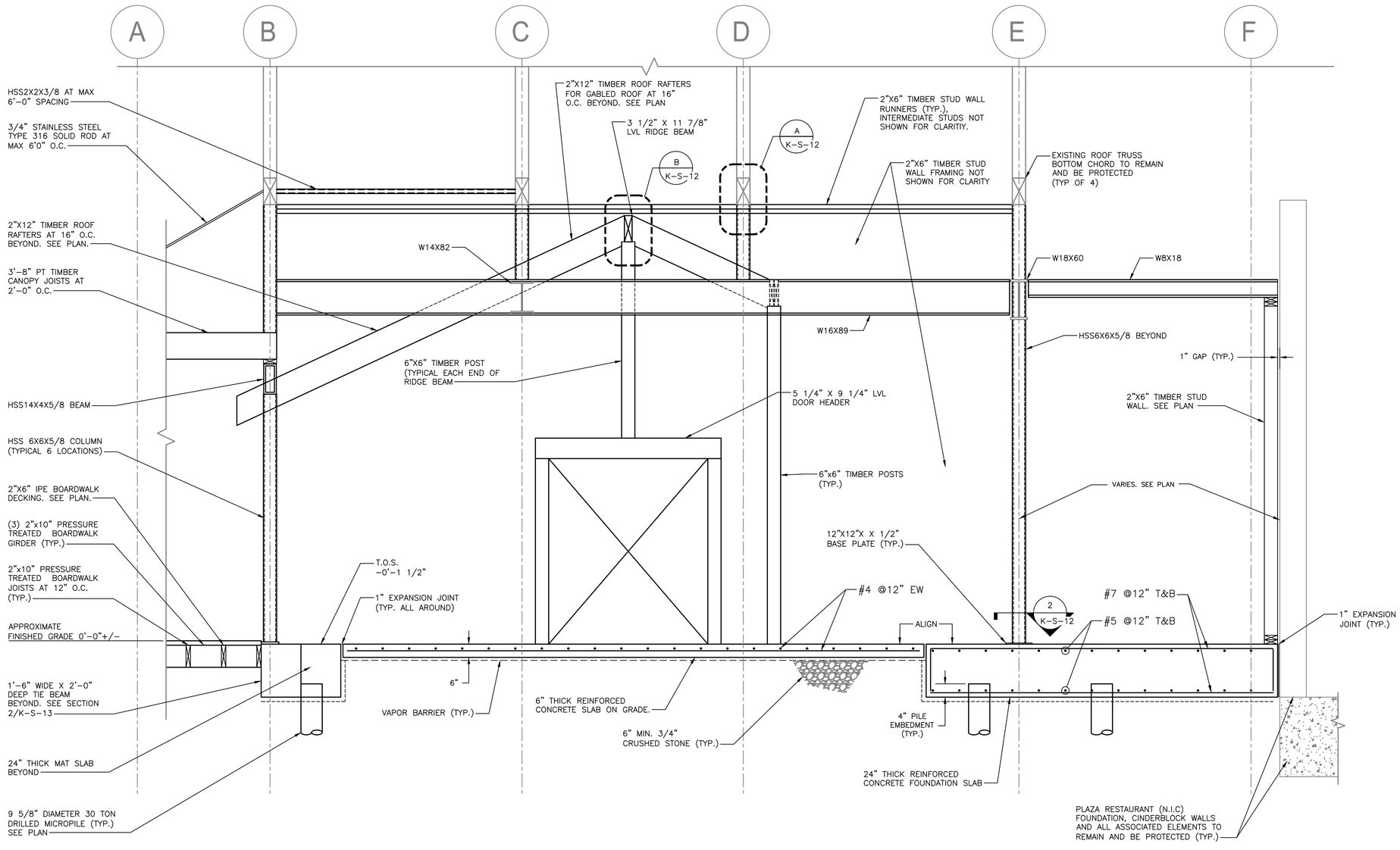

1 K-S-06 SECTION 1/2" = 1'-0"

Drawing Name: G:\SavinAutocad\2060\25-Playland-Mega-3\S\KS-1012.dwg
Rev#: Projectname: 211001F02 Comments: ----
Printed by: JCastro Date: 19 August 2022 1:08 PM Designed by: ----
Xrefs: [TB_24X36_WestchesterCo_3.dwg] [TSG-SVLOGO.dwg] [K-S-1003.dwg] [K-S-1019.dwg]

CONSULTANT INFORMATION

Savin Engineers, P.C.

CONSULTANT SEAL

REVISION NUMBER	DATE	MADE BY	APP'D BY	REVISION

RECORD DRAWING CERTIFICATION

☐ AS BUILT – CHANGES AS NOTED ☐ AS BUILT – NO CHANGES

CONTRACTOR
NAME
SIGNATURE
TITLE DATE

PROJECT COORDINATOR
NAME
SIGNATURE
TITLE DATE

WESTCHESTER COUNTY, NEW YORK
DEPARTMENT OF PUBLIC WORKS AND TRANSPORTATION
DIVISION OF ENGINEERING

INFRASTRUCTURE REHABILITATION - PHASE 3
PLAYLAND PARK, RYE, NEW YORK
RESTAURANT KITCHEN WITH FOOD VENDING
SECTION

CONTRACT NUMBER	22-523
SHEET NUMBER	K-S-10
DWG NO.:	
SCALE:	AS SHOWN
DATE:	8/23/2022
DPW FILE NUMBER	1-118-S-1286-0
REV. NO.	0

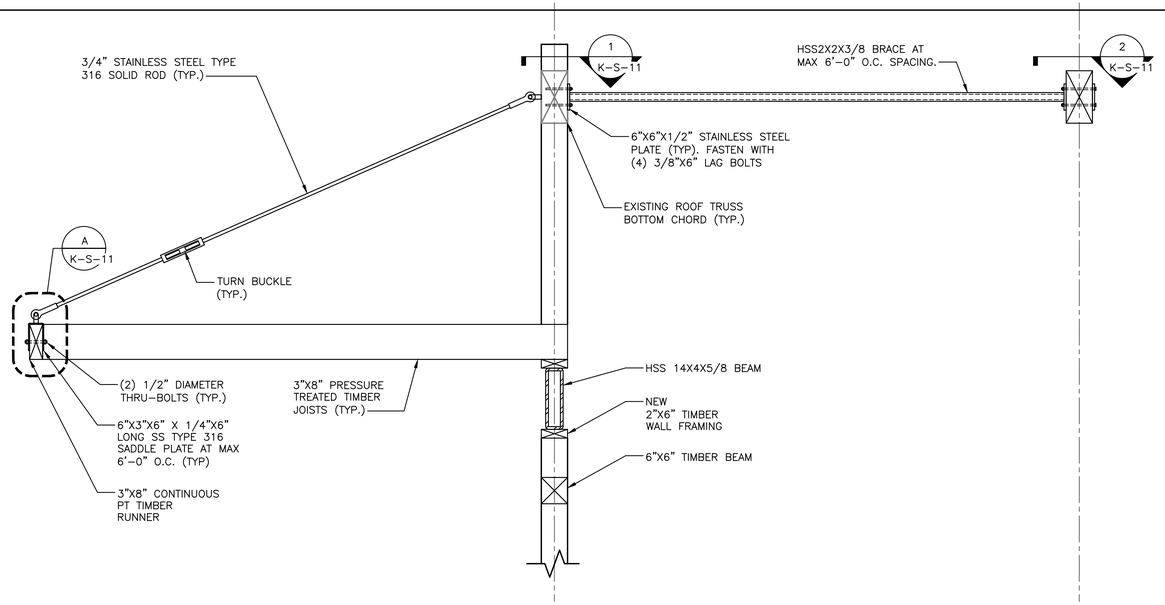

2 K-S-09 SECTION 3/4" = 1'-0"

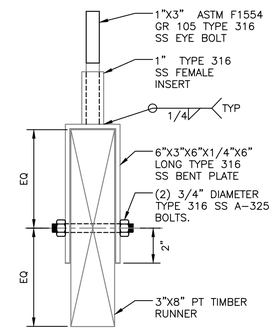

A K-S-11 DETAIL – JOIST AND GUY WIRE CONNECTION 3/4" = 1'-0"

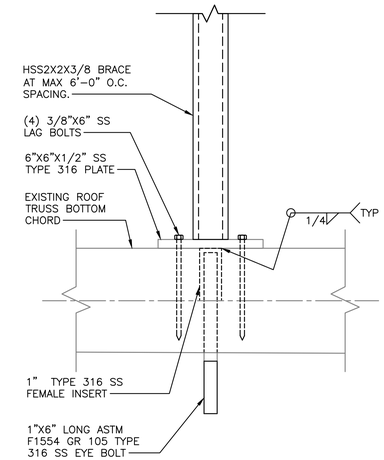

1 K-S-11 SECTION 3/4" = 1'-0"

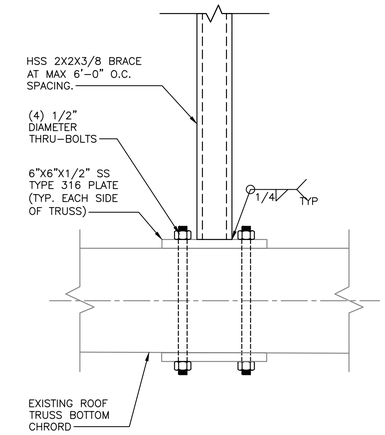

2 K-S-11 SECTION 3/4" = 1'-0"

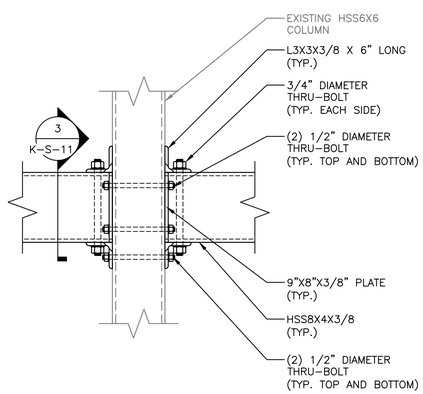

DETAIL – HSS BEAM TO COLONNADE CONNECTION 1 1/2" = 1'-0"

NOTES:

1. L4X6X3/8 NOT SHOWN FOR CLARITY. SEE DETAILS.

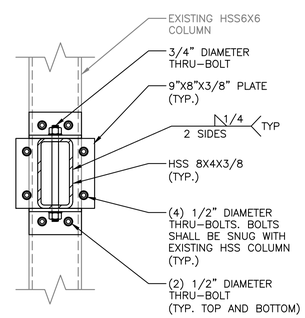

3 K-S-11 SECTION 1 1/2" = 1'-0"

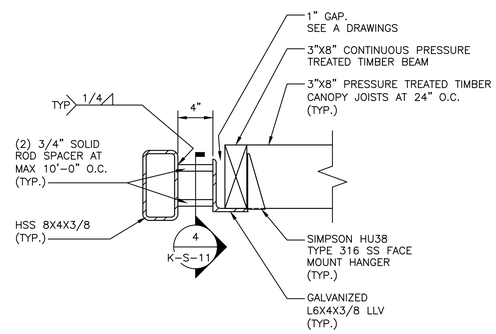

DETAIL – L6X4 TO HSS8X4 CONNECTION 1 1/2" = 1'-0"

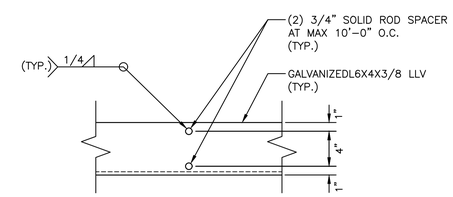

4 K-S-11 SECTION 1 1/2" = 1'-0"

NOTES:

1. FOR STRUCTURAL NOTES, SEE DRAWING K-S-01.
2. FOR STRUCTURAL ABBREVIATIONS AND SYMBOLS, SEE DRAWING K-S-02.

CONSULTANT INFORMATION

Savin Engineers, P.C.

CONSULTANT SEAL

STATE OF NEW YORK — MICHAEL J. COSTRO — LICENSED PROFESSIONAL ENGINEER

REVISION NUMBER	DATE	MADE BY	APP'D BY	REVISION

RECORD DRAWING CERTIFICATION

☐ AS BUILT – CHANGES AS NOTED ☐ AS BUILT – NO CHANGES

CONTRACTOR: NAME / SIGNATURE / TITLE / DATE

PROJECT COORDINATOR: NAME / SIGNATURE / TITLE / DATE

WESTCHESTER COUNTY, NEW YORK
DEPARTMENT OF PUBLIC WORKS AND TRANSPORTATION
DIVISION OF ENGINEERING

INFRASTRUCTURE REHABILITATION - PHASE 3
PLAYLAND PARK, RYE, NEW YORK
RESTAURANT KITCHEN WITH FOOD VENDING
SECTION AND DETAILS

CONTRACT NUMBER	22-523
SHEET NUMBER	K-S-11
DWG NO.:	
SCALE:	AS SHOWN
DATE:	8/23/2022
DPW FILE NUMBER	1-118-S-1287-0
REV. NO.	0

Drawing Name: G:\SavinAutocad\2060\25-Playland-Mega-3\S\KS-1005.dwg
Projectname: 211001F02 Comments: ----
Printed by: JCastro Date: 19 August 2022 1:08 PM Designed by: ----
Rev#:
Xrefs: [TB_24X36_WestchesterCo_3.dwg] [TSG-SVL000.dwg] [K-A-12.dwg] [K-S-1004.dwg] [K-S-1016.dwg]

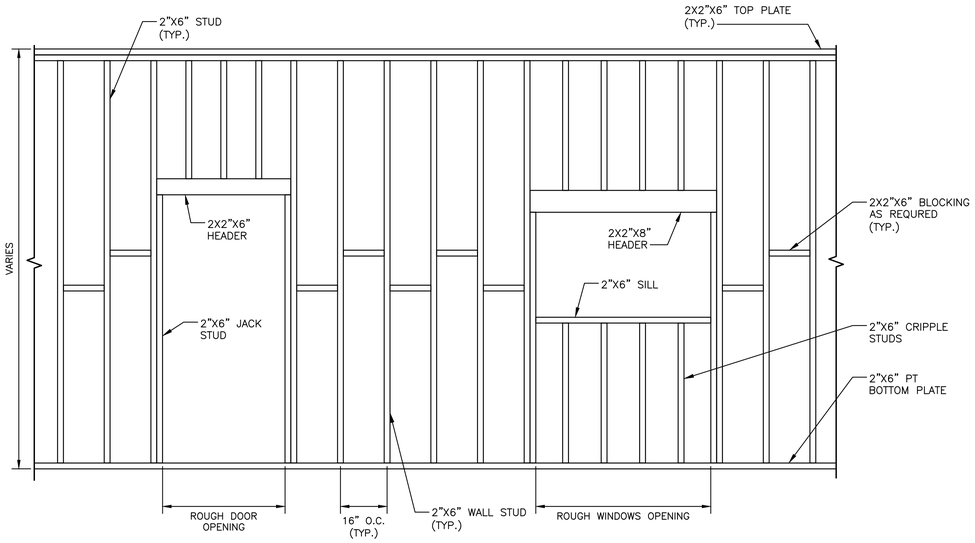

F DETAIL WALL ELEVATION
SCALE: N.T.S.

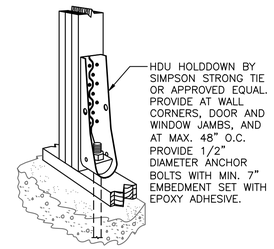

– HOLD DOWN/TENSION TIE
SCALE: N.T.S.

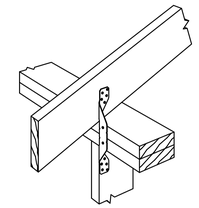

SIMPSON STRONG TIE H2 (OR APPROVED EQUAL). TYPICAL AT EACH RAFTER.

– HURRICANE TIE
SCALE: N.T.S.

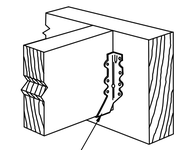

– FACE MOUNTED JOIST HANGER
SCALE: N.T.S.

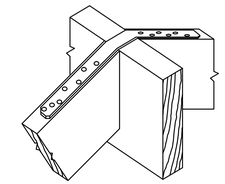

SIMPSON STRONG TIE (OR APPROVED EQUAL) AT EACH RAFTER. ATTACH DIRECTLY TO RAFTER

– RIDGE STRAPPING
SCALE: N.T.S.

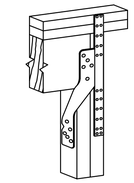

SIMPSON STRONG TIE H6 (OR APPROVED EQUAL) TYPICAL AT ALL EXTERIOR HEADER LOCATIONS.

– HEADER TO JACK STUD CONNECTION
SCALE: N.T.S.

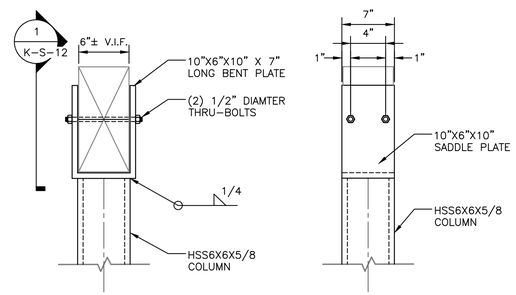

A DETAIL
K-S-12 1"=1'-0"

1 SECTION
K-S-12 1"=1'-0"

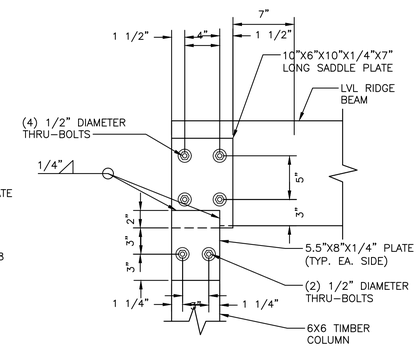

2 SECTION
K-S-12 SCALE: 1 1/2" = 1'-0"

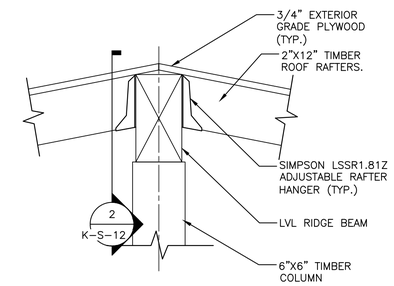

B DETAIL
K-S-10 SCALE: N.T.S.

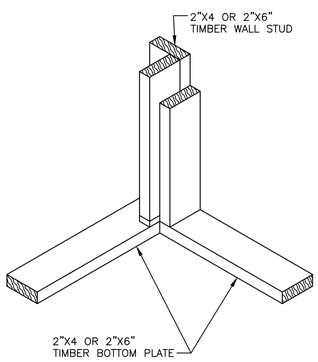

B TYPICAL STUDS AT CORNERS DETAIL
SCALE: N.T.S.

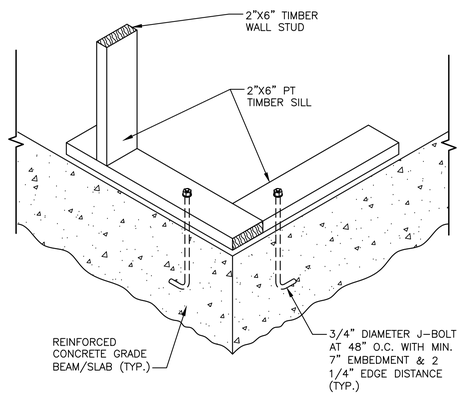

TYPICAL FLOOR FRAMING DETAIL
SCALE: N.T.S.

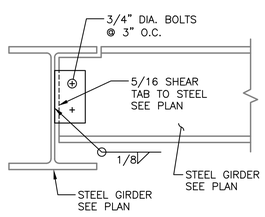

DETAIL
1 1/2" = 1'-0"

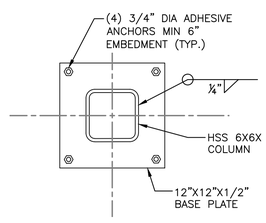

2 SECTION
K-S-10 SCALE: N.T.S.

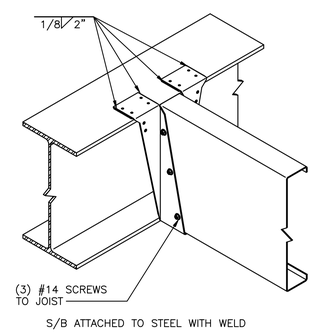

DETAIL
SCALE: N.T.S

NOTES:

1. FOR STRUCTURAL NOTES, SEE DRAWING K-S-01.
2. FOR STRUCTURAL ABBREVIATIONS AND SYMBOLS, SEE DRAWING K-S-02.

CONSULTANT INFORMATION
Savin Engineers, P.C.

CONSULTANT SEAL
STATE OF NEW YORK · LICENSED PROFESSIONAL ENGINEER · No. 085824

REVISION NUMBER	DATE	MADE BY	APP'D BY	REVISION

RECORD DRAWING CERTIFICATION
☐ AS BUILT – CHANGES AS NOTED ☐ AS BUILT – NO CHANGES

CONTRACTOR
NAME
SIGNATURE
TITLE DATE

PROJECT COORDINATOR
NAME
SIGNATURE
TITLE DATE

WESTCHESTER COUNTY, NEW YORK
DEPARTMENT OF PUBLIC WORKS AND TRANSPORTATION
DIVISION OF ENGINEERING

INFRASTRUCTURE REHABILITATION - PHASE 3
PLAYLAND PARK, RYE, NEW YORK
RESTAURANT KITCHEN WITH FOOD VENDING
SECTIONS AND DETAILS

CONTRACT NUMBER	SHEET NUMBER
22-523	K-S-12

DWG NO.:
SCALE: AS SHOWN
DATE: 8/23/2022
DPW FILE NUMBER 1-118-S-1288-0 REV. NO. 0

Drawing Name: G:\SavinAutocad\2060\25-Playland-Mega-3\S\KS-1006.dwg
Projectname: 211001F02 Comments: ----
Printed by: JCostro Date: 19 August 2022 1:09 PM Designed by: ----
Xrefs: [TB_24X36_WestchesterCo_3.dwg] [TSG-SVL060.dwg] [K-S-1016.dwg] [K-A-20.dwg]

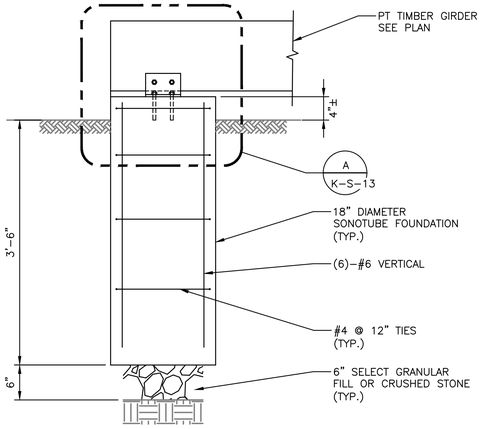

1 K-S-07 TYPICAL BOARDWALK SONOTUBE SECTION
SCALE: N.T.S

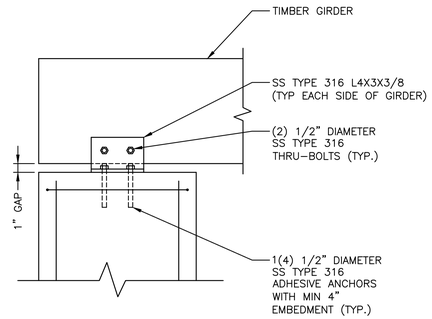

A K-S-13 DETAIL
SCALE: N.T.S

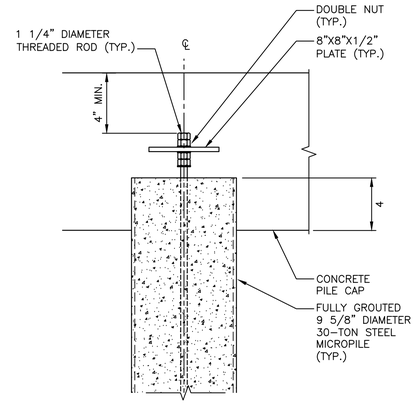

A D-S-501 TYPICAL PILE HEAD DETAIL
SCALE: N.T.S

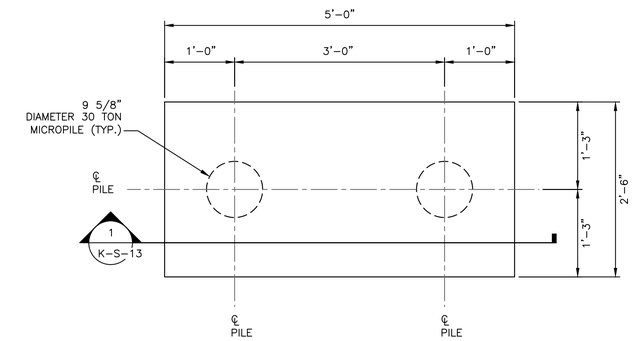

A K-S-06 PART PLAN
SCALE: N.T.S

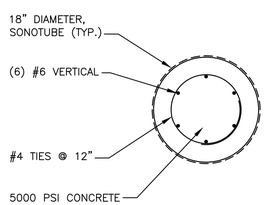

4 K-S-13 SECTION
SCALE: N.T.S

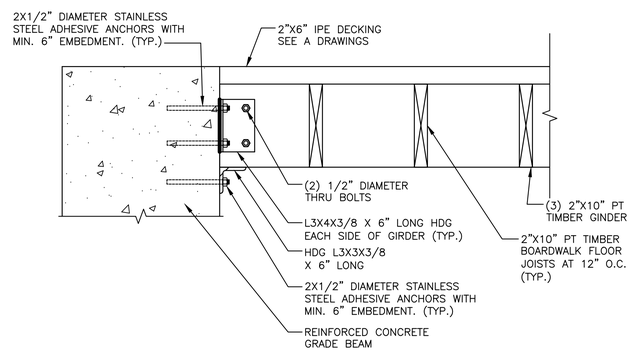

5 K-S-07 SECTION
SCALE: N.T.S

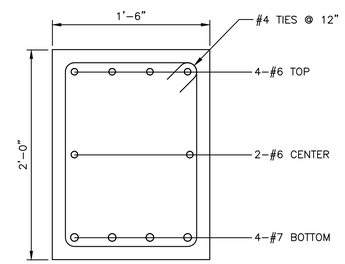

2 K-S-06 SECTION
SCALE: N.T.S

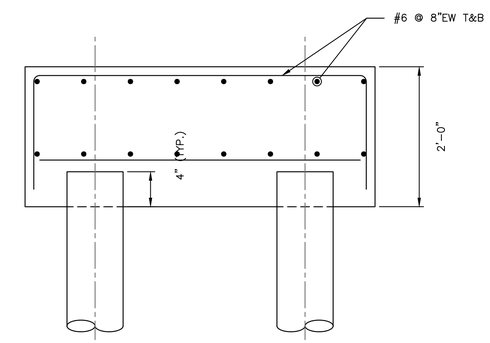

1 K-S-13 SECTION
SCALE: N.T.S

BASIC DEVELOPMENT LENGTH AND SPLICE LENGTH

FOR BARS IN TENSION

fy = 60,000 psi fc = 4000 psi OR GREATER, NORMAL WEIGHT CONCRETE

BASIC DEVELOPMENT LENGTH ** l d				BAR SIZE	CLASS B SPLICE LENGTH ** 1.3 x l d			
CLEAR SPACING > 3"		CLEAR SPACING < 3"			CLEAR SPACING > 3"		CLEAR SPACING < 3"	
BASIC	TOP *	BASIC	TOP *		BASIC	TOP *	BASIC	TOP *
1'-0"	1'-4"	1'-9"	2'-2"	#3	1'-4"	1'-9"	2'-2"	2'-11"
1'-4"	1'-8"	2'-2"	2'-9"	#4	1'-8"	2'-2"	2'-9"	3'-7"
1'-8"	2'-2"	2'-10"	3'-7"	#5	2'-2"	2'-10"	3'-7"	4'-8"
2'-0"	2'-6"	3'-3"	4'-2"	#6	2'-6"	3'-3"	4'-2"	5'-5"
3'-6"	4'-7"	5'-11"	7'-7"	#7	4'-7"	5'-11"	7'-7"	9'-11"
4'-0"	5'-2"	6'-9"	8'-8"	#8	5'-2"	6'-9"	8'-8"	11'-4"
4'-6"	5'-10"	7'-7"	9'-10"	#9	5'-10"	7'-7"	9'-9"	12'-9"
5'-0"	6'-5"	8'-6"	11'-10"	#10	6'-5"	8'-6"	11'-0"	13'-7"
5'-7"	7'-4"	9'-5"	12'-6"	#11	7'-4"	9'-5"	12'-6"	14'-9"

NOTES:

* TOP REINFORCEMENT IS HORIZONTAL REINFORCEMENT SO PLACED THAT MORE THAN 12 INCHES OF FRESH CONCRETE IS CAST IN THE MEMBER BELOW THE REINFORCEMENT

** LENGTHS SHOWN IN CHART SHALL BE MODIFIED WHERE REQUIRED TO CONFORM TO THE PROVISIONS OF ACI 318, SECTION 12.2

*** UNCOATED REINFORCEMENT

DEVELOPMENT LENGTH OF STANDARD HOOKS

FOR BARS IN TENSION

fy = 60,000 psi fc = 4000 psi OR GREATER, NORMAL WEIGHT CONCRETE

BAR SIZE	DEVELOPMENT LENGTH, l dh	
	BASIC	W/CONC. COVER *
#3	8"	6"
#4	10"	7"
#5	1'-0"	9"
#6	1'-3"	11"
#7	1'-5"	1'-0"
#8	1'-7"	1'-2"
#9	1'-10"	1'-4"
#10	2'-1"	1'-6"
#11	2'-3"	1'-7"

NOTES:

* SIDE COVER NORMAL TO PLANE OF HOOK AT LEAST 2 1/2"; AND FOR 90° HOOK, END COVER BEYOND OUTSIDE END OF HOOK AT LEAST 2".

** UNCOATED REINFORCEMENT

NOTES:

1. FOR STRUCTURAL NOTES, SEE DRAWING K-S-01.
2. FOR STRUCTURAL ABBREVIATIONS AND SYMBOLS, SEE DRAWING K-S-02.

CONSULTANT INFORMATION

Savin Engineers, P.C.

CONSULTANT SEAL

STATE OF NEW YORK · LICENSED PROFESSIONAL ENGINEER · No. 085354

REVISION NUMBER	DATE	MADE BY	APP'D BY	REVISION

RECORD DRAWING CERTIFICATION

☐ AS BUILT – CHANGES AS NOTED ☐ AS BUILT – NO CHANGES

CONTRACTOR
NAME
SIGNATURE
TITLE DATE

PROJECT COORDINATOR
NAME
SIGNATURE
TITLE DATE

WESTCHESTER COUNTY, NEW YORK
DEPARTMENT OF PUBLIC WORKS AND TRANSPORTATION
DIVISION OF ENGINEERING

INFRASTRUCTURE REHABILITATION - PHASE 3
PLAYLAND PARK, RYE, NEW YORK
RESTAURANT KITCHEN WITH FOOD VENDING
SECTIONS AND DETAILS

CONTRACT NUMBER	22-523
SHEET NUMBER	K-S-13
DWG NO.:	
SCALE:	AS SHOWN
DATE:	8/23/2022
DPW FILE NUMBER	1-118-S-1289-0
REV. NO.	0

Drawing Name: G:\SavinAutocad\2060\25-Playland-Mega-3\S\KS-1020.dwg
Ref#: Projectname: ---- Comments: ----
Printed by: JCastro Date: 19 August 2022 1:09 PM Designed by: ----
Xrefs: [TSG-SVL060.dwg] [TB_24X36_WestchesterCo_3.dwg] [K-S-DT0008.dwg] [K-S-DT0010.dwg

FIRE PROTECTION SAFETY NOTES:

1. SPECIAL PRECAUTION SHALL BE TAKEN BY THE CONTRACTOR SO THAT EQUIPMENT OF THIS APPLICATION AND ITS INSTALLATION WILL NOT AFFECT THE FOLLOWING: EGRESS TO AND FROM THE BUILDING. FIRE SAFETY OR CREATE A FIRE HAZARD. STRUCTURAL SAFETY OF THE BUILDING. ACCUMULATION OF DUST AND DEBRIS. (THE CONTRACTOR SHALL LEAVE THE SITE BROOM CLEANED EACH DAY.)

FIRE PROTECTION GENERAL NOTES:

1. DIMENSIONS, LOCATIONS AND SIZES INDICATED ON THE PLANS AND THE ELEVATION ARE APPROXIMATE AND SHALL BE VERIFIED BY FIELD INSPECTION BY THE CONTRACTOR.

2. SOME EXISTING PIPE AND EQUIPMENT IS SHOWN FOR CLARIFICATION OF THIS CONTRACT, BUT MUST BE PROTECTED BY THE CONTRACTOR.

3. NO WORK SHALL BE INITIATED UNTIL A WORK PERMIT IS OBTAINED BY THE CONTRACTOR AND A SAFETY PLAN IS SUBMITTED AND IS APPROVED.

4. CONTRACTOR IS RESPONSIBLE FOR OBTAINING ALL PERMITS, EQUIPMENT USE PERMITS, ALL INSPECTION APPROVALS, AND LETTER OF COMPLETION FROM THE DEPARTMENT OF BUILDINGS FOR WORK UNDER THIS CONTRACT AS APPLICABLE.

5. ANY EXISTING MATERIALS, PIPING, ETC., NOT INDICATED FOR DEMOLITION WHICH ARE REMOVED BY THE CONTRACTOR IN ORDER TO INSTALL NEW WORK SHALL BE REINSTALLED BY THE CONTRACTOR. IF EXISTING WORK IS DAMAGED IT SHALL BE REPLACED AT THE CONTRACTOR'S EXPENSE. ALL SURFACES OR FINISHES THAT ARE DAMAGED OR OTHERWISE AFFECTED BY WORK OF THIS CONTRACT SHALL BE PATCHED, REPAIRED, PAINTED OR REPLACED TO MATCH THE PRE-EXISTING CONDITION AND THE NEW WORK.

6. CONTRACTOR MAY PROPOSE ALTERNATE ROUTING IN DIFFICULT AREAS WHERE REPLACEMENT IN KIND IS NOT PRACTICAL. ANY AND ALL ALTERNATE ROUTING IS SUBJECT TO PRIOR REVIEW AND APPROVAL BY THE ENGINEER.

7. A FIRE WATCH SHALL BE PROVIDED WHEN SPRINKLER COVERAGE IS IMPACTED TO MAINTAIN BUILDING OPERATIONS OR AS REQUIRED.

FIRE PROTECTION SYMBOL LIST

— — — — — FS DRY— —	NEW DRY SPRINKLER PIPING
— — — — — DRY(E) —	EXISTING TO REMAIN DRY SPRINKLER PIPING
○	NEW UPRIGHT SPRINKLER HEAD
	EXISTING UPRIGHT SPRINKLER HEAD
●	NEW CONCEALED PENDENT SPRINKLER HEAD-ORDINARY TEMPERATURE
	SPRINKLER DRY PIPE VALVE
	FIRE HOSE CABINET
	SIAMESE CONNECTION
	CHECK VALVE
	CHECK VALVE W/ ALARM
	WATER MOTOR ALARM BELL
⊗	PIPE RISER
	PIPE DROP
	PIPE UP
	POINT OF CONNECTION
	POINT OF DISCONNECTION
	PREACTION 6" BELL
	SOLENOID VALVE
	OS & Y VALVE
#	REVISION SYMBOL
F#	REFER TO SUPPLEMENTAL FIGURE INDICATED BY NUMBER (I.E. F2 REFERS TO FIGURE 2)
XXX / X	EQUIPMENT TAG / EQUIPMENT NUMBER
X / X-XXX	DETAIL TAG/ CALL OUT TAG / FIRE PROTECTION SHEET NUMBER

SHOP DWGS/EQUIPMENT SUBMITTALS

THE CONTRACTOR MUST SUBMIT ANY EQUIPMENT ALTERNATES 2 WEEKS PRIOR TO BIDS DUE FOR REVIEW AND COMMENTS. ALTERNATES MUST BE ACCEPTED BY LIRO ENGINEERS, INC., THE ARCHITECT, AND THE OWNER PRIOR TO INCLUSION IN BID. THE CONTRACTOR IS RESPONSIBLE TO COORDINATE EQUIPMENT ALTERNATES WITH OTHER TRADES AND MAKE ADJUSTMENTS TO THE MECHANICAL SYSTEMS, AS REQUIRED, TO ACCOMMODATE THESE NEW ALTERNATES.

THE CONTRACTOR IS RESPONSIBLE TO SUBMIT ALL OF THE FOLLOWING ITEMS FOR REVIEW/APPROVAL BY NO MORE THAN 3 WEEKS AFTER THE CONTRACTOR'S CONTRACT/BID HAS BEEN AWARDED. ALL SUBMITTALS MUST BE SENT TOGETHER AS A **SINGLE PACKAGE** WITH MANUFACTURER'S SPECIFIC MODELS AND SPECIFICATIONS OUTLINED TO MATCH THE SCHEDULED REQUIREMENTS. EACH SUBMITTAL MUST BE LABELED WITH THE UNIT DESIGNATION USED WITHIN THIS DRAWING SET. IF THE SUBMITTAL PACKAGE IS FOUND TO BE INCOMPLETE UPON RECEIPT, THE PACKAGE WILL BE HELD AND WILL NOT BE REVIEWED UNTIL THE REMAINDER OF THE PACKAGE IS RECEIVED. SIX (6) HARD COPIES OF THE SUBMITTAL PACKAGE MUST BE SENT TO LIRO ENGINEERS, INC. DIGITAL SHOP DRAWING SUBMISSIONS ARE ACCEPTABLE.

SCOPE OF WORK:

1. THE INSTALLATION OF NEW DRY FS EQUIPMENT.

2. PROPOSED FIRE SPRINKLER HEAD LOCATIONS AND PIPING ARE AS NOTED ON PLANS. EXACT PIPING FROM THE FIRE SPRINKLER MAIN TO ALL HEADS IS TO BE COORDINATED AND HYDRAULICALLY CALCULATED BY THE F.S.C. & SUBMITTED TO THE ENGINEER FOR APPROVAL.

NOTE: THIS SCOPE OF WORK DESCRIPTION IS PROVIDED TO GIVE AN OVERALL "MACRO" DESCRIPTION OF THIS PROJECT. F.S.C. IS RESPONSIBLE TO REVIEW ALL ENGINEERING AND ARCHITECTURAL DRAWINGS AND VISIT THE SITE IF NEEDED, PRIOR TO SUBMISSION OF BID.

SPRINKLER HEAD SCHEDULE

	MANUFACTURER	MODEL	DESCRIPTION	K-FACTOR	QUANTITY
○	RELIABLE	F1FR	DRY ORDINARY UPRIGHT SPRINKLE HEAD	5.6	15
●	RELIABLE	F1FR	WET ORDINARY CONCEALED SPRINKLE HEAD	5.6	24
◀D	TYCO	DS1	DRY ORDINARY SIDEWALL SPRINKLE HEAD	5.6	4

ABBREVIATION

ACV	ALARM CHECK VALVE
B.O.P.	BOTTOM OF PIPE
(E)	EXISTING TO REMAIN
F.S.C.	FIRE SPRINKLER CONTRACTOR
P.C	PLUMBING CONTRACTOR
TYP	TYPICAL
W/	WITH
NYS	NEW YORK STATE
U/P	UNDERGROUND PIPING
W	WATER

DRAWING NOTATIONS

*	DRAWING NOTE TAB
	RISER DESIGNATION
	POINT OF CONNECTION
	POINT OF DISCONNECTION

DESIGN CRITERIA

1. AREA OF APPLICATION = 1950 SQ. FT

2. OCCUPANCY CLASSIFICATION = ORDINARY HAZARD GROUP 2

3. MAXIMUM COVERAGE PER SPRINKLER HEAD = 130 SQ. FT

4. DESIGN DENSITY = 0.20 GPM/SQ. FT

5. NUMBER OF SPRINKLER HEADS WITHIN AREA OF APPLICATION = 26

6. "K" FACTOR OF SPRINKLER HEADS = 5.6

7. DESIGN CRITERIA REQUIREMENTS BASED ON:
   - 2020 BUILDING CODE OF NEW YORK STATE
   - 2016 NFPA 13

ORDINARY HAZARD PIPE SCHEDULE

STEEL		COPPER	
1IN.	2 SPRINKLERS	1IN.	2 SPRINKLERS
1 1/4 IN.	3 SPRINKLERS	1 1/4 IN.	3 SPRINKLERS
1 1/2IN.	5 SPRINKLERS	1 1/2IN.	5 SPRINKLERS
2 IN.	10 SPRINKLERS	2 IN.	12 SPRINKLERS
2 1/2 IN.	20 SPRINKLERS	2 1/2 IN.	25 SPRINKLERS
3 IN.	40 SPRINKLERS	3 IN.	45 SPRINKLERS
3 1/2 IN.	65 SPRINKLERS	3 1/2 IN.	75 SPRINKLERS
4 IN.	100 SPRINKLERS	4 IN.	115 SPRINKLERS
5 IN.	160 SPRINKLERS	5 IN.	180 SPRINKLERS
6 IN.	275 SPRINKLERS	6 IN.	300 SPRINKLERS
8 IN.	SEE SECTION 8.2	8 IN.	SEE SECTION 8.2

FOR SI UNITS, 1 IN. = 25.4 MM.

MAX DISTANCE BETWEEN HANGERS (FT.-IN.)

	NOMINAL PIPE SIZE (IN.)											
	3/4	1	1 1/4	1 1/2	2	2 1/2	3	3 1/2	4	5	6	8
STEEL PIPE EXCEPT THREADED LIGHTWALL	N/A	12-0	12-0	15-0	15-0	15-0	15-0	15-0	15-0	15-0	15-0	15-0
THREADED LIGHTWALL STEEL PIPE	N/A	12-0	12-0	12-0	12-0	12-0	12-0	N/A	N/A	N/A	N/A	N/A
COPPER TUBE	8-0	8-0	10-0	10-0	12-0	12-0	12-0	15-0	15-0	15-0	15-0	15-0

CODE REFERENCE

2020 NEW YORK STATE BUILDING CODE
2016 NFPA 13

FIRE PROTECTION NOTES

1. THE DRAWINGS SHOW THE LAYOUT OF THE SYSTEM AND INDICATE THE APPROXIMATE LOCATIONS OF EQUIPMENT AND PIPING. CONTRACTOR IS CAUTIONED NOT TO SCALE THE DRAWINGS. THE PIPING SHALL BE RUN APPROXIMATELY IN THE AREAS AS INDICATED ON THE DRAWINGS, [HOWEVER, TO THE ARRANGEMENT OF THE PIPING SYSTEMS AS MAY BE REFERENCED WITH WORK OF OTHER TRADES]. CONTRACTOR SHALL REVIEW AND COORDINATE WITH STRUCTURAL, ELECTRICAL AND MECHANICAL DRAWINGS. PARTITIONS, STRUCTURAL MEMBERS, ETC. ARE DESIGNED TO BE FURRED OR CLOSED IN AND TO INCLUDE ROUGH-IN PIPING. CONTRACTOR SHALL FURNISH ALL OFFSETS, ADDITIONAL FITTINGS, ETC. WHETHER SHOWN ON DRAWINGS OR NOT, AS REQUIRED TO MEET INSTALLATION CONDITIONS.

2. CONTRACTOR IS TO COMPLY WITH LATEST NFPA AND N.Y.S. CODES, AND COORDINATE HIS WORK WITH OTHER TRADES AND MAKE NECESSARY ADJUSTMENTS.

3. CONTRACTOR IS TO PREPARE SHOP DRAWINGS FOR ENGINEERS REVIEW AFTER MAKING A COMPLETE FIELD SURVEY.

4. CONTRACTOR IS TO REPORT ANY CONDITION REQUIRING CHANGES FROM PLANS TO ENGINEER PRIOR TO STARTING WORK.

5. BRANCH LINES AND MAINS (1 1/2" OR LESS) - SCHEDULE 40 FM APPROVED

6. BRANCH LINES AND MAINS (2" OR LARGER) - THINWALL (THICKNESS LESS THEN SCHEDULE 40 MORE THEN SCHEDULE 10 & FM APPROVED)

7. CONTRACTOR IS TO PERFORM A HYDROSTATIC TEST FOR 2 HRS. @ 200 PSI WITH NO LEAKAGE AND PROVIDE A TEST CERTIFICATE TO ENGINEER

8. CONTRACTOR IS TO EMPLOY EXPERIENCED WORKMEN WHO ARE TO FAMILIARIZE THEMSELVES WITH THE BUILDING AND OBSERVE SAFETY REQUIREMENTS.

9. CONTRACTOR TO ADJUST HEAD LOCATION TO COORDINATE WITH LIGHTS, DUCTS, ETC.

10. PERMIT FROM LOCAL AUTHORITY, TO BE OBTAINED BY CONTRACTOR.

11. ALL WORK TO BE APPROVED BY OWNERS ENGINEER, STATE AUTHORITIES HAVING JURISDICTION AND MUNICIPAL FIRE, PLUMBING, BUILDING AND WATER DEPARTMENTS.

12. U.L. AND/OR FM APPROVED EQUIPMENT TO BE USED.

13. WORK TO BE IN ACCORDANCE WITH MUNICIPAL WATER DEPT. RULES
.
14. SYSTEM IS TO BE MAINTAINED AND TESTED BY THE OWNER OR HIS AGENT IN ACCORDANCE WITH APPLICABLE LOCAL AND STATE CODES AND IN CONFORMANCE WITH NFPA 13A, LATEST EDITION.

15. IF BUILDING OCCUPANCY OR CONSTRUCTION CHANGES, THE SPRINKLER SYSTEM IS TO BE UPDATED ACCORDINGLY BY THE OWNER OR HIS AGENT.

16. CONTRACTOR IS TO NEATLY CUT AND PATCH IN A FIRST CLASS WORKMANLIKE MANNER, ALL HOLES AND PENETRATIONS IN WALLS, CEILINGS, FLOORS, PARTITIONS, ETC.

17. THE ENGINEER IS NOT RETAINED FOR SUPERVISION.

18. THE INSTALLATION OF THIS SYSTEM WILL REQUIRE THE CLOSING OF ONE OR MORE FIRE PROTECTION CONTROL VALVES. THESE VALVE CLOSURES SHOULD BE CLOSELY COORDINATED WITH THE OWNERS WHO SHOULD CONTACT THE LOCAL FIRE DEPARTMENT, INSURANCE INTERESTS, ETC. PRIOR TO VALVE CLOSURES.

19. ACTUAL DESIGN DENSITY MAY EXCEED STANDARDS, HOWEVER, IT IS A MINIMUM TO BE USED BY THE CONTRACTOR.

20. ALL ALARMS RELATING TO THE SPRINKLER SYSTEM SHOULD BE ACTIVATED UPON PLACING THE SPRINKLER SYSTEM IN SERVICE.

21. THE INSTALLATION COMPONENTS, SIZING, SPACING, MATERIALS LOCATION CLEARANCES, POSITION AND TYPE OF SYSTEM SHALL CONFORM TO NFPA 13 AND NYS UNIFORM FIRE PREVENTION BUILDING CODE LATEST EDITION.

22. SPRINKLERS SHALL BE PROTECTED AGAINST FREEZING AND INJURY AS PER NFPA CODE.

23. INSPECTION AND TESTS OF SPRINKLER SYSTEM SHALL BE CONDUCTED AS SPECIFIED IN NFPA CODE.

24. WATER SUPPLY TEST PIPES AND GAUGES SHALL BE PROVIDED AS SPECIFIED IN CHAPTER 2-9 OF NPPA 13.

25. PIPING SPECIFICATIONS, PIPE SCHEDULES, SYSTEM TEST PIPES, PROTECTION AGAINST CORROSION, DAMAGE FITTINGS, VALVES, HANGERS, SPRINKLERS, GUARDS AND SHIELDS SHALL BE IN ACCORDANCE WITH CHAPTER 3 AND CHAPTER 8 OF NFPA 13, LATEST EDITION. PIPING SHALL BE PAINTED TO PREVENT CORROSION.

26. STOCK OF EXTRA SPRINKLERS WILL BE FURNISHED AS PER CHAPTER 3 OF NFPA 13 (REQUIRED FOR EACH TEMPERATURE RATING).

27. SPRINKLER ALARMS WILL BE IN ACCORDANCE WITH NFPA 13.

28. SPACING, LOCATION AND POSITION OF SPRINKLERS SHALL BE IN ACCORDANCE WITH CHAPTER 4 OF NFPA 13.

29. ALL PIPING PASSING THROUGH WALLS SHALL COMPLY WITH NFPA FOR FIRE PROOFING.

30. DISTANCE OF SPRINKLERS FROM HEAT SOURCES SHALL BE IN ACCORDANCE WITH TABLE 3-16.6.3 OF NFPA 13.

31. PROVIDE WATER SUPPLY LETTER WITH FLOW TEST DATA.

32. ALL PIPES PASSING THROUGH FOUNDATION WALLS TO BE PROTECTED.

33. ALL VALVES SHALL BE IDENTIFIED AS REQUIRED BY NFPA 13.

34. DRAINAGE TO CONFORM TO CHAPTER 3-11 OF NFPA 13.

35. A ONE PIECE REDUCING FITTING OF GOOD DESIGN SHOULD BE USED WHEREVER A CHANGE IS MADE IN THE SIZE OF PIPE AS PER SECTION 3-12.2.7 OF NFPA 13.

36. ALL VALVES ON CONNECTIONS TO WATER SUPPLIES AND IN SUPPLY TO SPRINKLERS SHALL BE APPROVED O.S. &Y. OR APPROVED INDICATOR TYPE WITH TAMPER SWITCHES.

37. DRAIN VALVES AND TEST VALVES SHALL BE APPROVED TYPE AS PER SECTION 3-14.1.2 OF NFPA 13.

38. HANGERS SHALL BE OF A TYPE APPROVED FOR USE WITH THE PIPE OR TUBE INVOLVED, SPRINKLER PIPING SHOULD BE SUPPORTED BY ADJUSTABLE HANGERS PER NFPA 13, SECTION 3-15.

39. PROVISIONS SHOULD BE MADE TO FACILITATE FLUSHING SYSTEM PIPING BY PROVIDING FLUSHING CONNECTIONS CONSISTING OF A CAPPED NIPPLE 4" LONG ON THE END OF THE CROSS MAIN, AS PER SECTION 3- 8.2 OF NFPA 13.

40. SPRINKLER SHALL BE AN APPROVED TYPE AS PER SECTION 3-16 OF NFPA 13.

41. TEMPERATURE RATING SHALL COMPLY WITH SEC. 3-16.6 OF NFPA 13.

42. CLEARANCES BETWEEN SPRINKLERS AND STORAGE OR PARTITIONS AS PER NFPA 13, SECTION 4-2.5

43. SPACING AND LOCATION OF SPRINKLER SHALL COMPLY WITH CHAPTER 4 NFPA 13.

44. CONTRACTOR TO COORDINATE HIS WORK WITH OTHER TRADES.

45. ONLY EXPERIENCED SPRINKLER MECHANICS TO WORK ON THE SYSTEM.

46. ALL PIPING TO BE A MINIMUM OF 1" UNLESS OTHERWISE NOTED.

47. PROVIDE SHOP DRAWINGS WITH HYDRAULIC CALCULATIONS FOR REVIEW TO LOCAL FIRE MARSHALL AND INSURANCE UNDERWRITER AND ENGINEER FOR APPROVAL PRIOR TO INSTALLATION.

48. ALL FIRE PROTECTION EQUIPMENT SHALL BE INSTALLED PER MANUFACTURER'S REQUIREMENTS/SPECIFICATIONS.

49. ALL FIRE PROTECTION EQUIPMENT SHALL BE MOUNTED ON MINIMUM 6" HIGH CONCRETE PAD UNLESS OTHERWISE NOTED (PAVER AND CINDER BLOCK IS NOT ACCEPTABLE).

50. PERMIT IS REQUIRED PRIOR TO INSTALLATION, TO INCLUDE SIGNED AND SEALED SHOP DRAWINGS, HYDRAULIC CALCULATION, SHOP DRAWINGS, MANUFACTURERS INFORMATION ON HEADS AND APPLIANCES, COMPLIANCE WITH NFPA 13 AND SECTION 903 2020 NYSBC/FC.

FIRE PROTECTION DRAWING LIST

SHEET NO.	SHEET NAME	REVISON NO.	REVISION DATE
K-FP-01	FIRE PROTECTION NOTES, SYMBOLS, ABBREVIATIONS, AND DRAWING LIST	0	-
K-FP-11	FIRE PROTECTION GROUND FLOOR DEMOLITION PLAN	0	-
K-FP-21	FIRE PROTECTION GROUND FLOOR AND ATTIC CONSTRUCTION RCP	0	-
K-FP-81	FIRE PROTECTION DETAILS	0	-

CONSULTANT INFORMATION

LiRo Engineers, Inc.
A LiRo Group Company
Syosset, N.Y. 516-214-8157[T]

CONSULTANT SEAL

STATE OF NEW YORK · FRANK F. ULIASE · No. 090111-1 · LICENSED PROFESSIONAL ENGINEER

REVISION NUMBER	DATE	MADE BY	APP'D BY	REVISION

RECORD DRAWING CERTIFICATION

☐ AS BUILT – CHANGES AS NOTED ☐ AS BUILT – NO CHANGES

CONTRACTOR
NAME
SIGNATURE
TITLE DATE

PROJECT COORDINATOR
NAME
SIGNATURE
TITLE DATE

WESTCHESTER COUNTY, NEW YORK
DEPARTMENT OF PUBLIC WORKS AND TRANSPORTATION
DIVISION OF ENGINEERING

INFRASTRUCTURE REHABILITATION - PHASE 3
PLAYLAND PARK, RYE, NEW YORK
RESTAURANT KITCHEN WITH FOOD VENDING
FIRE PROTECTION NOTES, SYMBOLS, ABBREVIATIONS & DWG LIST

CONTRACT NUMBER	22-523
SHEET NUMBER	K-FP-01
DWG NO.:	541 of 664
SCALE:	AS INDICATED
DATE:	08/23/2022
DPW FILE NUMBER	1-118-FP-1290-0
REV. NO.	0

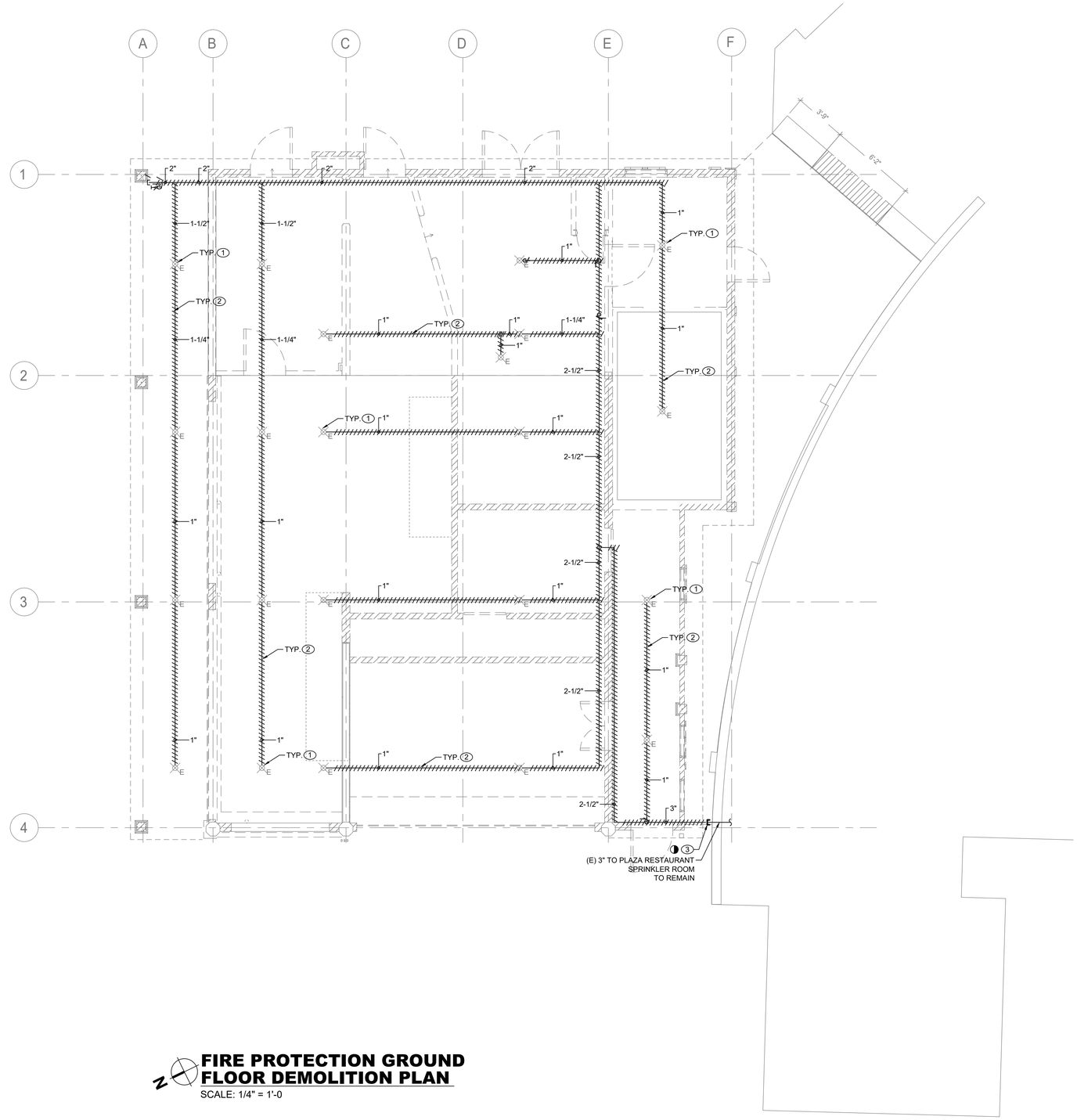

SPRINKLER DEMOLITION NOTES:

1. DEMOLISH ALL EXISTING SPRINKLER HEADS WITHIN THE NATHAN'S BUILDING.
2. DEMOLISH ALL EXISTING DRY SPRINKLER PIPING WITHIN THE NATHAN'S BUILDING INCLUDING ATTIC SPACE.
3. CUT AND TEMPORARY CAP EXISTING 3" DRY SPRINKLER LINE FOR FUTURE RECONNECTION.

GENERAL NOTES:

1. COORDINATE WITH FACILITY PRIOR TO SHUTDOWN OF FIRE PROTECTION SYSTEM FOR ANY DEMOLITION AND CONSTRUCTION WORK.

2. CONTRACTOR SHALL PROVIDE FIRE WATCH AS NEEDED FOR THE DEPENDENT BUILDINGS BY THE DEMOLITION AND CONSTRUCTION WORK WHILE SPRINKLER COVERAGE IS IMPACTED.

3. CONTRACTOR TO COORDINATE WITH FACILITY WHEN WORKING AROUND OR ABOVE THE RIDE COMPONENTS, AND PROVIDE ALL NECESSARY MEASURES TO PROTECT THESE COMPONENTS PER THE REQUIREMENTS OF THE FACILITY.

N

FIRE PROTECTION GROUND FLOOR DEMOLITION PLAN

SCALE: 1/4" = 1'-0

CONSULTANT INFORMATION

LiRo Engineers, Inc.
A LiRo Group Company
Syosset, N.Y. 516-214-8157[T]

CONSULTANT SEAL

STATE OF NEW YORK · FRANK F. ULLISE · No. 090111-1 · LICENSED PROFESSIONAL ENGINEER

REVISION NUMBER	DATE	MADE BY	APP'D BY	REVISION

RECORD DRAWING CERTIFICATION

☐ AS BUILT – CHANGES AS NOTED ☐ AS BUILT – NO CHANGES

CONTRACTOR
NAME
SIGNATURE
TITLE DATE

PROJECT COORDINATOR
NAME
SIGNATURE
TITLE DATE

WESTCHESTER COUNTY, NEW YORK
DEPARTMENT OF PUBLIC WORKS AND TRANSPORTATION
DIVISION OF ENGINEERING

INFRASTRUCTURE REHABILITATION - PHASE 3
PLAYLAND PARK, RYE, NEW YORK
RESTAURANT KITCHEN WITH FOOD VENDING
FIRE PROTECTION GROUND FLOOR DEMOLITION PLAN

CONTRACT NUMBER	22-523
SHEET NUMBER	K-FP-11
DWG NO.:	542 of 664
SCALE:	AS INDICATED
DATE:	08/23/2022
DPW FILE NUMBER	1-118-FP-1291-0
REV. NO.	0

FIRE PROTECTION CONSTRUCTION NOTES:

1. RECONNECT NEW 3" WET SPRINKLER LINE TO EXISTING 6" LINE WITHIN SPRINKLER ROOM OF PLAZA RESTAURANT.
2. RECONNECT NEW 3" DRY SPRINKLER LINE WITH EXISTING.

GENERAL NOTES:

1. ALL DISTRIBUTION PIPING, SHALL BE PAINTED AS DIRECTED BY ARCHITECT. REFER TO SPECIFICATION FOR PAINT TYPE AND APPLICATION PROCEDURE.
2. COORDINATE WITH FACILITY PRIOR TO SHUTDOWN OF FIRE PROTECTION SYSTEM FOR ANY DEMOLITION AND CONSTRUCTION WORK.
3. CONTRACTOR SHALL PROVIDE FIRE WATCH AS NEEDED FOR ALL AFFECTED BUILDINGS WHILE SPRINKLER COVERAGE IS IMPACTED.
4. CONTRACTOR TO COORDINATE WITH FACILITY WHEN WORKING AROUND OR ABOVE THE RIDE COMPONENTS, AND PROVIDE ALL NECESSARY MEASURES TO PROTECT THESE COMPONENTS PER THE REQUIREMENTS OF THE FACILITY.
5. UPON COMPLETION, SYSTEM SHALL BE TESTED FOR PROPER OPERATION.

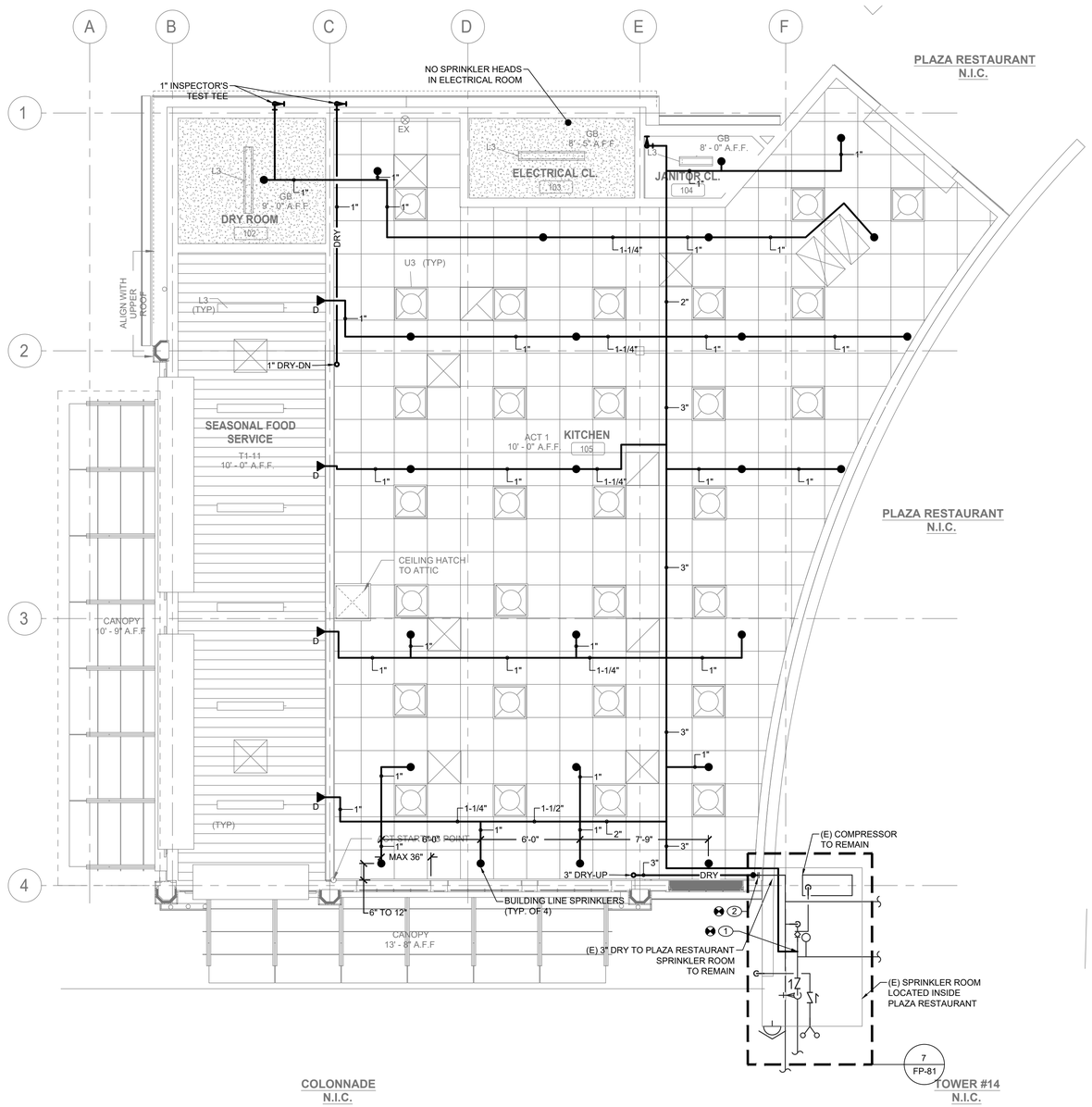

FIRE PROTECTION GROUND FLOOR CONSTRUCTION RCP

SCALE: 1/4" = 1'-0

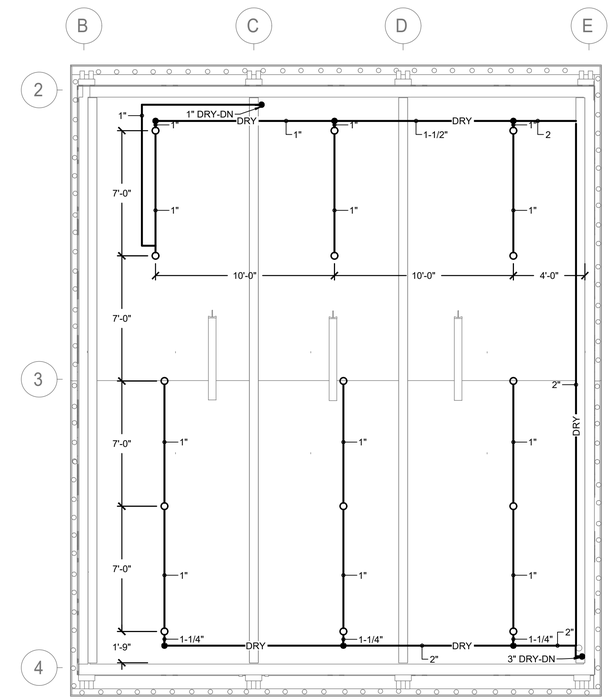

FIRE PROTECTION ATTIC CONSTRUCTION PLAN

SCALE: 1/4" = 1'-0

CONSULTANT INFORMATION	CONSULTANT SEAL	REVISION NUMBER	DATE	MADE BY	APP'D BY	REVISION
LiRo Engineers, Inc. A LiRo Group Company, Syosset, N.Y. 516-214-8157[T]	STATE OF NEW YORK, FRANK F. ULUSE, No. 090111-1, LICENSED PROFESSIONAL ENGINEER					

RECORD DRAWING CERTIFICATION: ☐ AS BUILT – CHANGES AS NOTED ☐ AS BUILT – NO CHANGES

CONTRACTOR: NAME / SIGNATURE / TITLE / DATE

PROJECT COORDINATOR: NAME / SIGNATURE / TITLE / DATE

WESTCHESTER COUNTY, NEW YORK
DEPARTMENT OF PUBLIC WORKS AND TRANSPORTATION
DIVISION OF ENGINEERING

INFRASTRUCTURE REHABILITATION - PHASE 3
PLAYLAND PARK, RYE, NEW YORK
RESTAURANT KITCHEN WITH FOOD VENDING
FIRE PROTECTION GROUND FLOOR AND ATTIC CONSTRUCTION RCP

CONTRACT NUMBER	22-523
SHEET NUMBER	K-FP-21
DWG NO.:	543 of 664
SCALE:	AS INDICATED
DATE:	08/23/2022
DPW FILE NUMBER	1-118-FP-1292-0
REV. NO.	0

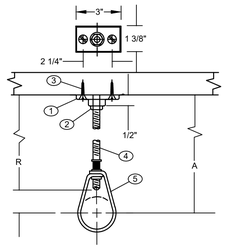

COMPONENTS

1. CLIP (CEILING FLANGE)
2. HEX NUT
3. WOOD SCREW
4. HANGER ROD
5. ADJUSTABLE HANGER RING

NFPA REQUIREMENTS / LIMITATIONS

1. NFPA 13 PERMITS THE USE OF 2 SCREW CEILING FLANGES ONLY
2. HAVING DIMENSIONS NOT LESS THAN THOSE OF NO. 18 X 1 1/2" WOOD SCREWS. DRIVE SCREWS AND NAILS ARE NOT ACCEPTABLE FASTENERS AND WOOD SCREWS ARE NOT TO BE DRIVEN.
3. FOR PIPE SIZES UP TO 2" AND IT CALLS FOR THE USE OF SCREWS

DESIGN DATA FOR CLIP HANGERS

NOMINAL PIPE SIZE	MINIMUM A DIMENSION	HANGER TAKEOUT	ROD DIAMETER	FASTENERS	
	INCHES	INCHES	INCHES	QTY	ITEMS
1/2	3 3/4	-1 1/4	3/8	1 2 1	3/8" CEILING FLANGE (CLIP) NO. 18 X 1 1/2" FLAT HEAD WOOD SCREWS 3/8" HEX NUT
3/4	3 3/4	-1 1/4	"		SEE ABOVE
1	3 3/4	-1 1/4	"		" "
1 1/4	4	-1 1/2	"		" "
1 1/2	4	-1 1/2	"		" "
2	4 1/4	-1 3/4	"		" "

1 FP-81 PIPE HANGER DETAIL

SCALE: NOT TO SCALE

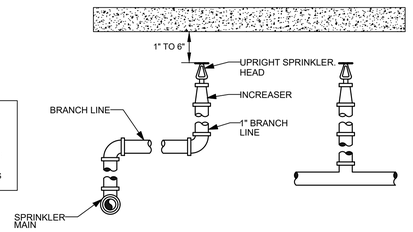

2 FP-81 UPRIGHT SPRINKLER DETAIL

SCALE: NOT TO SCALE

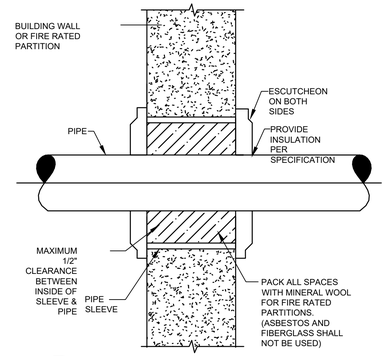

3 FP-81 PIPE PENETRATION

SCALE: NOT TO SCALE

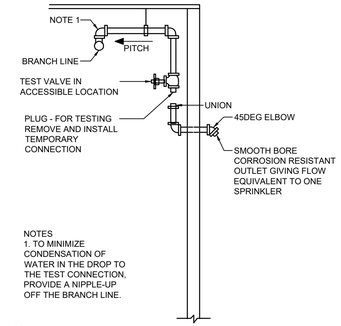

NOTES
1. TO MINIMIZE CONDENSATION OF WATER IN THE DROP TO THE TEST CONNECTION, PROVIDE A NIPPLE-UP OFF THE BRANCH LINE.

4 FP-81 DRY PIPE TEST CONNECTION

SCALE: NOT TO SCALE

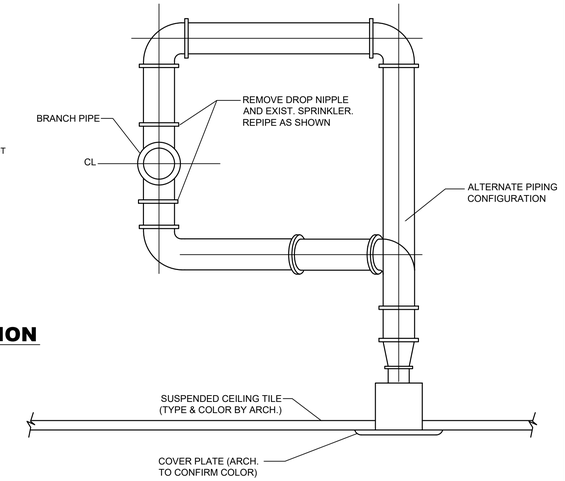

5 FP-81 TYPICAL SPRINKLER HEAD RELOCATION

SCALE: NOT TO SCALE

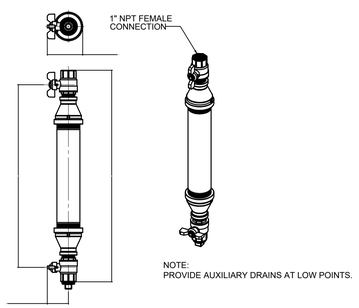

NOTE:
PROVIDE AUXILIARY DRAINS AT LOW POINTS.

6 FP-81 DRY SYSTEM AUXILIARY DRAIN

SCALE: NOT TO SCALE

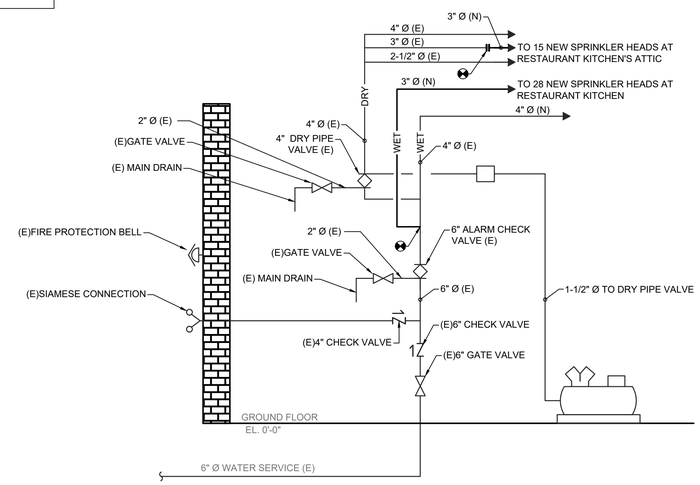

7 FP-81 PLAZA RESTAURANT SPRINKLER ROOM RISER - CONSTRUCTION

SCALE: NOT TO SCALE

GENERAL NOTES:

1. ALL DISTRIBUTION PIPING, INCLUDING PIPING NOT BEING REPLACED, SHALL BE (RE)PAINTED. REFER TO SPECIFICATION FOR PAINT TYPE AND APPLICATION PROCEDURE.
2. COORDINATE WITH FACILITY PRIOR TO SHUTDOWN OF FIRE PROTECTION SYSTEM FOR ANY DEMOLITION AND CONSTRUCTION WORK.
3. CONTRACTOR SHALL PROVIDE FIRE WATCH AS NEEDED FOR THE BUILDING WHILE SPRINKLER COVERAGE IS IMPACTED.
4. UPON COMPLETION OF NEW EQUIPMENT, SYSTEM SHALL BE TESTED FOR PROPER OPERATION.
5. CONTRACTOR TO COORDINATE WITH FACILITY WHEN WORKING AROUND OR ABOVE THE RIDE COMPONENTS, AND PROVIDE ALL NECESSARY MEASURES TO PROTECT THESE COMPONENTS PER THE REQUIREMENTS OF THE FACILITY.

PLUMBING SYMBOL LIST

IDENTIFIER	DESCRIPTION
——— — ——— CW	DOMESTIC COLD WATER
——— W ———	WASTE PIPING (ABOVE SLAB)
— — — - W - — — — —	WASTE PIPING (UNDER SLAB)
——— S ———	SANITARY PIPING (ABOVE SLAB)
— — — - S - — — — —	SANITARY PIPING (UNDER SLAB)
--------- V ----------	SANITARY VENT PIPING
	FIELD CONNECT
	FIELD DISCONNECT
F#	REFER TO SUPPLEMENTAL FIGURE INDICATED BY NUMBER (I.E. F2 REFERS TO FIGURE 2)
XXX / XX	EQUIPMENT TAG / EQUIPMENT NUMBER
XXX / X-XXX	DETAIL TAG/CALL OUT TAG / PLUMBING SHEET NUMBER

PIPING ELEMENTS/VALVING

- BACKFLOW PREVENTER (DOUBLE CHECK VALVE ASSEMBLY)
- BALL VALVE
- CAP ON END OF PIPE
- CLEANOUT
- FD — FLOOR DRAIN
- GATE VALVE
- HB — HOSE BIBB
- VALVE IN VALVE BOX
- PIPE DROPPING DOWN
- PIPE RISING UP
- TEE OUTLET DOWN
- TEE OUTLET UP
- VALVE IN RISE OR DROP
- NFHB — NON FREEZE HOSE BIBB IN BOX W/VACUUM BREAKER

SCOPE OF WORK

PLUMBING SCOPE OF WORK INCLUDES, BUT IS NOT LIMITED TO:

1. REMOVAL OF EXISTING WATER SERVICE.

2. THE INSTALLATION OF NEW PLUMBING FIXTURES AND ALL ASSOCIATED PIPING AND ACCESSORIES.

3. THE INSTALLATION OF NEW SANITARY AND DOMESTIC WATER SERVICES.

NOTE- THIS SCOPE OF WORK DESCRIPTION IS PROVIDED TO GIVE AN OVERALL "MACRO" DESCRIPTION OF THIS PROJECT. P.C. IS RESPONSIBLE TO REVIEW ALL ENGINEERING & ARCHITECTURAL DRAWINGS & VISIT THE SITE IF NEEDED, PRIOR TO SUBMISSION OF BID.

CODE REFERENCE

2020 NEW YORK STATE BUILDING CODE
2020 NEW YORK STATE MECHANICAL CODE
2020 NEW YORK STATE PLUMBING CODE
2020 NEW YORK STATE ENERGY CONSERVATION CODE

SECTION 704
DRAINAGE PIPING INSTALLATION

704.1 SLOPE OF HORIZONTAL DRAINAGE PIPING.

HORIZONTAL DRAINAGE PIPING SHALL BE INSTALLED IN UNIFORM ALIGNMENT AT UNIFORM SLOPES. THE MINIMUM SLOPE OF HORIZONTAL DRAINAGE PIPE SHALL BE IN ACCORDANCE WITH TABLE 704.1.

TABLE 704.1
SLOPE OF HORIZONTAL DRAINAGE PIPE

SIZE (INCHES)	MINIMUM SLOPE (INCH PER FOOT)
2 1/2 OR LESS	1/4
3 TO 6	1/8
8 OR LARGER	1/16

LEED NOTES

1. ALL ADHESIVES, SEALANTS, PAINTS & COATINGS APPLIED TO THE INTERIOR OF THE BUILDING (WITHIN THE WEATHER PROOFING SYSTEM, INCLUDING WALL CAVITIES) MUST NOT EXCEED THE LEED VOC LIMITS. PROVIDE A VOC SUBMITTAL AND MSDS FOR ALL ADHESIVES, SEALANTS, PAINTS AND COATINGS TO BE APPLIED.

PLUMBING GENERAL NOTES:

1. ALL PLUMBING WORK UNDER THIS CONTRACT SHALL CONFORM TO THE LATEST EDITION OF THE PLUMBING CODE OF NEW YORK STATE (PC-NYS), THE NEW YORK STATE ENERGY CODE, AND THE REQUIREMENTS OF THE UTILITY AND THE LOCAL WATER COMPANY.
2. ALL MATERIALS SHALL BE NEW UNLESS NOTED OTHERWISE.
3. THE PLUMBING CONTRACTOR SHALL ASSUME RESPONSIBILITY FOR ALL LABOR AND MATERIALS SUPPLIED AND INSTALLED UNDER THIS CONTRACT AND SHALL GUARANTEE THE WORK PERFORMED UNDER THIS CONTRACT FOR A PERIOD OF ONE (1) YEAR FROM THE DATE OF ACCEPTANCE OF THIS WORK.
4. PLUMBING CONTRACTOR SHALL CONSULT WITH, COOPERATE AND COORDINATE WITH THE GENERAL CONTRACTOR, MECHANICAL CONTRACTOR, SPRINKLER CONTRACTOR, ELECTRICAL CONTRACTOR, ETC. IN ORDER TO MINIMIZE INTERFERENCES BETWEEN TRADES DURING PERFORMANCE OF THIS WORK.
5. THE PLUMBING CONTRACTOR SHALL PREPARE AND FILE ALL REQUIRED PLANS AND PERMITS WITH THE LOCAL AUTHORITIES. PC SHALL PAY THE FILING FEES AS REQUIRED. PC SHALL OBTAIN ALL APPROVALS AND SHALL PAY FOR ALL WORK PERMITS, INSPECTIONS AND SIGN-OFFS AS REQUIRED TO EXECUTE THIS WORK IN A MANNER IN CONFORMANCE WITH THE CODES AND AUTHORITIES HAVING JURISDICTION.
6. THE PLUMBING CONTRACTOR SHALL PERFORM ALL TESTS AND ARRANGE FOR ALL INSPECTIONS FOR WORK UNDER HIS CONTRACT AS REQUIRED BY LAW AND SHALL SUPPLY ALL CERTIFICATES OF INSURANCE AS REQUIRED BY THE LAW AND THE OWNER. REFER TO SECTION 107 (INSPECTIONS) OF THE PC-NYS.
7. THE PLUMBING CONTRACTOR SHALL MAKE ALL FINAL CONNECTIONS TO ALL PLUMBING EQUIPMENT REGARDLESS WHETHER ILLUSTRATED HEREIN WITHOUT ANY ADDITIONAL COSTS TO THE OWNER.
8. PLUMBING CONTRACTOR SHALL VISIT THE SITE & BECOME FAMILIAR WITH THE EXISTING CONDITIONS, INCLUDING THE SIZE OF CONNECTIONS, ROUGHING DIMENSIONS, ETC. BEFORE SUBMITTING A QUOTATION FOR THE WORK.
9. PLUMBING CONTRACTOR SHALL PERFORM ALL CUTTING, EXCAVATION, BACKFILLING, ROUGH & FINISH PATCHING AS PER THE SPECIFICATIONS AS REQUIRED FOR THE INSTALLATION OF THE WORK, UNLESS NOTED OTHERWISE.
10. ALL CONNECTIONS TO NEW AND/OR EXISTING EQUIPMENT SHALL BE SIZED AND INSTALLED IN ACCORDANCE WITH THE MANUFACTURER'S INSTRUCTIONS.
11. IT IS THE INTENT OF THIS CONTRACT THAT THE COMPLETED WORK BE FULLY OPERATIONAL.
12. ALL PIPE HANGERS AND SUPPORTS SHALL BE INSTALLED AT INTERVALS AND BE FABRICATED OF MATERIALS AS REQUIRED BY THE PC-NYS.
13. ALL NEW PLUMBING FIXTURES SHALL BE INSTALLED WITH ANGLE STOP VALVES IN THE SUPPLY LINES SERVING THE FIXTURE.
14. ALL NEW EXPOSED WATER AND WASTE PIPING SERVING THE FIXTURES SHALL BE CHROME PLATED AND SHALL HAVE CHROME PLATED ESCUTCHEONS RIGIDLY ATTACHED TO THE PIPING AT THE POINT OF WALL OR FLOOR PENETRATIONS.
15. PLUMBING CONTRACTOR SHALL SUBMIT SHOP DRAWINGS FOR ALL NEW PLUMBING FIXTURES AND EQUIPMENT TO BE SUPPLIED AND INSTALLED UNDER THIS CONTRACT FOR APPROVAL BEFORE INSTALLATION OF SAME.
16. WATERPROOF PIPE SLEEVES SHALL BE INSTALLED AT ALL PENETRATIONS THROUGH EXTERIOR WALLS. PIPE SLEEVES SHALL BE INSTALLED AT ALL WALL PENETRATIONS THROUGH INTERIOR WALLS AND FLOORS.
17. WATER HAMMER ELIMINATORS (APPROVED - FIELD FABRICATED OR MANUFACTURED) SHALL BE INSTALLED AT ALL RUN OUTS IN HOT AND/OR COLD WATER LINES SERVING TOILET ROOMS AND OTHER AREAS WHICH INCORPORATE "RAPID - ACTION" VALVES SUCH AS FLUSHOMETERS, SOLENOID VALVES, ETC.
18. ALL PIPING SHALL BE TESTED AT A MINIMUM PRESSURE OF 1-1/2 TIMES THE MAXIMUM OPERATING PRESSURE UNLESS OTHERWISE NOTED ON THE DOCUMENTS OR THE PLUMBING CODE AND IN ACCORDANCE WITH THE UTILITY REQUIREMENTS.
19. ALL REMOVALS PERFORMED UNDER THIS CONTRACT SHALL INCLUDE REMOVAL OF ALL DEBRIS AND DISPOSAL AT AN APPROPRIATE SITE.
20. ALL LAVATORIES DESIGNED FOR USE BY PERSONS CONFINED TO WHEELCHAIRS SHALL HAVE THE HOT & COLD WATER SERVICES, AS WELL AS THE TRAP, RECESSED & INSULATED IN ACCORDANCE WITH ADA REQUIREMENTS.
21. REFER TO THE ARCHITECTURAL PLANS FOR ALL STRUCTURAL DIMENSIONS.
22. ALL WORK TO BE COORDINATED WITH OTHER TRADES.
23. ALL PIPING PENETRATIONS TO BE SEALED AROUND WITH "NELSON" FIRE SEAL.
24. ALL WATER SERVICE PIPING WITHIN THE BUILDING IS TO BE INSULATED IN ACCORDANCE WITH ALL NEW YORK STATE PLUMBING CODE (NYS-PC) AND NYS ENERGY CODES.
25. ALL PLUMBING FIXTURES TO BE INSTALLED AS PER FACTORY RECOMMENDATIONS.
26. ALL PLUMBING FIXTURES TO BE TRAPPED, VENTED AND PROVIDED WITH AIR SHOCKS WHEN REQUIRED.
27. PLUMBING FIXTURES SHALL COMPLY WITH "WATER CONSERVATION" REQUIREMENT AS DETAILED IN THE NYS-PC.
28. GC IS RESPONSIBLE TO SUBMIT APPLICATION AND TAP FEES TO LOCAL WATER AUTHORITY AND HAVE OWNER FILL OUT APPLICATION UPON COMPLETION OF PLUMBING ROUGH-IN INSPECTION.
29. ALL WATER AND HORIZONTAL STORM DRAIN PIPING INCLUDING ROOF DRAIN BODY SHALL BE INSULATED.
30. FLOOR DRAINS AND FLOOR CLEAN-OUTS SHALL BE SET LEVEL WITH FINISHED FLOORS.
31. ALL PIPE DIMENSIONS ARE INSIDE CLEAR.
32. ALL PLUMBING FIXTURES TO HAVE ISOLATION VALVES.
33. P.C. IS RESPONSIBLE TO ADJUST HOT WATER HEATER (WH) TEMPERATURE TO ENSURE A TEMPERATURE RANGE OF 110°F TO 120°F AT THE INDIVIDUAL FIXTURE OUTPUT. P.C. MUST ENSURE A TEMPERATURE OF 120° F MAXIMUM AT THE FIXTURES TO PREVENT SCALDING.
34. BUILDING DOMESTIC WATER DEMAND & SIZING IS CALCULATED FROM NYS-PC SECTION 603, 604 & APPENDIX E.
35. BUILDING SANITARY DEMAND & SIZING IS CALCULATED FROM NYS-PC SECTIONS 709 AND 710.
36. ALL DFU CALCULATIONS ARE BASED OFF OF TABLE 709.1 OF THE NYS-PC.
37. ALL SANITARY WATER PIPING SHALL BE PITCHED IN ACCORDANCE WITH NYS-PC SECTION 704 BASED ON TABLE 704.1 SLOPE OF HORIZONTAL DRAINAGE PIPE.
38. ALL VENT SIZING IS BASED OFF OF SECTION 916 OF THE NYS PLUMBING CODE.
39. ALL PLUMBING EQUIPMENT SHALL BE INSTALLED PER MANUFACTURER'S REQUIREMENTS/SPECIFICATIONS.

ABBREVIATIONS:

AD	ACCESS DOOR
BFP	BACKFLOW PREVENTER
CO	CLEAN OUT
CW	COLD WATER
DCV	DOUBLE CHECK VALVE
DFU	DRAINAGE FIXTURE UNIT
DPCO	DECK PLATE CLEAN OUT
FC	FIELD CONNECT
FD	FLOOR DRAIN
FFD	FUNNEL FLOOR DRAIN
FU	FIXTURE UNIT
HW	HOT WATER
HWR	HOT WATER RETURN
IAW	IN ACCORDANCE WITH
IWFD	INDIRECT WASTE FUNNEL DRAIN
LAV	LAVATORY
JS	JANITOR'S SINK
NC	NORMALLY CLOSED
NO	NORMALLY OPEN
NYS-PC	NEW YORK STATE PLUMBING CODE
RD	ROOF DRAIN
S	SANITARY
SD	STORM DRAIN
TMV	THERMOSTATIC MIXING VALVE
U.O.N.	UNLESS OTHERWISE NOTED
UR	URINAL
V	VENT
WC	WATER CLOSET
PC	PLUMBING CONTRACTOR
MC	MECHANICAL CONTRACTOR
TYP.	TYPICAL
VIF	VERIFY IN FIELD
WCO	WALL CLEAN OUT
WFU	WATER FIXTURE UNITS
(N)	NEW
(E)	EXISTING
(D)	DEMO

THE ABBREVIATIONS ARE SHOWN FOR GENERAL REFERENCE ONLY. THE PRESENCE OF AN ABBREVIATION ON THIS LIST DOES NOT IMPLY ITS USE ON THIS PROJECT. REFER TO DRAWINGS FOR SPECIFIC ABBREVIATIONS USED.

PLUMBING FIXTURE SCHEDULE

MARK	DESCRIPTION	SERVICE						BASED ON:			REMARKS
		TRAP	S/W	V	CW	TW	HW	ITEM	MANUFACTURER	MODEL	
PF-5	SERVICE SINK	3"	3"	2"	1/2"	-	1/2"	FAUCET DRAIN TRIM	MUSTEE	63M	FAUCET AMERICAN STANDARD 8344.212

NOTES:
1. PROVIDE ALL REQUIRED HANGERS, MOUNTING BRACKETS, AND HARDWARE FOR A COMPLETE INSTALLATION PER MANUFACTURES INSTRUCTIONS.

ELECTRIC DOMESTIC HOT WATER HEATER SCHEDULE

TAG	MANUFACTURER	MODEL	LOCATION	HEATER KW	STORAGE CAPACITY GAL.	STORAGE WATER TEMP SETPOINT (DEG F)	ELECTRICAL		DIMENSION	APPROX. SHIPPING WEIGHT (LBS)
							V-PH-HZ	AMPS	HxD (IN)	
WH-1	BRADFORD WHITE	LE120L3-3	JANITOR CLOSET	1.5	19	140	120-1-60	12.5	24.75x18	58

NOTES:

FLOOR DRAIN SCHEDULE

TAG	TYPE	MANUFACTURER	MODEL	SERVICE
FD-1	ADJUSTABLE	ZURN	FD-2320-R5	ALL SPACES

NOTES:
1. PROVIDE THE FOLLOWING FOR FD-1; CHORME PLATED STRAINER ASSEMBLY, 6" NICKEL HEAD ASSEMBLY, AND VANDAL PROOF.
2. PROVIDE BARRIER-TYPE TRAP SEAL PROTECTION DEVICE ZURN Z1072 OR APPROVED EQUAL.

REDUCED PRESSURE ZONE VALVE SCHEDULE

TAG	MANUFACTURER	MODEL	LOCATION	SIZE (IN)	PRESSURE DROP (PSI)
RPZ-1	WATTS	LF009-S	SPRINKLER ROOM	2	10

NOTES:
1. PROVIDE STRAINER.

WALL HYDRANT SCHEDULE

TAG	TYPE	MANUFACTURER	MODEL
NFHB	WALL HYDRANT	ZURN	Z1320XL

PLUMBING DRAWING LIST

SHEET NO.	SHEET NAME	REVISON NO.	REVISION DATE
K-P-01	PLUMBING NOTES, SYMBOLS, ABBREVIATIONS AND DRAWING LIST	0	-
K-P-21	PLUMBING GROUND FLOOR DEMOLITION PLAN	0	-
K-P-21	PLUMBING GROUND FLOOR CONSTRUCTION PLAN	0	-
K-P-81	PLUMBING DETAILS	0	-

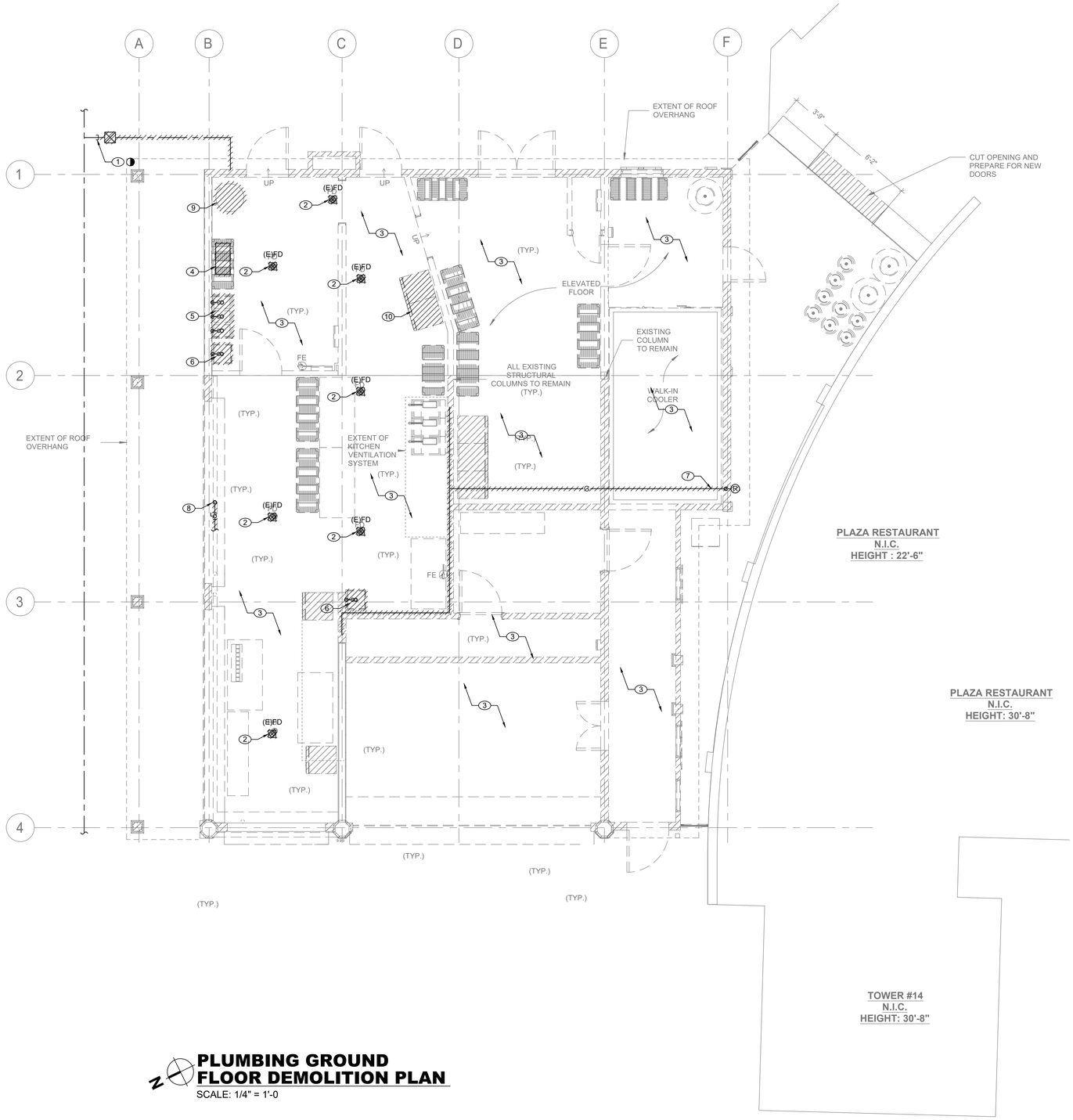

PLUMBING GROUND FLOOR DEMOLITION PLAN

SCALE: 1/4" = 1'-0

PLUMBING DEMOLITION NOTES:

1. CONTRACTOR CUT AND CAP UNDERGROUND EXISTING DOMESTIC WATER SERVICE OUTSIDE OF AREA OF WORK. REMOVE EXISTING CURB VALVE.
2. REMOVE EXISTING FLOOR DRAIN WITH ALL ASSOCIATED PIPING. CUT AND CAP EXISTING SANITARY PIPING BELOW FINISH FLOOR.
3. CONTRACTOR TO REMOVE ALL PLUMBING FIXTURES, EQUIPMENT, PIPING AND VALVES. ABANDON EXISTING UNDERGROUND PIPING IN PLACE. SANITARY PIPING SHALL NOT HAVE UNVENTED DEAD ENDS LONGER THAN TWO FEET. REMOVE UNDERGROUND PIPING THAT IN CONFLICT WITH NEW CONSTRUCTION.
4. REMOVE EXISTING GREASE INTERCEPTOR WITH ALL ASSOCIATED PIPING.
5. REMOVE EXISTING 3-COMPARTMENT SINK WITH ALL ASSOCIATED PIPING.
6. REMOVE EXISTING SINK WITH ALL ASSOCIATED PIPING.
7. DISCONNECT EXISTING PROPANE LINE FROM PROPANE EQUIPMENT AND REMOVE ALL PROPANE PIPING INCLUDING VALVES AND REGULATOR. REMOVE PROPANE EQUIPMENT.
8. REMOVE ALL EXISTING DOMESTIC WATER PIPING ABOVE FINISH FLOOR AND ABONDON BELOW FINISH FLOOR.
9. REMOVE EXISTING ELECTRIC WATER HEATER WITH ALL ASSOCIATED PIPING.
10. REMOVE EXISTING ICE MAKING MACHINE WITH ALL ASSOCIATED PIPING.

GENERAL NOTES:

1. ALL EXISTING PIPING ARE SHOWN AS A REFERENCE ONLY. CONTRACTOR SHALL FIELD VERIFY LOCATIONS AND SIZES FOR ALL EXISTING SERVICES PRIOR TO DEMOLITION.
2. COORDINATE WITH FACILITY PRIOR TO SHUTDOWN OF DOMESTIC WATER SYSTEM FOR ANY DEMOLITION AND CONSTRUCTION WORK.

CONSULTANT INFORMATION

LiRo Engineers, Inc.
A LiRo Group Company
Syosset, N.Y. 516-214-8157[T]

CONSULTANT SEAL

STATE OF NEW YORK · FRANK F. GLUSSE · No. 090111-1 · LICENSED PROFESSIONAL ENGINEER

REVISION NUMBER	DATE	MADE BY	APP'D BY	REVISION

RECORD DRAWING CERTIFICATION

☐ AS BUILT – CHANGES AS NOTED ☐ AS BUILT – NO CHANGES

CONTRACTOR
NAME
SIGNATURE
TITLE DATE

PROJECT COORDINATOR
NAME
SIGNATURE
TITLE DATE

WESTCHESTER COUNTY, NEW YORK
DEPARTMENT OF PUBLIC WORKS AND TRANSPORTATION
DIVISION OF ENGINEERING

INFRASTRUCTURE REHABILITATION - PHASE 3
PLAYLAND PARK, RYE, NEW YORK
RESTAURANT KITCHEN WITH FOOD VENDING
PLUMBING GROUND FLOOR DEMOLITION PLAN

CONTRACT NUMBER	22-523
SHEET NUMBER	K-P-11
DWG NO.:	546 of 664
SCALE:	AS INDICATED
DATE:	08/23/2022
DPW FILE NUMBER	1-118-P-1295-0
REV. NO.	0

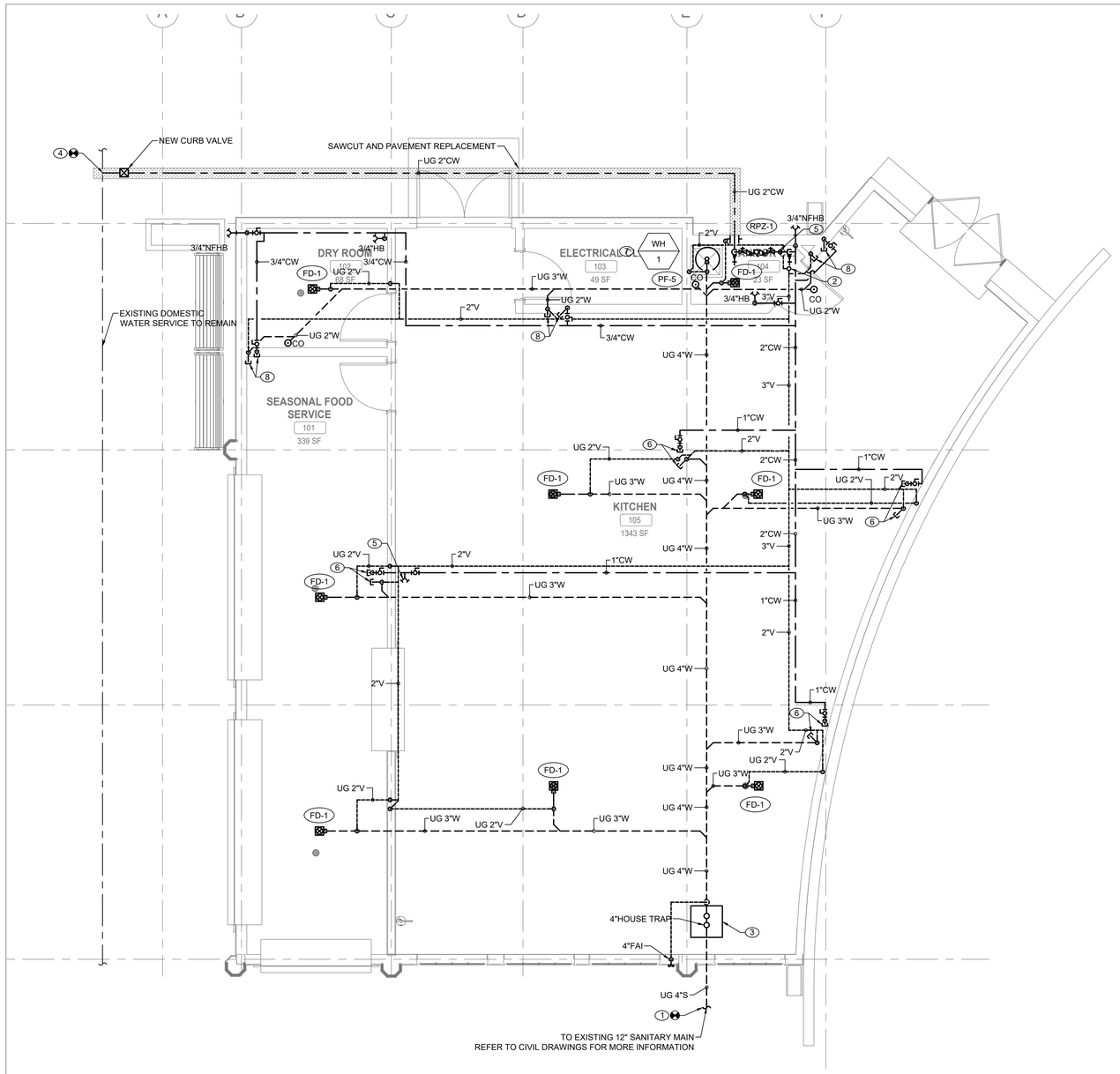

PLUMBING GROUND FLOOR CONSTRUCTION PLAN

SCALE: 1/4" = 1'-0

PLUMBING CONSTRUCTION NOTES:

1. CONNECT NEW 4" SANITARY SERVICE TO SEWER MAIN. CONTRACTOR TO VERIFY THE INVERT, SIZE, AND MATERIAL OF THE SEWER SERVICE TO FACILITATE NEW SANITARY SERVICE CONNECTION. COORDINATE CONNECTION WITH CIVIL DRAWINGS
2. PROVIDE NEW 4" VENT THRU ROOF.
3. PROVIDE NEW 4"HOUSE TRAP IN PIT. PROVIDE ACCESS DOOR FOR MAINTENANCE. PROVIDE 4" FRESH AIR INTAKE THRU EXTERIOR WALL. TERMINATE VENT WITH INSECT SCREEN. HOUSE TRAP SHALL BE PROTECTED FROM FREEZING.
4. CONNECT NEW 2" DOMESTIC COLD WATER SERVICE TO EXISTING WATER MAIN. PROVIDE NEW CURB VALVE.
5. PROVIDE A COMPRESSED AIR CONNECTION FOR WINTERIZING.
6. PROVIDE 3"W AND 1"CW STUB-UP FOR FUTURE KITCHEN FIXTURES EXPOSED NEXT TO THE WALL. CONNECTIONS SHALL BE ACCESSIBLE AFTER CONSTRUCTION.
7. PROVIDE NEW MOP SINK WITH P-TRAP, FAUCET, SHUTOFF VALVES AND ALL ASSOCIATED PIPING. INSTALL NEW STORAGE TYPE ELECTRIC DOMESTIC WATER HEATER FOR MOP SINK NEEDS. INSTALL WATER HEATER ABOVE MOP SINK AS HIGH AS POSSIBLE ON BRACKETS TO KEEP REQUIRED CLEARANCES FOR MAINTENANCE. PROVIDE DRIP PAN WITH DRAIN PIPING.
8. PROVIDE 2"W AND 3/4"CW STUB-UP FOR FUTURE KITCHEN FIXTURES INSIDE THE WALL. CONNECTIONS SHALL BE ACCESSIBLE AFTER CONSTRUCTION.

GENERAL NOTES:

1. COORDINATE WITH FACILITY PRIOR TO SHUTDOWN OF WATER DISTRIBUTION SYSTEM FOR ANY DEMOLITION AND CONSTRUCTION WORK.
2. PROVIDE DRAIN VALVES AT BOTTOM FOR EACH BRANCH. PROVIDE ACCESS PANELS TO ALL VALVES ABOVE CEILING AND BEHIND WALLS.
3. INSTALL NEW WATER PIPING WITH PROPER SLOPES TO AVOID WATER TRAPS DURING WINTER SEASON.
4. CONTRACTOR TO COORDINATE WITH FACILITY WHEN WORKING AROUND OR ABOVE THE RIDE COMPONENTS, AND PROVIDE ALL NECESSARY MEASURES TO PROTECT THESE COMPONENTS PER THE REQUIREMENTS OF THE FACILITY.
5. UPON COMPLETION, SYSTEM SHALL BE TESTED FOR PROPER OPERATION.
6. SEWER CROSSING WATER MAINS, CONDUITS, OR OTHER UTILITY SHALL BE MINIMUM 18" CLEARANCE BETWEEN THE OUTSIDE OF THE UTILITY AND OUTSIDE OF THE SEWER. THE CROSSINGS SHALL BE ARRANGED SO THAT THE SEWER JOINTS WILL BE EQUIDISTANT AND AS FAR AS POSSIBLE FROM THE WATER MAIN JOINTS.

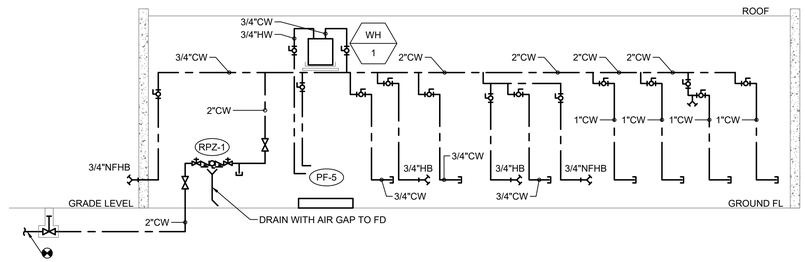

1 / P-21 **DOMESTIC WATER RISER DIAGRAM**

SCALE: NOT TO SCALE

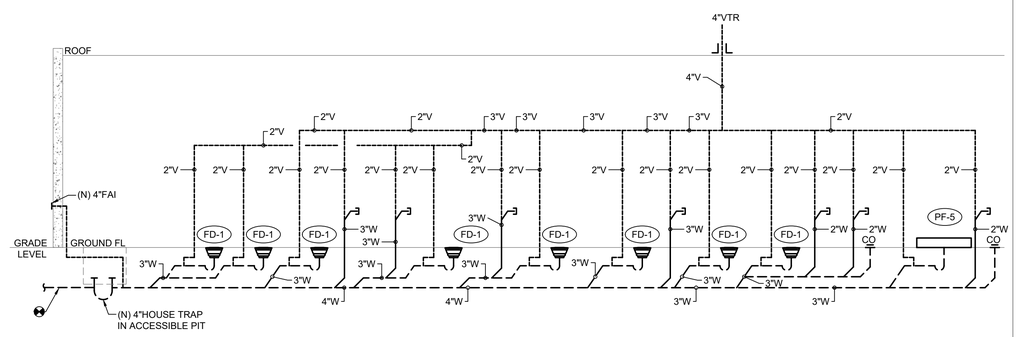

2 / P-21 **SANITARY RISER DIAGRAM**

SCALE: NOT TO SCALE

CONSULTANT INFORMATION

LiRo Engineers, Inc.
A LiRo Group Company
Syosset, N.Y. 516-214-8157[T]

CONSULTANT SEAL

STATE OF NEW YORK · FRANK F. ULIANO · No. 090111-1 · LICENSED PROFESSIONAL ENGINEER

REVISION NUMBER	DATE	MADE BY	APP'D BY	REVISION

RECORD DRAWING CERTIFICATION

☐ AS BUILT – CHANGES AS NOTED ☐ AS BUILT – NO CHANGES

CONTRACTOR: NAME / SIGNATURE / TITLE / DATE

PROJECT COORDINATOR: NAME / SIGNATURE / TITLE / DATE

WESTCHESTER COUNTY, NEW YORK
DEPARTMENT OF PUBLIC WORKS AND TRANSPORTATION
DIVISION OF ENGINEERING

INFRASTRUCTURE REHABILITATION - PHASE 3
PLAYLAND PARK, RYE, NEW YORK
RESTAURANT KITCHEN WITH FOOD VENDING
PLUMBING GROUND FLOOR CONSTRUCTION PLAN

CONTRACT NUMBER	22-523
SHEET NUMBER	K-P-21
DWG NO.:	547 of 664
SCALE:	AS INDICATED
DATE:	08/23/2022
DPW FILE NUMBER	1-118-P-1296-0
REV. NO.	0

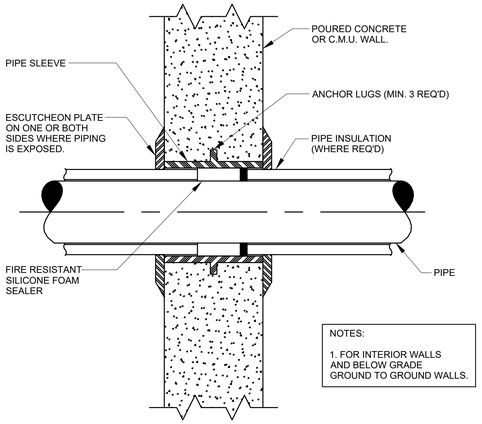

1 / P-81 PIPE SLEEVE THROUGH WALL DETAIL

SCALE: NOT TO SCALE

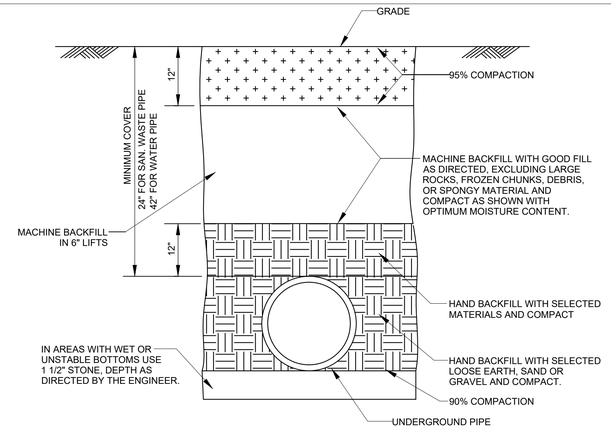

2 / P-81 PIPE TRENCH DETAIL

SCALE: NOT TO SCALE

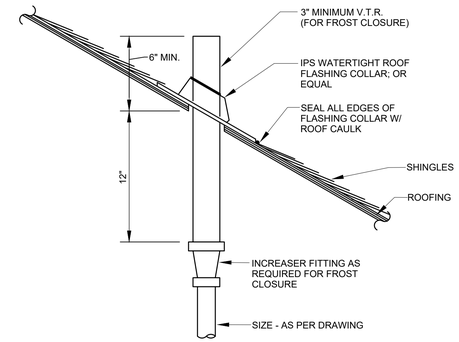

3 / P-81 PLUMBING VENT THROUGH PITCHED ROOF DETAIL

SCALE: NOT TO SCALE

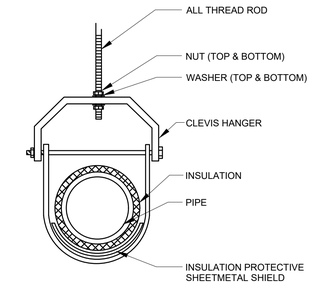

4 / P-81 TYPICAL CLEVIS HANGER DETAIL

SCALE: NOT TO SCALE

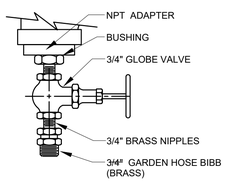

5 / P-81 DRAIN VALVE DETAIL

SCALE: NOT TO SCALE

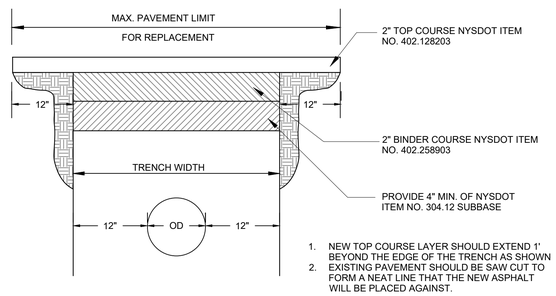

6 / P-81 ASPHALTIC MACADAM PAVEMENT REPLACEMENT

SCALE: NOT TO SCALE

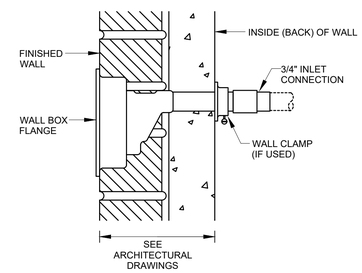

7 / P-81 FREEZE PROOF WALL HYDRANT

SCALE: NOT TO SCALE

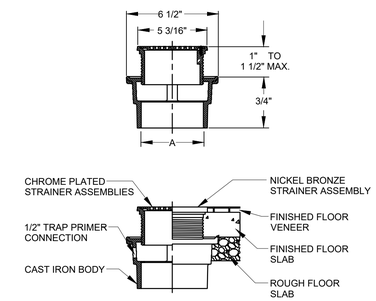

8 / P-81 FLOOR DRAIN DETAIL

SCALE: NOT TO SCALE

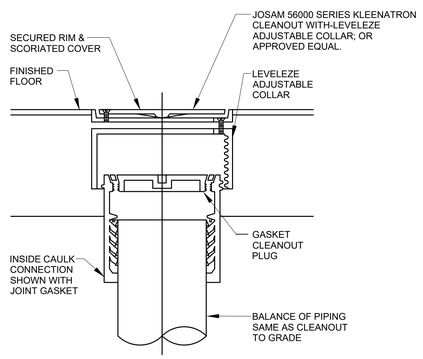

9 / P-81 FLOOR CLEANOUT DETAIL

SCALE: NOT TO SCALE

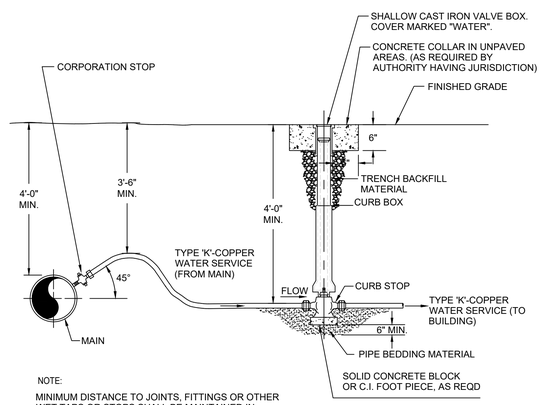

10 / P-81 COPPER WATER SERVICE AND CURB STOP

SCALE: NOT TO SCALE

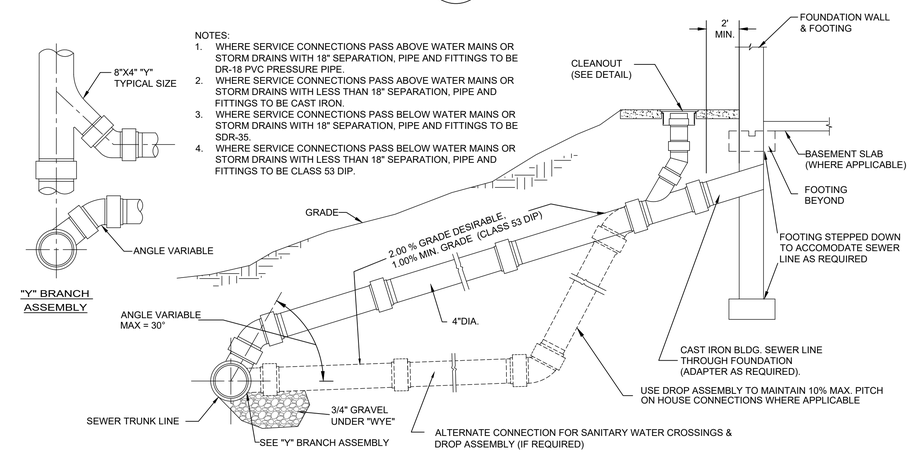

11 / P-81 SEWER SERVICE CONNECTION/ DROP ASSEMBLY

SCALE: NOT TO SCALE

CONSULTANT INFORMATION

LiRo Engineers, Inc.
A LiRo Group Company
Syosset, N.Y. 516-214-8157[T]

CONSULTANT SEAL

STATE OF NEW YORK · FRANK F. LILIOSE · No. 090111-1 · LICENSED PROFESSIONAL ENGINEER

REVISION NUMBER	DATE	MADE BY	APP'D BY	REVISION

RECORD DRAWING CERTIFICATION

☐ AS BUILT – CHANGES AS NOTED ☐ AS BUILT – NO CHANGES

CONTRACTOR: NAME ____ SIGNATURE ____ TITLE ____ DATE ____

PROJECT COORDINATOR: NAME ____ SIGNATURE ____ TITLE ____ DATE ____

WESTCHESTER COUNTY, NEW YORK
DEPARTMENT OF PUBLIC WORKS AND TRANSPORTATION
DIVISION OF ENGINEERING

INFRASTRUCTURE REHABILITATION PHASE 3
PLAYLAND PARK, RYE, NEW YORK
RESTAURANT KITCHEN WITH FOOD VENDING
PLUMBING DETAILS

CONTRACT NUMBER	22-523
SHEET NUMBER	K-P-81
DWG NO.:	548 of 664
SCALE:	AS INDICATED
DATE:	08/23/2022
DPW FILE NUMBER	1-118-P-1297-0
REV. NO.	0

MECHANICAL GENERAL NOTES

1. ALL WORK AND MATERIALS SHALL BE PURCHASED AND INSTALLED IN ACCORDANCE WITH ALL NATIONAL & NEW YORK STATE CODES AND REGULATIONS (AS WELL AS ALL APPLICABLE LOCAL CODES & REGULATIONS). THE CONTRACTOR SHALL BE RESPONSIBLE TO ENSURE THAT ALL HVAC WORK IS PROVIDED AND INSTALLED IN STRICT ACCORDANCE WITH SEISMIC REQUIREMENTS.
2. DO NOT SCALE FROM THESE DRAWINGS.
3. THE EXACT MOUNTING HEIGHTS AND LOCATIONS OF ALL HVAC EQUIPMENT SHALL BE FIELD VERIFIED AND COORDINATED WITH ALL OTHER MECHANICAL, ELECTRICAL, PLUMBING, FIRE SPRINKLER, ARCHITECTURAL AND STRUCTURAL SYSTEMS. DURING SHOP DRAWINGS SUBMISSIONS, SHOW ALL MOUNTING HEIGHTS OF DUCTWORK, UNITS, ETC.
4. VERIFY ALL EQUIPMENT VOLTAGES WITH THE ELECTRICAL DESIGN PRIOR TO ORDERING EQUIPMENT.
5. PROVIDE PHASE LOSS PROTECTION FOR ALL POLY-PHASE MOTOR DEVICES.
6. DUCTWORK SHALL BE CONSTRUCTED OF GALVANIZED SHEET STEEL IN STRICT COMPLIANCE WITH THE LATEST EDITION OF THE ASHRAE, NFPA, AND SMACNA GUIDE RECOMMENDATIONS. ALL DUCTS TO HAVE PITTSBURGH TYPE LOCK FOR LONGITUDINAL SEAMS AND DRIVE SLIP / "S" SLIP FOR TRANSVERSE JOINTS. "DUCT-MATE" JOINT SYSTEM IS ACCEPTABLE IN LIEU OF PRIOR SEAM SYSTEMS. SIZES AS SHOWN INDICATE INSIDE CLEAR DIMENSIONS OF THE AIR PASSAGE. DUCTWORK SHALL BE FULLY INSULATED AS PER APPLICABLE CODES AND WRITTEN SPECIFICATIONS.
7. DUCT SIZES MUST BE VERIFIED FOR CLEARANCES AT THE JOB SITE PRIOR TO FABRICATION. DIMENSIONS MAY BE CHANGED TO ACCOMMODATE CONSTRUCTION AS LONG AS EFFECTIVE CROSS-SECTIONAL AREA IS MAINTAINED. DUCT TRANSITIONS SHALL BE CONSTRUCTED WITH A SLOPE OF 1" TO 4". ALL DEVIATIONS FROM ORIGINAL CONTRACT DRAWINGS SHALL BE REVIEWED BY ENGINEER DURING THE SHOP DRAWING PROCESS.
8. PROVIDE MANUAL BALANCING DAMPERS AS REQUIRED TO PROPERLY BALANCE EACH INDIVIDUAL AIR DISTRIBUTION SYSTEM. IF THE LOCATION OF THE BALANCING DAMPER IS NOT DEFINED ON THE DRAWINGS, THE FOLLOWING MINIMUMS STANDARDS SHALL GOVERN. ALL SUPPLY, RETURN, AND EXHAUST MAIN BRANCHES FROM TRUNKS, EACH SPLIT AND ALL SUB- BRANCHES FROM MAIN SHALL INCORPORATE BALANCING DAMPERS.
9. PROVIDE FLEXIBLE CONNECTORS AT ALL DUCT CONNECTIONS TO VIBRATING EQUIPMENT. THESE CONNECTORS SHALL BE INSTALLED IN CLOSE PROXIMITY TO SUCH EQUIPMENT.
10. PROVIDE FIRE DAMPERS WITH RATED ACCESS DOORS AT ALL DUCT PENETRATIONS THROUGH FIRE RATED WALLS, SMOKE AND FIRE STOPPING, SHAFT, FLOORS, RATED CEILINGS AND PARTITIONS AS REQUIRED TO MAINTAIN ARCHITECTURAL FIRE RATINGS. REFER TO THE ARCHITECTURAL PLANS AND SPECIFICATIONS FOR LOCATIONS AND FIRE RATING REQUIREMENTS. CONTRACTOR MUST FULLY REVIEW ALL ARCHITECTURAL AND ENGINEERING DRAWINGS AND VISIT THE SITE PRIOR TO SUBMITTING THE BID. NO EXTRAS WILL BE ALLOWED.
11. ALL ACCESS DOORS REQUIRED IN GENERAL CONSTRUCTION ARE TO BE PROVIDED AND INSTALLED BY THE CONTRACTOR. IT IS THE RESPONSIBILITY OF THE CONTRACTOR TO IDENTIFY SIZE, TYPE AND LOCATION OF SUCH DOORS FOR PROPER ACCESS TO ALL CONCEALED HVAC EQUIPMENT, VALVES AND OTHER RELATED EQUIPMENT. THE CONTRACTOR SHALL IDENTIFY THESE REQUIREMENTS ON A COORDINATED SHOP DRAWING PRIOR TO SYSTEM FABRICATION AND INSTALLATION.
12. ALL CEILING MOUNTED EQUIPMENT MUST BE SUPPORTED DIRECTLY FROM BUILDING STRUCTURE WITH COMBINATION SPRING AND NEOPRENE-IN-SHEAR HANGERS AND ROD. PROVIDE SUPPLEMENTARY STEEL AS REQUIRED TO ADEQUATELY SUPPORT THE LOAD.
13. THE CONTRACTOR MUST CONTRACT AN INDEPENDENT NEBB CERTIFIED AIR BALANCING & TESTING COMPANY TO PERFORM THE AIR BALANCING WORK AND ASSOCIATED SYSTEM AIR BALANCING REPORT. ALL WORK SHALL BE PERFORMED IN STRICT COMPLIANCE WITH ALL APPLICABLE CODES, REGULATIONS, PLANS AND WRITTEN SPECIFICATIONS. SUBMIT THE FINAL AIR BALANCE REPORT TO THE ENGINEER FOR REVIEW AND APPROVAL PRIOR TO SUBSTANTIAL COMPLETION OF THE PROJECT, AS DETERMINED BY THE AND OWNER/CLIENT. THE AIR BALANCE REPORT MUST INCLUDE ALL SUPPLY, RETURN, & EXHAUST AIR TERMINALS, FRESH AIR (OUTSIDE AIR) INTAKE AND VENTILATION EXHAUST CFM RATES FOR ALL UNITS. ALSO INCLUDE ACTUAL SUPPLY & RETURN AIR VELOCITY & STATIC PRESSURE READINGS ALONG WITH ALL MOTOR AMPERAGES FOR ALL UNITS.
14. THE CONTRACTOR IS TO INCLUDE IN THEIR BID ALL LOW VOLTAGE CONTROL WIRING, THERMOSTATS, RELAYS, TRANSFORMERS, STARTERS ETC FOR A COMPLETE OPERATING CONTROL SYSTEM AS DESCRIBED IN THE SEQUENCE OF OPERATIONS, THE CONTRACTOR IS ALSO RESPONSIBLE FOR LINE VOLTAGE CONTROL FOR EXHAUST FANS CONTROLLED FROM LIGHT SWITCH AND THERMOSTATS. ALL CONTROL WIRING IN THE AREAS THAT DO NOT HAVE DROPPED CEILINGS THE CONTRACTOR MUST PROVIDE ALL CONTROL WIRING CONDUIT. IN AREAS OF DROPPED CEILING PLENUM RATED CONTROL WIRING CAN BE RUN EXPOSED ABOVE CEILING.
15. ALL MECHANICAL EQUIPMENT SHALL BE INSTALLED PER MANUFACTURER'S REQUIREMENTS/SPECIFICATIONS.

CODE REFERENCE

2020 NEW YORK STATE BUILDING CODE
2020 NEW YORK STATE MECHANICAL CODE
2020 NEW YORK STATE ENERGY CONSERVATION CODE

MECHANICAL DEMOLITION NOTES

1. CONTRACTOR SHALL BE RESPONSIBLE FOR DEMOLITION OF MECHANICAL EQUIPMENT AND MATERIAL RELATING TO THEIR RESPECTIVE TRADE.

2. THE CONTRACTOR SHALL REMOVE, RELOCATE, REPLACE, ADJUST, ADAPT AND MODIFY EXISTING EQUIPMENT AND/OR SYSTEMS AS REQUIRED WHEN SUCH WORK IS UNCOVERED AND FOUND TO INTERFERE WITH COMPLETION OF WORK IN THIS CONTRACT OR OTHER CONTRACT WORK.

3. EXECUTE THE DEMOLITION IN CAREFUL AND ORDERLY MANNER WITH THE LEAST POSSIBLE DISTURBANCE TO THE PUBLIC, EGRESS OR THE FUNCTIONING OF THE EXISTING BUILDING.

4. TAKE NECESSARY PRECAUTIONS TO PREVENT DUST AND DIRT FROM RISING BY WETTING DEMOLISHED DEBRIS. EXCESSIVE USE OF WATER WILL NOT BE PERMITTED.

5. PRIOR TO DEMOLITION, CONTRACTOR SHALL REVIEW WITH OWNER ALL MATERIALS TO BE REMOVED. SHOULD THE OWNER WANT TO KEEP ANY MATERIALS THE CONTRACTOR SHALL REMOVE AND DELIVER THE PARTS TO THE OWNER ON THE SITE WHERE SO DIRECTED. OTHERWISE ALL DEMOLISHED OR REMOVED MATERIALS SHALL BECOME THE PROPERTY OF THE CONTRACTOR AND SHALL BE REMOVED FROM THE SITE AND BE DISPOSED OF IN A LEGAL MANNER.

6. DEMOLITION SHALL INCLUDE REMOVAL OF ALL PARTS AND PIECES IN THEIR ENTIRETY BACK TO POINTS INDICATED OR IF NOT INDICATED BACK TO THEIR POINT OF SOURCE.

7. WHERE CONDITIONS PROHIBIT TOTAL REMOVAL OF THE WORK, THE REMAINING PORTION SHALL BE CUT FLUSH WITH THE SURROUNDING SURFACE AND BE CAPPED, PLUGGED OR SEALED AND THE SURROUNDING SURFACE SHALL BE REFINISHED IN AN APPROVED MANNER.

9. DO NOT REMOVE EXISTING STRUCTURAL WORK. DO NOT REMOVE OPERATIONAL ELEMENTS AND SAFETY-RELATED COMPONENTS IN A MANNER RESULTING IN A REDUCTION OF CAPACITIES TO PERFORM IN THE MANNER INTENDED OR RESULTING IN DECREASED OPERATIONAL LIFE, INCREASED MAINTENANCE, OR DECREASED SAFETY.

10. REMOVALS, DISCONNECTIONS, AND RELOCATIONS SHALL BE PERFORMED BY WORKMEN SKILLED IN THE TRADE INVOLVED AND SHALL BE EMPLOYED BY A CONTRACTOR LICENSED IN THE TRADE INVOLVED. ALL WORK SHALL BE DONE IN ACCORDANCE WITH ACCEPTED TRADE PRACTICES.

11. PROVIDE ADEQUATE TEMPORARY SUPPORT FOR WORK TO REMAIN, TO PREVENT FAILURE. DO NOT ENDANGER OTHER WORK.

12. PROTECTION: PROVIDE ADEQUATE PROTECTION WHERE REQUIRED FOR THE PRESENT BUILDING AND ITS CONTENTS. TEMPORARY DUSTPROOF BARRIERS AND BARRICADES SHALL BE ERECTED WHERE REQUIRED FOR PROTECTION OF PERSONNEL, PROTECTION FROM DUST AND DIRT, FOR SECURITY, FIRE AND WEATHER PROTECTIVE REASONS.

13. CONTRACTOR SHALL TAKE EVERY PRECAUTION AGAINST FIRE BY EMPLOYING FIRE DEPARTMENT TYPE HOSES AND PORTABLE FIRE EXTINGUISHERS AS REQUIRED BY OSHA AND/OR THE OWNER'S INSURANCE UNDERWRITER.

14. BEFORE STARTING DEMOLITION OPERATIONS, PROVIDE THE NECESSARY PROTECTIVE DEVICES, WHERE REQUIRED, AND IN STRICT ACCORDANCE WITH OSHA RULES AND REGULATIONS.

14. USE TEMPORARY ENCLOSURES, OR OTHER SUITABLE METHODS TO LIMIT DUST AND DIRT RISING AND SCATTERING TO LOWEST PRACTICAL LEVEL. COMPLY WITH GOVERNING REGULATIONS PERTAINING TO ENVIRONMENTAL PROTECTION.

15. FIELD VERIFY DEMOLITION REQUIREMENTS AND EXISTING CONDITIONS. DEMOLITION NOTES ARE INDICATED IN NOTE FORM.

16. CONTRACTOR SHALL ESTABLISH A PATH OF TRAVEL AND TIME SCHEDULE FOR THE REMOVAL OF ALL DEBRIS AND WASTE, AND HAVE THIS APPROVED BY OWNER. CONTRACTOR IS TO ENSURE THAT ALL CORRIDORS AND PUBLIC AREAS BE KEPT FREE OF OBSTRUCTIONS, DEBRIS, AND ARE TO BE BROOM SWEPT CLEAN AT ALL TIMES.

17. CONTRACTOR SHALL VISIT THE SITE AND BECOME INFORMED AS TO THE CONDITION OF THE PREMISES AND THE EXTENT AND CHARACTER OF WORK REQUIRED. NO ADDITIONAL COMPENSATION WILL BE APPROVED DUE TO FIELD CONDITIONS.

NYSECC ENERGY COMPLIANCE STATEMENT:

PER SECTION C101.7 OF THE 2020 NYSECC HISTORIC BUILDINGS ARE EXEMPT FROM THE REQUIREMENTS OF THE ENERGY CODE.

HVAC SYMBOL LIST

IDENTIFIER	DESCRIPTION
	NEW DUCTWORK OR PIPING
	EXISTING DUCTWORK OR PIPING TO BE REMOVED
	EXISTING DUCTWORK OR PIPING TO REMAIN
24X12 / 24X12	DOUBLE-LINE AND SINGLE-LINE RECTANGULAR DUCT, FIRST NUMBER INDICATES SIDE IN VIEW IN INCHES, SECOND NUMBER INDICATES SIDE IN DEPTH IN INCHES
	FLEXIBLE DUCTWORK
	REGULAR SUPPLY AIR DUCT (UP AND DOWN)
	REGULAR RETURN AIR DUCT (UP AND DOWN)
	REGULAR EXHAUST AIR DUCT (UP AND DOWN)
	REGULAR OUTSIDE AIR DUCT (UP AND DOWN)
VD	VOLUME DAMPER
BD	BACKDRAFT DAMPER
	MOTOR OPERATED DAMPER
XXX / XX	EQUIPMENT TAG EQUIPMENT NUMBER
XXX / X-XXX	DETAIL TAG/CALL OUT TAG MECHANICAL SHEET NUMBER
T	THERMOSTAT
	EXHAUST GRILLE
F#	REFER TO SUPPLEMENTAL FIGURE INDICATED BY NUMBER (I.E. F2 REFERS TO FIGURE 2)

HVAC ABBREVIATIONS

IDENTIFIER	DESCRIPTION
AC	DIRECT EXPANSION AIR CONDITION UNIT
CFM	CUBIC FEET PER MINUTE
COND	CONDENSATE
CU	CONDENSING UNIT
CUH	CABINET UNIT HEATER
DB	DRY BULB
DN	DOWN
EA	EXHAUST AIR
EF	EXHAUST FAN
EG	EXHAUST GRILLE
EUH	ELECTRIC UNIT HEATER
EER	ENERGY EFFICIENCY RATIO
EG	EXHAUST GRILLE
FAI	FRESH AIR INTAKE
GC	GENERAL CONTRACTOR
MBH	THOUSAND BTU PER HOUR
PC	PLUMBING CONTRACTOR
RG	RETURN GRILLE
RGL	REFRIGERANT GAS LINE
RLL	REFRIGERANT LIQUID LINE
RTU	ROOFTOP UNIT
SA	SUPPLY AIR
SD	SUPPLY DIFFUSER
TYP.	TYPICAL
VIF	VERIFY IN FIELD

SCOPE OF WORK

DEMOLITION

1. REMOVE TWO (2) EXISTING RANGE HOODS AS INDICATED.
2. REMOVE TWO (2) EXISTING FLUES AS INDICATED.
3. REMOVE TWO (2) EXISTING CEILING VENTILATION GRILLES AS INDICATED.
4. REMOVE ONE (1) EXISTING RELIEF VENT AS INDICATED.
5. REMOVE TWO (2) EXISTING ROOFTOP FANS AND ASSOCIATED DUCTWORK, CONTROLS AND ACCESSORIES.

CONSTRUCTION

1. PROVIDE ONE (1) NEW ROOFTOP AIR HANDLING UNIT RTU-1. PROVIDE DUCTWORK TO NEW SPACES AS INDICATED.
2. PROVIDE ONE (1) NEW OUTDOOR SPLIT CONDENSER AIR CONDITIONER UNIT AS INDICATED.
3. PROVIDE TWO (2) NEW CEILING RECESSED INDOOR AIR CONDITIONER UNITS AS INDICTED.
4. PROVIDE ONE (1) NEW PACKAGED TERMINAL AIR CONDITIONER UNIT AS INDICATED
5. PROVIDE ONE (1) NEW GENERAL KITCHEN/TRASH ROOM EXHAUST FAN ON ROOF AND ASSOCIATED DUCTWORK AS INDICATED.
6. PROVIDE ONE (1) NEW ATTIC EXHAUST FAN AS INDICATED.
7. PROVIDE ONE (1) NEW WALL MOUNTED ELECTRIC UNIT HEATER AS INDICATED.
8. PROVIDE TWO (2) NEW RAIN RESISTANT LOUVERS AS INDICATED.

MECHANICAL DRAWING LIST

SHEET NO.	SHEET NAME	REVISON NO.	REVISION DATE
K-M-01	MECHANICAL NOTES, SYMBOLS & LEGENDS	0	-
K-M-11	MECHANICAL 1ST FLOOR DEMOLITION PLAN	0	-
K-M-12	MECHANICAL ROOF DEMOLITION PLAN	0	-
K-M-21	MECHANICAL 1ST FLOOR CONSTRUCTION PLAN	0	-
K-M-22	MECHANICAL ATTIC FLOOR CONSTRUCTION PLAN	0	-
K-M-23	MECHANICAL ROOF CONSTRUCTION PLAN	0	-
K-M-61	MECHANICAL SCHEDULES	0	-
K-M-81	MECHANICAL DETAILS 1 OF 2	0	-
K-M-82	MECHANICAL DETAILS 2 OF 2	0	-
K-M-91	MECHANICAL CONTROLS	0	-

MECHANICAL VENTILATION SCHEDULE

SPACE DETAILS		MECH CODE REQUIREMENTS							DESIGN				
ROOM	AREA (FT²)	# PEOPLE	OA / SQ FT	OA PER PERSON	# OF FIXT (TOILET/URINALS/SLOP SINK)	EXH CFM/SQFT	EXH CFM/FIXTURE	NET OA	MIN DESIGN OA FLOW (CFM)	ACTUAL SA FLOW (CFM)	ACTUAL RA FLOW (CFM)	ACTUAL EA FLOW (CFM)	NOTES
105 KITCHEN	1347	27	0.12	7.5	-	0.7	-	943	1000	2400	1400	1000	1
102 DRY ROOM	67	-	0.12	-	-	-	-	8	100	100	-	100	1

NOTES:
1. NEW YORK STATE MECHANICAL CODE.

NATURAL VENTILATION SCHEDULE

SPACE DETAILS			DESIGN			NOTES
ROOM	AREA (SF)	4% FLOOR AREA (SF)	WINDOW FREE AREA (SF)	DOOR AREA (SF)	TOTAL OPENABLE AREA (SF)	
101 SEASONAL FOOD SERVICE	343	14	-	156	156	1,2

NOTES:
1. NEW YORK STATE MECHANICAL CODE.
2. NATURAL VENTILATION OF AN OCCUPIED SPACE SHALL BE THROUGH WINDOWS, DOORS, LOUVERS, AND OTHER OPENINGS TO THE OUTDOORS. THE MINIMUM OPENABLE AREA TO THE OUTDOORS SHALL BE 4 PERCENT OF THE FLOOR AREA BEING VENTILATED.

TABLE 1: ENERGY CODE ANALYSIS TABLE FOR MECHANICAL SYSTEMS

(PER 2020 NYS ENERGY CODE)

ITEM DESCRIPTION			PROPOSED VALUE	MINIMUM EFFECIENCY	CODE PRECRIBED VALUE AND CITATION	CITATION	SUPPORTING DOCUMENTATION
	UNIT TAG	EQUIPMENT TYPE					
HVAC EQUIPMENT PERFORMANCE	RTU-1	SINGLE PACKAGED UNIT	SEER= 12.6	SEER=11.2	MINIMUM EFFICIENCY REQUIREMENTS: ELECTRICALLY OPERATED UNITARY AIR CONDITIONERS AND CONDENSING UNITS > 65,000 Btu/H < 135,000 Btu/h	C403.2.3(1)	MECHANICAL SCHEDULES
HVAC EQUIPMENT PERFORMANCE	AC-1,AC-2, CU-1	SPLIT SYSTEM HEAT PUMP	HSPF = 11.2 SEER= 15.0	HSPF = 8.2 SEER= 14.0	MINIMUM EFFICIENCY REQUIREMENTS: ELECTRICALLY OPERATED UNITARY AIR CONDITIONERS AND CONDENSING UNITS < 65,000 Btu/h	C403.2.3(1)	MECHANICAL SCHEDULES
HVAC SYSTEM CONTROLS	ALL HEATING COOLING EQUIPMENT	THERMOSTATIC CONTROLS	DIGITAL THERMOSTATS	-	THERMOSTATIC CONTROLS FOR HVAC SYSTEM	C403.2.6	MECHANICAL SCHEDULES AND PLANS
SHUTOFF DAMPERS			GRAVITY/BACKDRAFT DAMPERS PROVIDED IN LIEU OF MOTORIZED DAMPER MOTORIZED DAMPERS PER EXCEPTIONS 1	-	BACKDRAFT DAMPER INSTALLED AT EXHAUST OPENINGS	C403.7.7	MECHANICAL SCHEDULES AND PLANS
DUCT LEAKAGE			SMACNA HVAC DUCT LEAKAGE TEST	-	SMACNA HVAC DUCT LEAKAGE TEST	PER C403	MECHANICAL DWGS. & SPECS

TABLE 2: ENERGY CODE COMPLIANCE INSPECTIONS FOR MECHANICAL SYSTEMS

(IIB - MECHANICAL AND SERVICE WATER HEATING INSPECTIONS)

	INSPECTION TEST	FREQUENCY	REFERENCE STANDARDS	INSPECTION DESCRIPTION	ECC CITATION
IIB2	SHUT-OFF DAMPERS	AS REQUIRED DURING INSTALLATION	APPROVED CONSTRUCTION DOCUMENTS	DAMPERS FOR STAIR AND ELEVATOR SHAFT VENTS AND OTHER OUTDOOR AIR INTAKES AND EXHAUST OPENINGS INTEGRAL TO THE BUILDING ENVELOPE SHALL BE VISUALLY INSPECTED TO VERIFY THAT SUCH DAMPERS, EXCEPT WHERE PERMITTED TO BE GRAVITY DAMPERS, COMPLY WITH APPROVED CONSTRUCTION DRAWINGS. MANUFACTURER'S LITERATURE SHALL BE REVIEWED TO VERIFY THAT THE PRODUCT HAS BEEN TESTED AND FOUND TO MEET THE STANDARD.	NYSECC C403.2.4.4, C403.7.7, OR ASHRAE 90.1-6.4.3.4
IIB3	HVAC AND SERVICE WATER HEATING EQUIPMENT	PRIOR TO FINAL MECHANICAL AND CONSTRUCTION INSPECTION	APPROVED CONSTRUCTION DOCUMENTS	EQUIPMENT SIZING, EFFICIENCIES AND OTHER PERFORMANCE FACTORS OF ALL MAJOR EQUIPMENT UNITS, AS DETERMINED BY THE APPLICANT OF RECORD, AND NO LESS THAN 15% OF MINOR EQUIPMENT UNITS, SHALL BE VERIFIED BY VISUAL INSPECTION AND, WHERE NECESSARY, REVIEW OF MANUFACTURER'S DATA. POOL HEATERS AND COVERS SHALL BE VERIFIED BY VISUAL INSPECTION	NYSECC C403.2, C404.2, C404.7, C406.2
IIB4	HVAC AND SERVICE WATER HEATING SYSTEM CONTROLS	AFTER INSTALLATION AND PRIOR TO FINAL ELECTRICAL AND CONSTRUCTION INSPECTION, EXCEPT THAT FOR CONTROLS WITH SEASONALLY DEPENDENT FUNCTIONALITY, SUCH TESTING SHALL BE PERFORMED BEFORE SIGN-OFF FOR ISSUANCE OF A FINAL CERTIFICATE OF OCCUPANCY	APPROVED CONSTRUCTION DOCUMENTS INCLUDING CONTROL SYSTEM NARRATIVES	NO LESS THAN 20% OF EACH TYPE OF REQUIRED CONTROLS AND ECONOMIZERS SHALL BE VERIFIED BY VISUAL INSPECTION AND TESTED FOR FUNCTIONALITY AND PROPER OPERATION. SUCH CONTROLS SHALL INCLUDE, BUT ARE NOT LIMITED TO, THERMOSTATIC AND ECONOMIZER CONTROLS	NYSECC C403.2.4, C403.2.5.1, C403.2.11, C403.3, C403.4, C404.3, C404.6, C404.7
IIB6	HVAC DUCT LEAKAGE TESTING	PRIOR TO CLOSING CEILINGS AND WALLS AND PRIOR TO FINAL CONSTRUCTION INSPECTION	APPROVED CONSTRUCTION DOCUMENTS; NYC MECHANICAL CODE	WHERE THE AIR HANDLER AND/OR SOME DUCTWORK IS IN UNCONDITIONED SPACE, DUCT-LEAKAGE TESTING SHALL BE PERFORMED EITHER AFTER ROUGH-IN OR POST-CONSTRUCTION TO ENSURE COMPLIANCE WITH ECC R403.3.3 AND R403.3.4. NOT LESS THAN 20% OF SUCH DUCTWORK SHALL BE TESTED	NYSECC C403

CONSULTANT INFORMATION
LiRo Engineers, Inc.
A LiRo Group Company
Syosset, N.Y. 516-214-8157[T]

CONSULTANT SEAL
STATE OF NEW YORK · FRANK F. ULISSE · No. 090111-1 · LICENSED PROFESSIONAL ENGINEER

REVISION NUMBER	DATE	MADE BY	APP'D BY	REVISION

RECORD DRAWING CERTIFICATION
☐ AS BUILT – CHANGES AS NOTED ☐ AS BUILT – NO CHANGES
CONTRACTOR: NAME / SIGNATURE / TITLE / DATE
PROJECT COORDINATOR: NAME / SIGNATURE / TITLE / DATE

WESTCHESTER COUNTY, NEW YORK
DEPARTMENT OF PUBLIC WORKS AND TRANSPORTATION
DIVISION OF ENGINEERING

INFRASTRUCTURE REHABILITATION - PHASE 3
PLAYLAND PARK, RYE, NEW YORK
RESTAURANT KITCHEN WITH FOOD VENDING
MECHANICAL NOTES, SYMBOLS AND LEGENDS

CONTRACT NUMBER	22-523
SHEET NUMBER	K-M-01
DWG NO.:	549 of 664
SCALE:	AS INDICATED
DATE:	08/23/2022
DPW FILE NUMBER	1-118-M-1298-0
REV. NO.	0

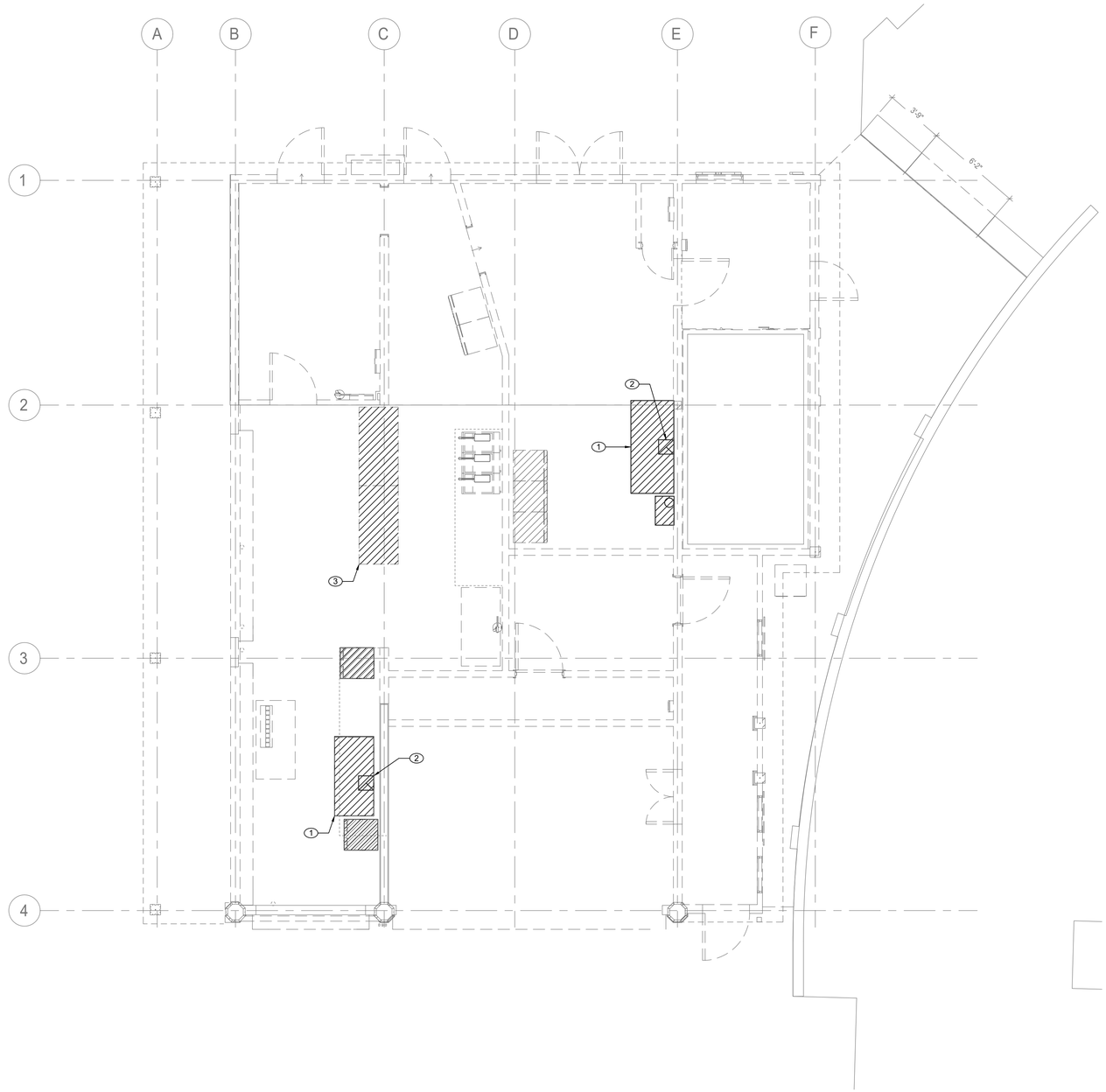

GENERAL NOTES:

1. RETURN REMOVED EXISTING EQUIPMENT TO OWNER IF IT IS IN WORKING CONDITION.
2. CONTRACTOR TO COORDINATE WITH FACILITY WHEN WORKING AROUND OR ABOVE THE RIDE COMPONENTS, AND PROVIDE ALL NECESSARY MEASURES TO PROTECT THESE COMPONENTS PER THE REQUIREMENTS OF THE FACILITY.

MECHANICAL DEMOLITION NOTES:

1. REMOVE EXISTING RANGE HOOD AND ASSOCIATED DUCTWORK AND PIPING. DEMOLISH EXISTING ANSUL FIRE PROTECTION SYSTEM AND ASSOCIATED CONTROLS. COORDINATE REMOVAL OF ANSUL SYSTEM WITH FIRE PROTECTION CONTRACTOR AND OWNER.
2. REMOVE EXISTING FLUE VENT FOR OVEN. COORDINATE WITH GC TO SEAL EXISTING WALL PENETRATION. PROVIDE FIRE STOPPING TO MATCH EXISTING.
3. REMOVE EXISTING CEILING VENTILATION GRILLES.

1 MECHANICAL FIRST FLOOR DEMOLITION PLAN

SCALE: 1/4" = 1'-0"

CONSULTANT INFORMATION

LiRo Engineers, Inc.
A LiRo Group Company
Syosset, N.Y. 516-214-8157[T]

CONSULTANT SEAL

STATE OF NEW YORK · FRANK F. ULISSE · No. 090111-1 · LICENSED PROFESSIONAL ENGINEER

REVISION NUMBER	DATE	MADE BY	APP'D BY	REVISION

RECORD DRAWING CERTIFICATION

☐ AS BUILT – CHANGES AS NOTED ☐ AS BUILT – NO CHANGES

CONTRACTOR
NAME
SIGNATURE
TITLE DATE

PROJECT COORDINATOR
NAME
SIGNATURE
TITLE DATE

WESTCHESTER COUNTY, NEW YORK
DEPARTMENT OF PUBLIC WORKS AND TRANSPORTATION
DIVISION OF ENGINEERING

INFRASTRUCTURE REHABILITATION - PHASE 3
PLAYLAND PARK, RYE, NEW YORK
RESTAURANT KITCHEN WITH FOOD VENDING
MECHANICAL FIRST FLOOR DEMOLITION PLAN

CONTRACT NUMBER	22-523
SHEET NUMBER	K-M-11
DWG NO.:	550 of 664
SCALE:	AS INDICATED
DATE:	08/23/2022
DPW FILE NUMBER	1-118-M-1299-0
REV. NO.	0

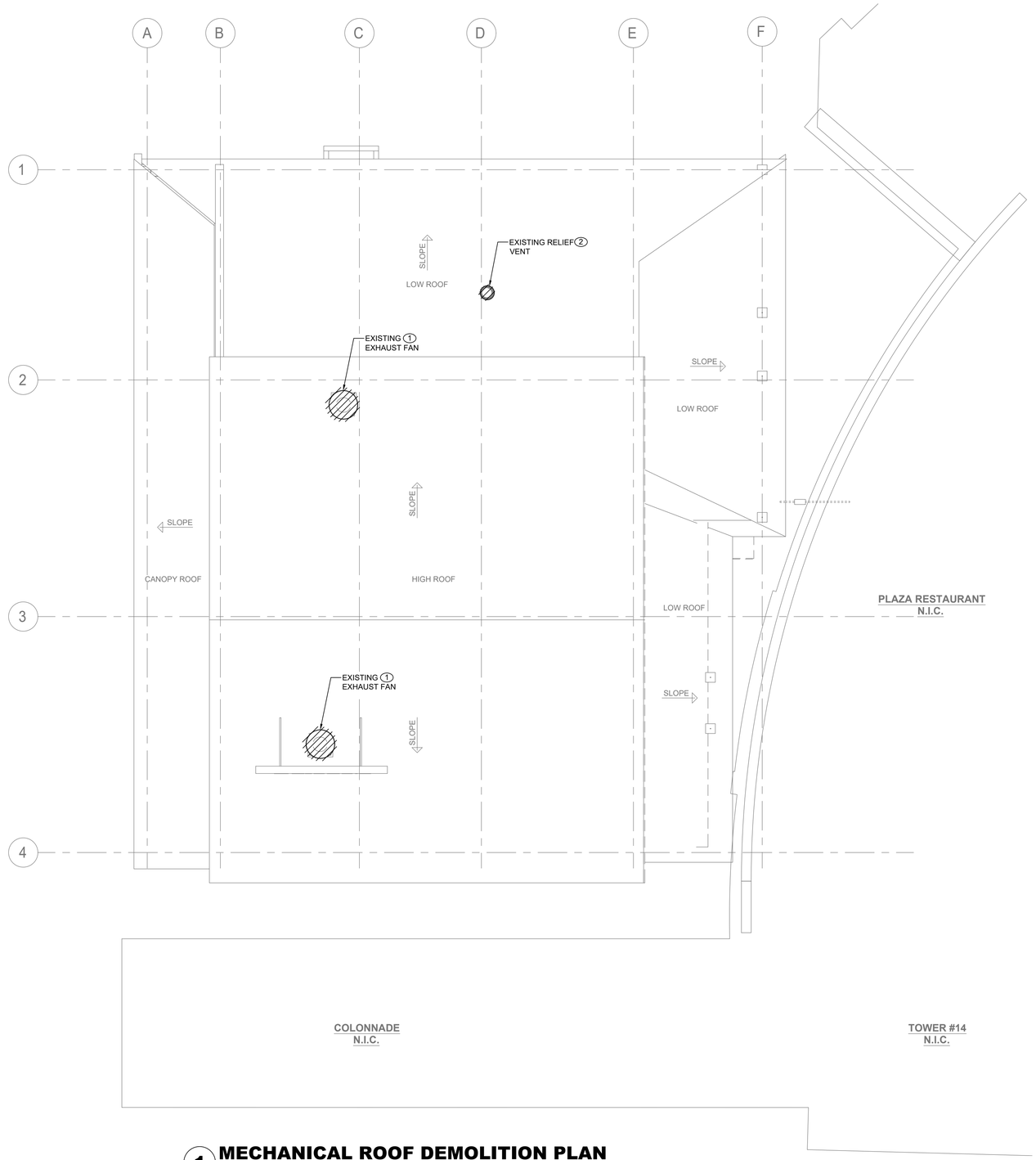

1 MECHANICAL ROOF DEMOLITION PLAN

SCALE: 1/4" = 1'-0"

GENERAL NOTES:

1. RETURN REMOVED EXISTING EQUIPMENT TO OWNER IF IT IS IN WORKING CONDITION.
2. CONTRACTOR TO COORDINATE WITH FACILITY WHEN WORKING AROUND OR ABOVE THE RIDE COMPONENTS, AND PROVIDE ALL NECESSARY MEASURES TO PROTECT THESE COMPONENTS PER THE REQUIREMENTS OF THE FACILITY.

MECHANICAL DEMOLITION NOTES:

1. DEMOLISH EXISTING EXHAUST FAN AND ASSOCIATED CONTROLS, DUCTWORK AND ACCESSORIES. COORDINATE REMOVAL OF ELECTRICAL POWER AND WIRING WITH ELECTRICAL CONTRACTOR. CONTRACTOR SHALL PATCH EXISTING ROOF PENETRATION TO MATCH EXISTING ROOF.
2. DEMOLISH EXISTING RELIEF VENT. CONTRACTOR SHALL PATCH EXISTING ROOF PENETRATION TO MATCH EXISTING ROOF.

CONSULTANT INFORMATION

LiRo Engineers, Inc.
A LiRo Group Company
Syosset, N.Y. 516-214-8157[T]

CONSULTANT SEAL

STATE OF NEW YORK · FRANK F. ULLISE · No. 090111-1 · LICENSED PROFESSIONAL ENGINEER

REVISION NUMBER	DATE	MADE BY	APP'D BY	REVISION

RECORD DRAWING CERTIFICATION

☐ AS BUILT – CHANGES AS NOTED ☐ AS BUILT – NO CHANGES

CONTRACTOR
NAME
SIGNATURE
TITLE DATE

PROJECT COORDINATOR
NAME
SIGNATURE
TITLE DATE

WESTCHESTER COUNTY, NEW YORK
DEPARTMENT OF PUBLIC WORKS AND TRANSPORTATION
DIVISION OF ENGINEERING

INFRASTRUCTURE REHABILITATION - PHASE 3
PLAYLAND PARK, RYE, NEW YORK
RESTAURANT KITCHEN WITH FOOD VENDING
MECHANICAL ROOF DEMOLITION PLAN

CONTRACT NUMBER	22-523
SHEET NUMBER	K-M-12
DWG NO.:	551 of 664
SCALE:	AS INDICATED
DATE:	08/23/2022
DPW FILE NUMBER	1-118-M-1300-0
REV. NO.	0

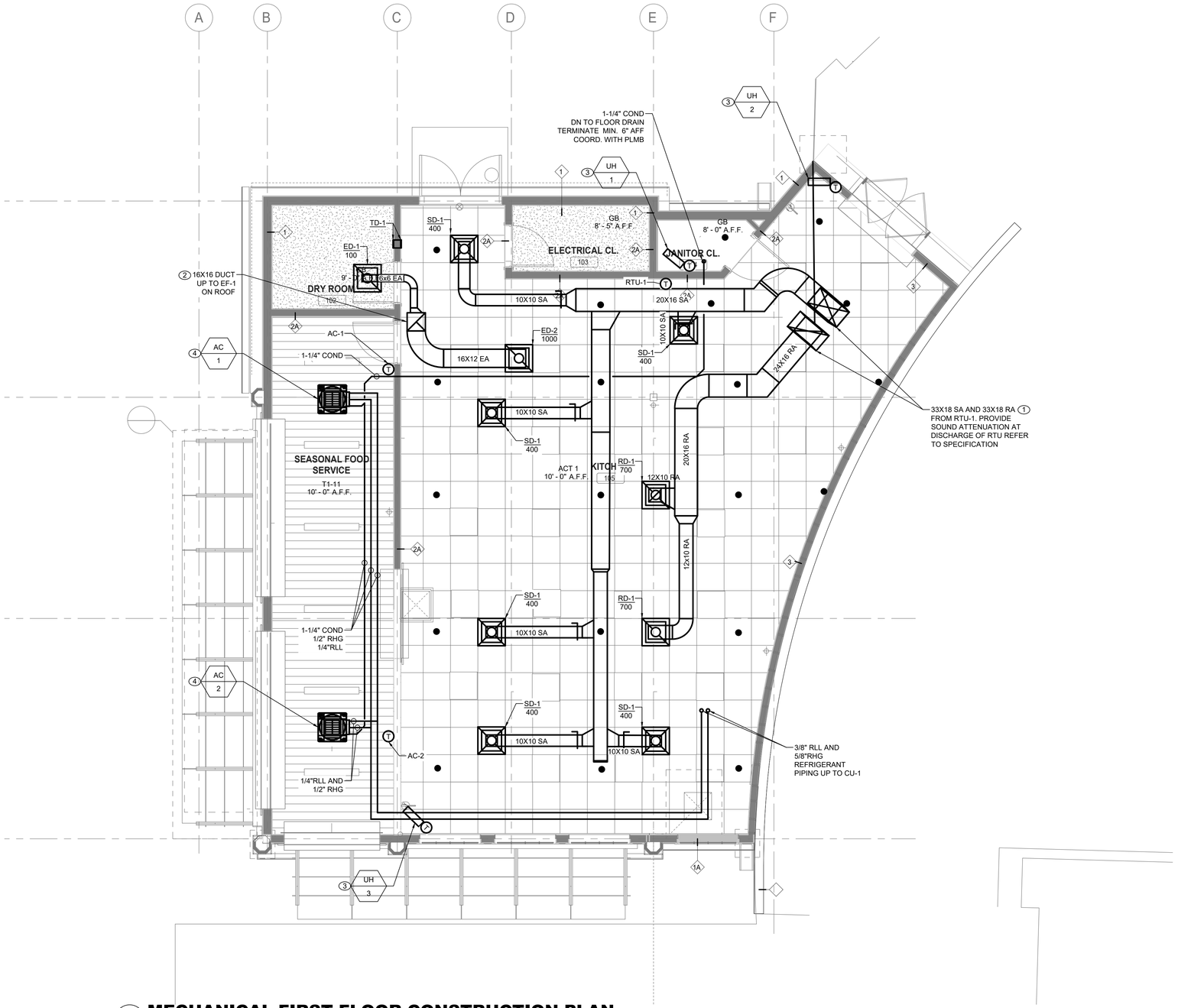

1 MECHANICAL FIRST FLOOR CONSTRUCTION PLAN

SCALE: 1/4" = 1'-0"

GENERAL NOTES:

1. CONTRACTOR TO COORDINATE WITH FACILITY WHEN WORKING AROUND OR ABOVE THE RIDE COMPONENTS, AND PROVIDE ALL NECESSARY MEASURES TO PROTECT THESE COMPONENTS PER THE REQUIREMENTS OF THE FACILITY.
2. UPON COMPLETION, SYSTEM SHALL BE TESTED FOR PROPER OPERATION.

MECHANICAL CONSTRUCTION NOTES:

1. PROVIDE SUPPLY AND RETURN DUCTWORK FROM ROOFTOP UNIT RTU-1 AND ROUTE ALONG INDICATED PATH. PROVIDE INSULATION TO ALL SUPPLY DUCTWORK. PROVIDE VOLUME DAMPERS AND SUPPLY DIFFUSERS/GRILLES AND BALANCE TO INDICATED VALUES.
2. PROVIDE EXHAUST DUCTWORK FROM KITCHEN UP TO ROOFTOP EXHAUST FAN AS INDICATED.
3. PROVIDE NEW WALL MOUNTED ELECTRIC UNIT HEATER. COORDINATE INSTALL HEIGHT IN FIELD.
4. PROVIDE NEW CEILING MOUNTED INDOOR UNITS AC-1 AND AC-2 AS SHOWN. COORDINATE ELECTRICAL POWER AND WIRING WITH ELECTRICAL DRAWINGS.

CONSULTANT INFORMATION

LiRo Engineers, Inc.
A LiRo Group Company
Syosset, N.Y. 516-214-8157[T]

CONSULTANT SEAL

STATE OF NEW YORK
FRANK F. ULISSE
No. 090111-1
LICENSED PROFESSIONAL ENGINEER

REVISION NUMBER	DATE	MADE BY	APP'D BY	REVISION

RECORD DRAWING CERTIFICATION

☐ AS BUILT – CHANGES AS NOTED ☐ AS BUILT – NO CHANGES

CONTRACTOR
NAME
SIGNATURE
TITLE DATE

PROJECT COORDINATOR
NAME
SIGNATURE
TITLE DATE

WESTCHESTER COUNTY, NEW YORK
DEPARTMENT OF PUBLIC WORKS AND TRANSPORTATION
DIVISION OF ENGINEERING

INFRASTRUCTURE REHABILITATION - PHASE 3
PLAYLAND PARK, RYE, NEW YORK
RESTAURANT KITCHEN WITH FOOD VENDING
MECHANICAL FIRST FLOOR CONSTRUCTION PLAN

CONTRACT NUMBER: 22-523
SHEET NUMBER: K-M-21
552 of 664
DWG NO.:
SCALE: AS INDICATED
DATE: 08/23/2022
DPW FILE NUMBER: 1-118-M-1301-0
REV. NO.: 0

GENERAL NOTES:

1. CONTRACTOR TO COORDINATE WITH FACILITY WHEN WORKING AROUND OR ABOVE THE RIDE COMPONENTS, AND PROVIDE ALL NECESSARY MEASURES TO PROTECT THESE COMPONENTS PER THE REQUIREMENTS OF THE FACILITY.
2. UPON COMPLETION, SYSTEM SHALL BE TESTED FOR PROPER OPERATION.

MECHANICAL CONSTRUCTION NOTES:

(1) PROVIDE SUPPLY AND RETURN DUCTWORK FROM ROOFTOP UNIT RTU-1 AND ROUTE ALONG INDICATED PATH. PROVIDE INSULATION TO ALL SUPPLY DUCTWORK. PROVIDE VOLUME DAMPERS AND SUPPLY DIFFUSERS/GRILLES AND BALANCE TO INDICATED VALUES. PLACE UNIT ON NEW ROOF CURB AS SHOWN ON K-M-82.

(2) PROVIDE NEW OUTDOOR SPLIT CONDENSER AIR CONDITIONER UNIT ON ROOF AS SHOWN. COORDINATE ELECTRICAL POWER AND WIRING WITH ELECTRICAL DRAWINGS. PLACE UNIT ON EQUIPMENT RAILS AS SHOWN ON K-M-81

(3) PROVIDE NEW PACKAGED TERMINAL AIR CONDITIONER UNIT. COORDINATE ELECTRICAL POWER AND WIRING WITH ELECTRICAL DRAWINGS.

(4) PROVIDE NEW EXHAUST FAN AS SCHEDULED. COORDINATE ELECTRICAL POWER AND WIRING WITH ELECTRICAL CONTRACTOR. INSTALL EF-2 AT 6'0" ABOVE ATTIC FLOOR TO CENTER.

(5) PROVIDE NEW RAIN RESISTANT LOUVERS AS SCHEDULED. INSTALL LV-1 AND LV-2 AT 6'0" ABOVE ATTIC FLOOR TO CENTER.

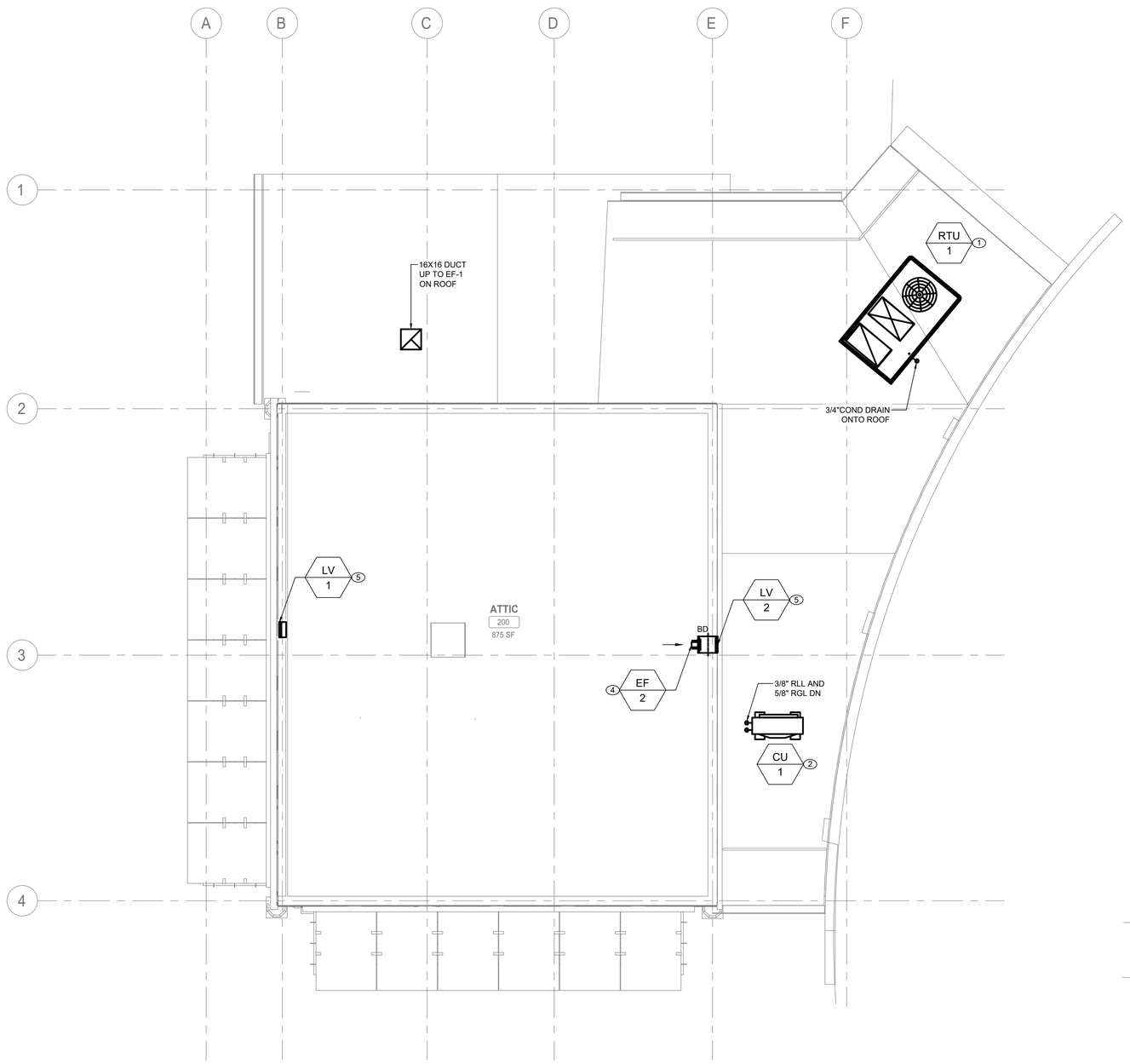

1 MECHANICAL ATTIC FLOOR CONSTRUCTION PLAN

SCALE: 1/4" = 1'-0"

CONSULTANT INFORMATION

LiRo Engineers, Inc.
A LiRo Group Company
Syosset, N.Y. 516-214-8157[T]

CONSULTANT SEAL

STATE OF NEW YORK · FRANK F. ULISSE · No. 090111-1 · LICENSED PROFESSIONAL ENGINEER

REVISION NUMBER	DATE	MADE BY	APP'D BY	REVISION

RECORD DRAWING CERTIFICATION

☐ AS BUILT – CHANGES AS NOTED ☐ AS BUILT – NO CHANGES

CONTRACTOR: NAME / SIGNATURE / TITLE / DATE

PROJECT COORDINATOR: NAME / SIGNATURE / TITLE / DATE

WESTCHESTER COUNTY, NEW YORK
DEPARTMENT OF PUBLIC WORKS AND TRANSPORTATION
DIVISION OF ENGINEERING

INFRASTRUCTURE REHABILITATION - PHASE 3
PLAYLAND PARK, RYE, NEW YORK
RESTAURANT KITCHEN WITH FOOD VENDING
MECHANICAL ATTIC FLOOR CONSTRUCTION PLAN

CONTRACT NUMBER	22-523
SHEET NUMBER	K-M-22
DWG NO.:	553 of 664
SCALE:	AS INDICATED
DATE:	08/23/2022
DPW FILE NUMBER	1-118-M-1302-0
REV. NO.	0

GENERAL NOTES:

1. CONTRACTOR TO COORDINATE WITH FACILITY WHEN WORKING AROUND OR ABOVE THE RIDE COMPONENTS, AND PROVIDE ALL NECESSARY MEASURES TO PROTECT THESE COMPONENTS PER THE REQUIREMENTS OF THE FACILITY.
2. UPON COMPLETION, SYSTEM SHALL BE TESTED FOR PROPER OPERATION.

MECHANICAL CONSTRUCTION NOTES:

(1) PROVIDE NEW EXHAUST FAN AS SCHEDULED. COORDINATE ELECTRICAL POWER AND WIRING WITH ELECTRICAL DRAWINGS. ENSURE ALL WORK IMPACTING ROOF IS DONE IN ACCORDANCE WITH ROOFING MANUFACTURER WARRANTY.

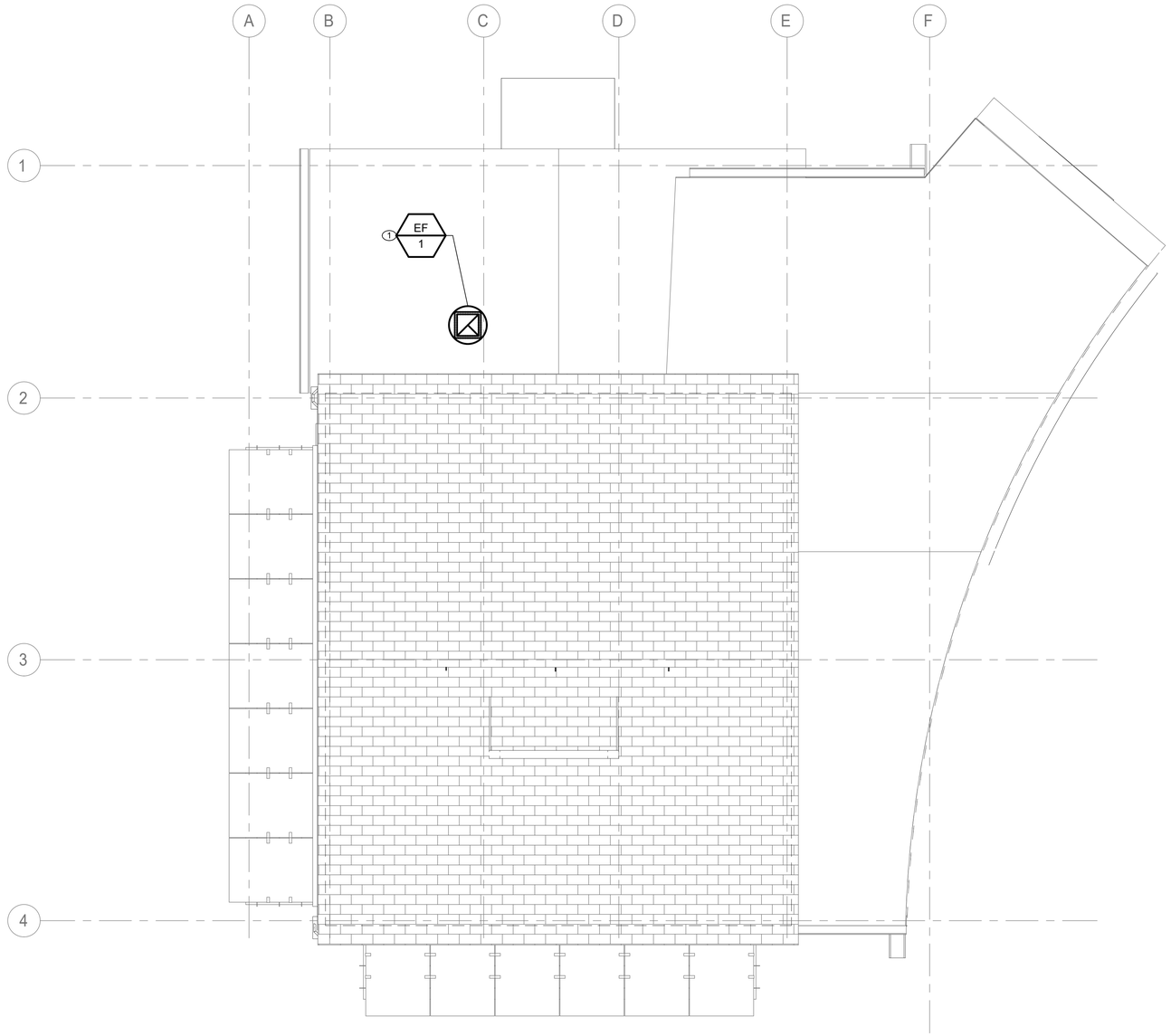

1 MECHANICAL ROOF CONSTRUCTION PLAN

SCALE: 1/4" = 1'-0"

CONSULTANT INFORMATION

LiRo Engineers, Inc.
A LiRo Group Company
Syosset, N.Y. 516-214-8157[T]

CONSULTANT SEAL

STATE OF NEW YORK · FRANK F. ULISSE · No. 090111-1 · LICENSED PROFESSIONAL ENGINEER

REVISION NUMBER	DATE	MADE BY	APP'D BY	REVISION

RECORD DRAWING CERTIFICATION

☐ AS BUILT – CHANGES AS NOTED ☐ AS BUILT – NO CHANGES

CONTRACTOR
NAME
SIGNATURE
TITLE DATE

PROJECT COORDINATOR
NAME
SIGNATURE
TITLE DATE

WESTCHESTER COUNTY, NEW YORK
DEPARTMENT OF PUBLIC WORKS AND TRANSPORTATION
DIVISION OF ENGINEERING

INFRASTRUCTURE REHABILITATION - PHASE 3
PLAYLAND PARK, RYE, NEW YORK
RESTAURANT KITCHEN WITH FOOD VENDING
MECHANICAL ROOF CONSTRUCTION PLAN

CONTRACT NUMBER 22-523
SHEET NUMBER **K-M-23**
DWG NO.:
SCALE: **AS INDICATED**
DATE: 08/23/2022
DPW FILE NUMBER 1-118-M-1303-0
REV. NO. 0

ROOFTOP AIR CONDITIONING UNIT SCHEDULE

TAG	MANUFACTURER	MODEL	LOCATION	NOM. CAP. (TONS)	MIN. OA (CFM)	MAX. OA (CFM)	SUPPLY FAN			FILTER		DX COOLING							HEATING		COMPRESSOR	CONDENSER			EER	ELECTRICAL			OPERATING WEIGHT (±LBS)	DIMENSIONS LxWxH (FT)	NOTES
							AIR FLOW (CFM)	ESP (IN)	MOTOR BHP	TYPE	MERV	REFRIG TYPE	TOTAL CAP. (MBH)	SENSIBLE CAP. (MBH)	EAT DB (°F)	EAT WB (°F)	LAT DB (°F)	LAT WB (°F)	ELEC. KW	TOTAL CAP. (MBH)	TYPE/QTY	AMB. TEMP (°F)	FAN QTY	Kw		MCA	MOCP	V-PH-HZ			
RTU-1	TRANE	THC092F3RNA	ROOF	7.5	1100	-	2400	0.50	0.55	2" PLEATED	13	R-410A	87.5	70.4	80.2	64.3	54.4	52.1	36.0	122.9	SCROLL/2	89	1	0.72	12.60	104	110	208-3-60	1228	7.4X4.4X3.9	1,2,3,4

NOTES:

1. PROVIDE DOWNFLOW SUPPLY AND RETURN UNIT CONFIGURATION, OVERSIZE SUPPLY FAN MOTOR, MOTORIZED OUTSIDE AIR DAMPER, NON-FUSED DISCONNECT, ECONOMIZER, ECONOMIZER HOOD, BAROMETRIC RELIEF HOOD AND 14" ROOF CURB.
2. FACTORY CONTROLS TO BE PROVIDED BY MANUFACTURER.
3. PROVIDE WITH MERV 13 FILTERS AND OPTION FOR UV LIGHT FILTRATION KIT.
4. PROVIDE DIGITAL CONTROLLER WITH DISPLAY CAPABLE OF DEMAND CONTROL VENTILATION AND ECONOMIZER MODE. CONTRACTOR TO PROVIDE TRANSFORMER AND POWER AS REQUIRED.

DUCTLESS SPLIT SYSTEM HEAT PUMP SCHEDULE

UNIT TAG (INDOOR)	ASSOCIATED OUTDOOR UNIT	MANUFACTURER	MODEL	LOCATION/SERVICE	REFRIGERANT	SUPPLY FAN	COOLING		HEATING		ELECTRICAL			WEIGHT	NOTES
						CFM	TOTAL/SENS. (MBH)	EAT DB/WB	MBH	EAT/LAT DB	V.-PH.-CY.	MCA	MOCP		
AC-1	CU-1	MITSUBISHI	PLFY-P18NFMU-E	SEASONAL FOOD SERVICE	R410A	460	18.0/18.0	81/66	20.0	68/90	208-1-60	0.50	15	31.3	1,2,3,4
AC-2	CU-1	MITSUBISHI	PLFY-P18NFMU-E	SEASONAL FOOD SERVICE	R410A	460	18.0/18.0	81/66	20.0	68/90	208-1-60	0.50	15	31.3	1,2,3,4

NOTES:

1. UNIT CAPACITY INDICATED AS SIZING CRITERIA.
2. PROVIDE UNIT WITH WIRED WALL MOUNTED THERMOSTAT.
3. PROVIDE ALL INDOOR UNIT WITH INTREGATED CONDENSATE PUMP
4. INSTALL AND SIZE REFRIGERANT PIPING PER MANUFACTURER'S SPECIFICATION.

DUCTLESS SPLIT SYSTEM HEAT PUMP CONDENSING UNIT SCHEDULE

UNIT TAG (OUTDOOR)	MANUFACTURER	MODEL	NOMINAL COOLING (BTU/HR)	NOMINAL HEATING (BTU/HR)	SERVICE	SEER	COP	V.-PH.-CY.	MCA	MOCP	WEIGHT	NOTES
CU-1	MITSUBISHI	PUMY-P36NKMU3-BS	36000	42000	SEASONAL FOOD SERVICE	22.3	4	208-1-60	29.0	44.0	271.0	1,2

NOTES:

1. UNIT CAPACITY INDICATED AS SIZING CRITERIA.
2. PROVIDE UNIT WITH 16" ROOF STAND.

FAN SCHEDULE

TAG	MANUFACTURER	MODEL	LOCATION	SERVICE	TYPE	DRIVE	AIR FLOW (CFM)	TSP (IN. WG)	ELECTRICAL				OPERATING WEIGHT (±LBS)	DIMENSIONS DxH (IN)	NOTES
									HP	BHP	RPM	V-PH-HZ			
EF-1	GREENHECK	G-130-VG	ROOF	KITCHEN / TRASH RM	CENTRIFUGAL	DIRECT	1100	0.25	0.25	0.09	906	115-1-60	24	19x19	1,2,3,4,5
EF-2	GREENHECK	SE1-8-440-VG	ATTIC	ATTIC	AXIAL	DIRECT	50	0.05	0.07	0.00	638	115-1-60	16	13X13	1,2,3,4,6

NOTES:

1. PROVIDE ALL CONTACTS, RELAYS, AND DEVICES NECESSARY FOR BMS CONTROL OF FANS PER SEQUENCE OF OPERATIONS.
2. PROVIDE THERMAL OVERLOAD FOR ALL SINGLE PHASE MOTORS.
3. PROVIDE SALT WATER RESISTANT HI-PRO POLYESTER COATING FOR ALL FANS.
4. FAN SHALL BE FURNISHED WITH NON FUSED DISCONNECT.
5. PROVIDE 12" ROOF CURBS FOR ALL ROOF MOUNTED FANS. INCLUDE 1.5" INSULATION ON CURB.
6. PROVIDE WALL HOUSING.

ELECTRIC UNIT HEATER SCHEDULE

TAG	MANUFACTURER	MODEL	SERVICE	TYPE	KW	AMPS	V-PH-HZ	NOTES
UH-1	TRANE	UHEC-031A0C0	WATER SERVICES RM	WALL HUNG	3.3	15.9	208-1-60	1
UH-2	TRANE	UHEC051AACA	KITCHEN	WALL HUNG	5	24.1	208-1-60	1
UH-3	TRANE	UHEC051AACA	KITCHEN	WALL HUNG	5	24.1	208-1-60	1

NOTES:

1. PROVIDE UNIT MOUNTED 2 STAGE THERMOSTAT.

LOUVER SCHEDULE

TAG	MANUFACTURER	MODEL	SERVICE	LOCATION	MATERIAL	FINISH TYPE	WIDTH (INCH)	HEIGHT (INCH)	FREE AIR VELOCITY (FPM)	PRESSURE DROP (IN. WG)	MINIMUM FREE AREA (SQUARE FEET)	NOTES
LV-1	GREENHECK	ESD-635	EXHAUST	ATTIC	ALUMINUM	BAKED ENAMEL	12	12	-	-	0.19	2
LV-2	GREENHECK	ESD-635	EXHAUST	ATTIC	ALUMINUM	BAKED ENAMEL	12	12	263	0.05	0.19	1

NOTES:

1. PROVIDE WITH ALUMINUM BIRD SCREEN AND BACKDRAFT DAMPERS.
2. PROVIDE WITH ALUMINUM BIRD SCREEN ONLY.

AIR INLET / OUTLET SCHEDULE

TAG	MANUFACTURER	MODEL	SERVICE	NECK SIZE (IN)	FACE SIZE (IN)	MOUNTING	CFM	MAX PD (wg)	MAX VELOCITY	MAX NC	NOTES
SD-1	TITUS	TMS	GENERAL SUPPLY	12	24x24	LAY-IN / GYP	321-425	0.10	600	30	1, 2, 3
RD-1	TITUS	50F	GENERAL RETURN	14X14	24x24	LAY-IN / GYP	528-732	0.05	600	30	1, 3
ED-1	TITUS	50F	GENERAL EXHAUST	6X6	24x24	LAY-IN / GYP	0-95	0.05	600	30	1, 3
ED-2	TITUS	50F	GENERAL EXHAUST	16X16	24X24	LAY-IN / GYP	732-972	0.50	600	30	1, 3
TG-1	TITUS	SG-LFF	TRANSFER	-	6X6	WALL MOUNTED	70	0.03	400	-	1

NOTES:

1. COORDINATE AND CONFIRM CEILING AND/OR WALL MOUNT (T-BAR, SURFACE, REINFORCEMENT, ETC) WITH ARCHITECTURAL RCP AND WALL CONSTRUCTION BEFORE ORDERING.
2. PROVIDE WITH MOLDED INSULATION BLANKET.
3. INTEGRAL VOLUME DAMPERS NOT ACCEPTABLE. VOLUME DAMPERS PROVIDED BY MECHANICAL CONTRACTOR ON ALL RUN-OUTS. EXCEPTIONS REQUIRE APPROVAL WHEN REQUIRED.

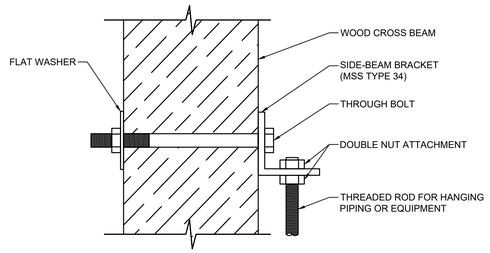

1 / M-81 MECHANICAL ANCHORING DETAIL
SCALE: NOT TO SCALE

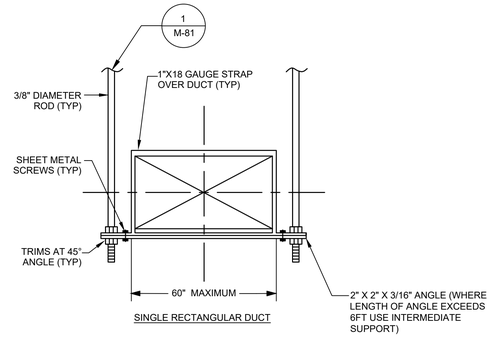

2 / M-81 MECHANICAL DUCT HANGER DETAIL
SCALE: NOT TO SCALE

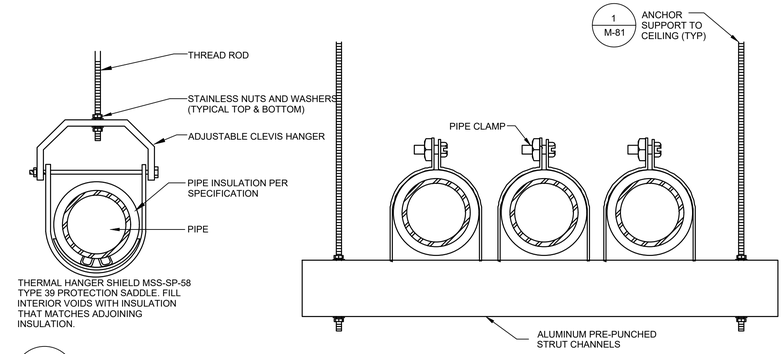

3 / M-81 MECHANICAL PIPE HANGER DETAIL
SCALE: NOT TO SCALE

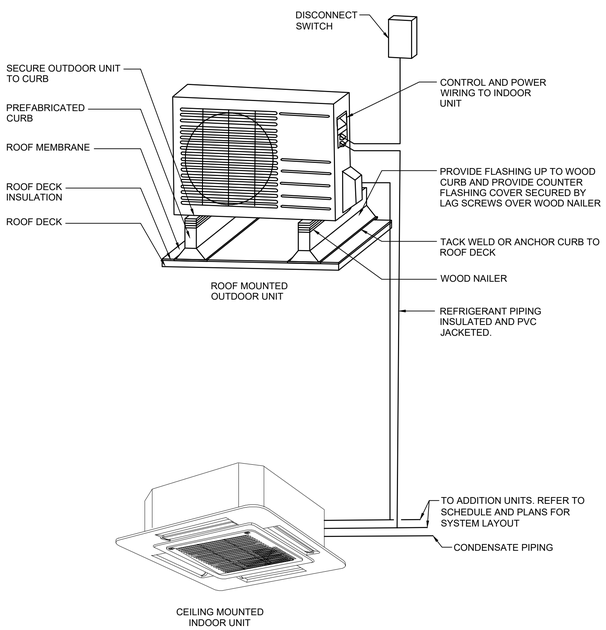

4 / M-81 MECHANICAL SPLIT PIPING DETAIL
SCALE: NOT TO SCALE

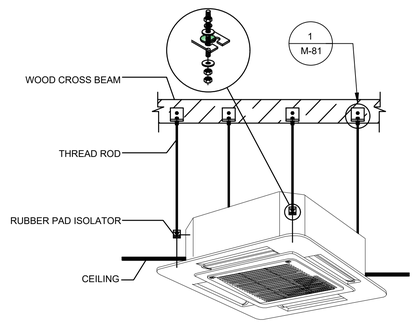

5 / M-81 SPLIT CEILING CASSETTE MOUNTING DETAIL
SCALE: NOT TO SCALE

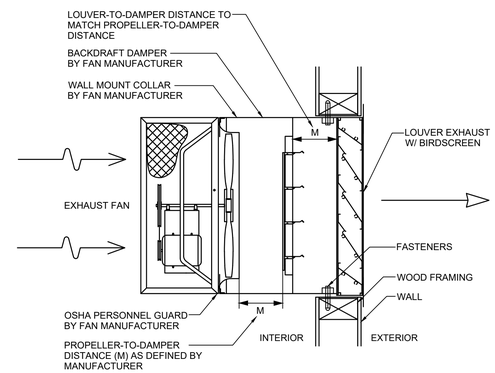

6 / M-81 PROPELLER FAN DETAIL
SCALE: NOT TO SCALE

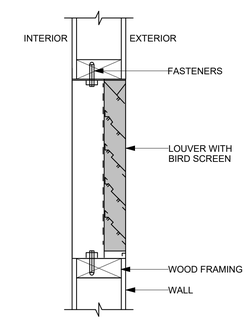

7 / M-81 MECHANICAL LOUVER
SCALE: NOT TO SCALE

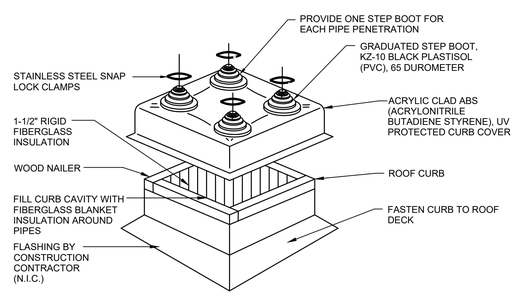

8 / M-81 MECHANICAL REFRIG. PENETRATION DETAIL
SCALE: NOT TO SCALE

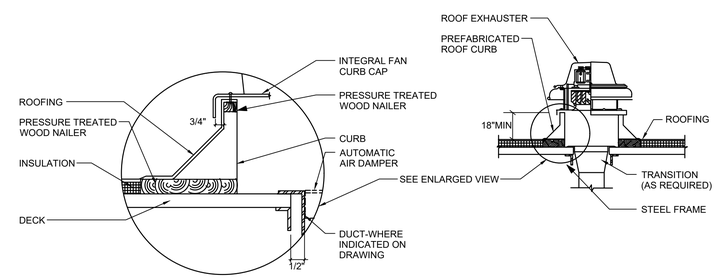

NOTES:
1. BACKDRAFT DAMPER SHALL BE FULL SIZE OF OPENING IN ROOF DECK.

9 / M-81 MECHANICAL ROOF FAN DETAIL
SCALE: NOT TO SCALE

CONSULTANT INFORMATION
LiRo Engineers, Inc.
A LiRo Group Company
Syosset, N.Y. 516-214-8157[T]

CONSULTANT SEAL
STATE OF NEW YORK · FRANK F. ULISSE · No. 090111 · LICENSED PROFESSIONAL ENGINEER

REVISION NUMBER	DATE	MADE BY	APP'D BY	REVISION

RECORD DRAWING CERTIFICATION
☐ AS BUILT – CHANGES AS NOTED ☐ AS BUILT – NO CHANGES

CONTRACTOR
NAME
SIGNATURE
TITLE DATE

PROJECT COORDINATOR
NAME
SIGNATURE
TITLE DATE

WESTCHESTER COUNTY, NEW YORK
DEPARTMENT OF PUBLIC WORKS AND TRANSPORTATION
DIVISION OF ENGINEERING

INFRASTRUCTURE REHABILITATION - PHASE 3
PLAYLAND PARK, RYE, NEW YORK
RESTAURANT KITCHEN WITH FOOD VENDING
MECHANICAL DETAILS 1 OF 2

CONTRACT NUMBER 22-523
SHEET NUMBER **K-M-81**
DWG NO.: 556 of 664
SCALE: **AS INDICATED**
DATE: 08/23/2022
DPW FILE NUMBER 1-118-M-1305-0
REV. NO. 0

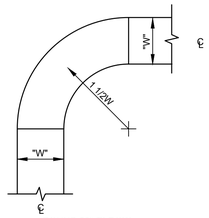

ROUND 90° **ELBOW**

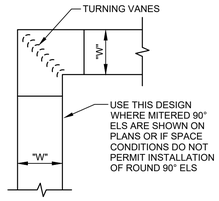

MITERED 90° **ELBOW**

CONSTRUCTION OF 90° **ELBOWS**

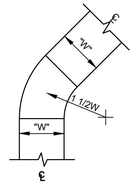

ROUND 45° **ELBOW**

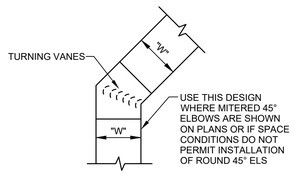

MITERED 45° ELBOW

CONSTRUCTION OF 45° ELBOWS

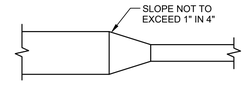

TYPICAL RECTANGULAR TRANSITION

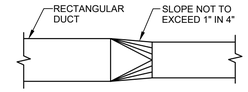

TYPICAL RECTANGULAR TO ROUND TRANSITION

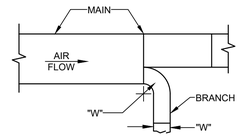

ROUND BRANCH TAKEOFF

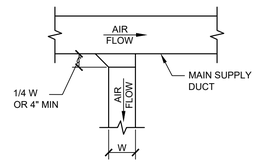

BRANCH DUCT TAKEOFF

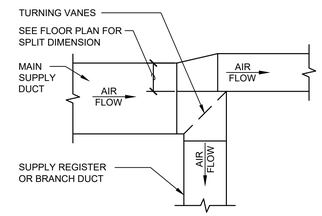

SQUARE BRANCH TAKEOFF

CONSTRUCTION OF TAKEOFFS

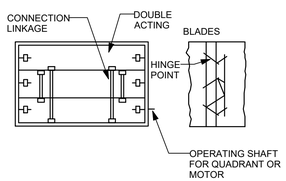

TYPICAL VOLUME DAMPER

INSTALLATION NOTES:

1. ALL DUCT TRANSITIONS SHALL BE CONSTRUCTED AND INSTALLED AS DETAILED BY SMACNA.
2. ALL DUCTS SHALL BE CONSTRUCTED AND ERECTED IN A NEAT AND WORKABLE MANNER.
3. DUCTS SHALL BE CONSTRUCTED OF THE WEIGHTS, GAUGES AND MATERIAL SPECIFIED.
4. THE DIMENSION SHOWN FOR ALL DUCTS SHOWN IN PLAN GIVE THE WIDTH FIRST AND THEN THE HEIGHT.
5. DUCT RISERS SHOULD BE SUPPORTED BY ANGLES AT EVERY FLOOR.
6. AIR TURN SHALL BE INSTALLED IN ALL ABRUPT ELBOWS TO PREVENT TURBULENCE.
7. DUCTS SHALL BE SECURELY ATTACHED TO THE BUILDING CONSTRUCTION IN AN APPROVED MANNER.
8. DIVERGING TRANSITION PIECES SHALL BE MADE AS GRADUAL AS POSSIBLE.
9. INSTALL FIRE DAMPERS IN ACCORDANCE WITH UL 555.
10. ACCESS PANELS SHOULD BE PLACED BEFORE AND/OR AFTER EQUIPMENT INSTALLED IN THE DUCT.
11. DUCT AREA SHOULD NOT BE DECREASED MORE THAN 10 PERCENT WHEN OBSTRUCTIONS CANNOT BE AVOIDED, AND THEN A STREAMLINED FITTING SHOULD BE USED.
12. FLEXIBLE FABRIC CONNECTIONS (OR EQUAL) SHOULD BE USED ON BOTH INLETS AND OUTLETS OF ALL FANS AND AIR HANDLING UNIT.
13. JOINTS AND SEAMS OF SUPPLY DUCTS SHALL BE FASTENED SECURELY AND MADE AIR TIGHT.
14. VANES SHORTER THAN 36" SHALL BE SINGLE WALL, WITH A 2" RADIUS AND 1 1/2" SPACING. VANES LARGER THAN 36" AND SHORTER THAN 48" SHALL BE DOUBLE WALL, WITH A 2" OUTER RADIUS, 1" INNER RADIUS, AND 2 1/8" SPACING. VANES LONGER THAN 48" SHALL BE DOUBLE WALL, WITH A 4 1/2" OUTER RADIUS, 2 1/4" INNER RADIUS, AND 3 1/4" SPACING. NO TURNING VANES SHALL INCLUDE A TRAILING EDGE.

1 / M-82 MECHANICAL DUCT CONSTRUCTION DETAIL

SCALE: NOT TO SCALE

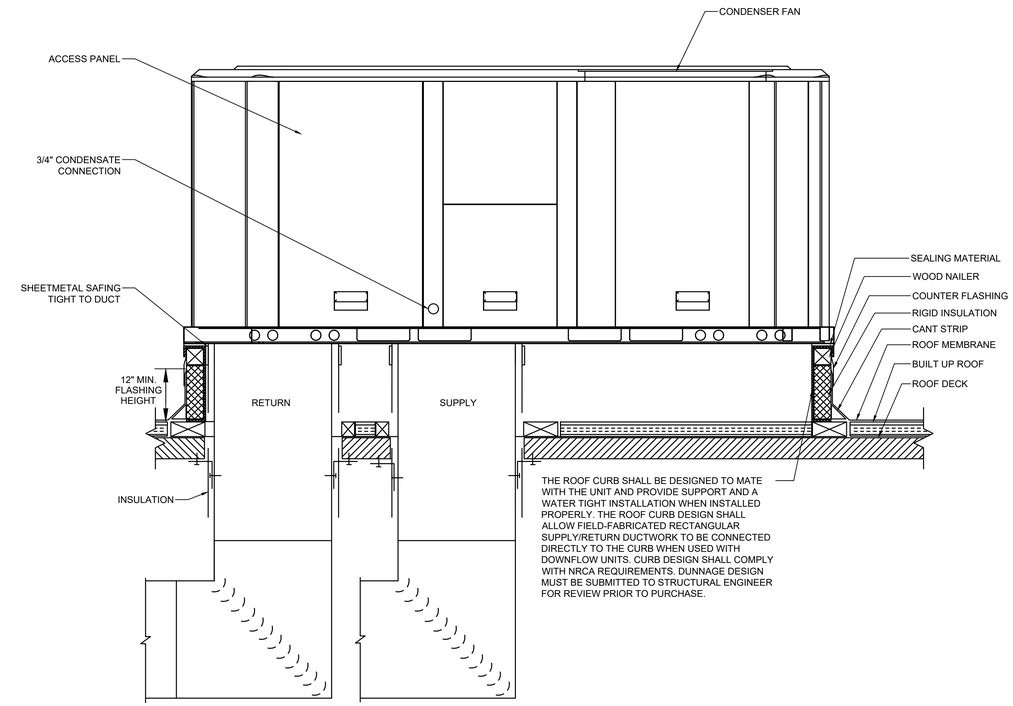

2 / M-82 ROOF TOP UNIT (RTU) DETAIL

SCALE: NOT TO SCALE

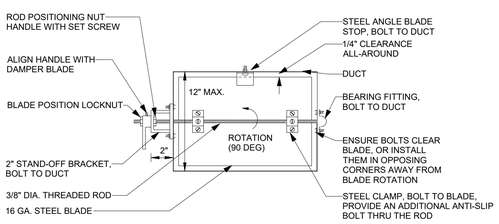

NOTES:

1. DAMPERS FOR ROUND DUCTS SHALL BE SIMILAR TO THE DAMPER SHOWN ABOVE.
2. ENSURE THAT FULL 90 DAMPER BLADE MOVEMENT IS UNOBSTRUCTED.
3. FOR DUCT HEIGHTS MORE THAN 12", PROVIDE FACTORY-FABRICATED OPPOSED BLADE DAMPERS.

3 / M-82 MECHANICAL VOLUME DAMPER DETAIL

SCALE: NOT TO SCALE

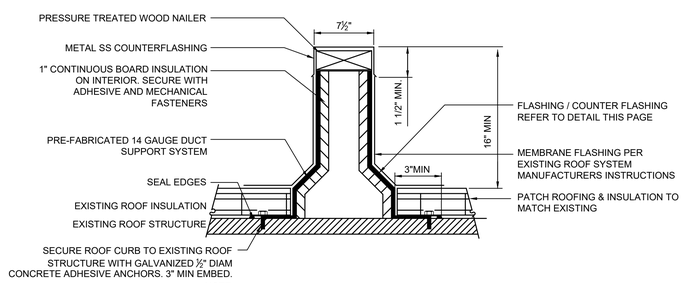

NOTE:

1. ALL EXPOSED METAL OR WELDS SUSCEPTIBLE TO RUSTING TO BE PAINTED WITH COLD GALVANIZED COATING
2. CONTRACTOR TO INSTALL MEMBRANE FLASHING PER EXISTING ROOFING SYSTEM MANUFACTURER'S INSTRUCTIONS AND TO MEET ANY EXISTING ROOF WARRANTY REQUIREMENTS.
3. CONTRACTOR TO VERIFY IN THE FIELD ALL EXISTING ROOF CONDITIONS AND DIMENSIONS PRIOR TO STARTING WORK.
4. MAINTAIN ROOF IN WEATHER TIGHT CONDITION DURING ENTIRE PROJECT.
5. CONTRACTOR TO PROVIDE TEMPORARY PROTECTION OF THE ROOF WITHIN THE AREA OF WORK THROUGHOUT CONSTRUCTION.
6. ANCHOR CONDENSER TO SUPPORTS WITH ½" STAINLESS STEEL GRADE 5 ANCHORS

4 / M-81 MECHANICAL EQUIP RAILS DETAIL

SCALE: NOT TO SCALE

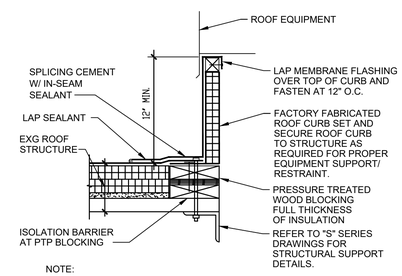

NOTE:

1. AT PENETRATIONS THROUGH EXISTING ROOF, FLASH INTO EXISTING ROOF SYSTEM AND PATCH TO MATCH AS REQUIRED BY ROOF SYSTEM MANUFACTURER.

5 / M-82 ROOF CURB DETAIL

SCALE: NOT TO SCALE

CONSULTANT INFORMATION

LiRo Engineers, Inc.
A LiRo Group Company
Syosset, N.Y. 516-214-8157[T]

CONSULTANT SEAL

STATE OF NEW YORK · FRANK F. ULISSE · No. 090111 · LICENSED PROFESSIONAL ENGINEER

REVISION NUMBER	DATE	MADE BY	APP'D BY	REVISION

RECORD DRAWING CERTIFICATION

☐ AS BUILT – CHANGES AS NOTED ☐ AS BUILT – NO CHANGES

CONTRACTOR: NAME / SIGNATURE / TITLE / DATE

PROJECT COORDINATOR: NAME / SIGNATURE / TITLE / DATE

WESTCHESTER COUNTY, NEW YORK
DEPARTMENT OF PUBLIC WORKS AND TRANSPORTATION
DIVISION OF ENGINEERING

INFRASTRUCTURE REHABILITATION - PHASE 3
PLAYLAND PARK, RYE, NEW YORK
RESTAURANT KITCHEN WITH FOOD VENDING
MECHANICAL DETAILS 2 OF 2

CONTRACT NUMBER	22-523
SHEET NUMBER	K-M-82
DWG NO.:	557 of 664
SCALE:	AS INDICATED
DATE:	08/23/2022
DPW FILE NUMBER	1-118-M-1306-0
REV. NO.	0

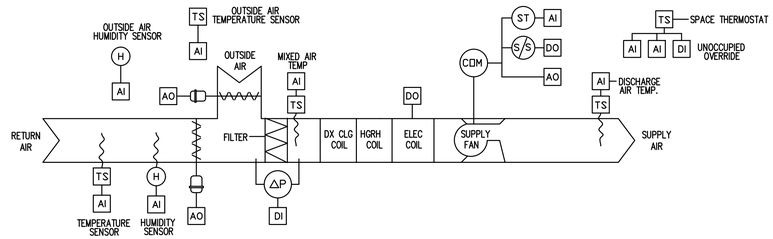

ROOFTOP UNIT - ELECTRIC HEATING COIL AND DX COOLING - SEQUENCE OF OPERATIONS:

1. GENERAL:
   a. SUPPLY FAN AND ASSOCIATED EXHAUST FANS SHALL RUN CONTINUOUSLY. THE SUPPLY FAN SHALL RUN AT THE FREQUENCY DETERMINED BY THE BALANCING CONTRACTOR.THE RTU SYSTEMS CONSISTS OF SUPPLY FANS W/ EC MOTOR CONTROLLER, BAROMETRIC (PASSIVE) RELIEF, RETURN AIR DAMPERS, ECONOMIZER, DAMPERS, DX COOLING COIL, HOT-GAS REHEAT COIL, AND GAS-FIRED HEATING COIL.
   b. THE RTU SYSTEM IS DESIGNED TO PROVIDE VENTILATION, HEATING AND COOLING SUPPLY AIR, AND MAKEUP FOR GENERAL KITCHEN EXHAUST TO A SINGLE ZONE. FUTURE KITCHEN HOOD MAKEUP AIR TO BE PROVIDED BY RESTAURANT VENDOR WITH DEDICATED SYSTEMS.
   c. THE RTU SYSTEM IS PROVIDED AS A PACKAGED SYSTEM, WITH MANUFACTURER PROVIDED UNIT CONTROLLER.
   d. THE CONTROL CONTRACTOR SHALL REVIEW MANUFACTURER SHOP DRAWINGS AND CONTROL DEVICE INSTALLATION, FURNISH AND INSTALL ALL REMAINING CONTROL DEVICES AND FIELD INSTALLED ACCESSORIES TO PERFORM THE SEQUENCES INDICATED. REFER TO EQUIPMENT SCHEDULES AND DETAILS FOR DEVICES INCLUDED WITH THE EQUIPMENT.
2. OCCUPIED MODE:
   a. SUPPLY FAN AND ASSOCIATED EXHAUST FANS SHALL RUN CONTINUOUSLY (SINGLE ZONE VAV).
   b. THE OUTSIDE AIR DAMPER SHALL OPEN TO THE POSITION REQUIRED TO MAINTAIN THE MINIMUM OUTSIDE AIR QUANTITY INDICATED. OUTSIDE AIR DAMPER SHALL NEVER BE POSITIONED BELOW THIS MINIMUM POSITION EXCEPT IN CASE OF ALARM.
   c. HEATING: WHEN THE SPACE TEMPERATURE IS AT OR BELOW THE HEATING SETPOINT, THE ELECTRIC COIL SHALL MODULATE TO MAINTAIN SPACE HEATING SETPOINT SUBJECT TO A DISCHARGE HIGH LIMIT OF 100 DEG. F (ADJUSTABLE) AND DISCHARGE LOW LIMIT OF 70 DEG. F (ADJUSTABLE).
   d. FREE COOLING: WHEN THE SPACE TEMPERATURE RISES 3 DEG. F (ADJUSTABLE) ABOVE THE SPACE HEATING SETPOINT, AND THE OUTSIDE AIR ENTHALPY IS LOWER THAN THE SPACE ENTHALPY, THE OUTSIDE AIR DAMPER SHALL MODULATE OPEN AND THE ASSOCIATED RELIEF DAMPER SHALL OPEN TO MAINTAIN THE OCCUPIED SETPOINT. THIS SHALL BE DONE SUBJECT TO LOW LIMIT OF 55 DEG. F (ADJUSTABLE) AND WITH THE ELECTRIC HEATING COIL DISABLED.
   e. COOLING: WHEN THE SPACE TEMPERATURE IS 3 DEG. F (ADJUSTABLE) ABOVE THE COOLING SETPOINT, AND THE OUTSIDE AIR CANNOT COOL THE SPACE, THE RESPECTIVE CONDENSING UNIT SHALL BE CYCLED WITH THE ELECTRIC HEATING COIL DISABLED TO MAINTAIN SPACE TEMPERATURE. USE 5 DEG. F (ADJUSTABLE) DEADBAND BETWEEN HEATING AND COOLING SETPOINTS.
3. ECONOMIZER OPERATION
   a. ECONOMIZER OPERATION IS ENABLED WHEN OUTDOOR AIR ENTHALPY IS LESS THAN RETURN AIR ENTHALPY.
   b. THE OUTSIDE AIR AND RETURN AIR DAMPERS SHALL MODULATE AS REQUIRED TO OPTIMIZE SUPPLY AIR TEMPERATURE SETPOINT VIA FREE COOLING.THIS IS TYPICALLY A FULLY OPEN OUTSIDE AIR DAMPER DURING SUMMER MONTHS, AND PARTIALLY OPEN OUTSIDE AIR AND RETURN AIR DAMPERS DURING WINTER MONTHS.
   c. IF ECONOMIZER MODE CAN NOT FULLY PROVIDE THE REQUIRED DISCHARGE AIR TEMPERATURE, THE DX COOLING COIL SHALL SUPPLEMENT AS REQUIRED.
4. UNOCCUPIED MODE:
   a. THE SUPPLY AND ASSOCIATED EXHAUST FAN SHALL BE OFF.
   b. THE OUTSIDE AIR DAMPER AND THE ASSOCIATED RELIEF AIR HOOD DAMPER SHALL BE FULLY CLOSED AND THE RETURN AIR DAMPER SHALL BE FULLY OPEN.
   c. ON DROP IN SPACE TEMPERATURE BELOW THE UNOCCUPIED HEATING SETPOINT, CYCLE THE FAN ON AND ELECTRICAL COIL SHALL OPERATE AT THE FULL RATE TO MAINTAIN REDUCED SPACE TEMPERATURE. USE 5 DEG. F (ADJUSTABLE) DEADBAND TO MINIMIZE SHORT CYCLING.
   d. A TIMED LOCAL OVERRIDE CONTROL SHALL ALLOW AN OCCUPANT TO OVERRIDE THE SCHEDULE AND PLACE THE UNIT IN OCCUPIED MODE FOR 1 HOUR (ADJUSTABLE). AT EXPIRATION OF THIS TIME, CONTROL OF THE UNIT SHALL AUTOMATICALLY RETURN TO THE SCHEDULE.
5. WARM-UP MODE:
   a. THE UNIT SHALL START PER AN OPTIMUM START PROGRAM.
   b. THE OUTSIDE AIR DAMPER AND THE ASSOCIATED RELIEF HOOD DAMPER SHALL BE FULLY CLOSED, THE RETURN AIR DAMPER SHALL BE FULLY OPEN, AND THE ASSOCIATED EXHAUST FAN SHALL BE OFF.
   c. THE SUPPLY FAN SHALL RUN AND THE ELECTRIC HEATING COIL SHALL MODULATE TO MAINTAIN OCCUPIED SETPOINT.
6. SAFETIES:
   a. DIFFERENTIAL PRESSURE ACROSS THE AIR FILTERS SHALL GENERATE AN ALARM AT UNIT CONTROLLER WHENEVER THE DIFFERENTIAL PRESSURE EXCEEDS IT'S ADJUSTABLE SETPOINT.
   b. IF THE DISCHARGE AIR TEMPERATURE DROPS BELOW 35 DEG F (ADJUSTABLE), THE SUPPLY FAN SHALL TURN OFF AND SHALL BE LOCKED OUT, AND AN ALARM SHALL BE ACTIVATED.
   c. IF THE DISCHARGE AIR TEMPERATURE RISES ABOVE 120 DEG. F (ADJUSTABLE), THE ELECTRIC HEATING COIL SHALL TURN OFF AND AN ALARM SHALL BE ACTIVATED.

1 / M-91 ROOFTOP UNIT - ELECTRIC COIL AND DX COOLING

SCALE: NOT TO SCALE

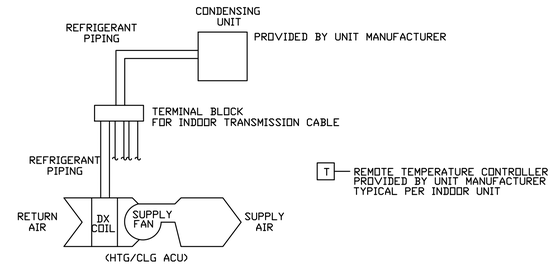

MULTIPLE DUCTLESS SPLIT SYSTEMS - HEATING AND COOLING - SEQUENCE OF OPERATIONS:

1. UNITS SHALL BE CONTROLLED WITH UNIT PROVIDED THERMOSTATS AND CONNECTED TO CONTROLLER .
2. GENERATE AN ALARM AT CONTROLLER WHEN THE TEMPERATURE GOES ABOVE OR BELOW ROOM TEMPERATURE RANGE (ADJUSTABLE).

2 / M-61 MULTIPLE DUCTLESS SPLIT SYSTEM

SCALE: NOT TO SCALE

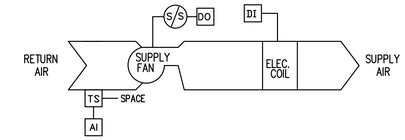

UNIT HEATER - ELECTRIC - SEQUENCE OF OPERATIONS:

1. ON DROP IN SPACE TEMPERATURE BELOW OCCUPIED HEATING SETPOINT, CYCLE THE FAN ON AND MODULATE (2 STAGE) ELECTRIC COIL TO MAINTAIN SPACE OCCUPIED SETPOINT, FAN SHALL HAVE DELAYED SHUT OFF AFTER VALVE CLOSES. USE 5 DEG. F (ADJUSTABLE) DEADBAND TO MINIMIZE SHORT CYCLING.

6 / M-91 UNIT HEATER - ELECTRIC

SCALE: NOT TO SCALE

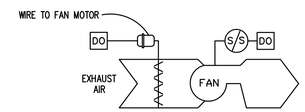

EXHAUST FAN - CONSTANT SPEED - SEQUENCE OF OPERATIONS:

INTERLOCK THE OPERATION OF THE EXHAUST FANS AND AUTOMATIC DAMPERS WITH THEIR RESPECTIVE HEATING AND COOLING EQUIPMENT, RTU-1.

1. OCCUPIED MODE:
   a. THE EXHAUST FAN SHALL RUN CONTINUOUSLY AND THE AUTOMATIC AIR DAMPER SHALL OPEN.
3. UNOCCUPIED MODE:
   a. THE EXHAUST FAN SHALL BE OFF AND THE AUTOMATIC AIR DAMPER SHALL BE CLOSED.
4. WARM-UP MODE:
   a. THE EXHAUST FAN SHALL BE OFF AND THE AUTOMATIC AIR DAMPER SHALL BE CLOSED.

4 / M-91 EXHAUST FAN - CONSTANT SPEED

SCALE: NOT TO SCALE

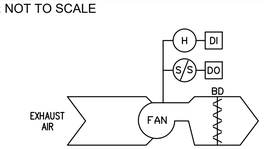

EXHAUST FAN - CONSTANT SPEED - SEQUENCE OF OPERATIONS:

GENERAL: EACH EXHAUST FAN CONSISTS OF FAN, BACKDRAFT DAMPER, AND EC MOTOR CONTROLLER

1. OCCUPIED MODE:
   a. THE EXHAUST FAN SHALL RUN WHEN THE RELATIVE HUMIDITY IN THE SPACE SERVED EXCEEDS 60 PERCENT.
3. UNOCCUPIED MODE:
   a. THE EXHAUST FAN SHALL RUN WHEN THE RELATIVE HUMIDITY IN THE SPACE SERVED EXCEEDS 60 PERCENT.
4. WARM-UP MODE:
   a. THE EXHAUST FAN SHALL RUN WHEN THE RELATIVE HUMIDITY IN THE SPACE SERVED EXCEEDS 60 PERCENT.

5 / M-91 ATTIC EXHAUST FAN - CONSTANT SPEED

SCALE: NOT TO SCALE

NOTES:

1. FOR ADDITIONAL NOTES, ABBREVIATIONS AND SYMBOLS, SEE DRAWING GE-E-01.

KEY NOTES:

1. EXISTING QUAD#1 ELECTRICAL ROOM LOCATED MAIN 208Y/120 VOLT DISTRIBUTION BOARD. EXISTING 200A CIRCUIT BREAKERS TO REMAIN AND BE REUSED.
2. DISCONNECT AND REMOVE ALL WIRE. EXISTING CONDUIT TO REMAIN. SEE DRAWING K-E-04 FOR ADDITIONAL INFORMATION.
3. DISCONNECT AND REMOVE 200 AMP DISCONNECT SWITCH. DISCONNECT AND REMOVE ALL CONDUIT AND WIRE. EXISTING UNDERGROUND CONDUIT RUNNING FROM QUAD 1 BUILDING SHALL BE REMOVED BACK TO FIRST UNDERGROUND COUPLING. CAP CONDUIT FOR POTENTIAL RE-USE. SEE DRAWING K-E-04 FOR ADDITIONAL INFORMATION.
4. DISCONNECT AND REMOVE ALL PANELS AND ALL ASSOCIATED BRANCH CIRCUITS, BREAKERS, CONDUIT AND WIRE. ASSUME FOR BIDDING PURPOSE 2000 FEET OF CONDUIT AND WIRE.
5. CONTRACTOR SHALL TRACE OUT FEEDER CIRCUIT POWER SOURCE. TERMINATE, DISCONNECT AND REMOVE ALL WIRE. ABANDON EXISTING CONDUIT BELOW GRADE.

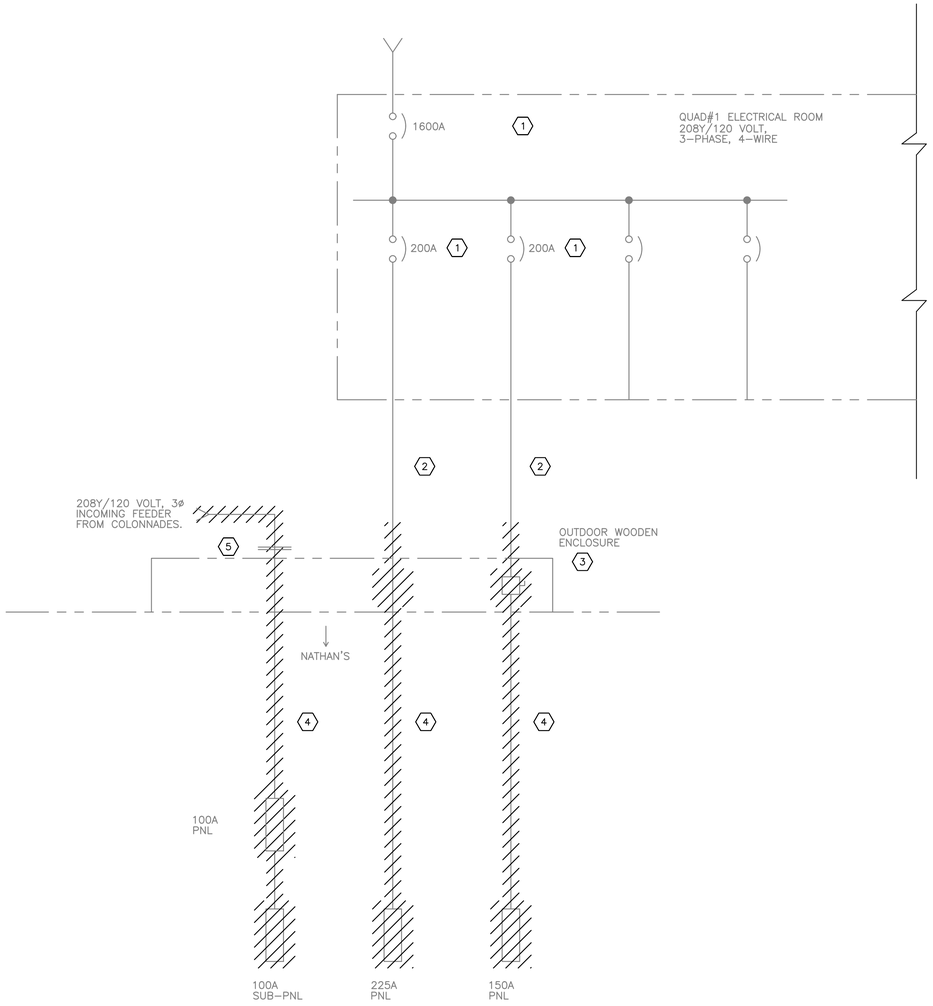

ONE LINE DIAGRAM – DEMOLITION
N.T.S.

Drawing Name: G:\SavinAutocad\2060\25-Playland-Mega-3\E\KE-1001.dwg
Rev#: Projectname: 211001F02 Comments: ----
Printed by: MGodby Date: 29 August 2022 4:11 PM Designed by: ----
Xrefs: [TB_24X36_WestchesterCo_3.dwg] [TSG-SVLOGO.dwg] [BCR-A-04.dwg] [BCRE-101.dwg

CONSULTANT INFORMATION

Savin Engineers, P.C.

CONSULTANT SEAL

STATE OF NEW YORK
STEVEN A. MARTINO
083631
LICENSED PROFESSIONAL ENGINEER

REVISION NUMBER	DATE	MADE BY	APP'D BY	REVISION

RECORD DRAWING CERTIFICATION

☐ AS BUILT – CHANGES AS NOTED ☐ AS BUILT – NO CHANGES

CONTRACTOR
NAME
SIGNATURE
TITLE DATE

PROJECT COORDINATOR
NAME
SIGNATURE
TITLE DATE

WESTCHESTER COUNTY, NEW YORK
DEPARTMENT OF PUBLIC WORKS AND TRANSPORTATION
DIVISION OF ENGINEERING

INFRASTRUCTURE REHABILITATION - PHASE 3
PLAYLAND PARK, RYE, NEW YORK
RESTAURANT KITCHEN WITH FOOD VENDING
ONE LINE DIAGRAM - DEMOLITION

CONTRACT NUMBER	22-523
SHEET NUMBER	K-E-01
DWG NO.:	
SCALE:	AS SHOWN
DATE:	8/23/2022
DPW FILE NUMBER	1-118-E-1308-0
REV. NO.	0

DEMOLITION LEGEND ⬡	
1	RECEPTACLE
2	DISCONNECT SWITCH (SEE NOTE 10)
3	42 CKT PANEL (225A)
4	PANEL (150A)
5	HANGING MENU WITH LIGHTS (SEE NOTE 9)
6	10 CKT PANEL (100A)
7	LIGHT SWITCH
8	GENERAL DUTY SAFETY SWITCH
9	MANUAL PULL STATION (REMOVED BY OTHERS)
10	UNIT HEATER
11	UNIT HEATER THERMOSTAT
12	COMMUNICATIONS HUB (SEE NOTE 8)
13	WALK-IN COOLER PANEL (6 CKT)
14	FLOODLIGHT
15	NOT USED
16	SEE NOTE 11
17	RANGE HOOD – DISCONNECT POWER
18	WALK-IN COOLER
19	WALK-IN COOLER HVAC EQUIPMENT

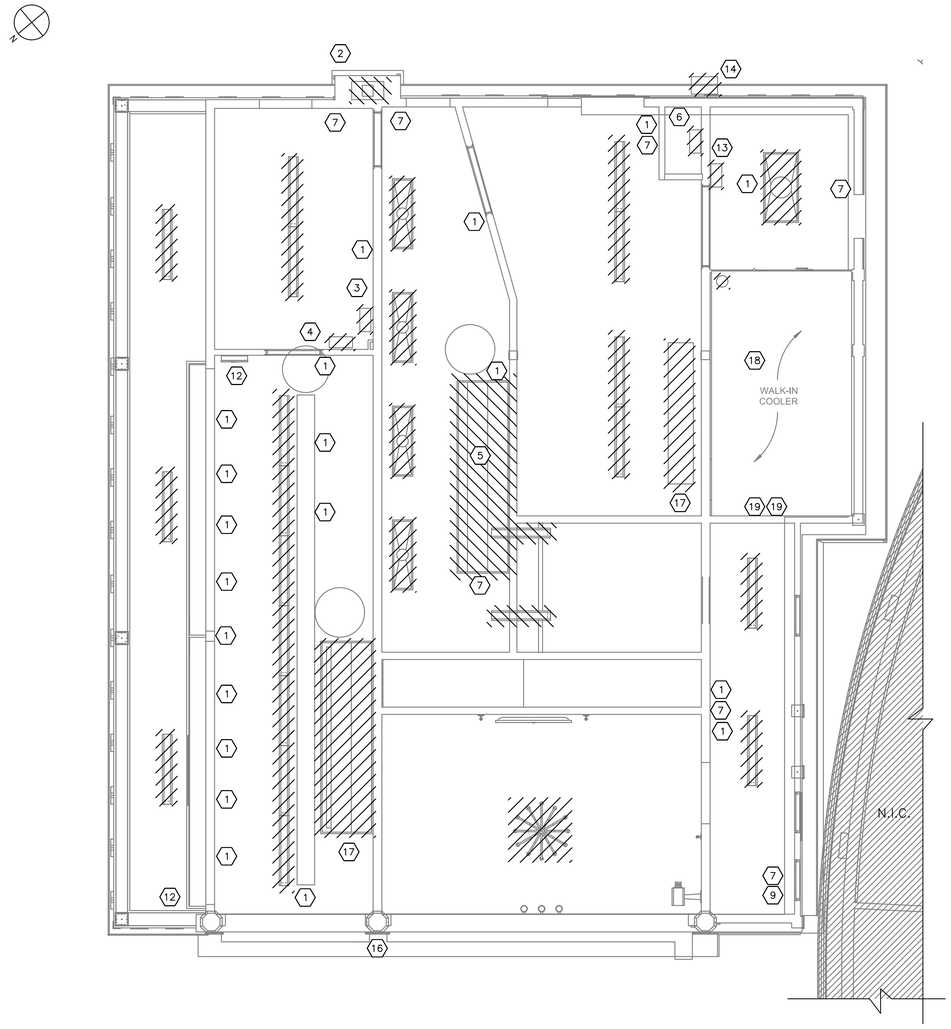

RESTAURANT KITCHEN GROUND FLOOR DEMOLITION POWER AND LIGHTING PLAN
1/4"=1'-0"

NOTES:

1. FOR ADDITIONAL NOTES, ABBREVIATIONS AND SYMBOLS, SEE DRAWING GE-E-01.
2. ALL REMOVED EQUIPMENT SHALL BE RETURNED TO OWNER UPON REQUEST. OTHERWISE ALL REMOVED MATERIAL SHALL BE LEGALLY DISPOSED OF.
3. DISCONNECT AND REMOVE ALL ELECTRICAL EQUIPMENT, LIGHTING, POWER, CONDUIT AND WIRE BACK TO SOURCE. REMOVE ALL PANELBOARDS. COMPLETE ELECTRICAL GUT UNLESS NOTED OTHERWISE.
4. ALL EXISTING CABLE AND CONDUIT SHALL BE DOCUMENTED PRIOR TO REMOVAL.
5. CONTRACTOR SHALL DISCONNECT AND REMOVE ALL EXISTING FLUORESCENT LIGHTING FIXTURES.
6. DISCONNECT AND REMOVE ALL EXTERIOR LIGHTING, ALL EXPOSED CONDUIT, JUNCTION BOXES, WIRE ETC.
7. CONTRACTOR SHALL DEMOLISH ALL EXISTING JUNCTION BOXES AND ALL ASSOCIATED CONDUITS, WIRES AND APPURTENANCES. FOR BIDDING PURPOSES ASSUME 2000 FEET 1"C, 3#12 & 1#12G.
8. DISPOSITION OF EXISTING CCTV/DATA/COMMUNICATIONS CABINET SHALL BE BY OTHERS. THIS INCLUDES BOTH INCOMING AND OUTGOING CONDUIT AND CABLES.
9. ELECTRICAL CONTRACTOR TO DISCONNECT AND REMOVE THE LIGHTING FIXTURES WITHIN THE CEILING-HUNG MENU AND ALL ASSOCIATED ACCESSORIES, CONDUIT AND WIRE.
10. LOCATION OF EXISTING 200A DISCONNECT SWITCH. DISCONNECT AND REMOVE ALL ASSOCIATED CONDUIT AND WIRE BACK TO SOURCE. CONTRACTOR SHALL REFER TO KEY NOTE 3 ON DRAWING K-E-01 FOR ADDITIONAL INFORMATION.
11. THREE EXISTING CONDUITS BELIEVED TO BE ABANDONED FIBER OPTIC DATA CABLING. CONTRACTOR SHALL TRACE OUT AND VERIFY CONDUITS ARE NO LONGER IN USE. CONTRACTOR SHALL DISCONNECT AND REMOVE ASSOCIATED CONDUIT AND WIRE BACK TO SOURCE ONCE STATUS HAS BEEN DETERMINED.

0 4' 8'
SCALE: 1/4" = 1'-0"

CONSULTANT INFORMATION
Savin Engineers, P.C.

CONSULTANT SEAL
STATE OF NEW YORK · STEVEN A. MARTINO · 083631 · LICENSED PROFESSIONAL ENGINEER

REVISION NUMBER	DATE	MADE BY	APP'D BY	REVISION

RECORD DRAWING CERTIFICATION
☐ AS BUILT – CHANGES AS NOTED ☐ AS BUILT – NO CHANGES

CONTRACTOR
NAME
SIGNATURE
TITLE DATE

PROJECT COORDINATOR
NAME
SIGNATURE
TITLE DATE

WESTCHESTER COUNTY, NEW YORK
DEPARTMENT OF PUBLIC WORKS AND TRANSPORTATION
DIVISION OF ENGINEERING

INFRASTRUCTURE REHABILITATION - PHASE 3
PLAYLAND PARK, RYE, NEW YORK
RESTAURANT KITCHEN WITH FOOD VENDING
GROUND FLOOR DEMOLITION POWER & LIGHTING PLAN

CONTRACT NUMBER	22-523
SHEET NUMBER	K-E-02
DWG NO.:	
SCALE:	AS SHOWN
DATE:	8/23/2022
DPW FILE NUMBER	1-118-E-1309-0
REV. NO.	0

Drawing Name: G:\SavinAutocad\2060\25-Playland-Mega-3\EV\KE-1002.dwg
Projectname: 211001F02 Comments: ----
Printed by: MGoaby Date: 29 August 2022 4:11 PM Designed by: ----
Reref: Xrefs: [TB_24X36_WestchesterCo_3.dwg] [TSG-SVL000.dwg] [K-A-02.dwg]

NOTES:

1. FOR ADDITIONAL NOTES, ABBREVIATIONS AND SYMBOLS, SEE DRAWING GE–E–01.
2. ALL REMOVED EQUIPMENT SHALL BE RETURNED TO OWNER UPON REQUEST. OTHERWISE ALL REMOVED MATERIAL SHALL BE LEGALLY DISPOSED OF.
3. FOR EXHAUST FANS AND NATHAN'S SIGNAGE, DISCONNECT AND REMOVE ALL ASSOCIATED POWER, CONDUIT AND WIRE BACK TO SOURCE.
4. DISCONNECT AND REMOVE ALL LIGHTING, ALL EXPOSED CONDUIT AND ASSOCIATED WIRING.

DEMOLITION LEGEND ⬡	
1	NATHAN'S SIGNAGE (SEE NOTE 3)
2	EXHAUST FAN (SEE NOTE 3)

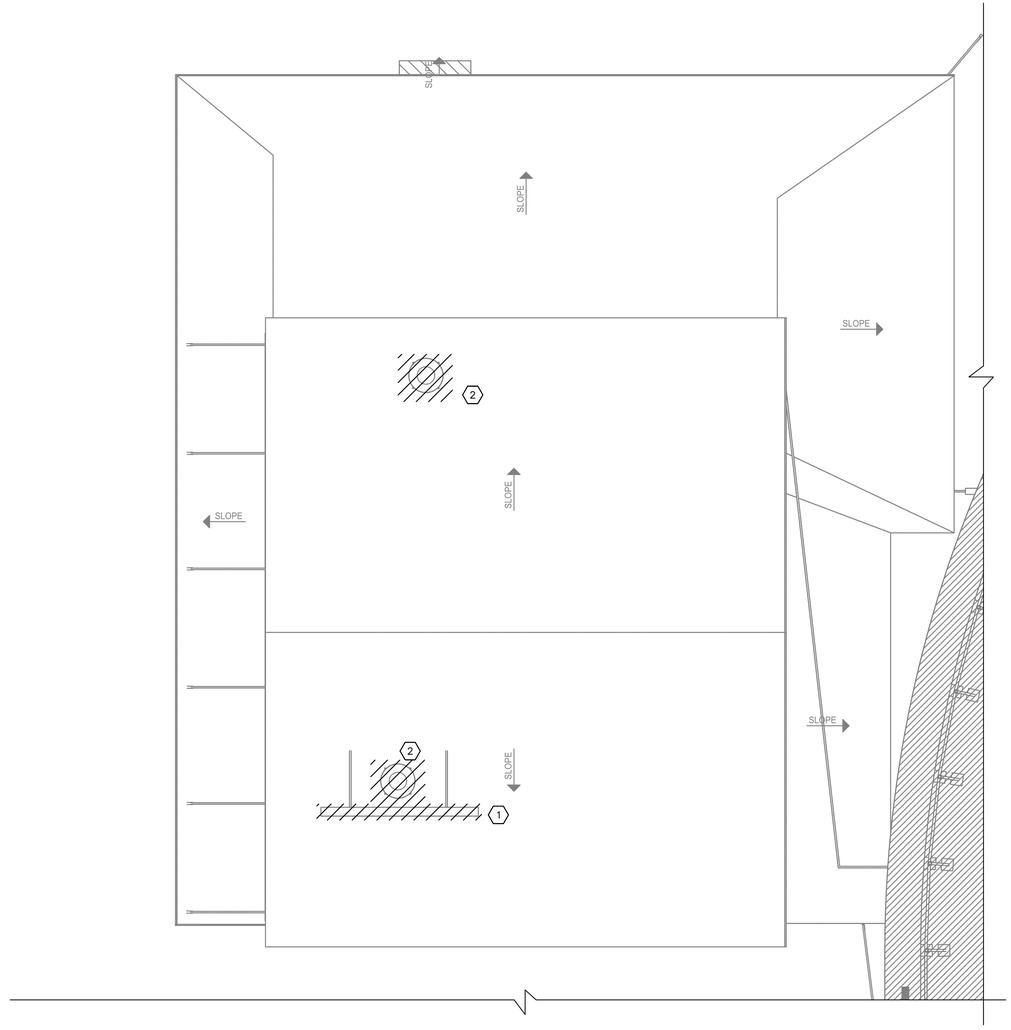

ROOF DEMOLITION PLAN
1/4"=1'–0"

0 4' 8'
SCALE: 1/4" = 1'–0"

Drawing Name: G:\SavinAutocad\2060\25–Playland–Mega–3\E\KE–1003.dwg
Projectname: 211001F02 Comments: ----
Printed by: MGadby Date: 29 August 2022 4:11 PM Designed by: ----
Xrefs: [TB_24X36_WestchesterCo_3.dwg] [TSG–SVLOGO.dwg] [K–A–03.dwg] [K–E–1001.dwg]

CONSULTANT INFORMATION

Savin Engineers, P.C.

CONSULTANT SEAL

STATE OF NEW YORK · STEVEN A. MARTINO · 083631 · LICENSED PROFESSIONAL ENGINEER

REVISION NUMBER	DATE	MADE BY	APP'D BY	REVISION

RECORD DRAWING CERTIFICATION

☐ AS BUILT – CHANGES AS NOTED ☐ AS BUILT – NO CHANGES

CONTRACTOR
NAME
SIGNATURE
TITLE DATE

PROJECT COORDINATOR
NAME
SIGNATURE
TITLE DATE

WESTCHESTER COUNTY, NEW YORK
DEPARTMENT OF PUBLIC WORKS AND TRANSPORTATION
DIVISION OF ENGINEERING

INFRASTRUCTURE REHABILITATION - PHASE 3
PLAYLAND PARK, RYE, NEW YORK
RESTAURANT KITCHEN WITH FOOD VENDING
ROOF DEMOLITION PLAN

CONTRACT NUMBER	SHEET NUMBER
22-523	K-E-03

DWG NO.:
SCALE: AS SHOWN
DATE: 8/23/2022
DPW FILE NUMBER 1-118-E-1310-0 REV. NO. 0

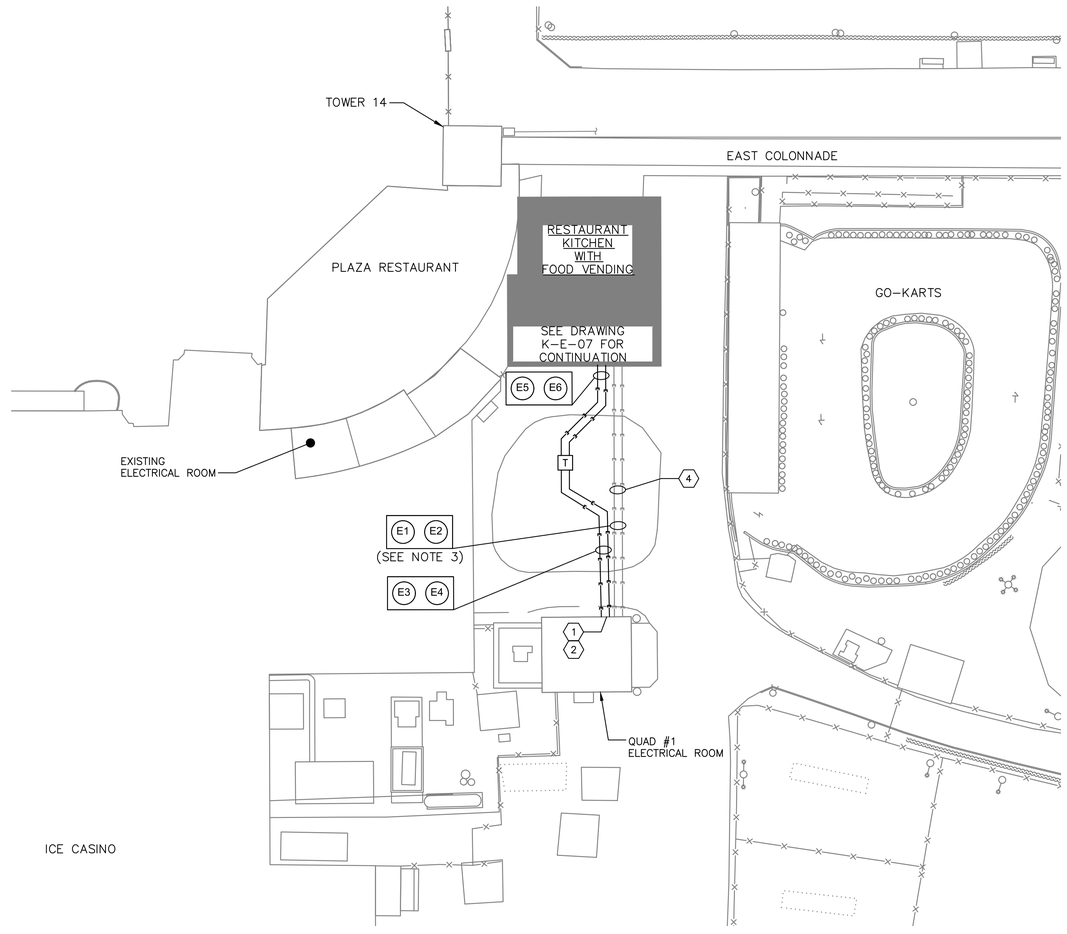

A K-E-04 PARTIAL SITE PLAN
SCALE: 1" = 20"

NOTES:

1. FOR ADDITIONAL NOTES, ABBREVIATIONS AND SYMBOLS, SEE DRAWING GE-E-01.
2. FOR PANEL SCHEDULES, SEE DRAWINGS K-E-05 AND K-E-06.
3. CONTRACTOR SHALL PROVIDE FOR IN HIS/HER BID FOR THE INSTALLATION OF THE NEW DUCT BANK FOR POWER TO PP-2 & LP-1. HOWEVER, CONTRACTOR SHALL INVESTIGATE THE EXISTING TWO CONDUIT RUNS FROM NATHANS TO QUAD #1 ELECTRICAL ROOM. IF POSSIBLE AND EXISTING CONDUIT CONDITION IS ACCEPTABLE, CONTRACTOR SHALL REUSE EXISTING DUCTBANK FOR NEW POWER FEEDERS FOR PP-2 & LP-1 CONTRACTOR SHALL EXTEND EXISTING CONDUITS TO NEW PANEL LOCATIONS. IF THE LATTER OPTION IS CHOSEN, PROVIDE DUCTBANK CREDIT BACK TO OWNER.

KEY NOTES:

1. INTERNAL TO QUAD #1 ELECTRICAL ROOM, EXTEND WITH TWO NEW 2 1/2" CONDUITS WITH 4#4/0 & 1#6 GND. IN EACH TO EXISTING 208Y/120 VOLT SWITCHBOARD. RECONNECT CABLE TO TWO EXISTING 200 AMP CIRCUIT BREAKERS.
2. INTERNAL TO QUAD #1 ELECTRICAL ROOM, EXTEND WITH TWO NEW 2 1/2" CONDUITS WITH 3#4/0 & 1#3 GND. (IN EACH) (PARALLEL FEED SET) TO 480/277 VOLT SWITCHBOARD. MODIFY EXISTING SWITCHBOARD TO ACCEPT A 400 AMP, 3-POLE CIRCUIT BREAKER FOR PANEL K-PP1. CONTRACTOR SHALL ASSUME, FOR BIDDING PURPOSES, A BUS TAP TO THE EXISTING SWITCHBOARD TO A NEW 400 AMP CIRCUIT BREAKER POTENTIALLY MOUNTED ON THE EXTERIOR OF THE STRUCTURE. ACTUAL CONNECTIONS SHALL BE DETERMINED IN THE FIELD.
3. NEW 300 KVA TRANSFORMER WITH 480 VOLT DELTA PRIMARY AND 208Y/120 VOLT, 3-PHASE, 4-WIRE SECONDARY. TRANSFORMER SHALL BE SUITABLE FOR OUTDOOR USE. MOUNT ON A PROPERLY SIZED CONCRETE HOUSE KEEPING PAD. PAD SHALL BE MINIMUM 8" THICK AND 4000 PSI CONCRETE.
4. PROVIDE NEW UNDERGROUND DUCT BANK FOR POWER TO PANELS K=PP2 AND K-LP-1 (SEE NOTE 3).

DUCTBANK SCHEDULE

NAME	FROM	TO	CONDUIT SIZE	CABLE	REMARKS
E1	QUAD #1 ELECTRICAL ROOM	PANEL PP-2	2 1/2"	4 #4/0 & 1 #6 GND	
E2	QUAD #1 ELECTRICAL ROOM	PANEL LP-1	2 1/2"	4 #4/0 & 1 #6 GND	
E3	QUAD #1 ELECTRICAL ROOM	TRANSFORMER	2 1/2"	3 #4/0 & 1 #3 GND	PARALLEL SET
E4	QUAD #1 ELECTRICAL ROOM	TRANSFORMER	2 1/2"	3 #4/0 & 1 #3 GND	
E5	TRANSFORMER	PANEL PP-1	4"	4-500 KCMIL & #1/0 GND	PARALLEL SET
E6	TRANSFORMER	PANEL PP-1	4"	4-500 KCMIL & #1/0 GND	

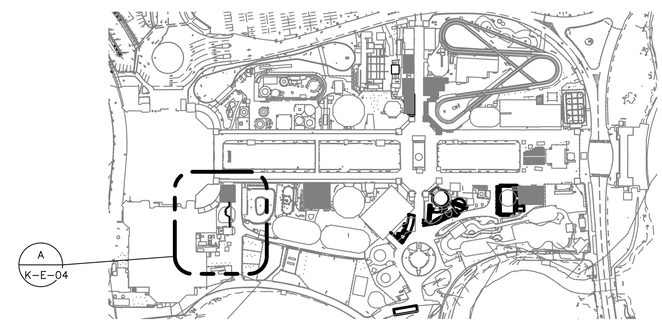

1 KEY PLAN
SCALE: 1" = 200'

0 20' 40'
SCALE: 1" = 20'-0"
0 200' 400'
SCALE: 1" = 200'-0"

Drawing Name: G:\SavinAutocad\2060\25-Playland-Mega-3\E\KE-1004.dwg
Projectname: ---- Comments: ----
Printed by: MGodby Date: 29 August 2022 4:12 PM Designed by: ----
Xrefs: [TB_24X36_WestchesterCo_3.dwg] [TSG-SVL000.dwg] [TWS-SP0001.dwg] [TWC-SP0001.dwg] [COL-A-01.dwg] [K-E-1003.dwg]

CONSULTANT INFORMATION
Savin Engineers, P.C.

CONSULTANT SEAL
STATE OF NEW YORK · STEVEN A. MARTINEZ · 083631 · LICENSED PROFESSIONAL ENGINEER

REVISION NUMBER	DATE	MADE BY	APP'D BY	REVISION

RECORD DRAWING CERTIFICATION
☐ AS BUILT - CHANGES AS NOTED ☐ AS BUILT - NO CHANGES

CONTRACTOR
NAME
SIGNATURE
TITLE DATE

PROJECT COORDINATOR
NAME
SIGNATURE
TITLE DATE

WESTCHESTER COUNTY, NEW YORK
DEPARTMENT OF PUBLIC WORKS AND TRANSPORTATION
DIVISION OF ENGINEERING

INFRASTRUCTURE REHABILITATION - PHASE 3
PLAYLAND PARK, RYE, NEW YORK
RESTAURANT KITCHEN WITH FOOD VENDING
SITE DUCTBANK PLAN

CONTRACT NUMBER	22-523
SHEET NUMBER	K-E-04
DWG NO.:	
SCALE:	AS SHOWN
DATE:	8/23/2022
DPW FILE NUMBER	1-118-E-1311-0
REV. NO.	0

PANELBOARD: K-PP-1* **LOCATION:** ELECTRICAL CLOSET

1 **NEMA RATING** 3 **POLES** **MOUNTING:** SURFACE

800 **AMP BUS RATING** 800 **AMP MAIN BREAKER** 42 **KA SHORT CIRCUIT RATING**

208Y/120 **VOLTS** 3 **PHASE** 4 **WIRE** **ELECTRONIC GRADE :** NO

CIRCUIT NO.	DESCRIPTION	LOAD KVA PHASE A	LOAD KVA PHASE B	LOAD KVA PHASE C	BREAKER AMPS / POLES	NOTES	CIRCUIT NO.	DESCRIPTION	LOAD KVA PHASE A	LOAD KVA PHASE B	LOAD KVA PHASE C	BREAKER AMPS / POLES	NOTES
1							2						
3							4						
5							6						
7							8						
9							10						
11							12						
13							14						
15							16						
17							18						
19							20						
21							22						
23							24						
25							26						
27							28						
29							30						
31							32						
33							34						
35							36						
37							38						
39							40						
41							42						
	TOTAL PHASE KVA THIS SIDE	0.00	0.00	0.00				**TOTAL PHASE KVA THIS SIDE**	0	0	0		
								TOTAL KVA PER PHASE	0.00	0.00	0.00		
								TOTAL THREE PHASE KVA	0.00				

NOTES:
1. *PANEL PROVIDED FOR FUTURE VENDOR FIT-OUT USE.
2.
3.
4.

NOTES CONT.:
5.
6.
7.
8.

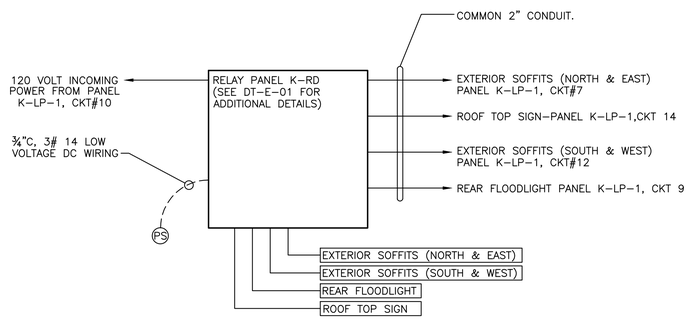

RESTAURANT KITCHEN EXTERIOR WIRING DETAIL
N.T.S.

NAME : K-RP	LOCATION: ELECTRICAL CLOSET
CKT NO	DESCRIPTION
1	EXTERIOR SOFFITS (NORTH & EAST)
2	EXTERIOR SOFFITS (SOUTH & WEST)
3	REAR FLOODLIGHT
4	ROOF TOP SIGN LTG.
5	SPARE
6	SPARE

NOTES:
1. FOR ADDITIONAL NOTES, ABBREVIATIONS AND SYMBOLS, SEE DRAWING GE-E-01.

KEY NOTES:
1. REUSE EXISTING 200 AMP CIRCUIT BREAKERS.
2. INSTALL NEW 400 AMP CIRCUIT BREAKER. OR AS REQUIRED BY KEY NOTE 2 ON DWG. K-E-04.
3. FOR BIDDING PURPOSES, ASSUME NEW UNDERGROUND DUCT BANK. REFER TO NOTE 3 ON DRAWING K-E-04 FOR ADDITIONAL INFORMATION.
4. NEW 208Y/120 VOLT 3 – PHASE, 4 – WIRE PANEL K-LP-1 WITH 225 AMP MAINS AND 200 AMP MAIN BREAKER.
5. NEW 208Y/120 VOLT 3 – PHASE, 4 – WIRE PANEL K-PP-2 WITH 225 AMP MAINS AND 200 AMP MAIN BREAKER.
6. 300 KVA TRANSFORMER WITH 480 VOLT DELTA PRIMARY AND 208Y/120V SECONDARY.
7. NEW 208Y/120 VOLT, 3 – PHASE, 4 – WIRE POWER PANEL K-PP-1 WITH 800 AMP MAINS AND 800 AMP MAIN CIRCUIT BREAKER.
8. NEW EXTERIOR LIGHTING RELAY PANEL K-RP

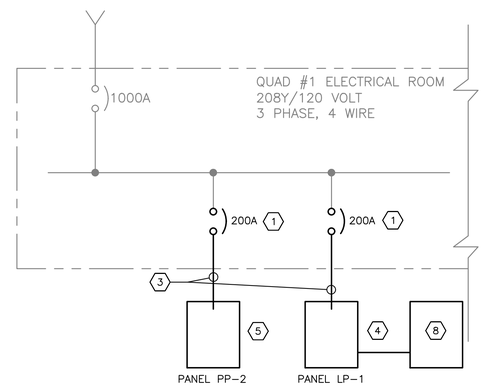

ONE LINE DIAGRAM
N.T.S.

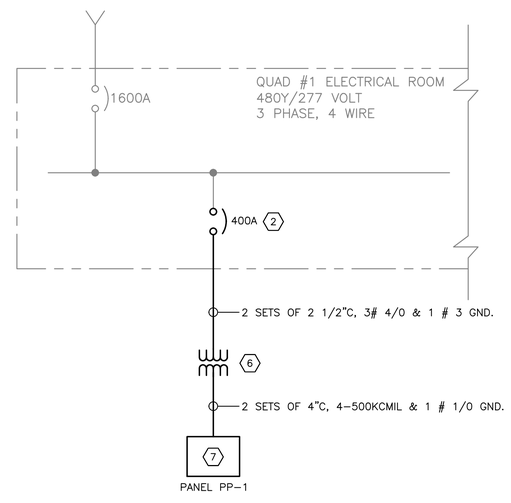

Drawing Name: G:\SavinAutocad\2060\25-Playland-Mega-3\EXKE-1005.dwg
Projectname: 211001F02 Comments: ----
Printed by: MGodby Date: 31 August 2022 9:23 AM Designed by: ----
Xrefs: [TB_24X36_WestchesterCo_3.dwg] [TSG-SYL060.dwg] [BCR-A-04.dwg] [BCRE-101.dwg]

CONSULTANT INFORMATION
Savin Engineers, P.C.

CONSULTANT SEAL
STATE OF NEW YORK · STEVEN A. MARINO · 083631 · LICENSED PROFESSIONAL ENGINEER

REVISION NUMBER	DATE	MADE BY	APP'D BY	REVISION

RECORD DRAWING CERTIFICATION
☐ AS BUILT – CHANGES AS NOTED ☐ AS BUILT – NO CHANGES

CONTRACTOR
NAME
SIGNATURE
TITLE DATE

PROJECT COORDINATOR
NAME
SIGNATURE
TITLE DATE

WESTCHESTER COUNTY, NEW YORK
DEPARTMENT OF PUBLIC WORKS AND TRANSPORTATION
DIVISION OF ENGINEERING

INFRASTRUCTURE REHABILITATION - PHASE 3
PLAYLAND PARK, RYE, NEW YORK
RESTAURANT KITCHEN WITH FOOD VENDING
ONE LINE DIAGRAMS AND EXTERIOR LIGHTING CONTROL

CONTRACT NUMBER	22-523
SHEET NUMBER	K-E-05
DWG NO.:	
SCALE:	AS SHOWN
DATE:	8/23/2022
DPW FILE NUMBER	1-118-E-1312-0
REV. NO.	0

NOTES:

1. FOR ADDITIONAL NOTES, ABBREVIATIONS AND SYMBOLS, SEE DRAWING GE-E-01.

PANELBOARD: K-LP-1 **LOCATION:** ELECTRICAL CLOSET

1 **NEMA RATING** 3 **POLES** **MOUNTING:** SURFACE

225 **AMP BUS RATING** 200 **AMP MAIN BREAKER** 42 **KA SHORT CIRCUIT RATING**

208Y/120 **VOLTS** 3 **PHASE** 4 **WIRE** **ELECTRONIC GRADE :** NO

CIRCUIT NO.	DESCRIPTION	LOAD KVA PHASE A	LOAD KVA PHASE B	LOAD KVA PHASE C	BREAKER AMPS / POLES	NOTES	CIRCUIT NO.	DESCRIPTION	LOAD KVA PHASE A	LOAD KVA PHASE B	LOAD KVA PHASE C	BREAKER AMPS / POLES	NOTES
1	KITCHEN LTG.	0.6			20/1		2	UTILITY, SERVICE & UPSTAIRS LTG.	0.37			20/1	
3	KITCHEN LTG.		0.6		20/1		4	SPARE		-		20/1	
5	SPARE			-	20/1		6	SPARE			-	20/1	
7	K-RP EXTERIOR SOFFITS (NORTH & EAST)	0.5			20/1		8	SPARE	-			20/1	
9	K-RP REAR FLOODLIGHT		0.2		20/1		10	POWER TO K-RP (120V)		0.2		20/1	
11	K-RP SPARE			-	20/1		12	K-RP EXTERIOR SOFFITS (SOUTH &			0.5	20/1	
13	SPARE	-			20/1		14	ROOF TOP SIGNAGE	0.2			20/1	
15	SPARE		-		20/1		16	K-RP SPARE		-		20/1	
17	SPARE			-	20/1		18	SPARE			-	20/1	
19	SPACE						20	SPACE					
21	SPACE						22	SPACE					
23	SPACE						24	SPACE					
25	SPACE						26	SPACE					
27	SPACE						28	SPACE					
29	SPACE						30	SPACE					
31	SPACE						32	SPACE					
33	SPACE						34	SPACE					
35	SPACE						36	SPACE					
37	SPACE						38	SPACE					
39	SPACE						40	SPACE					
41	SPACE						42	SPACE					
	TOTAL PHASE KVA THIS SIDE	1.10	0.80	0.00				**TOTAL PHASE KVA THIS SIDE**	0.57	0.2	0.5		
								TOTAL KVA PER PHASE	1.67	1.00	0.50		
								TOTAL THREE PHASE KVA	3.17				

NOTES:
1.
2.
3.
4.

NOTES CONT.:
5.
6.
7.
8.

PANELBOARD: K-PP-2 **LOCATION:** ELECTRICAL CLOSET

1 **NEMA RATING** 3 **POLES** **MOUNTING:** SURFACE

200 **AMP BUS RATING** 200 **AMP MAIN BREAKER** 42 **KA SHORT CIRCUIT RATING**

208Y/120 **VOLTS** 3 **PHASE** 4 **WIRE** **ELECTRONIC GRADE :** NO

CIRCUIT NO.	DESCRIPTION	LOAD KVA PHASE A	LOAD KVA PHASE B	LOAD KVA PHASE C	BREAKER AMPS / POLES	NOTES	CIRCUIT NO.	DESCRIPTION	LOAD KVA PHASE A	LOAD KVA PHASE B	LOAD KVA PHASE C	BREAKER AMPS / POLES	NOTES
1	UPSTAIRS RECEPTACLES	0.5			20/1		2	SPARE	-			20/1	
3	ROLL-UP DOOR		1		20/1		4	KITCHEN RECEPTACLES (GFI)		0.5		20/1	
5	ROLL-UP DOOR			1	20/1		6	KITCHEN RECEPTACLES (GFI)			0.5	20/1	
7	UH-1	1.65			20/2		8	AC-1	1.6			15/2	
9			1.65				10			1.6			
11	UH-2			2.5	30/2		12	AC-2			1.6	15/2	
13		2.5					14		1.6				
15	UH-3		2.5		30/2		16	RECEPTACLES		0.5		20/1	
17				2.5			18	SPARE			-	20/1	
19	EF-1	0.2			15/1		20	SPARE	-			20/1	
21	EF-2		0.20		15/1		22	SPARE		-		20/1	
23	RECEPTACLES			0.5	20/1		24	CU-1			3.1	35/2	
25	PTAC-1	0.5			15/2		26		3.1				
27			0.5				28	SPACE					
29	ROLL-UP DOOR			1	20/1		30	SPACE					
31	SPACE						32	SPACE					
33	SPACE						34	SPACE					
35	SPACE						36	SPACE					
37	SPACE						38	RTU-1	12			110/3	
39	SPACE						40			12			
41	SPACE						42				12		
	TOTAL PHASE KVA THIS SIDE	5.35	5.85	5.00				**TOTAL PHASE KVA THIS SIDE**	18.3	14.6	17.2		
								TOTAL KVA PER PHASE	23.65	20.45	22.20		
								TOTAL THREE PHASE KVA	66.30				

NOTES:
1.
2.
3.
4.

NOTES CONT.:
5.
6.
7.
8.

CONSULTANT INFORMATION

Savin Engineers, P.C.

CONSULTANT SEAL

STATE OF NEW YORK · STEVEN A. MARTINO · 083691 · LICENSED PROFESSIONAL ENGINEER

REVISION NUMBER	DATE	MADE BY	APP'D BY	REVISION

RECORD DRAWING CERTIFICATION

☐ AS BUILT – CHANGES AS NOTED ☐ AS BUILT – NO CHANGES

CONTRACTOR
NAME
SIGNATURE
TITLE DATE

PROJECT COORDINATOR
NAME
SIGNATURE
TITLE DATE

WESTCHESTER COUNTY, NEW YORK
DEPARTMENT OF PUBLIC WORKS AND TRANSPORTATION
DIVISION OF ENGINEERING

INFRASTRUCTURE REHABILITATION - PHASE 3
PLAYLAND PARK, RYE, NEW YORK
RESTAURANT KITCHEN WITH FOOD VENDING
PANEL SCHEDULES

CONTRACT NUMBER	22-523
SHEET NUMBER	K-E-06
DWG NO.:	
SCALE:	AS SHOWN
DATE:	8/23/2022
DPW FILE NUMBER	1-118-E-1313-0
REV. NO.	0

Drawing Name: G:\SavinAutocad\2060\25-Playland-Mega-3\E\KE-1011.dwg
Projectname: 211001F02 Comments: ----
Printed by: MGadby Date: 31 August 2022 9:00 AM Designed by: ----
Xrefs: [TB_24X36_WestchesterCo_3.dwg] [TSG-SVLOGO.dwg] [BCR-A-04.dwg] [BCRE-101.dwg]

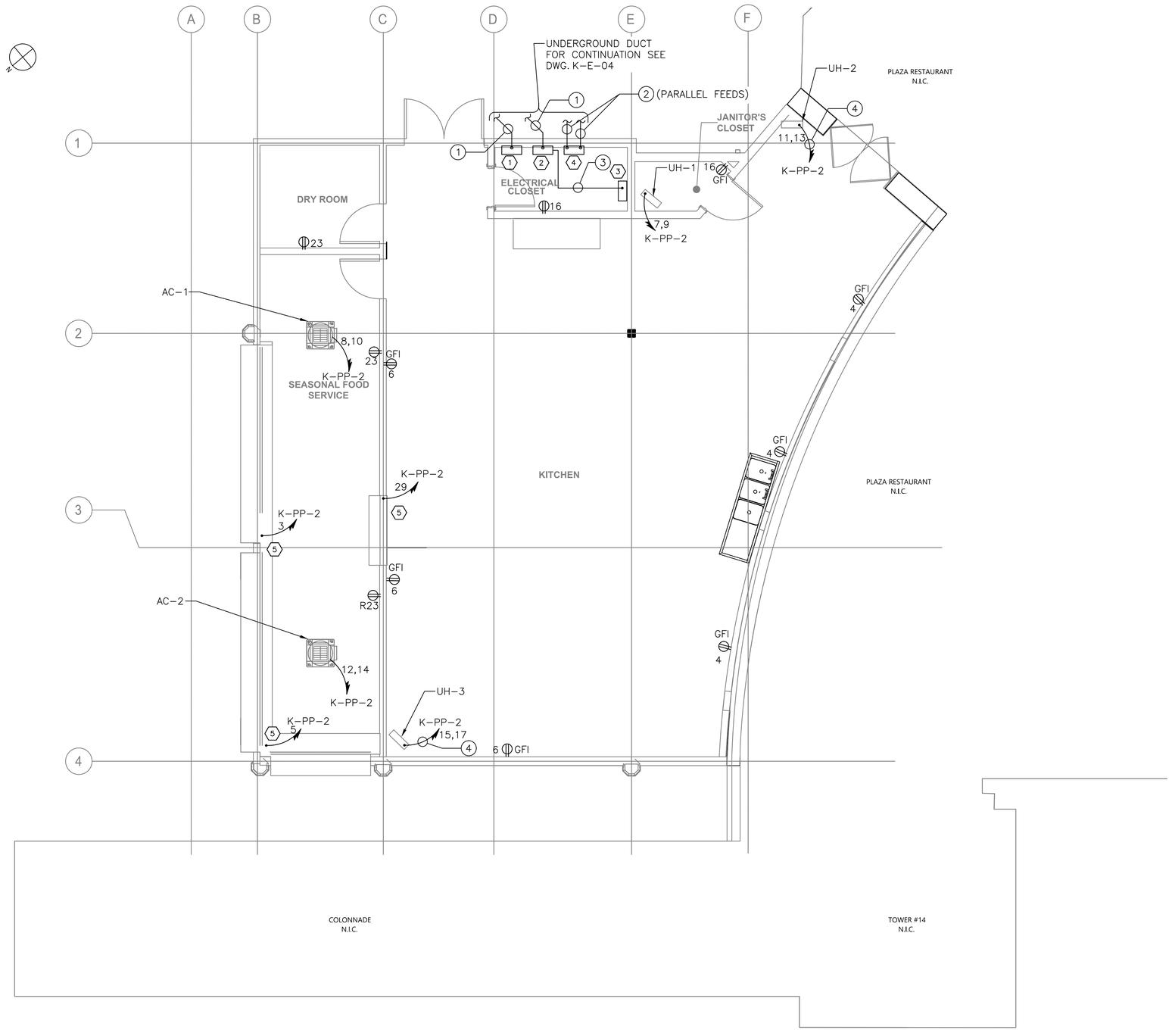

RESTARUANT KITCHEN GROUND FLOOR POWER PLAN

1/4"=1'-0"

NOTES:

1. FOR ADDITIONAL NOTES, ABBREVIATIONS AND SYMBOLS, SEE DRAWING GE-E-01.
2. ALL RECEPTACLES DESIGNATORS ARE POWERED VIA PANEL K-PP-2, UNLESS OTHERWISE NOTED.
3. ALL CIRCUITS SHOWN ON THE DRAWING BUT NOT SPECIFICALLY CALLED OUT ON THE CABLE AND CONDUIT SCHEDULE SHALL BE 3/4" CONDUIT 2#12, 1#12G AWG.
4. ALL HVAC LOW VOLTAGE WIRING SHALL BE PERFORMED BY THE HVAC CONTRACTOR, INCLUDING BUT NOT LIMITED TO LOW VOLTAGE THERMOSTAT WIRING.
5. EXHAUST FAN STARTERS SHALL BE FURNISHED BY THE EXHAUST FAN MANUFACTURER. FOR EXHAUST FAN STARTER REQUIREMENTS, SEE HVAC CONTRACT DRAWINGS AND SPECIFICATIONS.
6. FOR PANEL SCHEDULES, SEE DRAWING K-E-05.

KEY NOTES:

(1) NEW 208Y/120 VOLT POWER PANEL K-PP-2, 3 PHASE, 4 WIRE. 225 AMP MAINS WITH 200 AMP MAIN BREAKER.

(2) NEW 208Y/120 VOLT LIGHTING PANEL K-LP-1, 3 PHASE, 4 WIRE. 225 AMP MAINS WITH 200 AMP MAIN BREAKER.

(3) NEW EXTERIOR LIGHTING RELAY PANEL K-RP.

(4) NEW 208Y/120 VOLT POWER PANEL K-PP-1, 3 PHASE, 4 WIRE, 800 AMP MAINS WITH 800 AMP MAIN BREAKER.

(5) APPROXIMATE LOCATION OF MOTOR FOR NEW ROLL-UP DOOR. CONTRACTOR SHALL CONFIRM MOTOR LOCATION IN THE FIELD PRIOR TO INSTALLATION. CONTRACTOR SHALL CIRCUIT MOTOR FROM PANEL K-PP-2. NUMBER DESIGNATORS INDICATE CIRCUIT NUMBERS. CONTRACTOR SHALL PROVIDE 30 AMP, 2-POLE DISCONNECT SWITCH AT ROLL-UP DOOR MOTOR LOCATION.

CONDUIT AND WIRE LEGEND

NO.	DESCRIPTION
1	2 1/2"C, 4#4/0 & 1#6 GND
2	2 SETS OF 4"C, 4-500KCMIL & 1#1/0 GND
3	2"C, 12#12 & 5#12 GNDS
4	3/4"C, 2#10 & 1#10 GND

0 4' 8'

SCALE: 1/4" = 1'-0"

CONSULTANT INFORMATION

Savin Engineers, P.C.

CONSULTANT SEAL

STATE OF NEW YORK · STEVEN A. MARTINO · 083631 · LICENSED PROFESSIONAL ENGINEER

REVISION NUMBER	DATE	MADE BY	APP'D BY	REVISION

RECORD DRAWING CERTIFICATION

☐ AS BUILT – CHANGES AS NOTED ☐ AS BUILT – NO CHANGES

CONTRACTOR: NAME / SIGNATURE / TITLE / DATE

PROJECT COORDINATOR: NAME / SIGNATURE / TITLE / DATE

WESTCHESTER COUNTY, NEW YORK
DEPARTMENT OF PUBLIC WORKS AND TRANSPORTATION
DIVISION OF ENGINEERING

INFRASTRUCTURE REHABILITATION - PHASE 3
PLAYLAND PARK, RYE, NEW YORK
RESTAURANT KITCHEN WITH FOOD VENDING
GROUND FLOOR POWER PLAN

CONTRACT NUMBER	22-523
SHEET NUMBER	K-E-07
DWG NO.:	
SCALE:	AS SHOWN
DATE:	8/23/2022
DPW FILE NUMBER	1-118-E-1314-0
REV. NO.	0

Drawing Name: G:\SavinAutocad\2060\25-Playland-Mega-3\E\KE-1006.dwg
Projectname: 211001F02 Comments: ----
Printed by: MGadby Date: 29 August 2022 4:13 PM Designed by: ----
Rev#:
Xrefs: [TB_24X36_WestchesterCo_3.dwg] [TSG-SVL000.dwg] [K-A-11.dwg] [K-E-1005.dwg]

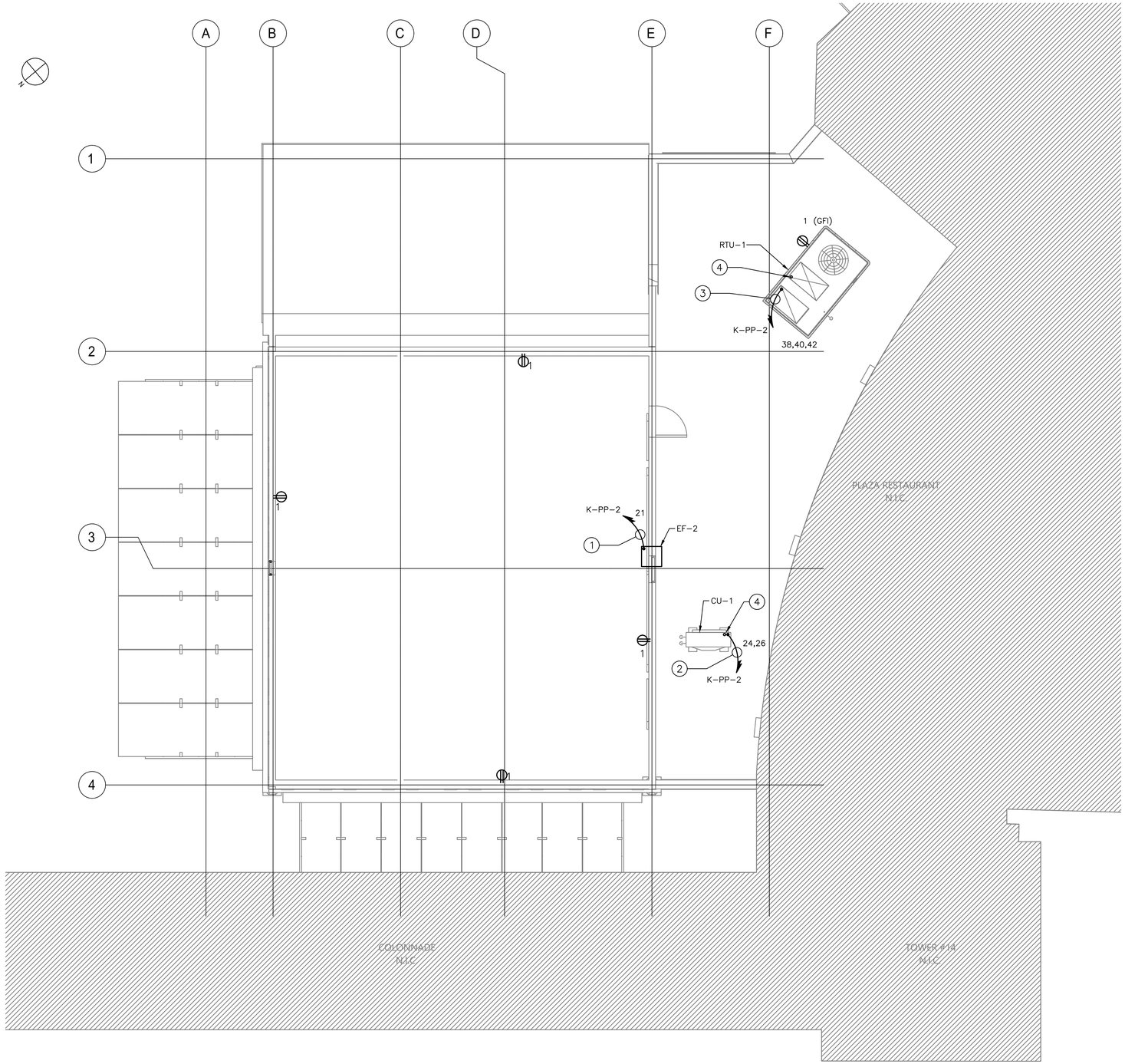

RESTAURANT KITCHEN SECOND FLOOR POWER PLAN

1/4"=1'-0"

NOTES:

1. FOR ADDITIONAL NOTES, ABBREVIATIONS AND SYMBOLS, SEE DRAWING GE-E-01.
2. ALL RECEPTACLES DESIGNATORS ARE POWERED K-PP-2, UNLESS OTHERWISE NOTED.
3. ALL CIRCUITS SHOWN ON THE DRAWING BUT NOT SPECIFICALLY CALLED OUT ON THE CABLE AND CONDUIT SCHEDULE SHALL BE 3/4" CONDUIT 2#12, 1#12G AWG.
4. ALL HVAC LOW VOLTAGE WIRING SHALL BE PERFORMED BY THE HVAC CONTRACTOR, INCLUDING BUT NOT LIMITED TO LOW VOLTAGE THERMOSTAT WIRING.
5. EXHAUST FAN STARTERS SHALL BE FURNISHED BY THE EXHAUST FAN MANUFACTURER. FOR EXHAUST FAN STARTER REQUIREMENTS, SEE HVAC CONTRACT DRAWINGS AND SPECIFICATIONS.
6. FOR PANEL SCHEDULES, SEE DRAWING K-E-05.
7. CONTRACTOR SHALL COORDINATE ALL REQUIRED DISCONNECTING MEANS WITH HVAC CONTRACTOR.
8. ALL ROOF PENETRATIONS SHALL BE WATERPROOF. PENETRATION COMPONENTS FOR CONDUIT SHALL BE SUITABLE AND COMPATIBLE FOR INSTALLED ROOF. SEE ARCHITECTURAL AND PLUMBING DRAWINGS FOR ADDITIONAL INFORMATION.

CONDUIT AND WIRE LEGEND

NO.	DESCRIPTION
1	3/4"C 2#10 & 1#10 GND
2	3/4"C, 2#8 & 1#10 GND
3	1 1/4"C, 3#2 & 1#8 GND
4	1"C, FOR CONTROL

0 4' 8'

SCALE: 1/4" = 1'-0"

CONSULTANT INFORMATION

Savin Engineers, P.C.

CONSULTANT SEAL

STATE OF NEW YORK · STEVEN A. MARTINO · 083631 · LICENSED PROFESSIONAL ENGINEER

REVISION NUMBER	DATE	MADE BY	APP'D BY	REVISION

RECORD DRAWING CERTIFICATION

☐ AS BUILT – CHANGES AS NOTED ☐ AS BUILT – NO CHANGES

CONTRACTOR

NAME
SIGNATURE
TITLE DATE

PROJECT COORDINATOR

NAME
SIGNATURE
TITLE DATE

WESTCHESTER COUNTY, NEW YORK
DEPARTMENT OF PUBLIC WORKS AND TRANSPORTATION
DIVISION OF ENGINEERING

INFRASTRUCTURE REHABILITATION - PHASE 3
PLAYLAND PARK, RYE, NEW YORK
RESTAURANT KITCHEN WITH FOOD VENDING
SECOND LEVEL POWER PLAN

CONTRACT NUMBER	22-523
SHEET NUMBER	K-E-08
DWG NO.:	
SCALE:	AS SHOWN
DATE:	8/23/2022
DPW FILE NUMBER	1-118-E-1315-0
REV. NO.	0

Drawing Name: G:\SavinAutocad\2060\25-Playland-Mega-3\E\KE-1007.dwg
Projectname: 211001F02 Comments: ----
Printed by: MGadby Date: 31 August 2022 8:43 AM Designed by: ----
Reqf: ----
Xrefs: [TB_24X36_WestchesterCo_3.dwg] [TSG-SVLOGO.dwg] [K-A-12.dwg] [K-E-1006.dwg]

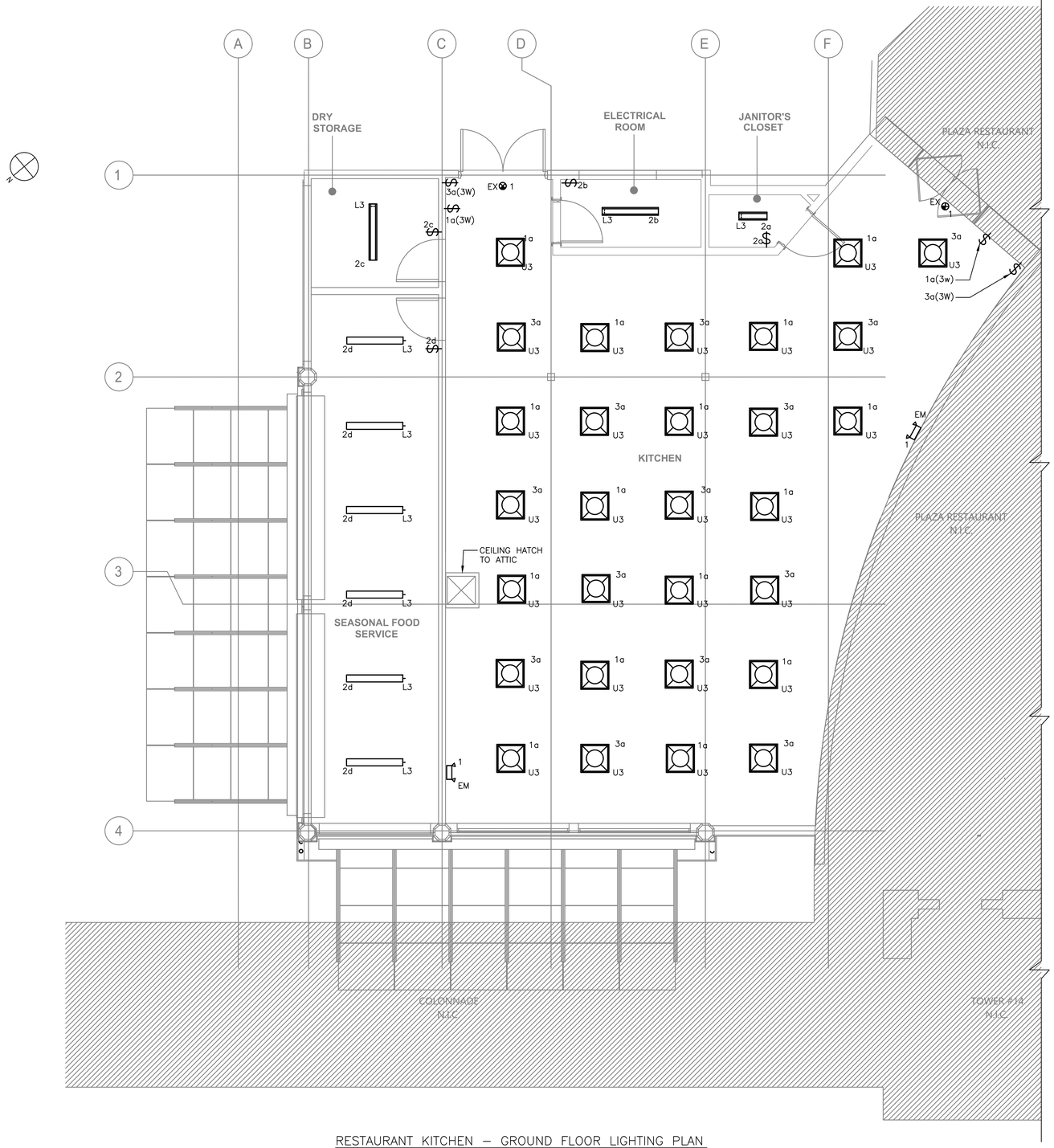

RESTAURANT KITCHEN – GROUND FLOOR LIGHTING PLAN

1/4"=1'-0"

NOTES:

1. FOR ADDITIONAL NOTES, ABBREVIATIONS AND SYMBOLS, SEE DRAWING GE-E-01.
2. ALL LIGHTING SYSTEMS SHOWN ON PLAN ARE POWERED VIA LIGHTING PANEL K-LP-1, UNLESS NOTED OTHERWISE. CONTRACTOR SHALL CIRCUIT LIGHTING FIXTURES WITH 3/4" CONDUIT WITH 2#12 & 1#12GND, UNLESS NOTED OTHERWISE.
3. EXIT SIGNS SHALL BE WIRED TO THE UN-SWITCHED LEG OF THE DESIGNATED CIRCUIT.
4. EMERGENCY FIXTURES SHALL BE WIRED TO THE UN-SWITCHED LEG OF THE DESIGNATED CIRCUIT.
5. ALL EXTERIOR LIGHTING SHALL BE CIRCUITED TO RELAY PANEL K-RP. CONTRACTOR SHALL CIRCUIT LIGHTING FIXTURES WITH 3/4" CONDUIT WITH 2#12 & 1#12GND, UNLESS NOTED OTHERWISE.
6. FOR LIGHTING PANEL SCHEDULE, REFER TO DRAWING K-E-06.
7. NUMBER DESIGNATORS NEXT TO FIXTURES AND/OR CONTROLS INDICATE CIRCUIT NUMBERS.
8. ALL LIGHTING CONTROL COMPONENTS SHALL BE FROM A SINGLE MANUFACTURER, AND MUST BE FROM THE SAME MANUFACTURER FOR ALL BUILDINGS WITHIN THE CONTRACT. EQUIPMENT INCLUDES BUT NOT LIMITED TO OCCUPANCY SENSORS, RELAY/POWER PACKS, SWITCHES, RELAY PANELS, PHOTOSENSOR, ETC.
9. LIGHTING CONTROLS SELECTED SHALL HAVE THE CAPABILITY TO BE CONNECTED TO A MASTER HEAD-END SYSTEM (FUTURE CONTRACT).
10. RELAY PANEL SHALL BE EQUIPPED WITH BOTH A BUILT-IN TIME CLOCK AND A PHOTOSENSOR CONTROL.
11. FOR EXTERIOR LIGHTING CONTROL WIRING INFORMATION, SEE EXTERIOR WIRING DETAIL SHOWN ON K-E-06.
12. FOR LIGHTING FIXTURE SCHEDULE SEE DRAWING GE-E-03.
13. ALL U3 FIXTURES SHALL BE PLACED 10 FT ABOVE THE FINISHED FLOOR.

LIGHTING CONTROL LEGEND

SYMBOL	DESCRIPTION
$ (3W)	120V RATED LIGHTING SINGLE POLE SWITCH – (3W) –3–WAY
RP	RELAY TIME CONTROL PANEL PROGRAMMABLE ZONE CONTROL PANEL UP TO 1 ADDRESS PER RELAY/DIMMING OUTPUT EQUIPPED WITH 0–10V DIMMING OUTPUT PER RELAY CATALOG NUMBER: ARP INTENCO8NLT–16SR–MVOLT–1VB–HLK–S–DTC OR APPROVED EQUAL
PS	ANALOG PHOTOCELL – PHOTOSENSOR SUITABLE FOR OUTDOOR APPLICATIONS. CATALOG NUMBER: LSA–APS–OL OR APPROVED EQUAL

0 4' 8'

SCALE: 1/4" = 1'-0"

CONSULTANT INFORMATION

Savin Engineers, P.C.

CONSULTANT SEAL

STATE OF NEW YORK · STEVEN A. MARTINEZ · 083631 · LICENSED PROFESSIONAL ENGINEER

REVISION NUMBER	DATE	MADE BY	APP'D BY	REVISION

RECORD DRAWING CERTIFICATION

☐ AS BUILT – CHANGES AS NOTED ☐ AS BUILT – NO CHANGES

CONTRACTOR: NAME / SIGNATURE / TITLE / DATE

PROJECT COORDINATOR: NAME / SIGNATURE / TITLE / DATE

WESTCHESTER COUNTY, NEW YORK
DEPARTMENT OF PUBLIC WORKS AND TRANSPORTATION
DIVISION OF ENGINEERING

INFRASTRUCTURE REHABILITATION - PHASE 3
PLAYLAND PARK, RYE, NEW YORK
RESTAURANT KITCHEN WITH FOOD VENDING
GROUND FLOOR LIGHTING PLAN

CONTRACT NUMBER	22-523
SHEET NUMBER	K-E-09
DWG NO.:	
SCALE:	AS SHOWN
DATE:	8/23/2022
DPW FILE NUMBER	1-118-E-1316-0
REV. NO.	0

Drawing Name: G:\SavinAutocad\2060\25-Playland-Mega-3\E\KE-1008.dwg
Projectname: 211001F02 Comments: ----
Printed by: MGoaby Date: 31 August 2022 8:43 AM Designed by: ----
Xrefs: [TB_24X36_WestchesterCo_3.dwg] [TSG-SVL060.dwg] [K-A-13.dwg] [K-E-1007.dwg]

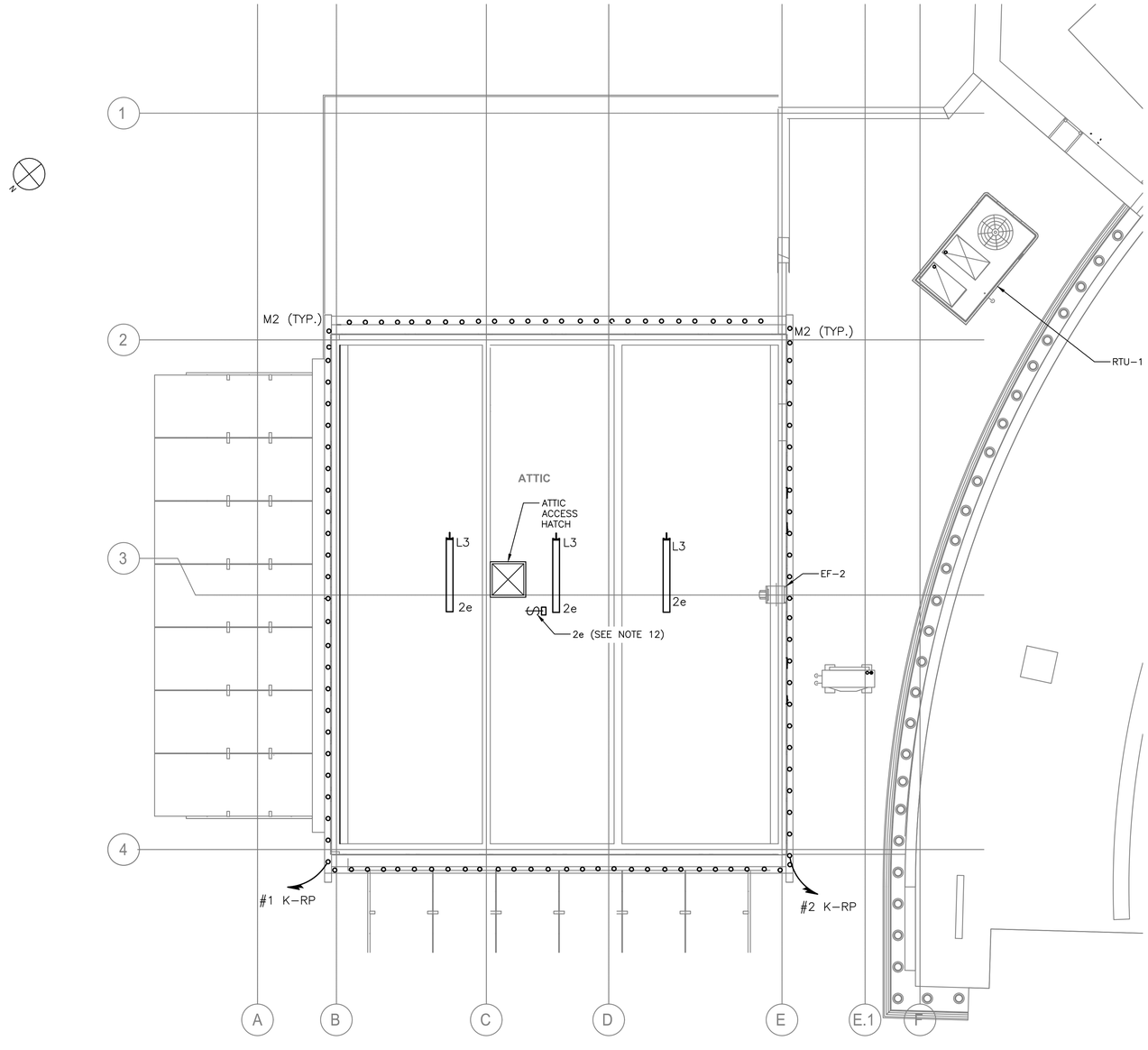

RESTAURANT KITCHEN SECOND FLOOR LIGHTING PLAN
1/4"=1'-0"

NOTES:

1. FOR ADDITIONAL NOTES, ABBREVIATIONS AND SYMBOLS, SEE DRAWING GE-E-01.
2. ALL LIGHTING SYSTEMS SHOWN ON PLAN ARE POWERED VIA LIGHTING PANEL K-LP-1, UNLESS NOTED OTHERWISE. CONTRACTOR SHALL CIRCUIT LIGHTING FIXTURES WITH 3/4" CONDUIT WITH 2#12 & 1#12GND, UNLESS NOTED OTHERWISE.
3. EXIT SIGNS SHALL BE WIRED TO THE UN-SWITCHED LEG OF THE DESIGNATED CIRCUIT.
4. EMERGENCY FIXTURES SHALL BE WIRED TO THE UN-SWITCHED LEG OF THE DESIGNATED CIRCUIT.
5. ALL EXTERIOR LIGHTING SHALL BE CIRCUITED TO RELAY PANEL K-RP. CONTRACTOR SHALL CIRCUIT LIGHTING FIXTURES WITH 3/4" CONDUIT WITH 2#10 & 1#10GND, UNLESS NOTED OTHERWISE.
6. FOR LIGHTING PANEL SCHEDULE, REFER TO DRAWING K-E-05, K-E-06.
7. NUMBER DESIGNATORS NEXT TO FIXTURES AND/OR CONTROLS INDICATE CIRCUIT NUMBERS.
8. RELAY PANEL SHALL BE EQUIPPED WITH BOTH A BUILT-IN TIME CLOCK AND A PHOTOSENSOR CONTROL.
9. FOR EXTERIOR LIGHTING CONTROL WIRING INFORMATION, SEE EXTERIOR WIRING DETAIL SHOWN ON K-E-06.
10. FOR LIGHTING FIXTURE SCHEDULE SEE DRAWING GE-E-03.
11. ALL L3 FIXTURES SHALL BE PLACED 12 FT ABOVE FINISHED FLOOR.
12. MOUNT ATTIC LIGHT SWITCH AT TOP OF ATTIC ACCESS HATCH.

0 4' 8'
SCALE: 1/4" = 1'-0"

CONSULTANT INFORMATION
Savin Engineers, P.C.

CONSULTANT SEAL
STATE OF NEW YORK · STEVEN A. MARTINO · 083631 · LICENSED PROFESSIONAL ENGINEER

REVISION NUMBER	DATE	MADE BY	APP'D BY	REVISION

RECORD DRAWING CERTIFICATION
☐ AS BUILT – CHANGES AS NOTED ☐ AS BUILT – NO CHANGES

CONTRACTOR
NAME
SIGNATURE
TITLE DATE

PROJECT COORDINATOR
NAME
SIGNATURE
TITLE DATE

WESTCHESTER COUNTY, NEW YORK
DEPARTMENT OF PUBLIC WORKS AND TRANSPORTATION
DIVISION OF ENGINEERING

INFRASTRUCTURE REHABILITATION - PHASE 3
PLAYLAND PARK, RYE, NEW YORK
RESTAURANT KITCHEN WITH FOOD VENDING
SECOND FLOOR LIGHTING PLAN

CONTRACT NUMBER	22-523
SHEET NUMBER	K-E-10
DWG NO.:	
SCALE:	AS SHOWN
DATE:	8/23/2022
DPW FILE NUMBER	1-118-E-1317-0
REV. NO.	0

Drawing Name: G:\SavinAutocad\2060\25-Playland-Mega-3\EX\KE-1009.dwg
Projectname: 211001F02 Comments: ----
Printed by: MGodby Date: 29 August 2022 4:14 PM Designed by: ----
Rev#:
Xrefs: [TB_24X36_WestchesterCo_3.dwg] [TSG-SVLOGO.dwg] [K-A-14.dwg] [K-E-1008.dwg]

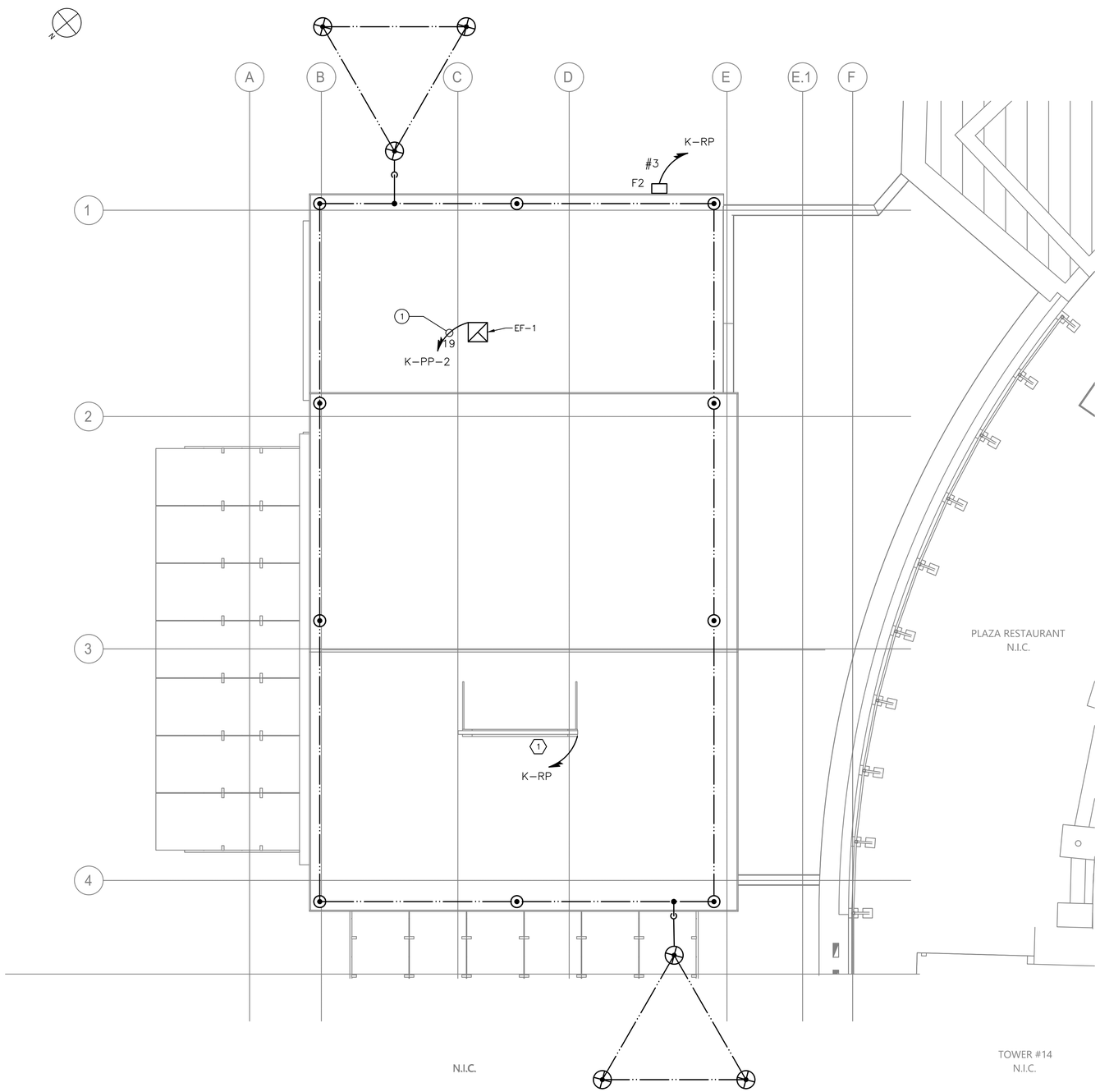

RESTAURANT KITCHEN ROOF PLAN – POWER, LIGHTING AND LIGHTNING PROTECTION

1/4"=1'-0"

NOTES:

1. FOR ADDITIONAL NOTES, ABBREVIATIONS AND SYMBOLS, SEE DRAWING GE-E-01.
2. CONTRACTOR IS ADVISED, THE LIGHTNING PROTECTION SYSTEM SHOWN SHALL BE USED AS A GUIDE AND FOR BIDDING PURPOSES. CONTRACTOR SHALL HIRE A CERTIFIED LIGHTNING PROTECTION SPECIALIST FOR INSTALLATION OF NEW SYSTEM. INSTALLER SHALL PROVIDE ALL THAT IS REQUIRED (PER NFPA 780) AND SHALL OBTAIN UL96A CERTIFICATION (MASTER LABEL) UPON COMPLETION. ADDITIONALLY, INSTALLER SHALL PROVIDE FOR ALL NECESSARY BONDING FOR COMPLETE SYSTEM.
3. CONTRACTOR SHALL COORDINATE WITH THE ARCHITECTURAL DRAWINGS FOR SPECIFIC INFORMATION ON THE NEW ROOF STRUCTURE AND MATERIALS.
4. ALL EXTERIOR LIGHTING SHALL BE CIRCUITED TO RELAY PANEL K-RP. CONTRACTOR SHALL CIRCUIT LIGHTING FIXTURES WITH 3/4" CONDUIT WITH 2#10 & 1#10 GND, UNLESS NOTED OTHERWISE.
5. TO MINIMIZE THE VISUAL IMPACT OF THE BUILDING ALL NEW DOWN CONDUCTORS SHALL BE ROUTED DOWN SIDE OF BUILDING. COORDINATE WITH ARCHITECTURAL FEATURES TO CONCEAL DOWN CONDUCTORS. CONTRACTOR SHALL COORDINATE WITH OTHER TRADES TO ACCOMPLISH THIS WORK. PROVIDE LPS BARE COPPER CABLE TO GROUND RODS.
6. CONTRACTOR IS ADVISED THE NEW DOWN CONDUCTOR SHALL BE BONDED TO THE LOWER METAL OVERHANG ROOF AND CONNECT TO THE EXISTING GROUND WIRE AND GROUND ROD AT GROUND LEVEL.
7. AT EACH LPS DOWN CONDUCTOR, PROVIDE TRIANGULAR GROUND GRID AS SHOWN (NOT ALL SHOWN),
8. EXHAUST FAN STARTERS SHALL BE FURNISHED BY THE EXHAUST FAN MANUFACTURER. FOR EXHAUST FAN STARTER REQUIREMENTS, SEE HVAC CONTRACT DRAWINGS AND SPECIFICATIONS.
9. ALL ROOF PENETRATIONS SHALL BE WATERPROOF. PENETRATION COMPONENTS FOR CONDUIT SHALL BE SUITABLE AND COMPATIBLE FOR INSTALLED ROOF. SEE ARCHITECTURAL AND PLUMBING DRAWINGS FOR ADDITIONAL INFORMATION.

KEY NOTES:

(1) PROVIDE POWER CONDUIT AND WIRE FOR RESTAURANT ROOFTOP SIGNAGE AND LETTERING. SIGNAGE SHALL BE POWERED VIA RELAY PANEL K-RP.

(2) PROVIDE NEW FLOODLIGHT FIXTURE TYPE F2, CONTRACTOR SHALL PROVIDE ALL NECESSARY CONDUIT AND WIRE. FLOODLIGHT SHALL BE POWERED VIA RELAY PANEL K-RP.

CONDUIT AND WIRE LEGEND	
NO.	DESCRIPTION
(1)	3/4"C, 2#8 & 1#8 GND

0 4' 8'

SCALE: 1/4" = 1'-0"

CONSULTANT INFORMATION

Savin Engineers, P.C.

CONSULTANT SEAL

STATE OF NEW YORK · STEVEN A. MARTINO · 083631 · LICENSED PROFESSIONAL ENGINEER

REVISION NUMBER	DATE	MADE BY	APP'D BY	REVISION

RECORD DRAWING CERTIFICATION

☐ AS BUILT – CHANGES AS NOTED ☐ AS BUILT – NO CHANGES

CONTRACTOR: NAME / SIGNATURE / TITLE / DATE

PROJECT COORDINATOR: NAME / SIGNATURE / TITLE / DATE

WESTCHESTER COUNTY, NEW YORK
DEPARTMENT OF PUBLIC WORKS AND TRANSPORTATION
DIVISION OF ENGINEERING

INFRASTRUCTURE REHABILITATION - PHASE 3
PLAYLAND PARK, RYE, NEW YORK
RESTAURANT KITCHEN WITH FOOD VENDING
ROOF PLAN - POWER AND LIGHTNING PROTECTION

CONTRACT NUMBER	22-523
SHEET NUMBER	K-E-11
DWG NO.:	
SCALE:	AS SHOWN
DATE:	8/23/2022
DPW FILE NUMBER	1-118-E-1318-0
REV. NO.	0

Drawing Name: G:\SavinAutocad\2060\25-Playland-Mega-3\E\KE-1010.dwg
Projectname: 211001F02 Comments: ----
Printed by: MGadby Date: 31 August 2022 8:43 AM Designed by: ----
Rev#:
Xrefs: [TB_24X36_WestchesterCo_3.dwg] [TSG-SVL000.dwg] [K-A-15.dwg] [K-E-1004.dwg

FIRE ALARM GENERAL NOTES:

1. THE FIRE ALARM AND SMOKE DETECTION SYSTEM SHALL BE INSTALLED IN COMPLIANCE WITH THE NATIONAL FIRE PREVENTION CODE (NFPA 72 - 2016), NATIONAL LIFE SAFETY CODE (NFPA 101 - 2018), NATIONAL ELECTRICAL CODE (NFPA 70 - 2017), 2020 NEW YORK STATE BUILDING CODE, AND ALL LOCAL MUNICIPAL CODES HAVING JURISDICTION.
2. THE FIRE ALARM AND SMOKE DETECTION SYSTEM SHALL BE MAINTAINED AND TESTED IN COMPLIANCE WITH NFPA 72.
3. A CONTINUOUS FIRE WATCH SHALL BE PROVIDED IF THERE IS FIRE SYSTEM IMPAIRMENT.
4. ALL FIRE ALARM STROBES SHALL BE SYNCHRONIZED AND SHALL REMAIN FLASHING AFTER SYSTEM SILENCE FUNCTION.
5. CONTRACTOR TO UPDATE ALL NECESSARY CORRESPONDING FIRE ALARM SIGNALS WHEN PERFORMING ANY MODIFICATION TO THE BUILDING, WHERE APPLICABLE, MAKE SURE THE SAME UPDATES ARE COORDINATED AND TRANSMITTED TO THE CENTRAL STATION.
6. HORNS WILL SOUND A TEMPORAL 3-SIGNALING RHYTHM PER NFPA 72.
7. EXACT PLACEMENT OF DEVICES TO BE VERIFIED IN FIELD.
8. ALL SMOKE DETECTORS SHALL BE INSTALLED A MINIMUM OF 36" FROM ANY HVAC SUPPLY OR RETURN REGISTER.
9. FIRE ALARM WIRING SHALL BE INSTALLED IN A MINIMUM OF 3/4" RIGID GALVANIZED CONDUIT OR BY NEW YORK STATE BUILDING CODE APPROVED WIRING METHODS.
10. WALL MOUNTED HORNS AND VISUAL FIRE ALARMS (STROBES) SHALL BE MOUNTED NOT LESS THAN 6'-8" AND NOT GREATER THAN 8'-0" A.F.F. WHERE LOCAL CONDITIONS ARE TOO LOW TO PERMIT THE REQUIRED MINIMUM INSTALLATION HEIGHT, INSTALL THE STROBES AT 6" BELOW THE CEILING.
11. MANUAL PULL STATIONS SHALL BE MOUNTED AT 4'-0" A.F.F. AND SHALL BE INSTALLED WITHIN 5'-0" OF EXIT DOOR.
12. WIRING SHALL BE INSTALLED IN ACCORDANCE WITH NFPA 70 AND AS RECOMMENDED BY THE MANUFACTURER OF THE FIRE ALARM SYSTEM.
13. ALL EQUIPMENT AND COMPONENTS SHALL BE NEW AND SHALL BE TESTED AND LISTED BY A NATIONALLY RECOGNIZED APPROVALS AGENCY.
14. ALL EQUIPMENT SHALL BE ATTACHED TO WALLS AND CEILING/FLOOR ASSEMBLIES AND SHALL BE HELD FIRMLY IN PLACE. FASTENERS AND SUPPORTS SHALL BE ADEQUATE TO SUPPORT REQUIRED LOAD.
15. ALL FIELD WIRING SHALL BE ELECTRICALLY SUPERVISED FOR OPEN CIRCUIT AND GROUND FAULTS.
16. ALL BOXES AND CABINETS SHALL BE UL LISTED FOR THEIR USE AND PURPOSE.
17. DIALER OR ALARM COMMUNICATOR TRANSMITTER SHALL TRANSMIT ALL POINTS AS THEY ARE REPORTED TO THE HOST PANEL.
18. ALL DEVICES SHALL BE COMPATIBLE WITH EXISTING SYSTEM (EST3 BY EDWARDS). FIRE ALARM PRODUCTS SHALL BE APPROVED BY THE ENGINEER OR OWNER.
19. ALL PENETRATIONS SHALL BE FIRE PROOFED AS REQUIRED.

FIRE ALARM CONSTRUCTION NOTES:

1. ELECTRICIAN SHALL COORDINATE WITH THE FIRE ALARM VENDOR TO PRODUCE A SEPARATE FIXED PRICE TO PERFORM THE SCOPE OF WORK CONTAINED ON THESE DRAWINGS IN CONNECTION WITH THE FIRE ALARM SYSTEM. THESE DRAWINGS ARE PROVIDED FOR BID PURPOSES ONLY AND TO ILLUSTRATE THE SCOPE OF WORK INTENT OF THIS PROJECT.
2. ELECTRICIAN SHALL OBTAIN SEPARATE PERMIT FOR FIRE ALARM PRIOR TO INSTALLATION.
3. PRIOR TO SUBMISSION OF THE FIRE ALARM SYSTEM BID, THE FIRE ALARM VENDOR IS RESPONSIBLE TO REVIEW ALL DRAWINGS (I.E., MECHANICAL/HVAC, ELECTRICAL, PLUMBING, FIRE SPRINKLER, AND ARCHITECTURAL). UPON SUBMISSION OF THE FIRE ALARM BID, THE FIRE ALARM VENDOR CERTIFIES THAT ALL DRAWINGS HAVE BEEN REVIEWED, THE SITE HAS BEEN VISITED/INSPECTED (IF APPLICABLE), AND THAT ALL LOCAL FIRE DEPARTMENT REQUIRED ITEMS ARE FULLY UNDERSTOOD AND INCLUDED IN THE BID PRICE (NO CHANGE ORDERS ALLOWED).
4. FIRE ALARM VENDOR MUST ADHERE TO NFPA 72, NFPA 101, AND ALL LOCAL CODES AND AUTHORITIES HAVING JURISDICTION. THE ENTIRE SYSTEM MUST BE DESIGNED IN ACCORDANCE WITH THESE AUTHORITIES HAVING JURISDICTION.
5. FIRE ALARM VENDOR SHALL INCLUDE THE COST OF THE ENGINEERING FEE, PROGRAMMING CHARGE, NEW EQUIPMENT, CONNECTION & TESTING, TROUBLESHOOTING, ATTENDANCE AT THE FIRE ALARM INSPECTION, ETC. AS PART OF THE TOTAL PRICE.
6. FIRE ALARM VENDOR MUST SUBMIT APPROVED, SIGNED AND SEALED DESIGN/BUILD DRAWINGS TO THE ENGINEER AND OWNER, INCLUDING: FIRE ALARM RISER DIAGRAM, LAYOUT, EQUIPMENT LIST, SPECIFICATIONS PRIOR TO START OF INSTALLATION. INSTALLATION OF THE NEW FIRE ALARM SYSTEM SHALL NOT PROCEED PRIOR TO WRITTEN APPROVAL BY THE ENGINEER.
7. FIRE ALARM VENDOR SHALL SUBMIT SHOP DRAWINGS IN COMPLIANCE WITH NFPA 72, 2020 NEW YORK STATE BUILDING CODE, AND 2020 NEW YORK STATE FIRE CODE SECTION 907.1.1.
8. ALL FIRE ALARM CABLES AND WIRING MUST BE PLENUM RETURN RATED CABLES.

SCOPE OF WORK:

1. DEMOLISH EXISTING FIRE ALARM DEVICES AND ASSOCIATED WIRING BACK TO SOURCE.
2. PROVIDE NEW FIRE ALARM DEVICES AS PER DRAWINGS. PROVIDE ALL NECESSARY WIRING, CONNECTIONS, CONDUIT, AND FITTINGS.
3. NEW FIRE ALARM DEVICES AND SIGNAL WIRING SHALL BE CONNECTED TO THE EXISTING FIRE ALARM PANEL IN THE PLAZA RESTAURANT.
4. NEW FIRE ALARM SYSTEM SHALL BE INSPECTED BY A THIRD PARTY INSPECTION AGENCY CERTIFIED BY WESTCHESTER COUNTY. ELECTRICIAN SHALL INCLUDE INSPECTION IN BASE BID SCOPE AND COORDINATE WITH INSPECTION AGENCY TO CERTIFY THE SYSTEM.
5. ELECTRICIAN SHALL COORDINATE WITH THE FIRE ALARM VENDOR (OPEN SYSTEMS METRO) TO RE-PROGRAM AND TEST THE CENTRAL FIRE ALARM SYSTEM IN THE PLAYLAND MAIN ADMINISTRATION BUILDING FOLLOWING THE INSTALLATION OF NEW SYSTEM AND DEVICES.
6. ELECTRICIAN SHALL COORDINATE WITH THE FIRE ALARM CENTRAL MONITORING PROVIDER (STATEWIDE MONITORING) TO TEST AND VERIFY CENTRAL MONITORING OF PARKWIDE SYSTEM FOLLOWING THE INSTALLATION OF NEW SYSTEM AND DEVICES.

FIRE ALARM SYSTEM RISER NOTES:

1. LOCATION OF DEVICES AND EQUIPMENT ARE APPROXIMATE. FINAL LOCATIONS MUST BE DETERMINED ACCORDING TO THE SITE CONDITIONS.
2. VISUAL FIRE ALARMS (STROBES) SHALL HAVE MINIMUM 5'-0" CLEARANCE FROM ANY OBSTRUCTIONS, SHALL BE FIELD ADJUSTABLE, AND SHALL BE RATED AT 75 CANDELA MINIMUM, UNLESS OTHERWISE NOTED. ALL STROBES SHALL BE SYNCHRONIZED AT LINE OF SIGHT.
3. WALL MOUNTED HORNS AND VISUAL FIRE ALARMS (STROBES) SHALL BE MOUNTED NOT LESS THAN 6'-8" AND NOT GREATER THAN 8'-0" A.F.F. WHERE LOCAL CONDITIONS ARE TOO LOW TO PERMIT THE REQUIRED MINIMUM INSTALLATION HEIGHT, INSTALL THE STROBES AT 6" BELOW THE CEILING.
4. MANUAL PULL STATIONS SHALL BE MOUNTED AT 4'-0" A.F.F. AND SHALL BE INSTALLED WITHIN 5'-0" OF EXIT DOOR.
5. FUSE CUT OUT BOX SHALL COMPLY WITH THE NATIONAL ELECTRICAL CODE AND HAVE A REMOVABLE SOLID COPPER NEUTRAL BAR.
6. ALL CONDUITS AND CONTROL PANELS SHALL BE GROUNDED TO BUILDING STEEL/GROUND GRID WITH A MINIMUM #8 CONDUCTOR.
7. RISER DIAGRAM ON THIS DRAWING IS FOR DESIGN PURPOSE ONLY. FIRE ALARM CONTRACTOR SHALL PROVIDE A COMPLETE RISER DIAGRAM WITH ACTUAL FIELD WIRING REQUIRED.
8. EACH FIRE ALARM INITIATING AND INDICATING CIRCUIT SHALL BE ELECTRICALLY SUPERVISED.
9. EACH VISUAL FIRE ALARM CIRCUIT SHALL CONTAIN AT LEAST 20% SPARE CAPACITY.
10. ALL CONTROL PANELS, FUSE CUTOUTS, TROUBLE BELLS, ALARM BELLS AND SILENCE SWITCHES SHALL BE PROPERLY LABELED WITH MINIMUM 1/4" HIGH LETTERS.
11. WIRING FOR AUDIBLE AND VISUAL ALARM NOTIFICATION DEVICES SHALL BE ARRANGED SO THAT A LOSS OF A PORTION OF THE WIRING ON A FLOOR WILL NOT RENDER MORE THAN 60% OF THE DEVICES OF EACH TYPE INOPERATIVE, AND THE DEVICES SHALL BE SO CONNECTED TO THE CIRCUITRY (i.e., BY MEANS OF ALTERNATE CIRCUITS) AS TO MAINTAIN AT LEAST PARTIAL AUDIBILITY/VISIBILITY THROUGHOUT THE ENTIRE FLOOR.
12. THE FIRE ALARM CONTROL PANEL SHALL BE PROVIDED WITH A KEY SWITCH. DURING DAILY TESTS, THE KEY SWITCH SHALL BE USED TO BYPASS THE CIRCUITS THAT CONTROL DAMPERS AND FAN SHUTDOWN.
13. THE DAMPERS AND FAN BYPASS FUNCTION SHALL BE AUTOMATICALLY RESTORED TO BE NORMAL UN-SHUNTED CONDITION WITHIN FORTY-FIVE MINUTES, IF NOT DONE SO MANUALLY BEFORE FORTY-FIVE MINUTES.
14. PERFORM FIRE ALARM SYSTEM TESTING PER THE 2020 NEW YORK STATE FIRE CODE AND NFPA 72.

FIRE ALARM LEGEND:

SYMBOL	DESCRIPTION
FA	FIRE ALARM SUB PANEL
S	SMOKE DETECTOR
H	HEAT DETECTOR
F	MANUAL FIRE ALARM PULL STATION
# H	FIRE ALARM WALL MOUNTED HORN/STROBE # = CANDELA RATING
FCO	FUSED CUT OUT SWITCH/FUSED LOCKABLE DISCONNECT SWITCH
ST #	WALL MOUNTED STROBE # = CANDELA RATING
	FLOW SWITCH CONNECTED TO FIRE ALARM SYSTEM
GV	SPRINKLER VALVE TAMPER SWITCH CONNECTED TO FIRE ALARM SYSTEM
S	DUCT MOUNTED SMOKE DETECTOR
FSR	FIRE ALARM INTERFACE RELAY FOR HVAC FAN SHUTDOWN

FIRE ALARM ABBREVIATIONS:

E	EXISTING TO REMAIN
ER	EXISTING TO BE RELOCATED
EL	EXISTING AS SHOWN IN NEW LOCATION
FACP	FIRE ALARM CONTROL PANEL
FCO	FUSED CUT OUT
FCU	FIRE ALARM CONTROL UNIT
FP	FIRE PROTECTION
N	NEW
RTU	ROOFTOP UNIT
SP	SPRINKLER
WP	WEATHERPROOF
X	EXISTING TO BE DEMOLISHED

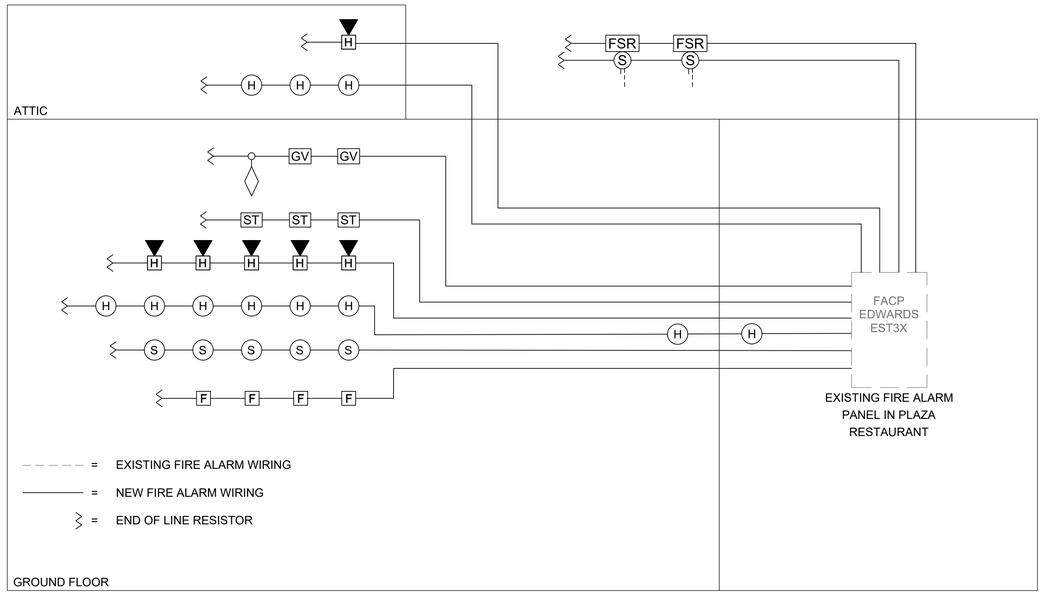

NOTES:
1. WIRING SHOWN ON RISER IS DIAGRAMMATICAL. PROVIDE NEW FIRE ALARM CABLE AS REQUIRED AND INSTALL WIRING LOOPS AS BEST SUITED FOR FIELD CONDITIONS.
2. THE BUILDING IS FULLY SPRINKLERED.

1 FIRE ALARM RISER DIAGRAM
SCALE: NOT TO SCALE

		SYSTEM OUTPUTS																	
		Control Unit Annunciation						Notification									Supp.		
	EVENT	A ACTUATE COMMON ALARM SIGNAL	B ACTUATE AUDIBLE ALARM SIGNAL	C INDICATE COMMON SUPERVISORY STATUS	D ACTUATE AUDIBLE SUPERVISORY SIGNAL	E INDICATE COMMON TROBLE SIGNAL	F ACTUATE AUDIBLE COMMON TROUBLE SIGNAL	G ACTIVATE HORNS AND STROBES THROUGHOUT THE PROTECTED AREA	H DISPLAY/PRINT CHANGE OF STATUS	I TRANSMIT AUTOMATIC ALARM SIGNAL TO SUPERVISING STATION	J TRANSMIT MANUAL ALARM SIGNAL TO SUPERVISING STATION	K TRANSMIT WATERFLOW ALARM SIGNAL TO SUPERVISING STATION	L TRANSMIT SUPERVISORY SIGNAL TO SUPERVISING STATION	M TRANSMIT CO ALARM SIGNAL TO SUPERVISING STATION	N TRANSMIT TROUBLE SIGNAL TO SUPERVISING STATION	O ACTIVATE TEMPORAL-4 SIGNAL ON ACTIVATED CO DETECTOR SOUNDER BASES	P SHUT DOWN CO PRODUCING EQUIPMENT	Q SHUT DOWN FANS/AIR HANDLING UNITS	R ACTIVATE AUTOMATIC CLOSURE OF FIRE-RATED ROLLING DOOR
1	ACTIVATION OF MANUAL PULL STATION	X	X					X	X		X								
2	ACTIVATION OF SMOKE DETECTOR	X	X					X	X	X								X	X
3	ACTIVATION OF DUCT MOUNTED SMOKE DETECTOR	X	X					X	X	X								X	
4	ACTIVATION OF HEAT DETECTOR	X	X					X	X	X								X	X
5	WATERFLOW SWITCH FOR FIRE SPRINKLER SYSTEM	X	X					X	X			X						X	
6	ACTIVATION OF CARBON MONOXIDE DETECTOR			X	X			X	X					X		X	X		
7	SPRINKLER VALVE (TAMPER SWITCH)			X	X				X				X						
8	FIRE ALARM LOSS OF PRIMARY/SECONDARY POWER					X	X		X						X				
9	FIRE ALARM SYSTEM WIRING FAILURE					X	X		X						X				

2 FIRE ALARM SEQUENCE OF OPERATIONS MATRIX
SCALE: NOT TO SCALE

CONSULTANT INFORMATION
LiRo Engineers, Inc.
A LiRo Group Company
Syosset, N.Y. 516-214-8157[T]

CONSULTANT SEAL
STATE OF NEW YORK · FRANK F. ULLISE · No. 090111-1 · LICENSED PROFESSIONAL ENGINEER

REVISION NUMBER	DATE	MADE BY	APP'D BY	REVISION

RECORD DRAWING CERTIFICATION
☐ AS BUILT – CHANGES AS NOTED ☐ AS BUILT – NO CHANGES

CONTRACTOR
NAME
SIGNATURE
TITLE DATE

PROJECT COORDINATOR
NAME
SIGNATURE
TITLE DATE

WESTCHESTER COUNTY, NEW YORK
DEPARTMENT OF PUBLIC WORKS AND TRANSPORTATION
DIVISION OF ENGINEERING

INFRASTRUCTURE REHABILITATION - PHASE 3
PLAYLAND PARK, RYE, NEW YORK
RESTAURANT KITCHEN WITH FOOD VENDING
FIRE ALARM NOTES, SYMBOLS, LEGEND, AND RISER DIAGRAM

CONTRACT NUMBER	22-523
SHEET NUMBER	K-FA-01
DWG NO.:	570 of 664
SCALE:	As indicated
DATE:	08/23/2022
DPW FILE NUMBER	1-118-FA-1319-0
REV. NO.	0

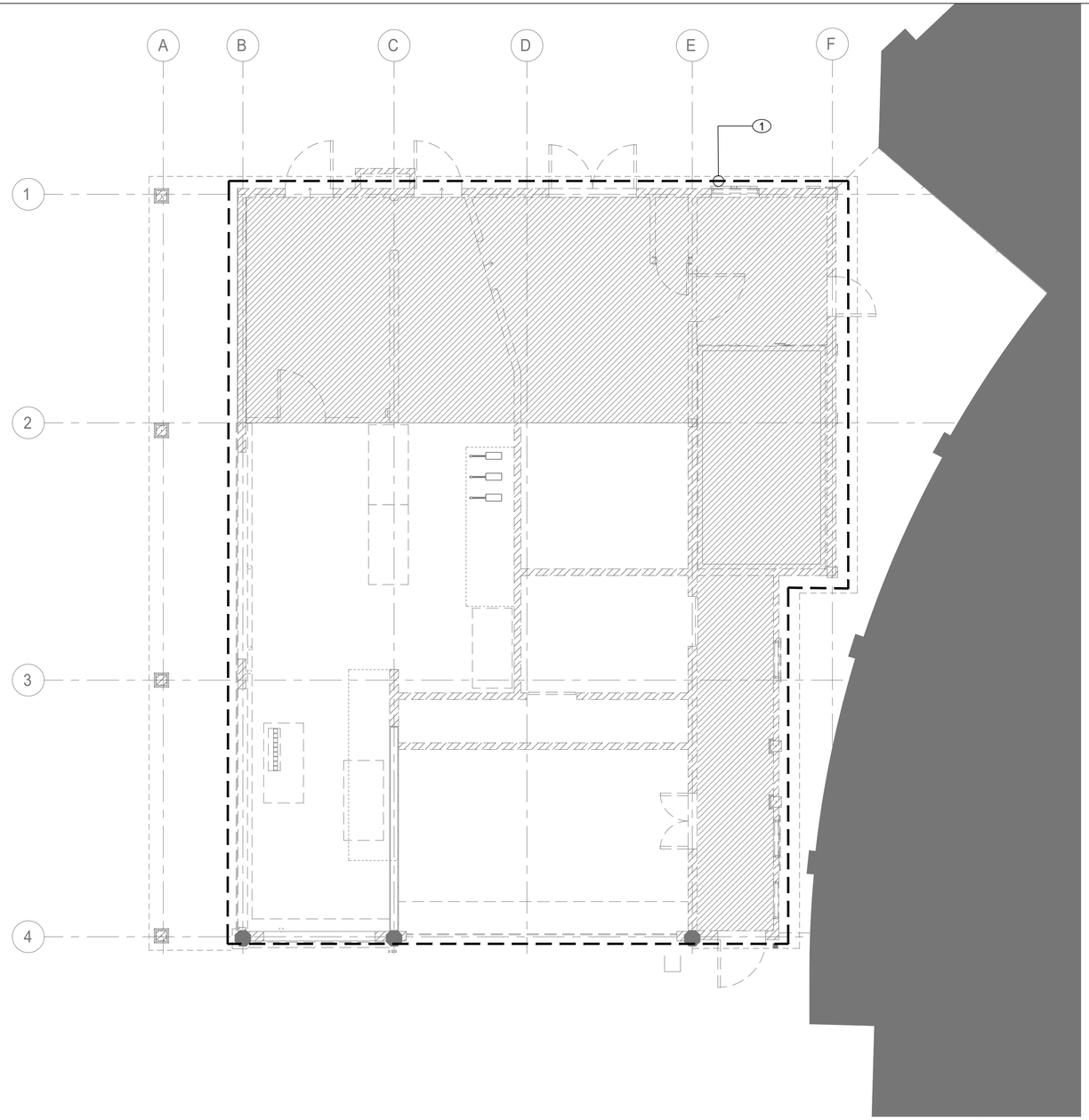

FIRE ALARM DEMOLITION NOTES:

1. NO EXISTING FIRE ALARM DEVICES WERE NOTED DURING BUILDING SURVEY. ANY ABANDONED DEVICES OR WIRING DISCOVERED DURING THE COURSE OF DEMOLITION SHALL BE REMOVED.

1 FIRE ALARM FIRST FLOOR DEMOLITION PLAN

SCALE: 1/4" = 1'-0"

CONSULTANT INFORMATION

LiRo Engineers, Inc.
A LiRo Group Company
Syosset, N.Y. 516-214-8157[T]

CONSULTANT SEAL

STATE OF NEW YORK · FRANK F. ULRICH · No. 090111 · LICENSED PROFESSIONAL ENGINEER

REVISION NUMBER	DATE	MADE BY	APP'D BY	REVISION

RECORD DRAWING CERTIFICATION

☐ AS BUILT – CHANGES AS NOTED ☐ AS BUILT – NO CHANGES

CONTRACTOR
NAME
SIGNATURE
TITLE DATE

PROJECT COORDINATOR
NAME
SIGNATURE
TITLE DATE

WESTCHESTER COUNTY, NEW YORK
DEPARTMENT OF PUBLIC WORKS AND TRANSPORTATION
DIVISION OF ENGINEERING

INFRASTRUCTURE REHABILITATION - PHASE 3
PLAYLAND PARK, RYE, NEW YORK
RESTAURANT KITCHEN WITH FOOD VENDING
FIRE ALARM FIRST FLOOR DEMOLITION PLAN

CONTRACT NUMBER	22-523
SHEET NUMBER	K-FA-11
DWG NO.:	571 of 664
SCALE:	As indicated
DATE:	08/23/2022
DPW FILE NUMBER	1-118-FA-1320-0
REV. NO.	0

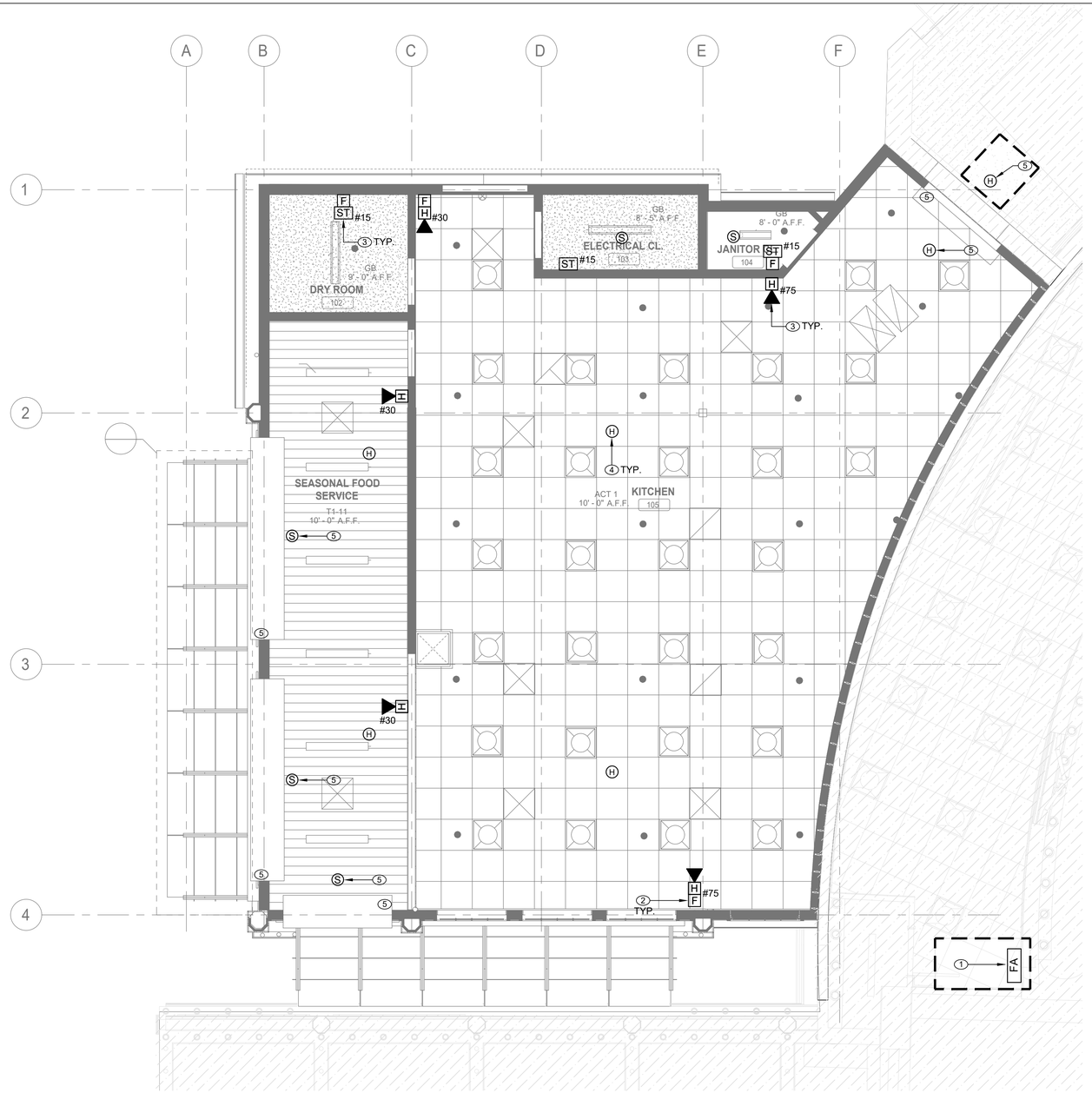

1 FIRE ALARM FIRST FLOOR CONSTRUCTION PLAN

SCALE: 1/4" = 1'-0"

FIRE ALARM CONSTRUCTION NOTES:

1. CONNECT NEW DEVICES TO EXISTING FIRE ALARM PANEL IN PLAZA RESTAURANT. PANEL SHALL REMAIN INSTALLED AND ACTIVE THROUGHOUT CONSTRUCTION. SYSTEM SHALL BE TESTED IN COORDINATION WITH FIRE ALARM SYSTEM VENDOR (EST). AS PART OF SYSTEM TESTING, ENSURE PANEL IS CONNECTED TO PARKWIDE SYSTEM.
2. NEW MANUAL PULL STATIONS SHALL BE INSTALLED AT 4'-0" ABOVE FINISHED FLOOR AT EACH BUILDING EXIT (MAX. DISTANCE OF 5'-0" FROM EXIT).
3. FIRE ALARM STROBES AND HORN STROBES SHALL BE FIELD ADJUSTABLE AND SET CANDELA RATING INDICATED ON PLAN. FIRE ALARM STROBES AND HORN STROBES SHALL BE INSTALLED AT 7'-4" ABOVE FINISHED FLOOR UNLESS OTHERWISE NOTED.
4. HEAT DETECTION SHALL BE PROVIDED FOR FUTURE KITCHEN EQUIPMENT. LOCATIONS SHOWN ARE APPROXIMATE. COORDINATE WITH TENANT KITCHEN LAYOUT (IF AVAILABLE) TO ENSURE COVERAGE OF COOKING EQUIPMENT.
5. AUTOMATIC CLOSURE OF ROLLING FIRE-RATED SERVICE AND COUNTER DOORS SHALL BE INITIATED BY FUSIBLE LINK AND NEARBY SMOKE OR HEAT DETECTORS. INSTALLATION OF FIRE-RATED DOORS AND INITIATING SMOKE DETECTORS SHALL COMPLY WITH NFPA 72 AND NFPA 80. INSTALL SMOKE/HEAT DETECTORS ON CENTER LINE OF CORRESPONDING DOOR. COORDINATE INSTALLATION, SEQUENCING, AND TESTING WITH DOOR MANUFACTURER. REFER TO ARCHITECTURAL DRAWINGS AND ARCHITECTURAL FIRE-RATED DOOR SPECIFICATION FOR ADDITIONAL INFORMATION.

FIRE ALARM GENERAL NOTES:

1. REFER TO DRAWING FA-001.00 FOR SYMBOLS, ABBREVIATIONS, AND NOTES. LAYOUT OF FIRE ALARM DEVICES ON THIS PLAN IS DIAGRAMMATIC; EXACT LOCATIONS OF DEVICES AND CONDUIT SHALL BE COORDINATED WITH FIELD CONDITIONS, ARCHITECTURAL REQUIREMENTS, AND MANUFACTURER RECOMMENDATIONS.
2. ALL DEVICES AND EQUIPMENT SHOWN ON THIS PLAN ARE NEW, UNLESS OTHERWISE NOTED.
3. INSTALL NEW FIRE ALARM SYSTEM IN STRICT ACCORDANCE WITH NFPA-72 AND NFPA-90A REQUIREMENTS.
4. CONTRACTOR SHALL INSTALL NEW FIRE ALARM SYSTEM AS INDICATED AND PROVIDE ALL NECESSARY WIRING, CONDUIT, AND APPARATUSES.
5. ALL VISUAL NOTIFICATION DEVICES IN THE SAME SPACE SHALL BE SYNCHRONIZED IN ACCORDANCE WITH NFPA-72.
6. COORDINATE INSTALLATION WITH FIRE ALARM SYSTEM VENDOR AND MANUFACTURER REQUIREMENTS.
7. COORDINATE FIRE ALARM DEVICES WITH ARCHITECTURAL FINISHES. CONCEAL CONDUIT IN FINISHED WALLS AND FLUSH MOUNT DEVICES WHERE POSSIBLE.
8. CONTRACTOR SHALL TEST THE FIRE ALARM SYSTEM AFTER COMPLETION OF INSTALLATION. FIRE ALARM SYSTEM SHALL BE TESTED AND VERIFIED TO BE WORKING PROPERLY PRIOR TO INSPECTION BY THE AUTHORITY HAVING JURISDICTION.
9. FOLLOWING INSTALLATION, CONTRACTOR SHALL PATCH, PAINT, AND RESTORE ALL WALLS AND CEILINGS TO MATCH EXISTING OR DESIRED NEW CONDITION.
10. FIRESTOP ALL FIRE-RATED FLOOR OR WALL PENETRATIONS TO MAINTAIN ORIGINAL FIRE RATING TO FULL DEPTH OF OPENING.
11. CONTRACTOR SHALL PROVIDE SLEEVE FOR CONDUIT PENETRATIONS THROUGH WALL AND CEILING FLOORS.

CONSULTANT INFORMATION

LiRo Engineers, Inc.
A LiRo Group Company
Syosset, N.Y. 516-214-8157[T]

CONSULTANT SEAL

STATE OF NEW YORK · FRANK F. ULISSE · No. 090111-1 · LICENSED PROFESSIONAL ENGINEER

REVISION NUMBER	DATE	MADE BY	APP'D BY	REVISION

RECORD DRAWING CERTIFICATION

☐ AS BUILT – CHANGES AS NOTED ☐ AS BUILT – NO CHANGES

CONTRACTOR
NAME
SIGNATURE
TITLE DATE

PROJECT COORDINATOR
NAME
SIGNATURE
TITLE DATE

WESTCHESTER COUNTY, NEW YORK
DEPARTMENT OF PUBLIC WORKS AND TRANSPORTATION
DIVISION OF ENGINEERING

INFRASTRUCTURE REHABILITATION - PHASE 3
PLAYLAND PARK, RYE, NEW YORK
RESTAURANT KITCHEN WITH FOOD VENDING
FIRE ALARM FIRST FLOOR PLAN

CONTRACT NUMBER	22-523
SHEET NUMBER	K-FA-21
DWG NO.:	572 of 664
SCALE:	As indicated
DATE:	08/23/2022
DPW FILE NUMBER	1-118-FA-1321-0
REV. NO.	0

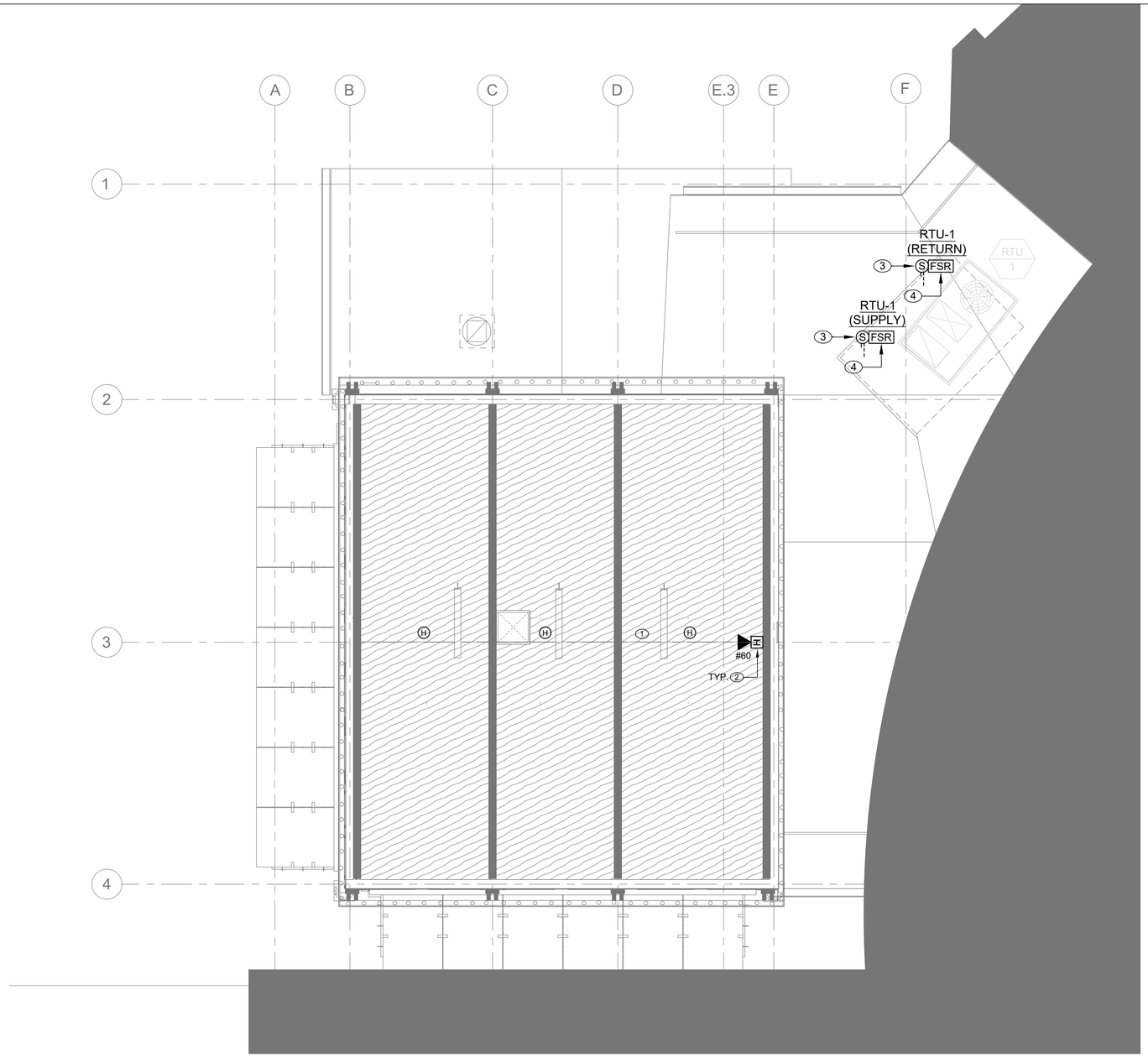

1 FIRE ALARM ATTIC FLOOR CONSTRUCTION PLAN

SCALE: 1/4" = 1'-0"

FIRE ALARM CONSTRUCTION NOTES:

1. CONNECT NEW DEVICES TO EXISTING FIRE ALARM PANEL IN PLAZA RESTAURANT. PANEL SHALL REMAIN INSTALLED AND ACTIVE THROUGHOUT CONSTRUCTION. SYSTEM SHALL BE TESTED IN COORDINATION WITH FIRE ALARM SYSTEM VENDOR (EST). AS PART OF SYSTEM TESTING, ENSURE PANEL IS CONNECTED TO PARKWIDE SYSTEM.
2. FIRE ALARM STROBES AND HORN STROBES SHALL BE FIELD ADJUSTABLE AND SET CANDELA RATING INDICATED ON PLAN. FIRE ALARM STROBES AND HORN STROBES SHALL BE INSTALLED AT 7'-4" ABOVE FINISHED FLOOR UNLESS OTHERWISE NOTED.
3. INSTALL DUCT MOUNTED SMOKE DETECTORS AT SUPPLY AND RETURN OF NEW ROOFTOP UNIT. COORDINATE INSTALLATION WITH MECHANICAL DRAWINGS AND MECHANICAL CONTRACTOR. CONNECT TO FIRE ALARM SYSTEM.
4. PROVIDE FAN SHUTDOWN RELAYS AND CONNECT TO SUPPLY AND RETURN DUCT DETECTORS. COORDINATE INSTALLATION WITH MECHANICAL DRAWINGS AND MECHANICAL CONTRACTOR. PROVIDE WIRING AND PROGRAMMING FOR UNIT SHUTDOWN IN ACCORDANCE WITH FIRE ALARM SEQUENCE OF OPERATIONS.

FIRE ALARM GENERAL NOTES:

1. REFER TO DRAWING FA-001.00 FOR SYMBOLS, ABBREVIATIONS, AND NOTES. LAYOUT OF FIRE ALARM DEVICES ON THIS PLAN IS DIAGRAMMATIC; EXACT LOCATIONS OF DEVICES AND CONDUIT SHALL BE COORDINATED WITH FIELD CONDITIONS, ARCHITECTURAL REQUIREMENTS, AND MANUFACTURER RECOMMENDATIONS.
2. ALL DEVICES AND EQUIPMENT SHOWN ON THIS PLAN ARE NEW, UNLESS OTHERWISE NOTED.
3. INSTALL NEW FIRE ALARM SYSTEM IN STRICT ACCORDANCE WITH NFPA-72 AND NFPA-90A REQUIREMENTS.
4. CONTRACTOR SHALL INSTALL NEW FIRE ALARM SYSTEM AS INDICATED AND PROVIDE ALL NECESSARY WIRING, CONDUIT, AND APPARATUSES.
5. ALL VISUAL NOTIFICATION DEVICES IN THE SAME SPACE SHALL BE SYNCHRONIZED IN ACCORDANCE WITH NFPA-72.
6. COORDINATE INSTALLATION WITH FIRE ALARM SYSTEM VENDOR AND MANUFACTURER REQUIREMENTS.
7. COORDINATE FIRE ALARM DEVICES WITH ARCHITECTURAL FINISHES. CONCEAL CONDUIT IN FINISHED WALLS AND FLUSH MOUNT DEVICES WHERE POSSIBLE.
8. CONTRACTOR SHALL TEST THE FIRE ALARM SYSTEM AFTER COMPLETION OF INSTALLATION. FIRE ALARM SYSTEM SHALL BE TESTED AND VERIFIED TO BE WORKING PROPERLY PRIOR TO INSPECTION BY THE AUTHORITY HAVING JURISDICTION.
9. FOLLOWING INSTALLATION, CONTRACTOR SHALL PATCH, PAINT, AND RESTORE ALL WALLS AND CEILINGS TO MATCH EXISTING OR DESIRED NEW CONDITION.
10. FIRESTOP ALL FIRE-RATED FLOOR OR WALL PENETRATIONS TO MAINTAIN ORIGINAL FIRE RATING TO FULL DEPTH OF OPENING.
11. CONTRACTOR SHALL PROVIDE SLEEVE FOR CONDUIT PENETRATIONS THROUGH WALL AND CEILING FLOORS.

CONSULTANT INFORMATION

LiRo Engineers, Inc.
A LiRo Group Company
Syosset, N.Y. 516-214-8157[T]

CONSULTANT SEAL

STATE OF NEW YORK · FRANK F. ULIASSE · No. 090111 · LICENSED PROFESSIONAL ENGINEER

REVISION NUMBER	DATE	MADE BY	APP'D BY	REVISION

RECORD DRAWING CERTIFICATION

☐ AS BUILT – CHANGES AS NOTED ☐ AS BUILT – NO CHANGES

CONTRACTOR
NAME
SIGNATURE
TITLE DATE

PROJECT COORDINATOR
NAME
SIGNATURE
TITLE DATE

WESTCHESTER COUNTY, NEW YORK
DEPARTMENT OF PUBLIC WORKS AND TRANSPORTATION
DIVISION OF ENGINEERING

INFRASTRUCTURE REHABILITATION - PHASE 3
PLAYLAND PARK, RYE, NEW YORK
RESTAURANT KITCHEN WITH FOOD VENDING
FIRE ALARM ATTIC FLOOR PLAN

CONTRACT NUMBER	22-523
SHEET NUMBER	K-FA-22
DWG NO.:	573 of 664
SCALE:	As indicated
DATE:	08/23/2022
DPW FILE NUMBER	1-118-FA-1322-0
REV. NO.	0

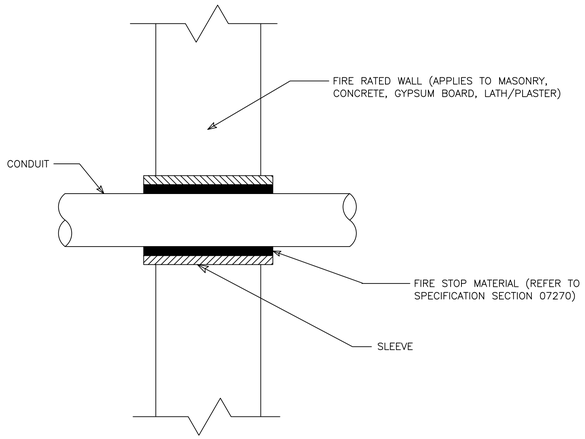

1 FA-81 CONDUIT PENETRATION THRU FIRE RATED WALL
NOT TO SCALE

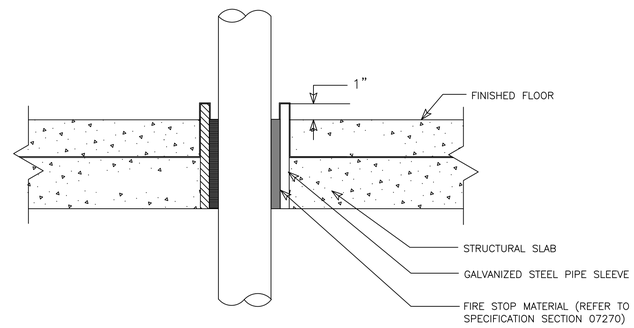

2 FA-81 CONDUIT PENETRATION THRU FLOOR SLAB
NOT TO SCALE

CONSULTANT INFORMATION

LiRo Engineers, Inc.
A LiRo Group Company
Syosset, N.Y. 516-214-8157[T]

CONSULTANT SEAL

STATE OF NEW YORK · FRANK F. ULISSE · No. 090111-1 · LICENSED PROFESSIONAL ENGINEER

REVISION NUMBER	DATE	MADE BY	APP'D BY	REVISION

RECORD DRAWING CERTIFICATION
☐ AS BUILT – CHANGES AS NOTED ☐ AS BUILT – NO CHANGES

CONTRACTOR
NAME
SIGNATURE
TITLE DATE

PROJECT COORDINATOR
NAME
SIGNATURE
TITLE DATE

WESTCHESTER COUNTY, NEW YORK
DEPARTMENT OF PUBLIC WORKS AND TRANSPORTATION
DIVISION OF ENGINEERING

INFRASTRUCTURE REHABILITATION - PHASE 3
PLAYLAND PARK, RYE, NEW YORK
RESTAURANT KITCHEN WITH FOOD VENDING
FIRE ALARM DETAILS

CONTRACT NUMBER 22-523
SHEET NUMBER K-FA-81
DWG NO.: 574 of 664
SCALE: As indicated
DATE: 08/23/2022
DPW FILE NUMBER 1-118-FA-1323-0
REV. NO. 0

GENERAL NOTES:

1. DIMENSIONS INDICATED ON THE DRAWINGS ARE APPROXIMATE AND SUBJECT TO REVISIONS AS PER ACTUAL FIELD CONDITIONS.
2. CONTRACTOR SHALL COMPLY WITH ALL NYSDEC PERMIT REQUIREMENTS AND ANY OTHER STATE, COUNTY, CITY OR TOWN AGENCY HAVING JURISDICTION. REFER TO THE CONTRACT SPECIFICATIONS FOR PERMIT REQUIREMENTS.
3. CONTRACTOR SHALL TAKE ALL PRECAUTIONS TO MAINTAIN UTILITY SERVICE TO AND FROM BUILDINGS AND PARK AREAS.
4. ANY UTILITIES SHOWN ON THE PLANS ARE FOR INFORMATION ONLY AND HAVE BEEN OBTAINED FROM AVAILABLE SOURCES. THE EXISTENCE AND LOCATION OF ANY UTILITIES INDICATED ON THE PLANS ARE NOT GUARANTEED AND SHALL BE INVESTIGATED AND VERIFIED IN THE FIELD BY THE CONTRACTOR BEFORE STARTING WORK. THE CONTRACTOR SHALL HAVE ALL EXISTING UTILITIES FIELD STAKED BEFORE STARTING WORK BY CALLING DIG SAFELY NEW YORK AT 1–800–962–7962. EXCAVATION IN THE VICINITY OF UNDERGROUND UTILITIES SHALL BE DUG BY HAND. THE CONTRACTOR WILL BE HELD RESPONSIBLE FOR ANY DAMAGE TO EXISTING UTILITIES. NO SEPARATE PAYMENT SHALL BE MADE FOR THIS WORK.
5. THE CONTRACTOR WILL BE REQUIRED TO PROVIDE PRIVATE UTILITY MARKOUTS FOR ALL UTILITIES IN THE WORK AREAS. THE CONTRACTOR SHALL SUBMIT THE PROPOSED UTILITY SUB–CONTRACTOR FOR APPROVAL.
6. THE CONTRACTOR SHALL OBTAIN AND HAVE ON THE JOB SITE, AT ALL TIMES, ALL PERMITS AS REQUIRED BY THE STATE, COUNTY, CITY, TOWN/VILLAGE OR ANY OTHER PERMITTING AGENCY. THE CONTRACTOR SHALL BEAR ALL COSTS OF OBTAINING THESE PERMITS.
7. CONTRACTOR SHALL REMOVE ALL DEBRIS AND EXCESS CONSTRUCTION MATERIALS TO THE SATISFACTION OF THE OWNER AND ENGINEER. THE CONTRACTOR SHALL BE RESPONSIBLE FOR THE REMOVAL AND LEGAL DISPOSAL OF ALL MATERIALS RESULTING FROM THE CONTRACT.
8. CONTRACTOR SHALL COORDINATE ALL CONSTRUCTION ACTIVITIES WITH THE OWNER AND ENGINEER TO MINIMIZE INTERRUPTIONS TO NORMAL PARK OPERATIONS.
9. CONTRACTOR SHALL SUBMIT A DETAILED WORK PLAN INCLUDING SEQUENCE OF OPERATIONS PRIOR TO COMMENCING WORK AND SHALL BE SUBJECT TO APPROVAL OF THE OWNER/ENGINEER.
10. THE CONTRACTOR SHALL NOTIFY THE OWNER AND THE ENGINEER A MINIMUM OF SEVENTY–TWO (72) HOURS PRIOR TO THE START OF CONSTRUCTION. IN ADDITION, IF WORK SHOULD BE STOPPED AND RESTARTED FOR ANY REASON, THE CONTRACTOR SHALL GIVE THE ENGINEER A MINIMUM OF SEVENTY–TWO (72) HOURS NOTICE.
11. ITEMS SUSTAINING DAMAGE DURING CONSTRUCTION AS A RESULT OF THE CONTRACTOR'S OPERATIONS SHALL BE REPAIRED AND/OR REPLACED TO THE SATISFACTION AND APPROVAL OF THE OWNER AT THE CONTRACTORS EXPENSE. ANY DAMAGE SHALL BE REPAIRED AT NO ADDITIONAL COST TO THE OWNER.
12. ALL NECESSARY PRECAUTIONS SHALL BE TAKEN TO PRESERVE THE MATERIAL BELOW AND BEYOND THE LINES OF ALL EXCAVATION IN THE SOUNDEST POSSIBLE CONDITION. ANY DAMAGE TO THE WORK DUE TO THE CONTRACTOR'S OPERATIONS SHALL BE REPAIRED AT THE EXPENSE OF AND BY THE CONTRACTOR.
13. NO MATERIALS OF ANY KIND SHALL BE USED UNTIL IT HAS BEEN INSPECTED AND ACCEPTED BY THE ENGINEER; ALL MATERIALS REJECTED SHALL BE IMMEDIATELY REMOVED FROM THE WORK SITE AND SHALL NOT BE OFFERED FOR INSPECTION AGAIN.
14. ANY MATERIALS OR WORKMANSHIP FOUND AT ANY TIME TO BE DEFECTIVE SHALL BE REMEDIED AT ONCE, REGARDLESS OF PREVIOUS INSPECTION, THE INSPECTION AND OBSERVATION OF WORK BY THE ENGINEER IS INTENDED TO AID THE CONTRACTOR IN APPLYING LABOR AND MATERIAL TO AND IN ACCORDANCE WITH THE SPECIFICATION, BUT SUCH INSPECTION SHALL NOT RELEASE THE CONTRACTOR FROM ANY CONTRACT OBLIGATIONS.
15. THE CONTRACTOR SHALL CONDUCT THE WORK IN A SAFE MANNER SO AS TO POSE NO DANGER OR HAZARDS TO PERSONS OR PROPERTY. WHERE NECESSARY, TEMPORARY SHIELDS OR OTHER PROTECTIVE DEVICES MUST BE UTILIZED. THE CONTRACTOR ASSUMES FULL RESPONSIBILITY AND EXPENSE OF ANY AND ALL SAFETY MEASURES. THE USE OF EXPLOSIVES IS STRICTLY PROHIBITED. THE CONTRACTOR SHALL COMPLY WITH ALL OSHA AND NEW YORK STATE DEPARTMENT OF LABOR REQUIREMENTS.
16. RESEED ALL AREAS WHERE WORK OCCURS AND/OR WHERE CONTRACTOR DAMAGES EXISTING GRASS. COMPLY WITH THE SPECIFICATIONS. STAGING AREAS SHALL BE RESTORED TO ORIGINAL CONDITION AND SHALL BE SEEDED FOLLOWING COMPLETION OF ALL PHYSICAL WORK.
17. THE CONTRACTOR SHALL HAVE A COMPETENT REPRESENTATIVE PRESENT WHO SHALL RESPOND TO ANY QUESTIONS OR REQUESTS OF THE ENGINEER IN THE PROSECUTION AND COMPLETION OF THE WORK IN CONFORMITY WITH THIS CONTRACT, AND SHALL HAVE FULL AUTHORITY TO SUPPLY LABOR AND MATERIAL IMMEDIATELY. THE CONTRACTOR SHALL ALSO HAVE A COMPETENT REPRESENTATIVE AVAILABLE TO RECEIVE TELEPHONE MESSAGES AND PROVIDE A REASONABLE REPLY AS SOON AS POSSIBLE, BUT NO LATER THAN 24 HOURS.
18. NEITHER THE OWNER OR ENGINEER SHALL BE RESPONSIBLE FOR THE MEANS AND METHODS CHOSEN BY THE CONTRACTOR TO COMPLETE THE WORK.
19. THE CONTRACTOR SHALL HAVE FULL RESPONSIBILITY FOR SITE SAFETY AND THE SAFETY OF THE CONTRACTOR'S WORK FORCE.
20. BACKFILL AT ALL EXCAVATIONS SHALL BE PLACED IN 6" LIFTS AND SHALL ACHIEVE A COMPACTION NOT LESS THAN 95 PERCENT OF STANDARD PROCTOR MAXIMUM DENSITY. UNDER THE TERMS OF THE CONTRACT, THE CONTRACTOR SHALL PERFORM FIELD TESTS BY AN APPROVED LABORATORY TO ASSURE THIS COMPACTION RATE AT VARYING DEPTHS. THE CONTRACTOR SHALL BEAR ALL COSTS FOR TESTING AND ANY DELAYS THAT RESULT FROM SUCH TESTING.
21. THE CONTRACTOR SHALL ADJUST ALL MANHOLE FRAMES AND COVERS, VALVE COVERS, WATERVALVE BOXES, DRAINAGE INLETS, ETC. AS NECESSARY TO MEET THE SURFACE OF NEW PAVEMENT OR WALKWAY AS REQUIRED TO ALLOW POSITIVE DRAINAGE. NO SEPARATE PAYMENT WILL BE MADE FOR THIS WORK UNLESS OTHERWISE NOTED IN THE CONTRACT DOCUMENTS. THE CONTRACTOR SHALL COORDINATE THIS ACTIVITY WITH THE RELATED UTILITY COMPANIES, IF APPLICABLE. WARPING OF THE PAVEMENT SURFACE TO MEET THESE ITEMS WILL NOT BE PERMITTED.
22. ALL EXISTING SIGNS IN THE CONTRACT AREA ARE TO REMAIN INTACT. SIGNS DAMAGED SHALL BE REPLACED AT THE CONTRACTOR'S EXPENSE. ANY SIGNS THAT REQUIRE RESETTING SHALL BE PLACED IN A FINAL POSITION DETERMINED BY THE OWNER. NO SEPARATE PAYMENT SHALL BE MADE FOR THIS WORK. THE CONTRACTOR SHALL BE HELD RESPONSIBLE FOR SIGNS DAMAGED BY HIS OPERATIONS. THE CONTRACTOR SHALL BE RESPONSIBLE FOR ALL DAMAGES TO BURIED AND OVERHEAD UTILITIES LOCATED ON PUBLIC AND PRIVATE PROPERTY. THE CONTRACTOR SHALL BE RESPONSIBLE FOR ALL DAMAGES TO FACILITIES ON PUBLIC AND PRIVATE PROPERTY, SUCH AS, LANDSCAPING, DRIVEWAYS, CURBS, PAVEMENT, SIDEWALK, ETC.
23. CONTRACTOR IS RESPONSIBLE TO COORDINATE AND VERIFY THE EXTENT OF ALL DEMOLITION WITH THE ENGINEER PRIOR TO PERFORMING THE WORK.
24. CONTRACTOR SHALL RESTORE STAGING AREA BACK TO ITS ORIGINAL CONDITION INCLUDING GRADING, SEEDING ETC. EXISTING TREES, UTILITIES, LIGHT POLES, STONE, SIDEWALK, CURB, ETC. SHALL BE PROTECTED AND REPLACED IF DAMAGED. PROVIDE ELECTRICAL POWER, WATER, TELEPHONE, ETC. AS SPECIFIED FOR THE ENGINEERS TRAILER WHICH SHALL BE LOCATED IN THE STAGING AREA.

SURVEY NOTES:

1. HORIZONTAL COORDINATES SHOWN HEREON REFER TO THE NORTH AMERICAN DATUM OF 1983 (NAD83), NEW YORK STATE PLANE COORDINATE SYSTEM, NEW YORK EAST ZONE 3101.
2. VERTICAL ELEVATIONS SHOWN HEREON REFER TO THE NORTH AMERICAN VERTICAL DATUM OF 1988 (NAVD88) WHICH IS BASED ON THE UNITED STATES COAST & GEODETIC SURVEY MEAN SEA LEVEL AT SANDY HOOK, NEW JERSEY.
3. LOCATION OF UTILITIES AS SHOWN ARE BASED UPON MAP TITLED "PARTIAL TOPOGRAPHICAL AND UTILITY SURVEY OF RYE PLAYLAND PARK" BY LKB LAST UPDATED SEPTEMBER 8, 2017.
4. LOCATIONS OF UNDERGROUND UTILITIES SHOWN ON THIS SURVEY ARE APPROXIMATE. RLT ENGINEERING, GEOLOGY, AND LAND SURVEYING, P.C., CANNOT GUARANTEE THE LOCATION OF UNDERGROUND UTILITIES AND STRUCTURES. THE STANDARD OF CARE USED BY RLT ENGINEERING, GEOLOGY, AND LAND SURVEYING, P.C. TO LOCATE THE UTILITIES IS REASONABLE AND CONSISTENT WITH THE LOCAL STANDARD OF CARE USED TO LOCATE THE UNDERGROUND UTILITIES. LOCATIONS AND SIZE ARE BASED ON UTILITY MARK–OUTS, AS–BUILT MAPS AND OTHER VISIBLE SURFACE EVIDENCE OBSERVED IN THE COURSE OF THIS SURVEY. PRIOR TO EXCAVATION OR CONSTRUCTION THE LOCATION, SIZE AND TYPE OF ALL UNDERGROUND UTILITY LOCATIONS MUST BE VERIFIED BY THE RESPECTIVE UTILITY COMPANY.
5. THE SUBJECT PROPERTY OF RYE PLAYLAND PARK FALLS WITHIN FEMA FLOOD ZONES AE (EL 12), AE (EL 13), VE (EL 14), VE (EL 15), VE (EL 16), VE (EL 17) AS SHOWN ON THE FEMA FLOOD INSURANCE RATE MAP COMMUNITY PANEL #36119C0358 F EFFECTIVE DATE SEPTEMBER 28, 2007 AND FEMA FLOOD INSURANCE RATE MAP COMMUNITY PANEL #36119C0356 F EFFECTIVE DATE SEPTEMBER 28, 2007. FEMA ELEVATIONS REFER TO NAVD88."

DEMOLITION NOTES:

1. ALL REQUIRED DEMOLITION PERMITS MUST BE OBTAINED FROM ALL REQUIRED AGENCIES PRIOR TO COMMENCEMENT OF WORK.
2. ANY ASBESTOS REMOVAL MUST BE DONE BY A CERTIFIED ASBESTOS REMOVAL CONTRACTOR.
3. ALL UTILITY COMPANIES MUST BE NOTIFIED A MINIMUM OF 48 HOURS IN ADVANCE OF DEMOLITION.
4. FOR ALL UTILITIES, CONTRACTOR SHALL VERIFY DISCONNECT PRIOR TO DEMOLITION.
5. PROPER FENCING OR PUBLIC PROTECTION DEVICES MUST BE CONSTRUCTED AND MAINTAINED AROUND THE PERIMETER OF THE SITE AT ALL TIMES DURING DEMOLITION PHASE.
6. IT IS THE CONTRACTOR'S RESPONSIBILITY TO CONTROL DUST, DIRT, AND DEBRIS DURING DEMOLITION AND CONSTRUCTION PHASES.
7. IF SUSPICIOUS AND/OR HAZARDOUS MATERIAL IS ENCOUNTERED DURING DEMOLITION / CONSTRUCTION, ALL WORK SHALL STOP AND THE COUNTY DEPARTMENT OF HEALTH AND THE NEW YORK STATE DEPARTMENT OF ENVIRONMENTAL CONSERVATION SHALL BE NOTIFIED IMMEDIATELY. WORK SHALL NOT RESUME UNTIL THE CONTRACTOR HAS OUTLINED APPROPRIATE ACTION FOR DEALING WITH THE WASTE MATERIAL.
8. WHERE EXISTING CURB, GUTTER, SIDEWALK OR WALK IS TO BE REMOVED, IT SHALL BE SAW CUT OR REMOVED AT THE NEAREST JOINT.
9. THE CONTRACTOR SHALL PERFORM DAILY CLEANUP OPERATIONS WHICH INCLUDE SWEEPING OF THE ROADWAYS, REMOVAL OF DEBRIS (CUPS, PAPER BAGS, CANS, ETC.), REMOVAL OF EXCESS CONSTRUCTION MATERIALS, ALL TO THE SATISFACTION OF THE OWNER.
10. THE CONTRACTOR SHALL CONFORM TO ALL STATE AND LOCAL RULES, REGULATIONS AND LAWS WHICH SHALL GOVERN THE HAULING AND DISPOSING OF TREES, SHRUBS, STUMPS, ROOTS, RUBBISH, DEBRIS AND OTHER MATTER.
11. NO TREES , SHRUBS, ROOTS, BRANCHES, WOOD, CONCRETE OR OTHER DEBRIS SHALL BE BURIED IN FILLS, EMBANKMENTS OR STOCK PILES.
12. NO CLEARED MATTER, DEBRIS SHALL BE STORED AT THE CONSTRUCTION SITE.
13. CONTRACTOR SHALL GUARANTEE THAT WORK PERFORMED UNDER THIS CONTRACT WILL NOT PERMANENTLY DAMAGE TREES, SHRUBS, TURF OR PLANTS DESIGNATED TO REMAIN, OR OTHER ADJACENT WORK OR FACILITIES. IF DAMAGE RESULTING FROM CONTRACTOR'S OPERATIONS APPEARS DURING THE PERIOD UP TO 24 MONTHS AFTER COMPLETION OF THE PROJECT, THE CONTRACTOR SHALL REPLACE DAMAGED ITEMS AT HIS EXPENSE.
14. DAMAGE TO ANY EXISTING ITEMS, NOT SHOWN IN CONTRACT DOCUMENTS TO BE REMOVED, SUCH AS PAVEMENT, GRASSED AREAS, UTILITIES, STRUCTURES OR OTHER FACILITIES SHALL BE REPAIRED BY THE CONTRACTOR IMMEDIATELY AT HIS OWN EXPENSE TO THE SATISFACTION OF THE ENGINEER AND OWNER. ALL ASPHALT PAVEMENTS, GRASSED AREAS AND LANDSCAPING THAT ARE DAMAGED OR DISTURBED SHALL BE RESTORED IN ACCORDANCE WITH APPLICABLE SECTIONS ON THE CONTRACT SPECIFICATIONS.
15. EXCEPT AS NOTED BELOW, CONTRACTOR SHALL REMOVE FROM THE SITE AND SATISFACTORILY DISPOSE OF ALL TREES, SHRUBS, ROOTS, BRUSH, MASONRY, RUBBISH, SCRAP, DEBRIS, PAVEMENT, CURBS, FENCES AND MISCELLANEOUS OTHER ITEMS NOT COVERED UNDER OTHER SECTIONS AS SHOWN, SPECIFIED OR OTHERWISE REQUIRED TO PERMIT CONSTRUCTION OF NEW WORK.
16. BURNING OF MATERIAL IS EXPRESSLY FORBIDDEN.
17. TREES AND SHRUBS TO BE SAVED:

A. TREES AND SHRUBS WHICH ARE TO REMAIN SHALL BE PROTECTED BY FENCES, BARRICADES, WRAPPING OR OTHER MEANS OF PROTECTION. EQUIPMENT STORAGE, MATERIAL STOCKPILES, ETC., SHALL NOT BE PERMITTED WITHIN TREE BRANCH SPREAD.

B. PROTECT ALL OTHER TREES AND SHRUBS FROM DEFACEMENT, INJURY AND DESTRUCTION. PRESERVE TREES WITHIN THE CONTRACT LIMITS THAT ARE SO DELINEATED ON THE PLANS OR AS MARKED IN THE FIELD BY THE ENGINEER. ALSO, ALL TO BE SAVED SHALL BE PROTECTED IN ACCORDANCE WITH THE CONTRACT DOCUMENTS.

C. DO NOT CUT ROOTS UNNECESSARILY; HANDWORK OR OTHER METHODS SHALL BE IMPLEMENTED TO PREVENT DAMAGE TO ROOTS WHICH EXTEND INTO GRADING LIMITS OR LIMITS OF EXCAVATION. DISTURB ROOTS AS LITTLE AS POSSIBLE WHEN TUNNELING UNDER TREES. BACKFILLING AROUND TREE ROOTS SHALL BE DONE IMMEDIATELY AFTER COMPLETION OF CONSTRUCTION IN THE VICINITY OF TREES.

D. THE CONTRACTOR SHALL BE RESPONSIBLE FOR THE PROTECTION OF ALL VEGETATION FROM DAMAGE RESULTING FROM EMISSIONS FROM MOTORIZED EQUIPMENT.

E. CONTRACTOR SHALL BE VIGILANT OF ANY OVERHEAD UTILITY LINES WHEN USING AERIAL EQUIPMENT FOR TREE TRIMMING OPERATIONS.

F. DURING WORKING OPERATION, PROTECT THE TRUNK, FOLIAGE, AND ROOT SYSTEM OF ALL TREES TO BE SAVED WITH BOARDS OR OTHER GUARDS AND AS REQUIRED TO PREVENT DAMAGE, INJURY AND DEFACEMENT. DO NOT PILE EXCAVATED MATERIAL ADJACENT TO THE BASE OF ANY TREES. DO NOT ALLOW RUNOFF TO ACCUMULATE AROUND BASE OF TREES. DO NOT FASTEN OR ATTACH ROPES, CABLE OR GUY WIRES TO TREES WITHOUT PERMISSION OF THE ENGINEER. WHEN SUCH PERMISSION IS GRANTED, PROTECT THE TREE BEFORE MAKING FASTENING OR ATTACHMENTS BY PROVIDING BURLAP WRAPPING AND SOFTWOOD CLEATS. THE CONTRACTOR SHALL BE HELD RESPONSIBLE FOR DAMAGE RESULTING FROM THESE ACTIONS. USE OF AXES OR CLIMBING SPURS FOR TRIMMING WILL NOT BE PERMITTED. PROVIDE CLIMBING ROPES DURING TRIMMING.

G. REMOVE SHRUBS TO BE SAVED, TAKING A SUFFICIENT EARTH BALL AT THE ROOTS TO MAINTAIN THE SHRUB. TEMPORARILY REPLANT IF REQUIRED, AND REPLACE AT THE COMPLETION OF CONSTRUCTION IN CONDITION EQUALING THE ORIGINAL.

H. TREE AND SHRUB REPAIR WHERE REQUIRED SHALL BE PERFORMED BY A TREE SURGEON.

I. TREES AND SHRUBS INTENDED TO REMAIN WHICH ARE DAMAGED BEYOND REPAIR BY CONSTRUCTION, SHALL BE REPLACED BY THE CONTRACTOR AT NO EXPENSE TO THE OWNER.

SITE NOTES:

1. THE CONTRACTOR SHALL PERFORM ALL WORK IN COMPLIANCE WITH TITLE 29 OF FEDERAL REGULATIONS, PART 1926, SAFETY AND HEALTH REGULATIONS FOR CONSTRUCTION(OSHA).
2. HIGHWAY DRAINAGE ALONG ALL ROADS AND PRIVATE DRIVES SHALL BE KEPT CLEAN OF MUD, DEBRIS ETC. AT ALL TIMES.
3. REFER TO ARCHITECTURAL DRAWINGS FOR BUILDING INFORMATION.
4. THE CONTRACTOR SHALL CONSULT THE DESIGN ENGINEER BEFORE DEVIATING FROM THESE PLANS.
5. IN ALL TRENCH EXCAVATIONS, CONTRACTOR MUST LAY THE TRENCH SIDE SLOPES BACK TO A SAFE SLOPE, USE A TRENCH SHIELD OR PROVIDE SHEETING AND BRACING IF REQUIRED.
6. THE CONTRACTOR SHALL TAKE PRECAUTIONS TO MAINTAIN A MINIMUM OF 2' OF COVER OVER ALL EXISTING AND NEW STORM AND SANITARY PIPES DURING CONSTRUCTION.
7. ALL EXISTING SURFACE APPURTENANCES (I.E. WATER VALVES, CATCH BASIN FRAMES AND GRATES, MANHOLE COVERS) WITHIN THE PROJECT LIMITS SHALL BE ADJUSTED TO FINISHED GRADE.
8. UNLESS COVERED BY THE CONTRACT SPECIFICATIONS OR AS NOTED ON THE PLANS, ALL WORK SHALL CONFORM TO THE NEW YORK STATE DEPARTMENT OF TRANSPORTATION STANDARD SPECIFICATIONS DATED JANUARY 1, 2020 AND ANY SUBSEQUENT APPENDICES.

UTILITY NOTES:

1. APPROXIMATE LOCATION OF KNOWN UTILITY STRUCTURES AND FACILITIES THAT MAY BE ENCOUNTERED WITHIN AND ADJACENT TO THE LIMITS OF WORK ARE SHOWN ON THE PLANS. THE ACCURACY AND COMPLETENESS OF THIS INFORMATION IS NOT GUARANTEED BY THE ENGINEER. THE CONTRACTOR IS ADVISED TO VERIFY IN FIELD ALL THE FACTS CONCERNING THE UTILITY LOCATIONS AND OTHER CONSTRUCTION OBSTACLES PRIOR TO CONSTRUCTION OF ANY DISCREPANCIES WHICH MAY AFFECT PROJECT DESIGN AND/OR SCOPE.
2. ALL ABANDONED WATER LINES SHALL BE CUT AND CAPPED IN ACCORDANCE WITH WESTCHESTER COUNTY REQUIREMENTS.
3. TRENCH DETAILS ARE INTENDED TO PROVIDE INFORMATION REGARDING BACKFILLING MATERIALS AND GENERAL MATERIAL DEPTHS ONLY. THE CONTRACTOR SHALL BE RESPONSIBLE FOR THE MEANS AND METHODS OF CONSTRUCTION AND SHALL PROVIDE APPROPRIATE SAFETY MEASURES, SHEETING AND BRACING AS NECESSARY. SHEETING CONDITIONS ARE TO BE DESIGNED BY A NEW YORK STATE LICENSED PROFESSIONAL ENGINEER AND SUBMITTED TO THE DESIGN ENGINEER FOR APPROVAL. THE DESIGN ENGINEER ASSUMES NO RESPONSIBILITY OR LIABILITY FOR FIELD CONDITIONS, TRENCHING OR BACKFILLING OPERATIONS DURING CONSTRUCTION. THE CONTRACTOR SHALL COMPLY WITH ALL APPLICABLE OSHA STANDARDS AND DETAILS FOR TRENCH EXCAVATION.
4. CONTRACTOR SHALL BE RESPONSIBLE FOR DEWATERING AND PRECLUDING PONDING OF WATER IN ALL AREAS. DEWATERING OPERATIONS SHALL BE IN ACCORDANCE WITH NYSDEC REGULATIONS, THE PROJECT STORMWATER POLLUTION PREVENTION PLAN AND WESTCHESTER COUNTY.
5. THE CONTRACTOR SHALL COMPLY WITH THE LATEST OSHA CONFINED SPACE ENTRY REQUIREMENTS (29 CFR PART 1910).
6. THE CONTRACTOR SHALL COMPLY WITH THE LATEST REVISED OSHA SHEETING REQUIREMENTS (29 CFR PART 1926.650, 651, 652).
7. ALL EXISTING UTILITIES THAT ARE TO REMAIN IN SERVICE AND THAT INTERFERE WITH THE WORK SHALL BE RELOCATED UNLESS OTHERWISE SHOWN.
8. ALL ABANDONED PIPES SHALL BE PLUGGED, REMOVED, CRUSHED OR FILLED WITH A SUITABLE MATERIAL AS DIRECTED BY THE ENGINEERS, ABANDONED PIPES 12" INSIDE DIAMETER AND LARGER MUST BE REMOVED, FILLED OR CRUSHED IN PLACE. SMALLER PIPES SHALL BE PLUGGED AND ABANDONED IN PLACE UNLESS OTHERWISE DIRECTED BY THE ENGINEER.
9. THE CONTRACTOR SHALL CONTACT THE UTILITY COMPANIES TO DETERMINE THEIR SCHEDULE FOR PERFORMING UTILITY RELOCATION AND INSTALLATION WORK. THE CONTRACTOR SHALL SCHEDULE THEIR WORK ACCORDINGLY IN ORDER TO NOT INTERFERE WITH THE WORK OF THE UTILITY COMPANIES.
10. TRENCHES SHALL BE BACKFILLED WITHOUT DELAY. OPEN TRENCHES SHALL BE TEMPORARILY SUPPORTED AND STEEL PLATED WHEN WORK IS NOT IN PROGRESS. CONTRACTOR MUST ENSURE NO TRENCHES ARE LEFT OPEN OVERNIGHT. THE CONTRACTOR IS RESPONSIBLE FOR THE DESIGN AND INSTALLATION OF STEEL PLATES THAT ARE CAPABLE OF SAFELY SUPPORTING THE SUBJECTED LOADS.
11. THE CONTRACTOR SHALL BE RESPONSIBLE FOR PROVIDING TEMPORARY LIGHTING WITHIN THE LIMITS OF CONSTRUCTION AND FOR ALL AREAS WHERE WHERE EXISTING STREET AND AREA LIGHTING SHUT–DOWN IS REQUIRED TO INSTALL NEW LIGHTING AND ELECTRICAL SERVICE.
12. ALL CMP PIPES SHALL FOLLOW NYSDOT SECTION 602–2 AND 707.02, BE HELICAL BITUMINOUS COATED, SHALL HAVE GASKETED AND BANDED JOINTS AND BE OF THE FOLLOWING PIPE GAUGES UNLESS OTHERWISE SPECIFIED.

   10" TO 21" – 14 GAUGE
   24" TO 30" – 12 GAUGE
   30" TO 60" – 10 GAUGE
13. IN INSTANCES WHERE THE STORM SEWER CROSSES THE SANITARY SEWER A CRUSHED STONE ENCASEMENT SHALL BE PROVIDED AROUND THE SANITARY SEWER UP TO THE STORM SEWER–COMPACT WITH APPROVED EQUIPMENT
14. ALL CATCH BASINS AND STORM MANHOLES WITHIN PAVEMENT TO BE CONSTRUCTED TO WITHSTAND H–20 LOADING.
15. ALL EXISTING CATCH BASINS WITHIN WORK LIMITS TO BE CLEANED OF ANY DEBRIS OR SILT.

GRADING NOTES:

1. REMOVE AND STOCKPILE TOPSOIL AS DIRECTED BY THE CONSTRUCTION MANAGER. REPLACE TOPSOIL TO A MINIMUM 4" DEPTH. ALL DISTURBED AREAS TO BE HYDROSEEDED AS DIRECTED BY THE CONSTRUCTION MANAGER.
2. CONTRACTOR SHALL BE RESPONSIBLE FOR THE MAINTENANCE AND REMOVAL OF TEMPORARY SEDIMENTATION CONTROLS, INCLUDING SILT SINK AND SILT FENCE. EROSION CONTROL MEASURES SHALL NOT BE REMOVED BEFORE VEGETATION HAS OCCURRED COMPLETELY.
3. ALL SILT FENCE TO BE REPLACED WHENEVER THEY BECOME CLOGGED OR INOPERABLE AND SHALL BE REPLACED AS DIRECTED BY THE ENGINEER.
4. THE CONTRACTOR SHALL BE RESPONSIBLE FOR RESTORATION OF TOPSOIL TO ALL DISTURBED AREAS. IT IS THE CONTRACTOR'S RESPONSIBILITY TO MAINTAIN EROSION CONTROL MEASURES AT ALL TIMES.
5. EROSION CONTROL MEASURES WILL BE IMPLEMENTED IN ACCORDANCE WITH THE NEW YORK STATE GUIDELINES FOR URBAN EROSION SEDIMENT CONTROL MANUAL, WESTCHESTER COUNTY HEALTH DEPARTMENT, AND THE CITY OF RYE REQUIREMENTS.
6. ALL INLETS TO THE STORM SEWER SHALL HAVE STONE DROP INLET PROTECTION. THE CONTRACTOR SHALL BE RESPONSIBLE FOR MAINTAINING THE BEST MANAGEMENT PRACTICES (BMP'S) UNTIL GROUND COVER IS ESTABLISHED.
7. SILT FENCE, JUTE MESH, AND/OR EROSION CONTROL BLANKETS WILL BE USED ON STEEP SLOPES AND WHEREVER NECESSARY TO CONTROL EROSION AND SILTATION OF EXISTING DRAINAGE SYSTEMS AS ORDERED BY THE ENGINEER OR SPECIFIED ON PLANS.
8. THE CONTRACTOR SHALL DESIGNATE A MEMBER OF HIS/HER FIRM TO BE RESPONSIBLE TO MONITOR EROSION CONTROL, EROSION CONTROL STRUCTURES, TREE PROTECTION AND PRESERVATION THROUGHOUT CONSTRUCTION.
9. ALL DISTURBED AREAS SHALL BE PROTECTED FROM EROSION EITHER BY MULCH OR TEMPORARY SEEDING WITHIN 2 WEEKS OF DISTURBANCE.

SOIL EROSION AND SEDIMENT CONTROL NOTES:

1. ALL SOIL EROSION AND SEDIMENT CONTROL PRACTICES TO BE INSTALLED PRIOR TO ANY SOIL DISTURBANCE, OR IN THEIR PROPER SEQUENCE, AND MAINTAINED UNTIL PERMANENT PROTECTION IS ESTABLISHED. CONTRACTOR SHALL COMPLY WITH ALL REQUIREMENTS OF THE STORMWATER POLLUTION PREVENTION PLAN.
2. ANY DISTURBED AREAS THAT WILL NOT RECEIVE PERMANENT RESTORATION WITHIN TEN (10) DAYS AFTER FINAL GRADING, AND NOT SUBJECT TO CONSTRUCTION TRAFFIC, WILL IMMEDIATELY RECEIVE A TEMPORARY COVER. THE DISTURBED AREAS WILL BE MULCHED WITH STRAW, OR EQUIVALENT MATERIAL AT A RATE OF TWO (2) TONS PER ACRE, ACCORDING TO STATE STANDARDS.
3. PERMANENT VEGETATION TO BE SEEDED OR SODDED ON ALL EXPOSED AREAS WITHIN TEN (10) DAYS AFTER FINAL GRADING. MULCH WILL BE USED AS NECESSARY FOR PROTECTION UNTIL SEEDING IS ESTABLISHED.
4. ALL WORK TO BE DONE IN ACCORDANCE WITH THE STANDARDS FOR SOIL EROSION AND SEDIMENT CONTROL IN THE STATE OF NEW YORK.
5. A SUB–BASE COURSE DETAIL WILL BE APPLIED IMMEDIATELY FOLLOWING ROUGH GRADING AND INSTALLATION OF IMPROVEMENTS IN ORDER TO STABILIZE ROADS, DRIVEWAYS PARKING AREAS AND SIDEWALKS. IN AREAS WHERE NO UTILITIES ARE PRESENT, THE SUB–BASE SHALL BE INSTALLED WITHIN 15 DAYS OF THE PRELIMINARY GRADING.
6. IMMEDIATELY FOLLOWING INITIAL DISTURBANCE OR ROUGH GRADING, ALL CRITICAL AREAS SUBJECT TO EROSION (I.E.; STEEP SLOPES AND ROADWAY EMBANKMENTS) WILL RECEIVE A TEMPORARY COVER OF STRAW MULCH OR A SUITABLE EQUIVALENT AT A RATE OF TWO (2) TONS PER ACRE, ACCORDING TO NYS STANDARDS.
7. ANY STEEP SLOPES RECEIVING PIPELINE INSTALLATION WILL BE BACKFILLED AND STABILIZED DAILY, AS THE INSTALLATION PROCEEDS (I.E.; SLOPES GREATER THAN 3:1).
8. IN ACCORDANCE WITH THE STANDARDS FOR PERMANENT VEGETATIVE COVER FOR SOIL STABILIZATION, ANY SOIL HAVING A pH OF 4 OR LESS OR CONTAINING IRON SULFIDES SHALL BE COVERED WITH A MINIMUM OF 12 INCHES OF SOIL HAVING A pH OF 5 OR GREATER PRIOR TO SEEDBED PREPARATION.
9. WESTCHESTER COUNTY AND THE ENGINEER, SHALL BE NOTIFIED 72 HOURS IN ADVANCE OF ANY LAND DISTURBING ACTIVITY.
10. AT THE TIME WHEN THE SITE PREPARATION FOR PERMANENT VEGETATIVE STABILIZATION IS GOING TO BE ACCOMPLISHED, ANY SOIL THAT WILL NOT PROVIDE A SUITABLE ENVIRONMENT TO SUPPORT ADEQUATE VEGETATIVE GROUND COVER, SHALL BE REMOVED OR TREATED IN SUCH A WAY THAT WILL PERMANENTLY ADJUST THE SOIL CONDITIONS AND RENDER IT SUITABLE FOR VEGETATIVE COVER. IF THE REMOVAL OR TREATMENT OF THE SOIL WILL NOT PROVIDE SUITABLE CONDITIONS, NON–VEGETATIVE MEANS OF PERMANENT GROUND STABILIZATION WILL HAVE TO BE EMPLOYED.
11. THE CONTRACTOR SHALL TAKE NECESSARY MEASURES TO MAINTAIN DUST CONTROL. DIRT HAUL ROADS SHALL BE SPRINKLED WITH WATER OR GIVEN A SURFACE OF CRUSHED STONES OR WOOD CHIPS AS REQUIRED. VEHICLES SHALL BE CLEANED, AS NECESSARY, PRIOR TO USING PUBLIC STREETS. PAVED ROADS SHALL BE SPRINKLED WITH WATER.
12. ALL SOIL EROSION AND SEDIMENT CONTROL DEVICES SHALL BE LOCATED IN THE FIELD AS REQUIRED OR AT THE DIRECTION OF THE ENGINEER. THE CONTRACT DRAWING ARE NOT INTENDED TO SHOW THE LOCATION AND DETAILS FOR ALL SUCH DEVICES BUT ARE TO BE USED AS A REASONABLE GUIDE.
13. ANY CHANGES TO THE SOIL AND SEDIMENT CONTROL PLANS WILL REQUIRE THE SUBMISSION OF REVISED SOIL EROSION AND SEDIMENT CONTROL PLANS TO WESTCHESTER COUNTY AND THE ENGINEER. THE REVISED PLANS MUST BE PREPARED BY THE CONTRACTOR AND MUST MEET ALL CURRENT NYS SOIL EROSION AND SEDIMENT CONTROL PRACTICES.
14. CONTRACTOR SHALL OBTAIN ALL REQUIRED SEDIMENT CONTROL PERMITS.
15. UPON COMPLETION OF CONSTRUCTION WORK AND AFTER FINAL GRADING AND WHEN PERMANENT STABILIZATION HAS BEEN ESTABLISHED, STRAW BALES, SILT FENCES AND ALL OTHER SOIL PLAN APPURTENANCES WILL BE REMOVED AND DISPOSED OF BY THE CONTRACTOR, UNLESS ORDERED TO REMAIN BY THE ENGINEER.
16. ALL EXCESS EXCAVATED MATERIAL, EXCEPT FOR TOP SOIL, WILL BE REMOVED FROM THE SITE BY THE CONTRACTOR IN ACCORDANCE WITH THE CONTRACT DOCUMENTS.
17. CONDUIT OUTLETS AND CATCH BASIN INLETS MUST BE PROTECTED PRIOR TO START OF CONSTRUCTION.
18. THE CONTRACTOR SHALL PROVIDE A DETAILED SEQUENCE OF CONSTRUCTION OPERATIONS FOR REVIEW AND SUBMITTAL TO WESTCHESTER COUNTY AND THE ENGINEER.
19. THE CONTRACTOR SHALL MEET ENGINEER ON–SITE TO DEFINE THOSE AREAS WHICH WILL REQUIRE SOIL EROSION AND SEDIMENT CONTROL FACILITIES, DISCUSS THEIR CONSTRUCTION AND THEREAFTER PROVIDE DETAILED PLANS FOR REVIEW OF SUCH FACILITIES BY WESTCHESTER COUNTY AND THE ENGINEER.
20. ALL SOIL EROSION AND SEDIMENT CONTROL PRACTICES SHALL BE IN PLACE WHERE POSSIBLE PRIOR TO, OR IMMEDIATELY FOLLOWING SITE AND ACCESS CLEARING.
21. ALL SOIL EROSION AND SEDIMENT CONTROL PRACTICES SHALL BE LEFT IN PLACE AND MAINTAINED; INCLUDING SILT AND SEDIMENT REMOVAL, UNTIL CONSTRUCTION IS COMPLETED, AREA STABILIZED AND THE ENGINEER SO DIRECTS.
22. CONTRACTOR SHALL CONFINE SOIL DISTURBANCE ACTIVITY TO THE AREAS CONTAINED WITHIN THE "LIMIT OF DISTURBANCE" LINES EXCEPT AS DIRECTED BY THE ENGINEER AND IN ACCORDANCE AND COORDINATION WITH ADJACENT CONTRACTS. SUCH ACTIVITY SHALL SHALL ESSENTIALLY CONSIST OF CLEARING, GRUBBING, GRADING AND CONSTRUCTION IN AREAS DEFINED AS BUILDINGS, PIPELINE, PARKING AREAS, DRIVES AND WALKWAYS OR AS MAY BE REQUIRED DUE TO GRADE CHANGES OR RETAINING WALLS.
23. ALL DEWATERING OPERATIONS MUST DISCHARGE DIRECTLY INTO A SEDIMENT FILTER AREA. SEDIMENT FILTER SHALL BE INSTALLED IN ACCORDANCE WITH THE CONTRACT DOCUMENTS AND THE DETAILS OF DESIGN AND CONSTRUCTION SHALL PREPARED AND SUBMITTED BY THE CONTRACTOR TO THE ENGINEER, AND ALL OTHER PERTINENT AGENCIES FOR REVIEW.
24. SOIL STABILIZATION METHODS SHALL BE UNDERTAKEN COINCIDENTALLY WITH ALL SITE IMPROVEMENTS AND CONTINUE DURING THE CONSTRUCTION ACTIVITY PERIOD.
25. THE LIMITS OF FENCING FOR TREE PROTECTION WILL BE DETERMINED IN THE FIELD PRIOR TO CONSTRUCTION AND WILL INCLUDE THE TREE CANOPY.
26. COMPLY WITH GENERAL PERMIT GP–0–20–001, AS OUTLINED IN THE STORM WATER PREVENTION PLAN (SWPPP).

6/15/2022 4:10:27 PM

CONSULTANT INFORMATION

LiRo Engineers, Inc.
A LiRo Group Company
Mineola, N.Y. 516-746-2350[T]

CONSULTANT SEAL

STATE OF NEW YORK · KENNETH J. HOLMSTROM · LICENSED PROFESSIONAL ENGINEER · No. 059134

REVISION NUMBER	DATE	MADE BY	APP'D BY	REVISION

RECORD DRAWING CERTIFICATION

☐ AS BUILT – CHANGES AS NOTED ☐ AS BUILT – NO CHANGES

CONTRACTOR	PROJECT COORDINATOR
NAME	NAME
SIGNATURE	SIGNATURE
TITLE DATE	TITLE DATE

WESTCHESTER COUNTY, NEW YORK
DEPARTMENT OF PUBLIC WORKS AND TRANSPORTATION
DIVISION OF ENGINEERING

INFRASTRUCTURE REHABILITATION PHASE 3
PLAYLAND PARK, RYE, NEW YORK
RESTAURANT KITCHEN WITH FOOD VENDING
GENERAL NOTES

CONTRACT NUMBER: 22-523	SHEET NUMBER: K-C-01
DWG NO.: 575 of 664	
SCALE: -	
DATE: 08/23/2022	
DPW FILE NUMBER: 1-118-C-1324-0	REV. NO. 0

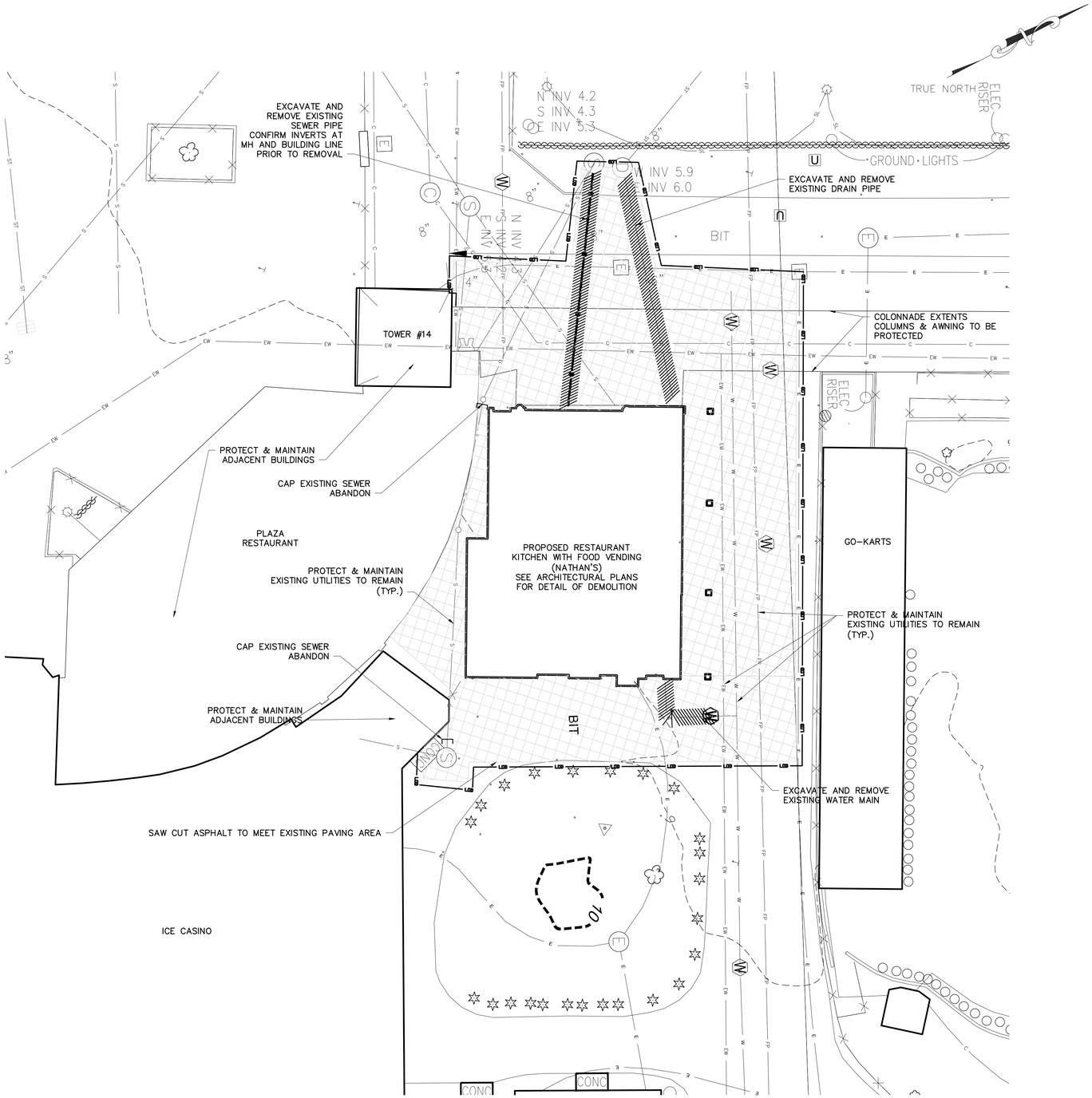

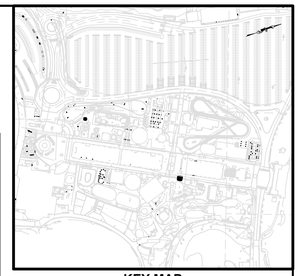

KEY MAP
SCALE: 1"=400'

EXISTING LEGEND

- POST
- UTILITY POLE
- SIGN
- HANDICAP PARKING
- GROUND LIGHT
- LIGHT POLE
- UTILITY POLE WITH LIGHT
- LIGHT POLE (SINGLE LIGHT)
- LIGHT POLE (DOUBLE LIGHT)
- LIGHT POLE (MULTI LIGHT)
- BOAT TIE-OFF CLEAT
- CATCH BASIN
- TRENCH DRAIN
- MAILBOX
- UNKNOWN MANHOLE
- COMMUNICATIONS BOX/HAND HOLE
- ELECTRIC HAND HOLE
- ELECTRIC BOX
- GAS METER
- IRRIGATION BOX
- UNKNOWN UTILITY BOX/HAND HOLE
- COMMUNICATION MANHOLE
- DRAINAGE MANHOLE
- ELECTRIC MANHOLE
- SEWER MANHOLE
- STORM SEWER MANHOLE
- SEWER CLEANOUT
- HYDRANT
- SIAMESE CONNECTION
- UNKNOWN VALVE
- WATER VALVE
- GAS VALVE
- WATER SPIGOT OR FOUNTAIN
- MONITORING WELL
- DECIDUOUS BUSH
- EVERGREEN BUSH
- DECIDUOUS TREE
- EVERGREEN TREE
- STUMP
- HEDGE ROW
- TREELINE
- BRUSHLINE
- RETAINING WALL
- GUIDE RAIL
- STONE WALL
- WATERLINE
- FENCE
- UNDERGROUND COMMUNICATION
- UNDERGROUND PROPANE
- UNDERGROUND ELECTRICAL
- UNDERGROUND STREET LIGHTING
- UNDERGROUND ENVIRONMENTAL WASTEWATER
- UNDERGROUND SEWER
- UNDERGROUND STORM SEWER
- UNDERGROUND WATER
- UNDERGROUND FIRE PROTECTION
- EXISTING MAJOR CONTOUR
- EXISTING MINOR CONTOUR

PROPOSED LEGEND:

- **SAW CUTTING ASPHALT CONCRETE**
- LIMITS OF DISTURBANCE
- LIMITS OF PAVEMENT REMOVAL (MILLING & EXCAVATION)
- **UTILITY REMOVAL**
- **AREA OF ASPHALT PAVEMENT REMOVAL (FULL DEPTH & EXCAVATION)**
- **DRAINAGE STRUCTURE INLET PROTECTION**

NOTES:

1. PAVEMENT REMOVAL, MILLING AND EXCAVATION, MATERIAL SHALL NOT BE STOCKPILED ON SITE.
2. EXISTING GRADES, PIPE LOCATIONS, SIZES, MATERIAL, INVERTS AND OTHER EXISTING CONDITIONS ARE SHOWN ON THE DRAWINGS FROM AVAILABLE AS-BUILT DRAWINGS AND FIELD SURVEY BY OTHERS. IT SHALL BE THE RESPONSIBILITY OF THE CONTRACTOR TO VERIFY ALL EXISTING CONDITIONS.
3. THE CONTRACTOR SHALL TAKE PROPER PRECAUTIONS NOT TO DAMAGE ANY EXISTING SITE CONDITIONS SPECIFICALLY EXCLUDED FROM THE CONTRACT AND WILL BE HELD SOLELY RESPONSIBLE FOR ANY DAMAGE OCCURRING DURING THE COURSE OF THE WORK DURING CONSTRUCTION. THE CONTRACTOR SHALL, AT THEIR OWN EXPENSE, MAKE ALL REPAIRS REQUIRED TO RESTORE ANY DAMAGED AREAS TO ORIGINAL CONDITIONS.

0 10 20 30
1'=10' SCALE BAR

6/15/2022 4:10:27 PM

CONSULTANT INFORMATION
LiRo Engineers, Inc.
A LiRo Group Company
Mineola, N.Y. 516-746-2350[T]

CONSULTANT SEAL
STATE OF NEW YORK · KENNETH J. HOUGH · LICENSED PROFESSIONAL ENGINEER · NO. 059134

REVISION NUMBER	DATE	MADE BY	APP'D BY	REVISION

RECORD DRAWING CERTIFICATION
☐ AS BUILT – CHANGES AS NOTED ☐ AS BUILT – NO CHANGES

CONTRACTOR
NAME
SIGNATURE
TITLE DATE

PROJECT COORDINATOR
NAME
SIGNATURE
TITLE DATE

WESTCHESTER COUNTY, NEW YORK
DEPARTMENT OF PUBLIC WORKS AND TRANSPORTATION
DIVISION OF ENGINEERING

INFRASTRUCTURE REHABILITATION PHASE 3
PLAYLAND PARK, RYE, NEW YORK
RESTAURANT KITCHEN WITH FOOD VENDING
EXISTING CONDITIONS/DEMOLITION PLAN

CONTRACT NUMBER	22-523
SHEET NUMBER	K-C-02
DWG NO.	576 of 664
SCALE:	1"=10'
DATE:	08/23/2022
DPW FILE NUMBER	1-118-C-1325-0
REV. NO.	0

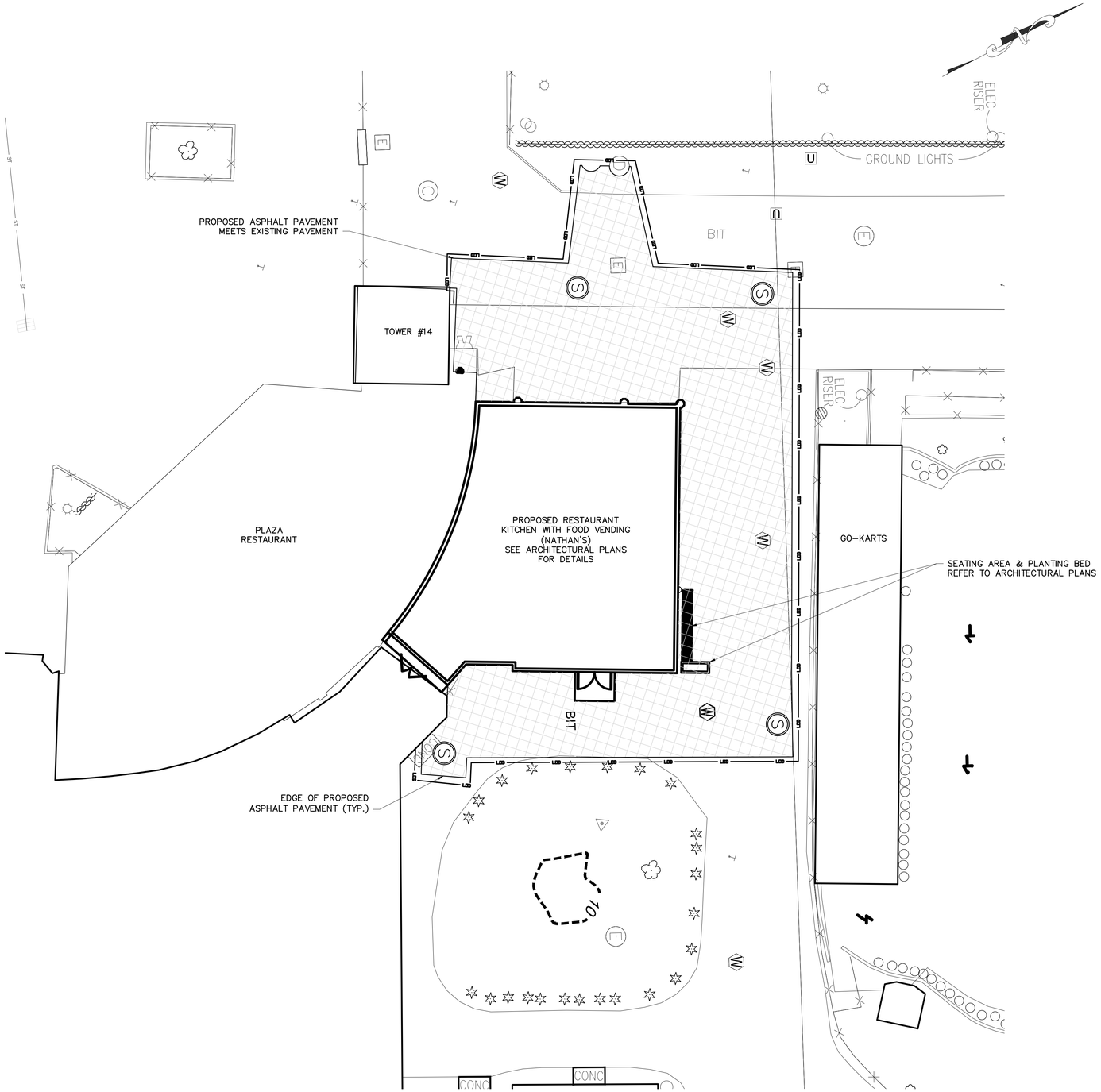

EXISTING LEGEND

- POST
- UTILITY POLE
- SIGN
- HANDICAP PARKING
- GROUND LIGHT
- LIGHT POLE
- UTILITY POLE WITH LIGHT
- LIGHT POLE (SINGLE LIGHT)
- LIGHT POLE (DOUBLE LIGHT)
- LIGHT POLE (MULTI LIGHT)
- BOAT TIE-OFF CLEAT
- CATCH BASIN
- TRENCH DRAIN
- MAILBOX
- UNKNOWN MANHOLE
- COMMUNICATIONS BOX/HAND HOLE
- ELECTRIC HAND HOLE
- ELECTRIC BOX
- GAS METER
- IRRIGATION BOX
- UNKNOWN UTILITY BOX/HAND HOLE
- COMMUNICATION MANHOLE
- DRAINAGE MANHOLE
- ELECTRIC MANHOLE
- SEWER MANHOLE
- STORM SEWER MANHOLE
- SEWER CLEANOUT
- HYDRANT
- SIAMESE CONNECTION
- UNKNOWN VALVE
- WATER VALVE
- GAS VALVE
- WATER SPIGOT OR FOUNTAIN
- MONITORING WELL
- DECIDUOUS BUSH
- EVERGREEN BUSH
- DECIDUOUS TREE
- EVERGREEN TREE
- STUMP
- HEDGE ROW
- TREELINE
- BRUSHLINE
- RETAINING WALL
- GUIDE RAIL
- STONE WALL
- FENCE

PROPOSED LEGEND:

- MOVABLE CONSTRUCTION FENCE
- SAW CUTTING ASPHALT CONCRETE
- LIMITS OF DISTURBANCE
- LIMITS OF PAVEMENT REMOVAL
- AREA OF FULL DEPTH ASPHALT PAVEMENT
- ROOF DOWNSPOUT
- DRAINAGE PIPE CLEANOUTS

New York 811 Know what's below. Call before you dig.

0 10 20 30
1'=10' SCALE BAR

6/15/2022 4:10:27 PM

CONSULTANT INFORMATION
LiRo Engineers, Inc.
A LiRo Group Company
Mineola, N.Y. 516-746-2350[T]

CONSULTANT SEAL
STATE OF NEW YORK
KENNETH J. HOLMSTROM
No. 059134
LICENSED PROFESSIONAL ENGINEER

REVISION NUMBER	DATE	MADE BY	APP'D BY	REVISION

RECORD DRAWING CERTIFICATION
AS BUILT – CHANGES AS NOTED
AS BUILT – NO CHANGES

CONTRACTOR
NAME
SIGNATURE
TITLE DATE

PROJECT COORDINATOR
NAME
SIGNATURE
TITLE DATE

WESTCHESTER COUNTY, NEW YORK
DEPARTMENT OF PUBLIC WORKS AND TRANSPORTATION
DIVISION OF ENGINEERING

INFRASTRUCTURE REHABILITATION PHASE 3
PLAYLAND PARK, RYE, NEW YORK
RESTAURANT KITCHEN WITH FOOD VENDING
SITE CONSTRUCTION PLAN

CONTRACT NUMBER	22-523
SHEET NUMBER	K-C-03
DWG NO.:	577 of 664
SCALE:	1"=10'
DATE:	08/23/2022
DPW FILE NUMBER	1-118-C-1326-0
REV. NO.	0

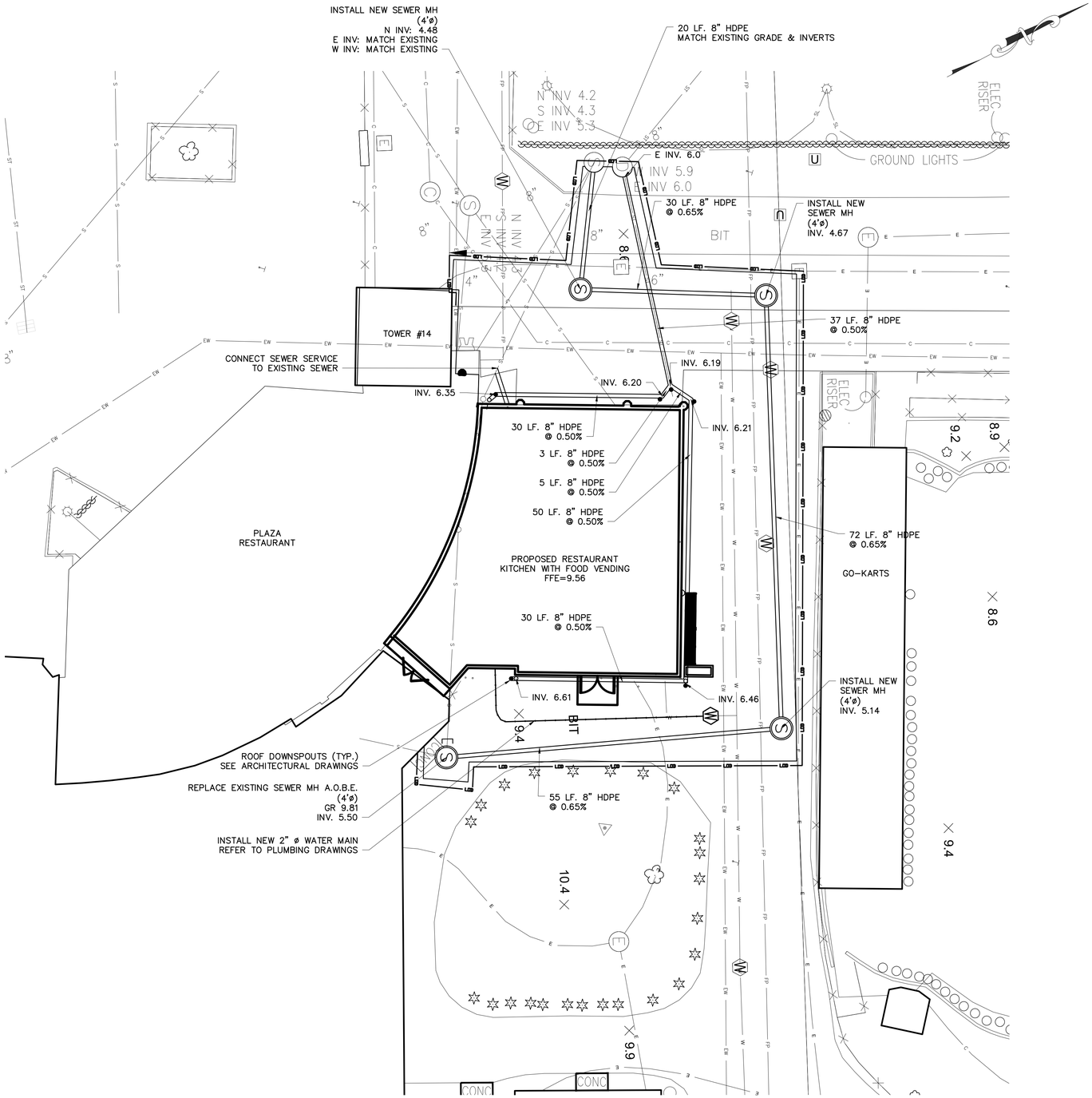

NOTE:
SEE FIRE PROTECTION PLAN FOR DETAILS ON
CONNECTION TO BUILDING EXPANSION

EXISTING LEGEND

- POST
- UTILITY POLE
- SIGN
- HANDICAP PARKING
- GROUND LIGHT
- LIGHT POLE
- UTILITY POLE WITH LIGHT
- LIGHT POLE (SINGLE LIGHT)
- LIGHT POLE (DOUBLE LIGHT)
- LIGHT POLE (MULTI LIGHT)
- BOAT TIE-OFF CLEAT
- CATCH BASIN
- TRENCH DRAIN
- MAILBOX
- UNKNOWN MANHOLE
- COMMUNICATIONS BOX/HAND HOLE
- ELECTRIC HAND HOLE
- ELECTRIC BOX
- GAS METER
- IRRIGATION BOX
- UNKNOWN UTILITY BOX/HAND HOLE
- COMMUNICATION MANHOLE
- DRAINAGE MANHOLE
- ELECTRIC MANHOLE
- SEWER MANHOLE
- STORM SEWER MANHOLE
- SEWER CLEANOUT
- HYDRANT
- SIAMESE CONNECTION
- UNKNOWN VALVE
- WATER VALVE
- GAS VALVE
- WATER SPIGOT OR FOUNTAIN
- MONITORING WELL
- DECIDUOUS BUSH
- EVERGREEN BUSH
- DECIDUOUS TREE
- EVERGREEN TREE
- STUMP
- HEDGE ROW
- TREELINE
- BRUSHLINE
- RETAINING WALL
- GUIDE RAIL
- STONE WALL
- WATERLINE
- FENCE
- UNDERGROUND COMMUNICATION
- UNDERGROUND PROPANE
- UNDERGROUND ELECTRICAL
- UNDERGROUND STREET LIGHTING
- UNDERGROUND ENVIRONMENTAL WASTEWATER
- UNDERGROUND SEWER
- UNDERGROUND STORM SEWER
- UNDERGROUND WATER
- UNDERGROUND FIRE PROTECTION

PROPOSED LEGEND:

- SAW CUTTING ASPHALT CONCRETE
- LIMITS OF DISTURBANCE
- LIMITS OF PAVEMENT REMOVAL (MILLING & EXCAVATION)
- PROPOSED WATER LINE
- PROPOSED CATCH BASIN
- PROPOSED STORM PIPE
- PROPOSED SANITARY MANHOLE
- PROPOSED SANITARY PIPE
- PROPOSED UNDERGROUND ELECTRIC

New York 811
Know what's below. Call before you dig.

0 10 20 30
1"=10' SCALE BAR

6/15/2022 4:10:27 PM

CONSULTANT INFORMATION
LiRo Engineers, Inc.
A LiRo Group Company
Mineola, N.Y. 516-746-2350[T]

CONSULTANT SEAL
STATE OF NEW YORK · KENNETH J. HOWARD · LICENSED PROFESSIONAL ENGINEER · NO. 089134

REVISION NUMBER	DATE	MADE BY	APP'D BY	REVISION

RECORD DRAWING CERTIFICATION
☐ AS BUILT – CHANGES AS NOTED ☐ AS BUILT – NO CHANGES

CONTRACTOR
NAME
SIGNATURE
TITLE DATE

PROJECT COORDINATOR
NAME
SIGNATURE
TITLE DATE

WESTCHESTER COUNTY, NEW YORK
DEPARTMENT OF PUBLIC WORKS AND TRANSPORTATION
DIVISION OF ENGINEERING

INFRASTRUCTURE REHABILITATION PHASE 3
PLAYLAND PARK, RYE, NEW YORK
RESTAURANT KITCHEN WITH FOOD VENDING
UTILITY CONSTRUCTION PLAN

CONTRACT NUMBER	22-523
SHEET NUMBER	K-C-04
DWG NO.:	578 of 664
SCALE:	1"=10'
DATE:	08/23/2022
DPW FILE NUMBER	1-118-C-1327-0
REV. NO.:	0

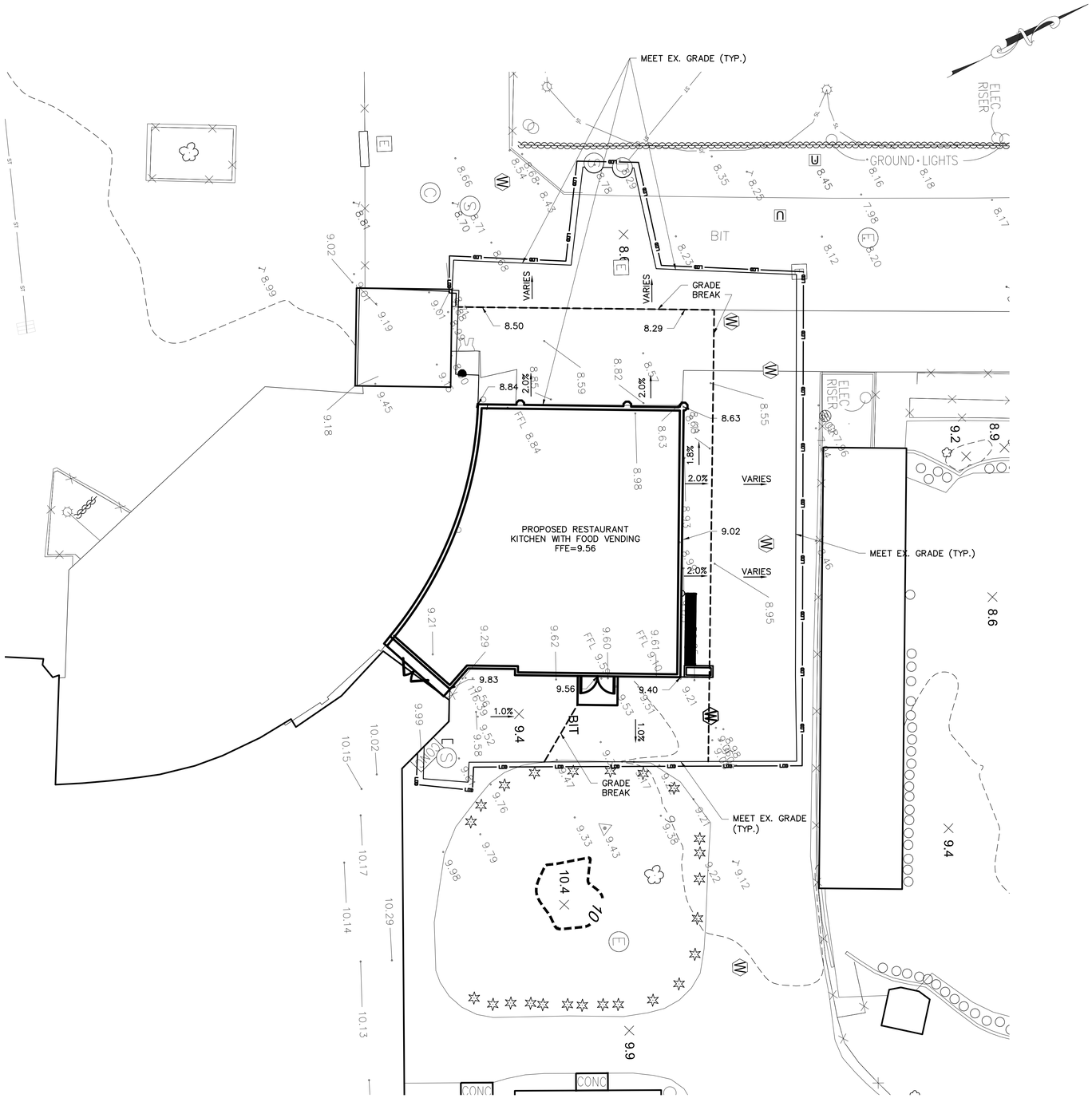

EXISTING LEGEND

	POST
	UTILITY POLE
	SIGN
	HANDICAP PARKING
	GROUND LIGHT
	LIGHT POLE
	UTILITY POLE WITH LIGHT
	LIGHT POLE (SINGLE LIGHT)
	LIGHT POLE (DOUBLE LIGHT)
	LIGHT POLE (MULTI LIGHT)
	BOAT TIE-OFF CLEAT
	CATCH BASIN
	TRENCH DRAIN
	MAILBOX
	UNKNOWN MANHOLE
	COMMUNICATIONS BOX/HAND HOLE
	ELECTRIC HAND HOLE
	ELECTRIC BOX
	GAS METER
	IRRIGATION BOX
	UNKNOWN UTILITY BOX/HAND HOLE
	COMMUNICATION MANHOLE
	DRAINAGE MANHOLE
	ELECTRIC MANHOLE
	SEWER MANHOLE
	STORM SEWER MANHOLE
	SEWER CLEANOUT
	HYDRANT
	SIAMESE CONNECTION
	UNKNOWN VALVE
	WATER VALVE
	GAS VALVE
	WATER SPIGOT OR FOUNTAIN
	MONITORING WELL
	DECIDUOUS BUSH
	EVERGREEN BUSH
	DECIDUOUS TREE
	EVERGREEN TREE
	STUMP
	HEDGE ROW
	TREELINE
	BRUSHLINE
	RETAINING WALL
	GUIDE RAIL
	STONE WALL
	WATERLINE
	FENCE
C	UNDERGROUND COMMUNICATION
P	UNDERGROUND PROPANE
E	UNDERGROUND ELECTRICAL
SL	UNDERGROUND STREET LIGHTING
EW	UNDERGROUND ENVIROMENTAL WASTEWATER
S	UNDERGROUND SEWER
ST	UNDERGROUND STORM SEWER
W	UNDERGROUND WATER
FP	UNDERGROUND FIRE PROTECTION
X 415.50	EXISTING SPOT ELEVATION
TG=415.50	EXISTING TOP OF GRATE ELEVATION

PROPOSED LEGEND:

LOD	LIMITS OF DISTURBANCE
415	PROPOSED MAJOR CONTOUR
414	PROPOSED MINOR CONTOUR
9.66	PROPOSED SPOT ELEVATION
	PROPOSED INLET PROTECTION
T9.46 B9.16 BE8.65	PROPOSED TOP OF CURB PROPOSED BOTTOM OF CURB PROPOSED ELEVATION BEHIND CURB
9.46	EXISTING GRADE

0 10 20 30

1'=10' SCALE BAR

6/15/2022 4:10:27 PM

CONSULTANT INFORMATION

LiRo Engineers, Inc.
A LiRo Group Company
Mineola, N.Y. 516-746-2350[T]

CONSULTANT SEAL

STATE OF NEW YORK · KENNETH J. HOLOHAN · LICENSED PROFESSIONAL ENGINEER · 059134

REVISION NUMBER	DATE	MADE BY	APP'D BY	REVISION

RECORD DRAWING CERTIFICATION

☐ AS BUILT – CHANGES AS NOTED ☐ AS BUILT – NO CHANGES

CONTRACTOR
NAME
SIGNATURE
TITLE DATE

PROJECT COORDINATOR
NAME
SIGNATURE
TITLE DATE

WESTCHESTER COUNTY, NEW YORK
DEPARTMENT OF PUBLIC WORKS AND TRANSPORTATION
DIVISION OF ENGINEERING

INFRASTRUCTURE REHABILITATION PHASE 3
PLAYLAND PARK, RYE, NEW YORK
RESTAURANT KITCHEN WITH FOOD VENDING
GRADING AND EROSION CONTROL PLAN

CONTRACT NUMBER	22-523
SHEET NUMBER	K-C-05
DWG NO.:	579 of 664
SCALE:	1"=10'
DATE:	08/23/2022
DPW FILE NUMBER	1-118-C-1328-0
REV. NO.	0

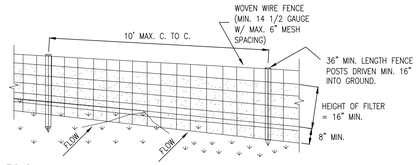

PERSPECTIVE VIEW

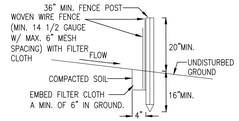

SECTION VIEW

CONSTRUCTION SPECIFICATIONS

1. WOVEN WIRE FENCE TO BE FASTENED SECURELY TO FENCE POSTS WITH WIRE TIES OR STAPLES. POSTS SHALL BE STEEL EITHER "T" OR "U" TYPE OR HARDWOOD.
2. FILTER CLOTH TO BE TO BE FASTENED SECURELY TO WOVEN WIRE FENCE WITH TIES SPACED EVERY 24" AT TOP AND MID SECTION. FENCE SHALL BE WOVEN WIRE, 12 1/2 GAUGE, 6" MAXIMUM MESH OPENING.
3. WHEN TWO SECTIONS OF FILTER CLOTH ADJOIN EACH OTHER THEY SHALL BE OVER-LAPPED BY SIX INCHES AND FOLDED. FILTER CLOTH SHALL BE EITHER FILTER X, MIRAFI 100X, STABILINKA T140N, OR APPROVED EQUIVALENT.
4. PREFABRICATED UNITS SHALL BE GEOFAB, ENVIROFENCE, OR APPROVED EQUIVALENT.
5. MAINTENANCE SHALL BE PERFORMED AS NEEDED AND MATERIAL REMOVED WHEN "BULGES" DEVELOP IN THE SILT FENCE.

SILT FENCE INSTALLATION DETAIL
ITEM NO. 209.13

N.T.S.

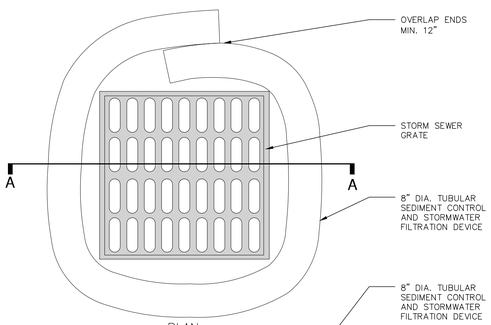

PLAN

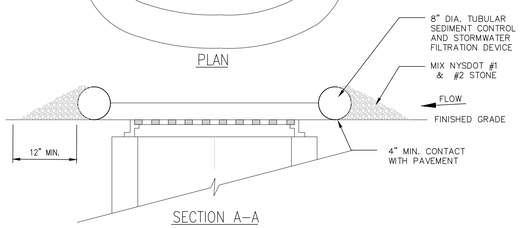

SECTION A–A

NOTES:

1. TUBULAR SEDIMENT CONTROL AND STORMWATER FILTRATION DEVICES SHALL BE FILTREXX FILTERSOXX, OR EQUIVALENT.
2. REPLACE AND DISPOSE OF PER MANUFACTURERS SPECIFICATIONS.
3. THIS PRACTICE INCLUDES SANDBAGS, COMPOST FILTER SOCKS, GEO-TUBES FILLED WITH BALLAST, AND MANUFACTURED SURFACE BARRIERS. PEA GRAVEL CAN ALSO BE USED IN CONJUNCTION WITH THESE PRACTICES TO IMPROVE PERFORMANCE. WHEN INLET IS NOT AT A LOW POINT, AND IS OFF-SET FROM THE PAVEMENT OR GUTTER LINE, PROTECTION SHOULD BE SELECTED AND INSTALLED SO THAT FLOWS ARE NOT DIVERTED AROUND INLET.
4. THE DRAINAGE AREA SHOULD BE LIMITED TO 1 ACRE AT THE DRAINAGE INLET. ALL PRACTICES WILL BE PLACED AT THE INLET PERIMETER OR BEYOND TO MAXIMIZE THE FLOW CAPACITY OF THE INLET. PRACTICES SHALL BE WEIGHTED, BRACED, TIED, OR OTHERWISE ANCHORED TO PREVENT MOVEMENT OR SHIFTING OF LOCATION ON PAVED SURFACES. TRAFFIC SAFETY SHALL BE INTEGRATED WITH THE USE OF THIS PRACTICE. ALL PRACTICES SHOULD BE MARKED WITH TRAFFIC SAFETY CONES AS APPROPRIATE. STRUCTURE HEIGHT SHALL NOT CAUSE FLOODING OR BY-PASS FLOW THAT WOULD CAUSE ADDITIONAL EROSION. THE STRUCTURE SHOULD BE INSPECTED AFTER EVERY STORM EVENT. ANY SEDIMENT SHOULD BE REMOVED AND DISPOSED OF ON THE SITE. ANY BROKEN O DAMAGED COMPONENTS SHOULD BE REPLACED. CHECK ALL MATERIALS FOR PROPER ANCHORING AND SECURE AS NECESSARY.
5. IF USING THE COMPOST FILTER SOCK, THE COMPOST INFILL SHALL BE WELL DECOMPOSED (MATURED AT LEAST 3 MONTHS), WEED-FREE, ORGANIC MATTER. IT SHALL BE AEROBICALLY COMPOSTED, POSSESS NO OBJECTIONABLE OODRS, AND CONTAIN LESS THAN 1%, BY DRY WEIGHT, OF MANMADE FOREIGN MATTER. WHEN USING COMPOST FILTER SOCKS ADJACENT TO SURFACE WATER, THE COMPOST SHOULD HAVE LOW NUTRIENT VALUE.

DRAINAGE STRUCTURE INLET PROTECTION, TEMPORARY

N.T.S.

STORM WATER POLLUTION PREVENTION PLAN NOTES:

THE CONTRACTOR SHALL BE RESPONSIBLE FOR IMPLEMENTATION AND ADHERENCE TO THE STORM WATER POLLUTION PREVENTION PLAN (SWPPP) FROM THE COMMENCEMENT OF THE PROJECT TO SITE STABILIZATION.

POLLUTION PREVENTION MEASURES:

THE CONTRACTOR SHALL TAKE THE FOLLOWING STEPS TO PREVENT LITTER, CHEMICALS AND DEBRIS FROM ENTERING STORM DRAINS AND DISCHARGES.

1. PROPERLY INSTALL AND MAINTAIN EROSION AND SEDIMENT CONTROL DEVICES AS OUTLINED IN THE PROJECT DOCUMENTS AND IN COMPLIANCE WITH THE LATEST EDITION OF THE NEW YORK STATE STANDARDS AND SPECIFICATIONS FOR EROSION AND SEDIMENT CONTROL.
2. PROPERLY CONTAIN AND DISPOSE OF ALL MATERIALS USED ON SITE.
3. CLEAN UP SPILLS IMMEDIATELY TO MINIMIZE SAFETY HAZARD AND PREVENT SPREADING.
4. ROUTINELY INSPECT AND CLEAN OUT CATCH BASINS AND STORM LINES.
5. LABEL ALL STORM INLETS AS "NO DUMPING".
6. CONTROL LITTER BY SWEEPING AND PICKING IT UP DAILY.
7. DO NOT STORE FUEL AND WASTE ON-SITE OR USE SECONDARY CONTAINMENT MEASURES.
8. IF PRACTICAL, USE ALTERNATIVE CLEANING METHODS SUCH AS WIPING DOWN OF VEHICLES AND EQUIPMENT INSTEAD OF HOSING.
9. REMOVE ALL EXCAVATED UNSUITABLE MATERIAL FROM THE SITE AS SOON AS PRACTICABLE.
10. PRACTICE GOOD HOUSEKEEPING AND EDUCATE EMPLOYEES ON POLLUTION PREVENTION MEASURES.

ON SITE MATERIAL STORAGE:

THE CONTRACTOR MAY HAVE THE FOLLOWING MATERIALS STORED ON-SITE DURING PROJECT CONSTRUCTION. THE LIST MAY NOT BE INCLUSIVE AND WILL VARY DURING THE DIFFERENT STAGES OF THE PROJECT.

1. PRE-CAST CONCRETE MANHOLES, CATCH BASINS AND OUTLET CONTROL STRUCTURE.
2. PVC PIPING AND APPURTENANCES.
3. STOCKPILED SOILS – TOP SOIL, SUB BASE MATERIAL, CUSHION MATERIAL, SELECT GRANULAR MATERIAL, GRAVEL AND CRUSHED STONE.
4. EROSION AND SEDIMENT CONTROL MATERIAL: SILT FENCE, RIP RAP AND SEED.
5. PAVING MATERIALS AND EQUIPMENT
6. SECURITY FENCE AND APPURTENANCES
7. EQUIPMENT REQUIRED TO PERFORM THE WORK.

THE CONTRACTOR SHALL UTILIZE THE POLLUTION PREVENTION MEASURES OUTLINED ABOVE TO PREVENT POLLUTANTS FROM STORED MATERIALS FROM REACHING THE STORM WATER CONVEYANCE DEVICES AND DISCHARGES.

EROSION AND SEDIMENT CONTROL PRACTICES:

TEMPORARY STORM INLET PROTECTION:
STORM INLET PROTECTION INTERCEPTS SEDIMENT LADEN RUNOFF AND TRAPS SEDIMENT TO PROTECT THE DRAINAGE SYSTEM. STORM INLET PROTECTION SHALL BE PROVIDED AT EACH NEW CATCH BASIN AS IT IS INSTALLED AND AROUND EXISTING CATCH BASINS AS SHOWN.

TEMPORARY SEDIMENT CONTROL – SILT FENCE
SILT FENCE REDUCES RUNOFF VELOCITY AND CAUSES SETTLING OF SEDIMENT. INSTALL SILT FENCE PRIOR TO BEGINNING ANY EXCAVATION OR EARTHWORK ACTIVITIES WHERE SHOWN ON THE DRAWINGS. INSTALL AROUND ANY STOCKPILED SOIL MATERIALS.

TEMPORARY STABILIZED CONSTRUCTION ENTRANCE
THE STABILIZED CONSTRUCTION ENTRANCE IS USED TO REDUCE OR ELIMINATE TRACKING OF SEDIMENT ONTO STREETS AND/OR PUBLIC RIGHT-OF-WAY.

TEMPORARY SEEDING
TEMPORARY SEEDING REDUCES EROSION AND SEDIMENT LOSS FROM THE BARE GROUND. PROVIDE TEMPORARY SEEDING TO PROVIDE TEMPORARY COVER FOR DISTURBED EARTH OR SOIL STOCKPILES HELD FOR LONGER THAN SEVEN (7) DAYS. TEMPORARY SHUT DOWN OF CONSTRUCTION OR WAITING FOR OPTIMAL PLANTING TIME. IN SPRING, SUMMER OR EARLY FALL APPLY RYE GRASS AT A RATE OF 1 LB/ 1,000 SQ. FT. IN LATE FALL APPLY CERTIFIED AROOSTOOK RYE AT 2.5 LBS / 1,000 SQ. FT. OR WOOD FIBER HYDROMULCH AT MANUFACTURE'S RECOMMENDED RATE. HAY OR STRAW SHALL BE ANCHORED.

DUST CONTROL
TEMPORARY AND PERMANENT STABILIZATION MEASURES SUCH AS SEEDING, MULCHING AND INSTALLING EROSION AND SEDIMENT CONTROL BLANKETS WILL PREVENT DUST FROM BLOWING OFF SITE. INSTALL THESE MEASURES AS SOON AS FINAL GRADES ARE REACHED AND ON SOIL STOCKPILES AND DISTURBED AREAS TO BE LEFT FOR LONGER THAN SEVEN (7) DAYS.

PHASING OF EROSION AND SEDIMENT CONTROL PRACTICES:

1. PRIOR TO COMMENCING ANY CONSTRUCTION ACTIVITIES ON THE SITE, THE CONTRACTOR SHALL MEET WITH THE OWNERS REPRESENTATIVE AND DESIGNER TO DISCUSS THE STORM WATER POLLUTION PREVENTION PLAN.
2. PRIOR TO COMMENCING ANY EXCAVATION PROCEDURES, INSTALL SILT FENCE AS SHOWN ON THE PLANS.
3. INSTALL STABILIZED CONSTRUCTION ENTRANCE.
4. AS THE NEW CATCH BASINS ARE INSTALLED, PROVIDE TEMPORARY INLET PROTECTION.
5. AS SOIL MATERIAL IS EXCAVATED OR STOCKPILED, PROVIDE A SILT FENCE ENCLOSURE AROUND THE PILE. IF THE PILE IS TO REMAIN FOR LONGER THAN SEVEN (7) DAYS, TEMPORARILY SEED THE PILE.
6. DO NOT LEAVE DISTURBED AREAS NOT TO BE COVERED BY IMPERVIOUS SURFACE BARE FOR LONGER THAN SEVEN (7) DAYS, ROUGH GRADE THE AREAS AND TEMPORARILY SEED.
7. AFTER FINAL GRADING OF VEGETATED AREAS, PROVIDE PERMANENT SEEDING.
8. UPON FINAL STABILIZATION OF THE SITE, REMOVE ALL TEMPORARY EROSION AND SEDIMENT CONTROL DEVICES. INSPECT ALL PERMANENT EROSION AND SEDIMENT CONTROL AND STORM WATER MANAGEMENT DEVICES. REPLACE ANY FAILING OR UNSATISFACTORY MEASURES. CLEAN ALL STORMWATER CATCH BASINS AND PIPING.

EROSION AND SEDIMENT CONTROL AND STORMWATER CONTROL DEVICE MAINTENANCE:

CONSTRUCTION DURATION
ALL EROSION AND SEDIMENT CONTROL DEVICES SHALL BE INSPECTED WEEKLY.

1. SILT FENCE SHALL BE REPLACED WHEN TORN, IS BULGING OR NO LONGER MEETING THE INSTALLATION DETAILS.
2. THE STABILIZED CONSTRUCTION ENTRANCE SHALL BE MAINTAINED IN A CONDITION TO PREVENT TRACKING OF SEDIMENT ON TO ROADS AND PUBLIC RIGHTS-OF-WAY. INSPECT TOP DRESSING AND PROVIDE ADDITIONAL AGGREGATE AS NECESSARY.
3. DRAINAGE STRUCTURES AND PIPING SHALL BE CHECKED FOR CLOGGING AND SEDIMENT ACCUMULATION AND CLEANED IF REQUIRED.

PROJECT COMPLETION
AT THE PROJECT COMPLETION AND PRIOR TO PROJECT CLOSE OUT, THE CONTRACTOR SHALL INSPECT ALL PERMANENT EROSION AND CONTROL AND STORMWATER MANAGEMENT PRACTICES.

1. ACCEPTABLE VEGETATION ESTABLISHMENT IN ACCORDANCE WITH SPECIFICATIONS.
2. DRAINAGE STRUCTURES AND PIPING SHALL BE CHECKED FOR CLOGGING AND SEDIMENT ACCUMULATION AND CLEANED IF REQUIRED.

MAINTENANCE OF PERMANENT STORMWATER MANAGEMENT PRACTICES

1. DRAINAGE STRUCTURES AND PIPING SHALL BE CHECKED FOR CLOGGING AND SEDIMENT ACCUMULATION AND CLEANED IF REQUIRED.

SITE ASSESSMENT AND INSPECTIONS

COMPLY WILL ALL CONDITIONS INCLUDED IN THE SPDES PERMIT, PART III.D.3 THROUGH PART III.D.5. THE REQUIREMENTS IN THESE SUBSECTIONS OF THE SPDES PERMIT TAKE PRECEDENCE OVER NOTES ON THIS DRAWING AND ON THE EROSION AND SEDIMENT CONTROL PLAN WHERE CONTRADICTIONS BETWEEN THESE DRAWINGS AND THE SPDES PERMIT MAY ARISE.

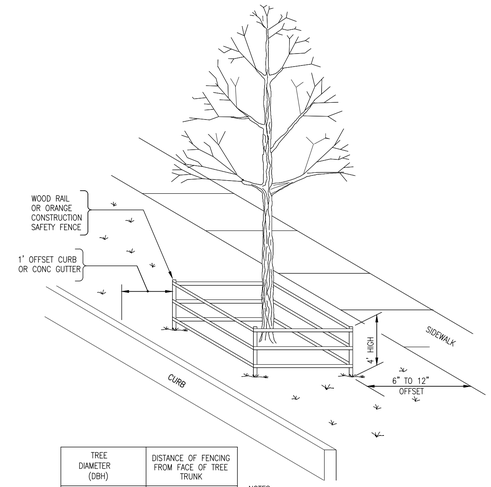

TREE DIAMETER (DBH)	DISTANCE OF FENCING FROM FACE OF TREE TRUNK
LESS THAN 10"	6'
10" – 14"	10'
15" – 19"	12'
20" OR MORE	15'

NOTES:

1. ALL TREES WITHIN THE PROJECT LIMITS THAT ARE TO REMAIN, ARE TO RECEIVE THIS TREATMENT.
2. DO NOT LEAVE CONSTRUCTION EQUIPMENT RUNNING (IDLING) UNDER TREE CANOPY.

TREE PROTECTION SYSTEM 5'–0"
ITEM NO. 611.21050009

N.T.S.

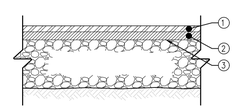

① 1" TOP COURSE, 12.5 F2 TOP COURSE HMA, 80 SERIES COMPACTION NYSDOT ITEM 402.128204

② 1" BINDER COURSE, 25 F9 BINDER COURSE HMA, 80 SERIES COMPACTION NYSDOT ITEM 402.258904

③ TACK COAT BETWEEN LAYERS, STRAIGHT TACK COAT, ITEM 407.0103

NOTES:

1. SLOPE SHALL MATCH EXISTING OR BE AS DIRECTED BY THE ENGINEER TO PROVIDE POSITIVE DRAINAGE.
2. ALL SEAMS BETWEEN EXISTING AND NEW SURFACES ARE TO BE SEALED WITH ASPHALT FILLER ITEM 633.13-CLEANING, SEALING AND/OR FILLING JOINTS.
3. SEE PLAN FOR LIMITS OF MILLING AND RESURFACING.

PAVEMENT MILLING AND RESURFACING

N.T.S.

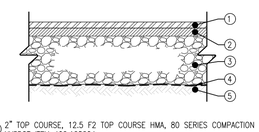

① 2" TOP COURSE, 12.5 F2 TOP COURSE HMA, 80 SERIES COMPACTION NYSDOT ITEM 402.128204

② 2" BINDER COURSE, 25 F9 BINDER COURSE HMA, 80 SERIES COMPACTION NYSDOT ITEM 402.258904

③ 4" SUBBASE COURSE, SUBBASE COURSE, TYPE 2 NYSDOT ITEM 304.12

④ GEOTEXTILE SEPARATION NYSDOT ITEM 207.21

⑤ COMPACTED SUBGRADE

NOTES:

1. COMPACT SUBGRADE TO A MODIFIED PROCTOR DENSITY OF 95%
2. SUBBASE COURSE SHALL HAVE NO MORE THAN (7%) SEVEN PERCENT BY WEIGHT FINER THAN NO. 200 SIEVE.
3. IMPRINTED PATTERN SHOWN IS FOR GRAPHICAL REPRESENTATIONS ONLY. ALL IMPRINTING/PATTERNING LAYOUTS AND POSITIONING SHALL BE APPROVED BY THE PROJECT ENGINEER PRIOR TO ACTUAL CONSTRUCTION.

ASPHALT PAVEMENT SECTION

N.T.S.

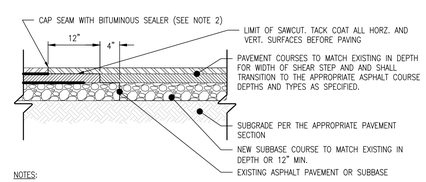

NOTES:

1. EXISTING PAVEMENT SHALL BE SAW CUT TO OBTAIN A STRAIGHT AND NEAT EDGE FOR PAVING. FINAL SAW CUT SHALL BE MADE PRIOR TR PAVING AND AFTER SUBBASE STONE IS PLACED.
2. ADD COAL TAR SEAL COAT WITH UNVULCANIZED RUBBER AT JOINT ALONG SAWCUT SEAM. SEALANT SHALL BE STRUCK OFF FLUSH WITH PAVEMENT SURFACE.
3. DEPTH OF SAWCUT SHALL BE DETERMINED ONCE THE PAVEMENT CROSS SECTION HAS BEEN EXPOSED.

SHEAR STEP DETAIL

N.T.S.

6/15/2022 4:10:27 PM

CONSULTANT INFORMATION

LiRo Engineers, Inc.
A LiRo Group Company
Mineola, N.Y. 516-746-2350[T]

CONSULTANT SEAL

STATE OF NEW YORK · KENNETH J. HOUSMAN · 059134 · LICENSED PROFESSIONAL ENGINEER

REVISION NUMBER	DATE	MADE BY	APP'D BY	REVISION

RECORD DRAWING CERTIFICATION

☐ AS BUILT – CHANGES AS NOTED ☐ AS BUILT – NO CHANGES

CONTRACTOR: NAME ____ SIGNATURE ____ TITLE ____ DATE ____

PROJECT COORDINATOR: NAME ____ SIGNATURE ____ TITLE ____ DATE ____

WESTCHESTER COUNTY, NEW YORK
DEPARTMENT OF PUBLIC WORKS AND TRANSPORTATION
DIVISION OF ENGINEERING

INFRASTRUCTURE REHABILITATION PHASE 3
PLAYLAND PARK, RYE, NEW YORK
RESTAURANT KITCHEN WITH FOOD VENDING
CIVIL DETAILS 1

CONTRACT NUMBER	22-523
SHEET NUMBER	K-C-06
DWG NO.:	580 of 664
SCALE:	AS INDICATED
DATE:	08/23/2022
DPW FILE NUMBER	1-118-C-1329-0
REV. NO.	0

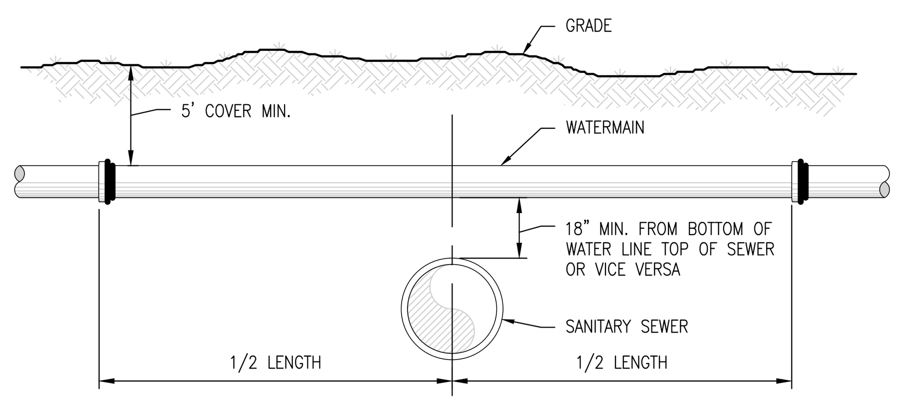

NOTE:

ALL EXCAVATIONS UNDER ANY UTILITY WILL BE BACKFILLED WITH NO. 1 CRUSHED STONE TO A POINT AT LEAST 6" OVER THE TOP OF THE UTILITY.

TYPICAL WATER LINE – SEWER LINE CROSSING

N.T.S.

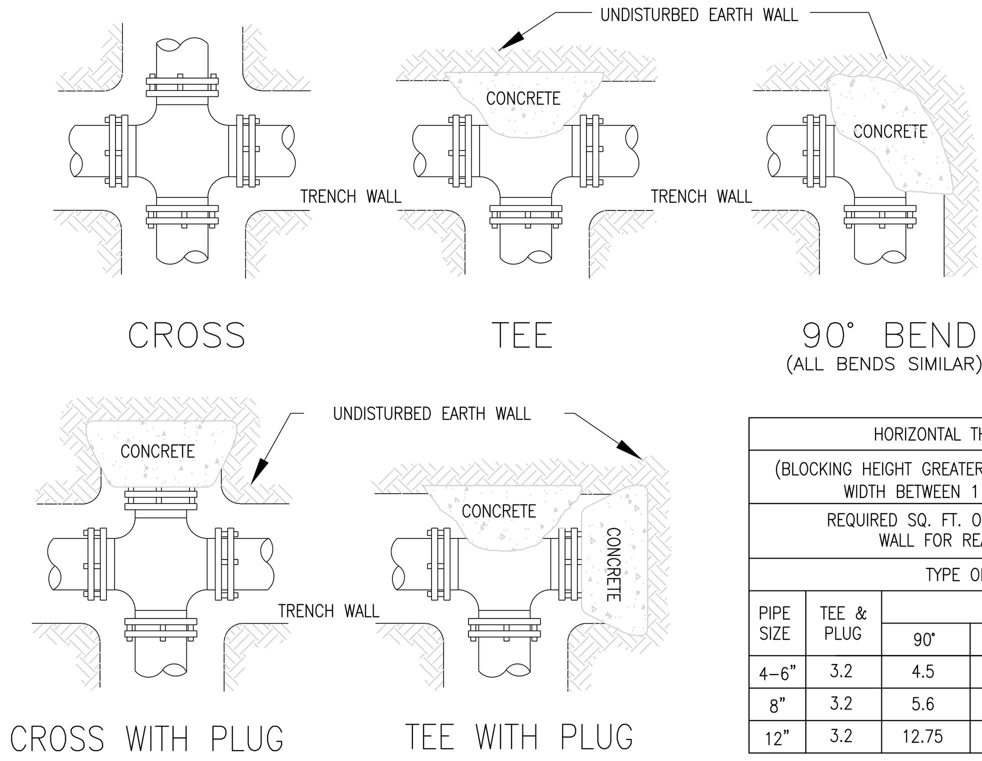

HORIZONTAL THRUST BLOCKING					
(BLOCKING HEIGHT GREATER THAN PIPE O.D.) (BLOCKING WIDTH BETWEEN 1 & 2 TIMES HEIGHT)					
REQUIRED SQ. FT. OF UNDISTURBED EARTH WALL FOR REACTION BACKING					
TYPE OF FITTINGS					
PIPE SIZE	TEE & PLUG	BENDS			
		90°	45°	22 1/2°	11 1/4°
4–6"	3.2	4.5	2.5	1.3	0.7
8"	3.2	5.6	2.5	1.3	0.7
12"	3.2	12.75	3.7	1.3	0.7

HORIZONTAL THRUST BLOCKING

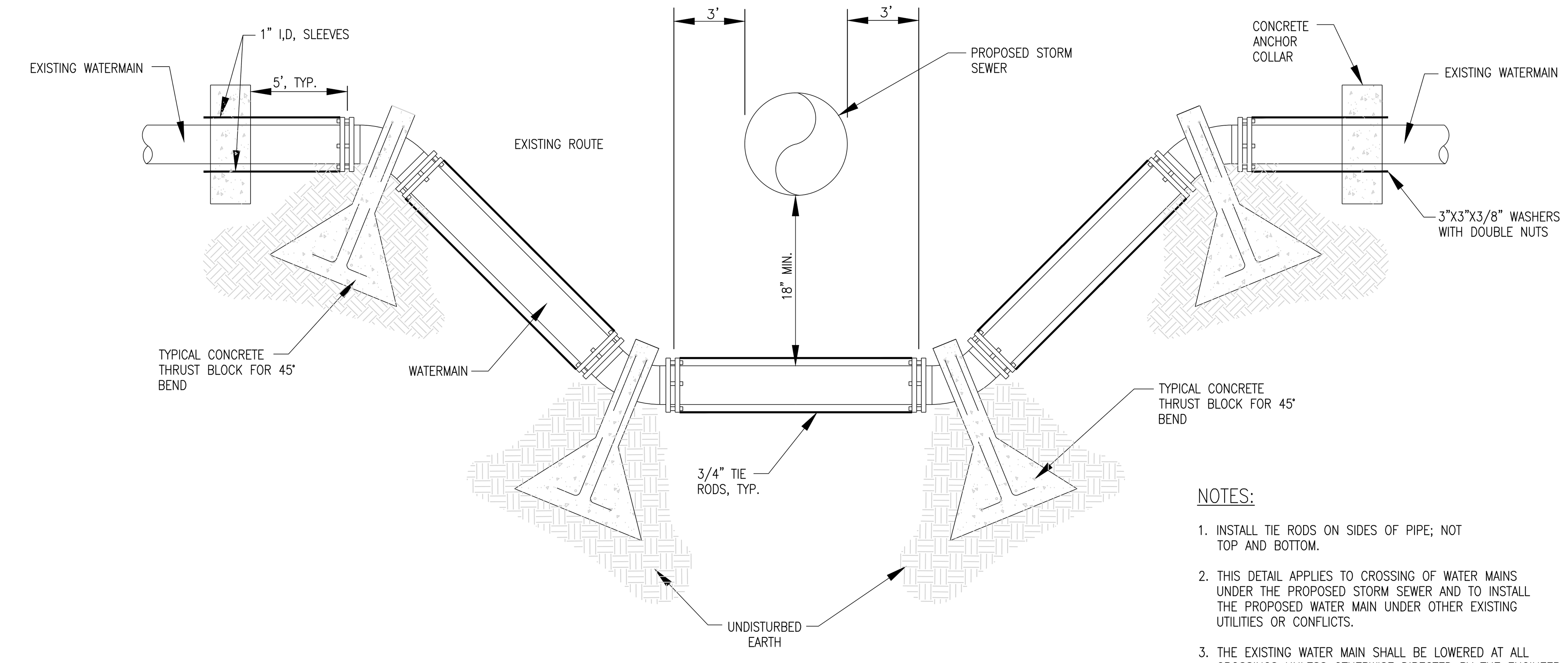

NOTES:

1. INSTALL TIE RODS ON SIDES OF PIPE; NOT TOP AND BOTTOM.
2. THIS DETAIL APPLIES TO CROSSING OF WATER MAINS UNDER THE PROPOSED STORM SEWER AND TO INSTALL THE PROPOSED WATER MAIN UNDER OTHER EXISTING UTILITIES OR CONFLICTS.
3. THE EXISTING WATER MAIN SHALL BE LOWERED AT ALL CROSSINGS UNLESS OTHERWISE DIRECTED BY THE ENGINEER IN THE FIELD.

TYPICAL WATERMAIN CROSSING DETAIL

N.T.S.

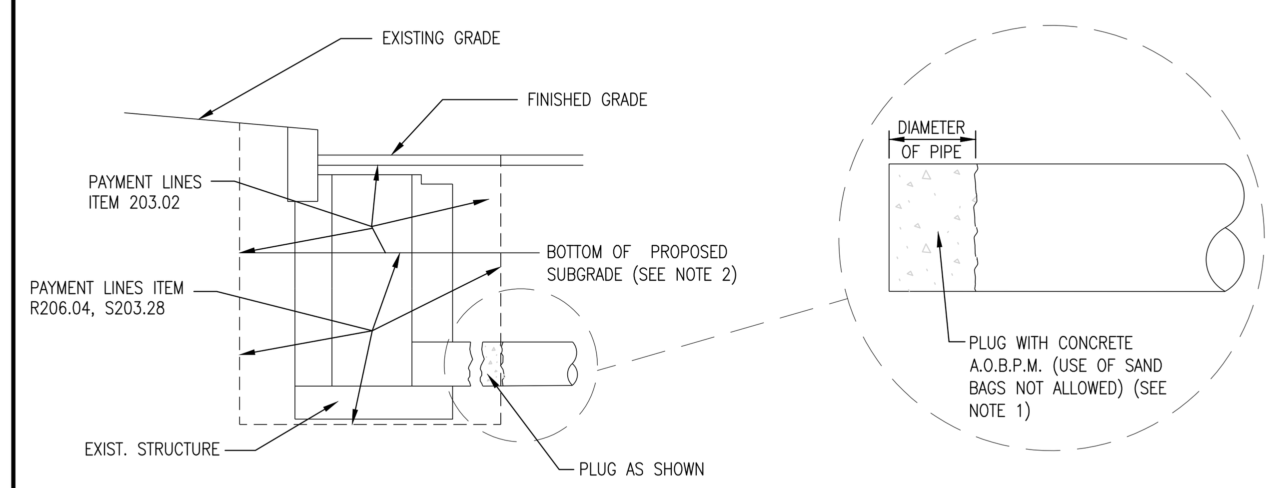

NOTES:

1. THE COST OF PLUGGING EXISTING LATERALS TO BE ABANDONED SHALL BE INCLUDED IN THE PRICE BID FOR TRENCH EXCAVATION IN THE CONTRACT. NO SEPARATE PAYMENT WILL BE MADE FOR THIS WORK.
2. UPPER PAY LIMITS FOR TRENCH AND CULVERT EXCAVATION SHALL BE TOP OF EXISTING SURFACE AT TIME OF EXCAVATION.

DETAILS FOR PLUGGING ABANDONED DRAINAGE STRUCTURES AND PIPES

N.T.S.

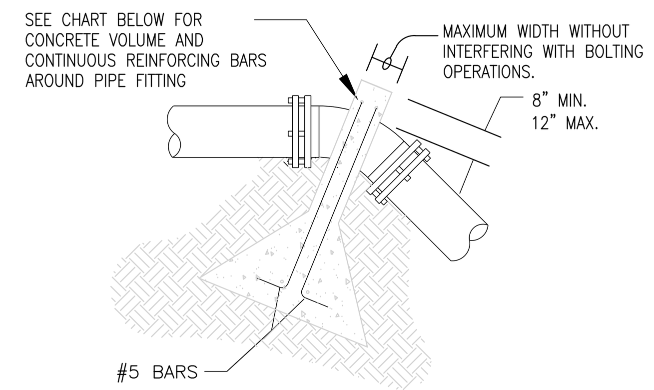

UPWARD THRUST BLOCKING

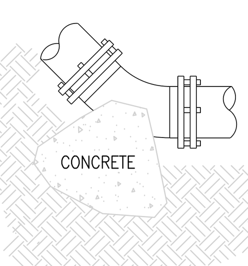

DOWNWARD THRUST BLOCKING

(SEE HORIZONTAL BLOCKING DETAIL)
(ALL BENDS SIMILAR)

UPWARD THRUST BLOCKING												
(REQUIRED REINFORCING BARS & CUBIC YARDS OF P.C. CONCRETE												
PIPE SIZE	90° BEND			45° BEND			22 1/2° BEND			11 1/4° BEND		
	CONC. C.Y.	REINF QTY.	REINF SIZE	CONC. C.Y.	REINF QTY.	REINF SIZE	CONC. C.Y.	REINF QTY.	REINF SIZE	CONC. C.Y.	REINF QTY.	REINF SIZE
4–6"	2.6	4	#5	2.1	4	#5	1.1	4	#5	0.6	4	#5
8"	2.9	4	#5	2.1	4	#5	1.1	4	#5	0.6	4	#5
12"	6.6	4	#5	4.7	4	#5	2.5	4	#5	1.3	4	#5

VERTICAL THRUST BLOCKING

NOTES:

1. DO NOT COVER BELLS OR FLANGES WITH CONCRETE
2. WRAP ALL FITTINGS WITH VISQUEEN.
3. BACK ALL TEES ACCORDING TO SIZE OF BRANCH.
4. BACKING FUTURE LINE EXTENSIONS SHALL BE SUCH THAT LATER REMOVAL IS POSSIBLE.
5. ALL BENDS WHERE FITTINGS ARE USED, BOTH HORIZONTAL OR VERTICAL SHALL BE BACKED.
6. REACTION BACKING TABLE IS BASED ON 150 P.S.I. AND SOIL BEARING PRESSURE OF 2,000 lb./sq.ft. ADDITIONAL BACKING MAY BE REQUIRED IN SOME AREAS AS DIRECTED BY ENGINEERS.
7. ALL CONCRETE SHALL BE 2500 P.S.I. MIN. .

THRUST BLOCKING DETAIL

N.T.S.

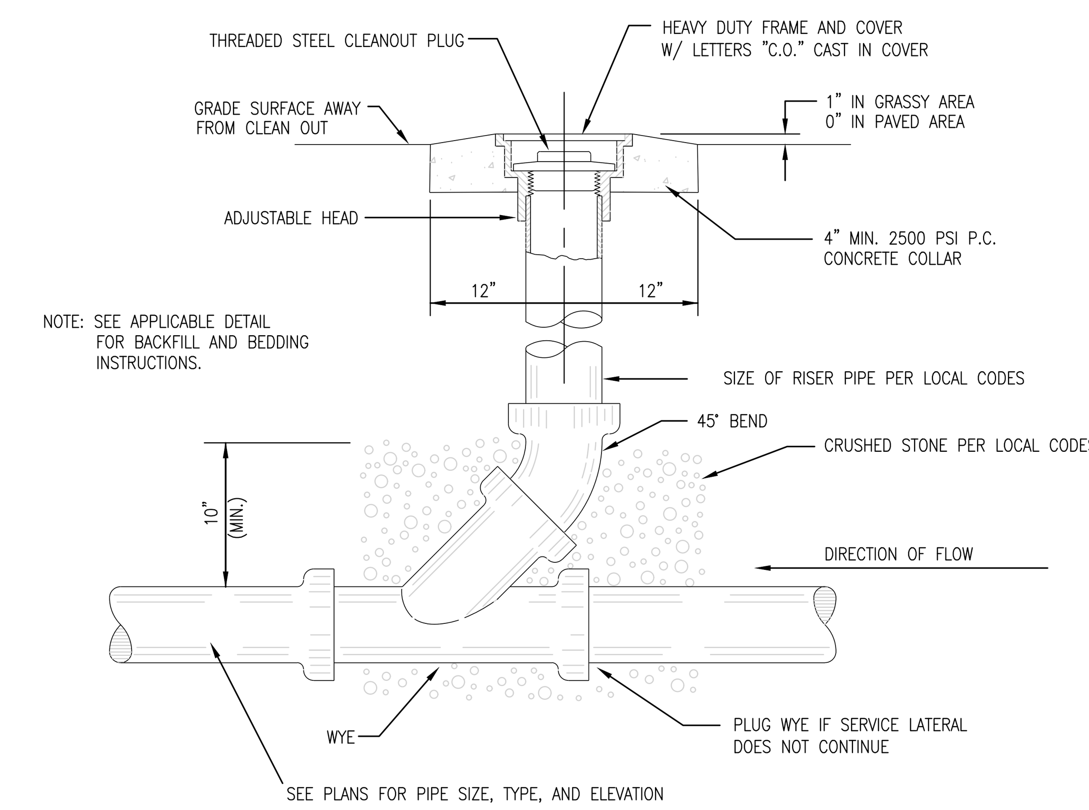

SEWER CLEAN–OUT

N.T.S.

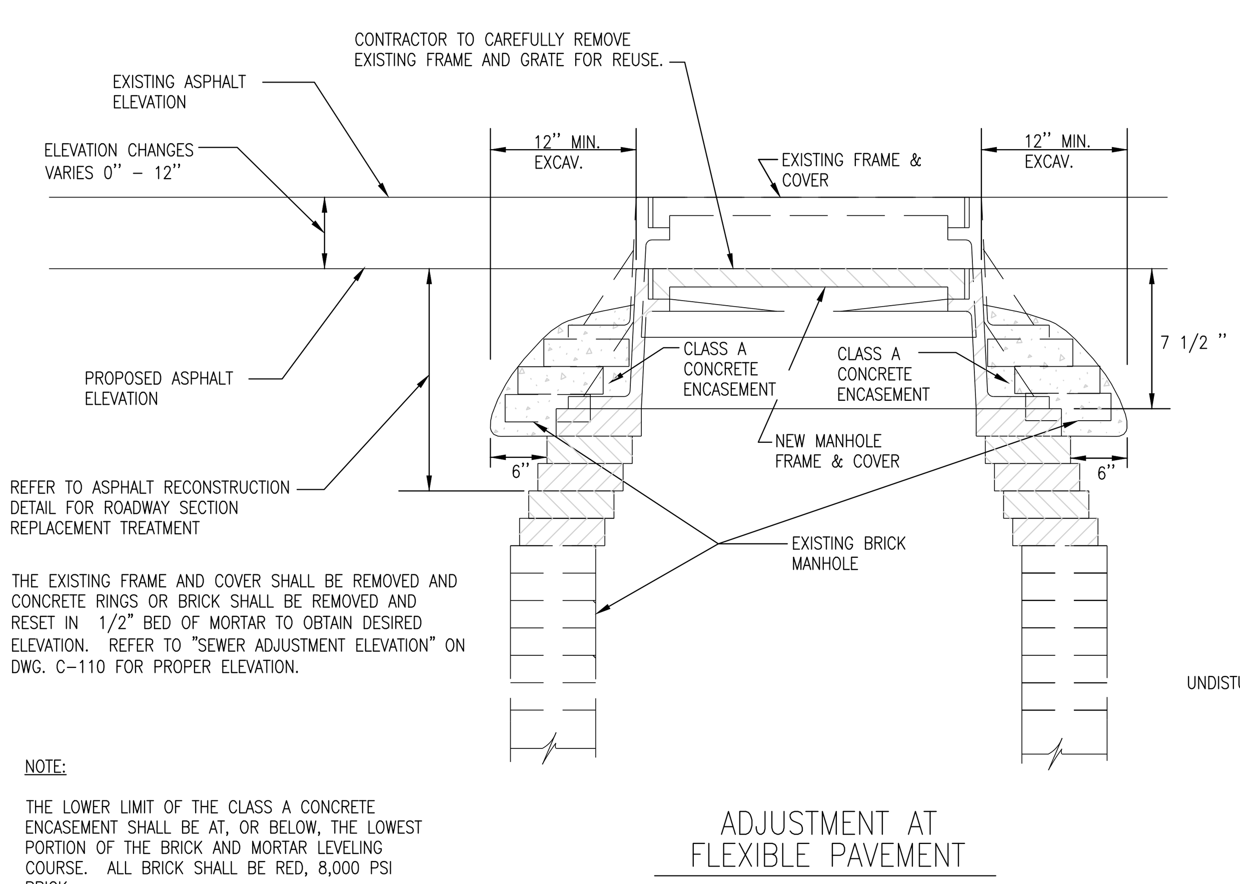

NOTE:

THE LOWER LIMIT OF THE CLASS A CONCRETE ENCASEMENT SHALL BE AT, OR BELOW, THE LOWEST PORTION OF THE BRICK AND MORTAR LEVELING COURSE. ALL BRICK SHALL BE RED, 8,000 PSI BRICK.

RESETTING EXISTING DRAINAGE FRAMES ON EXISTING DRAINAGE STRUCTURES ITEM NO. 604.07210110

N.T.S.

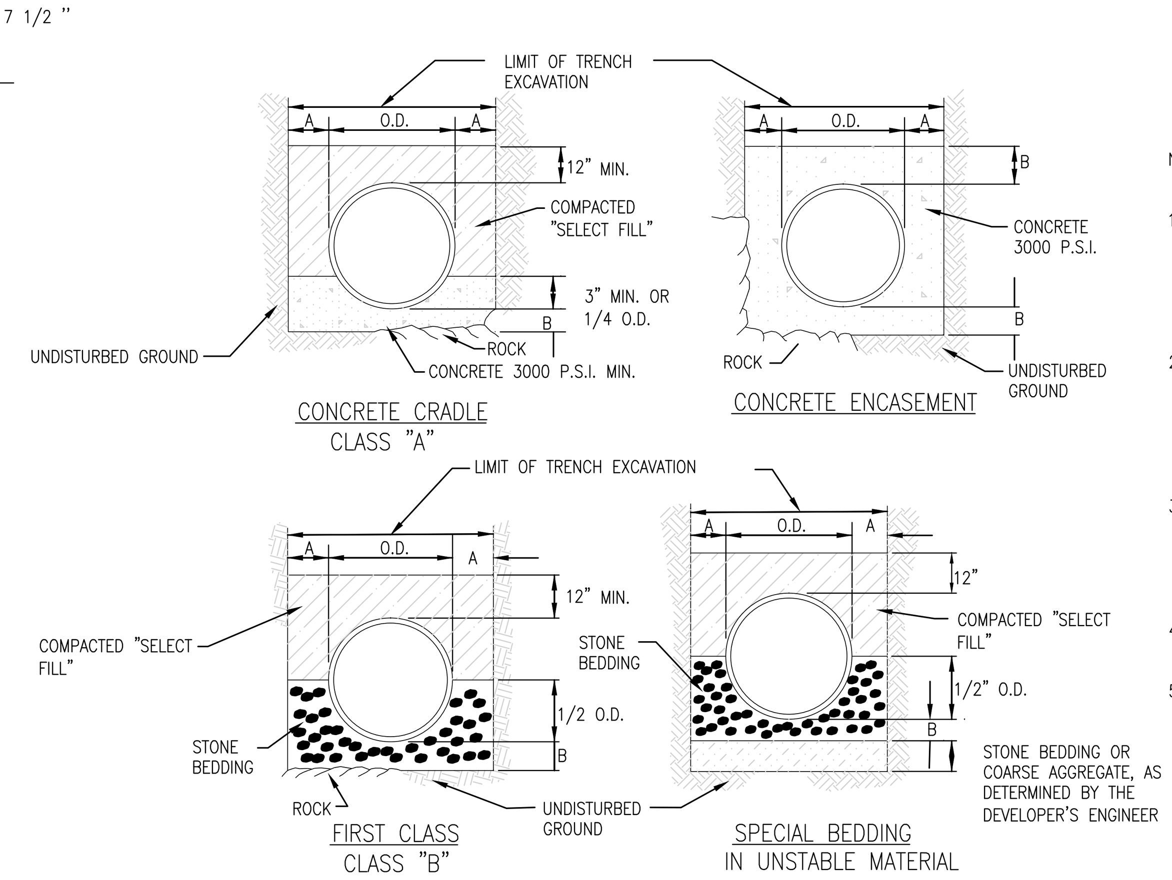

UTILITY BEDDING MATERIAL DETAIL

N.T.S.

NOTES:

1. SELECT FILL SHALL BE SAND, GRAVEL, AND SIMILAR MATERIAL WHICH SHALL BE FREE FROM CLAY, LOAM, ORGANIC MATERIAL, DEBRIS, FROZEN MATERIAL AND SHALL CONTAIN ONLY SMALL AMOUNTS OF STONE, PEBBLES OR LUMPS OVER ONE INCH IN GREATEST DIMENSION BUT NONE OVER TWO INCHES IN GREATEST DIMENSION, MEETING ASTM IA,IB,OR II.
2. STONE BEDDING SHALL MEAN APPROVED IMPORTED AGGREGATE MEETING THE REQUIREMENTS OF THE NEW YORK STATE DEPARTMENT OF TRANSPORTATION, STANDARD SPECIFICATION, MAY, 2008 EDITION, AS REVISED, SUBSECTION 703–01 "FINE AGGREGATE". PRIMARY SIZE 1 OR A MIXTURE OF PRIMARY SIZES 1 AND 2. OR ASTM CLASS IA,
3. COARSE AGGREGATE SHALL MEAN APPROVED IMPORTED AGGREGATE MEETING THE REQUIREMENTS OF THE NEW YORK STATE DEPARTMENT OF TRANSPORTATION, STANDARD SPECIFICATION, MAT 2008 EDITION, AS REVISED, SUBSECTION 703–02 "COURSE AGGREGATE". PRIMARY SIZE 3 AND/OR 4
4. THIS FIGURE APPLIES TO SANITARY, STORM and COMBINED MAINLINE AND LATERAL PIPE INSTALLATIONS AS WELL AS FORCEMAINS.
5. FIRST CLASS BEDDING SHALL BE USED UNLESS OTHERWISE SHOWN ON THE DRAWINGS OR DIRECTED BY THE ENGINEER.

PIPE DIA.	DIM. A	DIM. B
UP TO 18"	1.0'	6"
21" TO 36"	1.5'	9"
OVER 36"	1.5'	12"

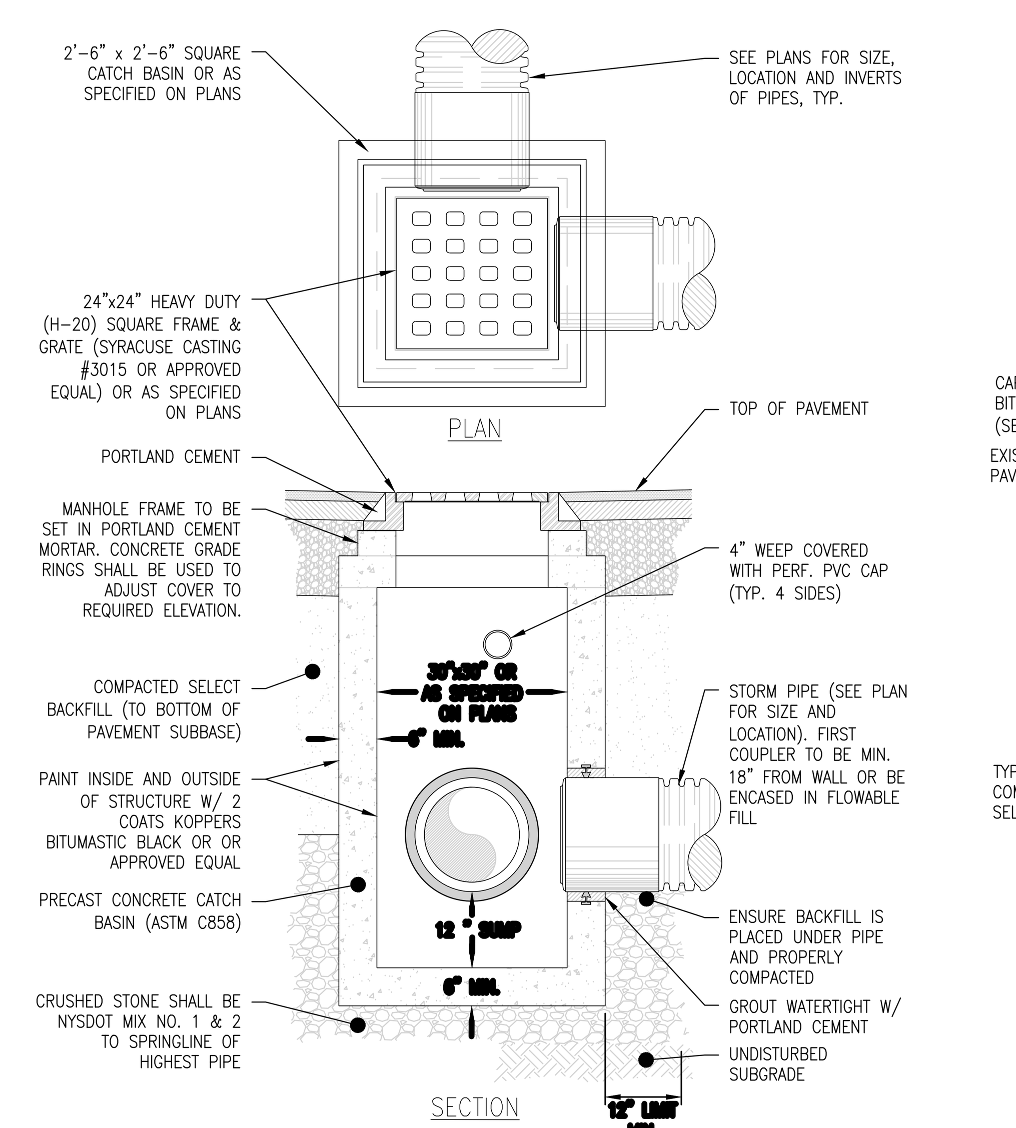

CATCH BASIN DETAIL

N.T.S.

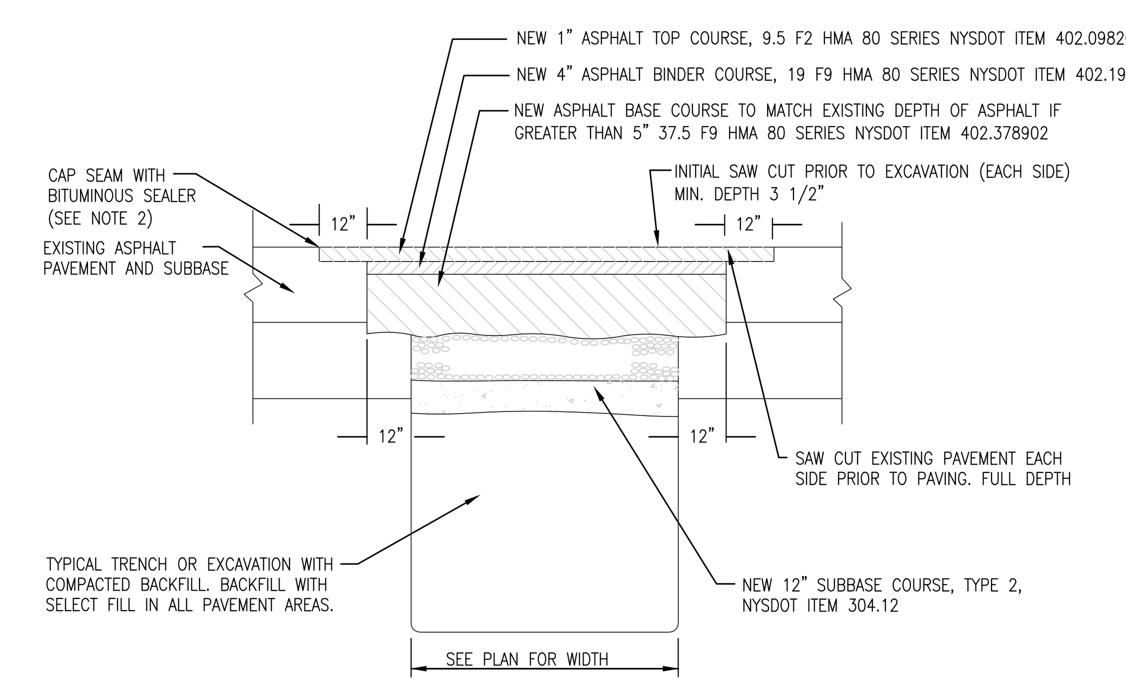

NOTES:

1. EXISTING PAVEMENT SHALL BE SAW CUT TO OBTAIN A STRAIGHT AND NEAT EDGE FOR PAVING. FINAL SAW CUT SHALL BE MADE PRIOR TO PAVING AFTER BACKFILL OF TRENCH TO BOTTOM OF NEW PAVEMENT
2. ALL SEAMS BETWEEN EXISTING AND NEW ASPHALT SURFACES SHALL BE SEALED WITH AN ASPHALT FILLER CORRESPONDING TO THE MATERIAL REQUIREMENTS OF N.Y.S.D.O.T. TABLE 702–5 MATERIAL DESIGNATION 702–3401. COST TO FURNISH AND APPLY THIS MATERIAL SHALL BE INCLUDED IN THE PRICE BID FOR ASPHALT TOP

PAVEMENT TRENCH RESTORATION DETAIL

N.T.S.

6/15/2022 4:10:27 PM

CONSULTANT INFORMATION

LiRo Engineers, Inc.
A LiRo Group Company
Mineola, N.Y. 516-746-2350[T]

CONSULTANT SEAL

STATE OF NEW YORK · KENNETH J. HOLMSTROM · LICENSED PROFESSIONAL ENGINEER · No. 059134

REVISION NUMBER	DATE	MADE BY	APP'D BY	REVISION

RECORD DRAWING CERTIFICATION

☐ AS BUILT – CHANGES AS NOTED ☐ AS BUILT – NO CHANGES

CONTRACTOR
NAME
SIGNATURE
TITLE DATE

PROJECT COORDINATOR
NAME
SIGNATURE
TITLE DATE

WESTCHESTER COUNTY, NEW YORK
DEPARTMENT OF PUBLIC WORKS AND TRANSPORTATION
DIVISION OF ENGINEERING

INFRASTRUCTURE REHABILITATION PHASE 3
PLAYLAND PARK, RYE, NEW YORK
RESTAURANT KITCHEN WITH FOOD VENDING
CIVIL DETAILS 2

CONTRACT NUMBER: 22-523
SHEET NUMBER: K-C-07
DWG NO.: 581 of 664
SCALE: AS INDICATED
DATE: 08/23/2022
DPW FILE NUMBER: 1-118-C-1330-0
REV. NO.: 0

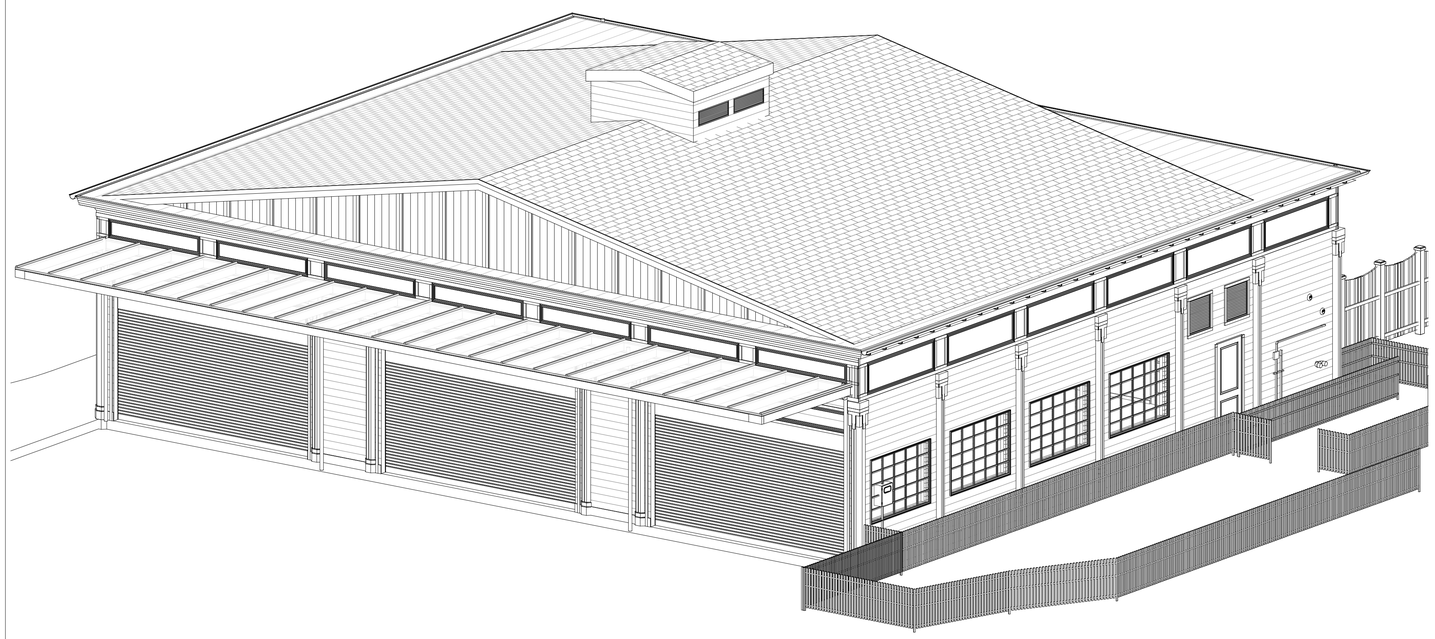

1 SOUTHEAST ARCADE

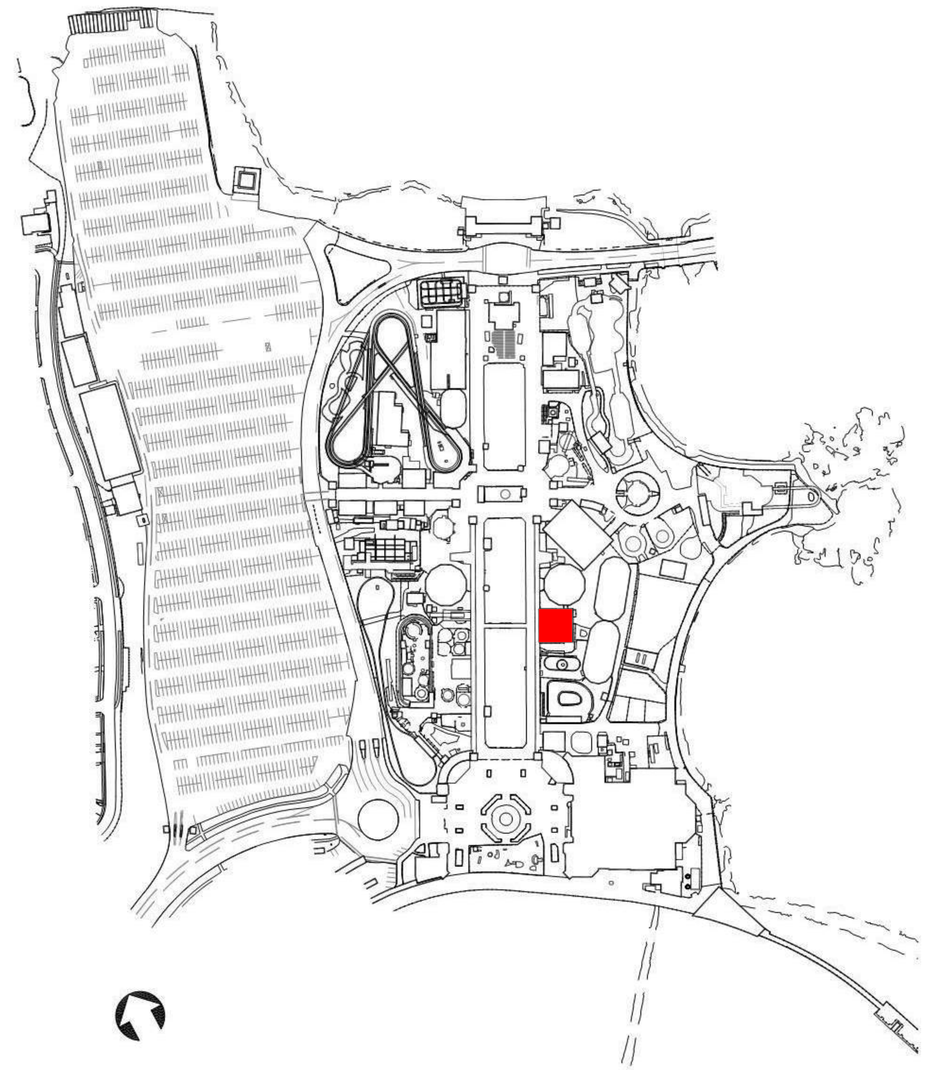

2 KEY MAP
N.T.S.

8/30/2022 2:53:09 PM

CONSULTANT INFORMATION

The LiRo Group

3 Aerial Way, Syosset, New York 11791
(516) 938-5476 www.liro.com

CONSULTANT SEAL

REGISTERED ARCHITECT ROBERT D. YOUNG JR. 023280 STATE OF NEW YORK

REVISION NUMBER	DATE	MADE BY	APP'D BY	REVISION

RECORD DRAWING CERTIFICATION

☐ AS BUILT – CHANGES AS NOTED ☐ AS BUILT – NO CHANGES

CONTRACTOR
NAME
SIGNATURE
TITLE DATE

PROJECT COORDINATOR
NAME
SIGNATURE
TITLE DATE

WESTCHESTER COUNTY, NEW YORK
DEPARTMENT OF PUBLIC WORKS AND TRANSPORTATION
DIVISION OF ENGINEERING

INFRASTRUCTURE REHABILITATION - PHASE 3
PLAYLAND PARK, RYE, NEW YORK
SOUTHEAST ARCADE BUILDING
BUILDING INTRO

CONTRACT NUMBER	22-523
SHEET NUMBER	SA-G-01
DWG NO.:	582 of 664
SCALE:	12" = 1'-0"
DATE:	08/23/2022
DPW FILE NUMBER	1-118-G-1331-0
REV. NO.	0

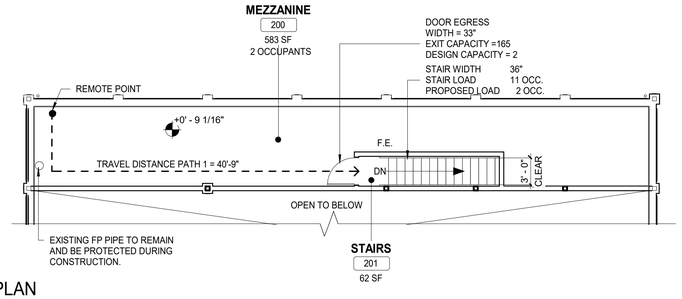

2 MEZZANINE EGRESS PLAN
1/8" = 1'-0"

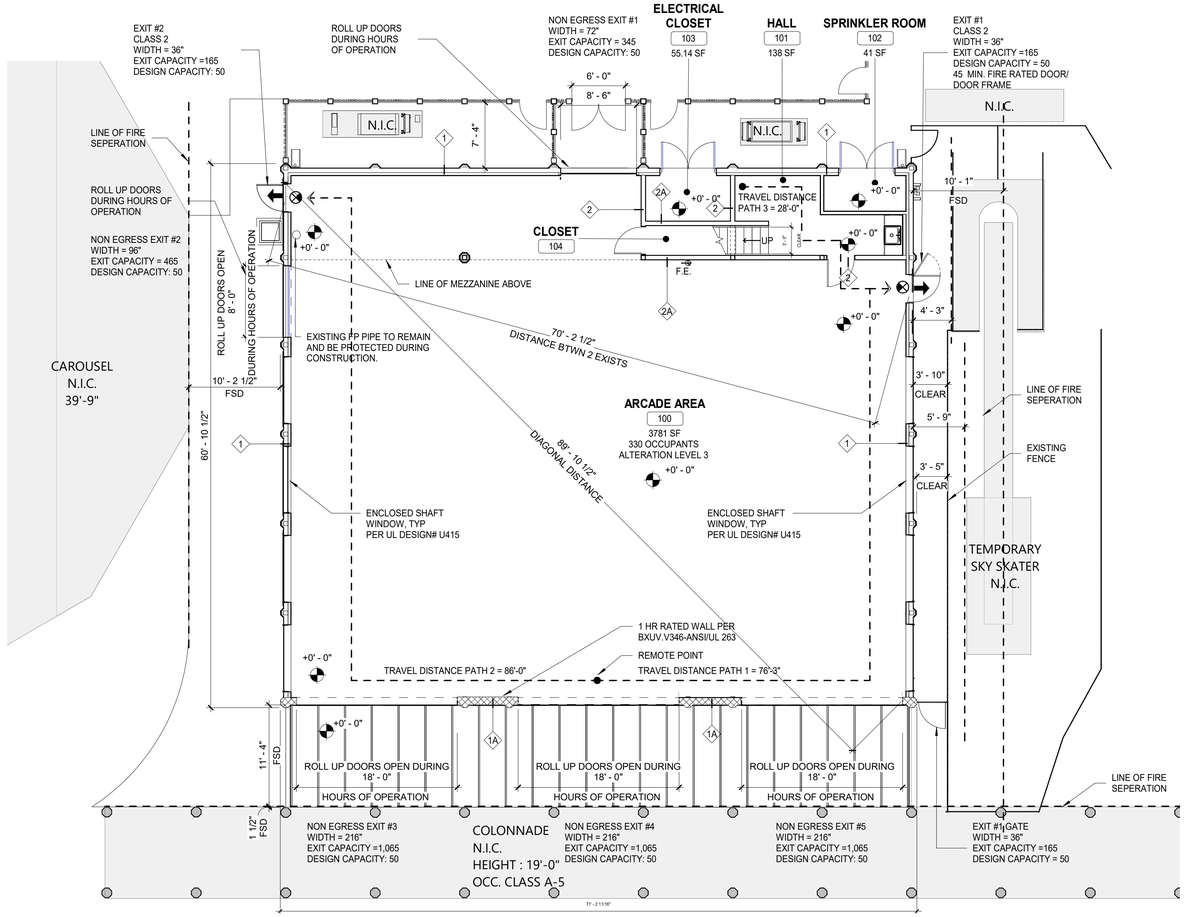

1 GROUND LEVEL EGRESS PLAN
1/8" = 1'-0"

EXISTING BUILDING CODE

EBC 302.4 - EXISTING MATERIALS
MATERIALS ALREADY IN USE IN A BUILDING IN COMPLIANCE WITH REQUIREMENTS OR APPROVALS IN EFFECT AT THE TIME OF THEIR ERECTION OR INSTALLATION SHALL BE PERMITTED TO REMAIN IN USE UNLESS DETERMINED BY THE BUILDING OFFICIAL TO BE UNSAFE.

EBC 302.5 - NEW REPLACEMENT MATERIALS
EXCEPT AS OTHERWISE REQUIRED OR PERMITTED BY THIS CODE, MATERIALS PERMITTED BY THE APPLICABLE CODE FOR NEW CONSTRUCTION SHALL BE USED. LIKE MATERIALS SHALL BE PERMITTED FOR REPAIRS AND ALTERATIONS, PROVIDED THAT UNSAFE CONDITIONS ARE NOT CREATED. HAZARDOUS MATERIALS SHALL NOT BE USED WHERE THE CODE FOR NEW CONSTRUCTION WOULD NOT PERMIT THEIR USE IN BUILDINGS OF SIMILAR OCCUPANCY, PURPOSE AND LOCATION.

EBC 907.1 - ENERGY CONSERVATION MINIMUM REQUIREMENTS
LEVEL 3 ALTERATIONS TO EXISTING BUILDINGS OR STRUCTURES ARE PERMITTED WITHOUT REQUIRING THE ENTIRE BUILDING OR STRUCTURE TO COMPLY WITH THE ENERGY REQUIREMENTS OF THE ENERGY CONSERVATION CONSTRUCTION CODE OF NEW YORK STATE OR RESIDENTIAL CODE OF NEW YORK STATE. THE ALTERATIONS SHALL CONFORM TO THE ENERGY REQUIREMENTS OF THE ENERGY CONSERVATION CONSTRUCTION CODE OF NEW YORK STATE OR RESIDENTIAL CODE OF NEW YORK STATE AS THEY RELATE TO NEW CONSTRUCTION ONLY.

2020 NYS ENERGY CONSERVATION CODE

[NY] C501.6 HISTORIC BUILDINGS
PROVISIONS OF THIS CODE RELATING TO THE CONSTRUCTION, REPAIR, ALTERATION, RESTORATION AND MOVEMENT OF STRUCTURES, AND CHANGE OF OCCUPANCY SHALL NOT BE MANDATORY FOR HISTORIC BUILDINGS.

CODE ANALYSIS

APPLICABLE CODES:

NEW YORK STATE BUILDING CODE 2020	(BC)
NEW YORK STATE EXISTING BUILDING CODE 2020	(EBC)
ENERGY CONSERVATION CONSTRUCTION CODE OF NEW YORK STATE	(ECCC)
NFPA 13 2016	(NFPA 13)

	REQUIRED	PROPOSED
OCCUPANCY CLASSIFICATION	A-3 AMUSEMENT ARCADES	
CONSTRUCTION TYPE (TBL 601)	VB (FULLY SPRINKLERED)	
HEIGHT (FT) (TBL 504.3)	28.16' < 60 (MAX. ALLOWABLE)	
NUMBER OF STORIES (TBL 504.4)	1 < 2 (MAX. ALLOWABLE)	
MEZZANINE AREA (SF) (TBL 505.2.1)	3,958 / 3 = 1319.33 SF	583 SF = < 1/3 OF FLOOR AREA
BUILDING ALLOWABLE AREA (SF) (506.2 & 506.3)	3,958 SF	< 24,200 SF (MAX. ALLOWABLE)

FIRE-RESISTANCE RATING REQUIREMENTS (TBL 601)	REQUIRED	PROPOSED
PRIMARY STRUCTURE FRAME	0	0
BEARING WALLS		
EXTERIOR (TBL 602)		
FIRE SEPARATION DISTANCE > = 10 FT	0	0
INTERIOR	0	0
NON BEARING WALLS AND PARTITIONS		
EXTERIOR (TBL 602)		
FIRE SEPARATION DISTANCE > = 10 FT	0	0
INTERIOR		
FLOOR CONSTRUCTION	0	0
ROOF CONSTRUCTION	0	0

ALLOWABLE AREA OF OPENINGS (BC 705.8)	REQUIRED	PROPOSED
FIRE SEPARATION DISTANCE (UNPROTECTED, SPRINKLER) 10 LESS THAN 15 FT	45%	N/A
INTERIOR FINISHES CLASS (BC 803)		
WALL AND CEILING	C	
FLOORS - RADIANT FLUX	CLASS II	
PORTABLE FIRE EXTINGUISHERS (BC 906)		
FIRE HAZARD	CLASS A	
HAZARD OCCUPANCY	ORDINARY	
MINIMUM RATED SINGLE EXTINGUISHER	2-A	
MAXIMUM FLOOR AREA PER UNIT OF A	1,500 SF	
MAXIMUM FLOOR AREA FOR EXTINGISHER	11, 250 SF	
MAXIMUM DISTANCE OF TRAVEL TO EXTINGUSHER	75'	

NUMBER OF TYPE 2-A EXINGUISHERS	REQUIRED	PROPOSED
FIRST FLOOR	1	1
MEZZANINE	1	1
MEANS OF EGRESS		
MAX. FLOOR AREA ALLOWANCES PER OCC. (TBL 1004.5) (SF)		
AMUSEMENT ARCADES	11 GROSS	
HALL / ACCESSORY STORAGE	300	
CLOSET / NON-OCCUPIABLE	NON-OCCUPIABLE	
MEZZANINE / STORAGE	300	
OCCUPANT LOAD		
ARCADE AREA (3,781 SF)	343.9	344 OCC.
HALL (138 SF)	NON-OCCUPIABLE	0 OCC.
CLOSET (40 SF)	NON-OCCUPIABLE	0 OCC.
MEZZANINE (583 SF)	1.94	2 OCC.

MINIMUM NUMBER OF EXISTS	REQUIRED	PROPOSED
OCCUPANT LOAD: 1 - 500	2	2
DIAGONAL DISTANCE (FT)		89'-10 1/2"
EXIT CONFIGURATION		
DISTANCE BETWEEN TWO EXISTS		
> = 1/2 OF THE DIAGONAL DIMENSION (BC 1007.1.1) (FT)	44'-11"	70'-2 1/2"

MAXIMUM COMMON PATH OF EGRESS TRAVEL	REQUIRED	PROPOSED
(TBL1006.2.1)		
A OCCUPANY WITH SPRINKLER SYSTEM	75'-0"	64'-3"
MAXIMUM TRAVEL DISTANCE (BC 1017)		
A OCCUPANCY WITH SPRINKELR SYSTEM	250'	88'-0"

PROJECTIONS (BC 705.2.3.1 EXCEPTIONS)
3. PROJECTIONS ON BUILDINGS OF TYPE V CONSTRUCTION SHALL BE PERMITTED TO BE OF TYPE V CONSTRUCTION AND SHALL NOT BE REQUIRED TO HAVE A FIRE RESISTANCE RATING WHERE SPRINKLER PROTECTION IS EXTENDED TO THESE AREAS.

EXTERIOR PROJECTIONS NFPA 13; SECTION 8.15.7.3
SPRINKLERS SHALL BE PERMITTED TO BE OMITTED FROM BELOW THE EXTERIOR PROJECTS OF COMBUSTIBLE CONSTRUCTION, PROVIDED THE EXPOSED FINISH MATERIAL ON THE EXTERIOR PROJECTS ARE NON COMBUSTIBLE; LIMITED-COMBUSTIBLE, OR FIRE RETARDANT-TREATED WOOD AS DEFINED IN NFPA 703.

ENERGY CODE ANALYSIS

2020 ENERGY CODE COMPLIANCE
CLIMATE ZONE 4 MARINE

TABLE C402.1.4 THERMAL ENVELOPE U-FACTOR

ROOFS	
INSULATION ENTIRELY ABOVE ROOF DECK	R-38
WALLS, ABOVE GRADE	
WOOD FRAMED AND OTHER	R-20
FLOORS	
JOISTS/ FRAMING	U0.033

TABLE 508.4 REQUIRED SEPARTATION OF OCCUPANCIES SPRINKLERED
A-2 TO A-2 NOT REQUIRED
A-2 TO U NOT REQUIRED

TABLE 602 REQUIREMENTS FOR EXTERIOR WALLS BASED ON FIRE SEPARATION

FIRE SEPARATION DISTANCE	TYPE OF CONSTRUCTION	HOURS REQ'D
X < 5	ALL	1
5≤ X <10	OTHERS	1
10 ≤ X < 30	VB	0

NORTH WALL PROPOSED TO BE 1 HOUR RATED
WEST WALL PROPOSED TO BE 1 HOUR RATED
SOUTH WALL PROPOSED TO BE 1 HOUR RATED

LEGEND

EX. WOOD FENCE
NEW WOOD FENCE UNDER SITE IMPROVEMENTS TO BE PROTECTED DURING CONSTRUCTION.
101 DOOR TAG
1i WINDOW TAG
FE FIRE EXTINGUISHER
N.I.C. NOT IN CONTRACT
Room name
101
150 SF
ROOM TAG
1i WALL TAG
EGRESS LIGHT FIXTURE: SEE ELECTRICAL DWGS FOR MORE INFO
INDICATES REMOVAL
1 HR FIRE RATED WALL
LINE OF FIRE SEPERATION

HISTORIC BUILDING

PLAYLAND AMUSEMENT PARK IS A DESIGNATED NATIONAL HISTORIC LANDMARK AND IS LISTED ON THE NATIONAL REGISTER OF HISTORIC PLACES.
NATIONAL HISTORIC PLACES REGISTER REFERNCE NUMBER 80004529 _NHL
NATIONAL ARCHIVES IDENTIFIER 75316138
THE SOUTH EAST ARCADE IS A LISTED STRUCTURE OF THE LANDMARK AND THEREFORE AN *HISTORIC BUILDING* UNDER THE 2020 BUILDING CODE AND THE 2020 EXISTING BUILDING CODE OF NEW YORK STATE.

8/30/2022 4:04:46 PM

CONSULTANT INFORMATION
The LiRo Group
3 Aerial Way, Syosset, New York 11791
(516) 938-5476 www.liro.com

CONSULTANT SEAL
REGISTERED ARCHITECT ROBERT D. TOWNLEY JR. 023280 STATE OF NEW YORK

REVISION NUMBER	DATE	MADE BY	APP'D BY	REVISION

RECORD DRAWING CERTIFICATION
☐ AS BUILT – CHANGES AS NOTED ☐ AS BUILT – NO CHANGES

CONTRACTOR
NAME
SIGNATURE
TITLE DATE

PROJECT COORDINATOR
NAME
SIGNATURE
TITLE DATE

WESTCHESTER COUNTY, NEW YORK
DEPARTMENT OF PUBLIC WORKS AND TRANSPORTATION
DIVISION OF ENGINEERING

INFRASTRUCTURE REHABILITATION - PHASE 3
PLAYLAND PARK, RYE, NEW YORK
SOUTHEAST ARCADE BUILDING
EGRESS PLANS AND CODE ANALYSIS

CONTRACT NUMBER	22-523
SHEET NUMBER	SA-G-02
DWG NO.:	583 of 664
SCALE:	As indicated
DATE:	08/23/2022
DPW FILE NUMBER	1-118-G-1332-0
REV. NO.	0

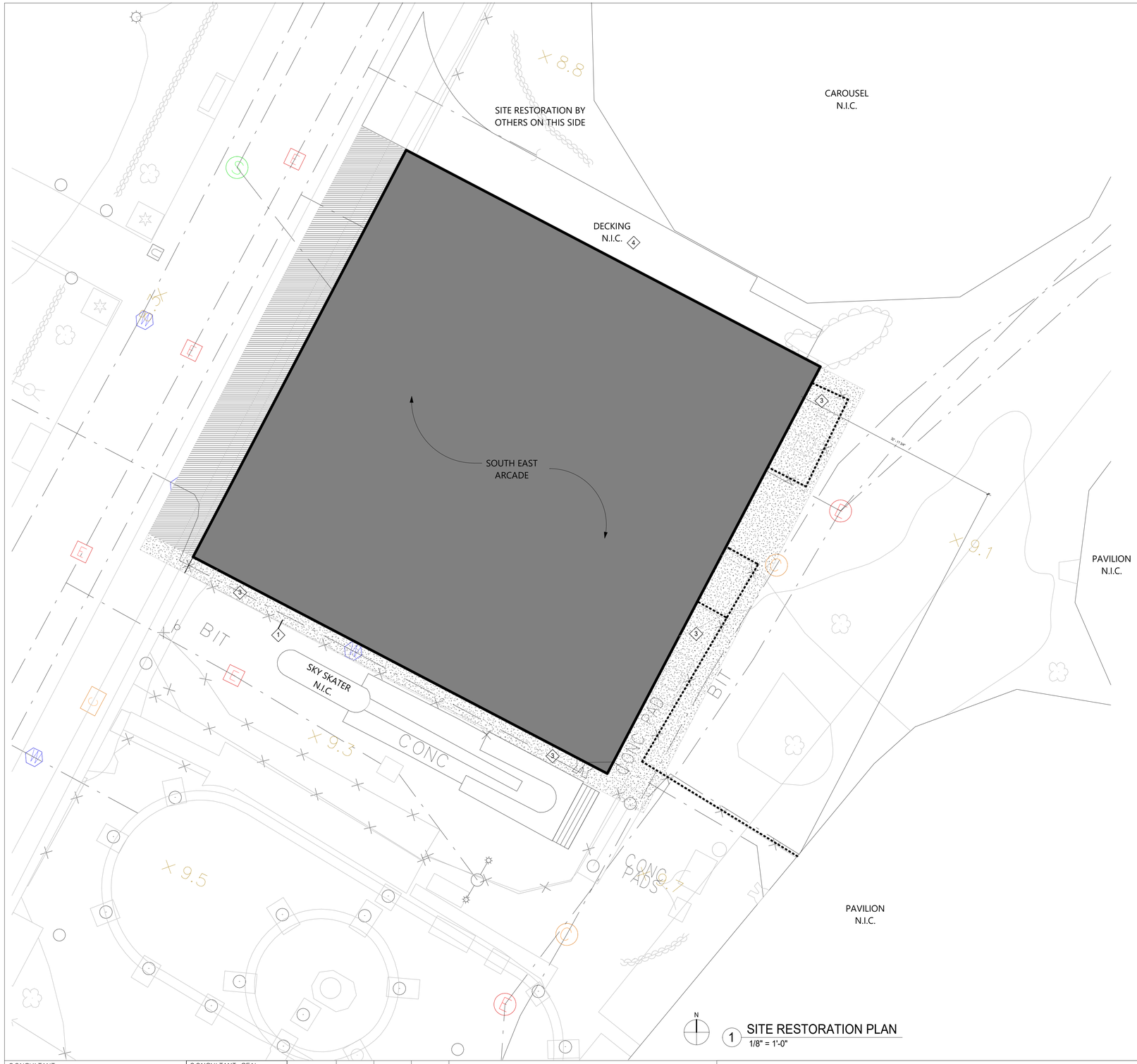

1 SITE RESTORATION PLAN
1/8" = 1'-0"

RESTORATION KEY NOTES

1. EXISTING FENCE TO REMAIN.
2. NEW GRAVEL (PERMEABLE) SURFACE.
3. REPAIR ASPHALT AS REQUIRED
4. IPE DECKING AND DECORATIVE SPHERES TO BE PROTECTED DURING CONSTRUCTION

GENERAL NOTES

1. PROVIDE PROTECTION FOR EXISTING FEATURES TO REMAIN. PROVIDE PROTECTION PLAN FOR APPROVAL.
2. SCHEDULE AND COMPLETE WORK AS REQUIRED TO GIVE THE SITE IMPROVEMENT CONTRACTORS ACCESS TO THEIR JOBSITE.

CONSTRUCTION NOTES

A. CONTRACTOR TO ENSURE NO DAMAGE OCCURS TO ANY EXISTING CONSTRUCTION ON PARK PROPERTY NOT CALLED OUT TO HAVE ANY WORK DONE ON. IT IS THE RESPONSIBILITY OF THE CONTRACTOR TO PROTECT AS REQUIRED. CONTRACTOR IS RESPONSIBLE FOR ANY DAMAGES THAT OCCUR DURING COURSE OF PROJECT.

B. CONTRACTOR TO REPLACE ALL PLANTED MATTER DISTRIBUTED DURING CONSTRUCTION UNLESS OTHERWISE NOTED.

C. CONTRACTOR TO REPAIR EXISTING ASPHALT AS REQUIRED TO MATCH ADJACENT LOOK, FINISH AND UNIFORM APPEARANCE.

D. CONTRACTOR TO REPAIR SOD AS REQUIRED.

RESTORATION LEGEND

- ASPHALT REPAIR
- REMOVE & REPLACE BOARDWALK
- EXISTING FENCE TO REMAIN
- FENCE WORK UNDER SITE IMPROVEMENTS. FENCE TO BE PROTECTED DURING CONSTRUCTION.
- EXISTING GRASS TO BE RESTORED. REFER TO LANDSCAPE ARCHITECT'S DRAWINGS FOR MORE INFORMATION.
- EXISTING ASPHALT TO BE REMOVED AND REPLACED
- EXISTING CHAIN LINK FENCE
- N.I.C. — EXISTING SCOPE NOT IN CONTRACT
- EXISTING WOODEN FENCE
- EXISTING WOODEN GATE TO BE REPLACED

DETAILS

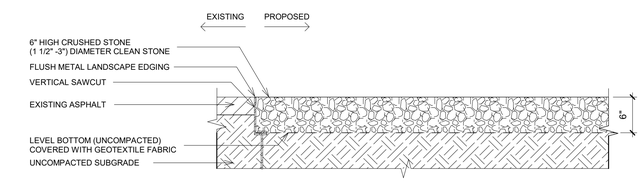

2 EXISTING ASPHALT RESTORATION DETAIL
1" = 1'-0"

8/30/2022 2:53:13 PM

CONSULTANT INFORMATION
The LiRo Group
3 Aerial Way, Syosset, New York 11791
(516) 938-5476 www.liro.com

CONSULTANT SEAL
REGISTERED ARCHITECT ROBERT D. YOUNG JR. 023290 STATE OF NEW YORK

REVISION NUMBER	DATE	MADE BY	APP'D BY	REVISION

RECORD DRAWING CERTIFICATION
AS BUILT – CHANGES AS NOTED
AS BUILT – NO CHANGES

CONTRACTOR
NAME
SIGNATURE
TITLE DATE

PROJECT COORDINATOR
NAME
SIGNATURE
TITLE DATE

WESTCHESTER COUNTY, NEW YORK
DEPARTMENT OF PUBLIC WORKS AND TRANSPORTATION
DIVISION OF ENGINEERING

INFRASTRUCTURE REHABILITATION - PHASE 3
PLAYLAND PARK, RYE, NEW YORK
SOUTHEAST ARCADE BUILDING
SITE RESTORATION PLAN

CONTRACT NUMBER	22-523
SHEET NUMBER	SA-G-03
DWG NO.:	584 of 664
SCALE:	As indicated
DATE:	08/23/2022
DPW FILE NUMBER	1-118-A-1333-0
REV. NO.	0

PLAYLAND REHABILITATION & UPGRADES
SOUTHEAST ARCADE - LEAD REMEDIATION
1 PLAYLAND PKWY, RYE, NY 10580

DETAILS:

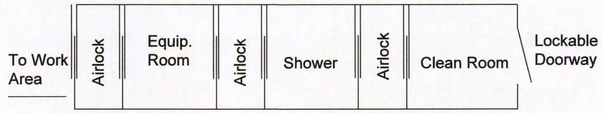

1 SA-H-20 LARGE PROJECT REMOTE WORKER DECONTAMINATION UNIT
Not To Scale

SCOPE OF WORK TABLE:

Work area	Location	Description	Material	Quantity	Procedure
1	Exterior	Entire Building	Painted Surfaces	800 SF	Manual Wet Scraping/Chemical Strip

PROJECT NOTES:

1. All layers of coating shall be considered as LBP and removed down to the substrates. Substrates coated with LBP and targeted for demolition may be removed and disposed of solid structure waste following TCLP testing.
2. Substrates coated with LBP and targeted for refurbish and recoating shall be abated using manual wet scraping or chemical stripping procedures, localized testing of chemical strapping products shall proceed broader use and only after approval by the DPW Environmental Consultant.
3. The abatement contractor shall separate paint chips and contaminated dust/particulate generated by the abatement from other project waste streams including worker personal protective equipment and plastic sheeting. All waste other than lead paint chips and contaminated dust/particulate shall be TCLP tested prior to disposal.
4. Waste generated by the work of this method shall be stored on site in a NYSDEC compliant Hazardous and Waste Storage Area and transported under manifest to the disposal site.
5. The contractor shall prepare a project specific work plan and project specific HASP for the work of this contract.
6. LBP remediation shall be consistent with guidelines from SSPC and work shall comply with the OSHA regulations including using of decontamination units and hand wash stations.
7. The contractor may propose alternate LBP removal procedures however, use of alternate procedures will require approval by DPW Environmental Consultant; the abatement contractor is responsible with maintaining the physical conditions and integrity of the targeted substrates, and the surrounding structures during abatement work.
8. The Contractor shall request and receive in writing prior to preceding with any work info from the owner regarding surfaces/materials that require protection.

LEGEND:

- WORK AREA LIMITS
- WS — OSHA HANDWASHING STATION
- HWSA — HAZARDOUS WASTE STORAGE AREA
- AIRLOCK
- W — TEMPORARY WATER SOURCE
- E — TEMPORARY ELECTRICAL SOURCE
- WOOD TRIM (GREEN)

KEYPLAN:

5/9/2022 4:20:24 PM

CONSULTANT INFORMATION
The LiRo Group
3 Aerial Way, Syosset, New York 11791
(516) 938-5476 www.liro.com

CONSULTANT SEAL
STATE OF NEW YORK · PETER JOSEPH GERASI · 070446 · LICENSED PROFESSIONAL ENGINEER

REVISION NUMBER	DATE	MADE BY	APP'D BY	REVISION

RECORD DRAWING CERTIFICATION
☐ AS BUILT – CHANGES AS NOTED ☐ AS BUILT – NO CHANGES

CONTRACTOR: NAME / SIGNATURE / TITLE / DATE
PROJECT COORDINATOR: NAME / SIGNATURE / TITLE / DATE

WESTCHESTER COUNTY, NEW YORK
DEPARTMENT OF PUBLIC WORKS AND TRANSPORTATION
DIVISION OF ENGINEERING
INFRASTRUCTURE REHABILITATION - PHASE 3
PLAYLAND PARK, RYE, NEW YORK
SOUTHEAST ARCADE
GENERAL LEAD REMEDIATION NOTES

CONTRACT NUMBER	22-523
SHEET NUMBER	SA-H-20
DWG NO.:	
SCALE:	NOT TO SCALE
DATE:	08/23/2022
DPW FILE NUMBER	1-118-G-1334-0
REV. NO.	0

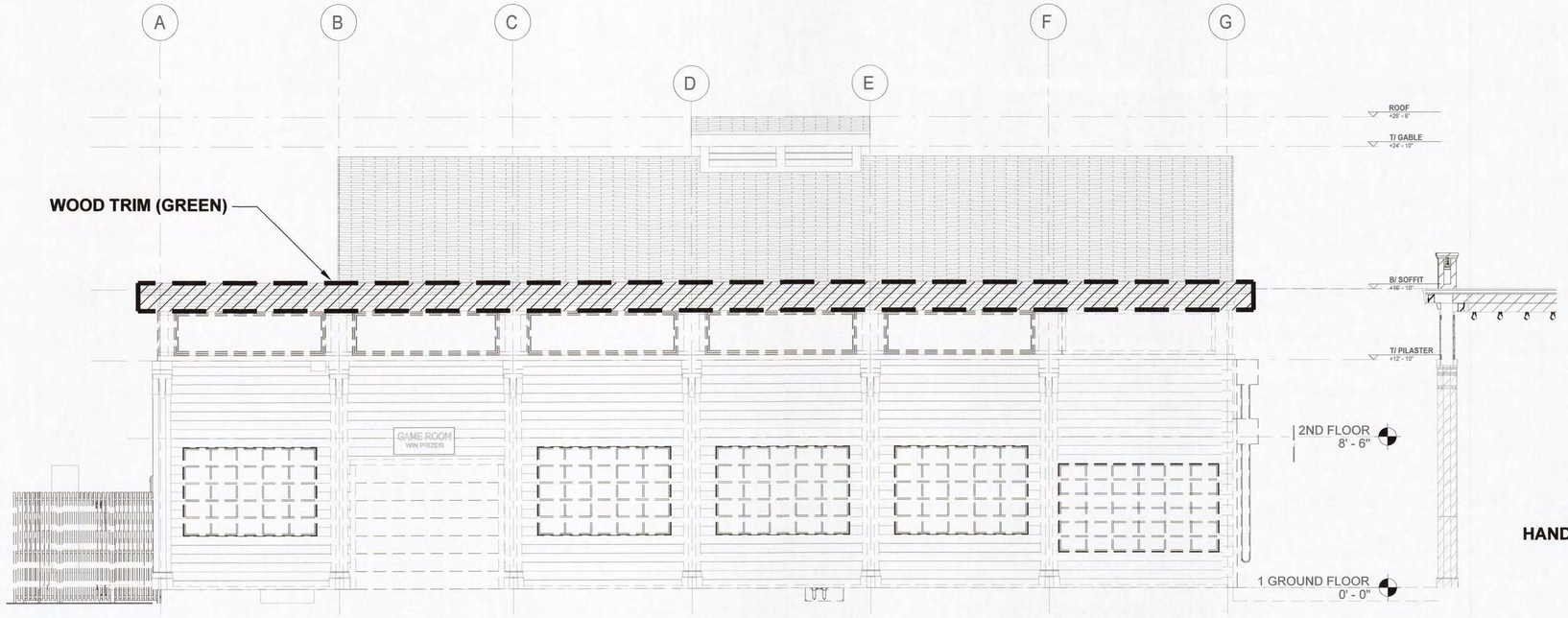

1 NORTH ELEVATION - LEAD REMEDIATION PLAN
NTS

3 GROUND FLOOR - LEAD REMEDIATION PLAN
NTS

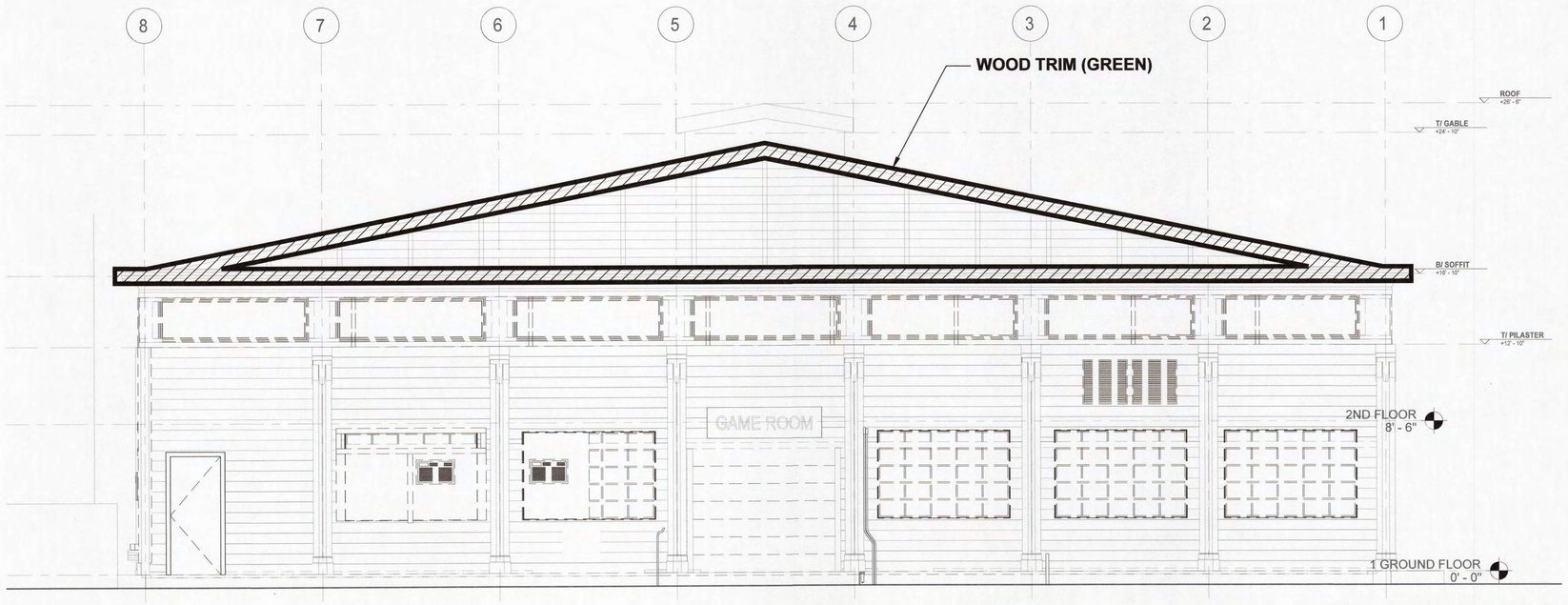

2 EAST ELEVATION - LEAD REMEDIATION PLAN
NTS

5/9/2022 4:20:24 PM

CONSULTANT INFORMATION

The LiRo Group

3 Aerial Way, Syosset, New York 11791
(516) 938-5476 www.liro.com

CONSULTANT SEAL

STATE OF NEW YORK · PETER JOSEPH BERGER · 070446 · LICENSED PROFESSIONAL ENGINEER

REVISION NUMBER	DATE	MADE BY	APP'D BY	REVISION

RECORD DRAWING CERTIFICATION

☐ AS BUILT – CHANGES AS NOTED ☐ AS BUILT – NO CHANGES

CONTRACTOR
NAME
SIGNATURE
TITLE DATE

PROJECT COORDINATOR
NAME
SIGNATURE
TITLE DATE

WESTCHESTER COUNTY, NEW YORK
DEPARTMENT OF PUBLIC WORKS AND TRANSPORTATION
DIVISION OF ENGINEERING

INFRASTRUCTURE REHABILITATION - PHASE 3
PLAYLAND PARK, RYE, NEW YORK
SOUTHEAST ARCADE
NORTH AND EAST ELEVATIONS - LEAD REMEDIATION PLAN

CONTRACT NUMBER	22-523
SHEET NUMBER	SA-H-21
DWG NO.:	
SCALE:	NOT TO SCALE
DATE:	08/23/2022
DPW FILE NUMBER	1-118-G-1335-0
REV. NO.	0

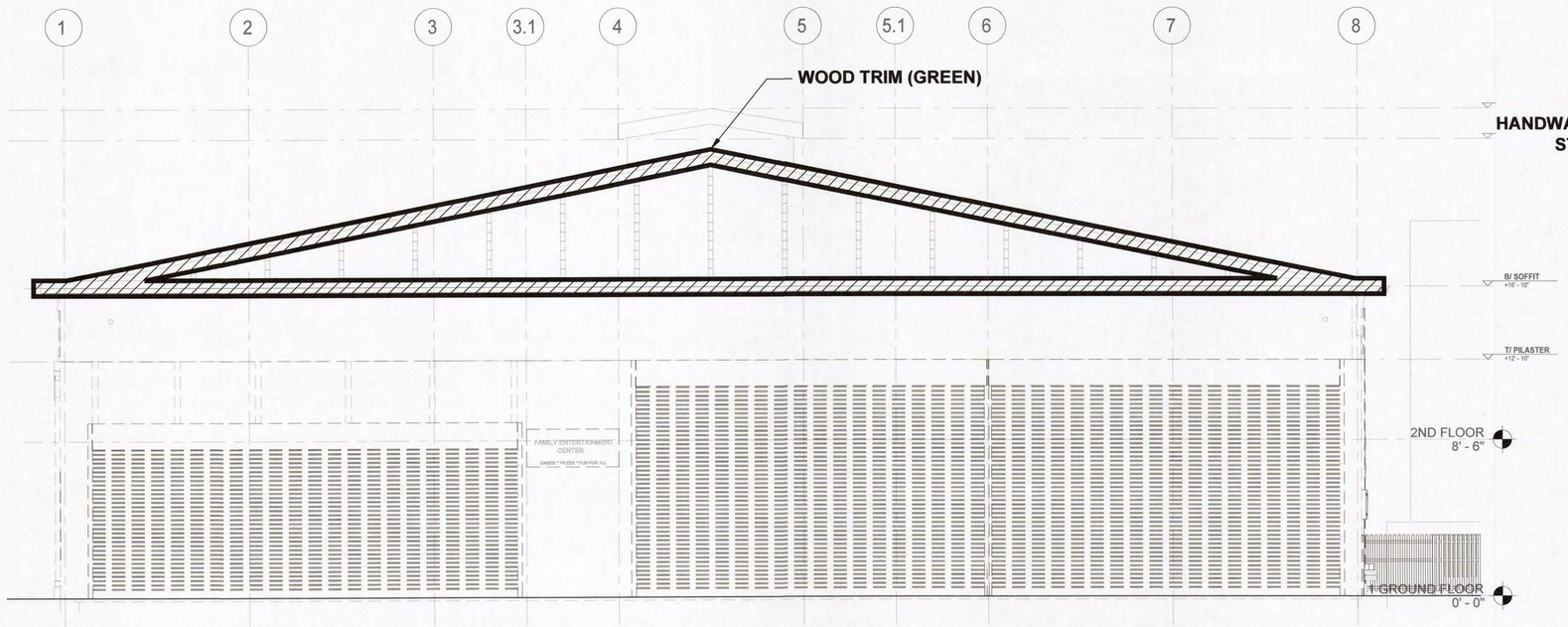

2 WEST ELEVATION - LEAD REMEDIATION PLAN
NTS

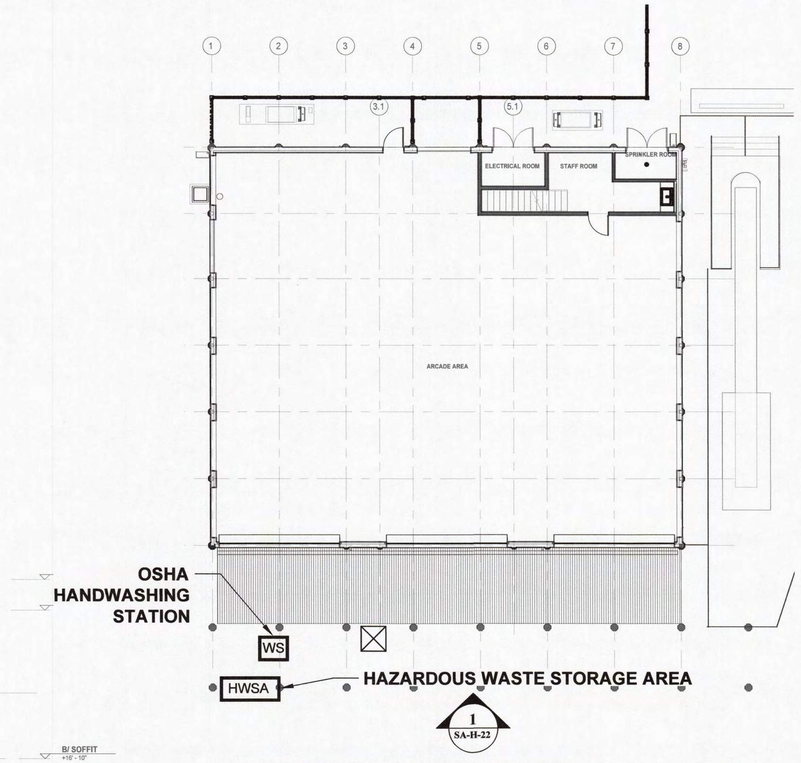

2 GROUND FLOOR - LEAD REMEDIATION PLAN
NTS

5/9/2022 4:20:24 PM

CONSULTANT INFORMATION

The LiRo Group
3 Aerial Way, Syosset, New York 11791
(516) 938-5476 www.liro.com

CONSULTANT SEAL

STATE OF NEW YORK
PETER JOSEPH GERBASI
NO. 070448
LICENSED PROFESSIONAL ENGINEER

REVISION NUMBER	DATE	MADE BY	APP'D BY	REVISION

RECORD DRAWING CERTIFICATION

☐ AS BUILT – CHANGES AS NOTED ☐ AS BUILT – NO CHANGES

CONTRACTOR
NAME
SIGNATURE
TITLE DATE

PROJECT COORDINATOR
NAME
SIGNATURE
TITLE DATE

WESTCHESTER COUNTY, NEW YORK
DEPARTMENT OF PUBLIC WORKS AND TRANSPORTATION
DIVISION OF ENGINEERING

INFRASTRUCTURE REHABILITATION- PHASE 3
PLAYLAND PARK, RYE, NEW YORK
SOUTHEAST ARCADE
WEST ELEVATION - LEAD REMEDIATION PLAN

CONTRACT NUMBER 22-523
SHEET NUMBER SA-H-22
DWG NO.:
SCALE: NOT TO SCALE
DATE: 08/23/2022
DPW FILE NUMBER 1-118-G-1336-0
REV. NO. 0

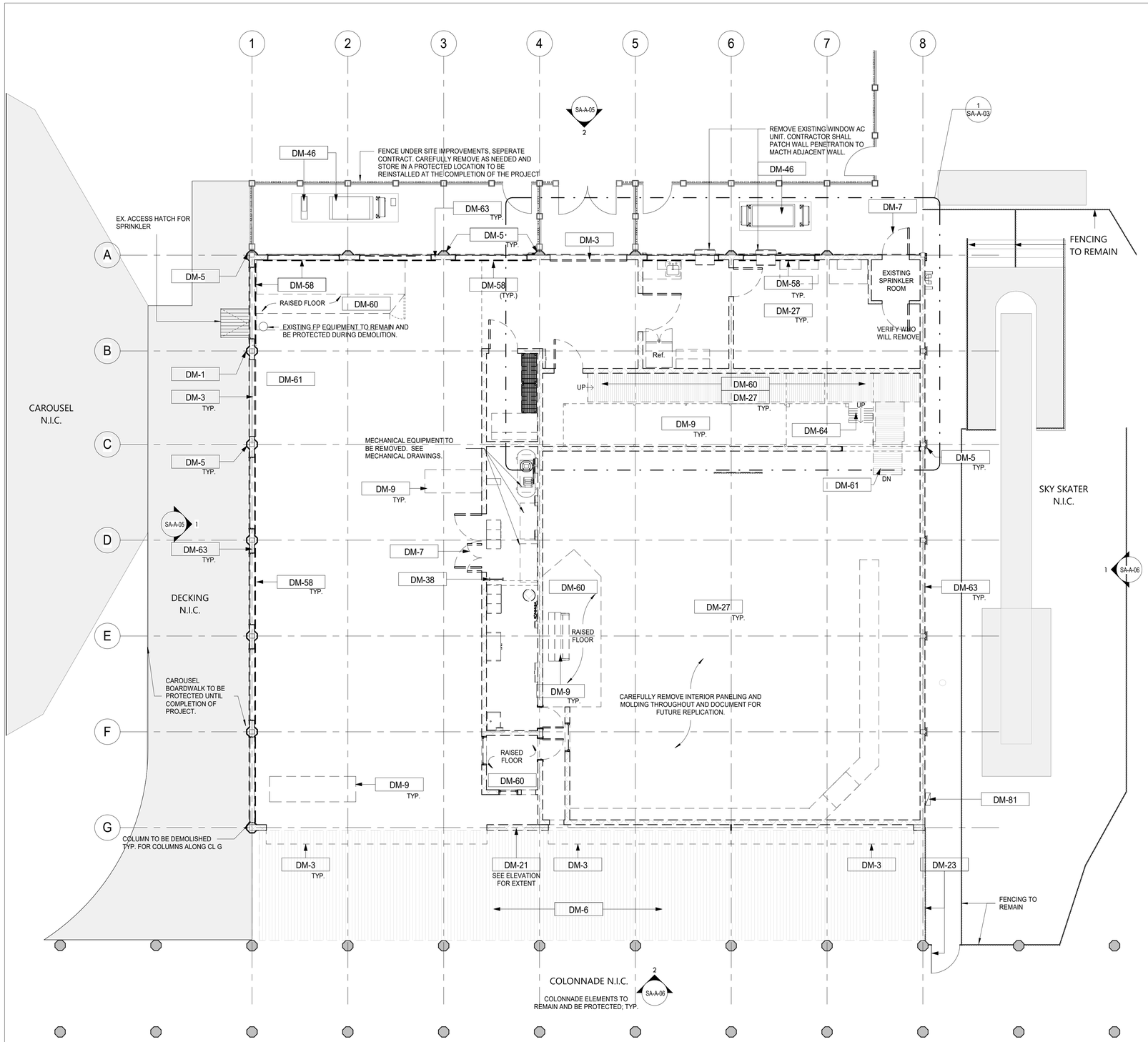

1 GROUND LEVEL DEMOLITION PLAN
3/16" = 1'-0"

DEMOLITION GENERAL NOTES

1. ALL DEMOLITION AND REMOVAL WORK SHALL BE COMPLETED AS INDICATED AND NOTED ON THE DRAWINGS AND AS SPECIFIED.
2. PRIOR TO STARTING WORK, MAKE A THOROUGH EXAMINATION OF THE PORTIONS OF THE STRUCTURE IN WHICH THE WORK IS TO BE PERFORMED. CHECK ALL THE WORK AT ADJOINING OR UNDERLYING LOCATIONS. REPORT TO THE ARCHITECT ANY AND ALL CONDITIONS WHICH MAY INTERFERE WITH OR OTHERWISE PREVENT THE PROPER EXECUTION AND COMPLETION OF THE WORK. DO NOT START WORK UNTIL SUCH CONDITIONS HAS BEEN EXAMINED AND MUTUALLY AGREED UPON WITH THE ARCHITECT.
3. DASHED LINES INDICATE WALLS, FIXTURES, EQUIPMENT, ETC. TO BE REMOVED AND DISPOSED OF BY G.C. . ANY QUESTIONS ON SCOPE OF DEMOLITION MUST BE DIRECTED TO THE ARCHITECT PRIOR TO BID. PROVIDE SHORING AND BRACING AS REQUIRED.
4. THE EXISTING WORK REQUIRED TO BE REMOVED SHALL BE AS INDICATED BUT SHALL ALSO EXTEND TO INCLUDE ANY AND ALL OTHER EXISTING MATERIALS OR WORK NECESSARY TO INSTALL THE NEW WORK AS SHOWN AND SPECIFIED AND TO CONNECT SAME WITH THE EXISTING WORK IN AN APPROVED MANNER.
5. ALTER AND RESTORE EXISTING WALLS, PARTITIONS, COLUMNS, CEILING AND FLOORS, AND THEIR RESPECTIVE FINISHED SURFACES TO ACCOMMODATE NEW CONSTRUCTION AND FINISHES, IN ACCORDANCE WITH DRAWINGS AND SPECIFICATIONS.
6. IMMEDIATELY NOTIFY THE OWNER'S REPRESENTATIVES OF ANY HAZARDOUS MATERIALS ENCOUNTERED DURING DEMOLITION/REMOVAL.
7. ALL DIMENSIONS AND CONSTRUCTION CONDITIONS TO BE VERIFIED BY THE CONTRACTOR PRIOR TO THE START OF WORK.
8. CONTAINERIZED DEMOLITION DEBRIS SHALL BE TCLP TESTED TO CONFIRM WASTE MAY BE DISPOSED OF AS NON-HAZARDOUS.
9. ALL ITEMS SCHEDULED FOR DEMOLITION SHALL BE REMOVED FROM THE SITE UNLESS OTHERWISE NOTED. CONTRACTOR SHALL BE RESPONSIBLE FOR CLEANING OF SITE ON A DAILY BASIS.
10. REFER TO ELECTRICAL, MECHANICAL, STRUCTURAL, PLUMBING, ETC. DEMOLITION DRAWINGS FOR ADDITIONAL ITEMS.
11. PATCH AND REPAIR SURFACES (FLOOR, WALL, CEILING) DAMAGED IN PREPARATION FOR NEW EQUIPMENT AND FINISHES.
12. PRIOR TO DEMOLITION, CONTRACTOR IS REQUIRED TO POSSES AN ASBESTOS -CONTAINMENT MATERIALS (ACM) PERMIT FROM THE DEPARTMENT OF LABOR.

DEMOLITION NOTES

1. THE GENERAL CONTRACTOR SHALL VISIT THE SITE AND FAMILIARIZE HIM/HERSELF WITH EXISTING CONDITIONS AND REQUIREMENTS OF THE WORK. THE GENERAL CONTRACTOR SHALL FIELD VERIFY EXACT QUANTITIES OF ALL ITEMS TO BE REMOVED.
2. THE CONTRACTOR SHALL PHOTOGRAPH AND DOCUMENT EXISTING HISTORIC DECORATIVE TRIMS INCLUDING SIZES AND PROFILES PRIOR TO ENVIRONMENTAL REMEDIATION WORK START.
3. DASHED LINES INDICATE WALLS, FIXTURES, EQUIPMENT, ETC. TO BE REMOVED AND DISPOSED OF BY THE CONTRACTOR. ANY QUESTIONS ON SCOPE OF DEMOLITION MUST BE DIRECTED TO THE ARCHITECT PRIOR TO BID.
4. ITEMS TO BE REMOVED / DEMOLISHED AS INDICATED ON THE DRAWINGS ARE INTENDED TO SHOW THE GENERAL SCOPE OF THE DEMOLITION WORK. THE DRAWINGS DO NOT REPRESENT IN DETAIL ALL ITEMS OR SITUATIONS THAT MAY BE ENCOUNTERED DURING THE DEMOLITION. IT IS THE CONTRACTOR'S RESPONSIBILITY TO REMOVE, PROTECT, AND MAKE CORRECTIONS AS REQUIRED TO ACHIEVE DRAWING INTENT. THE GENERAL CONTRACTOR SHALL NOTIFY ARCHITECT OF ANY STRUCTURAL NONCONFORMITY TO PLANS AND SPECIFICATIONS.
5. THE CONTRACTOR SHALL NOT REMOVE MATERIALS KNOWN TO CONTAIN ASBESTOS. THE CONTRACTOR SHALL PROMPTLY NOTIFY THE OWNER IN THE EVENT THAT THE CONTRACTOR FINDS MATERIALS KNOWN OR SUSPECTED TO CONTAIN ASBESTOS.
6. PLAYLAND RESERVES THE RIGHT TO REVIEW ALL MATERIALS DESIGNATED FOR REMOVAL AND TO RETAIN OWNERSHIP OF SUCH MATERIALS. IF PLAYLAND RETAINS ANY MATERIAL THE CONTRACTOR SHALL MAKE ARRANGEMENTS WITH THE PLAYLAND'S SUPERINTENDENT TO HAVE THOSE MATERIALS REMOVED AND STORED OFF SITE AT NO ADDITIONAL COST.
7. THE CONTRACTOR SHALL REMOVE AND DISCARD ANY REMAINING GAMES OR EQUIPMENT AS DIRECTED BY THE PLAYLAND 'S SUPERINTENDENT.
8. THE CONTRACTOR SHALL USE EXTREME CAUTION IN AREAS OF DEMOLITION WHICH MAY DISTURB EXISTING STRUCTURES. TEMPORARY SHORING, BARRICADES, DUST PARTITIONS, ETC. SHALL BE PROVIDED AS REQUIRED TO PROTECT GENERAL PUBLIC, ALL EXISTING STRUCTURES AND PROPERTY.
9. SEE STRUCTURAL, ELECTRICAL, SPRINKLER, AND PLUMBING DRAWINGS FOR RELATED DEMOLITION WORK.
10. VERIFY LOCATION OF EXISTING STRUCTURES AND SHORE UP ROOF/FLOOR ABOVE AS REQUIRED BEFORE REMOVING WALL.
11. REMOVAL OF ALL CEILINGS AND MOUNTED ITEMS THROUGHOUT THE CONTRACT AREA INCLUDE ANCHORING HARDWARE, AND MISCELLANEOUS FASTENINGS, ETC.
12. WALLS SHALL BE REMOVED AS INDICATED ON DEMOLITION PLANS. ALL UTILITIES IN WALL SHALL BE CUT TO BELOW SLAB OR ABOVE THE CEILING.
13. REMOVE ALL EXISTING ELECTRICAL LINES NOT TO BE RE-USED. ELECTRICAL WIRING SHALL BE DISCONNECTED BACK TO THE NEAREST ACTIVE LOCATION. ALL ABANDONED COMMUNICATION CABLES (DATA, TELEPHONE, FIRE ALARM, AND AUDIO/VIDEO CABLES) SHALL BE REMOVED TO SOURCE IF NOT TAGGED FOR FUTURE USE.
14. DEMOLITION PROCEDURES ARE THE SOLE RESPONSIBILITY OF THE GENERAL CONTRACTOR OF THIS CONTRACT. CONTRACTOR TO "CUT OFF" ALL NECESSARY UTILITIES REQUIRED TO OBTAIN DESIRED RESULTS. CONTRACTOR TO OBTAIN "SHUT OFF" APPROVALS FROM PLAYLAND PRIOR TO SCHEDULED DEMOLITION.
15. THE GENERAL CONTRACTOR SHALL PATCH AND REPAIR ALL EXISTING CONSTRUCTION DISTURBED BY THE WORK AND PREPARE FOR NEW FINISH AS SHOWN ON THE FINISH SCHEDULE.
16. THE EXISTING WOOD FLOOR SHALL BE CLEANED TO ALLOW FOR THE APPLICAITON OF NEW FLOOR COATING.
17. THE GENERAL CONTRACTOR SHALL BE RESPONSIBLE FOR THE CLEANING UP AND HAULING AWAY OF ALL TRASH AND DEBRIS ON A REGULAR BASIS DURING THE CONSTRUCTION PERIOD.
18. ALL DEBRIS REMOVED FROM THE SITE SHALL BE DISPOSED OF IN A LEGAL MANNER.
19. EXISTING EXITS SHALL REMAIN FULLY ACCESSIBLE AND UNOBSTRUCTED DURING THE PROGRESS OF THE WORK.

DEMOLITION LEGEND

EX. WOOD FENCE TO BE DEMOLISHED

EX. WOOD FENCE TO REMAIN

INDICATES REMOVAL

NIC — NOT IN CONTRACT

? — KEY NOTES

KEYNOTE LEGEND

KEY NOTE	NOTE
DM-1	REMOVE EXISTING WOOD SIDING.
DM-3	REMOVE ROLL DOWN DOOR AND ASSOCIATED HARDWARE.
DM-5	REMOVE COLUMN ENCLOSURES. CAREFULLY REMOVE AT LEAST ONE COLUMN ENCLOSURE TO USE AS REFERENCE IN ORDER TO REPLICATE TRIMS TO MATCH LOCATION, SIZE AND SHAPE AS INDICATED. COORDINATE WITH STRUCTURAL DRAWINGS.
DM-6	REMOVE EXISTING WOOD DECKING. (COORDINATE EXTENT OF REMOVAL REQUIRED TO REPAIR FLOOR JOISTS TO REMAIN AS NEEDED - SEE STRUCTURAL DRAWINGS).
DM-7	REMOVE EXISTING DOOR & FRAME.
DM-9	CONTRACTOR TO REMOVE ANY REMAINING EQUIPMENT AND BUILDING CONTENT. CONTENT MAY INCLUDE BUT NOT LIMITED TO REFRIGERATOR, STORAGE, RACKS, AC UNITS, GAMES ETC.
DM-21	CAREFULLY REMOVE FINIAL LIGHTS (H6) FOR REFURBISHMENT AND REINSTALLATION
DM-23	REMOVE EXISTING FENCE.
DM-27	REMOVE EXISTING FLOORING.
DM-38	REMOVE EXISTING LADDER.
DM-46	EXISTING ELECTRICAL EQUIPMENT TO BE PROTECTED DURING CONSTRUCTION.
DM-58	REMOVE PLYWOOD BOARDS AND COVERINGS FROM THE WINDOW ON BOTH INTERIOR AND EXTERIOR.
DM-60	RAISED FLOOR CONSTRUCTION TO BE REMOVED.
DM-61	REMOVE EXISTING FLOORING TO THE CONCRETE SLAB ON GRADE.
DM-63	CONTRACTOR TO CAREFULLY DOCUMENT AND REMOVE ALL EXISTING FACADE MATERIALS AND TRIM.
DM-64	REMOVE EXISTING STAIRCASE, AND PLATFORM TO THE SECOND FLOOR.
DM-81	EXISTING DATA/ TELEPHONE COMMUNICATION CABLES TO BE SUPPORTED DURING CONSTRUCTION AND RELOCATED AS INDICATED.

*COORDINATE EXTENT OF REMOVAL REQUIRED TO REPAIR FLOOR JOISTS- SEE STRUCTURAL DRAWINGS.

8/30/2022 2:52:24 PM

CONSULTANT INFORMATION

The LiRo Group
3 Aerial Way, Syosset, New York 11791
(516) 938-5476 www.liro.com

CONSULTANT SEAL

REGISTERED ARCHITECT ROBERT D. TOWNLEY JR. 023290 STATE OF NEW YORK

REVISION NUMBER	DATE	MADE BY	APP'D BY	REVISION

RECORD DRAWING CERTIFICATION

☐ AS BUILT – CHANGES AS NOTED ☐ AS BUILT – NO CHANGES

CONTRACTOR
NAME
SIGNATURE
TITLE DATE

PROJECT COORDINATOR
NAME
SIGNATURE
TITLE DATE

WESTCHESTER COUNTY, NEW YORK
DEPARTMENT OF PUBLIC WORKS AND TRANSPORTATION
DIVISION OF ENGINEERING

INFRASTRUCTURE REHABILITATION - PHASE 3
PLAYLAND PARK, RYE, NEW YORK
SOUTHEAST ARCADE BUILDING
SE ARCADE GROUND FLOOR - DEMOLITION PLAN

CONTRACT NUMBER	22-523
SHEET NUMBER	SA-A-01
DWG NO.:	588 of 664
SCALE:	As indicated
DATE:	08/23/2022
DPW FILE NUMBER	1-118-A-1337-0
REV. NO.	0

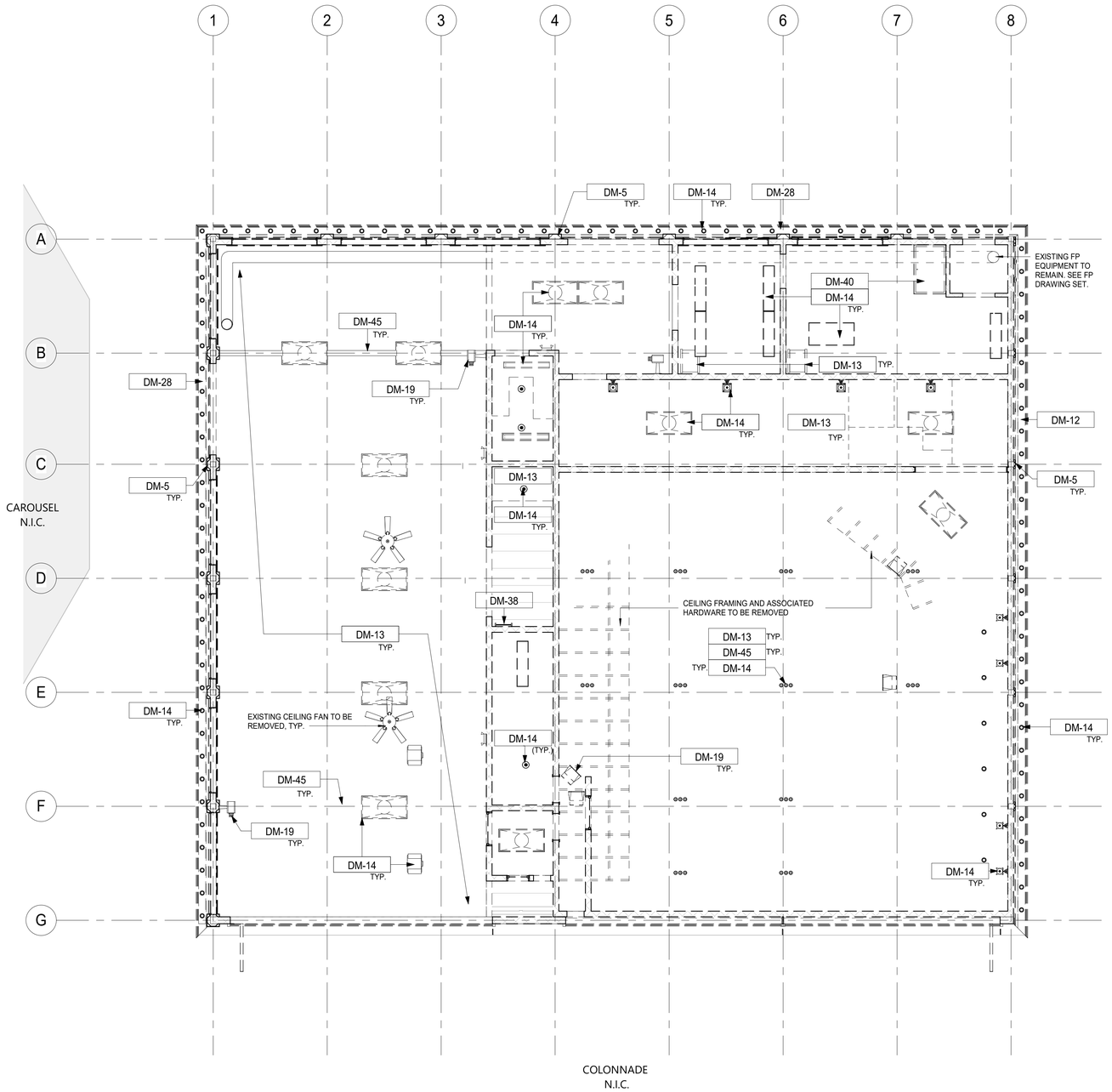

1 GROUND LEVEL DEMOLITION REFLECTED CEILING PLAN
3/16" = 1'-0"

DEMOLITION GENERAL NOTES

1. ALL DEMOLITION AND REMOVAL WORK SHALL BE COMPLETED AS INDICATED AND NOTED ON THE DRAWINGS AND AS SPECIFIED.
2. PRIOR TO STARTING WORK, MAKE A THOROUGH EXAMINATION OF THE PORTIONS OF THE STRUCTURE IN WHICH THE WORK IS TO BE PERFORMED. CHECK ALL THE WORK AT ADJOINING OR UNDERLYING LOCATIONS. REPORT TO THE ARCHITECT ANY AND ALL CONDITIONS WHICH MAY INTERFERE WITH OR OTHERWISE PREVENT THE PROPER EXECUTION AND COMPLETION OF THE WORK. DO NOT START WORK UNTIL SUCH CONDITIONS HAS BEEN EXAMINED AND MUTUALLY AGREED UPON WITH THE ARCHITECT.
3. DASHED LINES INDICATE WALLS, FIXTURES, EQUIPMENT, ETC. TO BE REMOVED AND DISPOSED OF BY G.C. . ANY QUESTIONS ON SCOPE OF DEMOLITION MUST BE DIRECTED TO THE ARCHITECT PRIOR TO BID. PROVIDE SHORING AND BRACING AS REQUIRED.
4. THE EXISTING WORK REQUIRED TO BE REMOVED SHALL BE AS INDICATED BUT SHALL ALSO EXTEND TO INCLUDE ANY AND ALL OTHER EXISTING MATERIALS OR WORK NECESSARY TO INSTALL THE NEW WORK AS SHOWN AND SPECIFIED AND TO CONNECT SAME WITH THE EXISTING WORK IN AN APPROVED MANNER.
5. ALTER AND RESTORE EXISTING WALLS, PARTITIONS, COLUMNS, CEILING AND FLOORS, AND THEIR RESPECTIVE FINISHED SURFACES TO ACCOMMODATE NEW CONSTRUCTION AND FINISHES, IN ACCORDANCE WITH DRAWINGS AND SPECIFICATIONS.
6. IMMEDIATELY NOTIFY THE OWNER'S REPRESENTATIVES OF ANY HAZARDOUS MATERIALS ENCOUNTERED DURING DEMOLITION/REMOVAL.
7. ALL DIMENSIONS AND CONSTRUCTION CONDITIONS TO BE VERIFIED BY THE CONTRACTOR PRIOR TO THE START OF WORK.
8. CONTAINERIZED DEMOLITION DEBRIS SHALL BE TCLP TESTED TO CONFIRM WASTE MAY BE DISPOSED OF AS NON-HAZARDOUS.
9. ALL ITEMS SCHEDULED FOR DEMOLITION SHALL BE REMOVED FROM THE SITE UNLESS OTHERWISE NOTED. CONTRACTOR SHALL BE RESPONSIBLE FOR CLEANING OF SITE ON A DAILY BASIS.
10. REFER TO ELECTRICAL, MECHANICAL, STRUCTURAL, PLUMBING, ETC. DEMOLITION DRAWINGS FOR ADDITIONAL ITEMS.
11. PATCH AND REPAIR SURFACES (FLOOR, WALL, CEILING) DAMAGED IN PREPARATION FOR NEW EQUIPMENT AND FINISHES.

DEMOLITION LEGEND

EX. WOOD FENCE TO BE DEMOLISHED

EX. WOOD FENCE TO REMAIN

INDICATES REMOVAL

NIC — NOT IN CONTRACT

? — KEY NOTES

KEYNOTE LEGEND

KEY NOTE	NOTE
DM-5	REMOVE COLUMN ENCLOSURES. CAREFULLY REMOVE AT LEAST ONE COLUMN ENCLOSURE TO USE AS REFERENCE IN ORDER TO REPLICATE TRIMS TO MATCH LOCATION, SIZE AND SHAPE AS INDICATED. COORDINATE WITH STRUCTURAL DRAWINGS.
DM-12	REMOVE EXTERIOR SOFFIT AS NECESSARY WHERE PERIMETER LIGHTING IS TO BE REMOVED. COORDINATE WITH ELECTRICAL DRAWINGS.
DM-13	REMOVE EXISTING CEILING AND ALL ACCESSORIES AND EQUIPMENT.
DM-14	REMOVE EXISTING LIGHTING FIXTURES AND ELECTRICAL WIRING CONNECTED TO THESE FIXTURES. SEE ELECTRICAL FOR DETAILS.
DM-19	DISCONNECT AND REMOVE EXISTING SUSPENDED EQUIPMENT SUCH AS CAMERAS, SPEAKERS, ETC. SEE ELECTRICAL DRAWINGS FOR DETAILS.
DM-28	REMOVE EXISTING GUTTER, FASCIA, AND SOFFITS.
DM-38	REMOVE EXISTING LADDER.
DM-40	REMOVE ACCESS HATCH.
DM-45	EXISTING TRUSS TO REMAIN AND BE PROTECTED DURING CONSTRUCTION.

8/30/2022 2:52:33 PM

CONSULTANT INFORMATION

The LiRo Group
3 Aerial Way, Syosset, New York 11791
(516) 938-5476 www.liro.com

CONSULTANT SEAL

REGISTERED ARCHITECT ROBERT D. YOUNG JR. 023280 STATE OF NEW YORK

REVISION NUMBER	DATE	MADE BY	APP'D BY	REVISION

RECORD DRAWING CERTIFICATION

☐ AS BUILT – CHANGES AS NOTED ☐ AS BUILT – NO CHANGES

CONTRACTOR
NAME
SIGNATURE
TITLE DATE

PROJECT COORDINATOR
NAME
SIGNATURE
TITLE DATE

WESTCHESTER COUNTY, NEW YORK
DEPARTMENT OF PUBLIC WORKS AND TRANSPORTATION
DIVISION OF ENGINEERING

INFRASTRUCTURE REHABILITATION - PHASE 3
PLAYLAND PARK, RYE, NEW YORK
SOUTHEAST ARCADE BUILDING
SE GROUND FLOOR DEMOLITION- REFLECTED CEILING PLAN

CONTRACT NUMBER	22-523
SHEET NUMBER	SA-A-02
DWG NO.:	589 of 664
SCALE:	As indicated
DATE:	08/23/2022
DPW FILE NUMBER	1-118-A-1338-0
REV. NO.	0

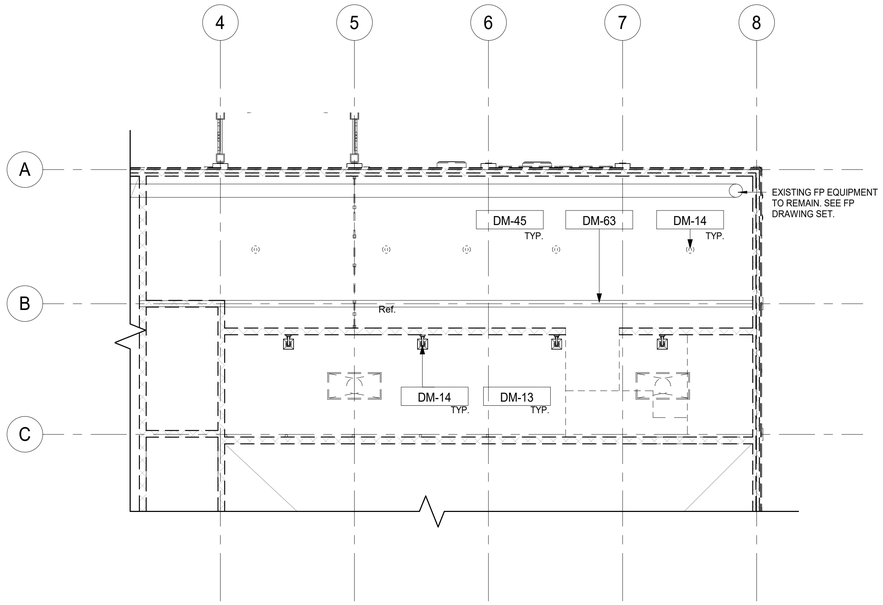

2 MEZZANINE DEMOLITION REFLECTED CEILING PLAN
3/16" = 1'-0"

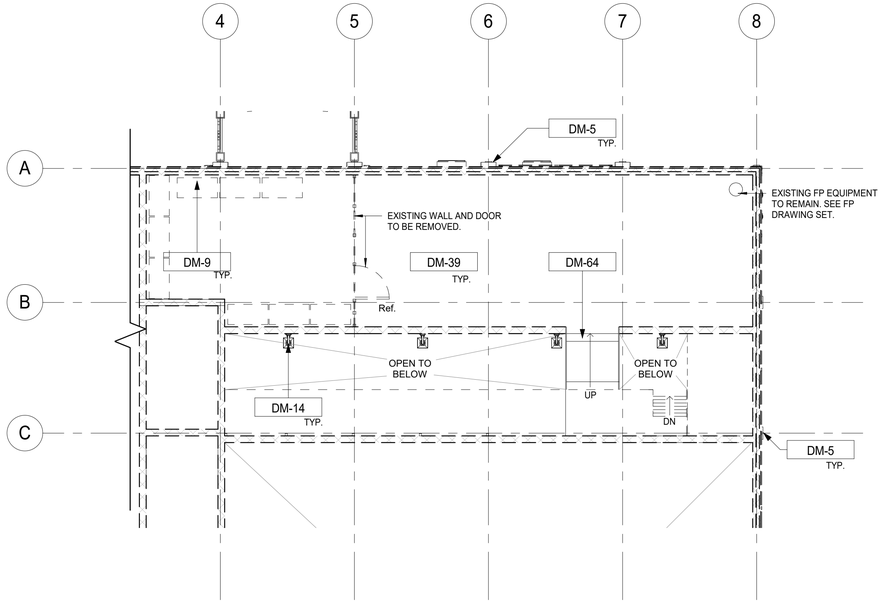

1 MEZZANINE DEMOLITION PLAN
3/16" = 1'-0"

DEMOLITION GENERAL NOTES

1. ALL DEMOLITION AND REMOVAL WORK SHALL BE COMPLETED AS INDICATED AND NOTED ON THE DRAWINGS AND AS SPECIFIED.
2. PRIOR TO STARTING WORK, MAKE A THOROUGH EXAMINATION OF THE PORTIONS OF THE STRUCTURE IN WHICH THE WORK IS TO BE PERFORMED. CHECK ALL THE WORK AT ADJOINING OR UNDERLYING LOCATIONS. REPORT TO THE ARCHITECT ANY AND ALL CONDITIONS WHICH MAY INTERFERE WITH OR OTHERWISE PREVENT THE PROPER EXECUTION AND COMPLETION OF THE WORK. DO NOT START WORK UNTIL SUCH CONDITIONS HAS BEEN EXAMINED AND MUTUALLY AGREED UPON WITH THE ARCHITECT.
3. DASHED LINES INDICATE WALLS, FIXTURES, EQUIPMENT, ETC. TO BE REMOVED AND DISPOSED OF BY G.C. . ANY QUESTIONS ON SCOPE OF DEMOLITION MUST BE DIRECTED TO THE ARCHITECT PRIOR TO BID. PROVIDE SHORING AND BRACING AS REQUIRED.
4. THE EXISTING WORK REQUIRED TO BE REMOVED SHALL BE AS INDICATED BUT SHALL ALSO EXTEND TO INCLUDE ANY AND ALL OTHER EXISTING MATERIALS OR WORK NECESSARY TO INSTALL THE NEW WORK AS SHOWN AND SPECIFIED AND TO CONNECT SAME WITH THE EXISTING WORK IN AN APPROVED MANNER.
5. ALTER AND RESTORE EXISTING WALLS, PARTITIONS, COLUMNS, CEILING AND FLOORS, AND THEIR RESPECTIVE FINISHED SURFACES TO ACCOMMODATE NEW CONSTRUCTION AND FINISHES, IN ACCORDANCE WITH DRAWINGS AND SPECIFICATIONS.
6. IMMEDIATELY NOTIFY THE OWNER'S REPRESENTATIVES OF ANY HAZARDOUS MATERIALS ENCOUNTERED DURING DEMOLITION/REMOVAL.
7. ALL DIMENSIONS AND CONSTRUCTION CONDITIONS TO BE VERIFIED BY THE CONTRACTOR PRIOR TO THE START OF WORK.
8. CONTAINERIZED DEMOLITION DEBRIS SHALL BE TCLP TESTED TO CONFIRM WASTE MAY BE DISPOSED OF AS NON-HAZARDOUS.
9. ALL ITEMS SCHEDULED FOR DEMOLITION SHALL BE REMOVED FROM THE SITE UNLESS OTHERWISE NOTED. CONTRACTOR SHALL BE RESPONSIBLE FOR CLEANING OF SITE ON A DAILY BASIS.
10. REFER TO ELECTRICAL, MECHANICAL, STRUCTURAL, PLUMBING, ETC. DEMOLITION DRAWINGS FOR ADDITIONAL ITEMS.
11. PATCH AND REPAIR SURFACES (FLOOR, WALL, CEILING) DAMAGED IN PREPARATION FOR NEW EQUIPMENT AND FINISHES.

DEMOLITION RCP GENERAL NOTES

1. ALL DEMOLITION AND REMOVAL WORK SHALL BE COMPLETED AS INDICATED AND NOTED ON THE DRAWINGS AND AS SPECIFIED.
2. PRIOR TO STARTING WORK, MAKE A THOROUGH EXAMINATION OF THE PORTIONS OF THE STRUCTURE IN WHICH THE WORK IS TO BE PERFORMED. CHECK ALL THE WORK AT ADJOINING OR UNDERLYING LOCATIONS. REPORT TO THE ARCHITECT ANY AND ALL CONDITIONS WHICH MAY INTERFERE WITH OR OTHERWISE PREVENT THE PROPER EXECUTION AND COMPLETION OF THE WORK. DO NOT START WORK UNTIL SUCH CONDITIONS HAS BEEN EXAMINED AND MUTUALLY AGREED UPON WITH THE ARCHITECT.
3. DASHED LINES INDICATE WALLS, FIXTURES, EQUIPMENT, ETC. TO BE REMOVED AND DISPOSED OF BY G.C. . ANY QUESTIONS ON SCOPE OF DEMOLITION MUST BE DIRECTED TO THE ARCHITECT PRIOR TO BID. PROVIDE SHORING AND BRACING AS REQUIRED.
4. THE EXISTING WORK REQUIRED TO BE REMOVED SHALL BE AS INDICATED BUT SHALL ALSO EXTEND TO INCLUDE ANY AND ALL OTHER EXISTING MATERIALS OR WORK NECESSARY TO INSTALL THE NEW WORK AS SHOWN AND SPECIFIED AND TO CONNECT SAME WITH THE EXISTING WORK IN AN APPROVED MANNER.
5. ALTER AND RESTORE EXISTING WALLS, PARTITIONS, COLUMNS, CEILING AND FLOORS, AND THEIR RESPECTIVE FINISHED SURFACES TO ACCOMMODATE NEW CONSTRUCTION AND FINISHES, IN ACCORDANCE WITH DRAWINGS AND SPECIFICATIONS.
6. IMMEDIATELY NOTIFY THE OWNER'S REPRESENTATIVES OF ANY HAZARDOUS MATERIALS ENCOUNTERED DURING DEMOLITION/REMOVAL.
7. ALL DIMENSIONS AND CONSTRUCTION CONDITIONS TO BE VERIFIED BY THE CONTRACTOR PRIOR TO THE START OF WORK.
8. CONTAINERIZED DEMOLITION DEBRIS SHALL BE TCLP TESTED TO CONFIRM WASTE MAY BE DISPOSED OF AS NON-HAZARDOUS.
9. ALL ITEMS SCHEDULED FOR DEMOLITION SHALL BE REMOVED FROM THE SITE UNLESS OTHERWISE NOTED. CONTRACTOR SHALL BE RESPONSIBLE FOR CLEANING OF SITE ON A DAILY BASIS.
10. REFER TO ELECTRICAL, MECHANICAL, STRUCTURAL, PLUMBING, ETC. DEMOLITION DRAWINGS FOR ADDITIONAL ITEMS.
11. PATCH AND REPAIR SURFACES (FLOOR, WALL, CEILING) DAMAGED IN PREPARATION FOR NEW EQUIPMENT AND FINISHES.

DEMOLITION LEGEND

EX. WOOD FENCE TO BE DEMOLISHED

EX. WOOD FENCE TO REMAIN

INDICATES REMOVAL

NIC — NOT IN CONTRACT

? — KEY NOTES

KEYNOTE LEGEND

KEY NOTE	NOTE
DM-5	REMOVE COLUMN ENCLOSURES. CAREFULLY REMOVE AT LEAST ONE COLUMN ENCLOSURE TO USE AS REFERENCE IN ORDER TO REPLICATE TRIMS TO MATCH LOCATION, SIZE AND SHAPE AS INDICATED. COORDINATE WITH STRUCTURAL DRAWINGS.
DM-9	CONTRACTOR TO REMOVE ANY REMAINING EQUIPMENT AND BUILDING CONTENT. CONTENT MAY INCLUDE BUT NOT LIMITED TO REFRIGERATOR, STORAGE, RACKS, AC UNITS, GAMES ETC.
DM-13	REMOVE EXISTING CEILING AND ALL ACCESSORIES AND EQUIPMENT.
DM-14	REMOVE EXISTING LIGHTING FIXTURES AND ELECTRICAL WIRING CONNECTED TO THESE FIXTURES. SEE ELECTRICAL FOR DETAILS.
DM-39	REMOVE MEZZANINE STRUCTURE IN ITS ENTIRETY.
DM-45	EXISTING TRUSS TO REMAIN AND BE PROTECTED DURING CONSTRUCTION.
DM-63	CONTRACTOR TO CAREFULLY DOCUMENT AND REMOVE ALL EXISTING FACADE MATERIALS AND TRIM.
DM-64	REMOVE EXISTING STAIRCASE, AND PLATFORM TO THE SECOND FLOOR.

8/30/2022 2:52:35 PM

CONSULTANT INFORMATION

The LiRo Group

3 Aerial Way, Syosset, New York 11791
(516) 938-5476 www.liro.com

CONSULTANT SEAL

REGISTERED ARCHITECT ROBERT D. DONOVAN 023229 STATE OF NEW YORK

REVISION NUMBER	DATE	MADE BY	APP'D BY	REVISION

RECORD DRAWING CERTIFICATION

☐ AS BUILT – CHANGES AS NOTED ☐ AS BUILT – NO CHANGES

CONTRACTOR
NAME
SIGNATURE
TITLE DATE

PROJECT COORDINATOR
NAME
SIGNATURE
TITLE DATE

WESTCHESTER COUNTY, NEW YORK
DEPARTMENT OF PUBLIC WORKS AND TRANSPORTATION
DIVISION OF ENGINEERING

INFRASTRUCTURE REHABILITATION - PHASE 3
PLAYLAND PARK, RYE, NEW YORK
SOUTHEAST ARCADE BUILDING
SE ARCADE SECOND FLOOR- DEMOLITION PLAN & RCP

CONTRACT NUMBER	22-523
SHEET NUMBER	SA-A-03
DWG NO.:	590 of 664
SCALE:	As indicated
DATE:	08/23/2022
DPW FILE NUMBER	1-118-A-1339-0
REV. NO.	0

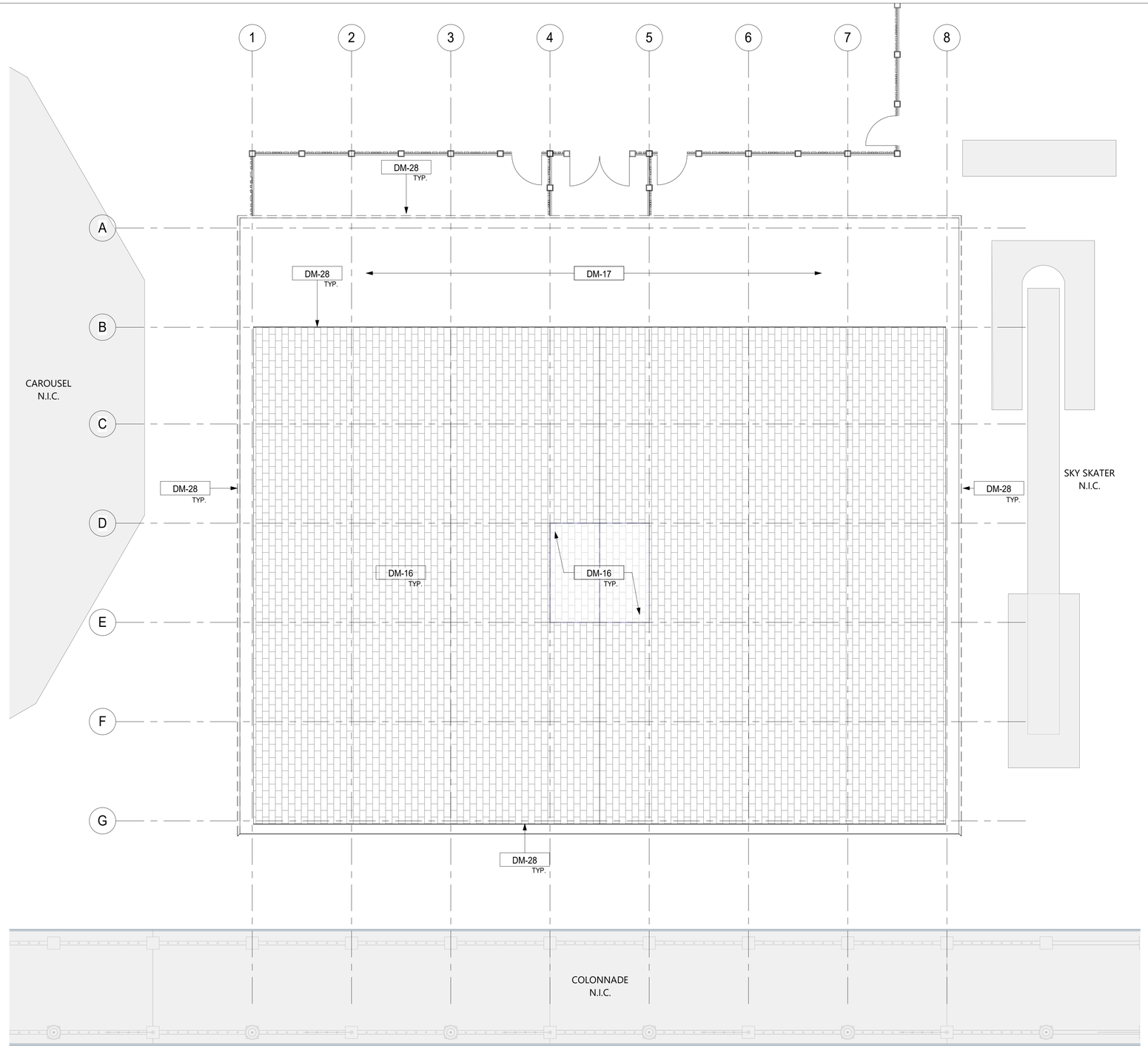

1 ROOF LEVEL DEMOLITION PLAN
3/16" = 1'-0"

DEMOLITION GENERAL NOTES

1. ALL DEMOLITION AND REMOVAL WORK SHALL BE COMPLETED AS INDICATED AND NOTED ON THE DRAWINGS AND AS SPECIFIED.
2. PRIOR TO STARTING WORK, MAKE A THOROUGH EXAMINATION OF THE PORTIONS OF THE STRUCTURE IN WHICH THE WORK IS TO BE PERFORMED. CHECK ALL THE WORK AT ADJOINING OR UNDERLYING LOCATIONS. REPORT TO THE ARCHITECT ANY AND ALL CONDITIONS WHICH MAY INTERFERE WITH OR OTHERWISE PREVENT THE PROPER EXECUTION AND COMPLETION OF THE WORK. DO NOT START WORK UNTIL SUCH CONDITIONS HAS BEEN EXAMINED AND MUTUALLY AGREED UPON WITH THE ARCHITECT.
3. DASHED LINES INDICATE WALLS, FIXTURES, EQUIPMENT, ETC. TO BE REMOVED AND DISPOSED OF BY G.C. . ANY QUESTIONS ON SCOPE OF DEMOLITION MUST BE DIRECTED TO THE ARCHITECT PRIOR TO BID. PROVIDE SHORING AND BRACING AS REQUIRED.
4. THE EXISTING WORK REQUIRED TO BE REMOVED SHALL BE AS INDICATED BUT SHALL ALSO EXTEND TO INCLUDE ANY AND ALL OTHER EXISTING MATERIALS OR WORK NECESSARY TO INSTALL THE NEW WORK AS SHOWN AND SPECIFIED AND TO CONNECT SAME WITH THE EXISTING WORK IN AN APPROVED MANNER.
5. ALTER AND RESTORE EXISTING WALLS, PARTITIONS, COLUMNS, CEILING AND FLOORS, AND THEIR RESPECTIVE FINISHED SURFACES TO ACCOMMODATE NEW CONSTRUCTION AND FINISHES, IN ACCORDANCE WITH DRAWINGS AND SPECIFICATIONS.
6. IMMEDIATELY NOTIFY THE OWNER'S REPRESENTATIVES OF ANY HAZDAROUS MATERIALS ENCOUNTERED DURING DEMOLITION/REMOVAL.
7. ALL DIMENSIONS AND CONSTRUCTION CONDITIONS TO BE VERIFIED BY THE CONTRACTOR PRIOR TO THE START OF WORK.
8. CONTAINERIZED DEMOLITION DEBRIS SHALL BE TCLP TESTED TO CONFIRM WASTE MAY BE DISPOSED OF AS NON-HAZARDOUS.
9. ALL ITEMS SCHEDULED FOR DEMOLITION SHALL BE REMOVED FROM THE SITE UNLESS OTHERWISE NOTED. CONTRACTOR SHALL BE RESPONSIBLE FOR CLEANING OF SITE ON A DAILY BASIS.
10. REFER TO ELECTRICAL, MECHANICAL, STRUCTURAL, PLUMBING, ETC. DEMOLITION DRAWINGS FOR ADDITIONAL ITEMS.
11. PATCH AND REPAIR SURFACES (FLOOR, WALL, CEILING) DAMAGED IN PREPARATION FOR NEW EQUIPMENT AND FINISHES.

DEMOLITION LEGEND

EX. WOOD FENCE TO BE DEMOLISHED

EX. WOOD FENCE TO REMAIN

INDICATES REMOVAL

NIC — NOT IN CONTRACT

? — KEY NOTES

KEYNOTE LEGEND

KEY NOTE	NOTE
DM-16	REMOVE EXISTING ROOFING SHINGLES, UNDERLAYMENT AND ANY ROTTED WOOD SHEATHING. REPLACE DAMAGED SHEATHING TO MATCH EXISTING. COORDINATE WITH A/E.
DM-17	REMOVE EXISTING ROOFING MEMBRANES, UNDERLAYMENT AND ANY ROTTED WOOD SHEATHING. REPLACE EXISTING DAMAGED SHEATHING TO MATCH EXISTING. COORDINATE WITH A/E.
DM-28	REMOVE EXISTING GUTTER, FASCIA, AND SOFFITS.

8/30/2022 2:52:40 PM

CONSULTANT INFORMATION

The LiRo Group
3 Aerial Way, Syosset, New York 11791
(516) 938-5476 www.liro.com

CONSULTANT SEAL

REGISTERED ARCHITECT ROBERT D. YOUNG JR. 023280 STATE OF NEW YORK

REVISION NUMBER	DATE	MADE BY	APP'D BY	REVISION

RECORD DRAWING CERTIFICATION

☐ AS BUILT – CHANGES AS NOTED ☐ AS BUILT – NO CHANGES

CONTRACTOR
NAME
SIGNATURE
TITLE DATE

PROJECT COORDINATOR
NAME
SIGNATURE
TITLE DATE

WESTCHESTER COUNTY, NEW YORK
DEPARTMENT OF PUBLIC WORKS AND TRANSPORTATION
DIVISION OF ENGINEERING

INFRASTRUCTURE REHABILITATION - PHASE 3
PLAYLAND PARK, RYE, NEW YORK
SOUTHEAST ARCADE BUILDING
SE ARCADE ROOF FLOOR - DEMOLITION PLAN

CONTRACT NUMBER	22-523
SHEET NUMBER	SA-A-04
DWG NO.:	591 of 664
SCALE:	As indicated
DATE:	08/23/2022
DPW FILE NUMBER	1-118-A-1340-0
REV. NO.	0

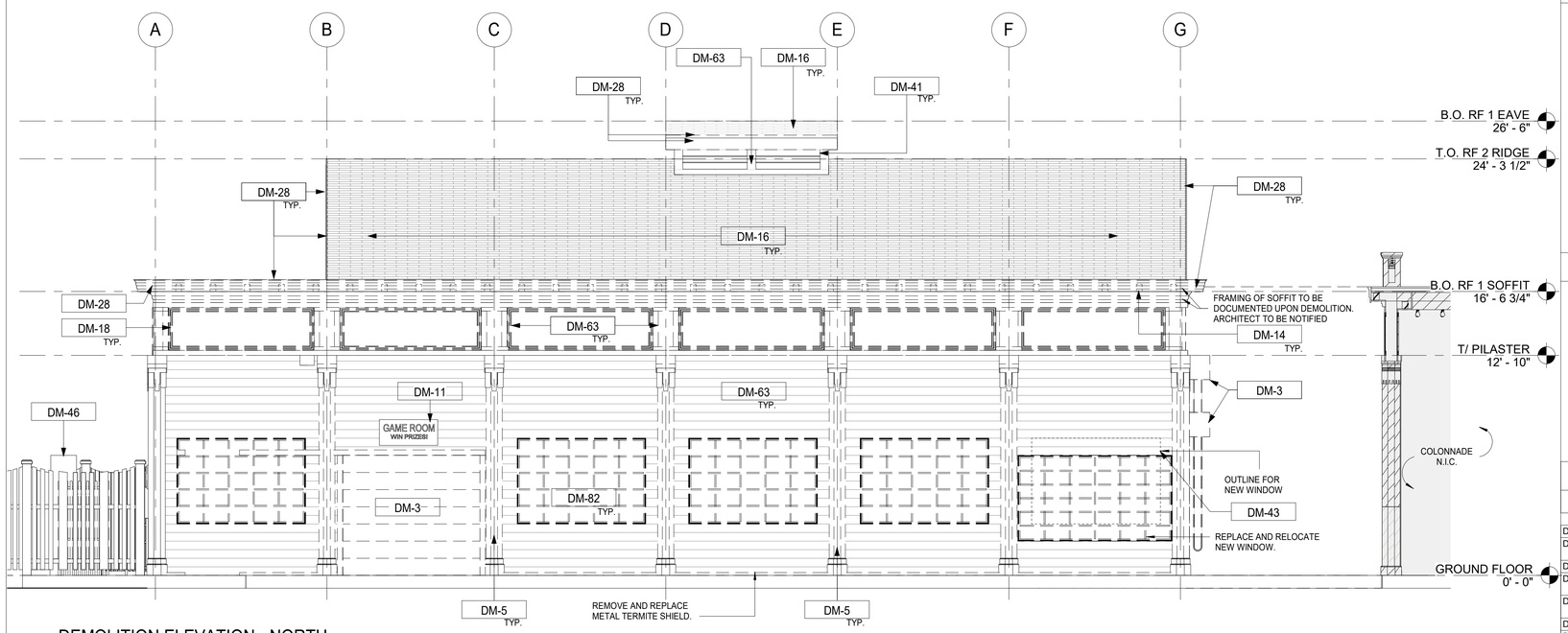

1 DEMOLITION ELEVATION - NORTH
1/4" = 1'-0"

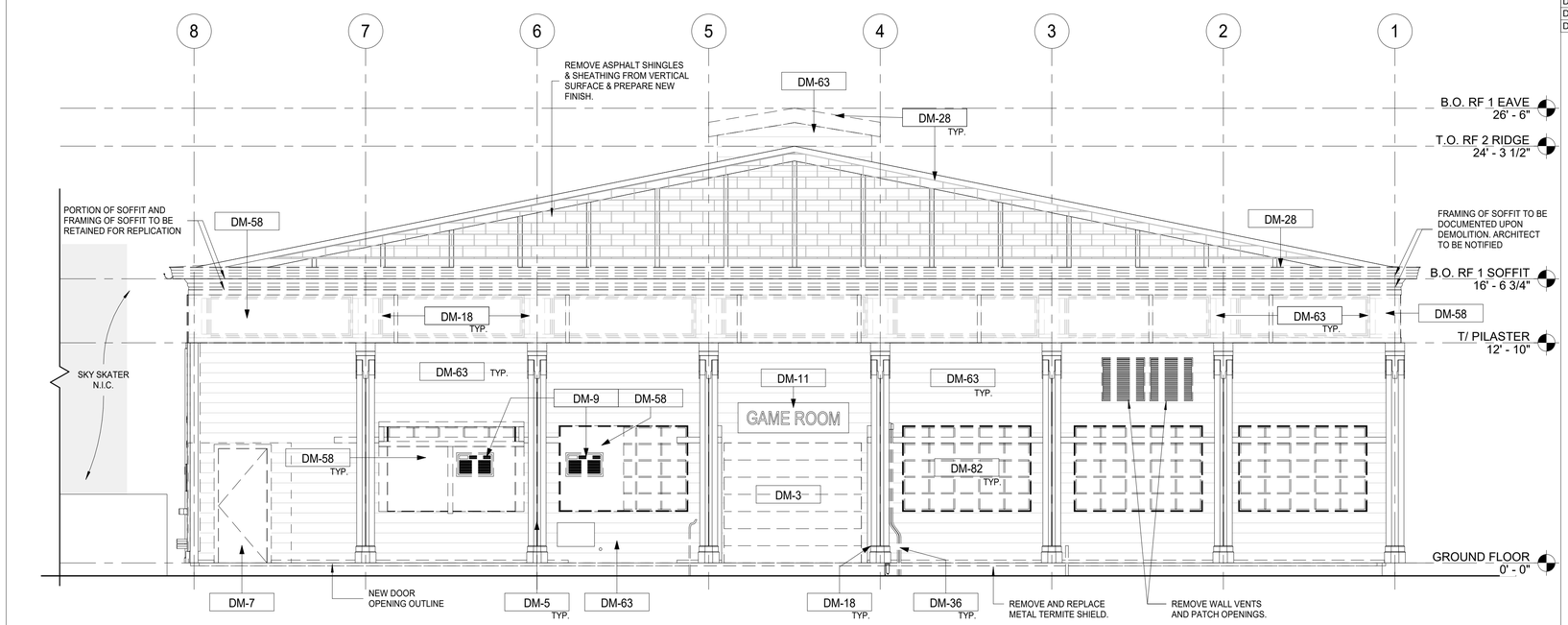

2 DEMOLITION ELEVATION - EAST
1/4" = 1'-0"

DEMOLITION GENERAL NOTES

1. ALL DEMOLITION AND REMOVAL WORK SHALL BE COMPLETED AS INDICATED AND NOTED ON THE DRAWINGS AND AS SPECIFIED.
2. PRIOR TO STARTING WORK, MAKE A THOROUGH EXAMINATION OF THE PORTIONS OF THE STRUCTURE IN WHICH THE WORK IS TO BE PERFORMED. CHECK ALL THE WORK AT ADJOINING OR UNDERLYING LOCATIONS. REPORT TO THE ARCHITECT ANY AND ALL CONDITIONS WHICH MAY INTERFERE WITH OR OTHERWISE PREVENT THE PROPER EXECUTION AND COMPLETION OF THE WORK. DO NOT START WORK UNTIL SUCH CONDITIONS HAS BEEN EXAMINED AND MUTUALLY AGREED UPON WITH THE ARCHITECT.
3. DASHED LINES INDICATE WALLS, FIXTURES, EQUIPMENT, ETC. TO BE REMOVED AND DISPOSED OF BY G.C. . ANY QUESTIONS ON SCOPE OF DEMOLITION MUST BE DIRECTED TO THE ARCHITECT PRIOR TO BID. PROVIDE SHORING AND BRACING AS REQUIRED.
4. THE EXISTING WORK REQUIRED TO BE REMOVED SHALL BE AS INDICATED BUT SHALL ALSO EXTEND TO INCLUDE ANY AND ALL OTHER EXISTING MATERIALS OR WORK NECESSARY TO INSTALL THE NEW WORK AS SHOWN AND SPECIFIED AND TO CONNECT SAME WITH THE EXISTING WORK IN AN APPROVED MANNER.
5. ALTER AND RESTORE EXISTING WALLS, PARTITIONS, COLUMNS, CEILING AND FLOORS, AND THEIR RESPECTIVE FINISHED SURFACES TO ACCOMMODATE NEW CONSTRUCTION AND FINISHES, IN ACCORDANCE WITH DRAWINGS AND SPECIFICATIONS.
6. IMMEDIATELY NOTIFY THE OWNER'S REPRESENTATIVES OF ANY HAZDAROUS MATERIALS ENCOUNTERED DURING DEMOLITION/REMOVAL.
7. ALL DIMENSIONS AND CONSTRUCTION CONDITIONS TO BE VERIFIED BY THE CONTRACTOR PRIOR TO THE START OF WORK.
8. CONTAINERIZED DEMOLITION DEBRIS SHALL BE TCLP TESTED TO CONFIRM WASTE MAY BE DISPOSED OF AS NON-HAZARDOUS.
9. ALL ITEMS SCHEDULED FOR DEMOLITION SHALL BE REMOVED FROM THE SITE UNLESS OTHERWISE NOTED. CONTRACTOR SHALL BE RESPONSIBLE FOR CLEANING OF SITE ON A DAILY BASIS.
10. REFER TO ELECTRICAL, MECHANICAL, STRUCTURAL, PLUMBING, ETC. DEMOLITION DRAWINGS FOR ADDITIONAL ITEMS.
11. PATCH AND REPAIR SURFACES (FLOOR, WALL, CEILING) DAMAGED IN PREPARATION FOR NEW EQUIPMENT AND FINISHES.

DEMOLITION LEGEND

EX. WOOD FENCE TO BE DEMOLISHED

EX. WOOD FENCE TO REMAIN

INDICATES REMOVAL

NIC — NOT IN CONTRACT

? — KEY NOTES

KEYNOTE LEGEND

KEY NOTE	NOTE
DM-3	REMOVE ROLL DOWN DOOR AND ASSOCIATED HARDWARE.
DM-5	REMOVE COLUMN ENCLOSURES. CAREFULLY REMOVE AT LEAST ONE COLUMN ENCLOSURE TO USE AS REFERENCE IN ORDER TO REPLICATE TRIMS TO MATCH LOCATION, SIZE AND SHAPE AS INDICATED. COORDINATE WITH STRUCTURAL DRAWINGS.
DM-7	REMOVE EXISTING DOOR & FRAME.
DM-9	CONTRACTOR TO REMOVE ANY REMAINING EQUIPMENT AND BUILDING CONTENT. CONTENT MAY INCLUDE BUT NOT LIMITED TO REFRIGERATOR, STORAGE, RACKS, AC UNITS, GAMES ETC.
DM-11	CAREFULLY REMOVE AND RETURN TO OWNER ALL EXISTING SIGNAGE AND LETTERING. COORDINATE SIGNAGE REMOVAL WITH OWNER PRIOR TO REMOVAL OF ANY SIGNAGE.
DM-14	REMOVE EXISTING LIGHTING FIXTURES AND ELECTRICAL WIRING CONNECTED TO THESE FIXTURES. SEE ELECTRICAL FOR DETAILS.
DM-16	REMOVE EXISTING ROOFING SHINGLES, UNDERLAYMENT AND ANY ROTTED WOOD SHEATHING. REPLACE DAMAGED SHEATHING TO MATCH EXISTING. COORDINATE WITH A/E.
DM-18	REMOVE EXISTING PANELS & TRIMS.
DM-28	REMOVE EXISTING GUTTER, FASCIA, AND SOFFITS.
DM-36	CAREFULLY REMOVE AND RELOCATE EXISTING WIRING, CONDUITS. SEE ELECTRICAL DRAWINGS.
DM-41	REMOVE EXISTING LOUVER.
DM-43	REMOVE SECTION OF EXISTING WALL. PROVIDE HEADER AND SILL AS REQUIRED TO CREATE A WINDOW OPENING. SEE ELEVATIONS.
DM-46	EXISTING ELECTRICAL EQUIPMENT TO BE PROTECTED DURING CONSTRUCTION.
DM-58	REMOVE PLYWOOD BOARDS AND COVERINGS FROM THE WINDOW ON BOTH INTERIOR AND EXTERIOR.
DM-63	CONTRACTOR TO CAREFULLY DOCUMENT AND REMOVE ALL EXISTING FACADE MATERIALS AND TRIM.
DM-82	REMOVE AND STORE WINDOWS FOR FUTURE USE; TYPICAL.

8/30/2022 2:52:44 PM

CONSULTANT INFORMATION

The LiRo Group
3 Aerial Way, Syosset, New York 11791
(516) 938-5476 www.liro.com

CONSULTANT SEAL

REGISTERED ARCHITECT ROBERT D. DONNIGAN 023292 STATE OF NEW YORK

REVISION NUMBER	DATE	MADE BY	APP'D BY	REVISION

RECORD DRAWING CERTIFICATION

☐ AS BUILT – CHANGES AS NOTED ☐ AS BUILT – NO CHANGES

CONTRACTOR
NAME
SIGNATURE
TITLE DATE

PROJECT COORDINATOR
NAME
SIGNATURE
TITLE DATE

WESTCHESTER COUNTY, NEW YORK
DEPARTMENT OF PUBLIC WORKS AND TRANSPORTATION
DIVISION OF ENGINEERING

INFRASTRUCTURE REHABILITATION - PHASE 3
PLAYLAND PARK, RYE, NEW YORK
SOUTHEAST ARCADE BUILDING
SE ARCADE EXTERIOR DEMOLITION ELEVATIONS 1

CONTRACT NUMBER	22-523
SHEET NUMBER	SA-A-05
DWG NO.:	592 of 664
SCALE:	1/4" = 1'-0"
DATE:	08/23/2022
DPW FILE NUMBER	1-118-A-1341-0
REV. NO.	0

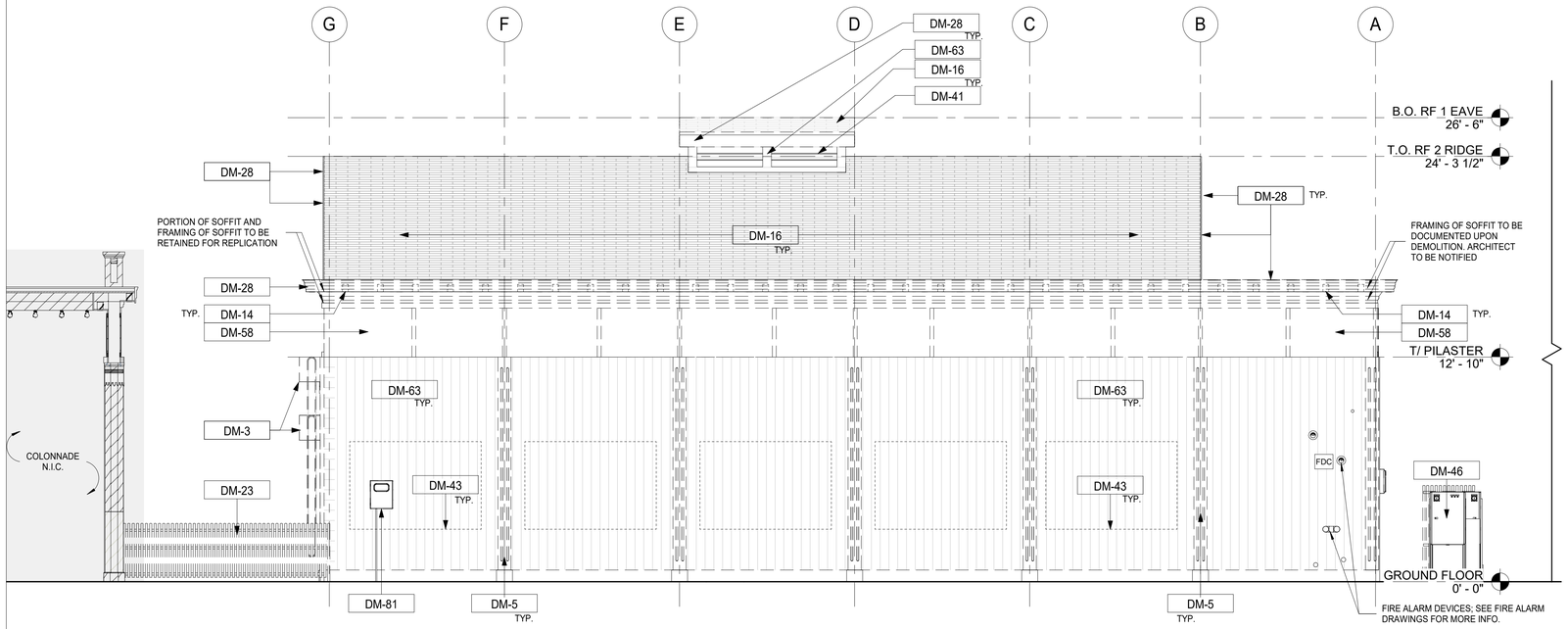

1 DEMOLITION ELEVATION - SOUTH
1/4" = 1'-0"

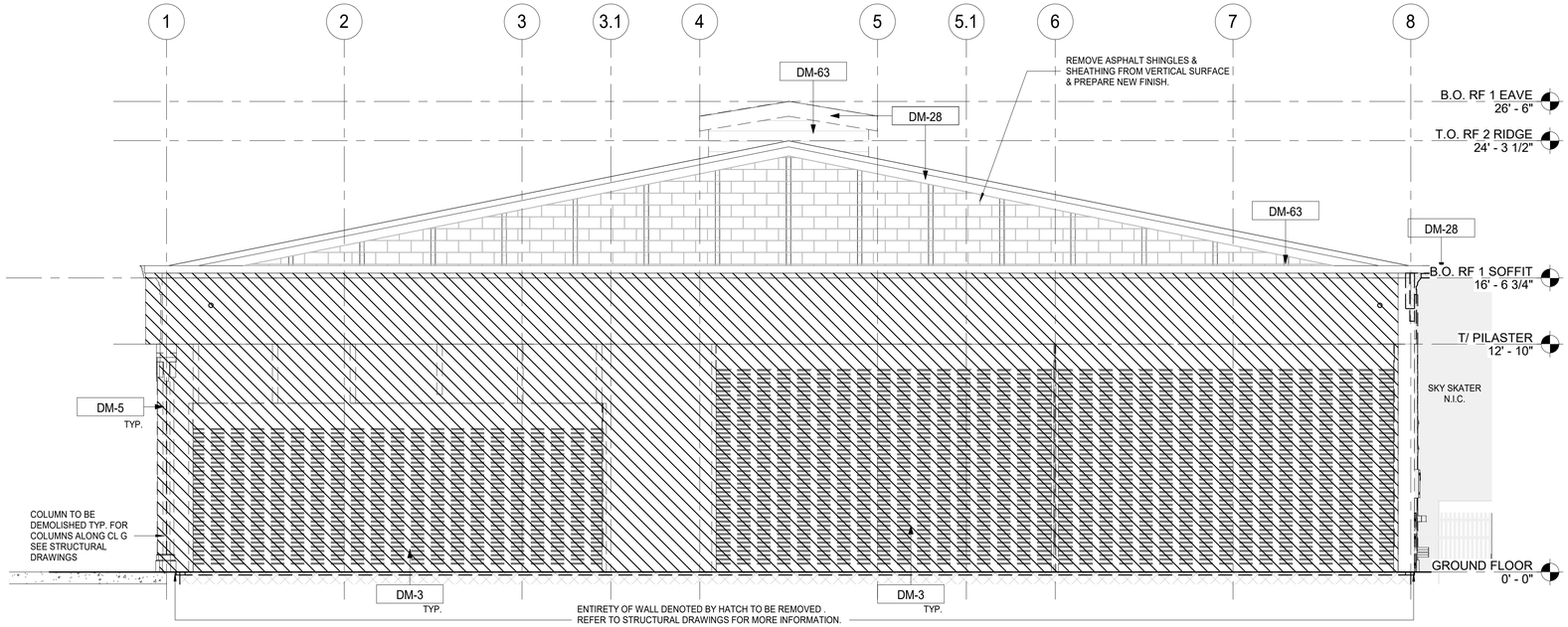

2 DEMOLITION ELEVATION - WEST
1/4" = 1'-0"

DEMOLITION GENERAL NOTES

1. ALL DEMOLITION AND REMOVAL WORK SHALL BE COMPLETED AS INDICATED AND NOTED ON THE DRAWINGS AND AS SPECIFIED.
2. PRIOR TO STARTING WORK, MAKE A THOROUGH EXAMINATION OF THE PORTIONS OF THE STRUCTURE IN WHICH THE WORK IS TO BE PERFORMED. CHECK ALL THE WORK AT ADJOINING OR UNDERLYING LOCATIONS. REPORT TO THE ARCHITECT ANY AND ALL CONDITIONS WHICH MAY INTERFERE WITH OR OTHERWISE PREVENT THE PROPER EXECUTION AND COMPLETION OF THE WORK. DO NOT START WORK UNTIL SUCH CONDITIONS HAS BEEN EXAMINED AND MUTUALLY AGREED UPON WITH THE ARCHITECT.
3. DASHED LINES INDICATE WALLS, FIXTURES, EQUIPMENT, ETC. TO BE REMOVED AND DISPOSED OF BY G.C. . ANY QUESTIONS ON SCOPE OF DEMOLITION MUST BE DIRECTED TO THE ARCHITECT PRIOR TO BID. PROVIDE SHORING AND BRACING AS REQUIRED.
4. THE EXISTING WORK REQUIRED TO BE REMOVED SHALL BE AS INDICATED BUT SHALL ALSO EXTEND TO INCLUDE ANY AND ALL OTHER EXISTING MATERIALS OR WORK NECESSARY TO INSTALL THE NEW WORK AS SHOWN AND SPECIFIED AND TO CONNECT SAME WITH THE EXISTING WORK IN AN APPROVED MANNER.
5. ALTER AND RESTORE EXISTING WALLS, PARTITIONS, COLUMNS, CEILING AND FLOORS, AND THEIR RESPECTIVE FINISHED SURFACES TO ACCOMMODATE NEW CONSTRUCTION AND FINISHES, IN ACCORDANCE WITH DRAWINGS AND SPECIFICATIONS.
6. IMMEDIATELY NOTIFY THE OWNER'S REPRESENTATIVES OF ANY HAZDAROUS MATERIALS ENCOUNTERED DURING DEMOLITION/REMOVAL.
7. ALL DIMENSIONS AND CONSTRUCTION CONDITIONS TO BE VERIFIED BY THE CONTRACTOR PRIOR TO THE START OF WORK.
8. CONTAINERIZED DEMOLITION DEBRIS SHALL BE TCLP TESTED TO CONFIRM WASTE MAY BE DISPOSED OF AS NON-HAZARDOUS.
9. ALL ITEMS SCHEDULED FOR DEMOLITION SHALL BE REMOVED FROM THE SITE UNLESS OTHERWISE NOTED. CONTRACTOR SHALL BE RESPONSIBLE FOR CLEANING OF SITE ON A DAILY BASIS.
10. REFER TO ELECTRICAL, MECHANICAL, STRUCTURAL, PLUMBING, ETC. DEMOLITION DRAWINGS FOR ADDITIONAL ITEMS.
11. PATCH AND REPAIR SURFACES (FLOOR, WALL, CEILING) DAMAGED IN PREPARATION FOR NEW EQUIPMENT AND FINISHES.

DEMOLITION LEGEND

EX. WOOD FENCE TO BE DEMOLISHED

EX. WOOD FENCE TO REMAIN

INDICATES REMOVAL

NIC — NOT IN CONTRACT

? — KEY NOTES

KEYNOTE LEGEND

KEY NOTE	NOTE
DM-3	REMOVE ROLL DOWN DOOR AND ASSOCIATED HARDWARE.
DM-5	REMOVE COLUMN ENCLOSURES. CAREFULLY REMOVE AT LEAST ONE COLUMN ENCLOSURE TO USE AS REFERENCE IN ORDER TO REPLICATE TRIMS TO MATCH LOCATION, SIZE AND SHAPE AS INDICATED. COORDINATE WITH STRUCTURAL DRAWINGS.
DM-14	REMOVE EXISTING LIGHTING FIXTURES AND ELECTRICAL WIRING CONNECTED TO THESE FIXTURES. SEE ELECTRICAL FOR DETAILS.
DM-16	REMOVE EXISTING ROOFING SHINGLES, UNDERLAYMENT AND ANY ROTTED WOOD SHEATHING. REPLACE DAMAGED SHEATHING TO MATCH EXISTING. COORDINATE WITH A/E.
DM-23	REMOVE EXISTING FENCE.
DM-28	REMOVE EXISTING GUTTER, FASCIA, AND SOFFITS.
DM-41	REMOVE EXISTING LOUVER.
DM-43	REMOVE SECTION OF EXISTING WALL. PROVIDE HEADER AND SILL AS REQUIRED TO CREATE A WINDOW OPENING. SEE ELEVATIONS.
DM-46	EXISTING ELECTRICAL EQUIPMENT TO BE PROTECTED DURING CONSTRUCTION.
DM-58	REMOVE PLYWOOD BOARDS AND COVERINGS FROM THE WINDOW ON BOTH INTERIOR AND EXTERIOR.
DM-63	CONTRACTOR TO CAREFULLY DOCUMENT AND REMOVE ALL EXISTING FACADE MATERIALS AND TRIM.
DM-81	EXISTING DATA/ TELEPHONE COMMUNICATION CABLES TO BE SUPPORTED DURING CONSTRUCTION AND RELOCATED AS INDICATED.

8/30/2022 2:52:48 PM

CONSULTANT INFORMATION

The LiRo Group
3 Aerial Way, Syosset, New York 11791
(516) 938-5476 www.liro.com

CONSULTANT SEAL

REGISTERED ARCHITECT ROBERT D. YOUNG JR. 023280 STATE OF NEW YORK

REVISION NUMBER	DATE	MADE BY	APP'D BY	REVISION

RECORD DRAWING CERTIFICATION

☐ AS BUILT – CHANGES AS NOTED ☐ AS BUILT – NO CHANGES

CONTRACTOR
NAME
SIGNATURE
TITLE DATE

PROJECT COORDINATOR
NAME
SIGNATURE
TITLE DATE

WESTCHESTER COUNTY, NEW YORK
DEPARTMENT OF PUBLIC WORKS AND TRANSPORTATION
DIVISION OF ENGINEERING

INFRASTRUCTURE REHABILITATION - PHASE 3
PLAYLAND PARK, RYE, NEW YORK
SOUTHEAST ARCADE BUILDING
SE ARCADE EXTERIOR DEMOLITION ELEVATIONS 2

CONTRACT NUMBER	22-523
SHEET NUMBER	SA-A-06
DWG NO.:	593 of 664
SCALE:	1/4" = 1'-0"
DATE:	08/23/2022
DPW FILE NUMBER	1-118-A-1342-0
REV. NO.	0

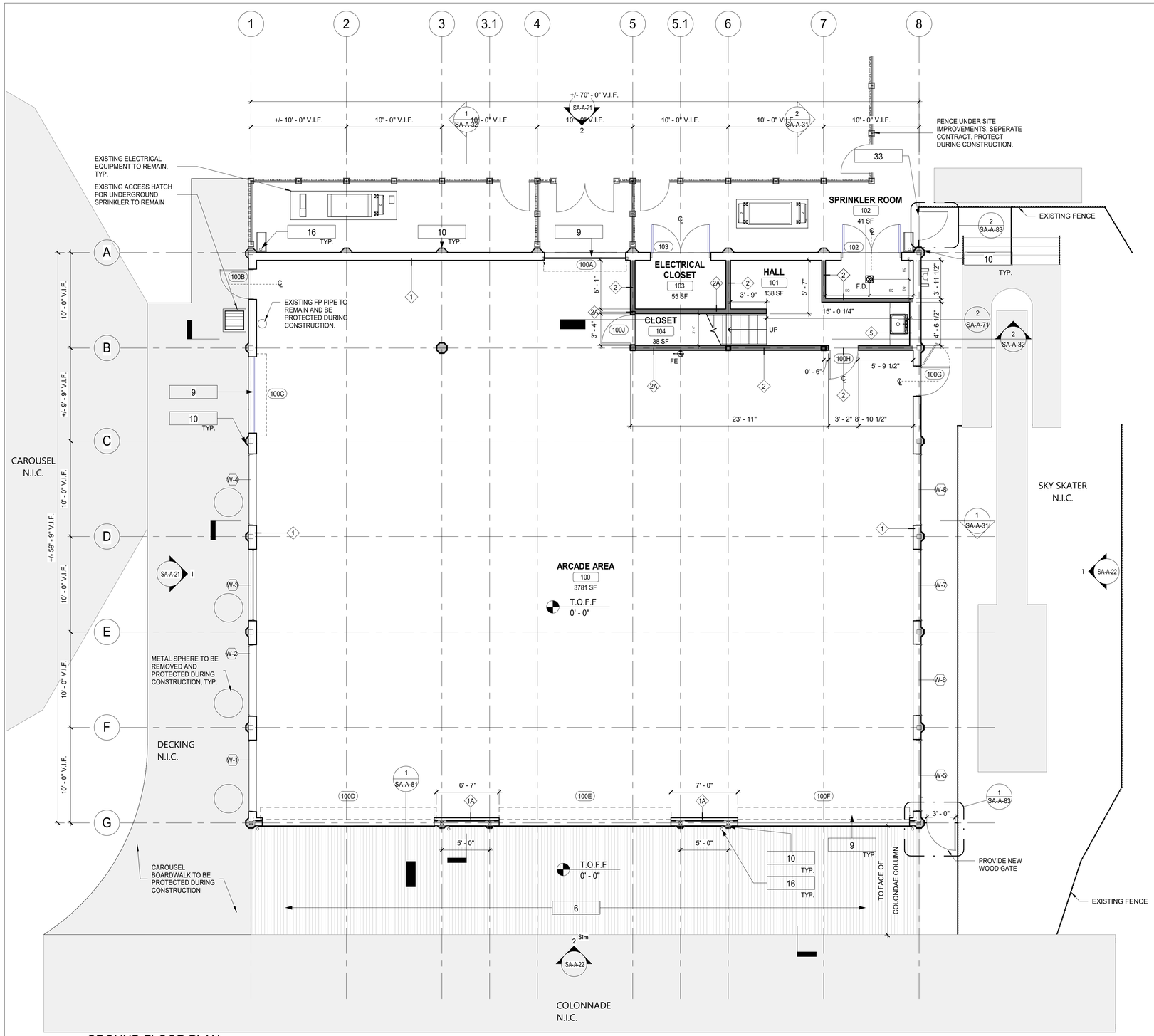

1 GROUND FLOOR PLAN
3/16" = 1'-0"

FLOOR PLAN GENERAL NOTES

1. ALL METAL STUDS 20 GA- TYPICAL NON-LOAD BEARING PARTITIONS. SEE USG STEEL- FRAMED DRYWALL SYSTEMS " LIMITING HEIGHT"- STEEL STUD ASSEMBLIES CHART. USE THE L/240 ALLOWABLE DEFLECTION FIGURES ONLY.
2. DIMENSIONS ARE TO FACE OF GYPSUM WALL BOARD, EXISTING WALL, GRID LINES, OR CENTERLINE OF COLUMN. ALL ELEVATIONS ARE NOTED FROM FINISH FLOOR ELEVATIONS.
3. PROVIDE DRYWALL TRIM AT ALL EXPOSED EDGES AND CORNERS.
4. MINIMUM DIMENSION FROM ANY CORNER OR WALL TO FRAMING STUD AT DOOR JAMB OPENING SHALL BE 4" (U.O.N.).
5. PROVIDE METAL BLOCKING FOR ANY WALL MOUNTED EQUIPMENT OR ACCESSORIES. COORDINATE ALL BLOCKING REQUIREMENTS NECESSARY WITH OTHER TRADES.
6. THE G.C. SHALL VERIFY DIMENSIONS OF THE EXISTING SPACE AND OF ANY EXISTING CONSTRUCTION TO REMAIN BY ACTUAL MEASUREMENT BEFORE ANY WORK IS PERFORMED. IF ANY MEASUREMENTS DIFFER FROM DIMENSIONS SHOWN ON PLAN, G.C. IS TO NOTIFY THE ARCHITECT IMMEDIATELY. THE G.C. SHALL BE RESPONSIBLE FOR CORRECTING ANY AND ALL DISCREPANCIES FOUND AFTER THE WORK IS PERFORMED, AT NO ADDITIONAL EXPENSE TO THE OWNER.
7. G.C. TO VERIFY ALL FINISHED DIMENSIONS. FIELD CONDITIONS ALTERING ANY DIMENSIONS SHOULD BE BROUGHT TO THE ATTENTION OF THE OWNER AND ARCHITECT.
8. THE G.C. SHALL PROVIDE CAULK JOINTS WHERE GYP. BD. MEETS THE FLOOR OR ROOF DECK.
9. THE G.C. SHALL BE RESPONSIBLE FOR COORDINATING WITH OWNER ON ALL WORK TO BE PERFORMED BY THE OWNER. ANY POTENTIAL CONFLICTS OR DELAYS CAUSED BY THE OWNER'S SUBCONTRACTORS MUST BE DOCUMENTED IN WRITING TO THE OWNER BEFORE THE DELAY IS ACTUALLY INCURRED FOR IT TO BE CONSIDERED. OTHERWISE THE G.C. WILL BE RESPONSIBLE FOR MEETING THE SCHEDULE AS OUTLINED IN THE CONTRACT.
10. THE G.C. SHALL SUPPLY ALL MATERIAL, LABOR, AND COORDINATION REQUIRED FOR THE INSTALLATION OF ALL OWNER- SUPPLIED ITEMS AS DESCRIBED IN THE DOCUMENTS, U.N.O.
11. THE G.C. IS RESPONSIBLE FOR ALL FLOOR AND WALL PENETRATIONS FOR ELECTRICAL AND MECHANICAL WORK. ALL SUCH OPENING SHALL BE FRAMED AND REINFORCED.
12. FLOOR SURFACES SHALL BE LEVELED TO ASSURE SMOOTH SURFACE FOR FINISH FLOOR INSTALLATION. G.C. SHALL ALSO PAY SPECIAL ATTENTION THAT ALL WALL SURFACES ARE SMOOTH WHERE MURALS WILL BE DIRECTLY APPLIED TO WALL.
13. G.C. TO COORDINATE ALL UTILITY STUB-UPS AND LOCATION OF ALL EQUIPMENT PRIOR TO INSTALLING ANY ONE ITEM.
14. REFER TO SHEET PR-A-63 FOR PARTITION TYPE INFORMATION.
15. PROVIDE PAINTED ACCESS PANELS IN WALLS & CEILING AT CONCEALED ITEMS. SUCH AS VALVES, CONTROLS, SWITCHES OR ANY OTHER ITEMS THAT REQUIRES ACCESS. G.C. TO DETERMINE ACCESS PANEL LOCATION W/ ARCHITECT PRIOR TO INSTALLATION.

CONSTRUCTION NOTES

1. DIMENSIONS ARE TO FACE OF GYPSUM WALL BOARD, GRID LINES, OR CENTERLINE OF COLUMN. ALL ELEVATIONS ARE NOTED FROM FINISH FLOOR ELEVATIONS.
2. PROVIDE DRYWALL TRIM AT ALL EXPOSED EDGES AND CORNERS.
3. MINIMUM DIMENSION FROM ANY CORNER OR WALL TO FRAMING STUD AT DOOR JAMB OPENING SHALL BE 4" (U.O.N.).
4. PROVIDE FIRE RETARDANT WOOD BLOCKING FOR ANY WALL MOUNTED EQUIPMENT OR ACCESSORIES. COORDINATE ALL BLOCKING REQUIREMENTS NECESSARY WITH OTHER TRADES.
5. THE CONTRACTOR SHALL VERIFY DIMENSIONS OF THE EXISTING SPACE AND OF ANY EXISTING CONSTRUCTION TO REMAIN BY ACTUAL MEASUREMENT BEFORE ANY WORK IS PERFORMED. IF ANY MEASUREMENTS DIFFER FROM DIMENSIONS SHOWN ON PLAN, G.C. IS TO NOTIFY THE ARCHITECT IMMEDIATELY. THE CONTRACTOR SHALL BE RESPONSIBLE FOR CORRECTING ANY AND ALL DISCREPANCIES FOUND AFTER THE WORK IS PERFORMED, AT NO ADDITIONAL EXPENSE TO THE OWNER.
6. THE G.C. SHALL PROVIDE CAULK JOINTS WHERE GYP. BD. MEETS THE FLOOR OR ROOF DECK.
7. THE G.C. SHALL BE RESPONSIBLE FOR COORDINATING WITH OWNER ON ALL WORK TO BE PERFORMED BY THE OWNER. ANY POTENTIAL CONFLICTS OR DELAYS CAUSED BY THE OWNER'S SUBCONTRACTORS MUST BE DOCUMENTED IN WRITING TO THE OWNER BEFORE THE DELAY IS ACTUALLY INCURRED FOR IT TO BE CONSIDERED. OTHERWISE THE G.C. WILL BE RESPONSIBLE FOR MEETING THE SCHEDULE AS OUTLINED IN THE CONTRACT.
8. THE CONTRACTOR TO VERIFY ALL FINISHED DIMENSIONS. FIELD CONDITIONS ALTERING ANY DIMENSIONS SHOULD BE BROUGHT TO THE ATTENTION OF THE OWNER AND ARCHITECT.
9. THE CONTRACTOR SHALL SUPPLY ALL MATERIAL, LABOR, AND COORDINATION REQUIRED FOR THEINSTALLATION OF ALL OWNER-SUPPLIED ITEMS AS DESCRIBED IN THE DOCUMENTS, U.N.O.
10. THE CONTRACTOR IS RESPONSIBLE FOR ALL FLOOR AND WALL PENETRATIONS FOR ELECTRICAL AND MECHANICAL WORK. ALL SUCH OPENING SHALL BE FRAMED AND REINFORCED.
11. FLOOR SURFACES SHALL BE LEVELED TO ASSURE SMOOTH SURFACE FOR FINISH FLOOR INSTALLATION.
12. THE CONTRACTOR. TO COORDINATE ALL UTILITY STUB-UPS AND LOCATION OF ALL EQUIPMENT PRIOR TO INSTALLING ANY ONE ITEM.
13. PROVIDE PAINTED ACCESS PANELS IN WALLS & CEILING AT CONCEALED ITEMS SUCH AS VALVES, CONTROLS, SWITCHES OR ANY OTHER ITEMS THAT REQUIRES ACCESS. G.C. TO DETERMINE ACCESS PANEL LOCATION W/ ARCHITECT PRIOR TO INSTALLATION.

CONSTRUCTION LEGEND

	INDICATES PATCH/REPAIR	1i	WALL TAG	101	DOOR TAG
N.I.C.	NOT IN CONTRACT	?	PLUMBING FIXTURE	FE	FIRE EXTINGUISHER
?	KEY NOTES	1i	WINDOW TAG		SPLASH BLOCK
Ref 1 A101 1 Ref	ELEVATION MARKER	Room name 101 150 SF	ROOM TAG	FD	FLOOR DRAIN

KEYNOTE LEGEND CONST.

Key Value	Keynote Text
1	PROVIDE AND INSTALL NEW 1x8 MILLED YELLOW PINE - TONGUE AND GROOVE - NO BEVEL
3	REPLICATE TRIMS TO MATCH DOCUMENTED TRIM, LOCATIONS, SIZE AND SHAPE. FINISH PAINT COLORS AS SCHEDULED.
5	PROVIDE AND INSTALL DOOR INCLUDING FRAME, SILL, LINTEL AND ANY ASSOCIATE HARDWARE. SEE DOOR SCHEDULE.
6	INSTALL NEW IPE DECKING. SEE STRUCTURAL FOR DETAILS.
9	PROVIDE AND INSTALL ROLL DOWN DOOR. SEE DETAILS AND SCHEDULE.
10	PROVIDE AND INSTALL COLUMN ENCLOSURES. SEE DETAILS.
11	PROVIDE AND INSTALL T1-11 CEILING.
14	PROVIDE NEW ASPHALT SHINGLE ROOFING,UNDERLAYMENT, AND REPLACE IN KIND EXISTING DECKING AS REQUIRED (COORDINATE WITH STRUCTURAL).
15	PROVIDE AND INSTALL SBS MODIFIED BITUMEN ROOFING AND UNDERLAYMENT.
16	PROVIDE AND INSTALL ALUMINUM METAL DRIP EDGE, DOWNSPOUT AND GUTTER AT PERIMETER OF ROOF.
21	NEW INTERIOR WALL. SEE WALL SCHEDULE.
23	NEW ROOF WITH BATT INSULATION (R-38 MIN) PACKED BETWEEN JOISTS. PROVIDE AND INSTALL SHINGLES, UNDERLAYMENT SHEATHING AND FLASHING SYSTEM.
30	NEW 2x6 WOOD FLOOR.
33	NEW WOOD FENCE. SEE DETAILS.
37	NEW CANOPY, SEE DETAILS.
39	NEW SOFFIT WITH RECESSED LIGHTS AS INDICATED ON RCP
42	NEW MECHANICAL EQUIPMENT. SEE MECHANICAL DRAWINGS.
44	NEW STAIRCASE. SEE DETAILS.
46	EXISTING ROOF BEAMS AND TRUSSES TO NOT BE PAINTED.
47	NEW SIGNAGE AND LETTERING TO BE INSTALLED. SEE DETAILS
51	NEW BIRD NETTING INSTALLED TIGHT UNDER ALL INTERIOR WOOD TRUSSES. ENSURE NO DAMAGE OCCURS TO EXISTING STRUCTURE SO AS TO ALTER ITS STRUCTURAL INTEGRITY. ZIPPERS TO BE COORDINATED WITH LOCATION OF SPRINKLER HEADS.
67	NEW FASCIA BOARD AND SOFFIT.
69	NEW SHEET METAL AT ROOF PERIMETER.
84	HALF ROUND ALUMINUM GUTTER AND DOWNSPOUT.
88	NEW PVC BASEBOARD.
95	RESTORE AND REINSTALL EXISTING HISTORIC WINDOW AND FRAME, TYP.

8/30/2022 2:52:48 PM

CONSULTANT INFORMATION
The LiRo Group
3 Aerial Way, Syosset, New York 11791
(516) 938-5476 www.liro.com

CONSULTANT SEAL
REGISTERED ARCHITECT ROBERT D. YOUNG JR. 023280 STATE OF NEW YORK

REVISION NUMBER	DATE	MADE BY	APP'D BY	REVISION

RECORD DRAWING CERTIFICATION
☐ AS BUILT – CHANGES AS NOTED ☐ AS BUILT – NO CHANGES

CONTRACTOR
NAME
SIGNATURE
TITLE DATE

PROJECT COORDINATOR
NAME
SIGNATURE
TITLE DATE

WESTCHESTER COUNTY, NEW YORK
DEPARTMENT OF PUBLIC WORKS AND TRANSPORTATION
DIVISION OF ENGINEERING

INFRASTRUCTURE REHABILITATION - PHASE 3
PLAYLAND PARK, RYE, NEW YORK
SOUTHEAST ARCADE BUILDING
SE ARCADE GROUND FLOOR PLAN

CONTRACT NUMBER	22-523
SHEET NUMBER	SA-A-11
DWG NO.:	594 of 664
SCALE:	As indicated
DATE:	08/23/2022
DPW FILE NUMBER	1-118-A-1343-0
REV. NO.	0

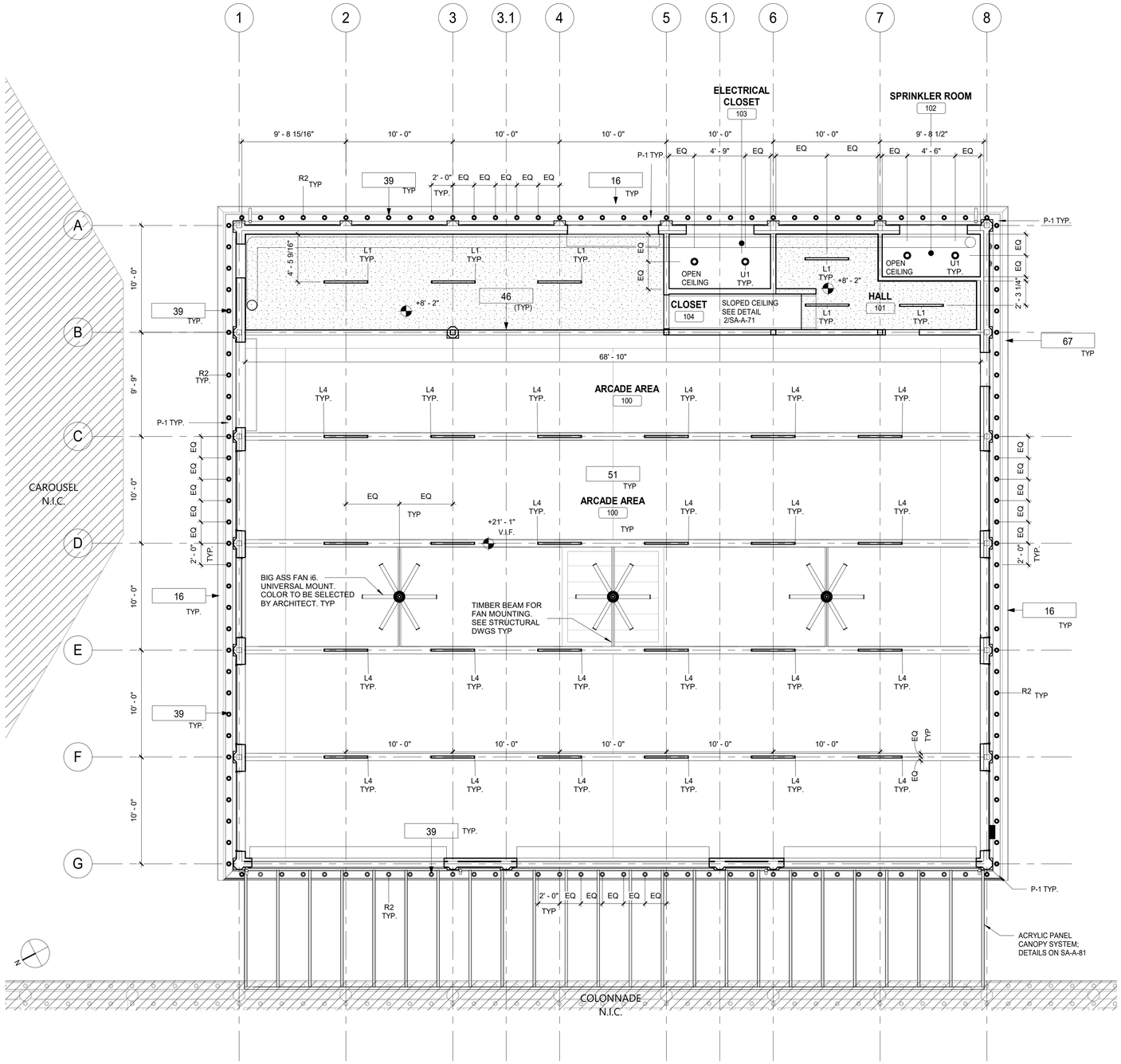

1 GROUND LEVEL REFLECTED CEILING PLAN
3/16" = 1'-0"

RCP GENERAL NOTES

1. CEILING TILES TO BE CENTERED BOTH WAYS IN EACH OR UNLESS DIMENSIONED OTHERWISE.
2. ALL DIMENSIONS ARE TO THE CENTER OF LIGHT FIXTURE, U.N.O.
3. FIXTURES LOCATED WITHIN THE CEILING GRID, ARE NOT NECESSARILY CENTERED IN EACH CEILING TILE. FOLLOW DIMENSIONS ON PLAN. IF NO DIMENSION IS PRESENT CONTACT ARCHITECT TO VERIFY LOCATION.
4. LIGHT FIXTURES TO BE LOCATED AS INDICATED ON THIS PLAN. REFER TO ELECTRICAL DRAWINGS FOR EXACT NUMBER AND TYPE OF LIGHT FIXTURE. CONTACT ARCHITECT/ ENGINEER IMMEDIATELY IF THERE ARE ANY DISCREPANCIES.
5. REFER TO MECHANICAL DRAWINGS FOR MECHANICAL DUCT DISTRIBUTION SYSTEM.
6. THE G.C. SHALL SET ALL CEILING AND SOFFITS USING A LASER LEVEL TO ACHIEVE A CEILING THAT IS PLUMBING, LEVEL, AND SQUARE TO ALL WALLS AND SOFFITS.
7. ALL NOTED CEILING DIMENSIONS ARE INDICATED AS CLEAR ABOVE FINISHED FLOOR DIMENSIONS. VERIFY THICKNESS OF FLOOR CONSTRUCTION WITH FLOOR SUBCONTRACTOR PRIOR TO THE INSTALLATION OF ANY NEW CEILING CONSTRUCTION IN ORDER TO ACHIEVE NOTED REQUIRED DIMENSIONS.
8. ALL SOFFIT DIMENSIONS ARE TO FINISH FACE, U.N.O.
9. ALL EXTERIOR DIMENSIONS ARE TO THE FACE OF EXTERIOR FINISH, U.N.O.
10. G.C. TO PROVIDE ADEQUATE CLEARANCES FOR FIXTURES, DUCTS, CEILINGS, AND PERTINENT ITEMS NECESSARY TO MAINTAIN THE SPECIFIC HEIGHTS ABOVE FINISH FLOOR. COORDINATE MECHANICAL, ELECTRICAL AND PLUMBING AS REQUIRED.
11. ADDITIONAL HANGER AND SAFETY WIRES FOR LIGHT FIXTURES AND AIR SUPPLY/ RETURN DIFFUSERS AS REQUIRED BY LOCAL CODES TO BE THE RESPONSIBILITY OF THE SUB-CONTRACTOR. ALL WIRING SUPPORT TO BE "CEILING GRADE" AS CONCURRENT WITH ELECTRICAL CODE ADOPTED FOR JURISDICTION OF PROJECT.
12. ALL CEILING ELEVATIONS DIMENSIONED FROM FINISH FLOOR BELOW.

RCP PLAN NOTES

1. REFER TO FINISH SCHEDULE FOR CEILING TYPES AND HEIGHTS.
2. LOCATIONS OF LIGHT FIXTURES SHALL BE COORDINATED WITH MECHANICAL, ELECTRICAL, SPRINKLER, FIRE DETECTION, SURVEILLANCE, ETC. EQUIPMENT.
3. CONTRACTOR SHALL PROVIDE THE NECESSARY FRAMING OR BRIDGING FOR ALL LIGHT FIXTURES, DIFFUSERS, RETURNS, ETC., AS WELL AS REQUIRED CUTOUTS.
4. CONTRACTOR SHALL NOTIFY THE ARCHITECT OF ANY POSSIBLE INTERFERENCES BEFORE PROCEEDING WITH CEILING INSTALLATION.
5. COORDINATE ALL TRADES INVOLVED IN ABOVE CEILING WORK TO ENSURE CLEARANCE OF FIXTURE, DUCTS, CEILING, ETC., NECESSARY TO MAINTAIN THE SPECIFIED CEILING HEIGHT ABOVE THE FINISHED FLOOR. NOTIFY ARCHITECT OF ANY CONFLICTS.
6. CEILING CONSTRUCTION SHALL NOT BE CLOSED IN UNTIL ALL DUCTWORK, PLUMBING, ELECTRICAL CONDUITS AND LINES HAVE BEEN INSPECTED FOR PROPER INSTALLATION.
7. THE CEILING PANEL JOINTS SHALL BE ALIGNED PERFECTLY WITH LIGHTING FIXTURES.
8. ALL JOINTS IN THE PANEL SHALL BE SQUARE, LEVEL AND PERFECTLY ALIGNED WITH EACH OTHER AND WITH BUILDING FIXTURES.
9. UNLESS NOTED ON THE REFLECTED CEILING PLAN, ALL LIGHT FIXTURES SHALL BE EQUALLY SPACED AND CENTERED IN THE SPACE.
10. ALL DIMENSIONS ARE TO FINISHED FACE OF WALL OR CENTERLINE OF LIGHT FIXTURES. CENTERLINES ARE IMPLIED ON DRAWINGS.
11. CONTRACTOR SHALL INSTALL ACCESS PANELS IN T1-11 CEILINGS FOR ACCESS TO MECHANICAL, PLUMBING, TELEPHONE & ELECTRICAL CONTROL EQUIPMENT REQUIRING ACCESS.
12. IN GENERAL, WITHIN EACH AREA, CEILING WORK REQUIREMENTS SHALL BE EXECUTED IN SUCH A MANNER AS TO PROVIDE CONTINUOUS MATCHED AND ALIGNED CEILINGS. THE FINAL CEILING INSTALLATION SHALL BE FREE OF ALL VISUAL DEFECTS.
13. CONTRACTOR TO PROVIDE PAINTED FINISH AS SPECIFY FOR ALL EXPOSED PLUMBING, MECHANICAL, FIRE PROTECTION, & OTHER BUILDING SYSTEM COMPONENTS. COORDINATE COLOR SELECTION WITH ARCHITECT.
14. PREP/PAINT ALL EXPOSED TRUSSED, BEAMS, & OTHER EXISTING SURFACES AS FINISH SURFACES.
15. LOCATION OF SUSPENDED LIGHT FIXTURES SHALL BE COORDINATED WITH THE FIXTURES BELOW.
16. REFER TO THE ELECTRICAL DRAWINGS FOR ALL CIRCUITING AND TYPE OF LIGHTING FIXTURE IN THE LEGEND.
17. ALL SUSPENDED FIXTURES SHALL BE SUPPORTED BY AIRPLANE CABLE OF SUFFICIENT SIZE TO SUPPORT FIXTURES.
18. REFER TO ARCHITECTURAL PLANS, SECTIONS, AND FINISH SCHEDULE FOR ADDITIONAL INFORMATION.
19. EXISTING HORIZONTAL STORM DRAINAGE PIPING AND CONNECTIONS LOCATED ABOVE THE CEILING SHALL BE INSULATED.
20. LIGHT FIXTURES SHALL BE COORDINATED WITH MECHANICAL EQUIPMENT IN AREAS OF EXPOSED STRUCTURES.

RCP LEGEND

- R-2 EXTERIOR RECESSED CAN LIGHT IN SOFFIT
- L-1 SURFACE MOUNTED LINEAR LIGHT
- L-4 INTERIOR PENDANT LIGHT; MOUNTED TO BOTTOM OF TRUSS
- U-3 INTERIOR RECESSED CAN LIGHT
- GYPSUM WALL BOARD CEILING GYP-1
- N.I.C. — INDICATES SCOPE NOT IN CONTRACT
- ? — KEY NOTES
- EX — EX- EXIT SIGN
- SUPPLY DIFFUSER. SEE MECHANICAL DRAWINGS
- EXHAUST GRILL. SEE MECHANICAL DRAWINGS
- OS — OS - OCCUPANCY SENSOR
- CEILING FAN; TYPE: BIG ASS FAN i6 COLOR: TO BE SELECTED BY ARCHITECT MOUNTING: UNIVERSAL MOUNT SEE DETAILS ON SHEET 10/SA-A-84

KEYNOTE LEGEND CONST.

Key Value	Keynote Text
1	PROVIDE AND INSTALL NEW 1x8 MILLED YELLOW PINE - TONGUE AND GROOVE - NO BEVEL
3	REPLICATE TRIMS TO MATCH DOCUMENTED TRIM, LOCATIONS, SIZE AND SHAPE. FINISH PAINT COLORS AS SCHEDULED.
5	PROVIDE AND INSTALL DOOR INCLUDING FRAME, SILL, LINTEL AND ANY ASSOCIATE HARDWARE. SEE DOOR SCHEDULE.
6	INSTALL NEW IPE DECKING. SEE STRUCTURAL FOR DETAILS.
9	PROVIDE AND INSTALL ROLL DOWN DOOR. SEE DETAILS AND SCHEDULE.
10	PROVIDE AND INSTALL COLUMN ENCLOSURES. SEE DETAILS.
11	PROVIDE AND INSTALL T1-11 CEILING.
14	PROVIDE NEW ASPHALT SHINGLE ROOFING,UNDERLAYMENT, AND REPLACE IN KIND EXISTING DECKING AS REQUIRED (COORDINATE WITH STRUCTURAL).
15	PROVIDE AND INSTALL SBS MODIFIED BITUMEN ROOFING AND UNDERLAYMENT.
16	PROVIDE AND INSTALL ALUMINUM METAL DRIP EDGE, DOWNSPOUT AND GUTTER AT PERIMETER OF ROOF.
21	NEW INTERIOR WALL. SEE WALL SCHEDULE.
23	NEW ROOF WITH BATT INSULATION (R-38 MIN) PACKED BETWEEN JOISTS. PROVIDE AND INSTALL SHINGLES, UNDERLAYMENT SHEATHING AND FLASHING SYSTEM.
30	NEW 2x6 WOOD FLOOR.
33	NEW WOOD FENCE. SEE DETAILS.
37	NEW CANOPY, SEE DETAILS.
39	NEW SOFFIT WITH RECESSED LIGHTS AS INDICATED ON RCP
42	NEW MECHANICAL EQUIPMENT. SEE MECHANICAL DRAWINGS.
44	NEW STAIRCASE. SEE DETAILS.
46	EXISTING ROOF BEAMS AND TRUSSES TO NOT BE PAINTED.
47	NEW SIGNAGE AND LETTERING TO BE INSTALLED. SEE DETAILS
51	NEW BIRD NETTING INSTALLED TIGHT UNDER ALL INTERIOR WOOD TRUSSES. ENSURE NO DAMAGE OCCURS TO EXISTING STRUCTURE SO AS TO ALTER ITS STRUCTURAL INTEGRITY. ZIPPERS TO BE COORDINATED WITH LOCATION OF SPRINKLER HEADS.
67	NEW FASCIA BOARD AND SOFFIT.
69	NEW SHEET METAL AT ROOF PERIMETER.
84	HALF ROUND ALUMINUM GUTTER AND DOWNSPOUT.
88	NEW PVC BASEBOARD.
95	RESTORE AND REINSTALL EXISTING HISTORIC WINDOW AND FRAME, TYP.

8/30/2022 2:52:49 PM

CONSULTANT INFORMATION
The LiRo Group
3 Aerial Way, Syosset, New York 11791
(516) 938-5476 www.liro.com

CONSULTANT SEAL
REGISTERED ARCHITECT ROBERT D. DONIGIAN 023280 STATE OF NEW YORK

REVISION NUMBER	DATE	MADE BY	APP'D BY	REVISION

RECORD DRAWING CERTIFICATION
☐ AS BUILT – CHANGES AS NOTED ☐ AS BUILT – NO CHANGES

CONTRACTOR
NAME
SIGNATURE
TITLE DATE

PROJECT COORDINATOR
NAME
SIGNATURE
TITLE DATE

WESTCHESTER COUNTY, NEW YORK
DEPARTMENT OF PUBLIC WORKS AND TRANSPORTATION
DIVISION OF ENGINEERING

INFRASTRUCTURE REHABILITATION - PHASE 3
PLAYLAND PARK, RYE, NEW YORK
SOUTHEAST ARCADE BUILDING
SE ARCADE REFLECTED CEILING PLANS

CONTRACT NUMBER	22-523
SHEET NUMBER	SA-A-12
DWG NO.:	595 of 664
SCALE:	As indicated
DATE:	08/23/2022
DPW FILE NUMBER	1-118-A-1344-0
REV. NO.	0

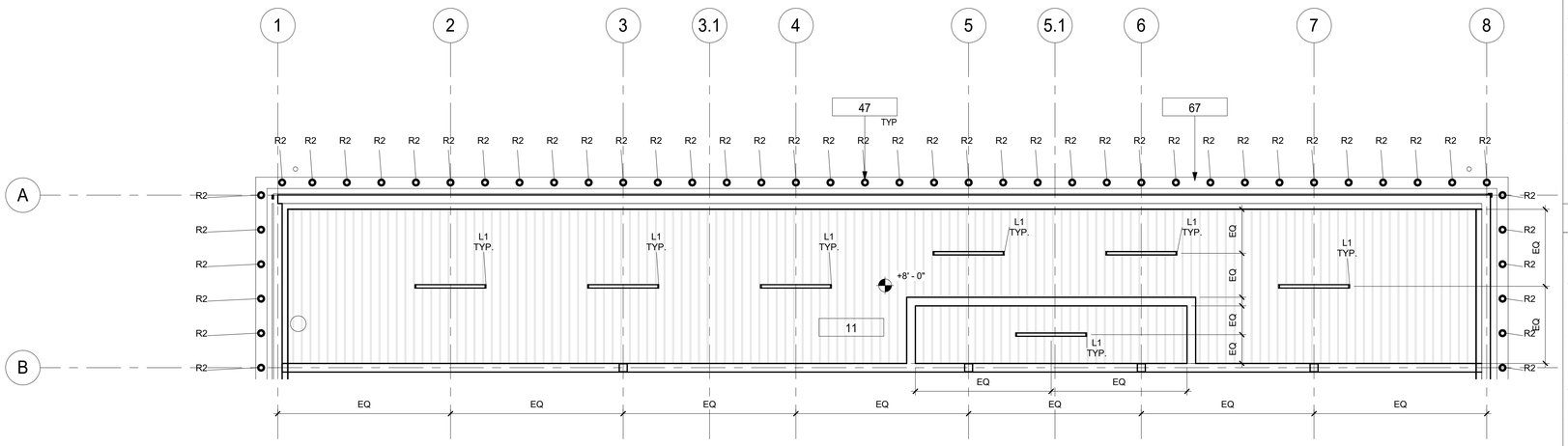

2 SECOND FLOOR REFLECTED CEILING PLAN
1/4" = 1'-0"

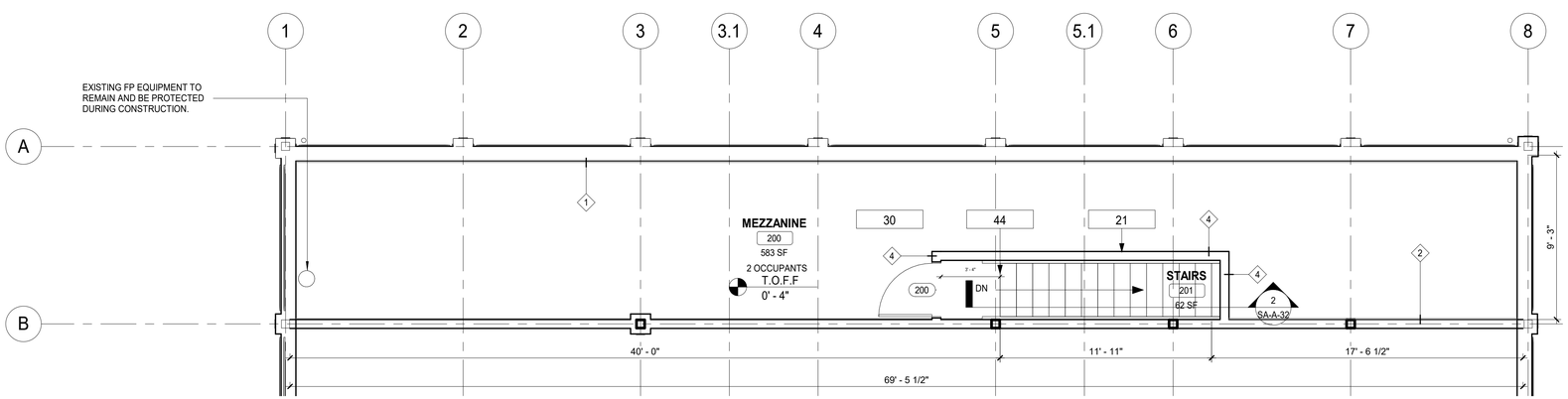

1 MEZZANINE CONSTRUCTION PLAN
1/4" = 1'-0"

FLOOR PLAN GENERAL NOTES

1. ALL METAL STUDS 20 GA- TYPICAL NON-LOAD BEARING PARTITIONS. SEE USG STEEL- FRAMED DRYWALL SYSTEMS " LIMITING HEIGHT"- STEEL STUD ASSEMBLIES CHART. USE THE L/240 ALLOWABLE DEFLECTION FIGURES ONLY.
2. DIMENSIONS ARE TO FACE OF GYPSUM WALL BOARD, EXISTING WALL, GRID LINES, OR CENTERLINE OF COLUMN. ALL ELEVATIONS ARE NOTED FROM FINISH FLOOR ELEVATIONS.
3. PROVIDE DRYWALL TRIM AT ALL EXPOSED EDGES AND CORNERS.
4. MINIMUM DIMENSION FROM ANY CORNER OR WALL TO FRAMING STUD AT DOOR JAMB OPENING SHALL BE 4" (U.O.N.).
5. PROVIDE METAL BLOCKING FOR ANY WALL MOUNTED EQUIPMENT OR ACCESSORIES. COORDINATE ALL BLOCKING REQUIREMENTS NECESSARY WITH OTHER TRADES.
6. THE G.C. SHALL VERIFY DIMENSIONS OF THE EXISTING SPACE AND OF ANY EXISTING CONSTRUCTION TO REMAIN BY ACTUAL MEASUREMENT BEFORE ANY WORK IS PERFORMED. IF ANY MEASUREMENTS DIFFER FROM DIMENSIONS SHOWN ON PLAN, G.C. IS TO NOTIFY THE ARCHITECT IMMEDIATELY. THE G.C. SHALL BE RESPONSIBLE FOR CORRECTING ANY AND ALL DISCREPANCIES FOUND AFTER THE WORK IS PERFORMED, AT NO ADDITIONAL EXPENSE TO THE OWNER.
7. G.C. TO VERIFY ALL FINISHED DIMENSIONS. FIELD CONDITIONS ALTERING ANY DIMENSIONS SHOULD BE BROUGHT TO THE ATTENTION OF THE OWNER AND ARCHITECT.
8. THE G.C. SHALL PROVIDE CAULK JOINTS WHERE GYP. BD. MEETS THE FLOOR OR ROOF DECK.
9. THE G.C. SHALL BE RESPONSIBLE FOR COORDINATING WITH OWNER ON ALL WORK TO BE PERFORMED BY THE OWNER. ANY POTENTIAL CONFLICTS OR DELAYS CAUSED BY THE OWNER'S SUBCONTRACTORS MUST BE DOCUMENTED IN WRITING TO THE OWNER BEFORE THE DELAY IS ACTUALLY INCURRED FOR IT TO BE CONSIDERED. OTHERWISE THE G.C. WILL BE RESPONSIBLE FOR MEETING THE SCHEDULE AS OUTLINED IN THE CONTRACT.
10. THE G.C. SHALL SUPPLY ALL MATERIAL, LABOR, AND COORDINATION REQUIRED FOR THE INSTALLATION OF ALL OWNER- SUPPLIED ITEMS AS DESCRIBED IN THE DOCUMENTS, U.N.O.
11. THE G.C. IS RESPONSIBLE FOR ALL FLOOR AND WALL PENETRATIONS FOR ELECTRICAL AND MECHANICAL WORK. ALL SUCH OPENING SHALL BE FRAMED AND REINFORCED.
12. FLOOR SURFACES SHALL BE LEVELED TO ASSURE SMOOTH SURFACE FOR FINISH FLOOR INSTALLATION. G.C. SHALL ALSO PAY SPECIAL ATTENTION THAT ALL WALL SURFACES ARE SMOOTH WHERE MURALS WILL BE DIRECTLY APPLIED TO WALL.
13. G.C. TO COORDINATE ALL UTILITY STUB-UPS AND LOCATION OF ALL EQUIPMENT PRIOR TO INSTALLING ANY ONE ITEM.
14. REFER TO SHEET PR-A-63 FOR PARTITION TYPE INFORMATION.
15. PROVIDE PAINTED ACCESS PANELS IN WALLS & CEILING AT CONCEALED ITEMS. SUCH AS VALVES, CONTROLS, SWITCHES OR ANY OTHER ITEMS THAT REQUIRES ACCESS. G.C. TO DETERMINE ACCESS PANEL LOCATION W/ ARCHITECT PRIOR TO INSTALLATION.

RCP GENERAL NOTES

1. CEILING TILES TO BE CENTERED BOTH WAYS IN EACH OR UNLESS DIMENSIONED OTHERWISE.
2. ALL DIMENSIONS ARE TO THE CENTER OF LIGHT FIXTURE, U.N.O.
3. FIXTURES LOCATED WITHIN THE CEILING GRID, ARE NOT NECESSARILY CENTERED IN EACH CEILING TILE. FOLLOW DIMENSIONS ON PLAN. IF NO DIMENSION IS PRESENT CONTACT ARCHITECT TO VERIFY LOCATION.
4. LIGHT FIXTURES TO BE LOCATED AS INDICATED ON THIS PLAN. REFER TO ELECTRICAL DRAWINGS FOR EXACT NUMBER AND TYPE OF LIGHT FIXTURE. CONTACT ARCHITECT/ ENGINEER IMMEDIATELY IF THERE ARE ANY DISCREPANCIES.
5. REFER TO MECHANICAL DRAWINGS FOR MECHANICAL DUCT DISTRIBUTION SYSTEM.
6. THE G.C. SHALL SET ALL CEILING AND SOFFITS USING A LASER LEVEL TO ACHIEVE A CEILING THAT IS PLUMBING, LEVEL, AND SQUARE TO ALL WALLS AND SOFFITS.
7. ALL NOTED CEILING DIMENSIONS ARE INDICATED AS CLEAR ABOVE FINISHED FLOOR DIMENSIONS. VERIFY THICKNESS OF FLOOR CONSTRUCTION WITH FLOOR SUBCONTRACTOR PRIOR TO THE INSTALLATION OF ANY NEW CEILING CONSTRUCTION IN ORDER TO ACHIEVE NOTED REQUIRED DIMENSIONS.
8. ALL SOFFIT DIMENSIONS ARE TO FINISH FACE, U.N.O.
9. ALL EXTERIOR DIMENSIONS ARE TO THE FACE OF EXTERIOR FINISH, U.N.O.
10. G.C. TO PROVIDE ADEQUATE CLEARANCES FOR FIXTURES, DUCTS, CEILINGS, AND PERTINENT ITEMS NECESSARY TO MAINTAIN THE SPECIFIC HEIGHTS ABOVE FINISH FLOOR. COORDINATE MECHANICAL, ELECTRICAL AND PLUMBING AS REQUIRED.
11. ADDITIONAL HANGER AND SAFETY WIRES FOR LIGHT FIXTURES AND AIR SUPPLY/ RETURN DIFFUSERS AS REQUIRED BY LOCAL CODES TO BE THE RESPONSIBILITY OF THE SUB-CONTRACTOR. ALL WIRING SUPPORT TO BE "CEILING GRADE" AS CONCURRENT WITH ELECTRICAL CODE ADOPTED FOR JURISDICTION OF PROJECT.
12. ALL CEILING ELEVATIONS DIMENSIONED FROM FINISH FLOOR BELOW.
13. PAINT ALL EXPOSED STRUCTURE AND STRUCTURE OVER KITCHEN ACT CEILING. REFER TO PR-A-67.
14. INSTALL BIRD NETTING AT BOTTOM OF TRUSSES TO KEEP BIRDS OUT.

CONSTRUCTION LEGEND

INDICATES PATCH/REPAIR
N.I.C. — NOT IN CONTRACT
? — KEY NOTES
1i — WALL TAG
? — PLUMBING FIXTURE
1i — WINDOW TAG
101 — DOOR TAG
FE — FIRE EXTINGUISHER
SPLASH BLOCK
Room name 101 150 SF — ROOM TAG
FD — FLOOR DRAIN
1 Ref — A101 — ELEVATION MARKER

RCP LEGEND

R-2 EXTERIOR RECESSED CAN LIGHT IN SOFFIT
L-1 SURFACE MOUNTED LINEAR LIGHT
L-4 INTERIOR PENDANT LIGHT; MOUNTED TO BOTTOM OF TRUSS
U-3 INTERIOR RECESSED CAN LIGHT
GYPSUM WALL BOARD CEILING GYP-1
N.I.C. — INDICATES SCOPE NOT IN CONTRACT
? — KEY NOTES
EX — EX- EXIT SIGN
SUPPLY DIFFUSER. SEE MECHANICAL DRAWINGS
EXHAUST GRILL. SEE MECHANICAL DRAWINGS
OS — OS - OCCUPANCY SENSOR
CEILING FAN:
TYPE: BIG ASS FAN i6
COLOR: TO BE SELECTED BY ARCHITECT
MOUNTING: UNIVERSAL MOUNT
SEE DETAILS ON SHEET 10/SA-A-84

KEYNOTE LEGEND CONST.

Key Value	Keynote Text
1	PROVIDE AND INSTALL NEW 1x8 MILLED YELLOW PINE - TONGUE AND GROOVE - NO BEVEL
3	REPLICATE TRIMS TO MATCH DOCUMENTED TRIM, LOCATIONS, SIZE AND SHAPE. FINISH PAINT COLORS AS SCHEDULED.
5	PROVIDE AND INSTALL DOOR INCLUDING FRAME, SILL, LINTEL AND ANY ASSOCIATE HARDWARE. SEE DOOR SCHEDULE.
6	INSTALL NEW IPE DECKING. SEE STRUCTURAL FOR DETAILS.
9	PROVIDE AND INSTALL ROLL DOWN DOOR. SEE DETAILS AND SCHEDULE.
10	PROVIDE AND INSTALL COLUMN ENCLOSURES. SEE DETAILS.
11	PROVIDE AND INSTALL T1-11 CEILING.
14	PROVIDE NEW ASPHALT SHINGLE ROOFING,UNDERLAYMENT, AND REPLACE IN KIND EXISTING DECKING AS REQUIRED (COORDINATE WITH STRUCTURAL).
15	PROVIDE AND INSTALL SBS MODIFIED BITUMEN ROOFING AND UNDERLAYMENT.
16	PROVIDE AND INSTALL ALUMINUM METAL DRIP EDGE, DOWNSPOUT AND GUTTER AT PERIMETER OF ROOF.
21	NEW INTERIOR WALL. SEE WALL SCHEDULE.
23	NEW ROOF WITH BATT INSULATION (R-38 MIN) PACKED BETWEEN JOISTS. PROVIDE AND INSTALL SHINGLES, UNDERLAYMENT SHEATHING AND FLASHING SYSTEM.
30	NEW 2x6 WOOD FLOOR.
33	NEW WOOD FENCE. SEE DETAILS.
37	NEW CANOPY, SEE DETAILS.
39	NEW SOFFIT WITH RECESSED LIGHTS AS INDICATED ON RCP
42	NEW MECHANICAL EQUIPMENT. SEE MECHANICAL DRAWINGS.
44	NEW STAIRCASE. SEE DETAILS.
46	EXISTING ROOF BEAMS AND TRUSSES TO NOT BE PAINTED.
47	NEW SIGNAGE AND LETTERING TO BE INSTALLED. SEE DETAILS
51	NEW BIRD NETTING INSTALLED TIGHT UNDER ALL INTERIOR WOOD TRUSSES. ENSURE NO DAMAGE OCCURS TO EXISTING STRUCTURE SO AS TO ALTER ITS STRUCTURAL INTEGRITY. ZIPPERS TO BE COORDINATED WITH LOCATION OF SPRINKLER HEADS.
67	NEW FASCIA BOARD AND SOFFIT.
69	NEW SHEET METAL AT ROOF PERIMETER.
84	HALF ROUND ALUMINUM GUTTER AND DOWNSPOUT.
88	NEW PVC BASEBOARD.
95	RESTORE AND REINSTALL EXISTING HISTORIC WINDOW AND FRAME, TYP.

8/30/2022 2:52:50 PM

CONSULTANT INFORMATION
The LiRo Group
3 Aerial Way, Syosset, New York 11791
(516) 938-5476 www.liro.com

CONSULTANT SEAL
REGISTERED ARCHITECT ROBERT D. YOUNG JR. 023280 STATE OF NEW YORK

REVISION NUMBER	DATE	MADE BY	APP'D BY	REVISION

RECORD DRAWING CERTIFICATION
☐ AS BUILT – CHANGES AS NOTED ☐ AS BUILT – NO CHANGES

CONTRACTOR
NAME
SIGNATURE
TITLE DATE

PROJECT COORDINATOR
NAME
SIGNATURE
TITLE DATE

WESTCHESTER COUNTY, NEW YORK
DEPARTMENT OF PUBLIC WORKS AND TRANSPORTATION
DIVISION OF ENGINEERING

INFRASTRUCTURE REHABILITATION - PHASE 3
PLAYLAND PARK, RYE, NEW YORK
SOUTHEAST ARCADE BUILDING
SE ARCADE MEZZANINE- PLANS & RCP

CONTRACT NUMBER	22-523
SHEET NUMBER	SA-A-13
DWG NO.:	596 of 664
SCALE:	As indicated
DATE:	08/23/2022
DPW FILE NUMBER	1-118-A-1345-0
REV. NO.	0

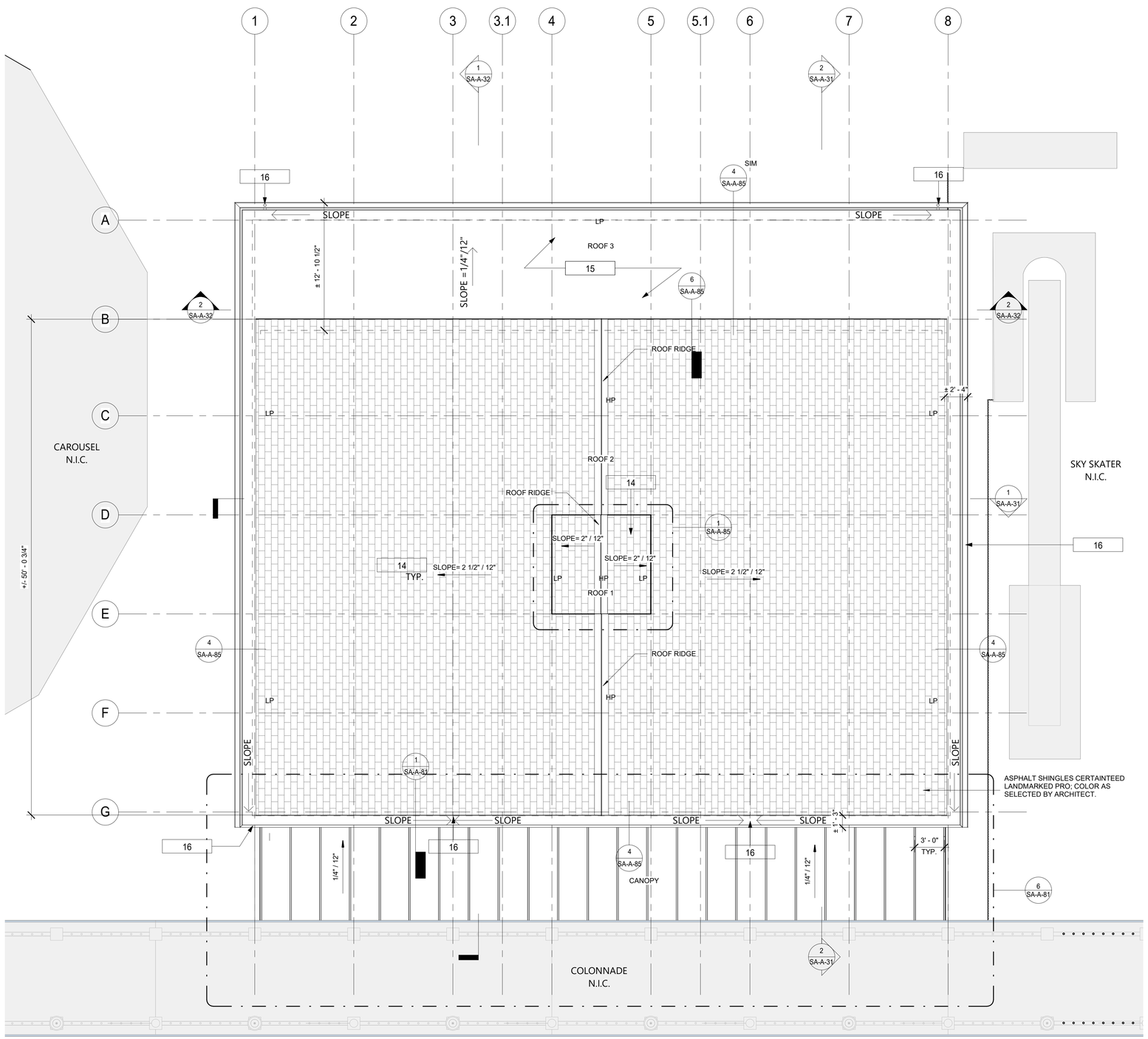

1 ROOF PLAN
3/16" = 1'-0"

CONTRACTOR TO PROVIDE ICE WATER SHIELD AT ROOF EAVE, RIDGE, HIP, RAKE, LOW PITCH, VENT STACK AS REQUIRED

FLOOR PLAN GENERAL NOTES

1. ALL METAL STUDS 20 GA- TYPICAL NON-LOAD BEARING PARTITIONS. SEE USG STEEL- FRAMED DRYWALL SYSTEMS " LIMITING HEIGHT"- STEEL STUD ASSEMBLIES CHART. USE THE L/240 ALLOWABLE DEFLECTION FIGURES ONLY.
2. DIMENSIONS ARE TO FACE OF GYPSUM WALL BOARD, EXISTING WALL, GRID LINES, OR CENTERLINE OF COLUMN. ALL ELEVATIONS ARE NOTED FROM FINISH FLOOR ELEVATIONS.
3. PROVIDE DRYWALL TRIM AT ALL EXPOSED EDGES AND CORNERS.
4. MINIMUM DIMENSION FROM ANY CORNER OR WALL TO FRAMING STUD AT DOOR JAMB OPENING SHALL BE 4" (U.O.N.).
5. PROVIDE METAL BLOCKING FOR ANY WALL MOUNTED EQUIPMENT OR ACCESSORIES. COORDINATE ALL BLOCKING REQUIREMENTS NECESSARY WITH OTHER TRADES.
6. THE G.C. SHALL VERIFY DIMENSIONS OF THE EXISTING SPACE AND OF ANY EXISTING CONSTRUCTION TO REMAIN BY ACTUAL MEASUREMENT BEFORE ANY WORK IS PERFORMED. IF ANY MEASUREMENTS DIFFER FROM DIMENSIONS SHOWN ON PLAN, G.C. IS TO NOTIFY THE ARCHITECT IMMEDIATELY. THE G.C. SHALL BE RESPONSIBLE FOR CORRECTING ANY AND ALL DISCREPANCIES FOUND AFTER THE WORK IS PERFORMED, AT NO ADDITIONAL EXPENSE TO THE OWNER.
7. G.C. TO VERIFY ALL FINISHED DIMENSIONS. FIELD CONDITIONS ALTERING ANY DIMENSIONS SHOULD BE BROUGHT TO THE ATTENTION OF THE OWNER AND ARCHITECT.
8. THE G.C. SHALL PROVIDE CAULK JOINTS WHERE GYP. BD. MEETS THE FLOOR OR ROOF DECK.
9. THE G.C. SHALL BE RESPONSIBLE FOR COORDINATING WITH OWNER ON ALL WORK TO BE PERFORMED BY THE OWNER. ANY POTENTIAL CONFLICTS OR DELAYS CAUSED BY THE OWNER'S SUBCONTRACTORS MUST BE DOCUMENTED IN WRITING TO THE OWNER BEFORE THE DELAY IS ACTUALLY INCURRED FOR IT TO BE CONSIDERED. OTHERWISE THE G.C. WILL BE RESPONSIBLE FOR MEETING THE SCHEDULE AS OUTLINED IN THE CONTRACT.
10. THE G.C. SHALL SUPPLY ALL MATERIAL, LABOR, AND COORDINATION REQUIRED FOR THE INSTALLATION OF ALL OWNER- SUPPLIED ITEMS AS DESCRIBED IN THE DOCUMENTS, U.N.O.
11. THE G.C. IS RESPONSIBLE FOR ALL FLOOR AND WALL PENETRATIONS FOR ELECTRICAL AND MECHANICAL WORK. ALL SUCH OPENING SHALL BE FRAMED AND REINFORCED.
12. FLOOR SURFACES SHALL BE LEVELED TO ASSURE SMOOTH SURFACE FOR FINISH FLOOR INSTALLATION. G.C. SHALL ALSO PAY SPECIAL ATTENTION THAT ALL WALL SURFACES ARE SMOOTH WHERE MURALS WILL BE DIRECTLY APPLIED TO WALL.
13. G.C. TO COORDINATE ALL UTILITY STUB-UPS AND LOCATION OF ALL EQUIPMENT PRIOR TO INSTALLING ANY ONE ITEM.
14. REFER TO SHEET PR-A-63 FOR PARTITION TYPE INFORMATION.
15. PROVIDE PAINTED ACCESS PANELS IN WALLS & CEILING AT CONCEALED ITEMS. SUCH AS VALVES, CONTROLS, SWITCHES OR ANY OTHER ITEMS THAT REQUIRES ACCESS. G.C. TO DETERMINE ACCESS PANEL LOCATION W/ ARCHITECT PRIOR TO INSTALLATION.

ROOF PLAN NOTES

1. ICE AND WATER SHEILD TO BE APPLIED TO ROOF DECKING AT EAVES, VALLEYS, PENETRATIONS AND AREAS BELOW A 4:12 PITCH.
2. REFER TO PLUMBING AND ELECRTICAL DRAWINGS FOR ANY ADDITIONAL ROOF PENETRATIONS.
3. ROOFING SYSTEM AND ACCESSORIES INSTALLATION AND DETAILS BE IN STRICT CONFORMANCE WITH MANUFACTURER'S STANDARDS AND RECOMMENDATIONS. ROOFING CONTRACTOR SHALL COMPLY WITH ALL WARRANTY REQUIREMENTS SET FORTH BY MANUFACTURER. CONTACT ARCHITECT FOR ANY "NON-STANDARD" DETAILS.

KEYNOTE LEGEND CONST.

Key Value	Keynote Text
1	PROVIDE AND INSTALL NEW 1x8 MILLED YELLOW PINE - TONGUE AND GROOVE - NO BEVEL
3	REPLICATE TRIMS TO MATCH DOCUMENTED TRIM, LOCATIONS, SIZE AND SHAPE. FINISH PAINT COLORS AS SCHEDULED.
5	PROVIDE AND INSTALL DOOR INCLUDING FRAME, SILL, LINTEL AND ANY ASSOCIATE HARDWARE. SEE DOOR SCHEDULE.
6	INSTALL NEW IPE DECKING. SEE STRUCTURAL FOR DETAILS.
9	PROVIDE AND INSTALL ROLL DOWN DOOR. SEE DETAILS AND SCHEDULE.
10	PROVIDE AND INSTALL COLUMN ENCLOSURES. SEE DETAILS.
11	PROVIDE AND INSTALL T1-11 CEILING.
14	PROVIDE NEW ASPHALT SHINGLE ROOFING,UNDERLAYMENT, AND REPLACE IN KIND EXISTING DECKING AS REQUIRED (COORDINATE WITH STRUCTURAL).
15	PROVIDE AND INSTALL SBS MODIFIED BITUMEN ROOFING AND UNDERLAYMENT.
16	PROVIDE AND INSTALL ALUMINUM METAL DRIP EDGE, DOWNSPOUT AND GUTTER AT PERIMETER OF ROOF.
21	NEW INTERIOR WALL. SEE WALL SCHEDULE.
23	NEW ROOF WITH BATT INSULATION (R-38 MIN) PACKED BETWEEN JOISTS. PROVIDE AND INSTALL SHINGLES, UNDERLAYMENT SHEATHING AND FLASHING SYSTEM.
30	NEW 2x6 WOOD FLOOR.
33	NEW WOOD FENCE. SEE DETAILS.
37	NEW CANOPY, SEE DETAILS.
39	NEW SOFFIT WITH RECESSED LIGHTS AS INDICATED ON RCP
42	NEW MECHANICAL EQUIPMENT. SEE MECHANICAL DRAWINGS.
44	NEW STAIRCASE. SEE DETAILS.
46	EXISTING ROOF BEAMS AND TRUSSES TO NOT BE PAINTED.
47	NEW SIGNAGE AND LETTERING TO BE INSTALLED. SEE DETAILS
51	NEW BIRD NETTING INSTALLED TIGHT UNDER ALL INTERIOR WOOD TRUSSES. ENSURE NO DAMAGE OCCURS TO EXISTING STRUCTURE SO AS TO ALTER ITS STRUCTURAL INTEGRITY. ZIPPERS TO BE COORDINATED WITH LOCATION OF SPRINKLER HEADS.
67	NEW FASCIA BOARD AND SOFFIT.
69	NEW SHEET METAL AT ROOF PERIMETER.
84	HALF ROUND ALUMINUM GUTTER AND DOWNSPOUT.
88	NEW PVC BASEBOARD.
95	RESTORE AND REINSTALL EXISTING HISTORIC WINDOW AND FRAME, TYP.

8/30/2022 2:52:57 PM

CONSULTANT INFORMATION

The LiRo Group
3 Aerial Way, Syosset, New York 11791
(516) 938-5476 www.liro.com

CONSULTANT SEAL

REGISTERED ARCHITECT ROBERT D. YOUNG 023280 STATE OF NEW YORK

REVISION NUMBER	DATE	MADE BY	APP'D BY	REVISION

RECORD DRAWING CERTIFICATION

☐ AS BUILT – CHANGES AS NOTED ☐ AS BUILT – NO CHANGES

CONTRACTOR
NAME
SIGNATURE
TITLE DATE

PROJECT COORDINATOR
NAME
SIGNATURE
TITLE DATE

WESTCHESTER COUNTY, NEW YORK
DEPARTMENT OF PUBLIC WORKS AND TRANSPORTATION
DIVISION OF ENGINEERING

INFRASTRUCTURE REHABILITATION - PHASE 3
PLAYLAND PARK, RYE, NEW YORK
SOUTHEAST ARCADE BUILDING
SE ARCADE ROOF PLAN

CONTRACT NUMBER	22-523
SHEET NUMBER	SA-A-14
DWG NO.:	597 of 664
SCALE:	3/16" = 1'-0"
DATE:	08/23/2022
DPW FILE NUMBER	1-118-A-1346-0
REV. NO.	0

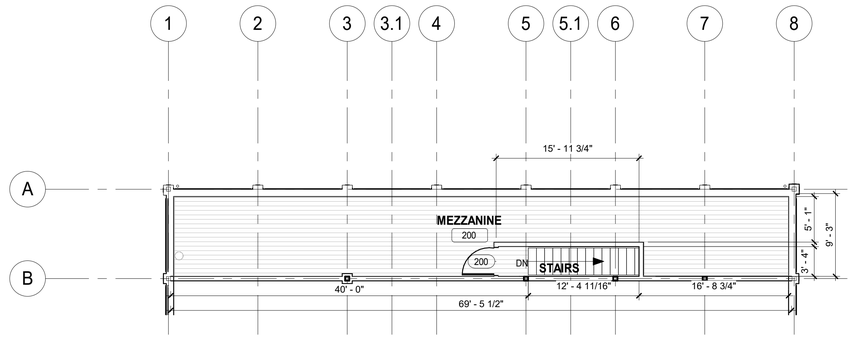

2 MEZZANINE FINISH PLAN
1/8" = 1'-0"

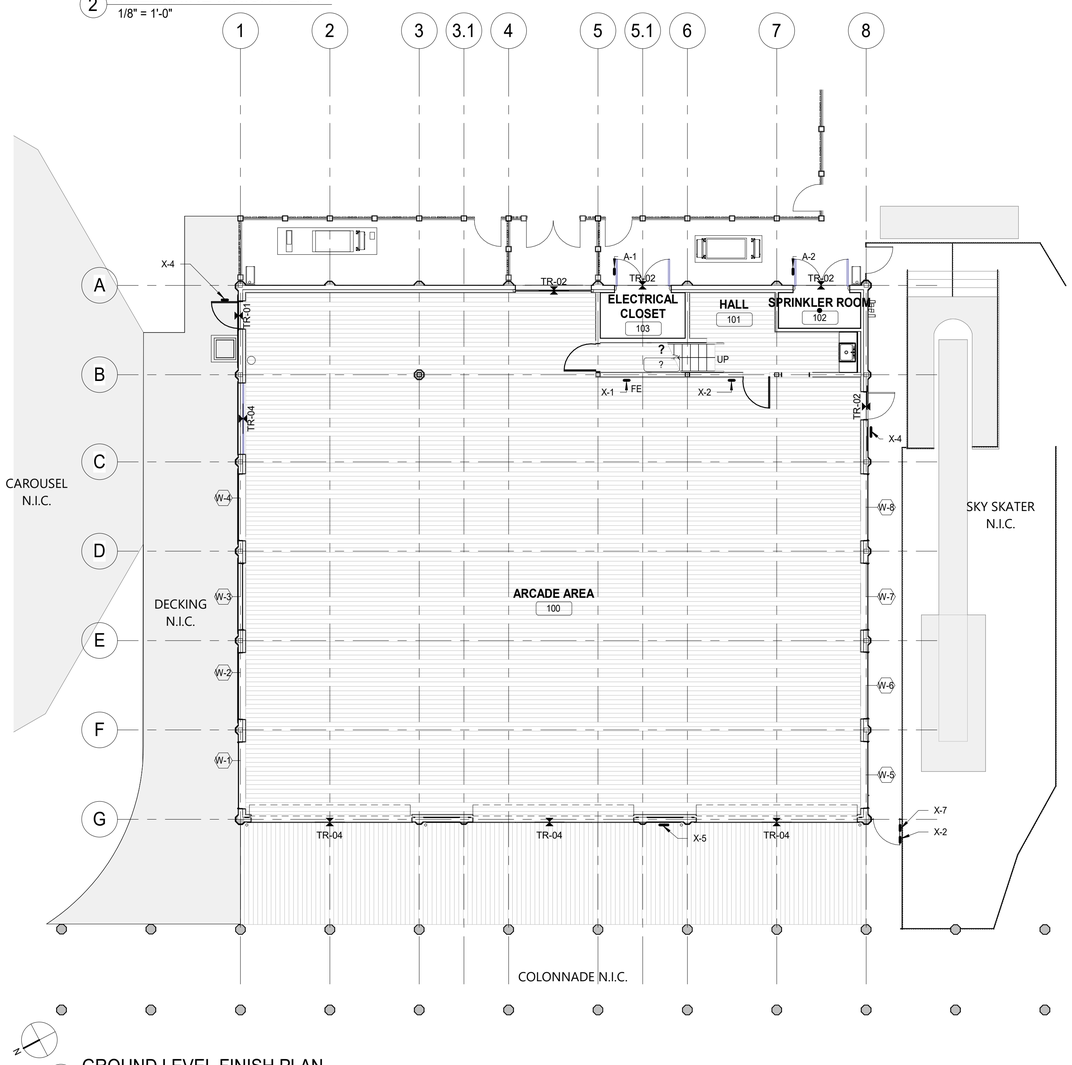

1 GROUND LEVEL FINISH PLAN
1/8" = 1'-0"

FINISH PLAN NOTES

1. INDICATES TYPICAL FINISHES WITHIN ROOM, U.O.N. SEE FINISH SCHEDULE FOR MORE INFORMATION.
2. ALL FLOORING COVERING MATERIALS TO BE INSTALLED PER MANUFACTURER'S STANDARD DETAILS AND SPECIFICATIONS. VERIFY WITH MANUFACTURER PRIOR INSTALLATION.
3. THE G.C. IS RESPONSIBLE FOR PROVIDING A SMOOTH LEVEL FLOOR SURFACE THAT MEETS MANUFACTURERS INSTALLATION SPECIFICATIONS PRIOR TO THE INSTALLATION OF ALL FLOORING MATERIALS.
4. THE FLOORING SUB-CONTRACTOR IS RESPONSIBLE FOR VERIFYING THAT THE CONDITION OF THE BASE FLOOR MEETS THE INSTALLATION SPECIFICATIONS PRIOR TO THE INSTALLATION OF THE NEW FLOORING MATERIAL.
5. ALL MATERIAL TRANSITIONS AN DOOR THRESHOLDS TO TAKE PLACE AT DOOR CENTERLINE U.N.O.
6. ALL DIMENSIONS ARE TO CENTERLINE OF TRANSITION BETWEEN FLOORING MATERIALS OR FINISH COLOR OF SAME MATERIAL. PLANS DO NOT SHOW ALL TILES OF SAME MATERIALS. CONTRACTOR TO START TILES AT POINT AS INDICATED ON PLANS.
7. THE GENERAL CONTRACTOR SHALL BE RESPONSIBLE FOR PROPER PREPARATION OF ALL NEW AND EXISTING SURFACES IN A SATISFACTORY MANNER TO RECEIVE NEW FINISHES. THIS INCLUDES THE DEMOLITION AND REMOVAL OF NECESSARY ITEMS. TOUCH- UP AND/ OR REFINISH OF SURFACES DAMAGED BY SUBSEQUENT WORK SHALL BE PERFORMED IN CONFORMANCE WITH THE MANUFACTURER'S RECOMMENDED INSTALLATION METHODS.
8. ALL SURFACES WHICH ARE TO RECEIVE A PAINT FINISH SHALL BE PRIMED AND FINISHED IN ACCORDANCE WITH THE WRITTEN SPECIFICATIONS.
9. ALL JOINTS IN GYPSUM BOARD WALLS SHALL BE FINISHED WITH PAPER TAPE 2" WIDE AND THREE COATS OF VINYL, DRY OR PREMIXED JOINT COMPOUND. ALL OUTSIDE CORNERS SHALL BE FINISHED WITH METAL CORNER BEADS, TAPED AND SPACKLED. ALL AREAS TO BE PAINTED SHALL BE SANDED SMOOTH. JUST PRIOR TO THE APPLICATION OF THE FIRST COAT OF PAINT, WIPE SANDED SURFACES WITH A DAMP CLOTH IN ORDER TO LAY FLAT ANY NAP WHICH MAY HAVE FORMED IN SANDING.
10. THE PAINT CONTRACTOR SHALL REMOVE ALL HARDWARE, SWITCH COVERS, ETC. PRIOR TO PAINTING AND BE RESPONSIBLE FOR THE REINSTALLATION AFTER PAINTING IS COMPLETED.
11. FINISH FLOORING INSTALLATION SHALL BE IN CONFORMANCE WITH THE MANUFACTURER'S RECOMMENDED INSTALLATION GUIDELINES. COORDINATE THE INSTALLATION WITH OTHER TRADES, SUCH AS ELECTRICAL.
12. ALL JOINTS BETWEEN MATERIALS TO BE TIGHT AND CONSTRUCTED IN A NEAT WORKMANLIKE MANNER.
13. ALL FINISHES SHALL BE TOUCHED UP TO CORRECT ANY IMPERFECTIONS AFTER INSTALLATION. FIXTURE CONTRACTOR SHALL PROVIDE TO THE GENERAL CONTRACTOR ALL MATERIALS FOR TOUCH UP WORK.
14. THE INTENT OF THE FINISH SPECIFICATIONS IS TO PROVIDE A SATISFACTORY FINISH TO ALL PARTS OF THE WORK. COVER ALL SURFACES THOROUGHLY. IF THE SPECIFIED NUMBER OF COATS DOES NOT ACCOMPLISH THE INTENT, THE GENERAL CONTRACTOR SHALL BE RESPONSIBLE FOR THE APPLICATION OF ADDITIONAL COATS OF THE SPECIFIED MATERIAL TO GIVE SATISFACTORY COVERAGE, AT NO ADDITIONAL COST TO OWNER.
15. CLEAN ALL GLASS SURFACES WITH LIQUID GLASS CLEANER AT PROJECT COMPLETION.
16. REFERENCE SPECIFICATIONS FOR COMPLETE FINISH DOCUMENTATION AND MANUFACTURER INSTALLATION AND MAINTENANCE DOCUMENTATION.
17. PROVIDE ALLOWANCE OF $2,500 PER WINDOW FOR WINDOW TREATMENT.

FINISH LEGEND

- N.I.C. — NOT IN CONTRACT
- IPE WOOD DECKING
- WOOD PLANK
- TR-XX — TRANSITION STRIP - SEE DETAILS ON SA-A-93
- A-X — SIGNAGE - SEE DETAILS ON SA-A-82
- EPOXY FLOORING

SOUTH EAST ARCADE FINISH SCHEDULE

ROOM #	ROOM NAME	CEILING	WALLS	WALL BASE	FLOOR	DOORS AND TRIM
100	ARCADE AREA	P-1	P-1	WB-1	WD-3	REFER TO DOOR SCHEDULE ON SA-A- 91
101	HALL	GYP	P-1	WB-1	WD-3	REFER TO DOOR SCHEDULE ON SA-A- 91
102	SPRINKLER ROOM	OPEN	P-1	WB-4	EP-1	REFER TO DOOR SCHEDULE ON SA-A- 91
103	ELECTRICAL CLOSET	OPEN	P-1	WB-4	EP-1	REFER TO DOOR SCHEDULE ON SA-A- 91
104	CLOSET	GYP	P-1	WB-1	WD-3	REFER TO DOOR SCHEDULE ON SA-A- 91
200	MEZZANINE	T1-11	P-1	WB-1	WD-3	REFER TO DOOR SCHEDULE ON SA-A- 91

FINISH LEGEND

CEILING	(FOR CEILING DETAILS, SEE SA-A-84)
P-1	**MFR:** BENJAMIN MOORE - **MODEL:** #901 - **COLOR:** MYSTICAL POWERS
GYP	GYPSUM BOARD **MFR:**TBD - **MODEL:** 5/8" THICK - **COLOR:** AS INDICATED ON FINISH PLAN (FOR PAINT TYPE AND SYSTEMS, SEE SPECIFICATIONS)
T1-11	**MFR:**TBD - **COLOR:** PREMIUM GRADE PLYWOOD SIDING - **SIZE:** 4'x8'x11/32"- **REMARKS:** GROOVED 2" O.C.
WALL	(FOR WALL DETAILS, SEE SA-A-93)
P-1	**MFR:** BENJAMIN MOORE - **MODEL:** #901 - **COLOR:** MYSTICAL POWERS
WALL BASE	(FOR WALL BASE DETAILS, SEE SA-A-93)
WB-1	**MFR:** - **MATERIAL:** HARDWOOD OR MDF - **COLOR:** AS INDICATED ON FINSIH PLAN - **SIZE:** 1"x6" - **REMARK:** SQUARE BASE
WB-4	**MFR:** DUR-A-FLEX - **MATERIAL:** EPOXY COVE BASE - **MODEL:** MACRO CHIP COLOR BLEND - **COLOR:** PEWTER
FLOORING	
WD-1	IPE DECKING **MFR:**TBD - **MODEL:** 2x6 PREMIUM GRADE/ FAS- **COLOR:** TBD - **REMARK:**1x6 NOMINAL
WD-2	WOOD PLANKS **MFR:** TBD - **MODEL:** 2x6 - **COLOR:** TBD
WD-3	PLYWOOD FLOORING **MFR:** TBD - **MODEL:** 3/4" THICK - **COLOR:** EXTERIOR GRADE PLYWOOD SHEATHING
EP-1	EPOXY FLOORING **MFR:** DUR-A-FLEX - **MODEL:** MACRO CHIP COLOR BLEND - **COLOR:** PEWTER- **REMARK:** COVE BASE TO MATCH: WB-4
THRESHOLD	(FOR THRESHOLD DETAILS, SEE SA-A-93)
TR-01	WOOD TO WOOD DOOR SILL (DOOR)
TR-02	EXTERIOR DOOR SILL (DOOR)
TR-04	EXTERIOR DOOR SILL (ROLL- UP DOOR)

8/30/2022 2:52:58 PM

CONSULTANT INFORMATION
The LiRo Group
3 Aerial Way, Syosset, New York 11791
(516) 938-5476 www.liro.com

CONSULTANT SEAL
REGISTERED ARCHITECT ROBERT D. JOHNSON 023220 STATE OF NEW YORK

REVISION NUMBER	DATE	MADE BY	APP'D BY	REVISION

RECORD DRAWING CERTIFICATION
☐ AS BUILT – CHANGES AS NOTED ☐ AS BUILT – NO CHANGES

CONTRACTOR
NAME
SIGNATURE
TITLE DATE

PROJECT COORDINATOR
NAME
SIGNATURE
TITLE DATE

WESTCHESTER COUNTY, NEW YORK
DEPARTMENT OF PUBLIC WORKS AND TRANSPORTATION
DIVISION OF ENGINEERING

INFRASTRUCTURE REHABILITATION - PHASE 3
PLAYLAND PARK, RYE, NEW YORK
SOUTHEAST ARCADE BUILDING
SE ARCADE FINISH PLANS

CONTRACT NUMBER	22-523
SHEET NUMBER	SA-A-15
DWG NO.:	598 of 664
SCALE:	As indicated
DATE:	08/23/2022
DPW FILE NUMBER	1-118-A-1347-0
REV. NO.	0

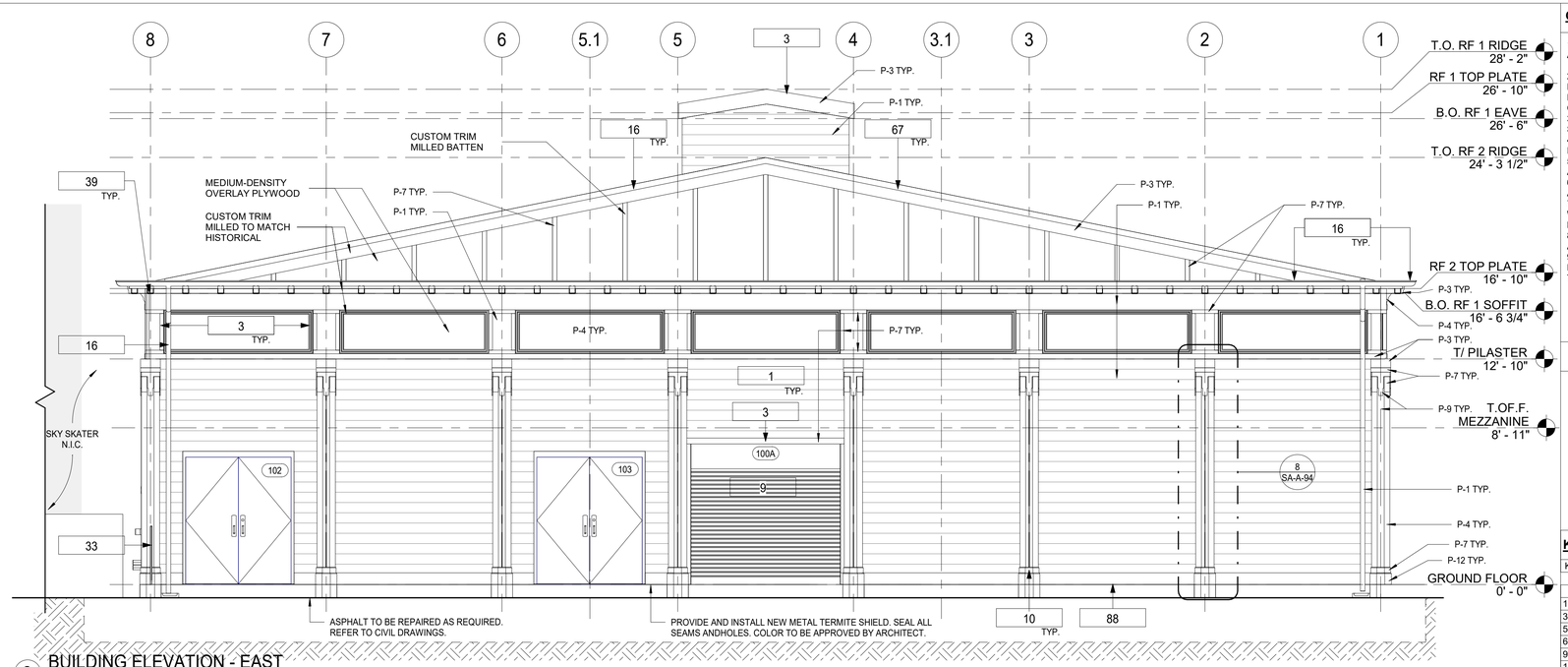

2 BUILDING ELEVATION - EAST
1/4" = 1'-0"

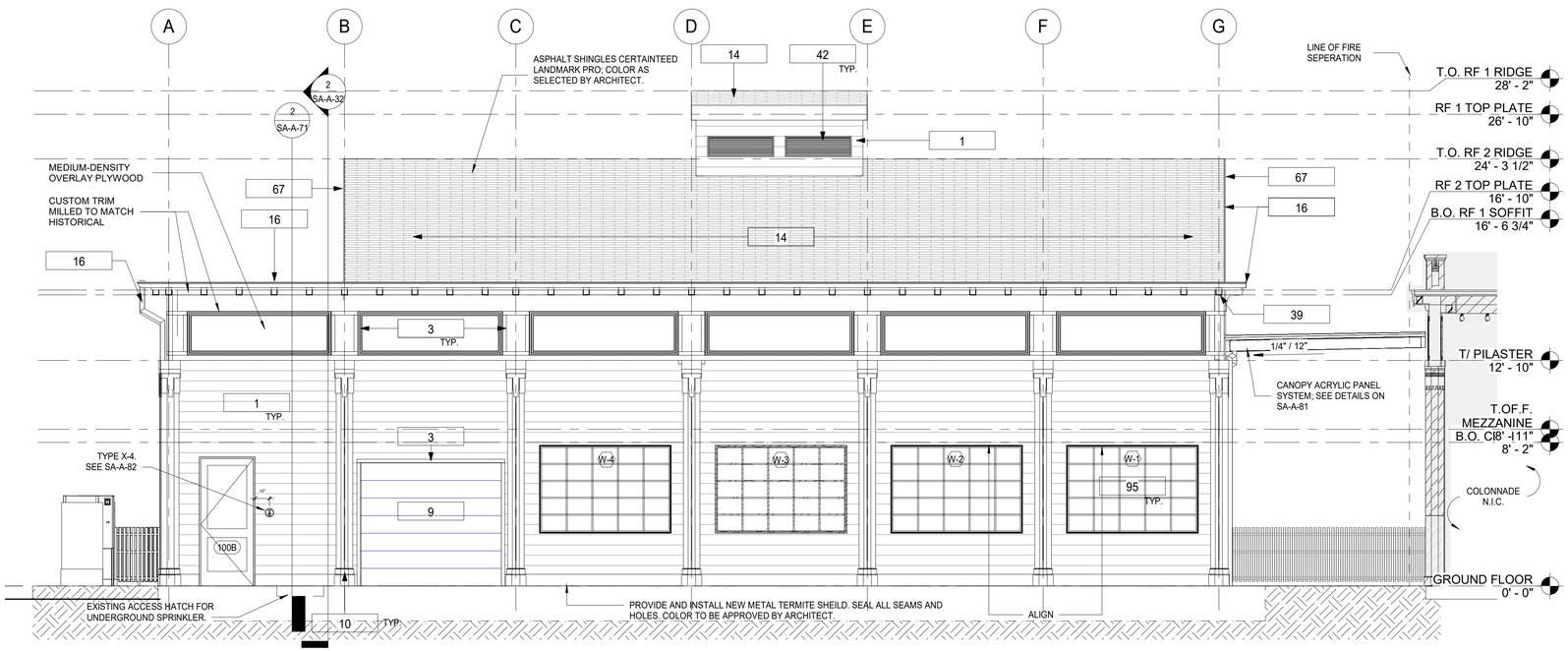

1 BUILDING ELEVATION - NORTH
1/4" = 1'-0"

CONSTRUCTION GENERAL NOTES

1. THE ARCHITECT DOES NOT CERTIFY DIMENSIONS OR CONDITIONS OF EXISTING CONSTRUCTION. CONTRACTOR SHALL NOTIFY ARCHITECT IMMEDIATELY OF ANY DISCREPANCY BETWEEN DRAWINGS AND EXISTING CONDITIONS. IN ADDITION, CONTRACTOR SHALL NOTIFY THE ARCHITECT OF ANY DEFECTIVE CONSTRUCTION UNCOVERED DURING CONSTRUCTION.
2. CONTRACTOR SHALL KEEP WORK SITE FREE FROM DEBRIS AND ACCUMULATED REFUSE, AND SHALL HAVE SOLE RESPONSIBILITY FOR PROTECTING ALL DANGEROUS AREAS FROM ENTRY BY UNAUTHORIZED PARTIES. ALL CONSTRUCTION SCRAPS, DIRT, AND DEBRIS SHALL BE REMOVED FROM THE PREMISES DAILY. SITE SHALL BE LEFT BROOM CLEAN AT THE END OF EACH WORKING DAY. AT THE COMPLETION OF THE WORK, HE PREMISES SHALL BE LEFT IN A BROOM CLEAN CONDITION.
3. ALL WORK TO BE PERFORMED IN A WORKMANLIKE FASHION. MATERIALS UTILIZED SHALL BE AS SPECIFIED ON THE DRAWINGS OR IN THE JOB SPECIFICATIONS, OR, IF GENERIC, IN COMPLIANCE WITH ASTM, NEW YORK CODE, OR OTHER GENERALLY ACCEPTED STANDARDS.
4. WHERE EXISTING EQUIPMENT OR CONSTRUCTION IS REMOVED OR ALTERED, ALL REMAINING SURFACES AND FINISHES AFFECTED SHALL BE PATCHED AND FINISHED TO MATCH ADJACENT CONSTRUCTION/PRE-EXISTING CONDITION.
5. ALL EXITS SHALL BE KEPT READILY ACCESSIBLE AND UNOBSTRUCTED AT ALL TIMES. ALL EXITS SHALL BE KEPT READILY ACCESSIBLE AND UNOBSTRUCTED AT ALL TIMES.
6. ALL INFILLED OPENINGS TO BE FLUSH WITH EXISTING MASONRY WALL SURFACES, EXTERIOR OF NEW AND OLD TO BE FLUSH AND MATCH WITH EXISTING ADJACENT WALL SYSTEM.
7. THE G.C. SHALL VERIFY DIMENSIONS OF THE EXISTING SPACE AND OF ANY EXISTING CONSTRUCTION TO REMAIN BY ACTUAL MEASUREMENT BEFORE ANY WORK IS PERFORMED. IF ANY MEASUREMENTS DIFFER FROM DIMENSIONS SHOWN ON PLAN, G.C. IS TO NOTIFY THE ARCHITECT IMMEDIATELY. THE G.C. SHALL BE RESPONSIBLE FOR CORRECTING ANY AND ALL DISCREPANCIES FOUND AFTER THE WORK IS PERFORMED, AT NO ADDITIONAL EXPENSE TO THE OWNER.
8. G.C. TO VERIFY ALL FINISHED DIMENSIONS. FIELD CONDITIONS ALTERING ANY DIMENSIONS SHOULD BE BROUGHT TO THE ATTENTION OF THE OWNER AND ARCHITECT.
9. THE G.C. SHALL BE RESPONSIBLE FOR COORDINATING WITH OWNER ON ALL WORK TO BE PERFORMED BY THE OWNER. ANY POTENTIAL CONFLICTS OR DELAYS CAUSED BY THE OWNER'S SUBCONTRACTORS MUST BE DOCUMENTED IN WRITING TO THE OWNER BEFORE THE DELAY IS ACTUALLY INCURRED FOR IT TO BE CONSIDERED. OTHERWISE THE G.C. WILL BE RESPONSIBLE FOR MEETING THE SCHEDULE AS OUTLINED IN THE CONTRACT.

CONSTRUCTION LEGEND

NIC	NOT IN CONTRACT
?	KEY NOTES
1i	WINDOW TAG
101	DOOR TAG

KEYNOTE LEGEND CONST.

Key Value	Keynote Text
1	PROVIDE AND INSTALL NEW 1x8 MILLED YELLOW PINE - TONGUE AND GROOVE - NO BEVEL
3	REPLICATE TRIMS TO MATCH DOCUMENTED TRIM, LOCATIONS, SIZE AND SHAPE. FINISH PAINT COLORS AS SCHEDULED.
5	PROVIDE AND INSTALL DOOR INCLUDING FRAME, SILL, LINTEL AND ANY ASSOCIATE HARDWARE. SEE DOOR SCHEDULE.
6	INSTALL NEW IPE DECKING. SEE STRUCTURAL FOR DETAILS.
9	PROVIDE AND INSTALL ROLL DOWN DOOR. SEE DETAILS AND SCHEDULE.
10	PROVIDE AND INSTALL COLUMN ENCLOSURES. SEE DETAILS.
11	PROVIDE AND INSTALL T1-11 CEILING.
14	PROVIDE NEW ASPHALT SHINGLE ROOFING,UNDERLAYMENT, AND REPLACE IN KIND EXISTING DECKING AS REQUIRED (COORDINATE WITH STRUCTURAL).
15	PROVIDE AND INSTALL SBS MODIFIED BITUMEN ROOFING AND UNDERLAYMENT.
16	PROVIDE AND INSTALL ALUMINUM METAL DRIP EDGE, DOWNSPOUT AND GUTTER AT PERIMETER OF ROOF.
21	NEW INTERIOR WALL. SEE WALL SCHEDULE.
23	NEW ROOF WITH BATT INSULATION (R-38 MIN) PACKED BETWEEN JOISTS. PROVIDE AND INSTALL SHINGLES, UNDERLAYMENT SHEATHING AND FLASHING SYSTEM.
30	NEW 2x6 WOOD FLOOR.
33	NEW WOOD FENCE. SEE DETAILS.
37	NEW CANOPY, SEE DETAILS.
39	NEW SOFFIT WITH RECESSED LIGHTS AS INDICATED ON RCP
42	NEW MECHANICAL EQUIPMENT. SEE MECHANICAL DRAWINGS.
44	NEW STAIRCASE. SEE DETAILS.
46	EXISTING ROOF BEAMS AND TRUSSES TO NOT BE PAINTED.
47	NEW SIGNAGE AND LETTERING TO BE INSTALLED. SEE DETAILS
51	NEW BIRD NETTING INSTALLED TIGHT UNDER ALL INTERIOR WOOD TRUSSES. ENSURE NO DAMAGE OCCURS TO EXISTING STRUCTURE SO AS TO ALTER ITS STRUCTURAL INTEGRITY. ZIPPERS TO BE COORDINATED WITH LOCATION OF SPRINKLER HEADS.
67	NEW FASCIA BOARD AND SOFFIT.
69	NEW SHEET METAL AT ROOF PERIMETER.
84	HALF ROUND ALUMINUM GUTTER AND DOWNSPOUT.
88	NEW PVC BASEBOARD.
95	RESTORE AND REINSTALL EXISTING HISTORIC WINDOW AND FRAME, TYP.

PLAYLAND MASTER PAINT SCHEDULE

KEY	COLOR	MANUFACTURER	REMARKS
P-1	MYSTICAL POWERS #901	BENJAMIN MOORE	
P-2	HERITAGE RED #HC-181	BENJAMIN MOORE	
P-3	NEW YORK STATE OF MIND #805	BENJAMIN MOORE	
P-4	LAZY SUNDAY #803	BENJAMIN MOORE	
P-5	DEEP JUNGLE #595	BENJAMIN MOORE	
P-6	LUCK OF THE IRISH #588	BENJAMIN MOORE	
P-7	MAJOLICA GREEN #0013	SHERWIN WILLIAMS	
P-8	ANTELOPE CANYON #125	BENJAMIN MOORE	
P-9	FORSYTHIA #6907	SHERWIN WILLIAMS	
P-10	CAPE BLUE #1642	BENJAMIN MOORE	
P-11	WHITE SNOW #9541	SHERWIN WILLIAMS	
P-12	TRICORN BLACK #6258	SHERWIN WILLIAMS	
P-13	READY WHITE MIX		INTERIOR USE ONLY
P-14	STUCCO TO MATCH P-1		FOR ALL NEW STUCCO SURFACES
P-15	VAN DEUSEN BLUE #HC-156	BENJAMIN MOORE	
P-16	#RAL9001		TYPICAL ROLL UP DOOR COLOR
P-17	FLORIDA BEACHES #900	BENJAMIN MOORE	
P-18	PIRATES COVE PEACH #903	BENJAMIN MOORE	
P-19	JADITE #6459	SHERWIN WILLIAMS	
P-20	DECISIVE YELLOW #6902	SHERWIN WILLIAMS	

8/30/2022 2:53:00 PM

CONSULTANT INFORMATION
The LiRo Group
3 Aerial Way, Syosset, New York 11791
(516) 938-5476 www.liro.com

CONSULTANT SEAL
REGISTERED ARCHITECT ROBERT D. TOMASULO 023290 STATE OF NEW YORK

REVISION NUMBER	DATE	MADE BY	APP'D BY	REVISION

RECORD DRAWING CERTIFICATION
☐ AS BUILT – CHANGES AS NOTED ☐ AS BUILT – NO CHANGES

CONTRACTOR
NAME
SIGNATURE
TITLE DATE

PROJECT COORDINATOR
NAME
SIGNATURE
TITLE DATE

WESTCHESTER COUNTY, NEW YORK
DEPARTMENT OF PUBLIC WORKS AND TRANSPORTATION
DIVISION OF ENGINEERING

INFRASTRUCTURE REHABILITATION - PHASE 3
PLAYLAND PARK, RYE, NEW YORK
SOUTHEAST ARCADE BUILDING
EXTERIOR BUILDING ELEVATIONS 1

CONTRACT NUMBER	22-523
SHEET NUMBER	SA-A-21
DWG NO.:	599 of 664
SCALE:	1/4" = 1'-0"
DATE:	08/23/2022
DPW FILE NUMBER	1-118-A-1348-0
REV. NO.	0

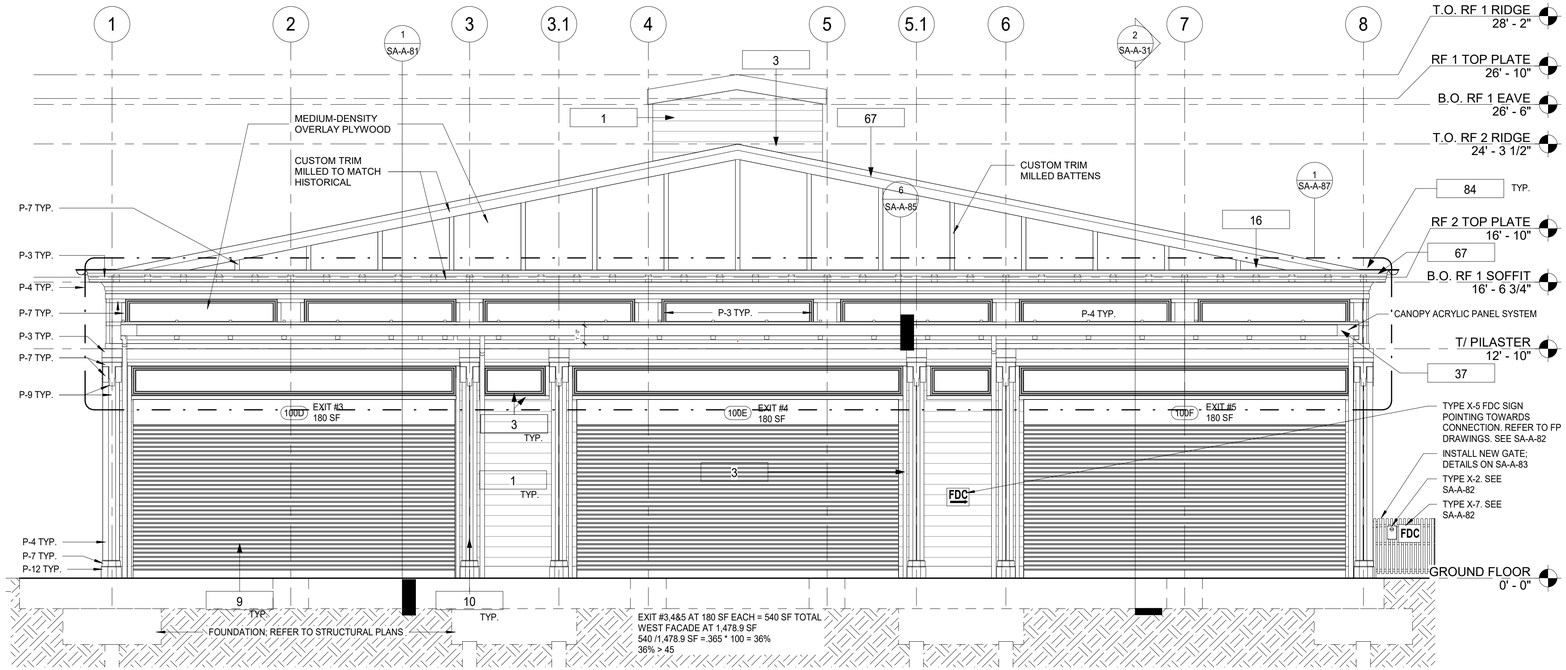

2 BUILDING ELEVATION - WEST
1/4" = 1'-0"

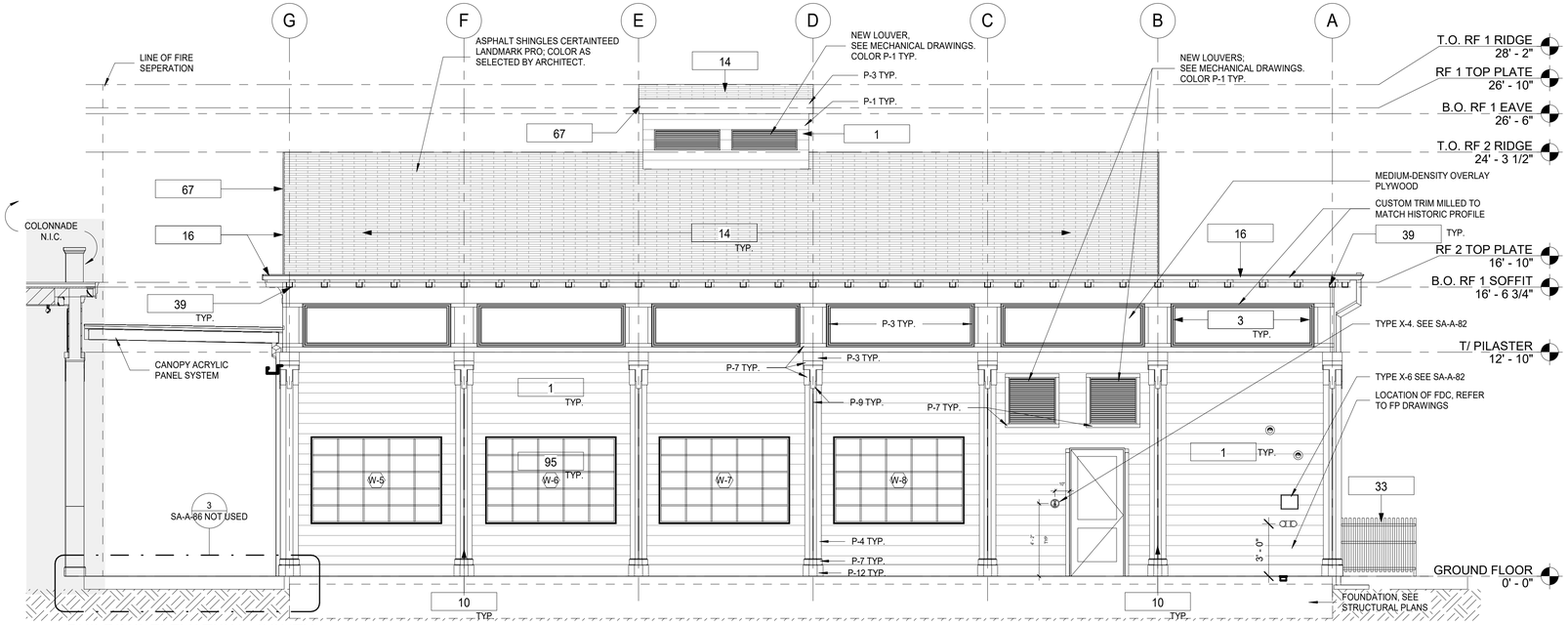

1 BUILDING ELEVATION - SOUTH
1/4" = 1'-0"

CONSTRUCTION GENERAL NOTES

1. THE ARCHITECT DOES NOT CERTIFY DIMENSIONS OR CONDITIONS OF EXISTING CONSTRUCTION. CONTRACTOR SHALL NOTIFY ARCHITECT IMMEDIATELY OF ANY DISCREPANCY BETWEEN DRAWINGS AND EXISTING CONDITIONS. IN ADDITION, CONTRACTOR SHALL NOTIFY THE ARCHITECT OF ANY DEFECTIVE CONSTRUCTION UNCOVERED DURING CONSTRUCTION.
2. CONTRACTOR SHALL KEEP WORK SITE FREE FROM DEBRIS AND ACCUMULATED REFUSE, AND SHALL HAVE SOLE RESPONSIBILITY FOR PROTECTING ALL DANGEROUS AREAS FROM ENTRY BY UNAUTHORIZED PARTIES. ALL CONSTRUCTION SCRAPS, DIRT, AND DEBRIS SHALL BE REMOVED FROM THE PREMISES DAILY. SITE SHALL BE LEFT BROOM CLEAN AT THE END OF EACH WORKING DAY. AT THE COMPLETION OF THE WORK, HE PREMISES SHALL BE LEFT IN A BROOM CLEAN CONDITION.
3. ALL WORK TO BE PERFORMED IN A WORKMANLIKE FASHION. MATERIALS UTILIZED SHALL BE AS SPECIFIED ON THE DRAWINGS OR IN THE JOB SPECIFICATIONS, OR, IF GENERIC, IN COMPLIANCE WITH ASTM, NEW YORK CODE, OR OTHER GENERALLY ACCEPTED STANDARDS.
4. WHERE EXISTING EQUIPMENT OR CONSTRUCTION IS REMOVED OR ALTERED, ALL REMAINING SURFACES AND FINISHES AFFECTED SHALL BE PATCHED AND FINISHED TO MATCH ADJACENT CONSTRUCTION/PRE-EXISTING CONDITION.
5. ALL EXITS SHALL BE KEPT READILY ACCESSIBLE AND UNOBSTRUCTED AT ALL TIMES. ALL EXITS SHALL BE KEPT READILY ACCESSIBLE AND UNOBSTRUCTED AT ALL TIMES.
6. ALL INFILLED OPENINGS TO BE FLUSH WITH EXISTING MASONRY WALL SURFACES, EXTERIOR OF NEW AND OLD TO BE FLUSH AND MATCH WITH EXISTING ADJACENT WALL SYSTEM.
7. THE G.C. SHALL VERIFY DIMENSIONS OF THE EXISTING SPACE AND OF ANY EXISTING CONSTRUCTION TO REMAIN BY ACTUAL MEASUREMENT BEFORE ANY WORK IS PERFORMED. IF ANY MEASUREMENTS DIFFER FROM DIMENSIONS SHOWN ON PLAN, G.C. IS TO NOTIFY THE ARCHITECT IMMEDIATELY. THE G.C. SHALL BE RESPONSIBLE FOR CORRECTING ANY AND ALL DISCREPANCIES FOUND AFTER THE WORK IS PERFORMED, AT NO ADDITIONAL EXPENSE TO THE OWNER.
8. G.C. TO VERIFY ALL FINISHED DIMENSIONS. FIELD CONDITIONS ALTERING ANY DIMENSIONS SHOULD BE BROUGHT TO THE ATTENTION OF THE OWNER AND ARCHITECT.
9. THE G.C. SHALL BE RESPONSIBLE FOR COORDINATING WITH OWNER ON ALL WORK TO BE PERFORMED BY THE OWNER. ANY POTENTIAL CONFLICTS OR DELAYS CAUSED BY THE OWNER'S SUBCONTRACTORS MUST BE DOCUMENTED IN WRITING TO THE OWNER BEFORE THE DELAY IS ACTUALLY INCURRED FOR IT TO BE CONSIDERED. OTHERWISE THE G.C. WILL BE RESPONSIBLE FOR MEETING THE SCHEDULE AS OUTLINED IN THE CONTRACT.

CONSTRUCTION LEGEND

NIC	NOT IN CONTRACT
?	KEY NOTES
1i	WINDOW TAG
101	DOOR TAG

KEYNOTE LEGEND CONST.

Key Value	Keynote Text
1	PROVIDE AND INSTALL NEW 1x8 MILLED YELLOW PINE - TONGUE AND GROOVE - NO BEVEL
3	REPLICATE TRIMS TO MATCH DOCUMENTED TRIM, LOCATIONS, SIZE AND SHAPE. FINISH PAINT COLORS AS SCHEDULED.
5	PROVIDE AND INSTALL DOOR INCLUDING FRAME, SILL, LINTEL AND ANY ASSOCIATE HARDWARE. SEE DOOR SCHEDULE.
6	INSTALL NEW IPE DECKING. SEE STRUCTURAL FOR DETAILS.
9	PROVIDE AND INSTALL ROLL DOWN DOOR. SEE DETAILS AND SCHEDULE.
10	PROVIDE AND INSTALL COLUMN ENCLOSURES. SEE DETAILS.
11	PROVIDE AND INSTALL T1-11 CEILING.
14	PROVIDE NEW ASPHALT SHINGLE ROOFING,UNDERLAYMENT, AND REPLACE IN KIND EXISTING DECKING AS REQUIRED (COORDINATE WITH STRUCTURAL).
15	PROVIDE AND INSTALL SBS MODIFIED BITUMEN ROOFING AND UNDERLAYMENT.
16	PROVIDE AND INSTALL ALUMINUM METAL DRIP EDGE, DOWNSPOUT AND GUTTER AT PERIMETER OF ROOF.
21	NEW INTERIOR WALL. SEE WALL SCHEDULE.
23	NEW ROOF WITH BATT INSULATION (R-38 MIN) PACKED BETWEEN JOISTS. PROVIDE AND INSTALL SHINGLES, UNDERLAYMENT SHEATHING AND FLASHING SYSTEM.
30	NEW 2x6 WOOD FLOOR.
33	NEW WOOD FENCE. SEE DETAILS.
37	NEW CANOPY, SEE DETAILS.
39	NEW SOFFIT WITH RECESSED LIGHTS AS INDICATED ON RCP
42	NEW MECHANICAL EQUIPMENT. SEE MECHANICAL DRAWINGS.
44	NEW STAIRCASE. SEE DETAILS.
46	EXISTING ROOF BEAMS AND TRUSSES TO NOT BE PAINTED.
47	NEW SIGNAGE AND LETTERING TO BE INSTALLED. SEE DETAILS
51	NEW BIRD NETTING INSTALLED TIGHT UNDER ALL INTERIOR WOOD TRUSSES. ENSURE NO DAMAGE OCCURS TO EXISTING STRUCTURE SO AS TO ALTER ITS STRUCTURAL INTEGRITY. ZIPPERS TO BE COORDINATED WITH LOCATION OF SPRINKLER HEADS.
67	NEW FASCIA BOARD AND SOFFIT.
69	NEW SHEET METAL AT ROOF PERIMETER.
84	HALF ROUND ALUMINUM GUTTER AND DOWNSPOUT.
88	NEW PVC BASEBOARD.
95	RESTORE AND REINSTALL EXISTING HISTORIC WINDOW AND FRAME, TYP.

PLAYLAND MASTER PAINT SCHEDULE

KEY	COLOR	MANUFACTURER	REMARKS
P-1	MYSTICAL POWERS #901	BENJAMIN MOORE	
P-2	HERITAGE RED #HC-181	BENJAMIN MOORE	
P-3	NEW YORK STATE OF MIND #805	BENJAMIN MOORE	
P-4	LAZY SUNDAY #803	BENJAMIN MOORE	
P-5	DEEP JUNGLE #595	BENJAMIN MOORE	
P-6	LUCK OF THE IRISH #588	BENJAMIN MOORE	
P-7	MAJOLICA GREEN #0013	SHERWIN WILLIAMS	
P-8	ANTELOPE CANYON #125	BENJAMIN MOORE	
P-9	FORSYTHIA #6907	SHERWIN WILLIAMS	
P-10	CAPE BLUE #1642	BENJAMIN MOORE	
P-11	WHITE SNOW #9541	SHERWIN WILLIAMS	
P-12	TRICORN BLACK #6258	SHERWIN WILLIAMS	
P-13	READY WHITE MIX		INTERIOR USE ONLY
P-14	STUCCO TO MATCH P-1		FOR ALL NEW STUCCO SURFACES
P-15	VAN DEUSEN BLUE #HC-156	BENJAMIN MOORE	
P-16	#RAL9001		TYPICAL ROLL UP DOOR COLOR
P-17	FLORIDA BEACHES #900	BENJAMIN MOORE	
P-18	PIRATES COVE PEACH #903	BENJAMIN MOORE	
P-19	JADITE #6459	SHERWIN WILLIAMS	
P-20	DECISIVE YELLOW #6902	SHERWIN WILLIAMS	

8/30/2022 2:53:02 PM

CONSULTANT INFORMATION
The LiRo Group
3 Aerial Way, Syosset, New York 11791
(516) 938-5476 www.liro.com

CONSULTANT SEAL
REGISTERED ARCHITECT ROBERT D. TOWNLEY JR. 023290 STATE OF NEW YORK

REVISION NUMBER	DATE	MADE BY	APP'D BY	REVISION

RECORD DRAWING CERTIFICATION
☐ AS BUILT – CHANGES AS NOTED ☐ AS BUILT – NO CHANGES

CONTRACTOR
NAME
SIGNATURE
TITLE DATE

PROJECT COORDINATOR
NAME
SIGNATURE
TITLE DATE

WESTCHESTER COUNTY, NEW YORK
DEPARTMENT OF PUBLIC WORKS AND TRANSPORTATION
DIVISION OF ENGINEERING

INFRASTRUCTURE REHABILITATION - PHASE 3
PLAYLAND PARK, RYE, NEW YORK
SOUTHEAST ARCADE BUILDING
EXTERIOR BUILDING ELEVATIONS 2

CONTRACT NUMBER	22-523
SHEET NUMBER	SA-A-22
DWG NO.:	600 of 664
SCALE:	1/4" = 1'-0"
DATE:	08/23/2022
DPW FILE NUMBER	1-118-A-1349-0
REV. NO.	0

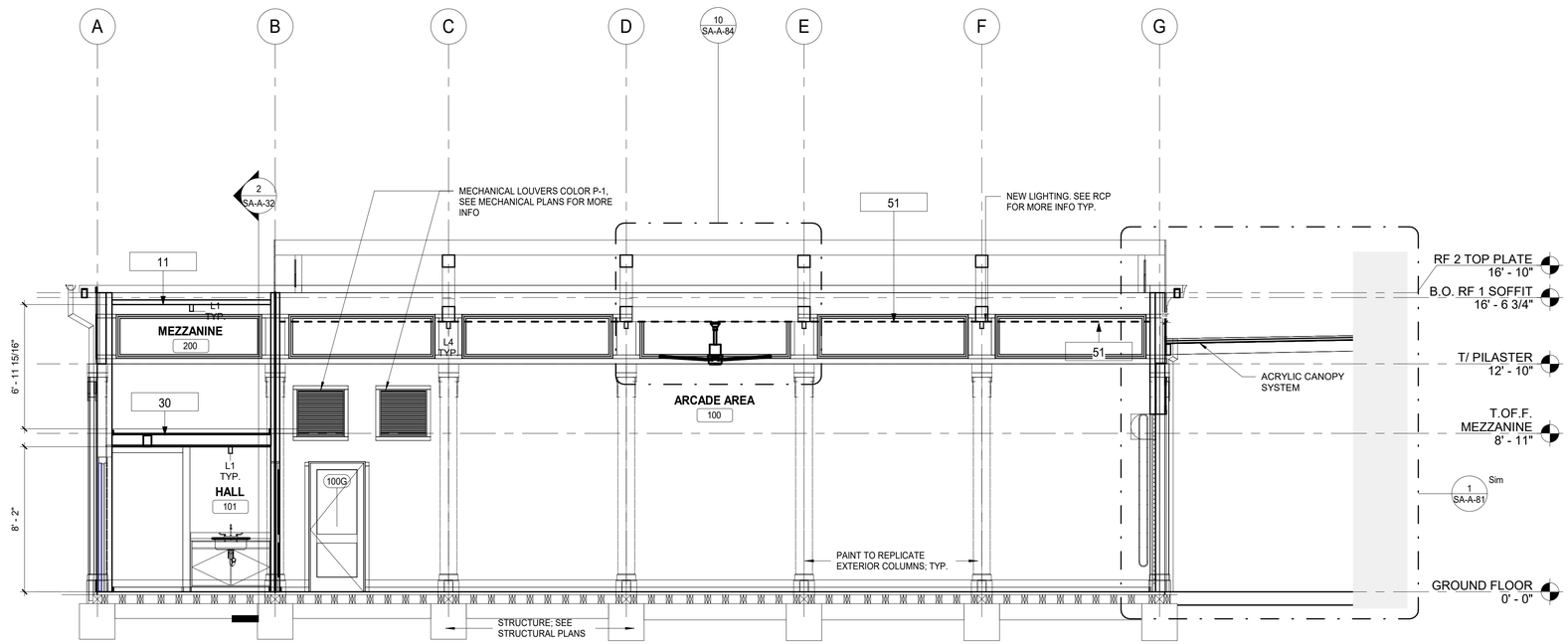

2 NORTH SECTION
1/4" = 1'-0"

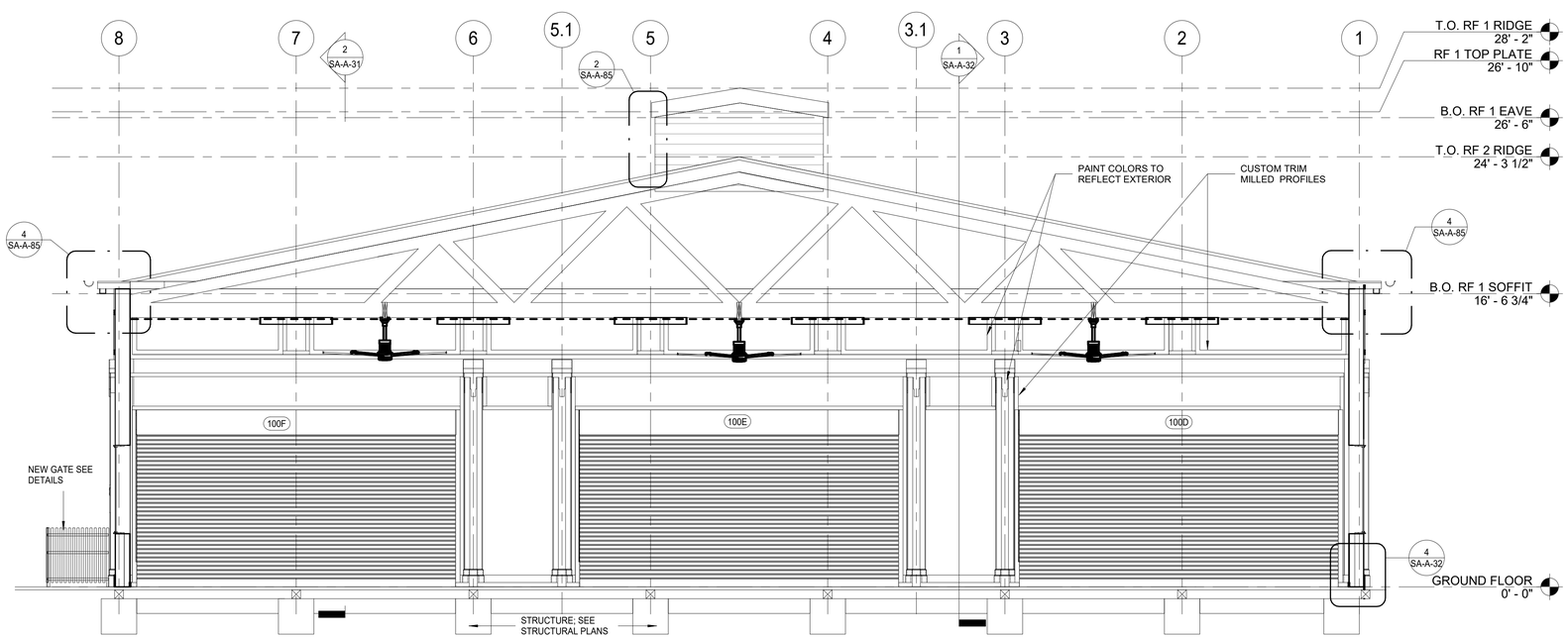

1 EAST SECTION
1/4" = 1'-0"

CONSTRUCTION LEGEND

NIC	NOT IN CONTRACT
?	KEY NOTES
1i	WINDOW TAG
101	DOOR TAG

KEYNOTE LEGEND CONST.

Key Value	Keynote Text
1	PROVIDE AND INSTALL NEW 1x8 MILLED YELLOW PINE - TONGUE AND GROOVE - NO BEVEL
3	REPLICATE TRIMS TO MATCH DOCUMENTED TRIM, LOCATIONS, SIZE AND SHAPE. FINISH PAINT COLORS AS SCHEDULED.
5	PROVIDE AND INSTALL DOOR INCLUDING FRAME, SILL, LINTEL AND ANY ASSOCIATE HARDWARE. SEE DOOR SCHEDULE.
6	INSTALL NEW IPE DECKING. SEE STRUCTURAL FOR DETAILS.
9	PROVIDE AND INSTALL ROLL DOWN DOOR. SEE DETAILS AND SCHEDULE.
10	PROVIDE AND INSTALL COLUMN ENCLOSURES. SEE DETAILS.
11	PROVIDE AND INSTALL T1-11 CEILING.
14	PROVIDE NEW ASPHALT SHINGLE ROOFING,UNDERLAYMENT, AND REPLACE IN KIND EXISTING DECKING AS REQUIRED (COORDINATE WITH STRUCTURAL).
15	PROVIDE AND INSTALL SBS MODIFIED BITUMEN ROOFING AND UNDERLAYMENT.
16	PROVIDE AND INSTALL ALUMINUM METAL DRIP EDGE, DOWNSPOUT AND GUTTER AT PERIMETER OF ROOF.
21	NEW INTERIOR WALL. SEE WALL SCHEDULE.
23	NEW ROOF WITH BATT INSULATION (R-38 MIN) PACKED BETWEEN JOISTS. PROVIDE AND INSTALL SHINGLES, UNDERLAYMENT SHEATHING AND FLASHING SYSTEM.
30	NEW 2x6 WOOD FLOOR.
33	NEW WOOD FENCE. SEE DETAILS.
37	NEW CANOPY, SEE DETAILS.
39	NEW SOFFIT WITH RECESSED LIGHTS AS INDICATED ON RCP
42	NEW MECHANICAL EQUIPMENT. SEE MECHANICAL DRAWINGS.
44	NEW STAIRCASE. SEE DETAILS.
46	EXISTING ROOF BEAMS AND TRUSSES TO NOT BE PAINTED.
47	NEW SIGNAGE AND LETTERING TO BE INSTALLED. SEE DETAILS
51	NEW BIRD NETTING INSTALLED TIGHT UNDER ALL INTERIOR WOOD TRUSSES. ENSURE NO DAMAGE OCCURS TO EXISTING STRUCTURE SO AS TO ALTER ITS STRUCTURAL INTEGRITY. ZIPPERS TO BE COORDINATED WITH LOCATION OF SPRINKLER HEADS.
67	NEW FASCIA BOARD AND SOFFIT.
69	NEW SHEET METAL AT ROOF PERIMETER.
84	HALF ROUND ALUMINUM GUTTER AND DOWNSPOUT.
88	NEW PVC BASEBOARD.
95	RESTORE AND REINSTALL EXISTING HISTORIC WINDOW AND FRAME, TYP.

8/30/2022 2:53:03 PM

CONSULTANT INFORMATION
The LiRo Group
3 Aerial Way, Syosset, New York 11791
(516) 938-5476 www.liro.com

CONSULTANT SEAL
REGISTERED ARCHITECT ROBERT D. YOUNG JR. 023280 STATE OF NEW YORK

REVISION NUMBER	DATE	MADE BY	APP'D BY	REVISION

RECORD DRAWING CERTIFICATION
☐ AS BUILT – CHANGES AS NOTED ☐ AS BUILT – NO CHANGES

CONTRACTOR
NAME
SIGNATURE
TITLE DATE

PROJECT COORDINATOR
NAME
SIGNATURE
TITLE DATE

WESTCHESTER COUNTY, NEW YORK
DEPARTMENT OF PUBLIC WORKS AND TRANSPORTATION
DIVISION OF ENGINEERING

INFRASTRUCTURE REHABILITATION - PHASE 3
PLAYLAND PARK, RYE, NEW YORK
SOUTHEAST ARCADE BUILDING
INTERIOR BUILDING SECTIONS 1 OF 2

CONTRACT NUMBER	22-523
SHEET NUMBER	SA-A-31
DWG NO.:	601 of 664
SCALE:	1/4" = 1'-0"
DATE:	08/23/2022
DPW FILE NUMBER	1-118-A-1350-0
REV. NO.	0

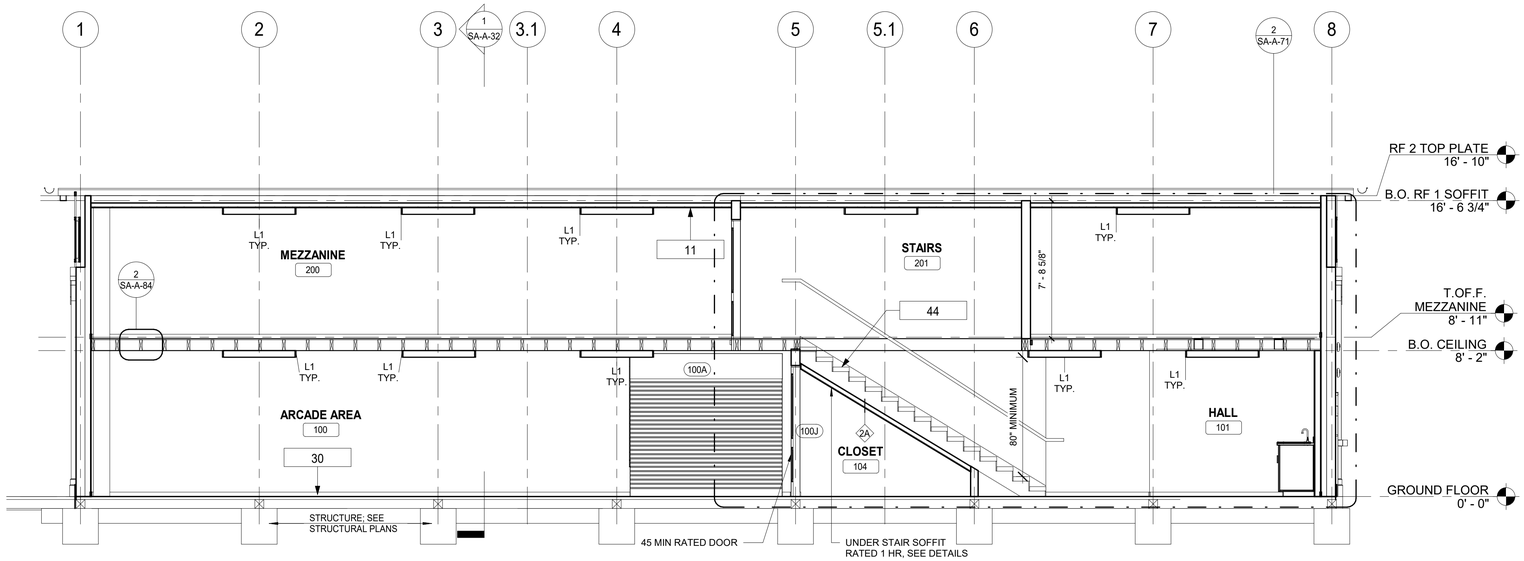

2 WEST INTERIOR SECTION
1/4" = 1'-0"

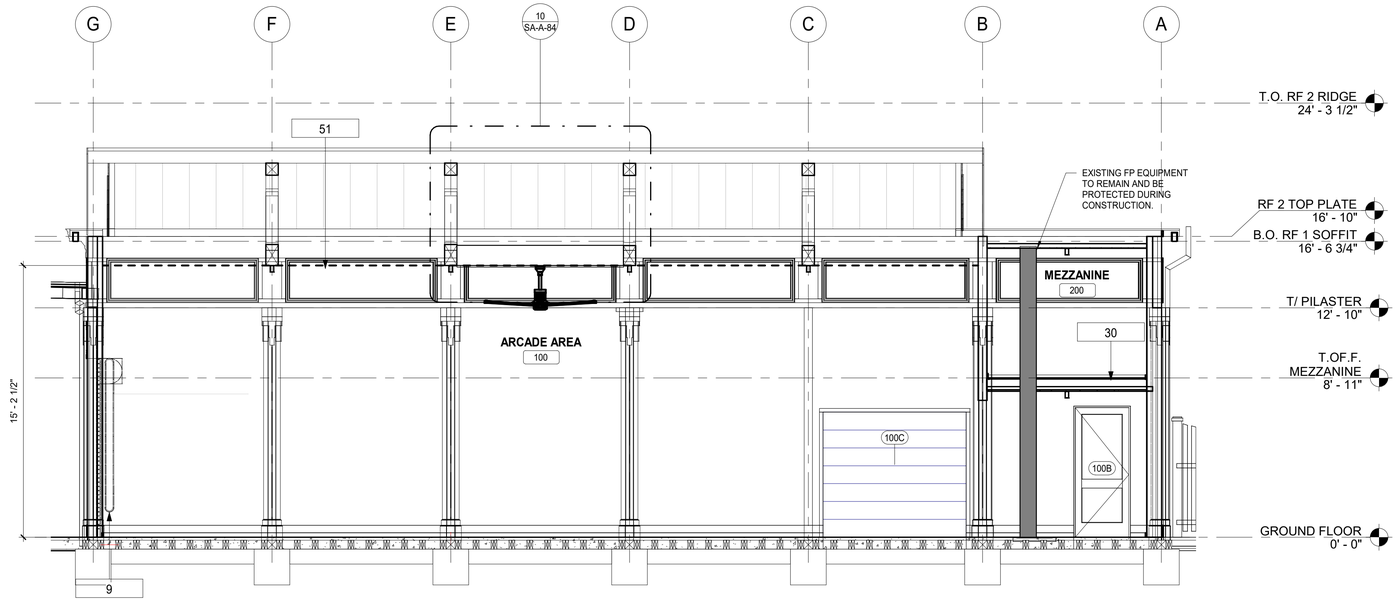

1 SOUTH INTERIOR ELEVATION
1/4" = 1'-0"

CONSTRUCTION LEGEND

NIC	NOT IN CONTRACT
?	KEY NOTES
1i	WINDOW TAG
101	DOOR TAG

KEYNOTE LEGEND CONST.

Key Value	Keynote Text
1	PROVIDE AND INSTALL NEW 1x8 MILLED YELLOW PINE - TONGUE AND GROOVE - NO BEVEL
3	REPLICATE TRIMS TO MATCH DOCUMENTED TRIM, LOCATIONS, SIZE AND SHAPE. FINISH PAINT COLORS AS SCHEDULED.
5	PROVIDE AND INSTALL DOOR INCLUDING FRAME, SILL, LINTEL AND ANY ASSOCIATE HARDWARE. SEE DOOR SCHEDULE.
6	INSTALL NEW IPE DECKING. SEE STRUCTURAL FOR DETAILS.
9	PROVIDE AND INSTALL ROLL DOWN DOOR. SEE DETAILS AND SCHEDULE.
10	PROVIDE AND INSTALL COLUMN ENCLOSURES. SEE DETAILS.
11	PROVIDE AND INSTALL T1-11 CEILING.
14	PROVIDE NEW ASPHALT SHINGLE ROOFING,UNDERLAYMENT, AND REPLACE IN KIND EXISTING DECKING AS REQUIRED (COORDINATE WITH STRUCTURAL).
15	PROVIDE AND INSTALL SBS MODIFIED BITUMEN ROOFING AND UNDERLAYMENT.
16	PROVIDE AND INSTALL ALUMINUM METAL DRIP EDGE, DOWNSPOUT AND GUTTER AT PERIMETER OF ROOF.
21	NEW INTERIOR WALL. SEE WALL SCHEDULE.
23	NEW ROOF WITH BATT INSULATION (R-38 MIN) PACKED BETWEEN JOISTS. PROVIDE AND INSTALL SHINGLES, UNDERLAYMENT SHEATHING AND FLASHING SYSTEM.
30	NEW 2x6 WOOD FLOOR.
33	NEW WOOD FENCE. SEE DETAILS.
37	NEW CANOPY, SEE DETAILS.
39	NEW SOFFIT WITH RECESSED LIGHTS AS INDICATED ON RCP
42	NEW MECHANICAL EQUIPMENT. SEE MECHANICAL DRAWINGS.
44	NEW STAIRCASE. SEE DETAILS.
46	EXISTING ROOF BEAMS AND TRUSSES TO NOT BE PAINTED.
47	NEW SIGNAGE AND LETTERING TO BE INSTALLED. SEE DETAILS
51	NEW BIRD NETTING INSTALLED TIGHT UNDER ALL INTERIOR WOOD TRUSSES. ENSURE NO DAMAGE OCCURS TO EXISTING STRUCTURE SO AS TO ALTER ITS STRUCTURAL INTEGRITY. ZIPPERS TO BE COORDINATED WITH LOCATION OF SPRINKLER HEADS.
67	NEW FASCIA BOARD AND SOFFIT.
69	NEW SHEET METAL AT ROOF PERIMETER.
84	HALF ROUND ALUMINUM GUTTER AND DOWNSPOUT.
88	NEW PVC BASEBOARD.
95	RESTORE AND REINSTALL EXISTING HISTORIC WINDOW AND FRAME, TYP.

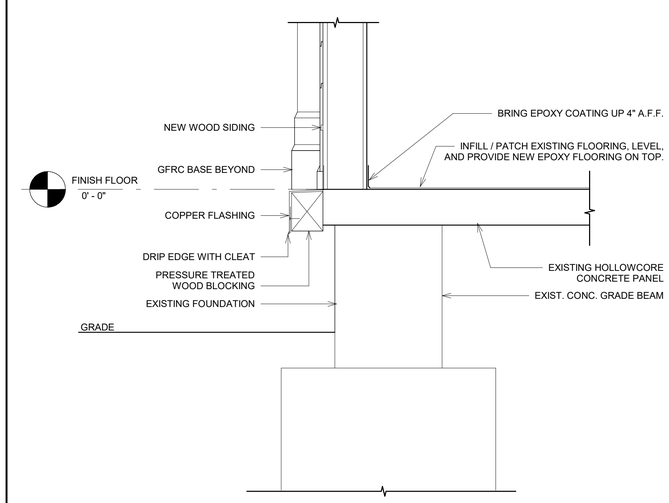

4 BUILDING SECTION CONDITION AT GRADE
1" = 1'-0"

8/30/2022 2:53:03 PM

CONSULTANT INFORMATION
The LiRo Group
3 Aerial Way, Syosset, New York 11791
(516) 938-5476 www.liro.com

CONSULTANT SEAL
REGISTERED ARCHITECT ROBERT D. YONNONI 023280 STATE OF NEW YORK

REVISION NUMBER	DATE	MADE BY	APP'D BY	REVISION

RECORD DRAWING CERTIFICATION
☐ AS BUILT – CHANGES AS NOTED ☐ AS BUILT – NO CHANGES

CONTRACTOR
NAME
SIGNATURE
TITLE DATE

PROJECT COORDINATOR
NAME
SIGNATURE
TITLE DATE

WESTCHESTER COUNTY, NEW YORK
DEPARTMENT OF PUBLIC WORKS AND TRANSPORTATION
DIVISION OF ENGINEERING

INFRASTRUCTURE REHABILITATION - PHASE 3
PLAYLAND PARK, RYE, NEW YORK
SOUTHEAST ARCADE BUILDING
INTERIOR BUILDING SECTIONS 2 OF 2

CONTRACT NUMBER	22-523
SHEET NUMBER	SA-A-32
DWG NO.:	602 of 664
SCALE:	As indicated
DATE:	08/23/2022
DPW FILE NUMBER	1-118-A-1351-0
REV. NO.	0

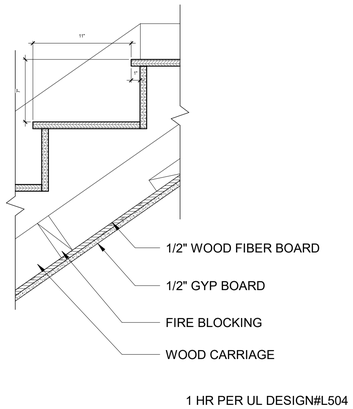

6 CEILING DETAIL AT STAIR
1 1/2" = 1'-0"

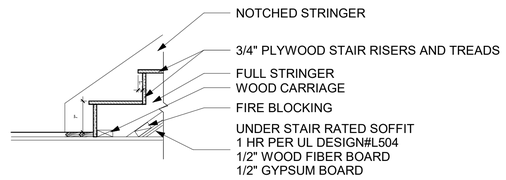

5 STAIR DETAIL WOOD FINISH AT BASE
3/4" = 1'-0"

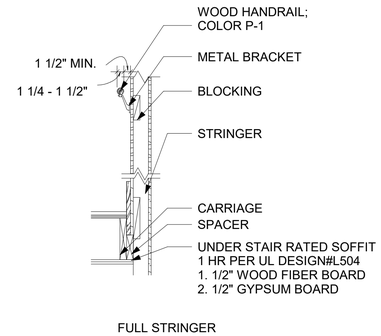

4 RAILING DETAILS
3/4" = 1'-0"

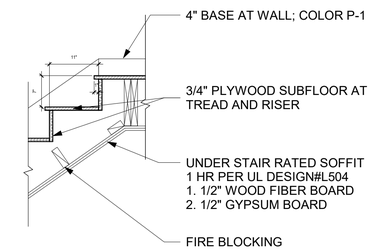

3 STAIR DETAIL WOOD FINISH AT MEZZANINE
3/4" = 1'-0"

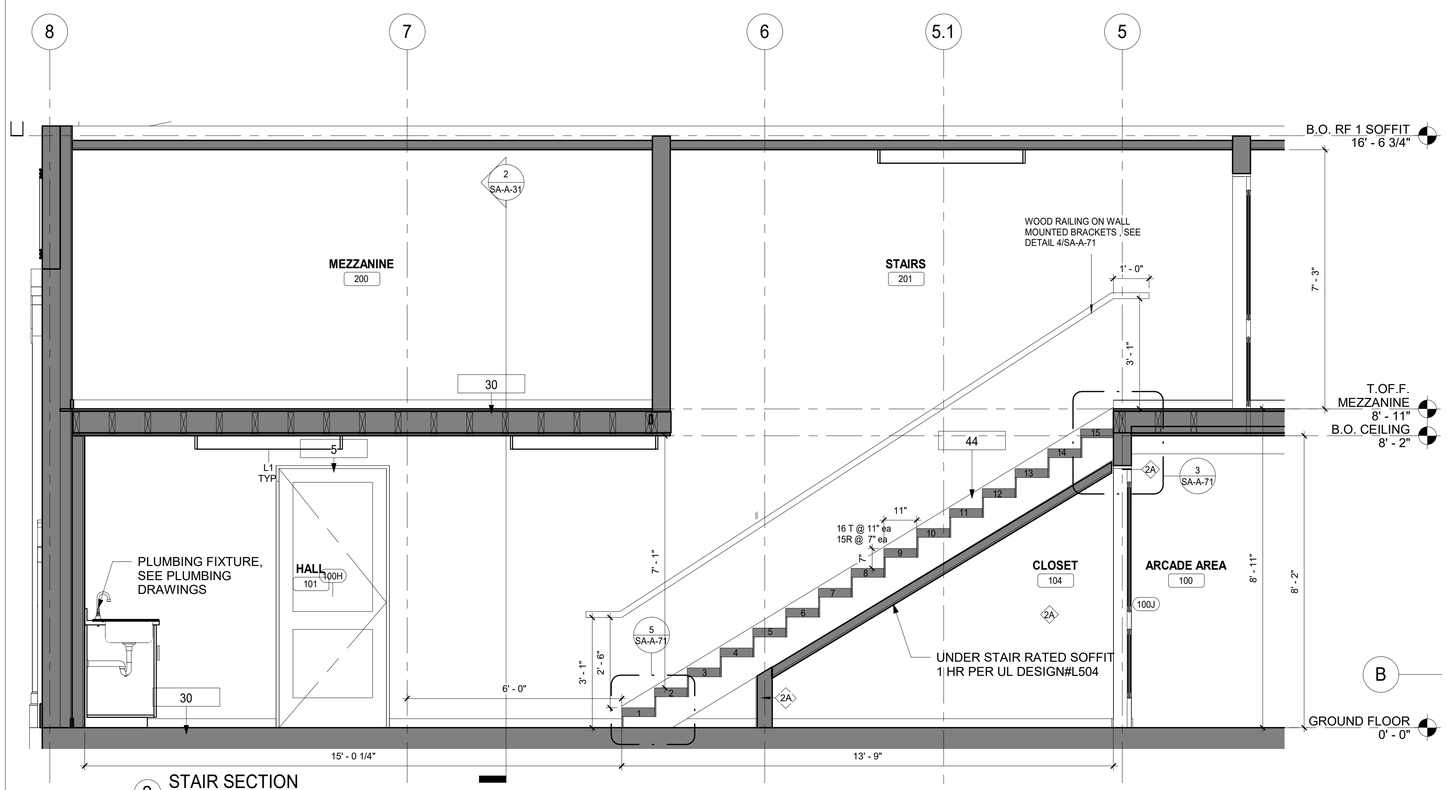

2 STAIR SECTION
1/2" = 1'-0"

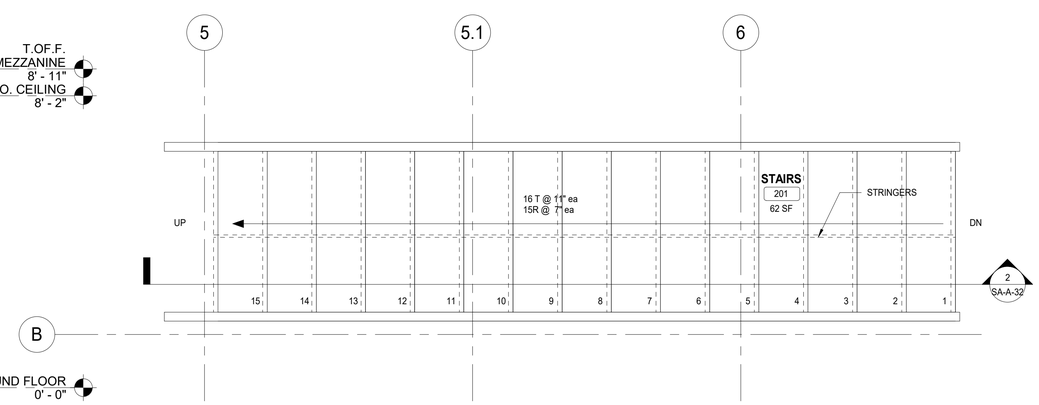

1 STAIR PLAN
3/4" = 1'-0"

8/30/2022 2:53:03 PM

CONSULTANT INFORMATION
The LiRo Group
3 Aerial Way, Syosset, New York 11791
(516) 938-5476 www.liro.com

CONSULTANT SEAL
REGISTERED ARCHITECT ROBERT D. YOUNG JR. 023200 STATE OF NEW YORK

REVISION NUMBER	DATE	MADE BY	APP'D BY	REVISION

RECORD DRAWING CERTIFICATION
AS BUILT – CHANGES AS NOTED
AS BUILT – NO CHANGES

CONTRACTOR
NAME
SIGNATURE
TITLE DATE

PROJECT COORDINATOR
NAME
SIGNATURE
TITLE DATE

WESTCHESTER COUNTY, NEW YORK
DEPARTMENT OF PUBLIC WORKS AND TRANSPORTATION
DIVISION OF ENGINEERING

INFRASTRUCTURE REHABILITATION - PHASE 3
PLAYLAND PARK, RYE, NEW YORK
SOUTHEAST ARCADE BUILDING
STAIR DETAILS

CONTRACT NUMBER	22-523
SHEET NUMBER	SA-A-71
DWG NO.:	603 of 664
SCALE:	As indicated
DATE:	08/23/2022
DPW FILE NUMBER	1-118-A-1352-0
REV. NO.	0

POLYCARBONATE GLAZING SYSTEM
POLYCARBONATE PANELS:
5/32" (4MM) THICK
23.625" (600MM) PANEL WIDTH
TRANSPARENT (LIGHT BLUE TINT)
70% LIGHT TRANSMISSION

EXTRUDED ALUMINUM MULLION SYSTEM

BASIS OF DESIGN: PALRAM SUNGLAZE™ 4/600 SYSTEM

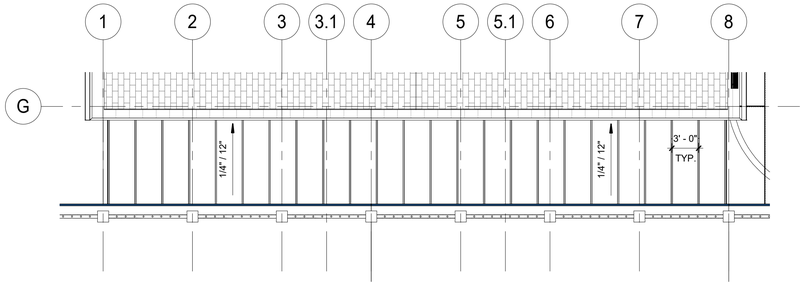

6 CANOPY REFLECTED CEILING PLAN
1/8" = 1'-0"

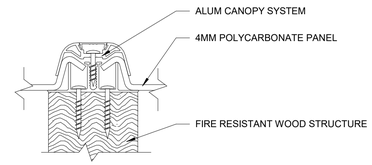

7 CANOPY SYSTEM DETAIL
6" = 1'-0"

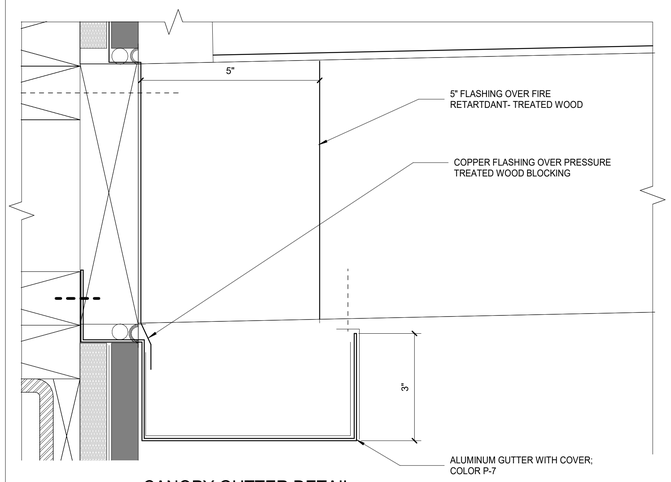

5 CANOPY GUTTER DETAIL
6" = 1'-0"

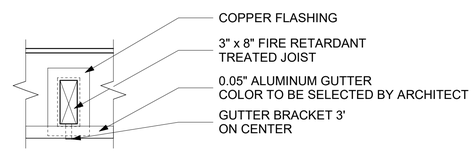

4 JOIST BEAM FLASHING DETAIL
1" = 1'-0"

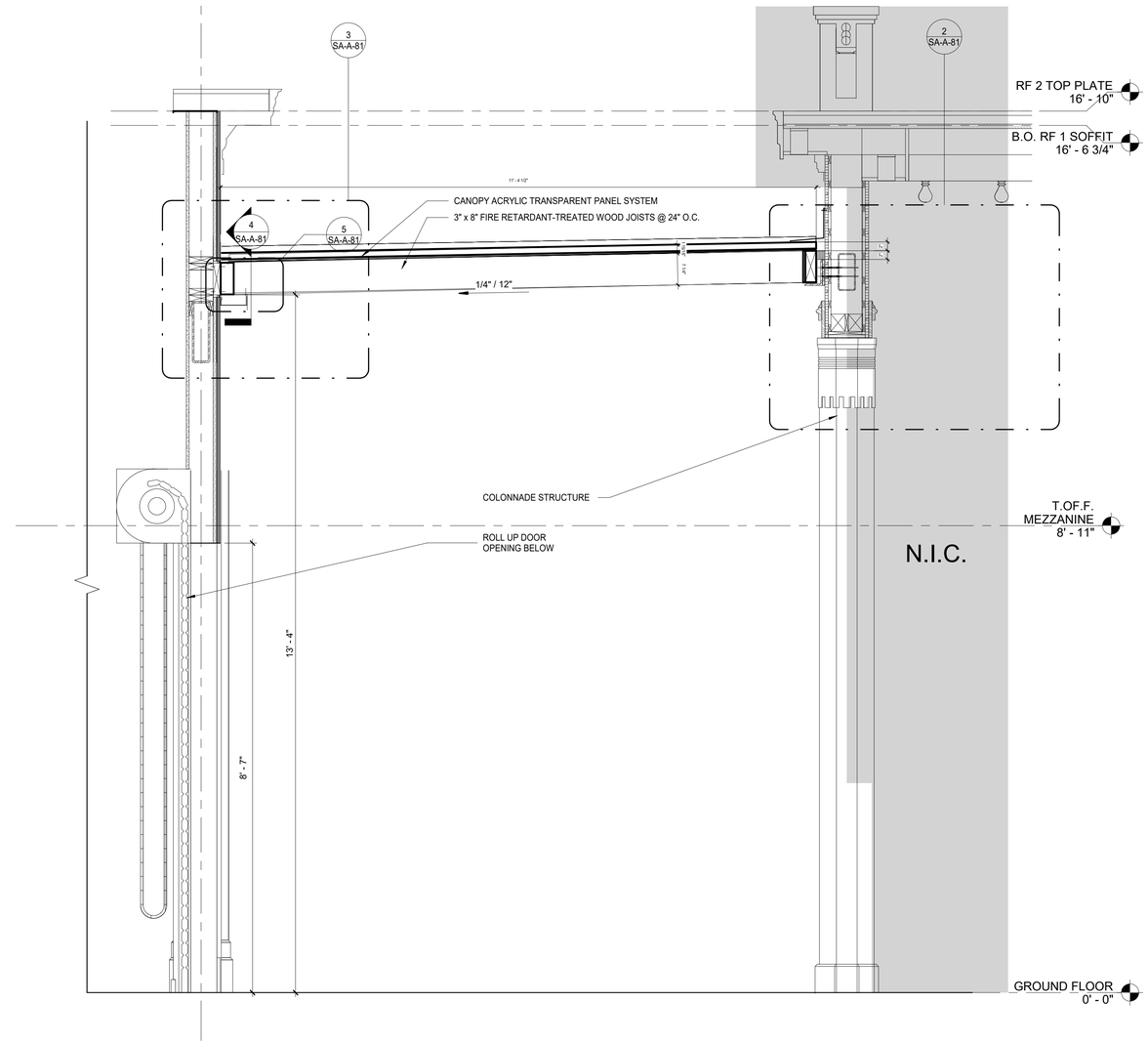

1 CANOPY SECTION DETAIL
3/4" = 1'-0"

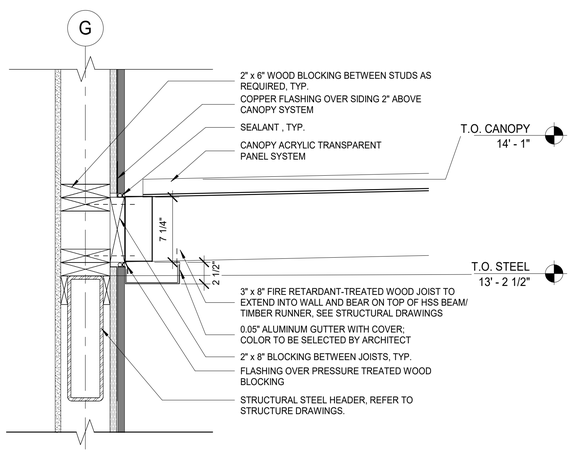

3 BUILDING TO CANOPY CONNECTION DETAIL
1 1/2" = 1'-0"

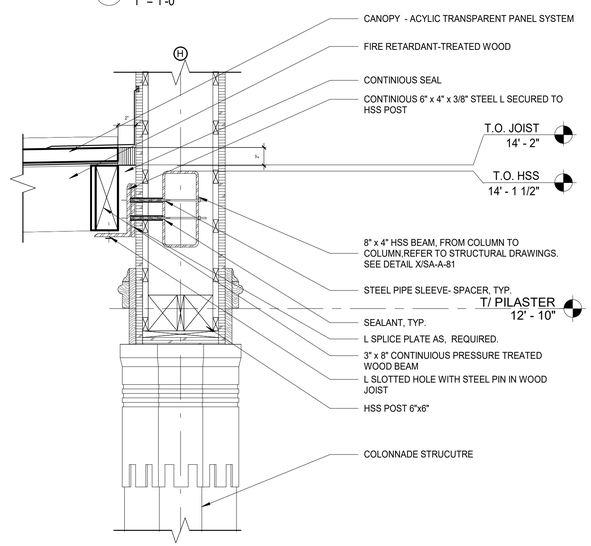

2 CANOPY TO COLONNADE CONNECTION DETAIL
1 1/2" = 1'-0"

8/30/2022 2:53:05 PM

CONSULTANT INFORMATION
The LiRo Group
3 Aerial Way, Syosset, New York 11791
(516) 938-5476 www.liro.com

CONSULTANT SEAL
REGISTERED ARCHITECT ROBERT D. DONNINO 023229 STATE OF NEW YORK

REVISION NUMBER	DATE	MADE BY	APP'D BY	REVISION

RECORD DRAWING CERTIFICATION
☐ AS BUILT – CHANGES AS NOTED ☐ AS BUILT – NO CHANGES

CONTRACTOR
NAME
SIGNATURE
TITLE DATE

PROJECT COORDINATOR
NAME
SIGNATURE
TITLE DATE

WESTCHESTER COUNTY, NEW YORK
DEPARTMENT OF PUBLIC WORKS AND TRANSPORTATION
DIVISION OF ENGINEERING

INFRASTRUCTURE REHABILITATION - PHASE 3
PLAYLAND PARK, RYE, NEW YORK
SOUTHEAST ARCADE BUILDING
CANOPY DETAILS

CONTRACT NUMBER **22-523**
SHEET NUMBER **SA-A-81**
DWG NO.: 604 of 664
SCALE: **As indicated**
DATE: **08/23/2022**
DPW FILE NUMBER **1-118-A-1353-0**
REV. NO. 0

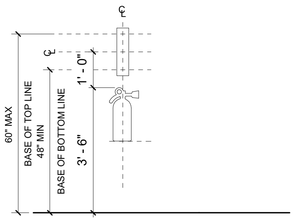

1 FIRE EXTINGUISHER SIGN LOCATION ELEVATION
1/2" = 1'-0"

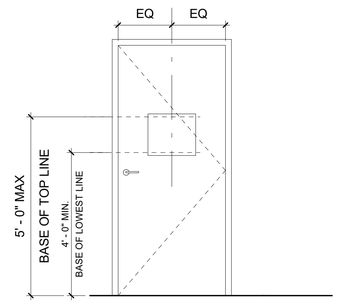

2 SIGN LOCATION ELEVATION TYPICAL DOOR CONDITION 2
1/2" = 1'-0"

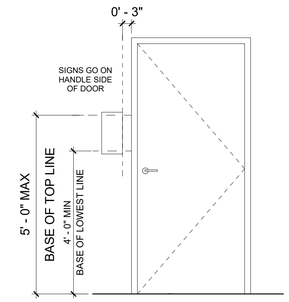

3 SIGN LOCATION ELEVATION TYPICAL DOOR CONDITION
1/2" = 1'-0"

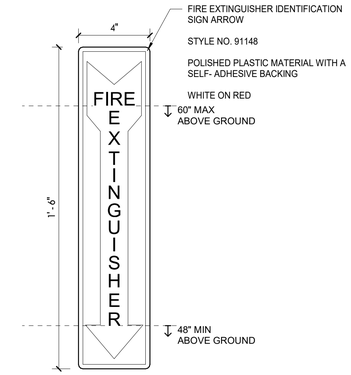

4 TYPE X-1 - FIRE EXTINGUISHER SIGN
3" = 1'-0"

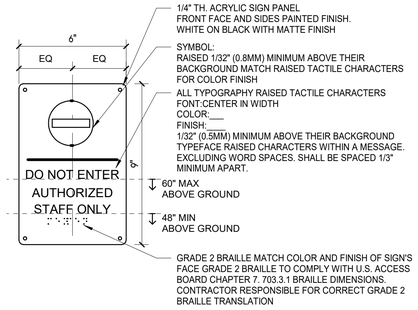

5 TYPE X-2 - STAFF ONLY SIGN
3" = 1'-0"

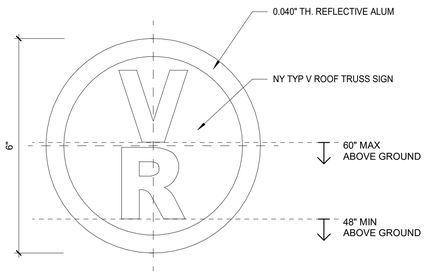

6 TYPE X-4 TRUSS SIGNAGE CLASS VR
6" = 1'-0"

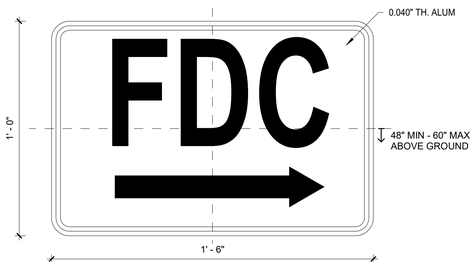

7 TYPE X-5 FDC SIGNAGE
3" = 1'-0"

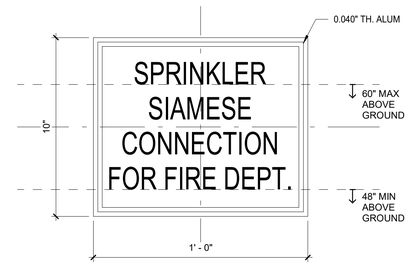

8 TYPE X-6 SIAMESE CONNECTION SIGNAGE
3" = 1'-0"

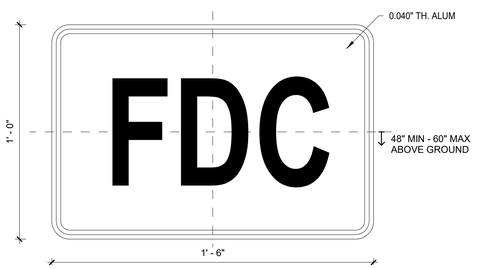

9 TYPE X-7 FDC SIGNAGE
3" = 1'-0"

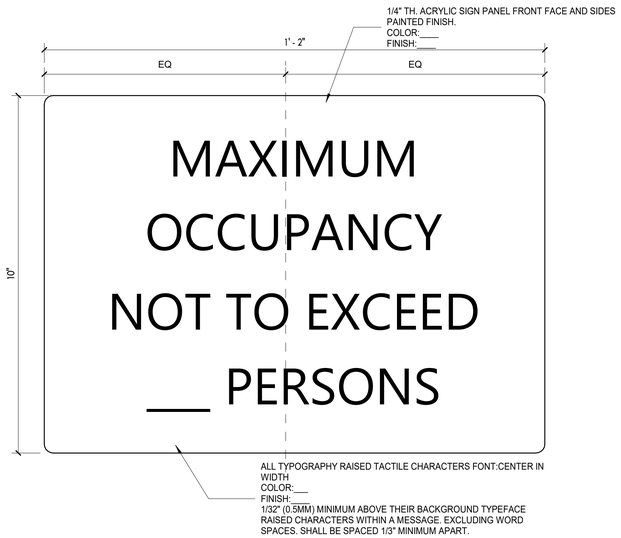

10 TYPE A-3 - CAPACITY SIGN
6" = 1'-0"

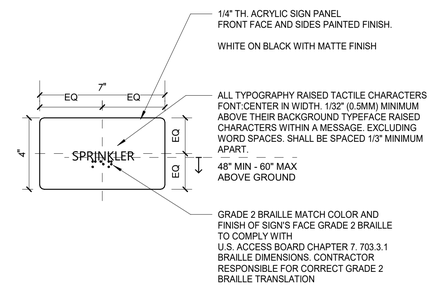

11 TYPE A-2- SPRINKLER ROOM ID SIGN
3" = 1'-0"

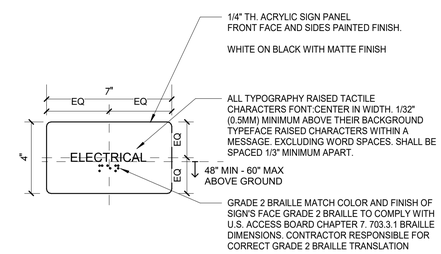

12 TYPE A-3 -ELECTRICAL CLOSET SIGN
3" = 1'-0"

8/30/2022 2:53:05 PM

CONSULTANT INFORMATION
The LiRo Group
3 Aerial Way, Syosset, New York 11791
(516) 938-5476 www.liro.com

CONSULTANT SEAL
REGISTERED ARCHITECT ROBERT D. JOHNSON 023280 STATE OF NEW YORK

REVISION NUMBER	DATE	MADE BY	APP'D BY	REVISION

RECORD DRAWING CERTIFICATION
☐ AS BUILT – CHANGES AS NOTED ☐ AS BUILT – NO CHANGES

CONTRACTOR
NAME
SIGNATURE
TITLE DATE

PROJECT COORDINATOR
NAME
SIGNATURE
TITLE DATE

WESTCHESTER COUNTY, NEW YORK
DEPARTMENT OF PUBLIC WORKS AND TRANSPORTATION
DIVISION OF ENGINEERING

INFRASTRUCTURE REHABILITATION - PHASE 3
PLAYLAND PARK, RYE, NEW YORK
SOUTHEAST ARCADE BUILDING
SIGNAGE DETAILS

CONTRACT NUMBER	22-523
SHEET NUMBER	SA-A-82
DWG NO.:	605 of 664
SCALE:	As indicated
DATE:	08/23/2022
DPW FILE NUMBER	1-118-A-1354-0
REV. NO.	0

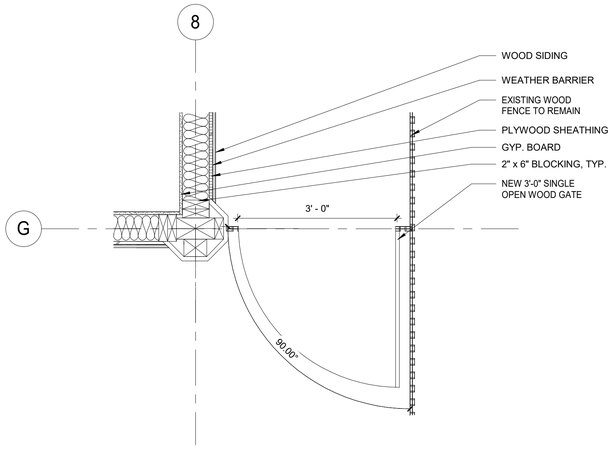

1 EX1 GATE PLAN VIEW
3/4" = 1'-0"

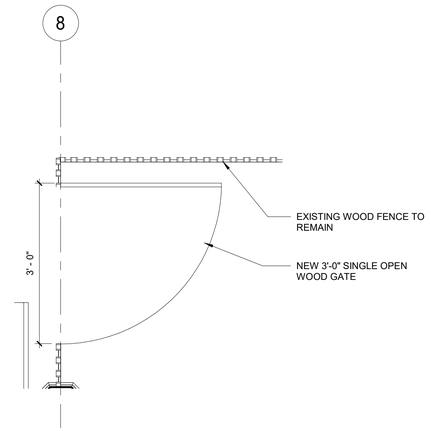

2 EX2 GATE PLAN VIEW
3/4" = 1'-0"

GATE SCHEDULE

DOOR NUMBER	DOOR TYPE	WIDTH	HEIGHT	GATE MATERIAL	FINISH	HDWR SET	REMARKS
EX1	GATE	3'-0"	3'-1"	WOOD	PAINT	PROVIDE SELF CLOSING HINGES & D HANDLE. TO BE APPROVED BY ARCHITECT	EXIT DEVICE
EX2	GATE	3'-0"	3'-1"	WOOD	PAINT	PROVIDE SELF CLOSING HINGES & D HANDLE. TO BE APPROVED BY ARCHITECT	

PLAYLAND MASTER PAINT SCHEDULE

KEY	COLOR	MANUFACTURER	REMARKS
P-1	MYSTICAL POWERS #901	BENJAMIN MOORE	
P-2	HERITAGE RED #HC-181	BENJAMIN MOORE	
P-3	NEW YORK STATE OF MIND #805	BENJAMIN MOORE	
P-4	LAZY SUNDAY #803	BENJAMIN MOORE	
P-5	DEEP JUNGLE #595	BENJAMIN MOORE	
P-6	LUCK OF THE IRISH #588	BENJAMIN MOORE	
P-7	MAJOLICA GREEN #0013	SHERWIN WILLIAMS	
P-8	ANTELOPE CANYON #125	BENJAMIN MOORE	
P-9	FORSYTHIA #6907	SHERWIN WILLIAMS	
P-10	CAPE BLUE #1642	BENJAMIN MOORE	
P-11	WHITE SNOW #9541	SHERWIN WILLIAMS	
P-12	TRICORN BLACK #6258	SHERWIN WILLIAMS	
P-13	READY WHITE MIX		INTERIOR USE ONLY
P-14	STUCCO TO MATCH P-1		FOR ALL NEW STUCCO SURFACES
P-15	VAN DEUSEN BLUE #HC-156	BENJAMIN MOORE	
P-16	#RAL9001		TYPICAL ROLL UP DOOR COLOR
P-17	FLORIDA BEACHES #900	BENJAMIN MOORE	
P-18	PIRATES COVE PEACH #903	BENJAMIN MOORE	
P-19	JADITE #6459	SHERWIN WILLIAMS	
P-20	DECISIVE YELLOW #6902	SHERWIN WILLIAMS	

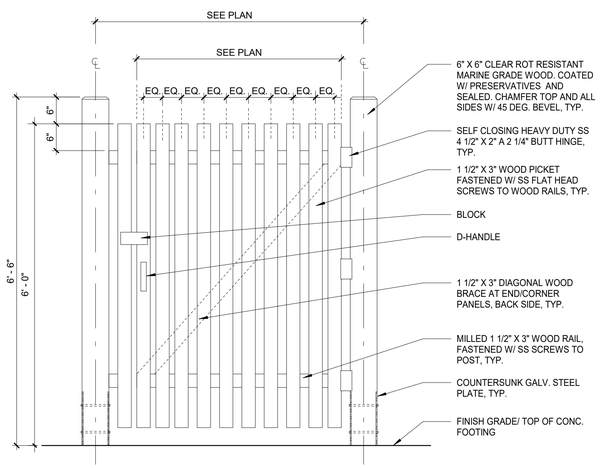

3 TYPICAL WOOD PICKET SINGLE GATE ELEVATION
3/4" = 1'-0"

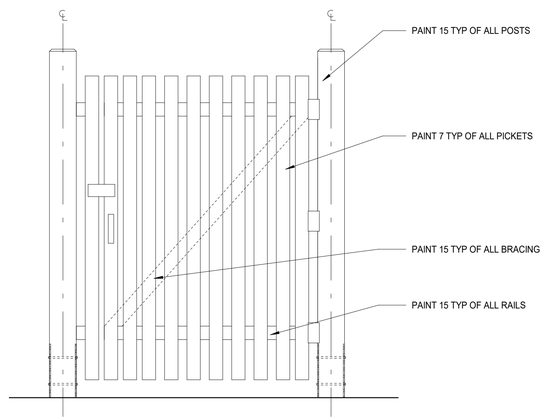

4 TYPICAL WOOD PICKET SINGLE GATE PAINT ELEVATION
3/4" = 1'-0"

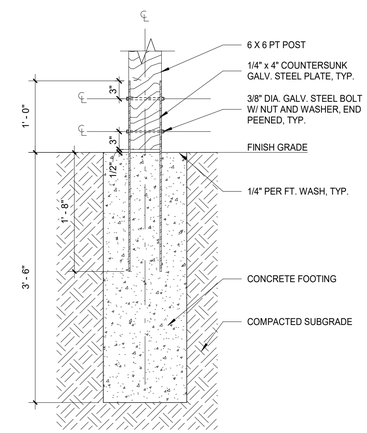

5 WOOD FENCE PIER DETAIL
1" = 1'-0"

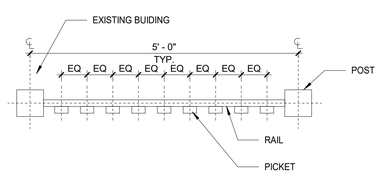

6 TYPICAL WOOD PICKET PLAN - GATE
3/4" = 1'-0"

8/30/2022 2:53:05 PM

CONSULTANT INFORMATION
The LiRo Group
3 Aerial Way, Syosset, New York 11791
(516) 938-5476 www.liro.com

CONSULTANT SEAL
REGISTERED ARCHITECT ROBERT D. DONNELLY 023295 STATE OF NEW YORK

REVISION NUMBER	DATE	MADE BY	APP'D BY	REVISION

RECORD DRAWING CERTIFICATION
☐ AS BUILT – CHANGES AS NOTED ☐ AS BUILT – NO CHANGES

CONTRACTOR
NAME
SIGNATURE
TITLE DATE

PROJECT COORDINATOR
NAME
SIGNATURE
TITLE DATE

WESTCHESTER COUNTY, NEW YORK
DEPARTMENT OF PUBLIC WORKS AND TRANSPORTATION
DIVISION OF ENGINEERING

INFRASTRUCTURE REHABILITATION - PHASE 3
PLAYLAND PARK, RYE, NEW YORK
SOUTHEAST ARCADE BUILDING
FENCE DETAILS

CONTRACT NUMBER **22-523**
SHEET NUMBER **SA-A-83**
DWG NO.: 606 of 664
SCALE: **As indicated**
DATE: **08/23/2022**
DPW FILE NUMBER **1-118-A-1355-0**
REV. NO. 0

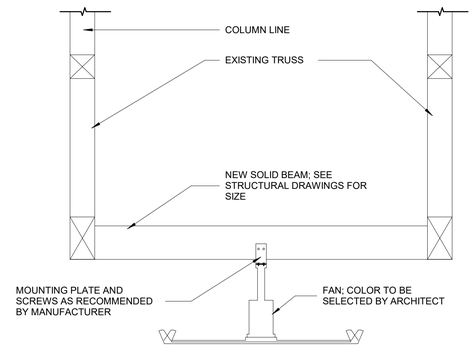

10 FAN MOUNTING DETAIL
1/2" = 1'-0"

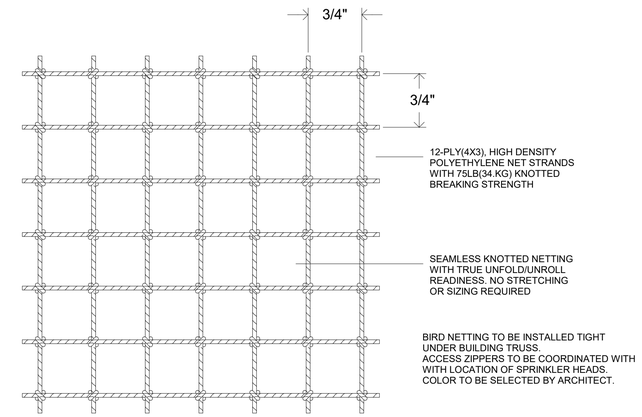

9 NET DETAILS - BIRD NETTING PARTIAL VIEW

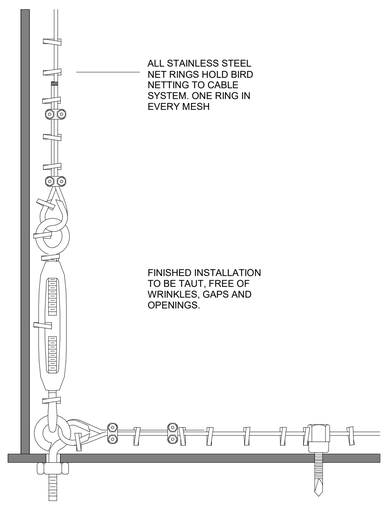

8 NET DETAILS - NET CABLE CONNECTION

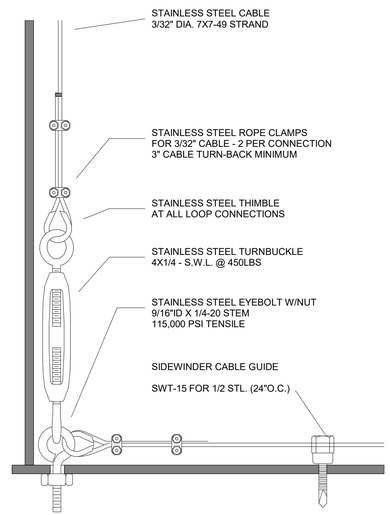

7 NET DETAILS - SUPPORT CABLE CONNECTIONS

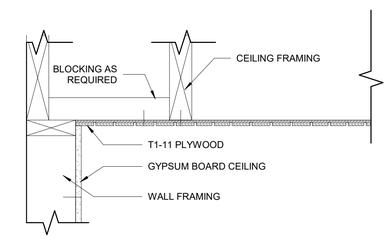

6 T1-11 FRAMING PARALLEL TO WALL
1 1/2" = 1'-0"

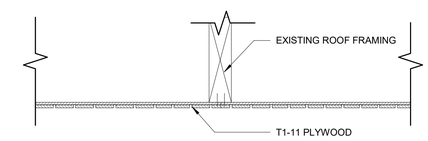

5 T1-11 FRAMING DETAIL
1 1/2" = 1'-0"

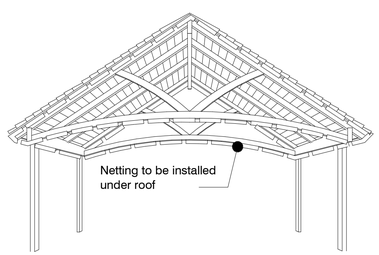

4 NET DETAILS - TRUSS NET LOCATION

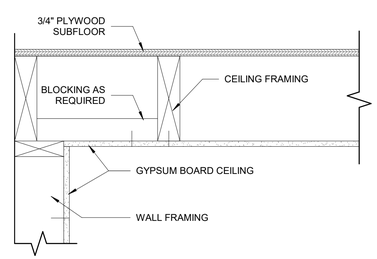

3 GYPSUM CEILING FRAMING PARALLEL TO WALL
1 1/2" = 1'-0"

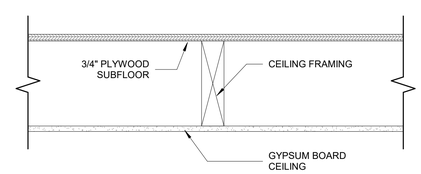

2 GYPSUM CEILING FRAMING DETAIL
1 1/2" = 1'-0"

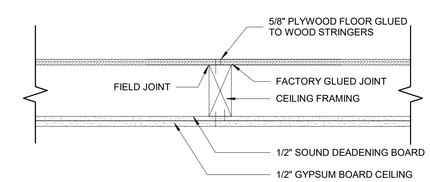

1 1 HOUR NON-COMBUSTIBLE FLOOR CEILING- LUMBER JOISTS- UL L504
1 1/2" = 1'-0"

8/30/2022 2:53:06 PM

CONSULTANT INFORMATION
The LiRo Group
3 Aerial Way, Syosset, New York 11791
(516) 938-5476 www.liro.com

CONSULTANT SEAL
REGISTERED ARCHITECT ROBERT D. TOMASZEWSKI 023280 STATE OF NEW YORK

REVISION NUMBER	DATE	MADE BY	APP'D BY	REVISION

RECORD DRAWING CERTIFICATION
☐ AS BUILT – CHANGES AS NOTED ☐ AS BUILT – NO CHANGES

CONTRACTOR
NAME
SIGNATURE
TITLE DATE

PROJECT COORDINATOR
NAME
SIGNATURE
TITLE DATE

WESTCHESTER COUNTY, NEW YORK
DEPARTMENT OF PUBLIC WORKS AND TRANSPORTATION
DIVISION OF ENGINEERING

INFRASTRUCTURE REHABILITATION - PHASE 3
PLAYLAND PARK, RYE, NEW YORK
SOUTHEAST ARCADE BUILDING
CEILING DETAILS

CONTRACT NUMBER	22-523
SHEET NUMBER	SA-A-84
DWG NO.:	607 of 664
SCALE:	As indicated
DATE:	08/23/2022
DPW FILE NUMBER	1-118-A-1356-0
REV. NO.	0

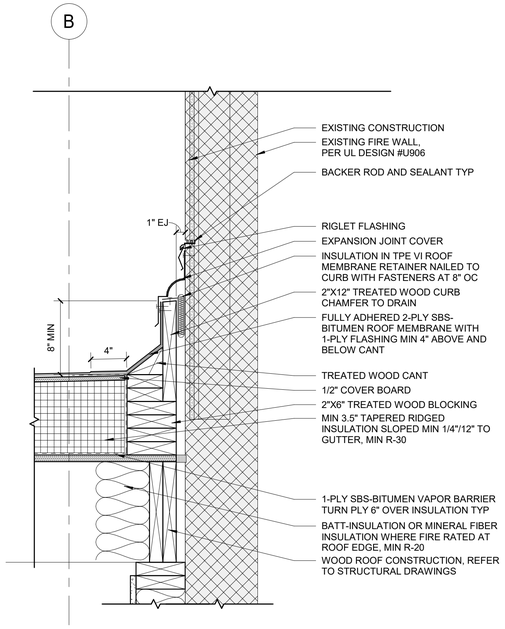

6 TYPICAL SBS ROOF TO EXISTING EXTERIOR WALL FLASHING DETAIL
1 1/2" = 1'-0"

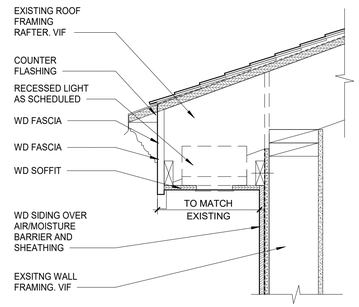

5 TYPICAL EXTERIOR SOFFIT DETAIL
1 1/2" = 1'-0"

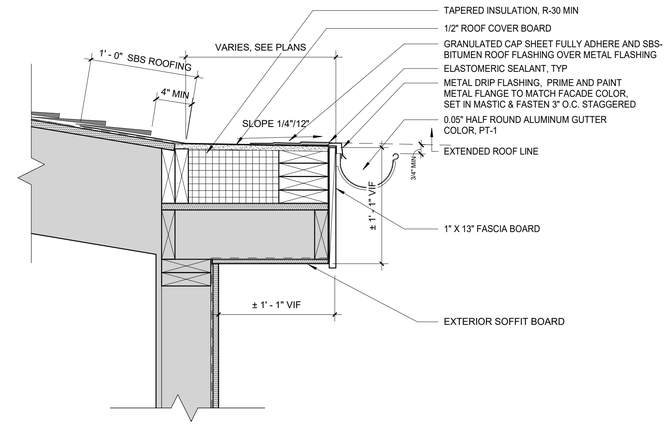

4 EXISTING ROOF EAVE WTIH SBS
1 1/2" = 1'-0"

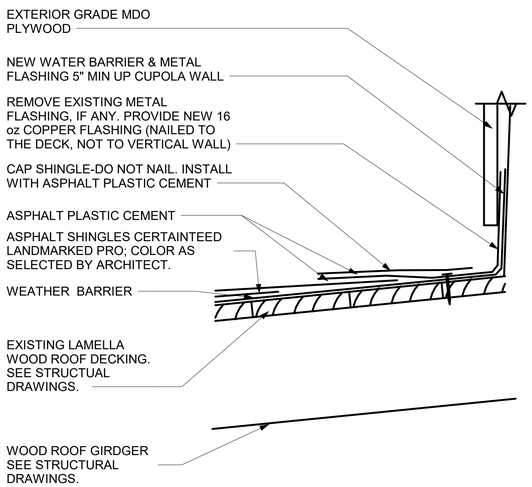

3 ROOF DETAILS - MONITOR /ROOF CONNECTION DETAIL
3" = 1'-0"

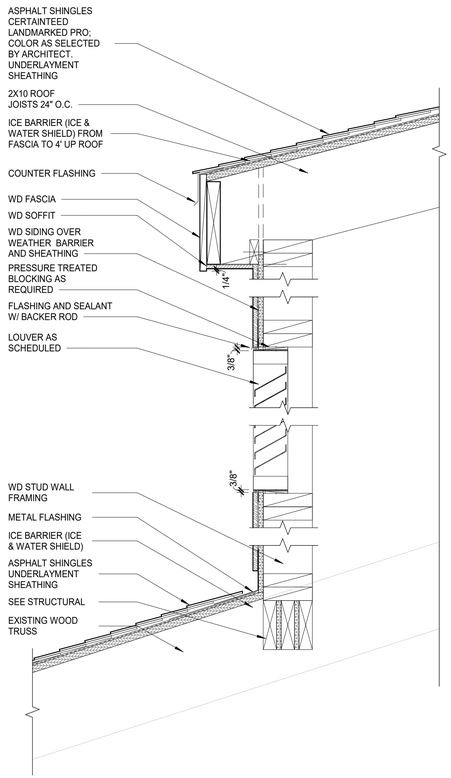

2 ROOF MONITOR SECTION
1 1/2" = 1'-0"

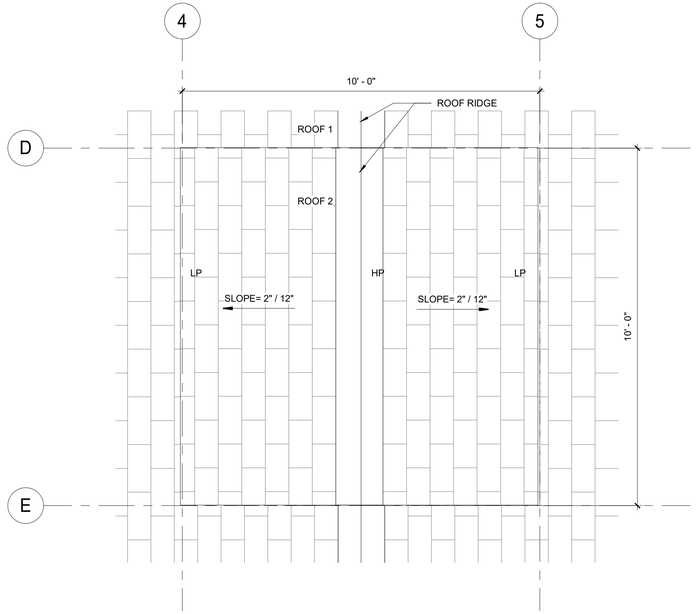

1 ENLARGED ROOF MONITOR PLAN
1/2" = 1'-0"

8/30/2022 2:53:06 PM

CONSULTANT INFORMATION
The LiRo Group
3 Aerial Way, Syosset, New York 11791
(516) 938-5476 www.liro.com

CONSULTANT SEAL
REGISTERED ARCHITECT ROBERT D. YOUNG 023280 STATE OF NEW YORK

REVISION NUMBER	DATE	MADE BY	APP'D BY	REVISION

RECORD DRAWING CERTIFICATION
☐ AS BUILT – CHANGES AS NOTED ☐ AS BUILT – NO CHANGES

CONTRACTOR
NAME
SIGNATURE
TITLE DATE

PROJECT COORDINATOR
NAME
SIGNATURE
TITLE DATE

WESTCHESTER COUNTY, NEW YORK
DEPARTMENT OF PUBLIC WORKS AND TRANSPORTATION
DIVISION OF ENGINEERING

INFRASTRUCTURE REHABILITATION - PHASE 3
PLAYLAND PARK, RYE, NEW YORK
SOUTHEAST ARCADE BUILDING
ROOF MONITOR DETAILS

CONTRACT NUMBER	22-523
SHEET NUMBER	SA-A-85
DWG NO.:	608 of 664
SCALE:	As indicated
DATE:	08/23/2022
DPW FILE NUMBER	1-118-A-1357-0
REV. NO.	0

SOUTH EAST ARCADE DOOR SCHEDULE

DOOR NUMBER	FROM ROOM	TO ROOM	TYPE	DOOR										FRAME			DETAIL			FIRE RATING	R-VALUE	U-VALUE	HARDWARE SET	REMARKS
				NEW OPENING	EX. OPENING	PANEL TYPE	WIDTH	HEIGHT	DOOR THICKNESS	MATERIAL	GLASS	FINISH/COLOR INSIDE	FINISH/COLOR OUTSIDE	FRAME TYPE	MATL	FINISH	HEAD	JAMB	THRESHOLD					
100A	ARCADE AREA	EXTERIOR	OVERHEAD DOOR	-	X	C	8' - 6"	8' - 0"		steel	NO	P-16	P-16	INTERIOR FACE OF WALL MOUNTING	steel	P-16	1	2	8	-	-	0.31	4	MOTORIZED
100B	ARCADE AREA	EXTERIOR	SINGLE PANEL	X	-	A-1	3' - 0"	7' - 3"	0' - 1 3/4"	H.M.	NO	TBD	TBD	1	H.M.	TBD	3	4	8		-	-	11	
100C	ARCADE AREA	EXTERIOR	OVERHEAD DOOR	-	X	C	8' - 0"	7' - 0"		steel	NO	P-16	P-16	INTERIOR FACE OF WALL MOUNTING	steel	P-16	1	2	7		-	0.31	4	MOTORIZED
100D	ARCADE AREA	EXTERIOR	OVERHEAD DOOR	X	-	C	18' - 0"	10' - 0"		steel	NO	P-16	P-16	INTERIOR FACE OF WALL MOUNTING	steel	P-16	1	2	7	45 MIN.	-	0.31	4	FIRE RATED CONNECTED TO FIRE ALARM SYSTEM, TYP. / MOTORIZED
100E	ARCADE AREA	EXTERIOR	OVERHEAD DOOR	X	-	C	18' - 0"	10' - 0"		steel	NO	P-16	P-16	INTERIOR FACE OF WALL MOUNTING	steel	P-16	1	2	7	45 MIN.	-	0.31	4	FIRE RATED CONNECTED TO FIRE ALARM SYSTEM, TYP. / MOTORIZED
100F	ARCADE AREA	EXTERIOR	OVERHEAD DOOR	X	-	C	18' - 0"	10' - 0"		steel	NO	P-16	P-16	INTERIOR FACE OF WALL MOUNTING	steel	P-16	1	2	7	45 MIN.	-	0.31	4	FIRE RATED CONNECTED TO FIRE ALARM SYSTEM, TYP. / MOTORIZED
100G	ARCADE AREA	EXTERIOR	SINGLE PANEL	-	-	A-1	3' - 0"	7' - 3"		H.M.	NO	TBD	TBD	1	H.M.	TBD	3	4	8	45 MIN.	-	-	9	RATED DOOR AND FRAME. 180 DEGREE SWING DOOR
100H	HALL	ARCADE AREA	SINGLE PANEL	X	-	A-2	3' - 0"	7' - 3"	0' - 1 3/4"	H.M.	NO	TBD	TBD	1	H.M.	TBD	5	6	-	-	-	-	3	
100J	CLOSET	ARCADE AREA	SINGLE PANEL	X	-	A-2	3' - 0"	7' - 3"	0' - 1 3/4"	H.M.	NO	TBD	TBD	1	H.M.	TBD	5	6	-	45 MIN.	-	-	8	
102	SPRINKLER ROOM	EXTERIOR	DOUBLE PANEL	X	-	D	6' - 0"	7' - 3"	0' - 1 3/4"	H.M.	NO	TBD	TBD	1	H.M.	TBD	3	4	8	-	-	-	10	
103	ELECTRICAL ROOM	EXTERIOR	DOUBLE PANEL	X	-	D	6' - 0"	7' - 3"	0' - 1 3/4"	H.M.	NO	TBD	TBD	1	H.M.	TBD	3	4	8	-	-	-	10	
200	HALL	MEZZANINE	SINGLE PANEL	X	-	A-2	3' - 0"	7' - 3"	0' - 1 3/4"	H.M.	NO	TBD	TBD	1	H.M.	TBD	5	6	-	-	-	-	3	

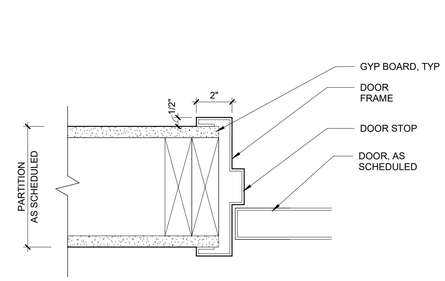

6 H.M. DOOR FRAME-JAMB DETAIL- INTERIOR
3" = 1'-0"

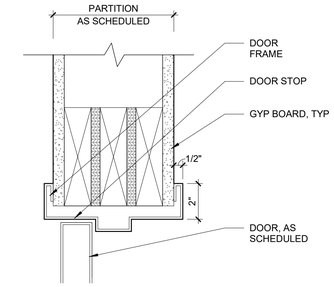

5 H.M. DOOR FRAME-HEAD DETAIL- INTERIOR
3" = 1'-0"

GENERAL DOOR SCHEDULE NOTES

1. CONTRACTOR TO CONFIRM ALL DOOR SIZES IN FIELD PRIOR TO ORDERING.
2. THE CONTRACTOR SHALL EXAMINE THE DRAWINGS, SCHEDULE AND SPECIFICATIONS AND FURNISH PROPER HARDWARE FOR ALL OPENINGS WHETHER LISTED OR NOT. COMPLETE SHOP DRAWINGS SHALL BE PROVIDED FOR APPROVAL PRIOR TO PURCHASE.
3. ALL EXIT DOORS SHALL BE OPENABLE FROM THE EGRESS SIDE WITHOUT THE USE OF A KEY OR SPECIAL KNOWLEDGE.
4. VERIFY DIMENSIONS OF EXISTING OPENING AND DOORS BEFORE ORDERING.
5. CONTRACTOR SHALL COORDINATE AND VERIFY LOCATION OF RECESSED FLOOR CLOSERS, PIVOTS, ETC. WITH EXISTING FLOOR SLABS AND OTHER FIELD CONDITIONS PRIOR TO ORDERING TO ENSURE PROPER CLEARANCES AND DEPTHS ARE ALLOWED.

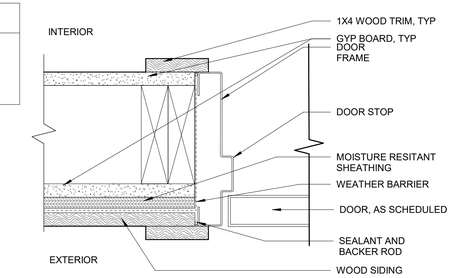

4 HM DOOR JAMB DETAIL - EXTERIOR
3" = 1'-0"

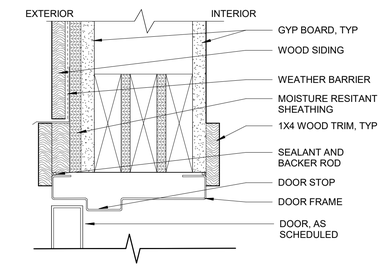

3 HM DOOR HEAD DETAIL - EXTERIOR
3" = 1'-0"

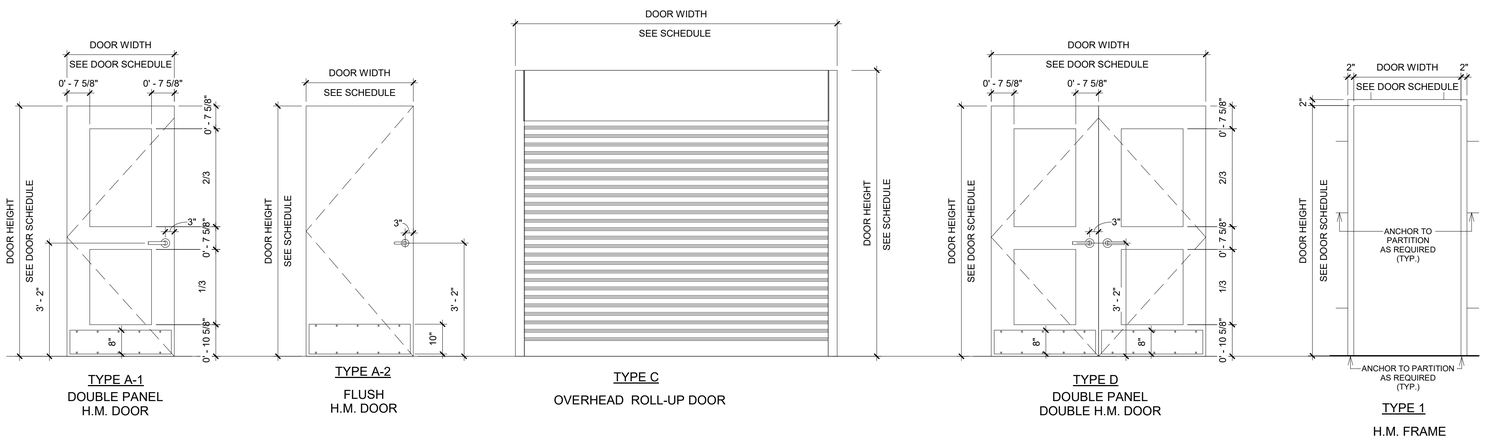

TYPE A-1
DOUBLE PANEL
H.M. DOOR

TYPE A-2
FLUSH
H.M. DOOR

TYPE C
OVERHEAD ROLL-UP DOOR

TYPE D
DOUBLE PANEL
DOUBLE H.M. DOOR

TYPE 1
H.M. FRAME

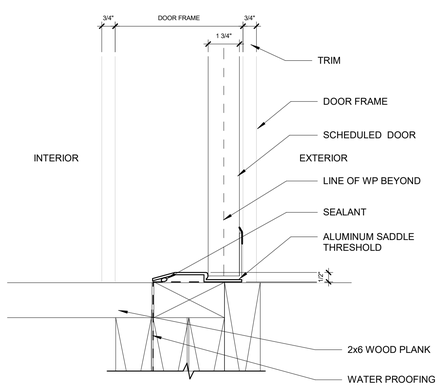

8 EXTERIOR DOOR SILL DETAIL - TR-01
3" = 1'-0"

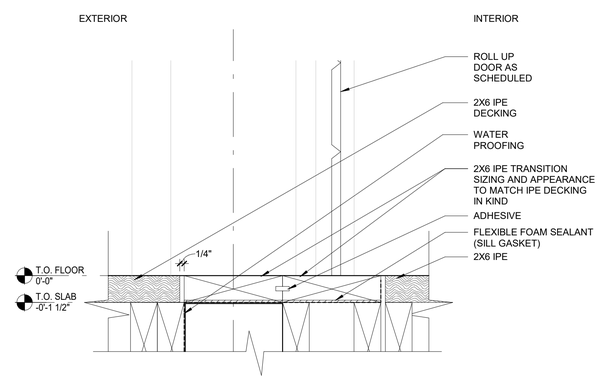

7 IPE TO WOOD PLANK TRANSITION- TR-04
3" = 1'-0"

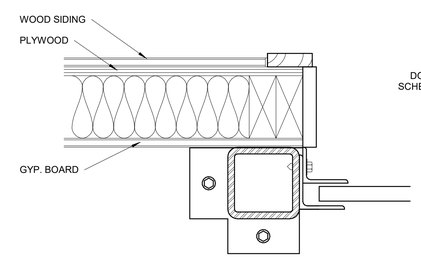

2 ROLL-UP DOOR JAMB DETAIL
3" = 1'-0"

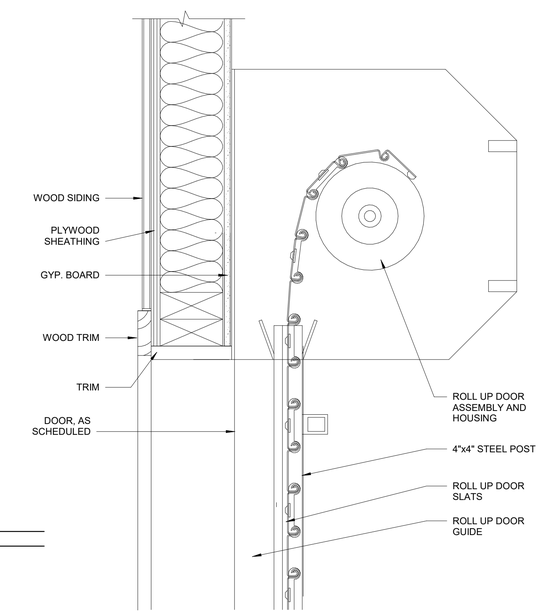

1 ROLL-UP DOOR HEAD DETAIL
3" = 1'-0"

8/30/2022 2:53:06 PM

CONSULTANT INFORMATION
The LiRo Group
3 Aerial Way, Syosset, New York 11791
(516) 938-5476 www.liro.com

CONSULTANT SEAL
REGISTERED ARCHITECT ROBERT D. TOMASZEWSKI 023280 STATE OF NEW YORK

REVISION NUMBER	DATE	MADE BY	APP'D BY	REVISION

RECORD DRAWING CERTIFICATION
☐ AS BUILT – CHANGES AS NOTED ☐ AS BUILT – NO CHANGES

CONTRACTOR
NAME
SIGNATURE
TITLE DATE

PROJECT COORDINATOR
NAME
SIGNATURE
TITLE DATE

WESTCHESTER COUNTY, NEW YORK
DEPARTMENT OF PUBLIC WORKS AND TRANSPORTATION
DIVISION OF ENGINEERING

INFRASTRUCTURE REHABILITATION - PHASE 3
PLAYLAND PARK, RYE, NEW YORK
SOUTHEAST ARCADE BUILDING
DOOR & HARDWARE SCHEDULE

CONTRACT NUMBER	22-523
SHEET NUMBER	SA-A-91
DWG NO.:	609 of 664
SCALE:	As indicated
DATE:	08/23/2022
DPW FILE NUMBER	1-118-A-1358-0
REV. NO.	0

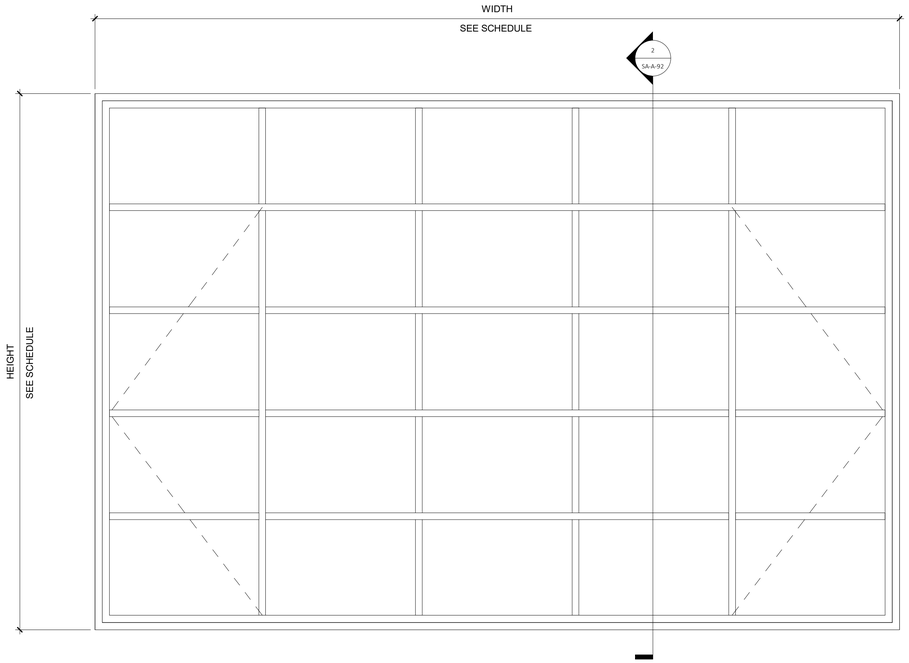

FRAME MUST BE REMOVED FOR CLEANING AND EXTENSIVE RUST REMOVAL, STRAIGHTENING OF BENT SECTIONS, WELDING OR SPLICING IN OF NEW SECTIONS AS NEEDED, AND REGLAZING. PROVIDE CAULKING AND WEATHERSTRIPPING.

EXISTING WINDOW ELEVATION TYPE 1
1 1/2" = 1'-0"

SOUTH EAST ARCADE WINDOW SCHEDULE

WINDOW NUMBER	LEVEL	WINDOW TYPE	OPERATION	ROUGH WIDTH	ROUGH HEIGHT	SILL HEIGHT	WINDOW MATERIAL	FINISH	EXTERIOR TRIM	REMARK
W-1	GROUND FLOOR	1	FIXED AND CASEMENT	7' - 6 3/4" VIF	5' - 0 3/4" VIF	3' - 0" VIF	STEEL	Black	P-7	REFER TO DETAILS A, B, & C ON THIS SHEET
W-2	GROUND FLOOR	1	FIXED AND CASEMENT	7' - 6 3/4" VIF	5' - 0 3/4" VIF	3' - 0" VIF	STEEL	Black	P-7	REFER TO DETAILS A, B, & C ON THIS SHEET
W-3	GROUND FLOOR	1	FIXED AND CASEMENT	7' - 6 3/4" VIF	5' - 0 3/4" VIF	3' - 0" VIF	STEEL	Black	P-7	REFER TO DETAILS A, B, & C ON THIS SHEET
W-4	GROUND FLOOR	1	FIXED AND CASEMENT	7' - 6 3/4" VIF	5' - 0 3/4" VIF	3' - 0" VIF	STEEL	Black	P-7	REFER TO DETAILS A, B, & C ON THIS SHEET
W-5	GROUND FLOOR	1	FIXED AND CASEMENT	7' - 6 3/4" VIF	5' - 0 3/4" VIF	3' - 0" VIF	STEEL	Black	P-7	REFER TO DETAILS A, B, & C ON THIS SHEET
W-6	GROUND FLOOR	1	FIXED AND CASEMENT	7' - 6 3/4" VIF	5' - 0 3/4" VIF	3' - 0" VIF	STEEL	Black	P-7	REFER TO DETAILS A, B, & C ON THIS SHEET
W-7	GROUND FLOOR	1	FIXED AND CASEMENT	7' - 6 3/4" VIF	5' - 0 3/4" VIF	3' - 0" VIF	STEEL	Black	P-7	REFER TO DETAILS A, B, & C ON THIS SHEET
W-8	GROUND FLOOR	1	FIXED AND CASEMENT	7' - 6 3/4" VIF	5' - 0 3/4" VIF	3' - 0" VIF	STEEL	Black	P-7	REFER TO DETAILS A, B, & C ON THIS SHEET

NOTE: GC TO VERIFY ALL DIMENSIONS

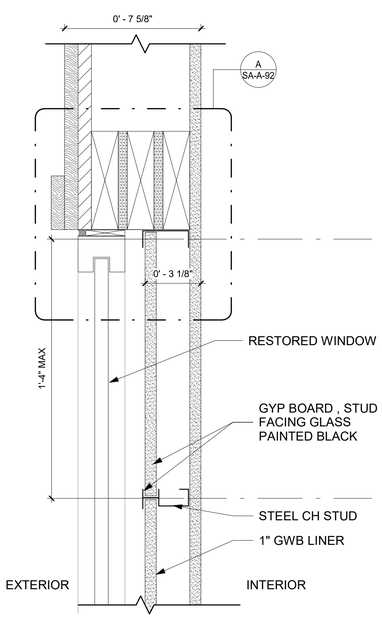

1 ENCLOSED SHAFT WINDOW
3" = 1'-0"

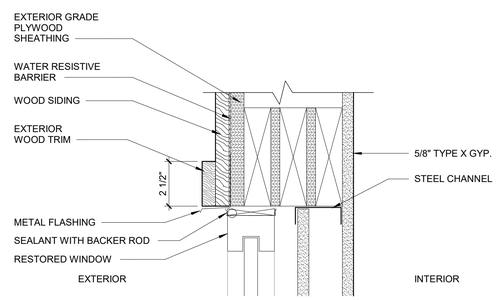

A WINDOW HEAD - DETAIL
3" = 1'-0"

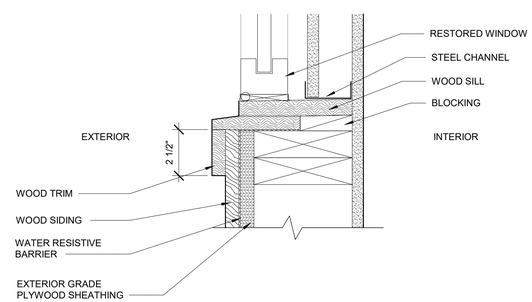

B WINDOW SILL - DETAIL
3" = 1'-0"

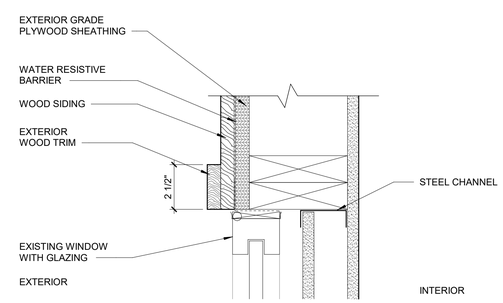

C WINDOW JAMB - DETAIL
3" = 1'-0"

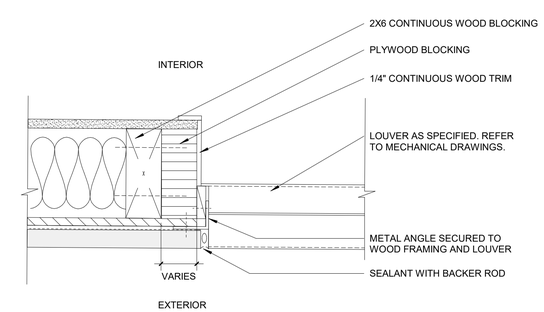

2 TYPICAL LOUVER JAMB DETAIL
6" = 1'-0"

8/30/2022 2:53:06 PM

CONSULTANT INFORMATION

The LiRo Group
3 Aerial Way, Syosset, New York 11791
(516) 938-5476 www.liro.com

CONSULTANT SEAL
REGISTERED ARCHITECT ROBERT D. YOUNG JR. 023280 STATE OF NEW YORK

REVISION NUMBER	DATE	MADE BY	APP'D BY	REVISION

RECORD DRAWING CERTIFICATION
☐ AS BUILT – CHANGES AS NOTED ☐ AS BUILT – NO CHANGES

CONTRACTOR
NAME
SIGNATURE
TITLE DATE

PROJECT COORDINATOR
NAME
SIGNATURE
TITLE DATE

WESTCHESTER COUNTY, NEW YORK
DEPARTMENT OF PUBLIC WORKS AND TRANSPORTATION
DIVISION OF ENGINEERING

INFRASTRUCTURE REHABILITATION - PHASE 3
PLAYLAND PARK, RYE, NEW YORK
SOUTHEAST ARCADE BUILDING
WINDOW, LOUVERS SCHEDULES & DETAILS

CONTRACT NUMBER	22-523
SHEET NUMBER	SA-A-92
DWG NO.:	610 of 664
SCALE:	As indicated
DATE:	08/23/2022
DPW FILE NUMBER	1-118-A-1359-0
REV. NO.	0

EXTERIOR
TWO SIDED - ONE LAYER

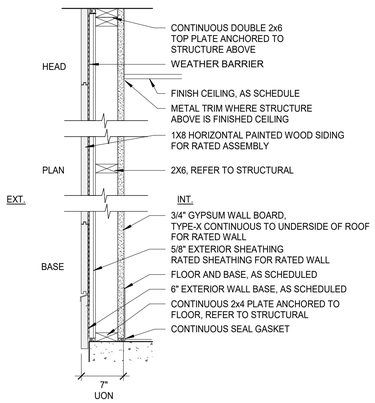

1 EXTERIOR WALL - NOT RATED
1 LAYER 5/8" IMPACT & MOLD-RESISTANT GYP. BD. UP TO 8' A.F.F. AND 5/8" MOLD-RESISTANT GYP. BD. TO CEILING ON THE INTERIOR SIDE

1A EXTERIOR WALL - 1 HR RATED - BXUV.V346-ANSI/UL 263
5/8" GWB-X , M-BLOC – MOISTURE RESISTANT, 2X6 WOOD STUD, 5/8" GWB-X, M-BLOC , ½" FIRE-RETARDANT SHEATHING, 1/8" DRAINAGE TYPE WEATHER BARRIER ,WOOD SIDING

EXTERIOR
TWO SIDED - ONE LAYER

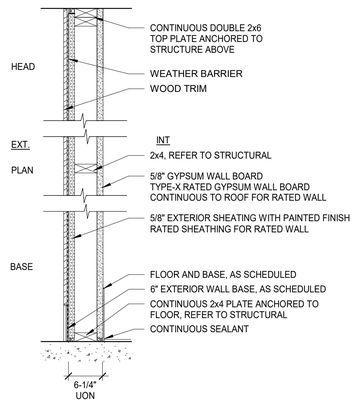

1B EXTERIOR WALL - NOT RATED
1 LAYER 5/8" EXTERIOR PAINTED FINISH PLYWOOD
1 LAYER 5/8" GYPSUM BOARD FLOOR TO CEILING

1C EXTERIOR WALL - 1 HR RATED - BXUV.V346-ANSI/UL 263
5/8" GWB-X , M-BLOC – MOISTURE RESISTANT, 2X6 WOOD STUD, 5/8" GWB-X, M-BLOC , ½" FIRE-RETARDANT SHEATHING, 1/8" DRAINAGE TYPE WEATHER BARRIER ,WOOD TRIM

TWO SIDED - ONE LAYER

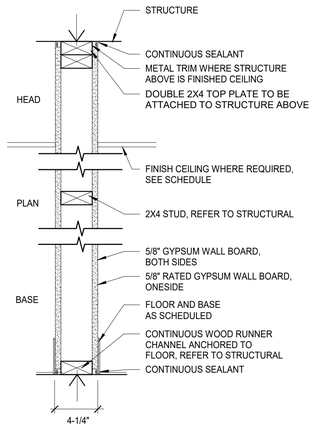

2 INTERIOR PARTITION - NO RATING
5-1/2" WOOD STUDS
1 LAYER 5/8" GYP. BD. EACH SIDE.

2A INTERIOR PARTITION - 1 HR RATING (ONE-SIDE)
5-1/2" WOOD STUDS
1 LAYER 5/8" GYP. BD.
1 LAYER 5/8" RATED GYP. BD.

GENERAL WALL/PARTITION NOTES:

1. SEE SPECIFICATIONS FOR GYPSUM BOARD AND OTHER WALL BOARD TYPES, APPLICATIONS AND THICKNESSES UNLESS NOTED OTHERWISE ON THE DRAWINGS.
2. REFER TO THE LATEST EDITION OF UNDERWRITERS LABORATORIES INC. FIRE RESISTANCE DIRECTORY FOR ADDITIONAL REQUIREMENTS ON UL RATED ASSEMBLIES AS NOTED IN THE PARTITION DESCRIPTIONS. WHERE UL# IS NOTED USE UL IN LIEU OF CHART ABOVE.
3. SOUND RATED PARTITIONS TYPES: WALL TYPE DESIGNATIONS INDICATED WITH AN "S" (XXS) ARE SOUND RATED AND REQUIRE SAFB (SOUND ATTENUATION FIRE BATT/BLANKET INSULATION) AND ACOUSTICAL SEALANT.

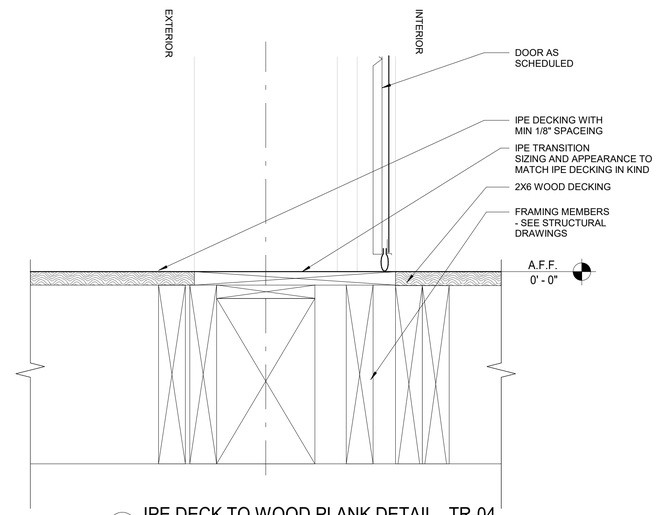

12 IPE DECK TO WOOD PLANK DETAIL_ TR-04
3" = 1'-0"

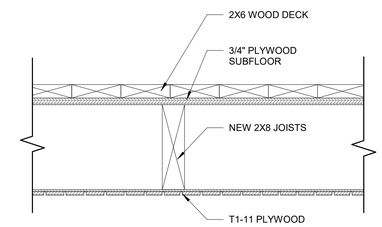

11 MEZZANINE FLOOR ASSEMBLY
1 1/2" = 1'-0"

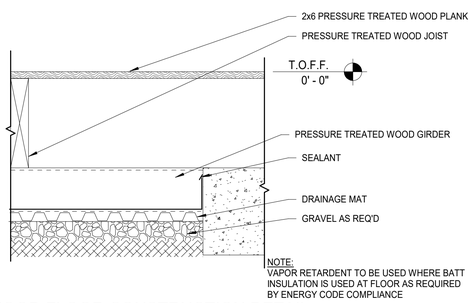

10 WOOD FLOOR CONSTRUCTION DETAIL
1 1/2" = 1'-0"

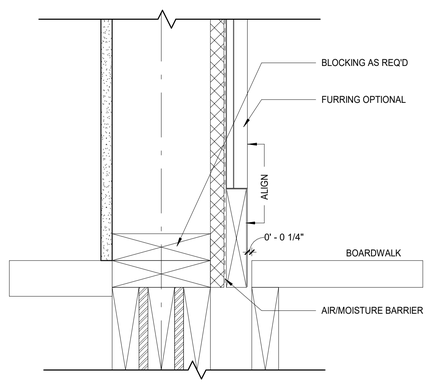

9 EXTERIOR WALL SILL DETAIL
3" = 1'-0"

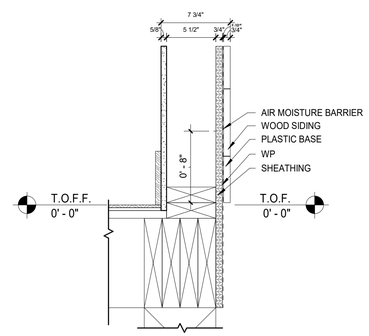

8 EXTERIOR WALL SILL DETAIL WITH PLASTIC BASE
1 1/2" = 1'-0"

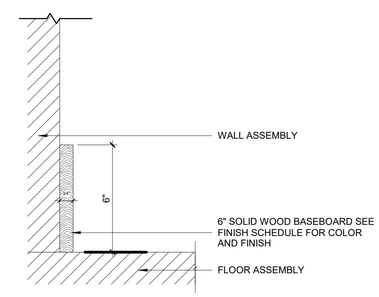

7 WOOD BASE
3" = 1'-0"

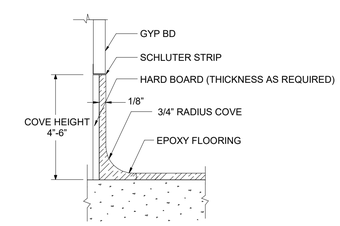

6 EPOXY FLOORING- COVE BASE DETAIL (BUILT OUT WALL)
6" = 1'-0"

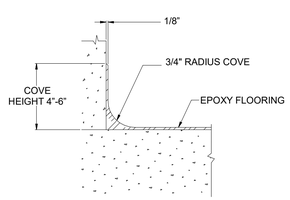

5 EPOXY FLOORING- CAPLESS COVE BASE DETAIL
6" = 1'-0"

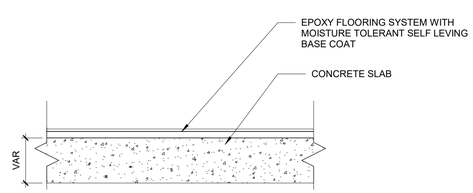

4 EPOXY FLOOR TYPICAL DETAIL
6" = 1'-0"

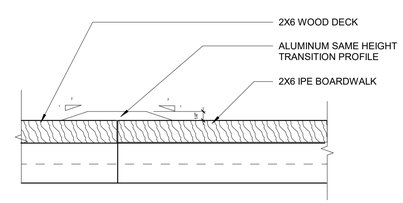

3 WOOD TO WOOD DETAIL
6" = 1'-0"

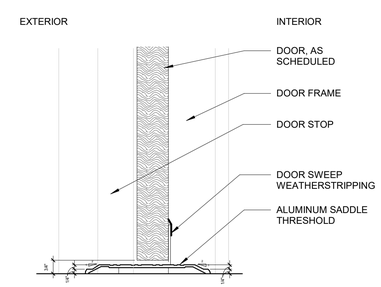

2 EXTERIOR DOOR SILL DETAIL - TR-02
3" = 1'-0"

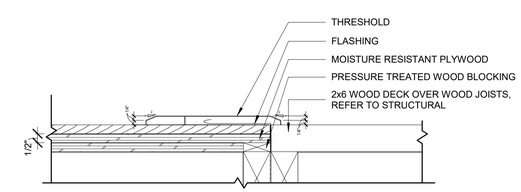

1 WOOD TO WOOD DECK TRANSITION DETAIL_TR-01
3" = 1'-0"

8/30/2022 2:53:07 PM

CONSULTANT INFORMATION
The LiRo Group
3 Aerial Way, Syosset, New York 11791
(516) 938-5476 www.liro.com

CONSULTANT SEAL
REGISTERED ARCHITECT ROBERT D. TOWNLEY JR. 023290 STATE OF NEW YORK

REVISION NUMBER	DATE	MADE BY	APP'D BY	REVISION

RECORD DRAWING CERTIFICATION
☐ AS BUILT – CHANGES AS NOTED ☐ AS BUILT – NO CHANGES

CONTRACTOR
NAME
SIGNATURE
TITLE DATE

PROJECT COORDINATOR
NAME
SIGNATURE
TITLE DATE

WESTCHESTER COUNTY, NEW YORK
DEPARTMENT OF PUBLIC WORKS AND TRANSPORTATION
DIVISION OF ENGINEERING

INFRASTRUCTURE REHABILITATION - PHASE 3
PLAYLAND PARK, RYE, NEW YORK
SOUTHEAST ARCADE BUILDING
PARTITION TYPES AND FLOORING DETAILS

CONTRACT NUMBER	22-523
SHEET NUMBER	SA-A-93
DWG NO.:	611 of 664
SCALE:	As indicated
DATE:	08/23/2022
DPW FILE NUMBER	1-118-A-1360-0
REV. NO.	0

PAINTING SCHEDULE

KEY	COLOR	MANUFACTURER	SWATCH NAME / #	REMARKS
P- 1	MYSTICAL POWERS #901	BENJAMIN MOORE	---	
P- 2	HERITAGE RED #HC-181	BENJAMIN MOORE	---	
P- 3	NEW YORK STATE OF MIND #805	BENJAMIN MOORE	---	
P- 4	LAZY SUNDAY #803	BENJAMIN MOORE	---	
P- 5	DEEP JUNGLE #595	BENJAMIN MOORE	---	
P- 6	LUCK OF THE IRISH #588	BENJAMIN MOORE	---	
P- 7	MAJOLICA GREEN #0013	SHERWIN WILLIAMS		
P- 8	ANTELOPE CANYON #125	BENJAMIN MOORE		
P- 9	FORSYTHIA #6907	SHERWIN WILLIAMS		
P- 10	CAPE BLUE #1642	BENJAMIN MOORE		
P- 11	WHITE SNOW #9541	SHERWIN WILLIAMS		
P- 12	TRICORN BLACK #6258	SHERWIN WILLIAMS		
P- 13	READY MIX WHITE			INTERIOR USE ONLY
P- 14	STUCCO PAINT TO MATCH P-1	KEIM		
P- 15	VAN DEUSEN BLUE #HC-156	BENJAMIN MOORE		

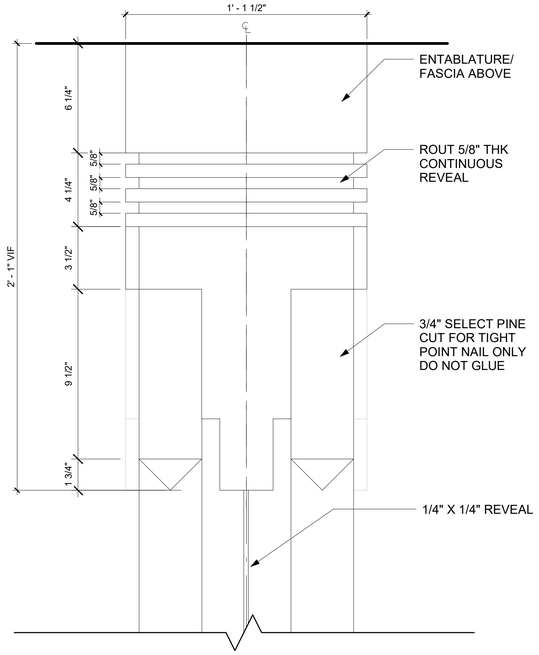

8 COLUMN CAPITAL DETAIL
3" = 1'-0"

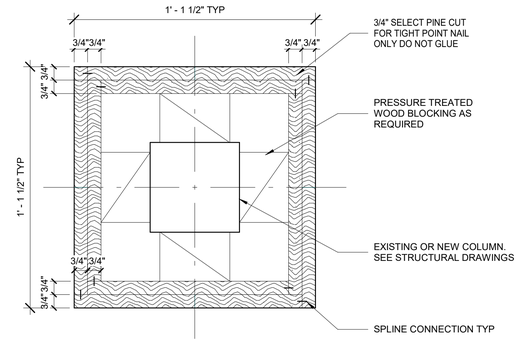

7 COLUMN DETAIL AT CAPITAL 3
3" = 1'-0"

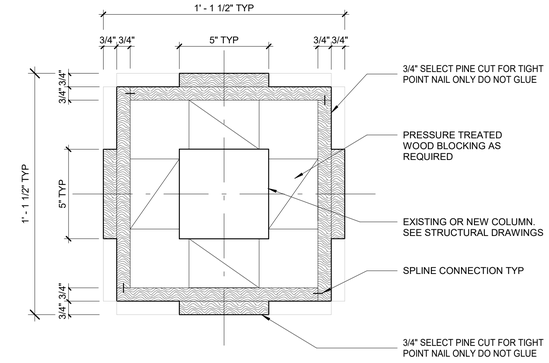

6 COLUMN DETAIL AT CAPITAL 2
3" = 1'-0"

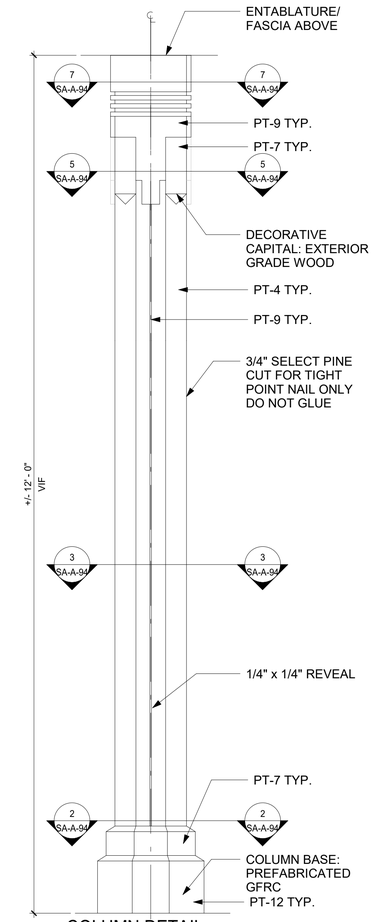

9 COLUMN DETAIL
1" = 1'-0"

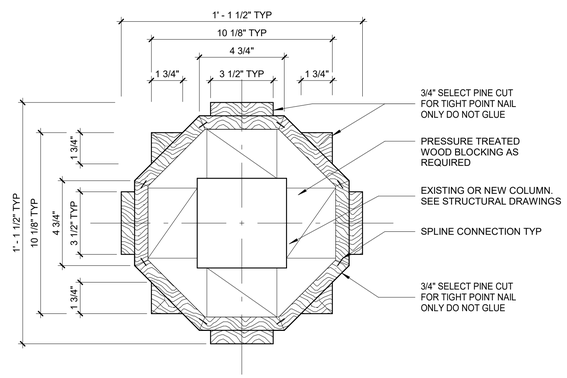

5 COLUMN DETAIL AT CAPTIAL
3" = 1'-0"

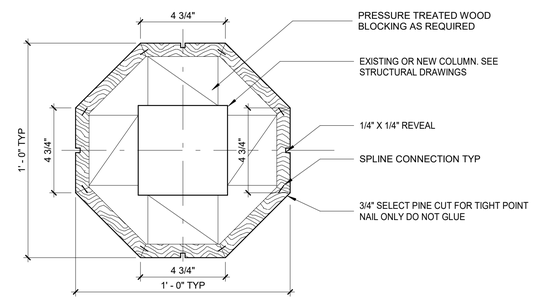

3 COLUMN DETAIL AT BASE SHAFT
3" = 1'-0"

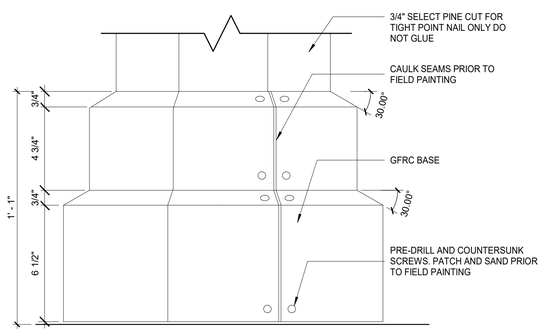

11 ELEVATION- COLUMN BASE
3" = 1'-0"

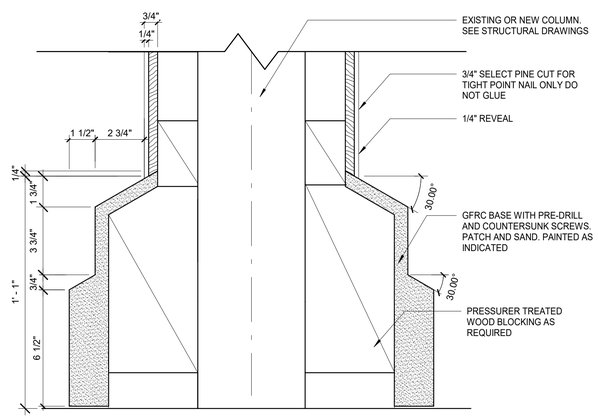

10 SECTION- COLUMN BASE
3" = 1'-0"

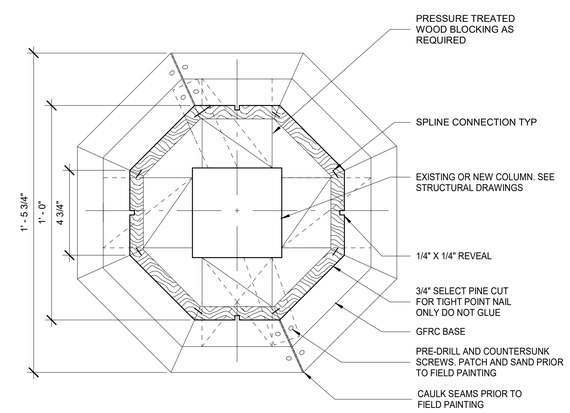

2 COLUMN DETAIL AT BASE
3" = 1'-0"

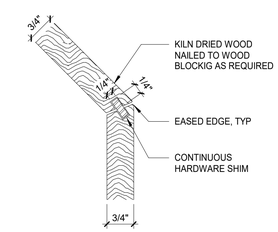

1 SPLINE CONNECTION DETAIL
6" = 1'-0"

NOTES:
1. KILN DRIED WOOD IS TO BE USED FOR COLUMN CLADDINGS.
2. PRESSURE-TREATED WOOD ARE TO BE USED FOR BLOCKING SUBSTRATE AS REQUIRED BY CLADDING INSTALLATIONS.
3. STAINLESS STEEL NAILS FASTENERS ARE TO BE USED FOR CLADDDING, BLOCKING INSTALLATIONS.
4. HARDWOOD IS TO BE USED FOR SPLINE SHIM CLADDIING CONNECTION.
5. SPLICE WOOD CLADDING PANEL OF INDIVIDUAL PIECES WHEN PANEL WIDTH EXCEEDS WIDTH OF WOOD PLANK AVAILABLE
6. **ALL DIMENSIONS TO BE VERIFIED IN FIELD**

8/30/2022 2:53:07 PM

CONSULTANT INFORMATION
The LiRo Group
3 Aerial Way, Syosset, New York 11791
(516) 938-5476 www.liro.com

CONSULTANT SEAL
REGISTERED ARCHITECT ROBERT D. YOUNG JR. 023280 STATE OF NEW YORK

REVISION NUMBER	DATE	MADE BY	APP'D BY	REVISION

RECORD DRAWING CERTIFICATION
☐ AS BUILT – CHANGES AS NOTED ☐ AS BUILT – NO CHANGES

CONTRACTOR
NAME
SIGNATURE
TITLE DATE

PROJECT COORDINATOR
NAME
SIGNATURE
TITLE DATE

WESTCHESTER COUNTY, NEW YORK
DEPARTMENT OF PUBLIC WORKS AND TRANSPORTATION
DIVISION OF ENGINEERING

INFRASTRUCTURE REHABILITATION - PHASE 3
PLAYLAND PARK, RYE, NEW YORK
SOUTHEAST ARCADE BUILDING
COLUMN DETAILS

CONTRACT NUMBER	22-523
SHEET NUMBER	SA-A-94
DWG NO.:	612 of 664
SCALE:	As indicated
DATE:	08/23/2022
DPW FILE NUMBER	1-118-A-1361-0
REV. NO.	0

GENERAL

G-1 THESE NOTES ARE GENERAL AND SUPPLEMENTAL TO THE SPECIFICATIONS. THESE NOTES APPLY TO THE ENTIRE PROJECT UNLESS MODIFIED OR NOTED OTHERWISE IN THE CONTRACT DOCUMENTS.

G-2 STANDARD DETAILS, SHOWN ON DRAWINGS XSA-S-09 THRU SA-S-10 SHALL BE USED WHEN REFERRED TO OR WHEN NO MORE RESTRICTIVE OR DIFFERENT DETAILS ARE SHOWN ON THE DRAWINGS.

G-3 DESIGN WAS IN ACCORDANCE WITH AND CONSTRUCTION SHALL COMPLY WITH THE PROVISIONS OF THE NEW YORK STATE BUILDING CODE (2020 NYSBC). THE DESIGN LOADS AND OTHER DESIGN VALUES GIVEN BELOW WERE USED FOR DESIGN OF STRUCTURES UON ON THE DRAWINGS.

G-4 DESIGN LOADS FOR NEW ELEMENTS:

LIVE LOADS:

SOUTHEAST ARCADE:

ALL FLOORS U.O.N.:	100 PSF
ROOF.:	60 PSF

SNOW LOADS:

GROUND SNOW LOAD,	Pg = 30 PSF
ROOF SNOW LOAD,	Pf= 21 PSF
SNOW EXPOSURE FACTOR,	Ce = 0.9
SNOW LOAD IMPORTANCE FACTOR,	I = 1.1
THERMAL FACTOR,	Ct = 1.0

WIND DESIGN:

BASIC WIND SPEED,	V = 126 MPH
BUILDING CATEGORY:	II
WIND EXPOSURE CATEGORY:	D
INTERNAL PRESSURE COEFFICIENT,	GCpi = ±0.18

SEISMIC DESIGN:

SPECTRAL RESPONSE COEFFICIENTS:

SDS =	0.296
SD1 =	0.096
SITE CLASS:	B
SEISMIC DESIGN CATEGORY:	C
SEISMIC IMPORTANCE FACTOR:	I = 1.25

BASIC SEISMIC FORCE RESISTING SYSTEM IS AS SHOWN ON DRAWINGS

DESIGN BASE SHEAR, V = AS SHOWN ON DRAWINGS

ANALYSIS PROCEDURE IS EQUIVALENT LATERAL FORCE METHOD, UON.

RESPONSE MODIFICATION FACTOR, R:

SOUTHEAST ARCADE: R = 1 1/2

LOADS INDICATED ABOVE REFLECT DESIGN LOADS FOR ANY NEW OR REHABILITATED STRUCTURAL ELEMENTS. THEY SHOULD NOT BE TAKEN AS DESIGN LOADS FOR THE STRUCTURE AS A WHOLE.

G-5 ALL DIMENSIONS INDICATED (*) ARE TO BE VERIFIED EITHER BY FIELD MEASUREMENTS FOR EXISTING STRUCTURES OR BY SHOP DRAWINGS FOR EQUIPMENT FURNISHED. STRUCTURAL DIMENSIONS NOT SHOWN BUT CONTROLLED BY OR RELATED TO EQUIPMENT SHALL BE VERIFIED BY THE CONTRACTOR WITH THE MANUFACTURER PRIOR TO CONSTRUCTION.

G-6 STRUCTURAL DRAWINGS SHALL BE USED IN COORDINATION WITH THE DRAWINGS OF ALL OTHER DISCIPLINES AND MANUFACTURER'S SHOP DRAWINGS.

G-7 IF A CONFLICT IS FOUND BETWEEN DIFFERENT PORTIONS OF THE CONTRACT DOCUMENTS, THE CONTRACTOR SHALL NOTIFY THE ENGINEER IMMEDIATELY. CONTINUED CONSTRUCTION OF THE AREA IN CONFLICT SHALL BE AT THE CONTRACTOR'S OWN RISK UNTIL THE CONFLICT IS RESOLVED BY THE ENGINEER.

G-8 WHENEVER ONE MEMBER IS FASTENED TO ANOTHER WITH FASTENINGS (BOLTS, WELDS, ETC.) SET AT A UNIFORM SPACING, THERE SHALL BE A MINIMUM OF TWO FASTENINGS PER PIECE CONNECTED AND THE FIRST AND LAST FASTENINGS SHALL BE LOCATED NOT TO EXCEED 0.25 OF FASTENER SPACING FROM EACH END.

G-9 STRUCTURES HAVE BEEN DESIGNED FOR OPERATIONAL LOADS ON THE COMPLETED STRUCTURE. DURING CONSTRUCTION, THE STRUCTURES SHALL BE PROTECTED BY BRACING AND TEMPORARY SUPPORTS WHEREVER EXCESSIVE CONSTRUCTION LOADS MAY OCCUR. OVERSTRESSING OF ANY STRUCTURAL ELEMENT IS PROHIBITED.

G-10 NO BACKFILL SHALL BE PLACED AGAINST ANY WALL UNLESS ALL SUPPORTING ELEMENTS OF THE STRUCTURE HAVE BEEN CONSTRUCTED AND HAVE REACHED THE SPECIFIED MINIMUM CONCRETE STRENGTH.

G-11 THE CONTRACTOR IS RESPONSIBLE FOR VERIFYING ALL EXISTING INFORMATION IN THE FIELD AS REQUIRED FOR NEW WORK.

FOUNDATIONS

F-1 DESIGN ASSUMPTIONS:
- A) ALLOWABLE BEARING PRESSURE: 1. SOUND ROCK – 8 TSF, 2. OVERBURDEN – 1 TSF.
- B) GROUNDWATER: EXISTING GROUNDWATER ELEVATIONS VARY ACROSS SITE.

F-2 GRAVITY UNDER DRAINS SHALL BE PROVIDED TO PERMANENTLY LOWER GROUNDWATER.

F-3 CONCRETE GENERAL NOTES APPLY TO FOUNDATIONS.

F-4 MINIMUM DEPTH FROM ADJACENT FINISHED GRADE TO BOTTOM OF FOUNDATION, 4'-0"

F-5 FOUNDATIONS BEARING ON ROCK SHALL BE CONSTRUCTED SUCH THAT ROCK SURFACE IS LEVEL, UNLESS APPROVED BY ENGINEER.

F-6 COMPACTED SELECT GRANULAR FILL 12 INCHES THICK MINIMUM, SHALL BE PLACED BELOW ALL CONCRETE FOUNDATIONS UNLESS DIRECTLY BEARING ON SOUND ROCK.

STRUCTURAL METALS

S-1 DETAIL, FABRICATE, AND ERECT STRUCTURAL STEEL IN ACCORDANCE WITH AISC SPECIFICATION FOR STRUCTURAL STEEL BUILDINGS, ALLOWABLE STRESS DESIGN AND LRFD DESIGN (LRFD MANUAL OF STEEL CONSTRUCTION, CURRENT EDITION).

S-2 STEEL MATERIAL:
- A) STRUCTURAL TUBING, ASTM A 500, GRADE B.
- B) STRUCTURAL PIPE, ASTM A 53, GRADE B.
- C) PLATES AND ANGLES, ASTM A 36 UNO.
- D) STRUCTURAL W SHAPES, ASTM A 992 (MIN. YIELD STRENGTH OF 50 KSI).
- E) STRUCTURAL S, M, & H SHAPES ASTM A572 GRADE 50.

S-3 PROVIDE MIN 3/4" DIAMETER ASTM A 325 HIGH STRENGTH BOLTS WITH FULLY TIGHTENED TYPE N CONNECTIONS FOR STRUCTURAL STEEL UON.

S-4 PROVIDE TYPICAL STEEL BEAM CONNECTIONS FOR A CAPACITY NOT LESS THAN THE TOTAL UNIFORM LOAD CAPACITY TABULATED IN THE AISC TABLES FOR ALLOWABLE LOADS OF BEAMS UNLESS NOTED OTHERWISE.

S-5 CAST IN PLACE ANCHOR BOLTS FOR STRUCTURAL STEEL SHALL CONFORM TO ASTM A307 UON.

S-6 DO NOT PAINT STEEL SURFACES WHICH ARE TO BE WELDED OR ARE TO BE ENCASED IN CONCRETE.

S-7 STAINLESS STEEL SHALL BE TYPE 316 FOR BOLTED CONSTRUCTIONS AND 316L FOR WELDED CONSTRUCTIONS.

S-8 ALUMINUM SHALL BE ALLOY 6061-T6.

S-9 ALL GROOVE AND BUTT WELDS SHALL BE FULL PENETRATION.

S-10 FILLET WELD SIZES SHALL BE THE MINIMUM SIZE REQUIRED BY AISC CODE FOR PLATE SIZES TO BE CONNECTED AND SHALL BE APPLIED TO THE ENTIRE JOINT CONTACT LENGTH, BUT NOT LESS THAN 3/16".

S-11 DETAIL, FABRICATE, AND ERECT ALUMINUM IN ACCORDANCE WITH THE ALUMINUM ASSOCIATION CONSTRUCTION MANUAL CURRENT EDITION.

S-12 ALL BOLTS, ANCHOR BOLTS, AND CONCRETE ANCHORS CONNECTING ALUMINUM SHALL BE TYPE 316 STAINLESS STEEL UON.

S-13 ALUMINUM SHALL BE ISOLATED FROM CONTACT WITH CONCRETE OR DISSIMILAR METALS.

EXCAVATION

E-1 CONTRACTOR SHALL PERFORM ALL EXCAVATION IN ACCORDANCE WITH STATE, LOCAL AND FEDERAL REQUIREMENTS INCLUDING OSHA BRACING AND EXCAVATION REQUIREMENTS.

E-2 TEMPORARY SHEETING AND BRACING IS NOT SHOWN ON CONTRACT DRAWINGS. ALL EXCAVATIONS WITH A POTENTIAL FOR CAVE-IN SHALL BE PROVIDED WITH EXCAVATION PROTECTION SYSTEMS IN ACCORDANCE WITH OSHA 1926. SLOPING AND BENCHING WHICH WILL ENCROACH ON AREAS SLATED TO REMAIN ACCESSIBLE OR THAT MAY ENCROACH ON EXISTING FOOTINGS AND STRUCTURES SHALL NOT BE PERMITTED.

E-3 CONTRACTOR SHALL ENGAGE THE SERVICES OF A LICENSED PROFESSIONAL ENGINEER REGISTERED IN THE STATE OF NEW YORK TO DESIGN ALL TEMPORARY SHEETING AND BRACING AND RELATED APPURTENANCES. CONTRACTOR TO SUBMIT SUCH PLANS TO ENGINEER FOR INFORMATION.

E-4 CONTRACTOR SHALL BE RESPONSIBLE FOR DEWATERING OF OPEN EXCAVATIONS.

E-5 ALL EXCAVATED MATERIALS SHALL BE REMOVED FROM SITE TO A FACILITY AS REQUIRED BY STATE, LOCAL FEDERAL LAW.

TIMBER

T-1 ALL WOOD FRAMING MEMBERS INCLUDING, BUT NOT LIMITED TO, WALL STUDS AND JOISTS, ARE INTENDED TO ACT AS A SYSTEM AS DETAILED IN THE STRUCTURAL DRAWINGS AND ONCE CONSTRUCTION IS COMPLETE. IT IS THE RESPONSIBILITY OF THE CONTRACTOR TO ENSURE SAFETY AND STABILITY OF WOOD FRAMING SYSTEMS (I.E. TEMPORARY BRACING IF REQUIRED) DURING CONSRTUCTION AS A RESULT OF CONSTRUCTION METHODS AND SEQUENCES.

T-2 ALL TIMBER BELOW FLOOR DECKING SHALL BE PRESSURE-TREATED SOUTHERN PINE LUMBER.

T-3 STORAGE OF ALL LUMBER AND TIMBER ON SITE SHALL BE KEPT OFF GROUND, UNDER COVER AND PROTECTED FROM DAMAGE.

T-4 ALL DIMENSIONAL LUMBER SHALL BE CERTIFIED BY THE SUPPLIER IN WRITING TO BE KILN DRIED.

T-5 STRUCTURE SHALL NOT BE ENCLOSED UNLESS LUMBER MOISTURE CONTENT HAS BEEN VERIFIED TO BE AT OR BELOW 15%. ANY SIGNS OF MOLD SHALL BE REMOVED AND TREATED IN ACCORDANCE WITH PROJECT SPECIFICATIONS OR INDUSTRY STANDARDS.

T-6 ALL LUMBER IN CONTACT WITH THE GROUND OR CONCRETE SHALL BE PRESSURE TREATED.

T-7 FASTENERS FOR PRESERVATIVE TREATED AND FIRE RETARDANT TREATED WOOD SHALL BE OF HOT DIPPED ZINC COATED GALVANIZED STEEL OR STAINLESS STEEL AND SHALL FOLLOW CURRENT SIMPSON GUIDELINES BASED ON WEATHER EXPOSURE. WHERE STAINLESS STEEL CONNECTORS OR HOT DIPPED GALVANIZED CONNECTORS ARE SPECIFIED IN THE DRAWINGS, STAINLESS STEEL OR HOT DIPPED GALVANIZED FASTENERS SHALL BE USED TO MATCH CONNECTOR TYPE.

T-8 ALL PLATES AND LEDGERS SHALL BE FASTENED WITH A MINIMUM (3) ANCHORS PER PIECE UNLESS NOTED OTHERWISE.

T-9 ALL METAL HARDWARE AND FRAMING ACCESSORIES SHALL BE MANUFACTURED BY SIMPSON STRONG-TIE COMPANY. ALL ITEMS SHALL BE INSTALLED PER THE SIMPSON'S INSTALLATION REQUIREMENTS. ALL NAIL HOLES SHALL BE FILLED WITH THE RECOMMENDED FASTENER UNLESS NOTED OTHERWISE ON THE DRAWING.

T-10 HOLES FOR BOLTS SHALL BE DRILLED WITH A BIT OF THE SAME NOMIMAL DIAMETER AS THE BOLT + 1/16". LEAD HOLES FOR LAG SCREWS SHALL BE BORED PER NDS 11.1.3.

T-11 ALL BOLTS, CARRIAGE BOLTS, LAG SCREWS, EXPANSION BOLTS AND EPOXY BOLTS SHALL BE INSTALLED WITH STANDARD CUT WASHERS UNDER THE BOLT HEAD AND NUTS THAT BEAR DIRECTLY ON THE WOOD. ALL NUTS SHALL BE TIGHTENED AT THE TIME OF INSTALLATION AND RE-TIGHTENED IF NECESSARY, DUE TO WOOD SHRINKAGE, PRIOR TO CLOSE OUT OR COMPLETION OF THE PROJECT. BOLTS AND LAG SCREWS SHALL CONFORM TO ANSI/ASME STANDARD B18.2.1. WOOD SCREWS SHALL CONFORM TO B18.6.1. ALL BOLTS SHALL CONFORM TO ASTM A307 GRADE A UNLESS NOTED OTHERWISE.

T-12 CUTTING AND NOTCHING OF SAWN LUMBER RAFTERS AND STUDS SHALL BE IN CONFORMANCE WITH THE FOLLOWING CRITERIA:

A. JOISTS NOTCHES AT THE ENDS OF JOISTS SHALL NOT EXCEED 1/5 OF THE JOIST DEPTH. HOLES IN JOISTS SHALL NOT BE WITHIN 2½ INCHES OF THE TOP OR BOTTOM OF THE JOIST, AND THE DIAMETER OF ANY SUCH HOLE SHALL NOT EXCEED 1/4 THE DEPTH OF THE JOIST. NOTCHES IN THE TOP OR BOTTOM OF THE JOISTS SHALL NOT EXCEED 1/6 THE DEPTH AND SHALL NOT BE LOCATED IN THE MIDDLE OF THE THIRD SPAN.

B. RAFTERS NOTCHES AT THE ENDS OF RAFTERS OR CEILING JOISTS SHALL NOT EXCEED 1/5 OF THE DEPTH. NOTCHES IN THE TOP OR BOTTOM OF THE RAFTER OR CEILING JOIST SHALL NOT EXCEED 1/6 THE DEPTH AND SHALL NOT BE LOCATED IN THE MIDDLE 1/3 OF THE SPAN. EXCEPT THAT A NOTCH NOT EXCEEDING 1/3 OF THE DEPTH IS PERMITTED IN THE TOP OF THE RAFTERS OR CEILING JOIST NOT FURTHER FROM THE FACE OF THE SUPPORT THAN THE DEPTH OF THE MEMBER. HOLES BORED IN RAFTERS OR CEILING JOISTS SHALL NOT BE WITHIN 2½" INCHES OF THE TOP AND BOTTOM AND THEIR DIAMETER SHALL NOT EXCEED 1/4 THE DEPTH OF THE MEMBER.

C. WALL STUDS A MAXIMUM OF 2¼" DIAMETER NEATLY BORED HOLE MAY BE PLACED IN THE CENTER OF ALL BEARING 2x6 STUDS WITH NO ADDITIONAL REINFORCEMENT REQUIRED.

SPECIAL INSPECTIONS – SOUTHEAST ARCADE

S-1 SPECIAL INSPECTION SHALL COMPLY WITH SPECIFICATIONS.

S-2 SPECIAL INSPECTION WILL BE PERFORMED IN ACCORDANCE WITH CHAPTER 17 OF THE NYS BUILDING CODE.

S-3 SPECIAL INSPECTION WILL BE PERFORMED ON THE FOLLOWING STRUCTURAL SYSTEMS:
- A) STRUCTURAL STEEL CONSTRUCTION (1705.2).
- B) WOOD CONSTRUCTION (1705.5).
- C) CONCRETE CONSTRUCTION (1705.3).
- D) WIND RESISTANCE (1705.11)
- E) SOILS (1705.6).
- F) DRIVEN DEEP FOUNDATIONS (1705.7)

CONCRETE (EXCEPT PRECAST)

C-1 CONCRETE STRENGTH CLASSES (28-DAY COMPRESSIVE STRENGTH): CLASS A (5000 PSI) STRUCTURES, REINFORCED DUCT BANKS, AND PIPE ENCASEMENT. FOR CONCRETE WALLS GREATER THAN 2 FEET THICK FOLLOW ACI RECOMMENDATIONS FOR MASS CONCRETE. CLASS D (2500 PSI) SIDEWALKS, CURBS AND GUTTERS, CONCRETE FILL, THRUST BLOCKS, UNREINFORCED DUCT BANKS AND PIPE ENCASEMENT, FENCE POST EMBEDMENT.

C-2 REINFORCEMENT: ASTM A615, GRADE 60, OR ASTM A706, GRADE 60 WHERE REINFORCEMENT IS TO BE WELDED.

C-3 CONCRETE COVER FOR REINFORCING:
- A) SURFACES CAST AGAINST SUBGRADE 3" MIN.
- B) FORMED SURFACES IN CONTACT WITH SOIL OR LIQUID 2" MIN.
- C) SURFACES NOT IN CONTACT WITH WEATHER, SOIL, OR LIQUID 1 1/2" MIN.

C-4 CONSTRUCTION JOINTS & CONTROL JOINTS SHALL BE LOCATED AS SHOWN ON THE DRAWINGS. WHERE NOT SHOWN, CONSTRUCTION JOINTS SHALL BE LOCATED AT NO MORE THAN 30 FEET ON CENTER. JOINT LOCATIONS SHALL BE AS APPROVED BY THE ENGINEER.

C-5 EQUIPMENT SUPPORTS, ANCHORAGES, OPENINGS, RECESSES AND REVEALS NOT SHOWN ON THE STRUCTURAL DRAWINGS BUT REQUIRED BY OTHER DISCIPLINES, SHALL BE PROVIDED FOR PRIOR TO PLACING CONCRETE.

C-6 SPLICES SHALL BE CLASS 'B' CONFORMING TO THE PROVISIONS OF ACI 318 UNLESS NOTED OTHERWISE.

C-7 AT ALL TYPICAL CURBS, EQUIPMENT PADS, AND PIPE SUPPORT PIERS, REINFORCING DOWELS SHOWN MAY BE REPLACED WITH MATCHING DOWELS SET IN EPOXY IN DRILLED HOLES AS SPECIFIED. DOWELS LOCATED CLOSER THAN 3" FROM ANY EDGE OF CONCRETE SHALL NOT BE REPLACED WITH DRILLED DOWELS.

C-8 DRILLED EPOXY DOWELS (WHERE DOWELS ARE SHOWN TO BE PLACED INTO HARDENED CONCRETE):
- A) THE HOLE DIAMETER SHALL BE NO LARGER THAN 1/8" GREATER THAN THE DIAMETER OF THE REINFORCING BAR AT THE DEFORMATIONS.
- B) THE DEPTH OF EMBEDMENT SHALL BE 12 BAR DIAMETERS, UNLESS SHOWN OTHERWISE.
- C) ADJUST THE DOWEL LOCATIONS AS NEEDED TO AVOID DRILLING THROUGH ANY REINFORCING BARS.IF THE DOWEL LOCATION NEEDS TO BE MODIFIED, CONTACT THE ENGINEER.

C-9 SLABS WITH SLOPING SURFACES SHALL HAVE THE INDICATED SLAB THICKNESS MAINTAINED AS THE MINIMUM. SLAB BOTTOMS CAN EITHER SLOPE WITH THE TOP SURFACE OR BE LEVEL. REINFORCEMENT IN SLABS WITH SLOPING SURFACES SHALL BE PLACED AT THE REQUIRED CLEARANCE FROM THE SLAB SURFACE.

C-10 SLOPES SHOWN ON SLAB SURFACES BY FLOW ARROWS SHALL BE 1.0 PERCENT UNLESS NOTED OTHERWISE.

C-11 WHERE HORIZONTAL CONSTRUCTION JOINTS, LOCATED ABOVE THE FOUNDATION SLAB, EXTEND BEYOND WHERE NEEDED, THEY SHALL BE TERMINATED AT A VERTICAL CONSTRUCTION JOINT APPROVED BY THE ENGINEER.

C-12 DOWELS, ANCHOR BOLTS, PIPES, WATERSTOPS AND OTHER EMBEDDED ITEMS SHALL BE HELD SECURELY IN POSITION WHILE CONCRETE IS BEING PLACED.

C-13 CONDUITS AND OTHER SIMILAR ITEMS EMBEDDED IN OR PENETRATING THROUGH CONCRETE SHALL BE SPACED ON CENTER NOT LESS THAN 3 TIMES THEIR OUTSIDE DIMENSION, BUT NOT LESS THAN 2 1/2" CLEAR IN CLASS 45F CONCRETE OR 2" CLEAR IN CLASS 45 CONCRETE. SUCH ITEMS SHALL NOT EXCEED 1/3 OF THE MEMBER THICKNESS.

C-14 REINFORCING BARS AND ACCESSORIES SHALL NOT BE IN CONTACT WITH ANY METAL PIPE, PIPE FLANGE, METAL CONDUIT, OR OTHER METAL PARTS EMBEDDED IN CONCRETE. A MINIMUM CLEARANCE OF 2 INCHES SHALL BE PROVIDED.

C-15 ALL JOINTS WHICH ARE IN MEMBERS IN CONTACT WITH LIQUID OR BELOW GRADE SHALL HAVE A WATERSTOP. CONSTRUCTION JOINTS SHALL HAVE A 6" PVC FLATSTRIP WATERSTOP. EXPANSION JOINTS SHALL HAVE A 9" PVC CENTERBULB WATERSTOP.

C-16 IN VERTICAL JOINTS, WATERSTOP SHALL STOP NO LESS THAN 18" ABOVE THE MAXIMUM WATER SURFACE OR 18" ABOVE GRADE, WHICHEVER IS HIGHER.

C-17 AT JOINT INTERSECTIONS, WATERSTOPS SHALL BE CONNECTED SO AS TO FORM A COMPLETE SEAL USING CONNECTION PIECES AS NEEDED.

C-18 ALL EXPOSED CORNERS SHALL HAVE A 3/4" CHAMFER OR A 1/2" RADIUS TOOLED CORNER.

DEMOLITION

LEGEND

EXISTING REINFORCED CONCRETE WALL OR STRUCTURE TO BE DEMOLISHED

SAW CUT LINE – FULL DEPTH UNLESS NOTED OTHERWISE

D-1 CONTRACTOR IS ALERTED THAT LIMITS OF DEMOLITION SHOWN IS APPROXIMATE. ACTUAL LIMITS SHALL BETHE MINIMUM REQUIRED FOR NEW STRUCTURE. CONTRACTOR TO CO-ORDINATE AND SUBMIT DEMOLITION PROCEDURE PER SPECIFICATIONS.

D-2 ALL ITEMS SHOWN ARE EXISTING TO REMAIN UNLESS NOTED OTHERWISE.

D-3 FOR ADDITIONAL DEMOLITION REQUIREMENTS SEE SPECIFICATIONS (024116).

D-4 ALL EXISTING CONCRETE TO BE DEMOLISHED IS STEEL REINFORCED UNLESS NOTED OTHERWISE. REINFORCING STEEL NOT SHOWN FOR CLARITY.

D-5 FOR ADDITIONAL DEMOLITION NOT SHOWN, SEE G, A, M, E, H, AND P DRAWINGS.

PILE NOTES

P-1 PILES SHALL BE DESIGNED AND INSTALLED BY A QUALIFIED PILE CONTRACTOR IN ACCORDANCE WITH THE BORED-IN PILE SPECIFICATIONS AND SUBJECT TO THE REQUIREMENTS LISTED HEREIN.

P-2 THE CONTRACTOR SHALL ENGAGE A LICENSED PROFESSIONAL ENGINEER REGISTERED IN THE STATE OF NEW YORK TO DESIGN PILE AND SUBMIT THE DESIGN TO THE ENGINEER FOR APPROVAL.

P-3 THE BORED-IN PILE SHALL BE MIN. 9 5/8" DIAMETER WITH 0.545" WALL THICKNESS AND DESIGNED AND INSTALLED FOR ULTIMATE LOAD IN COMPRESSION = 60 TONS ALLOWABLE LOAD IN COMPRESSION = 30 TONS.

P-4 ALL BORED-IN PILES SHALL BE GROUTED WITH A MINIMUM 28 DAY COMPRESSIVE STRENGTH OF 4000 PSI.

P-5 ALL BORED-IN PILES SHALL HAVE FULL LENGTH 1-1/4" ø THREADBARS. THE THREADBARS SHALL CONFORM TO THE REQUIREMENTS OF ASTM A722, GRADE 150 AS MANUFACTURED BY DYWIDAG OR APPROVED EQUAL, UNLESS NOTED OTHERWISE. PROVIDE BEARING PLATES AND NUTS IN ACCORDANCE WITH THE THREADBAR MANUFACTURER'S RECOMMENDATIONS.

P-6 PROVIDE CENTRALIZERS FOR THREADBARS AT 10 FEET MAXIMUM VERTICAL SPACING.

P-7 CUT OFF THE ELEVATIONS OF THE BORED-IN PILES AS SHOWN ON DRAWINGS.

P-8 ALL BORED-IN PILES SHALL BE INSTALLED WITH A MAXIMUM LATERAL TOLERANCE OF THREE INCHES.

P-9 DRILLING OPERATION SHALL BE PERFORMED IN THE PRESENCE OF THE ENGINEER.

P-10 ONE (1) STATIC AXIAL COMPRESSION LOAD TEST WILL BE REQUIRED.

P-11 THE INSTALLATION METHOD USED FOR THE SUCCESSFUL COMPLETION OF LOAD TESTING SHALL BE USED FOR ALL THE PRODUCTION PILES.

P-12 THE CONTRACTOR SHALL SUBMIT A STATIC AXIAL LOAD TESTING PROGRAM CONSISTING OF ONE (1) COMPRESSION TEST SHOWING PROPOSED PILE LOAD TEST LOCATIONS FOR APPROVAL OF THE ENGINEER.

P-13 COMPRESSION LOAD TESTING SHALL CONFORM TO ASTM D1143 AND THE PROJECT SPECIFICATIONS. UPLIFT LOAD TESTING SHALL CONFORM TO THE PROJECT SPECIFICATIONS AND ASTM D3689.

P-14 A MINIMUM PERIOD OF TWO (2) WEEKS SHALL ELAPSE FROM THE INSTALLATION OF THE TEST PILE TO THE COMMENCEMENT OF THE LOAD TEST.

P-15 TWO (2) TELLTALE RODS SHALL BE INSTALLED IN THE LOAD TEST PILE. THE BOTTOM END OF ONE TELLTALE ROD SHALL BE AT THE BOTTOM OF THE TEST PILE, AND THE BOTTOM END OF THE OTHER ROD SHALL BE TERMINATED MIDWAY BETWEEN PILE CUT-OFF AND PILE TIP. THE TELLTALE SHALL CONSIST OF A STEEL SOUNDING ROD EXTENDED TO AN ELEVATION DESIGNATED BY THE ENGINEER. THE TELLTALES SHALL BE PROTECTED BY A STEEL TUBE EMBEDDED IN GROUT. THE TELLTALE SHALL BE CENTERED IN THE TUBE IN A MANNER TO AVOID FRICTION BETWEEN THE TELLTALE AND THE TUBE.

P-16 THE LOADING PROCEDURE FOR STATIC AXIAL COMPRESSION TEST SHALL BE IN ACCORDANCE WITH NEW YORK STATE BUILDING CODE.

P-17 MEASUREMENTS OF MOVEMENT OF THE PILE BUTT, TELLTALES, REFERENCE BEAMS, ETC. SHALL BE TAKEN BY LICENSED SURVEYOR (REGISTERED IN THE STATE OF NEW YORK) ENGAGED BY THE OWNER.

P-18 MONITORING OF LOAD TEST SHALL BE PERFORMED BY A PROFESSIONAL ENGINEER REGISTERED IN THE STATE OF NEW YORK AND HIRED BY THE OWNER.

P-19 THE DIAL GAUGES FOR MONITORING THE MOVEMENT OF THE PILE SHALL HAVE A MINIMUM TRAVEL OF THREE (3) INCHES AND SHALL BE AT LEAST THREE (3) INCHES IN DIAMETER.

Drawing Name: G:\SavinAutocad\2060\25-Playland-Mega-3\S\SAS-1001.dwg
Rev#: Projectname: 211001F02 Comments: ----
Printed by: MGodby Date: 24 August 2022 4:36 PM Designed by: ----
Xrefs: [TB_24X36_WestchesterCo_3.dwg] [TSG-SVLOGO.dwg]

CONSULTANT INFORMATION

Savin Engineers, P.C.

CONSULTANT SEAL

STATE OF NEW YORK · LICENSED PROFESSIONAL ENGINEER · No. 065364

REVISION NUMBER	DATE	MADE BY	APP'D BY	REVISION

RECORD DRAWING CERTIFICATION

☐ AS BUILT – CHANGES AS NOTED ☐ AS BUILT – NO CHANGES

CONTRACTOR: NAME ____ SIGNATURE ____ TITLE ____ DATE ____

PROJECT COORDINATOR: NAME ____ SIGNATURE ____ TITLE ____ DATE ____

WESTCHESTER COUNTY, NEW YORK
DEPARTMENT OF PUBLIC WORKS AND TRANSPORTATION
DIVISION OF ENGINEERING

INFRASTRUCTURE REHABILITATION - PHASE 3
PLAYLAND PARK, RYE, NEW YORK
SOUTHEAST ARCADE
STRUCTURAL NOTES

CONTRACT NUMBER: 22-523
SHEET NUMBER: SA-S-01
DWG NO.:
SCALE: AS SHOWN
DATE: 8/23/2022
DPW FILE NUMBER: 1-118-S-1362-0
REV. NO. 0

STRUCTURAL ABBREVIATIONS

AB	ANCHOR BOLT
ADDL	ADDITIONAL
ADH	ADHESIVE
ADJ	ADJUSTABLE/ADJACENT
AFF	ABOVE FINISHED FLOOR
AGG	AGGREGATE
AL	ALUMINUM
ALT	ALTERNATE
APPROX	APPROXIMATE
ARCH	ARCHITECTURAL
AVG	AVERAGE
B	BORING
BLDG	BUILDING
BM	BEAM/BENCH MARK
BOF	BOTTOM OF FOOTING
BOS	BOTTOM OF STEEL
BOT	BOTTOM
BRG	BEARING
BT	BOLT
C	CHANNEL
C TO C	CENTER TO CENTER
CANT	CANTILEVER
CJ	CONSTRUCTION JOINT
CL	CENTER LINE
CLR	CLEAR
CMU	CONCRETE MASONRY UNIT
CO	CLEAN OUT
COL	COLUMN
CONC	CONCRETE
CONST	CONSTRUCTION
CONT	CONTINUOUS
CONTR	CONTRACTOR
CP	CONCRETE PLANK
CLJ	CONTROL JOINT
CTR	CENTER
CY	CUBIC YARD
DET	DETAIL
DIA (ø)	DIAMETER
DIAG	DIAGONAL
DIM	DIMENSION
DIST	DISTANCE
DN	DOWN
DO	DITTO
DP	DEEP
DWG	DRAWING
DWL	DOWEL
E	EAST
EA	EACH
EF	EACH FACE
EL	ELEVATION
ELEV	ELEVATOR
ENGR	ENGINEER
EMB	EMBEDMENT
ENCL	ENCLOSURE
ENT	ENTRANCE
EQ	EQUAL
EQPT	EQUIPMENT
EW	EACH WAY
EXIST	EXISTING
EXP	EXPANSION
EXP JT	EXPANSION JOINT
EXT	EXTERIOR
FAB	FABRICATE
FD	FLOOR DRAIN
FDN	FOUNDATION
FFL	FINISH FLOOR
FIN	FINISH
FLR	FLOOR
FT	FEET
FTG	FOOTING
F&C	FRAME&COVER
F&G	FRAME&GRATE

GA	GAUGE
GALV	GALVANIZE
GB	GRADE BEAM
GR	GRADE
GRTG	GRATING
HGT	HEIGHT
HORZ	HORIZONTAL
HP	HIGH POINT
HSS	HOLLOW STRUCTURAL STEEL
ID	INSIDE DIAMETER
IF	INSIDE FACE
IN	INCH
INCL	INCLUDE
INT	INTERIOR
INV	INVERT
J	JOIST
JB	JUNCTION BOX
JCT	JUNCTION
JT	JOINT
L	LENGTH/ANGLE
LF	LINEAR FEET
LG	LONG
LL	LIVE LOAD
LLH	LONG LEG HORIZONTAL
LLV	LONG LEG VERTICAL
LOC	LOCATION
LP	LOW POINT
LVR	LOUVER
LWL	LOW WATER LEVEL
MAS	MASONRY
MATL	MATERIAL
MAX	MAXIMUM
MECH	MECHANICAL
MET	METAL
MFR	MANUFACTURER
MG	MILLION GALLONS
MGD	MILLION GALLONS PER DAY
MH	MANHOLE
MIN	MINIMUM
MISC	MISCELLANEOUS
MO	MASONRY OPENING
MOD	MODIFY/MODIFIED
MTD	MOUNTED
N	NORTH
NA	NOT APPLICABLE
NIC	NOT IN CONTRACT
NO	NUMBER
NOM	NOMINAL
NTS	NOT TO SCALE
OC	ON CENTER
OD	OUTSIDE DIAMETER
OF	OUTSIDE FACE
OPNG	OPENING
OPP	OPPOSITE
OT	OPEN TRUSS
OVHD	OVERHEAD
PAR	PARALLEL
PC	POINT OF CURVE/PIECE
PCO	PILE CUT OFF
PI	POINT OF INTERSECTION
PL	PLATE/PROPERTY LINE
PREFAB	PREFABRICATED
PSF	POUNDS PER SQUARE FOOT
PSI	POUNDS PER SQUARE INCH
PT	POINT OF TANGENCY
PTN	PARTITION
PVMT	PAVEMENT
QTY	QUANTITY

R	RISER
RAD	RADIUS
RCP	REINFORCED CONCRETE PIPE
RD	ROOF DRAIN
REINF	REINFORCEMENT
RECT	RECTANGULAR
REM	REMOVE
REQD	REQUIRED
RF	ROOF
RO	ROUGH OPENING
S	SOUTH
SCHED	SCHEDULE
SECT	SECTION
SF	SQUARE FEET
SHT	SHEET
SIM	SIMILAR
SJ	STEEL JOIST
SPEC	SPECIFICATION
SQ	SQUARE
SS	STAINLESS STEEL
STA	STATION
STD	STANDARD
STR	STAIR
STIF	STIFFENER
STIR	STIRRUP
STL	STEEL
STRUC	STRUCTURAL
SUB	SUBSTITUTE
SYM	SYMMETRICAL
T	TREAD
T&B	TOP AND BOTTOM
T&G	TOUNGE AND GROOVE
TAN	TANGENT
TEMP	TEMPERATURE
THK	THICK
TOC	TOP OF CURB/CONCRETE
TOD	TOP OF DECK
TOF	TOP OF FOOTING
TOM	TOP OF MASONRY/MANHOLE
TOS	TOP OF SLAB/STEEL
TOW	TOP OF WALL
TYP	TYPICAL
UNO	UNLESS NOTED OTHERWISE
VERT	VERTICAL
W	WEST/WIDTH/WIDE FLANGE
W/	WITH
W/O	WITHOUT
WL	WATER LEVEL
WP	WATERPROOF/WALL PIPE
WPT	WALL PENETRATING TYPE
WS	WATER SURFACE
WT	WEIGHT
WWF	WELDED WIRE FABRIC
YD	YARD
YR	YEAR

SYMBOLS

- UNDISTURBED EARTH
- COMPACTED BACKFILL
- SELECT GRANULAR FILL MATERIAL
- CONCRETE BLOCK
- BRICK
- FINISHED WOOD
- CONCRETE
- ROUGH WOOD
- RIGID INSULATION
- REINFORCED STEEL IN CONCRETE
- WELDED WIRE FABRIC
- BLANKET INSULATION
- STEEL
- DENOTES MOMENT CONNECTION

Drawing Name: G:\SavinAutocad\2060\25-Playland-Mega-3\S\SAS-1004.dwg
Rev#: Projectname: ---- Comments: All inquiries regarding this drawing(s) or project should be made to NYC Environmental Protection, Bureau of Engineering Design and Construction.
Printed by: ---- Date: 8/23/2022 4:36 PM Designed by: ----

CONSULTANT INFORMATION

Savin Engineers, P.C.

CONSULTANT SEAL

STATE OF NEW YORK — LICENSED PROFESSIONAL ENGINEER — No. 085362

REVISION NUMBER	DATE	MADE BY	APP'D BY	REVISION

RECORD DRAWING CERTIFICATION

☐ AS BUILT – CHANGES AS NOTED ☐ AS BUILT – NO CHANGES

CONTRACTOR
NAME
SIGNATURE
TITLE DATE

PROJECT COORDINATOR
NAME
SIGNATURE
TITLE DATE

WESTCHESTER COUNTY, NEW YORK
DEPARTMENT OF PUBLIC WORKS AND TRANSPORTATION
DIVISION OF ENGINEERING

INFRASTRUCTURE REHABILITATION - PHASE 3
PLAYLAND PARK, RYE, NEW YORK
SOUTHEAST ARCADE
STRUCTURAL ABBREVIATIONS AND SYMBOLS

CONTRACT NUMBER 22-523	SHEET NUMBER SA-S-02
DWG NO.:	
SCALE: AS SHOWN	
DATE: 8/23/2022	
DPW FILE NUMBER 1-118-S-1363-0	REV. NO. 0

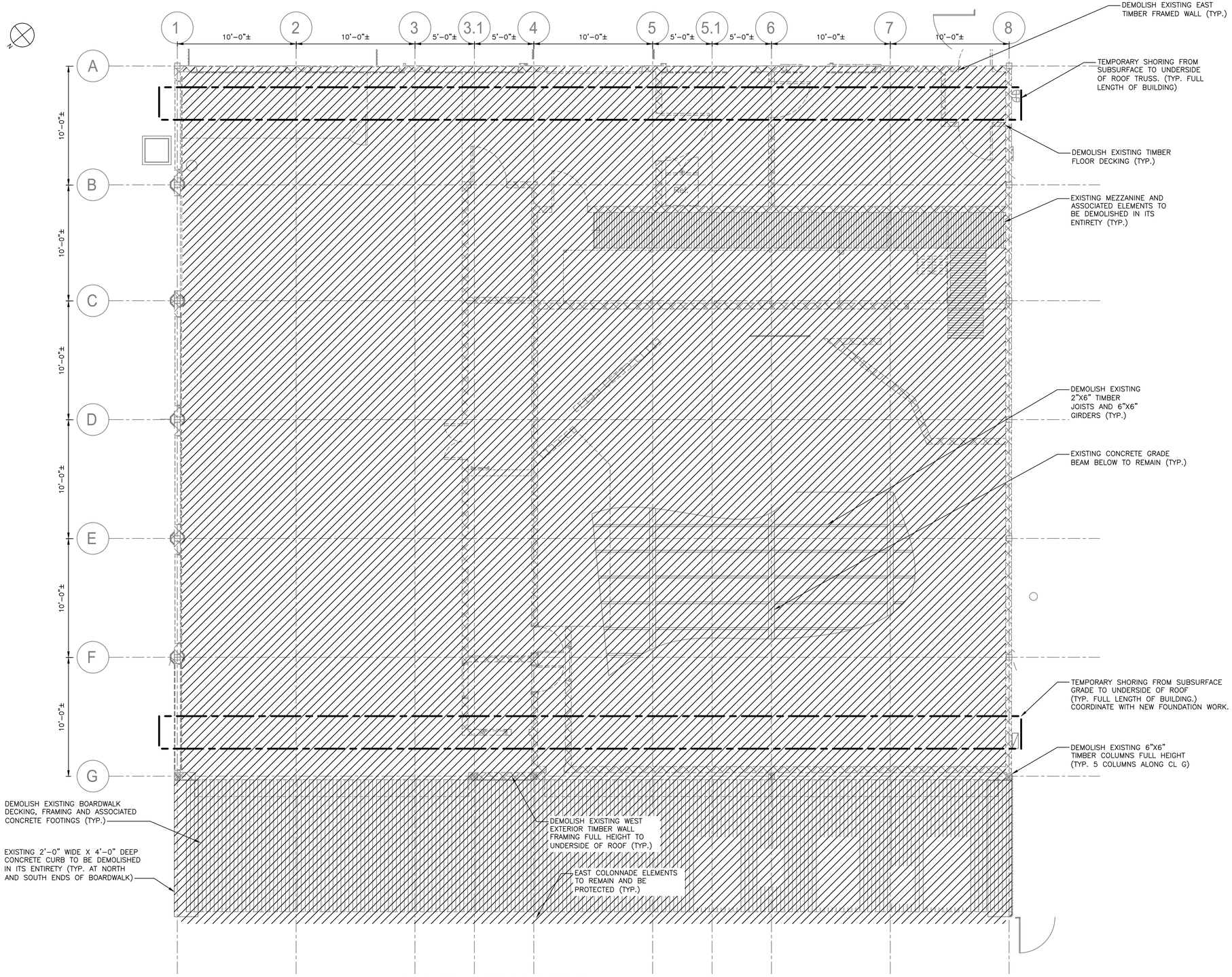

DEMOLITION – GROUND FLOOR PLAN

1/4"=1'-0"

NOTES:

1. FOR STRUCTURAL NOTES, SEE DRAWING SA-S-01.
2. FOR STRUCTURAL ABBREVIATIONS AND SYMBOLS, SEE DRAWING SA-S-02.

0 4' 8'

SCALE: 1/4" = 1'-0"

Drawing Name: G:\SavinAutocad\2060\25-Playland-Mega-3\S\SAS-1002.dwg
Rev#: Projectname: 211001F02 Comments: ----
Printed by: MGodby Date: 24 August 2022 4:37 PM Designed by: ----
Xrefs: [TB_24X36_WestchesterCo_3.dwg] [TSG-SVLOGO.dwg] [SA-S-1001.dwg] [SA-A-01.dwg]

CONSULTANT INFORMATION

Savin Engineers, P.C.

CONSULTANT SEAL

REVISION NUMBER	DATE	MADE BY	APP'D BY	REVISION

RECORD DRAWING CERTIFICATION

☐ AS BUILT – CHANGES AS NOTED ☐ AS BUILT – NO CHANGES

CONTRACTOR
NAME
SIGNATURE
TITLE DATE

PROJECT COORDINATOR
NAME
SIGNATURE
TITLE DATE

WESTCHESTER COUNTY, NEW YORK
DEPARTMENT OF PUBLIC WORKS AND TRANSPORTATION
DIVISION OF ENGINEERING

INFRASTRUCTURE REHABILITATION - PHASE 3
PLAYLAND PARK, RYE, NEW YORK
SOUTHEAST ARCADE
DEMOLITION - GROUND FLOOR PLAN

CONTRACT NUMBER: 22-523
SHEET NUMBER: SA-S-03
DWG NO.:
SCALE: AS SHOWN
615 of 664
DATE: 8/23/2022
DPW FILE NUMBER: 1-118-S-1364-0
REV. NO. 0

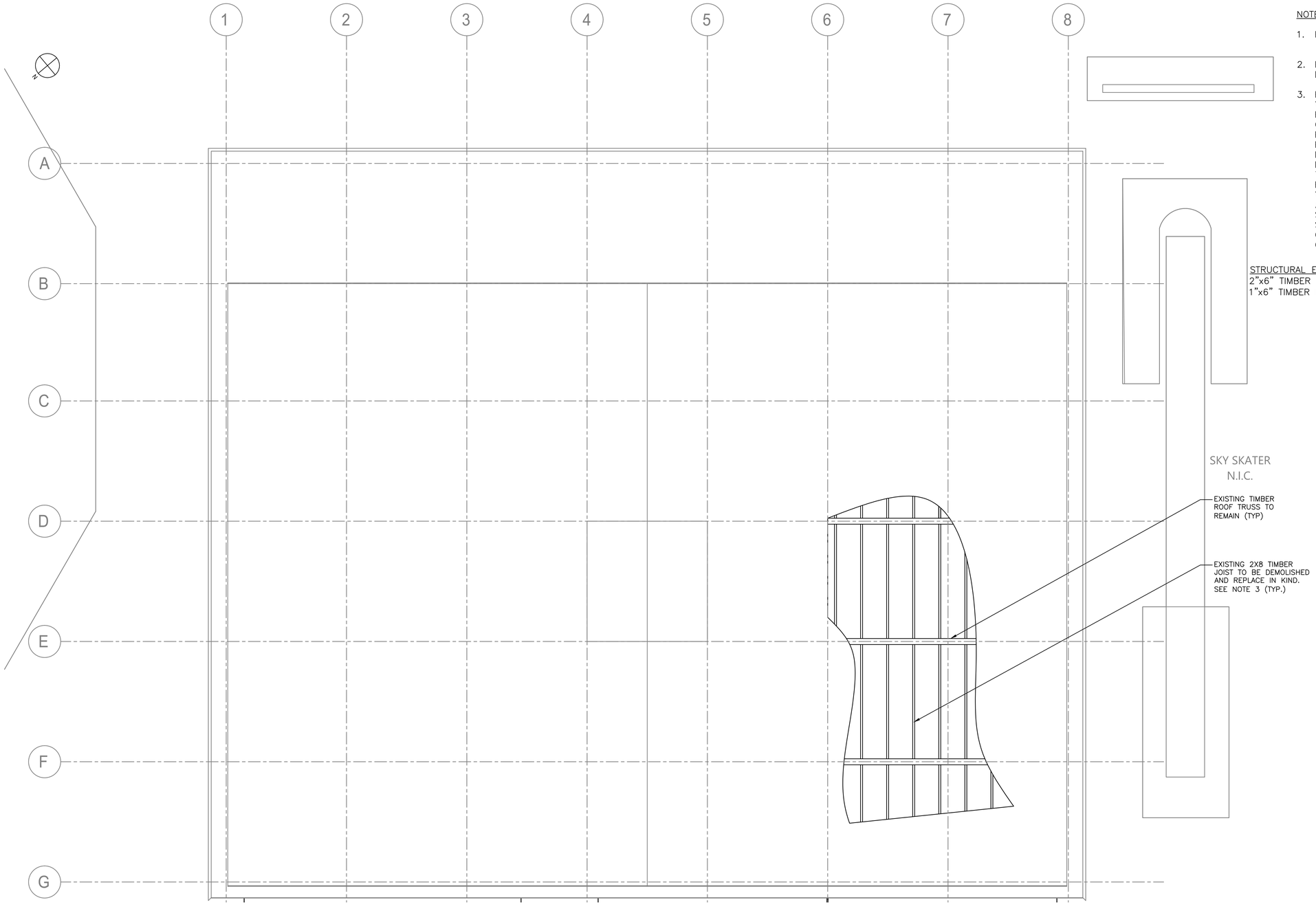

NOTES:

1. FOR STRUCTURAL NOTES, SEE DRAWING SA–S–01.
2. FOR STRUCTURAL ABBREVIATIONS AND SYMBOLS, SEE DRAWING SA–S–02.
3. REHABILITATION OF THE SOUTHEAST ARCADE INCLUDE VARIOUS ELEMENTS SLATED FOR REMOVAL AND REPLACEMENT IN–KIND FOR DETERIORATED MEMBERS. CONTRACTOR IS TO ALERT THE ENGINEER 6 WEEKS PRIOR TO START OF REHABILITATION WORK TO PERFORM FIELD INSPECTIONS OF THE REPAIR ITEMS IDENTIFIED BELOW. UPON COMPLETION OF THE FIELD INSPECTION WORK, THE ENGINEER WILL PROVIDE TO THE CONTRACTOR IN WRITING THE DEFINED LIMITS OF REPLACEMENT WORK. REHABILITATION WORK FOR VARIOUS ELEMENTS SHALL BE PERFORMED PER DETAILS AND SEQUENCES AS OUTLINED DRAWINGS, SA–S–03, SA–S–04, SA–S–05, SA–S–06, SA–S–07, AND SA–S–08. FOR THE PURPOSES OF BIDDING, CONTRACTOR SHALL INCLUDE IN THEIR BID THE QUANTITIES FOR EACH ELEMENT AS MENTIONED BELOW.

STRUCTURAL ELEMENTS TO BE REPAIRED/REPLACED	QUANTITY	UNITS
2"x6" TIMBER BATTEN MEMBERS	25	EA
1"x6" TIMBER ROOF DECKING	1000	EA

DEMOLITION – ROOF PLAN

1/4"=1'–0"

0 4' 8'

SCALE: 1/4" = 1'–0"

Drawing Name: G:\Savin\Autocad\2060\25–Playland–Mega–3\S\SAS–1005.dwg
Projectname: 211001F02 Comments: ----
Printed by: MGadby Date: 24 August 2022 4:37 PM Designed by: ----
Rev#:
Xrefs: [TB_24X36_WestchesterCo_3.dwg] [TSG–SVL000.dwg] [SA–S–1004.dwg] [SA–A–04.dwg]

CONSULTANT INFORMATION

Savin Engineers, P.C.

CONSULTANT SEAL

STATE OF NEW YORK · REGISTERED PROFESSIONAL ENGINEER · LEO. DESSEA

REVISION NUMBER	DATE	MADE BY	APP'D BY	REVISION

RECORD DRAWING CERTIFICATION

☐ AS BUILT – CHANGES AS NOTED ☐ AS BUILT – NO CHANGES

CONTRACTOR
NAME
SIGNATURE
TITLE DATE

PROJECT COORDINATOR
NAME
SIGNATURE
TITLE DATE

WESTCHESTER COUNTY, NEW YORK
DEPARTMENT OF PUBLIC WORKS AND TRANSPORTATION
DIVISION OF ENGINEERING

INFRASTRUCTURE REHABILITATION - PHASE 3
PLAYLAND PARK, RYE, NEW YORK
SOUTHEAST ARCADE
DEMOLITION - ROOF PLAN

CONTRACT NUMBER	22-523
SHEET NUMBER	SA-S-04
DWG NO.:	
SCALE:	AS SHOWN
DATE:	8/23/2022
DPW FILE NUMBER	1-118-S-1365-0
REV. NO.	0

NOTES:

1. FOR STRUCTURAL NOTES, SEE DRAWING SA-S-01.
2. FOR STRUCTURAL ABBREVIATIONS AND SYMBOLS, SEE DRAWING SA-S-02.

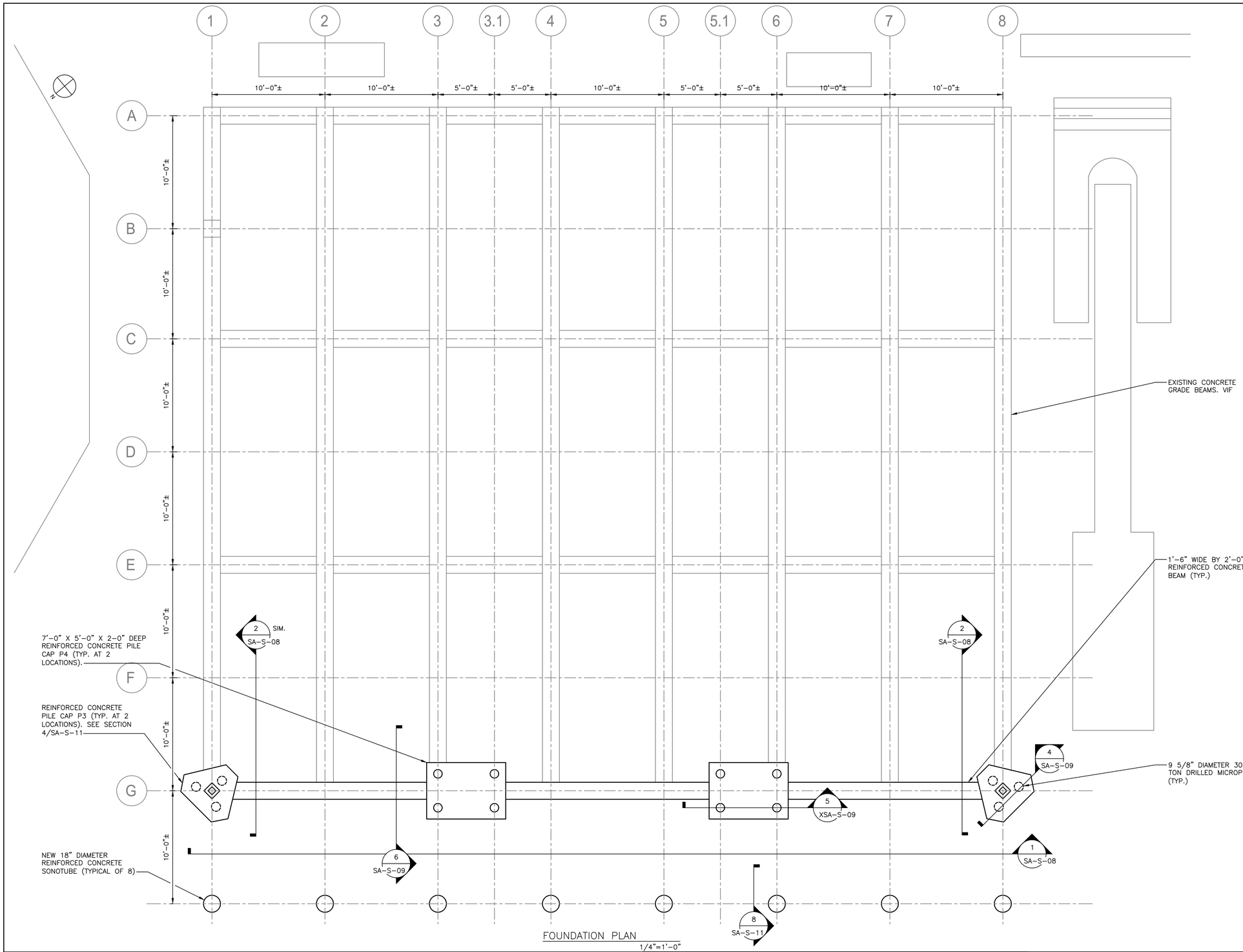

FOUNDATION PLAN
1/4"=1'-0"

0 4' 8'
SCALE: 1/4" = 1'-0"

CONSULTANT INFORMATION

Savin Engineers, P.C.

CONSULTANT SEAL

STATE OF NEW YORK · LICENSED PROFESSIONAL ENGINEER · No. 085364

REVISION NUMBER	DATE	MADE BY	APP'D BY	REVISION

RECORD DRAWING CERTIFICATION

☐ AS BUILT – CHANGES AS NOTED ☐ AS BUILT – NO CHANGES

CONTRACTOR
NAME
SIGNATURE
TITLE DATE

PROJECT COORDINATOR
NAME
SIGNATURE
TITLE DATE

WESTCHESTER COUNTY, NEW YORK
DEPARTMENT OF PUBLIC WORKS AND TRANSPORTATION
DIVISION OF ENGINEERING

INFRASTRUCTURE REHABILITATION - PHASE 3
PLAYLAND PARK, RYE, NEW YORK
SOUTHEAST ARCADE
FOUNDATION PLAN

CONTRACT NUMBER	SHEET NUMBER
22-523	SA-S-05

DWG NO.:
SCALE: AS SHOWN
DATE: 8/23/2022
DPW FILE NUMBER 1-118-S-1366-0 REV. NO. 0

Drawing Name: G:\SavinAutocad\2060\25-Playland-Mega-3\S\SAS-1011.dwg
Ref#: Projectname: 211001F02 Comments: ----
Printed by: MGadby Date: 24 August 2022 4:37 PM Designed by: ----
Xrefs: [TB_24X36_WestchesterCo_3.dwg] [TSG-SVL000.dwg] [SA-S-1009.dwg] [SA-A-01.dwg]

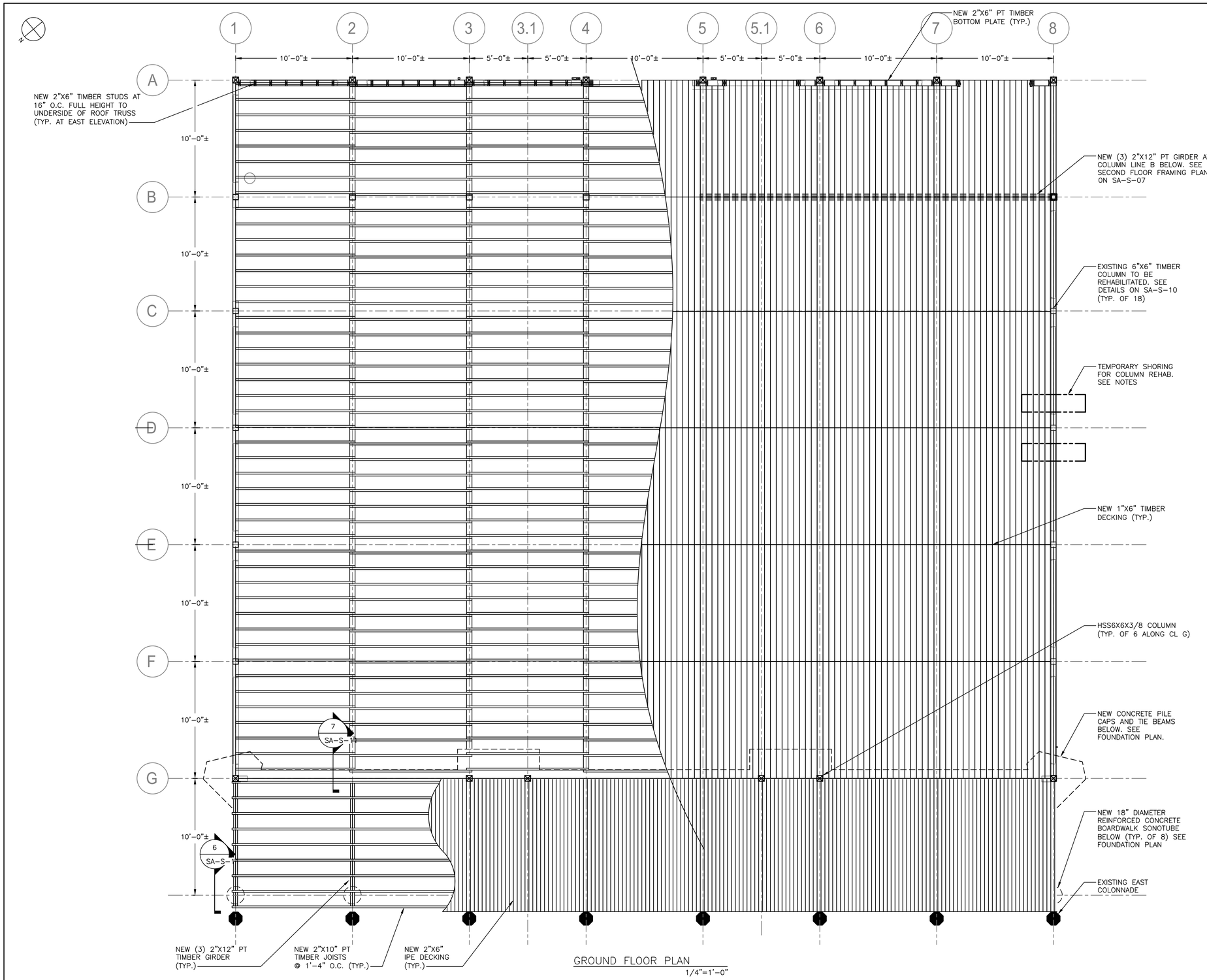

GROUND FLOOR PLAN

1/4"=1'-0"

NOTES:

1. CONTRACTOR SHALL SUBMIT A COLUMN REPAIR SEQUENCE OF CONSTRUCTION TO ENGINEER FOR REVIEW. THE FOLLOWING SHLL BE THE MINIMUM REQUIRED.
2. TEMPORARY SHORING AT EACH COLUMN LOCATION SHALL HAVE A MINIMUM 10-TON CAPACITY.
3. COLUMN REPAIR SHALL BE LIMITED TO MAXIMUM 2 COLUMNS AT A TIME. COLUMNS UNDER REPAIR MUST NOT BE ADJACENT TO EACH OTHER.
4. ALL HARDWARE SHALL BE TYPE 316 STAINLESS STEEL, UNLESS OTHERWISE NOTED.
5. COORDINATE INTERIOR WALL LAYOUTS AND OPENINGS WITH ARCHITECTURAL DRAWINGS.

0 4' 8'

SCALE: 1/4" = 1'-0"

Drawing Name: Z:\2060.25 - Playland Rehabilitation\04 - Design\MEGA CONTRACT #3\Drawings\CADD\S\SAS-1009.dwg
Projectname: 211001F02 Comments: ----
Printed by: ######## Date: 26 August 2022 12:43 PM Designed by: ----

CONSULTANT INFORMATION

Savin Engineers, P.C.

CONSULTANT SEAL

STATE OF NEW YORK — LICENSED PROFESSIONAL ENGINEER — No. 085363

REVISION NUMBER	DATE	MADE BY	APP'D BY	REVISION

RECORD DRAWING CERTIFICATION

☐ AS BUILT – CHANGES AS NOTED ☐ AS BUILT – NO CHANGES

CONTRACTOR
NAME
SIGNATURE
TITLE DATE

PROJECT COORDINATOR
NAME
SIGNATURE
TITLE DATE

WESTCHESTER COUNTY, NEW YORK
DEPARTMENT OF PUBLIC WORKS AND TRANSPORTATION
DIVISION OF ENGINEERING

INFRASTRUCTURE REHABILITATION - PHASE 3
PLAYLAND PARK, RYE, NEW YORK
SOUTHEAST ARCADE
GROUND FLOOR PLAN

CONTRACT NUMBER	22-523
SHEET NUMBER	SA-S-06
DWG NO.:	618 of 664
SCALE:	AS SHOWN
DATE:	8/23/2022
DPW FILE NUMBER	1-118-S-1367-0
REV. NO.	0

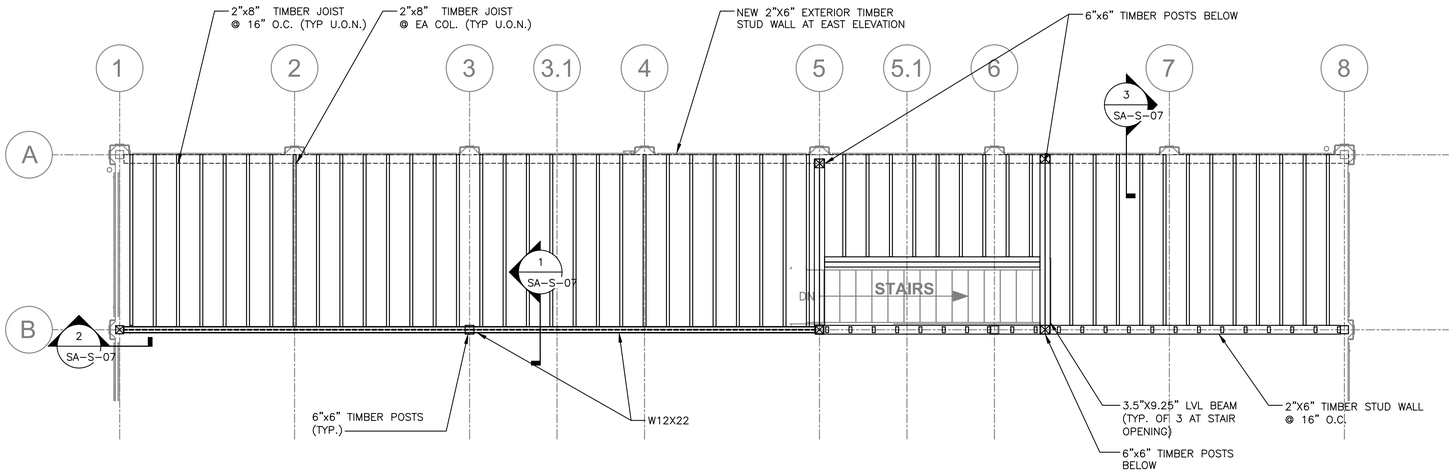

SECOND FLOOR FRAMING PLAN
SCALE: 1/4" = 1'-0"

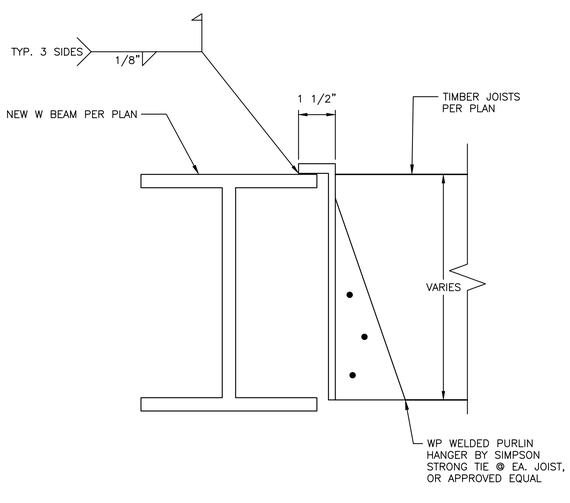

1 SA-S-07 JOIST HANGER SECTION
SCLE: N.T.S.

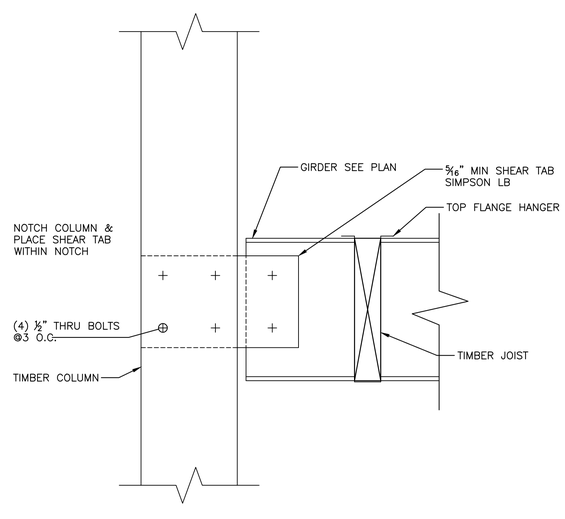

2 SA-S-07 SECTION – W BEAM TO TIMBER COLUMN CONNECTION
SCALE: 3" = 1'-0"

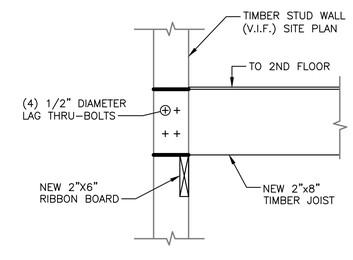

3 SA-S-07 SECTION
N.T.S.

0 4' 8'
SCALE: 1/4" = 1'-0"

0 3" 6"
SCALE: 3" = 1'-0"

Drawing Name: G:\SavinAutocad\2060\25-Playland-Mega-3\S\SAS-1013.dwg
Rev#: Projectname: ---- Comments: ----
Printed by: MGodby Date: 24 August 2022 4:38 PM Designed by: ----
Xrefs: [TSG-SVLOGO.dwg] [TB_24X36_WestchesterCo_3.dwg] [SA-A-13.dwg] [SA-S-1005.dwg] [SA-S-1007.dwg]

CONSULTANT INFORMATION
Savin Engineers, P.C.

CONSULTANT SEAL

REVISION NUMBER	DATE	MADE BY	APP'D BY	REVISION

RECORD DRAWING CERTIFICATION
☐ AS BUILT – CHANGES AS NOTED ☐ AS BUILT – NO CHANGES

CONTRACTOR
NAME
SIGNATURE
TITLE DATE

PROJECT COORDINATOR
NAME
SIGNATURE
TITLE DATE

WESTCHESTER COUNTY, NEW YORK
DEPARTMENT OF PUBLIC WORKS AND TRANSPORTATION
DIVISION OF ENGINEERING

INFRASTRUCTURE REHABILITATION - PHASE 3
PLAYLAND PARK, RYE, NEW YORK
SOUTHEAST ARCADE
SECTIONS AND DETAILS

CONTRACT NUMBER: 22-523
SHEET NUMBER: SA-S-07
DWG NO.:
SCALE: AS SHOWN
DATE: 8/23/2022
DPW FILE NUMBER: 1-118-S-1368-0
REV. NO.: 0

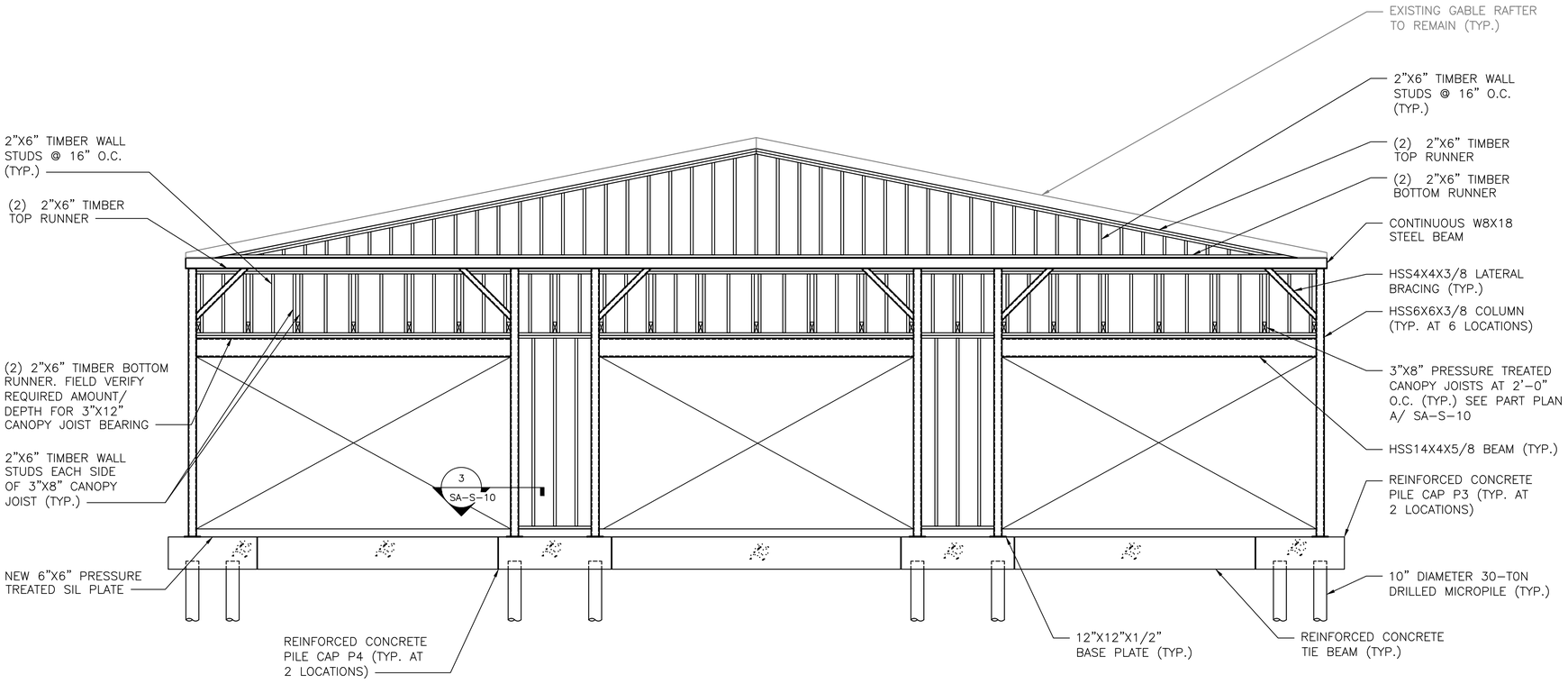

1 SA-S-05 SECTION
SCALE: 1/4" = 1'-0"

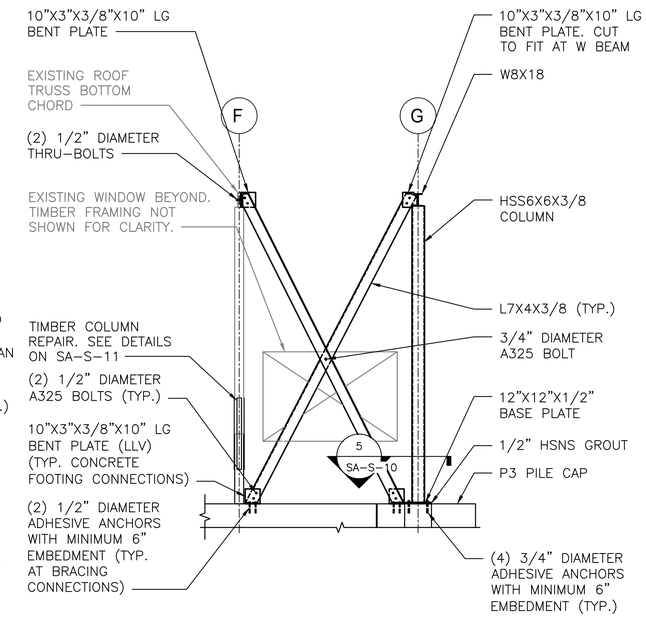

2 SA-S-05 SECTION
SCALE: 1/4" = 1'-0"

0 4' 8'
SCALE: 1/4" = 1'-0"

CONSULTANT INFORMATION
Savin Engineers, P.C.

CONSULTANT SEAL

REVISION NUMBER	DATE	MADE BY	APP'D BY	REVISION

RECORD DRAWING CERTIFICATION
☐ AS BUILT – CHANGES AS NOTED ☐ AS BUILT – NO CHANGES

CONTRACTOR
NAME
SIGNATURE
TITLE DATE

PROJECT COORDINATOR
NAME
SIGNATURE
TITLE DATE

WESTCHESTER COUNTY, NEW YORK
DEPARTMENT OF PUBLIC WORKS AND TRANSPORTATION
DIVISION OF ENGINEERING

INFRASTRUCTURE REHABILITATION - PHASE 3
PLAYLAND PARK, RYE, NEW YORK
SOUTHEAST ARCADE
SECTIONS

CONTRACT NUMBER	22-523
SHEET NUMBER	SA-S-08
DWG NO.:	620 of 664
SCALE:	AS SHOWN
DATE:	8/23/2022
DPW FILE NUMBER	1-118-S-1369-0
REV. NO.	0

Drawing Name: Z:\2060.25 - Playland Rehabilitation\04 - Design\MEGA CONTRACT #3\Drawings\CADD\S\SAS-1015.dwg
Projectname: 211001F02 Comments: ----
Printed by: ######## Date: 26 August 2022 12:48 PM Designed by: ----

BASIC DEVELOPMENT LENGTH AND SPLICE LENGTH								
FOR BARS IN TENSION								
fy = 60,000 psi				fc = 4000 psi OR GREATER, NORMAL WEIGHT CONCRETE				
BASIC DEVELOPMENT LENGTH ** l d				BAR SIZE	CLASS B SPLICE LENGTH ** 1.3 x l d			
CLEAR SPACING > 3"		CLEAR SPACING < 3"			CLEAR SPACING > 3"		CLEAR SPACING < 3"	
BASIC	TOP *	BASIC	TOP *		BASIC	TOP *	BASIC	TOP *
1'-0"	1'-4"	1'-9"	2'-2"	#3	1'-4"	1'-9"	2'-2"	2'-11"
1'-4"	1'-8"	2'-2"	2'-9"	#4	1'-8"	2'-2"	2'-9"	3'-7"
1'-8"	2'-2"	2'-10"	3'-7"	#5	2'-2"	2'-10"	3'-7"	4'-8"
2'-0"	2'-6"	3'-3"	4'-2"	#6	2'-6"	3'-3"	4'-2"	5'-5"
3'-6"	4'-7"	5'-11"	7'-7"	#7	4'-7"	5'-11"	7'-7"	9'-11"
4'-0"	5'-2"	6'-9"	8'-8"	#8	5'-2"	6'-9"	8'-8"	11'-4"
4'-6"	5'-10"	7'-7"	9'-10"	#9	5'-10"	7'-7"	9'-9"	12'-9"
5'-0"	6'-5"	8'-6"	11'-10"	#10	6'-5"	8'-6"	11'-0"	13'-7"
5'-7"	7'-4"	9'-5"	12'-6"	#11	7'-4"	9'-5"	12'-6"	14'-9"

NOTES:

* TOP REINFORCEMENT IS HORIZONTAL REINFORCEMENT SO PLACED THAT MORE THAN 12 INCHES OF FRESH CONCRETE IS CAST IN THE MEMBER BELOW THE REINFORCEMENT

** LENGTHS SHOWN IN CHART SHALL BE MODIFIED WHERE REQUIRED TO CONFORM TO THE PROVISIONS OF ACI 318, SECTION 12.2

*** UNCOATED REINFORCEMENT

DEVELOPMENT LENGTH OF STANDARD HOOKS		
FOR BARS IN TENSION		
fy = 60,000 psi fc = 4000 psi OR GREATER, NORMAL WEIGHT CONCRETE		
BAR SIZE	DEVELOPMENT LENGTH, l dh	
	BASIC	W/CONC. COVER *
#3	8"	6"
#4	10"	7"
#5	1'-0"	9"
#6	1'-3"	11"
#7	1'-5"	1'-0"
#8	1'-7"	1'-2"
#9	1'-10"	1'-4"
#10	2'-1"	1'-6"
#11	2'-3"	1'-7"

NOTES:

* SIDE COVER NORMAL TO PLANE OF HOOK AT LEAST 2 1/2"; AND FOR 90° HOOK, END COVER BEYOND OUTSIDE END OF HOOK AT LEAST 2".

** UNCOATED REINFORCEMENT

NOTES:

1. FOR STRUCTURAL NOTES, SEE DRAWING SA-S-01.
2. FOR STRUCTURAL ABBREVIATIONS AND SYMBOLS, SEE DRAWING SA-S-02.

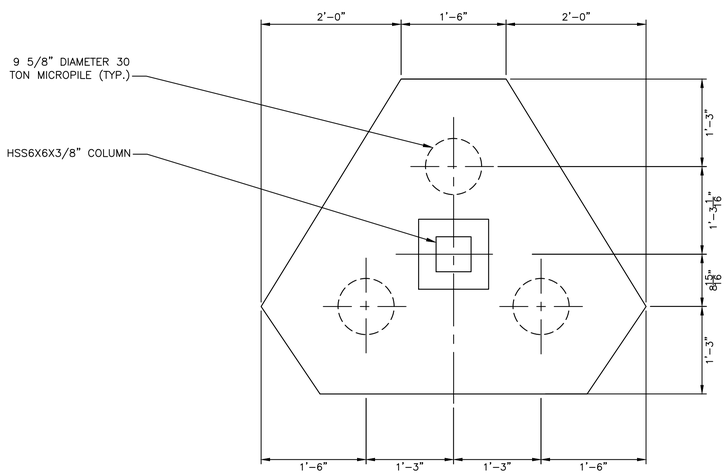

P3 – PILE CAP
1" = 1'-0"

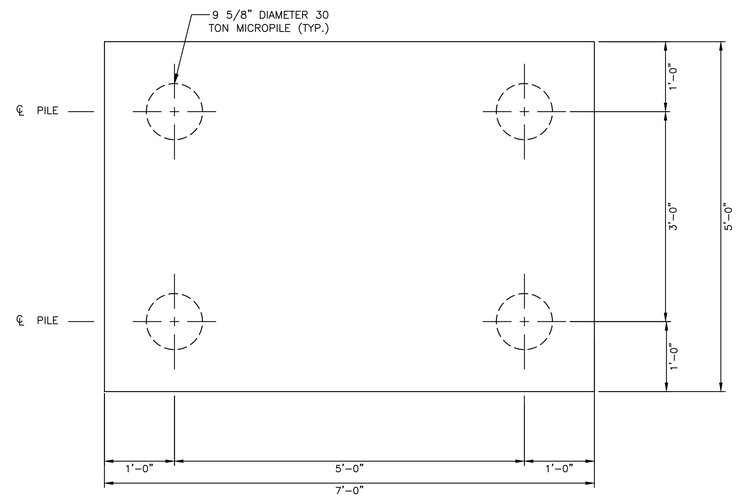

P4 – PILE CAP
1" = 1'-0"

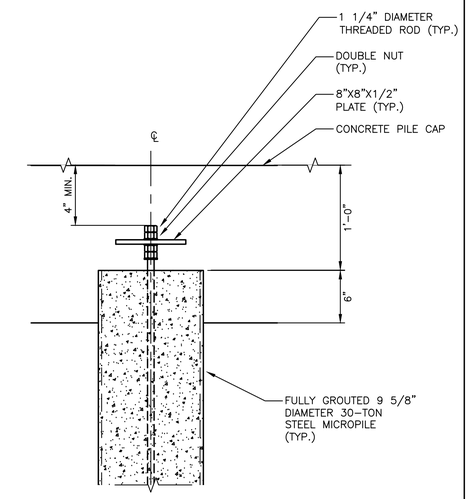

TYPICAL PILE HEAD DETAIL
SCALE: 1 1/2" = 1'-0"

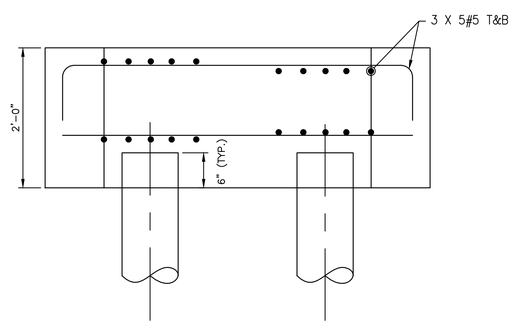

4 SECTION
SA-S-05
1" = 1'-0"

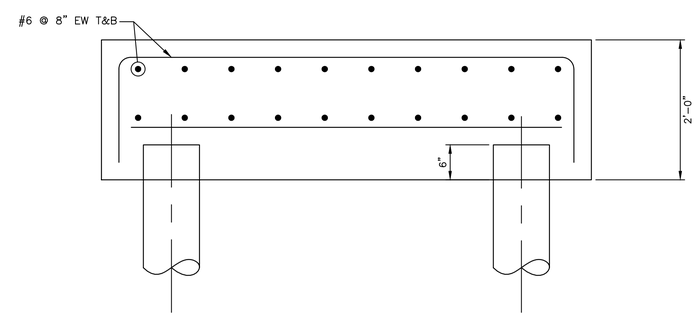

5 SECTION
SA-S-05
1" = 1'-0"

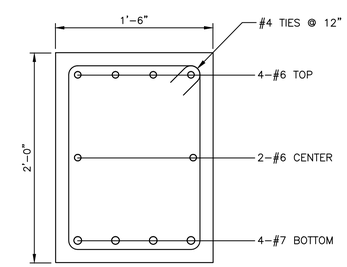

6 TIE BEAM SECTION
SA-S-05
SCALE: 1 1/2" = 1'-0"

0 1' 2'
SCALE: 1" = 1'-0"

Drawing Name: G:\SavinAutocad\2060\25-Playland-Mega-3\S\SAS-1012.dwg
Rev#: Projectname: ---- Comments: All inquiries regarding this drawing(s) or project should be made to NYC Environmental Protection, Bureau of Engineering Design and Construction.
Plotted by: ---- Date: 8/23/2022 4:38 PM Designed by: ----

CONSULTANT INFORMATION
Savin Engineers, P.C.

CONSULTANT SEAL
STATE OF NEW YORK
LICENSED PROFESSIONAL ENGINEER
No. 085394

REVISION NUMBER	DATE	MADE BY	APP'D BY	REVISION

RECORD DRAWING CERTIFICATION
☐ AS BUILT – CHANGES AS NOTED ☐ AS BUILT – NO CHANGES

CONTRACTOR
NAME
SIGNATURE
TITLE DATE

PROJECT COORDINATOR
NAME
SIGNATURE
TITLE DATE

WESTCHESTER COUNTY, NEW YORK
DEPARTMENT OF PUBLIC WORKS AND TRANSPORTATION
DIVISION OF ENGINEERING

INFRASTRUCTURE REHABILITATION - PHASE 3
PLAYLAND PARK, RYE, NEW YORK
SOUTHEAST ARCADE
SECTIONS AND DETAILS

CONTRACT NUMBER	22-523
SHEET NUMBER	SA-S-09
DWG NO.:	
SCALE:	AS SHOWN
DATE:	8/23/2022
DPW FILE NUMBER	1-118-S-1370-0
REV. NO.	0

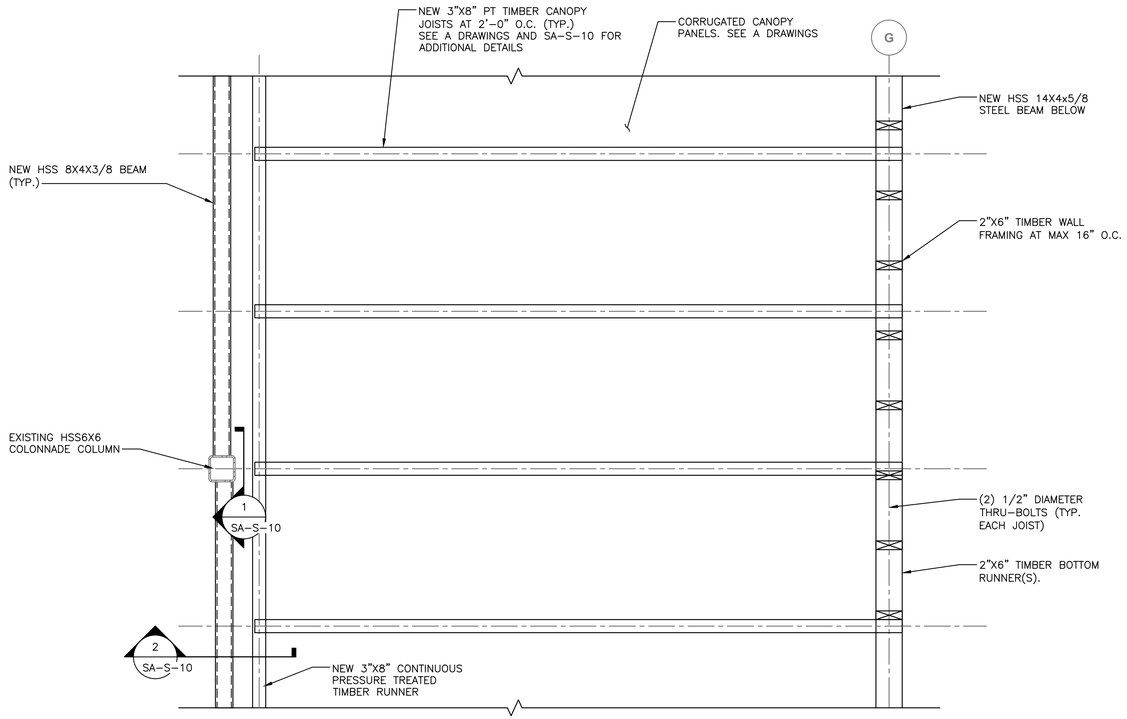

A SA-S-08 PART PLAN AT CANOPY
SCALE: 3/4" = 1'-0"

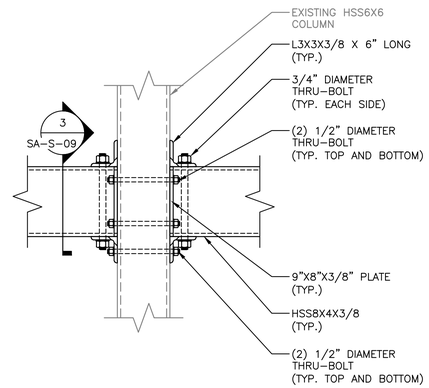

1 SA-S-10 SECTION – HSS BEAM TO COLONNADE CONNECTION
SCALE: 1 1/2" = 1'-0"

NOTES:

1. L4X6X3/8 NOT SHOWN FOR CLARITY. SEE DETAILS.

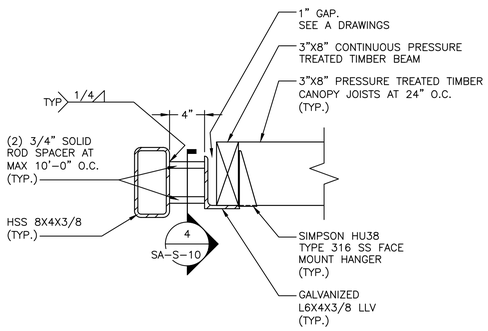

2 SA-S-10 SECTION – L6X4 TO HSS8X4 CONNECTION
SCALE: 1 1/2" = 1'-0"

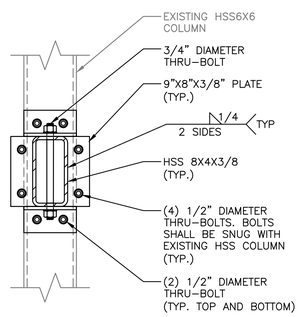

3 SA-S-10 SECTION – HSS BEAM TO HSS COLUMN CONNECTION
SCALE: 1 1/2" = 1'-0"

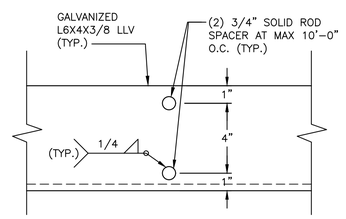

4 SA-S-10 SECTION
SCALE: 1 1/2"=1'-0"

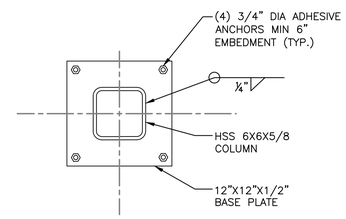

5 SA-S-08 SECTION
SCALE: N.T.S.

0 1' 2'
SCALE: 3/4" = 1'-0"

0 6" 1'
SCALE: 1 1/2" = 1'-0"

CONSULTANT INFORMATION

Savin Engineers, P.C.

CONSULTANT SEAL

STATE OF NEW YORK · LICENSED PROFESSIONAL ENGINEER · No. 085384

REVISION NUMBER	DATE	MADE BY	APP'D BY	REVISION

RECORD DRAWING CERTIFICATION

☐ AS BUILT – CHANGES AS NOTED ☐ AS BUILT – NO CHANGES

CONTRACTOR
NAME
SIGNATURE
TITLE DATE

PROJECT COORDINATOR
NAME
SIGNATURE
TITLE DATE

WESTCHESTER COUNTY, NEW YORK
DEPARTMENT OF PUBLIC WORKS AND TRANSPORTATION
DIVISION OF ENGINEERING

INFRASTRUCTURE REHABILITATION - PHASE 3
PLAYLAND PARK, RYE, NEW YORK
SOUTHEAST ARCADE
SECTIONS AND DETAILS

CONTRACT NUMBER	SHEET NUMBER
22-523	SA-S-10

DWG NO.:
SCALE: AS SHOWN
DATE: 8/23/2022
DPW FILE NUMBER 1-118-S-1371-0 REV. NO. 0

Drawing Name: G:\Savin\Autocad\2060\25-Playland-Mega-3\S\SAS-1008.dwg
Projectname: ---- Comments: ----
Printed by: MGodby Date: 24 August 2022 4:39 PM Designed by: ----
Xrefs: [TSC-SVL060.dwg] [TB_24X36_WestchesterCo_3.dwg] [SA-S-1010.dwg]

NOTES:

CONTRACTOR SHALL SUBMIT A COLUMN REPAIR SEQUENCE OF CONSTRUCTION TO ENGINEER FOR REVIEW. THE FOLLOWING SHALL BE THE MINIMUM REQUIRED.

1. TEMPORARY SHORING AT EACH COLUMN LOCATION SHALL HAVE A MINIMUM 10-TON CAPACITY.
2. COLUMN REPAIR SHALL BE LIMITED TO MAXIMUM 2 COLUMNS AT A TIME. COLUMNS UNDER REPAIR MUST NOT BE ADJACENT TO EACH OTHER.
3. ALL HARDWARE SHALL BE TYPE 316 STAINLESS STEEL, UNLESS OTHERWISE NOTED.

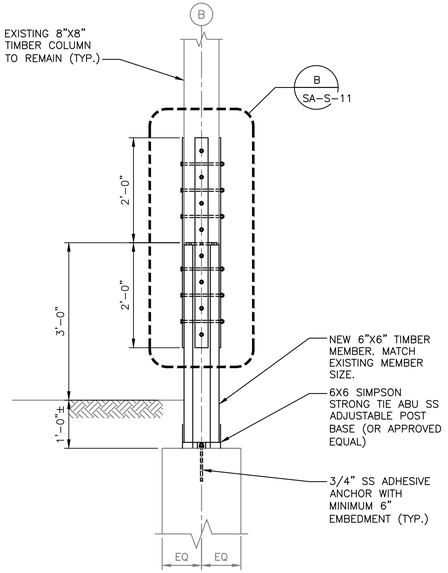

SECTION
SCALE: N.T.S

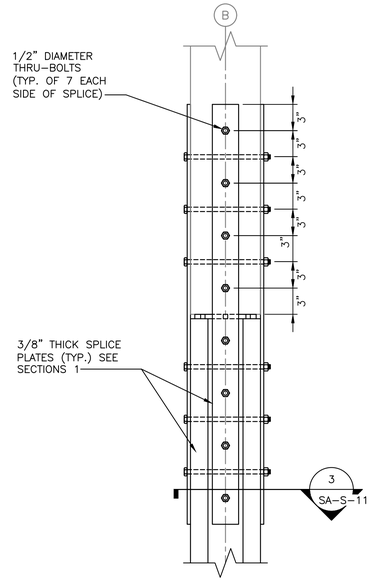

B SA-S-11 DETAIL
SCALE: N.T.S

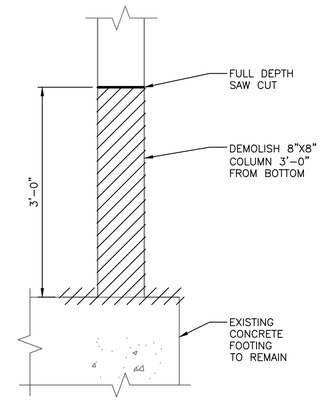

DEMOLITION
SCALE: N.T.S.

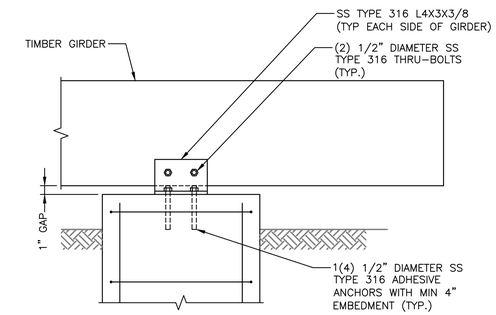

A SA-S-11 DETAIL
SCALE: N.T.S

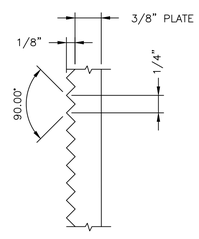

5 SA-S-11 SECTION
SCALE: N.T.S.

NOTES:

LIMITS OF KNURLING SHALL APPLY TO FACE OF ALL SPLICE PLATES IN CONTACT WITH EXISTING TIMBER COLUMN. KNURLING SHALL RUN AXIALLY AND HORIZONTALLY.

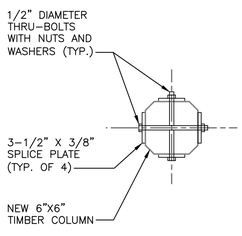

3 SA-S-11 SECTION
SCALE: 1 1/2 = 1'-0"

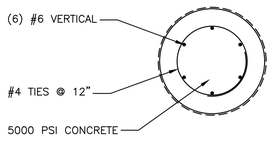

6 SA-S-11 SECTION
SCALE: 1" = 1'-0"

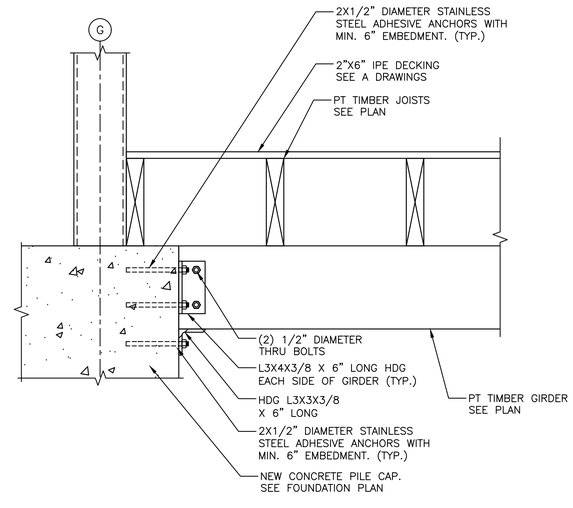

7 SA-S-06 SECTION
SCALE: N.T.S

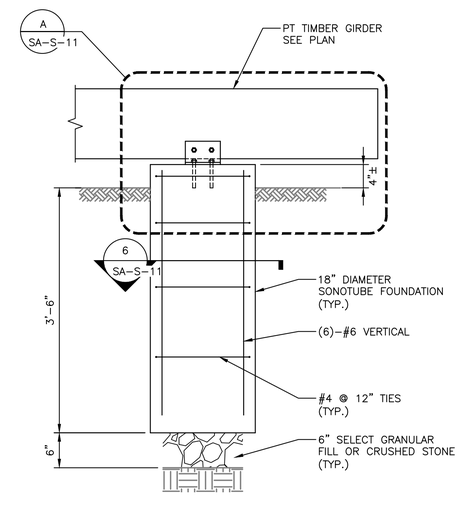

8 SA-S-05 TYPICAL BOARDWALK SONOTUBE SECTION
SCALE: N.T.S

Drawing Name: G:\SavinAutocad\2060\25-Playland-Mega-3\S\SAS-1006.dwg
Projectname: ---- Comments: ----
Reef: [TSG-SVL000.dwg] [TB_24X36_WestchesterCo_3.dwg] [SA-S-1007.dwg]
Printed by: MGodby Date: 24 August 2022 4:39 PM Designed by: ----
Xrefs:

CONSULTANT INFORMATION

Savin Engineers, P.C.

CONSULTANT SEAL

STATE OF NEW YORK · LICENSED PROFESSIONAL ENGINEER · No. 085384

REVISION NUMBER	DATE	MADE BY	APP'D BY	REVISION

RECORD DRAWING CERTIFICATION

☐ AS BUILT – CHANGES AS NOTED ☐ AS BUILT – NO CHANGES

CONTRACTOR
NAME
SIGNATURE
TITLE DATE

PROJECT COORDINATOR
NAME
SIGNATURE
TITLE DATE

WESTCHESTER COUNTY, NEW YORK
DEPARTMENT OF PUBLIC WORKS AND TRANSPORTATION
DIVISION OF ENGINEERING

INFRASTRUCTURE REHABILITATION - PHASE 3
PLAYLAND PARK, RYE, NEW YORK
SOUTHEAST ARCADE
SECTIONS AND DETAILS

CONTRACT NUMBER	SHEET NUMBER
22-523	SA-S-11
DWG NO.:	
SCALE: AS SHOWN	
DATE: 8/23/2022	
DPW FILE NUMBER 1-118-S-1372-0	REV. NO. 0

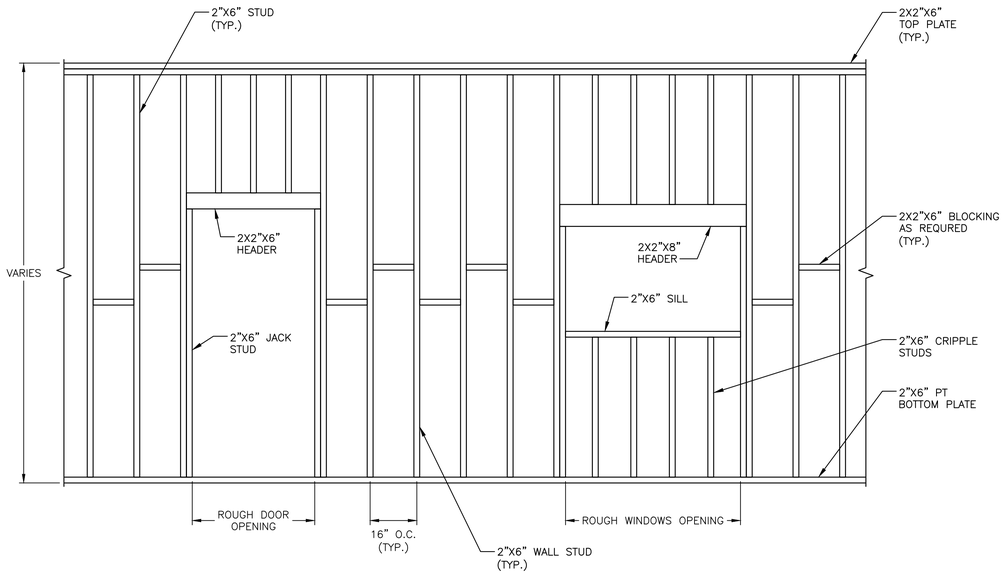

DETAIL WALL ELEVATION
SCALE: N.T.S.

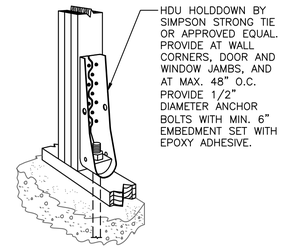

PROVIDE AT WALL CORNERS, DOOR AND WINDOW JAMBS, AND AT MAX. 48" O.C. PROVIDE 1/2" DIAMETER ANCHOR BOLTS WITH MIN. 6" EMBEDMENT SET WITH EPOXY ADHESIVE.

HOLD DOWN/TENSION TIE
SCALE: N.T.S.

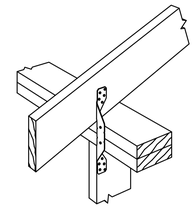

SIMPSON STRONG TIE H2 (OR APPROVED EQUAL). TYPICAL AT EACH RAFTER.

HURRICANE TIE
SCALE: N.T.S.

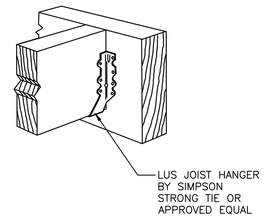

FACE MOUNTED JOIST HANGER
SCALE: N.T.S.

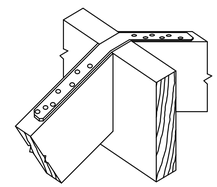

SIMPSON STRONG TIE (OR APPROVED EQUAL) AT EACH RAFTER. ATTACH DIRECTLY TO RAFTER

RIDGE STRAPPING
SCALE: N.T.S.

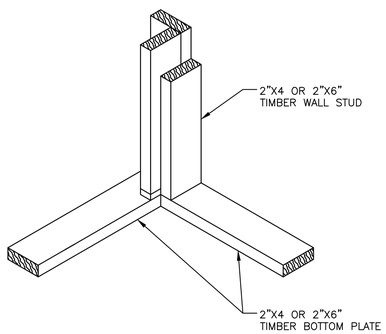

TYPICAL STUDS AT CORNERS DETAIL
SCALE: N.T.S.

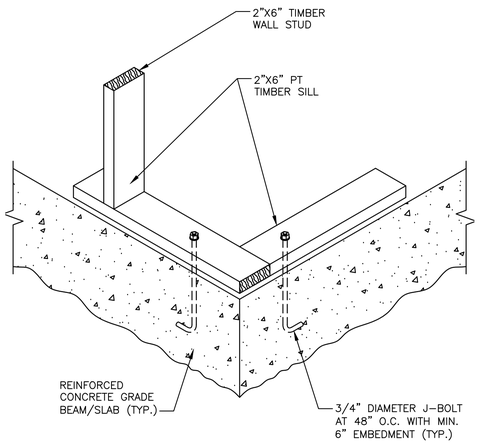

TYPICAL FLOOR FRAMING DETAIL
SCALE: N.T.S.

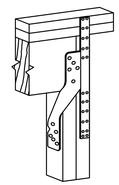

SIMPSON STRONG TIE H6 (OR APPROVED EQUAL) TYPICAL AT ALL EXTERIOR HEADER LOCATIONS.

HEADER TO JACK STUD CONNECTION
SCALE: N.T.S.

Drawing Name: G:\SavinAutocad\2060\25-Playland-Mega-3\S\SAS-1014.dwg
Rev#: Projectname: ---- Comments: ----
Printed by: MGodby Date: 24 August 2022 4:39 PM Designed by: ----
Xrefs: [TSG-SVLOGO.dwg] [TB_24X36_WestchesterCo_3.dwg] [SA-A-17.dwg] [SA-A-16.dwg

CONSULTANT INFORMATION
Savin Engineers, P.C.

CONSULTANT SEAL

REVISION NUMBER	DATE	MADE BY	APP'D BY	REVISION

RECORD DRAWING CERTIFICATION
☐ AS BUILT – CHANGES AS NOTED ☐ AS BUILT – NO CHANGES

CONTRACTOR
NAME
SIGNATURE
TITLE DATE

PROJECT COORDINATOR
NAME
SIGNATURE
TITLE DATE

WESTCHESTER COUNTY, NEW YORK
DEPARTMENT OF PUBLIC WORKS AND TRANSPORTATION
DIVISION OF ENGINEERING

INFRASTRUCTURE REHABILITATION - PHASE 3
PLAYLAND PARK, RYE, NEW YORK
SOUTHEAST ARCADE
SECTIONS AND DETAILS

CONTRACT NUMBER: 22-523
SHEET NUMBER: SA-S-12
DWG NO.:
SCALE: AS SHOWN
DATE: 8/23/2022
DPW FILE NUMBER: 1-118-S-1373-0
REV. NO.: 0

FIRE PROTECTION SAFETY NOTES:

1. SPECIAL PRECAUTION SHALL BE TAKEN BY THE CONTRACTOR SO THAT EQUIPMENT OF THIS APPLICATION AND ITS INSTALLATION WILL NOT AFFECT THE FOLLOWING: EGRESS TO AND FROM THE BUILDING. FIRE SAFETY OR CREATE A FIRE HAZARD. STRUCTURAL SAFETY OF THE BUILDING. ACCUMULATION OF DUST AND DEBRIS. (THE CONTRACTOR SHALL LEAVE THE SITE BROOM CLEANED EACH DAY.)

FIRE PROTECTION GENERAL NOTES:

1. DIMENSIONS, LOCATIONS AND SIZES INDICATED ON THE PLANS AND THE ELEVATION ARE APPROXIMATE AND SHALL BE VERIFIED BY FIELD INSPECTION BY THE CONTRACTOR.

2. SOME EXISTING PIPE AND EQUIPMENT IS SHOWN FOR CLARIFICATION OF THIS CONTRACT, BUT MUST BE PROTECTED BY THE CONTRACTOR.

3. NO WORK SHALL BE INITIATED UNTIL A WORK PERMIT IS OBTAINED BY THE CONTRACTOR AND A SAFETY PLAN IS SUBMITTED AND IS APPROVED.

4. CONTRACTOR IS RESPONSIBLE FOR OBTAINING ALL PERMITS, EQUIPMENT USE PERMITS, ALL INSPECTION APPROVALS, AND LETTER OF COMPLETION FROM THE DEPARTMENT OF BUILDINGS FOR WORK UNDER THIS CONTRACT AS APPLICABLE.

5. ANY EXISTING MATERIALS, PIPING, ETC., NOT INDICATED FOR DEMOLITION WHICH ARE REMOVED BY THE CONTRACTOR IN ORDER TO INSTALL NEW WORK SHALL BE REINSTALLED BY THE CONTRACTOR. IF EXISTING WORK IS DAMAGED IT SHALL BE REPLACED AT THE CONTRACTOR'S EXPENSE. ALL SURFACES OR FINISHES THAT ARE DAMAGED OR OTHERWISE AFFECTED BY WORK OF THIS CONTRACT SHALL BE PATCHED, REPAIRED, PAINTED OR REPLACED TO MATCH THE PRE-EXISTING CONDITION AND THE NEW WORK.

6. CONTRACTOR MAY PROPOSE ALTERNATE ROUTING IN DIFFICULT AREAS WHERE REPLACEMENT IN KIND IS NOT PRACTICAL. ANY AND ALL ALTERNATE ROUTING IS SUBJECT TO PRIOR REVIEW AND APPROVAL BY THE ENGINEER.

7. A FIRE WATCH SHALL BE PROVIDED WHEN SPRINKLER COVERAGE IS IMPACTED TO MAINTAIN BUILDING OPERATIONS OR AS REQUIRED.

FIRE PROTECTION SYMBOL LIST

— — — — — FS DRY— —	NEW DRY SPRINKLER PIPING
— — — — — DRY(E) —	EXISTING TO REMAIN DRY SPRINKLER PIPING
○	NEW UPRIGHT SPRINKLER HEAD
○	EXISTING UPRIGHT SPRINKLER HEAD
●	NEW CONCEALED PENDENT SPRINKLER HEAD-ORDINARY TEMPERATURE
	SPRINKLER DRY PIPE VALVE
	FIRE HOSE CABINET
	SIAMESE CONNECTION
	CHECK VALVE
	CHECK VALVE W/ ALARM
	WATER MOTOR ALARM BELL
⊗	PIPE RISER
	PIPE DROP
	PIPE UP
	POINT OF CONNECTION
	POINT OF DISCONNECTION
	PREACTION 6" BELL
	SOLENOID VALVE
	OS & Y VALVE
#	REVISION SYMBOL
F#	REFER TO SUPPLEMENTAL FIGURE INDICATED BY NUMBER (I.E. F2 REFERS TO FIGURE 2)
XXX / X	EQUIPMENT TAG / EQUIPMENT NUMBER
X / X-XXX	DETAIL TAG/ CALL OUT TAG / FIRE PROTECTION SHEET NUMBER

SHOP DWGS/EQUIPMENT SUBMITTALS

THE CONTRACTOR MUST SUBMIT ANY EQUIPMENT ALTERNATES 2 WEEKS PRIOR TO BIDS DUE FOR REVIEW AND COMMENTS. ALTERNATES MUST BE ACCEPTED BY LIRO ENGINEERS, INC., THE ARCHITECT, AND THE OWNER PRIOR TO INCLUSION IN BID. THE CONTRACTOR IS RESPONSIBLE TO COORDINATE EQUIPMENT ALTERNATES WITH OTHER TRADES AND MAKE ADJUSTMENTS TO THE MECHANICAL SYSTEMS, AS REQUIRED, TO ACCOMMODATE THESE NEW ALTERNATES.

THE CONTRACTOR IS RESPONSIBLE TO SUBMIT ALL OF THE FOLLOWING ITEMS FOR REVIEW/APPROVAL BY NO MORE THAN 3 WEEKS AFTER THE CONTRACTOR'S CONTRACT/BID HAS BEEN AWARDED. ALL SUBMITTALS MUST BE SENT TOGETHER AS A **SINGLE PACKAGE** WITH MANUFACTURER'S SPECIFIC MODELS AND SPECIFICATIONS OUTLINED TO MATCH THE SCHEDULED REQUIREMENTS. EACH SUBMITTAL MUST BE LABELED WITH THE UNIT DESIGNATION USED WITHIN THIS DRAWING SET. IF THE SUBMITTAL PACKAGE IS FOUND TO BE INCOMPLETE UPON RECEIPT, THE PACKAGE WILL BE HELD AND WILL NOT BE REVIEWED UNTIL THE REMAINDER OF THE PACKAGE IS RECEIVED. SIX (6) HARD COPIES OF THE SUBMITTAL PACKAGE MUST BE SENT TO LIRO ENGINEERS, INC. DIGITAL SHOP DRAWING SUBMISSIONS ARE ACCEPTABLE.

SCOPE OF WORK:

1. THE INSTALLATION OF NEW DRY FS EQUIPMENT.

2. PROPOSED FIRE SPRINKLER HEAD LOCATIONS AND PIPING ARE AS NOTED ON PLANS. EXACT PIPING FROM THE FIRE SPRINKLER MAIN TO ALL HEADS IS TO BE COORDINATED AND HYDRAULICALLY CALCULATED BY THE F.S.C. & SUBMITTED TO THE ENGINEER FOR APPROVAL.

NOTE: THIS SCOPE OF WORK DESCRIPTION IS PROVIDED TO GIVE AN OVERALL "MACRO" DESCRIPTION OF THIS PROJECT. F.S.C. IS RESPONSIBLE TO REVIEW ALL ENGINEERING AND ARCHITECTURAL DRAWINGS AND VISIT THE SITE IF NEEDED, PRIOR TO SUBMISSION OF BID.

SPRINKLER HEAD SCHEDULE

	MANUFACTURER	MODEL	DESCRIPTION	K-FACTOR	QUANTITY
○	RELIABLE	F1FR	DRY ORDINARY UPRIGHT SPRINKLE HEAD	5.6	51

ABBREVIATION

ACV	ALARM CHECK VALVE
B.O.P.	BOTTOM OF PIPE
(E)	EXISTING TO REMAIN
F.S.C.	FIRE SPRINKLER CONTRACTOR
P.C	PLUMBING CONTRACTOR
TYP	TYPICAL
W/	WITH
NYS	NEW YORK STATE
U/P	UNDERGROUND PIPING
W	WATER

DRAWING NOTATIONS

	DRAWING NOTE TAB
	RISER DESIGNATION
	POINT OF CONNECTION
	POINT OF DISCONNECTION

DESIGN CRITERIA

1. AREA OF APPLICATION = 1950 SQ. FT

2. OCCUPANCY CLASSIFICATION = ORDINARY HAZARD GROUP 2

3. MAXIMUM COVERAGE PER SPRINKLER HEAD = 130 SQ. FT

4. DESIGN DENSITY = 0.20 GPM/SQ. FT

5. NUMBER OF SPRINKLER HEADS WITHIN AREA OF APPLICATION = 26

6. "K" FACTOR OF SPRINKLER HEADS = 5.6

7. DESIGN CRITERIA REQUIREMENTS BASED ON:
   - 2020 BUILDING CODE OF NEW YORK STATE
   - 2016 NFPA 13

ORDINARY HAZARD PIPE SCHEDULE

STEEL		COPPER	
1IN.	2 SPRINKLERS	1IN.	2 SPRINKLERS
1 1/4 IN.	3 SPRINKLERS	1 1/4 IN.	3 SPRINKLERS
1 1/2IN.	5 SPRINKLERS	1 1/2IN.	5 SPRINKLERS
2 IN.	10 SPRINKLERS	2 IN.	12 SPRINKLERS
2 1/2 IN.	20 SPRINKLERS	2 1/2 IN.	25 SPRINKLERS
3 IN.	40 SPRINKLERS	3 IN.	45 SPRINKLERS
3 1/2 IN.	65 SPRINKLERS	3 1/2 IN.	75 SPRINKLERS
4 IN.	100 SPRINKLERS	4 IN.	115 SPRINKLERS
5 IN.	160 SPRINKLERS	5 IN.	180 SPRINKLERS
6 IN.	275 SPRINKLERS	6 IN.	300 SPRINKLERS
8 IN.	SEE SECTION 8.2	8 IN.	SEE SECTION 8.2

FOR SI UNITS, 1 IN. = 25.4 MM.

MAX DISTANCE BETWEEN HANGERS (FT.-IN.)

NOMINAL PIPE SIZE (IN.)

	3/4	1	1 1/4	1 1/2	2	2 1/2	3	3 1/2	4	5	6	8
STEEL PIPE EXCEPT THREADED LIGHTWALL	N/A	12-0	12-0	15-0	15-0	15-0	15-0	15-0	15-0	15-0	15-0	15-0
THREADED LIGHTWALL STEEL PIPE	N/A	12-0	12-0	12-0	12-0	12-0	12-0	N/A	N/A	N/A	N/A	N/A
COPPER TUBE	8-0	8-0	10-0	10-0	12-0	12-0	12-0	15-0	15-0	15-0	15-0	15-0

CODE REFERENCE

2020 NEW YORK STATE BUILDING CODE
2016 NFPA 13

FIRE PROTECTION NOTES

1. THE DRAWINGS SHOW THE LAYOUT OF THE SYSTEM AND INDICATE THE APPROXIMATE LOCATIONS OF EQUIPMENT AND PIPING. CONTRACTOR IS CAUTIONED NOT TO SCALE THE DRAWINGS. THE PIPING SHALL BE RUN APPROXIMATELY IN THE AREAS AS INDICATED ON THE DRAWINGS, [HOWEVER, TO THE ARRANGEMENT OF THE PIPING SYSTEMS AS MAY BE REFERENCED WITH WORK OF OTHER TRADES]. CONTRACTOR SHALL REVIEW AND COORDINATE WITH STRUCTURAL, ELECTRICAL AND MECHANICAL DRAWINGS. PARTITIONS, STRUCTURAL MEMBERS, ETC. ARE DESIGNED TO BE FURRED OR CLOSED IN AND TO INCLUDE ROUGH-IN PIPING. CONTRACTOR SHALL FURNISH ALL OFFSETS, ADDITIONAL FITTINGS, ETC. WHETHER SHOWN ON DRAWINGS OR NOT, AS REQUIRED TO MEET INSTALLATION CONDITIONS.

2. CONTRACTOR IS TO COMPLY WITH LATEST NFPA AND N.Y.S. CODES, AND COORDINATE HIS WORK WITH OTHER TRADES AND MAKE NECESSARY ADJUSTMENTS.

3. CONTRACTOR IS TO PREPARE SHOP DRAWINGS FOR ENGINEERS REVIEW AFTER MAKING A COMPLETE FIELD SURVEY.

4. CONTRACTOR IS TO REPORT ANY CONDITION REQUIRING CHANGES FROM PLANS TO ENGINEER PRIOR TO STARTING WORK.

5. BRANCH LINES AND MAINS (1 1/2" OR LESS) - SCHEDULE 40 FM APPROVED

6. BRANCH LINES AND MAINS (2" OR LARGER) - THINWALL (THICKNESS LESS THEN SCHEDULE 40 MORE THEN SCHEDULE 10 & FM APPROVED)

7. CONTRACTOR IS TO PERFORM A HYDROSTATIC TEST FOR 2 HRS. @ 200 PSI WITH NO LEAKAGE AND PROVIDE A TEST CERTIFICATE TO ENGINEER

8. CONTRACTOR IS TO EMPLOY EXPERIENCED WORKMEN WHO ARE TO FAMILIARIZE THEMSELVES WITH THE BUILDING AND OBSERVE SAFETY REQUIREMENTS.

9. CONTRACTOR TO ADJUST HEAD LOCATION TO COORDINATE WITH LIGHTS, DUCTS, ETC.

10. PERMIT FROM LOCAL AUTHORITY, TO BE OBTAINED BY CONTRACTOR.

11. ALL WORK TO BE APPROVED BY OWNERS ENGINEER, STATE AUTHORITIES HAVING JURISDICTION AND MUNICIPAL FIRE, PLUMBING, BUILDING AND WATER DEPARTMENTS.

12. U.L. AND/OR FM APPROVED EQUIPMENT TO BE USED.

13. WORK TO BE IN ACCORDANCE WITH MUNICIPAL WATER DEPT. RULES
.
14. SYSTEM IS TO BE MAINTAINED AND TESTED BY THE OWNER OR HIS AGENT IN ACCORDANCE WITH APPLICABLE LOCAL AND STATE CODES AND IN CONFORMANCE WITH NFPA 13A, LATEST EDITION.

15. IF BUILDING OCCUPANCY OR CONSTRUCTION CHANGES, THE SPRINKLER SYSTEM IS TO BE UPDATED ACCORDINGLY BY THE OWNER OR HIS AGENT.

16. CONTRACTOR IS TO NEATLY CUT AND PATCH IN A FIRST CLASS WORKMANLIKE MANNER, ALL HOLES AND PENETRATIONS IN WALLS, CEILINGS, FLOORS, PARTITIONS, ETC.

17. THE ENGINEER IS NOT RETAINED FOR SUPERVISION.

18. THE INSTALLATION OF THIS SYSTEM WILL REQUIRE THE CLOSING OF ONE OR MORE FIRE PROTECTION CONTROL VALVES. THESE VALVE CLOSURES SHOULD BE CLOSELY COORDINATED WITH THE OWNERS WHO SHOULD CONTACT THE LOCAL FIRE DEPARTMENT, INSURANCE INTERESTS, ETC. PRIOR TO VALVE CLOSURES.

19. ACTUAL DESIGN DENSITY MAY EXCEED STANDARDS, HOWEVER, IT IS A MINIMUM TO BE USED BY THE CONTRACTOR.

20. ALL ALARMS RELATING TO THE SPRINKLER SYSTEM SHOULD BE ACTIVATED UPON PLACING THE SPRINKLER SYSTEM IN SERVICE.

21. THE INSTALLATION COMPONENTS, SIZING, SPACING, MATERIALS LOCATION CLEARANCES, POSITION AND TYPE OF SYSTEM SHALL CONFORM TO NFPA 13 AND NYS UNIFORM FIRE PREVENTION BUILDING CODE LATEST EDITION.

22. SPRINKLERS SHALL BE PROTECTED AGAINST FREEZING AND INJURY AS PER NFPA CODE.

23. INSPECTION AND TESTS OF SPRINKLER SYSTEM SHALL BE CONDUCTED AS SPECIFIED IN NFPA CODE.

24. WATER SUPPLY TEST PIPES AND GAUGES SHALL BE PROVIDED AS SPECIFIED IN CHAPTER 2-9 OF NPPA 13.

25. PIPING SPECIFICATIONS, PIPE SCHEDULES, SYSTEM TEST PIPES, PROTECTION AGAINST CORROSION, DAMAGE FITTINGS, VALVES, HANGERS, SPRINKLERS, GUARDS AND SHIELDS SHALL BE IN ACCORDANCE WITH CHAPTER 3 AND CHAPTER 8 OF NFPA 13, LATEST EDITION. PIPING SHALL BE PAINTED TO PREVENT CORROSION.

26. STOCK OF EXTRA SPRINKLERS WILL BE FURNISHED AS PER CHAPTER 3 OF NFPA 13 (REQUIRED FOR EACH TEMPERATURE RATING).

27. SPRINKLER ALARMS WILL BE IN ACCORDANCE WITH NFPA 13.

28. SPACING, LOCATION AND POSITION OF SPRINKLERS SHALL BE IN ACCORDANCE WITH CHAPTER 4 OF NFPA 13.

29. ALL PIPING PASSING THROUGH WALLS SHALL COMPLY WITH NFPA FOR FIRE PROOFING.

30. DISTANCE OF SPRINKLERS FROM HEAT SOURCES SHALL BE IN ACCORDANCE WITH TABLE 3-16.6.3 OF NFPA 13.

31. PROVIDE WATER SUPPLY LETTER WITH FLOW TEST DATA.

32. ALL PIPES PASSING THROUGH FOUNDATION WALLS TO BE PROTECTED.

33. ALL VALVES SHALL BE IDENTIFIED AS REQUIRED BY NFPA 13.

34. DRAINAGE TO CONFORM TO CHAPTER 3-11 OF NFPA 13.

35. A ONE PIECE REDUCING FITTING OF GOOD DESIGN SHOULD BE USED WHEREVER A CHANGE IS MADE IN THE SIZE OF PIPE AS PER SECTION 3-12.2.7 OF NFPA 13.

36. ALL VALVES ON CONNECTIONS TO WATER SUPPLIES AND IN SUPPLY TO SPRINKLERS SHALL BE APPROVED O.S. &Y. OR APPROVED INDICATOR TYPE WITH TAMPER SWITCHES.

37. DRAIN VALVES AND TEST VALVES SHALL BE APPROVED TYPE AS PER SECTION 3-14.1.2 OF NFPA 13.

38. HANGERS SHALL BE OF A TYPE APPROVED FOR USE WITH THE PIPE OR TUBE INVOLVED, SPRINKLER PIPING SHOULD BE SUPPORTED BY ADJUSTABLE HANGERS PER NFPA 13, SECTION 3-15.

39. PROVISIONS SHOULD BE MADE TO FACILITATE FLUSHING SYSTEM PIPING BY PROVIDING FLUSHING CONNECTIONS CONSISTING OF A CAPPED NIPPLE 4" LONG ON THE END OF THE CROSS MAIN, AS PER SECTION 3- 8.2 OF NFPA 13.

40. SPRINKLER SHALL BE AN APPROVED TYPE AS PER SECTION 3-16 OF NFPA 13.

41. TEMPERATURE RATING SHALL COMPLY WITH SEC. 3-16.6 OF NFPA 13.

42. CLEARANCES BETWEEN SPRINKLERS AND STORAGE OR PARTITIONS AS PER NFPA 13, SECTION 4-2.5

43. SPACING AND LOCATION OF SPRINKLER SHALL COMPLY WITH CHAPTER 4 NFPA 13.

44. CONTRACTOR TO COORDINATE HIS WORK WITH OTHER TRADES.

45. ONLY EXPERIENCED SPRINKLER MECHANICS TO WORK ON THE SYSTEM.

46. ALL PIPING TO BE A MINIMUM OF 1" UNLESS OTHERWISE NOTED.

47. PROVIDE SHOP DRAWINGS WITH HYDRAULIC CALCULATIONS FOR REVIEW TO LOCAL FIRE MARSHALL AND INSURANCE UNDERWRITER AND ENGINEER FOR APPROVAL PRIOR TO INSTALLATION.

48. ALL FIRE PROTECTION EQUIPMENT SHALL BE INSTALLED PER MANUFACTURER'S REQUIREMENTS/SPECIFICATIONS.

49. ALL FIRE PROTECTION EQUIPMENT SHALL BE MOUNTED ON MINIMUM 6" HIGH CONCRETE PAD UNLESS OTHERWISE NOTED (PAVER AND CINDER BLOCK IS NOT ACCEPTABLE).

50. PERMIT IS REQUIRED PRIOR TO INSTALLATION, TO INCLUDE SIGNED AND SEALED SHOP DRAWINGS, HYDRAULIC CALCULATION, SHOP DRAWINGS, MANUFACTURERS INFORMATION ON HEADS AND APPLIANCES, COMPLIANCE WITH NFPA 13 AND SECTION 903 2020 NYSBC/FC.

FIRE PROTECTION DRAWING LIST

SHEET NO.	SHEET NAME	REVISON NO.	REVISION DATE
SA-FP-01	FIRE PROTECTION NOTES, SYMBOLS, ABBREVIATIONS, AND DRAWING LIST	0	-
SA-FP-11	FIRE PROTECTION GROUND AND SECOND FLOOR DEMOLITION RCP	0	-
SA-FP-21	FIRE PROTECTION GROUND AND SECOND FLOOR CONSTRUCTION RCP	0	-
SA-FP-81	FIRE PROTECTION DETAILS	0	-

CONSULTANT INFORMATION

LiRo Engineers, Inc.
A LiRo Group Company
Syosset, N.Y. 516-214-8157[T]

CONSULTANT SEAL

STATE OF NEW YORK · FRANK F. ULLISE · No. 0901111 · LICENSED PROFESSIONAL ENGINEER

REVISION NUMBER	DATE	MADE BY	APP'D BY	REVISION

RECORD DRAWING CERTIFICATION

☐ AS BUILT – CHANGES AS NOTED ☐ AS BUILT – NO CHANGES

CONTRACTOR
NAME
SIGNATURE
TITLE DATE

PROJECT COORDINATOR
NAME
SIGNATURE
TITLE DATE

WESTCHESTER COUNTY, NEW YORK
DEPARTMENT OF PUBLIC WORKS AND TRANSPORTATION
DIVISION OF ENGINEERING

INFRASTRUCTURE REHABILITATION - PHASE 3
PLAYLAND PARK, RYE, NEW YORK
SOUTHEAST ARCADE
FIRE PROTECTION NOTES, SYMBOLS, ABBREVIATIONS & DWG LIST

CONTRACT NUMBER	22-523
SHEET NUMBER	SA-FP-01
DWG NO.:	625 of 664
SCALE:	AS INDICATED
DATE:	08/23/2022
DPW FILE NUMBER	1-118-FP-1374-0
REV. NO.	0

SPRINKLER DEMOLITION NOTES:

1. CUT AND TEMPORARY CAP 4" SPRINKLER LINE FOR FUTURE RECONNECTION.
2. DEMOLISH ALL EXISTING SPRINKLER HEADS WITHIN THE SOUTHEAST ARCADE BUILDING INCLUDING ATTIC SPACE.
3. DEMOLISH ALL EXISTING DRY SPRINKLER PIPING WITHIN THE SOUTHEAST ARCADE BUILDING INCLUDING ATTIC SPACE.

GENERAL NOTES:

1. COORDINATE WITH FACILITY PRIOR TO SHUTDOWN OF FIRE PROTECTION SYSTEM FOR ANY DEMOLITION AND CONSTRUCTION WORK.

2. CONTRACTOR SHALL PROVIDE FIRE WATCH AS NEEDED FOR THE DEPENDENT BUILDINGS BY THE DEMOLITION AND CONSTRUCTION WORK WHILE SPRINKLER COVERAGE IS IMPACTED.

3. CONTRACTOR TO COORDINATE WITH FACILITY WHEN WORKING AROUND OR ABOVE THE RIDE COMPONENTS, AND PROVIDE ALL NECESSARY MEASURES TO PROTECT THESE COMPONENTS PER THE REQUIREMENTS OF THE FACILITY.

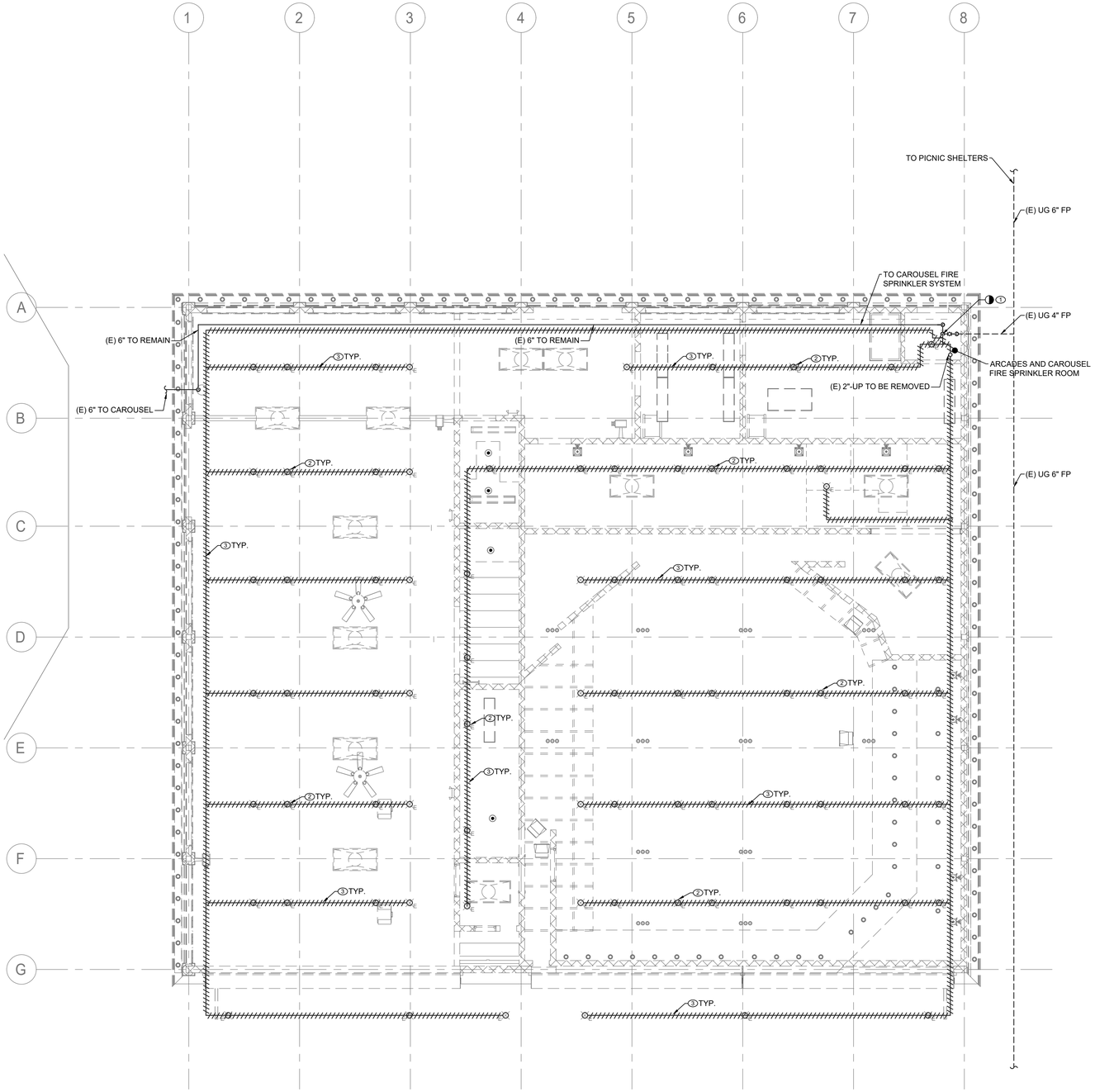

N

FIRE PROTECTION GROUND FLOOR DEMOLITION RCP

SCALE: 3/16" = 1'-0

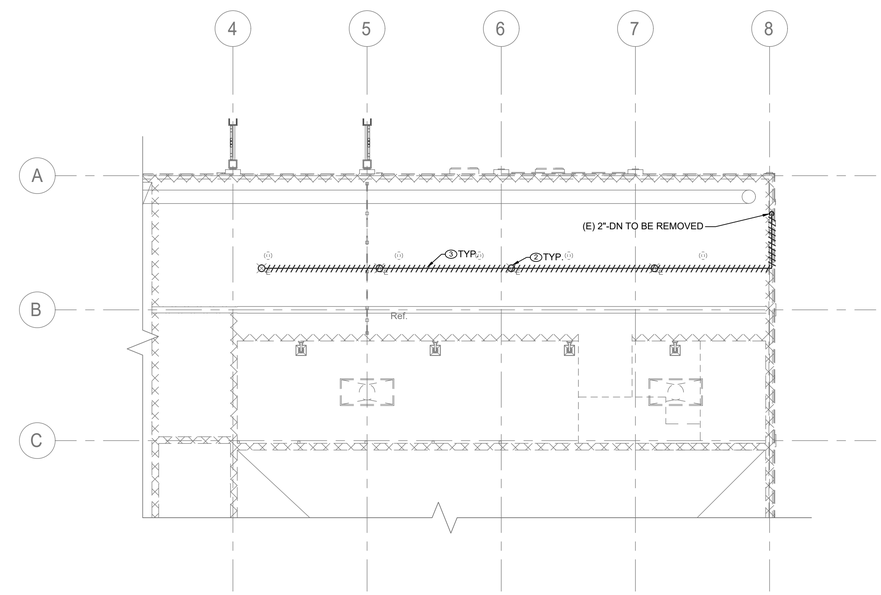

N

FIRE PROTECTION SECOND LEVEL DEMOLITION RCP

SCALE: 3/16" = 1'-0

CONSULTANT INFORMATION	CONSULTANT SEAL					RECORD DRAWING CERTIFICATION		WESTCHESTER COUNTY, NEW YORK	CONTRACT NUMBER	SHEET NUMBER
LiRo Engineers, Inc. A LiRo Group Company Syosset, N.Y. 516-214-8157[T]	STATE OF NEW YORK FRANK F. LUTHER No. 090111-1 LICENSED PROFESSIONAL ENGINEER					☐ AS BUILT – CHANGES AS NOTED ☐ AS BUILT – NO CHANGES		DEPARTMENT OF PUBLIC WORKS AND TRANSPORTATION DIVISION OF ENGINEERING	22-523	SA-FP-11
		REVISION NUMBER	DATE	MADE BY	APP'D BY	REVISION	CONTRACTOR: NAME / SIGNATURE / TITLE / DATE	PROJECT COORDINATOR: NAME / SIGNATURE / TITLE / DATE	DWG NO.: 626 of 664	
								INFRASTRUCTURE REHABILITATION - PHASE 3 PLAYLAND PARK, RYE, NEW YORK SOUTHEAST ARCADE FIRE PROTECTION GROUND AND SECOND FLOOR DEMOLITION RCP	SCALE: AS INDICATED	
									DATE: 08/23/2022	
									DPW FILE NUMBER 1-118-FP-1375-0	REV. NO. 0

FIRE PROTECTION CONSTRUCTION NOTES:

1. RECONNECT EXISTING 4" SPRINKLER PIPING WITH NEW.

GENERAL NOTES:

1. ALL DISTRIBUTION PIPING, SHALL BE PAINTED AS DIRECTED BY ARCHITECT. REFER TO SPECIFICATION FOR PAINT TYPE AND APPLICATION PROCEDURE.
2. COORDINATE WITH FACILITY PRIOR TO SHUTDOWN OF FIRE PROTECTION SYSTEM FOR ANY DEMOLITION AND CONSTRUCTION WORK.
3. CONTRACTOR SHALL PROVIDE FIRE WATCH AS NEEDED FOR ALL AFFECTED BUILDINGS WHILE SPRINKLER COVERAGE IS IMPACTED.
4. CONTRACTOR TO COORDINATE WITH FACILITY WHEN WORKING AROUND OR ABOVE THE RIDE COMPONENTS, AND PROVIDE ALL NECESSARY MEASURES TO PROTECT THESE COMPONENTS PER THE REQUIREMENTS OF THE FACILITY.
5. UPON COMPLETION, SYSTEM SHALL BE TESTED FOR PROPER OPERATION.
6. CONTRACTOR SHALL PROVIDE PROTECTION OF EXISTING PIPING AND SPRINKLERS DURING RENOVATION WORK FOR NORTHEAST ARCADE BUILDING. PROVIDE TEMPORARY SUPPORT AS NECESSARY TO ACCOMMODATE WORK PERFORMED BY OTHER TRADES.

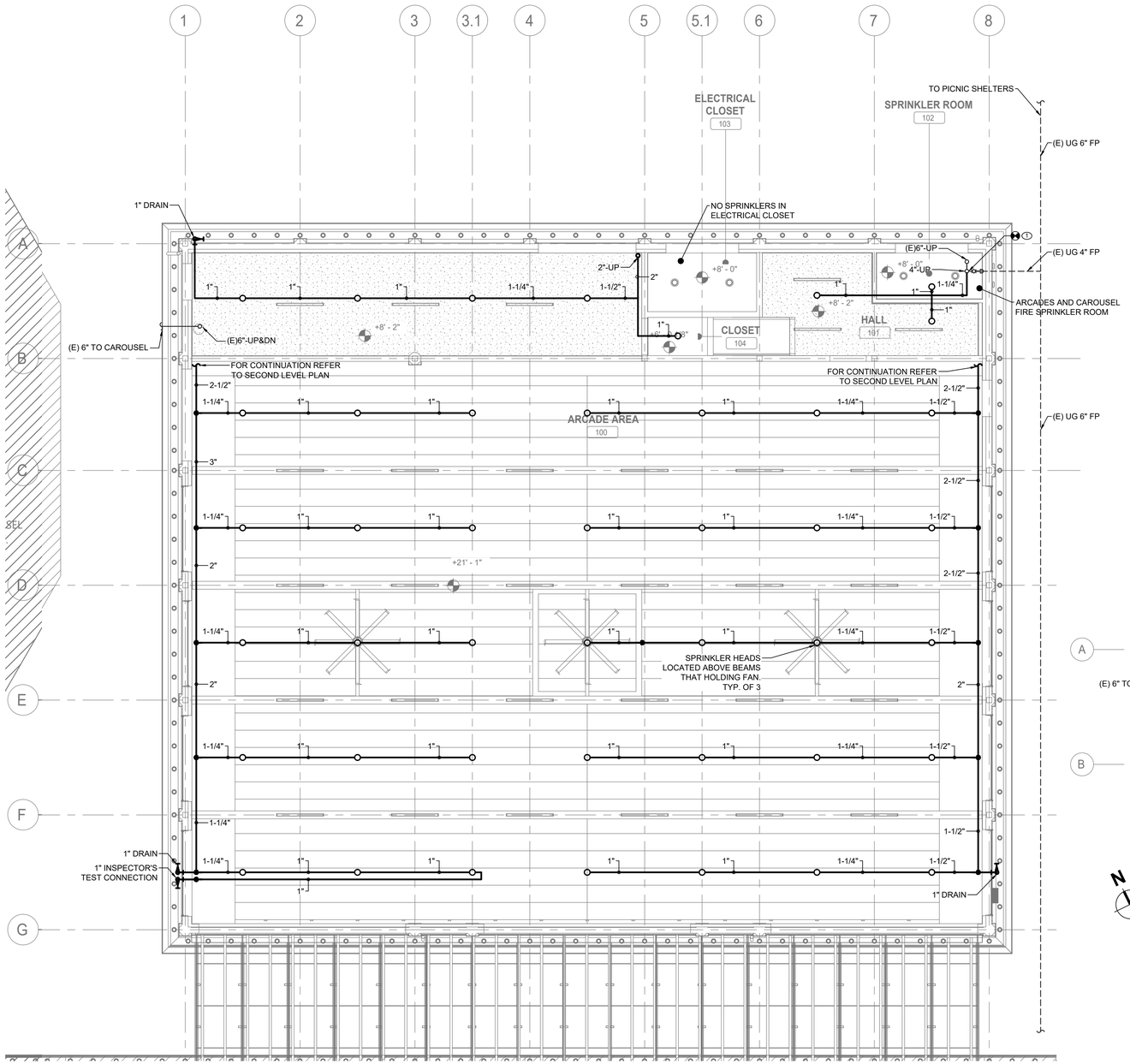

FIRE PROTECTION GROUND FLOOR CONSTRUCTION RCP

SCALE: 3/16" = 1'-0

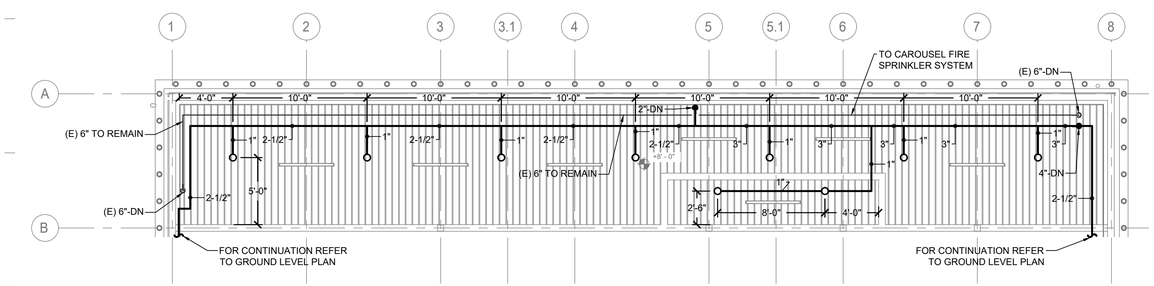

FIRE PROTECTION SECOND LEVEL CONSTRUCTION RCP

SCALE: 3/16" = 1'-0

CONSULTANT INFORMATION

LiRo Engineers, Inc.
A LiRo Group Company
Syosset, N.Y. 516-214-8157[T]

CONSULTANT SEAL

STATE OF NEW YORK · FRANK F. ULISSE · No. 090111-1 · LICENSED PROFESSIONAL ENGINEER

REVISION NUMBER	DATE	MADE BY	APP'D BY	REVISION

RECORD DRAWING CERTIFICATION

☐ AS BUILT – CHANGES AS NOTED ☐ AS BUILT – NO CHANGES

CONTRACTOR: NAME / SIGNATURE / TITLE / DATE

PROJECT COORDINATOR: NAME / SIGNATURE / TITLE / DATE

WESTCHESTER COUNTY, NEW YORK
DEPARTMENT OF PUBLIC WORKS AND TRANSPORTATION
DIVISION OF ENGINEERING

INFRASTRUCTURE REHABILITATION - PHASE 3
PLAYLAND PARK, RYE, NEW YORK
SOUTHEAST ARCADE
FIRE PROTECTION GROUND AND SECOND FLOOR CONSTRUCTION RCP

CONTRACT NUMBER	22-523
SHEET NUMBER	SA-FP-21
DWG NO.:	627 of 664
SCALE:	AS INDICATED
DATE:	08/23/2022
DPW FILE NUMBER	1-118-FP-1376-0
REV. NO.	0

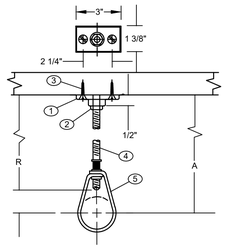

COMPONENTS

1. CLIP (CEILING FLANGE)
2. HEX NUT
3. WOOD SCREW
4. HANGER ROD
5. ADJUSTABLE HANGER RING

NFPA REQUIREMENTS / LIMITATIONS

1. NFPA 13 PERMITS THE USE OF 2 SCREW CEILING FLANGES ONLY
2. HAVING DIMENSIONS NOT LESS THAN THOSE OF NO. 18 X 1 1/2" WOOD SCREWS. DRIVE SCREWS AND NAILS ARE NOT ACCEPTABLE FASTENERS AND WOOD SCREWS ARE NOT TO BE DRIVEN.
3. FOR PIPE SIZES UP TO 2" AND IT CALLS FOR THE USE OF SCREWS

DESIGN DATA FOR CLIP HANGERS

NOMINAL PIPE SIZE	MINIMUM A DIMENSION	HANGER TAKEOUT	ROD DIAMETER	FASTENERS	
	INCHES	INCHES	INCHES	QTY	ITEMS
1/2	3 3/4	-1 1/4	3/8	1 2 1	3/8" CEILING FLANGE (CLIP) NO. 18 X 1 1/2" FLAT HEAD WOOD SCREWS 3/8" HEX NUT
3/4	3 3/4	-1 1/4	"		SEE ABOVE
1	3 3/4	-1 1/4	"		" "
1 1/4	4	-1 1/2	"		" "
1 1/2	4	-1 1/2	"		" "
2	4 1/4	-1 3/4	"		" "

1 FP-81 PIPE HANGER DETAIL

SCALE: NOT TO SCALE

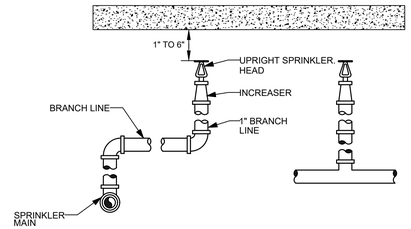

2 FP-81 UPRIGHT SPRINKLER DETAIL

SCALE: NOT TO SCALE

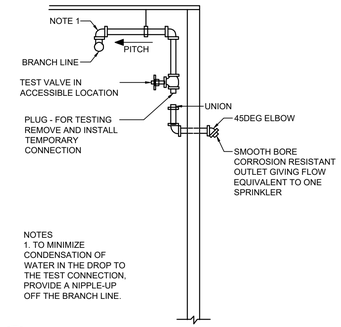

3 FP-81 DRY PIPE TEST CONNECTION

SCALE: NOT TO SCALE

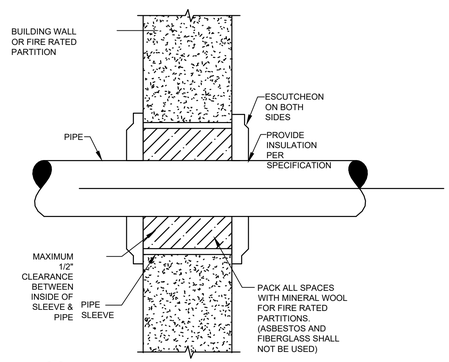

4 FP-81 PIPE PENETRATION

SCALE: NOT TO SCALE

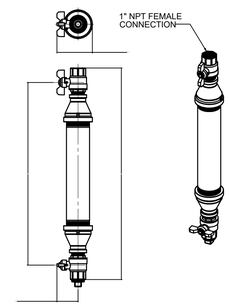

5 FP-81 DRY SYSTEM AUXILIARY DRAIN

SCALE: NOT TO SCALE

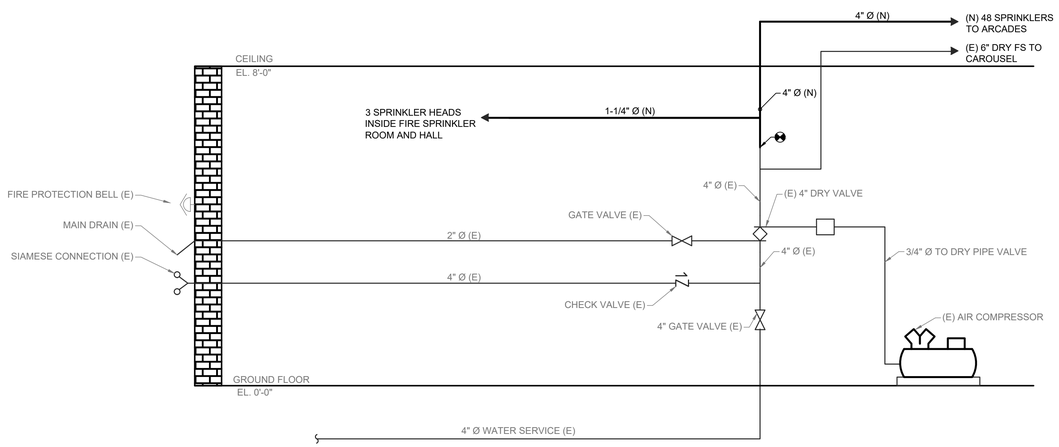

6 FP-81 SPRINKLER ROOM RISER - CONSTRUCTION

SCALE: NOT TO SCALE

GENERAL NOTES:

1. ALL DISTRIBUTION PIPING, INCLUDING PIPING NOT BEING REPLACED, SHALL BE (RE)PAINTED. REFER TO SPECIFICATION FOR PAINT TYPE AND APPLICATION PROCEDURE.
2. COORDINATE WITH FACILITY PRIOR TO SHUTDOWN OF FIRE PROTECTION SYSTEM FOR ANY DEMOLITION AND CONSTRUCTION WORK.
3. CONTRACTOR SHALL PROVIDE FIRE WATCH AS NEEDED FOR THE BUILDING WHILE SPRINKLER COVERAGE IS IMPACTED.
4. UPON COMPLETION OF NEW EQUIPMENT, SYSTEM SHALL BE TESTED FOR PROPER OPERATION.
5. CONTRACTOR TO COORDINATE WITH FACILITY WHEN WORKING AROUND OR ABOVE THE RIDE COMPONENTS, AND PROVIDE ALL NECESSARY MEASURES TO PROTECT THESE COMPONENTS PER THE REQUIREMENTS OF THE FACILITY.

CONSULTANT INFORMATION

LiRo Engineers, Inc.
A LiRo Group Company
Syosset, N.Y. 516-214-8157[T]

CONSULTANT SEAL

STATE OF NEW YORK · FRANK F. ULISSE · No. 090111 · LICENSED PROFESSIONAL ENGINEER

REVISION NUMBER	DATE	MADE BY	APP'D BY	REVISION

RECORD DRAWING CERTIFICATION

☐ AS BUILT – CHANGES AS NOTED ☐ AS BUILT – NO CHANGES

CONTRACTOR: NAME / SIGNATURE / TITLE / DATE

PROJECT COORDINATOR: NAME / SIGNATURE / TITLE / DATE

WESTCHESTER COUNTY, NEW YORK
DEPARTMENT OF PUBLIC WORKS AND TRANSPORTATION
DIVISION OF ENGINEERING

INFRASTRUCTURE REHABILITATION - PHASE 3
PLAYLAND PARK, RYE, NEW YORK
SOUTHEAST ARCADE
FIRE PROTECTION DETAILS

CONTRACT NUMBER	22-523
SHEET NUMBER	SA-FP-81
DWG NO.:	628 of 664
SCALE:	AS INDICATED
DATE:	08/23/2022
DPW FILE NUMBER	1-118-FP-1377-0
REV. NO.	0

PLUMBING SYMBOL LIST

IDENTIFIER	DESCRIPTION
——— — ——CW	DOMESTIC COLD WATER
——— W ———	WASTE PIPING (ABOVE SLAB)
— — — - W - — — — —	WASTE PIPING (UNDER SLAB)
——— S ———	SANITARY PIPING (ABOVE SLAB)
— — — - S - — — — —	SANITARY PIPING (UNDER SLAB)
--------- V -----------	SANITARY VENT PIPING
◕	FIELD CONNECT
◐	FIELD DISCONNECT
F#	REFER TO SUPPLEMENTAL FIGURE INDICATED BY NUMBER (I.E. F2 REFERS TO FIGURE 2)
XXX / XX	EQUIPMENT TAG EQUIPMENT NUMBER
XXX / X-XXX	DETAIL TAG/CALL OUT TAG PLUMBING SHEET NUMBER

PIPING ELEMENTS/VALVING

- BACKFLOW PREVENTER (DOUBLE CHECK VALVE ASSEMBLY)
- BALL VALVE
- CAP ON END OF PIPE
- CO CLEANOUT
- FD FLOOR DRAIN
- GATE VALVE
- HB HOSE BIBB
- VALVE IN VALVE BOX
- PIPE DROPPING DOWN
- PIPE RISING UP
- TEE OUTLET DOWN
- TEE OUTLET UP
- VALVE IN RISE OR DROP
- NFHB NON FREEZE HOSE BIBB IN BOX W/VACUUM BREAKER

SCOPE OF WORK

PLUMBING SCOPE OF WORK INCLUDES, BUT IS NOT LIMITED TO:

1. REMOVAL OF EXISTING WATER SERVICE.

2. THE INSTALLATION OF NEW PLUMBING FIXTURES AND ALL ASSOCIATED PIPING AND ACCESSORIES.

3. THE INSTALLATION OF NEW SANITARY AND DOMESTIC WATER SERVICES.

NOTE: THIS SCOPE OF WORK DESCRIPTION IS PROVIDED TO GIVE AN OVERALL "MACRO" DESCRIPTION OF THIS PROJECT .P.C. IS RESPONSIBLE TO REVIEW ALL ENGINEERING & ARCHITECTURAL DRAWINGS & VISIT THE SITE IF NEEDED, PRIOR TO SUBMISSION OF BID.

CODE REFERENCE

2020 NEW YORK STATE BUILDING CODE
2020 NEW YORK STATE MECHANICAL CODE
2020 NEW YORK STATE PLUMBING CODE
2020 NEW YORK STATE ENERGY CONSERVATION CODE

SECTION 704
DRAINAGE PIPING INSTALLATION

704.1 SLOPE OF HORIZONTAL DRAINAGE PIPING.

HORIZONTAL DRAINAGE PIPING SHALL BE INSTALLED IN UNIFORM ALIGNMENT AT UNIFORM SLOPES. THE MINIMUM SLOPE OF HORIZONTAL DRAINAGE PIPE SHALL BE IN ACCORDANCE WITH TABLE 704.1.

TABLE 704.1
SLOPE OF HORIZONTAL DRAINAGE PIPE

SIZE (INCHES)	MINIMUM SLOPE (INCH PER FOOT)
2 1/2 OR LESS	1/4
3 TO 6	1/8
8 OR LARGER	1/16

LEED NOTES

1. ALL ADHESIVES, SEALANTS, PAINTS & COATINGS APPLIED TO THE INTERIOR OF THE BUILDING (WITHIN THE WEATHER PROOFING SYSTEM, INCLUDING WALL CAVITIES) MUST NOT EXCEED THE LEED VOC LIMITS. PROVIDE A VOC SUBMITTAL AND MSDS FOR ALL ADHESIVES, SEALANTS, PAINTS AND COATINGS TO BE APPLIED.

PLUMBING GENERAL NOTES:

1. ALL PLUMBING WORK UNDER THIS CONTRACT SHALL CONFORM TO THE LATEST EDITION OF THE PLUMBING CODE OF NEW YORK STATE (PC-NYS), THE NEW YORK STATE ENERGY CODE, AND THE REQUIREMENTS OF THE UTILITY AND THE LOCAL WATER COMPANY.
2. ALL MATERIALS SHALL BE NEW UNLESS NOTED OTHERWISE.
3. THE PLUMBING CONTRACTOR SHALL ASSUME RESPONSIBILITY FOR ALL LABOR AND MATERIALS SUPPLIED AND INSTALLED UNDER THIS CONTRACT AND SHALL GUARANTEE THE WORK PERFORMED UNDER THIS CONTRACT FOR A PERIOD OF ONE (1) YEAR FROM THE DATE OF ACCEPTANCE OF THIS WORK.
4. PLUMBING CONTRACTOR SHALL CONSULT WITH, COOPERATE AND COORDINATE WITH THE GENERAL CONTRACTOR, MECHANICAL CONTRACTOR, SPRINKLER CONTRACTOR, ELECTRICAL CONTRACTOR, ETC. IN ORDER TO MINIMIZE INTERFERENCES BETWEEN TRADES DURING PERFORMANCE OF THIS WORK.
5. THE PLUMBING CONTRACTOR SHALL PREPARE AND FILE ALL REQUIRED PLANS AND PERMITS WITH THE LOCAL AUTHORITIES. PC SHALL PAY THE FILING FEES AS REQUIRED. PC SHALL OBTAIN ALL APPROVALS AND SHALL PAY FOR ALL WORK PERMITS, INSPECTIONS AND SIGN-OFFS AS REQUIRED TO EXECUTE THIS WORK IN A MANNER IN CONFORMANCE WITH THE CODES AND AUTHORITIES HAVING JURISDICTION.
6. THE PLUMBING CONTRACTOR SHALL PERFORM ALL TESTS AND ARRANGE FOR ALL INSPECTIONS FOR WORK UNDER HIS CONTRACT AS REQUIRED BY LAW AND SHALL SUPPLY ALL CERTIFICATES OF INSURANCE AS REQUIRED BY THE LAW AND THE OWNER. REFER TO SECTION 107 (INSPECTIONS) OF THE PC-NYS.
7. THE PLUMBING CONTRACTOR SHALL MAKE ALL FINAL CONNECTIONS TO ALL PLUMBING EQUIPMENT REGARDLESS WHETHER ILLUSTRATED HEREIN WITHOUT ANY ADDITIONAL COSTS TO THE OWNER.
8. PLUMBING CONTRACTOR SHALL VISIT THE SITE & BECOME FAMILIAR WITH THE EXISTING CONDITIONS, INCLUDING THE SIZE OF CONNECTIONS, ROUGHING DIMENSIONS, ETC. BEFORE SUBMITTING A QUOTATION FOR THE WORK.
9. PLUMBING CONTRACTOR SHALL PERFORM ALL CUTTING, EXCAVATION, BACKFILLING, ROUGH & FINISH PATCHING AS PER THE SPECIFICATIONS AS REQUIRED FOR THE INSTALLATION OF THE WORK, UNLESS NOTED OTHERWISE.
10. ALL CONNECTIONS TO NEW AND/OR EXISTING EQUIPMENT SHALL BE SIZED AND INSTALLED IN ACCORDANCE WITH THE MANUFACTURER'S INSTRUCTIONS.
11. IT IS THE INTENT OF THIS CONTRACT THAT THE COMPLETED WORK BE FULLY OPERATIONAL.
12. ALL PIPE HANGERS AND SUPPORTS SHALL BE INSTALLED AT INTERVALS AND BE FABRICATED OF MATERIALS AS REQUIRED BY THE PC-NYS.
13. ALL NEW PLUMBING FIXTURES SHALL BE INSTALLED WITH ANGLE STOP VALVES IN THE SUPPLY LINES SERVING THE FIXTURE.
14. ALL NEW EXPOSED WATER AND WASTE PIPING SERVING THE FIXTURES SHALL BE CHROME PLATED AND SHALL HAVE CHROME PLATED ESCUTCHEONS RIGIDLY ATTACHED TO THE PIPING AT THE POINT OF WALL OR FLOOR PENETRATIONS.
15. PLUMBING CONTRACTOR SHALL SUBMIT SHOP DRAWINGS FOR ALL NEW PLUMBING FIXTURES AND EQUIPMENT TO BE SUPPLIED AND INSTALLED UNDER THIS CONTRACT FOR APPROVAL BEFORE INSTALLATION OF SAME.
16. WATERPROOF PIPE SLEEVES SHALL BE INSTALLED AT ALL PENETRATIONS THROUGH EXTERIOR WALLS. PIPE SLEEVES SHALL BE INSTALLED AT ALL WALL PENETRATIONS THROUGH INTERIOR WALLS AND FLOORS.
17. WATER HAMMER ELIMINATORS (APPROVED - FIELD FABRICATED OR MANUFACTURED) SHALL BE INSTALLED AT ALL RUN OUTS IN HOT AND/OR COLD WATER LINES SERVING TOILET ROOMS AND OTHER AREAS WHICH INCORPORATE "RAPID - ACTION" VALVES SUCH AS FLUSHOMETERS, SOLENOID VALVES, ETC.
18. ALL PIPING SHALL BE TESTED AT A MINIMUM PRESSURE OF 1-1/2 TIMES THE MAXIMUM OPERATING PRESSURE UNLESS OTHERWISE NOTED ON THE DOCUMENTS OR THE PLUMBING CODE AND IN ACCORDANCE WITH THE UTILITY REQUIREMENTS.
19. ALL REMOVALS PERFORMED UNDER THIS CONTRACT SHALL INCLUDE REMOVAL OF ALL DEBRIS AND DISPOSAL AT AN APPROPRIATE SITE.
20. ALL LAVATORIES DESIGNED FOR USE BY PERSONS CONFINED TO WHEELCHAIRS SHALL HAVE THE HOT & COLD WATER SERVICES, AS WELL AS THE TRAP, RECESSED & INSULATED IN ACCORDANCE WITH ADA REQUIREMENTS.
21. REFER TO THE ARCHITECTURAL PLANS FOR ALL STRUCTURAL DIMENSIONS.
22. ALL WORK TO BE COORDINATED WITH OTHER TRADES.
23. ALL PIPING PENETRATIONS TO BE SEALED AROUND WITH "NELSON" FIRE SEAL.
24. ALL WATER SERVICE PIPING WITHIN THE BUILDING IS TO BE INSULATED IN ACCORDANCE WITH ALL NEW YORK STATE PLUMBING CODE (NYS-PC) AND NYS ENERGY CODES.
25. ALL PLUMBING FIXTURES TO BE INSTALLED AS PER FACTORY RECOMMENDATIONS.
26. ALL PLUMBING FIXTURES TO BE TRAPPED, VENTED AND PROVIDED WITH AIR SHOCKS WHEN REQUIRED.
27. PLUMBING FIXTURES SHALL COMPLY WITH "WATER CONSERVATION" REQUIREMENT AS DETAILED IN THE NYS-PC.
28. GC IS RESPONSIBLE TO SUBMIT APPLICATION AND TAP FEES TO LOCAL WATER AUTHORITY AND HAVE OWNER FILL OUT APPLICATION UPON COMPLETION OF PLUMBING ROUGH-IN INSPECTION.
29. ALL WATER AND HORIZONTAL STORM DRAIN PIPING INCLUDING ROOF DRAIN BODY SHALL BE INSULATED.
30. FLOOR DRAINS AND FLOOR CLEAN-OUTS SHALL BE SET LEVEL WITH FINISHED FLOORS.
31. ALL PIPE DIMENSIONS ARE INSIDE CLEAR.
32. ALL PLUMBING FIXTURES TO HAVE ISOLATION VALVES.
33. P.C. IS RESPONSIBLE TO ADJUST HOT WATER HEATER (WH) TEMPERATURE TO ENSURE A TEMPERATURE RANGE OF 110°F TO 120°F AT THE INDIVIDUAL FIXTURE OUTPUT. P.C. MUST ENSURE A TEMPERATURE OF 120° F MAXIMUM AT THE FIXTURES TO PREVENT SCALDING.
34. BUILDING DOMESTIC WATER DEMAND & SIZING IS CALCULATED FROM NYS-PC SECTION 603, 604 & APPENDIX E.
35. BUILDING SANITARY DEMAND & SIZING IS CALCULATED FROM NYS-PC SECTIONS 709 AND 710.
36. ALL DFU CALCULATIONS ARE BASED OFF OF TABLE 709.1 OF THE NYS-PC.
37. ALL SANITARY WATER PIPING SHALL BE PITCHED IN ACCORDANCE WITH NYS-PC SECTION 704 BASED ON TABLE 704.1 SLOPE OF HORIZONTAL DRAINAGE PIPE.
38. ALL VENT SIZING IS BASED OFF OF SECTION 916 OF THE NYS PLUMBING CODE.
39. ALL PLUMBING EQUIPMENT SHALL BE INSTALLED PER MANUFACTURER'S REQUIREMENTS/SPECIFICATIONS.

ABBREVIATIONS:

AD	ACCESS DOOR
BFP	BACKFLOW PREVENTER
CO	FLOOR CLEAN OUT
CW	COLD WATER
DCV	DOUBLE CHECK VALVE
DFU	DRAINAGE FIXTURE UNIT
DPCO	DECK PLATE CLEAN OUT
FC	FIELD CONNECT
FD	FLOOR DRAIN
FFD	FUNNEL FLOOR DRAIN
FU	FIXTURE UNIT
HW	HOT WATER
HWR	HOT WATER RETURN
IAW	IN ACCORDANCE WITH
IWFD	INDIRECT WASTE FUNNEL DRAIN
LAV	LAVATORY
JS	JANITOR'S SINK
NC	NORMALLY CLOSED
NO	NORMALLY OPEN
NYS-PC	NEW YORK STATE PLUMBING CODE
RD	ROOF DRAIN
S	SANITARY
SD	STORM DRAIN
TMV	THERMOSTATIC MIXING VALVE
U.O.N.	UNLESS OTHERWISE NOTED
UR	URINAL
V	VENT
WC	WATER CLOSET
PC	PLUMBING CONTRACTOR
MC	MECHANICAL CONTRACTOR
TYP.	TYPICAL
VIF	VERIFY IN FIELD
WCO	WALL CLEAN OUT
WFU	WATER FIXTURE UNITS
(N)	NEW
(E)	EXISTING
(D)	DEMO

THE ABBREVIATIONS ARE SHOWN FOR GENERAL REFERENCE ONLY. THE PRESENCE OF AN ABBREVIATION ON THIS LIST DOES NOT IMPLY ITS USE ON THIS PROJECT. REFER TO DRAWINGS FOR SPECIFIC ABBREVIATIONS USED.

SIMPLEX DRAIN PUMP SYSTEM

TAG	MANUFACTURER	MODEL	LOCATION	PUMP OPERATION	PERFORMANCE (GPM @ FT OF HEAD)				DISCHARGE (INCH)	VENT (INCH)	ELECTRICAL		OPTIONS / ACCESSORIES
					5	10	15	20			V.PH.HZ	HP	
SP-1	LIBERTY PUMPS	404 SERIES	UNDER PANTRY SINK	AUTOMATIC	37	30	19	5	2	2	115.1.60	1/3	ALARM & CHECK VALVE

NOTES

PLUMBING FIXTURE SCHEDULE

MARK	DESCRIPTION	SERVICE						BASED ON:			REMARKS
		TRAP	S/W	V	CW	TW	HW	ITEM	MANUFACTURER	MODEL	
PF-1	PANTRY SINK	2"	2"	2"	1/2"	-	1/2"	FAUCET DRAIN TRIM	ELKAY	LR2522SC	FAUCET ELKAY LK810GN04T4 SC

NOTES:
1. PROVIDE ALL REQUIRED HANGERS, MOUNTING BRACKETS, AND HARDWARE FOR A COMPLETE INSTALLATION PER MANUFACTURES INSTRUCTIONS. INCLUDES DRAIN AND P-TRAP.

ELECTRIC DOMESTIC HOT WATER HEATER SCHEDULE

TAG	MANUFACTURER	MODEL	LOCATION	HEATER KW	STORAGE WATER TEMP SETPOINT (DEG F)	ELECTRICAL		DIMENSION	APPROX. SHIPPING WEIGHT (LBS)
						V-PH-HZ	AMPS	HxWxD (IN)	
WH-1	EEMAX	SPEX3208	UNDER SINK	3	110	208-1-60	15	10.75x5.25x3	3

NOTES:

CLEANOUT SCHEDULE

TAG	TYPE	MANUFACTURER	MODEL
CO	ADJUSTABLE DECK PLATE CLEAN OUT	WATTS	CO-1200-R

PLUMBING DRAWING LIST

SHEET NO.	SHEET NAME	REVISON NO.	REVISION DATE
SA-P-01	PLUMBING NOTES, SYMBOLS, ABBREVIATIONS, AND DRAWING LIST	0	-
SA-P-11	PLUMBING GROUND FLOOR AND 2ND LEVEL DEMOLITION PLANS	0	-
SA-P-21	PLUMBING GROUND FLOOR AND 2ND LEVEL CONSTRUCTION PLANS	0	-
SA-P-81	PLUMBING DETAILS	0	-

CONSULTANT INFORMATION

LiRo Engineers, Inc.
A LiRo Group Company
Syosset, N.Y. 516-214-8157[T]

CONSULTANT SEAL

STATE OF NEW YORK · FRANK F. ULISSE · No. 090111-1 · LICENSED PROFESSIONAL ENGINEER

REVISION NUMBER	DATE	MADE BY	APP'D BY	REVISION

RECORD DRAWING CERTIFICATION

☐ AS BUILT – CHANGES AS NOTED ☐ AS BUILT – NO CHANGES

CONTRACTOR
NAME ______
SIGNATURE ______
TITLE ______ DATE ______

PROJECT COORDINATOR
NAME ______
SIGNATURE ______
TITLE ______ DATE ______

WESTCHESTER COUNTY, NEW YORK
DEPARTMENT OF PUBLIC WORKS AND TRANSPORTATION
DIVISION OF ENGINEERING

INFRASTRUCTURE REHABILITATION - PHASE 3
PLAYLAND PARK, RYE, NEW YORK
SOUTHEAST ARCADE
PLUMBING NOTES, SYMBOLS, ABBREVIATIONS AND DRAWING LIST

CONTRACT NUMBER 22-523
SHEET NUMBER **SA-P-01**
DWG NO.: 629 of 664
SCALE: **AS INDICATED**
DATE: 08/23/2022
DPW FILE NUMBER **1-118-P-1378-0**
REV. NO. 0

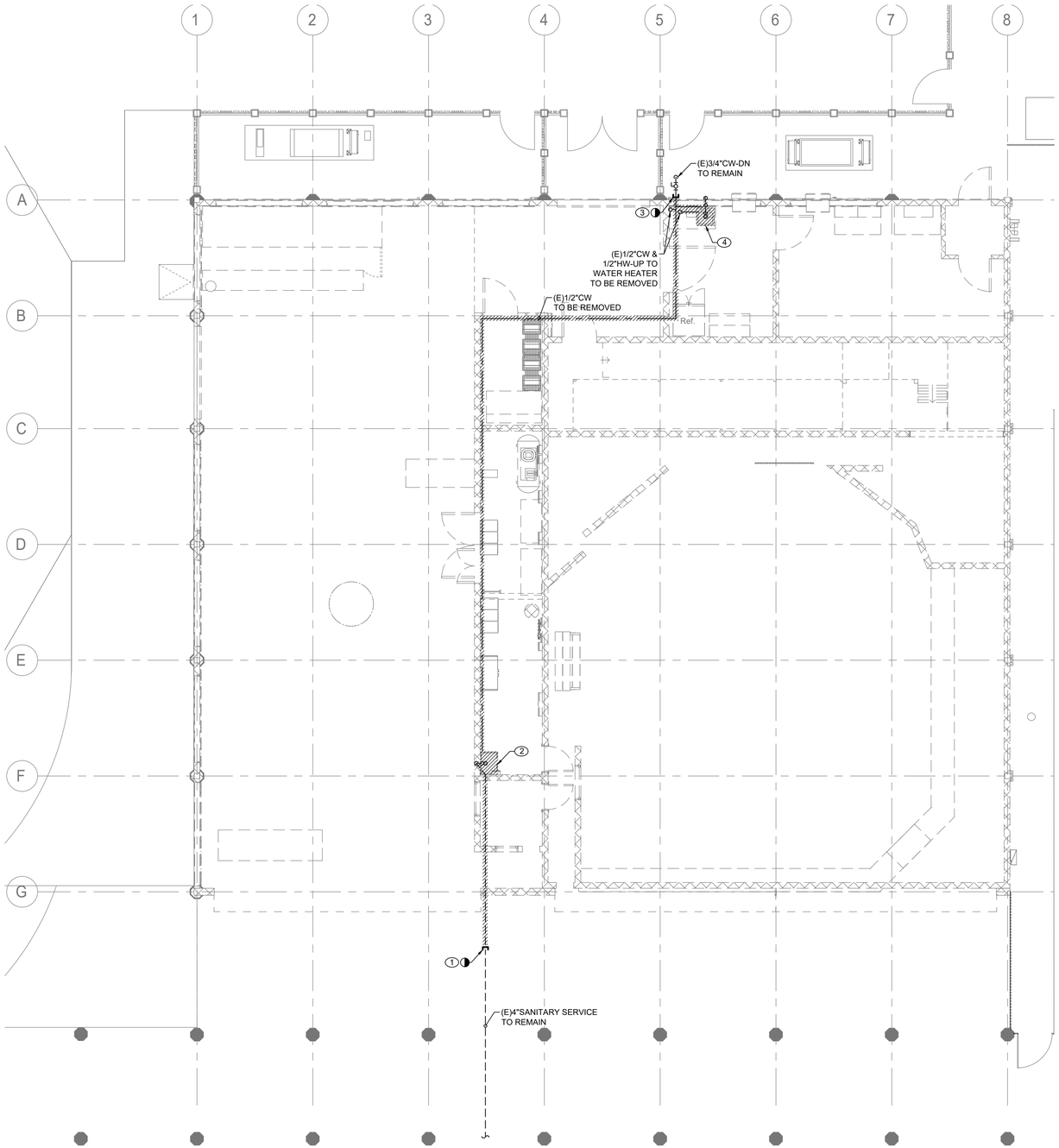

PLUMBING GROUND FLOOR DEMOLITION PLAN

SCALE: 3/16" = 1'-0

PLUMBING DEMOLITION NOTES:

1. CONTRACTOR TEMPORARILY CUT AND CAP EXISTING SANITARY PIPING BELOW GRADE. REMOVE ALL SANITARY AND VENT PIPING FROM PLUMBING FIXTURES. EXACT LOCATION VERIFY ON FIELD.
2. CONTRACTOR TO REMOVE EXISTING SINK WITH ALL ASSOCIATED PIPING BACK TO SOURCE AND TRIMS.
3. CONTRACTOR TEMPORARILY CUT AND CAP EXISTING 3/4" COLD WATER LINE. REMOVE ALL COLD, AND HOT WATER PIPING FROM PLUMBING FIXTURES AND WATER HEATER. EXACT LOCATION VERIFY ON FIELD.
4. CONTRACTOR TO REMOVE EXISTING SINK WITH ALL ASSOCIATED PIPING BACK TO SOURCE AND TRIMS. PATCH EXISTING OPENINGS AS NECESSARY TO MATCH EXISTING FIRE RATING AND FINISHES.

GENERAL NOTES:

1. ALL EXISTING PIPING ARE SHOWN AS A REFERENCE ONLY. CONTRACTOR SHALL FIELD VERIFY LOCATIONS AND SIZES FOR ALL EXISTING SERVICES PRIOR TO DEMOLITION.
2. COORDINATE WITH FACILITY PRIOR TO SHUTDOWN OF DOMESTIC WATER SYSTEM FOR ANY DEMOLITION AND CONSTRUCTION WORK.

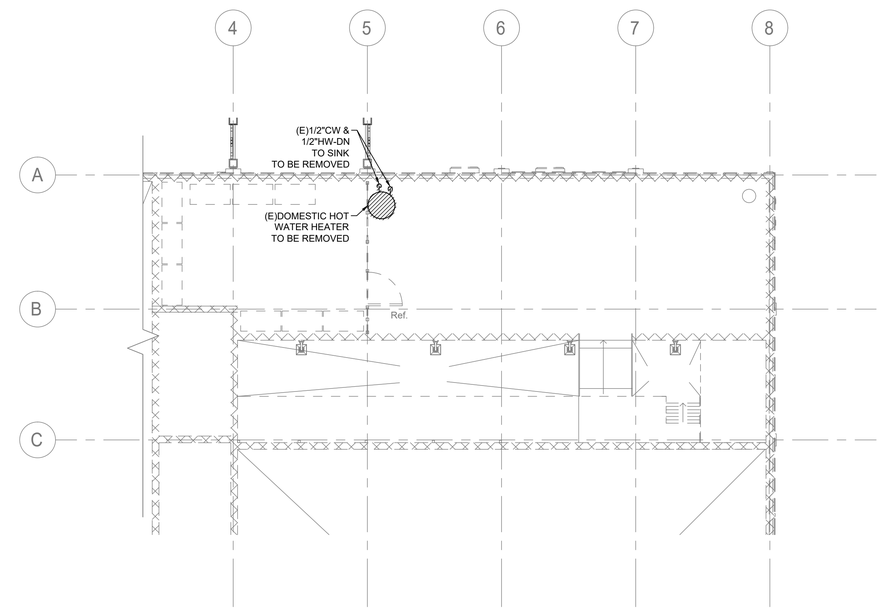

PLUMBING SECOND LEVEL DEMOLITION PLAN

SCALE: 3/16" = 1'-0

CONSULTANT INFORMATION

LiRo Engineers, Inc.
A LiRo Group Company
Syosset, N.Y. 516-214-8157[T]

CONSULTANT SEAL

STATE OF NEW YORK · FRANK F. LUTJSE · No. 090111-1 · LICENSED PROFESSIONAL ENGINEER

REVISION NUMBER	DATE	MADE BY	APP'D BY	REVISION

RECORD DRAWING CERTIFICATION

☐ AS BUILT – CHANGES AS NOTED ☐ AS BUILT – NO CHANGES

CONTRACTOR
NAME
SIGNATURE
TITLE DATE

PROJECT COORDINATOR
NAME
SIGNATURE
TITLE DATE

WESTCHESTER COUNTY, NEW YORK
DEPARTMENT OF PUBLIC WORKS AND TRANSPORTATION
DIVISION OF ENGINEERING

INFRASTRUCTURE REHABILITATION - PHASE 3
PLAYLAND PARK, RYE, NEW YORK
SOUTHEAST ARCADE
PLUMBING GROUND FLOOR AND 2ND LEVEL DEMOLITION PLANS

CONTRACT NUMBER	22-523
SHEET NUMBER	SA-P-11
DWG NO.:	630 of 664
SCALE:	AS INDICATED
DATE:	08/23/2022
DPW FILE NUMBER	1-118-P-1379-0
REV. NO.	0

PLUMBING CONSTRUCTION NOTES:

1. CONNECT NEW 4" SANITARY SERVICE TO EXISTING SEWER MAIN. CONTRACTOR TO VERIFY THE INVERT, SIZE, AND MATERIAL OF THE EXISTING SEWER PIPING TO FACILITATE NEW SANITARY SERVICE CONNECTION.
2. CONTRACTOR TO RECONNECT EXISTING 3/4" COLD WATER WITH NEW OUTSIDE BUILDING FOOTPRINT.
3. PROVIDE NEW 4"HOUSE TRAP IN PIT REFER TO STRUCTURAL DRAWINGS FOR DETAILS. PROVIDE ACCESS DOOR FOR MAINTENANCE. PROVIDE 4" FRESH AIR INTAKE THRU EXTERIOR WALL. TERMINATE VENT WITH INSECT SCREEN. HOUSE TRAP SHALL BE PROTECTED FROM FREEZING. PIT SHALL BE 24"X24" AND HEIGHT VERIFIED IN FIELD.
4. PROVIDE NEW PANTRY SINK COUNTERTOP MOUNTED WITH P-TRAP AND FAUCET. PROVIDE NEW INSTANTANEOUS WATER HEATER AND SINK SUMP PUMP UNDER THE SINK. PROVIDE ALL REQUIRED VALVES, SUPPORTS AND TRIMS.
5. PROVIDE NEW 4" VENT THRU ROOF.

GENERAL NOTES:

1. COORDINATE WITH FACILITY PRIOR TO SHUTDOWN OF WATER DISTRIBUTION SYSTEM FOR ANY DEMOLITION AND CONSTRUCTION WORK.
2. PROVIDE DRAIN VALVES AT BOTTOM FOR EACH BRANCH. PROVIDE ACCESS PANELS TO ALL VALVES ABOVE CEILING AND BEHIND WALLS.
3. INSTALL NEW WATER PIPING WITH PROPER SLOPES TO AVOID WATER TRAPS DURING WINTER SEASON.
4. CONTRACTOR TO COORDINATE WITH FACILITY WHEN WORKING AROUND OR ABOVE THE RIDE COMPONENTS, AND PROVIDE ALL NECESSARY MEASURES TO PROTECT THESE COMPONENTS PER THE REQUIREMENTS OF THE FACILITY.
5. UPON COMPLETION, SYSTEM SHALL BE TESTED FOR PROPER OPERATION.
6. SEWER CROSSING WATER MAINS, CONDUITS, OR OTHER UTILITY SHALL BE MINIMUM 18" CLEARANCE BETWEEN THE OUTSIDE OF THE UTILITY AND OUTSIDE OF THE SEWER. THE CROSSINGS SHALL BE ARRANGED SO THAT THE SEWER JOINTS WILL BE EQUIDISTANT AND AS FAR AS POSSIBLE FROM THE WATER MAIN JOINTS.

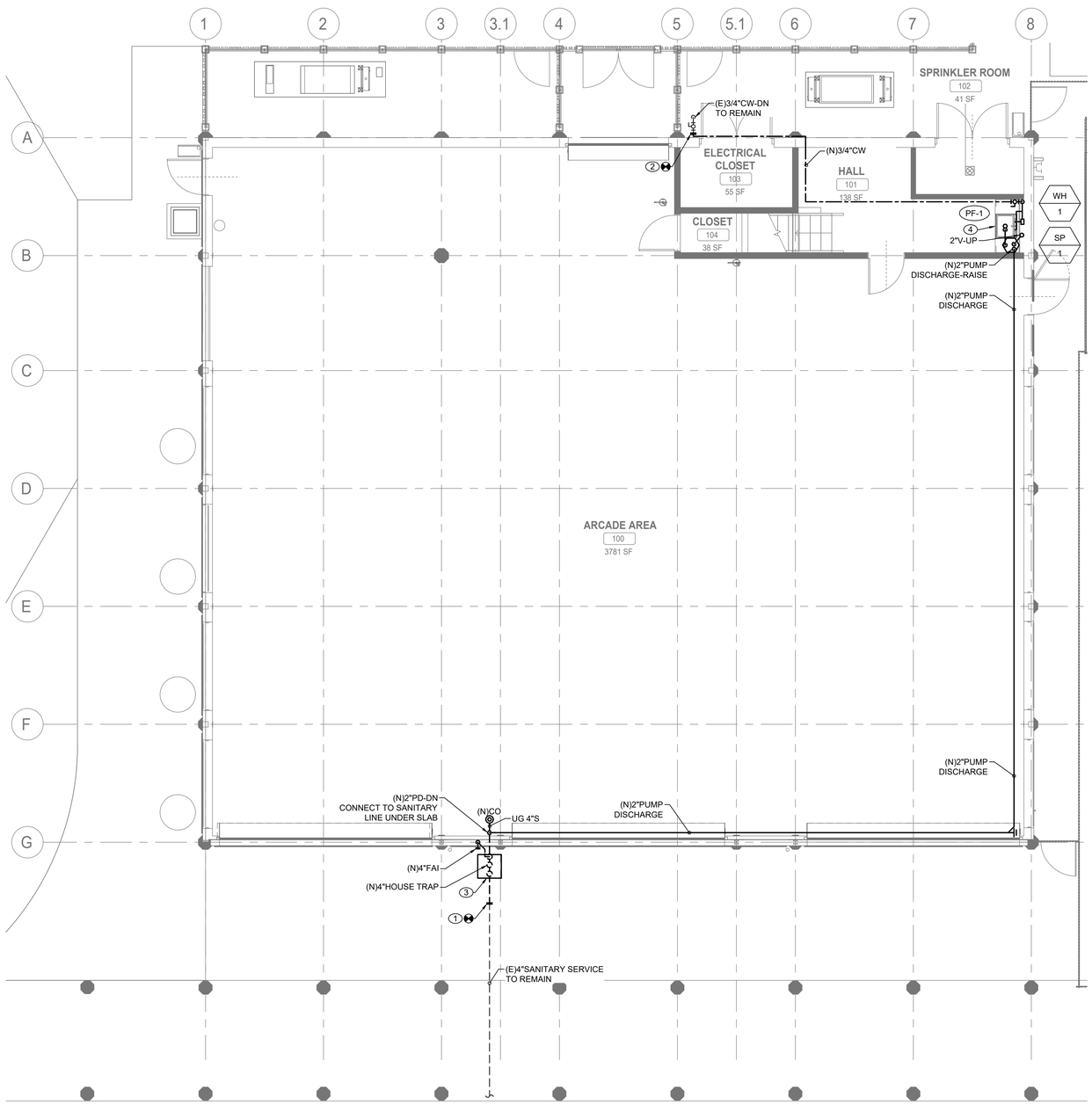

PLUMBING GROUND FLOOR CONSTRUCTION PLAN

SCALE: 3/16" = 1'-0

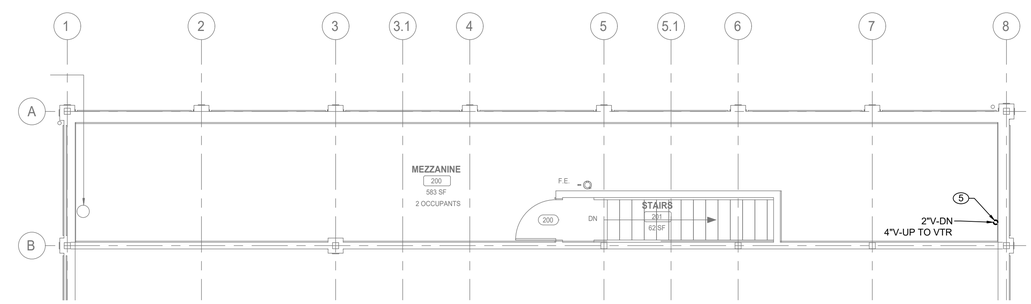

PLUMBING SECOND LEVEL CONSTRUCTION PLAN

SCALE: 3/16" = 1'-0

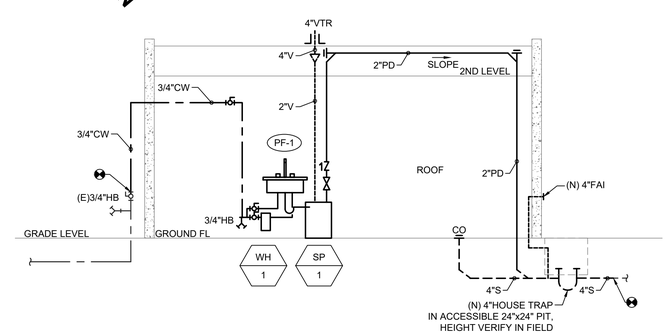

1 / P-21

SANITARY AND DOMESTIC WATER RISER DIAGRAM

SCALE: NOT TO SCALE

CONSULTANT INFORMATION

LiRo Engineers, Inc.
A LiRo Group Company
Syosset, N.Y. 516-214-8157[T]

CONSULTANT SEAL

STATE OF NEW YORK · FRANK F. ULISSE · No. 090111-1 · LICENSED PROFESSIONAL ENGINEER

REVISION NUMBER	DATE	MADE BY	APP'D BY	REVISION

RECORD DRAWING CERTIFICATION

☐ AS BUILT – CHANGES AS NOTED ☐ AS BUILT – NO CHANGES

CONTRACTOR: NAME / SIGNATURE / TITLE / DATE

PROJECT COORDINATOR: NAME / SIGNATURE / TITLE / DATE

WESTCHESTER COUNTY, NEW YORK
DEPARTMENT OF PUBLIC WORKS AND TRANSPORTATION
DIVISION OF ENGINEERING

INFRASTRUCTURE REHABILITATION - PHASE 3
PLAYLAND PARK, RYE, NEW YORK
SOUTHEAST ARCADE
PLUMBING GROUND FLOOR AND 2ND LEVEL CONSTRUCTION PLANS

CONTRACT NUMBER	22-523
SHEET NUMBER	SA-P-21
DWG NO.:	631 of 664
SCALE:	AS INDICATED
DATE:	08/23/2022
DPW FILE NUMBER	1-118-P-1380-0
REV. NO.	0

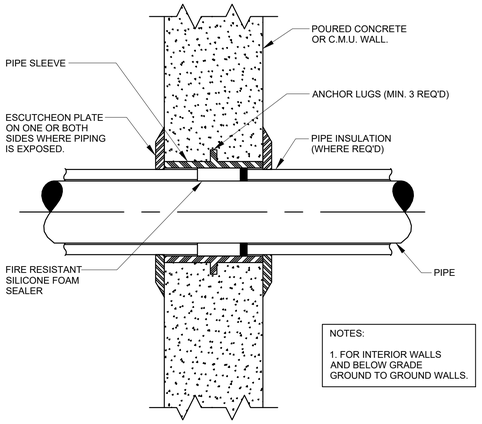

1 / P-81 PIPE SLEEVE THROUGH WALL DETAIL

SCALE: NOT TO SCALE

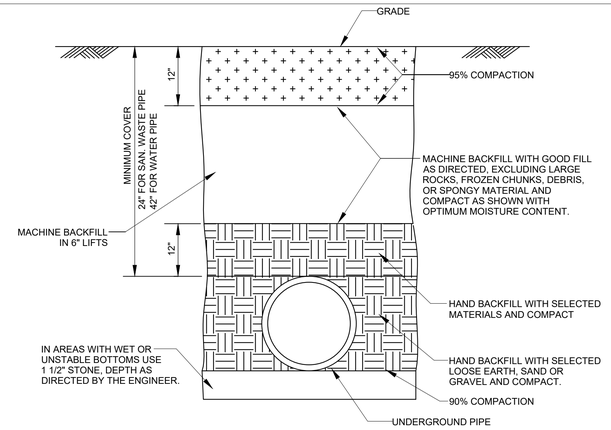

2 / P-81 PIPE TRENCH DETAIL

SCALE: NOT TO SCALE

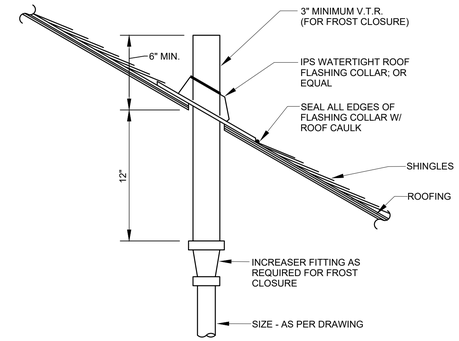

3 / P-81 PLUMBING VENT THROUGH PITCHED ROOF DETAIL

SCALE: NOT TO SCALE

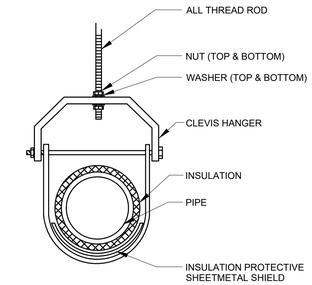

4 / P-81 TYPICAL CLEVIS HANGER DETAIL

SCALE: NOT TO SCALE

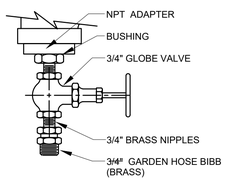

5 / P-81 DRAIN VALVE DETAIL

SCALE: NOT TO SCALE

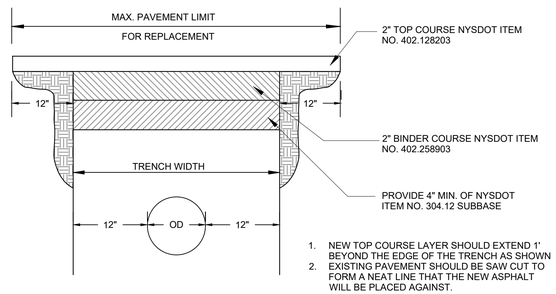

6 / P-81 ASPHALTIC MACADAM PAVEMENT REPLACEMENT

SCALE: NOT TO SCALE

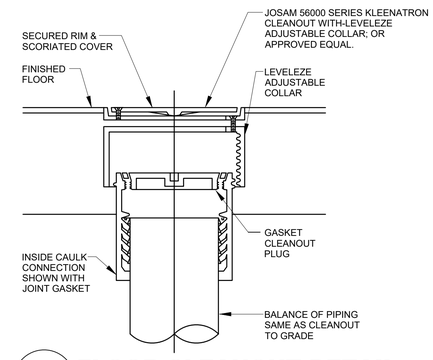

7 / P-81 FLOOR CLEANOUT DETAIL

SCALE: NOT TO SCALE

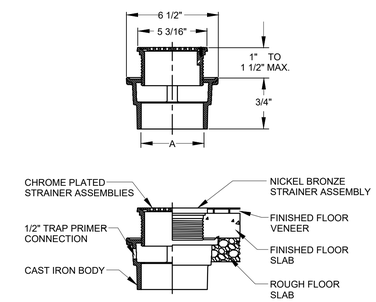

8 / P-81 FLOOR DRAIN DETAIL

SCALE: NOT TO SCALE

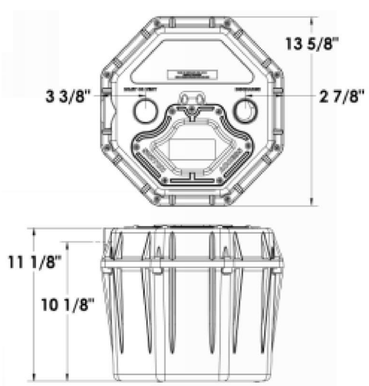

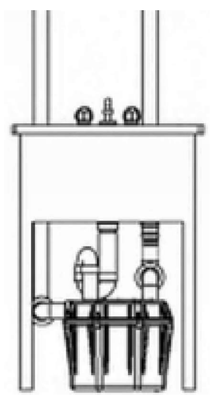

9 / P-81 DUMP PUMP DETAIL

SCALE: NOT TO SCALE

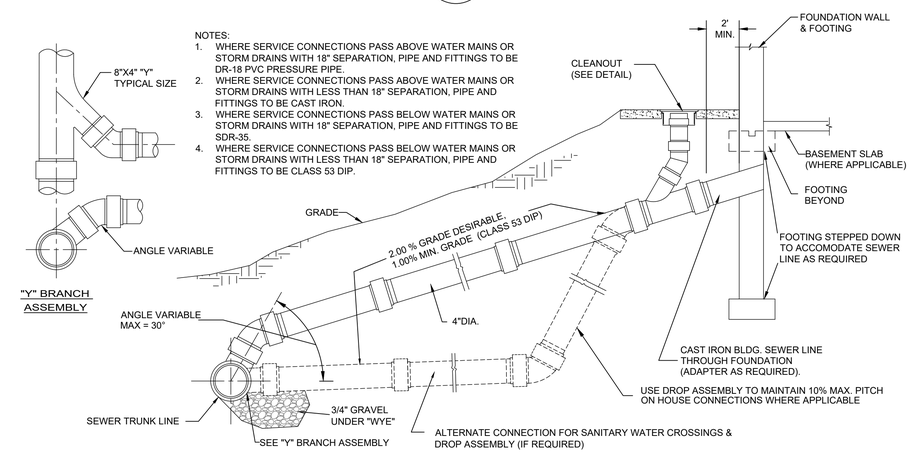

10 / P-81 SEWER SERVICE CONNECTION/ DROP ASSEMBLY

SCALE: NOT TO SCALE

CONSULTANT INFORMATION

LiRo Engineers, Inc.
A LiRo Group Company
Syosset, N.Y. 516-214-8157[T]

CONSULTANT SEAL

STATE OF NEW YORK · FRANK F. GUTSE · No. 095111-1 · LICENSED PROFESSIONAL ENGINEER

REVISION NUMBER	DATE	MADE BY	APP'D BY	REVISION

RECORD DRAWING CERTIFICATION

☐ AS BUILT – CHANGES AS NOTED ☐ AS BUILT – NO CHANGES

CONTRACTOR: NAME / SIGNATURE / TITLE / DATE

PROJECT COORDINATOR: NAME / SIGNATURE / TITLE / DATE

WESTCHESTER COUNTY, NEW YORK
DEPARTMENT OF PUBLIC WORKS AND TRANSPORTATION
DIVISION OF ENGINEERING

INFRASTRUCTURE REHABILITATION PHASE 3
PLAYLAND PARK, RYE, NEW YORK
SOUTHEAST ARCADE
PLUMBING DETAILS

CONTRACT NUMBER	22-523
SHEET NUMBER	SA-P-81
DWG NO.:	632 of 664
SCALE:	AS INDICATED
DATE:	08/23/2022
DPW FILE NUMBER	1-118-P-1381-0
REV. NO.	0

MECHANICAL GENERAL NOTES

1. ALL WORK AND MATERIALS SHALL BE PURCHASED AND INSTALLED IN ACCORDANCE WITH ALL NATIONAL & NEW YORK STATE CODES AND REGULATIONS (AS WELL AS ALL APPLICABLE LOCAL CODES & REGULATIONS). THE CONTRACTOR SHALL BE RESPONSIBLE TO ENSURE THAT ALL HVAC WORK IS PROVIDED AND INSTALLED IN STRICT ACCORDANCE WITH SEISMIC REQUIREMENTS.
2. DO NOT SCALE FROM THESE DRAWINGS.
3. THE EXACT MOUNTING HEIGHTS AND LOCATIONS OF ALL HVAC EQUIPMENT SHALL BE FIELD VERIFIED AND COORDINATED WITH ALL OTHER MECHANICAL, ELECTRICAL, PLUMBING, FIRE SPRINKLER, ARCHITECTURAL AND STRUCTURAL SYSTEMS. DURING SHOP DRAWINGS SUBMISSIONS, SHOW ALL MOUNTING HEIGHTS OF DUCTWORK, UNITS, ETC.
4. VERIFY ALL EQUIPMENT VOLTAGES WITH THE ELECTRICAL DESIGN PRIOR TO ORDERING EQUIPMENT.
5. PROVIDE PHASE LOSS PROTECTION FOR ALL POLY-PHASE MOTOR DEVICES.
6. DUCTWORK SHALL BE CONSTRUCTED OF GALVANIZED SHEET STEEL IN STRICT COMPLIANCE WITH THE LATEST EDITION OF THE ASHRAE, NFPA, AND SMACNA GUIDE RECOMMENDATIONS. ALL DUCTS TO HAVE PITTSBURGH TYPE LOCK FOR LONGITUDINAL SEAMS AND DRIVE SLIP / "S" SLIP FOR TRANSVERSE JOINTS. "DUCT-MATE" JOINT SYSTEM IS ACCEPTABLE IN LIEU OF PRIOR SEAM SYSTEMS. SIZES AS SHOWN INDICATE INSIDE CLEAR DIMENSIONS OF THE AIR PASSAGE. DUCTWORK SHALL BE FULLY INSULATED AS PER APPLICABLE CODES AND WRITTEN SPECIFICATIONS.
7. DUCT SIZES MUST BE VERIFIED FOR CLEARANCES AT THE JOB SITE PRIOR TO FABRICATION. DIMENSIONS MAY BE CHANGED TO ACCOMMODATE CONSTRUCTION AS LONG AS EFFECTIVE CROSS-SECTIONAL AREA IS MAINTAINED. DUCT TRANSITIONS SHALL BE CONSTRUCTED WITH A SLOPE OF 1" TO 4". ALL DEVIATIONS FROM ORIGINAL CONTRACT DRAWINGS SHALL BE REVIEWED BY ENGINEER DURING THE SHOP DRAWING PROCESS.
8. PROVIDE MANUAL BALANCING DAMPERS AS REQUIRED TO PROPERLY BALANCE EACH INDIVIDUAL AIR DISTRIBUTION SYSTEM. IF THE LOCATION OF THE BALANCING DAMPER IS NOT DEFINED ON THE DRAWINGS, THE FOLLOWING MINIMUMS STANDARDS SHALL GOVERN. ALL SUPPLY, RETURN, AND EXHAUST MAIN BRANCHES FROM TRUNKS, EACH SPLIT AND ALL SUB- BRANCHES FROM MAIN SHALL INCORPORATE BALANCING DAMPERS.
9. PROVIDE FLEXIBLE CONNECTORS AT ALL DUCT CONNECTIONS TO VIBRATING EQUIPMENT. THESE CONNECTORS SHALL BE INSTALLED IN CLOSE PROXIMITY TO SUCH EQUIPMENT.
10. PROVIDE FIRE DAMPERS WITH RATED ACCESS DOORS AT ALL DUCT PENETRATIONS THROUGH FIRE RATED WALLS, SMOKE AND FIRE STOPPING, SHAFT, FLOORS, RATED CEILINGS AND PARTITIONS AS REQUIRED TO MAINTAIN ARCHITECTURAL FIRE RATINGS. REFER TO THE ARCHITECTURAL PLANS AND SPECIFICATIONS FOR LOCATIONS AND FIRE RATING REQUIREMENTS. CONTRACTOR MUST FULLY REVIEW ALL ARCHITECTURAL AND ENGINEERING DRAWINGS AND VISIT THE SITE PRIOR TO SUBMITTING THE BID. NO EXTRAS WILL BE ALLOWED.
11. ALL ACCESS DOORS REQUIRED IN GENERAL CONSTRUCTION ARE TO BE PROVIDED AND INSTALLED BY THE CONTRACTOR. IT IS THE RESPONSIBILITY OF THE CONTRACTOR TO IDENTIFY SIZE, TYPE AND LOCATION OF SUCH DOORS FOR PROPER ACCESS TO ALL CONCEALED HVAC EQUIPMENT, VALVES AND OTHER RELATED EQUIPMENT. THE CONTRACTOR SHALL IDENTIFY THESE REQUIREMENTS ON A COORDINATED SHOP DRAWING PRIOR TO SYSTEM FABRICATION AND INSTALLATION.
12. ALL CEILING MOUNTED EQUIPMENT MUST BE SUPPORTED DIRECTLY FROM BUILDING STRUCTURE WITH COMBINATION SPRING AND NEOPRENE-IN-SHEAR HANGERS AND ROD. PROVIDE SUPPLEMENTARY STEEL AS REQUIRED TO ADEQUATELY SUPPORT THE LOAD.
13. THE CONTRACTOR MUST CONTRACT AN INDEPENDENT NEBB CERTIFIED AIR BALANCING & TESTING COMPANY TO PERFORM THE AIR BALANCING WORK AND ASSOCIATED SYSTEM AIR BALANCING REPORT. ALL WORK SHALL BE PERFORMED IN STRICT COMPLIANCE WITH ALL APPLICABLE CODES, REGULATIONS, PLANS AND WRITTEN SPECIFICATIONS. SUBMIT THE FINAL AIR BALANCE REPORT TO THE ENGINEER FOR REVIEW AND APPROVAL PRIOR TO SUBSTANTIAL COMPLETION OF THE PROJECT, AS DETERMINED BY THE AND OWNER/CLIENT. THE AIR BALANCE REPORT MUST INCLUDE ALL SUPPLY, RETURN, & EXHAUST AIR TERMINALS, FRESH AIR (OUTSIDE AIR) INTAKE AND VENTILATION EXHAUST CFM RATES FOR ALL UNITS. ALSO INCLUDE ACTUAL SUPPLY & RETURN AIR VELOCITY & STATIC PRESSURE READINGS ALONG WITH ALL MOTOR AMPERAGES FOR ALL UNITS.
14. THE CONTRACTOR IS TO INCLUDE IN THEIR BID ALL LOW VOLTAGE CONTROL WIRING, THERMOSTATS, RELAYS, TRANSFORMERS, STARTERS ETC FOR A COMPLETE OPERATING CONTROL SYSTEM AS DESCRIBED IN THE SEQUENCE OF OPERATIONS, THE CONTRACTOR IS ALSO RESPONSIBLE FOR LINE VOLTAGE CONTROL FOR EXHAUST FANS CONTROLLED FROM LIGHT SWITCH AND THERMOSTATS. ALL CONTROL WIRING IN THE AREAS THAT DO NOT HAVE DROPPED CEILINGS THE CONTRACTOR MUST PROVIDE ALL CONTROL WIRING CONDUIT. IN AREAS OF DROPPED CEILING PLENUM RATED CONTROL WIRING CAN BE RUN EXPOSED ABOVE CEILING.
15. ALL MECHANICAL EQUIPMENT SHALL BE INSTALLED PER MANUFACTURER'S REQUIREMENTS/SPECIFICATIONS.

CODE REFERENCE

2020 NEW YORK STATE BUILDING CODE
2020 NEW YORK STATE MECHANICAL CODE
2020 NEW YORK STATE ENERGY CONSERVATION CODE

MECHANICAL DEMOLITION NOTES

1. CONTRACTOR SHALL BE RESPONSIBLE FOR DEMOLITION OF MECHANICAL EQUIPMENT AND MATERIAL RELATING TO THEIR RESPECTIVE TRADE.

2. THE CONTRACTOR SHALL REMOVE, RELOCATE, REPLACE, ADJUST, ADAPT AND MODIFY EXISTING EQUIPMENT AND/OR SYSTEMS AS REQUIRED WHEN SUCH WORK IS UNCOVERED AND FOUND TO INTERFERE WITH COMPLETION OF WORK IN THIS CONTRACT OR OTHER CONTRACT WORK.

3. EXECUTE THE DEMOLITION IN CAREFUL AND ORDERLY MANNER WITH THE LEAST POSSIBLE DISTURBANCE TO THE PUBLIC, EGRESS OR THE FUNCTIONING OF THE EXISTING BUILDING.

4. TAKE NECESSARY PRECAUTIONS TO PREVENT DUST AND DIRT FROM RISING BY WETTING DEMOLISHED DEBRIS. EXCESSIVE USE OF WATER WILL NOT BE PERMITTED.

5. PRIOR TO DEMOLITION, CONTRACTOR SHALL REVIEW WITH OWNER ALL MATERIALS TO BE REMOVED, SHOULD THE OWNER WANT TO KEEP ANY MATERIALS THE CONTRACTOR SHALL REMOVE AND DELIVER THE PARTS TO THE OWNER ON THE SITE WHERE SO DIRECTED. OTHERWISE ALL DEMOLISHED OR REMOVED MATERIALS SHALL BECOME THE PROPERTY OF THE CONTRACTOR AND SHALL BE REMOVED FROM THE SITE AND BE DISPOSED OF IN A LEGAL MANNER.

6. DEMOLITION SHALL INCLUDE REMOVAL OF ALL PARTS AND PIECES IN THEIR ENTIRETY BACK TO POINTS INDICATED OR IF NOT INDICATED BACK TO THEIR POINT OF SOURCE.

7. WHERE CONDITIONS PROHIBIT TOTAL REMOVAL OF THE WORK, THE REMAINING PORTION SHALL BE CUT FLUSH WITH THE SURROUNDING SURFACE AND BE CAPPED, PLUGGED OR SEALED AND THE SURROUNDING SURFACE SHALL BE REFINISHED IN AN APPROVED MANNER.

9. DO NOT REMOVE EXISTING STRUCTURAL WORK. DO NOT REMOVE OPERATIONAL ELEMENTS AND SAFETY-RELATED COMPONENTS IN A MANNER RESULTING IN A REDUCTION OF CAPACITIES TO PERFORM IN THE MANNER INTENDED OR RESULTING IN DECREASED OPERATIONAL LIFE, INCREASED MAINTENANCE, OR DECREASED SAFETY.

10. REMOVALS, DISCONNECTIONS, AND RELOCATIONS SHALL BE PERFORMED BY WORKMEN SKILLED IN THE TRADE INVOLVED AND SHALL BE EMPLOYED BY A CONTRACTOR LICENSED IN THE TRADE INVOLVED. ALL WORK SHALL BE DONE IN ACCORDANCE WITH ACCEPTED TRADE PRACTICES.

11. PROVIDE ADEQUATE TEMPORARY SUPPORT FOR WORK TO REMAIN, TO PREVENT FAILURE. DO NOT ENDANGER OTHER WORK.

12. PROTECTION: PROVIDE ADEQUATE PROTECTION WHERE REQUIRED FOR THE PRESENT BUILDING AND ITS CONTENTS. TEMPORARY DUSTPROOF BARRIERS AND BARRICADES SHALL BE ERECTED WHERE REQUIRED FOR PROTECTION OF PERSONNEL, PROTECTION FROM DUST AND DIRT, FOR SECURITY, FIRE AND WEATHER PROTECTIVE REASONS.

13. CONTRACTOR SHALL TAKE EVERY PRECAUTION AGAINST FIRE BY EMPLOYING FIRE DEPARTMENT TYPE HOSES AND PORTABLE FIRE EXTINGUISHERS AS REQUIRED BY OSHA AND/OR THE OWNER'S INSURANCE UNDERWRITER.

14. BEFORE STARTING DEMOLITION OPERATIONS, PROVIDE THE NECESSARY PROTECTIVE DEVICES, WHERE REQUIRED, AND IN STRICT ACCORDANCE WITH OSHA RULES AND REGULATIONS.

14. USE TEMPORARY ENCLOSURES, OR OTHER SUITABLE METHODS TO LIMIT DUST AND DIRT RISING AND SCATTERING TO LOWEST PRACTICAL LEVEL. COMPLY WITH GOVERNING REGULATIONS PERTAINING TO ENVIRONMENTAL PROTECTION.

15. FIELD VERIFY DEMOLITION REQUIREMENTS AND EXISTING CONDITIONS. DEMOLITION NOTES ARE INDICATED IN NOTE FORM.

16. CONTRACTOR SHALL ESTABLISH A PATH OF TRAVEL AND TIME SCHEDULE FOR THE REMOVAL OF ALL DEBRIS AND WASTE, AND HAVE THIS APPROVED BY OWNER. CONTRACTOR IS TO ENSURE THAT ALL CORRIDORS AND PUBLIC AREAS BE KEPT FREE OF OBSTRUCTIONS, DEBRIS, AND ARE TO BE BROOM SWEPT CLEAN AT ALL TIMES.

17. CONTRACTOR SHALL VISIT THE SITE AND BECOME INFORMED AS TO THE CONDITION OF THE PREMISES AND THE EXTENT AND CHARACTER OF WORK REQUIRED. NO ADDITIONAL COMPENSATION WILL BE APPROVED DUE TO FIELD CONDITIONS.

NYSECC ENERGY COMPLIANCE STATEMENT:

PER SECTION C101.7 OF THE 2020 NYSECC HISTORIC BUILDINGS ARE EXEMPT FROM THE REQUIREMENTS OF THE ENERGY CODE.

HVAC SYMBOL LIST

IDENTIFIER	DESCRIPTION
	NEW DUCTWORK OR PIPING
	EXISTING DUCTWORK OR PIPING TO BE REMOVED
	EXISTING DUCTWORK OR PIPING TO REMAIN
24X12 / 24X12	DOUBLE-LINE AND SINGLE-LINE RECTANGULAR DUCT, FIRST NUMBER INDICATES SIDE IN VIEW IN INCHES, SECOND NUMBER INDICATES SIDE IN DEPTH IN INCHES
	FLEXIBLE DUCTWORK
	REGULAR SUPPLY AIR DUCT (UP AND DOWN)
	REGULAR RETURN AIR DUCT (UP AND DOWN)
	REGULAR EXHAUST AIR DUCT (UP AND DOWN)
	REGULAR OUTSIDE AIR DUCT (UP AND DOWN)
VD	VOLUME DAMPER
BD	BACKDRAFT DAMPER
FD	FIRE DAMPER
	MOTOR OPERATED DAMPER
XXX / XX	EQUIPMENT TAG EQUIPMENT NUMBER
XXX / X-XXX	DETAIL TAG/CALL OUT TAG MECHANICAL SHEET NUMBER
T	THERMOSTAT
	EXHAUST GRILLE
F#	REFER TO SUPPLEMENTAL FIGURE INDICATED BY NUMBER (I.E. F2 REFERS TO FIGURE 2)

HVAC ABBREVIATIONS

IDENTIFIER	DESCRIPTION
AC	DIRECT EXPANSION AIR CONDITION UNIT
CFM	CUBIC FEET PER MINUTE
COND	CONDENSATE
CU	CONDENSING UNIT
CUH	CABINET UNIT HEATER
DB	DRY BULB
DN	DOWN
EA	EXHAUST AIR
EF	EXHAUST FAN
EG	EXHAUST GRILLE
EUH	ELECTRIC UNIT HEATER
EER	ENERGY EFFICIENCY RATIO
EG	EXHAUST GRILLE
FD	FIRE DAMPER
FAI	FRESH AIR INTAKE
GC	GENERAL CONTRACTOR
MBH	THOUSAND BTU PER HOUR
PC	PLUMBING CONTRACTOR
RG	RETURN GRILLE
RTU	ROOFTOP UNIT
SA	SUPPLY AIR
SD	SUPPLY DIFFUSER
TYP.	TYPICAL
VIF	VERIFY IN FIELD
WWM	WELDED WIRE MESH

SCOPE OF WORK

DEMOLITION

1. REMOVE EXISTING PNEUMATIC CONTROLS EQUIPMENT, WIRING AND ACCESSORIES.
2. REMOVE TWO (2) EXISTING WINDOW AC UNITS AS INDICATED.
3. REMOVE THREE (3) EXISTING WALL MOUNTED PROPELLER FANS AS INDICATED.
4. REMOVE TWO (2) EXISTING LOUVERS AS INDICATED.
5. REMOVE ONE (1) EXISTING UNIT HEATER AND ASSOCIATED SUPPORTS, WIRING AND ACCESSORIES.

CONSTRUCTION

1. PROVIDE ONE (1) NEW PACKAGED TERMINAL AIR CONDITIONER UNIT AS INDICATED.
2. PROVIDE TWO (2) NEW EXHAUST FANS IN ARCADE AREA AS INDICATED.
3. PROVIDE SIX (6) NEW RAIN RESISTANT LOUVERS IN ARCADE AREA AS INDICATED.
4. PROVIDE ONE (1) NEW STORAGE EXHAUST FAN AS INDICATED.
5. PROVIDE ONE (1) NEW WALL MOUNTED ELECTRIC UNIT HEATER AS INDICATED.

MECHANICAL DRAWING LIST

SHEET NO.	SHEET NAME	REVISON NO.	REVISION DATE
SA-M-01	MECHANICAL NOTES, SYMBOLS & LEGENDS	0	-
SA-M-11	MECHANICAL 1ST FLOOR DEMOLITION PLAN	0	-
SA-M-12	MECHANICAL 2ND FLOOR DEMOLITION PLAN	0	-
SA-M-21	MECHANICAL 1ST FLOOR CONSTRUCTION PLAN	0	-
SA-M-22	MECHANICAL 2ND FLOOR CONSTRUCTION PLAN	0	-
MS-M-23	MECHANICAL EXTERIOR BUILDING ELEVATIONS	0	-
SA-M-61	MECHANICAL SCHEDULES	0	-
SA-M-81	MECHANICAL DETAILS	0	-
SA-M-91	MECHANICAL CONTROLS	0	-

MECHANICAL VENTILATION SCHEDULE

SPACE DETAILS		MECH CODE REQUIREMENTS				DESIGN				
ROOM	AREA (FT^2)	# PEOPLE	OA / SQ FT	OA PER PERSON	NET OA	MIN DESIGN OA FLOW (CFM)	ACTUAL SA FLOW (CFM)	ACTUAL RA FLOW (CFM)	ACTUAL EA FLOW (CFM)	NOTES
101 STAFF ROOM	178	1	0.06	5.0	15	75	335	260	-	1
202 STORAGE	646	1	0.06	5.0	45	-	-	-	80	1

NOTES:
1. NEW YORK STATE MECHANICAL CODE.

NATURAL VENTILATION SCHEDULE

SPACE DETAILS			DESIGN			
ROOM	AREA (SF)	4% FLOOR AREA (SF)	WINDOW FREE AREA (SF)	DOOR AREA (SF)	TOTAL OPENABLE AREA (SF)	NOTES
100 ARCADE AREA	3783	151	-	596	596	1,2

NOTES:
1. NEW YORK STATE MECHANICAL CODE.
2. NATURAL VENTILATION OF AN OCCUPIED SPACE SHALL BE THROUGH WINDOWS, DOORS, LOUVERS, AND OTHER OPENINGS TO THE OUTDOORS. THE MINIMUM OPENABLE AREA TO THE OUTDOORS SHALL BE 4 PERCENT OF THE FLOOR AREA BEING VENTILATED.

TABLE 1: ENERGY CODE ANALYSIS TABLE FOR MECHANICAL SYSTEMS

(PER 2020 NYS ENERGY CODE)

ITEM DESCRIPTION	UNIT TAG	EQUIPMENT TYPE	PROPOSED VALUE	MINIMUM EFFECIENCY	CODE PRECRIBED VALUE AND CITATION	CITATION	SUPPORTING DOCUMENTATION
HVAC EQUIPMENT PERFORMANCE	PTAC-1	PACAKAGE TERMINAL UNIT	EER = 12.0	EER = 11.9	MINIMUM EFFICIENCY REQUIREMENTS: ELECTRICALLY OPERATED UNITARY AIR CONDITIONERS AND CONDENSING UNITS THROUGH THE WALL < 30,000 Btu/hb	C403.2.3(1)	MECHANICAL SCHEDULES
HVAC SYSTEM CONTROLS	ALL HEATING COOLING EQUIPMENT	THERMOSTATIC CONTROLS	DIGITAL THERMOSTATS	-	THERMOSTATIC CONTROLS FOR HVAC SYSTEM	C403.2.6	MECHANICAL SCHEDULES AND PLANS
SHUTOFF DAMPERS			GRAVITY/BACKDRAFT DAMPERS PROVIDED IN LIEU OF MOTORIZED DAMPER MOTORIZED DAMPERS PER EXCEPTIONS 1 AND 3	-	BACDRAFT DAMPER INSTALLED AT EXHAUST OPENINGS	C403.7.7	MECHANICAL SCHEDULES AND PLANS
DUCT LEAKAGE			SMACNA HVAC DUCT LEAKAGE TEST	-	SMACNA HVAC DUCT LEAKAGE TEST	PER C403	MECHANICAL DWGS. & SPECS

TABLE 2: ENERGY CODE COMPLIANCE INSPECTIONS FOR MECHANICAL SYSTEMS

(IIB - MECHANICAL AND SERVICE WATER HEATING INSPECTIONS)

	INSPECTION TEST	FREQUENCY	REFERENCE STANDARDS	INSPECTION DESCRIPTION	ECC CITATION
IIB2	SHUT-OFF DAMPERS	AS REQUIRED DURING INSTALLATION	APPROVED CONSTRUCTION DOCUMENTS	DAMPERS FOR STAIR AND ELEVATOR SHAFT VENTS AND OTHER OUTDOOR AIR INTAKES AND EXHAUST OPENINGS INTEGRAL TO THE BUILDING ENVELOPE SHALL BE VISUALLY INSPECTED TO VERIFY THAT SUCH DAMPERS, EXCEPT WHERE PERMITTED TO BE GRAVITY DAMPERS, COMPLY WITH APPROVED CONSTRUCTION DRAWINGS. MANUFACTURER'S LITERATURE SHALL BE REVIEWED TO VERIFY THAT THE PRODUCT HAS BEEN TESTED AND FOUND TO MEET THE STANDARD.	NYSECC C403.2.4.4, OR ASHRAE 90.1-6.4.3.4
IIB3	HVAC AND SERVICE WATER HEATING EQUIPMENT	PRIOR TO FINAL MECHANICAL AND CONSTRUCTION INSPECTION	APPROVED CONSTRUCTION DOCUMENTS	EQUIPMENT SIZING, EFFICIENCIES AND OTHER PERFORMANCE FACTORS OF ALL MAJOR EQUIPMENT UNITS, AS DETERMINED BY THE APPLICANT OF RECORD, AND NO LESS THAN 15% OF MINOR EQUIPMENT UNITS, SHALL BE VERIFIED BY VISUAL INSPECTION AND, WHERE NECESSARY, REVIEW OF MANUFACTURER'S DATA. POOL HEATERS AND COVERS SHALL BE VERIFIED BY VISUAL INSPECTION	NYSECC C403.2, C404.2, C404.7, C406.2
IIB4	HVAC AND SERVICE WATER HEATING SYSTEM CONTROLS	AFTER INSTALLATION AND PRIOR TO FINAL ELECTRICAL AND CONSTRUCTION INSPECTION, EXCEPT THAT FOR CONTROLS WITH SEASONALLY DEPENDENT FUNCTIONALITY, SUCH TESTING SHALL BE PERFORMED BEFORE SIGN-OFF FOR ISSUANCE OF A FINAL CERTIFICATE OF OCCUPANCY	APPROVED CONSTRUCTION DOCUMENTS INCLUDING CONTROL SYSTEM NARRATIVES	NO LESS THAN 20% OF EACH TYPE OF REQUIRED CONTROLS AND ECONOMIZERS SHALL BE VERIFIED BY VISUAL INSPECTION AND TESTED FOR FUNCTIONALITY AND PROPER OPERATION. SUCH CONTROLS SHALL INCLUDE, BUT ARE NOT LIMITED TO, THERMOSTATIC AND ECONOMIZER CONTROLS	NYSECC C403.2.4, C403.2.5.1, C403.2.11, C403.3, C403.4, C404.3, C404.6, C404.7

CONSULTANT INFORMATION
LiRo Engineers, Inc.
A LiRo Group Company
Syosset, N.Y. 516-214-8157[T]

CONSULTANT SEAL
STATE OF NEW YORK
FRANK F. ULISSE
No. 090111-1
LICENSED PROFESSIONAL ENGINEER

REVISION NUMBER | DATE | MADE BY | APP'D BY | REVISION

RECORD DRAWING CERTIFICATION
☐ AS BUILT – CHANGES AS NOTED ☐ AS BUILT – NO CHANGES

CONTRACTOR
NAME
SIGNATURE
TITLE DATE

PROJECT COORDINATOR
NAME
SIGNATURE
TITLE DATE

WESTCHESTER COUNTY, NEW YORK
DEPARTMENT OF PUBLIC WORKS AND TRANSPORTATION
DIVISION OF ENGINEERING

INFRASTRUCTURE REHABILITATION - PHASE 3
PLAYLAND PARK, RYE, NEW YORK
SOUTHEAST ARCADE
MECHANICAL NOTES, SYMBOLS & LEGENDS

CONTRACT NUMBER: 22-523
SHEET NUMBER: **SA-M-01**
DWG NO.: 633 of 664
SCALE: **AS INDICATED**
DATE: 08/23/2022
DPW FILE NUMBER: **1-118-M-1382-0**
REV. NO. 0

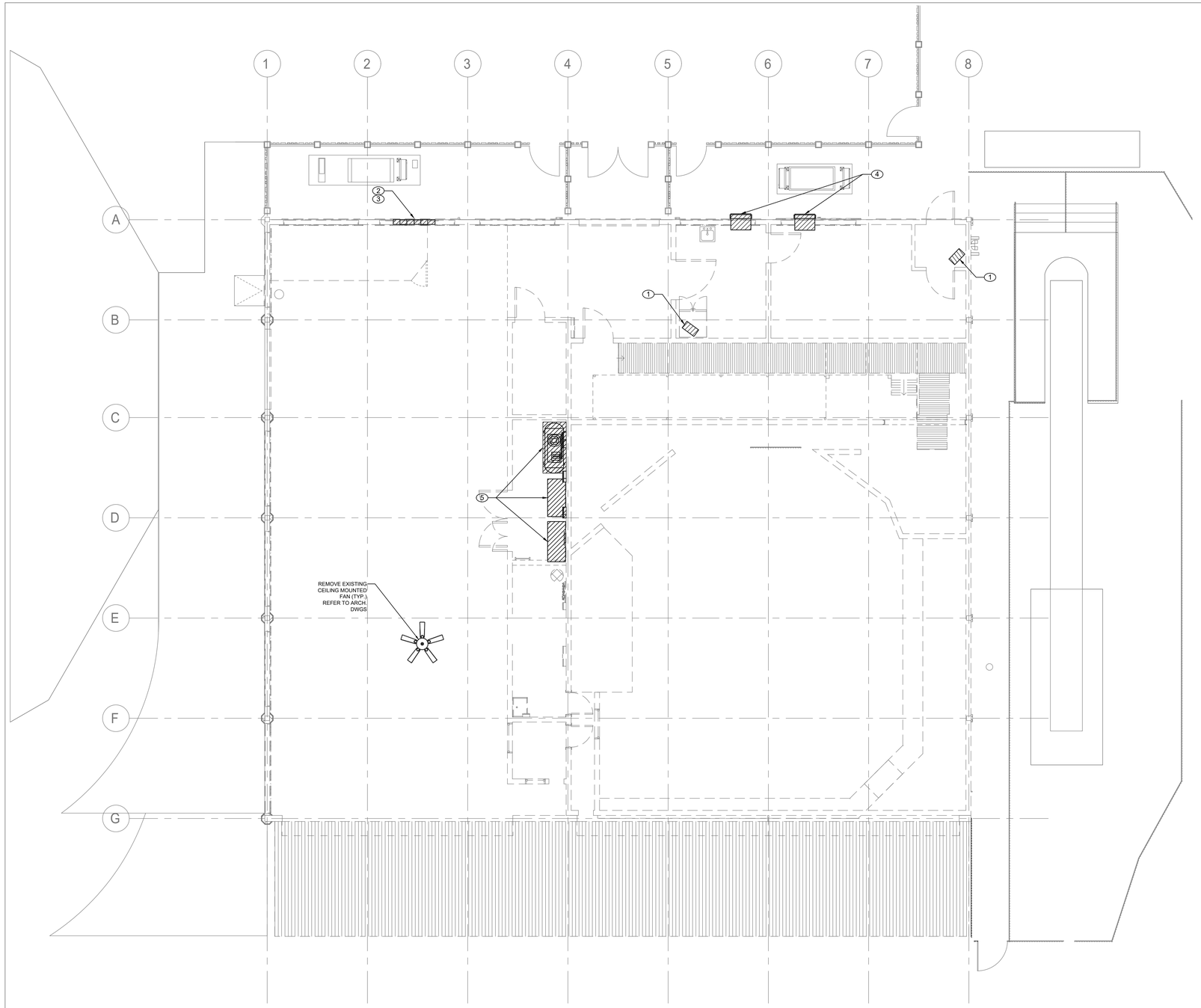

MECHANICAL FIRST FLOOR DEMOLITION PLAN

SCALE: 3/16" = 1'-0"

GENERAL NOTES:

1. RETURN REMOVED EXISTING EQUIPMENT TO OWNER IF IT IS IN WORKING CONDITION.
2. CONTRACTOR TO COORDINATE WITH FACILITY WHEN WORKING AROUND OR ABOVE THE RIDE COMPONENTS, AND PROVIDE ALL NECESSARY MEASURES TO PROTECT THESE COMPONENTS PER THE REQUIREMENTS OF THE FACILITY.

MECHANICAL DEMOLITION NOTES:

1. DEMOLISH EXISTING ELECTRIC UNIT HEATERS AND ASSOCIATED SUPPORTS, WIRING AND ACCESSORIES. COORDINATE REMOVAL OF ELECTRICAL POWER AND WIRING WITH ELECTRICAL CONTRACTOR.
2. DEMOLISH EXISTING WALL MOUNTED PROPELLER FAN. COORDINATE WITH GC TO SEAL EXISTING WALL PENETRATION. COORDINATE REMOVAL OF ELECTRICAL POWER AND WIRING WITH ELECTRICAL CONTRACTOR.
3. DEMOLISH EXISTING LOUVER. COORDINATE WITH GC TO SEAL EXISTING WALL PENETRATION.
4. REMOVE EXISTING WINDOW AC UNIT. IF NO LONGER IN WORKING CONDITION, DISPOSAL SHALL BE IN ACCORDANCE WITH EPA REQUIREMENTS.
5. DEMOLISH EXISTING PNEUMATIC CONTROLS EQUIPMENT, WIRING AND ACCESSORIES AND PNEUMATIC DISTRIBUTION PIPING. COORDINATE REMOVAL OF ELECTRICAL PRESENT AND WIRING WITH ELECTRICAL CONTRACTOR.

CONSULTANT INFORMATION

LiRo Engineers, Inc.
A LiRo Group Company
Syosset, N.Y. 516-214-8157[T]

CONSULTANT SEAL

STATE OF NEW YORK · FRANK F. ULISSE · No. 090111-1 · LICENSED PROFESSIONAL ENGINEER

REVISION NUMBER	DATE	MADE BY	APP'D BY	REVISION

RECORD DRAWING CERTIFICATION

☐ AS BUILT – CHANGES AS NOTED ☐ AS BUILT – NO CHANGES

CONTRACTOR: NAME / SIGNATURE / TITLE / DATE

PROJECT COORDINATOR: NAME / SIGNATURE / TITLE / DATE

WESTCHESTER COUNTY, NEW YORK
DEPARTMENT OF PUBLIC WORKS AND TRANSPORTATION
DIVISION OF ENGINEERING

INFRASTRUCTURE REHABILITATION - PHASE 3
PLAYLAND PARK, RYE, NEW YORK
SOUTHEAST ARCADE
MECHANICAL FIRST FLOOR DEMOLITION PLAN

CONTRACT NUMBER	22-523
SHEET NUMBER	SA-M-11
DWG. NO.:	634 of 664
SCALE:	AS INDICATED
DATE:	08/23/2022
DPW FILE NUMBER	1-118-M-1383-0
REV. NO.:	0

GENERAL NOTES:

1. RETURN REMOVED EXISTING EQUIPMENT TO OWNER IF IT IS IN WORKING CONDITION.
2. CONTRACTOR TO COORDINATE WITH FACILITY WHEN WORKING AROUND OR ABOVE THE RIDE COMPONENTS, AND PROVIDE ALL NECESSARY MEASURES TO PROTECT THESE COMPONENTS PER THE REQUIREMENTS OF THE FACILITY.

MECHANICAL DEMOLITION NOTES:

(1) DEMOLISH EXISTING WALL MOUNTED PROPELLER FAN. COORDINATE REMOVAL OF ELECTRICAL POWER AND WIRING WITH ELECTRICAL CONTRACTOR.

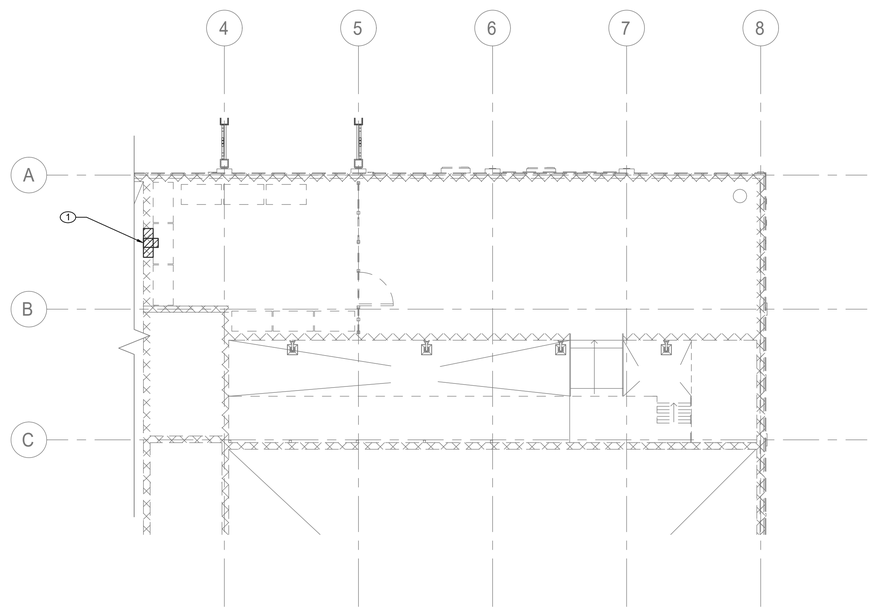

MECHANICAL SECOND FLOOR DEMOLITION PLAN

SCALE: 3/16" = 1'-0"

CONSULTANT INFORMATION

LiRo Engineers, Inc.
A LiRo Group Company
Syosset, N.Y. 516-214-8157[T]

CONSULTANT SEAL

STATE OF NEW YORK · FRANK F. ULISSE · No. 090111 · LICENSED PROFESSIONAL ENGINEER

REVISION NUMBER	DATE	MADE BY	APP'D BY	REVISION

RECORD DRAWING CERTIFICATION

☐ AS BUILT – CHANGES AS NOTED ☐ AS BUILT – NO CHANGES

CONTRACTOR
NAME
SIGNATURE
TITLE DATE

PROJECT COORDINATOR
NAME
SIGNATURE
TITLE DATE

WESTCHESTER COUNTY, NEW YORK
DEPARTMENT OF PUBLIC WORKS AND TRANSPORTATION
DIVISION OF ENGINEERING

INFRASTRUCTURE REHABILITATION - PHASE 3
PLAYLAND PARK, RYE, NEW YORK
SOUTHEAST ARCADE
MECHANICAL SECOND FLOOR DEMOLITION PLAN

CONTRACT NUMBER	22-523
SHEET NUMBER	SA-M-12
DWG NO.:	635 of 664
SCALE:	AS INDICATED
DATE:	08/23/2022
DPW FILE NUMBER	1-118-M-1384-0
REV. NO.	0

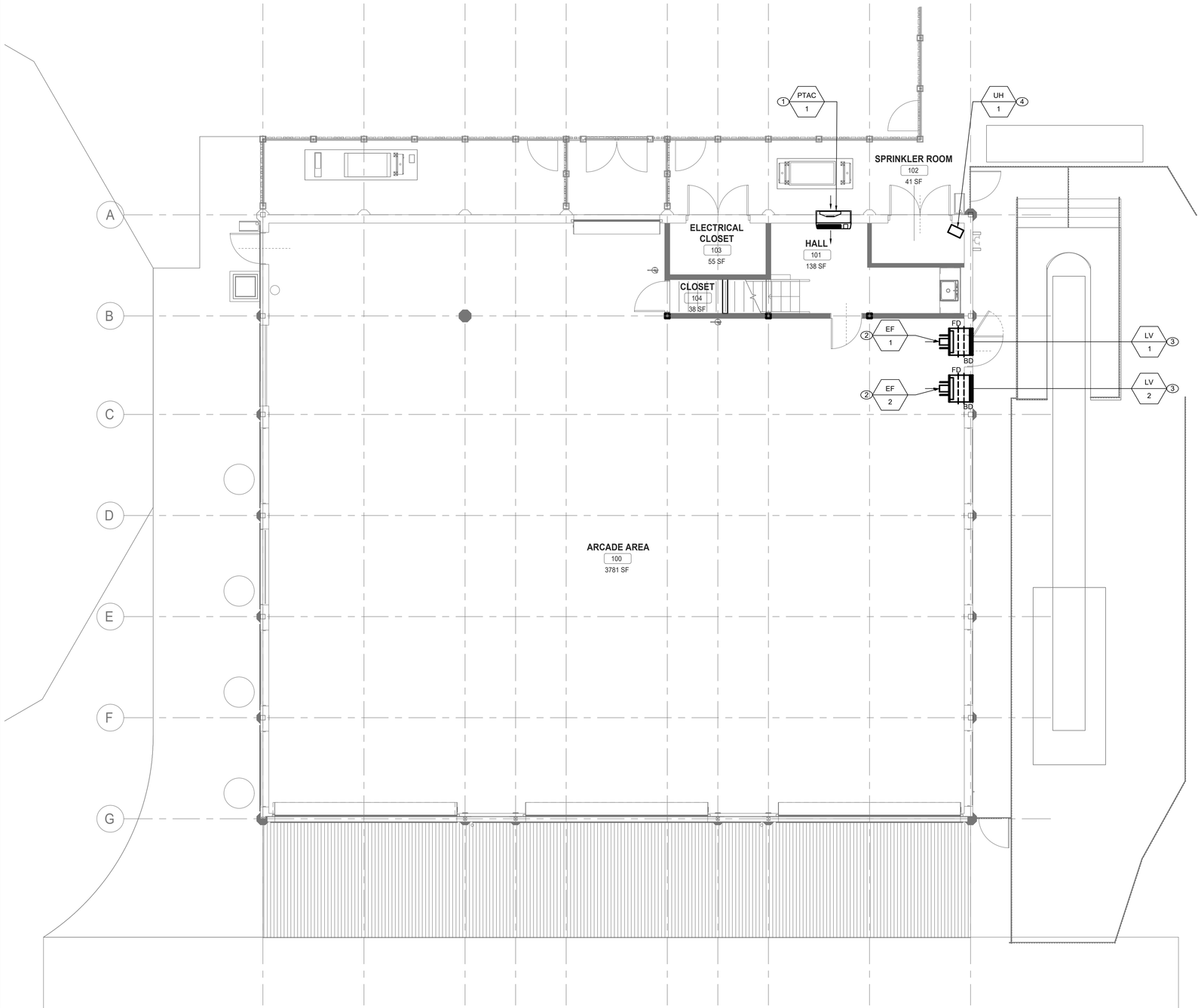

MECHANICAL FIRST FLOOR CONSTRUCTION PLAN

SCALE: 3/16" = 1'-0"

GENERAL NOTES:

1. CONTRACTOR TO COORDINATE WITH FACILITY WHEN WORKING AROUND OR ABOVE THE RIDE COMPONENTS, AND PROVIDE ALL NECESSARY MEASURES TO PROTECT THESE COMPONENTS PER THE REQUIREMENTS OF THE FACILITY.
2. UPON COMPLETION, SYSTEM SHALL BE TESTED FOR PROPER OPERATION.

MECHANICAL CONSTRUCTION NOTES:

1. PROVIDE NEW PACKAGED TERMINAL AIR CONDITIONER UNIT. COORDINATE ELECTRICAL POWER AND WIRING WITH ELECTRICAL CONTRACTOR.
2. PROVIDE NEW EXHAUST FAN AS SCHEDULED. INSTALL EF-1 AND EF-2 AT 11'0" AFF TO CENTER. COORDINATE ELECTRICAL POWER AND WIRING WITH ELECTRICAL CONTRACTOR.
3. PROVIDE NEW RAIN RESISTANT LOUVER AS SCHEDULED. ALIGN CENTER OF LOUVER WITH CENTER OF EXHAUST FAN. REFER TO DETAIL ON SA-M-81.
4. PROVIDE NEW ELECTRIC WALL MOUNTED UNIT HEATER. COORDINATE INSTALL HEIGHT IN FIELD.

CONSULTANT INFORMATION

LiRo Engineers, Inc.
A LiRo Group Company
Syosset, N.Y. 516-214-8157[T]

CONSULTANT SEAL

STATE OF NEW YORK · FRANK F. ULISSE · No. 090111-1 · LICENSED PROFESSIONAL ENGINEER

REVISION NUMBER	DATE	MADE BY	APP'D BY	REVISION

RECORD DRAWING CERTIFICATION

☐ AS BUILT – CHANGES AS NOTED ☐ AS BUILT – NO CHANGES

CONTRACTOR
NAME
SIGNATURE
TITLE DATE

PROJECT COORDINATOR
NAME
SIGNATURE
TITLE DATE

WESTCHESTER COUNTY, NEW YORK
DEPARTMENT OF PUBLIC WORKS AND TRANSPORTATION
DIVISION OF ENGINEERING

INFRASTRUCTURE REHABILITATION - PHASE 3
PLAYLAND PARK, RYE, NEW YORK
SOUTHEAST ARCADE
MECHANICAL FIRST FLOOR CONSTRUCTION PLAN

CONTRACT NUMBER	22-523
SHEET NUMBER	SA-M-21
DWG NO.:	636 of 664
SCALE:	AS INDICATED
DATE:	08/23/2022
DPW FILE NUMBER	1-118-M-1385-0
REV. NO.	0

GENERAL NOTES:

1. CONTRACTOR TO COORDINATE WITH FACILITY WHEN WORKING AROUND OR ABOVE THE RIDE COMPONENTS, AND PROVIDE ALL NECESSARY MEASURES TO PROTECT THESE COMPONENTS PER THE REQUIREMENTS OF THE FACILITY.
2. UPON COMPLETION, SYSTEM SHALL BE TESTED FOR PROPER OPERATION.

MECHANICAL CONSTRUCTION NOTES:

(1) PROVIDE NEW EXHAUST FAN AS SCHEDULED. COORDINATE ELECTRICAL POWER AND WIRING WITH ELECTRICAL CONTRACTOR.

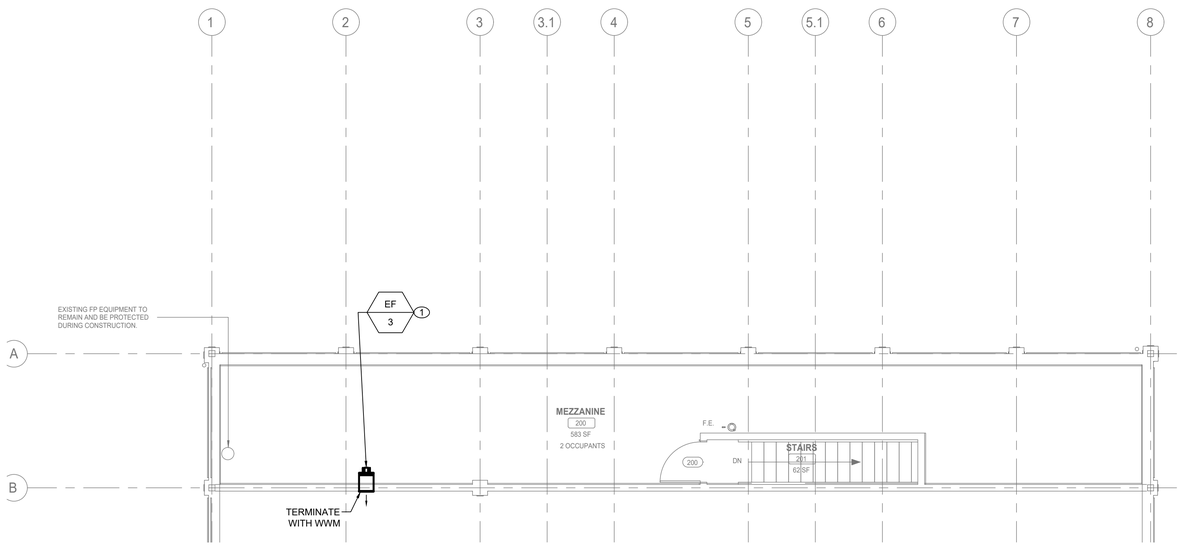

MECHANICAL SECOND FLOOR CONSTRUCTION PLAN

SCALE: 3/16" = 1'-0"

CONSULTANT INFORMATION

LiRo Engineers, Inc.
A LiRo Group Company
Syosset, N.Y. 516-214-8157[T]

CONSULTANT SEAL

STATE OF NEW YORK · FRANK F. DEJESUS · No. 090111-1 · LICENSED PROFESSIONAL ENGINEER

REVISION NUMBER	DATE	MADE BY	APP'D BY	REVISION

RECORD DRAWING CERTIFICATION

☐ AS BUILT – CHANGES AS NOTED ☐ AS BUILT – NO CHANGES

CONTRACTOR: NAME ____ SIGNATURE ____ TITLE ____ DATE ____

PROJECT COORDINATOR: NAME ____ SIGNATURE ____ TITLE ____ DATE ____

WESTCHESTER COUNTY, NEW YORK
DEPARTMENT OF PUBLIC WORKS AND TRANSPORTATION
DIVISION OF ENGINEERING

INFRASTRUCTURE REHABILITATION - PHASE 3
PLAYLAND PARK, RYE, NEW YORK
SOUTHEAST ARCADE
MECHANICAL SECOND FLOOR CONSTRUCTION PLAN

CONTRACT NUMBER	22-523
SHEET NUMBER	SA-M-22
DWG. NO.:	637 of 664
SCALE:	AS INDICATED
DATE:	08/23/2022
DPW FILE NUMBER	1-118-M-1386-0
REV. NO.	0

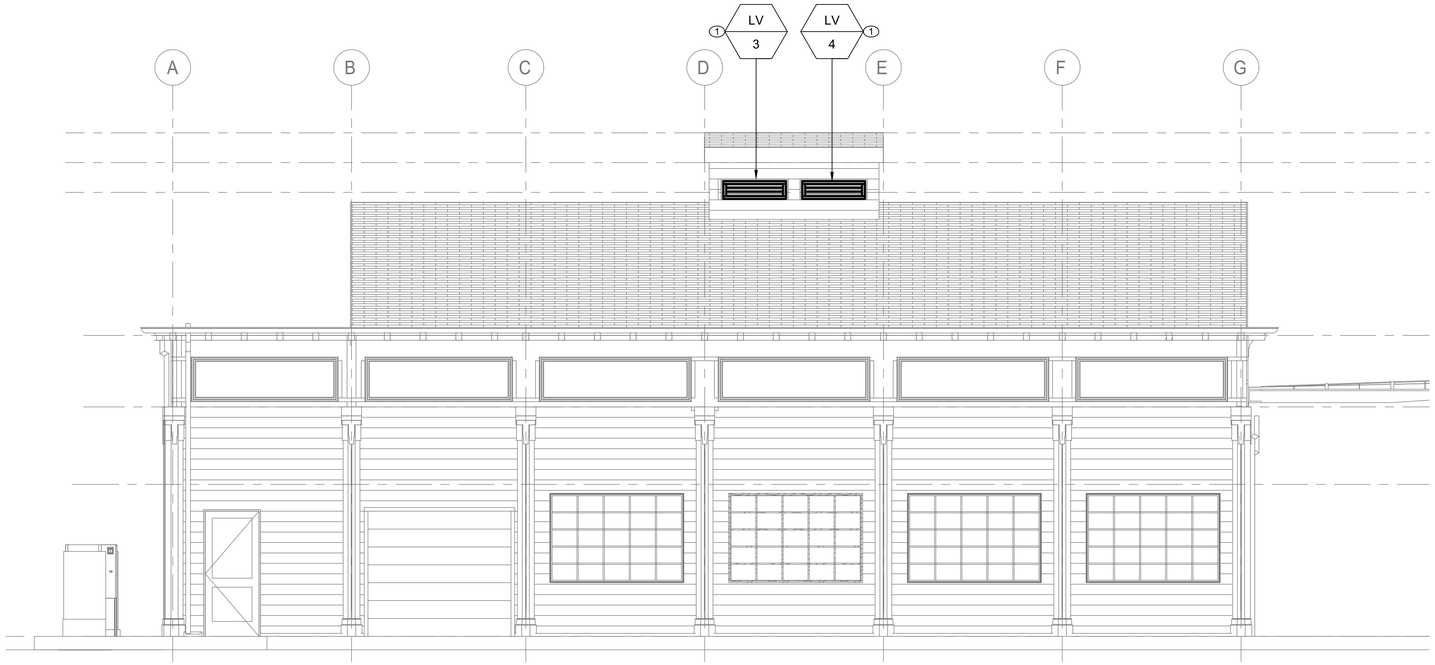

1 **MECHANICAL BUILDING ELEVATION - NORTH**
1/4" = 1'-0"

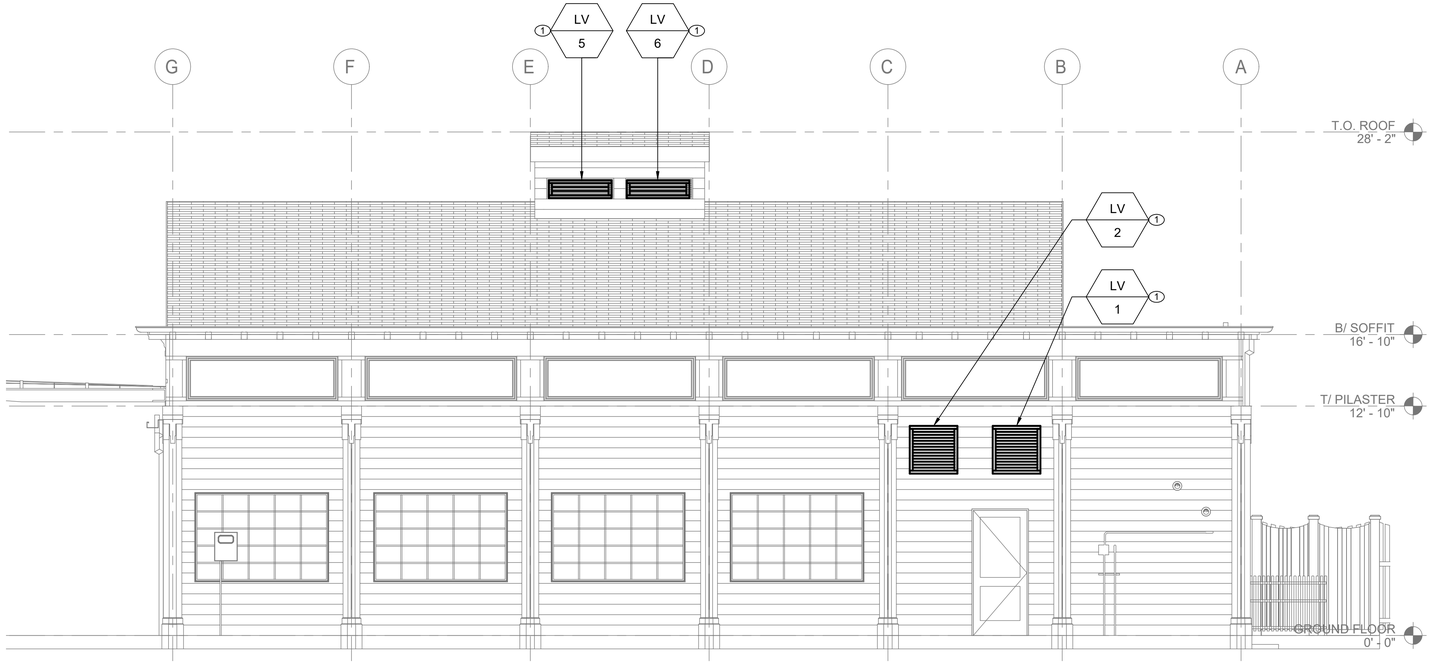

2 **MECHANICAL BUILDING ELEVATION - SOUTH**
1/4" = 1'-0"

GENERAL NOTES:

1. CONTRACTOR TO COORDINATE WITH FACILITY WHEN WORKING AROUND OR ABOVE THE RIDE COMPONENTS, AND PROVIDE ALL NECESSARY MEASURES TO PROTECT THESE COMPONENTS PER THE REQUIREMENTS OF THE FACILITY.
2. UPON COMPLETION, SYSTEM SHALL BE TESTED FOR PROPER OPERATION.

MECHANICAL CONSTRUCTION NOTES:

1. PROVIDE NEW RAIN RESISTANT LOUVER AS SCHEDULED. REFER TO DETAIL ON SA-M-81.

CONSULTANT INFORMATION

LiRo Engineers, Inc.
A LiRo Group Company
Syosset, N.Y. 516-214-8157[T]

CONSULTANT SEAL

STATE OF NEW YORK · FRANK F. ULUSSE · No. 090111-1 · LICENSED PROFESSIONAL ENGINEER

REVISION NUMBER	DATE	MADE BY	APP'D BY	REVISION

RECORD DRAWING CERTIFICATION

☐ AS BUILT – CHANGES AS NOTED ☐ AS BUILT – NO CHANGES

CONTRACTOR
NAME
SIGNATURE
TITLE DATE

PROJECT COORDINATOR
NAME
SIGNATURE
TITLE DATE

WESTCHESTER COUNTY, NEW YORK
DEPARTMENT OF PUBLIC WORKS AND TRANSPORTATION
DIVISION OF ENGINEERING

INFRASTRUCTURE REHABILITATION - PHASE 3
PLAYLAND PARK, RYE, NEW YORK
SOUTHEAST ARCADE
MECHANICAL EXTERIOR BUILDING ELEVATIONS

CONTRACT NUMBER	22-523
SHEET NUMBER	SA-M-23
DWG NO.:	638 of 664
SCALE:	AS INDICATED
DATE:	08/23/2022
DPW FILE NUMBER	1-118-M-1387-0
REV. NO.	0

PACKAGE TERMINAL AIR CONDITIONER UNIT SCHEDULE

TAG	MANUFACTURER	MODEL	TYPE	CONFIGURATION	SERVICE	LOCATION (FLOOR)	SUPPLY (CFM)	VENT (CFM)	ESP (IN. WG.)	COOLING COIL		HEATING COIL	ELECTRICAL			NOTES
										TOTAL LOAD (BTU/HR)	EAT DB/WB	ELEC. HEAT (Kw)	MOTOR FLA	NOMINAL HP	V.PH.HZ	
PTAC-1	FRIEDRICH	PZE07K3SB	THRU-WALL	DX/ELEC	101 STAFF ROOM	1ST FL	335	75	-	6800	78/61	3.6	2.7	0.07	208.1.60	1,2

NOTES:

1. PROVIDE FACTORY INTEGRATED CONTROLLER WITH EACH UNIT.
2. PROVIDE WALL SLEEVE BY MANUFACTURER.

FAN SCHEDULE

TAG	MANUFACTURER	MODEL	LOCATION	SERVICE	TYPE	DRIVE	AIR FLOW (CFM)	TSP (IN. WG)	ELECTRICAL				OPERATING WEIGHT (±LBS)	DIMENSIONS DxH (IN)	NOTES
									HP	BHP	RPM	V-PH-HZ			
EF-1	GREENHECK	AER-E24C-315-VG	100 ARCADE AREA	100 ARCADE AREA	AXIAL	DIRECT	3500	0.21	0.50	0.25	1127	115-1-60	68	32X32	1-5
EF-2	GREENHECK	AER-E24C-315-VG	100 ARCADE AREA	100 ARCADE AREA	AXIAL	DIRECT	3500	0.21	0.50	0.25	1127	115-1-60	68	32X32	1-5
EF-3	GREENHECK	SE1-8-440-VG	202 STORAGE	202 STORAGE	AXIAL	DIRECT	80	0.08	0.06	0.01	839	115-1-60	16	13X13	1-5

NOTES:

1. PROVIDE ALL CONTACTS, RELAYS, AND DEVICES NECESSARY FOR BMS CONTROL OF FANS PER SEQUENCE OF OPERATIONS.
2. PROVIDE WALL MOUNT SWITCH FOR EF-1, EF-2 AND EF-3, REFER TO CONTROLS.
3. PROVIDE THERMAL OVERLOAD FOR ALL SINGLE PHASE MOTORS.
4. PROVIDE SALT WATER RESISTANT HI-PRO POLYESTER COATING FOR ALL FANS.
5. FAN SHALL BE FURNISHED WITH NON FUSED DISCONNECT.

ELECTRIC UNIT HEATER SCHEDULE

TAG	MANUFACTURER	MODEL	SERVICE	TYPE	KW	AMPS	V-PH-HZ	NOTES
UH-1	TRANE	UHEC-031A0C0	102 SPRINKLER ROOM	WALL HUNG	3.3	15.9	208-1-60	1,2

NOTES:

1. PROVIDE UNIT MOUNTED THERMOSTATS.
2. PROVIDE WALL MOUNTING BRACKET.

LOUVER SCHEDULE

TAG	MANUFACTURER	MODEL	SERVICE	LOCATION	MATERIAL	FINISH TYPE	WIDTH (INCH)	HEIGHT (INCH)	FREE AIR VELOCITY (FPM)	PRESSURE DROP (IN. WG)	MINIMUM FREE AREA (SQUARE FEET)	NOTES
LV-1	GREENHECK	ESD-635	EXHAUST	100 ARCADE AREA	ALUMINUM	BAKED ENAMEL	32	32	954	0.13	3.67	1
LV-2	GREENHECK	ESD-635	EXHAUST	100 ARCADE AREA	ALUMINUM	BAKED ENAMEL	32	32	954	0.13	3.67	1
LV-3	GREENHECK	ESD-435	EXHAUST	ROOF MONITOR	ALUMINUM	BAKED ENAMEL	42	12	-	-	1.26	2
LV-4	GREENHECK	ESD-435	EXHAUST	ROOF MONITOR	ALUMINUM	BAKED ENAMEL	42	12	-	-	1.26	2
LV-5	GREENHECK	ESD-435	EXHAUST	ROOF MONITOR	ALUMINUM	BAKED ENAMEL	42	12	-	-	1.26	2
LV-6	GREENHECK	ESD-435	EXHAUST	ROOF MONITOR	ALUMINUM	BAKED ENAMEL	42	12	-	-	1.26	2

NOTES:

1. PROVIDE WITH ALUMINUM BIRD SCREEN AND BACKDRAFT DAMPERS.
2. PROVIDE WITH ALUMINUM BIRD SCREEN ONLY.

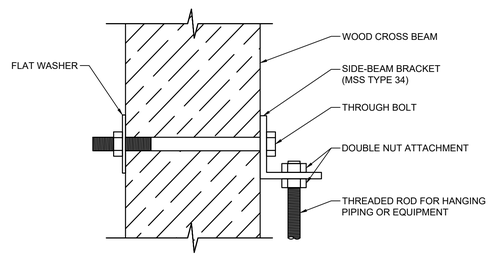

1 / M-81 MECHANICAL ANCHORING DETAIL
SCALE: NOT TO SCALE

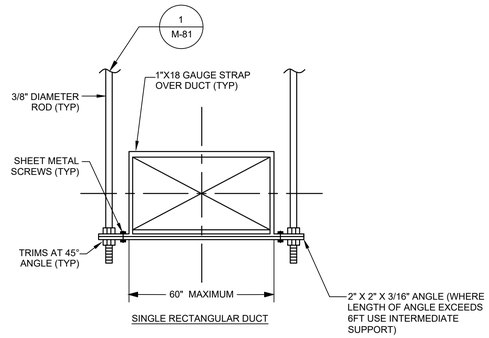

2 / M-81 MECHANICAL DUCT HANGER DETAIL
SCALE: NOT TO SCALE

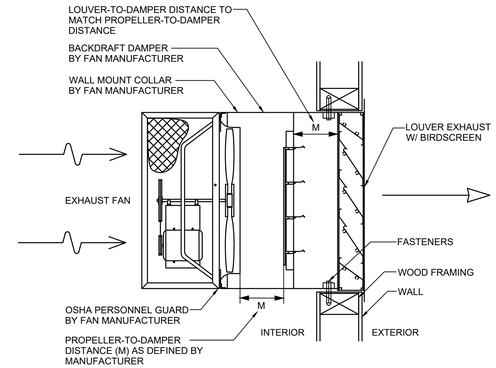

3 / M-81 PROPELLER FAN DETAIL
SCALE: NOT TO SCALE

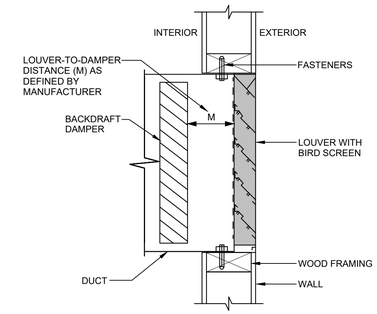

4 / M-81 MECHANICAL LOUVER
SCALE: NOT TO SCALE

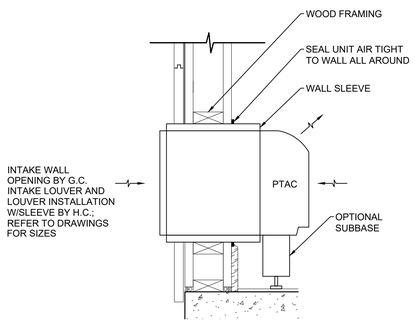

5 / M-81 FLOOR MOUNTED PTAC
SCALE: NOT TO SCALE

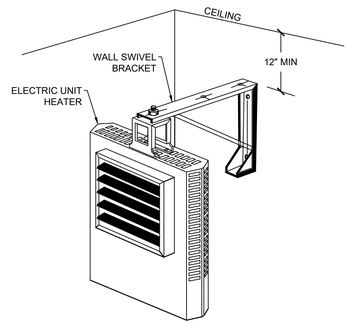

6 / M-81 MECHANICAL WALL MOUNTED ELECTRIC UNIT HEATER DETAIL
SCALE: NOT TO SCALE

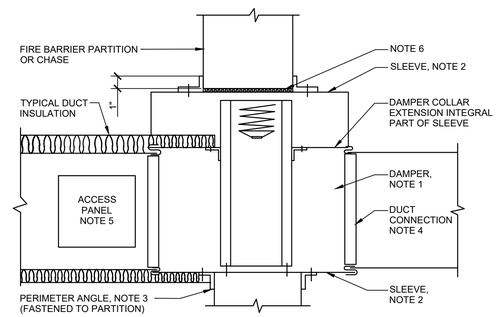

NOTE:

1. A VERTICAL DAMPER IS SHOWN. HORIZONTAL DAMPER INSTALLATION, IS SIMILAR. FOLLOW DAMPER MANUFACTURER'S INSTRUCTIONS, INCLUDING FASTENER OPTIONS AND GAGES FOR SLEEVE AND PERIMETER ANGLES. FIRE DAMPERS MUST BE INSTALLED IN THE PARTITION OR FLOOR AND NOT OUTSIDE THE PENETRATION.
2. GALVANIZED SLEEVE: GAGE NOT LESS THAN CONNECTING DUCT. FASTEN SLEEVE TO DAMPER FRAME AND TO PERIMETER ANGLES.
3. PERIMETER ANGLES: GALVANIZED STEEL, NOT LESS THAN 1 1/2"x1 1/2", 14 GAGE, TO PROVIDE 1" MINIMUM OVERLAP OF OPENING ON ALL 4 SIDES.
4. BREAKAWAY DUCT CONNECTION: CONTRACTOR'S OPTION OF TYPES SHOWN IN SMACNA.
5. ACCESS PANELS: SIZE AND LOCATION TO PERMIT SERVICING THE FUSIBLE LINK OR LINKS.
6. PROVIDE 1/4" TO 1/2" CLEARANCE ON HEIGHT AND WIDTH. FILL OPEN SPACE WITH ROCK WOOL FIRESTOP FIBER.
7. ALL DUCT WORK RISERS WHICH ARE RUN EXPOSED, SUCH AS THRU ATTIC FLOORS AND MECHANICAL ROOM FLOORS, SHALL BE PROVIDED WITH 3" HIGH CONCRETE CURB AROUND OPENING FOR DUCT.
8. INSTALL FIRE DAMPERS I ACCORDANCE WITH UL 555.

7 / M-81 FIRE DAMPER INSTALLATION
SCALE: NOT TO SCALE

CONSULTANT INFORMATION

LiRo Engineers, Inc.
A LiRo Group Company
Syosset, N.Y. 516-214-8157[T]

CONSULTANT SEAL

STATE OF NEW YORK · FRANK F. OLIVERI · No. 090111-1 · LICENSED PROFESSIONAL ENGINEER

REVISION NUMBER	DATE	MADE BY	APP'D BY	REVISION

RECORD DRAWING CERTIFICATION

☐ AS BUILT – CHANGES AS NOTED ☐ AS BUILT – NO CHANGES

CONTRACTOR: NAME ____ SIGNATURE ____ TITLE ____ DATE ____

PROJECT COORDINATOR: NAME ____ SIGNATURE ____ TITLE ____ DATE ____

WESTCHESTER COUNTY, NEW YORK
DEPARTMENT OF PUBLIC WORKS AND TRANSPORTATION
DIVISION OF ENGINEERING

INFRASTRUCTURE REHABILITATION - PHASE 3
PLAYLAND PARK, RYE, NEW YORK
SOUTHEAST ARCADE
MECHANICAL DETAILS

CONTRACT NUMBER	22-523
SHEET NUMBER	SA-M-81
DWG NO.:	640 of 664
SCALE:	AS INDICATED
DATE:	08/23/2022
DPW FILE NUMBER	1-118-M-1389-0
REV. NO.	0

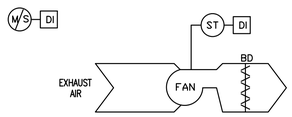

EXHAUST FAN - CONSTANT SPEED - SEQUENCE OF OPERATIONS:

GENERAL: EACH EXHAUST FAN CONSISTS OF FAN, BACKDRAFT DAMPER, AND EC MOTOR CONTROLLER

EXHAUST FAN TO BE LOCALLY CONTROLLED FROM SWITCH MOUNTED ADJACENT TO FAN.

1. OCCUPIED MODE:
   a. THE EXHAUST FAN SHALL RUN AT A CONSTANT VOLUME WHEN SWITCHED ON.
3. UNOCCUPIED MODE:
   a. THE EXHAUST FAN SHALL BE OFF WHEN SWITCHED OFF.

1 / M-91 **EXHAUST FAN - CONSTANT SPEED**
SCALE: NOT TO SCALE

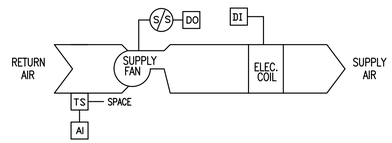

UNIT HEATER - ELECTRIC - SEQUENCE OF OPERATIONS:

1. ON DROP IN SPACE TEMPERATURE BELOW OCCUPIED HEATING SETPOINT, CYCLE THE FAN ON AND MODULATE (2 STAGE) ELECTRIC COIL TO MAINTAIN SPACE OCCUPIED SETPOINT, FAN SHALL HAVE DELAYED SHUT OFF AFTER VALVE CLOSES. USE 5 DEG. F (ADJUSTABLE) DEADBAND TO MINIMIZE SHORT CYCLING.

2 / M-91 **UNIT HEATER - ELECTRIC**
SCALE: NOT TO SCALE

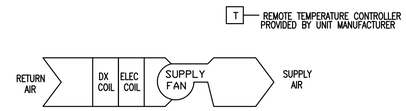

PACKAGED TERMINAL AIR CONDITIONER - SEQUENCE OF OPERATIONS:

1. UNITS SHALL BE CONTROLLED WITH THE UNIT PROVIDED CONTROL AND THERMOSTAT.
2. MONITOR ROOM TEMPERATURE BY A SPACE TEMPERATURE SENSOR.

3 / M-91 **PTAC SYSTEM DX & ELECTRIC HEAT**
SCALE: NOT TO SCALE

CONSULTANT INFORMATION

LiRo Engineers, Inc.
A LiRo Group Company
Syosset, N.Y. 516-214-8157[T]

CONSULTANT SEAL

STATE OF NEW YORK · FRANK F. ULISSE · No. 090111-1 · LICENSED PROFESSIONAL ENGINEER

REVISION NUMBER	DATE	MADE BY	APP'D BY	REVISION

RECORD DRAWING CERTIFICATION

☐ AS BUILT – CHANGES AS NOTED ☐ AS BUILT – NO CHANGES

CONTRACTOR
NAME
SIGNATURE
TITLE DATE

PROJECT COORDINATOR
NAME
SIGNATURE
TITLE DATE

WESTCHESTER COUNTY, NEW YORK
DEPARTMENT OF PUBLIC WORKS AND TRANSPORTATION
DIVISION OF ENGINEERING

INFRASTRUCTURE REHABILITATION - PHASE 3
PLAYLAND PARK, RYE, NEW YORK
SOUTHEAST ARCADE
MECHANICAL CONTROLS

CONTRACT NUMBER: 22-523
SHEET NUMBER: SA-M-91
DWG NO.: 641 of 664
SCALE: AS INDICATED
DATE: 08/23/2022
DPW FILE NUMBER: 1-118-M-1390-0
REV. NO.: 0

PANELBOARD EXISTING - GAME ROOM PANEL — **LOCATION:** SE ARCADE - REAR GAME ROOM

1 **NEMA RATING** — 3 **POLES** — **MOUNTING:** SURFACE

125 **AMP BUS RATING** — 100 **AMP MAIN BREAKER** — 22 **KA SHORT CIRCUIT RATING**

208Y/120 **VOLTS** — 3 **PHASE** — 4 **WIRE** — **ELECTRONIC GRADE:** NO

CIRCUIT NO.	DESCRIPTION	LOAD KVA PHASE A	LOAD KVA PHASE B	LOAD KVA PHASE C	BREAKER AMPS / POLES	NOTES	CIRCUIT NO.	DESCRIPTION	LOAD KVA PHASE A	LOAD KVA PHASE B	LOAD KVA PHASE C	BREAKER AMPS / POLES	NOTES
1	OUTLETS ABOVE DREAM AREA				15/1		2	CAROUSEL WALL OUTLETS ONLY				20/1	
3	INNER LIGHTS - FRONT				15/1		4	REAR DROP ISLAND & CAROUSEL				20/1	
5	INNER LIGHTS - REAR				15/1		6	DON ASSAWALL "A" OUTLETS				20/1	
7	OUTER LIGHTS - FRONT						8	OFFICE & LOUNGE INNER WALL				20/1	
9	OUTER LIGHTS - REAR						10	EXHAUST FANS				20/1	
11	REAR WALL GAMES - OUTLETS						12	REAR LEFT CORNER OUTLETS					
13	HOT WATER HEATER						14	OFFICE & LOUNGE OUTER WALL					
15	OFFICE LIGHTS - SPRINKLER RM. LIGHT				20/1		16	SPARE				20/1	
17	CEILING FANS						18	FRONT DROP LIGHTS					
19							20	EMERGENCY LIGHTS					
21	HONZANA MAIN COMPRESSORS						22	MAIN WAREHOUSE LIGHTS					
23							24						
	TOTAL PHASE KVA THIS SIDE	0	0	0				**TOTAL PHASE KVA THIS SIDE**	0	0	0		
								TOTAL KVA PER PHASE	0	0	0		
								TOTAL THREE PHASE KVA		0			

NOTES:
1.
2.
3.
4.

NOTES CONT.:
5.
6.
7.
8.

PANELBOARD EXISTING - OUTDOOR PANEL — **LOCATION:** OUTDOOR - EAST REAR CORNER OF BUILI

1 **NEMA RATING** — 3 **POLES** — **MOUNTING:** SURFACE

400 **AMP BUS RATING** — 225 **AMP MAIN BREAKER** — 42 **KA SHORT CIRCUIT RATING**

208Y/120 **VOLTS** — 3 **PHASE** — 4 **WIRE** — **ELECTRONIC GRADE :** NO

CIRCUIT NO.	DESCRIPTION	LOAD KVA PHASE A	LOAD KVA PHASE B	LOAD KVA PHASE C	BREAKER AMPS / POLES	NOTES	CIRCUIT NO.	DESCRIPTION	LOAD KVA PHASE A	LOAD KVA PHASE B	LOAD KVA PHASE C	BREAKER AMPS / POLES	NOTES
1							2						
3	CAROUSEL LIGHTS				20/3	1	4	~~SHOOTING GALLERY~~				60/3	
5							6						
7							8	SPARE				40/2	1
9	PICNIC SHELTER				100/3	1	10						
11							12	SPARE				20/1	1
13	SPARE				20/1	1	14	THUNDERBOLT				100/3	1
15	SPARE				20/1	1	16						
17	SPARE				20/1	1	18						
19							20	SWIPE CARD POWER - SKY SKATER / FAMILY				15/1	1
21	~~GAME ROOM PANEL~~				100/3		22	SKY SKATER				20/1	1
23							24	SKY SKATER				20/1	1
25	SPARE				20/1	1	26	SKY SKATER				100/3	1
27	~~LOCKER AREA~~				60/2	2	28						
29							30						
	TOTAL PHASE KVA THIS SIDE	0	0	0				**TOTAL PHASE KVA THIS SIDE**	0	0	0		
								TOTAL KVA PER PHASE	0	0	0		
								TOTAL THREE PHASE KVA		0			

NOTES:
1. NOT IN PROJECT SCOPE. BREAKERS TO REMAIN AND BE PROTECTED DURING CONSTRUCTION.
2. DISCONNECTED AND ROLLED UP // 10.03.2021
3.
4.

NOTES CONT.:
5.
6.
7.

NOTES:

1. FOR ADDITIONAL NOTES, ABBREVIATIONS AND SYMBOLS, SEE DRAWING GE–E–01.
2. EXISTING OUTDOOR TRANSFORMER AND PANEL SHALL REMAIN AND BE PROTECTED DURING CONSTRUCTION.

KEY NOTES:

1. EXISTING 480 DELTA, 208Y/120V, STEP–DOWN TRANSFORMER AND 208Y/120 VOLT, 400A POWER PANEL. LOCATED OUTSIDE THE REAR, NORTHEAST CORNER OF THE BUILDING.
2. DISCONNECT AND REMOVE ALL CONDUIT AND WIRE TO EXISTING BUILDING LOADS.
3. DISCONNECT AND REMOVE PANEL AND ASSOCIATED BRANCH CIRCUITS, BREAKERS, CONDUIT AND WIRE. ASSUME FOR BIDDING PURPOSES 2000' OF CONDUIT AND WIRE.

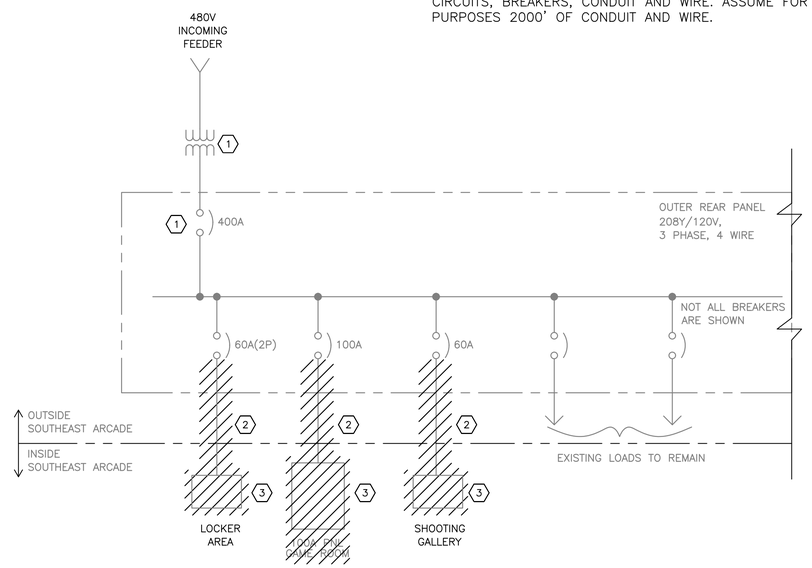

ONE LINE DIAGRAM – DEMOLITION
N.T.S.

Drawing Name: G:\SavinAutocad\2060\25-Playland-Mega-3\E\SAE-1001.dwg
Projectname: 211001F02 Comments: ----
Printed by: MGoaby Date: 29 August 2022 8:00 AM Designed by: ----
Rev#:
Xrefs: [TB_24X36_WestchesterCo_3.dwg] [TSG-SVL000.dwg] [BCRE-A-04.dwg] [BCRE-101.dwg]

CONSULTANT INFORMATION
Savin Engineers, P.C.

CONSULTANT SEAL
STATE OF NEW YORK — STEVEN A. MARTINO — 083631 — LICENSED PROFESSIONAL ENGINEER

REVISION NUMBER	DATE	MADE BY	APP'D BY	REVISION

RECORD DRAWING CERTIFICATION
☐ AS BUILT – CHANGES AS NOTED ☐ AS BUILT – NO CHANGES

CONTRACTOR
NAME
SIGNATURE
TITLE DATE

PROJECT COORDINATOR
NAME
SIGNATURE
TITLE DATE

WESTCHESTER COUNTY, NEW YORK
DEPARTMENT OF PUBLIC WORKS AND TRANSPORTATION
DIVISION OF ENGINEERING

INFRASTRUCTURE REHABILITATION - PHASE 3
PLAYLAND PARK, RYE, NEW YORK
SOUTHEAST ARCADE
ONE LINE DIAGRAM AND PANEL SCHEDULES - DEMOLITION

CONTRACT NUMBER **22-523**
SHEET NUMBER **SA-E-01**
DWG NO.:
SCALE: **AS SHOWN**
DATE: **8/23/2022**
DPW FILE NUMBER **1-118-E-1391-0**
REV. NO. **0**

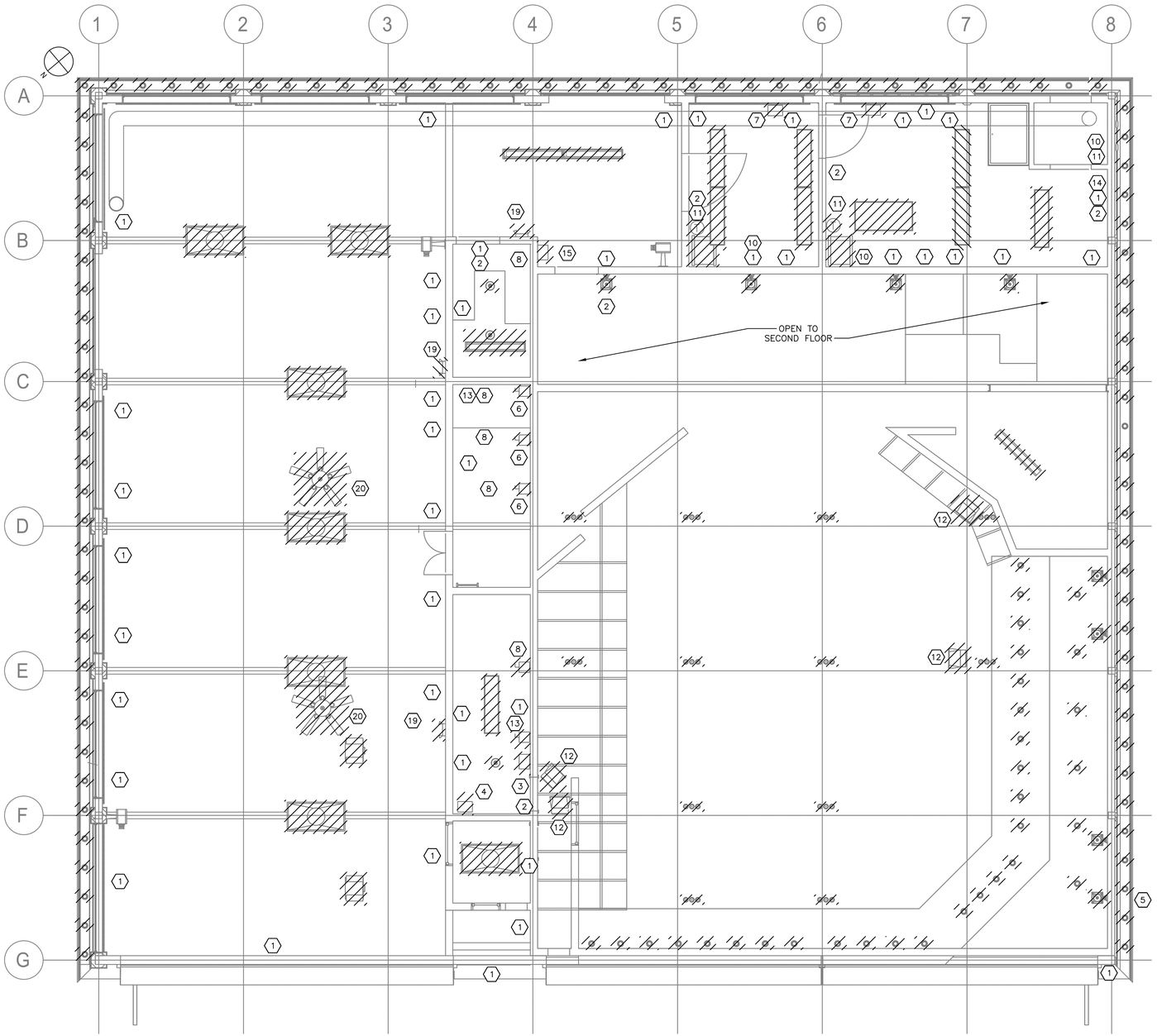

DEMOLITION LEGEND	
1	RECEPTACLE
2	LIGHT SWITCH
3	32 CKT PUSHMATIC PANEL
4	16 CKT PANEL "GAME ROOM STEP 1"
5	TELEPHONE (REMOVED BY OTHERS)
6	MECHANICAL EQUIPMENT (REMOVED BY OTHERS)–DISCONNECT POWER
7	AIR CONDITIONING UNIT (REMOVED BY OTHERS)–DISCONNECT POWER
8	GENERAL DUTY SAFETY SWITCH
9	COMPRESSOR SWITCH
10	UNIT HEATER (REMOVED BY OTHERS)–DISCONNECT POWER
11	UNIT HEATER THERMOSTAT (REMOVED BY OTHERS)–DISCONNECT POWER
12	SPEAKERS (REMOVED BY OTHERS)
13	HEAVY DUTY SAFETY SWITCH
14	DATA PORTS (REMOVED BY OTHERS)
15	24 CKT PANEL (GAME ROOM)
16	RECEPTACLE AND SWITCH
17	WATER HEATER
18	FREEZER
19	EMERGENCY LIGHT
20	CEILING MOUNTED FAN (REMOVED BY OTHERS)–DISCONNECT POWER

NOTES:

1. FOR ADDITIONAL NOTES, ABBREVIATIONS AND SYMBOLS, SEE DRAWING GE–E–01.
2. ALL REMOVED EQUIPMENT SHALL BE RETURNED TO OWNER UPON REQUEST. OTHERWISE ALL REMOVED MATERIAL SHALL BE LEGALLY DISPOSED OF.
3. DISCONNECT AND REMOVE ALL ASSOCIATED ELECTRICAL EQUIPMENT, LIGHTING, POWER, CONDUIT AND WIRE BACK TO SOURCE.
4. ALL EXISTING CABLE AND CONDUIT SHALL BE DOCUMENTED PRIOR TO REMOVAL.
5. CONTRACTOR SHALL DISCONNECT AND REMOVE ALL EXISTING FLUORESCENT LIGHTING FIXTURES.
6. ALL ASSOCIATED CIRCUITING TO BE DEMOLISHED FOR ALL RECEPTACLE AND LIGHTING FIXTURES SHOWN SHALL ASSUME TO BE 3/4" CONDUIT WITH 2 #12& 1#12G, UNLESS OTHERWISE NOTED AND SHALL BE DEMOLISHED.
7. ALL ASSOCIATED CIRCUITING TO BE DEMOLISHED FOR UNIT HEATER SHOWN SHALL ASSUME TO BE 1" CONDUIT WITH 3#8 AND 1#8G AND SHALL BE DEMOLISHED.
8. CONTRACTOR SHALL DEMOLISH ALL EXISTING JUNCTION BOXES AND ALL ASSOCIATED CONDUITS, WIRES AND APPURTENANCES. FOR BIDDING PURPOSES, ASSUME 2000 FEET 1"C, 3#12 & 1#12G.
9. CONTRACTOR IS ADVISED NARROW ACCESS AREA NORTH OF COLUMN LINE 4 HAS MULTIPLE "MAIN" SWITCHES TO BE DISCONNECTED AND REMOVED BACK TO SOURCE.

SOUTHEAST ARCADE GROUND FLOOR DEMOLITION POWER AND LIGHTING PLAN
1/4"=1'–0"

0 4' 8'
SCALE: 1/4" = 1'–0"

CONSULTANT INFORMATION
Savin Engineers, P.C.

CONSULTANT SEAL
STATE OF NEW YORK · STEVEN A. MARTINO · 083631 · LICENSED PROFESSIONAL ENGINEER

REVISION NUMBER	DATE	MADE BY	APP'D BY	REVISION

RECORD DRAWING CERTIFICATION
☐ AS BUILT – CHANGES AS NOTED ☐ AS BUILT – NO CHANGES

CONTRACTOR
NAME
SIGNATURE
TITLE DATE

PROJECT COORDINATOR
NAME
SIGNATURE
TITLE DATE

WESTCHESTER COUNTY, NEW YORK
DEPARTMENT OF PUBLIC WORKS AND TRANSPORTATION
DIVISION OF ENGINEERING

INFRASTRUCTURE REHABILITATION - PHASE 3
PLAYLAND PARK, RYE, NEW YORK
SOUTHEAST ARCADE
GROUND FLOOR DEMOLITION POWER & LIGHTING PLAN

CONTRACT NUMBER	22-523
SHEET NUMBER	SA-E-02
DWG NO.:	
SCALE:	AS SHOWN
DATE:	8/23/2022
DPW FILE NUMBER	1-118-E-1392-0
REV. NO.	0

Drawing Name: G:\SavinAutocad\2060\25-Playland-Mega-3\E\SAE-1002.dwg
Reref: Projectname: 211001F02 Comments: ----
Printed by: MGodby Date: 29 August 2022 8:00 AM Designed by: ----
Xrefs: [TB_24X36_WestchesterCo_3.dwg] [TSG-SVL060.dwg] [SA-A-02.dwg] [SA-E-1005.dwg]

NOTES:

1. FOR ADDITIONAL NOTES, ABBREVIATIONS AND SYMBOLS, SEE DRAWING GE–E–01.
2. ALL REMOVED EQUIPMENT SHALL BE RETURNED TO OWNER UPON REQUEST. OTHERWISE ALL REMOVED MATERIAL SHALL BE LEGALLY DISPOSED OF.
3. DISCONNECT AND REMOVE ALL ELECTRICAL EQUIPMENT, LIGHTING, POWER, CONDUIT AND WIRE BACK TO SOURCE.
4. ALL EXISTING CABLE AND CONDUIT SHALL BE DOCUMENTED PRIOR TO REMOVAL.

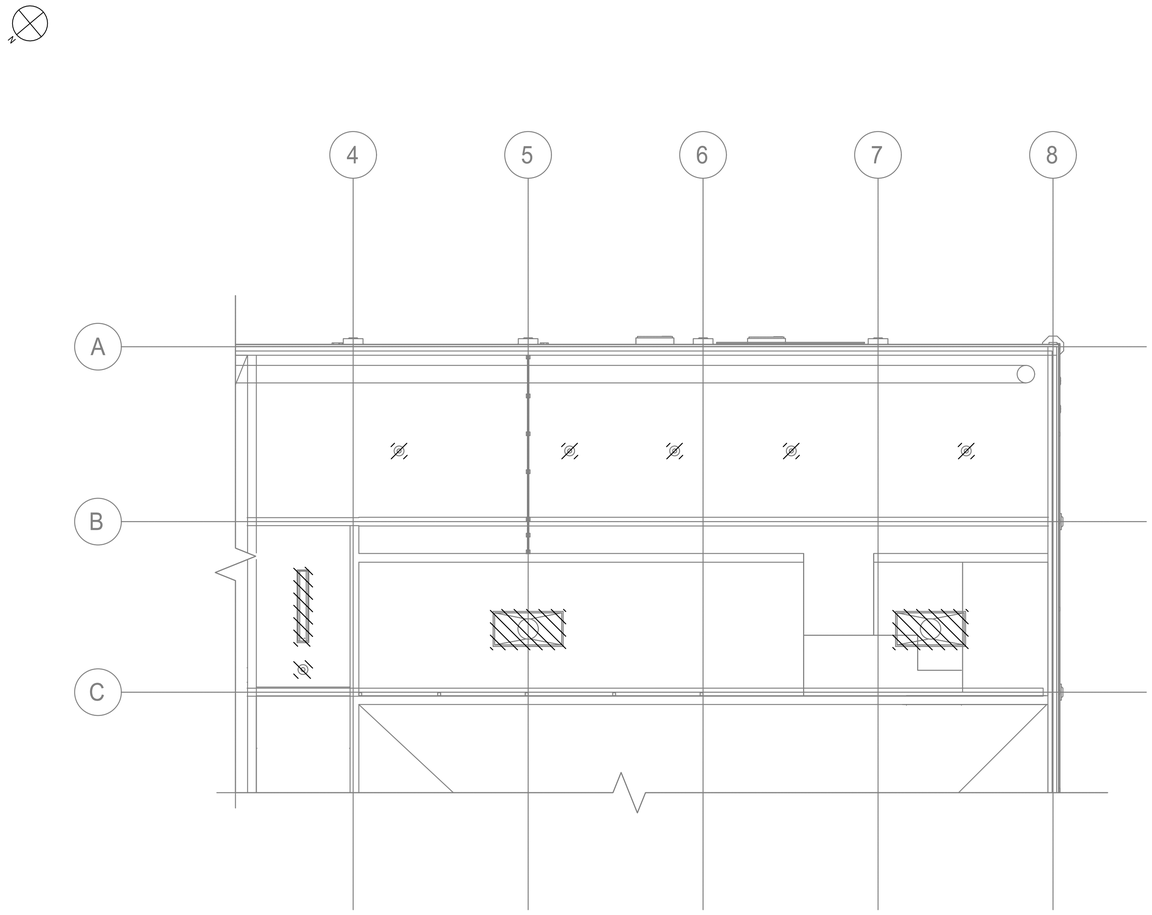

SOUTHEAST ARCADE SECOND LEVEL DEMOLITION PLAN
1/4"=1'–0"

SCALE: 1/4" = 1'–0"

Savin Engineers, P.C.

STATE OF NEW YORK · STEVEN A. MARTINO · 083631 · LICENSED PROFESSIONAL ENGINEER

REVISION NUMBER	DATE	MADE BY	APP'D BY	REVISION

RECORD DRAWING CERTIFICATION

☐ AS BUILT – CHANGES AS NOTED ☐ AS BUILT – NO CHANGES

CONTRACTOR: NAME / SIGNATURE / TITLE / DATE

PROJECT COORDINATOR: NAME / SIGNATURE / TITLE / DATE

WESTCHESTER COUNTY, NEW YORK
DEPARTMENT OF PUBLIC WORKS AND TRANSPORTATION
DIVISION OF ENGINEERING

INFRASTRUCTURE REHABILITATION - PHASE 3
PLAYLAND PARK, RYE, NEW YORK
SOUTHEAST ARCADE
SECOND LEVEL DEMOLITION PLAN

CONTRACT NUMBER	22-523
SHEET NUMBER	SA-E-03
DWG NO.:	
SCALE:	AS SHOWN
DATE:	8/23/2022
DPW FILE NUMBER	1-118-E-1393-0
REV. NO.	0

Drawing Name: G:\SavinAutocad\2060\25-Playland-Mega-3\E\SAE-1003.dwg
Projectname: 211001F02 Comments: ----
Printed by: MGoaby Date: 29 August 2022 8:01 AM Designed by: ----
Xrefs: [TB_24X36_WestchesterCo_3.dwg] [TSG-SVL000.dwg] [SA-A-03.dwg]

PANELBOARD: SA-PP-1 **LOCATION:** ELECTRICAL CLOSET

1 **NEMA RATING** 3 **POLES** **MOUNTING:** SURFACE

125 **AMP BUS RATING** 100 **AMP MAIN BREAKER** 42 **KA SHORT CIRCUIT RATING**

208Y/120 **VOLTS** 3 **PHASE** 4 **WIRE** **ELECTRONIC GRADE :** NO

CIRCUIT NO.	DESCRIPTION	LOAD KVA PHASE A	LOAD KVA PHASE B	LOAD KVA PHASE C	BREAKER AMPS / POLES	NOTES	CIRCUIT NO.	DESCRIPTION	LOAD KVA PHASE A	LOAD KVA PHASE B	LOAD KVA PHASE C	BREAKER AMPS / POLES	NOTES
1	EF-1	0.5			20/1		2	EF-3	0.5			20/1	
3	EF-2		0.5		20/1		4	ARCADE RECEPTACLES		0.5		20/1	
5	ARCADE CEILING FANS			0.1	20/1		6	ARCADE RECEPTACLES			0.5	20/1	
7	HALL RECEPTACLES	0.5			20/1		8	ARCADE RECEPTACLES	0.5			20/1	
9	UPSTAIRS RECEPTACLES		0.5		20/1		10	UH-1		1.65		20/2	
11	SPARE			-	20/1		12				1.65		
13	ROLL-UP DOOR	1.9			30/1		14	ARCADE RECEPTACLES	0.5			20/1	
15	ROLL-UP DOOR		1.9		30/1		16	SPARE		-		20/1	
17	ROLL-UP DOOR			1.9	30/1		18	SPARE			-	20/1	
19	SPARE	-			20/1		20	FUTURE SPRINKLER LOADS	0.5			20/1	
21	SPARE		-		20/1		22	FUTURE SPRINKLER LOADS		0.5		20/1	
23	SPARE			-	20/1		24	SPARE			-		
25	SPACE						26	SPACE					
27	SPACE						28	SPACE					
29	SPACE						30	SPACE					
31	SPACE						32	SPACE					
33	PTAC-1		1.8		15/2		34	SPACE					
35				1.8			36	SPACE					
37	SPACE						38	SPACE					
39	SPACE						40	SPACE					
41	SPACE						42	SPACE					
	TOTAL PHASE KVA THIS SIDE	2.90	4.70	3.80				**TOTAL PHASE KVA THIS SIDE**	2	2.65	2.15		
								TOTAL KVA PER PHASE	4.90	7.35	5.95		
								TOTAL THREE PHASE KVA		18.20			

NOTES:
1.
2.
3.
4.

NOTES CONT.:
5.
6.
7.
8.

PANELBOARD: SA-LP-1 **LOCATION:** ELECTRICAL CLOSET

1 **NEMA RATING** 3 **POLES** **MOUNTING:** SURFACE

125 **AMP BUS RATING** 60 **AMP MAIN BREAKER** 42 **KA SHORT CIRCUIT RATING**

208Y/120 **VOLTS** 3 **PHASE** 4 **WIRE** **ELECTRONIC GRADE :** NO

CIRCUIT NO.	DESCRIPTION	LOAD KVA PHASE A	LOAD KVA PHASE B	LOAD KVA PHASE C	BREAKER AMPS / POLES	NOTES	CIRCUIT NO.	DESCRIPTION	LOAD KVA PHASE A	LOAD KVA PHASE B	LOAD KVA PHASE C	BREAKER AMPS / POLES	NOTES
1	ARCADE LIGHTING	0.34			20/1		2	SPARE	-			20/1	
3	ARCADE LIGHTING		0.34		20/1		4	SPARE		-		20/1	
5	POWER TO SA-RP (120V)			0.1	20/1		6	UTILITY & UPSTAIRS LIGHTING			0.4	20/1	
7	SA-RP - EXTERIOR SOFFIT (NORTH)	0.6			20/1		8	SPACE					
9	SA-RP SPARE		-		20/1		10	SPACE					
11	SA-RP SPARE			-	20/1		12	SA-RP - EXTERIOR SOFFIT (SOUTH)			0.6	20/1	
13	SPARE	-			20/1		14	SA-RP - EXTERIOR SOFFIT (EAST)	0.6			20/1	
15	SPARE		-		20/1		16	SA-RP - EXTERIOR SOFFIT (WEST)		0.6		20/1	
17	SPARE			-	20/1		18	SPARE			-	20/1	
19	SPACE						20	SPARE	-			20/1	
21	SPACE						22	SPACE					
23	SPACE						24	SPACE					
25	SPACE						26	SPACE					
27	SPACE						28	SPACE					
29	SPACE						30	SPACE					
31	SPACE						32	SPACE					
33	SPACE						34	SPACE					
35	SPACE						36	SPACE					
37	SPACE						38	SPACE					
39	SPACE						40	SPACE					
41	SPACE						42	SPACE					
	TOTAL PHASE KVA THIS SIDE	0.94	0.34	0.10				**TOTAL PHASE KVA THIS SIDE**	0.6	0.6	0.98		
								TOTAL KVA PER PHASE	1.54	0.94	1.08		
								TOTAL THREE PHASE KVA		3.56			

NOTES:
1.
2.
3.
4.

NOTES CONT.:
5.
6.
7.
8.

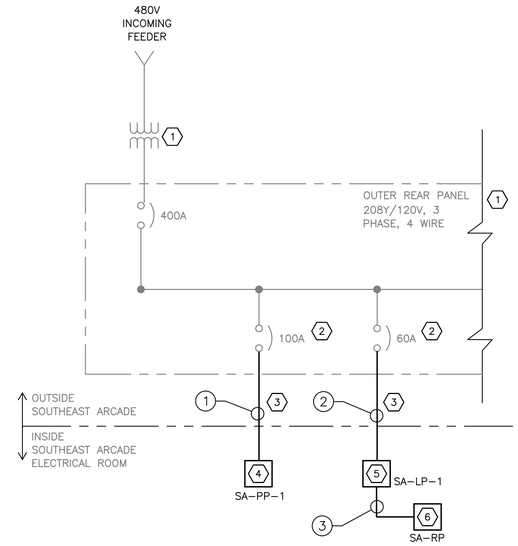

ONE LINE DIAGRAM
N.T.S.

NOTES:

1. FOR ADDITIONAL NOTES, ABBREVIATIONS AND SYMBOLS, SEE DRAWING GE-E-01.

KEY NOTES:

1. EXISTING 480 DELTA 208Y/120V, STEP-DOWN TRANSFORMER AND 208Y/120 VOLT, 400A POWER PANEL. LOCATED OUTSIDE THE REAR, NORTHEAST CORNER OF THE BUILDING.
2. REUSE EXISTING CIRCUIT BREAKER.
3. CONTRACTOR SHALL PROVIDE NEW CONDUIT AND WIRE.
4. NEW 208Y/120 VOLT, 3 PHASE, 4-WIRE POWER PANEL SA-PP-1 WITH 125 AMP MAINS AND 100 AMP MAIN CIRCUIT BREAKER.
5. NEW 60 AMP, 208Y/120 VOLT, 3 PHASE, 4-WIRE LIGHTING PANEL SA-LP-1 WITH 125 AMP MAINS AND 60 AMP MAIN CIRCUIT BREAKER.
6. NEW RELAY PANEL SA-RP FOR EXTERIOR LIGHTING CONTROL.

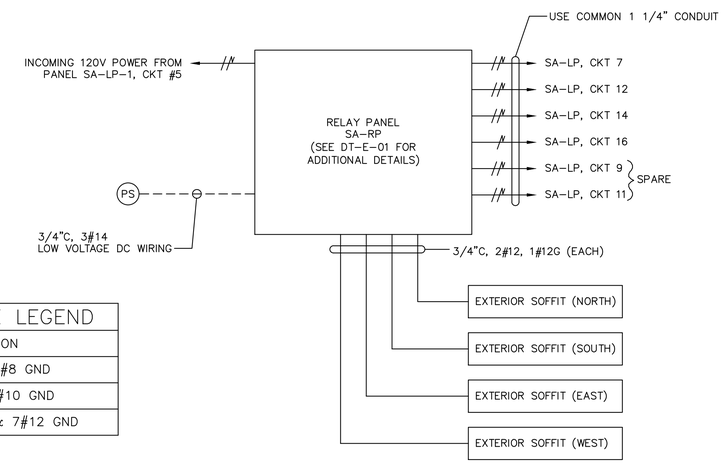

SOUTHEAST ARCADE EXTERIOR BUILDING WIRING DETAIL

CONDUIT AND WIRE LEGEND

NO.	DESCRIPTION
1	2"C, 4#2 & 1#8 GND
2	2"C, 4#6 & 1#10 GND
3	1 1/4"C, 14#12 & 7#12 GND

SA-RP	LOCATION: ELECTRICAL CLOSET	
CKT NO	DESCRIPTION	NOTES
1	EXTERIOR SOFFITS (NORTH)	
2	EXTERIOR SOFFITS (SOUTH)	
3	EXTERIOR SOFFITS (EAST)	
4	EXTERIOR SOFFITS (WEST)	
5	SPARE	
6	SPARE	

CONSULTANT INFORMATION

Savin Engineers, P.C.

CONSULTANT SEAL

STATE OF NEW YORK · STEVEN A. MARTINO · 093631 · LICENSED PROFESSIONAL ENGINEER

REVISION NUMBER	DATE	MADE BY	APP'D BY	REVISION

RECORD DRAWING CERTIFICATION

☐ AS BUILT – CHANGES AS NOTED ☐ AS BUILT – NO CHANGES

CONTRACTOR: NAME / SIGNATURE / TITLE / DATE

PROJECT COORDINATOR: NAME / SIGNATURE / TITLE / DATE

WESTCHESTER COUNTY, NEW YORK
DEPARTMENT OF PUBLIC WORKS AND TRANSPORTATION
DIVISION OF ENGINEERING

INFRASTRUCTURE REHABILITATION - PHASE 3
PLAYLAND PARK, RYE, NEW YORK
SOUTHEAST ARCADE
ONE LINE DIAGRAM AND PANEL SCHEDULES

CONTRACT NUMBER	SHEET NUMBER
22-523	SA-E-04

DWG NO.:
SCALE: AS SHOWN
DATE: 8/23/2022
DPW FILE NUMBER 1-118-E-1394-0 REV. NO. 0

Drawing Name: G:\SavinAutocad\2060\25-Playland-Mega-3\E\SAE-1005.dwg
Projectname: 211001F02 Comments: ----
Printed by: MGadby Date: 29 August 2022 8:01 AM Designed by: ----
Xrefs: [TB_24X36_WestchesterCo_3.dwg] [TSG-SVLOGO.dwg] [BCR-A-04.dwg] [BCRE-101.dwg]

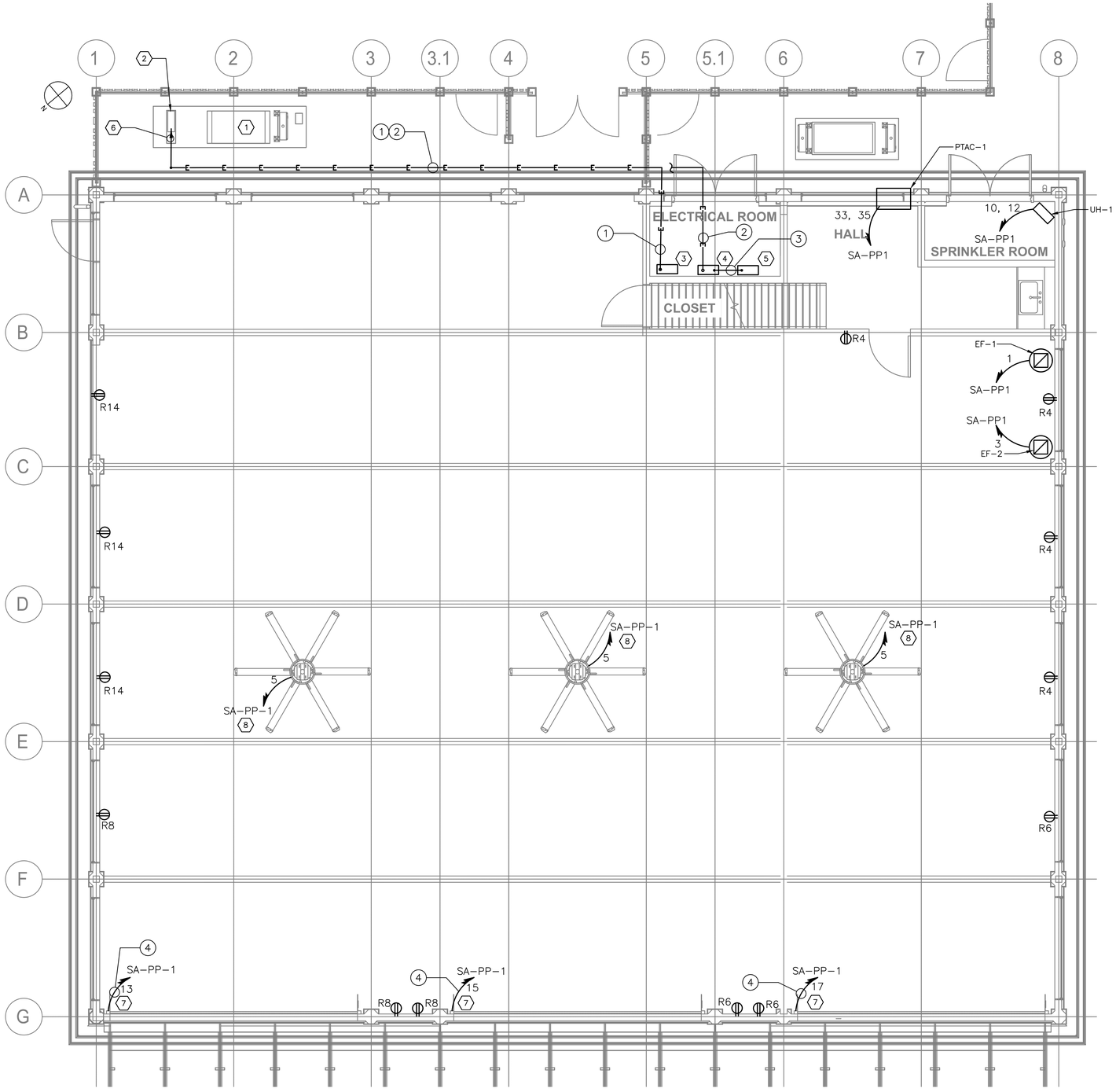

SOUTHEAST ARCADE GROUND FLOOR POWER PLAN

1/4"=1'-0"

NOTES:

1. FOR ADDITIONAL NOTES, ABBREVIATIONS AND SYMBOLS, SEE DRAWING GE-E-01.
2. SEE DRAWING SA-E-04 FOR PANEL SCHEDULES.
3. ALL RECEPTACLE DESIGNATORS ARE POWERED VIA PANEL SA-PP-1, UNLESS OTHERWISE NOTED.
4. ALL CIRCUITS SHOWN ON THE DRAWING, BUT NOT SPECIFICALLY CALLED OUT ON CONDUIT AND WIRE LEGEND, SHALL BE 3/4" CONDUIT WITH 2#12 & 1#12 GND.
5. FOR PANEL SCHEDULES, SEE DRAWING SA-E-04.
6. CONTRACTOR SHALL ASSUME THAT TWO ADDITIONAL CIRCUITS WILL BE NEEDED FOR EQUIPMENT IN THE SPRINKLER ROOM AND NOT AS YET SHOWN. FOR BIDDING PURPOSES, ASSUME A TOTAL OF 100 FEET OF 3/4" CONDUIT WITH 3#12 AWG WIRES.
7. EXHAUST FAN STARTERS SHALL BE FURNISHED BY THE EXHAUST FAN MANUFACTURER. FOR EXHAUST FAN STARTER REQUIREMENTS, SEE HVAC CONTRACT DRAWINGS AND SPECIFICATIONS.
8. DISCONNECT SWITCHES OUTDOORS, IN RESTROOMS AND/OR IN JANITORS CLOSETS SHALL BE IN A NEMA 3R ELCLOSURE.

KEY NOTES:

(1) EXISTING TRANSFORMER TO REMAIN AND BE PROTECTED DURING CONSTRUCTION.

(2) EXISTING 400 AMP PANEL TO REMAIN AND BE PROTECTED DURING CONSTRUCTION. THIS PANEL SUPPLIES POWER TO OTHER RIDES AND MUST REMAIN IN OPERATION.

(3) NEW 208Y/120V, 3 PHASE, 4 WIRE PANEL SA-PP-01 WITH 125 AMP MAINS AND 100 AMP MAIN CIRCUIT BREAKER.

(4) NEW 208Y/120V, 3 PHASE, 4 WIRE PANEL SA-LP-1 WITH 125 AMP MAINS AND 60 AMP MAIN CIRCUIT BREAKER.

(5) NEW EXTERIOR LIGHTING RELAY PANEL SA-RP.

(6) CONNECT NEW CONDUIT AND WIRE INTO EXISTING PANEL. NEW CONDUIT PENETRATIONS SHALL BE WITH WATERTIGHT HUBS.

(7) APPROXIMATE LOCATION OF MOTOR FOR NEW ROLL-UP DOOR. CONTRACTOR SHALL CONFIRM MOTOR LOCATION IN THE FIELD. PROVIDE 30 AMP, 2 POLE DISCONNECT SWITCH AT ROLL-UP DOOR MOTOR.

(8) CONTRACTOR SHALL COORDINATE BOTH THE POWER AND CONTROL OF FANS. CONTRACTOR SHALL PROVIDE FOR SWITCH CONTROL IN LOCATION AS REQUIRED BY STANDARD AMUSEMENTS. ADDITIONALLY ASSUME A TOTAL OF 100 FEET OF 3/4" CONDUIT WITH CAT 6 WIRE TO AGAIN A DESTINATION AS REQUIRED BY STANDARD AMUSEMENTS.

CONDUIT AND WIRE LEGEND

NO.	DESCRIPTION
1	2"C, 4#2 & 1#8 GND
2	2"C, 4#6 & 1 #10 GND
3	1 1/4"C, 12#12 & 6#12 GNDS
4	3/4"C, 2#10 & 1#10 GND

0 4' 8'

SCALE: 1/4" = 1'-0"

Drawing Name: G:\SavinAutocad\2060\25-Playland-Mega-3\E\SAE-1006.dwg
Ref#: Projectname: 211001F02 Comments: ----
Printed by: MGodby Date: 29 August 2022 8:01 AM Designed by: ----
Xrefs: [TB_24X36_WestchesterCo_3.dwg] [TSG-SVL000.dwg] [SA-A-12.dwg] [SA-E-1002.dwg]

CONSULTANT INFORMATION

Savin Engineers, P.C.

CONSULTANT SEAL

STATE OF NEW YORK · STEVEN A. MARTINO · 083631 · LICENSED PROFESSIONAL ENGINEER

REVISION NUMBER	DATE	MADE BY	APP'D BY	REVISION

RECORD DRAWING CERTIFICATION

☐ AS BUILT – CHANGES AS NOTED ☐ AS BUILT – NO CHANGES

CONTRACTOR
NAME
SIGNATURE
TITLE DATE

PROJECT COORDINATOR
NAME
SIGNATURE
TITLE DATE

WESTCHESTER COUNTY, NEW YORK
DEPARTMENT OF PUBLIC WORKS AND TRANSPORTATION
DIVISION OF ENGINEERING

INFRASTRUCTURE REHABILITATION - PHASE 3
PLAYLAND PARK, RYE, NEW YORK
SOUTHEAST ARCADE
GROUND FLOOR POWER PLAN

CONTRACT NUMBER	SHEET NUMBER
22-523	SA-E-05

DWG NO.:

SCALE: AS SHOWN

DATE: 8/23/2022

DPW FILE NUMBER 1-118-E-1395-0 REV. NO. 0

NOTES:

1. FOR ADDITIONAL NOTES, ABBREVIATIONS AND SYMBOLS, SEE DRAWING GE–E–01.
2. SEE DRAWING SA–E–04 FOR PANEL SCHEDULES.
3. EXHAUST FAN STARTERS SHALL BE FURNISHED BY THE EXHAUST FAN MANUFACTURER. FOR EXHAUST FAN STARTER REQUIREMENTS, SEE HVAC CONTRACT DRAWINGS AND SPECIFICATIONS.

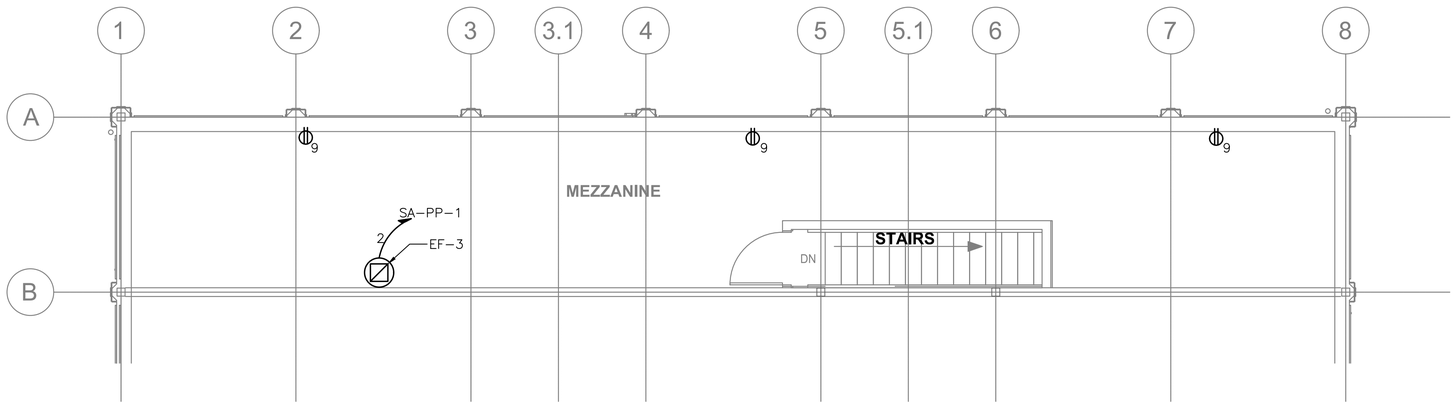

SOUTHEAST ARCADE SECOND LEVEL POWER PLAN
1/4"=1'–0"

0 4' 8'
SCALE: 1/4" = 1'–0"

Drawing Name: G:\SavinAutocad\2060\25–Playland–Mega–3\E\SAE–1007.dwg
Projectname: 211001F02 Comments: ----
Printed by: MGadby Date: 29 August 2022 8:01 AM Designed by: ----
Reqf: ----
Xrefs: [TB_24X36_WestchesterCo_3.dwg] [TSG–SVLOGO.dwg] [SA–A–13.dwg] [SA–E–1001.dwg]

CONSULTANT INFORMATION

Savin Engineers, P.C.

CONSULTANT SEAL

STATE OF NEW YORK · STEVEN A. MARTINO · 083631 · LICENSED PROFESSIONAL ENGINEER

REVISION NUMBER	DATE	MADE BY	APP'D BY	REVISION

RECORD DRAWING CERTIFICATION

☐ AS BUILT – CHANGES AS NOTED ☐ AS BUILT – NO CHANGES

CONTRACTOR
NAME
SIGNATURE
TITLE DATE

PROJECT COORDINATOR
NAME
SIGNATURE
TITLE DATE

WESTCHESTER COUNTY, NEW YORK
DEPARTMENT OF PUBLIC WORKS AND TRANSPORTATION
DIVISION OF ENGINEERING

INFRASTRUCTURE REHABILITATION - PHASE 3
PLAYLAND PARK, RYE, NEW YORK
SOUTHEAST ARCADE
SECOND LEVEL POWER PLAN

CONTRACT NUMBER	22-523
SHEET NUMBER	SA-E-06
DWG NO.:	
SCALE:	AS SHOWN
DATE:	8/23/2022
DPW FILE NUMBER	1-118-E-1396-0
REV. NO.	0

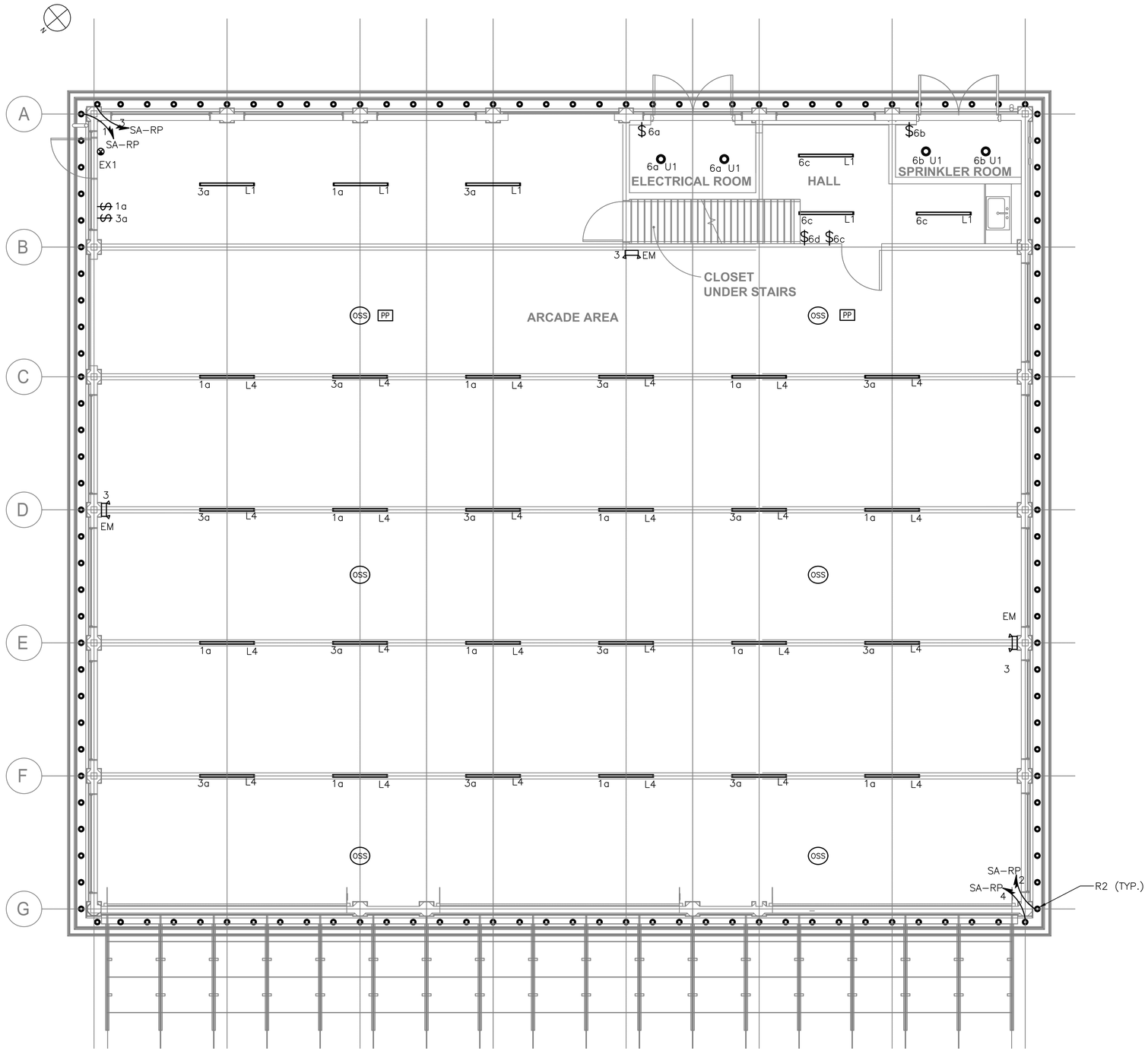

SOUTHEAST ARCADE GROUND FLOOR LIGHTING PLAN

1/4"=1'-0"

NOTES:

1. FOR ADDITIONAL NOTES, ABBREVIATIONS AND SYMBOLS, SEE DRAWING GE-E-01.
2. ALL INTERIOR LIGHTING IS POWERED VIA LIGHTING PANEL SA-LP-1, UNLESS NOTED OTHERWISE. CONTRACTOR SHALL CIRCUIT LIGHTING FIXTURES WITH 3/4" CONDUIT WITH 2#12 & 1#12GND.
3. EXIT SIGNS SHALL BE WIRED TO THE UN-SWITCHED LEG OF THE DESIGNATED CIRCUIT.
4. EMERGENCY FIXTURES SHALL BE WIRED TO THE UN-SWITCHED LEG OF THE DESIGNATED CIRCUIT.
5. ALL EXTERIOR LIGHTING SHALL BE CIRCUITED TO RELAY PANEL SA-RP. CONTRACTOR SHALL CIRCUIT LIGHTING FIXTURES WITH 3/4" CONDUIT WITH 2#12 & 2#12GND, UNLESS NOTED OTHERWISE. CONTRACTOR SHALL DAISY-CHAIN ALL EXTERIOR LIGHT FIXTURES WITH SAME CIRCUIT NUMBER BACK TO RELAY PANEL SA-RP.
6. FOR LIGHTING PANEL SCHEDULE, REFER TO DRAWINGS SA-E-04.
7. ALL POWER PACKS SHOWN ON DRAWINGS SHALL BE CIRCUITED FROM LIGHTING PANEL SA-LP-1.
8. NUMBER DESIGNATORS NEXT TO FIXTURES AND/OR CONTROLS INDICATE CIRCUIT NUMBERS.
9. POWER PACKS SHALL BE MOUNTED ABOVE FINISHED CEILING IF POSSIBLE.
10. ALL LIGHTING CONTROL COMPONENTS SHALL BE FROM A SINGLE MANUFACTURER, AND MUST BE FROM THE SAME MANUFACTURER FOR ALL BUILDINGS WITHIN THE CONTRACT AND AS PROVIDED ELSEWHERE AT THE PLAYLAND FACILITY.
11. LIGHTING CONTROLS SELECTED SHALL HAVE THE CAPABILITY TO BE CONNECTED TO A MASTER HEAD-END SYSTEM (FUTURE CONTRACT).
12. RELAY PANEL SHALL BE EQUIPPED WITH BOTH A BUILT-IN TIME CLOCK AND A PHOTOSENSOR CONTROL.
13. FOR EXTERIOR LIGHTING CONTROL WIRING INFORMATION, SEE DRAWING SA-E-04.
14. FOR LIGHTING FIXTURE SCHEDULE SEE DRAWING GE-E-03.

LIGHTING CONTROL LEGEND

SYMBOL	DESCRIPTION
OSS	OCCUPANCY / VACANCY SENSOR – SMALL MOTION, DUAL TECHNOLOGY (PASSIVE INFRARED/MICROPHONICS) ACUITY BRANDS, nLIGHT SYSTEM CATALOG NUMBER: nCM-PDT-9-RJB OR APPROVED EQUAL
PP 12	POWER / RELAY PACK – 120V RATED SELF CONTROLLED RELAY SWITCH, EQUIPPED WITH RJ45, PLENUM RATED, CONFIGURATIVE RELAY LOGIC ACUITY BRANDS, nLIGHT SYSTEM CATALOG NUMBER: nPP16-D-EFP-SA OR APPROVED EQUAL.
$	120V RATED LIGHTING SINGLE POLE SWITCH
RP	RELAY TIME CONTROL PANEL PROGRAMMABLE ZONE CONTROL PANEL UP TO 1 ADDRESS PER RELAY/DIMMING OUTPUT EQUIPPED WITH 0-10V DIMMING OUTPUT PER RELAY CATALOG NUMBER: ARP INTENCO8NLT-16SR-MVOLT-1VB-HLK-S-DTC OR APPROVED EQUAL
PS	ANALOG PHOTOCELL – PHOTOSENSOR SUITABLE FOR OUTDOOR APPLICATIONS. CATALOG NUMBER: LSA-APS-OL OR APPROVED EQUAL
n POD	RELAY TIME CONTROL PANEL PROGRAMMABLE ZONE CONTROL PANEL UP TO 1 ADDRESS PER RELAY/DIMMING OUTPUT EQUIPPED WITH 0-10V DIMMING OUTPUT PER RELAY CATALOG NUMBER: LSA-APS-OL OR APPROVED EQUAL

0 4' 8'

SCALE: 1/4" = 1'-0"

Drawing Name: G:\SavinAutocad\2060\25-Playland-Mega-3\E\SAE-1008.dwg
Reref: Projectname: 211001F02 Comments: ----
Printed by: MGodby Date: 29 August 2022 8:01 AM Designed by: ----
Xrefs: [TB_24X36_WestchesterCo_3.dwg] [TSC-SVLOGO.dwg] [SA-A-12.dwg] [SA-E-1006.dwg]

CONSULTANT INFORMATION

Savin Engineers, P.C.

CONSULTANT SEAL

STATE OF NEW YORK · STEVEN A. MARINO · 083631 · LICENSED PROFESSIONAL ENGINEER

REVISION NUMBER	DATE	MADE BY	APP'D BY	REVISION

RECORD DRAWING CERTIFICATION

☐ AS BUILT – CHANGES AS NOTED ☐ AS BUILT – NO CHANGES

CONTRACTOR: NAME / SIGNATURE / TITLE / DATE

PROJECT COORDINATOR: NAME / SIGNATURE / TITLE / DATE

WESTCHESTER COUNTY, NEW YORK
DEPARTMENT OF PUBLIC WORKS AND TRANSPORTATION
DIVISION OF ENGINEERING

INFRASTRUCTURE REHABILITATION - PHASE 3
PLAYLAND PARK, RYE, NEW YORK
SOUTHEAST ARCADE
GROUND FLOOR LIGHTING PLAN

CONTRACT NUMBER	22-523
SHEET NUMBER	SA-E-07
DWG NO.:	
SCALE:	AS SHOWN
DATE:	8/23/2022
DPW FILE NUMBER	1-118-E-1397-0
REV. NO.	0

NOTES:

1. FOR ADDITIONAL NOTES, ABBREVIATIONS AND SYMBOLS, SEE DRAWING GE–E–01.
2. ALL INTERIOR LIGHTING SHOWN IS POWERED VIA LIGHTING PANEL SA–LP–1, UNLESS NOTED OTHERWISE. CONTRACTOR SHALL CIRCUIT LIGHTING FIXTURES WITH 3/4" CONDUIT WITH 2#12 & 1#12GND.
3. EXIT SIGNS SHALL BE WIRED TO THE UN–SWITCHED LEG OF THE DESIGNATED CIRCUIT.
4. EMERGENCY FIXTURES SHALL BE WIRED TO THE UN–SWITCHED LEG OF THE DESIGNATED CIRCUIT.
5. FOR LIGHTING PANEL SCHEDULE, REFER TO DRAWING SA–E–04.
6. FIXTURE SHALL BE SURFACE MOUNTED. COORDINATE WITH ARCHITECTURAL DRAWINGS FOR MORE INFORMATION.

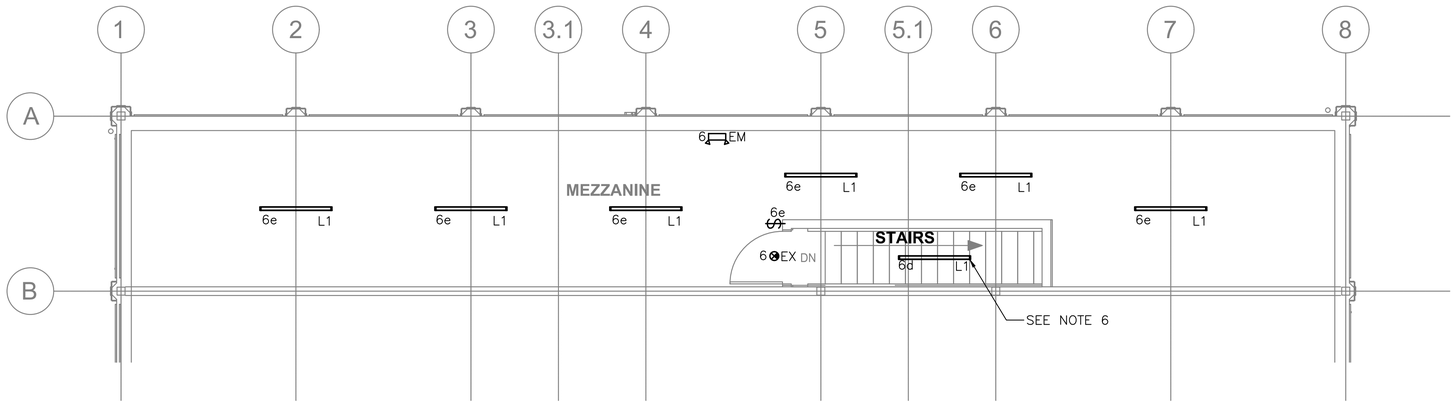

SOUTHEAST ARCADE SECOND LEVEL LIGHTING PLAN
1/4"=1'–0"

0 4' 8'
SCALE: 1/4" = 1'–0"

Drawing Name: G:\SavinAutocad\2060\25–Playland–Mega–3\E\SAE–1009.dwg
Projectname: 211001F02 Comments: ----
Printed by: MGadby Date: 29 August 2022 8:02 AM Designed by: ----
Reqf: Xrefs: [TB_24X36_WestchesterCo_3.dwg] [TSG–SVLOGO.dwg] [SA–A–13.dwg] [SA–E–1007.dwg]

CONSULTANT INFORMATION

Savin Engineers, P.C.

CONSULTANT SEAL

STATE OF NEW YORK · STEVEN A. MARTINO · 083631 · LICENSED PROFESSIONAL ENGINEER

REVISION NUMBER	DATE	MADE BY	APP'D BY	REVISION

RECORD DRAWING CERTIFICATION

☐ AS BUILT – CHANGES AS NOTED ☐ AS BUILT – NO CHANGES

CONTRACTOR
NAME
SIGNATURE
TITLE DATE

PROJECT COORDINATOR
NAME
SIGNATURE
TITLE DATE

WESTCHESTER COUNTY, NEW YORK
DEPARTMENT OF PUBLIC WORKS AND TRANSPORTATION
DIVISION OF ENGINEERING

INFRASTRUCTURE REHABILITATION - PHASE 3
PLAYLAND PARK, RYE, NEW YORK
SOUTHEAST ARCADE
SECOND LEVEL LIGHTING PLAN

CONTRACT NUMBER	22-523
SHEET NUMBER	SA-E-08
DWG NO.:	
SCALE:	AS SHOWN
DATE:	8/23/2022
DPW FILE NUMBER	1-118-E-1398-0
REV. NO.	0

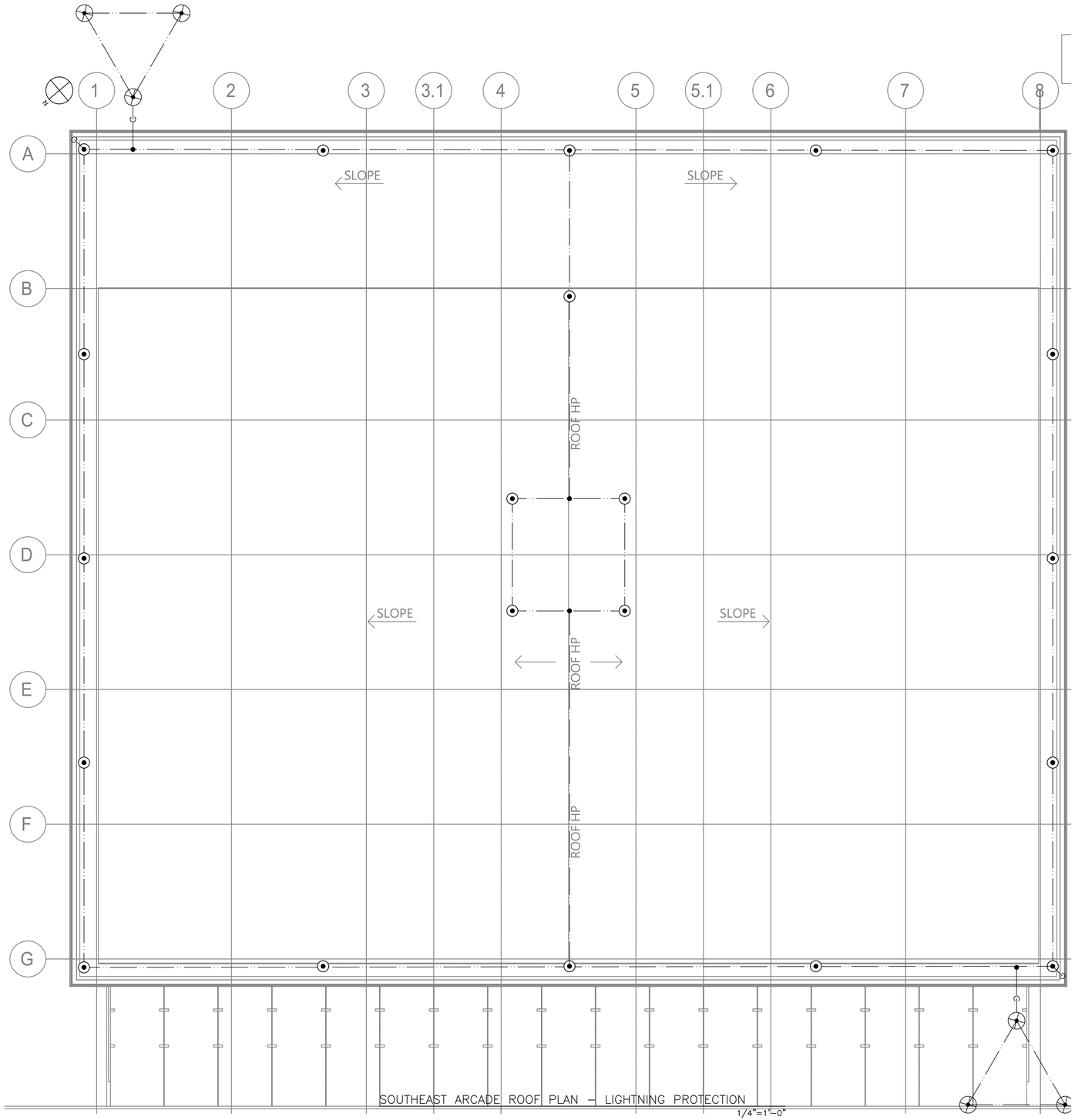

SOUTHEAST ARCADE ROOF PLAN – LIGHTNING PROTECTION

1/4"=1'-0"

NOTES:

1. FOR ADDITIONAL NOTES, ABBREVIATIONS AND SYMBOLS, SEE DRAWING GE-E-01.
2. CONTRACTOR IS ADVISED, THE LIGHTNING PROTECTION SYSTEM SHOWN SHALL BE USED AS A GUIDE AND FOR BIDDING PURPOSES. CONTRACTOR SHALL HIRE A CERTIFIED LIGHTNING PROTECTION SPECIALIST FOR INSTALLATION OF NEW SYSTEM. INSTALLER SHALL PROVIDE ALL THAT IS REQUIRED (PER NFPA 780) AND SHALL OBTAIN UL96A CERTIFICATION (MASTER LABEL) UPON COMPLETION. ADDITIONALLY, INSTALLER SHALL PROVIDE FOR ALL NECESSARY BONDING FOR COMPLETE SYSTEM.
3. CONTRACTOR SHALL COORDINATE WITH THE ARCHITECTURAL DRAWINGS FOR SPECIFIC INFORMATION ON THE NEW ROOF STRUCTURE AND MATERIALS.
4. TO MINIMIZE THE VISUAL IMPACT OF THE BUILDING ALL NEW DOWN CONDUCTORS SHALL BE ROUTED DOWN SIDE OF BUILDING. COORDINATE WITH ARCHITECTURAL FEATURES TO CONCEAL DOWN CONDUCTORS. CONTRACTOR SHALL COORDINATE WITH OTHER TRADES TO ACCOMPLISH THIS WORK. PROVIDE LPS BARE COPPER CABLE TO GROUND RODS.
5. CONTRACTOR IS ADVISED THE NEW DOWN CONDUCTOR SHALL BE BONDED TO THE LOWER METAL OVERHANG ROOF AND CONNECT TO THE EXISTING GROUND WIRE AND GROUND ROD AT GROUND LEVEL.
6. AT EACH LPS DOWN CONDUCTOR, PROVIDE TRIANGULAR GROUND GRID AS SHOWN (NOT ALL SHOWN),

0 4' 8'

SCALE: 1/4" = 1'-0"

Drawing Name: G:\SavinAutocad\2060\25-Playland-Mega-3\E\SAE-1010.dwg
Projectname: 211001F02 Comments: ----
Reqf: ----
Printed by: MGodby Date: 29 August 2022 8:02 AM Designed by: ----
Xrefs: [TB_24X36_WestchesterCo_3.dwg] [TSG-SVLOGO.dwg] [SA-A-14.dwg] [SA-E-1004.dwg]

CONSULTANT INFORMATION

Savin Engineers, P.C.

CONSULTANT SEAL

STATE OF NEW YORK · STEVEN A. MARTINO · 083631 · LICENSED PROFESSIONAL ENGINEER

REVISION NUMBER	DATE	MADE BY	APP'D BY	REVISION

RECORD DRAWING CERTIFICATION

☐ AS BUILT – CHANGES AS NOTED ☐ AS BUILT – NO CHANGES

CONTRACTOR: NAME ____ SIGNATURE ____ TITLE ____ DATE ____

PROJECT COORDINATOR: NAME ____ SIGNATURE ____ TITLE ____ DATE ____

WESTCHESTER COUNTY, NEW YORK
DEPARTMENT OF PUBLIC WORKS AND TRANSPORTATION
DIVISION OF ENGINEERING

INFRASTRUCTURE REHABILITATION - PHASE 3
PLAYLAND PARK, RYE, NEW YORK
SOUTHEAST ARCADE
ROOF PLAN - LIGHTNING PROTECTION

CONTRACT NUMBER	SHEET NUMBER
22-523	SA-E-09

DWG NO.:

SCALE: AS SHOWN

DATE: 8/23/2022

DPW FILE NUMBER 1-118-E-1399-0 REV. NO. 0

FIRE ALARM GENERAL NOTES:

1. THE FIRE ALARM AND SMOKE DETECTION SYSTEM SHALL BE INSTALLED IN COMPLIANCE WITH THE NATIONAL FIRE PREVENTION CODE (NFPA 72 - 2016), NATIONAL LIFE SAFETY CODE (NFPA 101 - 2018), NATIONAL ELECTRICAL CODE (NFPA 70 - 2017), 2020 NEW YORK STATE BUILDING CODE, AND ALL LOCAL MUNICIPAL CODES HAVING JURISDICTION.
2. THE FIRE ALARM AND SMOKE DETECTION SYSTEM SHALL BE MAINTAINED AND TESTED IN COMPLIANCE WITH NFPA 72.
3. A CONTINUOUS FIRE WATCH SHALL BE PROVIDED IF THERE IS FIRE SYSTEM IMPAIRMENT.
4. ALL FIRE ALARM STROBES SHALL BE SYNCHRONIZED AND SHALL REMAIN FLASHING AFTER SYSTEM SILENCE FUNCTION.
5. CONTRACTOR TO UPDATE ALL NECESSARY CORRESPONDING FIRE ALARM SIGNALS WHEN PERFORMING ANY MODIFICATION TO THE BUILDING, WHERE APPLICABLE, MAKE SURE THE SAME UPDATES ARE COORDINATED AND TRANSMITTED TO THE CENTRAL STATION.
6. HORNS WILL SOUND A TEMPORAL 3-SIGNALING RHYTHM PER NFPA 72.
7. EXACT PLACEMENT OF DEVICES TO BE VERIFIED IN FIELD.
8. ALL SMOKE DETECTORS SHALL BE INSTALLED A MINIMUM OF 36" FROM ANY HVAC SUPPLY OR RETURN REGISTER.
9. FIRE ALARM WIRING SHALL BE INSTALLED IN A MINIMUM OF 3/4" RIGID GALVANIZED CONDUIT OR BY NEW YORK STATE BUILDING CODE APPROVED WIRING METHODS.
10. WALL MOUNTED HORNS AND VISUAL FIRE ALARMS (STROBES) SHALL BE MOUNTED NOT LESS THAN 6'-8" AND NOT GREATER THAN 8'-0" A.F.F. WHERE LOCAL CONDITIONS ARE TOO LOW TO PERMIT THE REQUIRED MINIMUM INSTALLATION HEIGHT, INSTALL THE STROBES AT 6" BELOW THE CEILING.
11. MANUAL PULL STATIONS SHALL BE MOUNTED AT 4'-0" A.F.F. AND SHALL BE INSTALLED WITHIN 5'-0" OF EXIT DOOR.
12. WIRING SHALL BE INSTALLED IN ACCORDANCE WITH NFPA 70 AND AS RECOMMENDED BY THE MANUFACTURER OF THE FIRE ALARM SYSTEM.
13. ALL EQUIPMENT AND COMPONENTS SHALL BE NEW AND SHALL BE TESTED AND LISTED BY A NATIONALLY RECOGNIZED APPROVALS AGENCY.
14. ALL EQUIPMENT SHALL BE ATTACHED TO WALLS AND CEILING/FLOOR ASSEMBLIES AND SHALL BE HELD FIRMLY IN PLACE. FASTENERS AND SUPPORTS SHALL BE ADEQUATE TO SUPPORT REQUIRED LOAD.
15. ALL FIELD WIRING SHALL BE ELECTRICALLY SUPERVISED FOR OPEN CIRCUIT AND GROUND FAULTS.
16. ALL BOXES AND CABINETS SHALL BE UL LISTED FOR THEIR USE AND PURPOSE.
17. DIALER OR ALARM COMMUNICATOR TRANSMITTER SHALL TRANSMIT ALL POINTS AS THEY ARE REPORTED TO THE HOST PANEL.
18. ALL DEVICES SHALL BE COMPATIBLE WITH EXISTING SYSTEM (EST3 BY EDWARDS). FIRE ALARM PRODUCTS SHALL BE APPROVED BY THE ENGINEER OR OWNER.
19. ALL PENETRATIONS SHALL BE FIRE PROOFED AS REQUIRED.

FIRE ALARM CONSTRUCTION NOTES:

1. ELECTRICIAN SHALL COORDINATE WITH THE FIRE ALARM VENDOR TO PRODUCE A SEPARATE FIXED PRICE TO PERFORM THE SCOPE OF WORK CONTAINED ON THESE DRAWINGS IN CONNECTION WITH THE FIRE ALARM SYSTEM. THESE DRAWINGS ARE PROVIDED FOR BID PURPOSES ONLY AND TO ILLUSTRATE THE SCOPE OF WORK INTENT OF THIS PROJECT.
2. ELECTRICIAN SHALL OBTAIN SEPARATE PERMIT FOR FIRE ALARM PRIOR TO INSTALLATION.
3. PRIOR TO SUBMISSION OF THE FIRE ALARM SYSTEM BID, THE FIRE ALARM VENDOR IS RESPONSIBLE TO REVIEW ALL DRAWINGS (I.E., MECHANICAL/HVAC, ELECTRICAL, PLUMBING, FIRE SPRINKLER, AND ARCHITECTURAL). UPON SUBMISSION OF THE FIRE ALARM BID, THE FIRE ALARM VENDOR CERTIFIES THAT ALL DRAWINGS HAVE BEEN REVIEWED, THE SITE HAS BEEN VISITED/INSPECTED (IF APPLICABLE), AND THAT ALL LOCAL FIRE DEPARTMENT REQUIRED ITEMS ARE FULLY UNDERSTOOD AND INCLUDED IN THE BID PRICE (NO CHANGE ORDERS ALLOWED).
4. FIRE ALARM VENDOR MUST ADHERE TO NFPA 72, NFPA 101, AND ALL LOCAL CODES AND AUTHORITIES HAVING JURISDICTION. THE ENTIRE SYSTEM MUST BE DESIGNED IN ACCORDANCE WITH THESE AUTHORITIES HAVING JURISDICTION.
5. FIRE ALARM VENDOR SHALL INCLUDE THE COST OF THE ENGINEERING FEE, PROGRAMMING CHARGE, NEW EQUIPMENT, CONNECTION & TESTING, TROUBLESHOOTING, ATTENDANCE AT THE FIRE ALARM INSPECTION, ETC. AS PART OF THE TOTAL PRICE.
6. FIRE ALARM VENDOR MUST SUBMIT APPROVED, SIGNED AND SEALED DESIGN/BUILD DRAWINGS TO THE ENGINEER AND OWNER, INCLUDING: FIRE ALARM RISER DIAGRAM, LAYOUT, EQUIPMENT LIST, SPECIFICATIONS PRIOR TO START OF INSTALLATION. INSTALLATION OF THE NEW FIRE ALARM SYSTEM SHALL NOT PROCEED PRIOR TO WRITTEN APPROVAL BY THE ENGINEER.
7. FIRE ALARM VENDOR SHALL SUBMIT SHOP DRAWINGS IN COMPLIANCE WITH NFPA 72, 2020 NEW YORK STATE BUILDING CODE, AND 2020 NEW YORK STATE FIRE CODE SECTION 907.1.1.
8. ALL FIRE ALARM CABLES AND WIRING MUST BE PLENUM RETURN RATED CABLES.

SCOPE OF WORK:

1. DEMOLISH EXISTING FIRE ALARM DEVICES AND ASSOCIATED WIRING BACK TO SOURCE.
2. PROVIDE NEW FIRE ALARM SYSTEM WITH SUBPANEL AS PER DRAWINGS. COORDINATE LOCATION WITH FIELD CONDITIONS AND ARCHITECT. PROVIDE ALL NECESSARY WIRING, CONNECTIONS, CONDUIT, AND FITTINGS.
3. PROVIDE NEW FIRE ALARM DEVICES AS PER DRAWINGS. PROVIDE ALL NECESSARY WIRING, CONNECTIONS, CONDUIT, AND FITTINGS.
4. CONNECT FIRE ALARM DEVICES AND SIGNAL TO NEW FIRE ALARM SUBPANEL. CONNECT SUBPANEL TO CENTRAL FIRE ALARM CONTROL PANEL IN MAIN ADMINISTRATION BUILDING VIA QUAD 1. PROVIDE ALL REQUIRED PROGRAMMING.
5. NEW FIRE ALARM SYSTEM SHALL BE INSPECTED BY A THIRD PARTY INSPECTION AGENCY CERTIFIED BY WESTCHESTER COUNTY. ELECTRICIAN SHALL INCLUDE INSPECTION IN BASE BID SCOPE AND COORDINATE WITH INSPECTION AGENCY TO CERTIFY THE SYSTEM.
6. ELECTRICIAN SHALL COORDINATE WITH THE FIRE ALARM VENDOR (OPEN SYSTEMS METRO) TO RE-PROGRAM AND TEST THE CENTRAL FIRE ALARM SYSTEM IN THE PLAYLAND MAIN ADMINISTRATION BUILDING FOLLOWING THE INSTALLATION OF NEW SYSTEM AND DEVICES.
7. ELECTRICIAN SHALL COORDINATE WITH THE FIRE ALARM CENTRAL MONITORING PROVIDER (STATEWIDE MONITORING) TO TEST AND VERIFY CENTRAL MONITORING OF PARKWIDE SYSTEM FOLLOWING THE INSTALLATION OF NEW SYSTEM AND DEVICES.

FIRE ALARM SYSTEM RISER NOTES:

1. LOCATION OF DEVICES AND EQUIPMENT ARE APPROXIMATE. FINAL LOCATIONS MUST BE DETERMINED ACCORDING TO THE SITE CONDITIONS.
2. VISUAL FIRE ALARMS (STROBES) SHALL HAVE MINIMUM 5'-0" CLEARANCE FROM ANY OBSTRUCTIONS, SHALL BE FIELD ADJUSTABLE, AND SHALL BE RATED AT 75 CANDELA MINIMUM, UNLESS OTHERWISE NOTED. ALL STROBES SHALL BE SYNCHRONIZED AT LINE OF SIGHT.
3. WALL MOUNTED HORNS AND VISUAL FIRE ALARMS (STROBES) SHALL BE MOUNTED NOT LESS THAN 6'-8" AND NOT GREATER THAN 8'-0" A.F.F. WHERE LOCAL CONDITIONS ARE TOO LOW TO PERMIT THE REQUIRED MINIMUM INSTALLATION HEIGHT, INSTALL THE STROBES AT 6" BELOW THE CEILING.
4. MANUAL PULL STATIONS SHALL BE MOUNTED AT 4'-0" A.F.F. AND SHALL BE INSTALLED WITHIN 5'-0" OF EXIT DOOR.
5. FUSE CUT OUT BOX SHALL COMPLY WITH THE NATIONAL ELECTRICAL CODE AND HAVE A REMOVABLE SOLID COPPER NEUTRAL BAR.
6. ALL CONDUITS AND CONTROL PANELS SHALL BE GROUNDED TO BUILDING STEEL/GROUND GRID WITH A MINIMUM #8 CONDUCTOR.
7. RISER DIAGRAM ON THIS DRAWING IS FOR DESIGN PURPOSE ONLY. FIRE ALARM CONTRACTOR SHALL PROVIDE A COMPLETE RISER DIAGRAM WITH ACTUAL FIELD WIRING REQUIRED.
8. EACH FIRE ALARM INITIATING AND INDICATING CIRCUIT SHALL BE ELECTRICALLY SUPERVISED.
9. EACH VISUAL FIRE ALARM CIRCUIT SHALL CONTAIN AT LEAST 20% SPARE CAPACITY.
10. ALL CONTROL PANELS, FUSE CUTOUTS, TROUBLE BELLS, ALARM BELLS AND SILENCE SWITCHES SHALL BE PROPERLY LABELED WITH MINIMUM 1/4" HIGH LETTERS.
11. WIRING FOR AUDIBLE AND VISUAL ALARM NOTIFICATION DEVICES SHALL BE ARRANGED SO THAT A LOSS OF A PORTION OF THE WIRING ON A FLOOR WILL NOT RENDER MORE THAN 60% OF THE DEVICES OF EACH TYPE INOPERATIVE, AND THE DEVICES SHALL BE SO CONNECTED TO THE CIRCUITRY (i.e., BY MEANS OF ALTERNATE CIRCUITS) AS TO MAINTAIN AT LEAST PARTIAL AUDIBILITY/VISIBILITY THROUGHOUT THE ENTIRE FLOOR.
12. THE FIRE ALARM CONTROL PANEL SHALL BE PROVIDED WITH A KEY SWITCH. DURING DAILY TESTS, THE KEY SWITCH SHALL BE USED TO BYPASS THE CIRCUITS THAT CONTROL DAMPERS AND FAN SHUTDOWN.
13. THE DAMPERS AND FAN BYPASS FUNCTION SHALL BE AUTOMATICALLY RESTORED TO BE NORMAL UN-SHUNTED CONDITION WITHIN FORTY-FIVE MINUTES, IF NOT DONE SO MANUALLY BEFORE FORTY-FIVE MINUTES.
14. PERFORM FIRE ALARM SYSTEM TESTING PER THE 2020 NEW YORK STATE FIRE CODE AND NFPA 72.

FIRE ALARM LEGEND:

SYMBOL	DESCRIPTION
FA	FIRE ALARM SUB PANEL
S	SMOKE DETECTOR
H	HEAT DETECTOR
F	MANUAL FIRE ALARM PULL STATION
▼# H	FIRE ALARM WALL MOUNTED HORN/STROBE # = CANDELA RATING
ST #	WALL MOUNTED STROBE # = CANDELA RATING
	FLOW SWITCH CONNECTED TO FIRE ALARM SYSTEM
GV	SPRINKLER VALVE TAMPER SWITCH CONNECTED TO FIRE ALARM SYSTEM
M	FIRE ALARM MONITORING RELAY
FSR	FIRE ALARM INTERFACE RELAY FOR HVAC FAN SHUTDOWN

FIRE ALARM ABBREVIATIONS:

E	EXISTING TO REMAIN
ER	EXISTING TO BE RELOCATED
EL	EXISTING AS SHOWN IN NEW LOCATION
FACP	FIRE ALARM CONTROL PANEL
FCO	FUSED CUT OUT
FCU	FIRE ALARM CONTROL UNIT
FP	FIRE PROTECTION
N	NEW
RTU	ROOFTOP UNIT
SP	SPRINKLER
WP	WEATHERPROOF
X	EXISTING TO BE DEMOLISHED

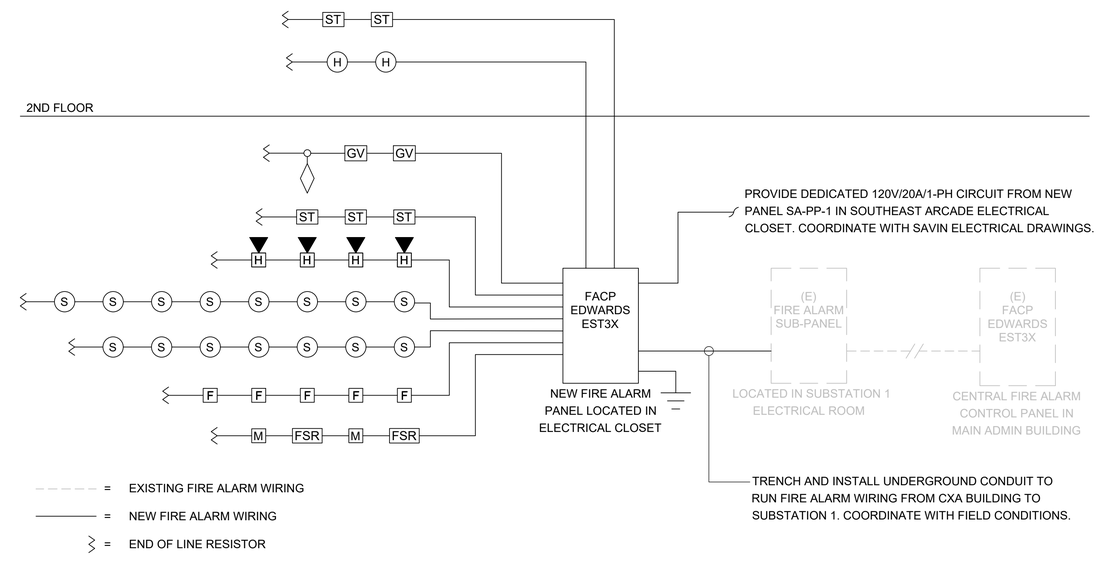

NOTES:
1. WIRING SHOWN ON RISER IS DIAGRAMMATICAL. PROVIDE NEW FIRE ALARM CABLE AS REQUIRED AND INSTALL WIRING LOOPS AS BEST SUITED FOR FIELD CONDITIONS.
2. THE BUILDING IS FULLY SPRINKLERED.

1 FIRE ALARM RISER DIAGRAM
SCALE: NOT TO SCALE

		SYSTEM OUTPUTS																		
		Control Unit Annunciation						Notification									Supp.			
	EVENT	A ACTUATE COMMON ALARM SIGNAL	B ACTUATE AUDIBLE ALARM SIGNAL	C INDICATE COMMON SUPERVISORY STATUS	D ACTUATE AUDIBLE SUPERVISORY SIGNAL	E INDICATE COMMON TROBLE SIGNAL	F ACTUATE AUDIBLE COMMON TROUBLE SIGNAL	G ACTIVATE HORNS AND STROBES THROUGHOUT THE PROTECTED AREA	H DISPLAY/PRINT CHANGE OF STATUS	I TRANSMIT AUTOMATIC ALARM SIGNAL TO SUPERVISING STATION	J TRANSMIT MANUAL ALARM SIGNAL TO SUPERVISING STATION	K TRANSMIT WATERFLOW ALARM SIGNAL TO SUPERVISING STATION	L TRANSMIT SUPERVISORY SIGNAL TO SUPERVISING STATION	M TRANSMIT CO ALARM SIGNAL TO SUPERVISING STATION	N TRANSMIT TROUBLE SIGNAL TO SUPERVISING STATION	O ACTIVATE TEMPORAL 4 SIGNAL ON ACTIVATED CO DETECTOR SOUNDER BASES	P SHUT DOWN CO PRODUCING EQUIPMENT	Q SHUT DOWN FANS/AIR HANDLING UNITS	R ACTIVATE AUTOMATIC CLOSURE OF FIRE-RATED ROLLING DOOR	S AUTOMATIC SHUTOFF OF EXHAUST FAN
1	ACTIVATION OF MANUAL PULL STATION	X	X					X	X		X									
2	ACTIVATION OF SMOKE DETECTOR	X	X					X	X	X								X	X	
3	ACTIVATION OF DUCT MOUNTED SMOKE DETECTOR	X	X					X	X	X								X		
4	ACTIVATION OF HEAT DETECTOR	X	X					X	X	X								X		
5	WATERFLOW SWITCH FOR FIRE SPRINKLER SYSTEM	X	X					X	X			X						X		
6	ACTIVATION OF CARBON MONOXIDE DETECTOR			X	X			X	X					X		X	X			
7	SPRINKLER VALVE (TAMPER SWITCH)			X	X				X				X							
8	FIRE ALARM LOSS OF PRIMARY/SECONDARY POWER					X	X		X						X					
9	FIRE ALARM SYSTEM WIRING FAILURE					X	X		X						X					
10	FIRE DAMPER (MONITORING RELAY)			X	X								X							X

2 FIRE ALARM SEQUENCE OF OPERATIONS MATRIX
SCALE: NOT TO SCALE

CONSULTANT INFORMATION

LiRo Engineers, Inc.
A LiRo Group Company
Syosset, N.Y. 516-214-8157[T]

CONSULTANT SEAL

STATE OF NEW YORK · FRANK F. ULLISE · No. 090111-1 · LICENSED PROFESSIONAL ENGINEER

REVISION NUMBER	DATE	MADE BY	APP'D BY	REVISION

RECORD DRAWING CERTIFICATION

☐ AS BUILT – CHANGES AS NOTED ☐ AS BUILT – NO CHANGES

CONTRACTOR
NAME
SIGNATURE
TITLE DATE

PROJECT COORDINATOR
NAME
SIGNATURE
TITLE DATE

WESTCHESTER COUNTY, NEW YORK
DEPARTMENT OF PUBLIC WORKS AND TRANSPORTATION
DIVISION OF ENGINEERING

INFRASTRUCTURE REHABILITATION - PHASE 3
PLAYLAND PARK, RYE, NEW YORK
SOUTHEAST ARCADE BUILDING
FIRE ALARM NOTES, SYMBOLS, LEGEND, AND RISER DIAGRAM

CONTRACT NUMBER	22-523
SHEET NUMBER	SA-FA-01
DWG NO.:	651 of 664
SCALE:	As indicated
DATE:	08/23/2022
DPW FILE NUMBER	1-118-FA-1400-0
REV. NO.	0

FIRE ALARM DEMOLITION NOTES:

1. NO EXISTING FIRE ALARM DEVICES WERE NOTED DURING BUILDING SURVEY. ANY ABANDONED DEVICES OR WIRING DISCOVERED DURING THE COURSE OF DEMOLITION SHALL BE REMOVED.

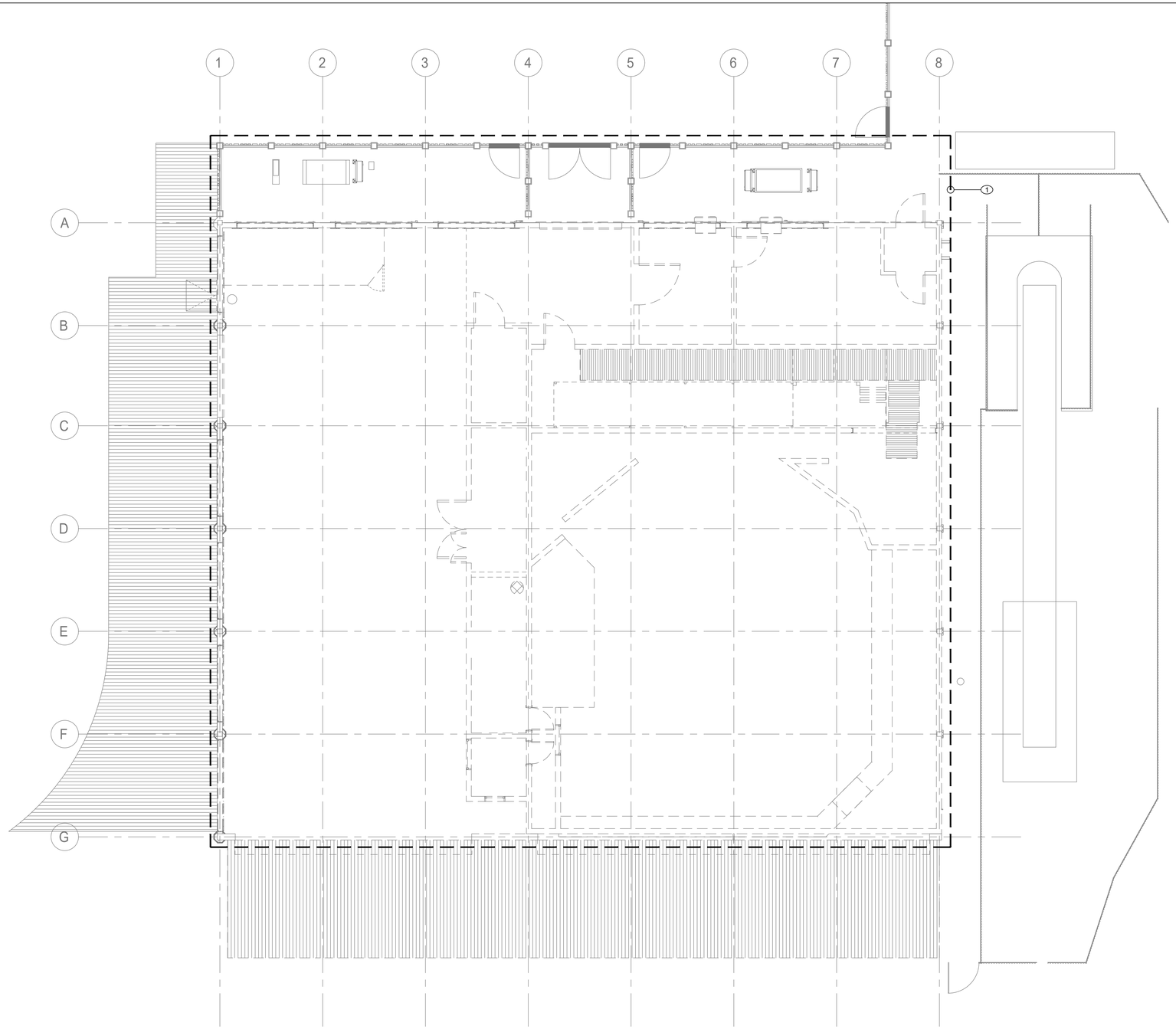

1 FIRE ALARM FIRST FLOOR DEMOLITION PLAN

SCALE: 3/16" = 1'-0"

CONSULTANT INFORMATION

LiRo Engineers, Inc.
A LiRo Group Company
Syosset, N.Y. 516-214-8157[T]

CONSULTANT SEAL

STATE OF NEW YORK · FRANK F. ULISSE · No. 090111-1 · LICENSED PROFESSIONAL ENGINEER

REVISION NUMBER	DATE	MADE BY	APP'D BY	REVISION

RECORD DRAWING CERTIFICATION

☐ AS BUILT – CHANGES AS NOTED ☐ AS BUILT – NO CHANGES

CONTRACTOR
NAME
SIGNATURE
TITLE DATE

PROJECT COORDINATOR
NAME
SIGNATURE
TITLE DATE

WESTCHESTER COUNTY, NEW YORK
DEPARTMENT OF PUBLIC WORKS AND TRANSPORTATION
DIVISION OF ENGINEERING

MEGA 3
PLAYLAND PARK, RYE, NEW YORK
SOUTHEAST ARCADE BUILDING
FIRE ALARM FIRST FLOOR DEMOLITION PLAN

CONTRACT NUMBER	22-523
SHEET NUMBER	SA-FA-11
DWG NO.:	652 of 664
SCALE:	As indicated
DATE:	08/23/2022
DPW FILE NUMBER	1-118-FA-1401-0
REV. NO.	0

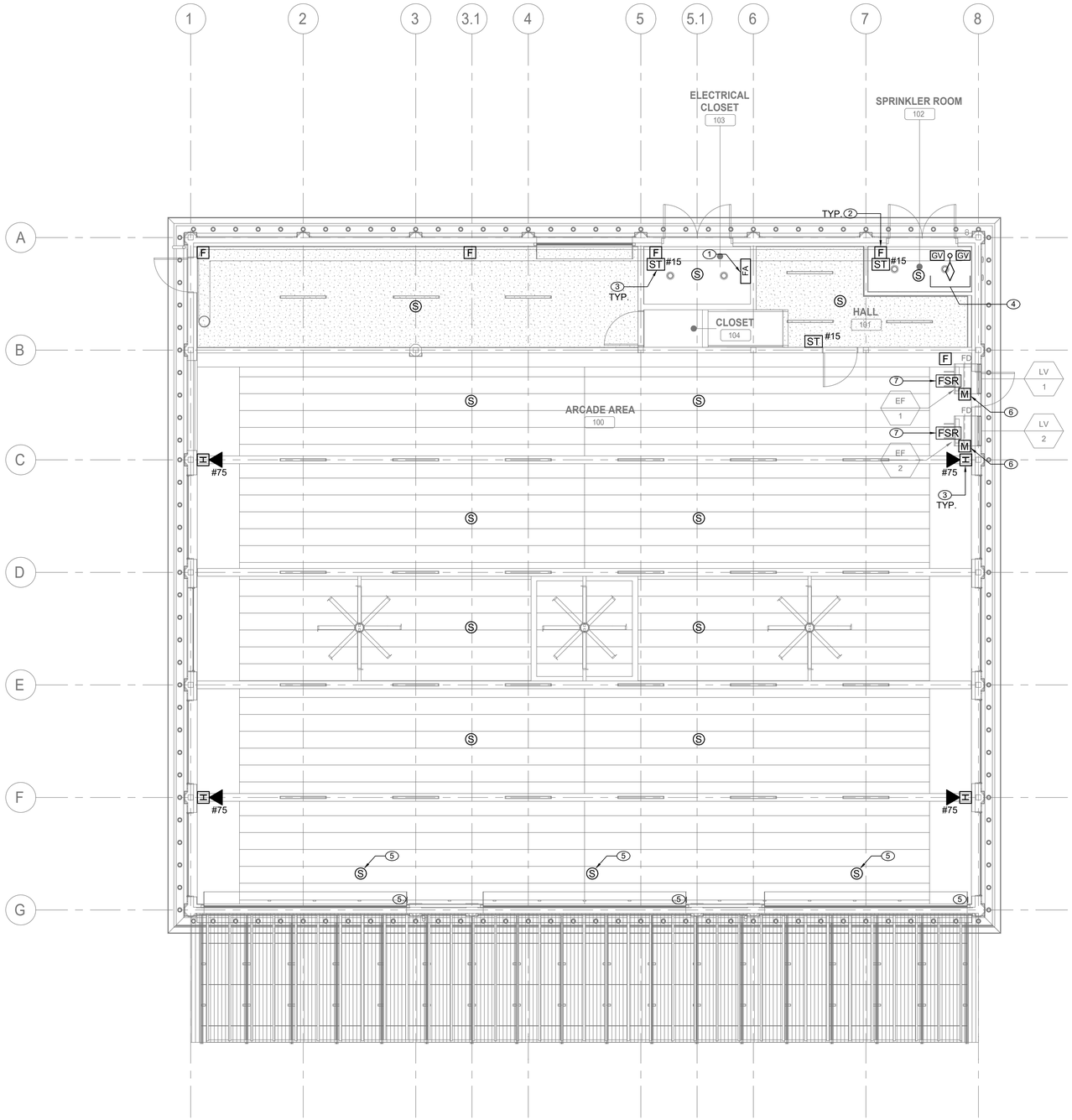

1 FIRE ALARM FIRST FLOOR CONSTRUCTION PLAN

SCALE: 3/16" = 1'-0"

FIRE ALARM CONSTRUCTION NOTES:

1. INSTALL NEW FIRE ALARM CONTROL PANEL TO SERVE SOUTHEAST ARCADE BUILDING. EDWARDS EST 3X-SFS1R OR APPROVED EQUAL, PER PARK STANDARDS OR AS SPECIFIED BY WITH PARKWIDE FIRE ALARM SYSTEM VENDOR (EST). NEW PANEL SHALL BE CONNECTED TO PARKWIDE SYSTEM AND TESTED IN COORDINATION WITH SYSTEM VENDOR. COORDINATE LOCATION WITHIN ELECTRICAL CLOSET WITH ELECTRICAL DRAWINGS.
2. NEW MANUAL PULL STATIONS SHALL BE INSTALLED AT 4'-0" ABOVE FINISHED FLOOR AT EACH BUILDING EXIT (MAX. DISTANCE OF 5'-0" FROM EXIT).
3. FIRE ALARM STROBES AND HORN STROBES SHALL BE FIELD ADJUSTABLE AND SET CANDELA RATING INDICATED ON PLAN. FIRE ALARM STROBES AND HORN STROBES SHALL BE INSTALLED AT 7'-4" ABOVE FINISHED FLOOR UNLESS OTHERWISE NOTED.
4. PROVIDE TAMPER AND WATERFLOW SWITCHES FOR NEW SPRINKLER VALVE ASSEMBLIES AND CONNECT TO EXISTING FIRE ALARM SYSTEM. COORDINATE LOCATION AND QUANTITY WITH FIRE PROTECTION DRAWINGS AND SPRINKLER SYSTEM INSTALLER.
5. AUTOMATIC CLOSURE OF ROLLING FIRE-RATED SERVICE DOORS SHALL BE INITIATED BY FUSIBLE LINK AND NEARBY SMOKE DETECTORS. INSTALLATION OF FIRE-RATED DOORS AND INITIATING SMOKE DETECTORS SHALL COMPLY WITH NFPA 72 AND NFPA 80. COORDINATE INSTALLATION, SEQUENCING, AND TESTING WITH DOOR MANUFACTURER. REFER TO ARCHITECTURAL DRAWINGS AND ARCHITECTURAL FIRE-RATED DOOR SPECIFICATION FOR ADDITIONAL INFORMATION.
6. INSTALL FIRE ALARM MONITORING RELAY MODULES AT NEW FIRE DAMPERS. MONITORING MODULES SHALL TRANSMIT SIGNAL TO FIRE ALARM CONTROL PANEL IN EVENT OF FIRE DAMPER CLOSURE BY FUSIBLE LINK.
7. PROVIDE FAN SHUTDOWN RELAYS FOR EXHAUST FANS, INTERLOCK WITH ASSOCIATED FIRE DAMPERS. EXHAUST FANS SHALL AUTOMATICALLY SHUT OFF IN EVENT OF FIRE DAMPER CLOSURE BY FUSIBLE LINK. PROVIDE WIRING AND PROGRAMMING FOR UNIT SHUTDOWN.

FIRE ALARM GENERAL NOTES:

1. REFER TO DRAWING FA-001.00 FOR SYMBOLS, ABBREVIATIONS, AND NOTES. LAYOUT OF FIRE ALARM DEVICES ON THIS PLAN IS DIAGRAMMATIC; EXACT LOCATIONS OF DEVICES AND CONDUIT SHALL BE COORDINATED WITH FIELD CONDITIONS, ARCHITECTURAL REQUIREMENTS, AND MANUFACTURER RECOMMENDATIONS.
2. ALL DEVICES AND EQUIPMENT SHOWN ON THIS PLAN ARE NEW, UNLESS OTHERWISE NOTED.
3. INSTALL NEW FIRE ALARM SYSTEM IN STRICT ACCORDANCE WITH NFPA-72 AND NFPA-90A REQUIREMENTS.
4. CONTRACTOR SHALL INSTALL NEW FIRE ALARM SYSTEM AS INDICATED AND PROVIDE ALL NECESSARY WIRING, CONDUIT, AND APPARATUSES.
5. ALL VISUAL NOTIFICATION DEVICES IN THE SAME SPACE SHALL BE SYNCHRONIZED IN ACCORDANCE WITH NFPA-72.
6. COORDINATE INSTALLATION WITH FIRE ALARM SYSTEM VENDOR AND MANUFACTURER REQUIREMENTS.
7. COORDINATE FIRE ALARM DEVICES WITH ARCHITECTURAL FINISHES. CONCEAL CONDUIT IN FINISHED WALLS AND FLUSH MOUNT DEVICES WHERE POSSIBLE.
8. CONTRACTOR SHALL TEST THE FIRE ALARM SYSTEM AFTER COMPLETION OF INSTALLATION. FIRE ALARM SYSTEM SHALL BE TESTED AND VERIFIED TO BE WORKING PROPERLY PRIOR TO INSPECTION BY THE AUTHORITY HAVING JURISDICTION.
9. FOLLOWING INSTALLATION, CONTRACTOR SHALL PATCH, PAINT, AND RESTORE ALL WALLS AND CEILINGS TO MATCH EXISTING OR DESIRED NEW CONDITION.
10. FIRESTOP ALL FIRE-RATED FLOOR OR WALL PENETRATIONS TO MAINTAIN ORIGINAL FIRE RATING TO FULL DEPTH OF OPENING.
11. CONTRACTOR SHALL PROVIDE SLEEVE FOR CONDUIT PENETRATIONS THROUGH WALL AND CEILING FLOORS.

CONSULTANT INFORMATION

LiRo Engineers, Inc.
A LiRo Group Company
Syosset, N.Y. 516-214-8157[T]

CONSULTANT SEAL

STATE OF NEW YORK · FRANK F. ULRICH · No. 090111 · LICENSED PROFESSIONAL ENGINEER

REVISION NUMBER	DATE	MADE BY	APP'D BY	REVISION

RECORD DRAWING CERTIFICATION

☐ AS BUILT – CHANGES AS NOTED ☐ AS BUILT – NO CHANGES

CONTRACTOR: NAME / SIGNATURE / TITLE / DATE

PROJECT COORDINATOR: NAME / SIGNATURE / TITLE / DATE

WESTCHESTER COUNTY, NEW YORK
DEPARTMENT OF PUBLIC WORKS AND TRANSPORTATION
DIVISION OF ENGINEERING

INFRASTRUCTURE REHABILITATION - PHASE 3
PLAYLAND PARK, RYE, NEW YORK
SOUTHEAST ARCADE BUILDING
FIRE ALARM FIRST FLOOR PLAN

CONTRACT NUMBER	22-523
SHEET NUMBER	SA-FA-21
DWG NO.:	653 of 664
SCALE:	As indicated
DATE:	08/23/2022
DPW FILE NUMBER	1-118-FA-1402-0
REV. NO.	0

FIRE ALARM GENERAL NOTES:

1. REFER TO DRAWING FA-001.00 FOR SYMBOLS, ABBREVIATIONS, AND NOTES. LAYOUT OF FIRE ALARM DEVICES ON THIS PLAN IS DIAGRAMMATIC; EXACT LOCATIONS OF DEVICES AND CONDUIT SHALL BE COORDINATED WITH FIELD CONDITIONS, ARCHITECTURAL REQUIREMENTS, AND MANUFACTURER RECOMMENDATIONS.
2. ALL DEVICES AND EQUIPMENT SHOWN ON THIS PLAN ARE NEW, UNLESS OTHERWISE NOTED.
3. INSTALL NEW FIRE ALARM SYSTEM IN STRICT ACCORDANCE WITH NFPA-72 AND NFPA-90A REQUIREMENTS.
4. CONTRACTOR SHALL INSTALL NEW FIRE ALARM SYSTEM AS INDICATED AND PROVIDE ALL NECESSARY WIRING, CONDUIT, AND APPARATUSES.
5. ALL VISUAL NOTIFICATION DEVICES IN THE SAME SPACE SHALL BE SYNCHRONIZED IN ACCORDANCE WITH NFPA-72.
6. COORDINATE INSTALLATION WITH FIRE ALARM SYSTEM VENDOR AND MANUFACTURER REQUIREMENTS.
7. COORDINATE FIRE ALARM DEVICES WITH ARCHITECTURAL FINISHES. CONCEAL CONDUIT IN FINISHED WALLS AND FLUSH MOUNT DEVICES WHERE POSSIBLE.
8. CONTRACTOR SHALL TEST THE FIRE ALARM SYSTEM AFTER COMPLETION OF INSTALLATION. FIRE ALARM SYSTEM SHALL BE TESTED AND VERIFIED TO BE WORKING PROPERLY PRIOR TO INSPECTION BY THE AUTHORITY HAVING JURISDICTION.
9. FOLLOWING INSTALLATION, CONTRACTOR SHALL PATCH, PAINT, AND RESTORE ALL WALLS AND CEILINGS TO MATCH EXISTING OR DESIRED NEW CONDITION.
10. FIRESTOP ALL FIRE-RATED FLOOR OR WALL PENETRATIONS TO MAINTAIN ORIGINAL FIRE RATING TO FULL DEPTH OF OPENING.
11. CONTRACTOR SHALL PROVIDE SLEEVE FOR CONDUIT PENETRATIONS THROUGH WALL AND CEILING FLOORS.

FIRE ALARM CONSTRUCTION NOTES:

1. FIRE ALARM STROBES AND HORN STROBES SHALL BE FIELD ADJUSTABLE AND SET CANDELA RATING INDICATED ON PLAN. FIRE ALARM STROBES AND HORN STROBES SHALL BE INSTALLED AT 7'-4" ABOVE FINISHED FLOOR UNLESS OTHERWISE NOTED.

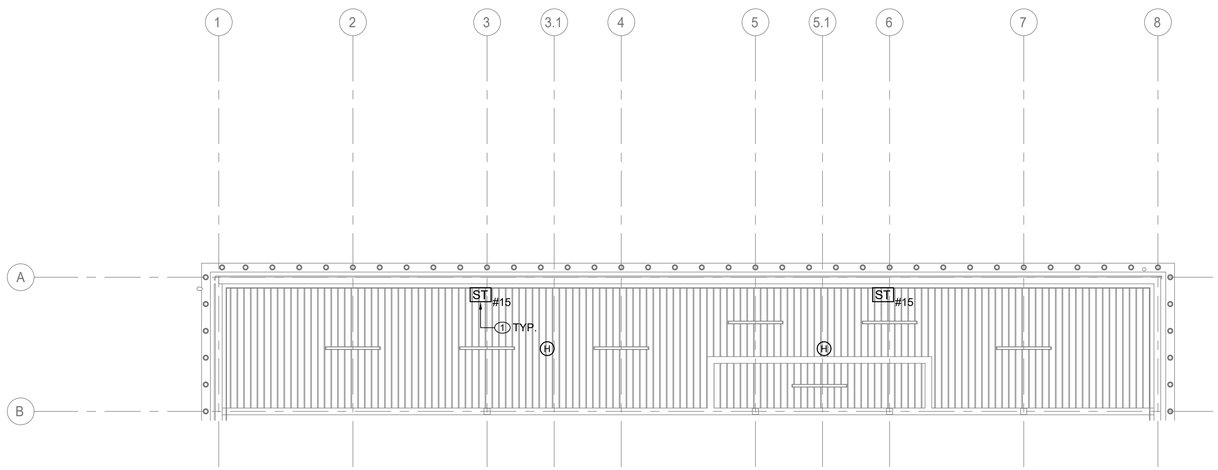

2 FIRE ALARM SECOND FLOOR CONSTRUCTION PLAN

SCALE: 3/16" = 1'-0"

CONSULTANT INFORMATION

LiRo Engineers, Inc.
A LiRo Group Company
Syosset, N.Y. 516-214-8157[T]

CONSULTANT SEAL

STATE OF NEW YORK · FRANK F. ULIANO · No. 090111-1 · LICENSED PROFESSIONAL ENGINEER

REVISION NUMBER	DATE	MADE BY	APP'D BY	REVISION

RECORD DRAWING CERTIFICATION

☐ AS BUILT – CHANGES AS NOTED ☐ AS BUILT – NO CHANGES

CONTRACTOR: NAME / SIGNATURE / TITLE / DATE

PROJECT COORDINATOR: NAME / SIGNATURE / TITLE / DATE

WESTCHESTER COUNTY, NEW YORK
DEPARTMENT OF PUBLIC WORKS AND TRANSPORTATION
DIVISION OF ENGINEERING

INFRASTRUCTURE REHABILITATION - PHASE 3
PLAYLAND PARK, RYE, NEW YORK
SOUTHEAST ARCADE BUILDING
FIRE ALARM SECOND FLOOR PLAN

CONTRACT NUMBER	22-523
SHEET NUMBER	SA-FA-22
DWG NO.:	654 of 664
SCALE:	As indicated
DATE:	08/23/2022
DPW FILE NUMBER	1-118-FA-1403-0
REV. NO.	0

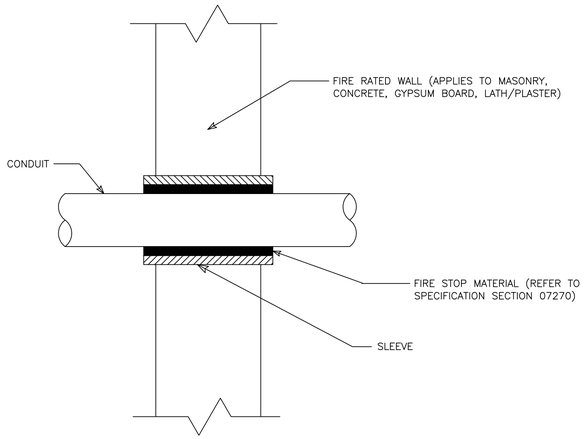

1 FA-81 CONDUIT PENETRATION THRU FIRE RATED WALL
NOT TO SCALE

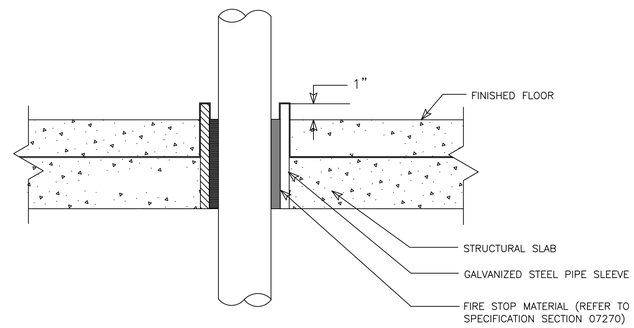

2 FA-81 CONDUIT PENETRATION THRU FLOOR SLAB
NOT TO SCALE

CONSULTANT INFORMATION

LiRo Engineers, Inc.
A LiRo Group Company
Syosset, N.Y. 516-214-8157[T]

CONSULTANT SEAL

STATE OF NEW YORK · FRANK F. ULISSE · No. 090111-1 · LICENSED PROFESSIONAL ENGINEER

REVISION NUMBER	DATE	MADE BY	APP'D BY	REVISION

RECORD DRAWING CERTIFICATION

☐ AS BUILT – CHANGES AS NOTED ☐ AS BUILT – NO CHANGES

CONTRACTOR
NAME
SIGNATURE
TITLE DATE

PROJECT COORDINATOR
NAME
SIGNATURE
TITLE DATE

WESTCHESTER COUNTY, NEW YORK
DEPARTMENT OF PUBLIC WORKS AND TRANSPORTATION
DIVISION OF ENGINEERING

INFRASTRUCTURE REHABILITATION - PHASE 3
PLAYLAND PARK, RYE, NEW YORK
SOUTHEAST ARCADE BUILDING
FIRE ALARM DETAILS

CONTRACT NUMBER 22-523
SHEET NUMBER **SA-FA-81**
DWG NO.: 655 of 664
SCALE: **As indicated**
DATE: 08/23/2022
DPW FILE NUMBER **1-118-FA-1404-0**
REV. NO. 0

GENERAL NOTES:

1. DIMENSIONS INDICATED ON THE DRAWINGS ARE APPROXIMATE AND SUBJECT TO REVISIONS AS PER ACTUAL FIELD CONDITIONS.
2. CONTRACTOR SHALL COMPLY WITH ALL NYSDEC PERMIT REQUIREMENTS AND ANY OTHER STATE, COUNTY, CITY OR TOWN AGENCY HAVING JURISDICTION. REFER TO THE CONTRACT SPECIFICATIONS FOR PERMIT REQUIREMENTS.
3. CONTRACTOR SHALL TAKE ALL PRECAUTIONS TO MAINTAIN UTILITY SERVICE TO AND FROM BUILDINGS AND PARK AREAS.
4. ANY UTILITIES SHOWN ON THE PLANS ARE FOR INFORMATION ONLY AND HAVE BEEN OBTAINED FROM AVAILABLE SOURCES. THE EXISTENCE AND LOCATION OF ANY UTILITIES INDICATED ON THE PLANS ARE NOT GUARANTEED AND SHALL BE INVESTIGATED AND VERIFIED IN THE FIELD BY THE CONTRACTOR BEFORE STARTING WORK. THE CONTRACTOR SHALL HAVE ALL EXISTING UTILITIES FIELD STAKED BEFORE STARTING WORK BY CALLING DIG SAFELY NEW YORK AT 1-800-962-7962. EXCAVATION IN THE VICINITY OF UNDERGROUND UTILITIES SHALL BE DUG BY HAND. THE CONTRACTOR WILL BE HELD RESPONSIBLE FOR ANY DAMAGE TO EXISTING UTILITIES. NO SEPARATE PAYMENT SHALL BE MADE FOR THIS WORK.
5. THE CONTRACTOR WILL BE REQUIRED TO PROVIDE PRIVATE UTILITY MARKOUTS FOR ALL UTILITIES IN THE WORK AREAS. THE CONTRACTOR SHALL SUBMIT THE PROPOSED UTILITY SUB-CONTRACTOR FOR APPROVAL.
6. THE CONTRACTOR SHALL OBTAIN AND HAVE ON THE JOB SITE, AT ALL TIMES, ALL PERMITS AS REQUIRED BY THE STATE, COUNTY, CITY, TOWN/VILLAGE OR ANY OTHER PERMITTING AGENCY. THE CONTRACTOR SHALL BEAR ALL COSTS OF OBTAINING THESE PERMITS.
7. CONTRACTOR SHALL REMOVE ALL DEBRIS AND EXCESS CONSTRUCTION MATERIALS TO THE SATISFACTION OF THE OWNER AND ENGINEER. THE CONTRACTOR SHALL BE RESPONSIBLE FOR THE REMOVAL AND LEGAL DISPOSAL OF ALL MATERIALS RESULTING FROM THE CONTRACT.
8. CONTRACTOR SHALL COORDINATE ALL CONSTRUCTION ACTIVITIES WITH THE OWNER AND ENGINEER TO MINIMIZE INTERRUPTIONS TO NORMAL PARK OPERATIONS.
9. CONTRACTOR SHALL SUBMIT A DETAILED WORK PLAN INCLUDING SEQUENCE OF OPERATIONS PRIOR TO COMMENCING WORK AND SHALL BE SUBJECT TO APPROVAL OF THE OWNER/ENGINEER.
10. THE CONTRACTOR SHALL NOTIFY THE OWNER AND THE ENGINEER A MINIMUM OF SEVENTY-TWO (72) HOURS PRIOR TO THE START OF CONSTRUCTION. IN ADDITION, IF WORK SHOULD BE STOPPED AND RESTARTED FOR ANY REASON, THE CONTRACTOR SHALL GIVE THE ENGINEER A MINIMUM OF SEVENTY-TWO (72) HOURS NOTICE.
11. ITEMS SUSTAINING DAMAGE DURING CONSTRUCTION AS A RESULT OF THE CONTRACTOR'S OPERATIONS SHALL BE REPAIRED AND/OR REPLACED TO THE SATISFACTION AND APPROVAL OF THE OWNER AT THE CONTRACTORS EXPENSE. ANY DAMAGE SHALL BE REPAIRED AT NO ADDITIONAL COST TO THE OWNER.
12. ALL NECESSARY PRECAUTIONS SHALL BE TAKEN TO PRESERVE THE MATERIAL BELOW AND BEYOND THE LINES OF ALL EXCAVATION IN THE SOUNDEST POSSIBLE CONDITION. ANY DAMAGE TO THE WORK DUE TO THE CONTRACTOR'S OPERATIONS SHALL BE REPAIRED AT THE EXPENSE OF AND BY THE CONTRACTOR.
13. NO MATERIALS OF ANY KIND SHALL BE USED UNTIL IT HAS BEEN INSPECTED AND ACCEPTED BY THE ENGINEER; ALL MATERIALS REJECTED SHALL BE IMMEDIATELY REMOVED FROM THE WORK SITE AND SHALL NOT BE OFFERED FOR INSPECTION AGAIN.
14. ANY MATERIALS OR WORKMANSHIP FOUND AT ANY TIME TO BE DEFECTIVE SHALL BE REMEDIED AT ONCE, REGARDLESS OF PREVIOUS INSPECTION, THE INSPECTION AND OBSERVATION OF WORK BY THE ENGINEER IS INTENDED TO AID THE CONTRACTOR IN APPLYING LABOR AND MATERIAL TO AND IN ACCORDANCE WITH THE SPECIFICATION, BUT SUCH INSPECTION SHALL NOT RELEASE THE CONTRACTOR FROM ANY CONTRACT OBLIGATIONS.
15. THE CONTRACTOR SHALL CONDUCT THE WORK IN A SAFE MANNER SO AS TO POSE NO DANGER OR HAZARDS TO PERSONS OR PROPERTY. WHERE NECESSARY, TEMPORARY SHIELDS OR OTHER PROTECTIVE DEVICES MUST BE UTILIZED. THE CONTRACTOR ASSUMES FULL RESPONSIBILITY AND EXPENSE OF ANY AND ALL SAFETY MEASURES. THE USE OF EXPLOSIVES IS STRICTLY PROHIBITED. THE CONTRACTOR SHALL COMPLY WITH ALL OSHA AND NEW YORK STATE DEPARTMENT OF LABOR REQUIREMENTS.
16. RESEED ALL AREAS WHERE WORK OCCURS AND/OR WHERE CONTRACTOR DAMAGES EXISTING GRASS. COMPLY WITH THE SPECIFICATIONS. STAGING AREAS SHALL BE RESTORED TO ORIGINAL CONDITION AND SHALL BE SEEDED FOLLOWING COMPLETION OF ALL PHYSICAL WORK.
17. THE CONTRACTOR SHALL HAVE A COMPETENT REPRESENTATIVE PRESENT WHO SHALL RESPOND TO ANY QUESTIONS OR REQUESTS OF THE ENGINEER IN THE PROSECUTION AND COMPLETION OF THE WORK IN CONFORMITY WITH THIS CONTRACT, AND SHALL HAVE FULL AUTHORITY TO SUPPLY LABOR AND MATERIAL IMMEDIATELY. THE CONTRACTOR SHALL ALSO HAVE A COMPETENT REPRESENTATIVE AVAILABLE TO RECEIVE TELEPHONE MESSAGES AND PROVIDE A REASONABLE REPLY AS SOON AS POSSIBLE, BUT NO LATER THAN 24 HOURS.
18. NEITHER THE OWNER OR ENGINEER SHALL BE RESPONSIBLE FOR THE MEANS AND METHODS CHOSEN BY THE CONTRACTOR TO COMPLETE THE WORK.
19. THE CONTRACTOR SHALL HAVE FULL RESPONSIBILITY FOR SITE SAFETY AND THE SAFETY OF THE CONTRACTOR'S WORK FORCE.
20. BACKFILL AT ALL EXCAVATIONS SHALL BE PLACED IN 6" LIFTS AND SHALL ACHIEVE A COMPACTION NOT LESS THAN 95 PERCENT OF STANDARD PROCTOR MAXIMUM DENSITY. UNDER THE TERMS OF THE CONTRACT, THE CONTRACTOR SHALL PERFORM FIELD TESTS BY AN APPROVED LABORATORY TO ASSURE THIS COMPACTION RATE AT VARYING DEPTHS. THE CONTRACTOR SHALL BEAR ALL COSTS FOR TESTING AND ANY DELAYS THAT RESULT FROM SUCH TESTING.
21. THE CONTRACTOR SHALL ADJUST ALL MANHOLE FRAMES AND COVERS, VALVE COVERS, WATERVALVE BOXES, DRAINAGE INLETS, ETC. AS NECESSARY TO MEET THE SURFACE OF NEW PAVEMENT OR WALKWAY AS REQUIRED TO ALLOW POSITIVE DRAINAGE. NO SEPARATE PAYMENT WILL BE MADE FOR THIS WORK UNLESS OTHERWISE NOTED IN THE CONTRACT DOCUMENTS. THE CONTRACTOR SHALL COORDINATE THIS ACTIVITY WITH THE RELATED UTILITY COMPANIES, IF APPLICABLE. WARPING OF THE PAVEMENT SURFACE TO MEET THESE ITEMS WILL NOT BE PERMITTED.
22. ALL EXISTING SIGNS IN THE CONTRACT AREA ARE TO REMAIN INTACT. SIGNS DAMAGED SHALL BE REPLACED AT THE CONTRACTOR'S EXPENSE. ANY SIGNS THAT REQUIRE RESETTING SHALL BE PLACED IN A FINAL POSITION DETERMINED BY THE OWNER. NO SEPARATE PAYMENT SHALL BE MADE FOR THIS WORK. THE CONTRACTOR SHALL BE HELD RESPONSIBLE FOR SIGNS DAMAGED BY HIS OPERATIONS. THE CONTRACTOR SHALL BE RESPONSIBLE FOR ALL DAMAGES TO BURIED AND OVERHEAD UTILITIES LOCATED ON PUBLIC AND PRIVATE PROPERTY. THE CONTRACTOR SHALL BE RESPONSIBLE FOR ALL DAMAGES TO FACILITIES ON PUBLIC AND PRIVATE PROPERTY, SUCH AS, LANDSCAPING, DRIVEWAYS, CURBS, PAVEMENT, SIDEWALK, ETC.
23. CONTRACTOR IS RESPONSIBLE TO COORDINATE AND VERIFY THE EXTENT OF ALL DEMOLITION WITH THE ENGINEER PRIOR TO PERFORMING THE WORK.
24. CONTRACTOR SHALL RESTORE STAGING AREA BACK TO ITS ORIGINAL CONDITION INCLUDING GRADING, SEEDING ETC. EXISTING TREES, UTILITIES, LIGHT POLES, STONE, SIDEWALK, CURB, ETC. SHALL BE PROTECTED AND REPLACED IF DAMAGED. PROVIDE ELECTRICAL POWER, WATER, TELEPHONE, ETC. AS SPECIFIED FOR THE ENGINEERS TRAILER WHICH SHALL BE LOCATED IN THE STAGING AREA.

SURVEY NOTES:

1. HORIZONTAL COORDINATES SHOWN HEREON REFER TO THE NORTH AMERICAN DATUM OF 1983 (NAD83), NEW YORK STATE PLANE COORDINATE SYSTEM, NEW YORK EAST ZONE 3101.
2. VERTICAL ELEVATIONS SHOWN HEREON REFER TO THE NORTH AMERICAN VERTICAL DATUM OF 1988 (NAVD88) WHICH IS BASED ON THE UNITED STATES COAST & GEODETIC SURVEY MEAN SEA LEVEL AT SANDY HOOK, NEW JERSEY.
3. LOCATION OF UTILITIES AS SHOWN ARE BASED UPON MAP TITLED "PARTIAL TOPOGRAPHICAL AND UTILITY SURVEY OF RYE PLAYLAND PARK" BY LKB LAST UPDATED SEPTEMBER 8, 2017.
4. LOCATIONS OF UNDERGROUND UTILITIES SHOWN ON THIS SURVEY ARE APPROXIMATE. RLT ENGINEERING, GEOLOGY, AND LAND SURVEYING, P.C., CANNOT GUARANTEE THE LOCATION OF UNDERGROUND UTILITIES AND STRUCTURES. THE STANDARD OF CARE USED BY RLT ENGINEERING, GEOLOGY, AND LAND SURVEYING, P.C. TO LOCATE THE UTILITIES IS REASONABLE AND CONSISTENT WITH THE LOCAL STANDARD OF CARE USED TO LOCATE THE UNDERGROUND UTILITIES. LOCATIONS AND SIZE ARE BASED ON UTILITY MARK-OUTS, AS-BUILT MAPS AND OTHER VISIBLE SURFACE EVIDENCE OBSERVED IN THE COURSE OF THIS SURVEY. PRIOR TO EXCAVATION OR CONSTRUCTION THE LOCATION, SIZE AND TYPE OF ALL UNDERGROUND UTILITY LOCATIONS MUST BE VERIFIED BY THE RESPECTIVE UTILITY COMPANY.
5. THE SUBJECT PROPERTY OF RYE PLAYLAND PARK FALLS WITHIN FEMA FLOOD ZONES AE (EL 12), AE (EL 13), VE (EL 14), VE (EL 15), VE (EL 16), VE (EL 17) AS SHOWN ON THE FEMA FLOOD INSURANCE RATE MAP COMMUNITY PANEL #36119C0358 F EFFECTIVE DATE SEPTEMBER 28, 2007 AND FEMA FLOOD INSURANCE RATE MAP COMMUNITY PANEL #36119C0356 F EFFECTIVE DATE SEPTEMBER 28, 2007. FEMA ELEVATIONS REFER TO NAVD88."

DEMOLITION NOTES:

1. ALL REQUIRED DEMOLITION PERMITS MUST BE OBTAINED FROM ALL REQUIRED AGENCIES PRIOR TO COMMENCEMENT OF WORK.
2. ANY ASBESTOS REMOVAL MUST BE DONE BY A CERTIFIED ASBESTOS REMOVAL CONTRACTOR.
3. ALL UTILITY COMPANIES MUST BE NOTIFIED A MINIMUM OF 48 HOURS IN ADVANCE OF DEMOLITION.
4. FOR ALL UTILITIES, CONTRACTOR SHALL VERIFY DISCONNECT PRIOR TO DEMOLITION.
5. PROPER FENCING OR PUBLIC PROTECTION DEVICES MUST BE CONSTRUCTED AND MAINTAINED AROUND THE PERIMETER OF THE SITE AT ALL TIMES DURING DEMOLITION PHASE.
6. IT IS THE CONTRACTOR'S RESPONSIBILITY TO CONTROL DUST, DIRT, AND DEBRIS DURING DEMOLITION AND CONSTRUCTION PHASES.
7. IF SUSPICIOUS AND/OR HAZARDOUS MATERIAL IS ENCOUNTERED DURING DEMOLITION / CONSTRUCTION, ALL WORK SHALL STOP AND THE COUNTY DEPARTMENT OF HEALTH AND THE NEW YORK STATE DEPARTMENT OF ENVIRONMENTAL CONSERVATION SHALL BE NOTIFIED IMMEDIATELY. WORK SHALL NOT RESUME UNTIL THE CONTRACTOR HAS OUTLINED APPROPRIATE ACTION FOR DEALING WITH THE WASTE MATERIAL.
8. WHERE EXISTING CURB, GUTTER, SIDEWALK OR WALK IS TO BE REMOVED, IT SHALL BE SAW CUT OR REMOVED AT THE NEAREST JOINT.
9. THE CONTRACTOR SHALL PERFORM DAILY CLEANUP OPERATIONS WHICH INCLUDE SWEEPING OF THE ROADWAYS, REMOVAL OF DEBRIS (CUPS, PAPER BAGS, CANS, ETC.), REMOVAL OF EXCESS CONSTRUCTION MATERIALS, ALL TO THE SATISFACTION OF THE OWNER.
10. THE CONTRACTOR SHALL CONFORM TO ALL STATE AND LOCAL RULES, REGULATIONS AND LAWS WHICH SHALL GOVERN THE HAULING AND DISPOSING OF TREES, SHRUBS, STUMPS, ROOTS, RUBBISH, DEBRIS AND OTHER MATTER.
11. NO TREES , SHRUBS, ROOTS, BRANCHES, WOOD, CONCRETE OR OTHER DEBRIS SHALL BE BURIED IN FILLS, EMBANKMENTS OR STOCK PILES.
12. NO CLEARED MATTER, DEBRIS SHALL BE STORED AT THE CONSTRUCTION SITE.
13. CONTRACTOR SHALL GUARANTEE THAT WORK PERFORMED UNDER THIS CONTRACT WILL NOT PERMANENTLY DAMAGE TREES, SHRUBS, TURF OR PLANTS DESIGNATED TO REMAIN, OR OTHER ADJACENT WORK OR FACILITIES. IF DAMAGE RESULTING FROM CONTRACTOR'S OPERATIONS APPEARS DURING THE PERIOD UP TO 24 MONTHS AFTER COMPLETION OF THE PROJECT, THE CONTRACTOR SHALL REPLACE DAMAGED ITEMS AT HIS EXPENSE.
14. DAMAGE TO ANY EXISTING ITEMS, NOT SHOWN IN CONTRACT DOCUMENTS TO BE REMOVED, SUCH AS PAVEMENT, GRASSED AREAS, UTILITIES, STRUCTURES OR OTHER FACILITIES SHALL BE REPAIRED BY THE CONTRACTOR IMMEDIATELY AT HIS OWN EXPENSE TO THE SATISFACTION OF THE ENGINEER AND OWNER. ALL ASPHALT PAVEMENTS, GRASSED AREAS AND LANDSCAPING THAT ARE DAMAGED OR DISTURBED SHALL BE RESTORED IN ACCORDANCE WITH APPLICABLE SECTIONS ON THE CONTRACT SPECIFICATIONS.
15. EXCEPT AS NOTED BELOW, CONTRACTOR SHALL REMOVE FROM THE SITE AND SATISFACTORILY DISPOSE OF ALL TREES, SHRUBS, ROOTS, BRUSH, MASONRY, RUBBISH, SCRAP, DEBRIS, PAVEMENT, CURBS, FENCES AND MISCELLANEOUS OTHER ITEMS NOT COVERED UNDER OTHER SECTIONS AS SHOWN, SPECIFIED OR OTHERWISE REQUIRED TO PERMIT CONSTRUCTION OF NEW WORK.
16. BURNING OF MATERIAL IS EXPRESSLY FORBIDDEN.
17. TREES AND SHRUBS TO BE SAVED:

A. TREES AND SHRUBS WHICH ARE TO REMAIN SHALL BE PROTECTED BY FENCES, BARRICADES, WRAPPING OR OTHER MEANS OF PROTECTION. EQUIPMENT STORAGE, MATERIAL STOCKPILES, ETC., SHALL NOT BE PERMITTED WITHIN TREE BRANCH SPREAD.

B. PROTECT ALL OTHER TREES AND SHRUBS FROM DEFACEMENT, INJURY AND DESTRUCTION. PRESERVE TREES WITHIN THE CONTRACT LIMITS THAT ARE SO DELINEATED ON THE PLANS OR AS MARKED IN THE FIELD BY THE ENGINEER. ALSO, ALL TO BE SAVED SHALL BE PROTECTED IN ACCORDANCE WITH THE CONTRACT DOCUMENTS.

C. DO NOT CUT ROOTS UNNECESSARILY; HANDWORK OR OTHER METHODS SHALL BE IMPLEMENTED TO PREVENT DAMAGE TO ROOTS WHICH EXTEND INTO GRADING LIMITS OR LIMITS OF EXCAVATION. DISTURB ROOTS AS LITTLE AS POSSIBLE WHEN TUNNELING UNDER TREES. BACKFILLING AROUND TREE ROOTS SHALL BE DONE IMMEDIATELY AFTER COMPLETION OF CONSTRUCTION IN THE VICINITY OF TREES.

D. THE CONTRACTOR SHALL BE RESPONSIBLE FOR THE PROTECTION OF ALL VEGETATION FROM DAMAGE RESULTING FROM EMISSIONS FROM MOTORIZED EQUIPMENT.

E. CONTRACTOR SHALL BE VIGILANT OF ANY OVERHEAD UTILITY LINES WHEN USING AERIAL EQUIPMENT FOR TREE TRIMMING OPERATIONS.

F. DURING WORKING OPERATION, PROTECT THE TRUNK, FOLIAGE, AND ROOT SYSTEM OF ALL TREES TO BE SAVED WITH BOARDS OR OTHER GUARDS AND AS REQUIRED TO PREVENT DAMAGE, INJURY AND DEFACEMENT. DO NOT PILE EXCAVATED MATERIAL ADJACENT TO THE BASE OF ANY TREES. DO NOT ALLOW RUNOFF TO ACCUMULATE AROUND BASE OF TREES. DO NOT FASTEN OR ATTACH ROPES, CABLE OR GUY WIRES TO TREES WITHOUT PERMISSION OF THE ENGINEER. WHEN SUCH PERMISSION IS GRANTED, PROTECT THE TREE BEFORE MAKING FASTENING OR ATTACHMENTS BY PROVIDING BURLAP WRAPPING AND SOFTWOOD CLEATS. THE CONTRACTOR SHALL BE HELD RESPONSIBLE FOR DAMAGE RESULTING FROM THESE ACTIONS. USE OF AXES OR CLIMBING SPURS FOR TRIMMING WILL NOT BE PERMITTED. PROVIDE CLIMBING ROPES DURING TRIMMING.

G. REMOVE SHRUBS TO BE SAVED, TAKING A SUFFICIENT EARTH BALL AT THE ROOTS TO MAINTAIN THE SHRUB. TEMPORARILY REPLANT IF REQUIRED, AND REPLACE AT THE COMPLETION OF CONSTRUCTION IN CONDITION EQUALING THE ORIGINAL.

H. TREE AND SHRUB REPAIR WHERE REQUIRED SHALL BE PERFORMED BY A TREE SURGEON.

I. TREES AND SHRUBS INTENDED TO REMAIN WHICH ARE DAMAGED BEYOND REPAIR BY CONSTRUCTION, SHALL BE REPLACED BY THE CONTRACTOR AT NO EXPENSE TO THE OWNER.

SITE NOTES:

1. THE CONTRACTOR SHALL PERFORM ALL WORK IN COMPLIANCE WITH TITLE 29 OF FEDERAL REGULATIONS, PART 1926, SAFETY AND HEALTH REGULATIONS FOR CONSTRUCTION(OSHA).
2. HIGHWAY DRAINAGE ALONG ALL ROADS AND PRIVATE DRIVES SHALL BE KEPT CLEAN OF MUD, DEBRIS ETC. AT ALL TIMES.
3. REFER TO ARCHITECTURAL DRAWINGS FOR BUILDING INFORMATION.
4. THE CONTRACTOR SHALL CONSULT THE DESIGN ENGINEER BEFORE DEVIATING FROM THESE PLANS.
5. IN ALL TRENCH EXCAVATIONS, CONTRACTOR MUST LAY THE TRENCH SIDE SLOPES BACK TO A SAFE SLOPE, USE A TRENCH SHIELD OR PROVIDE SHEETING AND BRACING IF REQUIRED.
6. THE CONTRACTOR SHALL TAKE PRECAUTIONS TO MAINTAIN A MINIMUM OF 2' OF COVER OVER ALL EXISTING AND NEW STORM AND SANITARY PIPES DURING CONSTRUCTION.
7. ALL EXISTING SURFACE APPURTENANCES (I.E. WATER VALVES, CATCH BASIN FRAMES AND GRATES, MANHOLE COVERS) WITHIN THE PROJECT LIMITS SHALL BE ADJUSTED TO FINISHED GRADE.
8. UNLESS COVERED BY THE CONTRACT SPECIFICATIONS OR AS NOTED ON THE PLANS, ALL WORK SHALL CONFORM TO THE NEW YORK STATE DEPARTMENT OF TRANSPORTATION STANDARD SPECIFICATIONS DATED JANUARY 1, 2020 AND ANY SUBSEQUENT APPENDICES.

UTILITY NOTES:

1. APPROXIMATE LOCATION OF KNOWN UTILITY STRUCTURES AND FACILITIES THAT MAY BE ENCOUNTERED WITHIN AND ADJACENT TO THE LIMITS OF WORK ARE SHOWN ON THE PLANS. THE ACCURACY AND COMPLETENESS OF THIS INFORMATION IS NOT GUARANTEED BY THE ENGINEER. THE CONTRACTOR IS ADVISED TO VERIFY IN FIELD ALL THE FACTS CONCERNING THE UTILITY LOCATIONS AND OTHER CONSTRUCTION OBSTACLES PRIOR TO CONSTRUCTION OF ANY DISCREPANCIES WHICH MAY AFFECT PROJECT DESIGN AND/OR SCOPE.
2. ALL ABANDONED WATER LINES SHALL BE CUT AND CAPPED IN ACCORDANCE WITH WESTCHESTER COUNTY REQUIREMENTS.
3. TRENCH DETAILS ARE INTENDED TO PROVIDE INFORMATION REGARDING BACKFILLING MATERIALS AND GENERAL MATERIAL DEPTHS ONLY. THE CONTRACTOR SHALL BE RESPONSIBLE FOR THE MEANS AND METHODS OF CONSTRUCTION AND SHALL PROVIDE APPROPRIATE SAFETY MEASURES, SHEETING AND BRACING AS NECESSARY. SHEETING CONDITIONS ARE TO BE DESIGNED BY A NEW YORK STATE LICENSED PROFESSIONAL ENGINEER AND SUBMITTED TO THE DESIGN ENGINEER FOR APPROVAL. THE DESIGN ENGINEER ASSUMES NO RESPONSIBILITY OR LIABILITY FOR FIELD CONDITIONS, TRENCHING OR BACKFILLING OPERATIONS DURING CONSTRUCTION. THE CONTRACTOR SHALL COMPLY WITH ALL APPLICABLE OSHA STANDARDS AND DETAILS FOR TRENCH EXCAVATION.
4. CONTRACTOR SHALL BE RESPONSIBLE FOR DEWATERING AND PRECLUDING PONDING OF WATER IN ALL AREAS. DEWATERING OPERATIONS SHALL BE IN ACCORDANCE WITH NYSDEC REGULATIONS, THE PROJECT STORMWATER POLLUTION PREVENTION PLAN AND WESTCHESTER COUNTY.
5. THE CONTRACTOR SHALL COMPLY WITH THE LATEST OSHA CONFINED SPACE ENTRY REQUIREMENTS (29 CFR PART 1910).
6. THE CONTRACTOR SHALL COMPLY WITH THE LATEST REVISED OSHA SHEETING REQUIREMENTS (29 CFR PART 1926.650, 651, 652).
7. ALL EXISTING UTILITIES THAT ARE TO REMAIN IN SERVICE AND THAT INTERFERE WITH THE WORK SHALL BE RELOCATED UNLESS OTHERWISE SHOWN.
8. ALL ABANDONED PIPES SHALL BE PLUGGED, REMOVED, CRUSHED OR FILLED WITH A SUITABLE MATERIAL AS DIRECTED BY THE ENGINEERS, ABANDONED PIPES 12" INSIDE DIAMETER AND LARGER MUST BE REMOVED, FILLED OR CRUSHED IN PLACE. SMALLER PIPES SHALL BE PLUGGED AND ABANDONED IN PLACE UNLESS OTHERWISE DIRECTED BY THE ENGINEER.
9. THE CONTRACTOR SHALL CONTACT THE UTILITY COMPANIES TO DETERMINE THEIR SCHEDULE FOR PERFORMING UTILITY RELOCATION AND INSTALLATION WORK. THE CONTRACTOR SHALL SCHEDULE THEIR WORK ACCORDINGLY IN ORDER TO NOT INTERFERE WITH THE WORK OF THE UTILITY COMPANIES.
10. TRENCHES SHALL BE BACKFILLED WITHOUT DELAY. OPEN TRENCHES SHALL BE TEMPORARILY SUPPORTED AND STEEL PLATED WHEN WORK IS NOT IN PROGRESS. CONTRACTOR MUST ENSURE NO TRENCHES ARE LEFT OPEN OVERNIGHT. THE CONTRACTOR IS RESPONSIBLE FOR THE DESIGN AND INSTALLATION OF STEEL PLATES THAT ARE CAPABLE OF SAFELY SUPPORTING THE SUBJECTED LOADS.
11. THE CONTRACTOR SHALL BE RESPONSIBLE FOR PROVIDING TEMPORARY LIGHTING WITHIN THE LIMITS OF CONSTRUCTION AND FOR ALL AREAS WHERE WHERE EXISTING STREET AND AREA LIGHTING SHUT-DOWN IS REQUIRED TO INSTALL NEW LIGHTING AND ELECTRICAL SERVICE.
12. ALL CMP PIPES SHALL FOLLOW NYSDOT SECTION 602-2 AND 707.02, BE HELICAL BITUMINOUS COATED, SHALL HAVE GASKETED AND BANDED JOINTS AND BE OF THE FOLLOWING PIPE GAUGES UNLESS OTHERWISE SPECIFIED.

   10" TO 21" - 14 GAUGE
   24" TO 30" - 12 GAUGE
   30" TO 60" - 10 GAUGE
13. IN INSTANCES WHERE THE STORM SEWER CROSSES THE SANITARY SEWER A CRUSHED STONE ENCASEMENT SHALL BE PROVIDED AROUND THE SANITARY SEWER UP TO THE STORM SEWER-COMPACT WITH APPROVED EQUIPMENT
14. ALL CATCH BASINS AND STORM MANHOLES WITHIN PAVEMENT TO BE CONSTRUCTED TO WITHSTAND H-20 LOADING.
15. ALL EXISTING CATCH BASINS WITHIN WORK LIMITS TO BE CLEANED OF ANY DEBRIS OR SILT.

GRADING NOTES:

1. REMOVE AND STOCKPILE TOPSOIL AS DIRECTED BY THE CONSTRUCTION MANAGER. REPLACE TOPSOIL TO A MINIMUM 4" DEPTH. ALL DISTURBED AREAS TO BE HYDROSEEDED AS DIRECTED BY THE CONSTRUCTION MANAGER.
2. CONTRACTOR SHALL BE RESPONSIBLE FOR THE MAINTENANCE AND REMOVAL OF TEMPORARY SEDIMENTATION CONTROLS, INCLUDING SILT SINK AND SILT FENCE. EROSION CONTROL MEASURES SHALL NOT BE REMOVED BEFORE VEGETATION HAS OCCURRED COMPLETELY.
3. ALL SILT FENCE TO BE REPLACED WHENEVER THEY BECOME CLOGGED OR INOPERABLE AND SHALL BE REPLACED AS DIRECTED BY THE ENGINEER.
4. THE CONTRACTOR SHALL BE RESPONSIBLE FOR RESTORATION OF TOPSOIL TO ALL DISTURBED AREAS. IT IS THE CONTRACTOR'S RESPONSIBILITY TO MAINTAIN EROSION CONTROL MEASURES AT ALL TIMES.
5. EROSION CONTROL MEASURES WILL BE IMPLEMENTED IN ACCORDANCE WITH THE NEW YORK STATE GUIDELINES FOR URBAN EROSION SEDIMENT CONTROL MANUAL, WESTCHESTER COUNTY HEALTH DEPARTMENT, AND THE CITY OF RYE REQUIREMENTS.
6. ALL INLETS TO THE STORM SEWER SHALL HAVE STONE DROP INLET PROTECTION. THE CONTRACTOR SHALL BE RESPONSIBLE FOR MAINTAINING THE BEST MANAGEMENT PRACTICES (BMP'S) UNTIL GROUND COVER IS ESTABLISHED.
7. SILT FENCE, JUTE MESH, AND/OR EROSION CONTROL BLANKETS WILL BE USED ON STEEP SLOPES AND WHEREVER NECESSARY TO CONTROL EROSION AND SILTATION OF EXISTING DRAINAGE SYSTEMS AS ORDERED BY THE ENGINEER OR SPECIFIED ON PLANS.
8. THE CONTRACTOR SHALL DESIGNATE A MEMBER OF HIS/HER FIRM TO BE RESPONSIBLE TO MONITOR EROSION CONTROL, EROSION CONTROL STRUCTURES, TREE PROTECTION AND PRESERVATION THROUGHOUT CONSTRUCTION.
9. ALL DISTURBED AREAS SHALL BE PROTECTED FROM EROSION EITHER BY MULCH OR TEMPORARY SEEDING WITHIN 2 WEEKS OF DISTURBANCE.

SOIL EROSION AND SEDIMENT CONTROL NOTES:

1. ALL SOIL EROSION AND SEDIMENT CONTROL PRACTICES TO BE INSTALLED PRIOR TO ANY SOIL DISTURBANCE, OR IN THEIR PROPER SEQUENCE, AND MAINTAINED UNTIL PERMANENT PROTECTION IS ESTABLISHED. CONTRACTOR SHALL COMPLY WITH ALL REQUIREMENTS OF THE STORMWATER POLLUTION PREVENTION PLAN.
2. ANY DISTURBED AREAS THAT WILL NOT RECEIVE PERMANENT RESTORATION WITHIN TEN (10) DAYS AFTER FINAL GRADING, AND NOT SUBJECT TO CONSTRUCTION TRAFFIC, WILL IMMEDIATELY RECEIVE A TEMPORARY COVER. THE DISTURBED AREAS WILL BE MULCHED WITH STRAW, OR EQUIVALENT MATERIAL AT A RATE OF TWO (2) TONS PER ACRE, ACCORDING TO STATE STANDARDS.
3. PERMANENT VEGETATION TO BE SEEDED OR SODDED ON ALL EXPOSED AREAS WITHIN TEN (10) DAYS AFTER FINAL GRADING. MULCH WILL BE USED AS NECESSARY FOR PROTECTION UNTIL SEEDING IS ESTABLISHED.
4. ALL WORK TO BE DONE IN ACCORDANCE WITH THE STANDARDS FOR SOIL EROSION AND SEDIMENT CONTROL IN THE STATE OF NEW YORK.
5. A SUB-BASE COURSE DETAIL WILL BE APPLIED IMMEDIATELY FOLLOWING ROUGH GRADING AND INSTALLATION OF IMPROVEMENTS IN ORDER TO STABILIZE ROADS, DRIVEWAYS PARKING AREAS AND SIDEWALKS. IN AREAS WHERE NO UTILITIES ARE PRESENT, THE SUB-BASE SHALL BE INSTALLED WITHIN 15 DAYS OF THE PRELIMINARY GRADING.
6. IMMEDIATELY FOLLOWING INITIAL DISTURBANCE OR ROUGH GRADING, ALL CRITICAL AREAS SUBJECT TO EROSION (I.E.; STEEP SLOPES AND ROADWAY EMBANKMENTS) WILL RECEIVE A TEMPORARY COVER OF STRAW MULCH OR A SUITABLE EQUIVALENT AT A RATE OF TWO (2) TONS PER ACRE, ACCORDING TO NYS STANDARDS.
7. ANY STEEP SLOPES RECEIVING PIPELINE INSTALLATION WILL BE BACKFILLED AND STABILIZED DAILY, AS THE INSTALLATION PROCEEDS (I.E.; SLOPES GREATER THAN 3:1).
8. IN ACCORDANCE WITH THE STANDARDS FOR PERMANENT VEGETATIVE COVER FOR SOIL STABILIZATION, ANY SOIL HAVING A pH OF 4 OR LESS OR CONTAINING IRON SULFIDES SHALL BE COVERED WITH A MINIMUM OF 12 INCHES OF SOIL HAVING A pH OF 5 OR GREATER PRIOR TO SEEDBED PREPARATION.
9. WESTCHESTER COUNTY AND THE ENGINEER, SHALL BE NOTIFIED 72 HOURS IN ADVANCE OF ANY LAND DISTURBING ACTIVITY.
10. AT THE TIME WHEN THE SITE PREPARATION FOR PERMANENT VEGETATIVE STABILIZATION IS GOING TO BE ACCOMPLISHED, ANY SOIL THAT WILL NOT PROVIDE A SUITABLE ENVIRONMENT TO SUPPORT ADEQUATE VEGETATIVE GROUND COVER, SHALL BE REMOVED OR TREATED IN SUCH A WAY THAT WILL PERMANENTLY ADJUST THE SOIL CONDITIONS AND RENDER IT SUITABLE FOR VEGETATIVE COVER. IF THE REMOVAL OR TREATMENT OF THE SOIL WILL NOT PROVIDE SUITABLE CONDITIONS, NON-VEGETATIVE MEANS OF PERMANENT GROUND STABILIZATION WILL HAVE TO BE EMPLOYED.
11. THE CONTRACTOR SHALL TAKE NECESSARY MEASURES TO MAINTAIN DUST CONTROL. DIRT HAUL ROADS SHALL BE SPRINKLED WITH WATER OR GIVEN A SURFACE OF CRUSHED STONES OR WOOD CHIPS AS REQUIRED. VEHICLES SHALL BE CLEANED, AS NECESSARY, PRIOR TO USING PUBLIC STREETS. PAVED ROADS SHALL BE SPRINKLED WITH WATER.
12. ALL SOIL EROSION AND SEDIMENT CONTROL DEVICES SHALL BE LOCATED IN THE FIELD AS REQUIRED OR AT THE DIRECTION OF THE ENGINEER. THE CONTRACT DRAWING ARE NOT INTENDED TO SHOW THE LOCATION AND DETAILS FOR ALL SUCH DEVICES BUT ARE TO BE USED AS A REASONABLE GUIDE.
13. ANY CHANGES TO THE SOIL AND SEDIMENT CONTROL PLANS WILL REQUIRE THE SUBMISSION OF REVISED SOIL EROSION AND SEDIMENT CONTROL PLANS TO WESTCHESTER COUNTY AND THE ENGINEER. THE REVISED PLANS MUST BE PREPARED BY THE CONTRACTOR AND MUST MEET ALL CURRENT NYS SOIL EROSION AND SEDIMENT CONTROL PRACTICES.
14. CONTRACTOR SHALL OBTAIN ALL REQUIRED SEDIMENT CONTROL PERMITS.
15. UPON COMPLETION OF CONSTRUCTION WORK AND AFTER FINAL GRADING AND WHEN PERMANENT STABILIZATION HAS BEEN ESTABLISHED, STRAW BALES, SILT FENCES AND ALL OTHER SOIL PLAN APPURTENANCES WILL BE REMOVED AND DISPOSED OF BY THE CONTRACTOR, UNLESS ORDERED TO REMAIN BY THE ENGINEER.
16. ALL EXCESS EXCAVATED MATERIAL, EXCEPT FOR TOP SOIL, WILL BE REMOVED FROM THE SITE BY THE CONTRACTOR IN ACCORDANCE WITH THE CONTRACT DOCUMENTS.
17. CONDUIT OUTLETS AND CATCH BASIN INLETS MUST BE PROTECTED PRIOR TO START OF CONSTRUCTION.
18. THE CONTRACTOR SHALL PROVIDE A DETAILED SEQUENCE OF CONSTRUCTION OPERATIONS FOR REVIEW AND SUBMITTAL TO WESTCHESTER COUNTY AND THE ENGINEER.
19. THE CONTRACTOR SHALL MEET ENGINEER ON-SITE TO DEFINE THOSE AREAS WHICH WILL REQUIRE SOIL EROSION AND SEDIMENT CONTROL FACILITIES, DISCUSS THEIR CONSTRUCTION AND THEREAFTER PROVIDE DETAILED PLANS FOR REVIEW OF SUCH FACILITIES BY WESTCHESTER COUNTY AND THE ENGINEER.
20. ALL SOIL EROSION AND SEDIMENT CONTROL PRACTICES SHALL BE IN PLACE WHERE POSSIBLE PRIOR TO, OR IMMEDIATELY FOLLOWING SITE AND ACCESS CLEARING.
21. ALL SOIL EROSION AND SEDIMENT CONTROL PRACTICES SHALL BE LEFT IN PLACE AND MAINTAINED; INCLUDING SILT AND SEDIMENT REMOVAL, UNTIL CONSTRUCTION IS COMPLETED, AREA STABILIZED AND THE ENGINEER SO DIRECTS.
22. CONTRACTOR SHALL CONFINE SOIL DISTURBANCE ACTIVITY TO THE AREAS CONTAINED WITHIN THE "LIMIT OF DISTURBANCE" LINES EXCEPT AS DIRECTED BY THE ENGINEER AND IN ACCORDANCE AND COORDINATION WITH ADJACENT CONTRACTS. SUCH ACTIVITY SHALL SHALL ESSENTIALLY CONSIST OF CLEARING, GRUBBING, GRADING AND CONSTRUCTION IN AREAS DEFINED AS BUILDINGS, PIPELINE, PARKING AREAS, DRIVES AND WALKWAYS OR AS MAY BE REQUIRED DUE TO GRADE CHANGES OR RETAINING WALLS.
23. ALL DEWATERING OPERATIONS MUST DISCHARGE DIRECTLY INTO A SEDIMENT FILTER AREA. SEDIMENT FILTER SHALL BE INSTALLED IN ACCORDANCE WITH THE CONTRACT DOCUMENTS AND THE DETAILS OF DESIGN AND CONSTRUCTION SHALL PREPARED AND SUBMITTED BY THE CONTRACTOR TO THE ENGINEER, AND ALL OTHER PERTINENT AGENCIES FOR REVIEW.
24. SOIL STABILIZATION METHODS SHALL BE UNDERTAKEN COINCIDENTALLY WITH ALL SITE IMPROVEMENTS AND CONTINUE DURING THE CONSTRUCTION ACTIVITY PERIOD.
25. THE LIMITS OF FENCING FOR TREE PROTECTION WILL BE DETERMINED IN THE FIELD PRIOR TO CONSTRUCTION AND WILL INCLUDE THE TREE CANOPY.
26. COMPLY WITH GENERAL PERMIT GP-0-20-001, AS OUTLINED IN THE STORM WATER PREVENTION PLAN (SWPPP).

6/15/2022 4:10:27 PM

CONSULTANT INFORMATION
LiRo Engineers, Inc.
A LiRo Group Company
Mineola, N.Y. 516-746-2350[T]

CONSULTANT SEAL
STATE OF NEW YORK
KENNETH J. HOLMSTROM
LICENSED PROFESSIONAL ENGINEER
No. 059134

REVISION NUMBER	DATE	MADE BY	APP'D BY	REVISION

RECORD DRAWING CERTIFICATION
☐ AS BUILT - CHANGES AS NOTED ☐ AS BUILT - NO CHANGES

CONTRACTOR	PROJECT COORDINATOR
NAME	NAME
SIGNATURE	SIGNATURE
TITLE DATE	TITLE DATE

WESTCHESTER COUNTY, NEW YORK
DEPARTMENT OF PUBLIC WORKS AND TRANSPORTATION
DIVISION OF ENGINEERING

INFRASTRUCTURE REHABILITATION PHASE 3
PLAYLAND PARK, RYE, NEW YORK
SOUTHEAST ARCADE BUILDING
GENERNAL NOTES

CONTRACT NUMBER	SHEET NUMBER
22-523	SA-C-01
DWG NO.: 656 of 664	
SCALE: -	
DATE: 08/23/2022	
DPW FILE NUMBER 1-118-C-1405-0	REV. NO. 0

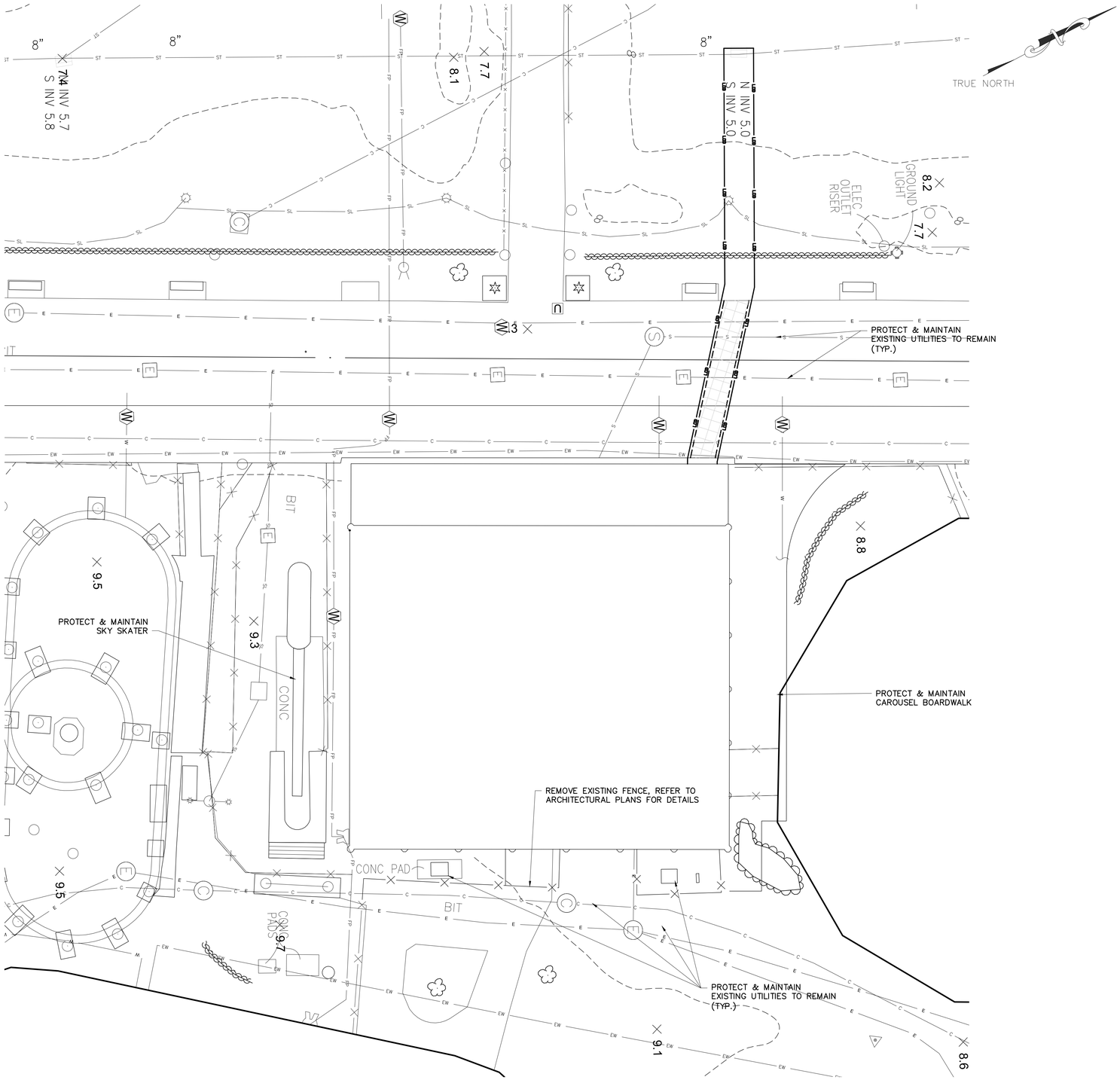

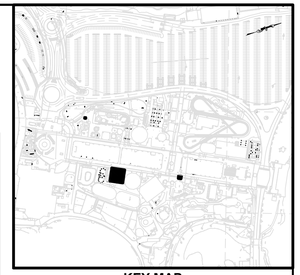

KEY MAP
NOT TO SCALE

EXISTING LEGEND

- POST
- UTILITY POLE
- SIGN OR
- HANDICAP PARKING
- GROUND LIGHT
- LIGHT POLE
- UTILITY POLE WITH LIGHT
- LIGHT POLE (SINGLE LIGHT)
- LIGHT POLE (DOUBLE LIGHT)
- LIGHT POLE (MULTI LIGHT)
- BOAT TIE-OFF CLEAT
- CATCH BASIN OR OR
- TRENCH DRAIN
- MAILBOX
- UNKNOWN MANHOLE
- COMMUNICATIONS BOX/HAND HOLE OR
- ELECTRIC HAND HOLE
- ELECTRIC BOX
- GAS METER
- IRRIGATION BOX
- UNKNOWN UTILITY BOX/HAND HOLE
- COMMUNICATION MANHOLE
- DRAINAGE MANHOLE OR
- ELECTRIC MANHOLE
- SEWER MANHOLE OR
- STORM SEWER MANHOLE
- SEWER CLEANOUT
- HYDRANT
- SIAMESE CONNECTION
- UNKNOWN VALVE OR
- WATER VALVE
- GAS VALVE
- WATER SPIGOT OR FOUNTAIN
- MONITORING WELL
- DECIDUOUS BUSH
- EVERGREEN BUSH
- DECIDUOUS TREE
- EVERGREEN TREE
- STUMP
- HEDGE ROW
- TREELINE
- BRUSHLINE
- RETAINING WALL
- GUIDE RAIL
- STONE WALL
- WATERLINE
- FENCE
- UNDERGROUND COMMUNICATION
- UNDERGROUND PROPANE
- UNDERGROUND ELECTRICAL
- UNDERGROUND STREET LIGHTING
- UNDERGROUND ENVIRONMENTAL WASTEWATER
- UNDERGROUND SEWER
- UNDERGROUND STORM SEWER
- UNDERGROUND WATER
- UNDERGROUND FIRE PROTECTION
- EXISTING MAJOR CONTOUR
- EXISTING MINOR CONTOUR

PROPOSED LEGEND:

- SAW CUTTING ASPHALT CONCRETE
- LIMITS OF DISTURBANCE
- LIMITS OF PAVEMENT REMOVAL
- AREA OF ASPHALT PAVEMENT REMOVAL (FULL DEPTH & EXCAVATION)
- DRAINAGE STRUCTURE INLET PROTECTION
- PIPE REMOVAL

NOTES:

1. PAVEMENT REMOVAL, MILLING AND EXCAVATION, MATERIAL SHALL NOT BE STOCKPILED ON SITE.

2. EXISTING GRADES, PIPE LOCATIONS, SIZES, MATERIAL, INVERTS AND OTHER EXISTING CONDITIONS ARE SHOWN ON THE DRAWINGS FROM AVAILABLE AS-BUILT DRAWINGS AND FIELD SURVEY BY OTHERS. IT SHALL BE THE RESPONSIBILITY OF THE CONTRACTOR TO VERIFY ALL EXISTING CONDITIONS.

3. THE CONTRACTOR SHALL TAKE PROPER PRECAUTIONS NOT TO DAMAGE ANY EXISTING SITE CONDITIONS SPECIFICALLY EXCLUDED FROM THE CONTRACT AND WILL BE HELD SOLELY RESPONSIBLE FOR ANY DAMAGE OCCURRING DURING THE COURSE OF THE WORK DURING CONSTRUCTION. THE CONTRACTOR SHALL, AT THEIR OWN EXPENSE, MAKE ALL REPAIRS REQUIRED TO RESTORE ANY DAMAGED AREAS TO ORIGINAL CONDITIONS.

New York 811 — Know what's below. Call before you dig.

0 10 20 30
1"=10' SCALE BAR

6/15/2022 4:10:27 PM

CONSULTANT INFORMATION
LiRo Engineers, Inc.
A LiRo Group Company
Mineola, N.Y. 516-746-2350[T]

CONSULTANT SEAL
STATE OF NEW YORK — KENNETH J. HOLBRAUN — LICENSED PROFESSIONAL ENGINEER — No. 059134

REVISION NUMBER	DATE	MADE BY	APP'D BY	REVISION

RECORD DRAWING CERTIFICATION
☐ AS BUILT – CHANGES AS NOTED ☐ AS BUILT – NO CHANGES

CONTRACTOR
NAME
SIGNATURE
TITLE DATE

PROJECT COORDINATOR
NAME
SIGNATURE
TITLE DATE

WESTCHESTER COUNTY, NEW YORK
DEPARTMENT OF PUBLIC WORKS AND TRANSPORTATION
DIVISION OF ENGINEERING

INFRASTRUCTURE REHABILITATION PHASE 3
PLAYLAND PARK, RYE, NEW YORK
SOUTHEAST ARCADE BUILDING
EXISTING CONDITIONS/DEMOLITION PLAN

CONTRACT NUMBER	22-523
SHEET NUMBER	SA-C-02
DWG NO.:	657 of 664
SCALE:	1"=10'
DATE:	08/23/2022
DPW FILE NUMBER:	1-118-C-1406-0
REV. NO.:	0

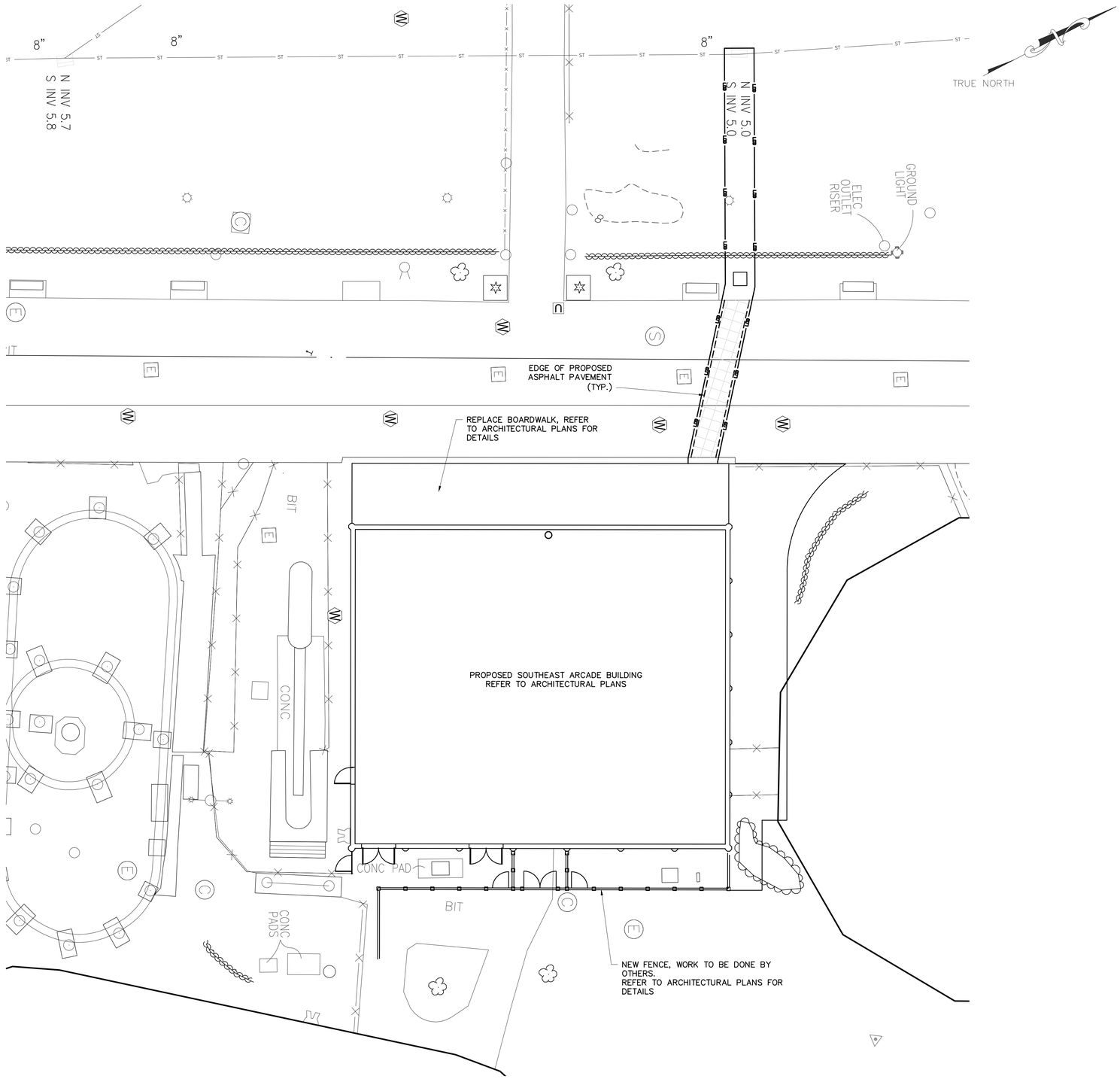

EXISTING LEGEND

- POST
- UTILITY POLE
- SIGN
- HANDICAP PARKING
- GROUND LIGHT
- LIGHT POLE
- UTILITY POLE WITH LIGHT
- LIGHT POLE (SINGLE LIGHT)
- LIGHT POLE (DOUBLE LIGHT)
- LIGHT POLE (MULTI LIGHT)
- BOAT TIE-OFF CLEAT
- CATCH BASIN
- TRENCH DRAIN
- MAILBOX
- UNKNOWN MANHOLE
- COMMUNICATIONS BOX/HAND HOLE
- ELECTRIC HAND HOLE
- ELECTRIC BOX
- GAS METER
- IRRIGATION BOX
- UNKNOWN UTILITY BOX/HAND HOLE
- COMMUNICATION MANHOLE
- DRAINAGE MANHOLE
- ELECTRIC MANHOLE
- SEWER MANHOLE
- STORM SEWER MANHOLE
- SEWER CLEANOUT
- HYDRANT
- SIAMESE CONNECTION
- UNKNOWN VALVE
- WATER VALVE
- GAS VALVE
- WATER SPIGOT OR FOUNTAIN
- MONITORING WELL
- DECIDUOUS BUSH
- EVERGREEN BUSH
- DECIDUOUS TREE
- EVERGREEN TREE
- STUMP
- HEDGE ROW
- TREELINE
- BRUSHLINE
- RETAINING WALL
- GUIDE RAIL
- STONE WALL
- FENCE

PROPOSED LEGEND:

- MOVABLE CONSTRUCTION FENCE
- SAW CUTTING ASPHALT CONCRETE
- LIMITS OF DISTURBANCE
- LIMITS OF PAVEMENT REMOVAL
- AREA OF FULL DEPTH ASPHALT PAVEMENT
- DRAINAGE STRUCTURE INLET PROTECTION

0 10 20 30
1'=10' SCALE BAR

6/15/2022 4:10:27 PM

CONSULTANT INFORMATION
LiRo Engineers, Inc.
A LiRo Group Company
Mineola, N.Y. 516-746-2350[T]

CONSULTANT SEAL
STATE OF NEW YORK · KENNETH J. HOUSER · LICENSED PROFESSIONAL ENGINEER · 089134

REVISION NUMBER	DATE	MADE BY	APP'D BY	REVISION

RECORD DRAWING CERTIFICATION
AS BUILT – CHANGES AS NOTED
AS BUILT – NO CHANGES

CONTRACTOR
NAME
SIGNATURE
TITLE DATE

PROJECT COORDINATOR
NAME
SIGNATURE
TITLE DATE

WESTCHESTER COUNTY, NEW YORK
DEPARTMENT OF PUBLIC WORKS AND TRANSPORTATION
DIVISION OF ENGINEERING

INFRASTRUCTURE REHABILITATION PHASE 3
PLAYLAND PARK, RYE, NEW YORK
SOUTHEAST ARCADE BUILDING
SITE CONSTRUCTION PLAN

CONTRACT NUMBER	22-523
SHEET NUMBER	SA-C-03
DWG NO.:	658 of 664
SCALE:	1"=10'
DATE:	08/23/2022
DPW FILE NUMBER	1-118-C-1407-0
REV. NO.:	0

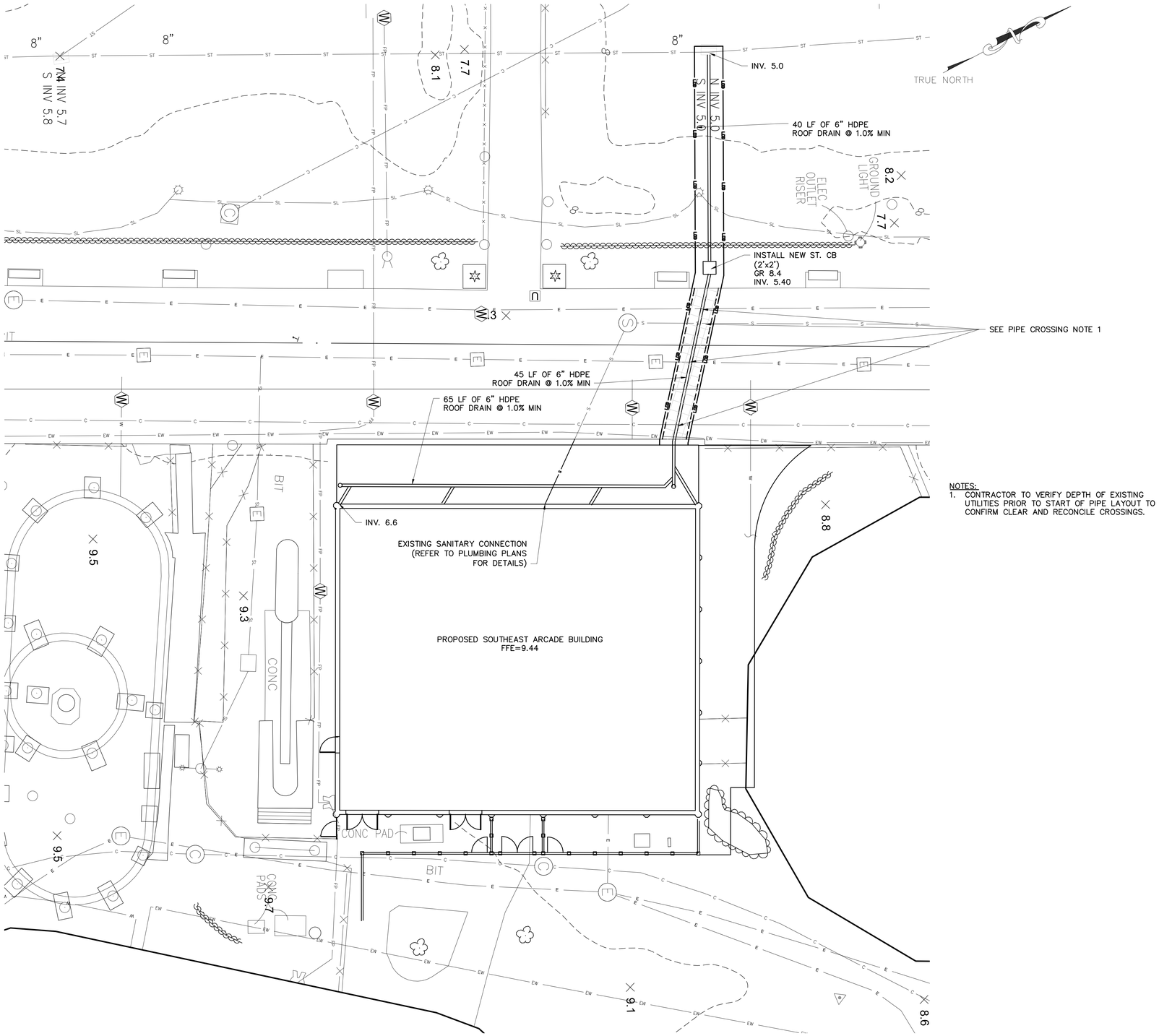

NOTES:
1. CONTRACTOR TO VERIFY DEPTH OF EXISTING UTILITIES PRIOR TO START OF PIPE LAYOUT TO CONFIRM CLEAR AND RECONCILE CROSSINGS.

EXISTING LEGEND

- POST
- UTILITY POLE
- SIGN
- HANDICAP PARKING
- GROUND LIGHT
- LIGHT POLE
- UTILITY POLE WITH LIGHT
- LIGHT POLE (SINGLE LIGHT)
- LIGHT POLE (DOUBLE LIGHT)
- LIGHT POLE (MULTI LIGHT)
- BOAT TIE-OFF CLEAT
- CATCH BASIN
- TRENCH DRAIN
- MAILBOX
- UNKNOWN MANHOLE
- COMMUNICATIONS BOX/HAND HOLE
- ELECTRIC HAND HOLE
- ELECTRIC BOX
- GAS METER
- IRRIGATION BOX
- UNKNOWN UTILITY BOX/HAND HOLE
- COMMUNICATION MANHOLE
- DRAINAGE MANHOLE
- ELECTRIC MANHOLE
- SEWER MANHOLE
- STORM SEWER MANHOLE
- SEWER CLEANOUT
- HYDRANT
- SIAMESE CONNECTION
- UNKNOWN VALVE
- WATER VALVE
- GAS VALVE
- WATER SPIGOT OR FOUNTAIN
- MONITORING WELL
- DECIDUOUS BUSH
- EVERGREEN BUSH
- DECIDUOUS TREE
- EVERGREEN TREE
- STUMP
- HEDGE ROW
- TREELINE
- BRUSHLINE
- RETAINING WALL
- GUIDE RAIL
- STONE WALL
- WATERLINE
- FENCE
- UNDERGROUND COMMUNICATION
- UNDERGROUND PROPANE
- UNDERGROUND ELECTRICAL
- UNDERGROUND STREET LIGHTING
- UNDERGROUND ENVIRONMENTAL WASTEWATER
- UNDERGROUND SEWER
- UNDERGROUND STORM SEWER
- UNDERGROUND WATER
- UNDERGROUND FIRE PROTECTION

PROPOSED LEGEND:

- SAW CUTTING ASPHALT CONCRETE
- LIMITS OF DISTURBANCE
- LIMITS OF PAVEMENT REMOVAL (MILLING & EXCAVATION)
- PROPOSED WATER LINE
- PROPOSED CATCH BASIN
- PROPOSED STORM PIPE
- PROPOSED SANITARY MANHOLE
- PROPOSED SANITARY PIPE
- PROPOSED UNDERGROUND ELECTRIC

New York 811 — Know what's below. Call before you dig.

0 10 20 30
1"=10' SCALE BAR

6/15/2022 4:10:27 PM

CONSULTANT INFORMATION
LiRo Engineers, Inc.
A LiRo Group Company
Mineola, N.Y. 516-746-2350[T]

CONSULTANT SEAL
STATE OF NEW YORK — KENNETH J. HOLMSTROM — LICENSED PROFESSIONAL ENGINEER — No. 059134

REVISION NUMBER	DATE	MADE BY	APP'D BY	REVISION

RECORD DRAWING CERTIFICATION
AS BUILT – CHANGES AS NOTED
AS BUILT – NO CHANGES

CONTRACTOR
NAME
SIGNATURE
TITLE DATE

PROJECT COORDINATOR
NAME
SIGNATURE
TITLE DATE

WESTCHESTER COUNTY, NEW YORK
DEPARTMENT OF PUBLIC WORKS AND TRANSPORTATION
DIVISION OF ENGINEERING

INFRASTRUCTURE REHABILITATION PHASE 3
PLAYLAND PARK, RYE, NEW YORK
SOUTHEAST ARCADE BUILDING
UTILITY CONSTRUCTION PLAN

CONTRACT NUMBER	22-523
SHEET NUMBER	SA-C-04
DWG NO.:	659 of 664
SCALE:	1"=10'
DATE:	08/23/2022
DPW FILE NUMBER	1-118-C-1408-0
REV. NO.	0

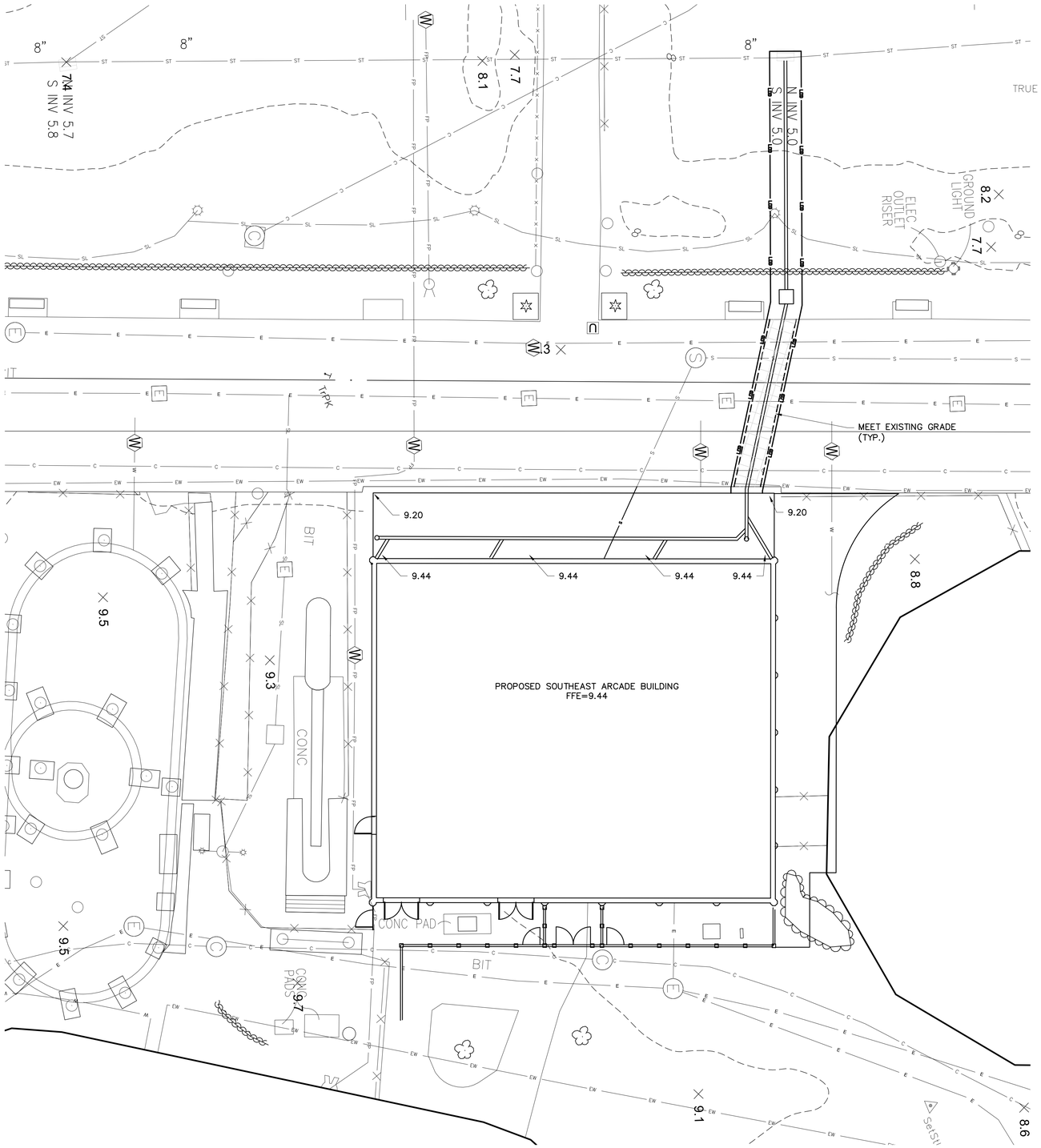

EXISTING LEGEND

	POST
	UTILITY POLE
OR	SIGN
	HANDICAP PARKING
	GROUND LIGHT
	LIGHT POLE
	UTILITY POLE WITH LIGHT
	LIGHT POLE (SINGLE LIGHT)
	LIGHT POLE (DOUBLE LIGHT)
	LIGHT POLE (MULTI LIGHT)
	BOAT TIE-OFF CLEAT
OR OR	CATCH BASIN
	TRENCH DRAIN
M	MAILBOX
	UNKNOWN MANHOLE
C OR C	COMMUNICATIONS BOX/HAND HOLE
E	ELECTRIC HAND HOLE
EB	ELECTRIC BOX
GM	GAS METER
IB	IRRIGATION BOX
U	UNKNOWN UTILITY BOX/HAND HOLE
C	COMMUNICATION MANHOLE
D OR D	DRAINAGE MANHOLE
E	ELECTRIC MANHOLE
S OR S	SEWER MANHOLE
ST	STORM SEWER MANHOLE
	SEWER CLEANOUT
	HYDRANT
M	SIAMESE CONNECTION
V OR V	UNKNOWN VALVE
W	WATER VALVE
G	GAS VALVE
WS	WATER SPIGOT OR FOUNTAIN
	MONITORING WELL
	DECIDUOUS BUSH
	EVERGREEN BUSH
	DECIDUOUS TREE
	EVERGREEN TREE
	STUMP
	HEDGE ROW
	TREELINE
	BRUSHLINE
	RETAINING WALL
	GUIDE RAIL
	STONE WALL
	WATERLINE
	FENCE
C	UNDERGROUND COMMUNICATION
P	UNDERGROUND PROPANE
E	UNDERGROUND ELECTRICAL
SL	UNDERGROUND STREET LIGHTING
EW	UNDERGROUND ENVIRONMENTAL WASTEWATER
S	UNDERGROUND SEWER
ST	UNDERGROUND STORM SEWER
W	UNDERGROUND WATER
FP	UNDERGROUND FIRE PROTECTION
x 415.50	EXISTING SPOT ELEVATION
TG=415.50	EXISTING TOP OF GRATE ELEVATION

PROPOSED LEGEND:

LOD	LIMITS OF DISTURBANCE
415	PROPOSED MAJOR CONTOUR
414	PROPOSED MINOR CONTOUR
9.66	PROPOSED SPOT ELEVATION
	PROPOSED INLET PROTECTION
T9.46 B9.16 BE8.65	PROPOSED TOP OF CURB PROPOSED BOTTOM OF CURB PROPOSED ELEVATION BEHIND CURB

New York 811
Know what's below. Call before you dig.

0 10 20 30
1"=10' SCALE BAR

6/15/2022 4:10:27 PM

CONSULTANT INFORMATION

LiRo Engineers, Inc.
A LiRo Group Company
Mineola, N.Y. 516-746-2350[T]

CONSULTANT SEAL

STATE OF NEW YORK · KENNETH J. HOLLOWAY · LICENSED PROFESSIONAL ENGINEER · 059134

REVISION NUMBER	DATE	MADE BY	APP'D BY	REVISION

RECORD DRAWING CERTIFICATION

☐ AS BUILT – CHANGES AS NOTED ☐ AS BUILT – NO CHANGES

CONTRACTOR
NAME
SIGNATURE
TITLE DATE

PROJECT COORDINATOR
NAME
SIGNATURE
TITLE DATE

WESTCHESTER COUNTY, NEW YORK
DEPARTMENT OF PUBLIC WORKS AND TRANSPORTATION
DIVISION OF ENGINEERING

INFRASTRUCTURE REHABILITATION PHASE 3
PLAYLAND PARK, RYE, NEW YORK
SOUTHEAST ARCADE BUILDING
GRADING AND EROSION CONTROL PLAN

CONTRACT NUMBER: 22-523	SHEET NUMBER: SA-C-05
DWG. NO.: 660 of 664	
SCALE: 1"=10'	
DATE: 08/23/2022	
DPW FILE NUMBER: 1-118-C-1409-0	REV. NO.: 0

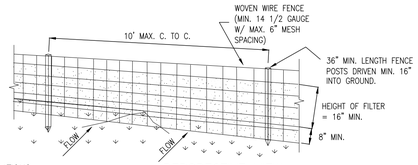

PERSPECTIVE VIEW

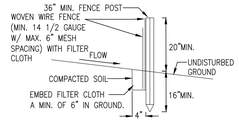

SECTION VIEW

CONSTRUCTION SPECIFICATIONS

1. WOVEN WIRE FENCE TO BE FASTENED SECURELY TO FENCE POSTS WITH WIRE TIES OR STAPLES. POSTS SHALL BE STEEL EITHER "T" OR "U" TYPE OR HARDWOOD.
2. FILTER CLOTH TO BE TO BE FASTENED SECURELY TO WOVEN WIRE FENCE WITH TIES SPACED EVERY 24" AT TOP AND MID SECTION. FENCE SHALL BE WOVEN WIRE, 12 1/2 GAUGE, 6" MAXIMUM MESH OPENING.
3. WHEN TWO SECTIONS OF FILTER CLOTH ADJOIN EACH OTHER THEY SHALL BE OVER-LAPPED BY SIX INCHES AND FOLDED. FILTER CLOTH SHALL BE EITHER FILTER X, MIRAFI 100X, STABILINKA T140N, OR APPROVED EQUIVALENT.
4. PREFABRICATED UNITS SHALL BE GEOFAB, ENVIROFENCE, OR APPROVED EQUIVALENT.
5. MAINTENANCE SHALL BE PERFORMED AS NEEDED AND MATERIAL REMOVED WHEN "BULGES" DEVELOP IN THE SILT FENCE.

SILT FENCE INSTALLATION DETAIL
ITEM NO. 209.13

N.T.S.

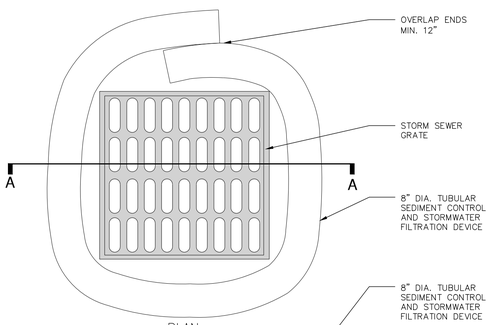

PLAN

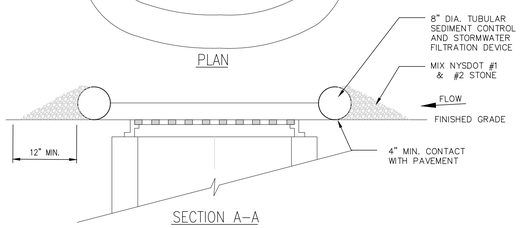

SECTION A–A

NOTES:

1. TUBULAR SEDIMENT CONTROL AND STORMWATER FILTRATION DEVICES SHALL BE FILTREXX FILTERSOXX, OR EQUIVALENT.
2. REPLACE AND DISPOSE OF PER MANUFACTURERS SPECIFICATIONS.
3. THIS PRACTICE INCLUDES SANDBAGS, COMPOST FILTER SOCKS, GEO-TUBES FILLED WITH BALLAST, AND MANUFACTURED SURFACE BARRIERS. PEA GRAVEL CAN ALSO BE USED IN CONJUNCTION WITH THESE PRACTICES TO IMPROVE PERFORMANCE. WHEN INLET IS NOT AT A LOW POINT, AND IS OFF-SET FROM THE PAVEMENT OR GUTTER LINE, PROTECTION SHOULD BE SELECTED AND INSTALLED SO THAT FLOWS ARE NOT DIVERTED AROUND INLET.
4. THE DRAINAGE AREA SHOULD BE LIMITED TO 1 ACRE AT THE DRAINAGE INLET. ALL PRACTICES WILL BE PLACED AT THE INLET PERIMETER OR BEYOND TO MAXIMIZE THE FLOW CAPACITY OF THE INLET. PRACTICES SHALL BE WEIGHTED, BRACED, TIED, OR OTHERWISE ANCHORED TO PREVENT MOVEMENT OR SHIFTING OF LOCATION ON PAVED SURFACES. TRAFFIC SAFETY SHALL BE INTEGRATED WITH THE USE OF THIS PRACTICE. ALL PRACTICES SHOULD BE MARKED WITH TRAFFIC SAFETY CONES AS APPROPRIATE. STRUCTURE HEIGHT SHALL NOT CAUSE FLOODING OR BY-PASS FLOW THAT WOULD CAUSE ADDITIONAL EROSION. THE STRUCTURE SHOULD BE INSPECTED AFTER EVERY STORM EVENT. ANY SEDIMENT SHOULD BE REMOVED AND DISPOSED OF ON THE SITE. ANY BROKEN O DAMAGED COMPONENTS SHOULD BE REPLACED. CHECK ALL MATERIALS FOR PROPER ANCHORING AND SECURE AS NECESSARY.
5. IF USING THE COMPOST FILTER SOCK, THE COMPOST INFILL SHALL BE WELL DECOMPOSED (MATURED AT LEAST 3 MONTHS), WEED-FREE, ORGANIC MATTER. IT SHALL BE AEROBICALLY COMPOSTED, POSSESS NO OBJECTIONABLE OODRS, AND CONTAIN LESS THAN 1%, BY DRY WEIGHT, OF MANMADE FOREIGN MATTER. WHEN USING COMPOST FILTER SOCKS ADJACENT TO SURFACE WATER, THE COMPOST SHOULD HAVE LOW NUTRIENT VALUE.

DRAINAGE STRUCTURE INLET PROTECTION, TEMPORARY

N.T.S.

STORM WATER POLLUTION PREVENTION PLAN NOTES:

THE CONTRACTOR SHALL BE RESPONSIBLE FOR IMPLEMENTATION AND ADHERENCE TO THE STORM WATER POLLUTION PREVENTION PLAN (SWPPP) FROM THE COMMENCEMENT OF THE PROJECT TO SITE STABILIZATION.

POLLUTION PREVENTION MEASURES:

THE CONTRACTOR SHALL TAKE THE FOLLOWING STEPS TO PREVENT LITTER, CHEMICALS AND DEBRIS FROM ENTERING STORM DRAINS AND DISCHARGES.

1. PROPERLY INSTALL AND MAINTAIN EROSION AND SEDIMENT CONTROL DEVICES AS OUTLINED IN THE PROJECT DOCUMENTS AND IN COMPLIANCE WITH THE LATEST EDITION OF THE NEW YORK STATE STANDARDS AND SPECIFICATIONS FOR EROSION AND SEDIMENT CONTROL.
2. PROPERLY CONTAIN AND DISPOSE OF ALL MATERIALS USED ON SITE.
3. CLEAN UP SPILLS IMMEDIATELY TO MINIMIZE SAFETY HAZARD AND PREVENT SPREADING.
4. ROUTINELY INSPECT AND CLEAN OUT CATCH BASINS AND STORM LINES.
5. LABEL ALL STORM INLETS AS "NO DUMPING".
6. CONTROL LITTER BY SWEEPING AND PICKING IT UP DAILY.
7. DO NOT STORE FUEL AND WASTE ON-SITE OR USE SECONDARY CONTAINMENT MEASURES.
8. IF PRACTICAL, USE ALTERNATIVE CLEANING METHODS SUCH AS WIPING DOWN OF VEHICLES AND EQUIPMENT INSTEAD OF HOSING.
9. REMOVE ALL EXCAVATED UNSUITABLE MATERIAL FROM THE SITE AS SOON AS PRACTICABLE.
10. PRACTICE GOOD HOUSEKEEPING AND EDUCATE EMPLOYEES ON POLLUTION PREVENTION MEASURES.

ON SITE MATERIAL STORAGE:

THE CONTRACTOR MAY HAVE THE FOLLOWING MATERIALS STORED ON-SITE DURING PROJECT CONSTRUCTION. THE LIST MAY NOT BE INCLUSIVE AND WILL VARY DURING THE DIFFERENT STAGES OF THE PROJECT.

1. PRE-CAST CONCRETE MANHOLES, CATCH BASINS AND OUTLET CONTROL STRUCTURE.
2. PVC PIPING AND APPURTENANCES.
3. STOCKPILED SOILS – TOP SOIL, SUB BASE MATERIAL, CUSHION MATERIAL, SELECT GRANULAR MATERIAL, GRAVEL AND CRUSHED STONE.
4. EROSION AND SEDIMENT CONTROL MATERIAL: SILT FENCE, RIP RAP AND SEED.
5. PAVING MATERIALS AND EQUIPMENT
6. SECURITY FENCE AND APPURTENANCES
7. EQUIPMENT REQUIRED TO PERFORM THE WORK.

THE CONTRACTOR SHALL UTILIZE THE POLLUTION PREVENTION MEASURES OUTLINED ABOVE TO PREVENT POLLUTANTS FROM STORED MATERIALS FROM REACHING THE STORM WATER CONVEYANCE DEVICES AND DISCHARGES.

EROSION AND SEDIMENT CONTROL PRACTICES:

TEMPORARY STORM INLET PROTECTION:
STORM INLET PROTECTION INTERCEPTS SEDIMENT LADEN RUNOFF AND TRAPS SEDIMENT TO PROTECT THE DRAINAGE SYSTEM. STORM INLET PROTECTION SHALL BE PROVIDED AT EACH NEW CATCH BASIN AS IT IS INSTALLED AND AROUND EXISTING CATCH BASINS AS SHOWN.

TEMPORARY SEDIMENT CONTROL – SILT FENCE
SILT FENCE REDUCES RUNOFF VELOCITY AND CAUSES SETTLING OF SEDIMENT. INSTALL SILT FENCE PRIOR TO BEGINNING ANY EXCAVATION OR EARTHWORK ACTIVITIES WHERE SHOWN ON THE DRAWINGS. INSTALL AROUND ANY STOCKPILED SOIL MATERIALS.

TEMPORARY STABILIZED CONSTRUCTION ENTRANCE
THE STABILIZED CONSTRUCTION ENTRANCE IS USED TO REDUCE OR ELIMINATE TRACKING OF SEDIMENT ONTO STREETS AND/OR PUBLIC RIGHT-OF-WAY.

TEMPORARY SEEDING
TEMPORARY SEEDING REDUCES EROSION AND SEDIMENT LOSS FROM THE BARE GROUND. PROVIDE TEMPORARY SEEDING TO PROVIDE TEMPORARY COVER FOR DISTURBED EARTH OR SOIL STOCKPILES HELD FOR LONGER THAN SEVEN (7) DAYS. TEMPORARY SHUT DOWN OF CONSTRUCTION OR WAITING FOR OPTIMAL PLANTING TIME. IN SPRING, SUMMER OR EARLY FALL APPLY RYE GRASS AT A RATE OF 1 LB/ 1,000 SQ. FT. IN LATE FALL APPLY CERTIFIED AROOSTOOK RYE AT 2.5 LBS / 1,000 SQ. FT. OR WOOD FIBER HYDROMULCH AT MANUFACTURE'S RECOMMENDED RATE. HAY OR STRAW SHALL BE ANCHORED.

DUST CONTROL
TEMPORARY AND PERMANENT STABILIZATION MEASURES SUCH AS SEEDING, MULCHING AND INSTALLING EROSION AND SEDIMENT CONTROL BLANKETS WILL PREVENT DUST FROM BLOWING OFF SITE. INSTALL THESE MEASURES AS SOON AS FINAL GRADES ARE REACHED AND ON SOIL STOCKPILES AND DISTURBED AREAS TO BE LEFT FOR LONGER THAN SEVEN (7) DAYS.

PHASING OF EROSION AND SEDIMENT CONTROL PRACTICES:

1. PRIOR TO COMMENCING ANY CONSTRUCTION ACTIVITIES ON THE SITE, THE CONTRACTOR SHALL MEET WITH THE OWNERS REPRESENTATIVE AND DESIGNER TO DISCUSS THE STORM WATER POLLUTION PREVENTION PLAN.
2. PRIOR TO COMMENCING ANY EXCAVATION PROCEDURES, INSTALL SILT FENCE AS SHOWN ON THE PLANS.
3. INSTALL STABILIZED CONSTRUCTION ENTRANCE.
4. AS THE NEW CATCH BASINS ARE INSTALLED, PROVIDE TEMPORARY INLET PROTECTION.
5. AS SOIL MATERIAL IS EXCAVATED OR STOCKPILED, PROVIDE A SILT FENCE ENCLOSURE AROUND THE PILE. IF THE PILE IS TO REMAIN FOR LONGER THAN SEVEN (7) DAYS, TEMPORARILY SEED THE PILE.
6. DO NOT LEAVE DISTURBED AREAS NOT TO BE COVERED BY IMPERVIOUS SURFACE BARE FOR LONGER THAN SEVEN (7) DAYS, ROUGH GRADE THE AREAS AND TEMPORARILY SEED.
7. AFTER FINAL GRADING OF VEGETATED AREAS, PROVIDE PERMANENT SEEDING.
8. UPON FINAL STABILIZATION OF THE SITE, REMOVE ALL TEMPORARY EROSION AND SEDIMENT CONTROL DEVICES. INSPECT ALL PERMANENT EROSION AND SEDIMENT CONTROL AND STORM WATER MANAGEMENT DEVICES. REPLACE ANY FAILING OR UNSATISFACTORY MEASURES. CLEAN ALL STORMWATER CATCH BASINS AND PIPING.

EROSION AND SEDIMENT CONTROL AND STORMWATER CONTROL DEVICE MAINTENANCE:

CONSTRUCTION DURATION
ALL EROSION AND SEDIMENT CONTROL DEVICES SHALL BE INSPECTED WEEKLY.

1. SILT FENCE SHALL BE REPLACED WHEN TORN, IS BULGING OR NO LONGER MEETING THE INSTALLATION DETAILS.
2. THE STABILIZED CONSTRUCTION ENTRANCE SHALL BE MAINTAINED IN A CONDITION TO PREVENT TRACKING OF SEDIMENT ON TO ROADS AND PUBLIC RIGHTS-OF-WAY. INSPECT TOP DRESSING AND PROVIDE ADDITIONAL AGGREGATE AS NECESSARY.
3. DRAINAGE STRUCTURES AND PIPING SHALL BE CHECKED FOR CLOGGING AND SEDIMENT ACCUMULATION AND CLEANED IF REQUIRED.

PROJECT COMPLETION
AT THE PROJECT COMPLETION AND PRIOR TO PROJECT CLOSE OUT, THE CONTRACTOR SHALL INSPECT ALL PERMANENT EROSION AND CONTROL AND STORMWATER MANAGEMENT PRACTICES.

1. ACCEPTABLE VEGETATION ESTABLISHMENT IN ACCORDANCE WITH SPECIFICATIONS.
2. DRAINAGE STRUCTURES AND PIPING SHALL BE CHECKED FOR CLOGGING AND SEDIMENT ACCUMULATION AND CLEANED IF REQUIRED.

MAINTENANCE OF PERMANENT STORMWATER MANAGEMENT PRACTICES

1. DRAINAGE STRUCTURES AND PIPING SHALL BE CHECKED FOR CLOGGING AND SEDIMENT ACCUMULATION AND CLEANED IF REQUIRED.

SITE ASSESSMENT AND INSPECTIONS

COMPLY WILL ALL CONDITIONS INCLUDED IN THE SPDES PERMIT, PART III.D.3 THROUGH PART III.D.5. THE REQUIREMENTS IN THESE SUBSECTIONS OF THE SPDES PERMIT TAKE PRECEDENCE OVER NOTES ON THIS DRAWING AND ON THE EROSION AND SEDIMENT CONTROL PLAN WHERE CONTRADICTIONS BETWEEN THESE DRAWINGS AND THE SPDES PERMIT MAY ARISE.

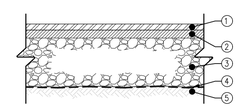

1. 2" TOP COURSE, 12.5 F2 TOP COURSE HMA, 80 SERIES COMPACTION NYSDOT ITEM 402.128204
2. 2" BINDER COURSE, 25 F9 BINDER COURSE HMA, 80 SERIES COMPACTION NYSDOT ITEM 402.258904
3. 4" SUBBASE COURSE, SUBBASE COURSE, TYPE 2 NYSDOT ITEM 304.12
4. GEOTEXTILE SEPARATION NYSDOT ITEM 207.21
5. COMPACTED SUBGRADE

NOTES:

1. COMPACT SUBGRADE TO A MODIFIED PROCTOR DENSITY OF 95%
2. SUBBASE COURSE SHALL HAVE NO MORE THAN (7%) SEVEN PERCENT BY WEIGHT FINER THAN NO. 200 SIEVE.
3. IMPRINTED PATTERN SHOWN IS FOR GRAPHICAL REPRESENTATIONS ONLY. ALL IMPRINTING/PATTERNING LAYOUTS AND POSITIONING SHALL BE APPROVED BY THE PROJECT ENGINEER PRIOR TO ACTUAL CONSTRUCTION.

ASPHALT PAVEMENT SECTION

N.T.S.

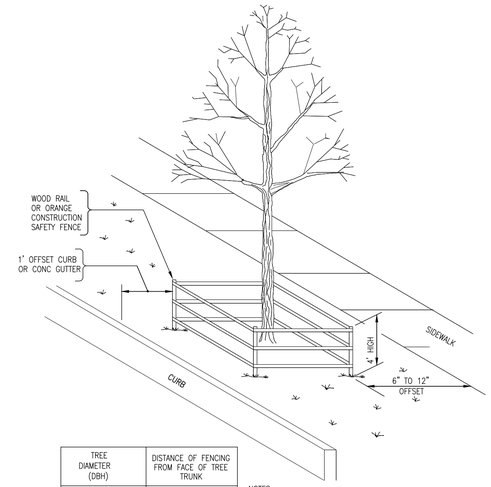

TREE DIAMETER (DBH)	DISTANCE OF FENCING FROM FACE OF TREE TRUNK
LESS THAN 10"	6'
10" – 14"	10'
15" – 19"	12'
20" OR MORE	15'

NOTES:

1. ALL TREES WITHIN THE PROJECT LIMITS THAT ARE TO REMAIN, ARE TO RECEIVE THIS TREATMENT.
2. DO NOT LEAVE CONSTRUCTION EQUIPMENT RUNNING (IDLING) UNDER TREE CANOPY.

TREE PROTECTION SYSTEM 5'–0"
ITEM NO. 611.21050009

N.T.S.

6/15/2022 4:10:27 PM

CONSULTANT INFORMATION

LiRo Engineers, Inc.
A LiRo Group Company
Mineola, N.Y. 516-746-2350[T]

CONSULTANT SEAL

STATE OF NEW YORK · KENNETH J. ROURKE · LICENSED PROFESSIONAL ENGINEER · NO. 059134

REVISION NUMBER	DATE	MADE BY	APP'D BY	REVISION

RECORD DRAWING CERTIFICATION

☐ AS BUILT – CHANGES AS NOTED ☐ AS BUILT – NO CHANGES

CONTRACTOR: NAME / SIGNATURE / TITLE / DATE

PROJECT COORDINATOR: NAME / SIGNATURE / TITLE / DATE

WESTCHESTER COUNTY, NEW YORK
DEPARTMENT OF PUBLIC WORKS AND TRANSPORTATION
DIVISION OF ENGINEERING

INFRASTRUCTURE REHABILITATION PHASE 3
PLAYLAND PARK, RYE, NEW YORK
SOUTHEAST ARCADE BUILDING
CIVIL DETAILS 1

CONTRACT NUMBER: 22-523
SHEET NUMBER: SA-C-06
DWG NO.: 661 of 664
SCALE:
DATE: 08/23/2022
DPW FILE NUMBER: 1-118-C-1410-0
REV. NO.: 0

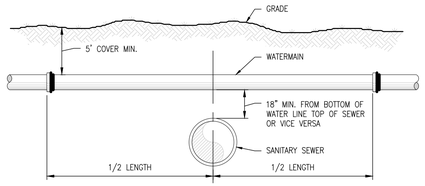

NOTE:

ALL EXCAVATIONS UNDER ANY UTILITY WILL BE BACKFILLED WITH NO. 1 CRUSHED STONE TO A POINT AT LEAST 6" OVER THE TOP OF THE UTILITY.

TYPICAL WATER LINE – SEWER LINE CROSSING

N.T.S.

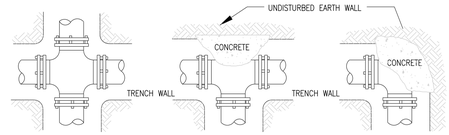

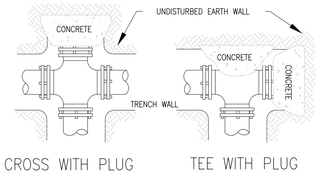

HORIZONTAL THRUST BLOCKING					
(BLOCKING HEIGHT GREATER THAN PIPE O.D.) (BLOCKING WIDTH BETWEEN 1 & 2 TIMES HEIGHT)					
REQUIRED SQ. FT. OF UNDISTURBED EARTH WALL FOR REACTION BACKING					
TYPE OF FITTINGS					
PIPE SIZE	TEE & PLUG	BENDS			
		90°	45°	22 1/2°	11 1/4°
4–6"	3.2	4.5	2.5	1.3	0.7
8"	3.2	5.6	2.5	1.3	0.7
12"	3.2	12.75	3.7	1.3	0.7

HORIZONTAL THRUST BLOCKING

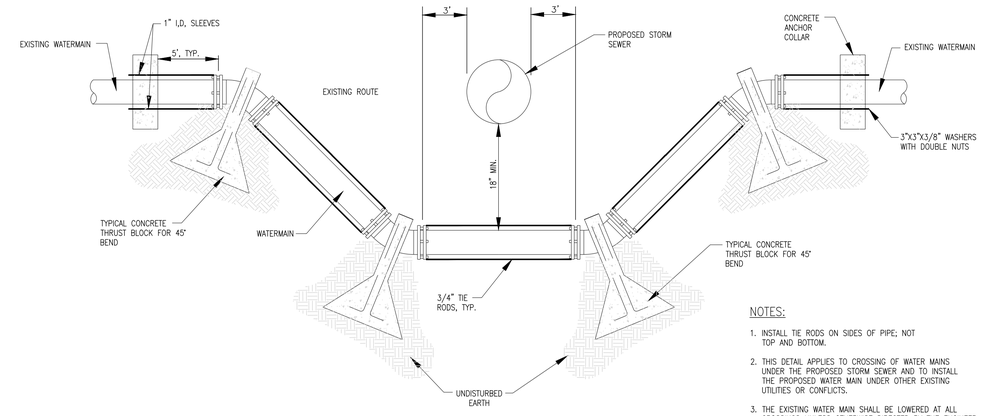

NOTES:

1. INSTALL TIE RODS ON SIDES OF PIPE; NOT TOP AND BOTTOM.
2. THIS DETAIL APPLIES TO CROSSING OF WATER MAINS UNDER THE PROPOSED STORM SEWER AND TO INSTALL THE PROPOSED WATER MAIN UNDER OTHER EXISTING UTILITIES OR CONFLICTS.
3. THE EXISTING WATER MAIN SHALL BE LOWERED AT ALL CROSSINGS UNLESS OTHERWISE DIRECTED BY THE ENGINEER IN THE FIELD.

TYPICAL WATERMAIN CROSSING DETAIL

N.T.S.

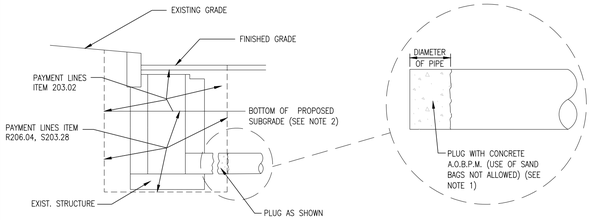

NOTES:

1. THE COST OF PLUGGING EXISTING LATERALS TO BE ABANDONED SHALL BE INCLUDED IN THE PRICE BID FOR TRENCH EXCAVATION IN THE CONTRACT. NO SEPARATE PAYMENT WILL BE MADE FOR THIS WORK.
2. UPPER PAY LIMITS FOR TRENCH AND CULVERT EXCAVATION SHALL BE TOP OF EXISTING SURFACE AT TIME OF EXCAVATION.

DETAILS FOR PLUGGING ABANDONED DRAINAGE STRUCTURES AND PIPES

N.T.S.

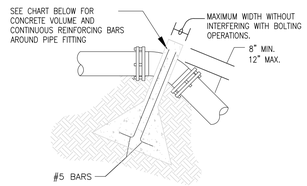

UPWARD THRUST BLOCKING

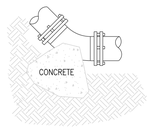

DOWNWARD THRUST BLOCKING

(SEE HORIZONTAL BLOCKING DETAIL)
(ALL BENDS SIMILAR)

UPWARD THRUST BLOCKING											
(REQUIRED REINFORCING BARS & CUBIC YARDS OF P.C. CONCRETE											
	90° BEND			45° BEND			22 1/2° BEND			11 1/4° BEND		
PIPE SIZE	CONC. C.Y.	REINF		CONC. C.Y.	REINF		CONC. C.Y.	REINF		CONC. C.Y.	REINF	
		QTY.	SIZE		QTY.	SIZE		QTY.	SIZE		QTY.	SIZE
4–6"	2.6	4	#5	2.1	4	#5	1.1	4	#5	0.6	4	#5
8"	2.9	4	#5	2.1	4	#5	1.1	4	#5	0.6	4	#5
12"	6.6	4	#5	4.7	4	#5	2.5	4	#5	1.3	4	#5

VERTICAL THRUST BLOCKING

NOTES:

1. DO NOT COVER BELLS OR FLANGES WITH CONCRETE
2. WRAP ALL FITTINGS WITH VISQUEEN.
3. BACK ALL TEES ACCORDING TO SIZE OF BRANCH.
4. BACKING FUTURE LINE EXTENSIONS SHALL BE SUCH THAT LATER REMOVAL IS POSSIBLE.
5. ALL BENDS WHERE FITTINGS ARE USED, BOTH HORIZONTAL OR VERTICAL SHALL BE BACKED.
6. REACTION BACKING TABLE IS BASED ON 150 P.S.I. AND SOIL BEARING PRESSURE OF 2,000 lb./sq.ft. ADDITIONAL BACKING MAY BE REQUIRED IN SOME AREAS AS DIRECTED BY ENGINEERS.
7. ALL CONCRETE SHALL BE 2500 P.S.I. MIN. .

THRUST BLOCKING DETAIL

N.T.S.

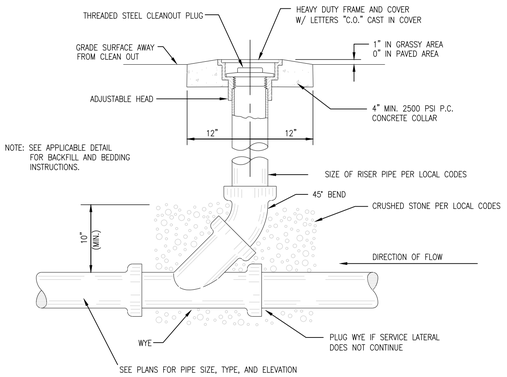

SEWER CLEAN–OUT

N.T.S.

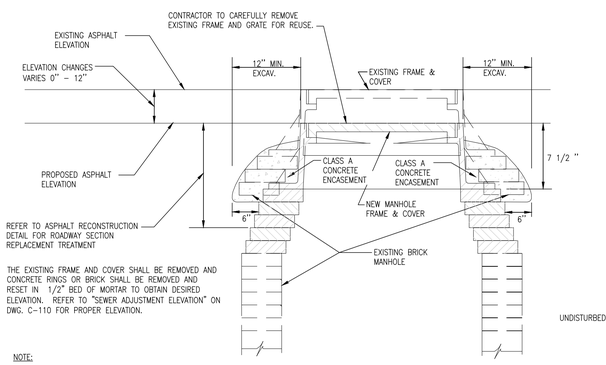

NOTE:

THE LOWER LIMIT OF THE CLASS A CONCRETE ENCASEMENT SHALL BE AT, OR BELOW, THE LOWEST PORTION OF THE BRICK AND MORTAR LEVELING COURSE. ALL BRICK SHALL BE RED, 8,000 PSI BRICK.

ADJUSTMENT AT FLEXIBLE PAVEMENT

RESETTING EXISTING DRAINAGE FRAMES ON EXISTING DRAINAGE STRUCTURES ITEM NO. 604.07210110

N.T.S.

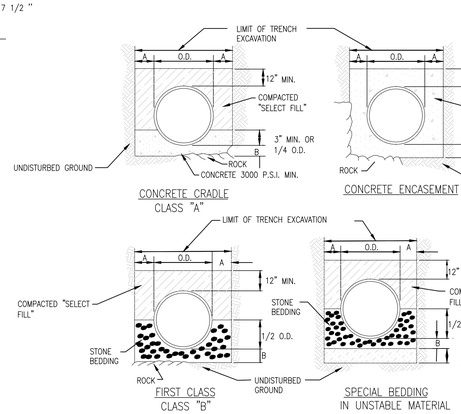

UTILITY BEDDING MATERIAL DETAIL

N.T.S.

NOTES:

1. SELECT FILL SHALL BE SAND, GRAVEL, AND SIMILAR MATERIAL WHICH SHALL BE FREE FROM CLAY, LOAM, ORGANIC MATERIAL, DEBRIS, FROZEN MATERIAL AND SHALL CONTAIN ONLY SMALL AMOUNTS OF STONE, PEBBLES OR LUMPS OVER ONE INCH IN GREATEST DIMENSION BUT NONE OVER TWO INCHES IN GREATEST DIMENSION, MEETING ASTM IA,IB,OR II.
2. STONE BEDDING SHALL MEAN APPROVED IMPORTED AGGREGATE MEETING THE REQUIREMENTS OF THE NEW YORK STATE DEPARTMENT OF TRANSPORTATION, STANDARD SPECIFICATION, MAY, 2008 EDITION, AS REVISED, SUBSECTION 703–01 "FINE AGGREGATE". PRIMARY SIZE 1 OR A MIXTURE OF PRIMARY SIZES 1 AND 2. OR ASTM CLASS IA,
3. COARSE AGGREGATE SHALL MEAN APPROVED IMPORTED AGGREGATE MEETING THE REQUIREMENTS OF THE NEW YORK STATE DEPARTMENT OF TRANSPORTATION, STANDARD SPECIFICATION, MAT 2008 EDITION, AS REVISED, SUBSECTION 703–02 "COURSE AGGREGATE". PRIMARY SIZE 3 AND/OR 4
4. THIS FIGURE APPLIES TO SANITARY, STORM and COMBINED MAINLINE AND LATERAL PIPE INSTALLATIONS AS WELL AS FORCEMAINS.
5. FIRST CLASS BEDDING SHALL BE USED UNLESS OTHERWISE SHOWN ON THE DRAWINGS OR DIRECTED BY THE ENGINEER.

PIPE DIA.	DIM. A	DIM. B
UP TO 18"	1.0'	6"
21" TO 36"	1.5'	9"
OVER 36"	1.5'	12"

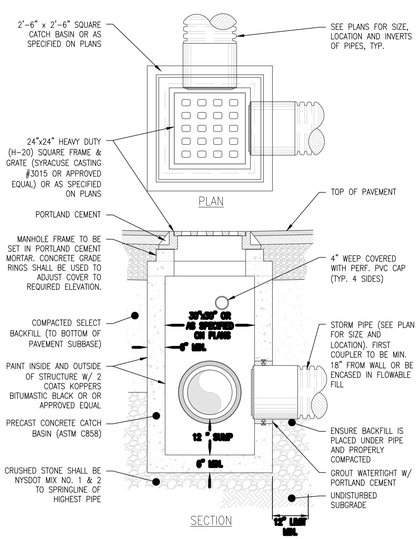

CATCH BASIN DETAIL

N.T.S.

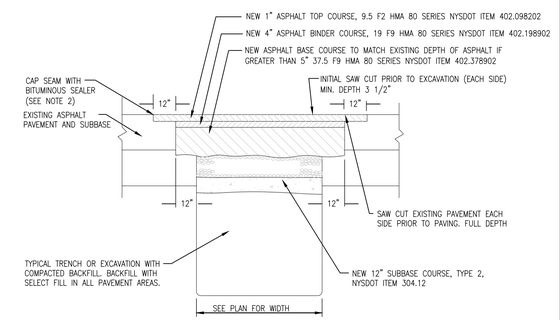

NOTES:

1. EXISTING PAVEMENT SHALL BE SAW CUT TO OBTAIN A STRAIGHT AND NEAT EDGE FOR PAVING. FINAL SAW CUT SHALL BE MADE PRIOR TO PAVING AFTER BACKFILL OF TRENCH TO BOTTOM OF NEW PAVEMENT
2. ALL SEAMS BETWEEN EXISTING AND NEW ASPHALT SURFACES SHALL BE SEALED WITH AN ASPHALT FILLER CORRESPONDING TO THE MATERIAL REQUIREMENTS OF N.Y.S.D.O.T. TABLE 702–5 MATERIAL DESIGNATION 702–3401. COST TO FURNISH AND APPLY THIS MATERIAL SHALL BE INCLUDED IN THE PRICE BID FOR ASPHALT TOP

PAVEMENT TRENCH RESTORATION DETAIL

N.T.S.

6/15/2022 4:10:27 PM

CONSULTANT INFORMATION

LiRo Engineers, Inc.
A LiRo Group Company
Mineola, N.Y. 516-746-2350[T]

CONSULTANT SEAL

STATE OF NEW YORK · KENNETH J. KOLB · LICENSE NO. 089134 · PROFESSIONAL ENGINEER

REVISION NUMBER	DATE	MADE BY	APP'D BY	REVISION

RECORD DRAWING CERTIFICATION

☐ AS BUILT – CHANGES AS NOTED ☐ AS BUILT – NO CHANGES

CONTRACTOR
NAME
SIGNATURE
TITLE DATE

PROJECT COORDINATOR
NAME
SIGNATURE
TITLE DATE

WESTCHESTER COUNTY, NEW YORK
DEPARTMENT OF PUBLIC WORKS AND TRANSPORTATION
DIVISION OF ENGINEERING

INFRASTRUCTURE REHABILITATION PHASE 3
PLAYLAND PARK, RYE, NEW YORK
SOUTHEAST ARCADE BUILDING
CIVIL DETAILS 2

CONTRACT NUMBER	22-523
SHEET NUMBER	SA-C-07
DWG NO.:	662 of 664
SCALE:	AS INDICATED
DATE:	08/23/2022
DPW FILE NUMBER	1-118-C-1411-0
REV. NO.:	0

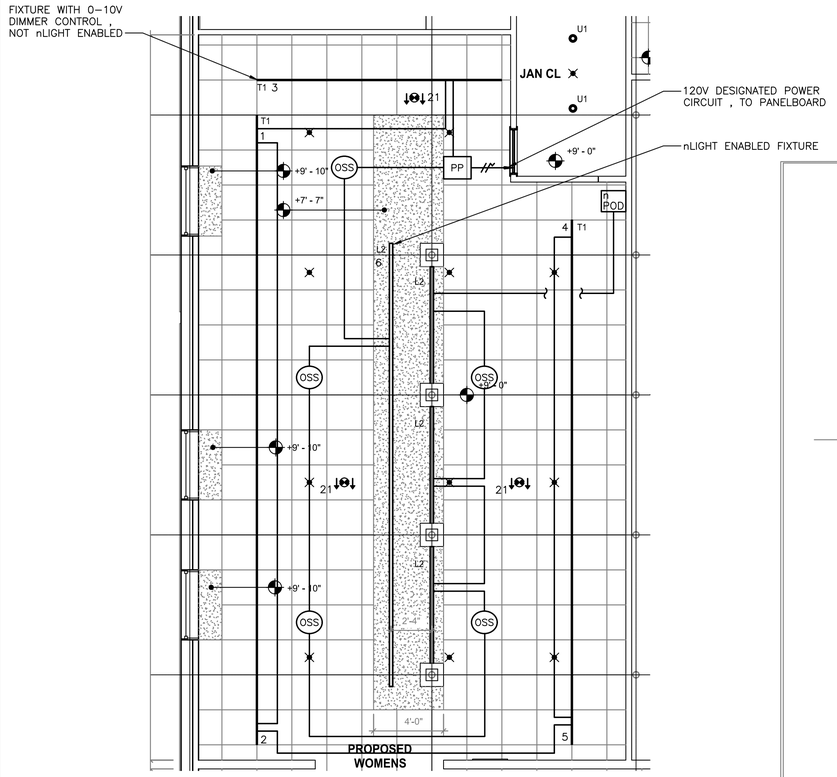

CONDUIT AND WIRE LEGEND	
LINE TYPE	DESCRIPTION
————	1"C, 1-CAT 6
--------	3/4"C., 2#14 LOW VOLTAGE WIRING
—//—	3/4"C., 2#12, 1#12G.

TYPICAL INTERIOR SPACE LIGHTING WIRING DETAIL

Scale: NTS

NOTES:

1. ALL OCCUPANCY SENSORS SHALL BE WIRED AS REQUIRED BY THE NEC AND THE EQUIPMENT MANUFACTURER.
2. ALL WIRING SHOWN DIAGRAMITCALLY, CONTRACTOR SHALL DETERMINE RACEWAY ROUTING REQUIREMENTS. CONTRACTOR SHALL INCLUDE ALL RACWAY HANGERS, SUPPORTS, BOXES, NEEDED AT NO ADDITIONAL COST TO THE OWNER

NOTES:

1. FOR ADDITIONAL NOTES, ABBREVIATIONS AND SYMBOLS, SEE DRAWING GE–E–01.
2. SEE LIGHTING CONTROL SYMBOLS ON DRAWING #######.

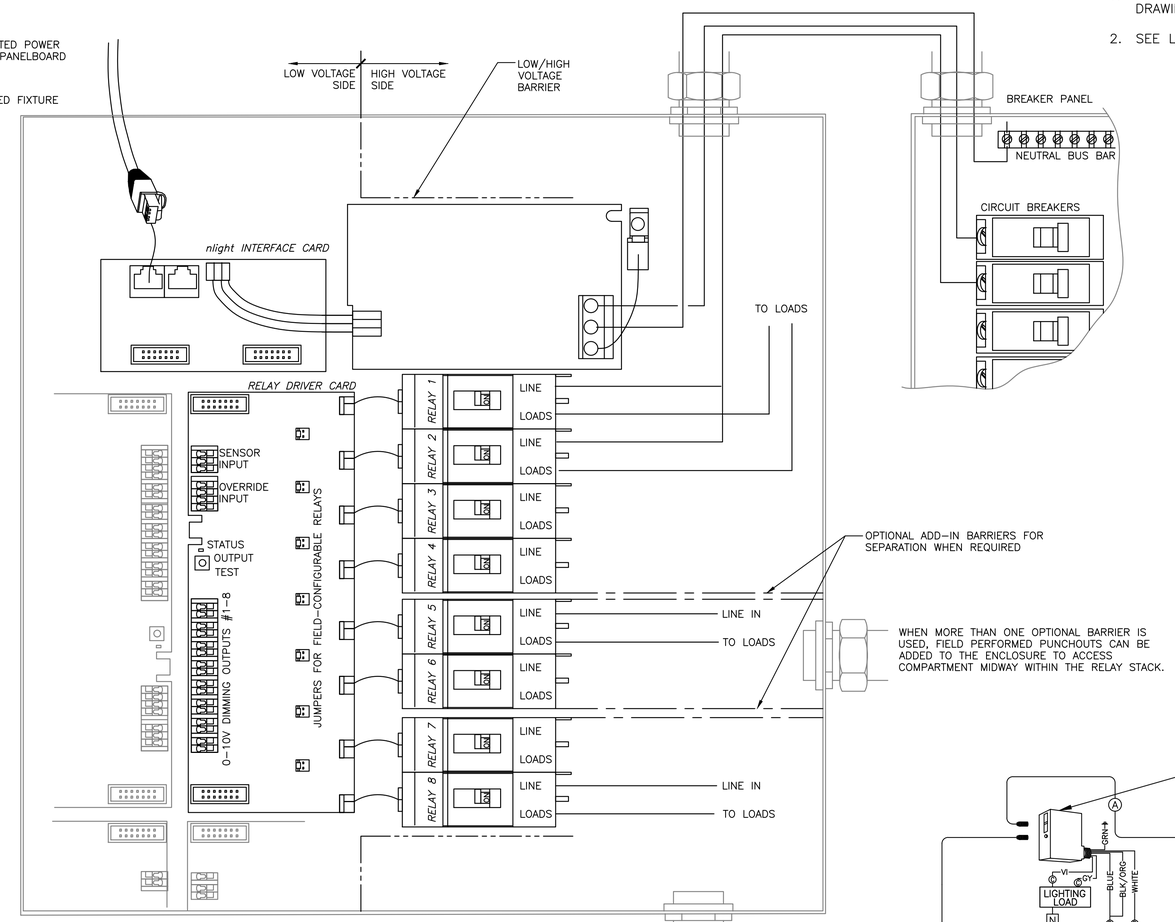

2 DT–E–07 TYPICAL EXTERIOR SECURITY LIGHTING CONTROL DIAGRAM

NOT TO SCALE

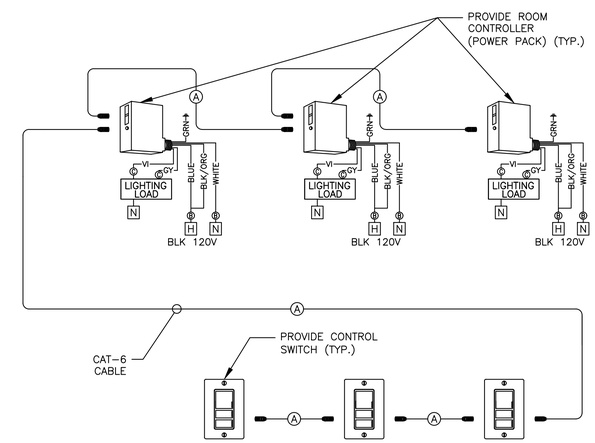

(A) CAT–6 CABLE

(B) POWER CIRCUIT, SEE PLAN VIEW DRAWINGS FOR SIZE REQUIREMENTS.

(C) LOW VOLTAGE DIMMING WIRING, SEE DETAILS ON LIGHTING CONTROLS DIAGRAM.

2 DT–E–07 TYPICAL INTERIOR LIGHTING CONTROL SYSTEM

N.T.S.

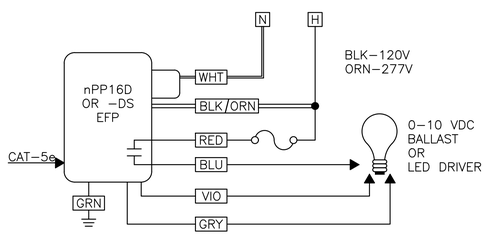

TYPICAL WIRING DIAGRAM – nPP16D/ER

NTS

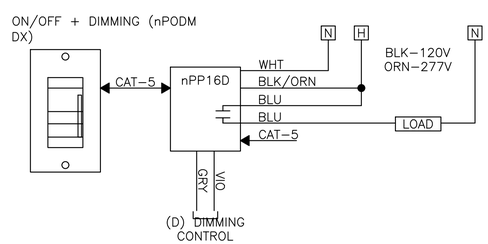

TYPICAL WIRING DIAGRAM – nPODMDX

NTS

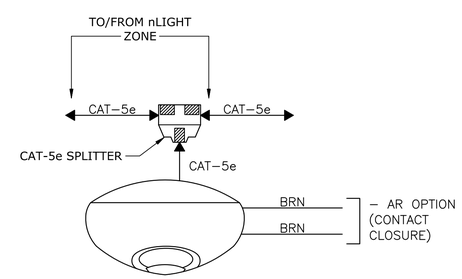

TYPICAL WIRING DIAGRAM – OCCUPANCY DIAGRAM

NTS

Drawing Name: G:\SavinAutocad\2060\25-Playland-Mega-3\GE\DTE503.dwg
Ref: Projectname: 211001F02 Comments: ----
Printed by: MGoaby Date: 30 August 2022 8:45 AM Designed by: ----
Xrefs: [TB_24X36_WestchesterCo_3.dwg] [TSG-SVL000.dwg]

CONSULTANT INFORMATION

Savin Engineers, P.C.

CONSULTANT SEAL

STATE OF NEW YORK · STEVEN A. MARTINO · 083631 · LICENSED PROFESSIONAL ENGINEER

REVISION NUMBER	DATE	MADE BY	APP'D BY	REVISION

RECORD DRAWING CERTIFICATION

☐ AS BUILT – CHANGES AS NOTED ☐ AS BUILT – NO CHANGES

CONTRACTOR: NAME / SIGNATURE / TITLE / DATE

PROJECT COORDINATOR: NAME / SIGNATURE / TITLE / DATE

WESTCHESTER COUNTY, NEW YORK
DEPARTMENT OF PUBLIC WORKS AND TRANSPORTATION
DIVISION OF ENGINEERING

INFRASTRUCTURE REHABILITATION - PHASE 3
PLAYLAND PARK, RYE, NEW YORK
ELECTRICAL
DETAILS 1

CONTRACT NUMBER	SHEET NUMBER
22-523	DT-E-01

DWG NO.:

SCALE: AS SHOWN

DATE: 8/23/2022

DPW FILE NUMBER 1-118-E-1412-0 REV. NO. 0

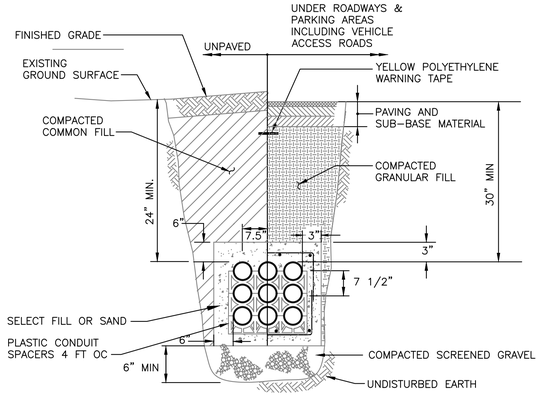

UNDERGROUND ELECTRICAL DUCTBANK DETAIL

NTS

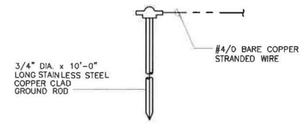

CABLE TO GROUND ROD CONNECTION

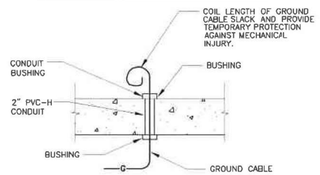

GROUND CABLE RISER EMERGING FROM CONCRETE FLOOR OR PAD DETAIL

GROUNDING NOTE:

1. UNLESS OTHERWISE NOTED, USE EXOTHERMIC WELD CONNECTIONS UNDERGROUND AND ABOVE GROUND.

TYPICAL GROUNDING DETAILS

SCALE: NTS

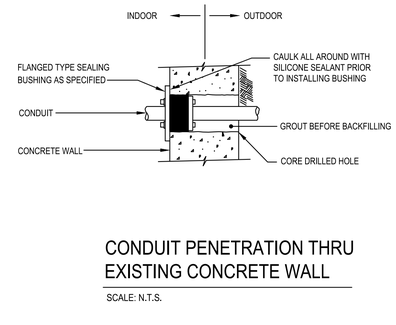

CONDUIT PENETRATION THRU EXISTING CONCRETE WALL

SCALE: N.T.S.

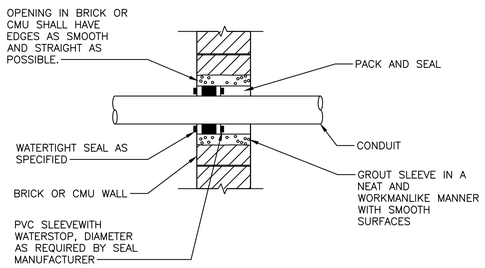

WATERTIGHT CONDUIT PENETRATION DETAIL

NOT TO SCALE

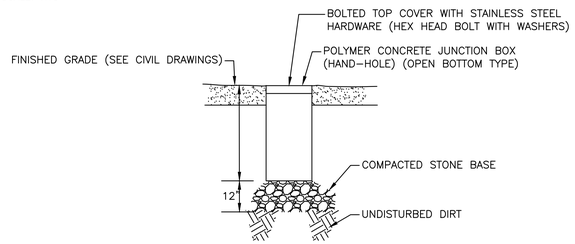

INGROUND POLYMER CONCRETE JUNCTION BOX DETAIL

NTS

(SIZE JUNCTION BOX AS REQUIRED)

NOTES:

1. HAND HOLES SHALL BE UL LISTED BOX VERTICAL DESIGN/TEST LOAD OF 22,500/33,750 POUNDS.THIS INCLUDES BOX BODY, ASSOCIATED COVER SUPPORTING GROUND/STONE.
2. PROVIDE BUILT-IN SEGREGRATION BARRIER FOR HH-1.
3. ANSI/SCTE 77 TIER 22 BOX WITH TIER 15 COVER (TYP.)

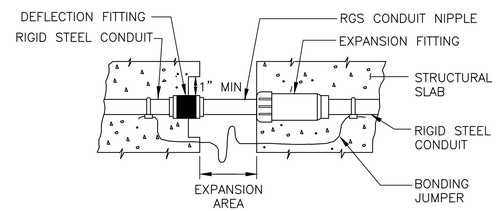

COMBINATION EXPANSION-DEFLECTION FITTING

NTS

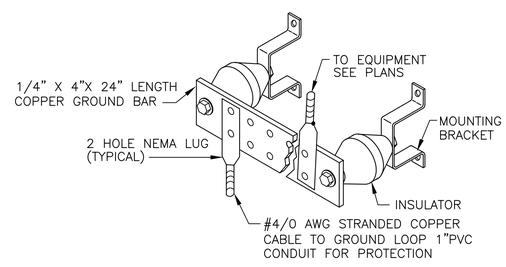

TYPICAL GROUND BAR

NTS

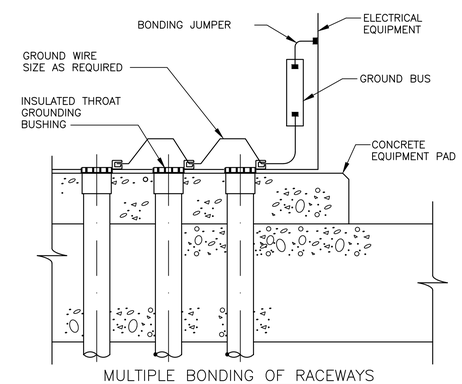

MULTIPLE BONDING OF RACEWAYS

SCALE: N.T.S.

Drawing Name: G:\SavinAutocad\2060\25-Playland-Mega-3\GE\DTE501.dwg
Projectname: 211001F02 Comments: ----
Printed by: MGoaby Date: 30 August 2022 8:45 AM Designed by: ----
Xrefs: [TB_24X36_WestchesterCo_3.dwg] [TSG-SVL060.dwg]

CONSULTANT INFORMATION

Savin Engineers, P.C.

CONSULTANT SEAL

STATE OF NEW YORK · STEVEN A. MARTINEZ · 083631 · LICENSED PROFESSIONAL ENGINEER

REVISION NUMBER	DATE	MADE BY	APP'D BY	REVISION

RECORD DRAWING CERTIFICATION

☐ AS BUILT – CHANGES AS NOTED ☐ AS BUILT – NO CHANGES

CONTRACTOR: NAME / SIGNATURE / TITLE / DATE

PROJECT COORDINATOR: NAME / SIGNATURE / TITLE / DATE

WESTCHESTER COUNTY, NEW YORK
DEPARTMENT OF PUBLIC WORKS AND TRANSPORTATION
DIVISION OF ENGINEERING

INFRASTRUCTURE REHABILITATION - PHASE 3
PLAYLAND PARK, RYE, NEW YORK
ELECTRICAL
DETAILS 2

CONTRACT NUMBER	SHEET NUMBER
22-523	DT-E-02

DWG NO.:

SCALE: AS SHOWN

DATE: 8/23/2022

DPW FILE NUMBER 1-118-E-1413-0 REV. NO. 0