ORANGE COUNTY COMMUNITY COLLEGE
MIDDLETOWN CAMPUS

115 SOUTH STREET, MIDDLETOWN NY

OCCC PHYSICAL EDUCATION CENTER HVAC ROOFTOP UNIT REPLACEMENT
COUNTY JOB NUMBER: OCCC-2023-19

LOCATION MAP

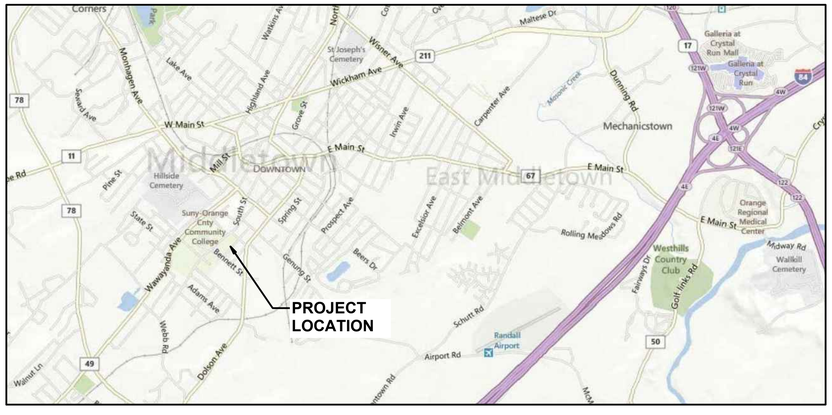

CAMPUS MAP

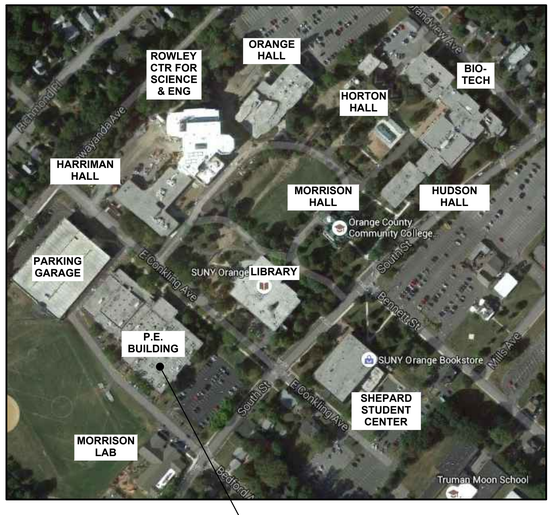

DRAWING LIST

PAGE	DWG. #	DRAWING TITLE
1	TS	TITLE SHEET
2	HE-001	MECH./ELEC.: SYMBOLS, NOTES & ABBREVIATIONS
3	HE-100	PARTIAL SITE PLAN
4	HE-101	MECH./ELEC.: PARTIAL FIRST FLOOR PLAN
5	HE-102	MECH./ELEC.: ENLARGED FLOOR PLAN
6	HE-103	MECH./ELEC.: PARTIAL SECOND FLOOR PLAN
7	HED-104	MECH./ELEC.: DEMOLITION PARTIAL ROOF PLAN
8	HE-104	MECH./ELEC.: NEW PARTIAL ROOF PLAN
9	HE-701	MECH./ELEC.: DETAILS
10	HE-702	MECH./ELEC.: DETAILS & SCHEDULES

REV #	DATE	REMARKS:	ISSUE #	DATE	ISSUED FOR:
			2	10/14/22	FOR BID
			1	10/7/22	100% REVIEW

⅛" ¼" ½" 0 1" 2"
REFERENCE SCALE

UNAUTHORIZED ALTERATION OR ADDITION TO A PLAN BEARING A LICENSED PROFESSIONAL ENGINEER'S SEAL IS A VIOLATION OF SECTION 7209, SUB-DIVISION 2 OF THE N.Y. STATE EDUCATION LAW.

FELLENZER ENGINEERING LLP
www.fellp.com
22 Mulberry St., Suite 2A,
Middletown, NY 10940
t 845-343-1481 fx 845-343-4986
181 Church St., Suite 100,
Poughkeepsie, NY 12601
t 845-454-9704 fx 855-320-8735

PROJECT TITLE:
OCCC PHYSICAL EDUCATION CENTER
HVAC ROOFTOP UNIT REPLACEMENT
115 SOUTH STREET, MIDDLETOWN, NY 10940

DRAWING TITLE: TITLE SHEET

DESIGNED BY:	DRAWN BY:	APPROVED BY PM:	APPROVED BY PIC:	DRAWING #:
BG	ZR	EDF	EDF	TS
DATE: 10/14/2022	SCALE: AS SHOWN		FE PROJECT #: 22-059	PAGE 1 OF 10

File Name: F:\2022\22-059 RTU Replacement RTU's 7-12 for PE Building - SUNY Orange\TS.dwg (Layout: TS)
Date: Thu, Oct 13, 2022 - 10:11 AM (Name: ZT)

GENERAL ELECTRICAL NOTES:

1. ALL CONDUITS ARE SHOWN DIAGRAMMATICALLY, EXACT RUNS SHALL BE DETERMINED IN FIELD EXCEPT WHERE SPECIFICALLY DIMENSIONED ON CONDUIT LAYOUTS. CONTRACTOR SHALL FOLLOW MINIMUM SPACING REQUIREMENTS TO REDUCE ELECTROMAGNETIC INTERFERENCE. COORDINATE CONDUIT ROUTING WITH ALL OTHER TRADES.
2. ALL EXPOSED CONDUIT SHALL BE RUN PARALLEL TO BUILDING WALLS AND BEAMS EXCEPT WHERE OTHERWISE SHOWN. CONTRACTOR SHALL INSTALL CONDUIT IN SUCH A MANNER TO AVOID ALL INTERFERENCES.
3. DEFLECTION/EXPANSION FITTINGS SHALL BE PROVIDED WHERE RIGID METAL CONDUIT CROSSES STRUCTURAL EXPANSION JOINTS.
4. EXPOSED CONDUIT SHALL BE SUPPORTED ON WALLS OR CEILINGS BY APPROVED HANGERS OF ANGLE OR CHANNEL CONSTRUCTION. CONDUITS SHALL BE SUPPORTED AT LEAST EVERY EIGHT (8) FEET.
5. ALL SPARE CONDUITS SHALL BE TERMINATED AS SHOWN ON CONDUIT LAYOUTS AND SHALL BE CAPPED 3" ABOVE FINISHED FLOOR.
6. NO CONDUIT SHALL BE SMALLER THAN ¾" UNLESS NOTED OTHERWISE ON PLANS.
7. THE NUMBER OF WIRES SHOWN ON THE DRAWINGS IS NOT NECESSARILY THE CORRECT NUMBER REQUIRED. THE CONTRACTOR SHALL INSTALL AS MANY AS ARE NECESSARY FOR PROVIDING A COMPLETE ELECTRICAL SYSTEM IN EACH CASE.
8. EQUIPMENT FURNISHED BY OTHERS SHALL BE INSTALLED & ENERGIZED BY THE ELECTRICAL CONTRACTOR.
9. THE ELECTRICAL CONTRACTOR SHALL NOT ENDANGER THE STABILITY OF THE STRUCTURE OR ANY PART THEREOF BY CUTTING, DRILLING OR OTHERWISE, AND SHALL NOT IN ANY WAY CUT OR ALTER THE WORK OF ANY OTHER CONTRACTOR, EXCEPT WITH THE WRITTEN CONSENT OF AND UNDER THE DIRECTION OF THE ENGINEER AND/OR GENERAL CONTRACTOR.
10. THE ELECTRICAL CONTRACTOR SHALL SECURE ALL APPROVALS AND CERTIFICATES AND PAY ALL FEES FOR ALL THE WORK INSTALLED. CERTIFICATES SHALL BE DELIVERED TO THE GENERAL CONTRACTOR BEFORE FINAL PAYMENT WILL BE MADE.
11. ALL WORK SHALL BE DONE IN ACCORDANCE WITH THE LATEST APPLICABLE VERSION OF THE NEC AS WELL AS ALL STATE AND LOCAL CODES.
12. THE DRAWINGS INDICATE AND THE SPECIFICATIONS DESCRIBE THE GENERAL ARRANGEMENTS AND LOCATION OF OUTLET BOXES, ETC. THE CONTRACTOR SHALL, WITHOUT EXTRA COST TO THE OWNER, MAKE ALL REASONABLE MODIFICATIONS IN THE WORK AS MAY BE REQUIRED TO PREVENT CONFLICT WITH EXISTING CONDITIONS, THE WORK OF OTHER TRADES AND FOR THE PROPER INSTALLATION OF THE WORK.
13. PRIOR TO SUBMISSION OF BID PROPOSAL, THE CONTRACTOR SHALL VISIT THE SITE AND EXAMINE CAREFULLY THE EXISTING CONDITIONS AND THE DIFFICULTIES THAT WILL BE INCURRED DURING THE PERFORMANCE OF HIS WORK.
    - A. VERIFY & COORDINATE CONDUIT ROUTING.
    - B. VERIFY & COORDINATE SCOPE OF DEMOLITION WORK.
    - C. VERIFY & COORDINATE SCOPE OF WORK INVOLVING CONNECTIONS TO EXISTING BASE BUILDING SYSTEMS.
    - D. VERIFY SCOPE OF WORK THAT HAS TO BE DONE WITH EXISTING FIRE ALARM SYSTEM AS REQUIRED TO ACCOMMODATE ALL ADDED DEVICES.
    - E. VERIFY WITH GENERAL CONTRACTOR SCOPE OF WORK ASSOCIATED WITH RIGGING OF EQUIPMENT TO BE PREPURCHASED.
    - F. COORDINATE WITH THE BUILDING ENGINEER AND GENERAL CONTRACTOR SHUT DOWNS OF EXISTING FACILITIES.
14. ARRANGE FOR SITE VISIT WITH THE BLDG. OWNER REPRESENTATIVE AND GENERAL CONTRACTOR.
15. CLAIMS FOR ADDITIONAL COMPENSATION ARISING DUE TO THE FAILURE OF THE CONTRACTOR TO FULLY UNDERSTAND THE SITE CONDITIONS SHALL NOT BE PAID FOR BY ANY OTHER PARTY.
16. CONNECTIONS TO EXISTING WORK:
    - A. INSTALL NEW WORK AND CONNECT TO EXISTING WORK WITH MINIMUM INTERFERENCE TO EXISTING FACILITIES.
    - B. TEMPORARY SHUTDOWNS OF EXISTING SERVICES:
        - a. AT NO ADDITIONAL CHARGES.
        - b. AT TIMES NOT TO INTERFERE WITH NORMAL OPERATION OF EXISTING SERVICES.
        - c. ONLY WITH WRITTEN CONSENT OF THE GENERAL CONTRACTOR AND/OR BUILDING OWNERS REPRESENTATIVE.
    - C. ALARM AND EMERGENCY SYSTEMS: ALARMS NEED TO BE TAKEN OFFLINE ON A DAILY BASIS WHILE WORK IS COMPLETED. CONTRACTOR SHALL CONTACT SECURITY WHEN AN ALARM IS TO BE TURNED OFF AND AT THE END OF THE DAY WHEN WORK IS COMPLETED.
    - D. MAINTAIN CONTINUOUS OPERATION OF EXISTING FACILITIES AS REQUIRED WITH NECESSARY TEMPORARY CONNECTIONS BETWEEN NEW AND EXISTING WORK.
    - E. CONNECT NEW WORK TO EXISTING WORK IN NEAT AND ACCEPTABLE MANNER. RESTORE EXISTING DISTURBED WORK TO ORIGINAL CONDITION, INCLUDING MAINTENANCE OF WIRING CONTINUITY AS REQUIRED.
    - F. PRIOR TO DEMOLITION OF AN EXISTING POWER PANEL, THE CONTRACTOR SHALL SEARCH OUT ALL EXISTING CIRCUITS FED FROM THE PANEL TO PREVENT ANY ACCIDENTAL SERVICE INTERRUPTIONS.
17. LEAVE WIRE SUFFICIENTLY LONG TO PERMIT MAKING FINAL CONNECTIONS. CONDUIT OVER 10 FEET IN WHICH WIRING IS NOT INSTALLED-FURNISH PULL STRING.
18. DO NOT PULL THERMOPLASTIC WIRES AT TEMPERATURES LOWER THAN 32 DEG F (0 DEG C). PROVIDE CABLE SUPPORTS FOR WIRE IN RISER CONDUITS AS REQUIRED BY CODE.
19. JUNCTION & PULL BOXES: DO NOT LOCATE EXPOSED IN FINISH SPACES UNLESS REQUIRED BY NEC. WHERE NECESSARY, REROUTE CONDUIT OR MAKE OTHER ARRANGEMENTS FOR CONCEALMENT. PROVIDE PULL BOXES AS INDICATED AND WHEREVER NECESSARY TO FACILITATE PULLING OF WIRE AND COORDINATE LOCATIONS WITH OTHER TRADES. COVERS OF JUNCTION AND PULL BOXES SHALL BE ACCESSIBLE. FOR EMPTY CONDUITS, INSTALL PULL BOXES EVERY 100 FEET AND AS INDICATED. COORDINATE LOCATIONS WITH OTHER TRADES.
20. SUPPORT PANEL, JUNCTION & PULL BOXES INDEPENDENTLY TO BUILDING STRUCTURE WITH NO WEIGHT BEARING ON CONDUIT.
21. ALL ACCESS DOOR LOCATIONS SHALL BE REVIEWED BY ENGINEER PRIOR TO INSTALLATION.
22. FOR EACH LOCATION OF OTHER TRADES EQUIPMENT, SEE RESPECTIVE TRADE DRAWINGS.
23. CONTRACTOR SHALL PROVIDE AND INSTALL ALL COMPONENTS INDICATED ON DETAILS SHEETS, PLANS, SPECIFICATIONS AND ALL PERTINENT EQUIPMENT REQUIRED FOR A COMPLETE WORKABLE SYSTEM.
24. USE OF ISOLATED TYPE GROUNDING CONDUCTOR FOR IG TYPE RECEPTACLES, PLUG MOLDS & EQUIPMENT DOES NOT RELIEVE REQUIREMENT FOR GROUNDING CONDUIT SYSTEM, DEVICES AND EQUIPMENT AS REQUIRED BY ALL APPLICABLE CODES. PROVIDE AND INSTALL GROUNDING FITTING, EQUIPMENT GROUND WIRING ETC. AS REQUIRED.
25. ALL CONDUITS, TRANSFORMERS ETC. SHALL BE SUPPORTED FROM STRUCTURAL STEEL ONLY. COORDINATE WITH GENERAL CONTRACTOR.
26. ALL FLOOR MOUNTED ELECTRICAL EQUIPMENT IN ELECTRICAL AND SERVICE SWITCHBOARD ROOM SHALL BE INSTALLED ON 4" CONCRETE PAD AS REQUIRED TO SUPPORT EACH SECTION OF EQUIPMENT. COORDINATE WITH GENERAL CONTRACTOR.
27. PROVIDE BARRIERS IN ALL PULL BOXES FOR CONDUIT SETS.
28. PAINT AND RUST PROOF ALL HARDWARE & CONDUITS ON ROOF AND IN EXPOSED AREAS AS DIRECTED BY GENERAL CONTRACTOR.
29. NUMBER SHOWN ADJACENT TO LIGHTING FIXTURES, RECEPTACLES, OUTLETS, JUNCTION BOXES ETC. INDICATES CIRCUIT NUMBER.
30. ALL GROUND CONNECTIONS TO THE BUILDING STEEL SHALL BE EXOTHERMIC WELDED.
31. FLEXIBLE CONNECTIONS IN EXPOSED AREAS SHALL NOT EXCEED 18" MAXIMUM.
32. ALL EQUIPMENT DEVICES, WIRING, ETC. SHOWN ON THE DRAWINGS IS NEW UNLESS OTHERWISE NOTED.
33. ELECTRICAL CONTRACTOR SHALL PROVIDE SLEEVES/ OPENINGS FOR ALL CONDUIT RISERS PENETRATING WALLS, ROOF & FLOOR SLABS. ALL ROOF AND MECH. ROOMS SLAB PENETRATIONS SHALL BE WATERPROOF. METHOD OF PENETRATIONS & FIRE/WATER WATER PROOFING SHALL BE APPROVED BY ENGINEER, COORDINATE WITH GENERAL CONTRACTOR.
34. ELECTRICAL CONTRACTOR SHALL BECOME FAMILIAR AND COMPLY WITH OWNERS BUILDING STANDARDS FOR CONSTRUCTION.
35. ALL FINAL CONNECTIONS TO VIBRATING EQUIPMENT (MOTORS, GENERATORS ETC.) SHALL BE THROUGH A LIQUID TIGHT FLEXIBLE METAL CONDUIT.
36. ALL PENETRATIONS THROUGH FIRE RATED PARTITIONS SHALL BE SEALED FIRE AND SMOKE TIGHT WITH AN APPROPRIATE U.L. LISTED FIRESTOPPING MATERIAL AND OR SYSTEM.
37. THE TERMS "PROVIDE" OR "FURNISH", AS USED ON THESE PLANS, INDICATE THAT THE CONTRACTOR IS TO FURNISH AND INSTALL THE REFERENCED EQUIPMENT OR SYSTEMS IN THEIR ENTIRETY AS REQUIRED FOR A COMPLETE AND OPERABLE SYSTEM.
38. CONTRACT CLOSE OUT: IN THE PRESENCE OF THE OWNER, ENGINEER AND HVAC STAFF; DEMONSTRATING OPERATION OF SYSTEMS AND THAT ALL SPECIFICATIONS HAVE BEEN MET TO THE SATISFACTION OF ALL PARTIES.
39. IT IS THE INTENTION THAT THESE SPECIFICATIONS, AND DRAWINGS ACCOMPANYING SAME, SHALL PROVIDE FOR THE FURNISHING AND INSTALLING OF THE NEW SHEPARD CENTER CHILLER (CH-1). COMPLETE AS SPECIFIED AND SHOWN. ANY WORK SHOWN ON THE DRAWINGS AND NOT PARTICULARLY DESCRIBED IN THE SPECIFICATIONS OR VICE VERSA, OR ANY WORK CHANGES WHICH MAY BE EVIDENTLY NECESSARY TO COMPLETE THE INSTALLATION SHALL BE FURNISHED BY THIS CONTRACTOR.
40. IT IS THE INTENT AND PURPOSE OF THESE SPECIFICATIONS AND DRAWINGS TO INCLUDE AND PROVIDE FOR ALL MATERIALS, APPLIANCES AND LABOR TO PROPERLY COMPLETE AND LEAVE IN PERFECT WORKING CONDITION THE ENTIRE SYSTEM HEREINAFTER SPECIFIED. ANY MATERIAL, LABOR OR APPLIANCE NOT SPECIFICALLY MENTIONED IN THESE SPECIFICATIONS OR SHOWN ON THE DRAWINGS, BUT NECESSARY FOR A COMPLETE INSTALLATION MUST BE FURNISHED BY THIS CONTRACTOR.
41. IT IS THE INTENT OF THESE PLANS AND SPECIFICATIONS TO PROVIDE ALTERATIONS AND/OR NEW CONSTRUCTION AS INDICATED ON THE DRAWINGS AND IN THE SPECIFICATIONS TO PROVIDE COMPLETE NEW SYSTEMS IN EVERY RESPECT, CAPABLE OF OPERATING AS DESIGNED. IT IS NOT INTENDED THAT EVERY FITTING, MINOR DETAIL OR FEATURE BE SHOWN ON DRAWINGS. THE CONTRACTOR SHALL BE RESPONSIBLE FOR ANY DETAIL NECESSARY FOR COMPLETION OF THESE SYSTEMS IN ACCORDANCE WITH GOOD PRACTICE.

SWITCHBOARDS, PANEL BOARDS, INDUSTRIAL CONTROL PANELS, METER SOCKET ENCLOSURES, AND MOTOR CONTROL CENTERS THAT ARE LIKELY TO REQUIRE EXAMINATION, ADJUSTMENT SERVICING OR MAINTENANCE WHILE ENERGIZED SHALL BE FIELD MARKED TO WARN QUALIFIED PERSONS OF POTENTIAL ELECTRIC ARC FLASH HAZARDS. THE MARKING SHALL BE LOCATED SO AS TO BE CLEARLY VISIBLE TO QUALIFIED PERSONS BEFORE EXAMINATION, ADJUSTMENT, SERVICING, OR MAINTENANCE OF THE EQUIPMENT.

ELECTRICAL DEMOLITION NOTES:

1. COORDINATE WITH DEMOLITION PLANS FOR EXACT AREAS TO BE DEMOLISHED.
2. DISCONNECT AND REMOVE ALL DEVICES, FIXTURES, DATA/TEL. OUTLETS, POWER CONNECTIONS TO HVAC EQUIPMENT AND DISCONNECT SWITCHES, CONDUIT & WIRING FROM ALL WALLS/CEILINGS BEING REMOVED, WITHIN THIS AREA BACK TO POWER PANEL OF ORIGIN.
3. ALL EXISTING DEVICES SCHEDULED TO REMAIN SHALL BE EXTENDED/RE-CIRCUITED AS REQUIRED TO MAINTAIN CONTINUITY OF CIRCUIT/DEVICES.
4. REMOVALS SHALL INCLUDE, BUT NOT BE LIMITED TO DEVICES, FIXTURES, FIRE ALARM DEVICES, DATA/TEL. OUTLETS, POWER CONNECTIONS TO HVAC EQUIPMENT AND DISCONNECT SWITCHES, CONDUIT & WIRING.
5. ELECTRICAL CONTRACTOR TO PROVIDE ALL NECESSARY TEMPORARY WORK AND/OR MATERIALS TO RENDER EXISTING SYSTEM OPERATIONAL DURING ALL PHASES OF CONSTRUCTION IN ALL OCCUPIED SPACES. INCLUDING BUT NOT LIMITED TO, POWER, DATA, LIGHTING, EMERGENCY COMPONENTS & ALARMS. COORDINATE WITH ALL TRADES, OWNER AND OVERALL CONSTRUCTION PHASING SCHEDULE.
6. ALL CUTTING AND PATCHING NECESSARY FOR THE DEMOLITION WORK SHALL BE THE RESPONSIBILITY OF THIS CONTRACTOR.
7. IT SHALL BE THE OWNER'S RESPONSIBILITY TO REMOVE ANY LOOSE EQUIPMENT, FURNITURE, SUPPLIES, ETC. THAT MAY BE LOCATED IN THE AREA OF WORK.
8. THE PLANS ARE INTENDED TO CONVEY THE EXTENT AND SCOPE OF THE DEMOLITION WORK. EVERY ITEM INTENDED FOR REMOVAL MAY NOT BE SHOWN. THE CONTRACTOR IS ADVISED TO SURVEY THE PROJECT SITE BEFORE SUBMITTING A BID FOR DEMOLITION WORK.

HVAC DEMOLITION NOTES:

1. REMOVE ALL EQUIPMENT, DUCTWORK AND PIPING AS INDICATED ON PLAN. REMOVALS SHALL INCLUDE ALL SUPPORTS AND HANGERS, HOUSEKEEPING PADS, DAMPERS, VALVES, FITTINGS, CONTROLS AND ASSOCIATED LOW VOLTAGE WIRING, AND ANY OTHER ASSOCIATED ACCESSORIES WHICH PERTAIN TO THE EQUIPMENT TO BE REMOVED.
2. REMOVAL OF ALL POWER CONNECTIONS TO DEMOLITION ITEMS SHALL BE BY THE HVAC CONTRACTOR.
3. ANY DISCREPANCIES BETWEEN THE DEMOLITION PLANS AND ACTUAL FIELD CONDITIONS SHALL BE BROUGHT TO THE ATTENTION OF THE ARCHITECT OR ENGINEER. ANY DEMOLITION WORK WHICH MAY BE QUESTIONABLE DUE TO UNFORESEEN FIELD CONDITIONS SHALL NOT BE REMOVED UNTIL REVIEWED BY THE ARCHITECT, ENGINEER OR BUILDING FACILITIES MANAGER.
4. DEMOLITION WORK SHALL INCLUDE THE PREPARATION OF EXISTING EQUIPMENT FOR CONNECTION TO NEW EQUIPMENT. COORDINATE DEMOLITION WORK WITH THE CONSTRUCTION PLANS.
5. ALL EQUIPMENT REMOVALS SHALL BECOME THE PROPERTY OF THIS CONTRACTOR. THIS CONTRACTOR SHALL BE RESPONSIBLE FOR THE PROPER REMOVAL AND DISPOSAL OF DEMOLITION ITEMS OFF-SITE, UNLESS OTHERWISE NOTED.
6. ALL CUTTING AND PATCHING NECESSARY FOR THE DEMOLITION WORK SHALL BE THE RESPONSIBILITY OF THIS CONTRACTOR.
7. IT SHALL BE THE OWNER'S RESPONSIBILITY TO REMOVE ANY LOOSE EQUIPMENT, FURNITURE, SUPPLIES, ETC. THAT MAY BE LOCATED IN THE AREA OF WORK.
8. THE PLANS ARE INTENDED TO CONVEY THE EXTENT AND SCOPE OF THE DEMOLITION WORK. EVERY ITEM INTENDED FOR REMOVAL MAY NOT BE SHOWN. THE CONTRACTOR IS ADVISED TO SURVEY THE PROJECT SITE BEFORE SUBMITTING A BID FOR DEMOLITION WORK.

CONTROLS NOTES:

1. ALL CONTROLS WORK SHALL BE BY DAY AUTOMATION, WHO WILL BE RETAINED BY THE COLLEGE. CONTACT SCOTT SULLIVAN AT (518)-729-6919 FOR COORDINATION.
2. ALL NEW EQUIPMENT SHALL OPERATE UNDER ITS OWN OPERATING AND SAFETY PROTOCOLS, AND SHALL BE FACTORY EQUIPPED WITH THE REQUIRED HARDWARE FOR CONNECTION TO THE EXISTING BMS.

GENERAL PHASING NOTE:

1. CONSTRUCTION START DATE: MAY 22, 2023.
   CONSTRUCTION COMPLETION DATE: AUGUST 17, 2023

FIRE ALARM NOTES:

1. ALL CHANGES TO THE FIRE ALARM SYSTEM SHALL BE BY JCI, WHO WILL BE RETAINED BY THE COLLEGE. CONTACT MARK TASIK AT (845)-537-7269 FOR COORDINATION.
2. REFER TO THE FLOOR PLANS FOR LOCATION & QUANTITY OF FIRE ALARM DEVICES.
3. ALL FIRE ALARM WIRING SHALL BE IN TEFLON WIRE AND SHALL BE CONCEALED IN CEILING SPACES & WALLS.
4. CONTRACTOR IS RESPONSIBLE FOR ALL FILING AND FINAL INSPECTION AS PER THE LOCAL AUTHORITY HAVING JURISDICTION.
5. CONTRACTOR TO PROVIDE AND INSTALL ALL NECESSARY MODULES, INTERFACE MODULES AND DEVICES REQUIRED TO PROVIDE AN OPERABLE ALARM SYSTEM IN COMPLIANCE WITH ALL CODES.
6. ACTIVATION OF THE SMOKE DETECTORS SHALL CAUSE A GENERAL ALARM AFTER THE SMOKE DETECTOR PERFORMS VERIFICATION.
7. UPON ENTERING THE PANEL ALARM MODE, THE ALARM INDICATING DEVICE SHALL BE ACTIVATED, AND THE SUPPLY FANS SHALL SHUT-DOWN AND THE DIGITAL COMMUNICATOR SHALL NOTIFY THE CENTRAL RECEIVING STATION.
8. CONTRACTOR SHALL PROVIDE ALL NECESSARY ADDITIONAL RELAY DEVICES OR POWER TRANSFORMERS FOR PROPER OPERATION OF THE FAN SHUT-DOWN UNITS AND OTHER RELATED DEVICES.
9. BATTERY BACKUP SHALL PROVIDE A MINIMUM OF 24 HRS. OPERATION WITH A 15 MINUTE ALARM AT THE END OF 24 HRS.
10. NEW FIRE ALARM SYSTEM SHALL BE TESTED IN ACCORDANCE WITH NFPA CODES 70, 70E, 72, BCNYS, FCNYS, LSC101 (2000)-CH.32 NEW BOARD AND CARE OCCUPANCY AS WELL AS ALL LOCAL AND STATE CODE REQUIREMENTS.
11. CONTRACTOR SHALL PROVIDE ALL ADDITIONAL APPURTENANCES AS REQUIRED FOR A COMPLETE AND OPERABLE SYSTEM. MODEL NUMBERS GIVEN MAY NOT INCLUDE ALL SPECIFIC REQUIRED ACCESSORIES FOR COMPLETE INSTALLATION.
12. ENTIRE FIRE DETECTION AND ALARM SYSTEM SHALL BE FURNISHED AND INSTALLED BY A N.Y. STATE LICENSED ALARM CONTRACTOR.
13. ALL AIR HANDLING SYSTEMS RATED 2,000 CFM OR MORE SHALL BE PROVIDED WITH DUCT SMOKE DETECTORS FAN SHUTDOWNS CONNECTED TO THE FIRE ALARM SYSTEM.

GENERAL NOTES:

1. THE DRAWINGS ON THESE PLANS ARE DIAGRAMMATIC. THIS CONTRACTOR IS THE ONLY CONTRACTOR. THIS CONTRACTOR SHALL BE RESPONSIBLE FOR COORDINATING ALL HVAC WORK WITH OTHER TRADES AND THE BUILDING STRUCTURE. NO EXTRA PAYMENTS WILL BE AUTHORIZED FOR REROUTING OR REMOVAL OF INSTALLED WORK DUE TO LACK OF COORDINATION WITH OTHER SYSTEMS.
2. THE SCOPE OF THIS PROJECT INCLUDES THE REPLACEMENT OF RT-7 THROUGH RT-12.
3. THIS CONTRACTOR SHALL BE RESPONSIBLE FOR ALL CUTTING AND PATCHING OF WALLS, FLOORS AND CEILINGS AS REQUIRED FOR INSTALLATION OF HIS WORK.
4. ACCESS PANELS SHALL BE PROVIDED IN CEILINGS, WALLS, FLOORS, ETC., AS REQUIRED TO MAINTAIN ACCESSIBILITY TO VALVES, DAMPERS, TRAPS, COILS, ETC.
5. PROVIDE DUCT ACCESS DOORS AT ALL MOTORIZED DAMPERS, FIRE DAMPERS, AND SMOKE DAMPERS.
6. ALL PENETRATIONS THROUGH FIRE RATED PARTITIONS SHALL BE SEALED FIRE AND SMOKE TIGHT WITH AN APPROPRIATE U.L. LISTED FIRESTOPPING MATERIAL AND OR SYSTEM.
7. ALL DUCTWORK PASSING THROUGH A FIRE RATED PARTITION SHALL BE PROVIDED WITH A FIRE DAMPER TO MAINTAIN THE FIRE RATING OF THE PARTITION.
8. LOCATIONS OF DIFFUSERS AND GRILLES ARE APPROXIMATE. REFER TO ARCHITECTURAL PLANS FOR EXACT LOCATIONS.
9. ALL BRANCHES AND TAKE-OFFS SHALL BE EQUIPPED WITH VOLUME CONTROL DAMPERS. DAMPERS TO BE OPPOSED BLADE TYPE, 4" MAX. BLADE HEIGHT. VOLUME DAMPERS TO BE LOCATED AS NEAR TO THE POINT OF TAKE-OFF AS PRACTICAL.
10. FLEXIBLE DUCT CONNECTIONS SHALL BE LIMITED TO A MAXIMUM LENGTH OF FIVE (5) FEET AND SUPPORTED AT MID-POINT.
11. ALL SUPPLY & RETURN AIR DUCTWORK SHALL BE INSULATED.
12. PROVIDE SHUT-OFF VALVES AT ALL PIPING BRANCH TAKE-OFFS AND AT ALL CONNECTIONS TO EQUIPMENT.
13. PROVIDE DRAINS WITH HOSE ADAPTERS AND CAPS ON PIPING AT ALL LOW POINTS. PROVIDE MANUAL VENTS ON PIPING AT ALL HIGH POINTS.
14. COORDINATE ELECTRICAL CHARACTERISTICS AND REQUIREMENTS OF ALL MECHANICAL EQUIPMENT WITH ELECTRICAL CONTRACTOR.
15. ALL MOTOR STARTERS SHALL BE FURNISHED BY THE HVAC CONTRACTOR AND INSTALLED BY THE ELECTRICAL CONTRACTOR.
16. ROOFTOP UNIT CONTROLS SHALL BE PROVIDED BY THE COLLEGE'S CONTROLS CONTRACTOR AND PAID FOR BY THE COLLEGE. THIS CONTRACTOR SHALL BE RESPONSIBLE FOR COORDINATION WITH THE CONTROLS CONTRACTOR FOR INSTALLATION.
17. PRIOR TO ANY WORK, THE CONTRACTOR SHALL INSPECT THE ROOF AND REPORT ANY DEFECTS TO THE ENGINEER AND SUNY ORANGE REPRESENTATIVES. THE CONTRACTOR SHALL PROTECT THE ROOF FROM BEING DAMAGED DURING DEMOLITION AND CONSTRUCTION, AND SHALL BE RESPONSIBLE FOR ANY DAMAGE. ANY ROOF REPAIRS SHALL BE PERFORMED BY THE COLLEGE'S ROOFING CONTRACTOR.
18. THE TERMS "PROVIDE" OR "FURNISH", AS USED ON THESE PLANS, INDICATE THAT THE CONTRACTOR IS TO FURNISH AND INSTALL THE REFERENCED EQUIPMENT OR SYSTEMS IN THEIR ENTIRETY AS REQUIRED FOR A COMPLETE AND OPERABLE SYSTEM.
19. CONTRACTOR SHALL PROVIDE AND INSTALL ALL COMPONENTS INDICATED ON DETAIL SHEETS, PLANS, SPECIFICATIONS AND ALL PERTINENT EQUIPMENT REQUIRED FOR A COMPLETE AND WORKABLE SYSTEM.
20. CONTRACT CLOSE OUT: IN THE PRESENCE OF THE OWNER, ENGINEER OR ARCHITECT; DEMONSTRATING OPERATION OF SYSTEMS AND THAT ALL SPECIFICATIONS HAVE BEEN MET TO THE SATISFACTION OF ALL PARTIES.
21. IT IS THE INTENTION THAT THESE SPECIFICATIONS, AND DRAWINGS ACCOMPANYING SAME, SHALL PROVIDE FOR THE FURNISHING AND INSTALLING OF THE HVAC SYSTEMS COMPLETE AS SPECIFIED AND SHOWN. ANY WORK SHOWN ON THE DRAWINGS AND NOT PARTICULARLY DESCRIBED IN THE SPECIFICATIONS OR VICE VERSA, OR ANY WORK CHANGES WHICH MAY BE EVIDENTLY NECESSARY TO COMPLETE THE INSTALLATION SHALL BE FURNISHED BY THIS CONTRACTOR.
22. IT IS THE INTENT AND PURPOSE OF THESE SPECIFICATIONS AND DRAWINGS TO INCLUDE AND PROVIDE FOR ALL MATERIALS, APPLIANCES AND LABOR TO PROPERLY COMPLETE AND LEAVE IN PERFECT WORKING CONDITION THE ENTIRE SYSTEM HEREINAFTER SPECIFIED. ANY MATERIAL, LABOR OR APPLIANCE NOT SPECIFICALLY MENTIONED IN THESE SPECIFICATIONS OR SHOWN ON THE DRAWINGS, BUT NECESSARY FOR A COMPLETE INSTALLATION MUST BE FURNISHED BY THIS CONTRACTOR.
23. IT IS THE INTENT OF THESE PLANS AND SPECIFICATIONS TO PROVIDE ALTERATIONS AND/OR NEW CONSTRUCTION AS INDICATED ON THE DRAWINGS AND IN THE SPECIFICATIONS TO PROVIDE COMPLETE NEW SYSTEMS IN EVERY RESPECT, CAPABLE OF OPERATING AS DESIGNED. IT IS NOT INTENDED THAT EVERY FITTING, MINOR DETAIL OR FEATURE BE SHOWN ON DRAWINGS. THE CONTRACTOR SHALL BE RESPONSIBLE FOR ANY DETAIL NECESSARY FOR COMPLETION OF THESE SYSTEMS IN ACCORDANCE WITH GOOD PRACTICE.

GENERAL ROOFING NOTES:

1. ALL ROOFING WORK SHALL BE PERFORMED IN ACCORDANCE WITH EXISTING MATERIALS AND CONFORM WITH EXISTING WARRANTY.
2. THIS CONTRACTOR SHALL RETAIN ONE OF THE FOLLOWING APPROVED CONTRACTORS TO PERFORM ALL ROOFING WORK:

HYGRADE INSULATORS	A-Z COATINGS
CONTACT PERSON: ROBERT PICCIONE	CONTACT PERSON: GERALD ROBB
P: (908)-454-1865	P: (570)-558-0932
E: BOBJR@HYGRADEINSULATORS.COM	E: JRBB740@AOL.COM

HVAC LINE TYPES

Line	Description
-/-/-/-/- or --------	EXISTING EQUIPMENT/DUCT TO BE REMOVED
	EXISTING EQUIPMENT/DUCT TO REMAIN
	NEW EQUIPMENT / DUCT

POWER SYMBOLS

- SPECIAL PURPOSE CONNECTION.
- 3P, FUSED DISCONNECT SWITCH, FURNISHED AND INSTALLED BY ELECTRICAL CONTRACTOR. SHALL HAVE THE SAME # OF POLES & AMPERE RATING AS CONNECTING CIRCUIT UNLESS OTHERWISE NOTED.
- CONDUIT HOME RUN TO DESIGNATED PANEL. REFER TO PANEL SCHEDULE FOR CONDUIT & CABLE QUANTITY AND SIZE.
- DOUBLE HOME RUN
- TRIPLE HOME RUN

DUCTWORK SYMBOLS

- DUCTWORK DOUBLE LINE REPRESENTATION: "A" INDICATES DUCT WIDTH; "B" INDICATES DUCT DEPTH. (AxB)
- DUCTWORK SINGLE LINE REPRESENTATION: "A" INDICATES DUCT WIDTH; "B" INDICATES DUCT DEPTH. (AxB)
- SUPPLY AIR DUCT UP
- SUPPLY AIR DUCT DOWN
- RETURN AIR DUCT UP
- RETURN AIR DUCT DOWN
- EXHAUST AIR DUCT UP
- EXHAUST AIR DUCT DOWN
- FLEXIBLE DUCTWORK
- SUPPLY AIR FLOW
- RETURN/EXHAUST AIR FLOW
- VOLUME DAMPER
- SUPPLY AIR TERMINAL
- RETURN/EXHAUST AIR TERMINAL
- EXHAUST AIR TERMINAL

PIPING SYMBOLS

- TOP CONNECTION, 45° OR 90°
- BOTTOM CONNECTION, 45° OR 90°
- SIDE CONNECTION
- CAPPED OUTLET
- PIPE DOWN TURN
- PIPE RISE

ABBREVIATIONS

ACT	ACOUSTIC CEILING TILE
AD	ACCESS DOOR
AFF	ABOVE FINISHED FLOOR
AHU	AIR HANDLING UNIT
AL	ALUMINUM
AP	ACCESS PANEL
AUTO	AUTOMATIC
AWG	AMERICAN WIRE GAUGE
BCW	BARE COPPER WIRE
BTUH	BRITISH THERMAL UNITS/HOUR
C	CONDUIT
CHWR	CHILLED WATER RETURN
CHWS	CHILLED WATER SUPPLY
CKT	CIRCUIT
CLG	CEILING
CWS	CONDENSER WATER SUPPLY
CU	COPPER
D	DRAIN
Db	DRY BULB TEMPERATURE, °F
dB	DECIBELS
DN	DOWN
DP	DISTRIBUTION PANEL
Dp	DEW POINT TEMPERATURE, °F
DS	DISCONNECT (LOCKOUT) SWITCH
DWG	DRAWING
EA	EACH
E.C.	ELECTRICAL CONTRACTOR
ELEC.	ELECTRICAL
EQUIP.	EQUIPMENT
EMT	ELECTRICAL METALLIC TUBING
ET	EXPANSION TANK
EXIST	EXISTING
FC	FLEXIBLE CONNECTION
FL, FLR	FLOOR
FLEX	FLEXIBLE
FPC	FIRE PROTECTION CONTRACTOR
FT	FEET OR FOOT
G	NATURAL GAS PIPE
GND	GROUND
GFI	GROUND FAULT INTERRUPTER
G.C.	GENERAL CONTRACTOR
GPM	GALLONS PER MINUTE
H.C.	HVAC CONTRACTOR
HP	HORSEPOWER
HWR	HOT WATER RETURN
HWS	HOT WATER SUPPLY
HZ	HERTZ
IMC	INTERMEDIATE METAL CONDUIT
JB	JUNCTION BOX
KV	KILO VOLT
KVA	KILO VOLT AMP
KW	KILO WATT
LF	LINEAR FEET
LBS/HR	POUNDS PER HOUR
MAX.	MAXIMUM
MBH	ONE THOUSAND BTUH
M.C.	MECHANICAL CONTRACTOR
MCB	MAIN CIRCUIT BREAKER
MCM	THOUSAND CIRCULAR MILS
MD	MOTORIZED DAMPER
MDP	MAIN DISTRIBUTION PANEL
MECH	MECHANICAL
MER	MECHANICAL EQUIPMENT ROOM
MIN.	MINIMUM
MTD	MOUNTED
MTG	MOUNTING
NEC	NATIONAL ELECTRIC CODE
NTS	NOT TO SCALE
NOM.	NOMINAL
N/C	NOT IN CONTRACT
NIC	NOT IN CONTRACT
NM	NON-METALLIC CONDUIT
P	POLE
P	PUMP
PB	PULL BOX
ø	PHASE
P.C.	PLUMBING CONTRACTOR
PD	PRESSURE DROP (FEET OF WATER)
PWR	POWER
PRV	PRESSURE REDUCING VALVE
PSI	POUNDS PER SQUARE IN.
REQ.	REQUIRED
RGS	RIGID GALVANIZED STEEL
RPZ	REDUCED PRESSURE ZONE
RM	ROOM
SCHED.	SCHEDULE
SECT.	SECTION
Sp. Gr.	SPECIFIC GRAVITY
SPEC.	SPECIFICATION
S.S.	STAINLESS STEEL
SW	SWITCH
SWBD	SWITCH BOARD
SYS	SYSTEM
TYP	TYPICAL
U.N.O.	UNLESS NOTED OTHERWISE
V	VALVE
VFC	VARIABLE FREQUENCY CONTROLLER
VIF	VERIFY IN FIELD
VI	VIBRATION ISOLATOR
VSD	VARIABLE SPEED DRIVE
W	WATT
Wb	WET BULB TEMPERATURE, °F
WFM	WATER FLOW MEASURING DEVICE
WP	WEATHER PROOF
XFMR/ TRANSF.	TRANSFORMER

GENERAL SYMBOLS

- POINT OF CONNECTION BETWEEN NEW AND EXISTING WORK
- POINT OF DISCONNECT
- (X / XX) INDICATES SECTION LETTER; INDICATES DRAWING NUMBER WHERE LOCATED
- (XXX / XXX) INDICATES TYPE OF AIR OUTLET; INDICATES AIR FLOW REQUIREMENTS

REV #	DATE	REMARKS:	ISSUE #	DATE	ISSUED FOR:
			2	10/14/22	FOR BID
			1	10/7/22	100% REVIEW

⅛" ¼" ½" 0 1" 2"
REFERENCE SCALE

UNAUTHORIZED ALTERATION OR ADDITION TO A PLAN BEARING A LICENSED PROFESSIONAL ENGINEER'S SEAL IS A VIOLATION OF SECTION 7209, SUB-DIVISION 2 OF THE N.Y. STATE EDUCATION LAW.

FELLENZER ENGINEERING LLP
www.fellp.com
22 Mulberry St., Suite 2A, Middletown, NY 10940
t 845-343-1481 fx 845-343-4986
181 Church St., Suite 100, Poughkeepsie, NY 12601
t 845-454-9704 fx 855-320-8735

PROJECT TITLE:
OCCC PHYSICAL EDUCATION CENTER
HVAC ROOFTOP UNIT REPLACEMENT
115 SOUTH STREET, MIDDLETOWN, NY 10940

DRAWING TITLE:
MECH./ELEC.: SYMBOLS, NOTES & ABBREVIATIONS

DESIGNED BY:	DRAWN BY:	APPROVED BY PM:	APPROVED BY PIC:	DRAWING #:
BG	ZR	EDF	EDF	HE-001
DATE: 10/14/2022	SCALE: AS SHOWN	FE PROJECT #: 22-059		PAGE 2 OF 10

File Name: F:\2022\22-059 RTU Replacement RTU's 7-12 for PE Building - SUNY Orange\HE-001.dwg (Layout: HE-001)
Date: Thu, Oct 13, 2022 - 10:11 AM (Name: zr)

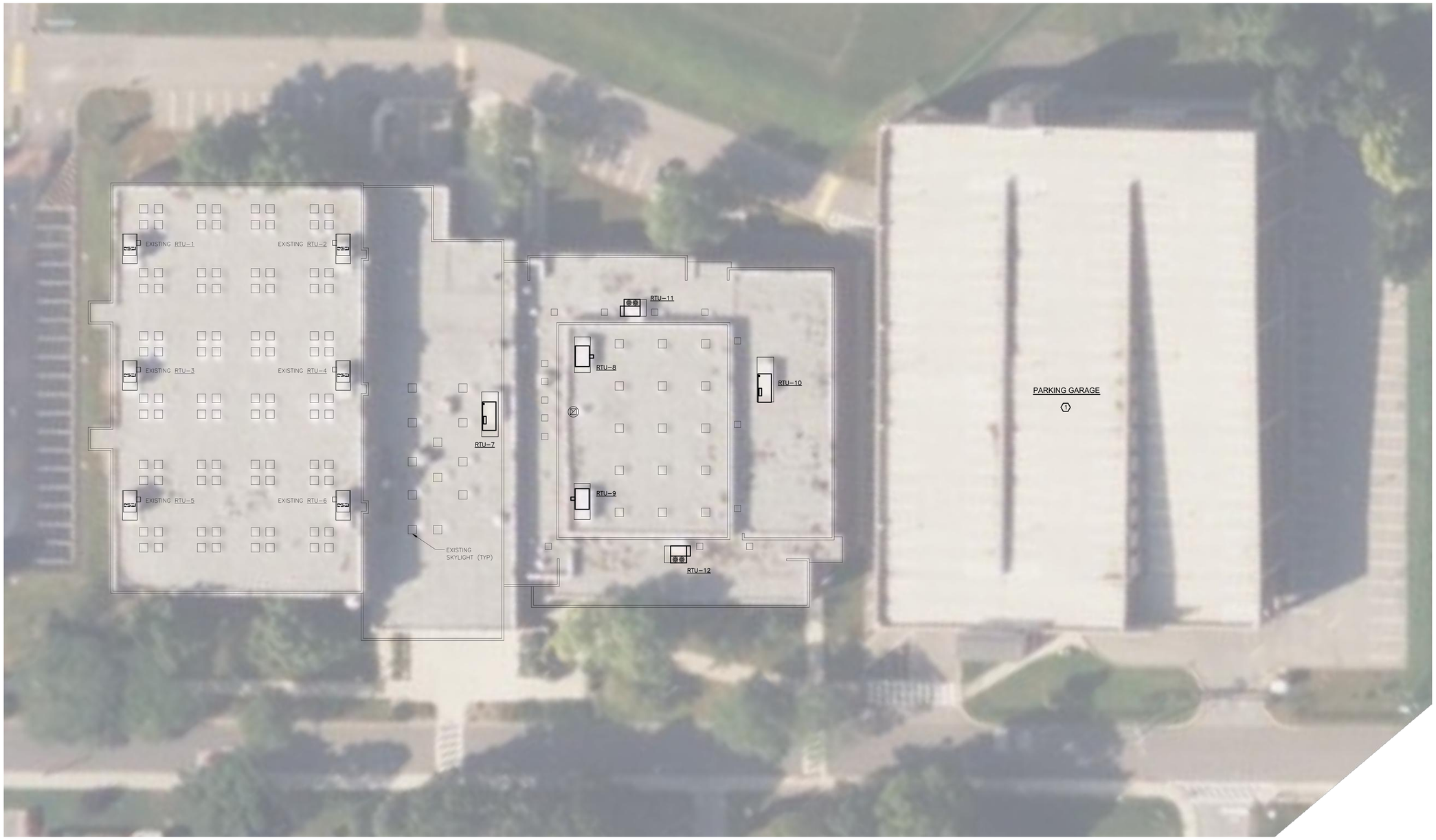

1 PARTIAL SITE PLAN
SCALE: 1"=20'-0"

KEYED NOTE:

1. CONTRACTOR IS ALLOWED TO RECEIVE AHU/RTU'S PRIOR TO CONSTRUCTION AND STORE IN PARKING GARAGE. CONTRACTOR IS ALSO ALLOWED TO USE OCCC FORKLIFT (MAXIMUM CAPACITY 3,000 IBS.) FOR UNLOADING OF EQUIPMENT. COORDINATE WITH OCCC PRIOR TO DELIVERY AND USE OF FORKLIFT.

GENERAL PHASING NOTE:

1. CONSTRUCTION START DATE: MAY 22, 2023.
   CONSTRUCTION COMPLETION DATE: AUGUST 17, 2023

REV #	DATE	REMARKS:	ISSUE #	DATE	ISSUED FOR:
			2	10/14/22	FOR BID
			1	10/7/22	100% REVIEW

⅛" ¼" ½" 0 1" 2"
REFERENCE SCALE

UNAUTHORIZED ALTERATION OR ADDITION TO A PLAN BEARING A LICENSED PROFESSIONAL ENGINEER'S SEAL IS A VIOLATION OF SECTION 7209, SUB-DIVISION 2 OF THE N.Y. STATE EDUCATION LAW.

FELLENZER ENGINEERING LLP
www.fellp.com
22 Mulberry St., Suite 2A,
Middletown, NY 10940
t 845-343-1481 fx 845-343-4986
181 Church St., Suite 100,
Poughkeepsie, NY 12601
t 845-454-9704 fx 855-320-8735

PROJECT TITLE:
OCCC PHYSICAL EDUCATION CENTER
HVAC ROOFTOP UNIT REPLACEMENT
115 SOUTH STREET, MIDDLETOWN, NY 10940

DRAWING TITLE:
PARTIAL SITE PLAN

DESIGNED BY:	DRAWN BY:	APPROVED BY PM:	APPROVED BY PIC:	DRAWING #:
BG	AH	EDF	EDF	HE-100
DATE: 10/14/2022	SCALE: AS SHOWN		FE PROJECT #: 22-059	PAGE OF 10

File Name: F:\2020\20-609 RTU Replacement RTU's 7-12 for PE Building - SUNY Orange\HE-100.dwg (Layout: HE-100)
Date: Thu, Oct 13, 2022 - 10:11 AM (Name: 27)

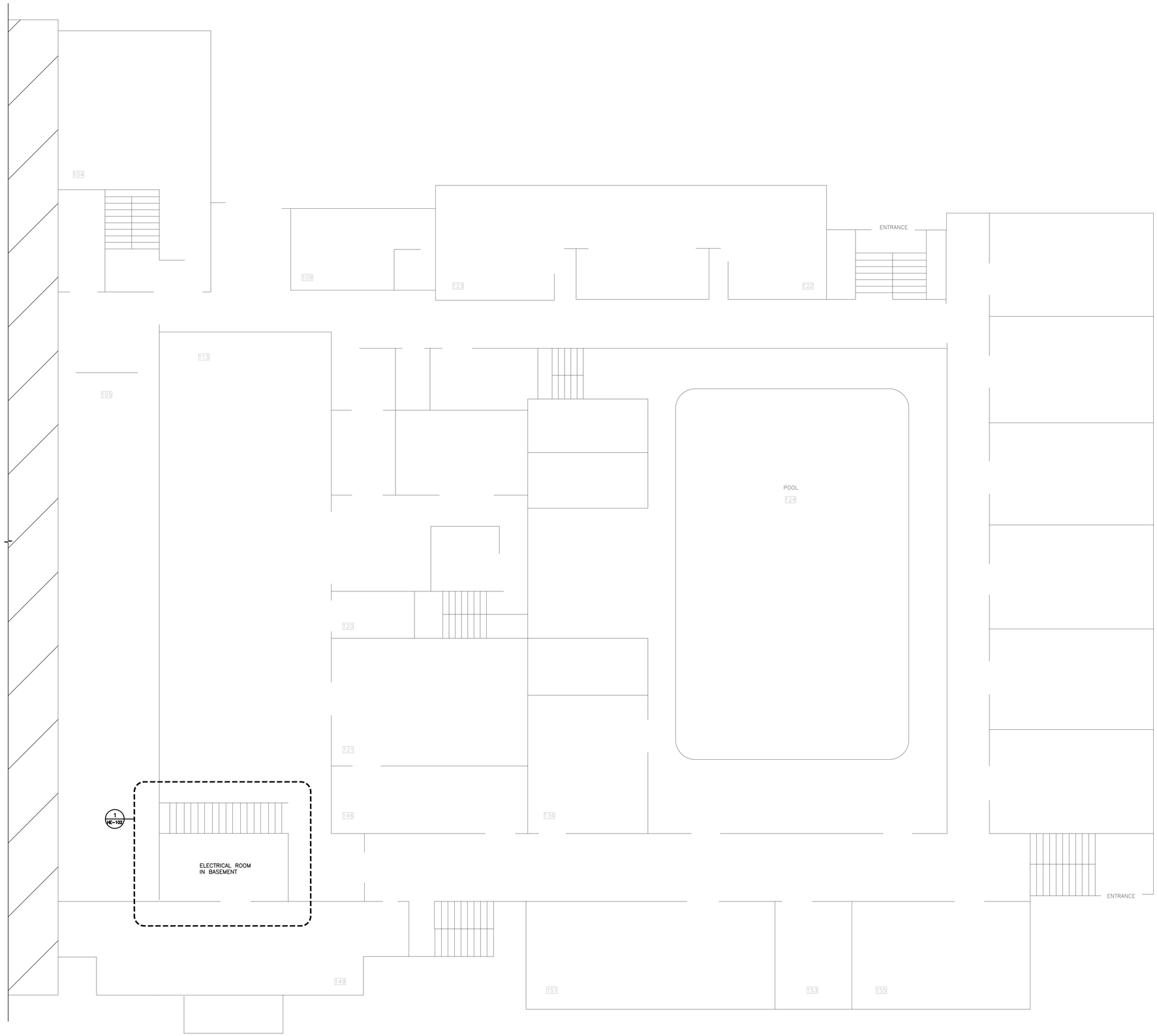

1 MECH./ELEC.: PARTIAL FIRST FLOOR PLAN
SCALE: 1/8"=1'-0"

REV #	DATE	REMARKS:	ISSUE #	DATE	ISSUED FOR:
			2	10/14/22	FOR BID
			1	10/7/22	100% REVIEW

1/8" 1/4" 1/2" 0 1" 2"
REFERENCE SCALE

UNAUTHORIZED ALTERATION OR ADDITION TO A PLAN BEARING A LICENSED PROFESSIONAL ENGINEER'S SEAL IS A VIOLATION OF SECTION 7209, SUB-DIVISION 2 OF THE N.Y. STATE EDUCATION LAW.

FELLENZER ENGINEERING LLP
www.fellp.com
22 Mulberry St., Suite 2A,
Middletown, NY 10940
t 845-343-1481 fx 845-343-4986
181 Church St., Suite 100,
Poughkeepsie, NY 12601
t 845-454-9704 fx 855-320-8735

PROJECT TITLE:
OCCC PHYSICAL EDUCATION CENTER
HVAC ROOFTOP UNIT REPLACEMENT
115 SOUTH STREET, MIDDLETOWN, NY 10940

DRAWING TITLE: MECH./ELEC.: PARTIAL FIRST FLOOR PLAN

DESIGNED BY:	DRAWN BY:	APPROVED BY PM:	APPROVED BY PIC:	DRAWING #:
BG	SA	EDF	EDF	HE-101
DATE: 10/14/2022	SCALE: AS SHOWN	FE PROJECT #: 22-059		PAGE 3 OF 10

File Name: F:\2022\22-059 RTU Replacement RTU's 7-12 for PE Building - SUNY Orange\HE-101.dwg (Layout: HE-101)
Date: Thu, Oct 13, 2022 - 10:11 AM (Name: 2)

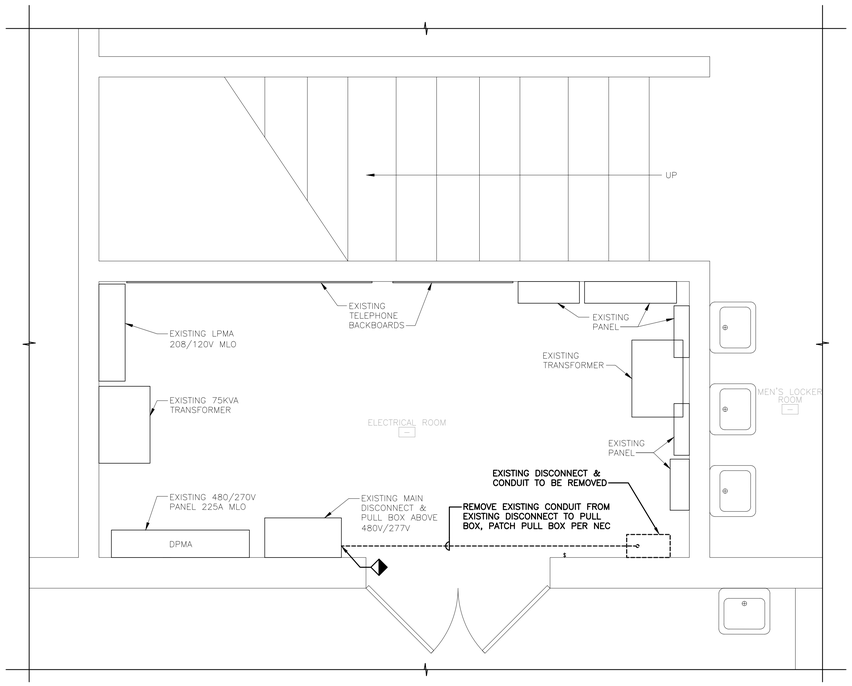

1 MECH./ELEC.: ENLARGED DEMOLITION FLOOR PLAN
SCALE: 1/2"=1'-0"

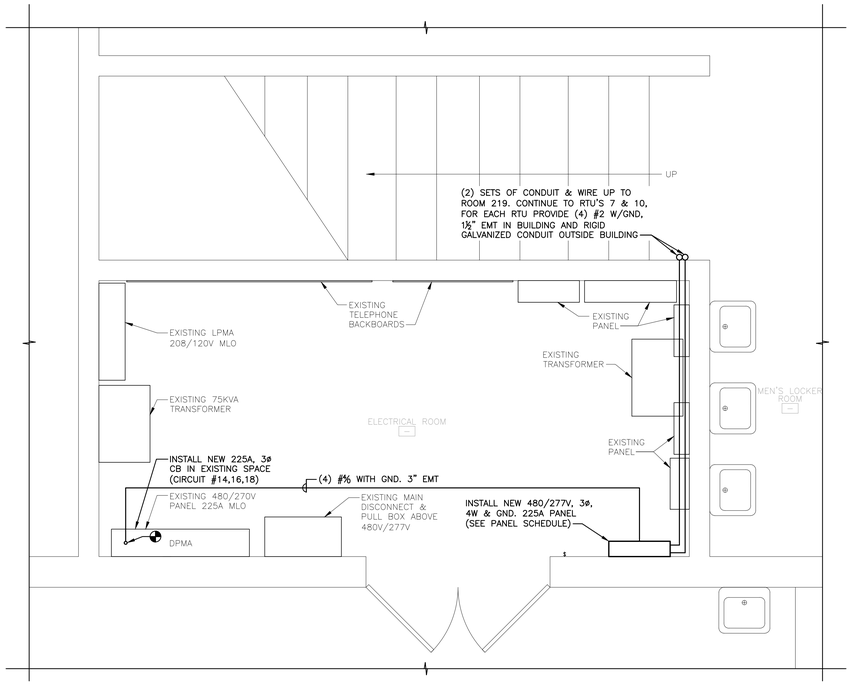

2 MECH./ELEC.: ENLARGED CONSTRUCTION FLOOR PLAN
SCALE: 1/2"=1'-0"

REV #	DATE	REMARKS:	ISSUE #	DATE	ISSUED FOR:
			2	10/14/22	FOR BID
			1	10/7/22	100% REVIEW

⅛" ¼" ½" 0 1" 2"
REFERENCE SCALE

UNAUTHORIZED ALTERATION OR ADDITION TO A PLAN BEARING A LICENSED PROFESSIONAL ENGINEER'S SEAL IS A VIOLATION OF SECTION 7209, SUB-DIVISION 2 OF THE N.Y. STATE EDUCATION LAW.

FELLENZER ENGINEERING LLP
www.fellp.com
22 Mulberry St., Suite 2A,
Middletown, NY 10940
t 845-343-1481 fx 845-343-4986
181 Church St., Suite 100,
Poughkeepsie, NY 12601
t 845-454-9704 fx 855-320-8735

PROJECT TITLE:
OCCC PHYSICAL EDUCATION CENTER
HVAC ROOFTOP UNIT REPLACEMENT
115 SOUTH STREET, MIDDLETOWN, NY 10940

DRAWING TITLE:
MECH./ELEC.: ENLARGED FLOOR PLAN

DESIGNED BY:	DRAWN BY:	APPROVED BY PM:	APPROVED BY PIC:	DRAWING #:
BG	SA	EDF	EDF	HE-102
DATE: 10/14/2022	SCALE: AS SHOWN		FE PROJECT #: 22-059	PAGE 4 OF 10

File Name: F:\2022\22-059 RTU Replacement RTU's 7-12 for PE Building - SUNY Orange\HE-102.dwg (Layout: HE-102)
Date: Thu, Oct 13, 2022 - 10:11 AM (Name: 21)

1 MECH./ELEC.: PARTIAL SECOND FLOOR PLAN
SCALE: 1/8"=1'-0"

REV #	DATE	REMARKS:	ISSUE #	DATE	ISSUED FOR:
			2	10/14/22	FOR BID
			1	10/7/22	100% REVIEW

1/8" 1/4" 1/2" 0 1" 2"
REFERENCE SCALE

UNAUTHORIZED ALTERATION OR ADDITION TO A PLAN BEARING A LICENSED PROFESSIONAL ENGINEER'S SEAL IS A VIOLATION OF SECTION 7209, SUB-DIVISION 2 OF THE N.Y. STATE EDUCATION LAW.

FELLENZER ENGINEERING LLP
www.fellp.com
22 Mulberry St., Suite 2A,
Middletown, NY 10940
t 845-343-1481 fx 845-343-4986
181 Church St., Suite 100,
Poughkeepsie, NY 12601
t 845-454-9704 fx 855-320-8735

PROJECT TITLE:
OCCC PHYSICAL EDUCATION CENTER
HVAC ROOFTOP UNIT REPLACEMENT
115 SOUTH STREET, MIDDLETOWN, NY 10940

DRAWING TITLE: MECH./ELEC.: PARTIAL SECOND FLOOR PLAN

DESIGNED BY:	DRAWN BY:	APPROVED BY PM:	APPROVED BY PIC:	DRAWING #:
BG	ZR	EDF	EDF	HE-103
DATE: 10/14/2022	SCALE: AS SHOWN		FE PROJECT #: 22-059	PAGE 5 OF 10

File Name: F:\2022\22-059 RTU Replacement RTU's 7-12 for PE Building - SUNY Orange\HE-103.dwg (Layout: HE-103)
Date: Thu, Oct 13, 2022 - 10:11 AM (Name: zr)

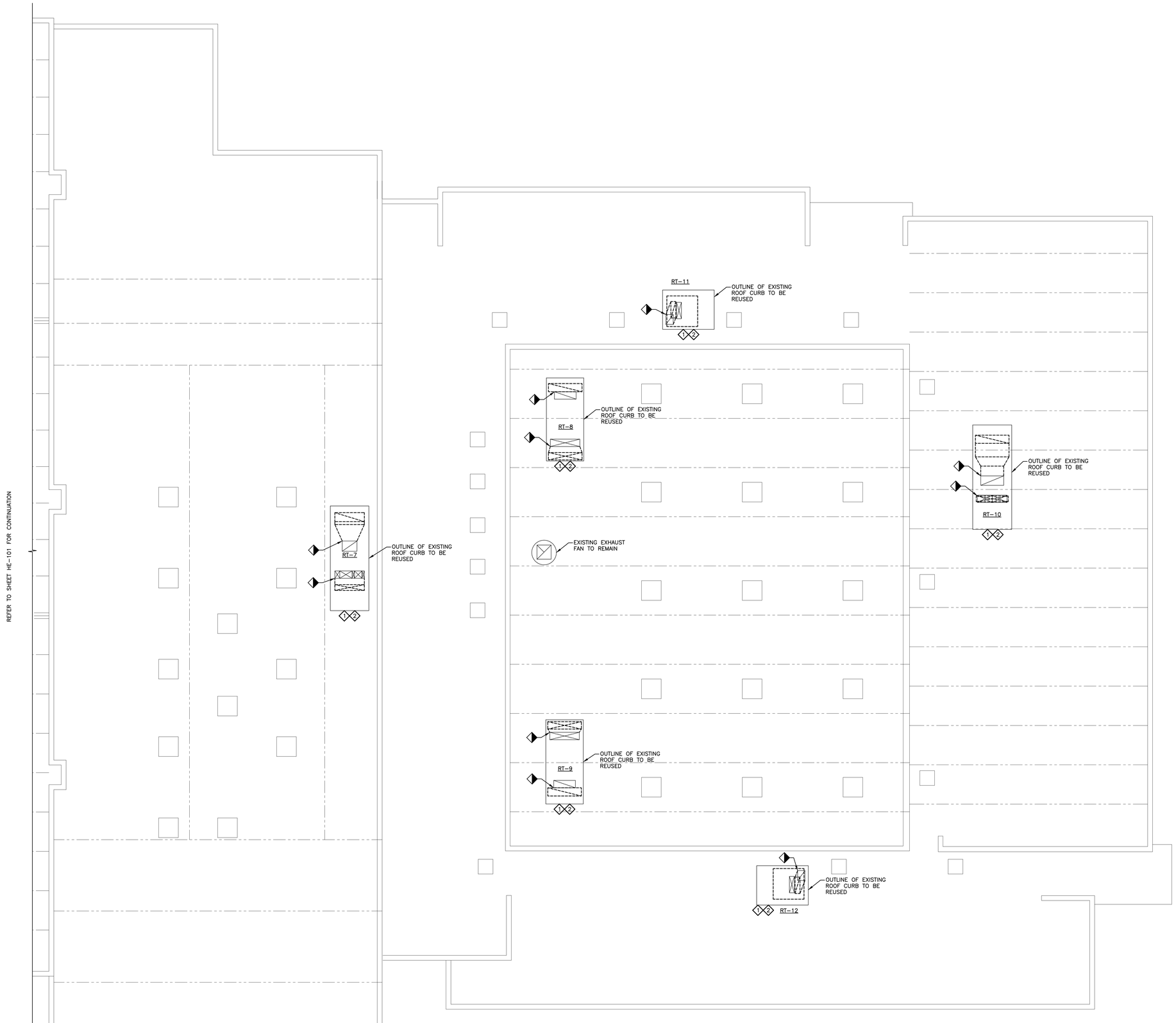

1 MECH./ELEC.: DEMOLITION PARTIAL ROOF PLAN
SCALE: 1/8"=1'-0"

KEYED NOTES:

1. EXISTING ROOFTOP UNIT AND TRANSITION CURBING TO BE REMOVED, EXISTING CURBING TO BE REUSED, DISCONNECT EXISTING HYDRONIC PIPING AND CAP TEMPORARILY FOR NEW RECONNECTION TO NEW UNITS.
2. DISCONNECT ELECTRICAL WIRING FROM ALL EXISTING ROOFTOP UNITS.

MECHANICAL DEMOLITION NOTES:

1. ALL LOCATIONS SHOWN ARE APPROXIMATE. IT IS THE RESPONSIBILITY OF THE HVAC CONTRACTOR TO VERIFY LOCATIONS OF UNITS, PIPING, AND DUCTWORK PRIOR TO ANY DEMOLITION WORK.
2. REMOVE ALL EQUIPMENT AS INDICATED ON PLAN. REMOVALS SHALL INCLUDE ALL SUPPORTS, DAMPERS, VALVES, FITTINGS, CONTROLS AND ALL ASSOCIATED LOW VOLTAGE WIRING, AND ANY OTHER ASSOCIATED ACCESSORIES WHICH PERTAIN TO THE EQUIPMENT TO BE REMOVED.
3. REMOVAL OF ALL POWER CONNECTIONS TO DEMOLITION ITEMS SHALL BE BY THE HVAC CONTRACTOR.
4. ANY DISCREPANCIES BETWEEN DEMOLITION PLANS AND ACTUAL FIELD CONDITIONS SHALL BE BROUGHT TO THE ATTENTION OF THE ENGINEER. ANY DEMOLITION WORK WHICH MAY BE QUESTIONABLE DUE TO UNFORESEEN FIELD CONDITIONS SHALL NOT BE REMOVED UNTIL REVIEWED BY THE ENGINEER OR BUILDING FACILITIES MANAGER.
5. DEMOLITION WORK SHALL INCLUDE THE PREPARATION OF EXISTING EQUIPMENT FOR CONNECTION TO NEW EQUIPMENT. COORDINATE DEMOLITION WORK WITH THE CONSTRUCTION PLANS.
6. ALL EQUIPMENT REMOVALS SHALL BECOME THE PROPERTY OF THIS CONTRACTOR. THIS CONTRACTOR SHALL BE RESPONSIBLE FOR THE PROPER REMOVAL AND DISPOSAL OF DEMOLITION ITEMS OFF-SITE, UNLESS OTHERWISE NOTED.
7. ALL CUTTING AND PATCHING NECESSARY FOR DEMOLITION WORK SHALL BE THE RESPONSIBILITY OF THE HVAC CONTRACTOR.
8. THE SCOPE OF THIS PROJECT INCLUDES THE REPLACEMENT OF RT-7 THROUGH RT-12.
9. THE PLANS ARE INTENDED TO CONVEY THE EXTENT AND SCOPE OF THE DEMOLITION WORK. EVERY ITEM INTENDED FOR REMOVAL MAY NOT BE SHOWN. THE CONTRACTOR IS ADVISED TO ATTEND THE OWNER'S SPECIFIED WALK-THROUGH OF THE PROJECT SITE BEFORE SUBMITTING A BID FOR DEMOLITION WORK.
10. IT IS THE RESPONSIBILITY OF THE HVAC CONTRACTOR FOR THE DRAINING, FILLING & CHEMICAL WATER TREATMENT PER BOILER MANUFACTURER'S REQUIREMENTS.

REV #	DATE	REMARKS:	ISSUE #	DATE	ISSUED FOR:
			2	10/14/22	FOR BID
			1	10/7/22	100% REVIEW

⅛" ¼" ½" 0 1" 2"
REFERENCE SCALE

UNAUTHORIZED ALTERATION OR ADDITION TO A PLAN BEARING A LICENSED PROFESSIONAL ENGINEER'S SEAL IS A VIOLATION OF SECTION 7209, SUB-DIVISION 2 OF THE N.Y. STATE EDUCATION LAW.

FELLENZER ENGINEERING LLP
www.fellp.com
22 Mulberry St., Suite 2A,
Middletown, NY 10940
t 845-343-1481 fx 845-343-4986
181 Church St., Suite 100,
Poughkeepsie, NY 12601
t 845-454-9704 fx 855-320-8735

PROJECT TITLE:
OCCC PHYSICAL EDUCATION CENTER
HVAC ROOFTOP UNIT REPLACEMENT
115 SOUTH STREET, MIDDLETOWN, NY 10940

DRAWING TITLE: MECH./ELEC.: DEMOLITION PARTIAL ROOF PLAN

DESIGNED BY:	DRAWN BY:	APPROVED BY PM:	APPROVED BY PIC:	DRAWING #:
BG	SA	EDF	EDF	HED-104
DATE: 10/14/2022	SCALE: AS SHOWN		FE PROJECT #: 22-059	PAGE 6 OF 10

File Name: F:\2022\22-059 RTU Replacement RTU's 7-12 for PE Building - SUNY Orange\HED-104.dwg (Layout: HED-104)
Date: Thu, Oct 13, 2022 - 10:11 AM (Name: jf)

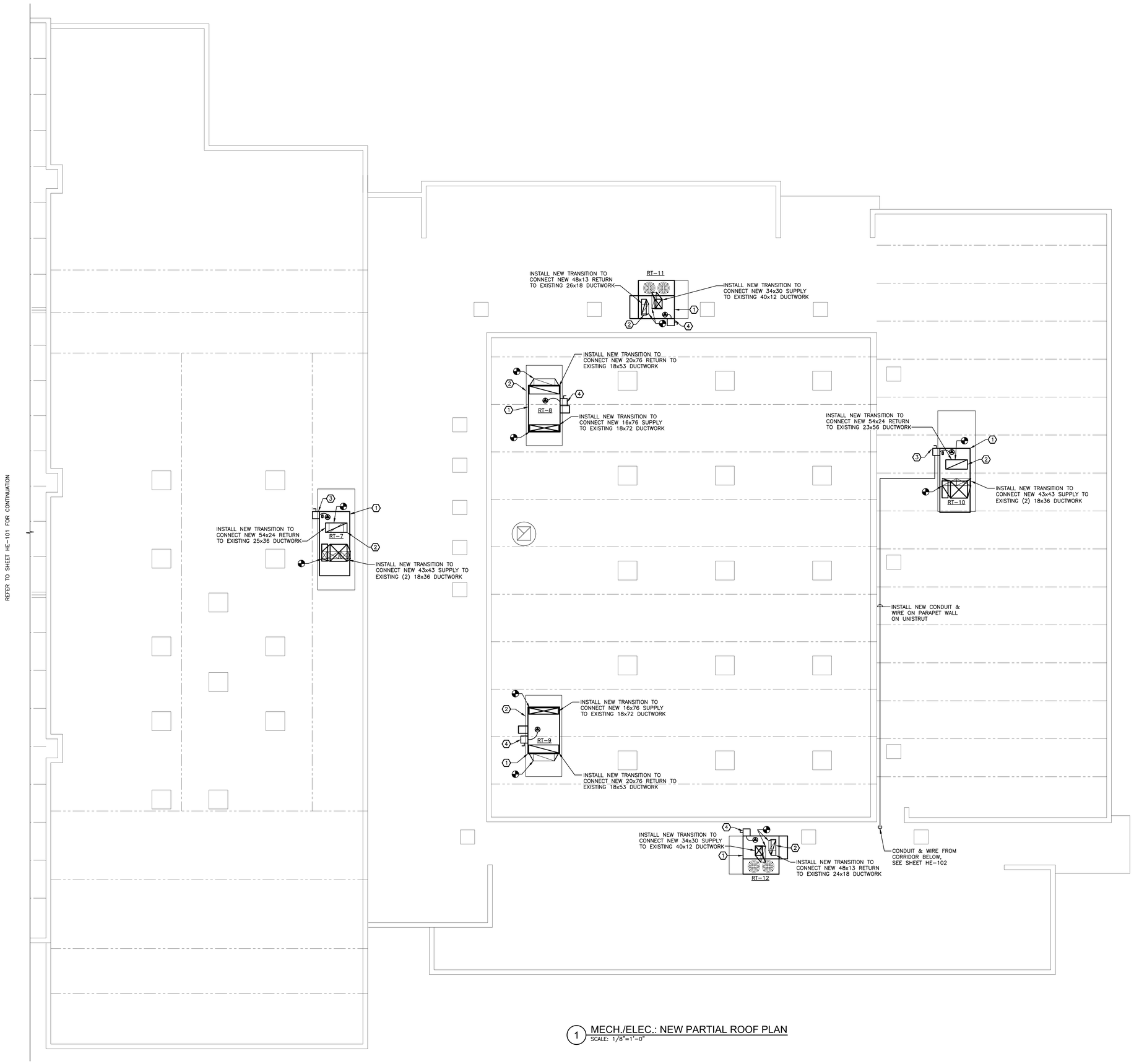

1 MECH./ELEC.: NEW PARTIAL ROOF PLAN
SCALE: 1/8"=1'-0"

KEYED NOTES:

1. INSTALL NEW ROOFTOP UNIT ON EXISTING ROOF CURB USING CUSTOM INSULATED TRANSITION CURBING. MAKE ALL NECESSARY CONNECTIONS TO GLYCOL SUPPLY AND RETURN PIPING. RELOCATE ALL PIPING AS NECESSARY. CONTRACTOR TO SUBMIT SHOP DRAWINGS OF TRANSITION CURBING TO ENGINEER FOR APPROVAL.
2. DUCT SMOKE DETECTORS SHALL BE FURNISHED AND INSTALLED BY THE COLLEGE'S FIRE ALARM CONTRACTOR. DUCT SMOKE DETECTORS SHALL BE INSTALLED IN COMMON SECTION OF SUPPLY AND RETURN AIR DUCT DIRECTLY BELOW ROOFTOP UNIT AND CONNECTED TO THE EXISTING FIRE ALARM SYSTEM. CONNECT ROOFTOP UNIT TO EXISTING FIRE ALARM SYSTEM FOR FAN SHUTDOWN.
3. PROVIDE NEW ELECTRICAL FEEDER, NON-FUSED DISCONNECT SWITCH AND CONNECTION TO NEW RTU.
4. DISCONNECT EXISTING POWER FEEDER. EXTEND WIRE AND CONDUIT FROM EXISTING DISCONNECTION POINT TO NEW NON-FUSED DISCONNECT SWITCH. PROVIDE WIRE AND CONDUIT FOR CONNECTION FROM DISCONNECT SWITCH TO NEW RTU'S.

INSTALLATION NOTES:

1. ALL LOCATIONS SHOWN ARE APPROXIMATE. VERIFY LOCATIONS OF ROOFTOP UNITS, PIPING, AND DUCTWORK IN FIELD.
2. INSTALL NEW ROOFTOP UNITS AT LOCATIONS SHOWN ON PLANS. RECONNECT TO EXISTING PIPING AND DUCTWORK.
3. CONNECT NEW ROOFTOP UNITS TO EXISTING ELECTRICAL WIRING. EXTEND CABLE AND USE JUNCTION BOXES AS NECESSARY TO MAKE THE CONNECTION.
4. ALL UNITS SHALL BE SUPPLIED WITH A FACTORY INSTALLED DISCONNECT SWITCH, CONVENIENCE RECEPTACLE AND LIGHT.
5. REPORT ANY DEFECTS IN EXISTING DUCTWORK, POWER WIRING, AND HYDRONIC PIPING TO SUNY ORANGE REPRESENTATIVES.
6. EXISTING CURBING MAY BE REUSED IF NEW UNIT FITS THE EXISTING CURB. CONTRACTOR TO PROVIDE SHOP DRAWINGS TO ENGINEER FOR APPROVAL.
7. THE SCOPE OF THIS PROJECT INCLUDES THE REPLACEMENT OF RT-7 THROUGH RT-12.

REV #	DATE	REMARKS:	ISSUE #	DATE	ISSUED FOR:
			2	10/14/22	FOR BID
			1	10/7/22	100% REVIEW

⅛" ¼" ½" 0 1" 2"
REFERENCE SCALE

UNAUTHORIZED ALTERATION OR ADDITION TO A PLAN BEARING A LICENSED PROFESSIONAL ENGINEER'S SEAL IS A VIOLATION OF SECTION 7209, SUB-DIVISION 2 OF THE N.Y. STATE EDUCATION LAW.

FELLENZER ENGINEERING LLP
www.fellp.com
22 Mulberry St., Suite 2A,
Middletown, NY 10940
t 845-343-1481 fx 845-343-4986
181 Church St., Suite 100,
Poughkeepsie, NY 12601
t 845-454-9704 fx 855-320-8735

PROJECT TITLE:
OCCC PHYSICAL EDUCATION CENTER
HVAC ROOFTOP UNIT REPLACEMENT
115 SOUTH STREET, MIDDLETOWN, NY 10940

DRAWING TITLE:
MECH./ELEC.: NEW PARTIAL ROOF PLAN

DESIGNED BY:	DRAWN BY:	APPROVED BY PM:	APPROVED BY PIC:	DRAWING #:
BG	SA	EDF	EDF	HE-104
DATE: 10/14/2022	SCALE: AS SHOWN		FE PROJECT #: 22-059	PAGE 7 OF 10

File Name: F:\2022\22-059 RTU Replacement RTU's 7-12 for PE Building - SUNY Orange\HE-104.dwg (Layout: HE-104)
Date: Thu, Oct 13, 2022 - 10:11 AM (Name: 2?)

NOTES:

1. REPLACE EXISTING ROOF TOP UNITS (12 TOTAL) AT LOCATIONS SHOWN ON PLANS
2. REPLACE ALL EXISTING ROOF CURBS FOR ALL 12 UNITS. MODIFY EXISTING ROOF ROOF MEMBRANE AND SUB-ROOFING IN ACCORDANCE WITH ROOFING MANUFACTURERS REQUIREMENTS AND IN COMPLIANCE WITH EXISTING WARRANTY. SUBMIT SHOP DRAWINGS.
3. LOCATIONS OF EXISTING DUCTWORK, PIPING AND ROOFTOP UNIT LOCATIONS ARE APPROXIMATE. VERIFY EXACT LOCATION IN FIELD.
4. REMOVE ALL EXISTING EQUIPMENT TO AN OFFSITE LOCATION AND DISPOSE OF IN A MANNER ACCEPTABLE TO LOCAL, COUNTY, STATE AND FEDERAL REGULATIONS.
5. ALL UNITS SHALL BE SUPPLIED WITH A FACTORY INSTALL DISCONNECT SWITCH, CONVENIENCE RECEPTACLE AND LIGHT.
6. DISCONNECTION AND RECONNECTION OF ENERGY MANAGEMENT SYSTEM FOR ALL ROOFTOP UNITS MUST BE CLOSELY COORDINATED WITH EUA-DAY CONTROLS AT (914-227-8120) CONTACT EUA-DAY 3 WORKING DAYS BEFORE REMOVAL OF EACH ROOFTOP UNIT. THIS SHOULD BE AT NO COST TO THE BIDDING HVAC CONTRACTOR.

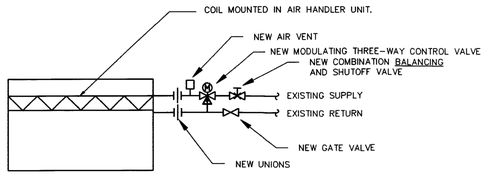

NOTES
1: ALL PIPING SHALL BE TYPE L COPPER AS SPECIFIED.
2: HVAC CONTRACTOR. RESPONSIBLE FOR BALANCING SYSTEM.
3: SCHEMATIC TYPICAL FOR HEATING COILS
4: RELOCATE EXISTING SUPPLY & RETURN PIPING FROM EXISTING LOCATIONS ON EXSITING COIL LOCATIONS TO NEW COIL LOCATIONS. INSULATE NEW PIPING.

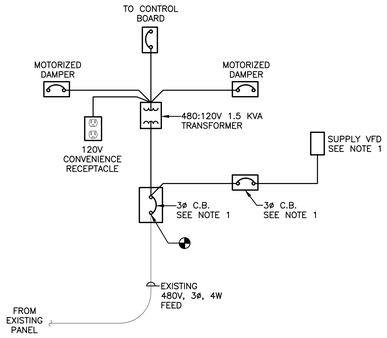

NOTE:
1. FOR RT-8 AND RT-9 NON-FUSED DISCONNECT AND VFD FACTORY INSTALLED.

2 ROOFTOP UNIT ELECTRICAL CONNECTION DETAIL(TYPICAL FOR RT-8,9,11&12)
N.T.S

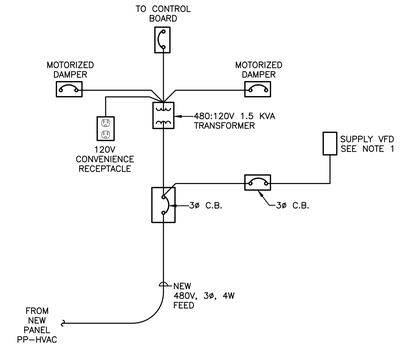

3 ROOFTOP UNIT ELECTRICAL CONNECTION DETAIL(TYPICAL FOR RT-7&10)
N.T.S

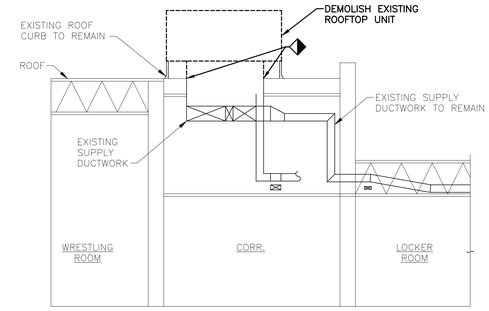

4 ROOFTOP UNIT RT-7 DEMOLITION DETAIL - END VIEW
N.T.S

NOTES:

1. SPACE THERMOSTAT SHALL RESET SETPOINT OF DISCHARGE AIR P.I. CONTROLLER TO MAINTAIN SPACE TEMPERATURE.
2. DISCHARGE AIR P.I.CONTROLLER SHALL CONTROLL HEATING COIL VALVE, OUTDOOR AIR, AND EXHAUST AIR DAMPERS AND COOLING CIRCUIT SEQUENCE TO MAINTAIN DISCHARGE AIR TEMPERATURE.
3. MIXED AIR LOW LIMIT CONTROLLER SHALL MODULATE DAMPERS TO PREVENT EXCESSIVELY LOW TEMPERATURES FROM ENTERING COILS.
4. WHEN ENTHALPY OF OUTDOOR AIR EXCEEDS ENTHALPY OF RETURN AIR, THE OUTDOOR AIR DAMPER SHALL BE DRIVED TO THE MINIMUM OPEN POSITION AS DETERMINED BY THE MANUAL POSITIONING SWITCH.
5. OUTDOOR AND EXHAUST AIR DAMPERS SHALL CLOSE WHEN FAN IS OFF.
6. IF A LOW TEMPERATURE LIMIT CONTROLLER IS USED, WHEN THE MIXED AIR TEMPERATURE FALLS TO THE SETPOINT OF THAT CONTROLLER A SEQUENCE FOR LOW TEMPERATURE LIMIT OPERATION SHALL BE INITIATED.
7. MINIMUM OUTDOOR AIR POSITIONING SWITCH TO BE LOCATED NEAR THERMOSTAT FOR AIR HANDLER.
8. THIS CONTROL SCHEMATIC IS TYPICAL FOR ALL AIR HANDLERS. UNITS NOT EQUIPPED WITH COOLING SHALL OPERATE SIMMILAR EXCEPT COOLING CIRCUIT SHALL NOT EXIST.

* EXHAUST FAN NOT SHOWN.

SEQUENCE OF OPERATION:

1. CONTROL SYSTEM ENERGIZES WHEN FAN IS TURNED ON.
2. MANUAL POSITIONING SWITCH DETERMINES MINIMUM OUTDOOR AIR DAMPER POSITION.
3. TEMPERATURE SENSOR SUPPLIES OUTDOOR AIR DRY BULB TEMP. SIGNAL TO ENTHALPY CONTROLLER.
4. HUMIDITY SENSOR SUPPLIES OUTDOOR AIR RELATIVE HUMIDITY SIGNAL TO ENTHALPY CONTROLLER.
5. TEMPERATURE SENSOR SUPPLIES RETURN AIR DRY BULB TEMP. SIGNAL TO ENTHALPY CONTROLLER.
6. HUMIDITY SENSOR SUPPLIES RETURN AIR RELATIVE HUMIDITY SIGNAL TO ENTHALPY CONTROLLER.
7. ENTHALPY CONTROLLER POSITIONS DAMPERS TO ADMIT OUTDOOR AIR OR RETURN AIR DEPENDING ON WHICH CONTAINS LOWER TOTAL HEAT.
8. MIXED AIR LOW LIMIT CONTROLLER MODULATES DAMPERS TO PREVENT EXCESSIVELY LOW TEMPERATURES FROM ENTERING COILS.
9. SPACE THERMOSTAT RESETS SETPOINT OF DISCHARGE AIR P.I. CONTROLLER.
10. DISCHARGE AIR P.I. CONTROLLER SEQUENCES HEATING COIL VALVE, OUTDOOR AIR DAMPER, EXHAUST AIR DAMPER, RETURN AIR DAMPER, AND COOLING COIL VALVE WITH DEAD BAND IN BETWEEN TO USE OUTDOOR AIR FOR COOLING.
11. CONTROLLER INITIATES SEQUENCE FOR LOW TEMPERATURE LIMIT OPERATION: CLOSE OUTSIDE AIR DAMPER AND EXHAUST AIR DAMPER, HEATING COIL VALVE FULL OPEN, COOLING COIL VALVE CLOSED.

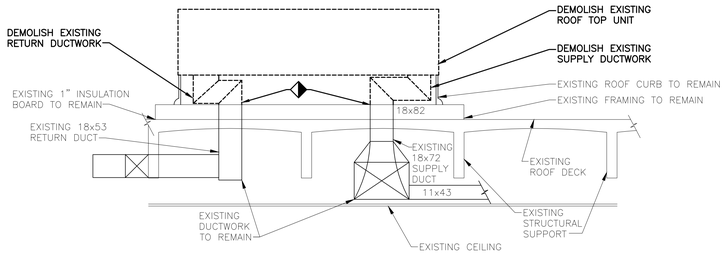

5 ROOFTOP UNIT RT-8 & RT-9 - DEMOLITION DETAIL
N.T.S

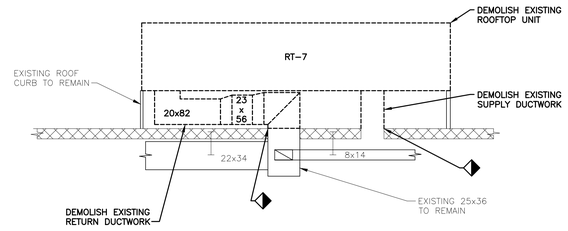

6 ROOFTOP UNIT RT-7 DEMOLITION DETAIL - SIDE VIEW
N.T.S

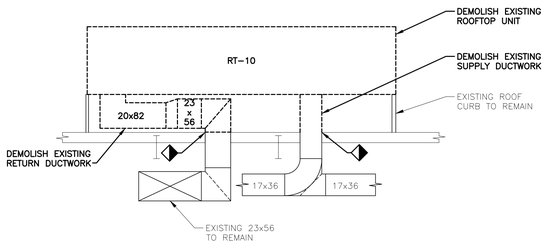

7 ROOFTOP UNIT RT-10 - DEMOLITION DETAIL
N.T.S

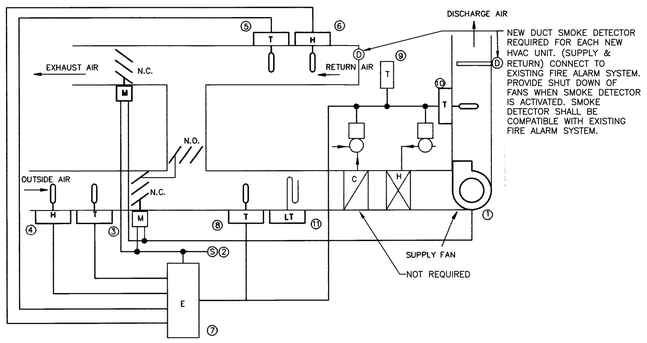

1 EXISTING AIR HANDLER CONTROL SCHEMATIC (FOR REFERENCE ONLY)
N.T.S

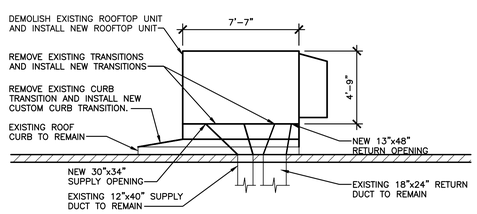

8 RT-11 AND RT-12 INSTALLATION DETAIL- SIDE VIEW
SCALE: 1/4"=1'-0"

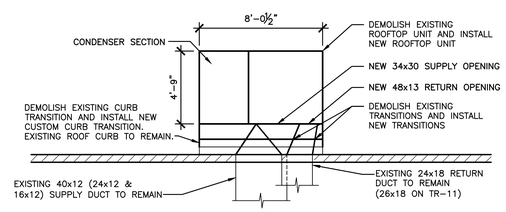

9 RT-11 AND RT-12 INSTALLATION DETAIL- END VIEW
SCALE: 1/4"=1'-0"

REV #	DATE	REMARKS:	ISSUE #	DATE	ISSUED FOR:
			2	10/14/22	FOR BID
			1	10/7/22	100% REVIEW

⅛" ¼" ½" 0 1" 2"
REFERENCE SCALE

UNAUTHORIZED ALTERATION OR ADDITION TO A PLAN BEARING A LICENSED PROFESSIONAL ENGINEER'S SEAL IS A VIOLATION OF SECTION 7209, SUB-DIVISION 2 OF THE N.Y. STATE EDUCATION LAW.

FELLENZER ENGINEERING LLP
www.fellp.com
22 Mulberry St., Suite 2A, Middletown, NY 10940
t 845-343-1481 fx 845-343-4986
181 Church St., Suite 100, Poughkeepsie, NY 12601
t 845-454-9704 fx 855-320-8735

PROJECT TITLE:
OCCC PHYSICAL EDUCATION CENTER
HVAC ROOFTOP UNIT REPLACEMENT
115 SOUTH STREET, MIDDLETOWN, NY 10940

DRAWING TITLE: MECH./ELEC.: DETAILS

DESIGNED BY:	DRAWN BY:	APPROVED BY PM:	APPROVED BY PIC:	DRAWING #:
BG	ZR	EDF	EDF	HE-701
DATE: 10/14/2022	SCALE: AS SHOWN		FE PROJECT #: 22-059	PAGE 8 OF 10

File Name: F:\2022\22-059 RTU Replacement RTU's 7-12 for FE Building - SUNY Orange\HE-701.dwg (Layout: HE-701)
Date: Thu, Oct 13, 2022 - 10:11 AM (Name: ZR)

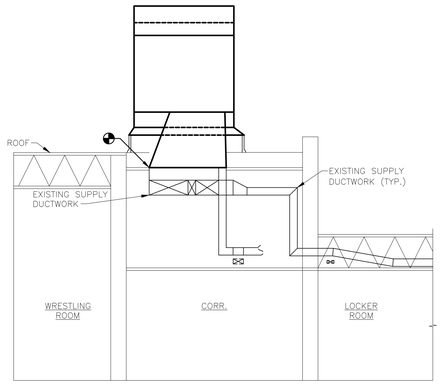

1 ROOFTOP UNIT RT-7 - INSTALLATION DETAIL - END VIEW
1/4"=1'-0"

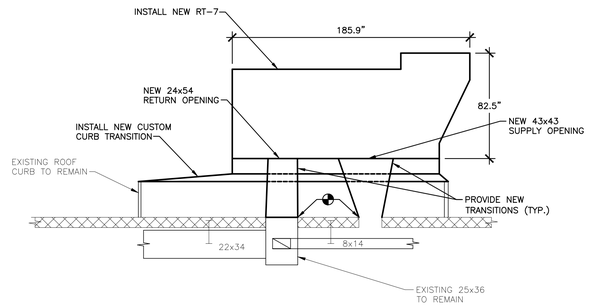

2 ROOFTOP UNIT RT-7 - INSTALLATION DETAIL - SIDE VIEW
1/4"=1'-0"

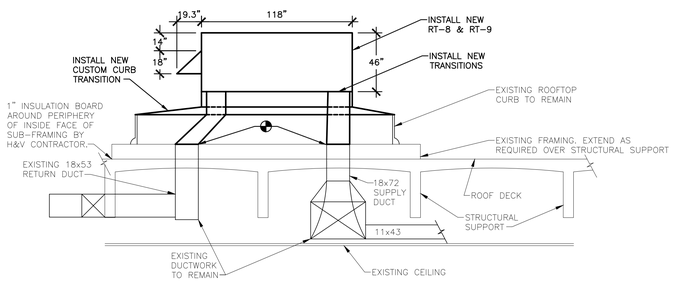

3 ROOFTOP UNIT RT-8 & RT-9 - INSTALLATION DETAIL
1/4"=1'-0"

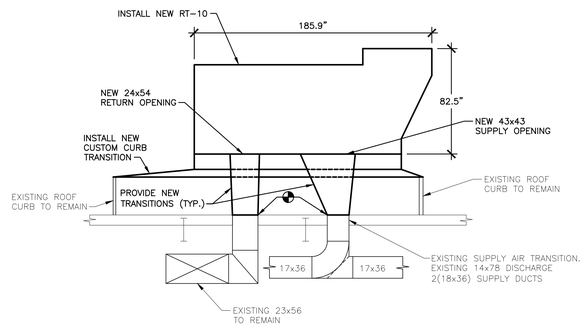

4 ROOFTOP UNIT RT-10 - INSTALLATION DETAIL
1/4"=1'-0"

ROOFTOP UNIT SCHEDULE

UNIT NUMBER	MANUFACTURER (OR APPROVED EQUAL)	MODEL NUMBER	MAX. WEIGHT (LBS)	AREA SERVED	TYPE	CFM (S.A.)	E.S.P. (S.A.)	COOLING COIL DATA				HEATING COIL DATA (40% E.G. SOL.)				ACCESSORIES
								TOTAL (MBH)	SENS. (MBH)	TYPE	IEER	FLUID ENT/LVG		MBH	GPM	FILTER
RT-7	DAIKIN	DPS020A	3786	LOCKER ROOMS	HEATING & COOLING	9,000	0.5	257.742	218.77	4 ROW	20.4	180°F	140.8 °F	713.1	40	2" DISP.
RT-8	DAIKIN	OAH017GHGC	2884.9	POOL	HEATING ONLY	10,000	0.75	N/A	N/A	N/A	N/A	180°F	118.8 °F	1108.9	40	2" DISP.
RT-9	DAIKIN	OAH017GHGC	2884.9	POOL	HEATING ONLY	10,000	0.75	N/A	N/A	N/A	N/A	180°F	118.8 °F	1108.9	40	2" DISP.
RT-10	DAIKIN	DPS020A	3786	HANDBALL COURTS	HEATING & COOLING	9,000	0.5	257.742	218.77	4 ROW	20.4	180°F	140.8 °F	713.1	40	2" DISP.
RT-11	DAIKIN	DPS010A	2218	CLASSROOMS & NURSE	HEATING & COOLING	3,200	0.5	120	86.7	2 ROW	19.3	180°F	142°F	187	11	2" DISP.
RT-12	DAIKIN	DPS010A	2218	ADMIN. AREA	HEATING & COOLING	3,200	0.5	120	86.7	2 ROW	19.3	180°F	142°F	187	11	2" DISP.

ROOFTOP UNIT SCHEDULE (CONT'D)

UNIT NUMBER	ELECTRICAL CONNECTION						SUPPLY FAN		RETURN FAN		COND. FAN MOTORS	COMPRESSOR MTRS	REMARKS
	VOLTS/HZ/PHASE	EXISTING FUSE DISCONNECT	FLA (AMPS)	MCA (AMPS)	MROPD (AMPS)		RA/LRA	HP	RA/LRA	HP	RATED AMPS	RATED AMPS	
RT-7	460/60/3	70 A	57.2	64.7	90	-	N/A	10	N/A	(2) 4	(2) 2.6, 5.2 TOTAL	30.1	SEE NOTES 1, 2, 3, 4, 5, 7, 9 & 10
RT-8	460/60/3	20 A	9.8	12.25	20	-	9.8/70.56	7.5	N/A	N/A	N/A	N/A	SEE NOTES 1, 2, 6, 8 & 9
RT-9	460/60/3	20 A	9.8	12.25	20	-	9.8/70.56	7.5	N/A	N/A	N/A	N/A	SEE NOTES 1, 2, 6, 8 & 9
RT-10	460/60/3	70 A	57.2	64.7	90	-	N/A	10	N/A	(2) 4	(2) 2.6, 5.2 TOTAL	30.1	SEE NOTES 1, 2, 3, 4, 5, 7, 9 & 10
RT-11	460/60/3	30 A	20.5	22.5	30	-	4	4	2.3	2.3	(2) 0.9, 1.8 TOTAL	4.5/7.9	SEE NOTES 1, 2, 3, 4, 5, 7, 9 & 10
RT-12	460/60/3	30 A	20.5	22.5	30	-	4	4	2.3	2.3	(2) 0.9, 1.8 TOTAL	4.5/7.9	SEE NOTES 1, 2, 3, 4, 5, 7, 9 & 10

NOTES:

1. EXISTING CONDUIT AND CONDUCTORS MAY BE USED IF OF ADEQUATE SIZE AND IN GOOD CONDITION.
2. UNIT TO BE CONNECTED TO THE EXISTING BMS. ALL CONNECTIONS TO EXISTING BY DAY AUTOMATION.
3. PROVIDE UNIT WITH BACNET IP CARD.
4. PROVIDE UNIT WITH THE FOLLOWING FACTORY INSTALLED SENSORS: LEAVING COIL/ENTERING FAN TEMPERATURE SENSOR, DUCT HIGH LIMIT SWITCH, BACNET/IP CARD, RETURN AIR TEMPERATURE SENSOR, DISCHARGE AIR TEMPERATURE SENSOR, OUTSIDE AIR TEMPERATUR SENSOR, RETURN AIR ENTHALPY SENSOR, OUTSIDE AIR ENTHALPY SENSOR, DIRTY FILTER ON/OFF SWITCH, SUPPLY FAN AIR PROVING VIA MODBUS, BUILDING STATIC PRESSURE SENSOR.
5. PROVIDE UNIT WITH MOTORIZED DAMPERS AND VFD'S. CONTROL WIRING TO BE INSTALLED BY DAY AUTOMATION.
6. PROVIDE UNIT WITH MOTORIZED DAMPERS. CONTROL WIRING TO BE INSTALLED BY DAY AUTOMATION.
7. PROVIDE UNITT WITH FACTORY INSTALLED NON-FUSED DISCONNECT SWITCH.
8. PROVIDE UNIT WITH FACTORY INSTALLED VFD AND NON-FUSED DISCONNECT.
9. PROVIDED UNIT WITH POWERED 115V GFI OUTLET.
10. PROVIDE UNIT WITH ENTHALPY ECONOMIZER.

LOAD	CONDUCTORS	C.B.			C.B.	CONDUCTORS	LOAD
RTU-7	(4)#2 WITH GND.,1½" C	90	1	2	90	(4)#2 WITH GND.,1½" C	RTU-10
			3	4			
			5	6			
SPARE	---	20	7	8	20	---	SPARE
			9	10			
			11	12			
			13	14	-	---	SPACE
			15	16			
			17	18			
SPACE	---	-	19	20			
			21	22			
			23	24			
			25	26			
			27	28			
			29	30			

POWER PANEL - (PP-HVAC)

TYPE: SQUARE D
RATING: 277/480V,3ø 4W
MAINS: MLO
BRACING: 22 KAIC
ENCLOSURE: NEMA 1 SURFACE MOUNT
POLES: 30

NOTES:

1. ALL WIRE SHALL BE DUAL RATED THHN/THWN COPPER CONDUCTOR UNLESS OTHERWISE NOTED.
2. ALL CIRCUITS SHALL HAVE FULL SIZE INSULATED GREEN GROUND UNLESS OTHERWISE NOTED.

REV #	DATE	REMARKS:	ISSUE #	DATE	ISSUED FOR:
			2	10/14/22	FOR BID
			1	10/7/22	100% REVIEW

⅛" ¼" ½" 0 1" 2"
REFERENCE SCALE

UNAUTHORIZED ALTERATION OR ADDITION TO A PLAN BEARING A LICENSED PROFESSIONAL ENGINEER'S SEAL IS A VIOLATION OF SECTION 7209, SUB-DIVISION 2 OF THE N.Y. STATE EDUCATION LAW.

FELLENZER ENGINEERING LLP
www.fellp.com
22 Mulberry St., Suite 2A,
Middletown, NY 10940
t 845-343-1481 fx 845-343-4986
181 Church St., Suite 100,
Poughkeepsie, NY 12601
t 845-454-9704 fx 855-320-8735

PROJECT TITLE:
OCCC PHYSICAL EDUCATION CENTER
HVAC ROOFTOP UNIT REPLACEMENT
115 SOUTH STREET, MIDDLETOWN, NY 10940

DRAWING TITLE:
MECH./ELEC.: DETAILS & SCHEDULES

DESIGNED BY:	DRAWN BY:	APPROVED BY PM:	APPROVED BY PIC:	DRAWING #:
BG	AH	EDF	EDF	HE-702
DATE: 10/14/2022	SCALE: AS SHOWN	FE PROJECT #: 22-059		PAGE 9 of 10

File Name: F:\2022\22-059 RTU Replacement RTU's 7-12 for PE Building - SUNY Orange\HE-702.dwg (Layout: HE-702)
Date: Thu, Oct 13, 2022 - 10:11 AM (Name: ef)