STORM KING ART CENTER
CONSERVATION, FABRICATION, & MAINTENANCE (C.F.M.) BUILDING

06/13/22
BID SET

Owner
Storm King Art Center
1 Museum Road
New Windsor, NY 12553
+1 (845) 534-3115

Design Architect
heneghan peng architects
14-16 Lord Edward Street
Dublin, D02 YC63
+353 1 633 9000

Executive Architect
WXY Architecture + Urban Design
224 Centre Street, 5th Floor
New York, NY 10013
+1 (212) 219-1953

Landscape Architect
Gustafson Porter + Bowman
1 Cobham Mews
London, MW1 9SB
+44 020 7284 8950

Reed Hilderbrand LLC
33 Whitney Avenue, 3rd Floor
New Haven, CT 06510
+1 (617) 923-2422

Structural & Lighting
ARUP
77 Water Street
New York, NY 10005
+1 (212) 896-3000

MEPF & IT
BuroHappold
100 Broadway #23
New York, NY 10005
+1 (212) 616-0228

Civil
VHB
100 Great Oaks Blvd., Suite 118
Albany, NY 12203
+1 (518) 389-3606

AV & Acoustics
LSTN Consultants
76 Beaver Street, 2nd Floor
New York, NY 10005
+1 (347) 788-0810

Facade
Front Inc.
100 E. Broadway Street, #501
New York, NY 10002
+1 (212) 242-2220

Key Plan

Description	Date
Filing Set	06/17/22

Project

Storm King Art Center

C.F.M. Building

Seal

NOT FOR CONSTRUCTION

Drawing Title

Cover Sheet

Date	06/17/22
Scale	Not to Scale
Drawing Number	G-C-000
Sheet Size	ARCH D

SHEET NUMBER	SHEET NAME	FILING SET
G-C-000	Cover Sheet	•
G-C-001	Drawing List	•
G-C-002	Abbreviations, Symbols, & General Notes	•
G-C-003	Accessibility Summary	•
G-C-004	Code Summary	•
G-C-005	Occupancy Load & Exit Capacity	•
G-C-006	Fire Ratings & Egress Distance	•
G-C-007	Fire Extinguisher Locations	•
EN-C-001	Building Envelope Takeoffs	•
EN-C-002	Energy Code & COMcheck	•
EN-C-003	Energy Code & COMcheck	•
EN-C-004	Energy Code & COMcheck	•
EN-C-005	Energy Code & COMcheck	•
A-C-011	Site Plan - Property	•
A-C-012	Site Plan - Building	•
A-C-091	Site Plan - Building - Setting Out	•
A-C-092	Setting Out - Plan	•
A-C-093	Setting Out - Vertical Grid & Details	•
A-C-101	Floor Plan - Ground Level	•
A-C-102	Floor Plan - Second Level	•
A-C-103	Floor Plan - Roof Level	•
A-C-111	RCP - Ground Level	•
A-C-112	RCP - Second Level	•
A-C-121	Enlarged Plan - Ground Level - A	•
A-C-122	Enlarged Plan - Ground Level - B	•
A-C-123	Enlarged Plan - Ground Level - C	•
A-C-124	Enlarged Plan - Second Level - A	•
A-C-125	Enlarged Plan - Second Level - B	•
A-C-126	Enlarged Plan - Second Level - C	•
A-C-127	Enlarged Plan - Roof Level - A	•
A-C-128	Enlarged Plan - Roof Level - B	•
A-C-129	Enlarged Plan - Roof Level - C	•
A-C-131	Enlarged RCP - Ground Level - A	•
A-C-132	Enlarged RCP - Ground Level - B	•
A-C-133	Enlarged RCP - Ground Level - C	•
A-C-134	Enlarged RCP - Second Level - A	•
A-C-135	Enlarged RCP - Second Level - B	•
A-C-136	Enlarged RCP - Second Level - C	•
A-C-141	Enlarged Finish & Device Plan - Ground Level - A	•
A-C-142	Enlarged Finish & Device Plan - Ground Level - B	•
A-C-143	Enlarged Finish & Device Plan - Ground Level - C	•
A-C-144	Enlarged Finish & Device Plan - Second Level - A	•
A-C-145	Enlarged Finish & Device Plan - Second Level - B	•
A-C-201	Building Elevations - Overall	•
A-C-202	Building Elevations - Overall	•
A-C-301	Building Sections	•
A-C-302	Building Sections	•
A-C-303	Building Sections	•
A-C-401	Wall Sections	•
A-C-402	Wall Sections	•
A-C-403	Wall Sections	•
A-C-404	Wall Sections	•
A-C-405	Wall Sections	•
A-C-411	Facade Details	•
A-C-412	Facade Details	•
A-C-413	Facade Details	•
A-C-414	Facade Details	•
A-C-421	Louver Details	•
A-C-422	Louver Details	•
A-C-423	Window Details	•

SHEET NUMBER	SHEET NAME	FILING SET
A-C-424	Window Details	•
A-C-425	Skylight Details	•
A-C-431	Door Details - Exterior	•
A-C-432	Door Details - Exterior	•
A-C-433	Door Details - Exterior	•
A-C-434	Door Details - Exterior	•
A-C-435	Door Details - Exterior	•
A-C-436	Door Details - Exterior	•
A-C-441	Roof Details	•
A-C-442	Roof Details	•
A-C-443	Roof Details	•
A-C-491	Fire Protection Storage Tank - Plans & Sections	•
A-C-492	Fire Protection Storage Tank - Elevations	•
A-C-493	Fire Protection Storage Tank - Details	•
A-C-501	Stair 01 - Plans & Sections	•
A-C-502	Stair 02 - Plans & Sections	•
A-C-503	Stair Details	•
A-C-505	Access Ladder Details	•
A-C-506	Access Ladder Details	•
A-C-511	LU/LA Hoistway - Plans & Section	•
A-C-512	LU/LA Hoistway - Details	•
A-C-601	Room Plan - 104	•
A-C-602	Room RCP - 104	•
A-C-603	Room Elevations - 104	•
A-C-604	Room Elevations - 104	•
A-C-605	Room Plan, RCP & Elevations - 105	•
A-C-606	Room Plan, RCP & Elevations - 106	•
A-C-607	Room Plan, RCP & Elevations - 107	•
A-C-608	Room Plan & RCP -108	•
A-C-609	Room Elevations - 108	•
A-C-610	Room Plan, RCP & Elevations - 112	•
A-C-611	Room Plan, RCP & Elevations - 113	•
A-C-612	Room Plan - 115	•
A-C-613	Room Plan - 115	•
A-C-614	Room RCP - 115	•
A-C-615	Room RCP - 115	•
A-C-616	Room Elevations - 115	•
A-C-617	Room Elevations - 115	•
A-C-618	Room Plan & RCP - 201	•
A-C-619	Room Elevations - 201	•
A-C-620	Room Plan & RCP - 202/211	•
A-C-621	Room Elevations - 202	•
A-C-622	Room Plan, RCP & Elevations - 204	•
A-C-623	Room Plan & RCP - 205	•
A-C-624	Room Elevations - 205	•
A-C-625	Room Plan - 207/208/209	•
A-C-626	Room Plan- 207/208/209	•
A-C-627	Room RCP - 207/208/209	•
A-C-628	Room RCP - 207/208/209	•
A-C-629	Room Elevations - 207	•
A-C-630	Room Elevations - 207/209	•
A-C-631	Room Elevations - 208	•
A-C-641	Interior Sections	•
A-C-642	Interior Section Details	•
A-C-643	Interior Plan Details	•
A-C-645	Door Details	•
A-C-646	Door Details	•
A-C-651	Millwork Details - 112/113	•
A-C-652	Millwork Details - 205	•
A-C-653	Millwork Details - 208/105/106	•
A-C-654	Millwork Details - 209	•
A-C-655	Millwork Details - 209	•

SHEET NUMBER	SHEET NAME	FILING SET
A-C-661	Interior Glazing Systems	•
A-C-662	Interior Glazing Systems	•
A-C-663	Interior Glazing Details	•
A-C-664	Interior Louver Details	•
A-C-691	Partition Details	•
A-C-692	Device Details	•
A-C-701	Room Finish Schedule	•
A-C-702	Window & Door Schedule	•
A-C-703	Door Elevations	•
A-C-704	Fixture & Appliance Schedules	•
A-C-711	Exterior Wall Types	•
A-C-721	Interior Wall Types	•
A-C-722	Interior Wall Types	•
A-C-731	Floor & Roof Types	•
A-C-791	Keynote Master Schedule	•
S-C-001	Structural Symbols and Abbreviations	•
S-C-002	Structural General Notes, Sheet 1	•
S-C-003	Structural General Notes, Sheet 2	•
S-C-011	Structural Loading Plans	•
S-C-101	Foundation Plan, Ground Level	•
S-C-301	Framing Plan, Second Level	•
S-C-302	Framing Plan, Roof Level	•
S-C-501	Frame Elevations	•
S-C-701	Structural Typ Concrete Details, Sheet 1	•
S-C-702	Structural Typ Concrete Details, Sheet 2	•
S-C-703	Structural Typ Concrete Details, Sheet 3	•
S-C-711	Structural Typ Steel Details, Sheet 1	•
S-C-712	Structural Typ Steel Details, Sheet 2	•
S-C-713	Structural Typ Metal Deck Details	•
S-C-714	Structural Typ Braced Frame Details	•
S-C-801	Foundation Details	•
S-C-802	Storage Tank - Plans, Sections and Elevations	•
S-C-811	Framing Details	•
M-C-001	Abbreviations, Symbols & Legends	•
M-C-002	General Notes	•
M-C-101	Duct Plan - Ground Level	•
M-C-102	Duct Plan - Second Level	•
M-C-103	Duct Plan - Roof Level	•
M-C-201	Pipe Plan - Ground Level	•
M-C-202	Pipe Plan - Second Level	•
M-C-203	Pipe Plan - Roof Level	•
M-C-501	Mechanical Details	•
M-C-502	Mechanical Details	•
M-C-503	Mechanical Details	•
M-C-504	Mechanical Details	•
M-C-505	Mechanical Details	•
M-C-506	Mechanical Details	•
M-C-507	Mechanical Details	•
M-C-508	Mechanical Details	•
M-C-601	Mechanical Schedules	•
M-C-602	Mechanical Schedules	•
M-C-701	Duct Riser	•
M-C-703	Refrigerant Riser	•
M-C-900	Controls Site Plan	•
M-C-901	Control Details	•
M-C-902	Control Details	•
M-C-903	Control Details	•
P-C-001	Abbreviations, Symbols & Legends	•
P-C-002	General Notes	•

SHEET NUMBER	SHEET NAME	FILING SET
P-C-100	Piping Plan - Underslab	•
P-C-101	Piping Plan - Ground Level	•
P-C-102	Piping Plan - Second Level	•
P-C-103	Piping Plan - Roof Level	•
P-C-501	Plumbing Details	•
P-C-502	Plumbing Details	•
P-C-503	Plumbing Details	•
P-C-504	Plumbing Details	•
P-C-601	Plumbing Schedules	•
P-C-701	Domestic Water Riser	•
P-C-702	Drain & Vent Riser	•
P-C-703	Storm Drain Riser	•
E-C-001	Abbreviations, Symbols & Legends	•
E-C-002	General Notes	•
E-C-003	General Notes	•
E-C-101	Power Plan - Ground Level	•
E-C-102	Power Plan - Second Level	•
E-C-103	Power Plan - Roof Level	•
E-C-201	Lighting Plan - Ground Level	•
E-C-202	Lighting Plan - Second Level	•
E-C-401	Enlarged Plans	•
E-C-501	Electrical Details	•
E-C-502	Electrical Details	•
E-C-503	Electrical Details	•
E-C-504	Electrical Details	•
E-C-601	Electrical Schedules	•
E-C-602	Electrical Schedules	•
E-C-603	Electrical Schedules	•
E-C-604	Electrical Schedules	•
E-C-605	Electrical Schedules	•
E-C-701	Electrical Riser	•
E-C-900	Site Plan - Property - Electrical Power	•
E-C-911	Site Plan - Building - Lighting	•
FA-C-001	Abbreviations, Symbols, and General Notes	•
FA-C-101	Fire Alarm - Ground Level	•
FA-C-102	Fire Alarm - Second Level	•
FA-C-701	Fire Alarm Riser	•
FP-C-001	Abbreviations, Symbols & Legends	•
FP-C-002	General Notes	•
FP-C-101	Fire Protection - Ground Level	•
FP-C-102	Fire Protection - Second Level	•
FP-C-501	Fire Protection Details	•
FP-C-502	Fire Protection Details	•
FP-C-601	Fire Protection Schedules	•
FP-C-701	Fire Protection Riser	•

AV, IT, SC, AND IH SERIES ALSO INCLUDED FOR BID SET.

Owner
Storm King Art Center
1 Museum Road
New Windsor, NY 12553
+1 (845) 534-3115

Design Architect
heneghan peng architects
14-16 Lord Edward Street
Dublin, D02 YC63
+353 1 633 9000

Executive Architect
WXY Architecture + Urban Design
224 Centre Street, 5th Floor
New York, NY 10013
+1 (212) 219-1953

Landscape Architect
Gustafson Porter + Bowman
1 Cobham Mews
London, MW1 9SB
+44 020 7284 8950

Reed Hilderbrand LLC
33 Whitney Avenue, 3rd Floor
New Haven, CT 06510
+1 (617) 923-2422

Structural & Lighting
ARUP
77 Water Street
New York, NY 10005
+1 (212) 896-3000

MEPF & IT
BuroHappold
100 Broadway #23
New York, NY 10005
+1 (212) 616-0228

Civil
VHB
100 Great Oaks Blvd., Suite 118
Albany, NY 12203
+1 (518) 389-3606

AV & Acoustics
LSTN Consultants
76 Beaver Street, 2nd Floor
New York, NY 10005
+1 (347) 788-0810

Facade
Front Inc.
100 E. Broadway Street, #501
New York, NY 10002
+1 (212) 242-2220

Key Plan

Description	Date
Filing Set	06/17/22

Project

Storm King Art Center

C.F.M. Building

Seal

NOT FOR CONSTRUCTION

Drawing Title

Drawing List

Date	06/17/22
Scale	Not to Scale
Drawing Number	G-C-001
Sheet Size	ARCH D

General Notes

1. No work shall commence without first obtaining any required permits or approvals from applicable regulating agencies of the State of New York and Town of Cornwall.
2. All work shall comply with the requirements of the State Uniform Fire Prevention and Building Code of the Codes Rules and Regulations of the State of New York and any other applicable state regulations.
3. All work shall comply with the Zoning Law of the Town of Cornwall and any other applicable local regulations.
4. All work relating to waste water disposal shall be approved by the Town of Cornwall and shall comply with all applicable regulations.
5. All work shall be performed by contractors and subcontractors licensed to work in the State of New York including, but not limited to, the following trades: general contracting, surveying, site work, concrete erection, steel fabrication and erection, general electrical, general plumbing, and mechanical equipment installation.
6. All contractors and subcontractors shall carry general liability and worker's compensation insurance as required by the Town of Cornwall, the State of New York and other regulating agencies. Contractors and subcontractors shall provide certificates of insurance.
7. The Contractor shall file all applications, pay for all necessary permits and secure certificates of occupancy for the Work.
8. All necessary provisions for installation of primary electrical service shall be made in conjunction with and to the required specifications of the Local Gas and Electric Companies.
9. All materials for construction located on site shall be segregated and neatly stored out of the path of construction operations and shall be protected from damage by all hazards including weather, ground moisture and construction activities until use.
10. Unless otherwise indicated, all material furnished and incorporated into the Work shall be new, unused and of quality standard to the industry for first class work of similar nature and character. Materials shall be installed in accordance with the manufacturers' recommendations and best standard of the trades involved.
11. The Contractor shall be responsible for the protection of all existing buildings and other installations that are to remain intact while performing the Work.
12. Where adjacent structures are occupied or to be preserved, the Contractor shall take every precaution to safeguard the structural integrity of the walls, roofing, entrance and exit of the adjacent building and to provide, if required, temporary waterproofing and parging to protect it. The Contractor shall also take every precaution to ensure that damage, noise, dust and interruptions to adjacent structures will be kept to a minimum.
13. The Contractor shall visit the site and be knowledgeable of conditions thereon, comply with Specification Sections in Division 1 and 2 for specific requirements for survey of existing site conditions and conduct of excavation and ensuing construction activities prior to proceeding with the Work.
14. The Contractor shall verify accuracy of survey information and shall perform additional site surveys to ensure accurate placement of buildings on the site. See survey for geo-location information.
15. All dimensions shall have preference over scale. Do not scale these drawings.
16. All dimensions shall be verified in the field prior to proceeding with the Work. The Architect shall be notified of any discrepancies.
17. Plan dimensions are shown to the centerline of columns and the finished face of walls unless noted otherwise. Elevation and section dimensions are shown relative to finish floor levels which are referenced to building elevation above sea level. See survey for elevation information.
18. Where discrepancies exist between drawings of various disciplines, notify the Architect of these discrepancies prior to construction. Consult the Architect before proceeding with work in any area requiring clarification. In case of conflict in documents, specifications or general requirements, the most stringent is to be required.
19. Details shown are intended to describe scope and profile. Where details have not been provided, the Work is intended to be similar in character to those areas detailed. Where specific dimensions, details or design intent cannot be determined, consult the Architect prior to proceeding with the Work.
20. The Work in these drawings in intended to show scope of penetrations, slab and wall openings required to accommodate mechanical, electrical and plumbing trades. However, the Contractor shall coordinate all penetrations, slab and wall openings required by these trades before proceeding with the Work.
21. All pipes, bus ducts, risers and other elements that penetrate floor slabs shall be installed in a manner that will preserve the fire resistive and structural integrity of the building.
22. Not all Specifications Divisions are referenced on the sheet legend notes. Multiple divisions may apply to each note. Reference the specific specification for related sections.
23. Each legend references that particular sheet it is on and may not correspond to other sheets.

Symbol Legend

- A-X-XXX X — Building Elevation
- X / X A-X-XXX X / X — Interior Elevation
- X A-X-XXX — Building Section
- X A-X-XXX — Wall Section
- X A-X-XXX — Detail Callout
- N — North Arrow
- XXX ROOM NAME XXX SF — Room Tag
- 0' - 0" Level — Elevation Marker
- GL — Grid Line
- X — Revision Tag
- ALIGN — Align
- 00-00-00.XX — Keynote
  - Element Identifier
  - Specification Number
- XXXX 8' - 0" — Finish Ceiling Type/Height
- XXXX — Lighting Fixture Tag
- 101 — Door Number
- W00 — Opening Tag
  - Window Type (W)
  - Louver Type (L)
  - Grille Type (G)
  - Diffuser Type (DF)
  - Exterior Storefront (EST)
  - Interior Storefront (IST)
- X00 — Assembly Tag
  - Exterior Wall Type (E)
  - Interior Wall Type (P)
  - Roof Type (R)
  - Floor Type (F)
- XX00 — Device/Equipment/Fixture Tag
  - Electrical Device (ED)
  - Security Devices (SD)
  - Kitchen Equipment (KE)
- X000 — Millwork/Casework Tag
- Construction Above
- ℄ — Center Line
- Match Line

Material Indicators

- Earth
- Rock Fill
- Sand, Mortar, Plaster
- Concrete
- Stone
- Brick, Masonry
- Metal
- Wood
- Wood (Continuous)
- Wood (Blocking)
- Plywood
- Glass
- Tile (Dimensional)
- Gypsum Board
- Insulation (Batt, Blanket)
- Insulation (Rigid)

Abbreviations

ADJ	Adjacent or Adjustable
AFF	Above Finished Floor
ALUM	Aluminum
AS REQ'D	As Required
BAT	Batten
CAB	Cabinet
CLG	Ceiling
COL	Column
CONST	Construction
DIAM	Diameter
ELEC	Electric(al)
EQ	Equal
EX	Existing
FF	Finished Floor
FH	Full Height
FM	Field Measure
FO	"Face of" or "Finish Opening"
GWB	Gypsum Wall Board
HC	Hollow Core
HDF	High-Density Fiberboard
HDWD	Hardwood
HM	Hollow Metal
LAM	Laminated
MDF	Medium-Density Fiberboard
MTL	Metal
NIC	Not in Contract
NTS	Not to Scale
OC	On Center
OPP HAND	Opposite Hand
PH	Partial Height
PL GL	Plate Glass
PL LAM	Plastic Laminate
PLY	Plywood
PNL	Panel
RO	Rough Opening
RVL	Reveal
SDL	Saddle
SIM	Similar
SS	Stainless Steel
T&B	Top & Bottom
TO	Top of
TOFF	Top of Finished Floor
TOH	Top of Head
TOS	Top of Sill
TYP	Typical
UC	Undercut
UON	Unless Otherwise Noted
VGB	Vertical Grab Bar
VIF	Verify in Field
W/	With
W/O	Without
WP	Waterproof

Owner
Storm King Art Center
1 Museum Road
New Windsor, NY 12553
+1 (845) 534-3115

Design Architect
heneghan peng architects
14-16 Lord Edward Street
Dublin, D02 YC63
+353 1 633 9000

Executive Architect
WXY Architecture + Urban Design
224 Centre Street, 5th Floor
New York, NY 10013
+1 (212) 219-1953

Landscape Architect
Gustafson Porter + Bowman
1 Cobham Mews
London, MW1 9SB
+44 020 7284 8950

Reed Hilderbrand LLC
33 Whitney Avenue, 3rd Floor
New Haven, CT 06510
+1 (617) 923-2422

Structural & Lighting
ARUP
77 Water Street
New York, NY 10005
+1 (212) 896-3000

MEPF & IT
BuroHappold
100 Broadway #23
New York, NY 10005
+1 (212) 616-0228

Civil
VHB
100 Great Oaks Blvd., Suite 118
Albany, NY 12203
+1 (518) 389-3606

AV & Acoustics
LSTN Consultants
76 Beaver Street, 2nd Floor
New York, NY 10005
+1 (347) 788-0810

Facade
Front Inc.
100 E. Broadway Street, #501
New York, NY 10002
+1 (212) 242-2220

Key Plan

Description	Date
Filing Set	06/17/22

Project

Storm King Art Center

C.F.M. Building

Seal

NOT FOR CONSTRUCTION

Drawing Title

Abbreviations, Symbols, & General Notes

Date	06/17/22
Scale	1" = 1'-0"
Drawing Number	G-C-002
Sheet Size	ARCH D

Door Clearances

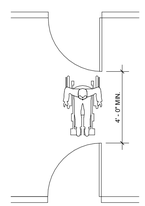

TWO HINGED DOORS IN SERIES

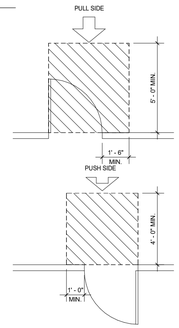

MANEUVERING CLEARANCE: FRONT APPROACHES - SWINGING DOORS

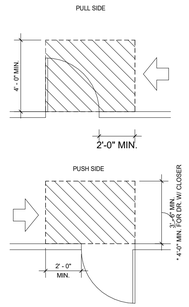

MANEUVERING CLEARANCE: LATCH SIDE APPROACHES - SWINGING DOORS

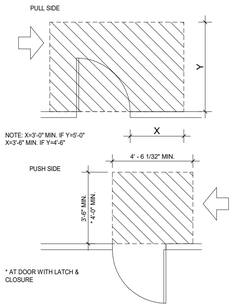

MANEUVERING CLEARANCE: HINGE SIDE APPROACHES - SWINGING DOORS

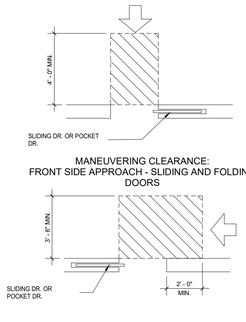

MANEUVERING CLEARANCE: FRONT SIDE APPROACH - SLIDING AND FOLDING DOORS

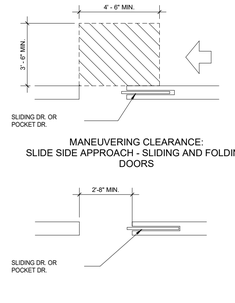

MANEUVERING CLEARANCE: SLIDE SIDE APPROACH - SLIDING AND FOLDING DOORS

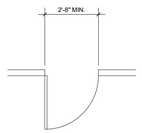

CLEAR DOORWAY WIDTH

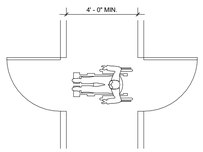

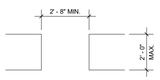

MAXIMUM DOORWAY DEPTH

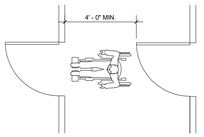

TWO HINGED DOORS IN SERIES

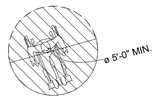

MIN. CLEARANCE FOR A 360 DEG. WHEELCHAIR TURN

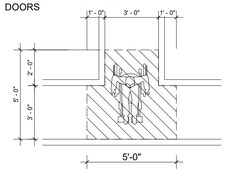

MIN. CLEARANCE FOR A 180 DEG. WHEELCHAIR TURN

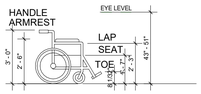

WHEELCHAIR PLANNING GUIDELINES

Restrooms

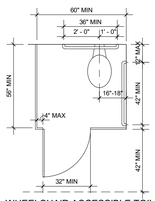

WHEELCHAIR ACCESSIBLE TOILET COMPARTMENT

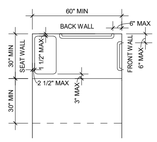

ROLL IN SHOWER CLEARANCES

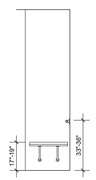

SEAT WALL ELEVATION

BACK WALL ELEVATION

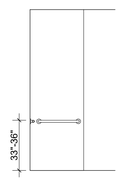

FRONT WALL ELEVATION

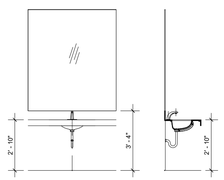

LAVATORIES AND MIRRORS HEIGHTS

FREESTANDING FOUNTAIN

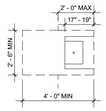

FOUNTAIN CLEAR FLOOR SPACE

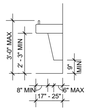

SPOUT HEIGHT AND KNEE CLEARANCES

CLEAR FLOOR SPACE AT LAVATORY

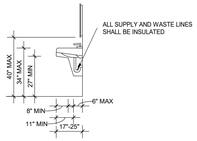

LAVATORY CLEARANCES

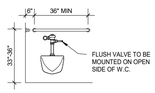

REAR WALL GRAB BAR FOR TOILET ROOM

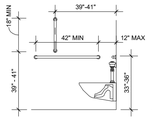

SIDE WALL GRAB BARS FOR TOILET ROOM

TOILET MOUNTING HEIGHT

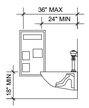

RECESSED TOILET PAPER DISPENSER

GENERAL NOTE: ALL GRAB BAR HEIGHTS TO BE MEASURED TO TOP OF BAR

Elevators

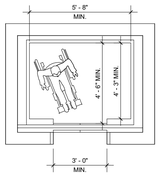

CENTER DOOR OPENING

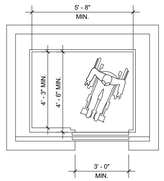

MIN. DIMENSIONS OF ELEVATOR CABS

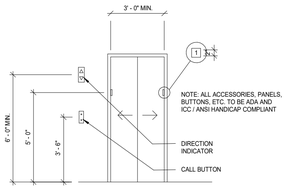

MOUNTING HEIGHT

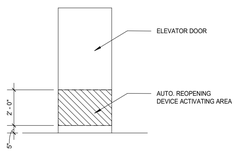

AUTOMATIC REOPENING DEVICE AT ELEVATOR DOOR

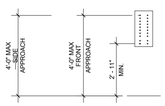

CAB CONTROL HEIGHT

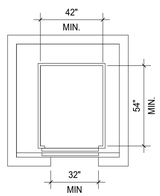

MIN. DIMENSIONS OF LU/LA LIFT

Accessible Reach Ranges

DRINKING FOUNTAINS

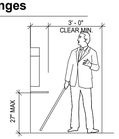

WALKING PARALLEL TO A WALL

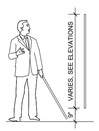

PARTITION MOUNTING

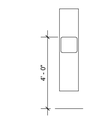

PAPER TOWEL DISPENSER & WASTE RECEPTACLE HEIGHTS

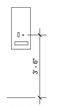

TAMPON DISPENSER

HAND DRYER

PAPER TOWEL DISPENSER

COAT HOOK

SOAP DISPENSER

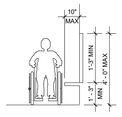

UNOBSTRUCTED SIDE REACH (LOW)

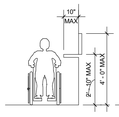

UNOBSTRUCTED SIDE REACH (HIGH)

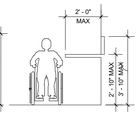

OBSTRUCTED SIDE REACH (HIGH)

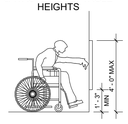

OBSTRUCTED FORWARD REACH (LOW)

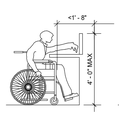

OBSTRUCTED FORWARD REACH (A)

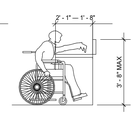

OBSTRUCTED FORWARD REACH (B)

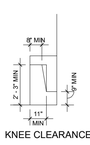

KNEE CLEARANCE

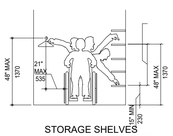

STORAGE SHELVES & CLOSET REACH RANGES

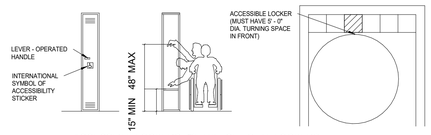

ACCESSIBLE LOCKERS (5% MIN. OF TOTAL LOCKERS TO BE FULLY ACCESSIBLE)

Accessibility Summary

Buildings and facilities shall be designed and constructed to be accessible in accordance with the Federal 2010 ADA Standards for Accessible Design. Refer to the 2010 ADA Standards for Accessible Design using chapter reference for clarifications and exceptions.

204 Protruding Objects
Protruding objects on circulation paths shall comply with 307.

210 Stairways
Interior and exterior stairs that are part of a means of egress shall comply with 504.

211 Drinking Fountains
Where drinking fountains are provided on an exterior site, on a floor, or within a secured area they shall be provided in accordance with 211.

213.3 Plumbing Fixtures and Accessories
Plumbing fixtures and accessories provided in a toilet room or bathing room required to comply with 213.2 shall comply with 213.3

213 Toilet Facilities and Bathing Facilities
Where toilet facilities and bathing facilities are provided, they shall comply with 213.

225 Storage
Storage facilities shall comply with 225

227 Sales and Service
Where provided, check-out aisles, sales counters, service counters, food service lines, queues, and waiting lines shall comply with 227 and 904.

303 Changes in Level
Where changes in level are permitted in floor or ground surfaces, they shall comply with 303.

404 Doors, Doorways, and Gates.
Doors, doorways, and gates that are part of an accessible route shall comply with 404.

404.2.4.4 Floor or Ground Surface.
Floor or ground surface within required maneuvering clearances shall comply with 302.

405 Ramps
Ramps on accessible routes shall comply with 405. Changes in level other than the running slope and cross slope are not permitted on ramp runs

407 Elevators
Elevators shall comply with 407 and with ASME A17.1 (incorporated by reference, see “Referenced Standards” in Chapter 1). They shall be passenger elevators as classified by ASME A17.1. Elevator operation shall be automatic.

502 Parking Spaces
Car and van parking spaces shall comply with 502. Where parking spaces are marked with lines, width measurements of parking spaces and access aisles shall be made from the centerline of the markings

505 Handrails
Handrails provided along walking surfaces complying with 403, required at ramps complying with 405, and required at stairs complying with 504 shall comply with 505.

703.7.2 Symbols
The international symbol of accessibility shall comply with figure 703.7.2.1.

802.1 Wheelchair Spaces
Wheelchair spaces shall comply with 802.1.

Owner
Storm King Art Center
1 Museum Road
New Windsor, NY 12553
+1 (845) 534-3115

Design Architect
heneghan peng architects
14-16 Lord Edward Street
Dublin, D02 YC63
+353 1 633 9000

Executive Architect
WXY Architecture + Urban Design
224 Centre Street, 5th Floor
New York, NY 10013
+1 (212) 219-1953

Landscape Architect
Gustafson Porter + Bowman
1 Cobham Mews
London, MW1 9SB
+44 020 7284 8950

Reed Hilderbrand LLC
33 Whitney Avenue, 3rd Floor
New Haven, CT 06510
+1 (617) 923-2422

Structural & Lighting
ARUP
77 Water Street
New York, NY 10005
+1 (212) 896-3000

MEPF & IT
BuroHappold
100 Broadway #23
New York, NY 10005
+1 (212) 616-0228

Civil
VHB
100 Great Oaks Blvd., Suite 118
Albany, NY 12203
+1 (518) 389-3606

AV & Acoustics
LSTN Consultants
76 Beaver Street, 2nd Floor
New York, NY 10005
+1 (347) 788-0810

Facade
Front Inc.
100 E. Broadway Street, #501
New York, NY 10002
+1 (212) 242-2220

Key Plan

Description	Date
Filing Set	06/17/22

Project

Storm King Art Center

C.F.M. Building

Seal

NOT FOR CONSTRUCTION

Drawing Title

Accessibility Summary

Date	06/17/22
Scale	Not to Scale
Drawing Number	G-C-003
Sheet Size	ARCH D

Applicable Codes & Standards

Building Code (BCNYS)	2020 Building Code of New York State (adopted from IBC 2018 with amendments) Code of the Town of Cornwall, NY Uniform Fire Prevention and Building Code (Uniform Code) Title 19, New York Codes, Rules and Regulations (19 NYCRR)
Energy Conservation Code (ECCNYS)	2020 Energy Conservation Code of New York State (adopted from IECC 2018 with amendments)
Fire Code (FCNYS)	2020 Fire Code of New York State (adopted from IFC 2018 with amendments)
Mechanical Code (MCNYS)	2020 Mechanical Code of New York State (adopted from IMC 2018 with amendments)
Plumbing Code (PCNYS)	2020 Plumbing Code of New York State (adopted from IPC 2018 with amendments)
Accessibility	BCNYS Chapter 11, in accordance with ICC A117.1
Zoning	Zoning Resolution of the Town of Cornwall, NY

Zoning & Land Use

Section, Block, Lot	30-1-1.1, 30-1-1.4, 30-1-1.5, 30-1-4.22, 30-1-11, 30-1-13, 30-1-14, 30-1-4.2, 30-1-62, 30-1-63, 30-1-64, 30-1-8, 30-1-86, 30-1-87, 30-1-88, 34-1-108, 34-1-9.1, 34-1-9.2, 30-1-9, 34-1-6.1
Zoning District Designation	Mountain and Conservation Residence District (MCR)
Zoning Use Group	Use Group C

Bulk Regulations

	Allowable	*Proposed*
Minimum Usable Lot Area	5 acres	539 acres
Required Lot Width	200'	>200'
Minimum Front Yard Depth	70'	80'
Required Minimum Side Yard	70'	150'
Required Total Side Yard	140'	525'
Minimum Required Road Frontage	150'	1,300'
Maximum Building Height	40' -0"	30' - 6"
Maximum Development Coverage	15%	5%
Maximum Building Coverage Percent	4%	0.3%
Floor Area Ratio	0.08	0.0044

Key Plan

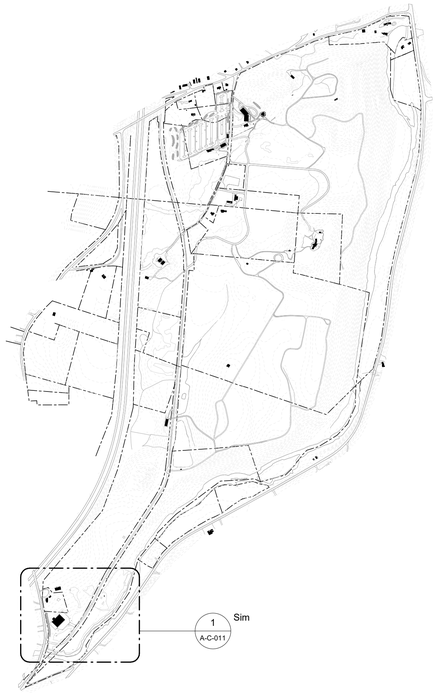

Building Classification & Code Summary

Construction Type	Type II-B
Occupancy Classification	F-1 - Factory/Industrial Moderate Hazard (Woodworking, Metals)
Automatic Sprinkler System	Provided, in accordance with Section 903.3.1.1
Emergency Alarm/Voice Communications	Provided
Climate Zone	5A

Chapter 5: General Building Heights and Areas

	Allowable	*Proposed*	*Reference*
Maximum Building Height (feet)	75' - 0"	30' - 6"	504.3
Maximum Building Height (stories)	3	2	504.4
Maximum Allowable Area (A_a)	116,250 SF	19,375 SF	506.2.3
Allowable Area Factor (A_t)	46,500 SF	-	506.2
Area Factor Increase (I_f)	75%	-	506.3.3

Chapter 6: Types of Construction

	Allowable	*Proposed*	*Reference*
Minimum Fire-Resistance Rating Req.			Table 601
Primary Structural Frame	0 hours	0 hours	
Exterior Bearing Walls	0 hours	0 hours	
Interior Bearing Walls	0 hours	0 hours	
Exterior Non-bearing walls/partitions	0 hours	0 hours	
Interior Non-bearing walls/partitions	0 hours	0 hours	
Floor Construction	0 hours	0 hours	
Roof Construction	0 hours	0 hours	

Chapter 7: Fire and Smoke Protection Features

	Allowable	*Proposed*	*Reference*
Minimum Fire-Resistance Rating Req.			
Fire Walls	3 hours	N/A	706.4
Fire Barriers	varies		707
Shaft Enclosures (<4 stories)	1 hour	1 hour	713.4
Interior Exit Stairways	1 hour	1 hour	1023.2
Fire Partitions	1 hour	N/A	708.3

Chapter 8: Interior Finishes

	Allowable	*Proposed*	*Reference*
Interior Wall and Ceiling Finish Req.			803.1.2
Exit Access Stairway Enclosures	C	C or better	Table 803.13
Rooms and Enclosed Spaces	C	C or better	Table 803.13
Interior Thermal Barrier for MCM panels	Not Required	Not Provided	1406.11.1.2

Chapter 9: Fire Protection and Life Safety Systems

	Allowable	*Proposed*	*Reference*
Automatic Sprinkler System	Required	Provided	903.2.4
Portable Fire Extinguishers (Type A)			906
Min. extinguisher rating	2-A	2-A	Table 906.3(1)
Max. floor area per unit of A	1,500 SF	1,335 SF	Table 906.3(1)
Max. floor area for extinguisher	11,250 SF	2,670 SF	Table 906.3(1)
Max. travel distance to extinguisher	75' - 0"	70' - 8"	Table 906.3(1)
Manual Fire Alarm Boxes	Not Required	Not Provided	907.2.4
Fire Pump Room Enclosure	1 hour	1 hour	913.2.1 ex. 1

Chapter 10: Means of Egress

	Allowable	*Proposed*	*Reference*
Minimum Stairway Width	0.2" per occupant	varies, see drawings	1005.3.1 ex. 1
Minimum Egress Component Width	0.15" per occupant	varies, see drawings	1005.3.2 ex. 1
Maximum Common Path of Travel	100' - 0"	55' - 0"	Table 1006.2.1
Min. Number of Access to Exits per Story	2	2	1006.3.2
Maximum Exit Access Travel Distance	250' - 0"	140' - 0"	1017.2

All code references are to BCNYS, UON.

Owner
Storm King Art Center
1 Museum Road
New Windsor, NY 12553
+1 (845) 534-3115

Design Architect
heneghan peng architects
14-16 Lord Edward Street
Dublin, D02 YC63
+353 1 633 9000

Executive Architect
WXY Architecture + Urban Design
224 Centre Street, 5th Floor
New York, NY 10013
+1 (212) 219-1953

Landscape Architect
Gustafson Porter + Bowman
1 Cobham Mews
London, MW1 9SB
+44 020 7284 8950

Reed Hilderbrand LLC
33 Whitney Avenue, 3rd Floor
New Haven, CT 06510
+1 (617) 923-2422

Structural & Lighting
ARUP
77 Water Street
New York, NY 10005
+1 (212) 896-3000

MEPF & IT
BuroHappold
100 Broadway #23
New York, NY 10005
+1 (212) 616-0228

Civil
VHB
100 Great Oaks Blvd., Suite 118
Albany, NY 12203
+1 (518) 389-3606

AV & Acoustics
LSTN Consultants
76 Beaver Street, 2nd Floor
New York, NY 10005
+1 (347) 788-0810

Facade
Front Inc.
100 E. Broadway Street, #501
New York, NY 10002
+1 (212) 242-2220

Key Plan

N

Description	Date
Filing Set	06/17/22

Project

Storm King Art Center

C.F.M. Building

Seal

NOT FOR CONSTRUCTION

Drawing Title

Code Summary

Date	06/17/22
Scale	Not to Scale
Drawing Number	G-C-004
Sheet Size	ARCH D

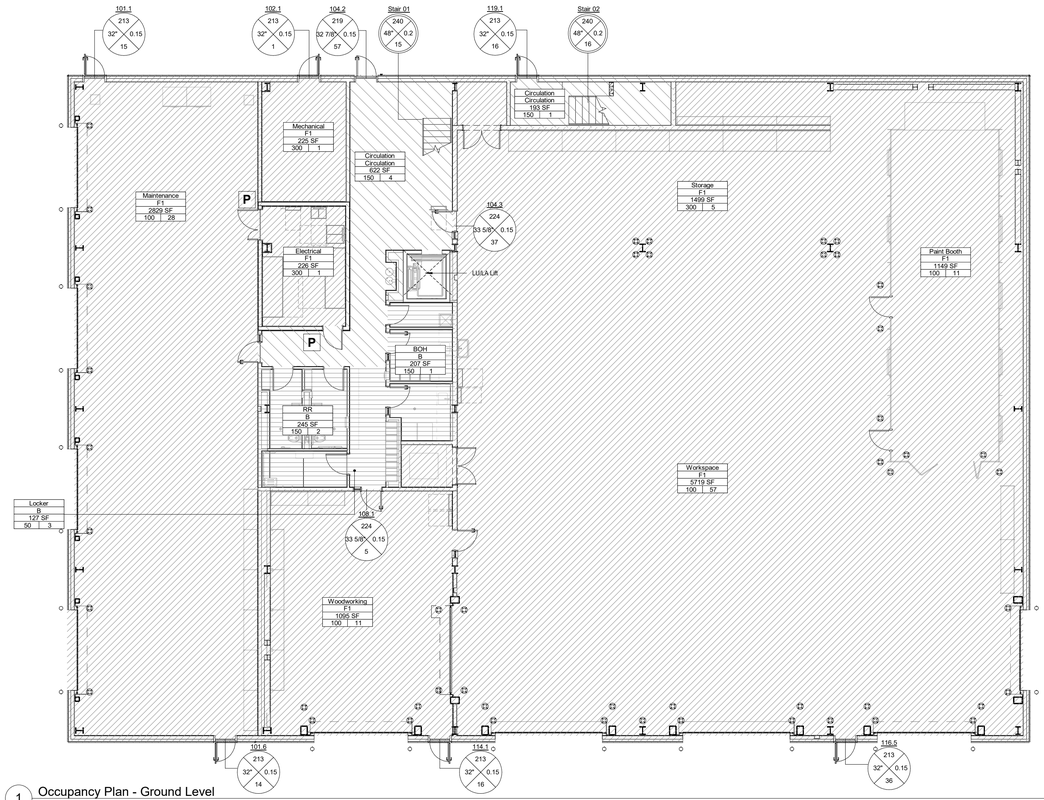

1 Occupancy Plan - Ground Level
3/32" = 1'-0"

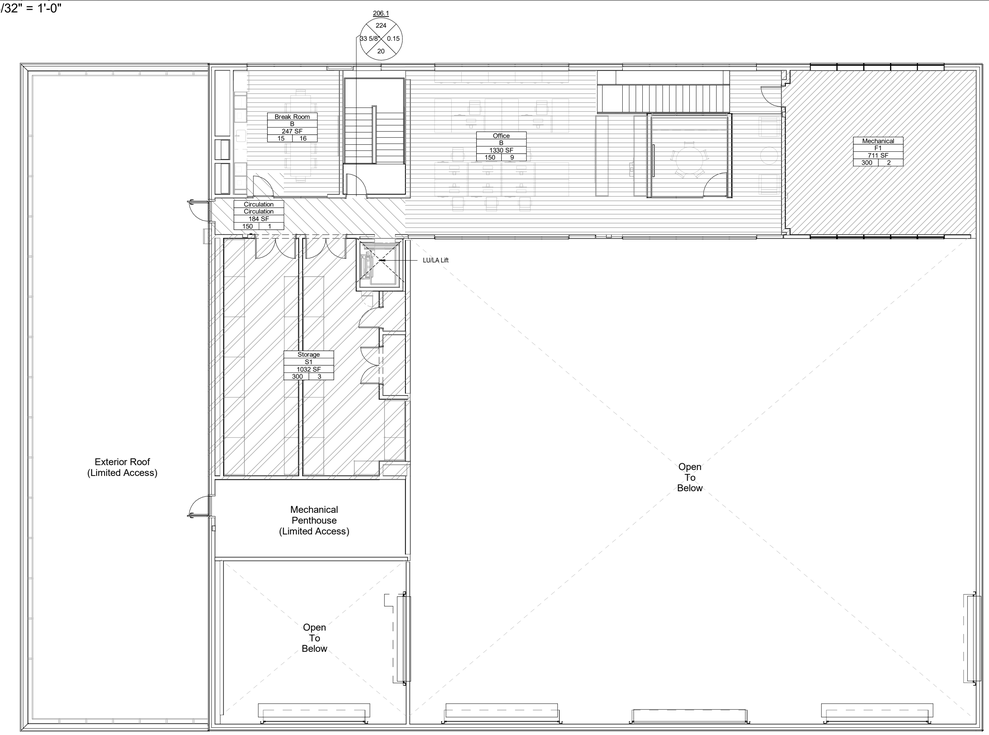

2 Occupancy Plan - Second Level
3/32" = 1'-0"

Occupancy Schedule

Area Name	Area	Function	Area Type	Building Code of New York State: Floor Area / Occupant	Building Code of New York State: Occupant Load
Ground Level					
Maintenance	2829 SF	F1	Gross	100	28
Mechanical	225 SF	F1	Gross	300	1
Electrical	226 SF	F1	Gross	300	1
Circulation	622 SF	Circulation	Gross	150	4
BOH	207 SF	B	Gross	150	1
RR	245 SF	B	Gross	150	2
Woodworking	1095 SF	F1	Gross	100	11
Workspace	5719 SF	F1	Gross	100	57
Paint Booth	1149 SF	F1	Gross	100	11
Storage	1499 SF	F1	Gross	300	5
Locker	127 SF	B	Gross	50	3
Circulation	193 SF	Circulation	Gross	150	1
					125
Second Level					
Storage	1032 SF	S1	Gross	300	3
Circulation	184 SF	Circulation	Gross	150	1
Break Room	247 SF	B	Net	15	16
Office	1330 SF	B	Gross	150	9
Mechanical	711 SF	F1	Gross	300	2
					31
Total Occupant Load					156

Egress Capacity

Number	Clear Egress Width	Occupant Factor	Door Egress Capacity
101.1	32"	0.15	213
101.6	32"	0.15	213
102.1	32"	0.15	213
104.2	32 7/8"	0.15	219
114.1	32"	0.15	213
116.5	32"	0.15	213
119.1	32"	0.15	213
204.1	32"	0.15	213
212.1	32"	0.15	213

Life Safety Legend

- Path of Travel
- Non-Rated Wall
- 1-Hour Rated Wall
- 2-Hour Rated Wall
- Door Egress Tag
- Stair Egress Tag
- Exit Signage
- Area Occupancy Tag
- TRAVEL PATH X — Travel Path ID Tag
- P — Panic Hardware
- FE — Fire Extinguisher (Type A) Tag
- FE — Fire Extinguisher (Type A-B) Tag
- FE — Fire Extinguisher (Type C) Tag
- B — Business
- S-1 — Moderate-Hazard Industrial
- F-1 — Moderate-Hazard Industrial
- Circulation

Owner
Storm King Art Center
1 Museum Road
New Windsor, NY 12553
+1 (845) 534-3115

Design Architect
heneghan peng architects
14-16 Lord Edward Street
Dublin, D02 YC63
+353 1 633 9000

Executive Architect
WXY Architecture + Urban Design
224 Centre Street, 5th Floor
New York, NY 10013
+1 (212) 219-1953

Landscape Architect
Gustafson Porter + Bowman
1 Cobham Mews
London, MW1 9SB
+44 020 7284 8950

Reed Hilderbrand LLC
33 Whitney Avenue, 3rd Floor
New Haven, CT 06510
+1 (617) 923-2422

Structural & Lighting
ARUP
77 Water Street
New York, NY 10005
+1 (212) 896-3000

MEPF & IT
BuroHappold
100 Broadway #23
New York, NY 10005
+1 (212) 616-0228

Civil
VHB
100 Great Oaks Blvd., Suite 118
Albany, NY 12203
+1 (518) 389-3606

AV & Acoustics
LSTN Consultants
76 Beaver Street, 2nd Floor
New York, NY 10005
+1 (347) 788-0810

Facade
Front Inc.
100 E. Broadway Street, #501
New York, NY 10002
+1 (212) 242-2220

Key Plan

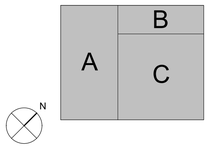

Description	Date
Filing Set	06/17/22

Project

Storm King Art Center

C.F.M. Building

Seal

NOT FOR CONSTRUCTION

Drawing Title

Occupancy Load & Exit Capacity

Date	06/17/22
Scale	3/32" = 1'-0"
Drawing Number	G-C-005
Sheet Size	ARCH D

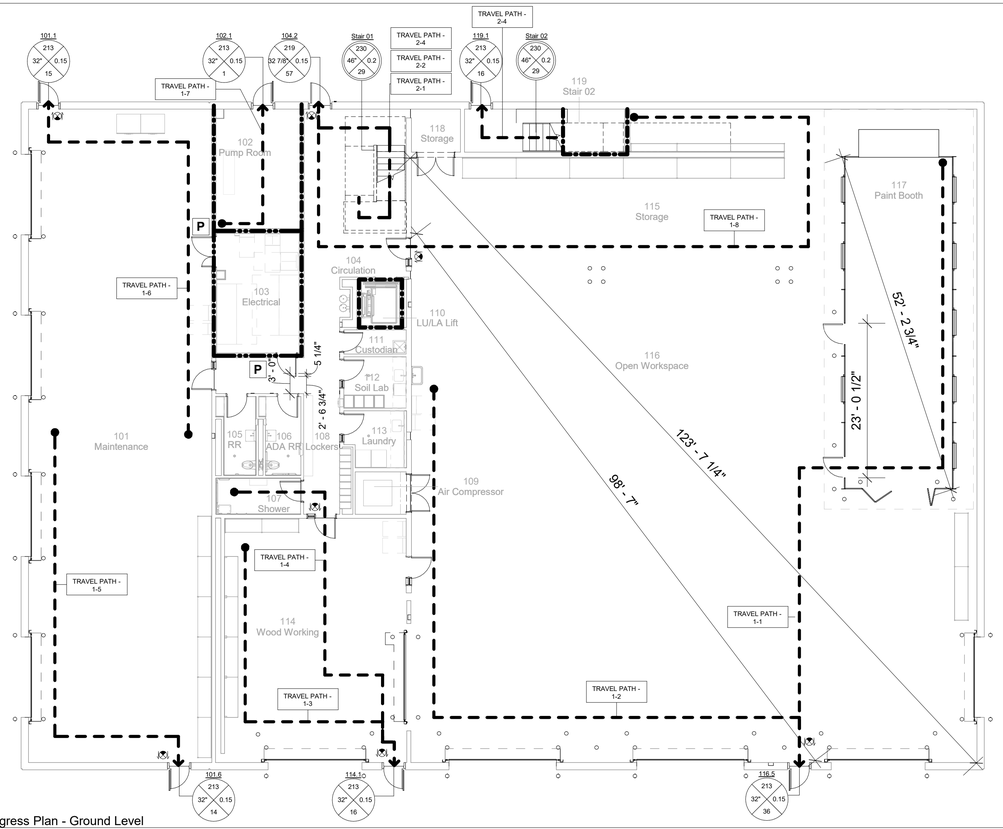

1 Egress Plan - Ground Level
3/32" = 1'-0"

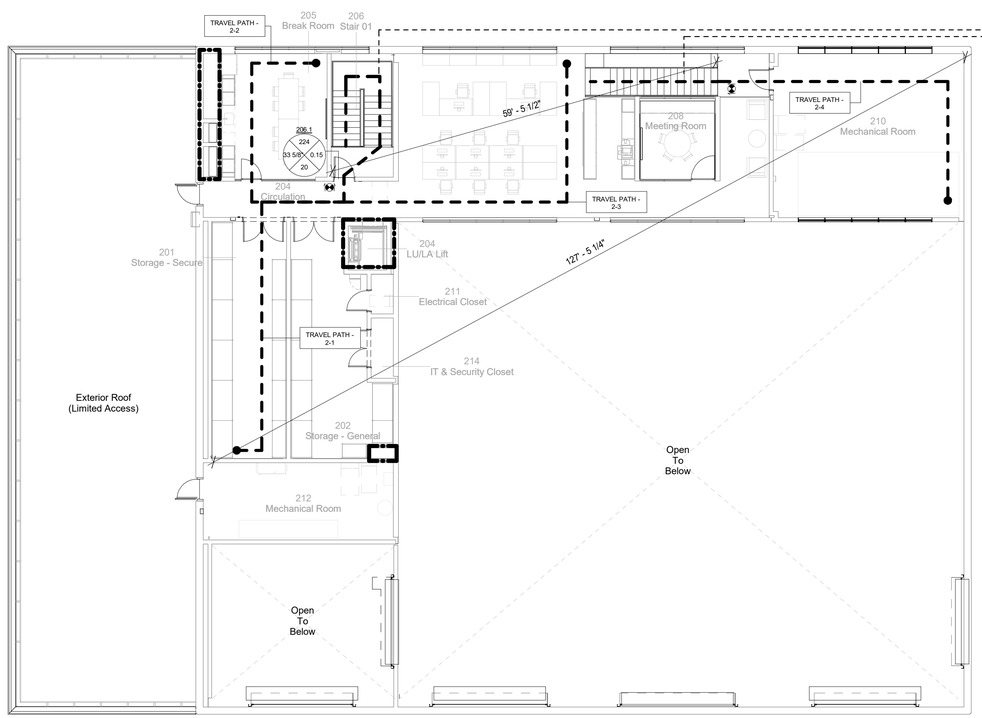

2 Egress Plan - Second Level
3/32" = 1'-0"

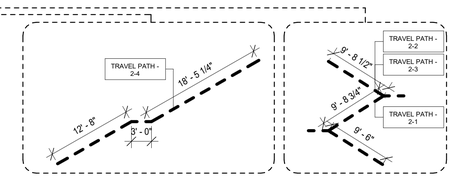

Open Stair 02 Travel Path

Open Stair 01 Travel Path

Egress Travel Paths - Ground Level

Travel Path ID	Travel Distance	Allowable Distance
1-1	111' - 4 3/4"	250'-0"
1-2	110' - 9"	250'-0"
1-3	54' - 6 1/2"	250'-0"
1-4	64' - 4"	250'-0"
1-5	68' - 1 1/4"	250'-0"
1-6	70' - 6"	250'-0"
1-7	23' - 8 1/2"	250'-0"
1-8	139' - 10 3/4"	250'-0"

Egress Travel Paths - Second Level

Travel Path ID	Travel Distance	Allowable Distance
2-1	129' - 5 3/4"	250'-0"
2-2	116' - 8 1/4"	250'-0"
2-3	99' - 9 1/4"	250'-0"
2-4	123' - 8 1/2"	250'-0"

Life Safety Legend

- Path of Travel
- Non-Rated Wall
- 1-Hour Rated Wall
- 2-Hour Rated Wall
- Door Egress Tag
- Stair Egress Tag
- Exit Signage
- Area Occupancy Tag
- Travel Path ID Tag (TRAVEL PATH X)
- Panic Hardware (P)
- Fire Extinguisher (Type A) Tag (FE)
- Fire Extinguisher (Type A-B) Tag (FE)
- Fire Extinguisher (Type C) Tag (FE)
- B — Business
- S-1 — Moderate-Hazard Industrial
- F-1 — Moderate-Hazard Industrial
- Circulation

Owner
Storm King Art Center
1 Museum Road
New Windsor, NY 12553
+1 (845) 534-3115

Design Architect
heneghan peng architects
14-16 Lord Edward Street
Dublin, D02 YC63
+353 1 633 9000

Executive Architect
WXY Architecture + Urban Design
224 Centre Street, 5th Floor
New York, NY 10013
+1 (212) 219-1953

Landscape Architect
Gustafson Porter + Bowman
1 Cobham Mews
London, MW1 9SB
+44 020 7284 8950

Reed Hilderbrand LLC
33 Whitney Avenue, 3rd Floor
New Haven, CT 06510
+1 (617) 923-2422

Structural & Lighting
ARUP
77 Water Street
New York, NY 10005
+1 (212) 896-3000

MEPF & IT
BuroHappold
100 Broadway #23
New York, NY 10005
+1 (212) 616-0228

Civil
VHB
100 Great Oaks Blvd., Suite 118
Albany, NY 12203
+1 (518) 389-3606

AV & Acoustics
LSTN Consultants
76 Beaver Street, 2nd Floor
New York, NY 10005
+1 (347) 788-0810

Facade
Front Inc.
100 E. Broadway Street, #501
New York, NY 10002
+1 (212) 242-2220

Key Plan

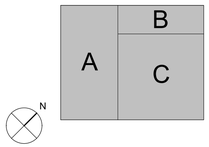

Description	Date
Filing Set	06/17/22

Project

Storm King Art Center

C.F.M. Building

Seal

NOT FOR CONSTRUCTION

Drawing Title

Fire Ratings & Egress Distance

Date	06/17/22
Scale	3/32" = 1'-0"
Drawing Number	G-C-006
Sheet Size	ARCH D

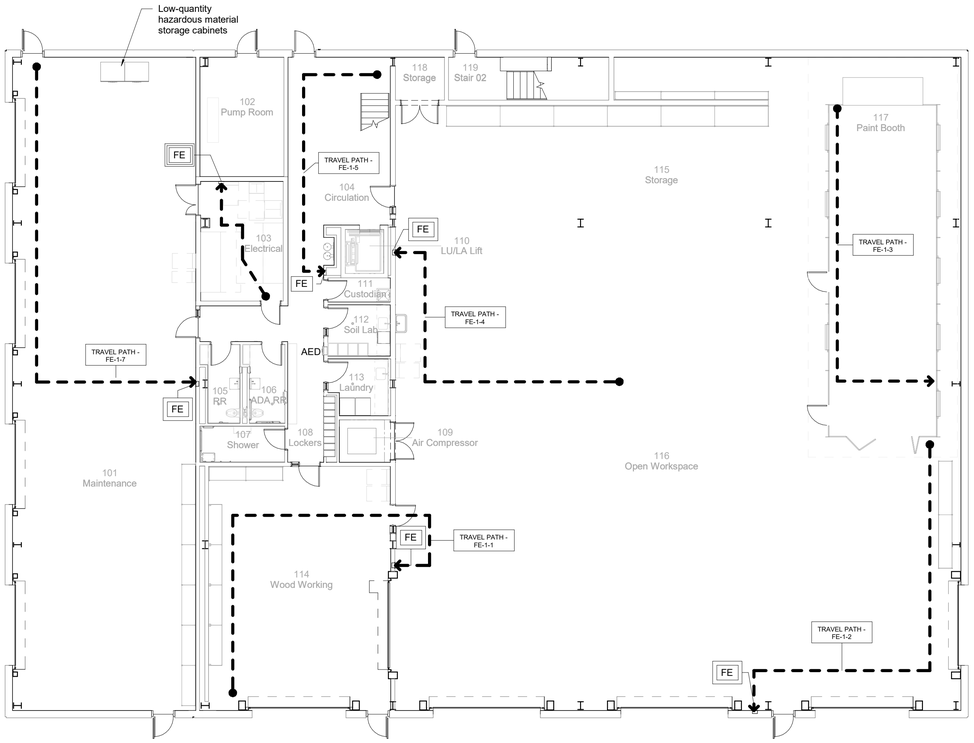

1 Fire Extinguisher Plan - Ground Level
3/32" = 1'-0"

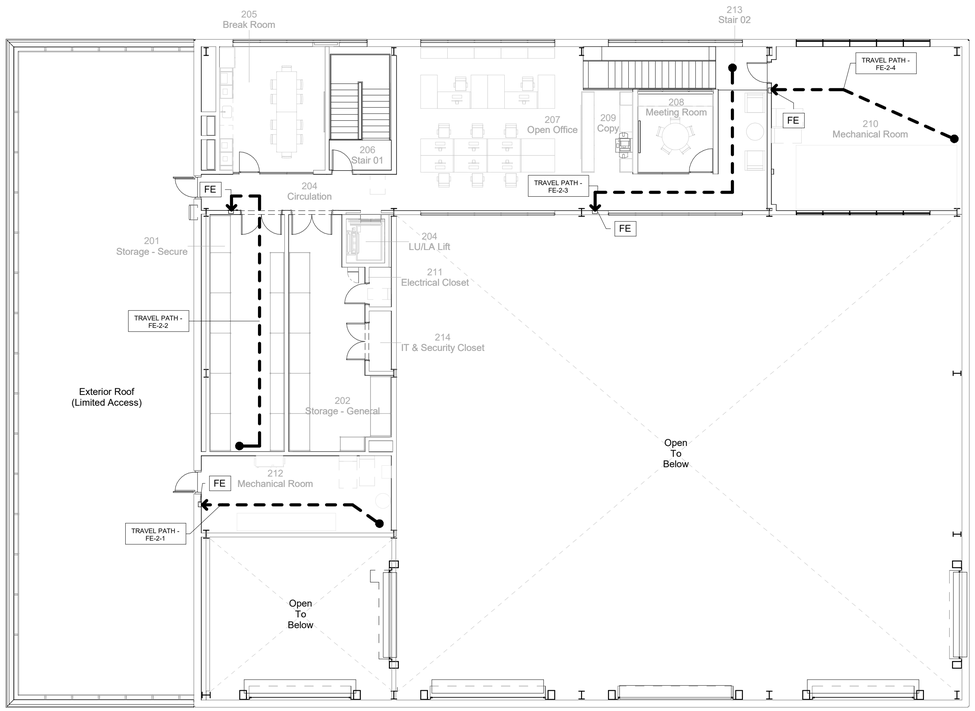

2 Fire Extinguisher Plan - Second Level
3/32" = 1'-0"

FE Travel Paths - Ground Level

Travel Path	*Travel Distance*
FE-1-1	68' - 4 3/4"
FE-1-2	65' - 11"
FE-1-3	54' - 10 3/4"
FE-1-4	52' - 8 1/4"
FE-1-5	29' - 4"
FE-1-6	20' - 10 1/4"
FE-1-7	70' - 8"

FE Travel Paths - Second Level

Travel Path	*Travel Distance*
FE-2-1	27' - 3 1/2"
FE-2-2	46' - 7"
FE-2-3	41' - 8 1/4"
FE-2-4	32' - 7 1/2"

Life Safety Legend

- Path of Travel
- Non-Rated Wall
- 1-Hour Rated Wall
- 2-Hour Rated Wall
- Door Egress Tag
- Stair Egress Tag
- Exit Signage
- Area Occupancy Tag
- Travel Path ID Tag
- Panic Hardware
- Fire Extinguisher (Type A) Tag
- Fire Extinguisher (Type A-B) Tag
- Fire Extinguisher (Type C) Tag
- B — Business
- S-1 — Moderate-Hazard Industrial
- F-1 — Moderate-Hazard Industrial
- Circulation

Owner
Storm King Art Center
1 Museum Road
New Windsor, NY 12553
+1 (845) 534-3115

Design Architect
heneghan peng architects
14-16 Lord Edward Street
Dublin, D02 YC63
+353 1 633 9000

Executive Architect
WXY Architecture + Urban Design
224 Centre Street, 5th Floor
New York, NY 10013
+1 (212) 219-1953

Landscape Architect
Gustafson Porter + Bowman
1 Cobham Mews
London, MW1 9SB
+44 020 7284 8950

Reed Hilderbrand LLC
33 Whitney Avenue, 3rd Floor
New Haven, CT 06510
+1 (617) 923-2422

Structural & Lighting
ARUP
77 Water Street
New York, NY 10005
+1 (212) 896-3000

MEPF & IT
BuroHappold
100 Broadway #23
New York, NY 10005
+1 (212) 616-0228

Civil
VHB
100 Great Oaks Blvd., Suite 118
Albany, NY 12203
+1 (518) 389-3606

AV & Acoustics
LSTN Consultants
76 Beaver Street, 2nd Floor
New York, NY 10005
+1 (347) 788-0810

Facade
Front Inc.
100 E. Broadway Street, #501
New York, NY 10002
+1 (212) 242-2220

Key Plan

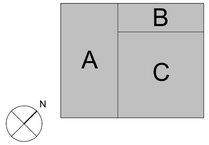

Description	Date
Filing Set	06/17/22

Project

Storm King Art Center

C.F.M. Building

Seal

NOT FOR CONSTRUCTION

Drawing Title

Fire Extinguisher Locations

Date	06/17/22
Scale	3/32" = 1'-0"
Drawing Number	G-C-007
Sheet Size	ARCH D

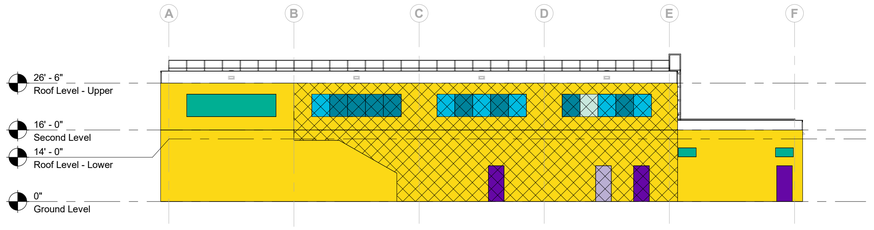

1 North Elevation - Enclosure Takeoffs
1/16" = 1'-0"

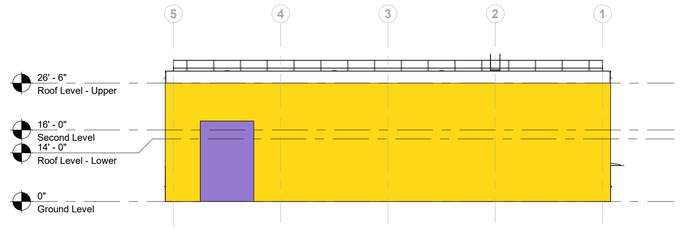

2 East Elevation - Enclosure Takeoffs
1/16" = 1'-0"

3 South Elevation - Enclosure Takeoffs
1/16" = 1'-0"

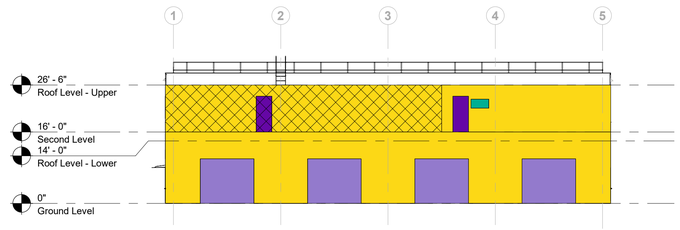

4 West Elevation - Enclosure Takeoffs
1/16" = 1'-0"

Enclosure Takeoffs

Assembly	*Color*	*Area Use*	*Opaque Area*	*Opening Area*
01_North				
EN_Door (HM) (Office)		Office	0 SF	56 SF
EN_Door (HM/GL) (Office)		Office	0 SF	28 SF
EN_Wall (Office)		Office	1623 SF	0 SF
EN_Window (W32) (Office)		Office	0 SF	120 SF
EN_Window (W33) (Office)		Office	0 SF	160 SF
EN_Window (W34) (Office)		Office	0 SF	20 SF
EN_Door (HM)		Workshop	0 SF	28 SF
EN_Louver		Workshop	0 SF	116 SF
EN_Wall		Workshop	1362 SF	0 SF
			2985 SF	528 SF
02_East				
EN_Door (Rolling)		Workshop	0 SF	216 SF
EN_Wall		Workshop	2425 SF	0 SF
			2425 SF	216 SF
03_South				
EN_Door (HM)		Workshop	0 SF	84 SF
EN_Door (Rolling)		Workshop	0 SF	1080 SF
EN_Wall		Workshop	2349 SF	0 SF
			2349 SF	1164 SF
04_West				
EN_Door (HM) (Office)		Office	0 SF	28 SF
EN_Wall (Office)		Office	621 SF	0 SF
EN_Door (HM)		Workshop	0 SF	28 SF
EN_Door (Rolling)		Workshop	0 SF	480 SF
EN_Louver		Workshop	0 SF	8 SF
EN_Wall		Workshop	1476 SF	0 SF
			2097 SF	544 SF
05_Under-Slab Insulation				
EN_SOG Insulation (Office)		Office	1777 SF	0 SF
			1777 SF	0 SF
06_Roof				
EN_Roof (Office)		Office	3127 SF	0 SF
EN_Roof		Workshop	10382 SF	0 SF
EN_Skylight (W31)		Workshop	0 SF	160 SF
			13509 SF	160 SF
TOTAL			25143 SF	2612 SF

Foundation Insulation Perimeter Extents

Assembly	*Color*	*Area Use*	*Length*
Perimeter Insulation		Workshop	469' - 10"
Perimeter Insulation (Office)		Office	29' - 4"
TOTAL			499' - 2"

5 Ground Level - Enclosure Takeoffs
1/16" = 1'-0"

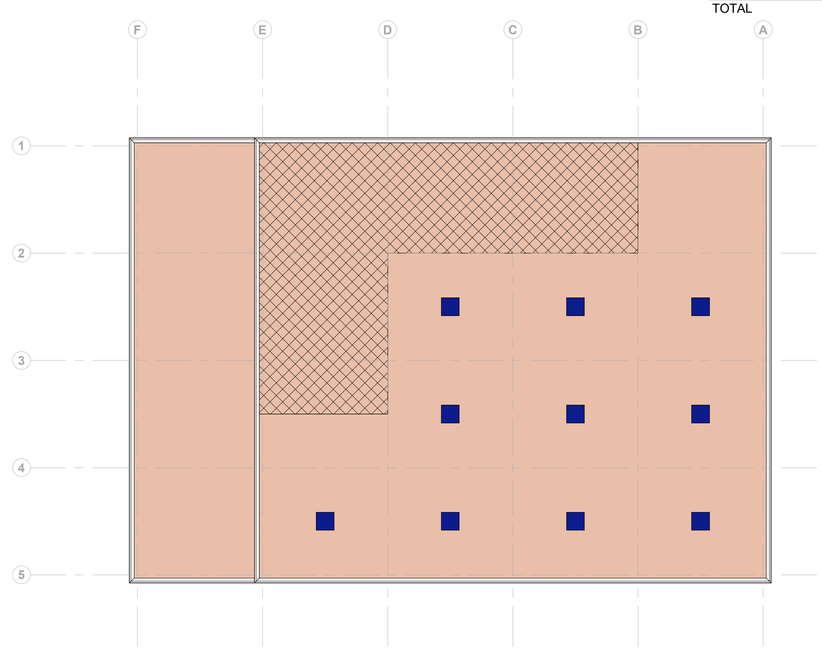

6 Roof Level - Enclosure Takeoffs
1/16" = 1'-0"

Owner
Storm King Art Center
1 Museum Road
New Windsor, NY 12553
+1 (845) 534-3115

Design Architect
heneghan peng architects
14-16 Lord Edward Street
Dublin, D02 YC63
+353 1 633 9000

Executive Architect
WXY Architecture + Urban Design
224 Centre Street, 5th Floor
New York, NY 10013
+1 (212) 219-1953

Landscape Architect
Gustafson Porter + Bowman
1 Cobham Mews
London, MW1 9SB
+44 020 7284 8950

Reed Hilderbrand LLC
33 Whitney Avenue, 3rd Floor
New Haven, CT 06510
+1 (617) 923-2422

Structural & Lighting
ARUP
77 Water Street
New York, NY 10005
+1 (212) 896-3000

MEPF & IT
BuroHappold
100 Broadway #23
New York, NY 10005
+1 (212) 616-0228

Civil
VHB
100 Great Oaks Blvd., Suite 118
Albany, NY 12203
+1 (518) 389-3606

AV & Acoustics
LSTN Consultants
76 Beaver Street, 2nd Floor
New York, NY 10005
+1 (347) 788-0810

Facade
Front Inc.
100 E. Broadway Street, #501
New York, NY 10002
+1 (212) 242-2220

Key Plan

N

Description	Date
Filing Set	06/17/22

Project

Storm King Art Center

C.F.M. Building

Seal

NOT FOR CONSTRUCTION

Drawing Title

Building Envelope Takeoffs

Date	06/17/22
Scale	1/16" = 1'-0"
Drawing Number	EN-C-001
Sheet Size	ARCH D

COM*check* Software Version COMcheckWeb

Envelope Compliance Certificate

Project Information

Energy Code:	2020 New York State Energy Conservation Construction Code
Project Title:	Storm King - CFM Building
Location:	New Windsor, New York
Climate Zone:	5a
Project Type:	New Construction
Vertical Glazing / Wall Area:	3%
Skylight / Roof Area	1%

Construction Site:
New Windsor, New York 12553

Owner/Agent:
Storm King Art Center
1 Museum Rd
New Windsor, New York 12553
845-534-3115

Designer/Contractor:
WXY Architecture + Urban Design
25 Park Place, 5th Floor
New York, New York 10007
212-219-1953

Additional Efficiency Package(s)

Credits: 1.0 Required 1.0 Proposed
Enhanced Envelope Performance, 1.0 credit

Building Area	Floor Area
1-Workshop : Nonresidential	13551
2-Office : Nonresidential	5247

Envelope Assemblies

Assembly	Gross Area or Perimeter	Cavity R-Value	Cont. R-Value	Proposed U-Factor	Budget U-Factor$_{tsc}$
Roof: Insulation Entirely Above Deck, [Bldg. Use 2 - Office]	3127	---	40.0	0.025	0.032
Roof: Insulation Entirely Above Deck, [Bldg. Use 1 - Workshop]	10542	---	40.0	0.025	0.032
Skylight (W31): Metal Frame with Thermal Break: Plastic, with Curb, Perf. Specs.: Product ID Velux CM1, SHGC 0.27, [Bldg. Use 1 - Workshop] (b)	16	---	---	0.690	0.500
Skylight (W31): Metal Frame with Thermal Break: Plastic, with Curb, Perf. Specs.: Product ID Velux CM1, SHGC 0.27, [Bldg. Use 1 - Workshop] (b)	16	---	---	0.690	0.500
Skylight (W31): Metal Frame with Thermal Break: Plastic, with Curb, Perf. Specs.: Product ID Velux CM1, SHGC 0.27, [Bldg. Use 1 - Workshop] (b)	16	---	---	0.690	0.500
Skylight (W31): Metal Frame with Thermal Break: Plastic, with Curb, Perf. Specs.: Product ID Velux CM1, SHGC 0.27, [Bldg. Use 1 - Workshop] (b)	16	---	---	0.690	0.500
Skylight (W31): Metal Frame with Thermal Break: Plastic, with Curb, Perf. Specs.: Product ID Velux CM1, SHGC 0.27, [Bldg. Use 1 - Workshop] (b)	16	---	---	0.690	0.500
Skylight (W31): Metal Frame with Thermal Break: Plastic, with Curb, Perf. Specs.: Product ID Velux CM1, SHGC 0.27, [Bldg. Use 1 - Workshop] (b)	16	---	---	0.690	0.500
Skylight (W31): Metal Frame with Thermal Break: Plastic, with Curb, Perf. Specs.: Product ID Velux CM1, SHGC 0.27, [Bldg.	16	---	---	0.690	0.500

Assembly	Gross Area or Perimeter	Cavity R-Value	Cont. R-Value	Proposed U-Factor	Budget U-Factor$_{tsc}$
Use 1 - Workshop] (b)					
Skylight (W31): Metal Frame with Thermal Break: Plastic, with Curb, Perf. Specs.: Product ID Velux CM1, SHGC 0.27, [Bldg. Use 1 - Workshop] (b)	16	---	---	0.690	0.500
Skylight (W31): Metal Frame with Thermal Break: Plastic, with Curb, Perf. Specs.: Product ID Velux CM1, SHGC 0.27, [Bldg. Use 1 - Workshop] (b)	16	---	---	0.690	0.500
Floor: Unheated Slab-On-Grade, Vertical 2 ft., [Bldg. Use 1 - Workshop] (c)	470	---	15.0	0.520	0.540
Floor: Unheated Slab-On-Grade, Horizontal with vertical 2 ft., [Bldg. Use 2 - Office] (c)	29	---	15.0	0.690	0.540
NORTH					
Ext. Wall: Steel-Framed, 24in. o.c., [Bldg. Use 1 - Workshop]	1390	0.0	32.0	0.029	0.064
Door: Insulated Metal, Swinging, [Bldg. Use 1 - Workshop]	28	---	---	0.360	0.370
Louver: Steel-Framed, 24in. o.c., [Bldg. Use 1 - Workshop]	116	0.0	0.0	0.338	0.064
Ext. Wall: Steel-Framed, 24in. o.c., [Bldg. Use 2 - Office]	1967	0.0	32.0	0.029	0.064
Door: Insulated Metal, Swinging, [Bldg. Use 2 - Office]	56	---	---	0.360	0.370
Door: Glass (over 50% glazing): Metal Frame, Entrance Door, Perf. Specs.: Product ID Kawneer 250 T Insulpour Thermal Entrance, SHGC 0.25, [Bldg. Use 2 - Office] (b)	28	---	---	0.500	0.770
Window (W32): Metal Frame with Thermal Break: Operable, Perf. Specs.: Product ID W32 - Kawneer AA4325 High Thermal Window, SHGC 0.26, [Bldg. Use 2 - Office] (b)	120	---	---	0.330	0.450
Window (W33): Metal Frame with Thermal Break: Fixed, Perf. Specs.: Product ID W33 - Kawneer AA4325 High Thermal Window, SHGC 0.34, [Bldg. Use 2 - Office] (b)	160	---	---	0.290	0.380
Window (W34 - Spandrel): Metal Frame with Thermal Break: Fixed, Perf. Specs.: Product ID W34 - Kawneer AA4325 High Thermal Window, SHGC 0.34, [Bldg. Use 2 - Office] (b)	20	---	---	0.290	0.380
EAST					
Ext. Wall: Steel-Framed, 24in. o.c., [Bldg. Use 1 - Workshop]	2641	0.0	32.0	0.029	0.064
Door (Rolling): Insulated Metal, Garage door 14% glazing, [Bldg. Use 1 - Workshop]	216	---	---	0.125	0.310
SOUTH					
Ext. Wall: Steel-Framed, 24in. o.c., [Bldg. Use 1 - Workshop]	3513	0.0	32.0	0.029	0.064
Door (Rolling): Insulated Metal, Garage door 14% glazing, [Bldg. Use 1 - Workshop]	1080	---	---	0.125	0.310
Door: Insulated Metal, Swinging, [Bldg. Use 1 - Workshop]	84	---	---	0.360	0.370
Louver: Steel-Framed, 24in. o.c., [Bldg. Use 1 - Workshop]	8	0.0	0.0	0.338	0.064
WEST					
Ext. Wall: Steel-Framed, 24in. o.c., [Bldg. Use 2 - Office]	649	0.0	32.0	0.029	0.064
Door: Insulated Metal, Swinging, [Bldg. Use 2 - Office]	28	---	---	0.360	0.370
Ext. Wall: Steel-Framed, 24in. o.c., [Bldg. Use 1 - Workshop]	1984	0.0	32.0	0.029	0.064
Door: Insulated Metal, Swinging, [Bldg. Use 1 - Workshop]	28	---	---	0.360	0.370
Door (Rolling): Insulated Metal, Garage door 14% glazing, [Bldg. Use 1 - Workshop]	480	---	---	0.125	0.310

(a) Budget U-factors are used for software baseline calculations ONLY, and are not code requirements.
(b) Fenestration product performance must be certified in accordance with NFRC and requires supporting documentation.
(c) Slab-On-Grade proposed and budget U-factors shown in table are F-factors.

Envelope PASSES: Design 22% better than code

Envelope Compliance Statement

Compliance Statement: The proposed envelope design represented in this document is consistent with the building plans, specifications, and other calculations submitted with this permit application. The proposed envelope systems have been designed to meet the 2020 New York State Energy Conservation Construction Code requirements in COM*check* Version COMcheckWeb and to comply with any applicable mandatory requirements listed in the Inspection Checklist.

Name - Title Signature Date

COM*check* Software Version COMcheckWeb

Inspection Checklist

Energy Code: 2020 New York State Energy Conservation Construction Code

Requirements: 100.0% were addressed directly in the COM*check* software

Text in the "Comments/Assumptions" column is provided by the user in the COMcheck Requirements screen. For each requirement, the user certifies that a code requirement will be met and how that is documented, or that an exception is being claimed. Where compliance is itemized in a separate table, a reference to that table is provided.

Section # & Req.ID	Plan Review	Complies?	Comments/Assumptions
C103.2 [PR1]^{1}	Plans and/or specifications provide all information with which compliance can be determined for the building envelope and document where exceptions to the standard are claimed.	☐Complies ☐Does Not ☐Not Observable ☐Not Applicable	Requirement will be met.
C402.4.1 [PR10]^{1}	The vertical fenestration area <= 30 percent of the gross above-grade wall area.	☐Complies ☐Does Not ☐Not Observable ☐Not Applicable	Requirement will be met.
C402.4.1 [PR11]^{1}	The skylight area <= 3 percent of the gross roof area.	☐Complies ☐Does Not ☐Not Observable ☐Not Applicable	Requirement will be met.
C402.4.2 [PR14]^{1}	In enclosed spaces > 2,500 ft2 directly under a roof with ceiling heights >15 ft. and used as an office, lobby, atrium, concourse, corridor, storage, gymnasium/exercise center, convention center, automotive service, manufacturing, non-refrigerated warehouse, retail store, distribution/sorting area, transportation, or workshop, the following requirements apply: (a) the daylight zone under skylights is >= half the floor area; (b) the skylight area to daylight zone is >= 3 percent with a skylight VT >= 0.40; or a minimum skylight effective aperture >= 1 percent.	☐Complies ☐Does Not ☐Not Observable ☐Not Applicable	Requirement will be met.
C402.4.2.2 [PR15]^{1}	Skylights in office, storage, automotive service, manufacturing, non-refrigerated warehouse, retail store, and distribution/sorting area have a measured haze value > 90 percent unless designed to exclude direct sunlight.	☐Complies ☐Does Not ☐Not Observable ☐Not Applicable	**Exception:** Requirement does not apply.

Additional Comments/Assumptions:

1 High Impact (Tier 1) 2 Medium Impact (Tier 2) 3 Low Impact (Tier 3)

Section # & Req.ID	Footing / Foundation Inspection	Complies?	Comments/Assumptions
C303.2 [FO4]^{1}	Slab edge insulation installed per manufacturer's instructions.	☐Complies ☐Does Not ☐Not Observable ☐Not Applicable	Requirement will be met.
C303.2.1 [FO6]^{1}	Exterior insulation protected against damage, sunlight, moisture, wind, landscaping and equipment maintenance activities.	☐Complies ☐Does Not ☐Not Observable ☐Not Applicable	Requirement will be met.
C105 [FO3]^{1}	Installed slab-on-grade insulation type and R-value consistent with insulation specifications reported in plans and COMcheck reports.	☐Complies ☐Does Not ☐Not Observable ☐Not Applicable	*See the Envelope Assemblies table for values.*
C402.2.4 [FO7]^{1}	Slab edge insulation depth/length. Slab insulation extending away from building is covered by pavement or >= 10 inches of soil.	☐Complies ☐Does Not ☐Not Observable ☐Not Applicable	Requirement will be met. *See the Envelope Assemblies table for values.*

Additional Comments/Assumptions:

1 High Impact (Tier 1) 2 Medium Impact (Tier 2) 3 Low Impact (Tier 3)

Section # & Req.ID	Framing / Rough-In Inspection	Complies?	Comments/Assumptions
C303.1.3 [FR12]^{1}	Fenestration products rated in accordance with NFRC.	☐Complies ☐Does Not ☐Not Observable ☐Not Applicable	Requirement will be met.
C303.1.3 [FR13]^{1}	Fenestration products are certified as to performance labels or certificates provided.	☐Complies ☐Does Not ☐Not Observable ☐Not Applicable	Requirement will be met.
C402.4.3 [FR10]^{1}	Vertical fenestration SHGC value.	☐Complies ☐Does Not ☐Not Observable ☐Not Applicable	*See the Envelope Assemblies table for values.*
C402.4.3 [FR11]^{1}	Skylight SHGC value.	☐Complies ☐Does Not ☐Not Observable ☐Not Applicable	*See the Envelope Assemblies table for values.*
C402.4.3, C402.4.3 4 [FR8]^{1}	Installed vertical fenestration U-factor and SHGC consistent with label specifications and as reported in plans and COMcheck reports.	☐Complies ☐Does Not ☐Not Observable ☐Not Applicable	*See the Envelope Assemblies table for values.*
C402.4.3 4 [FR9]^{1}	Installed skylight U-factor and SHGC consistent with label specifications and as reported in plans and COMcheck reports.	☐Complies ☐Does Not ☐Not Observable ☐Not Applicable	*See the Envelope Assemblies table for values.*
C402.5.1.2.1 [FR19]^{1}	The building envelope contains a continuous air barrier that is sealed in an approved manner and material permeability <= 0.004 dfm/ft2. Air barrier penetrations are sealed in an approved manner.	☐Complies ☐Does Not ☐Not Observable ☐Not Applicable	Requirement will be met.
C402.5.2, C402.5.4 [FR18]^{1}	Factory-built fenestration and doors are labeled as meeting air leakage requirements.	☐Complies ☐Does Not ☐Not Observable ☐Not Applicable	Requirement will be met.
C402.5.7 [FR17]^{1}	Vestibules are installed on all building entrances. Doors have self-closing devices.	☐Complies ☐Does Not ☐Not Observable ☐Not Applicable	**Exception:** Doors that open directly from a space =3000 ft2.

Additional Comments/Assumptions:

1 High Impact (Tier 1) 2 Medium Impact (Tier 2) 3 Low Impact (Tier 3)

Section # & Req.ID	Mechanical Rough-In Inspection	Complies?	Comments/Assumptions
C402.5.5, C403.2.4.3 [ME3]^{1}	Stair and elevator shaft vents have motorized dampers that automatically close. Reference section C403.7.7 for operational details.	☐Complies ☐Does Not ☐Not Observable ☐Not Applicable	Requirement will be met.
C403.7.7 [ME58]^{1}	Outdoor air and exhaust systems have motorized dampers that automatically shut when not in use and meet maximum leakage rates. Check gravity dampers where allowed. Reference section language for operational details.	☐Complies ☐Does Not ☐Not Observable ☐Not Applicable	Requirement will be met.

Additional Comments/Assumptions:

1 High Impact (Tier 1) 2 Medium Impact (Tier 2) 3 Low Impact (Tier 3)

Section # & Req.ID	Insulation Inspection	Complies?	Comments/Assumptions
C303.1 [IN3]^{1}	Roof insulation installed per manufacturer's instructions. Blown or poured loose-fill insulation is installed only where the roof slope is <=3 in 12.	☐Complies ☐Does Not ☐Not Observable ☐Not Applicable	Requirement will be met.
C402.2.1 [IN20]^{1}	Insulation installed on a suspended ceiling having ceiling tiles is not being specified for roof/ceiling assemblies. Continuous insulation board installed in 2 or more layers with edge joints offset between layers.	☐Complies ☐Does Not ☐Not Observable ☐Not Applicable	Requirement will be met.
C303.1 [IN10]^{2}	Building envelope insulation is labeled with R-value or insulation certificate providing R-value and other relevant data.	☐Complies ☐Does Not ☐Not Observable ☐Not Applicable	Requirement will be met.
C303.2 [IN7]^{1}	Above-grade wall insulation installed per manufacturer's instructions.	☐Complies ☐Does Not ☐Not Observable ☐Not Applicable	Requirement will be met.
C303.2.1 [IN14]^{2}	Exterior insulation is protected from damage with a protective material. Verification for exposed foundation insulation may need to occur during Foundation Inspection.	☐Complies ☐Does Not ☐Not Observable ☐Not Applicable	Requirement will be met.
C402.2.1.1 [IN4]^{1}	Skylight curbs are insulated to the level of roofs with insulation above deck or R-5.	☐Complies ☐Does Not ☐Not Observable ☐Not Applicable	**Exception:** Unit skylight curbs included as a component of a skylight listed and labeled per NFRC 100.
C105 [IN6]^{1}	Installed above-grade wall insulation type and R-value consistent with insulation specifications reported in plans and COMcheck reports.	☐Complies ☐Does Not ☐Not Observable ☐Not Applicable	*See the Envelope Assemblies table for values.*
C402.2.3 [IN8]^{1}	Installed floor insulation type and R-value consistent with insulation specifications reported in plans and COMcheck reports.	☐Complies ☐Does Not ☐Not Observable ☐Not Applicable	*See the Envelope Assemblies table for values.*
C402.2.6 [IN18]^{1}	Radiant panels and associated components, designed for heat transfer from the panel surfaces to the occupants or indoor space are insulated with a minimum of R-3.5.	☐Complies ☐Does Not ☐Not Observable ☐Not Applicable	**Exception:** Requirement does not apply.
C105 [IN2]^{1}	Installed roof insulation type and R-value consistent with insulation specifications reported in plans and COMcheck reports. For some ceiling systems, verification may need to occur during Framing Inspection.	☐Complies ☐Does Not ☐Not Observable ☐Not Applicable	*See the Envelope Assemblies table for values.*
C402.5.1.1 [IN1]^{1}	All sources of air leakage in the building thermal envelope are sealed, caulked, gasketed, weather stripped or wrapped with moisture vapor-permeable wrapping material to minimize air leakage.	☐Complies ☐Does Not ☐Not Observable ☐Not Applicable	Requirement will be met.

Additional Comments/Assumptions:

1 High Impact (Tier 1) 2 Medium Impact (Tier 2) 3 Low Impact (Tier 3)

Section # & Req.ID	Final Inspection	Complies?	Comments/Assumptions
C402.5.6 [FI37]^{1}	Weatherseals installed on all loading dock cargo door openings and provide direct contact along the top and sides of vehicles parked in the doorway.	☐Complies ☐Does Not ☐Not Observable ☐Not Applicable	Requirement will be met.
C402.5.8 [FI26]^{1}	Recessed luminaires in thermal envelope to limit infiltration and be IC rated and labeled. Seal between interior finish and luminaire housing.	☐Complies ☐Does Not ☐Not Observable ☐Not Applicable	**Exception:** Requirement does not apply.

Additional Comments/Assumptions:

1 High Impact (Tier 1) 2 Medium Impact (Tier 2) 3 Low Impact (Tier 3)

Owner
Storm King Art Center
1 Museum Road
New Windsor, NY 12553
+1 (845) 534-3115

Design Architect
heneghan peng architects
14-16 Lord Edward Street
Dublin, D02 YC63
+353 1 633 9000

Executive Architect
WXY Architecture + Urban Design
224 Centre Street, 5th Floor
New York, NY 10013
+1 (212) 219-1953

Landscape Architect
Gustafson Porter + Bowman
1 Cobham Mews
London, MW1 9SB
+44 020 7284 8950

Reed Hilderbrand LLC
33 Whitney Avenue, 3rd Floor
New Haven, CT 06510
+1 (617) 923-2422

Structural & Lighting
ARUP
77 Water Street
New York, NY 10005
+1 (212) 896-3000

MEPF & IT
BuroHappold
100 Broadway #23
New York, NY 10005
+1 (212) 616-0228

Civil
VHB
100 Great Oaks Blvd., Suite 118
Albany, NY 12203
+1 (518) 389-3606

AV & Acoustics
LSTN Consultants
76 Beaver Street, 2nd Floor
New York, NY 10005
+1 (347) 788-0810

Facade
Front Inc.
100 E. Broadway Street, #501
New York, NY 10002
+1 (212) 242-2220

Key Plan

Description	Date
Filing Set	06/17/22

Project

Storm King Art Center

C.F.M. Building

Seal

NOT FOR CONSTRUCTION

Drawing Title

Energy Code & COMcheck

Date	06/17/22
Scale	Not to Scale
Drawing Number	EN-C-002
Sheet Size	ARCH D

COM*check* Software Version COMcheckWeb

Interior Lighting Compliance Certificate

Project Information

Energy Code: 2020 New York State Energy Conservation Construction Code
Project Title: Storm King CFM Building
Project Type: New Construction

Construction Site:

Owner/Agent:
Storm King Art Center
1 Museum Rd
New Windsor
Windsor, New York 12553
8455343115

Designer/Contractor:

Additional Efficiency Package(s)

Credits: 1.0 Required 1.0 Proposed
Reduced Lighting Power, 1.0 credit

Allowed Interior Lighting Power

A Area Category	B Floor Area (ft2)	C Allowed Watts / ft2	D Allowed Watts
1-116 workspace (Common Space Types:Workshop)	5609	1.03	5777
2-114 Woodwork (Common Space Types:Workshop)	996	1.03	1026
3-105 106 107 (Common Space Types:Restrooms)	190	0.77	146
4-113 (Common Space Types:Laundry/Washing Area)	71	0.39	28
5-103 elec (Common Space Types:Electrical/Mechanical)	218	0.39	85
6-104 (Common Space Types:Corridor/Transition <8 ft wide)	551	0.59	325
7-102 Mech (Common Space Types:Electrical/Mechanical)	222	0.39	87
8-101 Maintenance (Common Space Types:Workshop)	2665	1.03	2745
9-115 (Common Space Types:Storage >=1000 sq.ft.)	1311	0.41	538
10-108 (Common Space Types:Locker Room)	96	0.43	41
11-204 (Common Space Types:Corridor/Transition <8 ft wide)	162	0.59	96
12-205 (Common Space Types:Lounge/Breakroom)	290	0.56	162
13-207 (Common Space Types:Office - Open Plan)	919	0.73	671
14-212 mech (Common Space Types:Electrical/Mechanical)	327	0.39	128
15-112 Soil lab (Common Space Types:Laboratory For Medical/Industrial/Research)	71	1.30	92
16-111 custodian (Common Space Types:Laundry/Washing Area)	34	0.39	13
17-109 air comp (Common Space Types:Electrical/Mechanical)	48	0.39	19
18-118 storage (Common Space Types:Storage)	48	0.57	27
19-119 stair 2 (Common Space Types:Stairwell)	126	0.52	66
20-201 (Common Space Types:Storage)	396	0.57	226
21-202 (Common Space Types:Storage)	412	0.57	235
22-206 (Common Space Types:Stairwell)	171	0.52	89
23-211 elec (Common Space Types:Electrical/Mechanical)	22	0.39	9
24-208 (Common Space Types:Conference/Meeting/Multipurpose)	133	0.96	128
25-209 (Common Space Types:Copy/Print Room)	94	0.50	47
26-210 Mech (Common Space Types:Electrical/Mechanical)	694	0.39	271
27-213 stair 2 (Common Space Types:Stairwell)	179	0.52	93
		Total Allowed Watts =	13168

Proposed Interior Lighting Power

A Fixture ID : Description / Lamp / Wattage Per Lamp / Ballast	B Lamps/ Fixture	C # of Fixture	D Fixture Watt.	E (C X D)
1-116 workspace (Common Space Types:Workshop)				
AL01: AL01: ZL1N 96inch: LED Linear 33W:	2	26	68	1768
AL02: AL02: ZL1N 96inch: LED Linear 33W:	1	28	48	1344
2-114 Woodwork (Common Space Types:Workshop)				
AL01B: AL01B: ZL1N 48inch: LED Linear 33W:	2	4	104	416
AL01: AL01: ZL1N 96inch: LED Linear 33W:	2	6	68	408
3-105 106 107 (Common Space Types:Restrooms)				
AL12: AL12: 4ft recessed coronet: LED Linear 20W:	1	4	29	116
4-113 (Common Space Types:Laundry/Washing Area)				
AL12: AL12: 4ft recessed coronet: LED Linear 20W:	1	1	29	29
5-103 elec (Common Space Types:Electrical/Mechanical)				
BL01: BL01: BoH Linear: LED Linear 33W:	1	4	31	124
6-104 (Common Space Types:Corridor/Transition <8 ft wide)				
AL02b: AL02b: ZL1N 48inch: LED Linear 22W:	1	6	25	150
7-102 Mech (Common Space Types:Electrical/Mechanical)				
BL01: BL01: BoH Linear: LED Linear 33W:	1	4	31	124
8-101 Maintenance (Common Space Types:Workshop)				
AL01A: AL01A: ZL1N 48inch: LED Linear 33W:	1	36	34	1224
9-115 (Common Space Types:Storage >=1000 sq.ft.)				
AL15: AL15: 8ft recessed coronet: LED Linear 33W:	2	8	80	640
AL16: AL16: 4ft recessed coronet: LED Linear 33W:	1	1	40	40
AL12: AL12: 4ft recessed coronet: LED Linear 20W:	1	1	29	29
10-108 (Common Space Types:Locker Room)				
AL02b: AL02b: ZL1N 48inch: LED Linear 22W:	1	1	25	25
11-204 (Common Space Types:Corridor/Transition <8 ft wide)				
AL02C: AL02C: ZL1N 96inch: LED Linear 33W:	1	2	48	96
12-205 (Common Space Types:Lounge/Breakroom)				
AL02: AL02: ZL1N 96inch: LED Linear 33W:	1	2	48	96
13-207 (Common Space Types:Office - Open Plan)				
AL02: AL02: ZL1N 96inch: LED Linear 33W:	1	6	48	288
AL02C: AL02C: ZL1N 96inch: LED Linear 33W:	1	3	48	144
14-212 mech (Common Space Types:Electrical/Mechanical)				
BL01: BL01: BoH Linear: LED Linear 33W:	1	6	31	186
15-112 Soil lab (Common Space Types:Laboratory For Medical/Industrial/Research)				
AL12: AL12: 4ft recessed coronet: LED Linear 20W:	1	1	29	29
16-111 custodian (Common Space Types:Laundry/Washing Area)				
BL01: BL01: BoH Linear: LED Linear 33W:	1	1	31	31
17-109 air comp (Common Space Types:Electrical/Mechanical)				
BL01A: BL01A: BoH Linear: LED Linear 33W:	1	1	31	31
18-118 storage (Common Space Types:Storage)				
BL01A: BL01A: BoH Linear: LED Linear 33W:	1	1	31	31
19-119 stair 2 (Common Space Types:Stairwell)				
AL02A: AL02A: ZL1N 48inch: LED Linear 22W:	1	3	25	75
20-201 (Common Space Types:Storage)				
BL01: BL01: BoH Linear: LED Linear 33W:	1	5	31	155
21-202 (Common Space Types:Storage)				
BL01A: BL01A: BoH Linear: LED Linear 33W:	1	2	31	62
BL01: BL01: BoH Linear: LED Linear 33W:	1	6	31	186
22-206 (Common Space Types:Stairwell)				
AL02A: AL02A: ZL1N 48inch: LED Linear 22W:	1	2	25	50

A Fixture ID : Description / Lamp / Wattage Per Lamp / Ballast	B Lamps/ Fixture	C # of Fixture	D Fixture Watt.	E (C X D)
23-211 elec (Common Space Types:Electrical/Mechanical)				
BL01A: BL01A: BoH Linear: LED Linear 33W:	1	1	31	31
24-208 (Common Space Types:Conference/Meeting/Multipurpose)				
AL13: AL13: 8ft recessed coronet: LED Linear 33W:	2	1	60	60
25-209 (Common Space Types:Copy/Print Room)				
AL02C: AL02C: ZL1N 96inch: LED Linear 33W:	1	1	48	48
26-210 Mech (Common Space Types:Electrical/Mechanical)				
BL02: BL02: BoH Linear: LED Other Fixture Unit 60W:	1	5	61	305
BL01: BL01: BoH Linear: LED Linear 33W:	1	1	31	31
27-213 stair 2 (Common Space Types:Stairwell)				
AL02C: AL02C: ZL1N 96inch: LED Linear 33W:	1	2	48	96
			Total Proposed Watts =	8468

Interior Lighting PASSES: Design 36% better than code

Interior Lighting Compliance Statement

Compliance Statement: The proposed interior lighting design represented in this document is consistent with the building plans, specifications, and other calculations submitted with this permit application. The proposed interior lighting systems have been designed to meet the 2020 New York State Energy Conservation Construction Code requirements in COM*check* Version COMcheckWeb and to comply with any applicable mandatory requirements listed in the Inspection Checklist.

Name - Title Signature Date

COM*check* Software Version COMcheckWeb

Exterior Lighting Compliance Certificate

Project Information

Energy Code: 2020 New York State Energy Conservation Construction Code
Project Title: Storm King CFM Building
Project Type: New Construction
Exterior Lighting Zone 2 (Light industrial area with limited nighttime use (LZ2))

Construction Site:

Owner/Agent:
Storm King Art Center
1 Museum Rd
New Windsor
Windsor, New York 12553
8455343115

Designer/Contractor:

Allowed Exterior Lighting Power

A Area/Surface Category	B Quantity	C Allowed Watts /	D Tradable Wattage	E Allowed Watts (B X C)
Driveway	28200 ft2	0.04	Yes	1128
			Total Tradable Watts (a) =	1128
			Total Allowed Watts =	1128
			Total Allowed Supplemental Watts (b) =	400

(a) Wattage tradeoffs are only allowed between tradable areas/surfaces.
(b) A supplemental allowance equal to 400 watts may be applied toward compliance of both non-tradable and tradable areas/surfaces.

Proposed Exterior Lighting Power

A Fixture ID : Description / Lamp / Wattage Per Lamp / Ballast	B Lamps/ Fixture	C # of Fixture	D Fixture Watt.	E (C X D)
Driveway (28200 ft2): Tradable Wattage				
AWS05: AWS05: Palco: LED Other Fixture Unit 80W:	1	8	80	640
AWS04: AWS04: Palco: LED A Lamp 13W:	1	5	16	80
			Total Tradable Proposed Watts =	720

Exterior Lighting PASSES: Design 53% better than code

Exterior Lighting Compliance Statement

Compliance Statement: The proposed exterior lighting design represented in this document is consistent with the building plans, specifications, and other calculations submitted with this permit application. The proposed exterior lighting systems have been designed to meet the 2020 New York State Energy Conservation Construction Code requirements in COM*check* Version COMcheckWeb and to comply with any applicable mandatory requirements listed in the Inspection Checklist.

Name - Title Signature Date

COM*check* Software Version COMcheckWeb

Inspection Checklist

Energy Code: 2020 New York State Energy Conservation Construction Code

Requirements: 100.0% were addressed directly in the COM*check* software

Text in the "Comments/Assumptions" column is provided by the user in the COMcheck Requirements screen. For each requirement, the user certifies that a code requirement will be met and how that is documented, or that an exception is being claimed. Where compliance is itemized in a separate table, a reference to that table is provided.

Section # & Req.ID	Plan Review	Complies?	Comments/Assumptions
C103.2 [PR4][1]	Plans, specifications, and/or calculations provide all information with which compliance can be determined for the interior lighting and electrical systems and equipment and document where exceptions to the standard are claimed. Information provided should include interior lighting power calculations, wattage of bulbs and ballasts, transformers and control devices.	☐Complies ☐Does Not ☐Not Observable ☐Not Applicable	Requirement will be met.
C103.2 [PR8][1]	Plans, specifications, and/or calculations provide all information with which compliance can be determined for the exterior lighting and electrical systems and equipment and document where exceptions to the standard are claimed. Information provided should include exterior lighting power calculations, wattage of bulbs and ballasts, transformers and control devices.	☐Complies ☐Does Not ☐Not Observable ☐Not Applicable	Requirement will be met.

Additional Comments/Assumptions:

1 High Impact (Tier 1) 2 Medium Impact (Tier 2) 3 Low Impact (Tier 3)

Section # & Req.ID	Rough-In Electrical Inspection	Complies?	Comments/Assumptions
C405.2.2.2 [EL22][1]	Spaces required to have light-reduction controls have a manual control that allows the occupant to reduce the connected lighting load in a reasonably uniform illumination pattern >= 50 percent.	☐Complies ☐Does Not ☐Not Observable ☐Not Applicable	Requirement will be met.
C405.2.1, C405.2.1.1 [EL18][1]	Occupancy sensors installed in classrooms/lecture/training rooms, conference/meeting/multipurpose rooms, copy/print rooms, lounges/breakrooms, enclosed offices, open plan office areas, restrooms, storage rooms, locker rooms, warehouse storage areas, and other spaces <= 300 sqft that are enclosed by floor-to-ceiling height partitions. Reference section language C405.2.1.2 for control function in warehouses and section C405.2.1.3 for open plan office spaces.	☐Complies ☐Does Not ☐Not Observable ☐Not Applicable	Requirement will be met.
C405.2.1.2 [EL19][1]	Occupancy sensors control function in warehouses: In warehouses, the lighting in aisleways and open areas is controlled with occupant sensors that automatically reduce lighting power by 50% or more when the areas are unoccupied. The occupant sensors control lighting in each aisleway independently and do not control lighting beyond the aisleway being controlled by the sensor.	☐Complies ☐Does Not ☐Not Observable ☐Not Applicable	**Exception:** Requirement does not apply.
C405.2.1.3 [EL20][1]	Occupant sensor control function in open plan office areas: Occupant sensor controls in open office spaces >= 300 sq.ft. have controls 1) configured so that general lighting can be controlled separately in control zones with floor areas <= 600 sq.ft. within the space, 2) automatically turn off general lighting in all control zones within 20 minutes after all occupants have left the space, 3) are configured so that general lighting power in each control zone is reduced by >= 80% of the full zone general lighting power within 20 minutes of all occupants leaving that control zone, and 4) are configured such that any daylight responsive control will activate space general lighting or control zone general lighting only when occupancy for the same area is detected.	☐Complies ☐Does Not ☐Not Observable ☐Not Applicable	Requirement will be met.
C405.2.2, C405.2.2.1, C405.2.2.2 [EL21][1]	Each area not served by occupancy sensors (per C405.2.1) have time-switch controls and functions detailed in sections C405.2.2.1 and C405.2.2.2.	☐Complies ☐Does Not ☐Not Observable ☐Not Applicable	Requirement will be met.

1 High Impact (Tier 1) 2 Medium Impact (Tier 2) 3 Low Impact (Tier 3)

Section # & Req.ID	Rough-In Electrical Inspection	Complies?	Comments/Assumptions
C405.2.3, C405.2.3.1, C405.2.3.2 [EL23][1]	Daylight zones provided with individual controls that control the lights independent of general area lighting. See code section C405.2.3 Daylight-responsive controls for applicable spaces. C405.2.3.1 Daylight responsive control function and section C405.2.3.2 Sidelit zone.	☐Complies ☐Does Not ☐Not Observable ☐Not Applicable	Requirement will be met.
C405.2.4 [EL26][1]	Separate lighting control devices for specific uses installed per approved lighting plans.	☐Complies ☐Does Not ☐Not Observable ☐Not Applicable	Requirement will be met.
C405.2.4 [EL27][1]	Additional interior lighting power allowed for special functions per the approved lighting plans and is automatically controlled and separated from general lighting.	☐Complies ☐Does Not ☐Not Observable ☐Not Applicable	Requirement will be met.
C405.2.5 [EL28][1]	Manual controls required by the energy code are in a location with ready access to occupants and located where the controlled lights are visible, or identify the area served and their status.	☐Complies ☐Does Not ☐Not Observable ☐Not Applicable	Requirement will be met.
C405.2.6 [EL30][1]	Automatic lighting controls for exterior lighting installed. Controls will be daylight controlled, set based on business operation time-of-day, or reduce connected lighting > 30%.	☐Complies ☐Does Not ☐Not Observable ☐Not Applicable	Requirement will be met.
C405.3 [EL6][1]	Exit signs do not exceed 5 watts per face.	☐Complies ☐Does Not ☐Not Observable ☐Not Applicable	Requirement will be met.

Additional Comments/Assumptions:

1 High Impact (Tier 1) 2 Medium Impact (Tier 2) 3 Low Impact (Tier 3)

Section # & Req.ID	Final Inspection	Complies?	Comments/Assumptions
C303.3, C408.2.5.2 [FI17][1]	Furnished O&M instructions for systems and equipment to the building owner or designated representative.	☐Complies ☐Does Not ☐Not Observable ☐Not Applicable	Requirement will be met.
C405.4.1 [FI18][1]	Interior installed lamp and fixture lighting power is consistent with what is shown on the approved lighting plans, demonstrating proposed watts are less than or equal to allowed watts.	☐Complies ☐Does Not ☐Not Observable ☐Not Applicable	*See the Interior Lighting fixture schedule for values.*
C405.5.1 [FI19][1]	Exterior lighting power is consistent with what is shown on the approved lighting plans, demonstrating proposed watts are less than or equal to allowed watts.	☐Complies ☐Does Not ☐Not Observable ☐Not Applicable	*See the Exterior Lighting fixture schedule for values.*
C408.2.5.1 [FI16][1]	Furnished as-built drawings for electric power systems within 90 days of system acceptance.	☐Complies ☐Does Not ☐Not Observable ☐Not Applicable	Requirement will be met.
C408.3 [FI33][1]	Lighting systems have been tested to ensure proper calibration, adjustment, programming, and operation.	☐Complies ☐Does Not ☐Not Observable ☐Not Applicable	Requirement will be met.

Additional Comments/Assumptions:

1 High Impact (Tier 1) 2 Medium Impact (Tier 2) 3 Low Impact (Tier 3)

Owner
Storm King Art Center
1 Museum Road
New Windsor, NY 12553
+1 (845) 534-3115

Design Architect
heneghan peng architects
14-16 Lord Edward Street
Dublin, D02 YC63, IE
+353 1 633 9000

Executive Architect
WXY Architecture + Urban Design
224 Centre Street, 5th Floor
New York, NY 10013
+1 (212) 219-1953

Landscape Architect
Gustafson Porter + Bowman
1 Cobham Mews
London, MW1 9SB, UK
+44 020 7284 8950

Reed Hilderbrand LLC
33 Whitney Avenue, 3rd Floor
New Haven, CT, US 06510
+1 (617) 923-2422

Structural & Lighting
ARUP
77 Water Street
New York, NY, US 10005
+1 (212) 896-3000

MEPF & IT
BuroHappold
100 Broadway #23
New York, NY, US 10005
+1 (212) 616-0228

Civil
VHB
100 Great Oaks Blvd., Suite 118
Albany, NY, US 12203
+1 (518) 389-3606

AV & Acoustics
LSTN Consultants
76 Beaver Street, 2nd Floor
New York, NY, US 10005
+1 (347) 788-0810

Facade
Front Inc.
100 E. Broadway Street, #501
New York, NY, US 10002
+1 (212) 242-2220

Key Plan

Description	Date
Filing Set	06/17/22

Project

Storm King Art Center

C.F.M. Building

Seal

NOT FOR CONSTRUCTION

Drawing Title

Energy Code & COMcheck

Date	06/17/22
Scale	
Drawing Number	EN-C-003
Sheet Size	ARCH D

COM*check* Software Version COMcheckWeb
Mechanical Compliance Certificate

Project Information

Energy Code: 2020 New York State Energy Conservation Construction Code
Project Title: Storm King - CFM Building
Location: New Windsor, New York
Climate Zone: 5a
Project Type: New Construction

Construction Site:
Storm King - CFM Building
New Windsor, New York 12553

Owner/Agent:
Storm King Art Center
1 Museum Rd
New Windsor, New York 12553
854-534-3115

Designer/Contractor:
WXY Architecture + Urban Design
25 Park Place, 5th Floor
New York, New York 10007
212-219-1953

Additional Efficiency Package(s)
Credits: 1.0 Required 1.0 Proposed
Enhanced Envelope Performance, 1.0 credit

Mechanical Systems List

Quantity System Type & Description

2 ACCU TURYE0964AN40A (Unknown):
VRF Condensing Unit, Air Cooled w/ Heat Recovery Heat Pump
Heating Mode: Capacity = 108 kBtu/h,
No minimum efficiency requirement applies
Cooling Mode: Capacity = 96 kBtu/h,
No minimum efficiency requirement applies
Fan System: None

4 FCU TPKFYP006BM142B (Single Zone):
Cooling: 1 each - VRF Zone Fan Unit, Capacity = 6 kBtu/h, Unknown Economizer
No minimum efficiency requirement applies
Fan System: FCU TPKFYP006BM142B -- Compliance (Motor nameplate HP and fan efficiency method) : Passes

Fans:
FAN 1 Supply, Single-Zone VAV, 210 CFM, 0.1 motor nameplate hp, 0.0 fan efficiency grade, 0.0 total fan efficiency, 0.0 design fan efficiency , fan exception: Single fan <= 5HP

2 FCU TPEFYP015MA143A (Single Zone):
Cooling: 1 each - VRF Zone Fan Unit, Capacity = 15 kBtu/h, Unknown Economizer
No minimum efficiency requirement applies
Fan System: FCU TPEFYP015MA143A -- Compliance (Motor nameplate HP and fan efficiency method) : Passes

Fans:
FAN 1 Supply, Single-Zone VAV, 494 CFM, 0.1 motor nameplate hp, 0.0 fan efficiency grade, 0.0 total fan efficiency, 0.0 design fan efficiency , fan exception: Single fan <= 5HP

3 FCU TPEFYP006MA143A (Single Zone):
Cooling: 1 each - VRF Zone Fan Unit, Capacity = 6 kBtu/h, Unknown Economizer
No minimum efficiency requirement applies
Fan System: FCU TPEFYP006MA143A -- Compliance (Motor nameplate HP and fan efficiency method) : Passes

Fans:
FAN 1 Supply, Single-Zone VAV, 300 CFM, 0.1 motor nameplate hp, 0.0 fan efficiency grade, 0.0 total fan efficiency, 0.0 design fan efficiency , fan exception: Fan array <= 5 total HP

1 FCU PLFY-P40VEM-A (Single Zone):
Cooling: 1 each - VRF Zone Fan Unit, Capacity = 15 kBtu/h, Unknown Economizer
No minimum efficiency requirement applies
Fan System: FCU PLFY-P40VEM-A -- Compliance (Motor nameplate HP and fan efficiency method) : Passes

Quantity System Type & Description

Fans:
FAN 1 Supply, Single-Zone VAV, 636 CFM, 0.1 motor nameplate hp, 0.0 fan efficiency grade, 0.0 total fan efficiency, 0.0 design fan efficiency , fan exception: Single fan <= 5HP

1 FCU TPEFYP012MA143A (Single Zone):
Cooling: 1 each - VRF Zone Fan Unit, Capacity = 12 kBtu/h, Unknown Economizer
No minimum efficiency requirement applies
Fan System: FCU TPEFYP012MA143A -- Compliance (Motor nameplate HP and fan efficiency method) : Passes

Fans:
FAN 1 Supply, Single-Zone VAV, 371 CFM, 0.1 motor nameplate hp, 0.0 fan efficiency grade, 0.0 total fan efficiency, 0.0 design fan efficiency , fan exception: Single fan <= 5HP

1 FCU TPEFYP024MH142A (Single Zone):
Cooling: 1 each - VRF Zone Fan Unit, Capacity = 24 kBtu/h, Unknown Economizer
No minimum efficiency requirement applies
Fan System: FCU TPEFYP024MH142A -- Compliance (Motor nameplate HP and fan efficiency method) : Passes

Fans:
FAN 1 Supply, Single-Zone VAV, 671 CFM, 0.5 motor nameplate hp, 0.0 fan efficiency grade, 0.0 total fan efficiency, 0.0 design fan efficiency , fan exception: Single fan <= 5HP

2 FCU TPKFYP008HM142A (Single Zone):
Cooling: 1 each - VRF Zone Fan Unit, Capacity = 8 kBtu/h, Unknown Economizer
No minimum efficiency requirement applies
Fan System: FCU TPKFYP008HM142A -- Compliance (Motor nameplate HP and fan efficiency method) : Passes

Fans:
FAN 1 Supply, Single-Zone VAV, 413 CFM, 0.1 motor nameplate hp, 0.0 fan efficiency grade, 0.0 total fan efficiency, 0.0 design fan efficiency , fan exception: Single fan <= 5HP

1 ERV-C-2-1 (Single Zone):
Cooling: 1 each - Hydronic Coil, Capacity = 381 kBtu/h, Air-Cooled Condenser, Air Economizer
No minimum efficiency requirement applies
Fan System: ERV-C-2-1 | OPEN WORKSPACE / STORAGE -- Compliance (Brake HP and fan efficiency method) : Passes

Fans:
FAN 8 Supply, Single-Zone VAV, 5000 CFM, 7.5 motor nameplate hp, 6.0 design brake hp (6.0 max. BHP), 71.0 fan efficiency grade, 66.4 total fan efficiency, 65.6 design fan efficiency
Pressure Drop Credits:
Energy recover device, other than Coil Runaround Loop, 143.1130 credit

1 ERV-C-2-2 (Single Zone):
Cooling: 1 each - Hydronic Coil, Capacity = 11 kBtu/h, Air-Cooled Condenser, Unknown Economizer
No minimum efficiency requirement applies
Fan System: ERV-C-2-2 | WOOD WORKING -- Compliance (Motor nameplate HP and fan efficiency method) : Passes

Fans:
FAN 9 Supply, Single-Zone VAV, 1200 CFM, 1.5 motor nameplate hp, 85.0 fan efficiency grade, 85.1 total fan efficiency, 76.0 design fan efficiency , fan exception: Fan array <= 5 total HP

1 ERV-C-2-3 (Multiple-Zone):
Cooling: 1 each - Hydronic Coil, Capacity = 9 kBtu/h, Air-Cooled Condenser, Unknown Economizer
No minimum efficiency requirement applies
Fan System: ERV-C-2-3 | OFFICES, STORAGE, RESTROOMS -- Compliance (Motor nameplate HP and fan efficiency method) : Passes

Fans:
FAN 10 Supply, Multi-Zone VAV, 900 CFM, 0.5 motor nameplate hp, 0.0 fan efficiency grade, 0.0 total fan efficiency, 0.0 design fan efficiency , fan exception: Single fan <= 5HP

1 Water Heater:
Electric Storage Water Heater, Capacity: 80 gallons w/ Circulation Pump
Proposed Efficiency: 0.05 SL, %/h (if > 12 kW), Required Efficiency: 0.64 SL, %/h (if > 12 kW)

Mechanical Compliance Statement

Compliance Statement: The proposed mechanical design represented in this document is consistent with the building plans, specifications, and other calculations submitted with this permit application. The proposed mechanical systems have been designed to meet the 2020 New York State Energy Conservation Construction Code requirements in COM*check* Version COMcheckWeb and to comply with any applicable mandatory requirements listed in the Inspection Checklist.

Name - Title ____________ Signature ____________ Date ____________

COM*check* Software Version COMcheckWeb
Inspection Checklist

Energy Code: 2020 New York State Energy Conservation Construction Code

Requirements: 100.0% were addressed directly in the COM*check* software

Text in the "Comments/Assumptions" column is provided by the user in the COMcheck Requirements screen. For each requirement, the user certifies that a code requirement will be met and how that is documented, or that an exception is being claimed. Where compliance is itemized in a separate table, a reference to that table is provided.

Section # & Req.ID	Plan Review	Complies?	Comments/Assumptions
C103.2 [PR2][1]	Plans, specifications, and/or calculations provide all information with which compliance can be determined for the mechanical systems and equipment and document where exceptions to the standard are claimed. Load calculations per acceptable engineering standards and handbooks.	☐Complies ☐Does Not ☐Not Observable ☐Not Applicable	Requirement will be met.
C103.2 [PR3][1]	Plans, specifications, and/or calculations provide all information with which compliance can be determined for the service water heating systems and equipment and document where exceptions to the standard are claimed. Hot water system sized per manufacturer's sizing guide.	☐Complies ☐Does Not ☐Not Observable ☐Not Applicable	Requirement will be met.

Additional Comments/Assumptions:

1 High Impact (Tier 1) | 2 Medium Impact (Tier 2) | 3 Low Impact (Tier 3)

Section # & Req.ID	Footing / Foundation Inspection	Complies?	Comments/Assumptions
C403.12.2, C403.12.3 [FO9][3]	Snow/ice melting system and freeze protection systems have sensors and controls configured to limit service for pavement temperature and outdoor temperature. future connection to controls.	☐Complies ☐Does Not ☐Not Observable ☐Not Applicable	**Exception:** Requirement does not apply.

Additional Comments/Assumptions:

1 High Impact (Tier 1) | 2 Medium Impact (Tier 2) | 3 Low Impact (Tier 3)

Section # & Req.ID	Plumbing Rough-In Inspection	Complies?	Comments/Assumptions
C404.5, C404.5.1, C404.5.2 [PL6][3]	Heated water supply piping conforms to pipe length and volume requirements. Refer to section details.	☐Complies ☐Does Not ☐Not Observable ☐Not Applicable	**Exception:** Requirement does not apply. **Location on plans/spec:** No heated water in this system. See M-C-201 and M-C-202.
C404.5, C404.5.1, C404.5.2 [PL6][3]	Heated water supply piping conforms to pipe length and volume requirements. Refer to section details.	☐Complies ☐Does Not ☐Not Observable ☐Not Applicable	**Exception:** Requirement does not apply. **Location on plans/spec:** No heated water in this system. See M-C-201 and M-C-202.
C404.5, C404.5.1, C404.5.2 [PL6][3]	Heated water supply piping conforms to pipe length and volume requirements. Refer to section details.	☐Complies ☐Does Not ☐Not Observable ☐Not Applicable	**Exception:** Requirement does not apply. **Location on plans/spec:** No heated water in this system. See M-C-201 and M-C-202.
C404.5, C404.5.1, C404.5.2 [PL6][3]	Heated water supply piping conforms to pipe length and volume requirements. Refer to section details.	☐Complies ☐Does Not ☐Not Observable ☐Not Applicable	**Exception:** Requirement does not apply. **Location on plans/spec:** No heated water in this system. See M-C-201 and M-C-202.
C404.5, C404.5.1, C404.5.2 [PL6][3]	Heated water supply piping conforms to pipe length and volume requirements. Refer to section details.	☐Complies ☐Does Not ☐Not Observable ☐Not Applicable	**Exception:** Requirement does not apply. **Location on plans/spec:** No heated water in this system. See M-C-201 and M-C-202.
C404.5, C404.5.1, C404.5.2 [PL6][3]	Heated water supply piping conforms to pipe length and volume requirements. Refer to section details.	☐Complies ☐Does Not ☐Not Observable ☐Not Applicable	**Exception:** Requirement does not apply. **Location on plans/spec:** No heated water in this system. See M-C-201 and M-C-202.
C404.5, C404.5.1, C404.5.2 [PL6][3]	Heated water supply piping conforms to pipe length and volume requirements. Refer to section details.	☐Complies ☐Does Not ☐Not Observable ☐Not Applicable	**Exception:** Requirement does not apply. **Location on plans/spec:** No heated water in this system. See M-C-201 and M-C-202.
C404.5, C404.5.1, C404.5.2 [PL6][3]	Heated water supply piping conforms to pipe length and volume requirements. Refer to section details.	☐Complies ☐Does Not ☐Not Observable ☐Not Applicable	**Exception:** Requirement does not apply. **Location on plans/spec:** No heated water in this system. See M-C-201 and M-C-202.
C404.5, C404.5.1, C404.5.2 [PL6][3]	Heated water supply piping conforms to pipe length and volume requirements. Refer to section details.	☐Complies ☐Does Not ☐Not Observable ☐Not Applicable	**Exception:** Requirement does not apply.
C404.5, C404.5.1, C404.5.2 [PL6][3]	Heated water supply piping conforms to pipe length and volume requirements. Refer to section details.	☐Complies ☐Does Not ☐Not Observable ☐Not Applicable	**Exception:** Requirement does not apply.
C404.5, C404.5.1, C404.5.2 [PL6][3]	Heated water supply piping conforms to pipe length and volume requirements. Refer to section details.	☐Complies ☐Does Not ☐Not Observable ☐Not Applicable	**Exception:** Requirement does not apply.

1 High Impact (Tier 1) | 2 Medium Impact (Tier 2) | 3 Low Impact (Tier 3)

Section # & Req.ID	Plumbing Rough-In Inspection	Complies?	Comments/Assumptions
C404.5, C404.5.1, C404.5.2 [PL6][3]	Heated water supply piping conforms to pipe length and volume requirements. Refer to section details.	☐Complies ☐Does Not ☐Not Observable ☐Not Applicable	Requirement will be met.
C404.6.1, C404.6.2 [PL3][1]	Automatic time switches installed to automatically switch off the recirculating hot-water system or heat trace.	☐Complies ☐Does Not ☐Not Observable ☐Not Applicable	Requirement will be met.
C404.6.3 [PL7][3]	Pumps that circulate water between a heater and storage tank have controls that limit operation from startup to <= 5 minutes after end of heating cycle.	☐Complies ☐Does Not ☐Not Observable ☐Not Applicable	**Exception:** Requirement does not apply.
C404.6.3 [PL7][3]	Pumps that circulate water between a heater and storage tank have controls that limit operation from startup to <= 5 minutes after end of heating cycle.	☐Complies ☐Does Not ☐Not Observable ☐Not Applicable	**Exception:** Requirement does not apply.
C404.6.3 [PL7][3]	Pumps that circulate water between a heater and storage tank have controls that limit operation from startup to <= 5 minutes after end of heating cycle.	☐Complies ☐Does Not ☐Not Observable ☐Not Applicable	**Exception:** Requirement does not apply.
C404.6.3 [PL7][3]	Pumps that circulate water between a heater and storage tank have controls that limit operation from startup to <= 5 minutes after end of heating cycle.	☐Complies ☐Does Not ☐Not Observable ☐Not Applicable	**Exception:** Requirement does not apply.
C404.6.3 [PL7][3]	Pumps that circulate water between a heater and storage tank have controls that limit operation from startup to <= 5 minutes after end of heating cycle.	☐Complies ☐Does Not ☐Not Observable ☐Not Applicable	**Exception:** Requirement does not apply.
C404.6.3 [PL7][3]	Pumps that circulate water between a heater and storage tank have controls that limit operation from startup to <= 5 minutes after end of heating cycle.	☐Complies ☐Does Not ☐Not Observable ☐Not Applicable	**Exception:** Requirement does not apply.
C404.6.3 [PL7][3]	Pumps that circulate water between a heater and storage tank have controls that limit operation from startup to <= 5 minutes after end of heating cycle.	☐Complies ☐Does Not ☐Not Observable ☐Not Applicable	**Exception:** Requirement does not apply.
C404.6.3 [PL7][3]	Pumps that circulate water between a heater and storage tank have controls that limit operation from startup to <= 5 minutes after end of heating cycle.	☐Complies ☐Does Not ☐Not Observable ☐Not Applicable	**Exception:** Requirement does not apply.
C404.6.3 [PL7][3]	Pumps that circulate water between a heater and storage tank have controls that limit operation from startup to <= 5 minutes after end of heating cycle.	☐Complies ☐Does Not ☐Not Observable ☐Not Applicable	**Exception:** Requirement does not apply.
C404.6.3 [PL7][3]	Pumps that circulate water between a heater and storage tank have controls that limit operation from startup to <= 5 minutes after end of heating cycle.	☐Complies ☐Does Not ☐Not Observable ☐Not Applicable	**Exception:** Requirement does not apply.

1 High Impact (Tier 1) | 2 Medium Impact (Tier 2) | 3 Low Impact (Tier 3)

Section # & Req.ID	Plumbing Rough-In Inspection	Complies?	Comments/Assumptions
C404.6.3 [PL7][3]	Pumps that circulate water between a heater and storage tank have controls that limit operation from startup to <= 5 minutes after end of heating cycle.	☐Complies ☐Does Not ☐Not Observable ☐Not Applicable	**Exception:** Requirement does not apply.
C404.6.3 [PL7][3]	Pumps that circulate water between a heater and storage tank have controls that limit operation from startup to <= 5 minutes after end of heating cycle.	☐Complies ☐Does Not ☐Not Observable ☐Not Applicable	Requirement will be met.
C404.7 [PL8][3]	Demand recirculation water systems have controls that start the pump upon receiving a signal from the action of a user of a fixture or appliance and limits the temperature of the water entering the cold-water piping to 104°F.	☐Complies ☐Does Not ☐Not Observable ☐Not Applicable	**Exception:** Requirement does not apply.
C404.7 [PL8][3]	Demand recirculation water systems have controls that start the pump upon receiving a signal from the action of a user of a fixture or appliance and limits the temperature of the water entering the cold-water piping to 104°F.	☐Complies ☐Does Not ☐Not Observable ☐Not Applicable	**Exception:** Requirement does not apply.
C404.7 [PL8][3]	Demand recirculation water systems have controls that start the pump upon receiving a signal from the action of a user of a fixture or appliance and limits the temperature of the water entering the cold-water piping to 104°F.	☐Complies ☐Does Not ☐Not Observable ☐Not Applicable	**Exception:** Requirement does not apply.
C404.7 [PL8][3]	Demand recirculation water systems have controls that start the pump upon receiving a signal from the action of a user of a fixture or appliance and limits the temperature of the water entering the cold-water piping to 104°F.	☐Complies ☐Does Not ☐Not Observable ☐Not Applicable	**Exception:** Requirement does not apply.
C404.7 [PL8][3]	Demand recirculation water systems have controls that start the pump upon receiving a signal from the action of a user of a fixture or appliance and limits the temperature of the water entering the cold-water piping to 104°F.	☐Complies ☐Does Not ☐Not Observable ☐Not Applicable	**Exception:** Requirement does not apply.
C404.7 [PL8][3]	Demand recirculation water systems have controls that start the pump upon receiving a signal from the action of a user of a fixture or appliance and limits the temperature of the water entering the cold-water piping to 104°F.	☐Complies ☐Does Not ☐Not Observable ☐Not Applicable	**Exception:** Requirement does not apply.
C404.7 [PL8][3]	Demand recirculation water systems have controls that start the pump upon receiving a signal from the action of a user of a fixture or appliance and limits the temperature of the water entering the cold-water piping to 104°F.	☐Complies ☐Does Not ☐Not Observable ☐Not Applicable	**Exception:** Requirement does not apply.

1 High Impact (Tier 1) | 2 Medium Impact (Tier 2) | 3 Low Impact (Tier 3)

Section # & Req.ID	Plumbing Rough-In Inspection	Complies?	Comments/Assumptions
C404.7 [PL8][3]	Demand recirculation water systems have controls that start the pump upon receiving a signal from the action of a user of a fixture or appliance and limits the temperature of the water entering the cold-water piping to 104°F.	☐Complies ☐Does Not ☐Not Observable ☐Not Applicable	**Exception:** Requirement does not apply.
C404.7 [PL8][3]	Demand recirculation water systems have controls that start the pump upon receiving a signal from the action of a user of a fixture or appliance and limits the temperature of the water entering the cold-water piping to 104°F.	☐Complies ☐Does Not ☐Not Observable ☐Not Applicable	**Exception:** Requirement does not apply.
C404.7 [PL8][3]	Demand recirculation water systems have controls that start the pump upon receiving a signal from the action of a user of a fixture or appliance and limits the temperature of the water entering the cold-water piping to 104°F.	☐Complies ☐Does Not ☐Not Observable ☐Not Applicable	**Exception:** Requirement does not apply.
C404.7 [PL8][3]	Demand recirculation water systems have controls that start the pump upon receiving a signal from the action of a user of a fixture or appliance and limits the temperature of the water entering the cold-water piping to 104°F.	☐Complies ☐Does Not ☐Not Observable ☐Not Applicable	**Exception:** Requirement does not apply.
C404.7 [PL8][3]	Demand recirculation water systems have controls that start the pump upon receiving a signal from the action of a user of a fixture or appliance and limits the temperature of the water entering the cold-water piping to 104°F.	☐Complies ☐Does Not ☐Not Observable ☐Not Applicable	Requirement will be met.

Additional Comments/Assumptions:

1 High Impact (Tier 1) | 2 Medium Impact (Tier 2) | 3 Low Impact (Tier 3)

Section # & Req.ID	Mechanical Rough-In Inspection	Complies?	Comments/Assumptions
C402.2.6 [ME41][3]	Thermally ineffective panel surfaces of sensible heating panels have insulation >= R-3.5.	☐Complies ☐Does Not ☐Not Observable ☐Not Applicable	Requirement will be met.
C403.11.3 [ME61][2]	HVAC piping insulation insulated in accordance with Table C403.11.3. Insulation exposed to weather is protected from damage and is provided with shielding from solar radiation.	☐Complies ☐Does Not ☐Not Observable ☐Not Applicable	Requirement will be met.
C403.11.3 [ME61][2]	HVAC piping insulation insulated in accordance with Table C403.11.3. Insulation exposed to weather is protected from damage and is provided with shielding from solar radiation.	☐Complies ☐Does Not ☐Not Observable ☐Not Applicable	Requirement will be met.
C403.11.3 [ME61][2]	HVAC piping insulation insulated in accordance with Table C403.11.3. Insulation exposed to weather is protected from damage and is provided with shielding from solar radiation.	☐Complies ☐Does Not ☐Not Observable ☐Not Applicable	Requirement will be met.
C403.11.3 [ME61][2]	HVAC piping insulation insulated in accordance with Table C403.11.3. Insulation exposed to weather is protected from damage and is provided with shielding from solar radiation.	☐Complies ☐Does Not ☐Not Observable ☐Not Applicable	Requirement will be met.
C403.11.3 [ME61][2]	HVAC piping insulation insulated in accordance with Table C403.11.3. Insulation exposed to weather is protected from damage and is provided with shielding from solar radiation.	☐Complies ☐Does Not ☐Not Observable ☐Not Applicable	Requirement will be met.
C403.11.3 [ME61][2]	HVAC piping insulation insulated in accordance with Table C403.11.3. Insulation exposed to weather is protected from damage and is provided with shielding from solar radiation.	☐Complies ☐Does Not ☐Not Observable ☐Not Applicable	Requirement will be met.
C403.11.3 [ME61][2]	HVAC piping insulation insulated in accordance with Table C403.11.3. Insulation exposed to weather is protected from damage and is provided with shielding from solar radiation.	☐Complies ☐Does Not ☐Not Observable ☐Not Applicable	Requirement will be met.
C403.11.3 [ME61][2]	HVAC piping insulation insulated in accordance with Table C403.11.3. Insulation exposed to weather is protected from damage and is provided with shielding from solar radiation.	☐Complies ☐Does Not ☐Not Observable ☐Not Applicable	Requirement will be met.
C403.11.3 [ME61][2]	HVAC piping insulation insulated in accordance with Table C403.11.3. Insulation exposed to weather is protected from damage and is provided with shielding from solar radiation.	☐Complies ☐Does Not ☐Not Observable ☐Not Applicable	Requirement will be met.

1 High Impact (Tier 1) | 2 Medium Impact (Tier 2) | 3 Low Impact (Tier 3)

Section # & Req.ID	Mechanical Rough-In Inspection	Complies?	Comments/Assumptions
C403.11.3 [ME61][2]	HVAC piping insulation insulated in accordance with Table C403.11.3. Insulation exposed to weather is protected from damage and is provided with shielding from solar radiation.	☐Complies ☐Does Not ☐Not Observable ☐Not Applicable	Requirement will be met.
C403.11.3 [ME61][2]	HVAC piping insulation insulated in accordance with Table C403.11.3. Insulation exposed to weather is protected from damage and is provided with shielding from solar radiation.	☐Complies ☐Does Not ☐Not Observable ☐Not Applicable	**Exception:** Requirement does not apply.
C403.8.1 [ME65][3]	HVAC fan systems at design conditions do not exceed allowable fan system motor nameplate hp or fan system bhp.	☐Complies ☐Does Not ☐Not Observable ☐Not Applicable	Requirement will be met. *See the Mechanical Systems list for values.*
C403.8.1 [ME65][3]	HVAC fan systems at design conditions do not exceed allowable fan system motor nameplate hp or fan system bhp.	☐Complies ☐Does Not ☐Not Observable ☐Not Applicable	Requirement will be met. *See the Mechanical Systems list for values.*
C403.8.2 [ME21][2]	HVAC fan motors not oversized beyond allowable limits.	☐Complies ☐Does Not ☐Not Observable ☐Not Applicable	Requirement will be met.
C403.8.3 [ME117][2]	Fans have efficiency grade (FEG) >= 67. The total efficiency of the fan at the design point of operation <= 15% of maximum total efficiency of the fan.	☐Complies ☐Does Not ☐Not Observable ☐Not Applicable	Requirement will be met.
C403.8.3 [ME117][2]	Fans have efficiency grade (FEG) >= 67. The total efficiency of the fan at the design point of operation <= 15% of maximum total efficiency of the fan.	☐Complies ☐Does Not ☐Not Observable ☐Not Applicable	Requirement will be met.
C403.8.4 [ME142][2]	Motors for fans that are not less than 1/12 hp and less than 1 hp are electronically commutated motors or have a minimum motor efficiency of 70 percent. These motors have the means to adjust motor speed.	☐Complies ☐Does Not ☐Not Observable ☐Not Applicable	Requirement will be met. **Location on plans/spec:** "MOTOR CONTROL" column in "M-VRF FCU SCHEDULE" on M-C-601
C403.8.4 [ME142][2]	Motors for fans that are not less than 1/12 hp and less than 1 hp are electronically commutated motors or have a minimum motor efficiency of 70 percent. These motors have the means to adjust motor speed.	☐Complies ☐Does Not ☐Not Observable ☐Not Applicable	Requirement will be met. **Location on plans/spec:** "MOTOR CONTROL" column in "M-VRF FCU SCHEDULE" on M-C-601
C403.8.4 [ME142][2]	Motors for fans that are not less than 1/12 hp and less than 1 hp are electronically commutated motors or have a minimum motor efficiency of 70 percent. These motors have the means to adjust motor speed.	☐Complies ☐Does Not ☐Not Observable ☐Not Applicable	Requirement will be met. **Location on plans/spec:** "MOTOR CONTROL" column in "M-VRF FCU SCHEDULE" on M-C-601
C403.8.4 [ME142][2]	Motors for fans that are not less than 1/12 hp and less than 1 hp are electronically commutated motors or have a minimum motor efficiency of 70 percent. These motors have the means to adjust motor speed.	☐Complies ☐Does Not ☐Not Observable ☐Not Applicable	Requirement will be met. **Location on plans/spec:** "MOTOR CONTROL" column in "M-VRF FCU SCHEDULE" on M-C-601

1 High Impact (Tier 1) | 2 Medium Impact (Tier 2) | 3 Low Impact (Tier 3)

Section # & Req.ID	Mechanical Rough-In Inspection	Complies?	Comments/Assumptions
C403.8.4 [ME142][2]	Motors for fans that are not less than 1/12 hp and less than 1 hp are electronically commutated motors or have a minimum motor efficiency of 70 percent. These motors have the means to adjust motor speed.	☐Complies ☐Does Not ☐Not Observable ☐Not Applicable	Requirement will be met. **Location on plans/spec:** "MOTOR CONTROL" column in "M-VRF FCU SCHEDULE" on M-C-601
C403.8.4 [ME142][2]	Motors for fans that are not less than 1/12 hp and less than 1 hp are electronically commutated motors or have a minimum motor efficiency of 70 percent. These motors have the means to adjust motor speed.	☐Complies ☐Does Not ☐Not Observable ☐Not Applicable	Requirement will be met. **Location on plans/spec:** "MOTOR CONTROL" column in "M-VRF FCU SCHEDULE" on M-C-601
C403.8.4 [ME142][2]	Motors for fans that are not less than 1/12 hp and less than 1 hp are electronically commutated motors or have a minimum motor efficiency of 70 percent. These motors have the means to adjust motor speed.	☐Complies ☐Does Not ☐Not Observable ☐Not Applicable	Requirement will be met. **Location on plans/spec:** "MOTOR CONTROL" column in "M-VRF FCU SCHEDULE" on M-C-601
C403.8.4 [ME142][2]	Motors for fans that are not less than 1/12 hp and less than 1 hp are electronically commutated motors or have a minimum motor efficiency of 70 percent. These motors have the means to adjust motor speed.	☐Complies ☐Does Not ☐Not Observable ☐Not Applicable	Requirement will be met.
C403.8.4 [ME142][2]	Motors for fans that are not less than 1/12 hp and less than 1 hp are electronically commutated motors or have a minimum motor efficiency of 70 percent. These motors have the means to adjust motor speed.	☐Complies ☐Does Not ☐Not Observable ☐Not Applicable	Requirement will be met.
C403.8.4 [ME142][2]	Motors for fans that are not less than 1/12 hp and less than 1 hp are electronically commutated motors or have a minimum motor efficiency of 70 percent. These motors have the means to adjust motor speed.	☐Complies ☐Does Not ☐Not Observable ☐Not Applicable	Requirement will be met.
C403.8.5 [ME143][2]	Each DX cooling system > 65 kBtu and chiller water/evaporative cooling system with fans > 1/4 hp are designed to vary the indoor fan airflow as a function of load and comply with detailed requirements of this section.	☐Complies ☐Does Not ☐Not Observable ☐Not Applicable	**Exception:** Requirement does not apply.
C403.8.5 [ME143][2]	Each DX cooling system > 65 kBtu and chiller water/evaporative cooling system with fans > 1/4 hp are designed to vary the indoor fan airflow as a function of load and comply with detailed requirements of this section.	☐Complies ☐Does Not ☐Not Observable ☐Not Applicable	**Exception:** Requirement does not apply.
C403.8.5 [ME143][2]	Each DX cooling system > 65 kBtu and chiller water/evaporative cooling system with fans > 1/4 hp are designed to vary the indoor fan airflow as a function of load and comply with detailed requirements of this section.	☐Complies ☐Does Not ☐Not Observable ☐Not Applicable	**Exception:** Requirement does not apply.
C403.8.5 [ME143][2]	Each DX cooling system > 65 kBtu and chiller water/evaporative cooling system with fans > 1/4 hp are designed to vary the indoor fan airflow as a function of load and comply with detailed requirements of this section.	☐Complies ☐Does Not ☐Not Observable ☐Not Applicable	**Exception:** Requirement does not apply.

1 High Impact (Tier 1) | 2 Medium Impact (Tier 2) | 3 Low Impact (Tier 3)

Section # & Req.ID	Mechanical Rough-In Inspection	Complies?	Comments/Assumptions
C403.8.5 [ME143][2]	Each DX cooling system > 65 kBtu and chiller water/evaporative cooling system with fans > 1/4 hp are designed to vary the indoor fan airflow as a function of load and comply with detailed requirements of this section.	☐Complies ☐Does Not ☐Not Observable ☐Not Applicable	**Exception:** Requirement does not apply.
C403.8.5 [ME143][2]	Each DX cooling system > 65 kBtu and chiller water/evaporative cooling system with fans > 1/4 hp are designed to vary the indoor fan airflow as a function of load and comply with detailed requirements of this section.	☐Complies ☐Does Not ☐Not Observable ☐Not Applicable	**Exception:** Requirement does not apply.
C403.8.5 [ME143][2]	Each DX cooling system > 65 kBtu and chiller water/evaporative cooling system with fans > 1/4 hp are designed to vary the indoor fan airflow as a function of load and comply with detailed requirements of this section.	☐Complies ☐Does Not ☐Not Observable ☐Not Applicable	**Exception:** Requirement does not apply.
C403.8.5 [ME143][2]	Each DX cooling system > 65 kBtu and chiller water/evaporative cooling system with fans > 1/4 hp are designed to vary the indoor fan airflow as a function of load and comply with detailed requirements of this section.	☐Complies ☐Does Not ☐Not Observable ☐Not Applicable	**Exception:** Where the volume of outdoor air required to comply with the ventilation requirements of the IMC at low speed exceeds the air that would be delivered.
C403.8.5 [ME143][2]	Each DX cooling system > 65 kBtu and chiller water/evaporative cooling system with fans > 1/4 hp are designed to vary the indoor fan airflow as a function of load and comply with detailed requirements of this section.	☐Complies ☐Does Not ☐Not Observable ☐Not Applicable	**Exception:** Requirement does not apply.
C403.8.5 [ME143][2]	Each DX cooling system > 65 kBtu and chiller water/evaporative cooling system with fans > 1/4 hp are designed to vary the indoor fan airflow as a function of load and comply with detailed requirements of this section.	☐Complies ☐Does Not ☐Not Observable ☐Not Applicable	**Exception:** Requirement does not apply.
C403.12.1 [ME71][2]	Systems that heat outside the building envelope are radiant heat systems controlled by an occupancy sensing device or timer switch.	☐Complies ☐Does Not ☐Not Observable ☐Not Applicable	**Exception:** Requirement does not apply.
C403.2.3 [ME55][2]	HVAC equipment efficiency verified.	☐Complies ☐Does Not ☐Not Observable ☐Not Applicable	*See the Mechanical Systems list for values.*
C403.2.1 [ME112][3]	Zone isolation devices and controls installed where applicable.	☐Complies ☐Does Not ☐Not Observable ☐Not Applicable	Requirement will be met.
C403.5.5 [ME113][2]	Fault detection and diagnostics installed with air-cooled unitary DX units having economizers.	☐Complies ☐Does Not ☐Not Observable ☐Not Applicable	**Exception:** Requirement does not apply.
C403.2.2 [ME59][1]	Natural or mechanical ventilation is provided in accordance with International Mechanical Code Chapter 4. Mechanical ventilation has capability to reduce outdoor air supply to minimum per IMC Chapter 4.	☐Complies ☐Does Not ☐Not Observable ☐Not Applicable	Requirement will be met.

1 High Impact (Tier 1) | 2 Medium Impact (Tier 2) | 3 Low Impact (Tier 3)

Section # & Req.ID	Mechanical Rough-In Inspection	Complies?	Comments/Assumptions
C403.7.1 [ME59][1]	Demand control ventilation provided for spaces >500 ft2 and >25 people/1000 ft2 occupant density and served by systems with air side economizer, auto modulating outside air damper control, or design airflow >3,000 cfm.	☐Complies ☐Does Not ☐Not Observable ☐Not Applicable	**Exception:** Systems with energy recovery.
C403.7.2 [ME115][3]	Enclosed parking garage ventilation has automatic contaminant detection and capacity to stage or modulate fans to 50% or less of design capacity.	☐Complies ☐Does Not ☐Not Observable ☐Not Applicable	**Exception:** Requirement does not apply.
C403.7.3 [ME140][3]	Units that provide ventilation air to multiple zones and operate in combination with zone heating and cooling systems do not use heating or heat recovery to warm supply air to a temperature greater than 60°F when representative building loads or outdoor air temperatures indicate that the majority of zones require cooling.	☐Complies ☐Does Not ☐Not Observable ☐Not Applicable	Requirement will be met.
C403.7.6 [ME141][3]	HVAC systems serving guestrooms in Group R-1 buildings with > 50 guestrooms: Each guestroom is provided with controls that automatically manage temperature setpoint and ventilation (see sections C403.7.6.1 and C403.7.6.2).	☐Complies ☐Does Not ☐Not Observable ☐Not Applicable	**Exception:** Requirement does not apply.
C403.7.4 [ME57][1]	Exhaust air energy recovery on systems meeting Table C403.7.4(1) and C403.7.4(2).	☐Complies ☐Does Not ☐Not Observable ☐Not Applicable	Requirement will be met.
C403.7.5 [ME116][3]	Kitchen exhaust systems comply with replacement air and conditioned supply air limitations, and satisfy hood rating requirements and maximum exhaust rate criteria.	☐Complies ☐Does Not ☐Not Observable ☐Not Applicable	**Exception:** Requirement does not apply.
C403.11.1, C403.11.2 [ME60][2]	HVAC ducts and plenums insulated in accordance with C403.11.1 and constructed in accordance with C403.11.2, verification may need to occur during Foundation Inspection.	☐Complies ☐Does Not ☐Not Observable ☐Not Applicable	Requirement will be met.
C403.5, C403.5.1, C403.5.2 [ME62][1]	Air economizers provided where required, meet the requirements for design capacity, control signal, ventilation controls, high-limit shut-off, integrated economizer control, and provide a means to relieve excess outside air during operation.	☐Complies ☐Does Not ☐Not Observable ☐Not Applicable	**Exception:** Heat recovery systems.
C403.5.3.3 [ME124][1]	Air economizers automatically reduce outdoor air intake to the design minimum outdoor air quantity when outdoor air intake will not reduce cooling energy usage. See Table C403.5.3.3 for applicable device types and climate zones.	☐Complies ☐Does Not ☐Not Observable ☐Not Applicable	**Exception:** Requirement does not apply.
C403.5.3.4 [ME125][1]	System capable of relieving excess outdoor air during air economizer operation to prevent overpressurizing the building. The relief air outlet located to avoid recirculation into the building.	☐Complies ☐Does Not ☐Not Observable ☐Not Applicable	Requirement will be met.

1 High Impact (Tier 1) | 2 Medium Impact (Tier 2) | 3 Low Impact (Tier 3)

Section # & Req.ID	Mechanical Rough-In Inspection	Complies?	Comments/Assumptions
C403.5.3.5 [ME126][1]	Return, exhaust/relief and outdoor air dampers used in economizers have motorized dampers that automatically shut when not in use and meet maximum leakage rates. Reference section C403.7.7 for details.	☐Complies ☐Does Not ☐Not Observable ☐Not Applicable	Requirement will be met.
C403.4.1.1 [ME75][2]	Hydronic and multizone HVAC system controls areVAV fans driven by mechanical or electrical variable speed drive per Table C403.4.1.1.	☐Complies ☐Does Not ☐Not Observable ☐Not Applicable	Requirement will be met.
C403.4.1.2 [ME67][2]	VAV fans have static pressure sensors located so controller setpoint <=1.2 w.c..	☐Complies ☐Does Not ☐Not Observable ☐Not Applicable	Requirement will be met.
C403.4.1.3 [ME24][2]	Reset static pressure setpoint for DDC controlled VAV boxes reporting to central controller based on the zones requiring the most pressure.	☐Complies ☐Does Not ☐Not Observable ☐Not Applicable	Requirement will be met.
C403.4.3.1 [ME50][2]	Three-pipe hydronic systems using a common return for hot and chilled water are not used.	☐Complies ☐Does Not ☐Not Observable ☐Not Applicable	Requirement will be met.
C403.4.3.1 [ME50][2]	Three-pipe hydronic systems using a common return for hot and chilled water are not used.	☐Complies ☐Does Not ☐Not Observable ☐Not Applicable	Requirement will be met.
C403.4.3.1 [ME50][2]	Three-pipe hydronic systems using a common return for hot and chilled water are not used.	☐Complies ☐Does Not ☐Not Observable ☐Not Applicable	Requirement will be met.
C403.4.3.3.2 [ME121][3]	Closed-circuit cooling tower within heat pump loop have either automatic bypass valve or lower leakage positive closure dampers. Open-circuit tower within heat pump loop have automatic valve to bypass all heat pump water flow around the tower. Open- or closed-circuit cooling towers used in conjunction with a separate heat exchanger have heat loss by shutting down the circulation pump on the cooling tower loop. Open- or closed circuit cooling towers have a separate heat exchanger to isolate the cooling tower from the heat pump loop, and heat loss is controlled by shutting down the circulation pump on the cooling tower loop.	☐Complies ☐Does Not ☐Not Observable ☐Not Applicable	**Exception:** Requirement does not apply.
C403.4.5 [ME26][3]	Chilled water plants with multiple chillers have capability to reduce flow automatically through the chiller plant when a chiller is shut down. Boiler plants with multiple boilers have the capability to reduce flow automatically through the boiler plant when a boiler is shut down.	☐Complies ☐Does Not ☐Not Observable ☐Not Applicable	Requirement will be met.

1 High Impact (Tier 1) | 2 Medium Impact (Tier 2) | 3 Low Impact (Tier 3)

Owner
Storm King Art Center
1 Museum Road
New Windsor, NY 12553
+1 (845) 534-3115

Design Architect
heneghan peng architects
14-16 Lord Edward Street
Dublin, D02 YC63, IE
+353 1 633 9000

Executive Architect
WXY Architecture + Urban Design
224 Centre Street, 5th Floor
New York, NY 10013
+1 (212) 219-1953

Landscape Architect
Gustafson Porter + Bowman
1 Cobham Mews
London, MW1 9SB, UK
+44 020 7284 8950

Reed Hilderbrand LLC
33 Whitney Avenue, 3rd Floor
New Haven, CT, US 06510
+1 (617) 923-2422

Structural & Lighting
ARUP
77 Water Street
New York, NY, US 10005
+1 (212) 896-3000

MEPF & IT
BuroHappold
100 Broadway #23
New York, NY, US 10005
+1 (212) 616-0228

Civil
VHB
100 Great Oaks Blvd., Suite 118
Albany, NY, US 12203
+1 (518) 389-3606

AV & Acoustics
LSTN Consultants
76 Beaver Street, 2nd Floor
New York, NY, US 10005
+1 (347) 788-0810

Facade
Front Inc.
100 E. Broadway Street, #501
New York, NY, US 10002
+1 (212) 242-2220

Key Plan

Description	Date
Filing Set	06/17/22

Project

Storm King Art Center
C.F.M. Building

Seal

NOT FOR CONSTRUCTION

Drawing Title

Energy Code & COMcheck

Date	06/17/22
Scale	
Drawing Number	EN-C-004
Sheet Size	ARCH D

Section # & Req.ID	Mechanical Rough-In Inspection	Complies?	Comments/Assumptions
C403.4.5 [ME26][1]	Chilled water plants with multiple chillers have capability to reduce flow automatically through the chiller plant when a chiller is shut down. Boiler plants with multiple boilers have the capability to reduce flow automatically through the boiler plant when a boiler is shut down.	☐Complies ☐Does Not ☐Not Observable ☐Not Applicable	Requirement will be met.
C403.4.5 [ME26][1]	Chilled water plants with multiple chillers have capability to reduce flow automatically through the chiller plant when a chiller is shut down. Boiler plants with multiple boilers have the capability to reduce flow automatically through the boiler plant when a boiler is shut down.	☐Complies ☐Does Not ☐Not Observable ☐Not Applicable	Requirement will be met.
C403.6.1 [ME130][1]	Supply air systems serving multiple zones have VAV systems with controls configured to reduce the volume of air reheated, recooled, or mixed in each zone. See section for details.	☐Complies ☐Does Not ☐Not Observable ☐Not Applicable	Requirement will be met.
C403.6.2 [ME131][1]	Single-duct VAV systems use terminal devices configured to reduce the supply of primary supply air before reheating or recooling takes place.	☐Complies ☐Does Not ☐Not Observable ☐Not Applicable	Requirement will be met.
C403.6.3 [ME132][1]	Systems that have 1 warm air duct and 1 cool air duct use terminal devices configured to reduce the flow from one duct to a minimum before mixing of air from the other duct takes place.	☐Complies ☐Does Not ☐Not Observable ☐Not Applicable	**Exception:** Requirement does not apply.
C403.6.4 [ME133][1]	Individual dual-duct or mixing heating and cooling systems with a single fan and with total capacities > 90,000 Btuh not equipped with air economizers.	☐Complies ☐Does Not ☐Not Observable ☐Not Applicable	**Exception:** Requirement does not apply.
C403.6.5 [ME134][1]	Multiple zone HVAC systems have supply air temperature reset controls.	☐Complies ☐Does Not ☐Not Observable ☐Not Applicable	Requirement will be met.
C403.6.7 [ME136][1]	Parallel-flow fan-powered VAV air terminals have automatic controls configured to 1) turn off the terminal fan except when space heating is required or where required for ventilation, 2) turn on the terminal fan as the first stage of heating before the heating coil is activated, and 3) during heating for warmup or setback temperature control, either operate the terminal fan and heating coil without primary air or, reverse the terminal damper logic and provide heating from the central air handler by primary air.	☐Complies ☐Does Not ☐Not Observable ☐Not Applicable	Requirement will be met.

1 High Impact (Tier 1) 2 Medium Impact (Tier 2) 3 Low Impact (Tier 3)

Section # & Req.ID	Mechanical Rough-In Inspection	Complies?	Comments/Assumptions
C403.6.8 [ME137][1]	Systems with DDC of individual zones reporting to the central control panel configured to reset the static pressure setpoint based on zone requiring the most pressure. The DDC is capable of monitoring zone damper positions or have an alternative method of indicating the need for static pressure. See section for details.	☐Complies ☐Does Not ☐Not Observable ☐Not Applicable	Requirement will be met.
C403.6.9 [ME138][1]	Static pressure sensors used to control VAV fans located such that the controller setpoint is <= 1.2 inches w.c.. Where this results in one or more sensors being located downstream of major duct splits, not less than one sensor located on each major branch.	☐Complies ☐Does Not ☐Not Observable ☐Not Applicable	Requirement will be met.
C403.6.6 [ME135][1]	Multiple zone VAV systems with DDC of individual zone boxes have static pressure setpoint reset controls.	☐Complies ☐Does Not ☐Not Observable ☐Not Applicable	Requirement will be met. *See the Mechanical Systems list for values.*
C403.4.1.4 [ME63][2]	Heating for vestibules and air curtains with integral heating include automatic controls that shut off the heating system when outdoor air temperatures > 45F. Vestibule heating and cooling systems controlled by a thermostat in the vestibule with heating setpoint <= 60F and cooling setpoint >= 80F.	☐Complies ☐Does Not ☐Not Observable ☐Not Applicable	**Exception:** Requirement does not apply.
C403.9.5 [ME31][1]	Condenser heat recovery system that can heat water to 85 ºF or provide 60% of peak heat rejection is installed for preheating of service hot water.	☐Complies ☐Does Not ☐Not Observable ☐Not Applicable	Requirement will be met. **Location on plans/spec:** No hydronics
C403.9.5 [ME31][1]	Condenser heat recovery system that can heat water to 85 ºF or provide 60% of peak heat rejection is installed for preheating of service hot water.	☐Complies ☐Does Not ☐Not Observable ☐Not Applicable	Requirement will be met. **Location on plans/spec:** No hydronics
C403.9.5 [ME31][1]	Condenser heat recovery system that can heat water to 85 ºF or provide 60% of peak heat rejection is installed for preheating of service hot water.	☐Complies ☐Does Not ☐Not Observable ☐Not Applicable	Requirement will be met. **Location on plans/spec:** No hydronics
C408.2.2.1 [ME53][1]	Air outlets and zone terminal devices have means for air balancing.	☐Complies ☐Does Not ☐Not Observable ☐Not Applicable	Requirement will be met. **Location on plans/spec:** M-C-002 notes section B.3
C408.2.2.2 [ME54][1]	HVAC hydronic heating and cooling coils have means to balance and have pressure test connections.	☐Complies ☐Does Not ☐Not Observable ☐Not Applicable	Requirement will be met. **Location on plans/spec:** No hydronics
C408.2.2.2 [ME54][1]	HVAC hydronic heating and cooling coils have means to balance and have pressure test connections.	☐Complies ☐Does Not ☐Not Observable ☐Not Applicable	Requirement will be met. **Location on plans/spec:** No hydronics
C408.2.2.2 [ME54][1]	HVAC hydronic heating and cooling coils have means to balance and have pressure test connections.	☐Complies ☐Does Not ☐Not Observable ☐Not Applicable	Requirement will be met. **Location on plans/spec:** No hydronics

1 High Impact (Tier 1) 2 Medium Impact (Tier 2) 3 Low Impact (Tier 3)

Section # & Req.ID	Mechanical Rough-In Inspection	Complies?	Comments/Assumptions
C403.5.1, C403.5.1, C403.5.2 [ME123][1]	Refrigerated display cases, walk-in coolers or walk-in freezers served by remote compressors and remote condensers not located in a condensing unit, have fan-powered condensers that comply with Sections C403.5.1 and refrigeration compressor systems that comply with C403.5.2...	☐Complies ☐Does Not ☐Not Observable ☐Not Applicable	**Exception:** Requirement does not apply.

Additional Comments/Assumptions:

1 High Impact (Tier 1) 2 Medium Impact (Tier 2) 3 Low Impact (Tier 3)

Section # & Req.ID	Final Inspection	Complies?	Comments/Assumptions
C403.3, C408.2.5.3 [FI8][1]	Furnished O&M manuals for HVAC systems within 90 days of system acceptance.	☐Complies ☐Does Not ☐Not Observable ☐Not Applicable	Requirement will be met.
C403.2.2 [FI27][1]	HVAC systems and equipment capacity does not exceed calculated loads.	☐Complies ☐Does Not ☐Not Observable ☐Not Applicable	Requirement will be met.
C403.2.4.1 [FI47][1]	Heating and cooling to each zone is controlled by a thermostat control. Minimum one humidity control device per installed humidification/dehumidification system.	☐Complies ☐Does Not ☐Not Observable ☐Not Applicable	Requirement will be met. **Location on plans/spec:** M-C-101 and M-C-102 show thermostat locations for each FCU.
C403.2.4.1 [FI47][1]	Heating and cooling to each zone is controlled by a thermostat control. Minimum one humidity control device per installed humidification/dehumidification system.	☐Complies ☐Does Not ☐Not Observable ☐Not Applicable	Requirement will be met. **Location on plans/spec:** M-C-101 and M-C-102 show thermostat locations for each FCU.
C403.2.4.1 [FI47][1]	Heating and cooling to each zone is controlled by a thermostat control. Minimum one humidity control device per installed humidification/dehumidification system.	☐Complies ☐Does Not ☐Not Observable ☐Not Applicable	Requirement will be met. **Location on plans/spec:** M-C-101 and M-C-102 show thermostat locations for each FCU.
C403.2.4.1 [FI47][1]	Heating and cooling to each zone is controlled by a thermostat control. Minimum one humidity control device per installed humidification/dehumidification system.	☐Complies ☐Does Not ☐Not Observable ☐Not Applicable	Requirement will be met. **Location on plans/spec:** M-C-101 and M-C-102 show thermostat locations for each FCU.
C403.2.4.1 [FI47][1]	Heating and cooling to each zone is controlled by a thermostat control. Minimum one humidity control device per installed humidification/dehumidification system.	☐Complies ☐Does Not ☐Not Observable ☐Not Applicable	Requirement will be met. **Location on plans/spec:** M-C-101 and M-C-102 show thermostat locations for each FCU.
C403.2.4.1 [FI47][1]	Heating and cooling to each zone is controlled by a thermostat control. Minimum one humidity control device per installed humidification/dehumidification system.	☐Complies ☐Does Not ☐Not Observable ☐Not Applicable	Requirement will be met. **Location on plans/spec:** M-C-101 and M-C-102 show thermostat locations for each FCU.
C403.2.4.1 [FI47][1]	Heating and cooling to each zone is controlled by a thermostat control. Minimum one humidity control device per installed humidification/dehumidification system.	☐Complies ☐Does Not ☐Not Observable ☐Not Applicable	Requirement will be met. **Location on plans/spec:** M-C-101 and M-C-102 show thermostat locations for each FCU.

1 High Impact (Tier 1) 2 Medium Impact (Tier 2) 3 Low Impact (Tier 3)

Section # & Req.ID	Final Inspection	Complies?	Comments/Assumptions
C403.2.4.1 [FI47][1]	Heating and cooling to each zone is controlled by a thermostat control. Minimum one humidity control device per installed humidification/dehumidification system.	☐Complies ☐Does Not ☐Not Observable ☐Not Applicable	Requirement will be met.
C403.2.4.1 [FI47][1]	Heating and cooling to each zone is controlled by a thermostat control. Minimum one humidity control device per installed humidification/dehumidification system.	☐Complies ☐Does Not ☐Not Observable ☐Not Applicable	Requirement will be met.
C403.2.4.1 [FI47][1]	Heating and cooling to each zone is controlled by a thermostat control. Minimum one humidity control device per installed humidification/dehumidification system.	☐Complies ☐Does Not ☐Not Observable ☐Not Applicable	Requirement will be met.
C403.2.4.1 [FI47][1]	Heat pump controls prevent supplemental electric resistance heat from coming on when not needed.	☐Complies ☐Does Not ☐Not Observable ☐Not Applicable	**Exception:** Requirement does not apply.
C403.4.1.2 [FI38][1]	Thermostatic controls have a 5 ºF deadband.	☐Complies ☐Does Not ☐Not Observable ☐Not Applicable	Requirement will be met.
C403.2.4.1.3 [FI20][1]	Temperature controls have setpoint overlap restrictions.	☐Complies ☐Does Not ☐Not Observable ☐Not Applicable	Requirement will be met.
C403.2.4.2 [FI39][1]	Each zone equipped with setback controls using automatic time clock or programmable control system.	☐Complies ☐Does Not ☐Not Observable ☐Not Applicable	Requirement will be met.
C403.2.4.2.1, C403.2.4.2.2 [FI40][1]	Automatic Controls: Setback to 55ºF (heat) and 85ºF (cool); 7-day clock; 2-hour occupant override, 10-hour backup	☐Complies ☐Does Not ☐Not Observable ☐Not Applicable	Requirement will be met.
C403.2.4.2.3 [FI41][1]	Systems include optimum start controls.	☐Complies ☐Does Not ☐Not Observable ☐Not Applicable	Requirement will be met.
C403.2.4.2.3 [FI41][1]	Systems include optimum start controls.	☐Complies ☐Does Not ☐Not Observable ☐Not Applicable	Requirement will be met.
C403.2.4.2.3 [FI41][1]	Systems include optimum start controls.	☐Complies ☐Does Not ☐Not Observable ☐Not Applicable	Requirement will be met.
C403.2.4.2.3 [FI41][1]	Systems include optimum start controls.	☐Complies ☐Does Not ☐Not Observable ☐Not Applicable	Requirement will be met.

1 High Impact (Tier 1) 2 Medium Impact (Tier 2) 3 Low Impact (Tier 3)

Section # & Req.ID	Final Inspection	Complies?	Comments/Assumptions
C403.2.4.2.3 [FI41][1]	Systems include optimum start controls.	☐Complies ☐Does Not ☐Not Observable ☐Not Applicable	Requirement will be met.
C403.2.4.2.3 [FI41][1]	Systems include optimum start controls.	☐Complies ☐Does Not ☐Not Observable ☐Not Applicable	Requirement will be met.
C403.2.4.2.3 [FI41][1]	Systems include optimum start controls.	☐Complies ☐Does Not ☐Not Observable ☐Not Applicable	Requirement will be met.
C403.2.4.2.3 [FI41][1]	Systems include optimum start controls.	☐Complies ☐Does Not ☐Not Observable ☐Not Applicable	Requirement will be met.
C404.3 [FI11][1]	Heat traps installed on supply and discharge piping of non-circulating systems.	☐Complies ☐Does Not ☐Not Observable ☐Not Applicable	Requirement will be met.
C404.4 [FI25][1]	All piping insulated in accordance with section details and Table C403.11.3.	☐Complies ☐Does Not ☐Not Observable ☐Not Applicable	Requirement will be met.
C404.6.1 [FI12][1]	Controls are installed that limit the operation of a recirculation pump installed to maintain temperature of a storage tank. System return pipe is a dedicated return pipe or a cold water supply pipe.	☐Complies ☐Does Not ☐Not Observable ☐Not Applicable	Requirement will be met.
C408.2.1 [FI28][1]	Commissioning plan developed by registered design professional or approved agency.	☐Complies ☐Does Not ☐Not Observable ☐Not Applicable	Requirement will be met.
C408.2.3.1 [FI31][1]	HVAC equipment has been tested to ensure proper operation.	☐Complies ☐Does Not ☐Not Observable ☐Not Applicable	Requirement will be met.
C408.2.3.2 [FI10][1]	HVAC control systems have been tested to ensure proper operation, calibration and adjustment of controls.	☐Complies ☐Does Not ☐Not Observable ☐Not Applicable	Requirement will be met.

1 High Impact (Tier 1) 2 Medium Impact (Tier 2) 3 Low Impact (Tier 3)

Section # & Req.ID	Final Inspection	Complies?	Comments/Assumptions
C408.2.3.3 [FI32][1]	Economizers have been tested to ensure proper operation.	☐Complies ☐Does Not ☐Not Observable ☐Not Applicable	Requirement will be met.
C408.2.4 [FI29][1]	Preliminary commissioning report compiled and certified by registered design professional or approved agency.	☐Complies ☐Does Not ☐Not Observable ☐Not Applicable	Requirement will be met.
C408.2.5.1 [FI7][1]	Furnished HVAC as-built drawings submitted within 90 days of system acceptance.	☐Complies ☐Does Not ☐Not Observable ☐Not Applicable	Requirement will be met.
C408.2.5.3 [FI43][1]	An air and/or hydronic system balancing report is provided for HVAC systems.	☐Complies ☐Does Not ☐Not Observable ☐Not Applicable	Requirement will be met.
C408.2.5.4 [FI30][1]	Final commissioning report due to building owner within 90 days of receipt of certificate of occupancy.	☐Complies ☐Does Not ☐Not Observable ☐Not Applicable	Requirement will be met.

Additional Comments/Assumptions:

1 High Impact (Tier 1) 2 Medium Impact (Tier 2) 3 Low Impact (Tier 3)

Owner
Storm King Art Center
1 Museum Road
New Windsor, NY 12553
+1 (845) 534-3115

Design Architect
heneghan peng architects
14-16 Lord Edward Street
Dublin, D02 YC63, IE
+353 1 633 9000

Executive Architect
WXY Architecture + Urban Design
224 Centre Street, 5th Floor
New York, NY 10013
+1 (212) 219-1953

Landscape Architect
Gustafson Porter + Bowman
1 Cobham Mews
London, MW1 9SB, UK
+44 020 7284 8950

Reed Hilderbrand LLC
33 Whitney Avenue, 3rd Floor
New Haven, CT, US 06510
+1 (617) 923-2422

Structural & Lighting
ARUP
77 Water Street
New York, NY, US 10005
+1 (212) 896-3000

MEPF & IT
BuroHappold
100 Broadway #23
New York, NY, US 10005
+1 (212) 616-0228

Civil
VHB
100 Great Oaks Blvd., Suite 118
Albany, NY, US 12203
+1 (518) 389-3606

AV & Acoustics
LSTN Consultants
76 Beaver Street, 2nd Floor
New York, NY, US 10005
+1 (347) 788-0810

Facade
Front Inc.
100 E. Broadway Street, #501
New York, NY, US 10002
+1 (212) 242-2220

Key Plan

Description	Date
Filing Set	06/17/22

Project

Storm King Art Center

C.F.M. Building

Seal

NOT FOR CONSTRUCTION

Drawing Title

Energy Code & COMcheck

Date	06/17/22
Scale	
Drawing Number	EN-C-005
Sheet Size	ARCH D

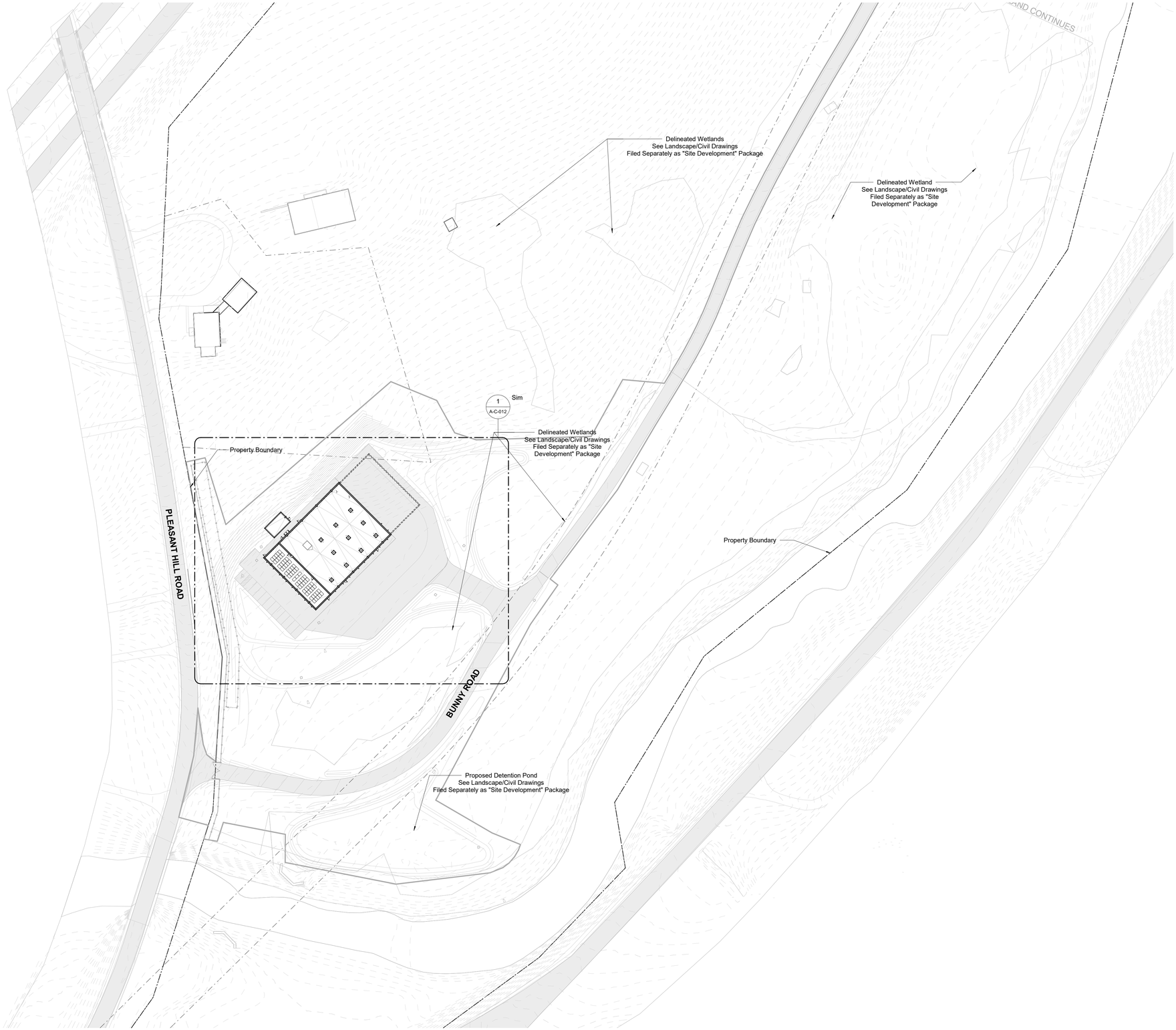

1 Site Plan - Property
1/64" = 1'-0"

Owner
Storm King Art Center
1 Museum Road
New Windsor, NY 12553
+1 (845) 534-3115

Design Architect
heneghan peng architects
14-16 Lord Edward Street
Dublin, D02 YC63
+353 1 633 9000

Executive Architect
WXY Architecture + Urban Design
224 Centre Street, 5th Floor
New York, NY 10013
+1 (212) 219-1953

Landscape Architect
Gustafson Porter + Bowman
1 Cobham Mews
London, MW1 9SB
+44 020 7284 8950

Reed Hilderbrand LLC
33 Whitney Avenue, 3rd Floor
New Haven, CT 06510
+1 (617) 923-2422

Structural & Lighting
ARUP
77 Water Street
New York, NY 10005
+1 (212) 896-3000

MEPF & IT
BuroHappold
100 Broadway #23
New York, NY 10005
+1 (212) 616-0228

Civil
VHB
100 Great Oaks Blvd., Suite 118
Albany, NY 12203
+1 (518) 389-3606

AV & Acoustics
LSTN Consultants
76 Beaver Street, 2nd Floor
New York, NY 10005
+1 (347) 788-0810

Facade
Front Inc.
100 E. Broadway Street, #501
New York, NY 10002
+1 (212) 242-2220

Key Plan

N

Description	Date
Filing Set	06/17/22

Project

Storm King Art Center

C.F.M. Building

Seal

NOT FOR CONSTRUCTION

Drawing Title

Site Plan - Property

Date	06/17/22
Scale	1/64" = 1'-0"
Drawing Number	A-C-011
Sheet Size	ARCH D

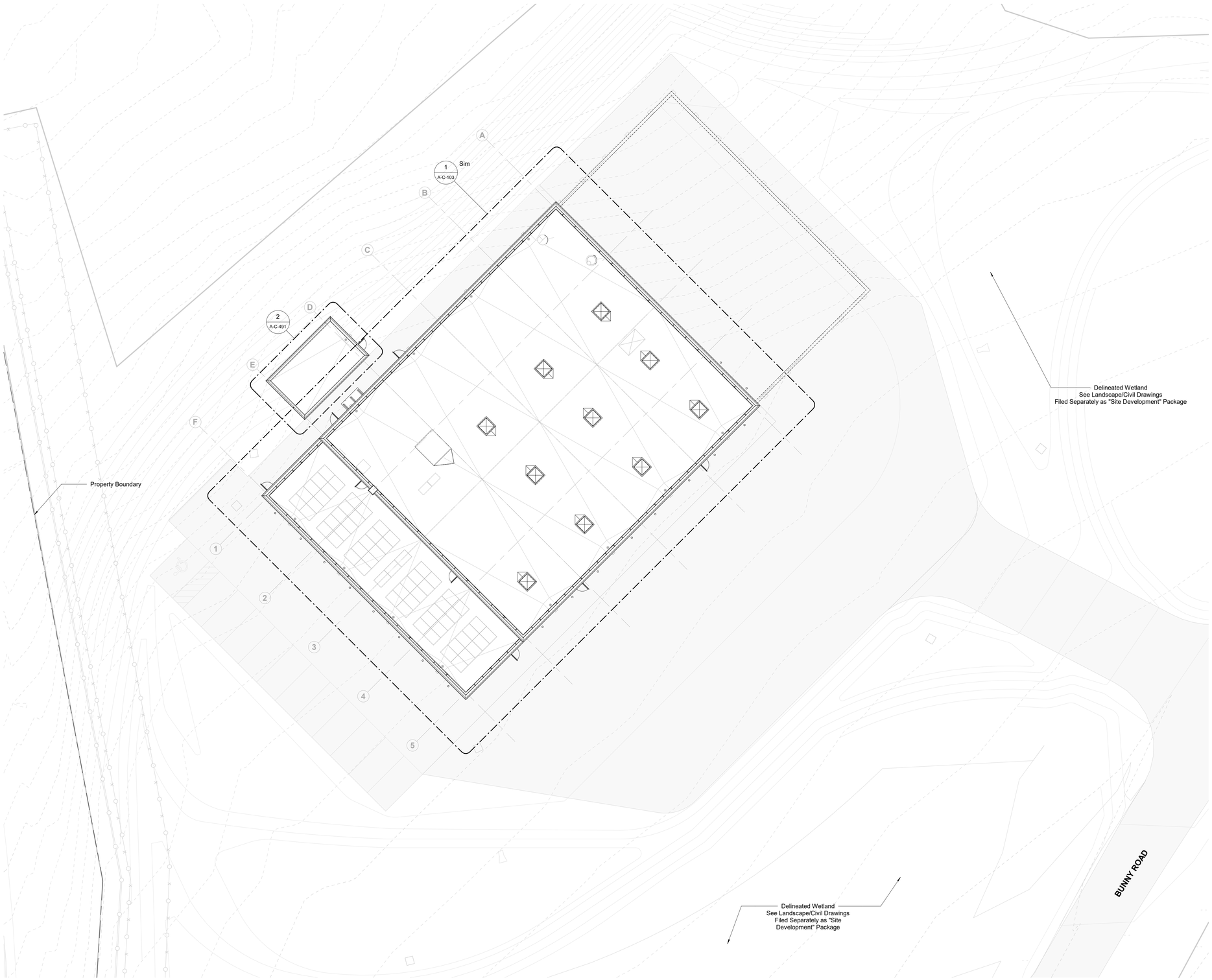

1 Site Plan - Building
1/16" = 1'-0"

Owner
Storm King Art Center
1 Museum Road
New Windsor, NY 12553
+1 (845) 534-3115

Design Architect
heneghan peng architects
14-16 Lord Edward Street
Dublin, D02 YC63
+353 1 633 9000

Executive Architect
WXY Architecture + Urban Design
224 Centre Street, 5th Floor
New York, NY 10013
+1 (212) 219-1953

Landscape Architect
Gustafson Porter + Bowman
1 Cobham Mews
London, MW1 9SB
+44 020 7284 8950

Reed Hilderbrand LLC
33 Whitney Avenue, 3rd Floor
New Haven, CT 06510
+1 (617) 923-2422

Structural & Lighting
ARUP
77 Water Street
New York, NY 10005
+1 (212) 896-3000

MEPF & IT
BuroHappold
100 Broadway #23
New York, NY 10005
+1 (212) 616-0228

Civil
VHB
100 Great Oaks Blvd., Suite 118
Albany, NY 12203
+1 (518) 389-3606

AV & Acoustics
LSTN Consultants
76 Beaver Street, 2nd Floor
New York, NY 10005
+1 (347) 788-0810

Facade
Front Inc.
100 E. Broadway Street, #501
New York, NY 10002
+1 (212) 242-2220

Key Plan

N

Description	Date
Filing Set	06/17/22

Project

Storm King Art Center

C.F.M. Building

Seal

NOT FOR CONSTRUCTION

Drawing Title

Site Plan - Building

Date	06/17/22
Scale	1/16" = 1'-0"
Drawing Number	A-C-012
Sheet Size	ARCH D

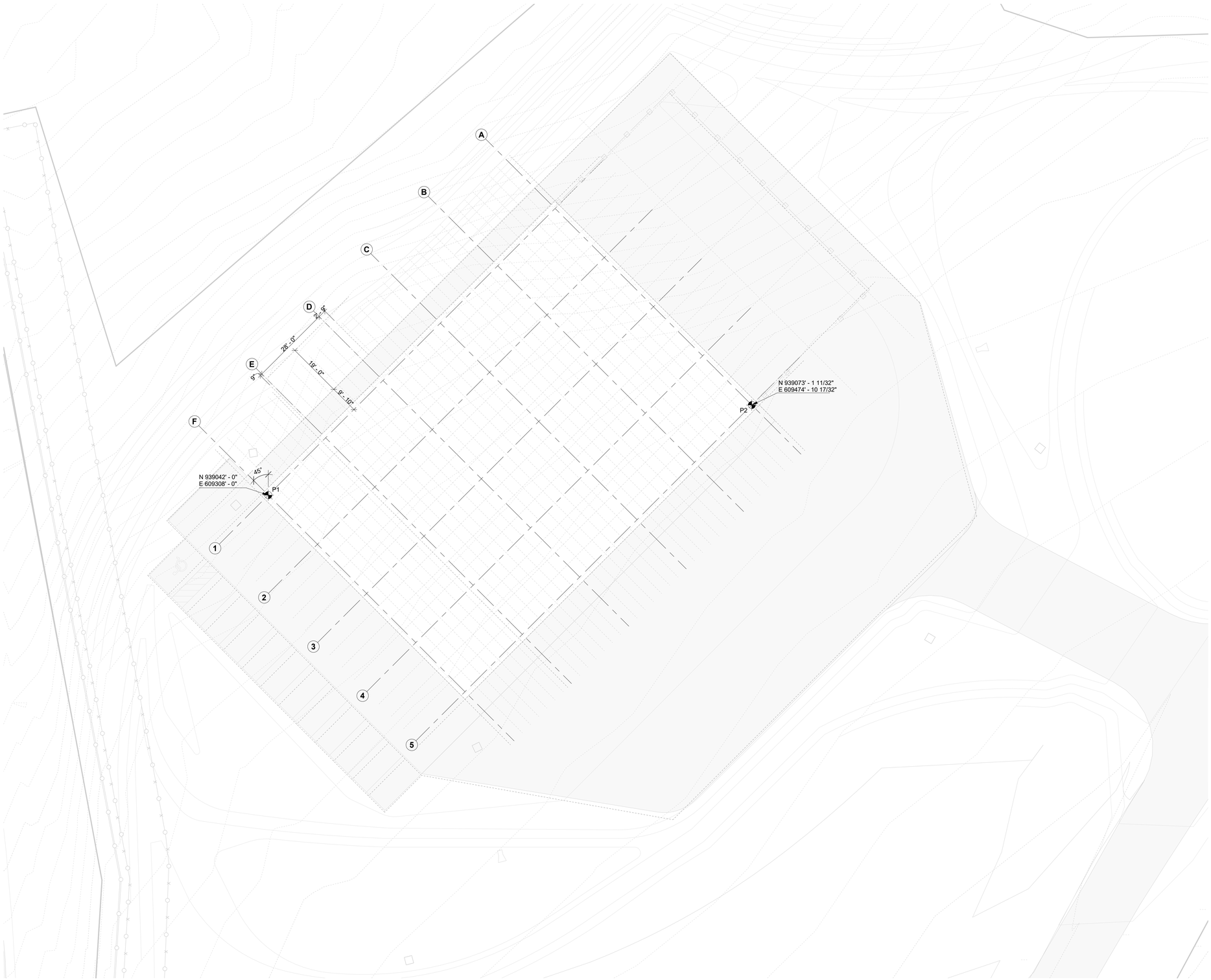

1 Site Plan - Building - Setting Out
1/16" = 1'-0"

Owner
Storm King Art Center
1 Museum Road
New Windsor, NY 12553
+1 (845) 534-3115

Design Architect
heneghan peng architects
14-16 Lord Edward Street
Dublin, D02 YC63
+353 1 633 9000

Executive Architect
WXY Architecture + Urban Design
224 Centre Street, 5th Floor
New York, NY 10013
+1 (212) 219-1953

Landscape Architect
Gustafson Porter + Bowman
1 Cobham Mews
London, MW1 9SB
+44 020 7284 8950

Reed Hilderbrand LLC
33 Whitney Avenue, 3rd Floor
New Haven, CT 06510
+1 (617) 923-2422

Structural & Lighting
ARUP
77 Water Street
New York, NY 10005
+1 (212) 896-3000

MEPF & IT
BuroHappold
100 Broadway #23
New York, NY 10005
+1 (212) 616-0228

Civil
VHB
100 Great Oaks Blvd., Suite 118
Albany, NY 12203
+1 (518) 389-3606

AV & Acoustics
LSTN Consultants
76 Beaver Street, 2nd Floor
New York, NY 10005
+1 (347) 788-0810

Facade
Front Inc.
100 E. Broadway Street, #501
New York, NY 10002
+1 (212) 242-2220

Key Plan

N

Description	Date
Filing Set	06/17/22

Project

Storm King Art Center

C.F.M. Building

Seal

NOT FOR CONSTRUCTION

Drawing Title

Site Plan - Building - Setting Out

Date	06/17/22
Scale	1/16" = 1'-0"
Drawing Number	A-C-091
Sheet Size	ARCH D

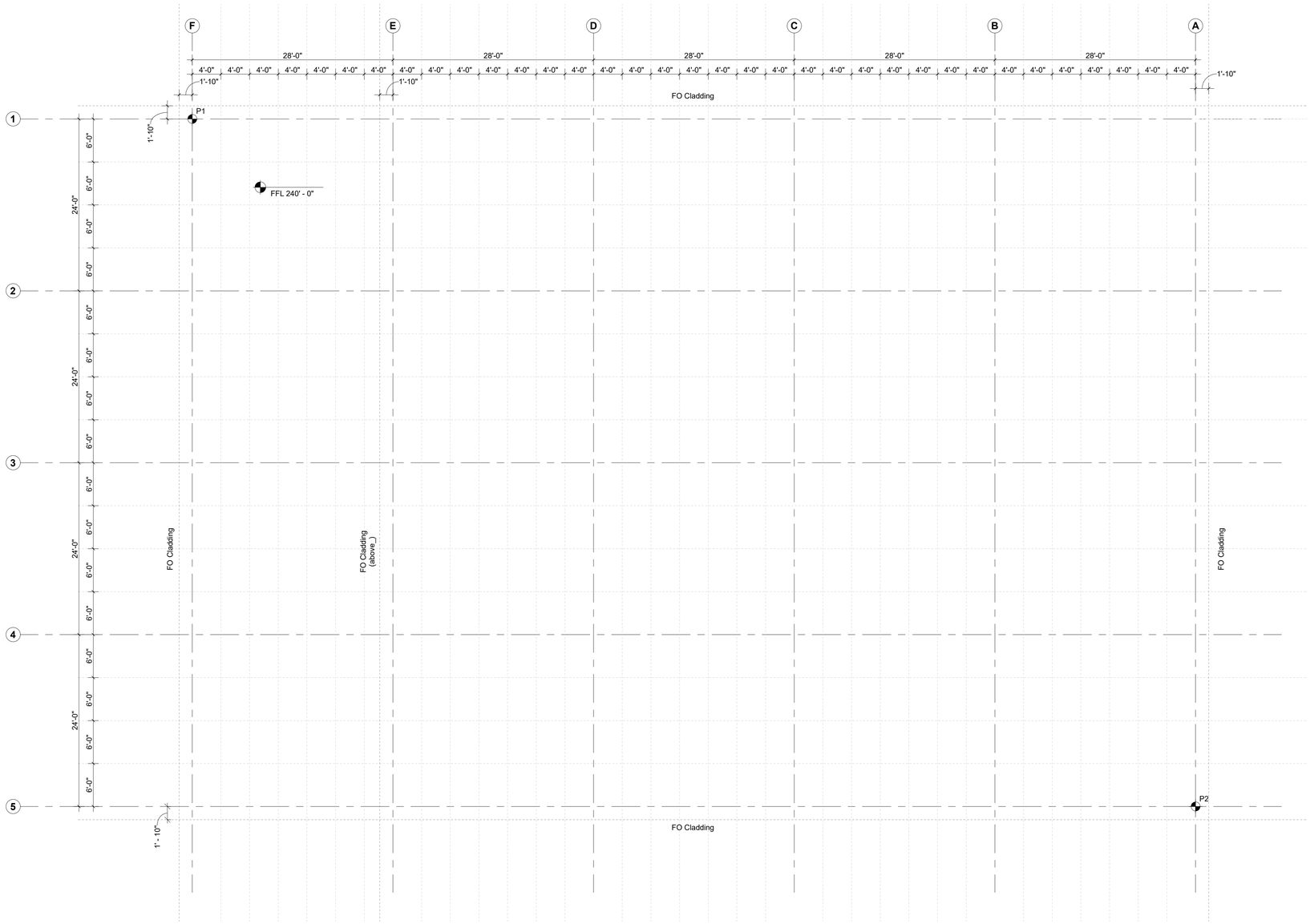

1 Setting Out - Plan Grid
1/8" = 1'-0"

Owner
Storm King Art Center
1 Museum Road
New Windsor, NY 12553
+1 (845) 534-3115

Design Architect
heneghan peng architects
14-16 Lord Edward Street
Dublin, D02 YC63
+353 1 633 9000

Executive Architect
WXY Architecture + Urban Design
224 Centre Street, 5th Floor
New York, NY 10013
+1 (212) 219-1953

Landscape Architect
Gustafson Porter + Bowman
1 Cobham Mews
London, MW1 9SB
+44 020 7284 8950

Reed Hilderbrand LLC
33 Whitney Avenue, 3rd Floor
New Haven, CT 06510
+1 (617) 923-2422

Structural & Lighting
ARUP
77 Water Street
New York, NY 10005
+1 (212) 896-3000

MEPF & IT
BuroHappold
100 Broadway #23
New York, NY 10005
+1 (212) 616-0228

Civil
VHB
100 Great Oaks Blvd., Suite 118
Albany, NY 12203
+1 (518) 389-3606

AV & Acoustics
LSTN Consultants
76 Beaver Street, 2nd Floor
New York, NY 10005
+1 (347) 788-0810

Facade
Front Inc.
100 E. Broadway Street, #501
New York, NY 10002
+1 (212) 242-2220

Key Plan

N

Description	Date
Filing Set	06/17/22

Project

Storm King Art Center

C.F.M. Building

Seal

NOT FOR CONSTRUCTION

Drawing Title

Setting Out - Plan

Date	06/17/22
Scale	1/8" = 1'-0"
Drawing Number	A-C-092
Sheet Size	ARCH D

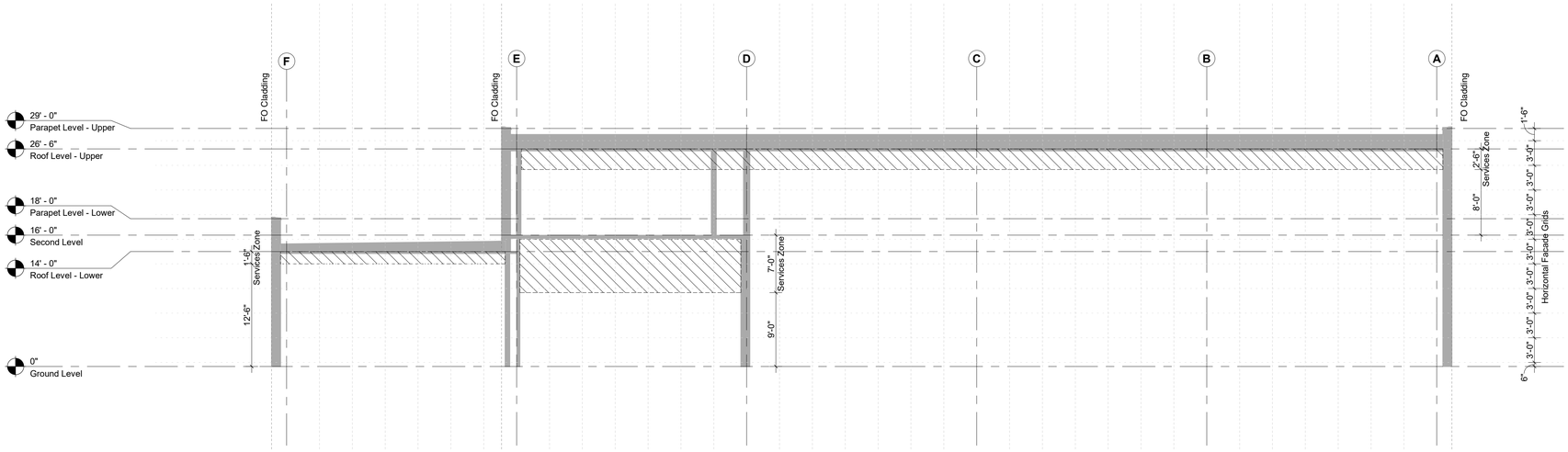

1 Setting Out - Vertical Grid
1/8" = 1'-0"

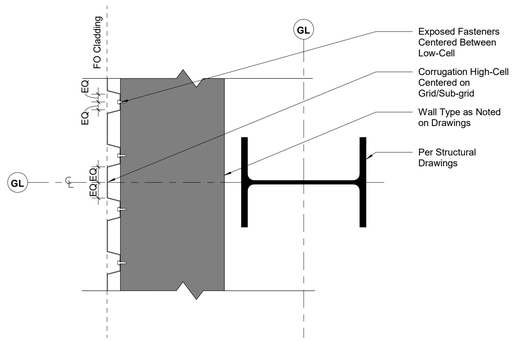

2 Setting Out - Cladding - Plan Detail
1 1/2" = 1'-0"

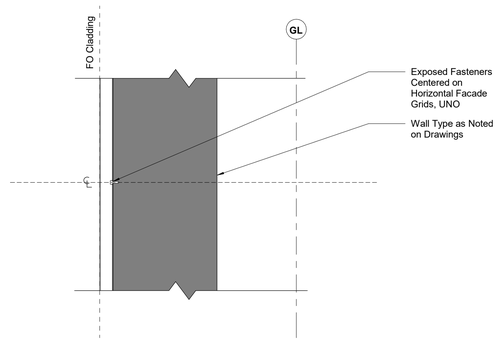

3 Setting Out - Cladding - Section Detail
1 1/2" = 1'-0"

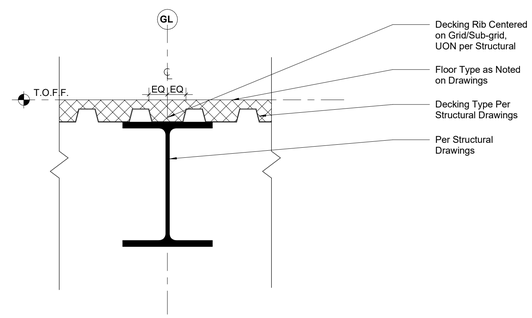

4 Setting Out - Decking - Section Detail
1 1/2" = 1'-0"

Owner
Storm King Art Center
1 Museum Road
New Windsor, NY 12553
+1 (845) 534-3115

Design Architect
heneghan peng architects
14-16 Lord Edward Street
Dublin, D02 YC63
+353 1 633 9000

Executive Architect
WXY Architecture + Urban Design
224 Centre Street, 5th Floor
New York, NY 10013
+1 (212) 219-1953

Landscape Architect
Gustafson Porter + Bowman
1 Cobham Mews
London, MW1 9SB
+44 020 7284 8950

Reed Hilderbrand LLC
33 Whitney Avenue, 3rd Floor
New Haven, CT 06510
+1 (617) 923-2422

Structural & Lighting
ARUP
77 Water Street
New York, NY 10005
+1 (212) 896-3000

MEPF & IT
BuroHappold
100 Broadway #23
New York, NY 10005
+1 (212) 616-0228

Civil
VHB
100 Great Oaks Blvd., Suite 118
Albany, NY 12203
+1 (518) 389-3606

AV & Acoustics
LSTN Consultants
76 Beaver Street, 2nd Floor
New York, NY 10005
+1 (347) 788-0810

Facade
Front Inc.
100 E. Broadway Street, #501
New York, NY 10002
+1 (212) 242-2220

Key Plan

Description	Date
Filing Set	06/17/22

Project

Storm King Art Center

C.F.M. Building

Seal

NOT FOR CONSTRUCTION

Drawing Title

Setting Out - Vertical Grid & Details

Date	06/17/22
Scale	As indicated
Drawing Number	A-C-093
Sheet Size	ARCH D

Keynote Legend

Keynote	*Description*
41-34-23	Semi-Downdraft Spray Paint Booth

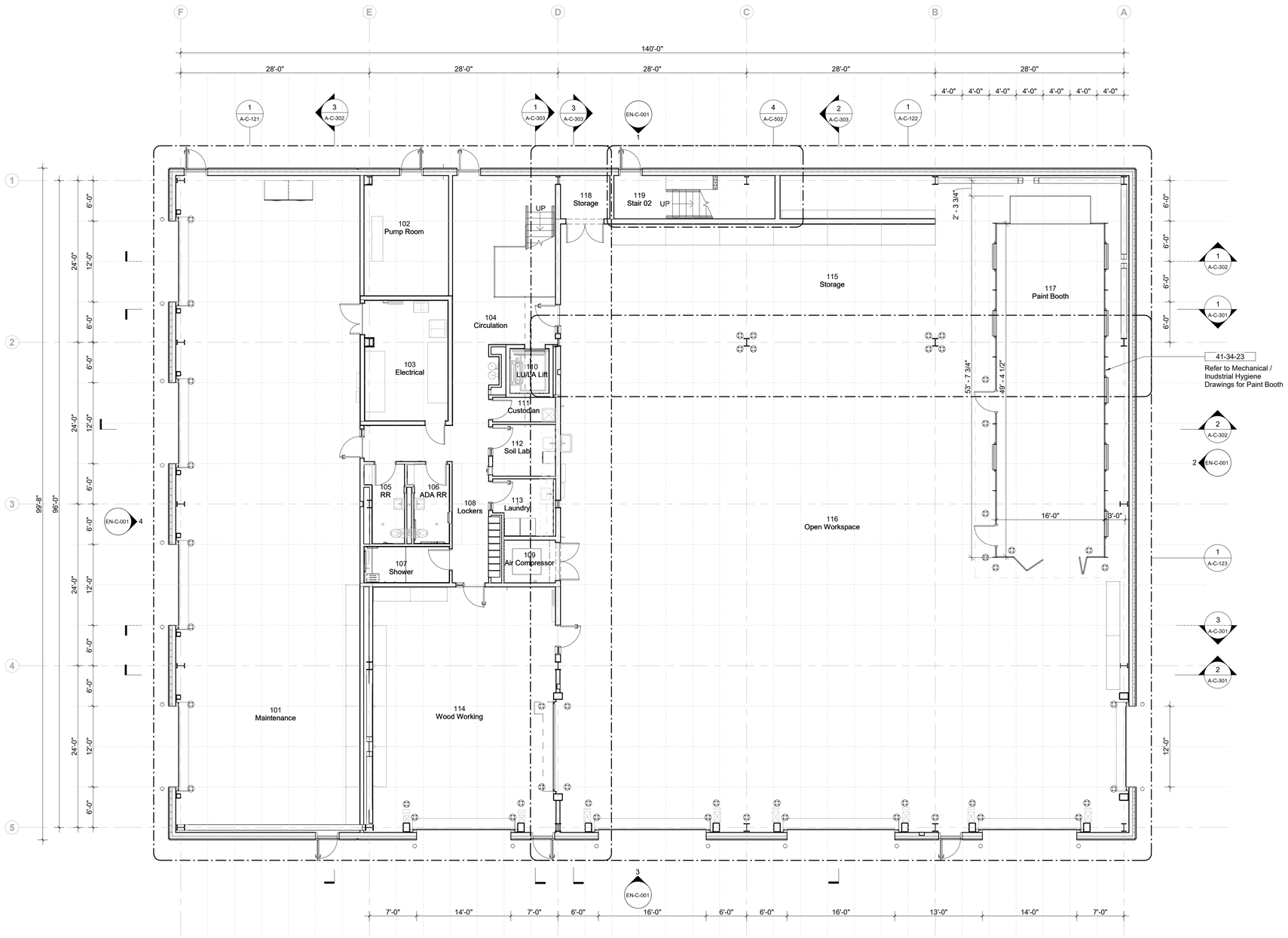

1 Ground Level
1/8" = 1'-0"

Owner
Storm King Art Center
1 Museum Road
New Windsor, NY 12553
+1 (845) 534-3115

Design Architect
heneghan peng architects
14-16 Lord Edward Street
Dublin, D02 YC63
+353 1 633 9000

Executive Architect
WXY Architecture + Urban Design
224 Centre Street, 5th Floor
New York, NY 10013
+1 (212) 219-1953

Landscape Architect
Gustafson Porter + Bowman
1 Cobham Mews
London, MW1 9SB
+44 020 7284 8950

Reed Hilderbrand LLC
33 Whitney Avenue, 3rd Floor
New Haven, CT 06510
+1 (617) 923-2422

Structural & Lighting
ARUP
77 Water Street
New York, NY 10005
+1 (212) 896-3000

MEPF & IT
BuroHappold
100 Broadway #23
New York, NY 10005
+1 (212) 616-0228

Civil
VHB
100 Great Oaks Blvd., Suite 118
Albany, NY 12203
+1 (518) 389-3606

AV & Acoustics
LSTN Consultants
76 Beaver Street, 2nd Floor
New York, NY 10005
+1 (347) 788-0810

Facade
Front Inc.
100 E. Broadway Street, #501
New York, NY 10002
+1 (212) 242-2220

Key Plan

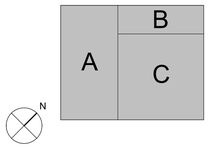

Description	Date
Filing Set	06/17/22

Project

Storm King Art Center

C.F.M. Building

Seal

NOT FOR CONSTRUCTION

Drawing Title

Floor Plan - Ground Level

Date	06/17/22
Scale	1/8" = 1'-0"
Drawing Number	A-C-101
Sheet Size	ARCH D

Keynote Legend

Keynote	*Description*
07-54-00.A	Roof Walk Pads

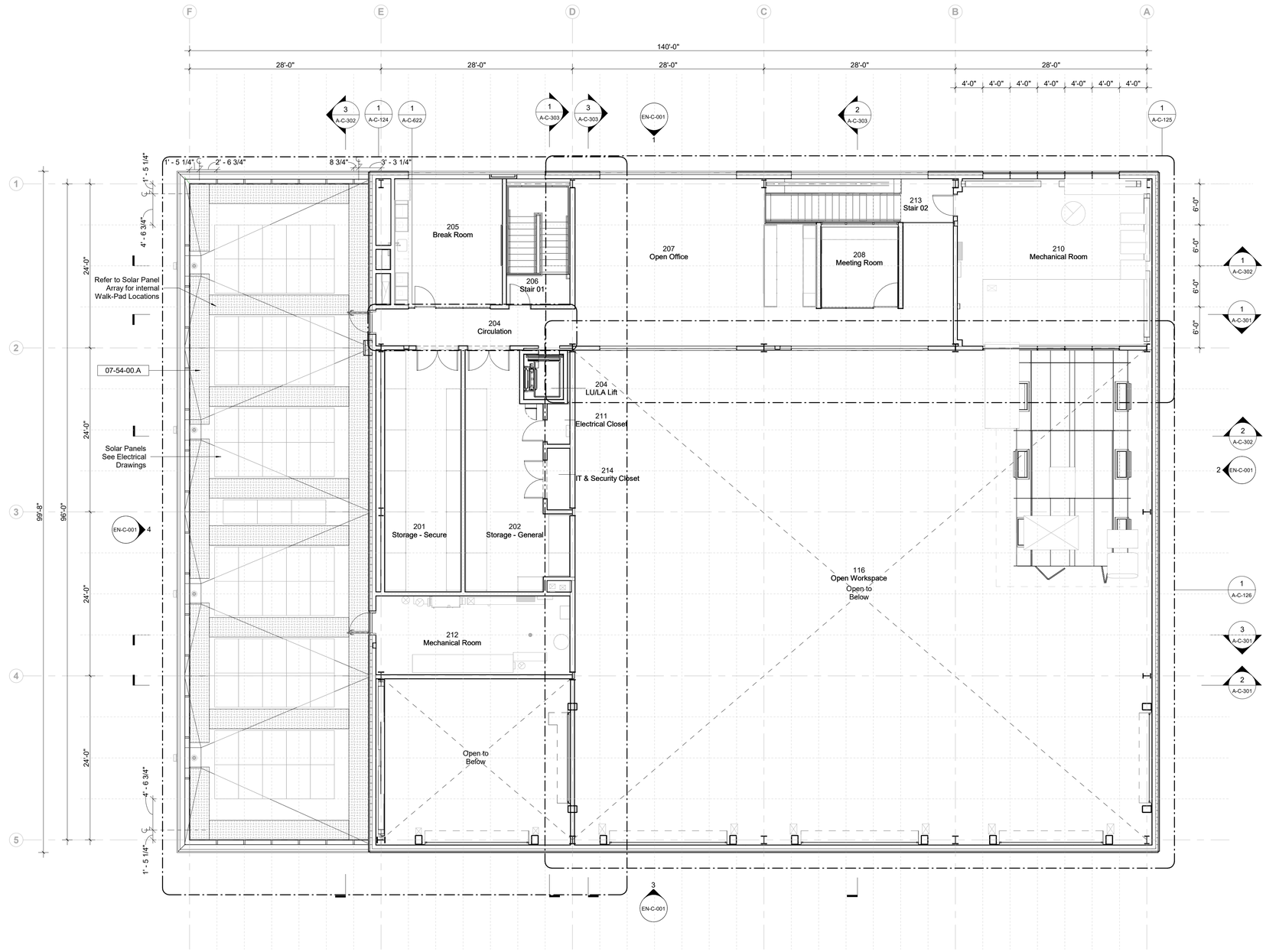

1 Second Level
1/8" = 1'-0"

Owner
Storm King Art Center
1 Museum Road
New Windsor, NY 12553
+1 (845) 534-3115

Design Architect
heneghan peng architects
14-16 Lord Edward Street
Dublin, D02 YC63
+353 1 633 9000

Executive Architect
WXY Architecture + Urban Design
224 Centre Street, 5th Floor
New York, NY 10013
+1 (212) 219-1953

Landscape Architect
Gustafson Porter + Bowman
1 Cobham Mews
London, MW1 9SB
+44 020 7284 8950

Reed Hilderbrand LLC
33 Whitney Avenue, 3rd Floor
New Haven, CT 06510
+1 (617) 923-2422

Structural & Lighting
ARUP
77 Water Street
New York, NY 10005
+1 (212) 896-3000

MEPF & IT
BuroHappold
100 Broadway #23
New York, NY 10005
+1 (212) 616-0228

Civil
VHB
100 Great Oaks Blvd., Suite 118
Albany, NY 12203
+1 (518) 389-3606

AV & Acoustics
LSTN Consultants
76 Beaver Street, 2nd Floor
New York, NY 10005
+1 (347) 788-0810

Facade
Front Inc.
100 E. Broadway Street, #501
New York, NY 10002
+1 (212) 242-2220

Key Plan

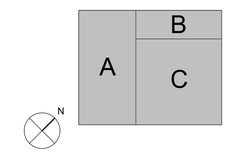

Description	Date
Filing Set	06/17/22

Project

Storm King Art Center

C.F.M. Building

Seal

NOT FOR CONSTRUCTION

Drawing Title

Floor Plan - Second Level

Date	06/17/22
Scale	1/8" = 1'-0"
Drawing Number	A-C-102
Sheet Size	ARCH D

Keynote Legend	
Keynote	*Description*
07-54-00.A	Roof Walk Pads

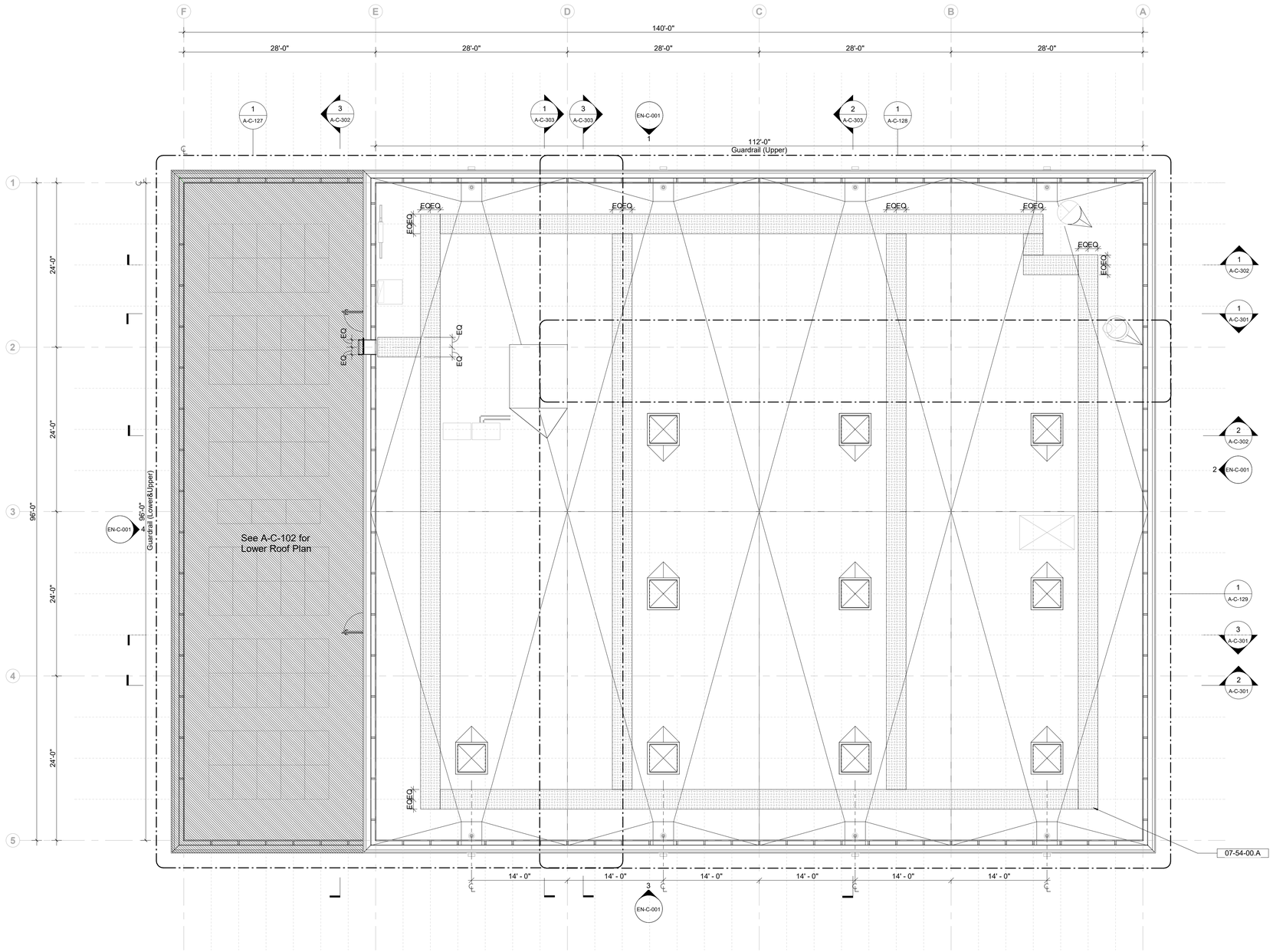

1 Roof Level
1/8" = 1'-0"

Owner
Storm King Art Center
1 Museum Road
New Windsor, NY 12553
+1 (845) 534-3115

Design Architect
heneghan peng architects
14-16 Lord Edward Street
Dublin, D02 YC63
+353 1 633 9000

Executive Architect
WXY Architecture + Urban Design
224 Centre Street, 5th Floor
New York, NY 10013
+1 (212) 219-1953

Landscape Architect
Gustafson Porter + Bowman
1 Cobham Mews
London, MW1 9SB
+44 020 7284 8950

Reed Hilderbrand LLC
33 Whitney Avenue, 3rd Floor
New Haven, CT 06510
+1 (617) 923-2422

Structural & Lighting
ARUP
77 Water Street
New York, NY 10005
+1 (212) 896-3000

MEPF & IT
BuroHappold
100 Broadway #23
New York, NY 10005
+1 (212) 616-0228

Civil
VHB
100 Great Oaks Blvd., Suite 118
Albany, NY 12203
+1 (518) 389-3606

AV & Acoustics
LSTN Consultants
76 Beaver Street, 2nd Floor
New York, NY 10005
+1 (347) 788-0810

Facade
Front Inc.
100 E. Broadway Street, #501
New York, NY 10002
+1 (212) 242-2220

Key Plan

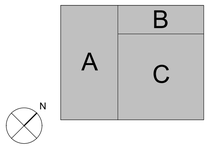

Description	Date
Filing Set	06/17/22

Project

Storm King Art Center

C.F.M. Building

Seal

NOT FOR CONSTRUCTION

Drawing Title

Floor Plan - Roof Level

Date	06/17/22
Scale	1/8" = 1'-0"
Drawing Number	A-C-103
Sheet Size	ARCH D

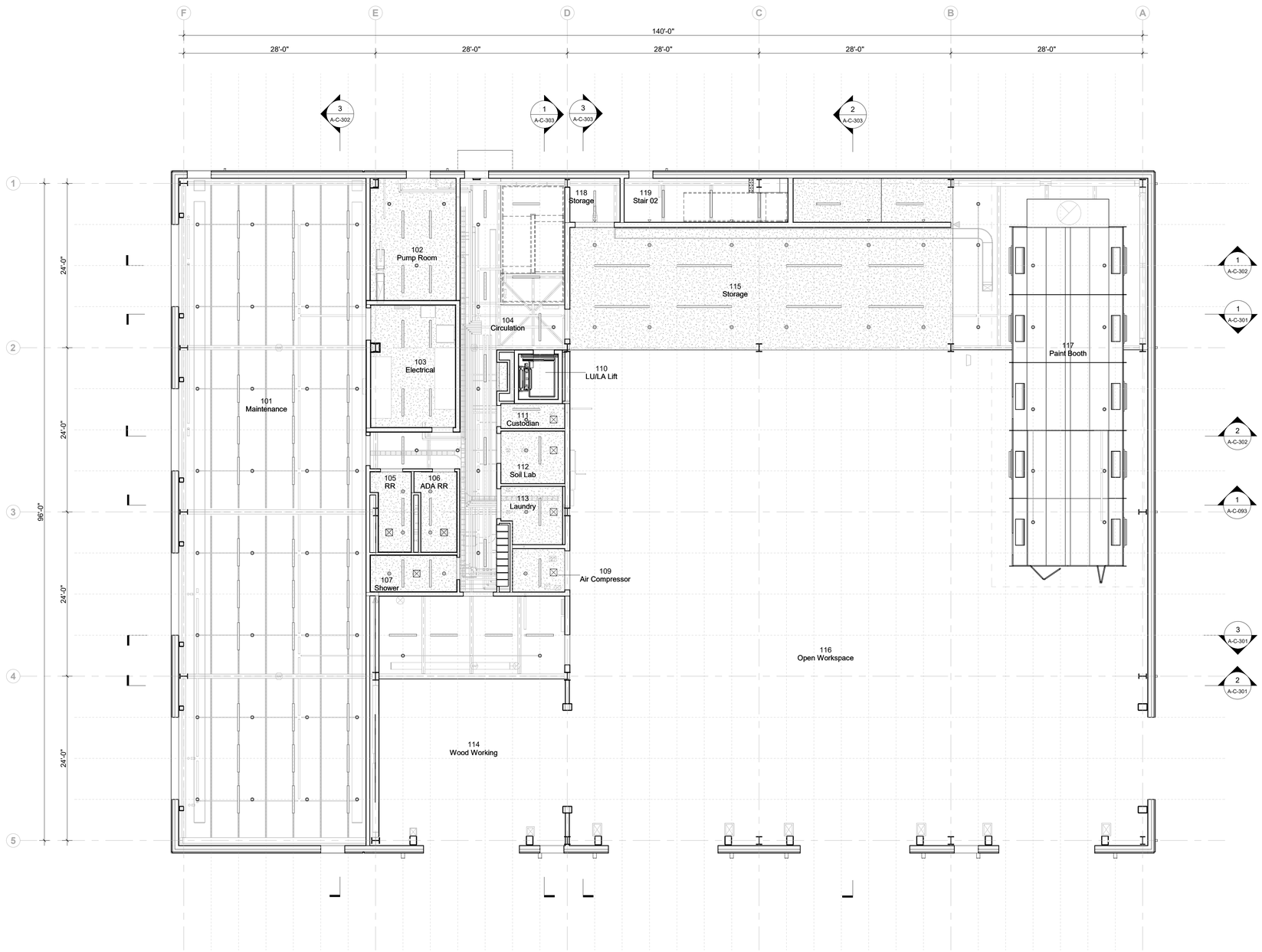

1 Ground Level
1/8" = 1'-0"

RCP Legend

- Sprinkler Head - Upright
- Sprinkler Head - Concealed Pendent
- Sprinkler Head - Wall Mounted
- Ceiling Mounted Diffuser
- Lighting Fixture

Sheet Notes

1. All Devices To Be Centered/Aligned to Grid References As Shown On Drawings UON. Where Devices Are Located Off Grid All Dimensions Are To Device Centerline UON.
2. See A-C-092 For Grid Set Out Information
3. See A-C-692 For All Device Mounting Heights And Locations.
4. Inside Face Of Partitions At Floor Openings To Be Aligned With Edge Of Floor Opening UON
5. In The Event Of Conflict Between Data Shown On Drawings And Data In The Specification, The Drawings Shall Govern. Detail Drawings Take Precedent Over Drawings Of Larger Scope.

Owner
Storm King Art Center
1 Museum Road
New Windsor, NY 12553
+1 (845) 534-3115

Design Architect
heneghan peng architects
14-16 Lord Edward Street
Dublin, D02 YC63
+353 1 633 9000

Executive Architect
WXY Architecture + Urban Design
224 Centre Street, 5th Floor
New York, NY 10013
+1 (212) 219-1953

Landscape Architect
Gustafson Porter + Bowman
1 Cobham Mews
London, MW1 9SB
+44 020 7284 8950

Reed Hilderbrand LLC
33 Whitney Avenue, 3rd Floor
New Haven, CT 06510
+1 (617) 923-2422

Structural & Lighting
ARUP
77 Water Street
New York, NY 10005
+1 (212) 896-3000

MEPF & IT
BuroHappold
100 Broadway #23
New York, NY 10005
+1 (212) 616-0228

Civil
VHB
100 Great Oaks Blvd., Suite 118
Albany, NY 12203
+1 (518) 389-3606

AV & Acoustics
LSTN Consultants
76 Beaver Street, 2nd Floor
New York, NY 10005
+1 (347) 788-0810

Facade
Front Inc.
100 E. Broadway Street, #501
New York, NY 10002
+1 (212) 242-2220

Key Plan

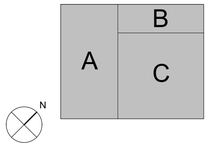

Description	Date
Filing Set	06/17/22

Project

Storm King Art Center

C.F.M. Building

Seal

NOT FOR CONSTRUCTION

Drawing Title

RCP - Ground Level

Date	06/17/22
Scale	As indicated
Drawing Number	A-C-111
Sheet Size	ARCH D

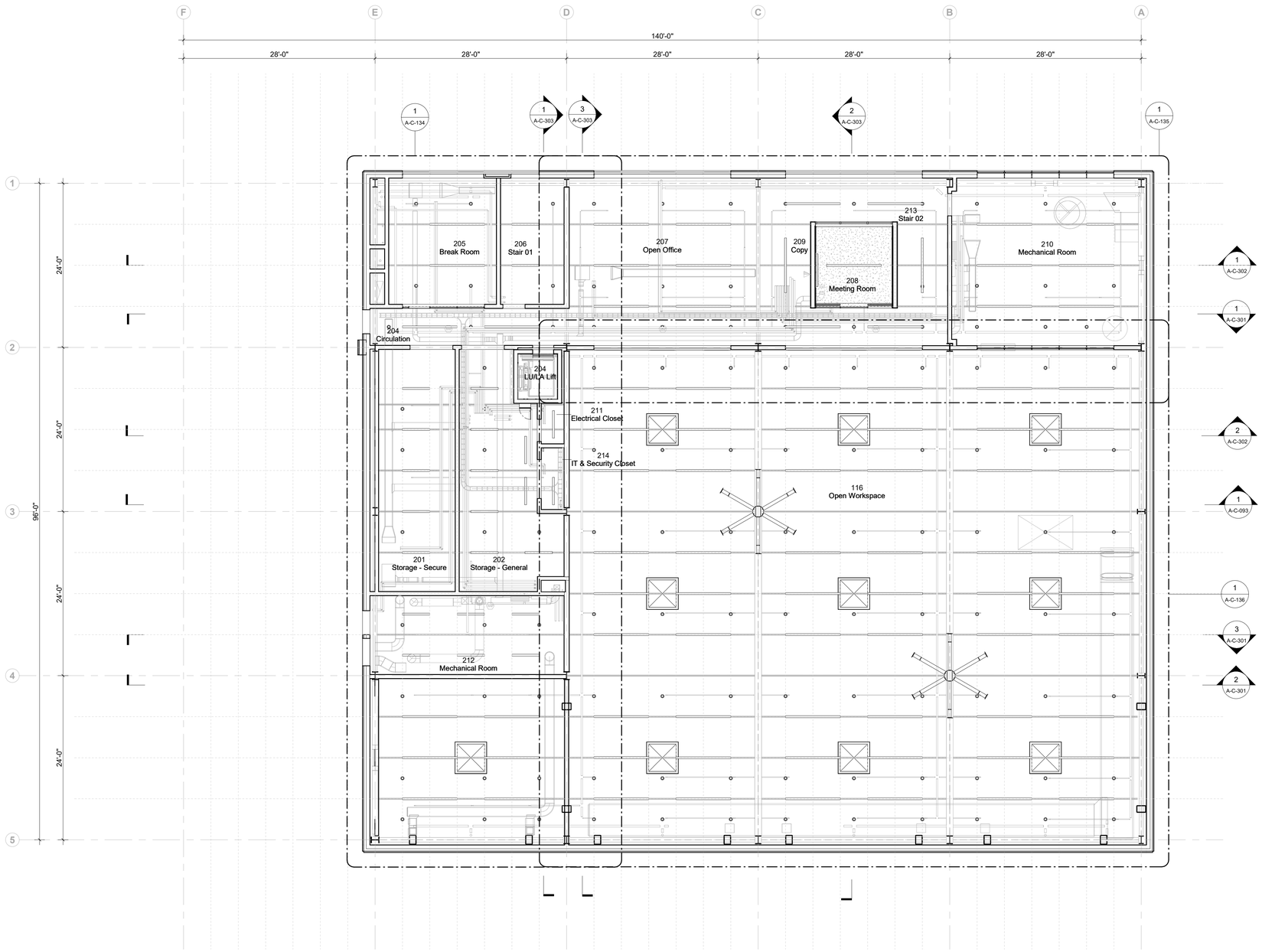

1 Second Level
1/8" = 1'-0"

RCP Legend

- Sprinkler Head - Upright
- Sprinkler Head - Concealed Pendent
- Sprinkler Head - Wall Mounted
- Ceiling Mounted Diffuser
- Lighting Fixture

Sheet Notes

1. All Devices To Be Centered/Aligned to Grid References As Shown On Drawings UON. Where Devices Are Located Off Grid All Dimensions Are To Device Centerline UON.
2. See A-C-092 For Grid Set Out Information
3. See A-C-692 For All Device Mounting Heights And Locations.
4. Inside Face Of Partitions At Floor Openings To Be Aligned With Edge Of Floor Opening UON
5. In The Event Of Conflict Between Data Shown On Drawings And Data In The Specification, The Drawings Shall Govern. Detail Drawings Take Precedent Over Drawings Of Larger Scope.

Owner
Storm King Art Center
1 Museum Road
New Windsor, NY 12553
+1 (845) 534-3115

Design Architect
heneghan peng architects
14-16 Lord Edward Street
Dublin, D02 YC63
+353 1 633 9000

Executive Architect
WXY Architecture + Urban Design
224 Centre Street, 5th Floor
New York, NY 10013
+1 (212) 219-1953

Landscape Architect
Gustafson Porter + Bowman
1 Cobham Mews
London, MW1 9SB
+44 020 7284 8950

Reed Hilderbrand LLC
33 Whitney Avenue, 3rd Floor
New Haven, CT 06510
+1 (617) 923-2422

Structural & Lighting
ARUP
77 Water Street
New York, NY 10005
+1 (212) 896-3000

MEPF & IT
BuroHappold
100 Broadway #23
New York, NY 10005
+1 (212) 616-0228

Civil
VHB
100 Great Oaks Blvd., Suite 118
Albany, NY 12203
+1 (518) 389-3606

AV & Acoustics
LSTN Consultants
76 Beaver Street, 2nd Floor
New York, NY 10005
+1 (347) 788-0810

Facade
Front Inc.
100 E. Broadway Street, #501
New York, NY 10002
+1 (212) 242-2220

Key Plan

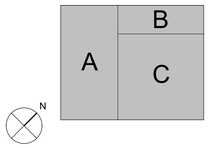

Description	Date
Filing Set	06/17/22

Project

Storm King Art Center

C.F.M. Building

Seal

NOT FOR CONSTRUCTION

Drawing Title

RCP - Second Level

Date	06/17/22
Scale	As indicated
Drawing Number	A-C-112
Sheet Size	ARCH D

Sheet Notes

1. All Dimensions Are To Wall/Door Centerline UON. See A-C-720 Series For Partition Types And Details
2. See A-C-092 For Grid Set Out
3. See A-C-003 For Typical Accessible Clearances And Dimensions For ADA Compliance. Notify The Archtiect Of Any Discrepancies With The Plans Prior To The Start Of Work.
4. See A-C-600 Series For Detailed Room Layouts
5. See A-C-692 For All Device Mounting Heights And Locations.
6. Inside Face Of Partitions At Floor Openings To Be Aligned With Edge Of Floor Opening UON
7. See A-C-007 For Fire Extinguisher Locations
8. In The Event Of Conflict Between Data Shown On Drawings And Data In The Specification, The Drawings Shall Govern. Detail Drawings Take Precedent Over Drawings Of Larger Scope.

Keynote Legend

Keynote	Description
10-44-16.F1	Fire Extinguisher and Cabinet, Recessed
10-44-16.F2	Fire Extinguisher and Cabinet, Surface-Mounted
14-26-00	Limited-Use/Limited Application Elevators
22-42-00.M2	Mop Sink Faucet
22-42-00.P1	Shop Sink
22-42-00.P2	Mop Sink
32-39-00.B	Bollard - Fixed Base Plate

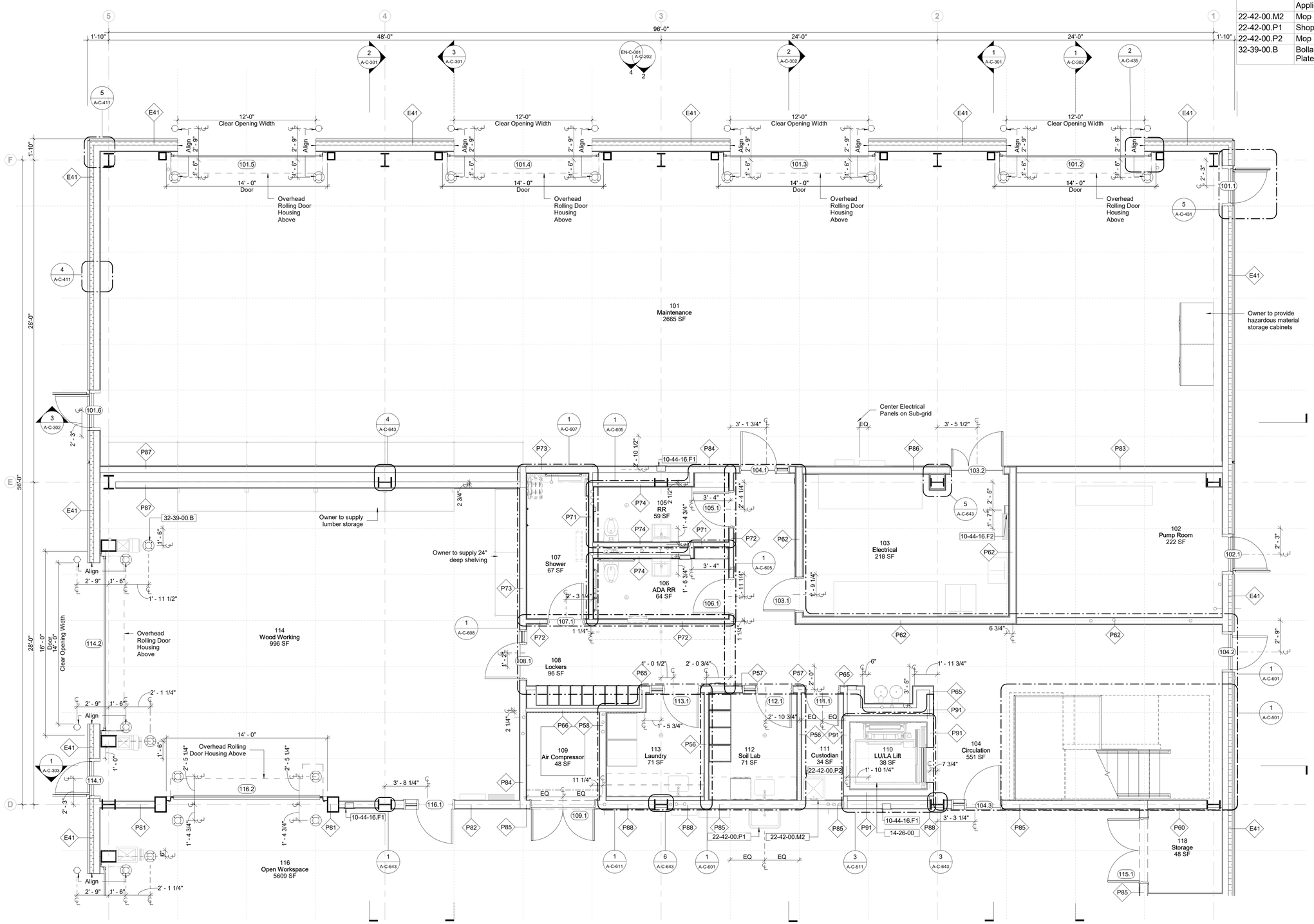

1 Enlarged Plan - Ground Level - A
1/4" = 1'-0"

Owner
Storm King Art Center
1 Museum Road
New Windsor, NY 12553
+1 (845) 534-3115

Design Architect
heneghan peng architects
14-16 Lord Edward Street
Dublin, D02 YC63
+353 1 633 9000

Executive Architect
WXY Architecture + Urban Design
224 Centre Street, 5th Floor
New York, NY 10013
+1 (212) 219-1953

Landscape Architect
Gustafson Porter + Bowman
1 Cobham Mews
London, MW1 9SB
+44 020 7284 8950

Reed Hilderbrand LLC
33 Whitney Avenue, 3rd Floor
New Haven, CT 06510
+1 (617) 923-2422

Structural & Lighting
ARUP
77 Water Street
New York, NY 10005
+1 (212) 896-3000

MEPF & IT
BuroHappold
100 Broadway #23
New York, NY 10005
+1 (212) 616-0228

Civil
VHB
100 Great Oaks Blvd., Suite 118
Albany, NY 12203
+1 (518) 389-3606

AV & Acoustics
LSTN Consultants
76 Beaver Street, 2nd Floor
New York, NY 10005
+1 (347) 788-0810

Facade
Front Inc.
100 E. Broadway Street, #501
New York, NY 10002
+1 (212) 242-2220

Key Plan

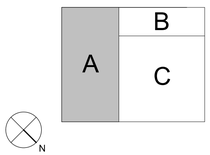

Description	Date
Filing Set	06/17/22

Project

Storm King Art Center

C.F.M. Building

Seal

NOT FOR CONSTRUCTION

Drawing Title

Enlarged Plan - Ground Level - A

Date	06/17/22
Scale	1/4" = 1'-0"
Drawing Number	A-C-121
Sheet Size	ARCH D

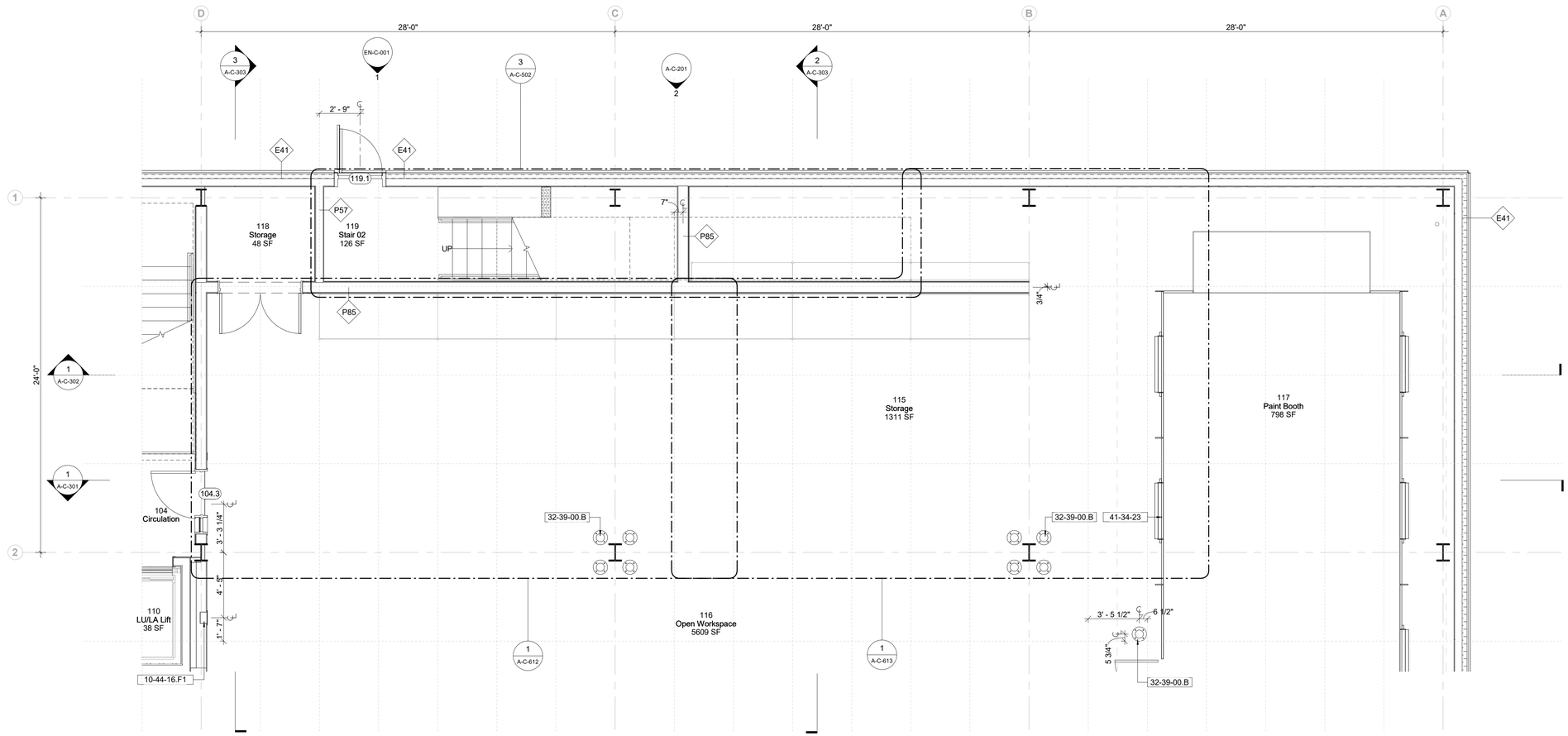

1 Enlarged Plan - Ground Level - B
1/4" = 1'-0"

Keynote Legend

Keynote	*Description*
10-44-16.F1	Fire Extinguisher and Cabinet, Recessed
32-39-00.B	Bollard - Fixed Base Plate
41-34-23	Semi-Downdraft Spray Paint Booth

Sheet Notes

1. All Dimensions Are To Wall/Door Centerline UON. See A-C-720 Series For Partition Types And Details
2. See A-C-092 For Grid Set Out
3. See A-C-003 For Typical Accessible Clearances And Dimensions For ADA Compliance. Notify The Archtiect Of Any Discrepancies With The Plans Prior To The Start Of Work.
4. See A-C-600 Series For Detailed Room Layouts
5. See A-C-692 For All Device Mounting Heights And Locations.
6. Inside Face Of Partitions At Floor Openings To Be Aligned With Edge Of Floor Opening UON
7. See A-C-007 For Fire Extinguisher Locations
8. In The Event Of Conflict Between Data Shown On Drawings And Data In The Specification, The Drawings Shall Govern. Detail Drawings Take Precedent Over Drawings Of Larger Scope.

Owner
Storm King Art Center
1 Museum Road
New Windsor, NY 12553
+1 (845) 534-3115

Design Architect
heneghan peng architects
14-16 Lord Edward Street
Dublin, D02 YC63
+353 1 633 9000

Executive Architect
WXY Architecture + Urban Design
224 Centre Street, 5th Floor
New York, NY 10013
+1 (212) 219-1953

Landscape Architect
Gustafson Porter + Bowman
1 Cobham Mews
London, MW1 9SB
+44 020 7284 8950

Reed Hilderbrand LLC
33 Whitney Avenue, 3rd Floor
New Haven, CT 06510
+1 (617) 923-2422

Structural & Lighting
ARUP
77 Water Street
New York, NY 10005
+1 (212) 896-3000

MEPF & IT
BuroHappold
100 Broadway #23
New York, NY 10005
+1 (212) 616-0228

Civil
VHB
100 Great Oaks Blvd., Suite 118
Albany, NY 12203
+1 (518) 389-3606

AV & Acoustics
LSTN Consultants
76 Beaver Street, 2nd Floor
New York, NY 10005
+1 (347) 788-0810

Facade
Front Inc.
100 E. Broadway Street, #501
New York, NY 10002
+1 (212) 242-2220

Key Plan

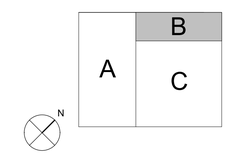

Description	Date
Filing Set	06/17/22

Project

Storm King Art Center

C.F.M. Building

Seal

NOT FOR CONSTRUCTION

Drawing Title

Enlarged Plan - Ground Level - B

Date	06/17/22
Scale	As indicated
Drawing Number	A-C-122
Sheet Size	ARCH D

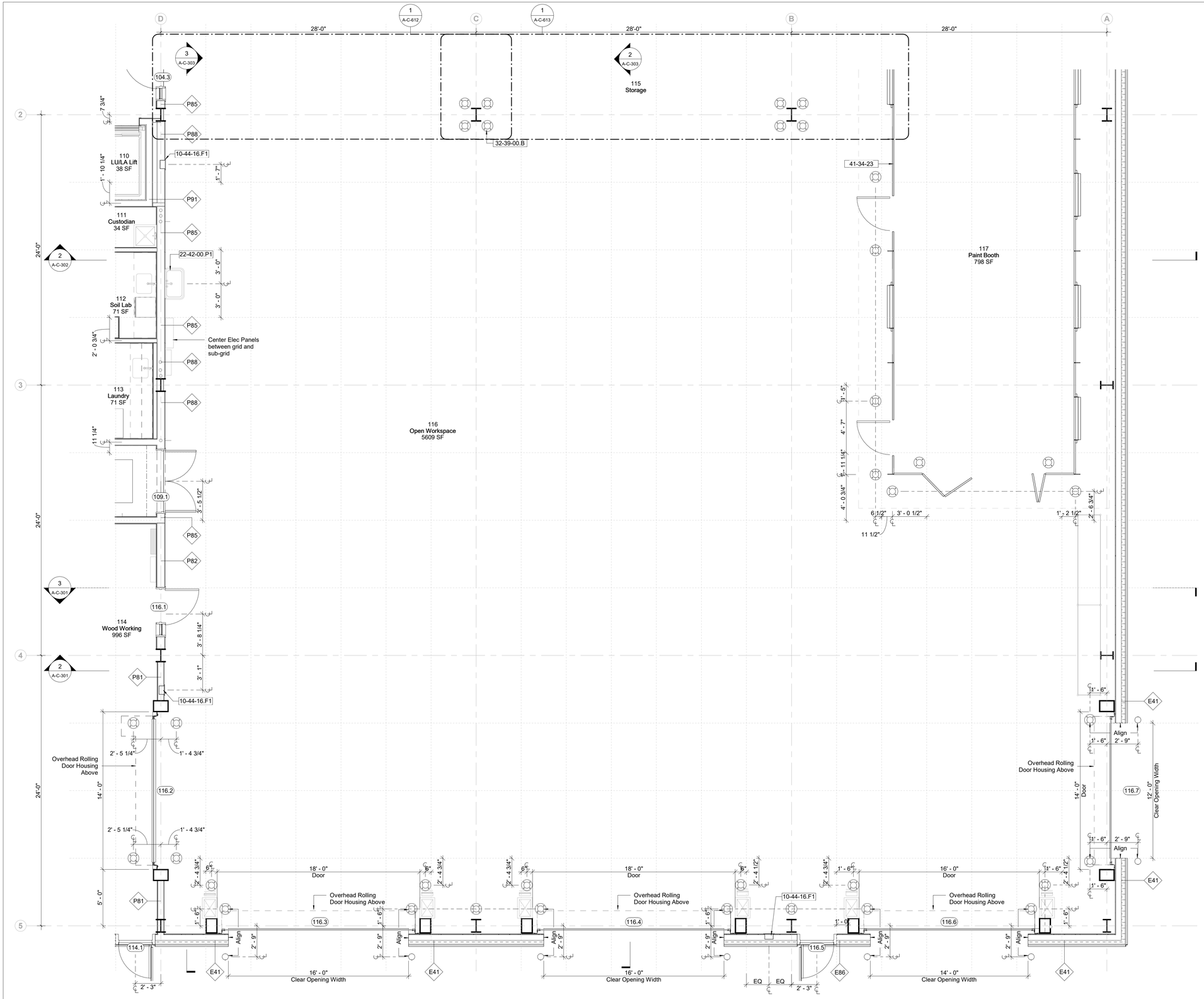

1 Enlarged Plan - Ground Level - C
1/4" = 1'-0"

Keynote Legend

Keynote	Description
10-44-16.F1	Fire Extinguisher and Cabinet, Recessed
22-42-00.P1	Shop Sink
32-39-00.B	Bollard - Fixed Base Plate
41-34-23	Semi-Downdraft Spray Paint Booth

Sheet Notes

1. All Dimensions Are To Wall/Door Centerline UON. See A-C-720 Series For Partition Types And Details
2. See A-C-092 For Grid Set Out
3. See A-C-003 For Typical Accessible Clearances And Dimensions For ADA Compliance. Notify The Archtiect Of Any Discrepancies With The Plans Prior To The Start Of Work.
4. See A-C-600 Series For Detailed Room Layouts
5. See A-C-692 For All Device Mounting Heights And Locations.
6. Inside Face Of Partitions At Floor Openings To Be Aligned With Edge Of Floor Opening UON
7. See A-C-007 For Fire Extinguisher Locations
8. In The Event Of Conflict Between Data Shown On Drawings And Data In The Specification, The Drawings Shall Govern. Detail Drawings Take Precedent Over Drawings Of Larger Scope.

Owner
Storm King Art Center
1 Museum Road
New Windsor, NY 12553
+1 (845) 534-3115

Design Architect
heneghan peng architects
14-16 Lord Edward Street
Dublin, D02 YC63
+353 1 633 9000

Executive Architect
WXY Architecture + Urban Design
224 Centre Street, 5th Floor
New York, NY 10013
+1 (212) 219-1953

Landscape Architect
Gustafson Porter + Bowman
1 Cobham Mews
London, MW1 9SB
+44 020 7284 8950

Reed Hilderbrand LLC
33 Whitney Avenue, 3rd Floor
New Haven, CT 06510
+1 (617) 923-2422

Structural & Lighting
ARUP
77 Water Street
New York, NY 10005
+1 (212) 896-3000

MEPF & IT
BuroHappold
100 Broadway #23
New York, NY 10005
+1 (212) 616-0228

Civil
VHB
100 Great Oaks Blvd., Suite 118
Albany, NY 12203
+1 (518) 389-3606

AV & Acoustics
LSTN Consultants
76 Beaver Street, 2nd Floor
New York, NY 10005
+1 (347) 788-0810

Facade
Front Inc.
100 E. Broadway Street, #501
New York, NY 10002
+1 (212) 242-2220

Key Plan

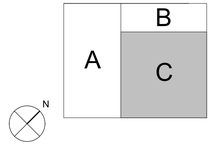

Description	Date
Filing Set	06/17/22

Project

Storm King Art Center
C.F.M. Building

Seal

NOT FOR CONSTRUCTION

Drawing Title

Enlarged Plan - Ground Level - C

Date	06/17/22
Scale	As indicated
Drawing Number	A-C-123
Sheet Size	ARCH D

Keynote Legend

Keynote	Description
10-44-16.F1	Fire Extinguisher and Cabinet, Recessed
14-26-00	Limited-Use/Limited Application Elevators

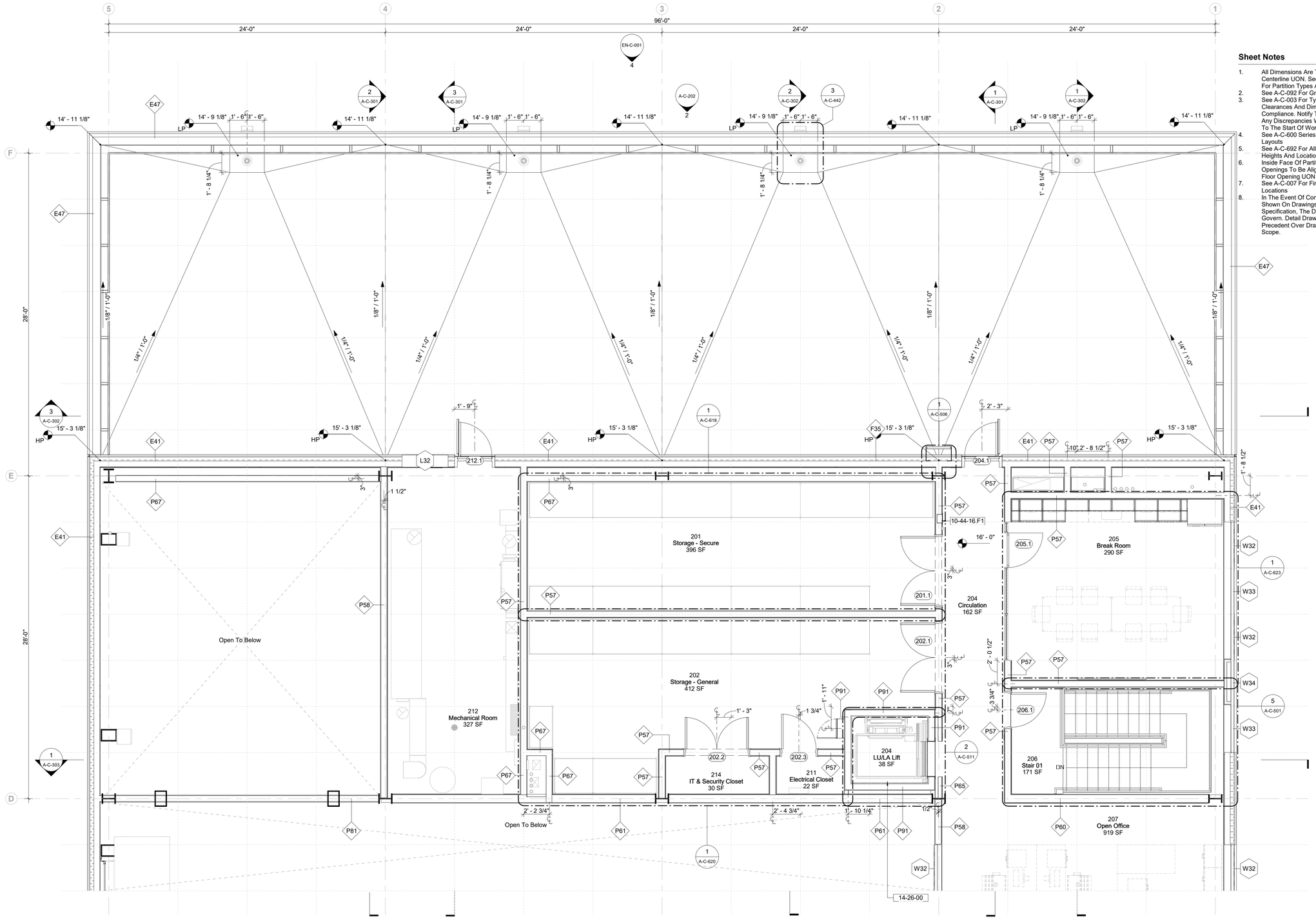

1 Enlarged Plan - Second Level - A
1/4" = 1'-0"

Sheet Notes

1. All Dimensions Are To Wall/Door Centerline UON. See A-C-720 Series For Partition Types And Details
2. See A-C-092 For Grid Set Out
3. See A-C-003 For Typical Accessible Clearances And Dimensions For ADA Compliance. Notify The Archtiect Of Any Discrepancies With The Plans Prior To The Start Of Work.
4. See A-C-600 Series For Detailed Room Layouts
5. See A-C-692 For All Device Mounting Heights And Locations.
6. Inside Face Of Partitions At Floor Openings To Be Aligned With Edge Of Floor Opening UON
7. See A-C-007 For Fire Extinguisher Locations
8. In The Event Of Conflict Between Data Shown On Drawings And Data In The Specification, The Drawings Shall Govern. Detail Drawings Take Precedent Over Drawings Of Larger Scope.

Owner
Storm King Art Center
1 Museum Road
New Windsor, NY 12553
+1 (845) 534-3115

Design Architect
heneghan peng architects
14-16 Lord Edward Street
Dublin, D02 YC63
+353 1 633 9000

Executive Architect
WXY Architecture + Urban Design
224 Centre Street, 5th Floor
New York, NY 10013
+1 (212) 219-1953

Landscape Architect
Gustafson Porter + Bowman
1 Cobham Mews
London, MW1 9SB
+44 020 7284 8950

Reed Hilderbrand LLC
33 Whitney Avenue, 3rd Floor
New Haven, CT 06510
+1 (617) 923-2422

Structural & Lighting
ARUP
77 Water Street
New York, NY 10005
+1 (212) 896-3000

MEPF & IT
BuroHappold
100 Broadway #23
New York, NY 10005
+1 (212) 616-0228

Civil
VHB
100 Great Oaks Blvd., Suite 118
Albany, NY 12203
+1 (518) 389-3606

AV & Acoustics
LSTN Consultants
76 Beaver Street, 2nd Floor
New York, NY 10005
+1 (347) 788-0810

Facade
Front Inc.
100 E. Broadway Street, #501
New York, NY 10002
+1 (212) 242-2220

Key Plan

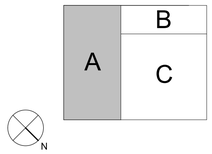

Description	Date
Filing Set	06/17/22

Project

Storm King Art Center
C.F.M. Building

Seal

NOT FOR CONSTRUCTION

Drawing Title

Enlarged Plan - Second Level - A

Date	06/17/22
Scale	As indicated
Drawing Number	A-C-124
Sheet Size	ARCH D

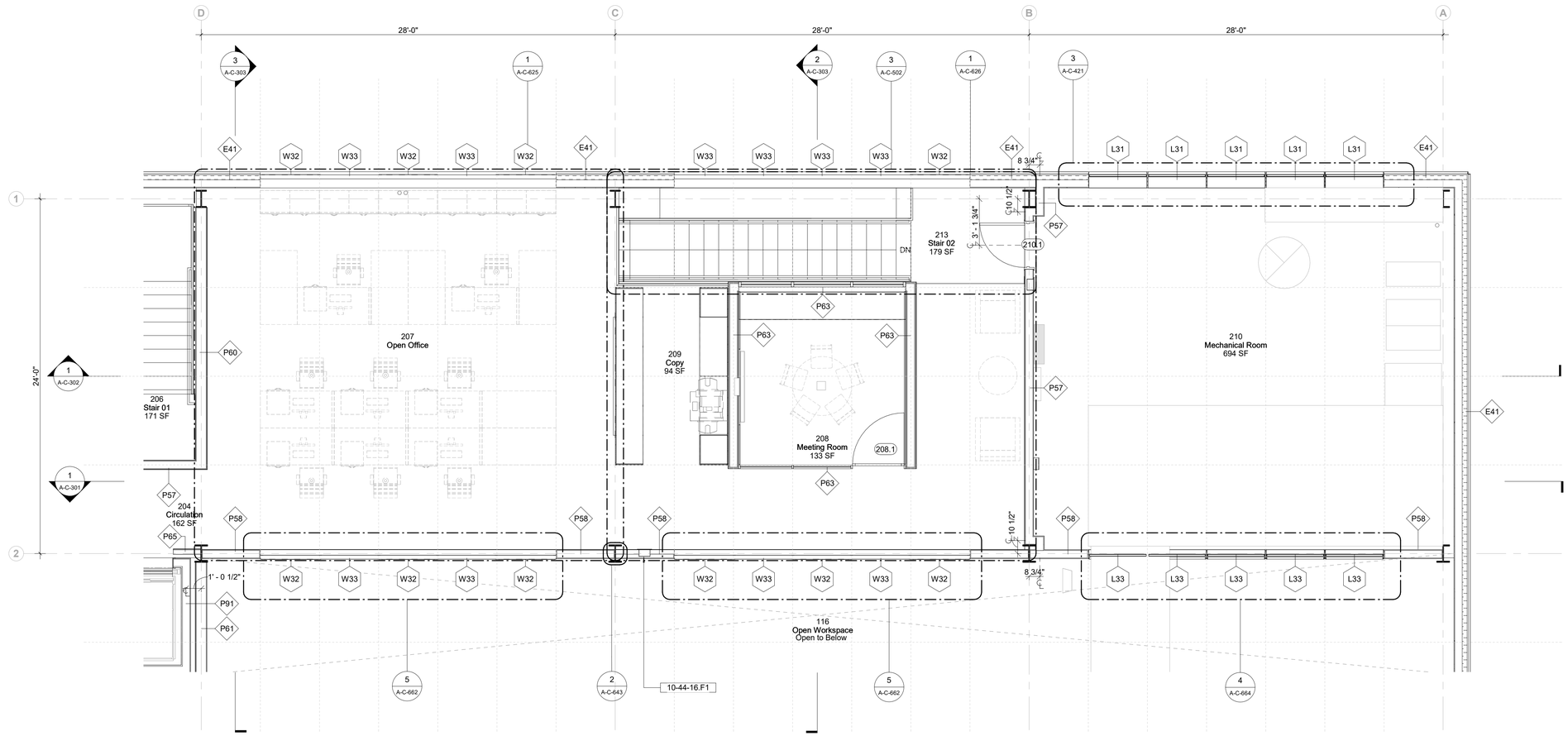

1 Enlarged Plan - Second Level - B
1/4" = 1'-0"

Keynote Legend

Keynote	*Description*
10-44-16.F1	Fire Extinguisher and Cabinet, Recessed

Sheet Notes

1. All Dimensions Are To Wall/Door Centerline UON. See A-C-720 Series For Partition Types And Details
2. See A-C-092 For Grid Set Out
3. See A-C-003 For Typical Accessible Clearances And Dimensions For ADA Compliance. Notify The Archtiect Of Any Discrepancies With The Plans Prior To The Start Of Work.
4. See A-C-600 Series For Detailed Room Layouts
5. See A-C-692 For All Device Mounting Heights And Locations.
6. Inside Face Of Partitions At Floor Openings To Be Aligned With Edge Of Floor Opening UON
7. See A-C-007 For Fire Extinguisher Locations
8. In The Event Of Conflict Between Data Shown On Drawings And Data In The Specification, The Drawings Shall Govern. Detail Drawings Take Precedent Over Drawings Of Larger Scope.

Owner
Storm King Art Center
1 Museum Road
New Windsor, NY 12553
+1 (845) 534-3115

Design Architect
heneghan peng architects
14-16 Lord Edward Street
Dublin, D02 YC63
+353 1 633 9000

Executive Architect
WXY Architecture + Urban Design
224 Centre Street, 5th Floor
New York, NY 10013
+1 (212) 219-1953

Landscape Architect
Gustafson Porter + Bowman
1 Cobham Mews
London, MW1 9SB
+44 020 7284 8950

Reed Hilderbrand LLC
33 Whitney Avenue, 3rd Floor
New Haven, CT 06510
+1 (617) 923-2422

Structural & Lighting
ARUP
77 Water Street
New York, NY 10005
+1 (212) 896-3000

MEPF & IT
BuroHappold
100 Broadway #23
New York, NY 10005
+1 (212) 616-0228

Civil
VHB
100 Great Oaks Blvd., Suite 118
Albany, NY 12203
+1 (518) 389-3606

AV & Acoustics
LSTN Consultants
76 Beaver Street, 2nd Floor
New York, NY 10005
+1 (347) 788-0810

Facade
Front Inc.
100 E. Broadway Street, #501
New York, NY 10002
+1 (212) 242-2220

Key Plan

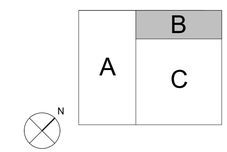

Description	Date
Filing Set	06/17/22

Project

Storm King Art Center

C.F.M. Building

Seal

NOT FOR CONSTRUCTION

Drawing Title

Enlarged Plan - Second Level - B

Date	06/17/22
Scale	As indicated
Drawing Number	A-C-125
Sheet Size	ARCH D

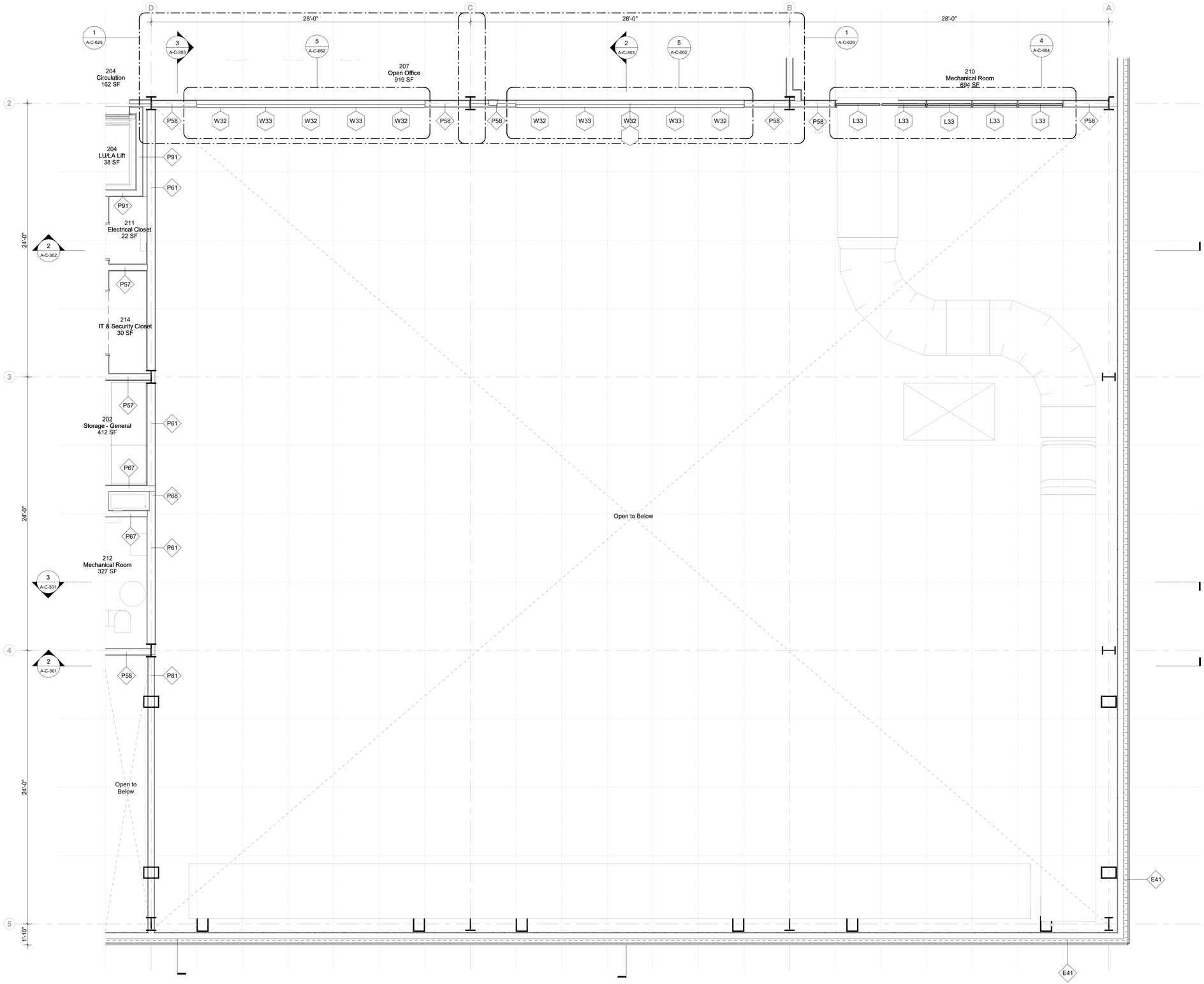

1 Enlarged Plan - Second Level - C
1/4" = 1'-0"

3
EN-C-001

Sheet Notes

1. All Dimensions Are To Wall/Door Centerline UON. See A-C-720 Series For Partition Types And Details
2. See A-C-092 For Grid Set Out
3. See A-C-003 For Typical Accessible Clearances And Dimensions For ADA Compliance. Notify The Archtiect Of Any Discrepancies With The Plans Prior To The Start Of Work.
4. See A-C-600 Series For Detailed Room Layouts
5. See A-C-692 For All Device Mounting Heights And Locations.
6. Inside Face Of Partitions At Floor Openings To Be Aligned With Edge Of Floor Opening UON
7. See A-C-007 For Fire Extinguisher Locations
8. In The Event Of Conflict Between Data Shown On Drawings And Data In The Specification, The Drawings Shall Govern. Detail Drawings Take Precedent Over Drawings Of Larger Scope.

Owner
Storm King Art Center
1 Museum Road
New Windsor, NY 12553
+1 (845) 534-3115

Design Architect
heneghan peng architects
14-16 Lord Edward Street
Dublin, D02 YC63
+353 1 633 9000

Executive Architect
WXY Architecture + Urban Design
224 Centre Street, 5th Floor
New York, NY 10013
+1 (212) 219-1953

Landscape Architect
Gustafson Porter + Bowman
1 Cobham Mews
London, MW1 9SB
+44 020 7284 8950

Reed Hilderbrand LLC
33 Whitney Avenue, 3rd Floor
New Haven, CT 06510
+1 (617) 923-2422

Structural & Lighting
ARUP
77 Water Street
New York, NY 10005
+1 (212) 896-3000

MEPF & IT
BuroHappold
100 Broadway #23
New York, NY 10005
+1 (212) 616-0228

Civil
VHB
100 Great Oaks Blvd., Suite 118
Albany, NY 12203
+1 (518) 389-3606

AV & Acoustics
LSTN Consultants
76 Beaver Street, 2nd Floor
New York, NY 10005
+1 (347) 788-0810

Facade
Front Inc.
100 E. Broadway Street, #501
New York, NY 10002
+1 (212) 242-2220

Key Plan

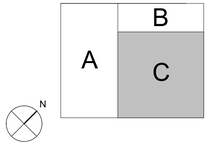

Description	Date
Filing Set	06/17/22

Project

Storm King Art Center

C.F.M. Building

Seal

NOT FOR CONSTRUCTION

Drawing Title

Enlarged Plan - Second Level - C

Date	06/17/22
Scale	As indicated
Drawing Number	A-C-126
Sheet Size	ARCH D

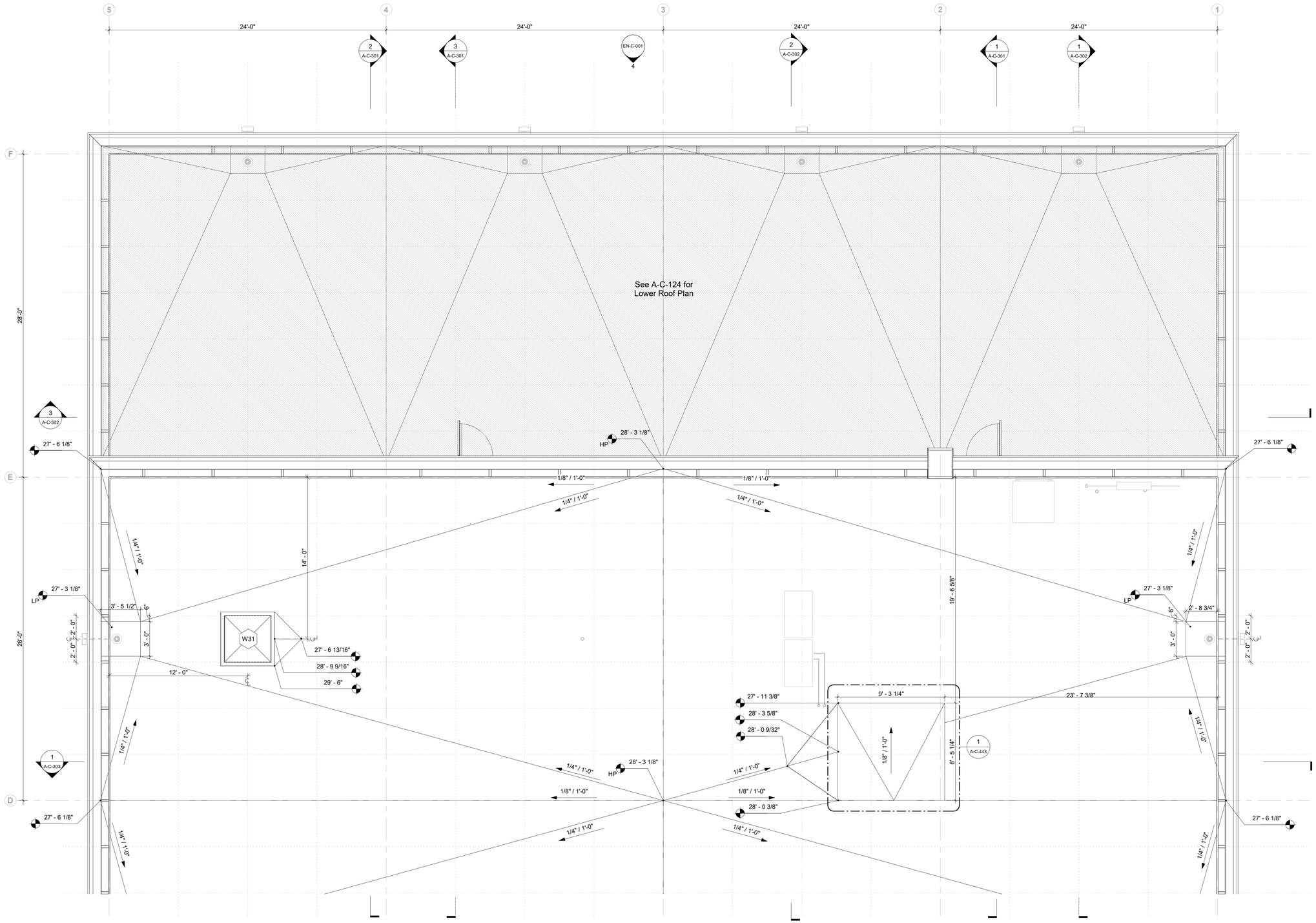

1 Enlarged Plan - Roof Level - A
1/4" = 1'-0"

Owner
Storm King Art Center
1 Museum Road
New Windsor, NY 12553
+1 (845) 534-3115

Design Architect
heneghan peng architects
14-16 Lord Edward Street
Dublin, D02 YC63
+353 1 633 9000

Executive Architect
WXY Architecture + Urban Design
224 Centre Street, 5th Floor
New York, NY 10013
+1 (212) 219-1953

Landscape Architect
Gustafson Porter + Bowman
1 Cobham Mews
London, MW1 9SB
+44 020 7284 8950

Reed Hilderbrand LLC
33 Whitney Avenue, 3rd Floor
New Haven, CT 06510
+1 (617) 923-2422

Structural & Lighting
ARUP
77 Water Street
New York, NY 10005
+1 (212) 896-3000

MEPF & IT
BuroHappold
100 Broadway #23
New York, NY 10005
+1 (212) 616-0228

Civil
VHB
100 Great Oaks Blvd., Suite 118
Albany, NY 12203
+1 (518) 389-3606

AV & Acoustics
LSTN Consultants
76 Beaver Street, 2nd Floor
New York, NY 10005
+1 (347) 788-0810

Facade
Front Inc.
100 E. Broadway Street, #501
New York, NY 10002
+1 (212) 242-2220

Key Plan

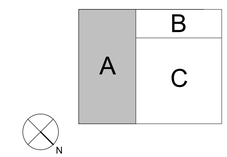

Description	Date
Filing Set	06/17/22

Project

Storm King Art Center

C.F.M. Building

Seal

NOT FOR CONSTRUCTION

Drawing Title

Enlarged Plan - Roof Level - A

Date	06/17/22
Scale	1/4" = 1'-0"
Drawing Number	A-C-127
Sheet Size	ARCH D

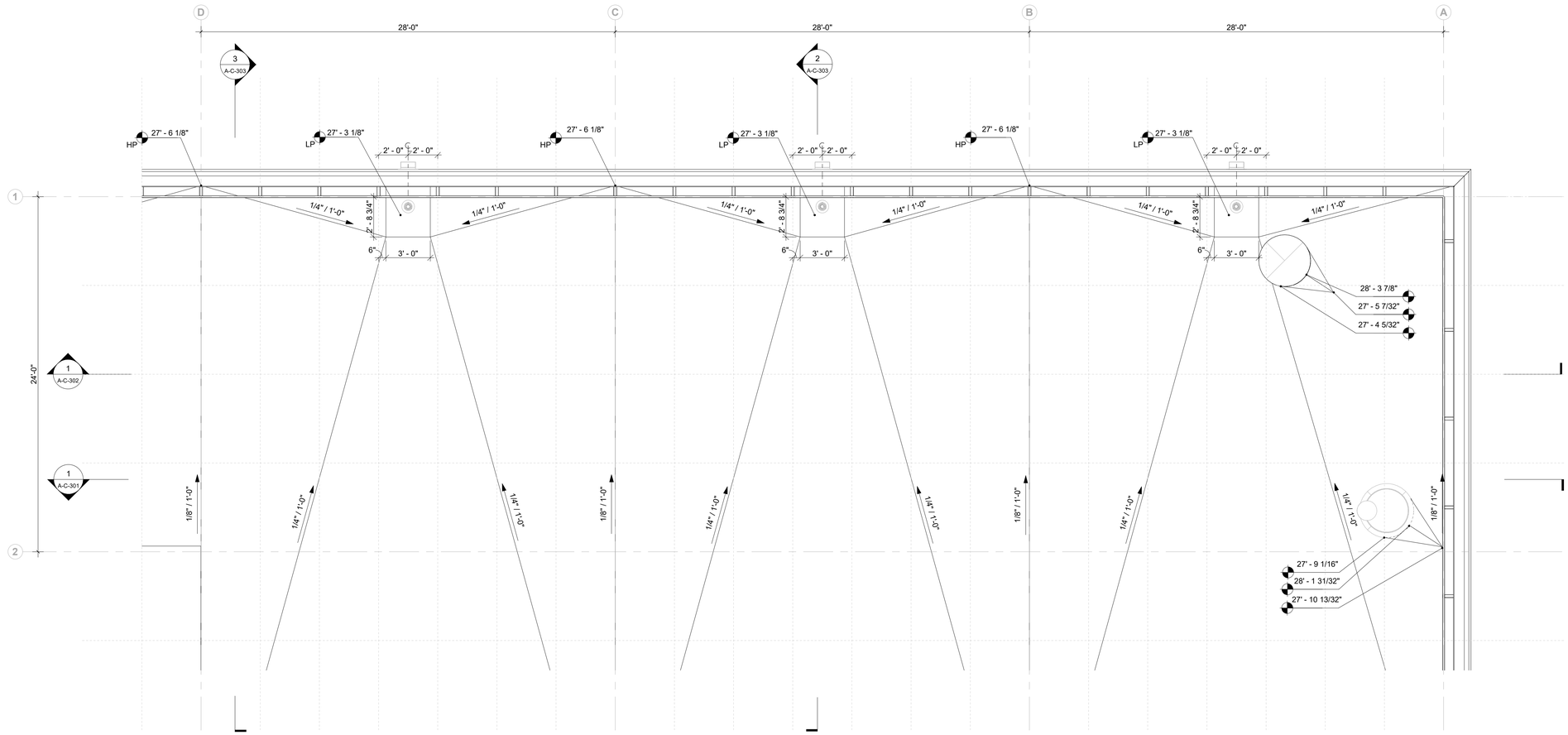

1 Enlarged Plan - Roof Level - B
1/4" = 1'-0"

Owner
Storm King Art Center
1 Museum Road
New Windsor, NY 12553
+1 (845) 534-3115

Design Architect
heneghan peng architects
14-16 Lord Edward Street
Dublin, D02 YC63
+353 1 633 9000

Executive Architect
WXY Architecture + Urban Design
224 Centre Street, 5th Floor
New York, NY 10013
+1 (212) 219-1953

Landscape Architect
Gustafson Porter + Bowman
1 Cobham Mews
London, MW1 9SB
+44 020 7284 8950

Reed Hilderbrand LLC
33 Whitney Avenue, 3rd Floor
New Haven, CT 06510
+1 (617) 923-2422

Structural & Lighting
ARUP
77 Water Street
New York, NY 10005
+1 (212) 896-3000

MEPF & IT
BuroHappold
100 Broadway #23
New York, NY 10005
+1 (212) 616-0228

Civil
VHB
100 Great Oaks Blvd., Suite 118
Albany, NY 12203
+1 (518) 389-3606

AV & Acoustics
LSTN Consultants
76 Beaver Street, 2nd Floor
New York, NY 10005
+1 (347) 788-0810

Facade
Front Inc.
100 E. Broadway Street, #501
New York, NY 10002
+1 (212) 242-2220

Key Plan

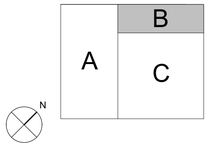

Description	Date
Filing Set	06/17/22

Project

Storm King Art Center

C.F.M. Building

Seal

NOT FOR CONSTRUCTION

Drawing Title

Enlarged Plan - Roof Level - B

Date	06/17/22
Scale	1/4" = 1'-0"
Drawing Number	A-C-128
Sheet Size	ARCH D

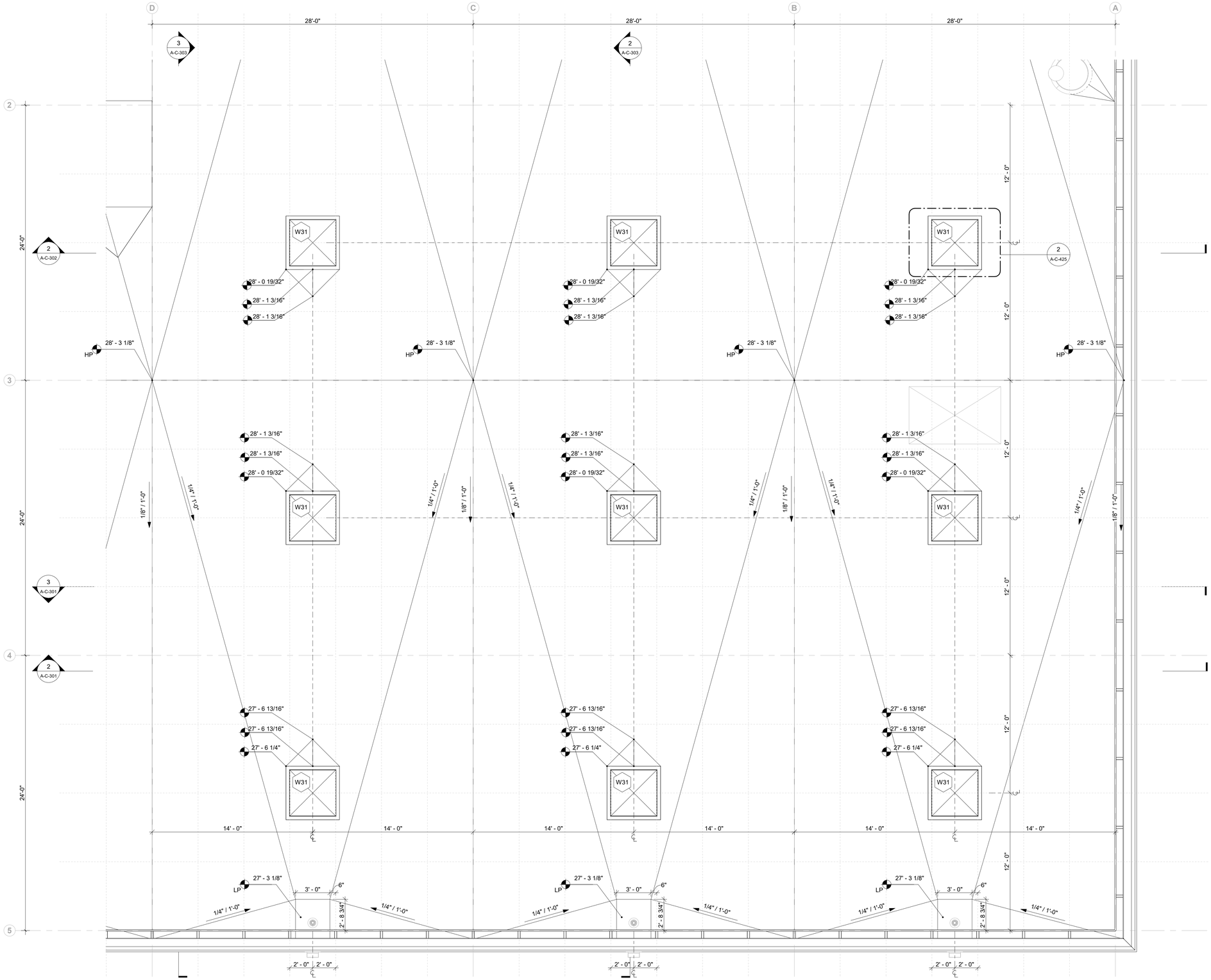

1 Enlarged Plan - Roof Level - C
1/4" = 1'-0"

Owner
Storm King Art Center
1 Museum Road
New Windsor, NY 12553
+1 (845) 534-3115

Design Architect
heneghan peng architects
14-16 Lord Edward Street
Dublin, D02 YC63
+353 1 633 9000

Executive Architect
WXY Architecture + Urban Design
224 Centre Street, 5th Floor
New York, NY 10013
+1 (212) 219-1953

Landscape Architect
Gustafson Porter + Bowman
1 Cobham Mews
London, MW1 9SB
+44 020 7284 8950

Reed Hilderbrand LLC
33 Whitney Avenue, 3rd Floor
New Haven, CT 06510
+1 (617) 923-2422

Structural & Lighting
ARUP
77 Water Street
New York, NY 10005
+1 (212) 896-3000

MEPF & IT
BuroHappold
100 Broadway #23
New York, NY 10005
+1 (212) 616-0228

Civil
VHB
100 Great Oaks Blvd., Suite 118
Albany, NY 12203
+1 (518) 389-3606

AV & Acoustics
LSTN Consultants
76 Beaver Street, 2nd Floor
New York, NY 10005
+1 (347) 788-0810

Facade
Front Inc.
100 E. Broadway Street, #501
New York, NY 10002
+1 (212) 242-2220

Key Plan

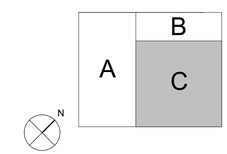

Description	Date
Filing Set	06/17/22

Project

Storm King Art Center

C.F.M. Building

Seal

NOT FOR CONSTRUCTION

Drawing Title

Enlarged Plan - Roof Level - C

Date	06/17/22
Scale	1/4" = 1'-0"
Drawing Number	A-C-129
Sheet Size	ARCH D

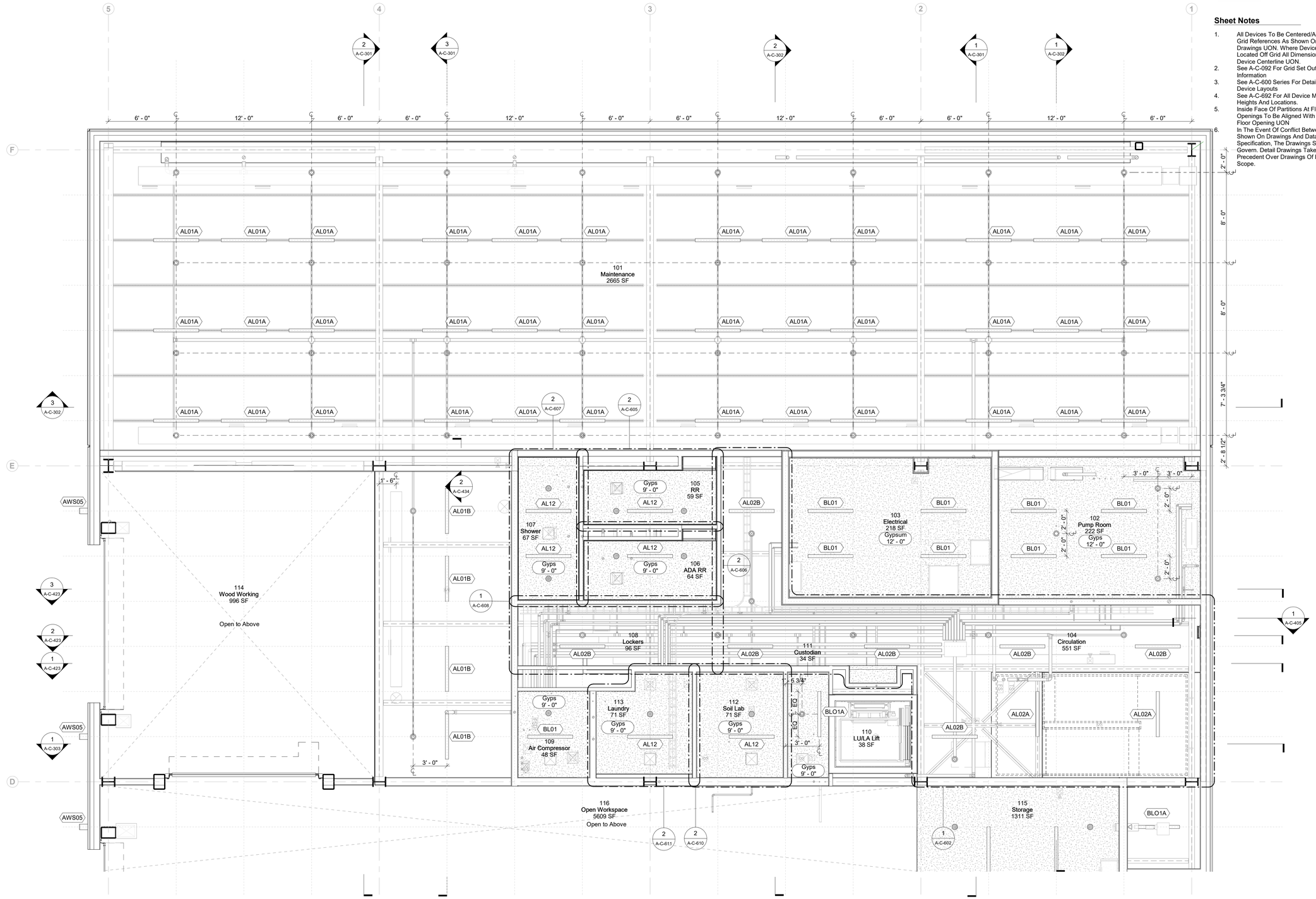

1 Enlarged RCP - Ground Level - A
1/4" = 1'-0"

RCP Legend

- Sprinkler Head - Upright
- Sprinkler Head - Concealed Pendent
- Sprinkler Head - Wall Mounted
- Ceiling Mounted Diffuser
- Lighting Fixture

Sheet Notes

1. All Devices To Be Centered/Aligned to Grid References As Shown On Drawings UON. Where Devices Are Located Off Grid All Dimensions Are To Device Centerline UON.
2. See A-C-092 For Grid Set Out Information
3. See A-C-600 Series For Detailed Room Device Layouts
4. See A-C-692 For All Device Mounting Heights And Locations.
5. Inside Face Of Partitions At Floor Openings To Be Aligned With Edge Of Floor Opening UON
6. In The Event Of Conflict Between Data Shown On Drawings And Data In The Specification, The Drawings Shall Govern. Detail Drawings Take Precedent Over Drawings Of Larger Scope.

Owner
Storm King Art Center
1 Museum Road
New Windsor, NY 12553
+1 (845) 534-3115

Design Architect
heneghan peng architects
14-16 Lord Edward Street
Dublin, D02 YC63
+353 1 633 9000

Executive Architect
WXY Architecture + Urban Design
224 Centre Street, 5th Floor
New York, NY 10013
+1 (212) 219-1953

Landscape Architect
Gustafson Porter + Bowman
1 Cobham Mews
London, MW1 9SB
+44 020 7284 8950

Reed Hilderbrand LLC
33 Whitney Avenue, 3rd Floor
New Haven, CT 06510
+1 (617) 923-2422

Structural & Lighting
ARUP
77 Water Street
New York, NY 10005
+1 (212) 896-3000

MEPF & IT
BuroHappold
100 Broadway #23
New York, NY 10005
+1 (212) 616-0228

Civil
VHB
100 Great Oaks Blvd., Suite 118
Albany, NY 12203
+1 (518) 389-3606

AV & Acoustics
LSTN Consultants
76 Beaver Street, 2nd Floor
New York, NY 10005
+1 (347) 788-0810

Facade
Front Inc.
100 E. Broadway Street, #501
New York, NY 10002
+1 (212) 242-2220

Key Plan

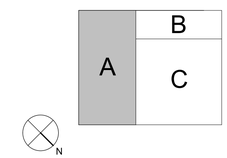

Description	Date
Filing Set	06/17/22

Project

Storm King Art Center

C.F.M. Building

Seal

NOT FOR CONSTRUCTION

Drawing Title

Enlarged RCP - Ground Level - A

Date	06/17/22
Scale	As indicated
Drawing Number	A-C-131
Sheet Size	ARCH D

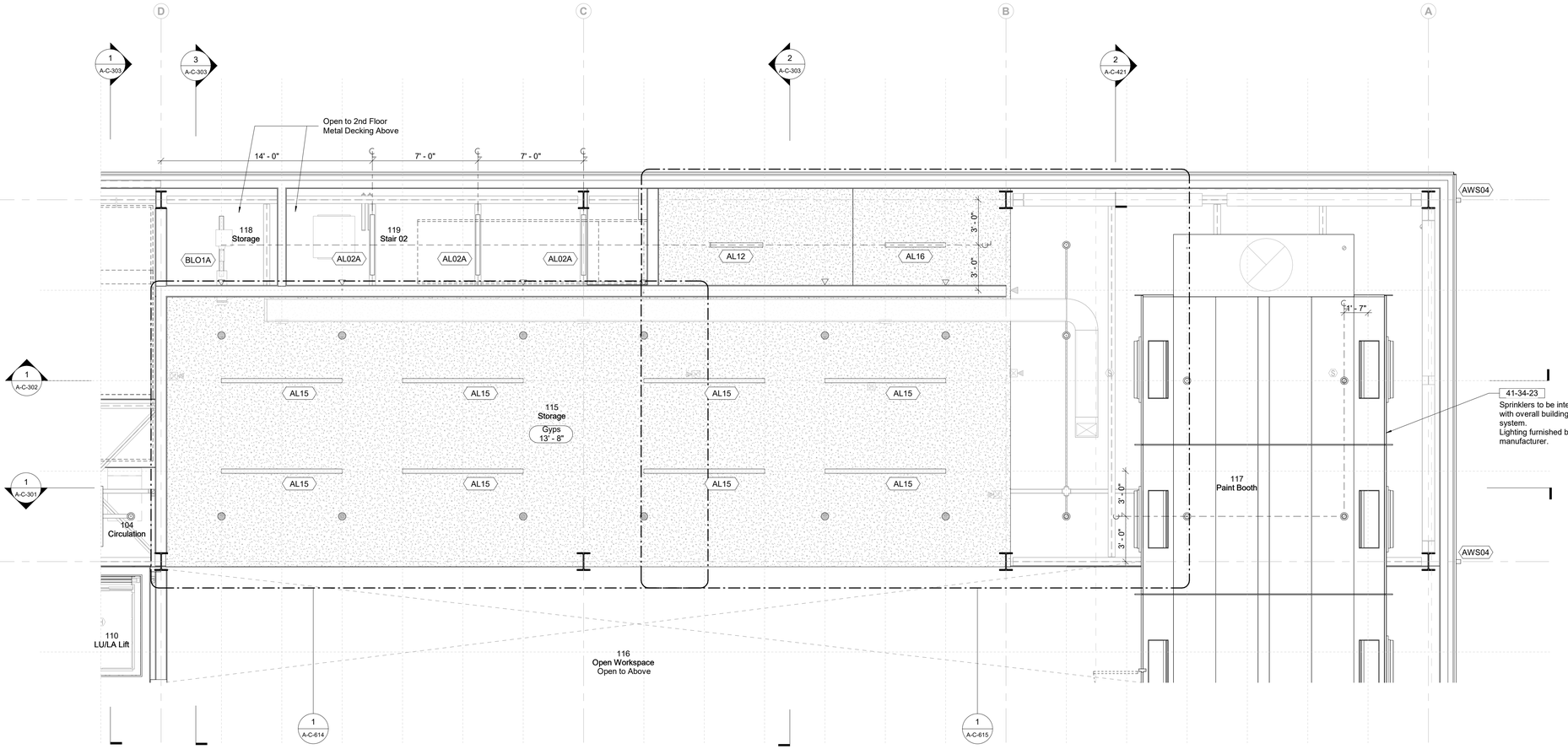

1 Enlarged RCP - Ground Level - B
1/4" = 1'-0"

Keynote Legend

Keynote	Description
41-34-23	Semi-Downdraft Spray Paint Booth

RCP Legend

- Sprinkler Head - Upright
- Sprinkler Head - Concealed Pendent
- Sprinkler Head - Wall Mounted
- Ceiling Mounted Diffuser
- Lighting Fixture

Sheet Notes

1. All Devices To Be Centered/Aligned to Grid References As Shown On Drawings UON. Where Devices Are Located Off Grid All Dimensions Are To Device Centerline UON.
2. See A-C-092 For Grid Set Out Information
3. See A-C-600 Series For Detailed Room Device Layouts
4. See A-C-692 For All Device Mounting Heights And Locations.
5. Inside Face Of Partitions At Floor Openings To Be Aligned With Edge Of Floor Opening UON
6. In The Event Of Conflict Between Data Shown On Drawings And Data In The Specification, The Drawings Shall Govern. Detail Drawings Take Precedent Over Drawings Of Larger Scope.

Owner
Storm King Art Center
1 Museum Road
New Windsor, NY 12553
+1 (845) 534-3115

Design Architect
heneghan peng architects
14-16 Lord Edward Street
Dublin, D02 YC63
+353 1 633 9000

Executive Architect
WXY Architecture + Urban Design
224 Centre Street, 5th Floor
New York, NY 10013
+1 (212) 219-1953

Landscape Architect
Gustafson Porter + Bowman
1 Cobham Mews
London, MW1 9SB
+44 020 7284 8950

Reed Hilderbrand LLC
33 Whitney Avenue, 3rd Floor
New Haven, CT 06510
+1 (617) 923-2422

Structural & Lighting
ARUP
77 Water Street
New York, NY 10005
+1 (212) 896-3000

MEPF & IT
BuroHappold
100 Broadway #23
New York, NY 10005
+1 (212) 616-0228

Civil
VHB
100 Great Oaks Blvd., Suite 118
Albany, NY 12203
+1 (518) 389-3606

AV & Acoustics
LSTN Consultants
76 Beaver Street, 2nd Floor
New York, NY 10005
+1 (347) 788-0810

Facade
Front Inc.
100 E. Broadway Street, #501
New York, NY 10002
+1 (212) 242-2220

Key Plan

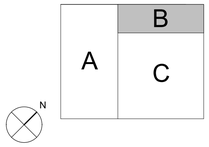

Description	Date
Filing Set	06/17/22

Project

Storm King Art Center

C.F.M. Building

Seal

NOT FOR CONSTRUCTION

Drawing Title

Enlarged RCP - Ground Level - B

Date	06/17/22
Scale	As indicated
Drawing Number	A-C-132
Sheet Size	ARCH D

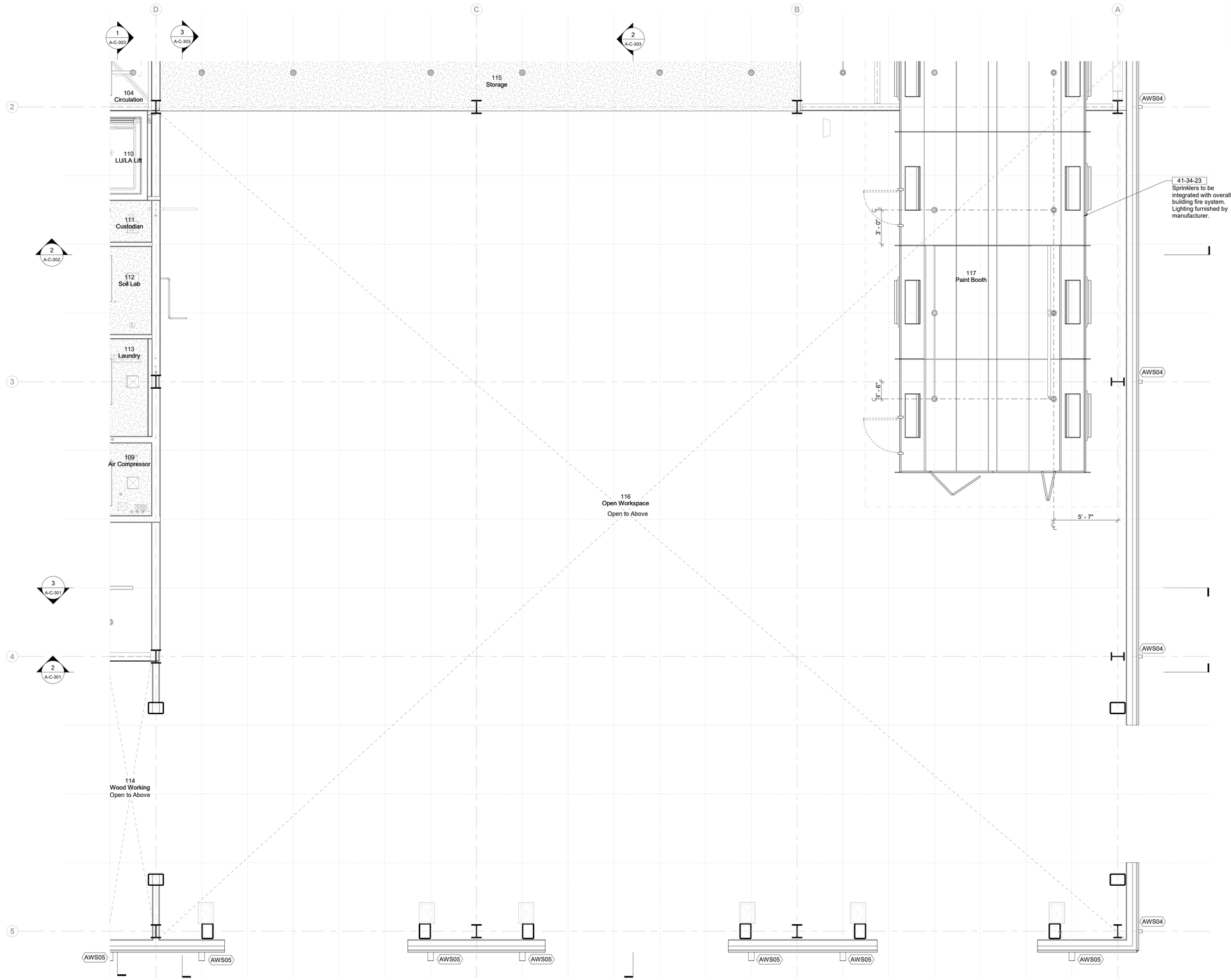

1 Enlarged RCP - Ground Level - C
1/4" = 1'-0"

Keynote Legend

Keynote	Description
41-34-23	Semi-Downdraft Spray Paint Booth

RCP Legend

- Sprinkler Head - Upright
- Sprinkler Head - Concealed Pendent
- Sprinkler Head - Wall Mounted
- Ceiling Mounted Diffuser
- Lighting Fixture

Sheet Notes

1. All Devices To Be Centered/Aligned to Grid References As Shown On Drawings UON. Where Devices Are Located Off Grid All Dimensions Are To Device Centerline UON.
2. See A-C-092 For Grid Set Out Information
3. See A-C-600 Series For Detailed Room Device Layouts
4. See A-C-692 For All Device Mounting Heights And Locations.
5. Inside Face Of Partitions At Floor Openings To Be Aligned With Edge Of Floor Opening UON
6. In The Event Of Conflict Between Data Shown On Drawings And Data In The Specification, The Drawings Shall Govern. Detail Drawings Take Precedent Over Drawings Of Larger Scope.

Owner
Storm King Art Center
1 Museum Road
New Windsor, NY 12553
+1 (845) 534-3115

Design Architect
heneghan peng architects
14-16 Lord Edward Street
Dublin, D02 YC63
+353 1 633 9000

Executive Architect
WXY Architecture + Urban Design
224 Centre Street, 5th Floor
New York, NY 10013
+1 (212) 219-1953

Landscape Architect
Gustafson Porter + Bowman
1 Cobham Mews
London, MW1 9SB
+44 020 7284 8950

Reed Hilderbrand LLC
33 Whitney Avenue, 3rd Floor
New Haven, CT 06510
+1 (617) 923-2422

Structural & Lighting
ARUP
77 Water Street
New York, NY 10005
+1 (212) 896-3000

MEPF & IT
BuroHappold
100 Broadway #23
New York, NY 10005
+1 (212) 616-0228

Civil
VHB
100 Great Oaks Blvd., Suite 118
Albany, NY 12203
+1 (518) 389-3606

AV & Acoustics
LSTN Consultants
76 Beaver Street, 2nd Floor
New York, NY 10005
+1 (347) 788-0810

Facade
Front Inc.
100 E. Broadway Street, #501
New York, NY 10002
+1 (212) 242-2220

Key Plan

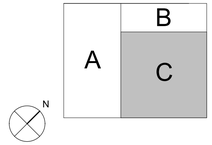

Description	Date
Filing Set	06/17/22

Project

Storm King Art Center

C.F.M. Building

Seal

NOT FOR CONSTRUCTION

Drawing Title

Enlarged RCP - Ground Level - C

Date	06/17/22
Scale	As indicated
Drawing Number	A-C-133
Sheet Size	ARCH D

RCP Legend

- Sprinkler Head - Upright
- Sprinkler Head - Concealed Pendent
- Sprinkler Head - Wall Mounted
- Ceiling Mounted Diffuser
- Lighting Fixture

Sheet Notes

1. All Devices To Be Centered/Aligned to Grid References As Shown On Drawings UON. Where Devices Are Located Off Grid All Dimensions Are To Device Centerline UON.
2. See A-C-092 For Grid Set Out Information
3. See A-C-600 Series For Detailed Room Device Layouts
4. See A-C-692 For All Device Mounting Heights And Locations.
5. Inside Face Of Partitions At Floor Openings To Be Aligned With Edge Of Floor Opening UON
6. In The Event Of Conflict Between Data Shown On Drawings And Data In The Specification, The Drawings Shall Govern. Detail Drawings Take Precedent Over Drawings Of Larger Scope.

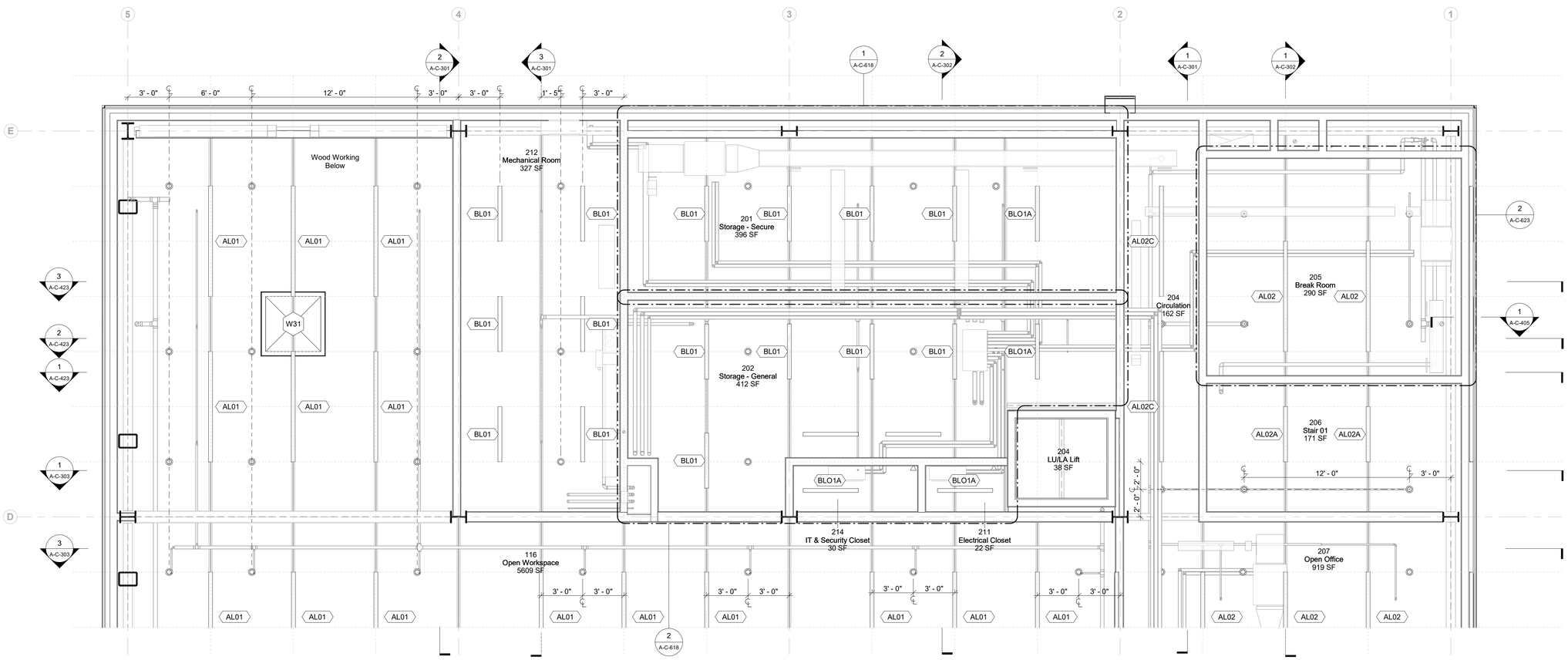

1 Enlarged RCP - Second Level - A
1/4" = 1'-0"

Owner
Storm King Art Center
1 Museum Road
New Windsor, NY 12553
+1 (845) 534-3115

Design Architect
heneghan peng architects
14-16 Lord Edward Street
Dublin, D02 YC63
+353 1 633 9000

Executive Architect
WXY Architecture + Urban Design
224 Centre Street, 5th Floor
New York, NY 10013
+1 (212) 219-1953

Landscape Architect
Gustafson Porter + Bowman
1 Cobham Mews
London, MW1 9SB
+44 020 7284 8950

Reed Hilderbrand LLC
33 Whitney Avenue, 3rd Floor
New Haven, CT 06510
+1 (617) 923-2422

Structural & Lighting
ARUP
77 Water Street
New York, NY 10005
+1 (212) 896-3000

MEPF & IT
BuroHappold
100 Broadway #23
New York, NY 10005
+1 (212) 616-0228

Civil
VHB
100 Great Oaks Blvd., Suite 118
Albany, NY 12203
+1 (518) 389-3606

AV & Acoustics
LSTN Consultants
76 Beaver Street, 2nd Floor
New York, NY 10005
+1 (347) 788-0810

Facade
Front Inc.
100 E. Broadway Street, #501
New York, NY 10002
+1 (212) 242-2220

Key Plan

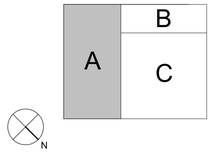

Description	Date
Filing Set	06/17/22

Project

Storm King Art Center
C.F.M. Building

Seal

NOT FOR CONSTRUCTION

Drawing Title

Enlarged RCP - Second Level - A

Date	06/17/22
Scale	As indicated
Drawing Number	A-C-134
Sheet Size	ARCH D

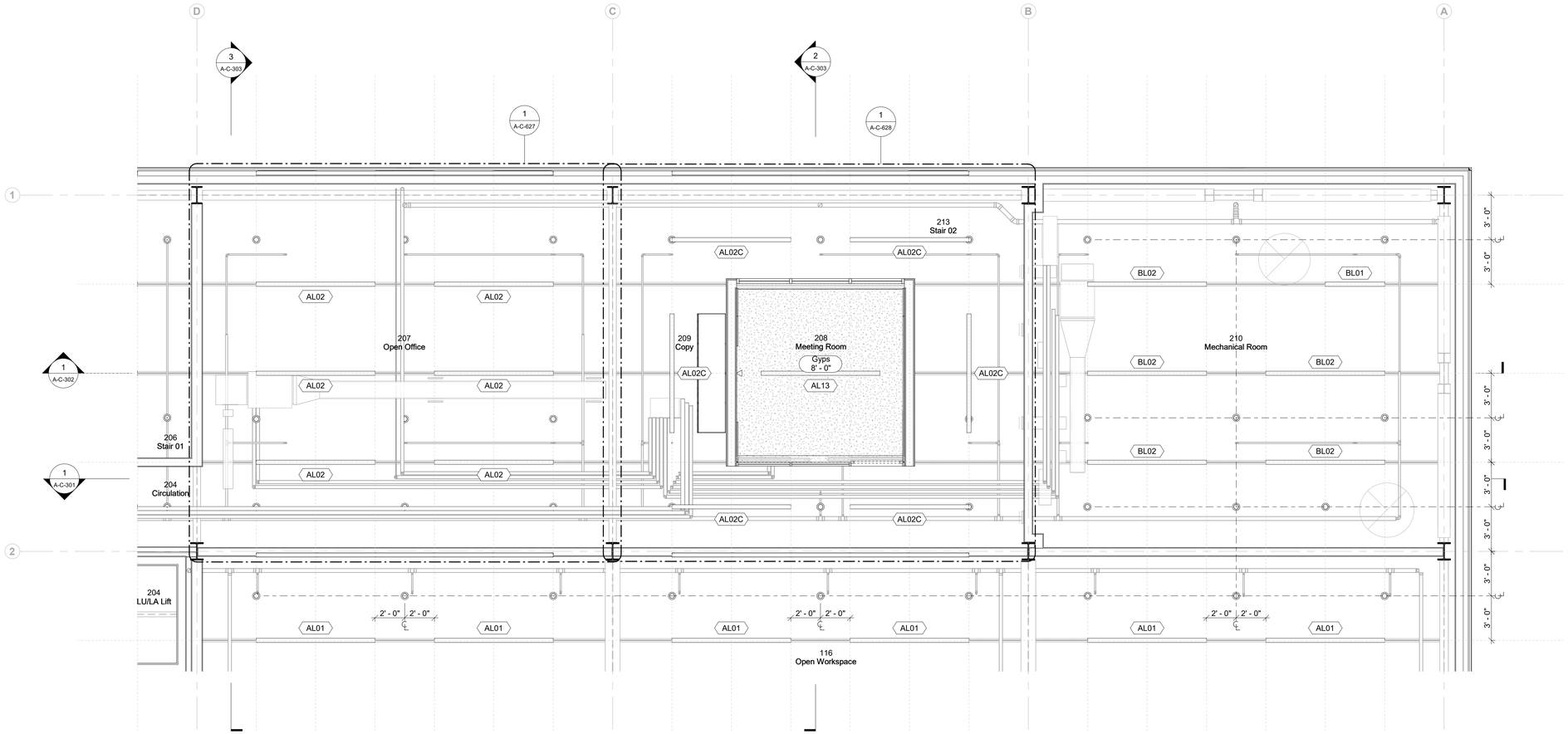

1 Enlarged RCP - Second Level - B
1/4" = 1'-0"

RCP Legend

- Sprinkler Head - Upright
- Sprinkler Head - Concealed Pendent
- Sprinkler Head - Wall Mounted
- Ceiling Mounted Diffuser
- Lighting Fixture

Sheet Notes

1. All Devices To Be Centered/Aligned to Grid References As Shown On Drawings UON. Where Devices Are Located Off Grid All Dimensions Are To Device Centerline UON.
2. See A-C-092 For Grid Set Out Information
3. See A-C-600 Series For Detailed Room Device Layouts
4. See A-C-692 For All Device Mounting Heights And Locations.
5. Inside Face Of Partitions At Floor Openings To Be Aligned With Edge Of Floor Opening UON
6. In The Event Of Conflict Between Data Shown On Drawings And Data In The Specification, The Drawings Shall Govern. Detail Drawings Take Precedent Over Drawings Of Larger Scope.

Owner
Storm King Art Center
1 Museum Road
New Windsor, NY 12553
+1 (845) 534-3115

Design Architect
heneghan peng architects
14-16 Lord Edward Street
Dublin, D02 YC63
+353 1 633 9000

Executive Architect
WXY Architecture + Urban Design
224 Centre Street, 5th Floor
New York, NY 10013
+1 (212) 219-1953

Landscape Architect
Gustafson Porter + Bowman
1 Cobham Mews
London, MW1 9SB
+44 020 7284 8950

Reed Hilderbrand LLC
33 Whitney Avenue, 3rd Floor
New Haven, CT 06510
+1 (617) 923-2422

Structural & Lighting
ARUP
77 Water Street
New York, NY 10005
+1 (212) 896-3000

MEPF & IT
BuroHappold
100 Broadway #23
New York, NY 10005
+1 (212) 616-0228

Civil
VHB
100 Great Oaks Blvd., Suite 118
Albany, NY 12203
+1 (518) 389-3606

AV & Acoustics
LSTN Consultants
76 Beaver Street, 2nd Floor
New York, NY 10005
+1 (347) 788-0810

Facade
Front Inc.
100 E. Broadway Street, #501
New York, NY 10002
+1 (212) 242-2220

Key Plan

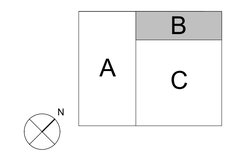

Description	Date
Filing Set	06/17/22

Project

Storm King Art Center

C.F.M. Building

Seal

NOT FOR CONSTRUCTION

Drawing Title

Enlarged RCP - Second Level - B

Date	06/17/22
Scale	As indicated
Drawing Number	A-C-135
Sheet Size	ARCH D

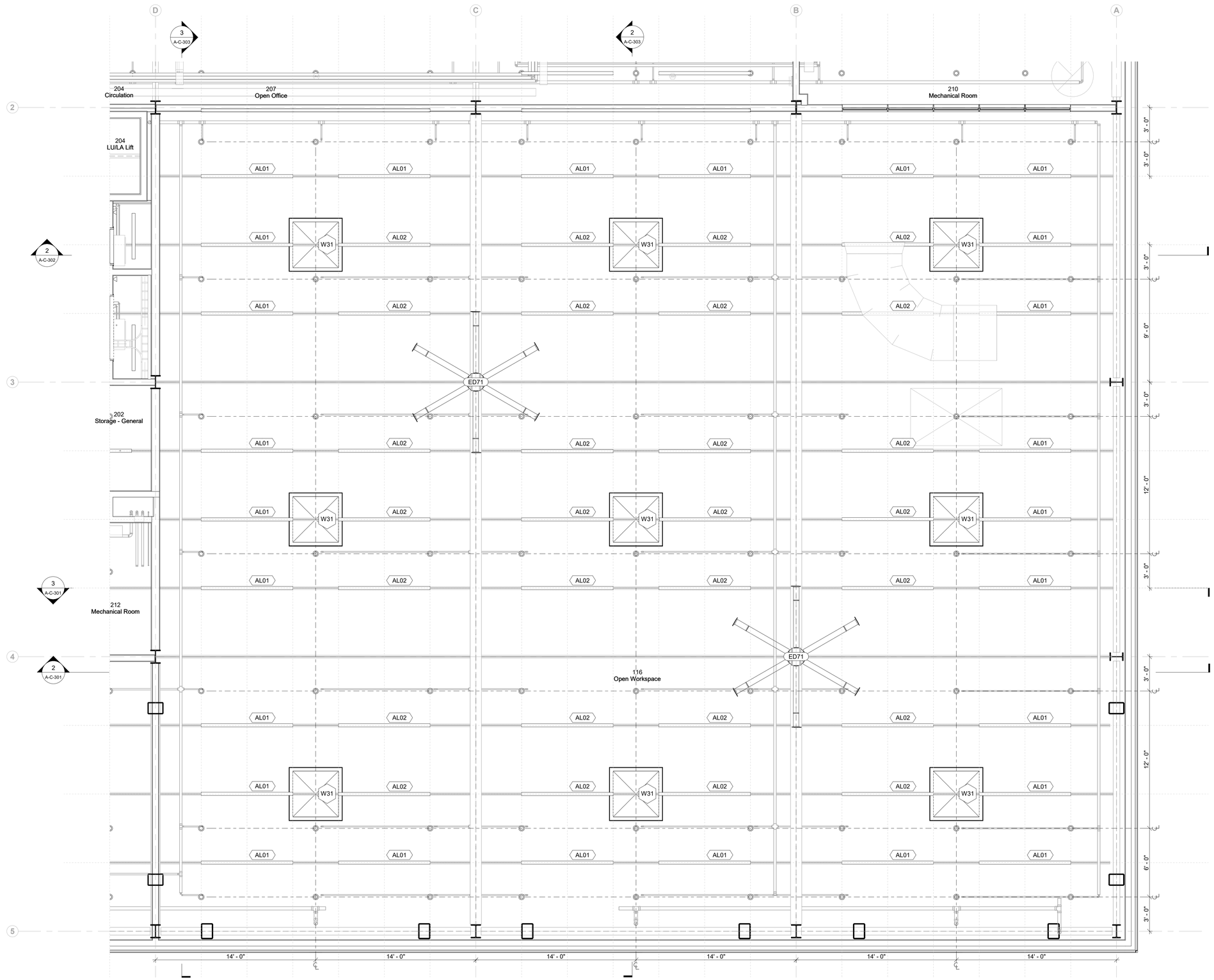

1 Enlarged RCP - Second Level - C
1/4" = 1'-0"

RCP Legend

- Sprinkler Head - Upright
- Sprinkler Head - Concealed Pendent
- Sprinkler Head - Wall Mounted
- Ceiling Mounted Diffuser
- Lighting Fixture

Sheet Notes

1. All Devices To Be Centered/Aligned to Grid References As Shown On Drawings UON. Where Devices Are Located Off Grid All Dimensions Are To Device Centerline UON.
2. See A-C-092 For Grid Set Out Information
3. See A-C-600 Series For Detailed Room Device Layouts
4. See A-C-692 For All Device Mounting Heights And Locations.
5. Inside Face Of Partitions At Floor Openings To Be Aligned With Edge Of Floor Opening UON
6. In The Event Of Conflict Between Data Shown On Drawings And Data In The Specification, The Drawings Shall Govern. Detail Drawings Take Precedent Over Drawings Of Larger Scope.

Owner
Storm King Art Center
1 Museum Road
New Windsor, NY 12553
+1 (845) 534-3115

Design Architect
heneghan peng architects
14-16 Lord Edward Street
Dublin, D02 YC63
+353 1 633 9000

Executive Architect
WXY Architecture + Urban Design
224 Centre Street, 5th Floor
New York, NY 10013
+1 (212) 219-1953

Landscape Architect
Gustafson Porter + Bowman
1 Cobham Mews
London, MW1 9SB
+44 020 7284 8950

Reed Hilderbrand LLC
33 Whitney Avenue, 3rd Floor
New Haven, CT 06510
+1 (617) 923-2422

Structural & Lighting
ARUP
77 Water Street
New York, NY 10005
+1 (212) 896-3000

MEPF & IT
BuroHappold
100 Broadway #23
New York, NY 10005
+1 (212) 616-0228

Civil
VHB
100 Great Oaks Blvd., Suite 118
Albany, NY 12203
+1 (518) 389-3606

AV & Acoustics
LSTN Consultants
76 Beaver Street, 2nd Floor
New York, NY 10005
+1 (347) 788-0810

Facade
Front Inc.
100 E. Broadway Street, #501
New York, NY 10002
+1 (212) 242-2220

Key Plan

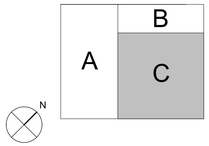

Description	Date
Filing Set	06/17/22

Project

Storm King Art Center

C.F.M. Building

Seal

NOT FOR CONSTRUCTION

Drawing Title

Enlarged RCP - Second Level - C

Date	06/17/22
Scale	As indicated
Drawing Number	A-C-136
Sheet Size	ARCH D

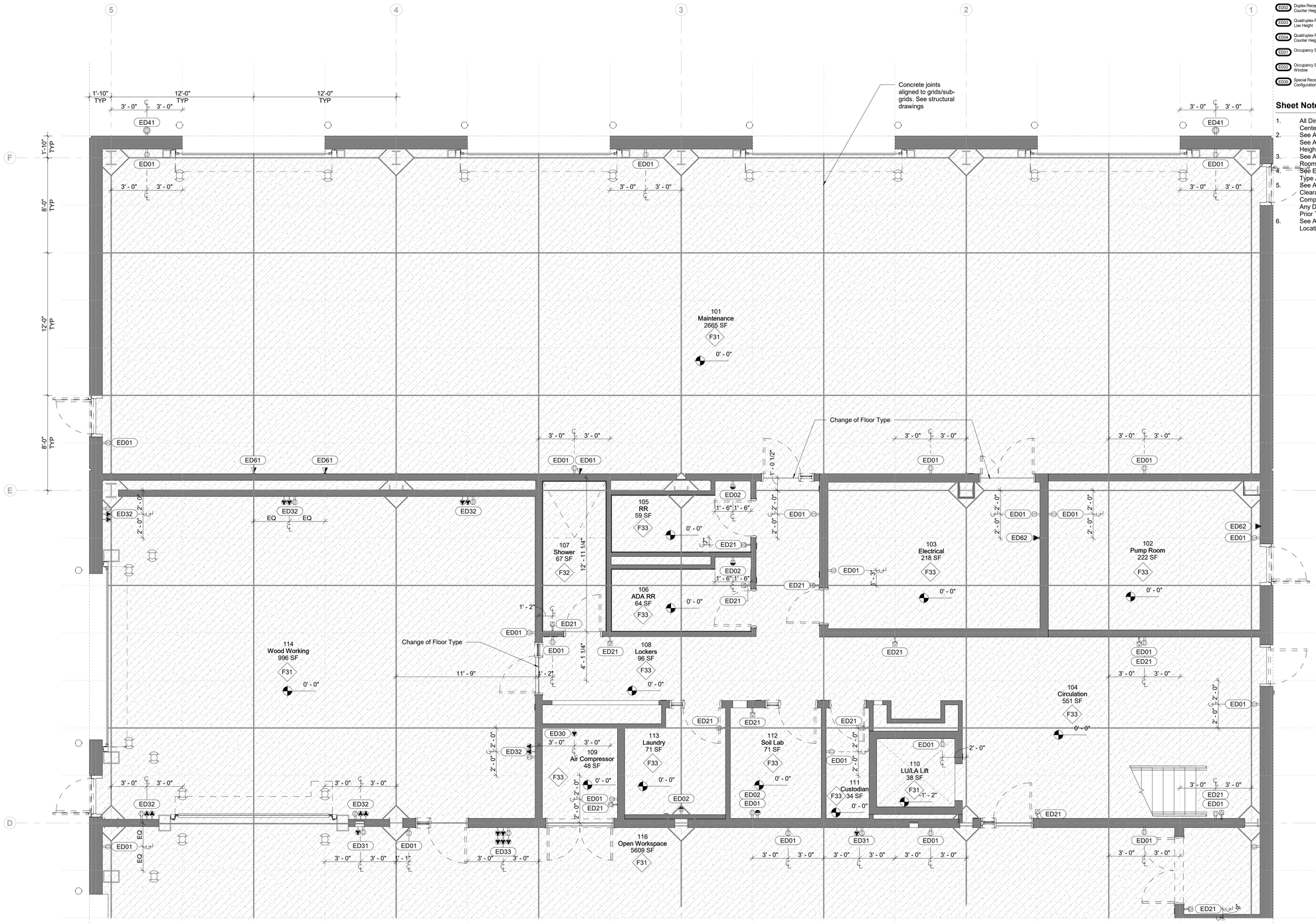

1 Enlarged Floor Finish Plan - Ground Level - A
1/4" = 1'-0"

Floor Finish Legend

- Sealed Concrete
- Linoleum
- Concrete Joint

Electrical Device Legend

ED01	Duplex receptacle Low Height	ED11	Special Receptacle Configuration - 2 Stack
ED02	Duplex Receptacle Counter Height	ED12	Special Receptacle Configuration - 3 Stack
ED03	Quadruplex Receptacle Low Height	ED13	Special Receptacle Configuration - 6 Stack
ED04	Quadruplex Receptacle Counter Height	ED41	Exterior Duplex Outlet Low Height
ED21	Occupancy Sensor - Wall	ED51	Power/Telecommunications Floorbox
ED22	Occupancy Sensor - Window	ED61	Single Telecommunications Receptacle
ED30	Special Receptacle Configuration - Single	ED62	Duplex Telecommunications Receptacle

Sheet Notes

1. All Dimensions Are To Device Centerline UON.
2. See A-C-092 For Grid Set Out See A-C-692 For All Device Mounting Heights And Locations.
3. See A-C-600 Series For Detailed Room Device Layouts
4. See Electrical Drawings for Outlet Type And Power Requirements.
5. See A-C-003 For Typical Accessible Clearances And Dimensions For ADA Compliance. Notify The Architect Of Any Discrepancies With The Plans Prior To The Start Of Work.
6. See A-C-007 For Fire Extinguisher Locations

Owner
Storm King Art Center
1 Museum Road
New Windsor, NY 12553
+1 (845) 534-3115

Design Architect
heneghan peng architects
14-16 Lord Edward Street
Dublin, D02 YC63
+353 1 633 9000

Executive Architect
WXY Architecture + Urban Design
224 Centre Street, 5th Floor
New York, NY 10013
+1 (212) 219-1953

Landscape Architect
Gustafson Porter + Bowman
1 Cobham Mews
London, MW1 9SB
+44 020 7284 8950

Reed Hilderbrand LLC
33 Whitney Avenue, 3rd Floor
New Haven, CT 06510
+1 (617) 923-2422

Structural & Lighting
ARUP
77 Water Street
New York, NY 10005
+1 (212) 896-3000

MEPF & IT
BuroHappold
100 Broadway #23
New York, NY 10005
+1 (212) 616-0228

Civil
VHB
100 Great Oaks Blvd., Suite 118
Albany, NY 12203
+1 (518) 389-3606

AV & Acoustics
LSTN Consultants
76 Beaver Street, 2nd Floor
New York, NY 10005
+1 (347) 788-0810

Facade
Front Inc.
100 E. Broadway Street, #501
New York, NY 10002
+1 (212) 242-2220

Key Plan

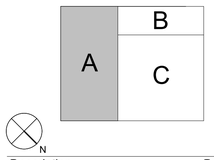

Description	Date
Filing Set	06/17/22

Project

Storm King Art Center

C.F.M. Building

Seal

NOT FOR CONSTRUCTION

Drawing Title

Enlarged Finish & Device Plan - Ground Level - A

Date	06/17/22
Scale	As indicated
Drawing Number	A-C-141
Sheet Size	ARCH D

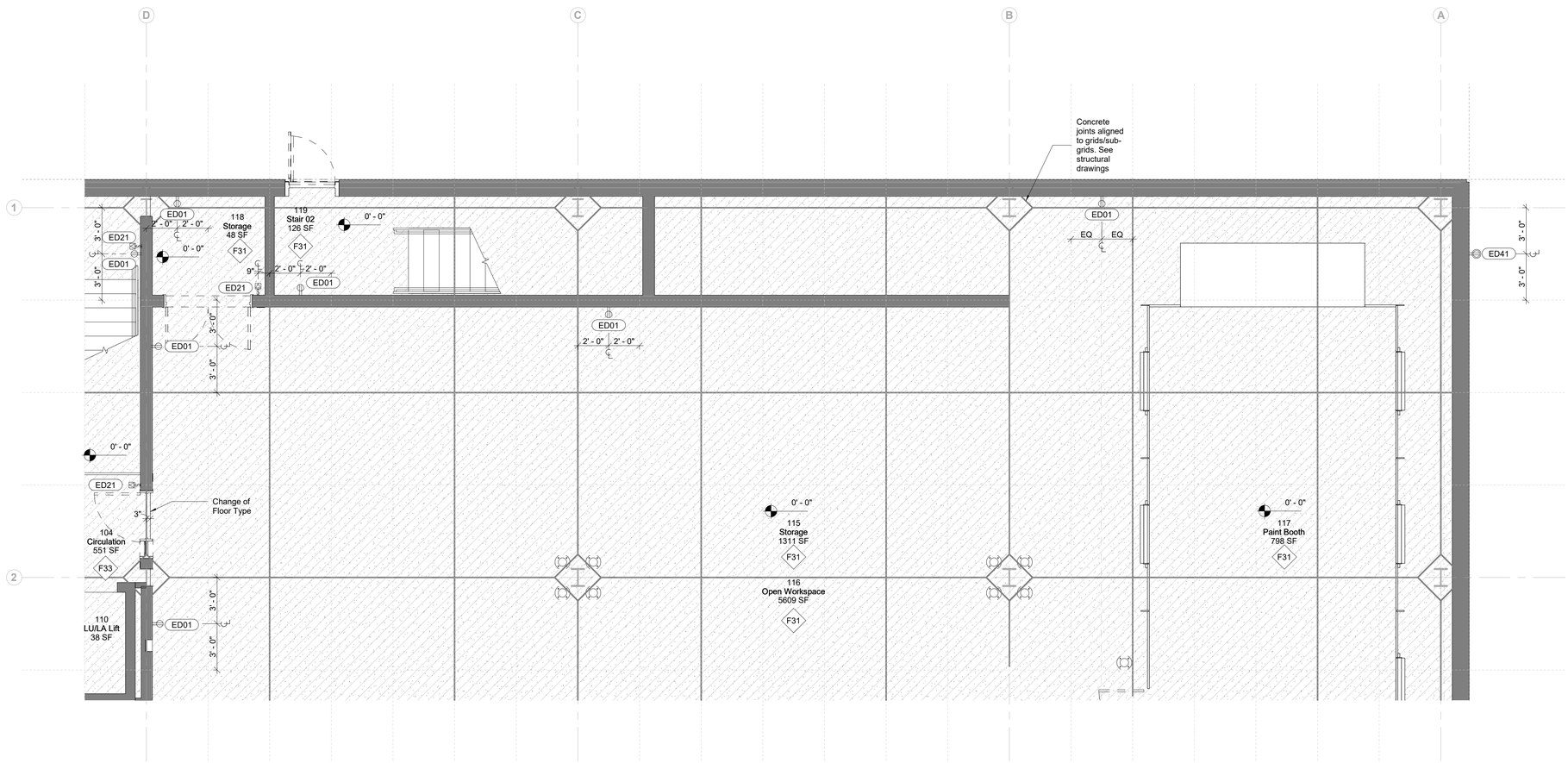

1 Enlarged Floor Finish Plan - Ground Level - B
1/4" = 1'-0"

Floor Finish Legend

- Sealed Concrete
- Linoleum
- Concrete Joint

Electrical Device Legend

ED01	Duplex receptacle Low Height	ED11	Special Receptacle Configuration - 2 Stack
ED02	Duplex Receptacle Counter Height	ED12	Special Receptacle Configuration - 3 Stack
ED03	Quadruplex Receptacle Low Height	ED13	Special Receptacle Configuration - 4 Stack
ED04	Quadruplex Receptacle Counter Height	ED41	Exterior Duplex Outlet Low Height
ED21	Occupancy Sensor - Wall	ED51	Power/Telecommunications Floorbox
ED22	Occupancy Sensor - Window	ED61	Single Telecommunications Receptacle
ED30	Special Receptacle Configuration - Single	ED62	Duplex Telecommunications Receptacle

Sheet Notes

1. All Dimensions Are To Device Centerline UON.
2. See A-C-092 For Grid Set Out See A-C-692 For All Device Mounting Heights And Locations.
3. See A-C-600 Series For Detailed Room Device Layouts
4. See Electrical Drawings for Outlet Type And Power Requirements.
5. See A-C-003 For Typical Accessible Clearances And Dimensions For ADA Compliance. Notify The Architect Of Any Discrepancies With The Plans Prior To The Start Of Work.
6. See A-C-007 For Fire Extinguisher Locations

Owner
Storm King Art Center
1 Museum Road
New Windsor, NY 12553
+1 (845) 534-3115

Design Architect
heneghan peng architects
14-16 Lord Edward Street
Dublin, D02 YC63
+353 1 633 9000

Executive Architect
WXY Architecture + Urban Design
224 Centre Street, 5th Floor
New York, NY 10013
+1 (212) 219-1953

Landscape Architect
Gustafson Porter + Bowman
1 Cobham Mews
London, MW1 9SB
+44 020 7284 8950

Reed Hilderbrand LLC
33 Whitney Avenue, 3rd Floor
New Haven, CT 06510
+1 (617) 923-2422

Structural & Lighting
ARUP
77 Water Street
New York, NY 10005
+1 (212) 896-3000

MEPF & IT
BuroHappold
100 Broadway #23
New York, NY 10005
+1 (212) 616-0228

Civil
VHB
100 Great Oaks Blvd., Suite 118
Albany, NY 12203
+1 (518) 389-3606

AV & Acoustics
LSTN Consultants
76 Beaver Street, 2nd Floor
New York, NY 10005
+1 (347) 788-0810

Facade
Front Inc.
100 E. Broadway Street, #501
New York, NY 10002
+1 (212) 242-2220

Key Plan

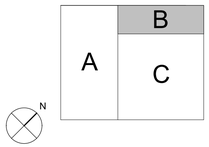

Description	Date
Filing Set	06/17/22

Project

Storm King Art Center

C.F.M. Building

Seal

NOT FOR CONSTRUCTION

Drawing Title

Enlarged Finish & Device Plan - Ground Level - B

Date	06/17/22
Scale	As indicated
Drawing Number	A-C-142
Sheet Size	ARCH D

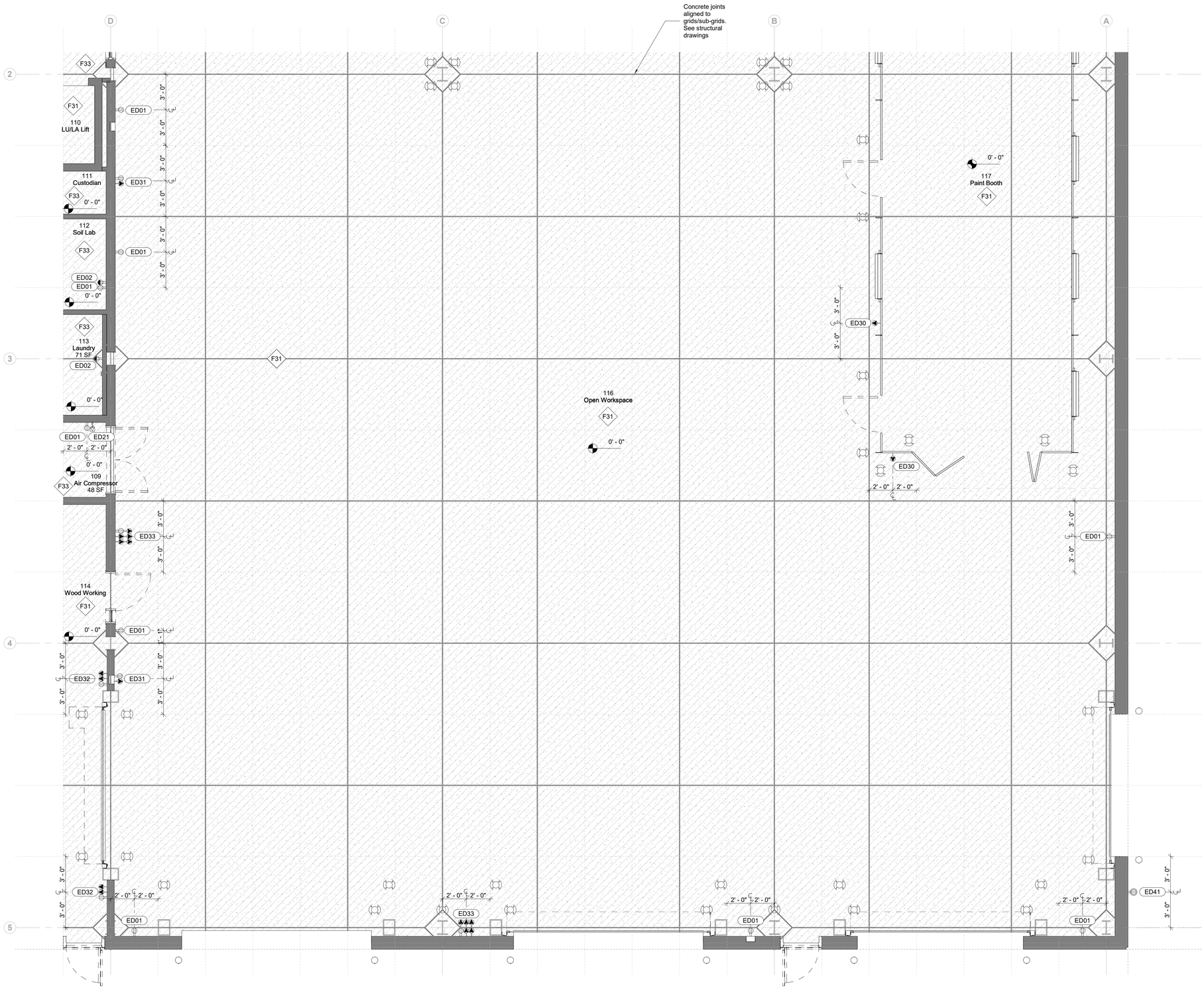

1 Enlarged Floor Finish Plan - Ground Level - C
1/4" = 1'-0"

Floor Finish Legend

- Sealed Concrete
- Linoleum
- Concrete Joint

Electrical Device Legend

ED01	Duplex receptacle Low Height	ED31	Special Receptacle Configuration - 2 Stack
ED02	Duplex Receptacle Counter Height	ED32	Special Receptacle Configuration - 3 Stack
ED03	Quadruplex Receptacle Low Height	ED33	Special Receptacle Configuration - 6 Stack
ED04	Quadruplex Receptacle Counter Height	ED41	Exterior Duplex Outlet Low Height
ED21	Occupancy Sensor - Wall	ED51	Power/Telecommunications Floorbox
ED22	Occupancy Sensor - Window	ED61	Single Telecommunications Receptacle
ED30	Special Receptacle Configuration - Single	ED62	Duplex Telecommunications Receptacle

Sheet Notes

1. All Dimensions Are To Device Centerline UON.
2. See A-C-092 For Grid Set Out See A-C-692 For All Device Mounting Heights And Locations.
3. See A-C-600 Series For Detailed Room Device Layouts
4. See Electrical Drawings for Outlet Type And Power Requirements.
5. See A-C-003 For Typical Accessible Clearances And Dimensions For ADA Compliance. Notify The Archtiect Of Any Discrepancies With The Plans Prior To The Start Of Work.
6. See A-C-007 For Fire Extinguisher Locations

Owner
Storm King Art Center
1 Museum Road
New Windsor, NY 12553
+1 (845) 534-3115

Design Architect
heneghan peng architects
14-16 Lord Edward Street
Dublin, D02 YC63
+353 1 633 9000

Executive Architect
WXY Architecture + Urban Design
224 Centre Street, 5th Floor
New York, NY 10013
+1 (212) 219-1953

Landscape Architect
Gustafson Porter + Bowman
1 Cobham Mews
London, MW1 9SB
+44 020 7284 8950

Reed Hilderbrand LLC
33 Whitney Avenue, 3rd Floor
New Haven, CT 06510
+1 (617) 923-2422

Structural & Lighting
ARUP
77 Water Street
New York, NY 10005
+1 (212) 896-3000

MEPF & IT
BuroHappold
100 Broadway #23
New York, NY 10005
+1 (212) 616-0228

Civil
VHB
100 Great Oaks Blvd., Suite 118
Albany, NY 12203
+1 (518) 389-3606

AV & Acoustics
LSTN Consultants
76 Beaver Street, 2nd Floor
New York, NY 10005
+1 (347) 788-0810

Facade
Front Inc.
100 E. Broadway Street, #501
New York, NY 10002
+1 (212) 242-2220

Key Plan

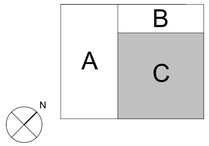

Description	Date
Filing Set	06/17/22

Project

Storm King Art Center

C.F.M. Building

Seal

NOT FOR CONSTRUCTION

Drawing Title

Enlarged Finish & Device Plan - Ground Level - C

Date	06/17/22
Scale	As indicated
Drawing Number	A-C-143
Sheet Size	ARCH D

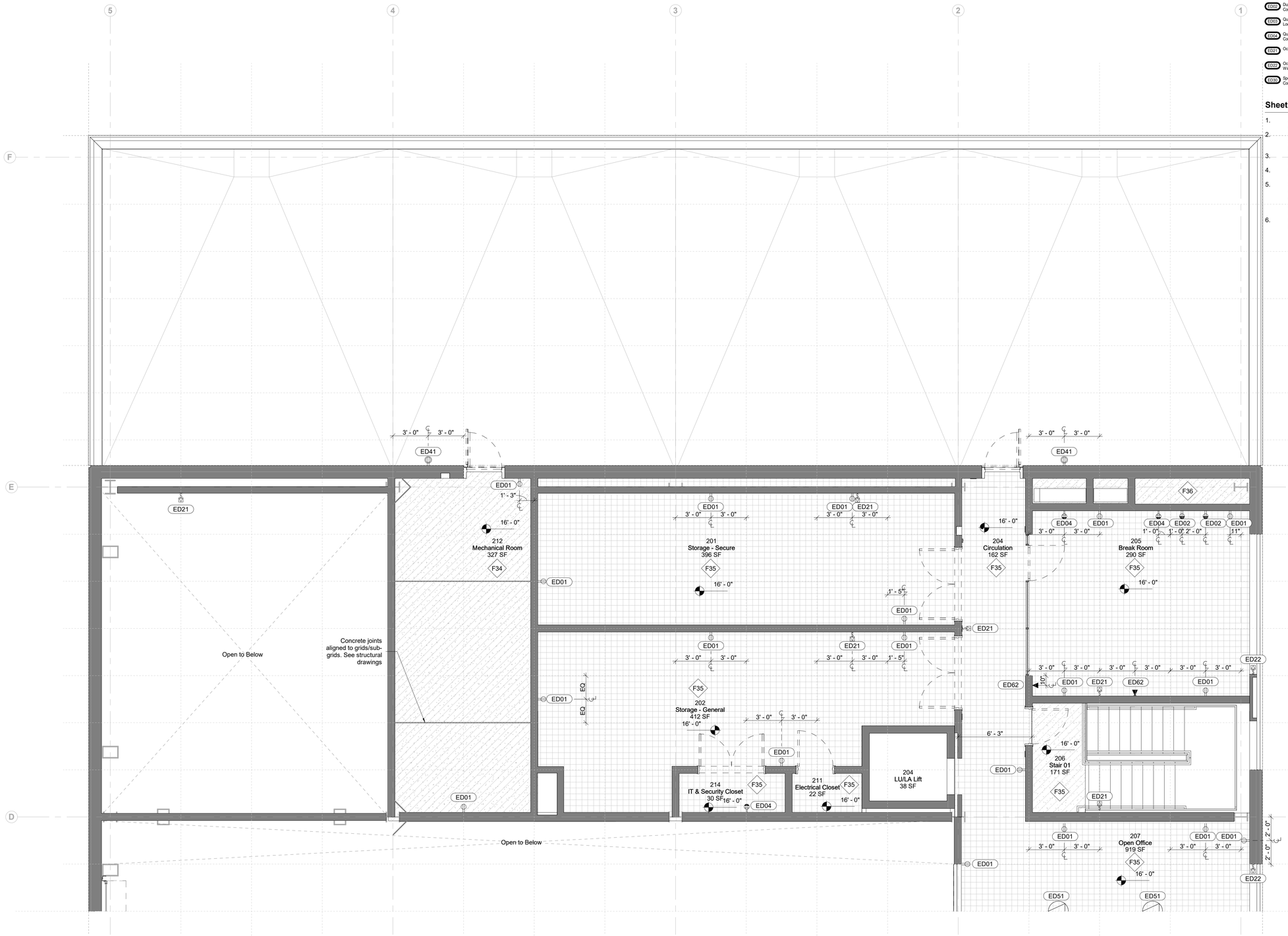

1 Enlarged Floor Finish Plan - Second Level - A
1/4" = 1'-0"

Floor Finish Legend

- Sealed Concrete
- Linoleum
- Concrete Joint

Electrical Device Legend

ED01	Duplex receptacle Low Height	ED31	Special Receptacle Configuration - 2 Stack
ED03	Duplex Receptacle Counter Height	ED32	Special Receptacle Configuration - 3 Stack
ED05	Quadruplex Receptacle Low Height	ED33	Special Receptacle Configuration - 6 Stack
ED06	Quadruplex Receptacle Counter Height	ED41	Exterior Duplex Outlet Low Height
ED21	Occupancy Sensor - Wall	ED51	Power/Telecommunications Floorbox
ED22	Occupancy Sensor - Window	ED61	Single Telecommunications Receptacle
ED30	Special Receptacle Configuration - Single	ED62	Duplex Telecommunications Receptacle

Sheet Notes

1. All Dimensions Are To Device Centerline UON.
2. See A-C-092 For Grid Set Out
   See A-C-692 For All Device Mounting Heights And Locations.
3. See A-C-600 Series For Detailed Room Device Layouts
4. See Electrical Drawings for Outlet Type And Power Requirements.
5. See A-C-003 For Typical Accessible Clearances And Dimensions For ADA Compliance. Notify The Architect Of Any Discrepancies With The Plans Prior To The Start Of Work.
6. See A-C-007 For Fire Extinguisher Locations

Owner
Storm King Art Center
1 Museum Road
New Windsor, NY 12553
+1 (845) 534-3115

Design Architect
heneghan peng architects
14-16 Lord Edward Street
Dublin, D02 YC63
+353 1 633 9000

Executive Architect
WXY Architecture + Urban Design
224 Centre Street, 5th Floor
New York, NY 10013
+1 (212) 219-1953

Landscape Architect
Gustafson Porter + Bowman
1 Cobham Mews
London, MW1 9SB
+44 020 7284 8950

Reed Hilderbrand LLC
33 Whitney Avenue, 3rd Floor
New Haven, CT 06510
+1 (617) 923-2422

Structural & Lighting
ARUP
77 Water Street
New York, NY 10005
+1 (212) 896-3000

MEPF & IT
BuroHappold
100 Broadway #23
New York, NY 10005
+1 (212) 616-0228

Civil
VHB
100 Great Oaks Blvd., Suite 118
Albany, NY 12203
+1 (518) 389-3606

AV & Acoustics
LSTN Consultants
76 Beaver Street, 2nd Floor
New York, NY 10005
+1 (347) 788-0810

Facade
Front Inc.
100 E. Broadway Street, #501
New York, NY 10002
+1 (212) 242-2220

Key Plan

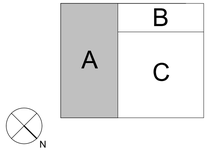

Description	Date
Filing Set	06/17/22

Project

Storm King Art Center

C.F.M. Building

Seal

NOT FOR CONSTRUCTION

Drawing Title

Enlarged Finish & Device Plan - Second Level - A

Date	06/17/22
Scale	As indicated
Drawing Number	A-C-144
Sheet Size	ARCH D

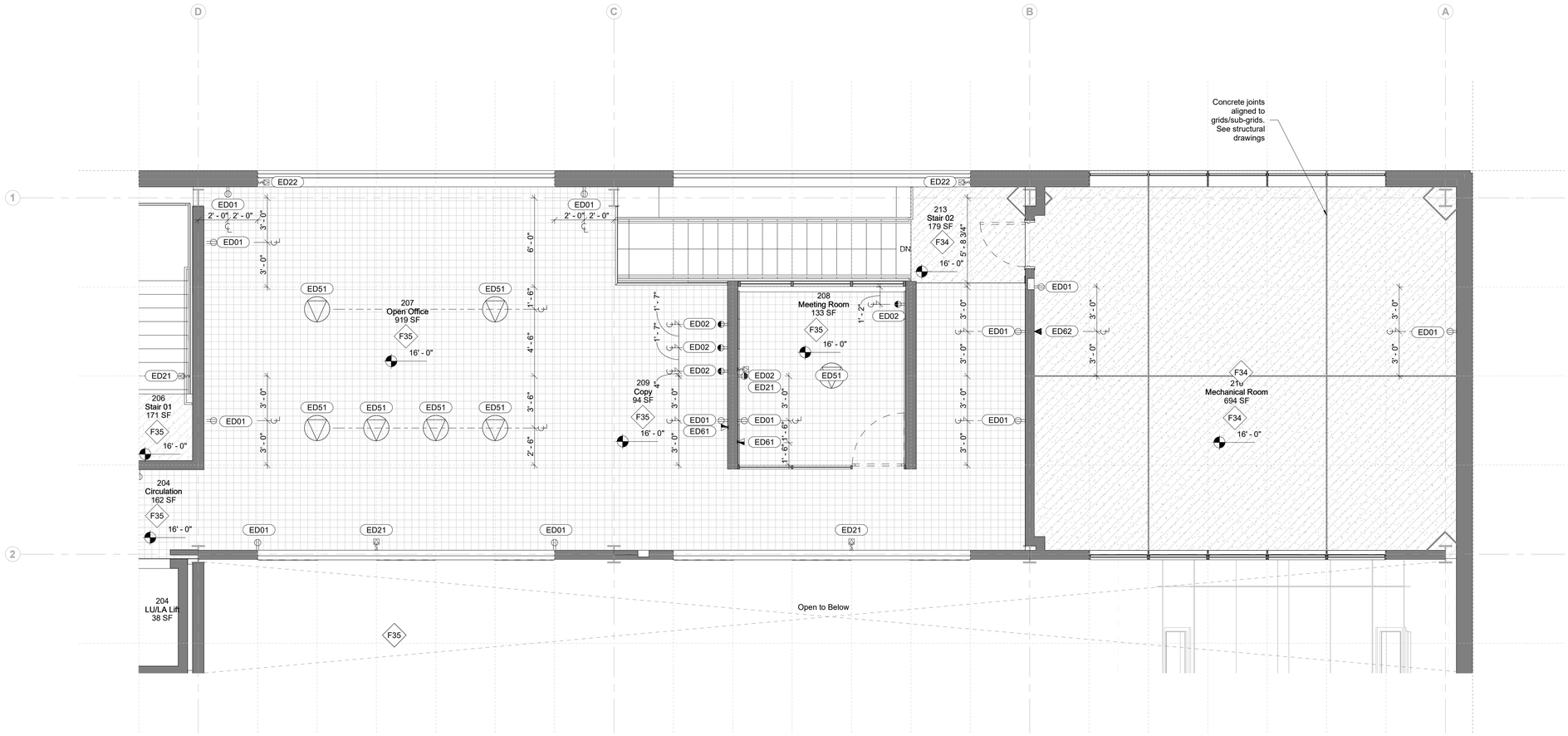

1 Enlarged Floor Finish Plan - Second Level - B
1/4" = 1'-0"

Floor Finish Legend

- Sealed Concrete
- Linoleum
- Concrete Joint

Electrical Device Legend

ED01	Duplex receptacle Low Height	ED51	Special Receptacle Configuration - 2 Stack
ED02	Duplex Receptacle Counter Height	ED52	Special Receptacle Configuration - 3 Stack
ED03	Quadruplex Receptacle Low Height	ED53	Special Receptacle Configuration - 6 Stack
ED04	Quadruplex Receptacle Counter Height	ED61	Exterior Duplex Outlet Low Height
ED21	Occupancy Sensor - Wall	ED61	Power/Telecommunications Floorbox
ED22	Occupancy Sensor - Window	ED01	Single Telecommunications Receptacle
ED00	Special Receptacle Configuration - Single	ED02	Duplex Telecommunications Receptacle

Sheet Notes

1. All Dimensions Are To Device Centerline UON.
2. See A-C-092 For Grid Set Out
   See A-C-692 For All Device Mounting Heights And Locations.
3. See A-C-600 Series For Detailed Room Device Layouts
4. See Electrical Drawings for Outlet Type And Power Requirements.
5. See A-C-003 For Typical Accessible Clearances And Dimensions For ADA Compliance. Notify The Architect Of Any Discrepancies With The Plans Prior To The Start Of Work.
6. See A-C-007 For Fire Extinguisher Locations

Owner
Storm King Art Center
1 Museum Road
New Windsor, NY 12553
+1 (845) 534-3115

Design Architect
heneghan peng architects
14-16 Lord Edward Street
Dublin, D02 YC63
+353 1 633 9000

Executive Architect
WXY Architecture + Urban Design
224 Centre Street, 5th Floor
New York, NY 10013
+1 (212) 219-1953

Landscape Architect
Gustafson Porter + Bowman
1 Cobham Mews
London, MW1 9SB
+44 020 7284 8950

Reed Hilderbrand LLC
33 Whitney Avenue, 3rd Floor
New Haven, CT 06510
+1 (617) 923-2422

Structural & Lighting
ARUP
77 Water Street
New York, NY 10005
+1 (212) 896-3000

MEPF & IT
BuroHappold
100 Broadway #23
New York, NY 10005
+1 (212) 616-0228

Civil
VHB
100 Great Oaks Blvd., Suite 118
Albany, NY 12203
+1 (518) 389-3606

AV & Acoustics
LSTN Consultants
76 Beaver Street, 2nd Floor
New York, NY 10005
+1 (347) 788-0810

Facade
Front Inc.
100 E. Broadway Street, #501
New York, NY 10002
+1 (212) 242-2220

Key Plan

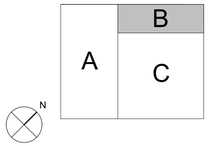

Description	Date
Filing Set	06/17/22

Project

Storm King Art Center

C.F.M. Building

Seal

NOT FOR CONSTRUCTION

Drawing Title

Enlarged Finish & Device Plan - Second Level - B

Date	06/17/22
Scale	As indicated
Drawing Number	A-C-145
Sheet Size	ARCH D

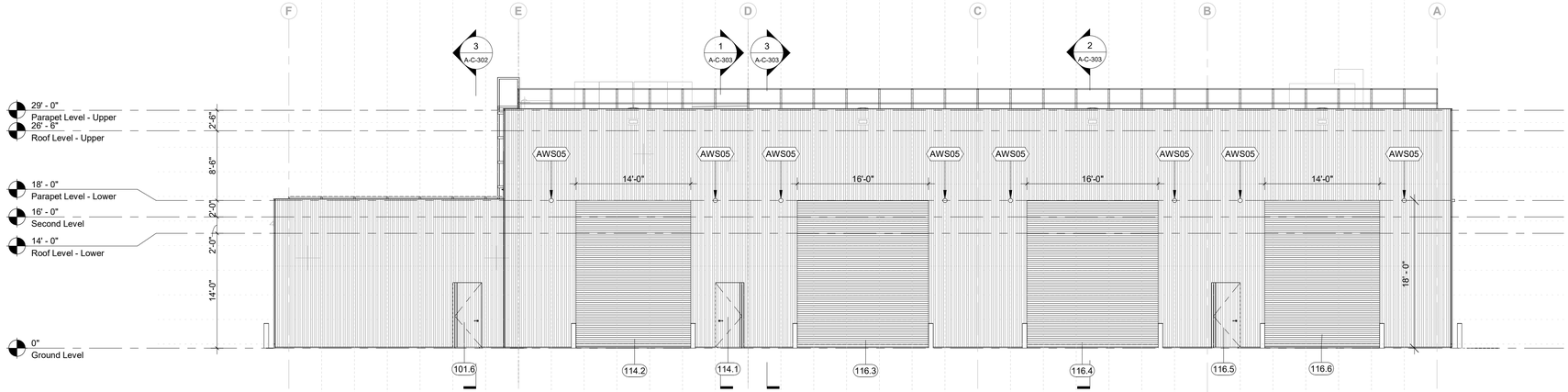

1 South Elevation
1/8" = 1'-0"

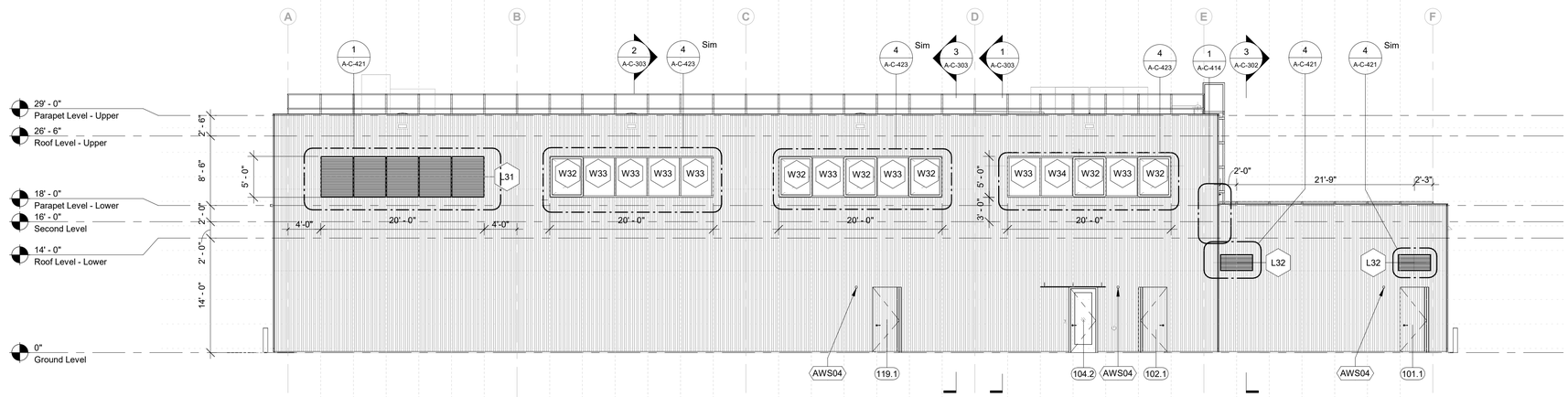

2 North Elevation
1/8" = 1'-0"

Owner
Storm King Art Center
1 Museum Road
New Windsor, NY 12553
+1 (845) 534-3115

Design Architect
heneghan peng architects
14-16 Lord Edward Street
Dublin, D02 YC63
+353 1 633 9000

Executive Architect
WXY Architecture + Urban Design
224 Centre Street, 5th Floor
New York, NY 10013
+1 (212) 219-1953

Landscape Architect
Gustafson Porter + Bowman
1 Cobham Mews
London, MW1 9SB
+44 020 7284 8950

Reed Hilderbrand LLC
33 Whitney Avenue, 3rd Floor
New Haven, CT 06510
+1 (617) 923-2422

Structural & Lighting
ARUP
77 Water Street
New York, NY 10005
+1 (212) 896-3000

MEPF & IT
BuroHappold
100 Broadway #23
New York, NY 10005
+1 (212) 616-0228

Civil
VHB
100 Great Oaks Blvd., Suite 118
Albany, NY 12203
+1 (518) 389-3606

AV & Acoustics
LSTN Consultants
76 Beaver Street, 2nd Floor
New York, NY 10005
+1 (347) 788-0810

Facade
Front Inc.
100 E. Broadway Street, #501
New York, NY 10002
+1 (212) 242-2220

Key Plan

Description	Date
Filing Set	06/17/22

Project

Storm King Art Center

C.F.M. Building

Seal

NOT FOR CONSTRUCTION

Drawing Title

Building Elevations - Overall

Date	06/17/22
Scale	1/8" = 1'-0"
Drawing Number	A-C-201
Sheet Size	ARCH D

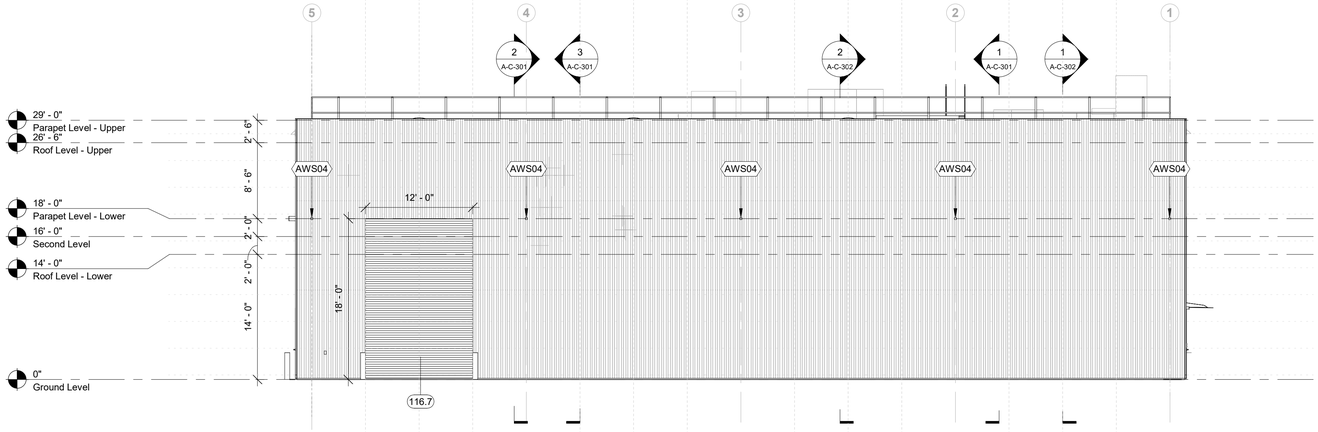

1 East Elevation
1/8" = 1'-0"

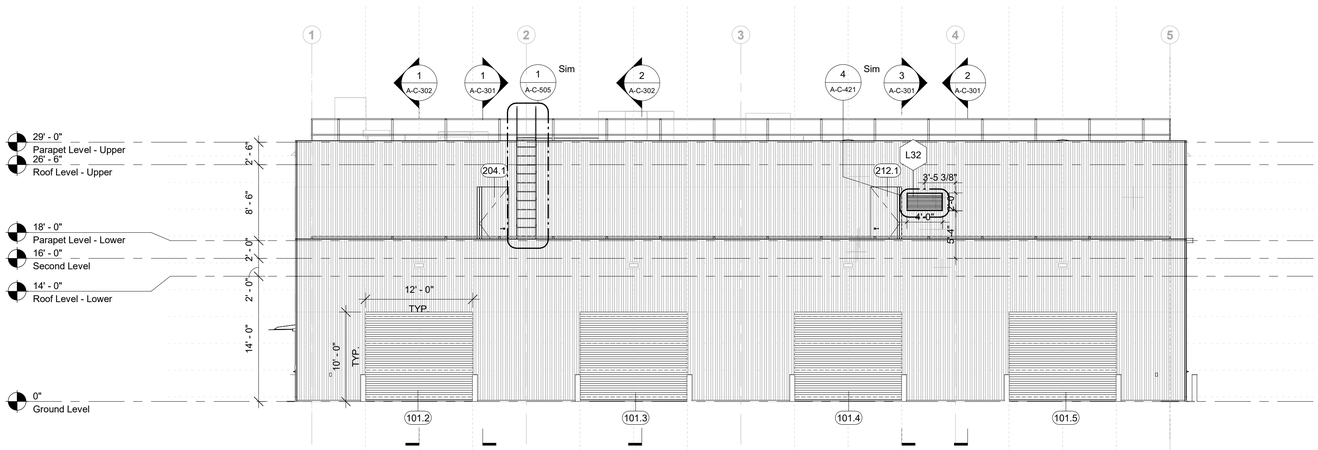

2 West Elevation
1/8" = 1'-0"

Owner
Storm King Art Center
1 Museum Road
New Windsor, NY 12553
+1 (845) 534-3115

Design Architect
heneghan peng architects
14-16 Lord Edward Street
Dublin, D02 YC63
+353 1 633 9000

Executive Architect
WXY Architecture + Urban Design
224 Centre Street, 5th Floor
New York, NY 10013
+1 (212) 219-1953

Landscape Architect
Gustafson Porter + Bowman
1 Cobham Mews
London, MW1 9SB
+44 020 7284 8950

Reed Hilderbrand LLC
33 Whitney Avenue, 3rd Floor
New Haven, CT 06510
+1 (617) 923-2422

Structural & Lighting
ARUP
77 Water Street
New York, NY 10005
+1 (212) 896-3000

MEPF & IT
BuroHappold
100 Broadway #23
New York, NY 10005
+1 (212) 616-0228

Civil
VHB
100 Great Oaks Blvd., Suite 118
Albany, NY 12203
+1 (518) 389-3606

AV & Acoustics
LSTN Consultants
76 Beaver Street, 2nd Floor
New York, NY 10005
+1 (347) 788-0810

Facade
Front Inc.
100 E. Broadway Street, #501
New York, NY 10002
+1 (212) 242-2220

Key Plan

Description	Date
Filing Set	06/17/22

Project

Storm King Art Center

C.F.M. Building

Seal

NOT FOR CONSTRUCTION

Drawing Title

Building Elevations - Overall

Date	06/17/22
Scale	1/8" = 1'-0"
Drawing Number	A-C-202
Sheet Size	ARCH D

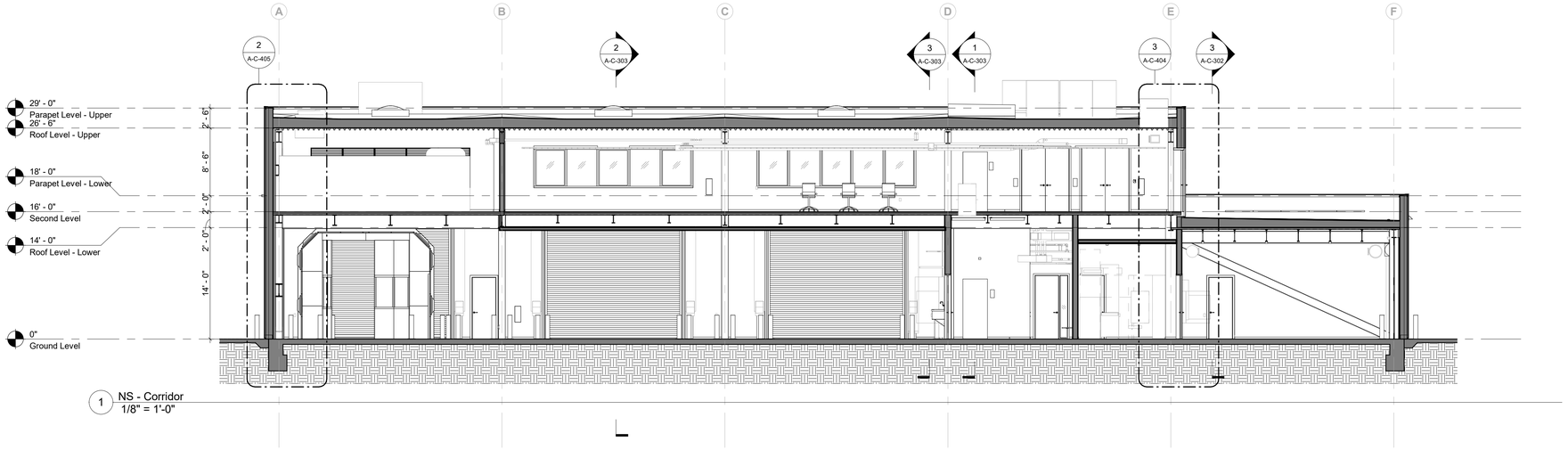

1 NS - Corridor
1/8" = 1'-0"

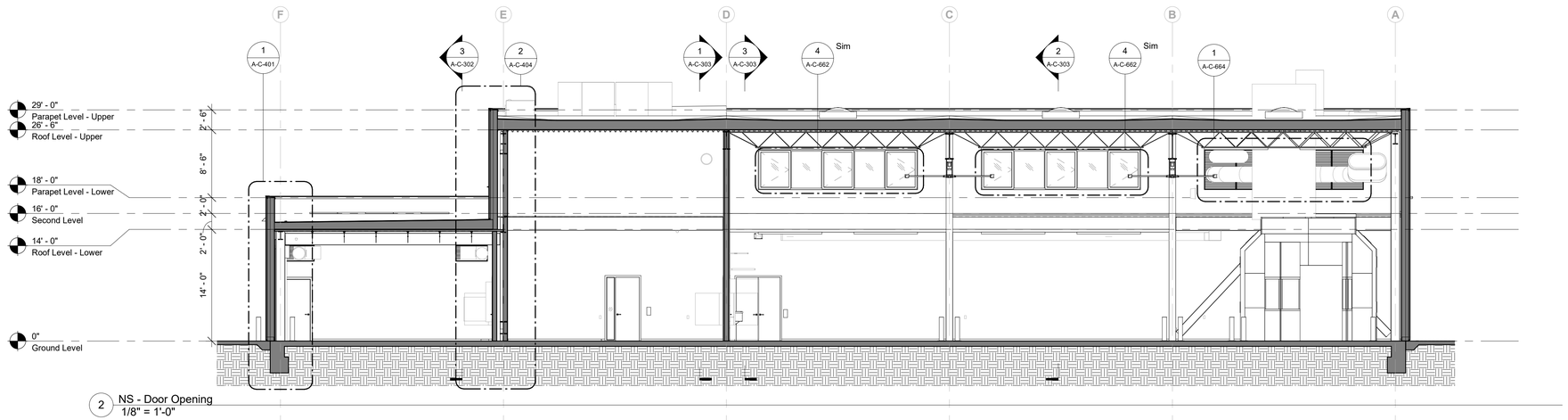

2 NS - Door Opening
1/8" = 1'-0"

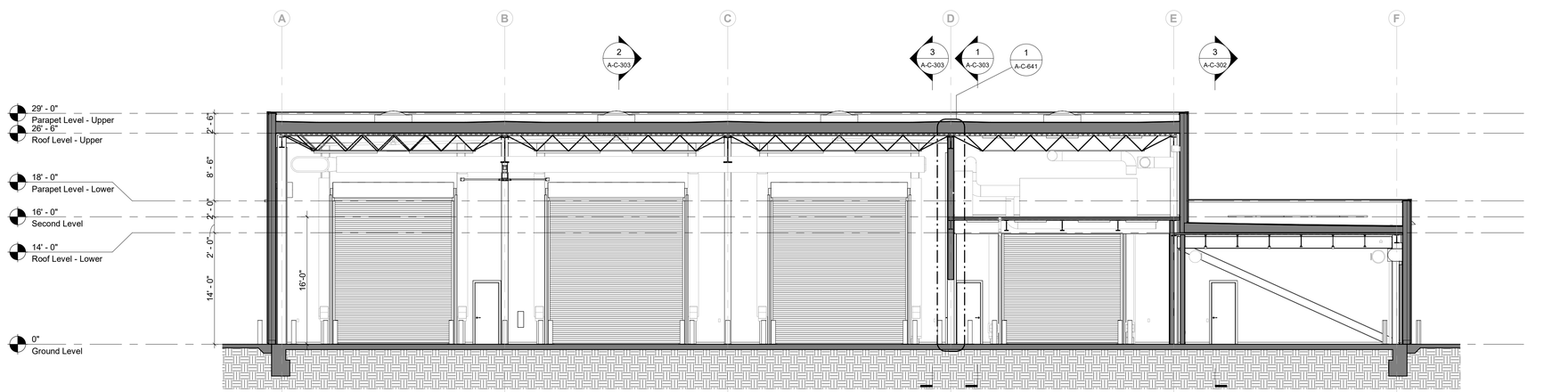

3 NS - Interior Overhead
1/8" = 1'-0"

Owner
Storm King Art Center
1 Museum Road
New Windsor, NY 12553
+1 (845) 534-3115

Design Architect
heneghan peng architects
14-16 Lord Edward Street
Dublin, D02 YC63
+353 1 633 9000

Executive Architect
WXY Architecture + Urban Design
224 Centre Street, 5th Floor
New York, NY 10013
+1 (212) 219-1953

Landscape Architect
Gustafson Porter + Bowman
1 Cobham Mews
London, MW1 9SB
+44 020 7284 8950

Reed Hilderbrand LLC
33 Whitney Avenue, 3rd Floor
New Haven, CT 06510
+1 (617) 923-2422

Structural & Lighting
ARUP
77 Water Street
New York, NY 10005
+1 (212) 896-3000

MEPF & IT
BuroHappold
100 Broadway #23
New York, NY 10005
+1 (212) 616-0228

Civil
VHB
100 Great Oaks Blvd., Suite 118
Albany, NY 12203
+1 (518) 389-3606

AV & Acoustics
LSTN Consultants
76 Beaver Street, 2nd Floor
New York, NY 10005
+1 (347) 788-0810

Facade
Front Inc.
100 E. Broadway Street, #501
New York, NY 10002
+1 (212) 242-2220

Key Plan

Description	Date
Filing Set	06/17/22

Project

Storm King Art Center

C.F.M. Building

Seal

NOT FOR CONSTRUCTION

Drawing Title

Building Sections

Date	06/17/22
Scale	1/8" = 1'-0"
Drawing Number	A-C-301
Sheet Size	ARCH D

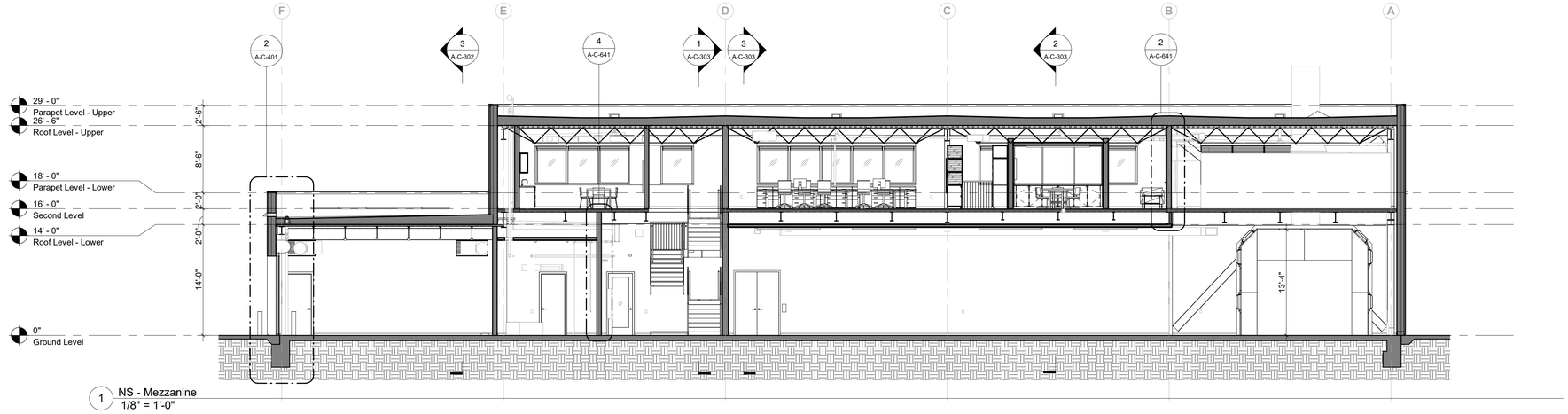

1 NS - Mezzanine
1/8" = 1'-0"

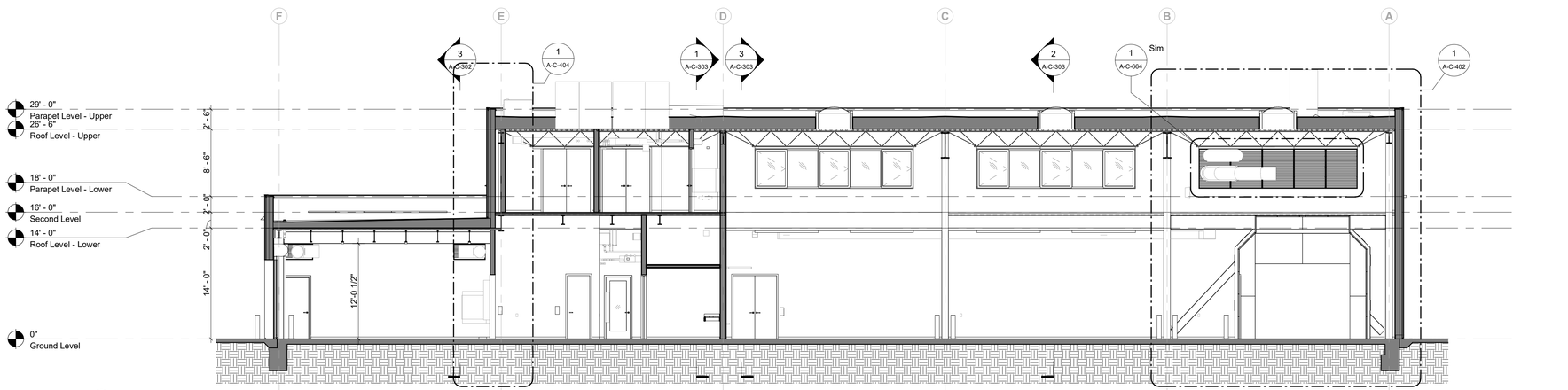

2 NS - Maintenance Door
1/8" = 1'-0"

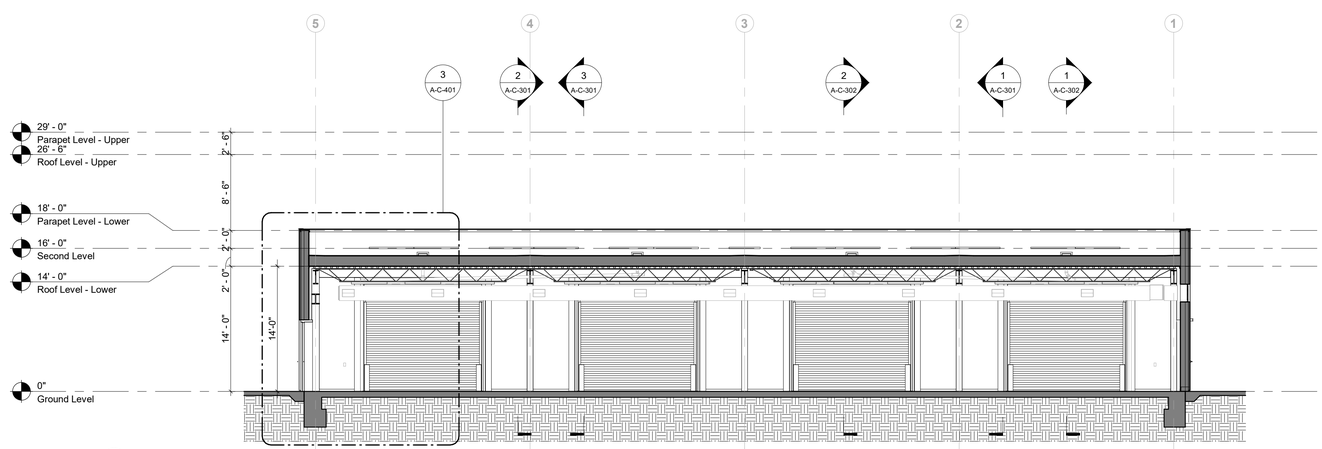

3 EW - Single Door
1/8" = 1'-0"

Owner
Storm King Art Center
1 Museum Road
New Windsor, NY 12553
+1 (845) 534-3115

Design Architect
heneghan peng architects
14-16 Lord Edward Street
Dublin, D02 YC63
+353 1 633 9000

Executive Architect
WXY Architecture + Urban Design
224 Centre Street, 5th Floor
New York, NY 10013
+1 (212) 219-1953

Landscape Architect
Gustafson Porter + Bowman
1 Cobham Mews
London, MW1 9SB
+44 020 7284 8950

Reed Hilderbrand LLC
33 Whitney Avenue, 3rd Floor
New Haven, CT 06510
+1 (617) 923-2422

Structural & Lighting
ARUP
77 Water Street
New York, NY 10005
+1 (212) 896-3000

MEPF & IT
BuroHappold
100 Broadway #23
New York, NY 10005
+1 (212) 616-0228

Civil
VHB
100 Great Oaks Blvd., Suite 118
Albany, NY 12203
+1 (518) 389-3606

AV & Acoustics
LSTN Consultants
76 Beaver Street, 2nd Floor
New York, NY 10005
+1 (347) 788-0810

Facade
Front Inc.
100 E. Broadway Street, #501
New York, NY 10002
+1 (212) 242-2220

Key Plan

Description	Date
Filing Set	06/17/22

Project

Storm King Art Center

C.F.M. Building

Seal

NOT FOR CONSTRUCTION

Drawing Title

Building Sections

Date	06/17/22
Scale	1/8" = 1'-0"
Drawing Number	A-C-302
Sheet Size	ARCH D

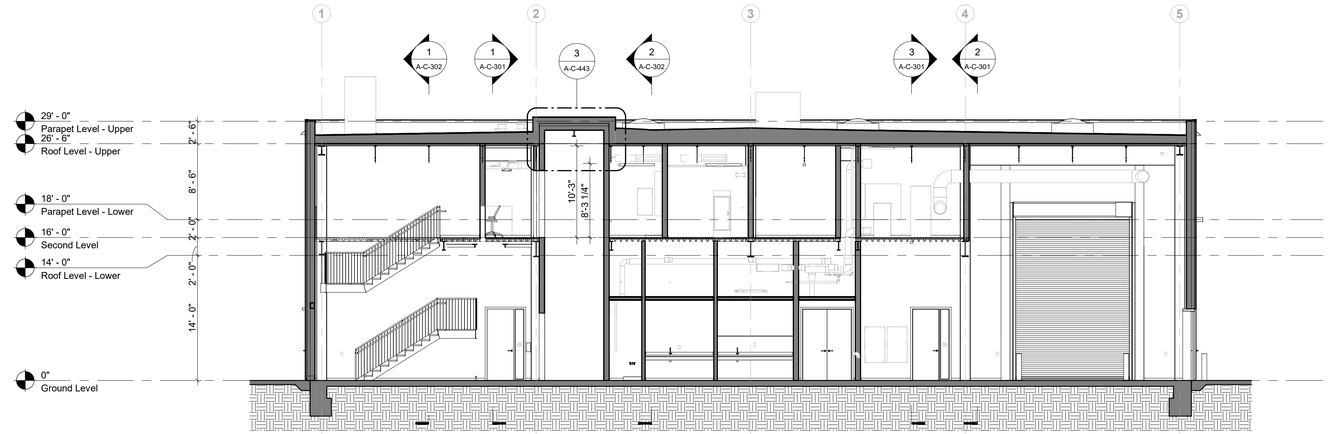

1 EW - Stair & Elevator
1/8" = 1'-0"

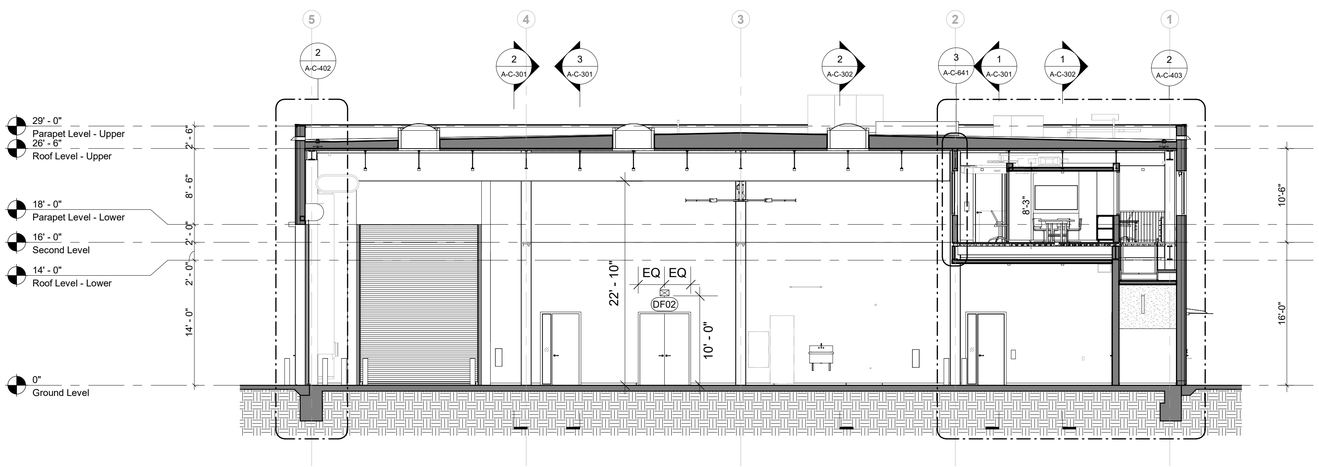

2 EW - Skylights
1/8" = 1'-0"

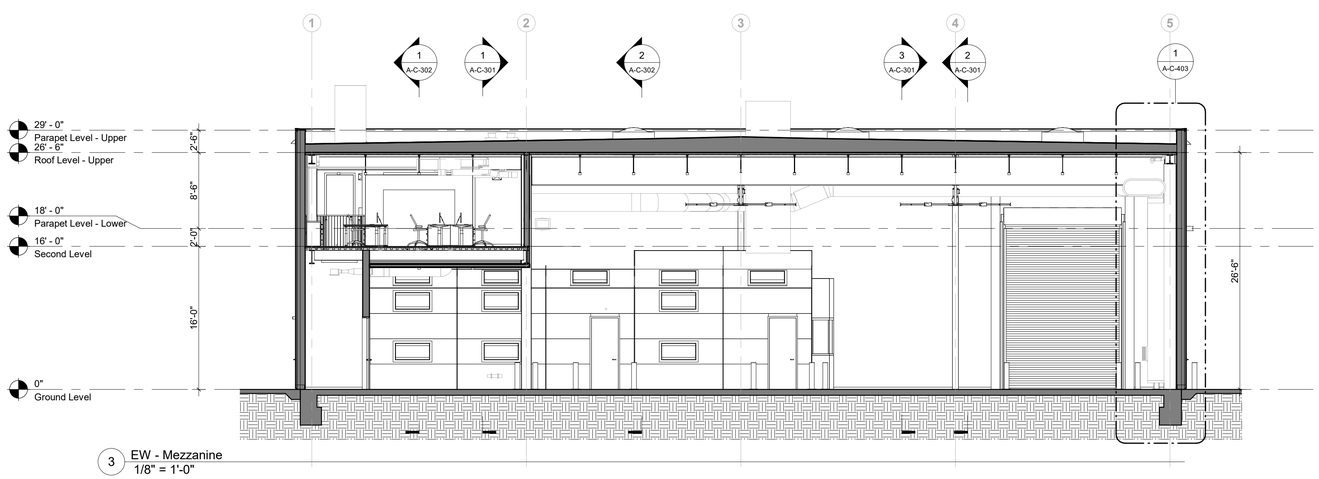

3 EW - Mezzanine
1/8" = 1'-0"

Owner
Storm King Art Center
1 Museum Road
New Windsor, NY 12553
+1 (845) 534-3115

Design Architect
heneghan peng architects
14-16 Lord Edward Street
Dublin, D02 YC63
+353 1 633 9000

Executive Architect
WXY Architecture + Urban Design
224 Centre Street, 5th Floor
New York, NY 10013
+1 (212) 219-1953

Landscape Architect
Gustafson Porter + Bowman
1 Cobham Mews
London, MW1 9SB
+44 020 7284 8950

Reed Hilderbrand LLC
33 Whitney Avenue, 3rd Floor
New Haven, CT 06510
+1 (617) 923-2422

Structural & Lighting
ARUP
77 Water Street
New York, NY 10005
+1 (212) 896-3000

MEPF & IT
BuroHappold
100 Broadway #23
New York, NY 10005
+1 (212) 616-0228

Civil
VHB
100 Great Oaks Blvd., Suite 118
Albany, NY 12203
+1 (518) 389-3606

AV & Acoustics
LSTN Consultants
76 Beaver Street, 2nd Floor
New York, NY 10005
+1 (347) 788-0810

Facade
Front Inc.
100 E. Broadway Street, #501
New York, NY 10002
+1 (212) 242-2220

Key Plan

Description	Date
Filing Set	06/17/22

Project

Storm King Art Center

C.F.M. Building

Seal

NOT FOR CONSTRUCTION

Drawing Title

Building Sections

Date	06/17/22
Scale	1/8" = 1'-0"
Drawing Number	A-C-303
Sheet Size	ARCH D

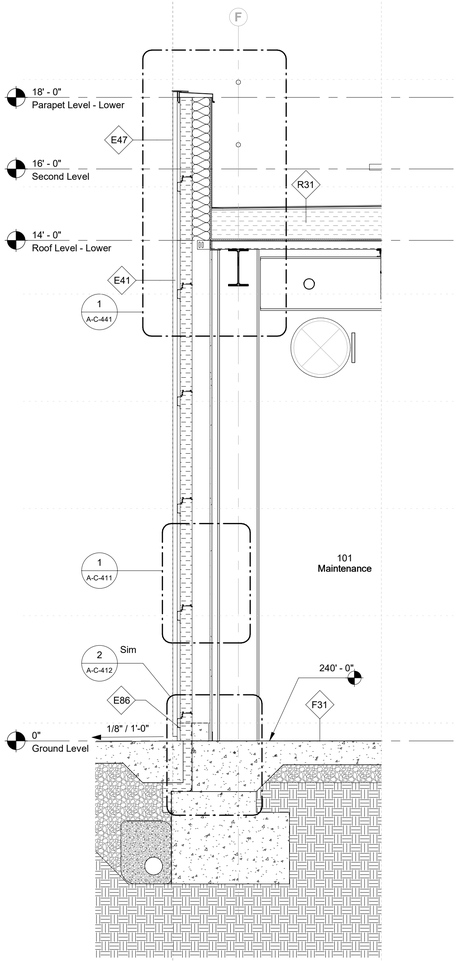

1 Maintenance Exterior Wall - Typical
1/2" = 1'-0"

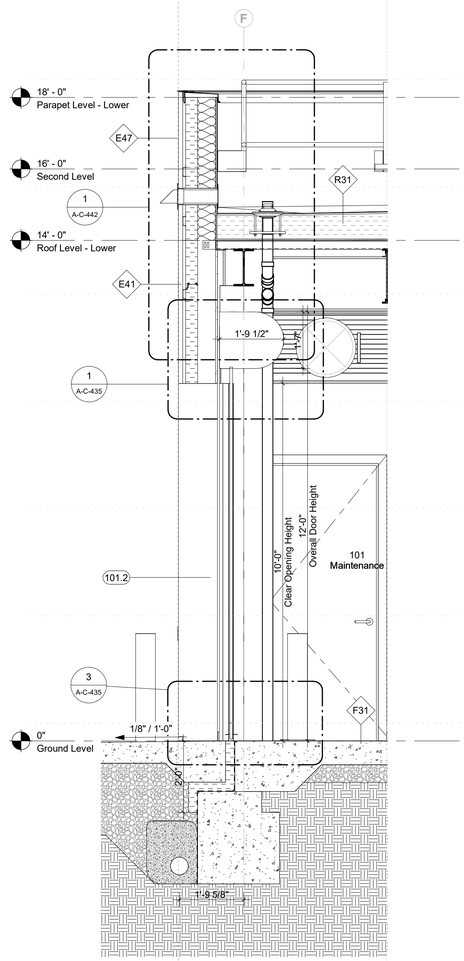

2 Maintenance Roll-up Door
1/2" = 1'-0"

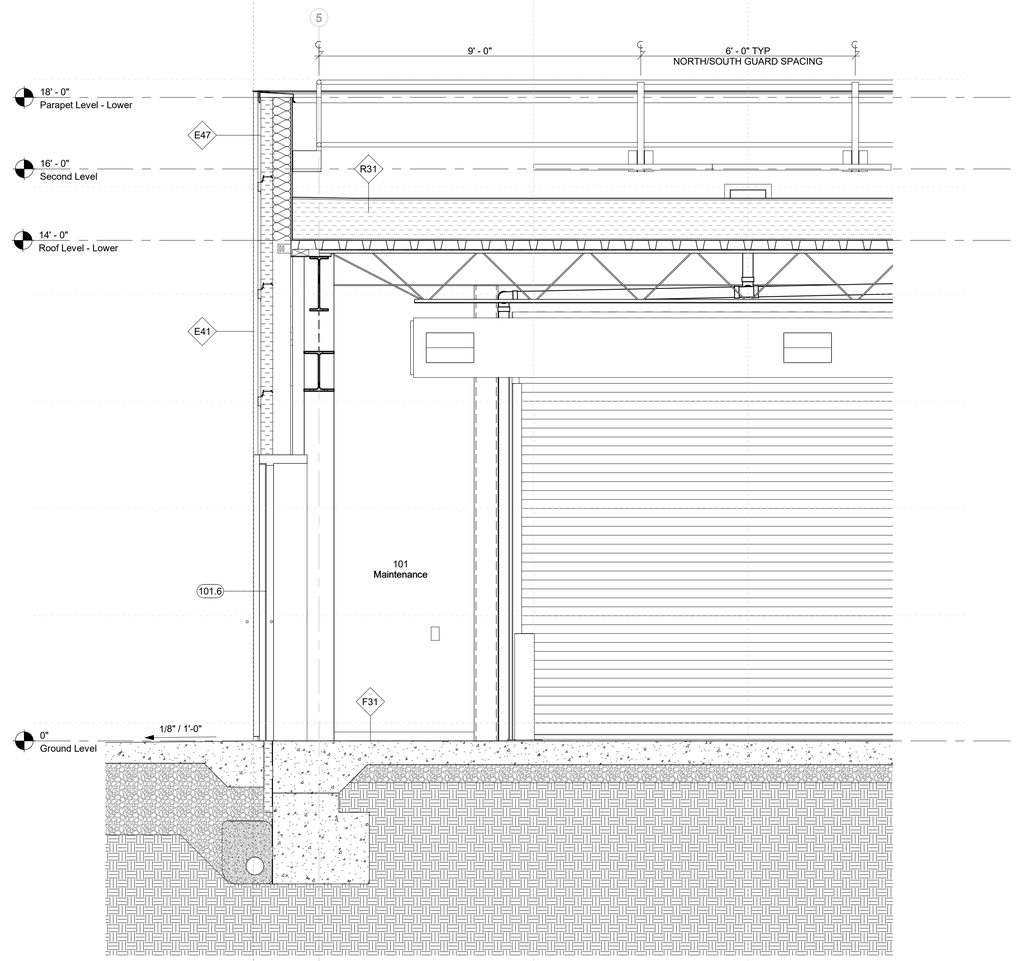

3 Maintenance Personnel Door
1/2" = 1'-0"

Owner
Storm King Art Center
1 Museum Road
New Windsor, NY 12553
+1 (845) 534-3115

Design Architect
heneghan peng architects
14-16 Lord Edward Street
Dublin, D02 YC63
+353 1 633 9000

Executive Architect
WXY Architecture + Urban Design
224 Centre Street, 5th Floor
New York, NY 10013
+1 (212) 219-1953

Landscape Architect
Gustafson Porter + Bowman
1 Cobham Mews
London, MW1 9SB
+44 020 7284 8950

Reed Hilderbrand LLC
33 Whitney Avenue, 3rd Floor
New Haven, CT 06510
+1 (617) 923-2422

Structural & Lighting
ARUP
77 Water Street
New York, NY 10005
+1 (212) 896-3000

MEPF & IT
BuroHappold
100 Broadway #23
New York, NY 10005
+1 (212) 616-0228

Civil
VHB
100 Great Oaks Blvd., Suite 118
Albany, NY 12203
+1 (518) 389-3606

AV & Acoustics
LSTN Consultants
76 Beaver Street, 2nd Floor
New York, NY 10005
+1 (347) 788-0810

Facade
Front Inc.
100 E. Broadway Street, #501
New York, NY 10002
+1 (212) 242-2220

Key Plan

Description	Date
Filing Set	06/17/22

Project

Storm King Art Center

C.F.M. Building

Seal

NOT FOR CONSTRUCTION

Drawing Title

Wall Sections

Date	06/17/22
Scale	1/2" = 1'-0"
Drawing Number	A-C-401
Sheet Size	ARCH D

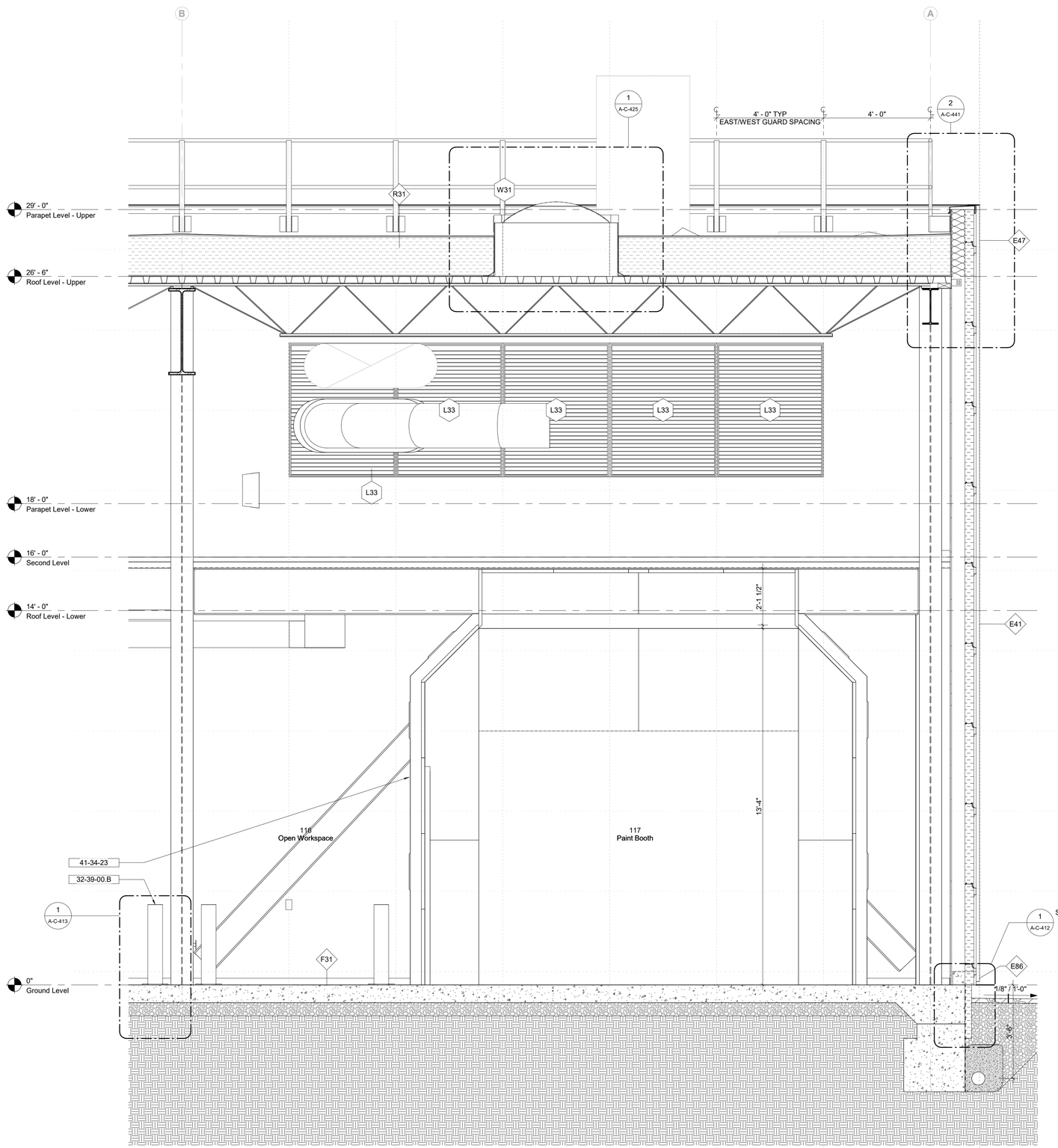

1 Open Workspace Skylight
1/2" = 1'-0"

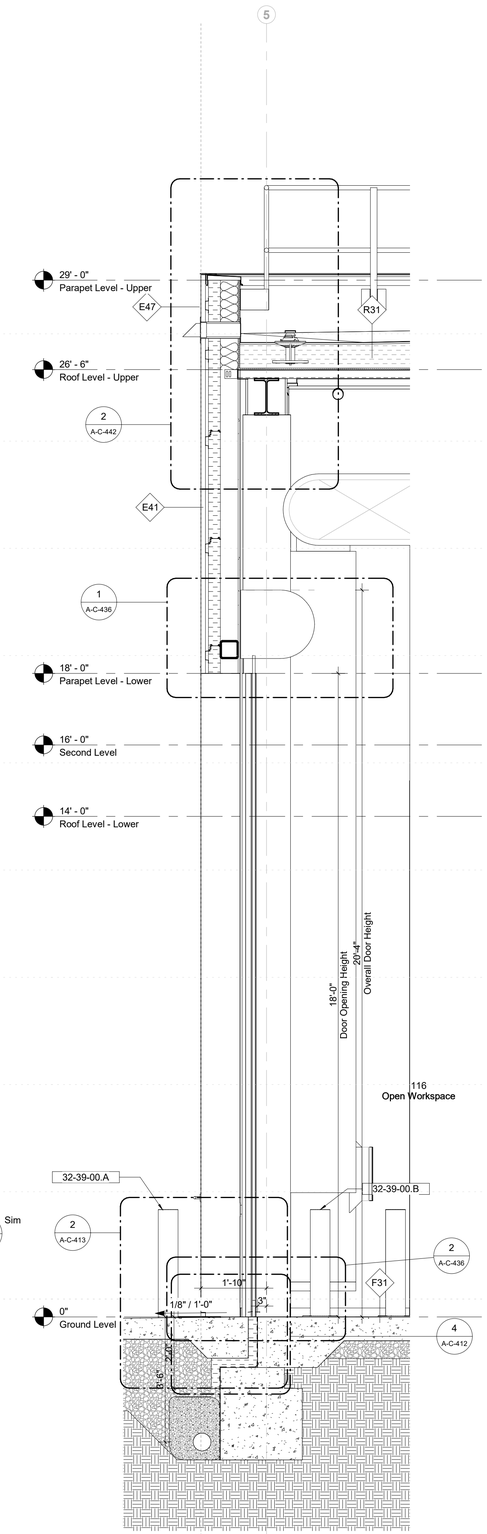

2 Open Workspace Coiling Door
1/2" = 1'-0"

Keynote Legend

Keynote	*Description*
32-39-00.A	Bollard - Fixed
32-39-00.B	Bollard - Fixed Base Plate
41-34-23	Semi-Downdraft Spray Paint Booth

Owner
Storm King Art Center
1 Museum Road
New Windsor, NY 12553
+1 (845) 534-3115

Design Architect
heneghan peng architects
14-16 Lord Edward Street
Dublin, D02 YC63
+353 1 633 9000

Executive Architect
WXY Architecture + Urban Design
224 Centre Street, 5th Floor
New York, NY 10013
+1 (212) 219-1953

Landscape Architect
Gustafson Porter + Bowman
1 Cobham Mews
London, MW1 9SB
+44 020 7284 8950

Reed Hilderbrand LLC
33 Whitney Avenue, 3rd Floor
New Haven, CT 06510
+1 (617) 923-2422

Structural & Lighting
ARUP
77 Water Street
New York, NY 10005
+1 (212) 896-3000

MEPF & IT
BuroHappold
100 Broadway #23
New York, NY 10005
+1 (212) 616-0228

Civil
VHB
100 Great Oaks Blvd., Suite 118
Albany, NY 12203
+1 (518) 389-3606

AV & Acoustics
LSTN Consultants
76 Beaver Street, 2nd Floor
New York, NY 10005
+1 (347) 788-0810

Facade
Front Inc.
100 E. Broadway Street, #501
New York, NY 10002
+1 (212) 242-2220

Key Plan

Description	Date
Filing Set	06/17/22

Project

Storm King Art Center

C.F.M. Building

Seal

NOT FOR CONSTRUCTION

Drawing Title

Wall Sections

Date	06/17/22
Scale	1/2" = 1'-0"
Drawing Number	A-C-402
Sheet Size	ARCH D

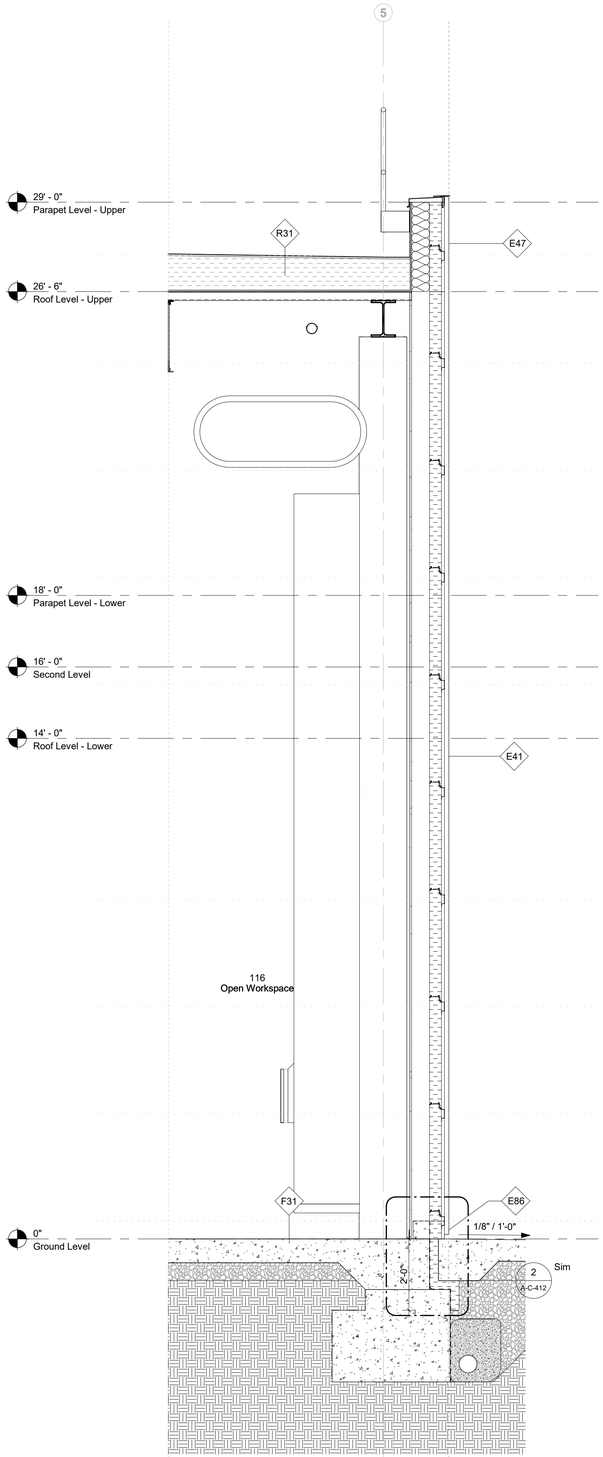

1 Open Workspace Exterior Wall - Typical
1/2" = 1'-0"

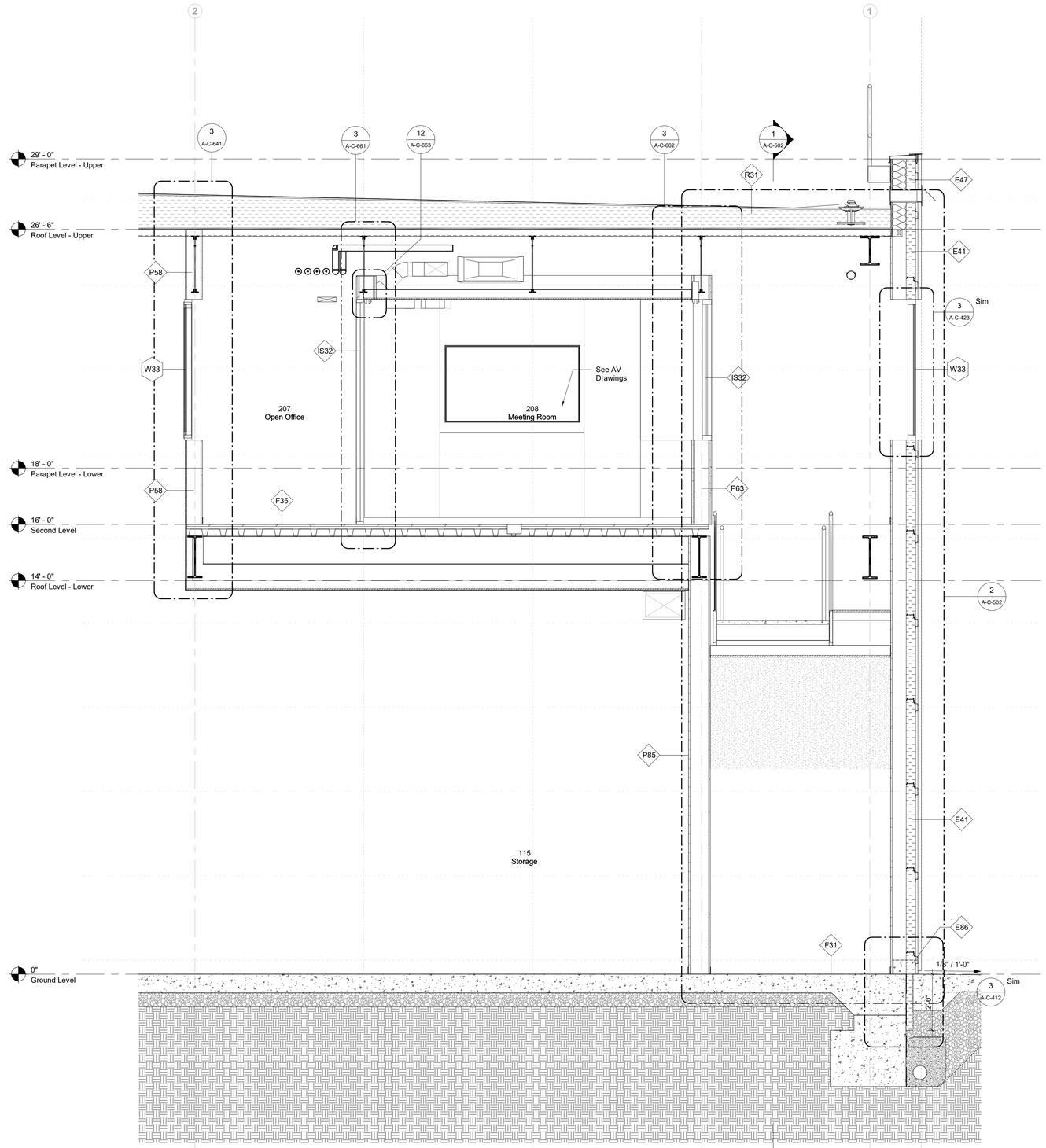

2 Office Meeting Room
1/2" = 1'-0"

Owner
Storm King Art Center
1 Museum Road
New Windsor, NY 12553
+1 (845) 534-3115

Design Architect
heneghan peng architects
14-16 Lord Edward Street
Dublin, D02 YC63
+353 1 633 9000

Executive Architect
WXY Architecture + Urban Design
224 Centre Street, 5th Floor
New York, NY 10013
+1 (212) 219-1953

Landscape Architect
Gustafson Porter + Bowman
1 Cobham Mews
London, MW1 9SB
+44 020 7284 8950

Reed Hilderbrand LLC
33 Whitney Avenue, 3rd Floor
New Haven, CT 06510
+1 (617) 923-2422

Structural & Lighting
ARUP
77 Water Street
New York, NY 10005
+1 (212) 896-3000

MEPF & IT
BuroHappold
100 Broadway #23
New York, NY 10005
+1 (212) 616-0228

Civil
VHB
100 Great Oaks Blvd., Suite 118
Albany, NY 12203
+1 (518) 389-3606

AV & Acoustics
LSTN Consultants
76 Beaver Street, 2nd Floor
New York, NY 10005
+1 (347) 788-0810

Facade
Front Inc.
100 E. Broadway Street, #501
New York, NY 10002
+1 (212) 242-2220

Key Plan

Description	Date
Filing Set	06/17/22

Project

Storm King Art Center

C.F.M. Building

Seal

NOT FOR CONSTRUCTION

Drawing Title

Wall Sections

Date	06/17/22
Scale	1/2" = 1'-0"
Drawing Number	A-C-403
Sheet Size	ARCH D

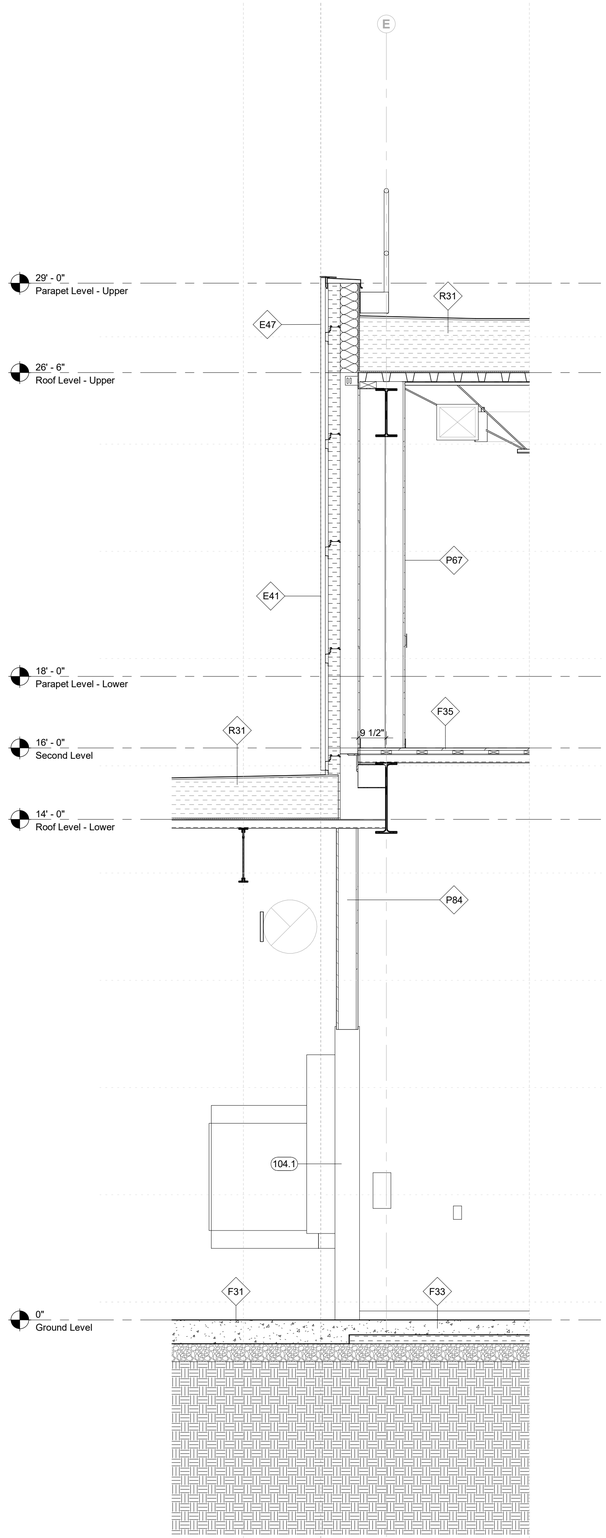

1 Lower Roof to Facade Connection
1/2" = 1'-0"

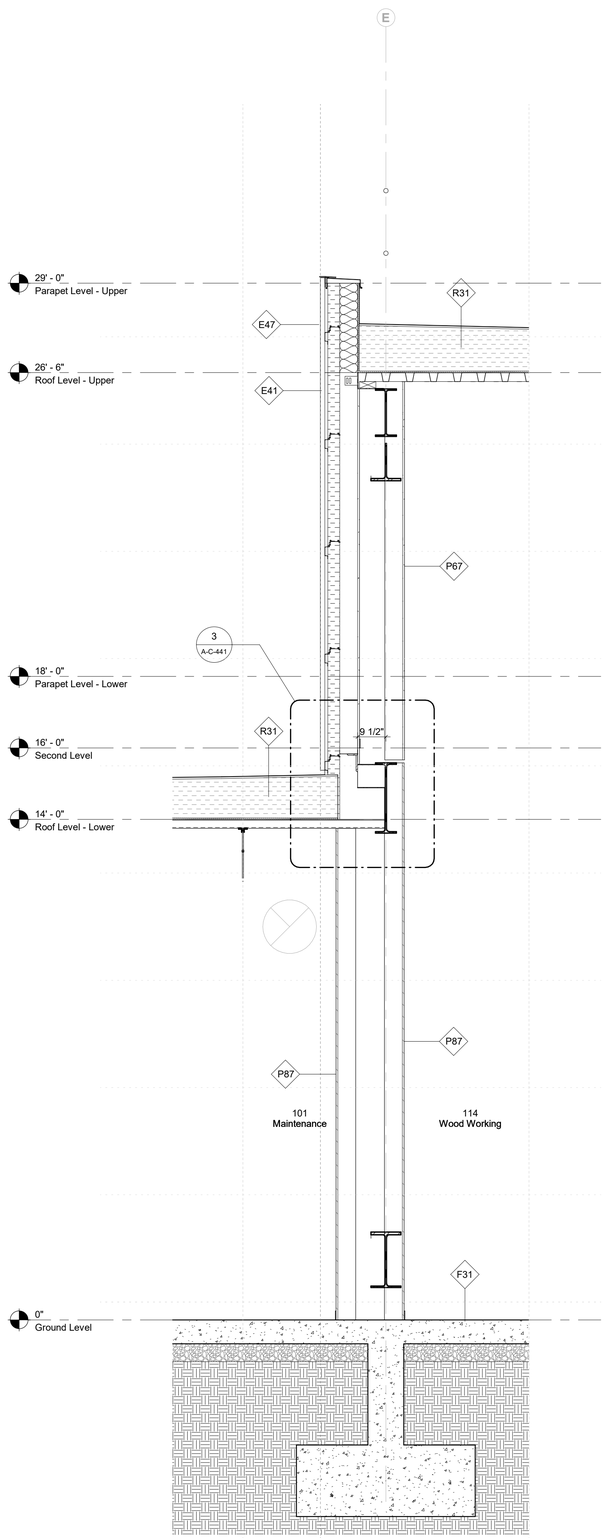

2 Lower Roof to Facade Connection at Woodworking
1/2" = 1'-0"

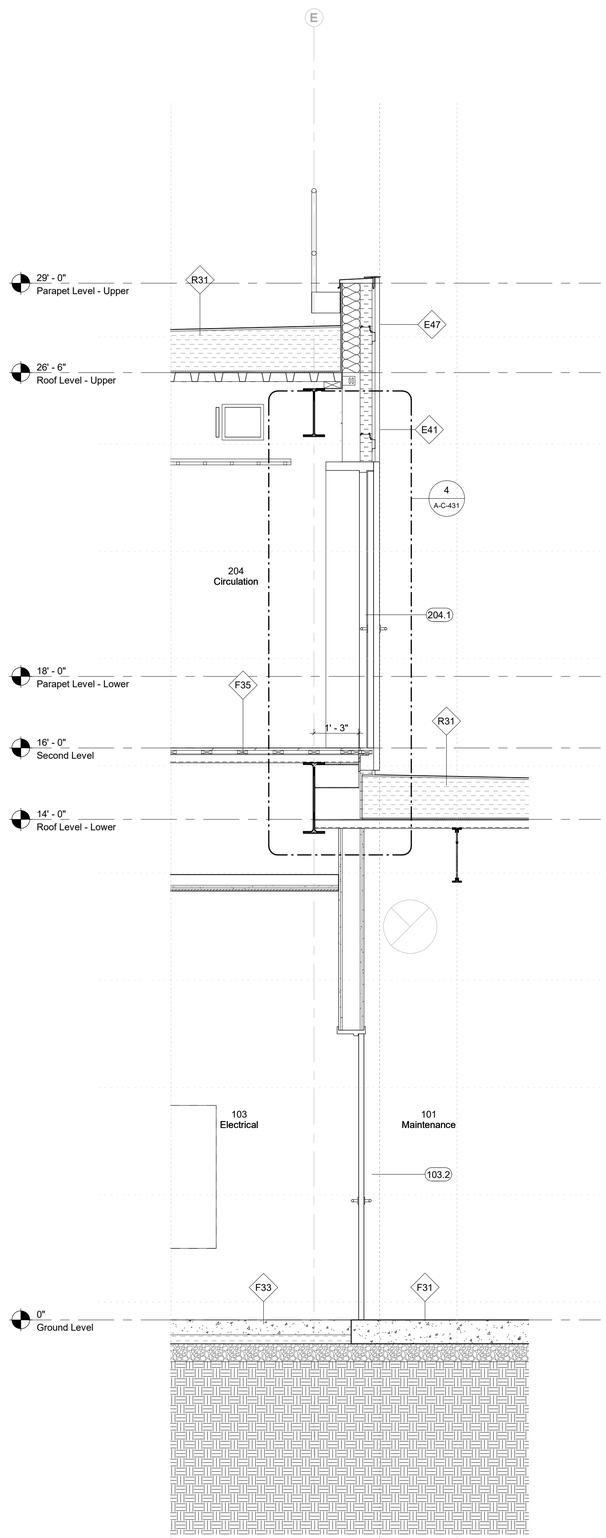

3 Lower Roof to Facade Connection with Exterior Door
1/2" = 1'-0"

Owner
Storm King Art Center
1 Museum Road
New Windsor, NY 12553
+1 (845) 534-3115

Design Architect
heneghan peng architects
14-16 Lord Edward Street
Dublin, D02 YC63
+353 1 633 9000

Executive Architect
WXY Architecture + Urban Design
224 Centre Street, 5th Floor
New York, NY 10013
+1 (212) 219-1953

Landscape Architect
Gustafson Porter + Bowman
1 Cobham Mews
London, MW1 9SB
+44 020 7284 8950

Reed Hilderbrand LLC
33 Whitney Avenue, 3rd Floor
New Haven, CT 06510
+1 (617) 923-2422

Structural & Lighting
ARUP
77 Water Street
New York, NY 10005
+1 (212) 896-3000

MEPF & IT
BuroHappold
100 Broadway #23
New York, NY 10005
+1 (212) 616-0228

Civil
VHB
100 Great Oaks Blvd., Suite 118
Albany, NY 12203
+1 (518) 389-3606

AV & Acoustics
LSTN Consultants
76 Beaver Street, 2nd Floor
New York, NY 10005
+1 (347) 788-0810

Facade
Front Inc.
100 E. Broadway Street, #501
New York, NY 10002
+1 (212) 242-2220

Key Plan

Description	Date
Filing Set	06/17/22

Project

Storm King Art Center

C.F.M. Building

Seal

NOT FOR CONSTRUCTION

Drawing Title

Wall Sections

Date	06/17/22
Scale	1/2" = 1'-0"
Drawing Number	A-C-404
Sheet Size	ARCH D

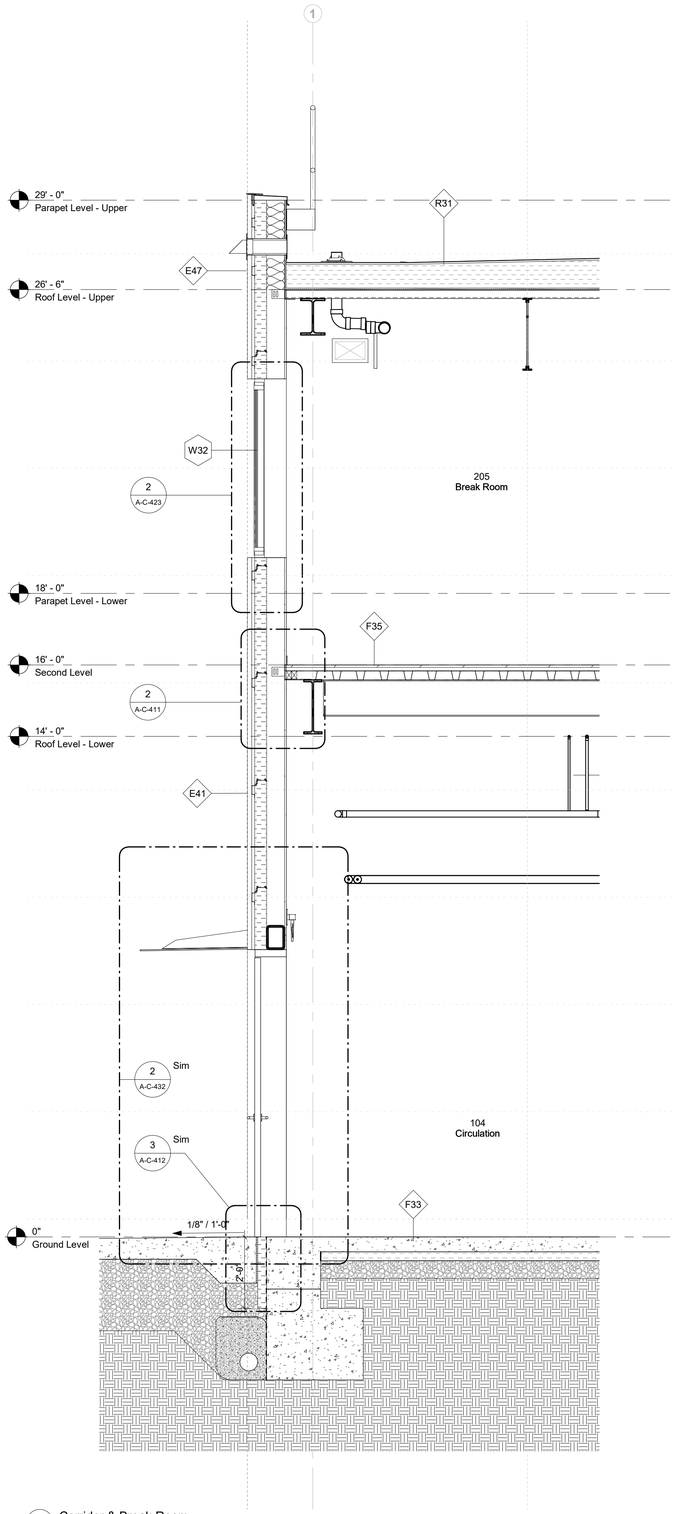

1 Corridor & Break Room
1/2" = 1'-0"

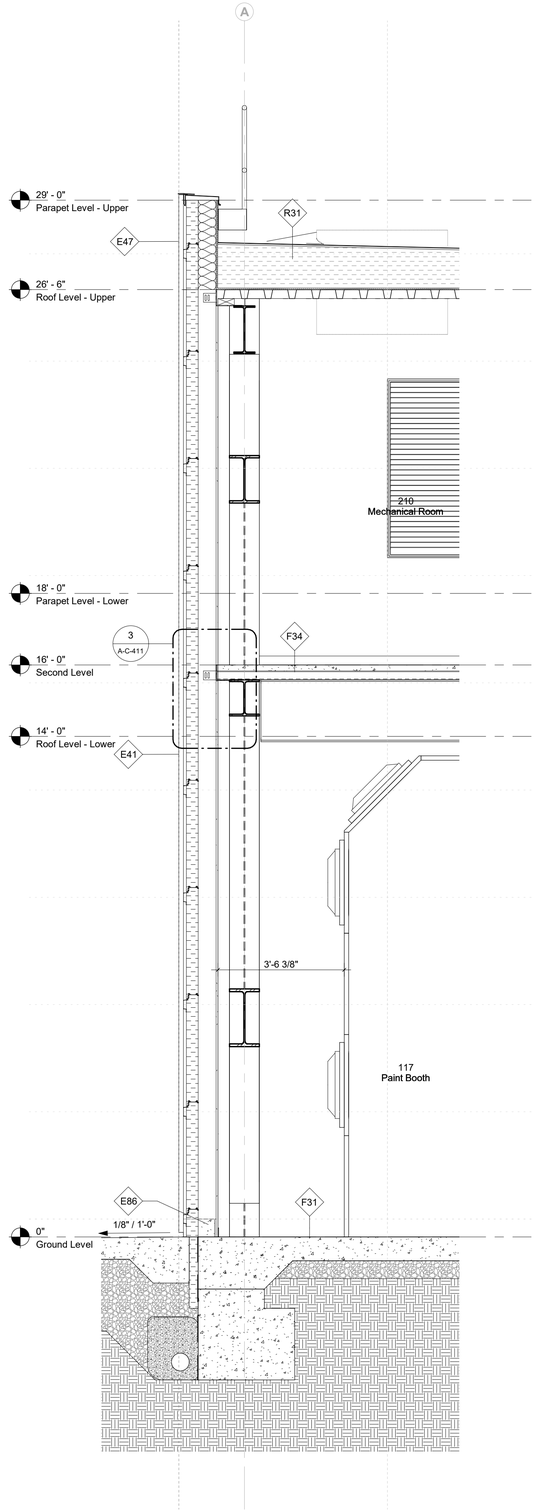

2 Mechanical Room & Paint Booth
1/2" = 1'-0"

Owner
Storm King Art Center
1 Museum Road
New Windsor, NY 12553
+1 (845) 534-3115

Design Architect
heneghan peng architects
14-16 Lord Edward Street
Dublin, D02 YC63
+353 1 633 9000

Executive Architect
WXY Architecture + Urban Design
224 Centre Street, 5th Floor
New York, NY 10013
+1 (212) 219-1953

Landscape Architect
Gustafson Porter + Bowman
1 Cobham Mews
London, MW1 9SB
+44 020 7284 8950

Reed Hilderbrand LLC
33 Whitney Avenue, 3rd Floor
New Haven, CT 06510
+1 (617) 923-2422

Structural & Lighting
ARUP
77 Water Street
New York, NY 10005
+1 (212) 896-3000

MEPF & IT
BuroHappold
100 Broadway #23
New York, NY 10005
+1 (212) 616-0228

Civil
VHB
100 Great Oaks Blvd., Suite 118
Albany, NY 12203
+1 (518) 389-3606

AV & Acoustics
LSTN Consultants
76 Beaver Street, 2nd Floor
New York, NY 10005
+1 (347) 788-0810

Facade
Front Inc.
100 E. Broadway Street, #501
New York, NY 10002
+1 (212) 242-2220

Key Plan

Description	Date
Filing Set	06/17/22

Project

Storm King Art Center

C.F.M. Building

Seal

NOT FOR CONSTRUCTION

Drawing Title

Wall Sections

Date	06/17/22
Scale	1/2" = 1'-0"
Drawing Number	A-C-405
Sheet Size	ARCH D

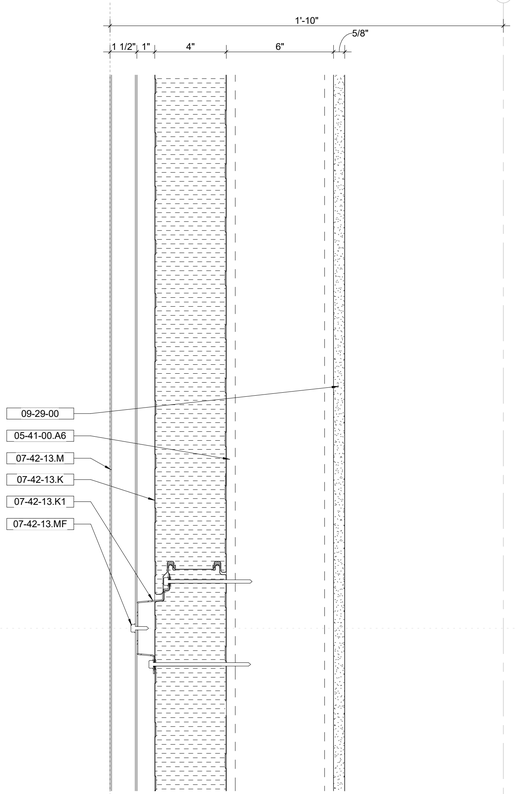

1 Facade Typical Detail
3" = 1'-0"

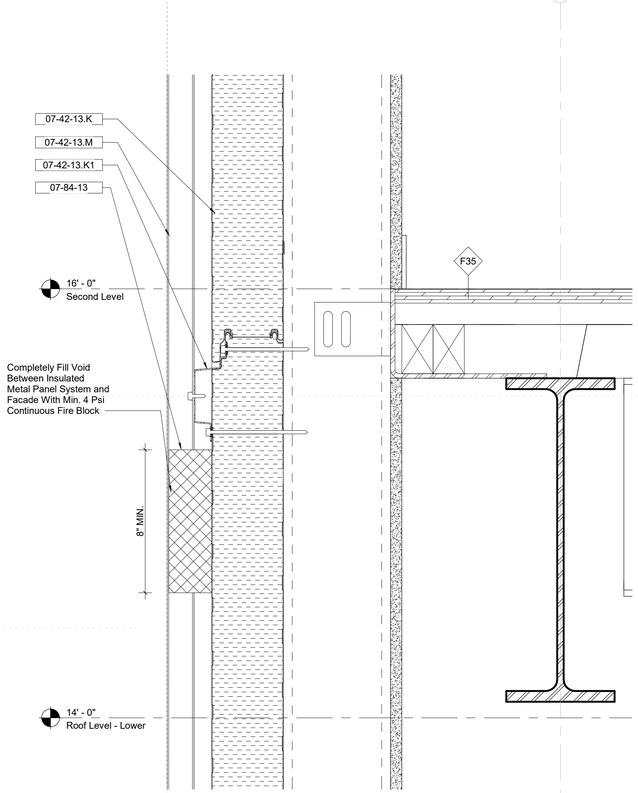

2 Facade Story Transition at Service Bar
3" = 1'-0"

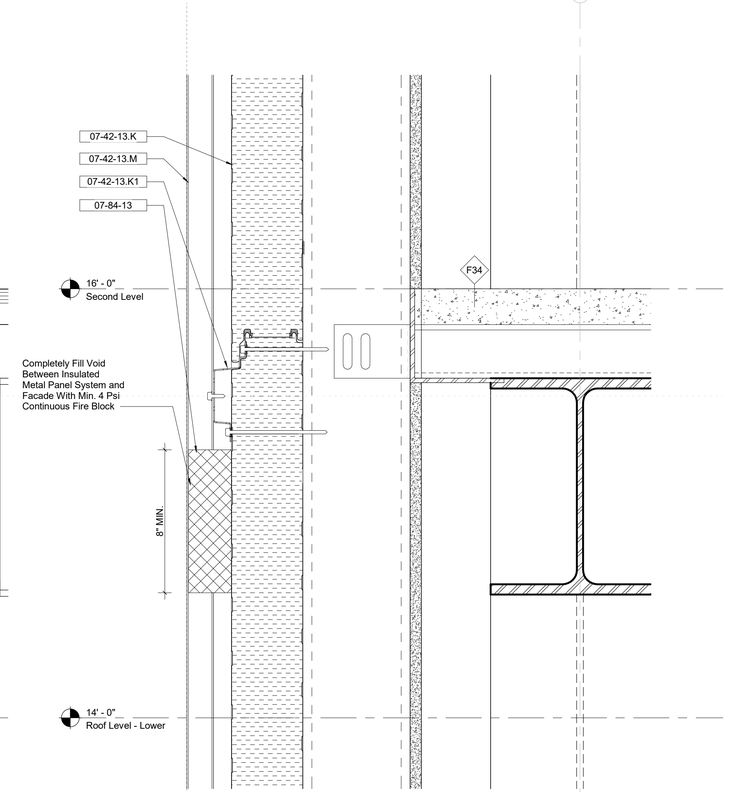

3 Facade Story Transition at Mechanical Room
3" = 1'-0"

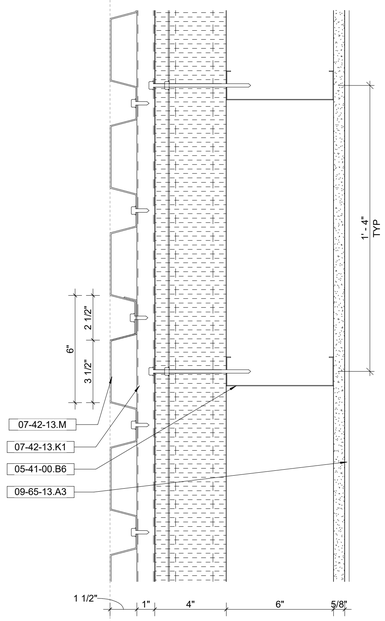

4 Facade Typical Plan Detail
3" = 1'-0"

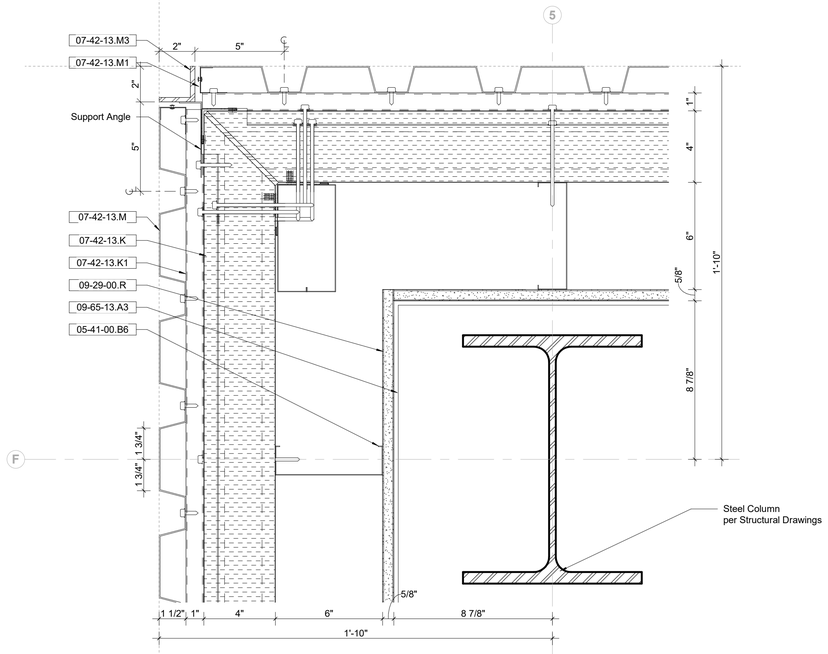

5 Facade Corner - Plan Detail
3" = 1'-0"

Keynote Legend

Keynote	*Description*
05-41-00.A6	6" Metal Stud
05-41-00.B6	6" Metal Channel Runner
07-42-13.K	Insulated Metal Composite Panel
07-42-13.K1	Integrated Hat Channel
07-42-13.M	Corrugated Metal Cladding
07-42-13.M1	Closure Trim
07-42-13.M3	Corner Angle Trim
07-42-13.MF	Exposed Fastener
07-84-13	Firestopping
09-29-00	Gypsum Drywall
09-29-00.R	5/8" Gypsum Wall Board - Abuse-Resistant
09-65-13.A3	Resilient Base, 3"-high

Owner
Storm King Art Center
1 Museum Road
New Windsor, NY 12553
+1 (845) 534-3115

Design Architect
heneghan peng architects
14-16 Lord Edward Street
Dublin, D02 YC63
+353 1 633 9000

Executive Architect
WXY Architecture + Urban Design
224 Centre Street, 5th Floor
New York, NY 10013
+1 (212) 219-1953

Landscape Architect
Gustafson Porter + Bowman
1 Cobham Mews
London, MW1 9SB
+44 020 7284 8950

Reed Hilderbrand LLC
33 Whitney Avenue, 3rd Floor
New Haven, CT 06510
+1 (617) 923-2422

Structural & Lighting
ARUP
77 Water Street
New York, NY 10005
+1 (212) 896-3000

MEPF & IT
BuroHappold
100 Broadway #23
New York, NY 10005
+1 (212) 616-0228

Civil
VHB
100 Great Oaks Blvd., Suite 118
Albany, NY 12203
+1 (518) 389-3606

AV & Acoustics
LSTN Consultants
76 Beaver Street, 2nd Floor
New York, NY 10005
+1 (347) 788-0810

Facade
Front Inc.
100 E. Broadway Street, #501
New York, NY 10002
+1 (212) 242-2220

Key Plan

Description	Date
Filing Set	06/17/22

Project

Storm King Art Center

C.F.M. Building

Seal

NOT FOR CONSTRUCTION

Drawing Title

Facade Details

Date	06/17/22
Scale	3" = 1'-0"
Drawing Number	A-C-411
Sheet Size	ARCH D

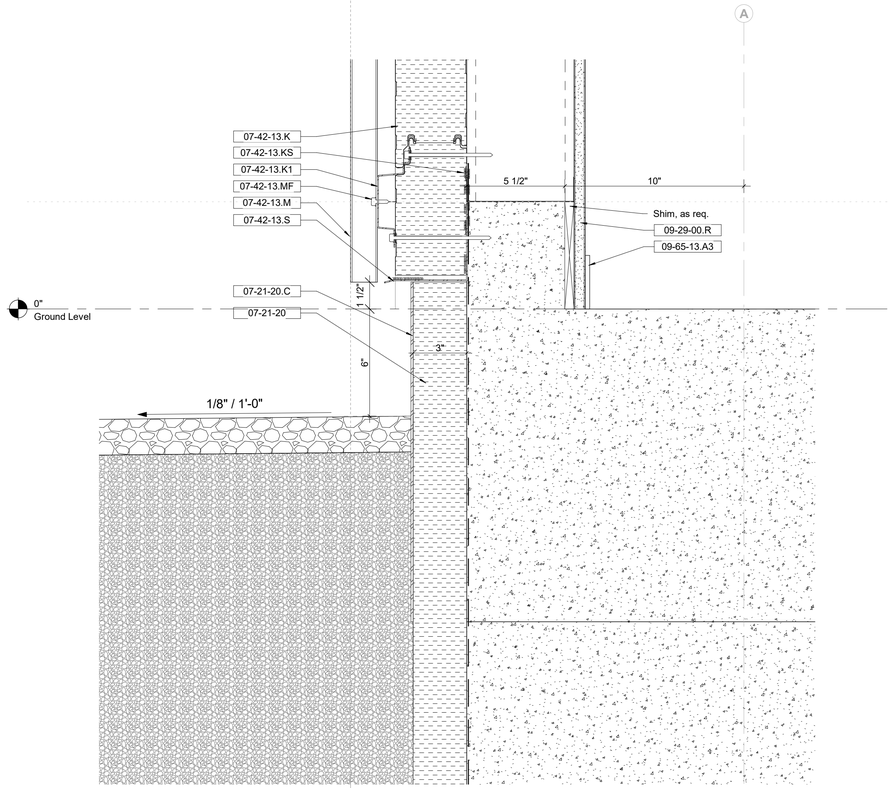

1 Facade Typical Base Detail - at Gravel
3" = 1'-0"

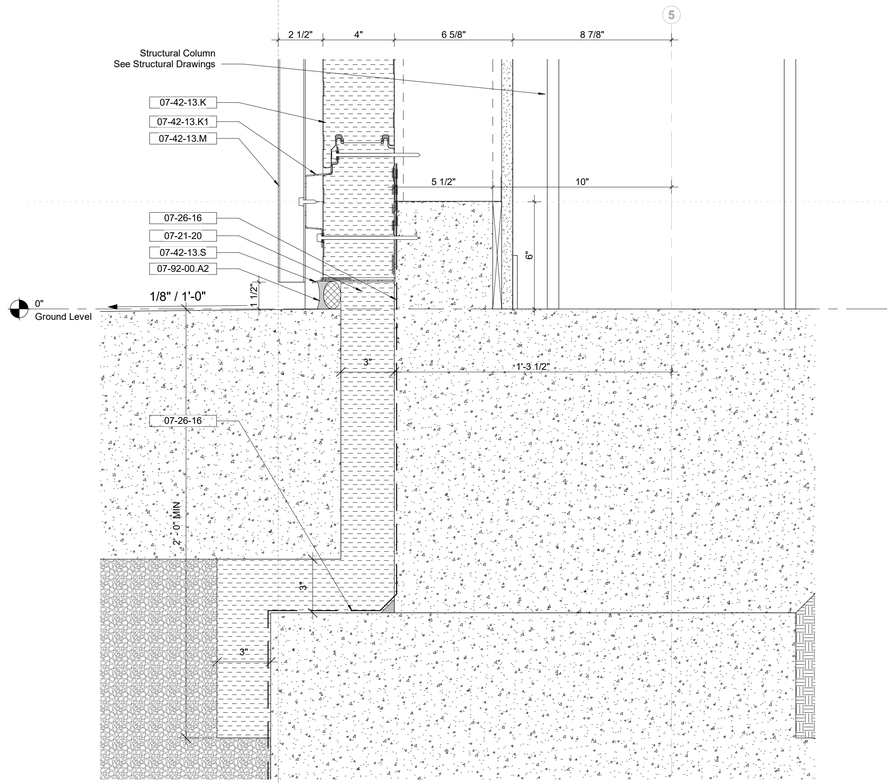

2 Facade Typical Base Detail - at Column Footing
3" = 1'-0"

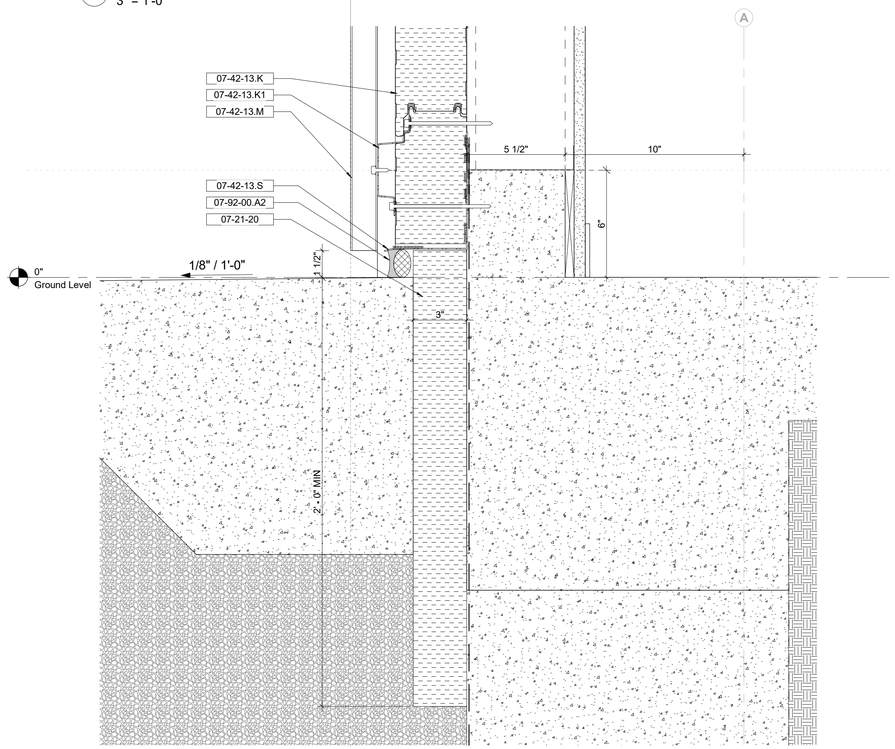

3 Facade Typical Base Detail - at Grade Beam
3" = 1'-0"

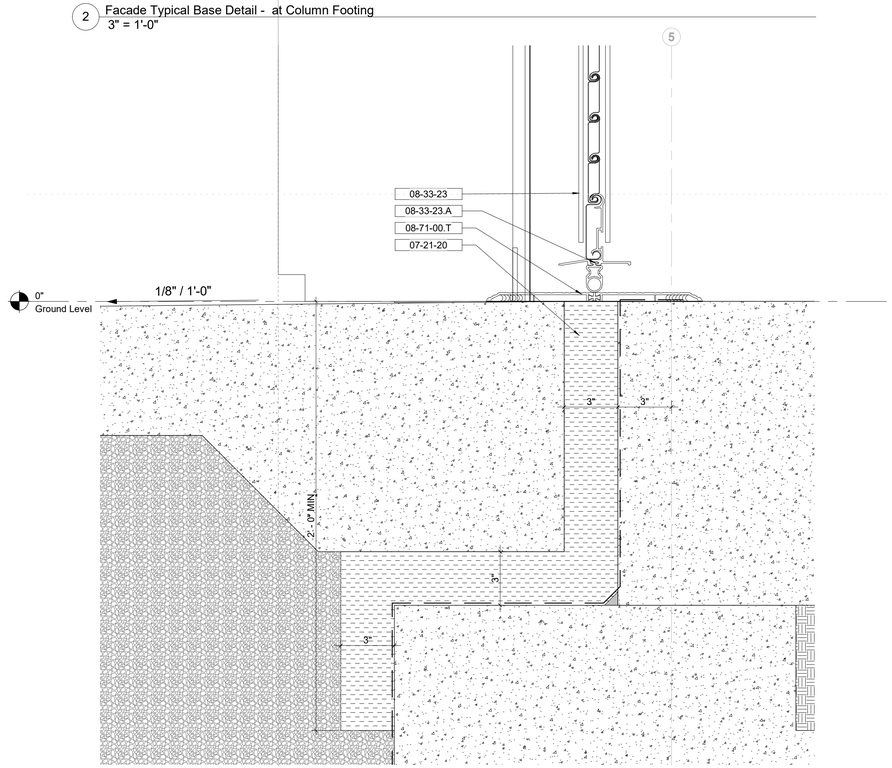

4 Facade Typical Base Detail - at Coiling Door Threshold
3" = 1'-0"

Keynote Legend

Keynote	*Description*
07-21-20	XPS Insulation
07-21-20.C	Stainless Steel Cover Plate
07-26-16	Below-grade Vapor Retarder
07-42-13.K	Insulated Metal Composite Panel
07-42-13.K1	Integrated Hat Channel
07-42-13.KS	Continuous Butyl Sealant
07-42-13.M	Corrugated Metal Cladding
07-42-13.MF	Exposed Fastener
07-42-13.S	Sheet Metal Flashing, Color-matched to Cladding
07-92-00.A2	Joint Sealant w/ Backer Rod
08-33-23	Overhead Coiling Door
08-33-23.A	Astragal Rubber Seal
08-71-00.T	Door Threshold, Thermally-broken
09-29-00.R	5/8" Gypsum Wall Board - Abuse-Resistant
09-65-13.A3	Resilient Base, 3"-high

Owner
Storm King Art Center
1 Museum Road
New Windsor, NY 12553
+1 (845) 534-3115

Design Architect
heneghan peng architects
14-16 Lord Edward Street
Dublin, D02 YC63
+353 1 633 9000

Executive Architect
WXY Architecture + Urban Design
224 Centre Street, 5th Floor
New York, NY 10013
+1 (212) 219-1953

Landscape Architect
Gustafson Porter + Bowman
1 Cobham Mews
London, MW1 9SB
+44 020 7284 8950

Reed Hilderbrand LLC
33 Whitney Avenue, 3rd Floor
New Haven, CT 06510
+1 (617) 923-2422

Structural & Lighting
ARUP
77 Water Street
New York, NY 10005
+1 (212) 896-3000

MEPF & IT
BuroHappold
100 Broadway #23
New York, NY 10005
+1 (212) 616-0228

Civil
VHB
100 Great Oaks Blvd., Suite 118
Albany, NY 12203
+1 (518) 389-3606

AV & Acoustics
LSTN Consultants
76 Beaver Street, 2nd Floor
New York, NY 10005
+1 (347) 788-0810

Facade
Front Inc.
100 E. Broadway Street, #501
New York, NY 10002
+1 (212) 242-2220

Key Plan

Description	Date
Filing Set	06/17/22

Project

Storm King Art Center

C.F.M. Building

Seal

NOT FOR CONSTRUCTION

Drawing Title

Facade Details

Date	06/17/22
Scale	3" = 1'-0"
Drawing Number	A-C-412
Sheet Size	ARCH D

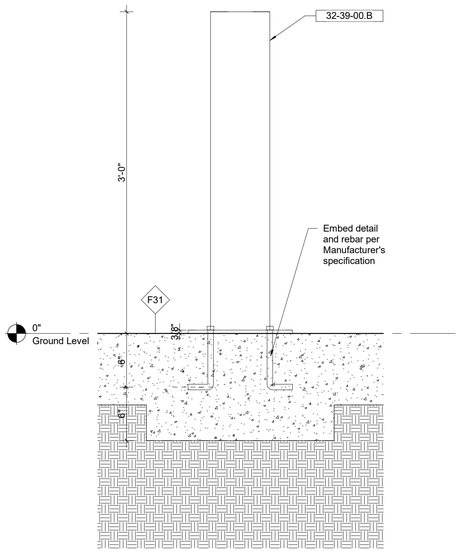

1 Fixed Base Plate Bollard Typical Detail
1 1/2" = 1'-0"

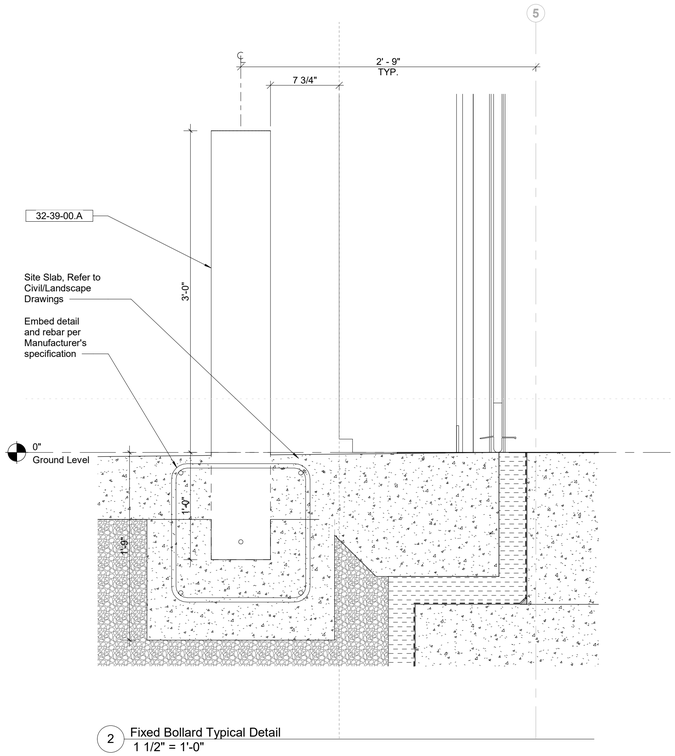

2 Fixed Bollard Typical Detail
1 1/2" = 1'-0"

Keynote Legend

Keynote	*Description*
32-39-00.A	Bollard - Fixed
32-39-00.B	Bollard - Fixed Base Plate

Owner
Storm King Art Center
1 Museum Road
New Windsor, NY 12553
+1 (845) 534-3115

Design Architect
heneghan peng architects
14-16 Lord Edward Street
Dublin, D02 YC63
+353 1 633 9000

Executive Architect
WXY Architecture + Urban Design
224 Centre Street, 5th Floor
New York, NY 10013
+1 (212) 219-1953

Landscape Architect
Gustafson Porter + Bowman
1 Cobham Mews
London, MW1 9SB
+44 020 7284 8950

Reed Hilderbrand LLC
33 Whitney Avenue, 3rd Floor
New Haven, CT 06510
+1 (617) 923-2422

Structural & Lighting
ARUP
77 Water Street
New York, NY 10005
+1 (212) 896-3000

MEPF & IT
BuroHappold
100 Broadway #23
New York, NY 10005
+1 (212) 616-0228

Civil
VHB
100 Great Oaks Blvd., Suite 118
Albany, NY 12203
+1 (518) 389-3606

AV & Acoustics
LSTN Consultants
76 Beaver Street, 2nd Floor
New York, NY 10005
+1 (347) 788-0810

Facade
Front Inc.
100 E. Broadway Street, #501
New York, NY 10002
+1 (212) 242-2220

Key Plan

Description	Date
Filing Set	06/17/22

Project

Storm King Art Center

C.F.M. Building

Seal

NOT FOR CONSTRUCTION

Drawing Title

Facade Details

Date	06/17/22
Scale	1 1/2" = 1'-0"
Drawing Number	A-C-413
Sheet Size	ARCH D

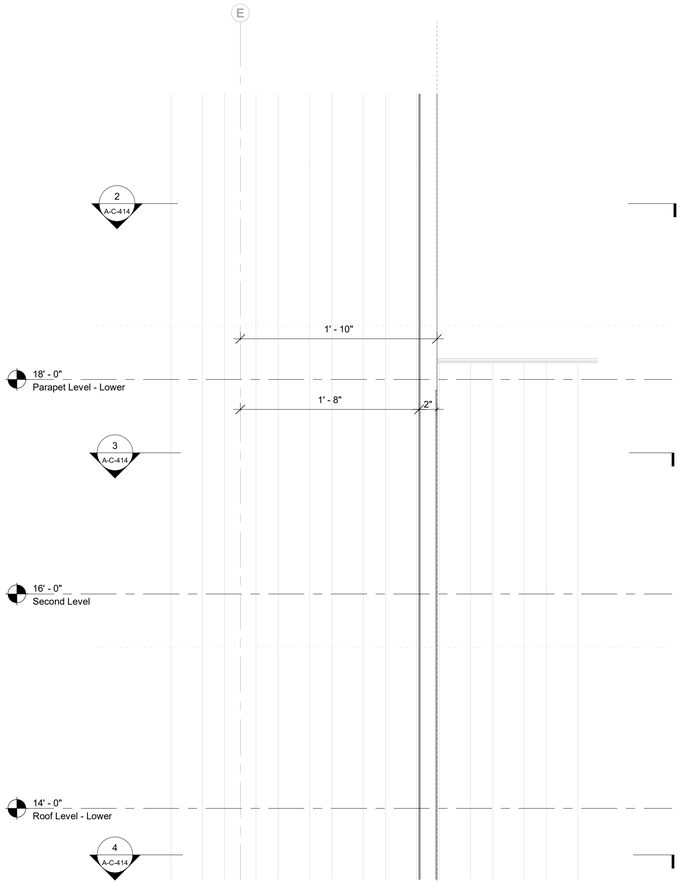

1 Upper Roof to Maintenance Facade Transition - Enlarged Elevation
1 1/2" = 1'-0"

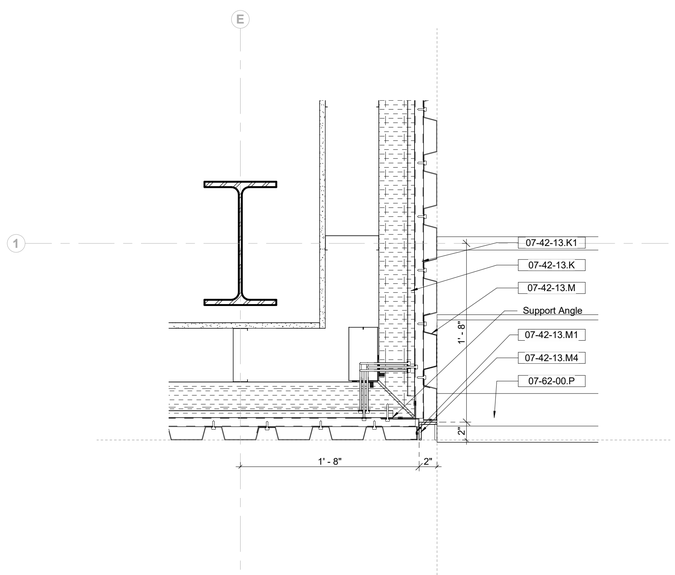

2 Upper Roof to Maintenance Facade Transition - Section A
1 1/2" = 1'-0"

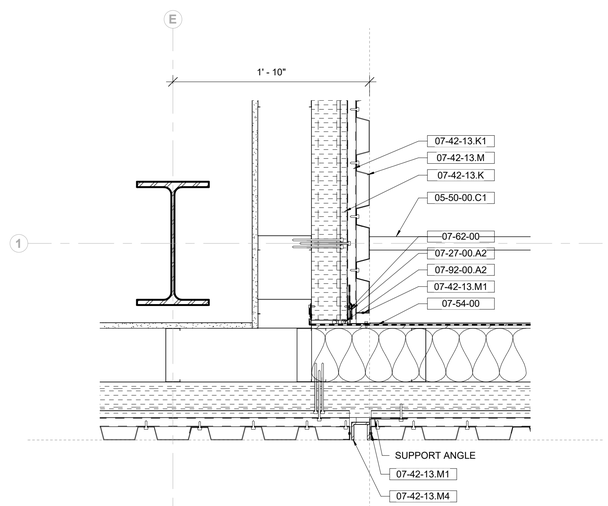

3 Upper Roof to Maintenance Facade Transition - Section B
1 1/2" = 1'-0"

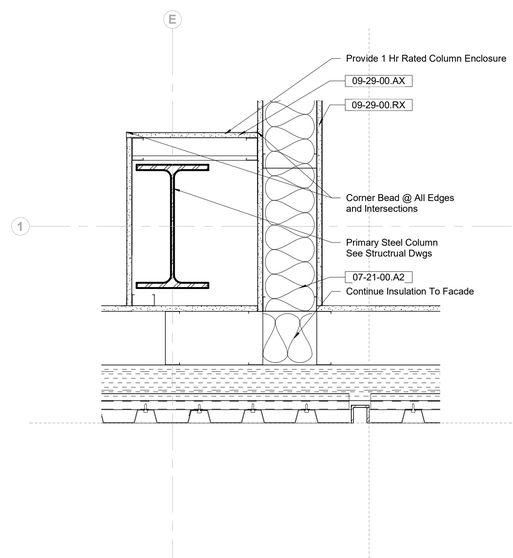

4 Upper Roof to Maintenance Facade Transition - Section C
1 1/2" = 1'-0"

Keynote Legend

Keynote	*Description*
05-50-00.C1	Roof Guard, Parapet-Mounted
07-21-00.A2	Mineral Wool Insulation, Interior
07-27-00.A2	Self-Adhering Vapor-Impermeable Air Barrier
07-42-13.K	Insulated Metal Composite Panel
07-42-13.K1	Integrated Hat Channel
07-42-13.M	Corrugated Metal Cladding
07-42-13.M1	Closure Trim
07-42-13.M4	Channel Trim
07-54-00	Thermoplastic Membrane Roofing (TPO)
07-62-00	Sheet Metal Flashing
07-62-00.P	Parapet Coping
07-92-00.A2	Joint Sealant w/ Backer Rod
09-29-00.AX	5/8" Gypsum Wall Board (Fire-Rated)
09-29-00.RX	5/8" Gypsum Wall Board - Abuse-Resistant (Fire-Rated)

Owner
Storm King Art Center
1 Museum Road
New Windsor, NY 12553
+1 (845) 534-3115

Design Architect
heneghan peng architects
14-16 Lord Edward Street
Dublin, D02 YC63
+353 1 633 9000

Executive Architect
WXY Architecture + Urban Design
224 Centre Street, 5th Floor
New York, NY 10013
+1 (212) 219-1953

Landscape Architect
Gustafson Porter + Bowman
1 Cobham Mews
London, MW1 9SB
+44 020 7284 8950

Reed Hilderbrand LLC
33 Whitney Avenue, 3rd Floor
New Haven, CT 06510
+1 (617) 923-2422

Structural & Lighting
ARUP
77 Water Street
New York, NY 10005
+1 (212) 896-3000

MEPF & IT
BuroHappold
100 Broadway #23
New York, NY 10005
+1 (212) 616-0228

Civil
VHB
100 Great Oaks Blvd., Suite 118
Albany, NY 12203
+1 (518) 389-3606

AV & Acoustics
LSTN Consultants
76 Beaver Street, 2nd Floor
New York, NY 10005
+1 (347) 788-0810

Facade
Front Inc.
100 E. Broadway Street, #501
New York, NY 10002
+1 (212) 242-2220

Key Plan

Description	Date
Filing Set	06/17/22

Project

Storm King Art Center

C.F.M. Building

Seal

NOT FOR CONSTRUCTION

Drawing Title

Facade Details

Date	06/17/22
Scale	1 1/2" = 1'-0"
Drawing Number	A-C-414
Sheet Size	ARCH D

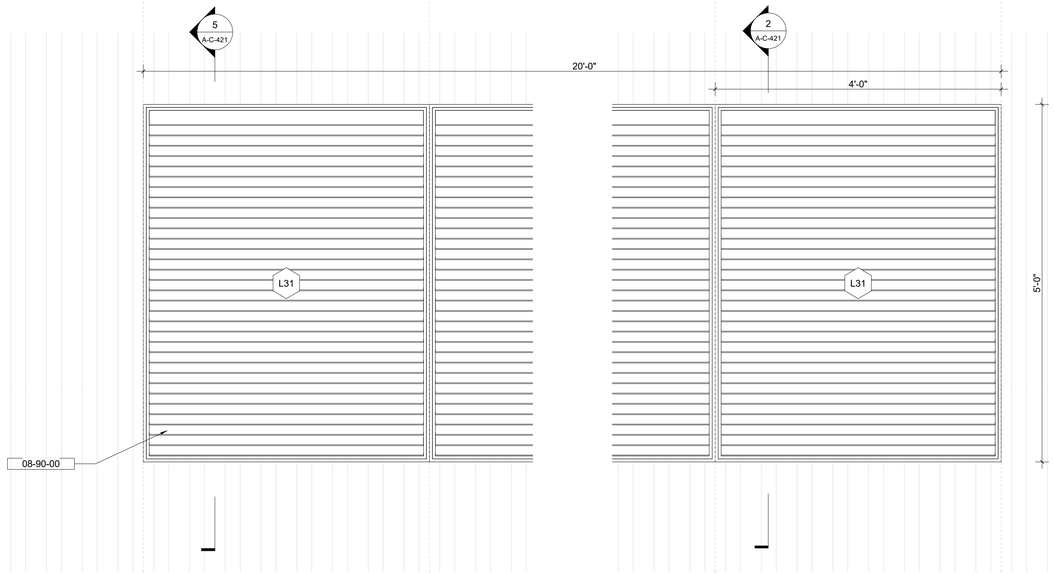

1 Elevation - Louver L31
1" = 1'-0"

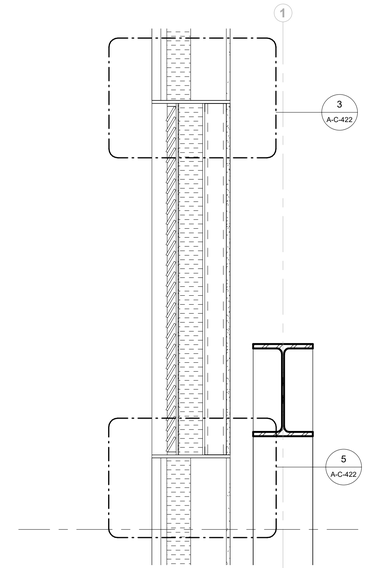

2 Section - Louver w/ Blank-off Panel
1" = 1'-0"

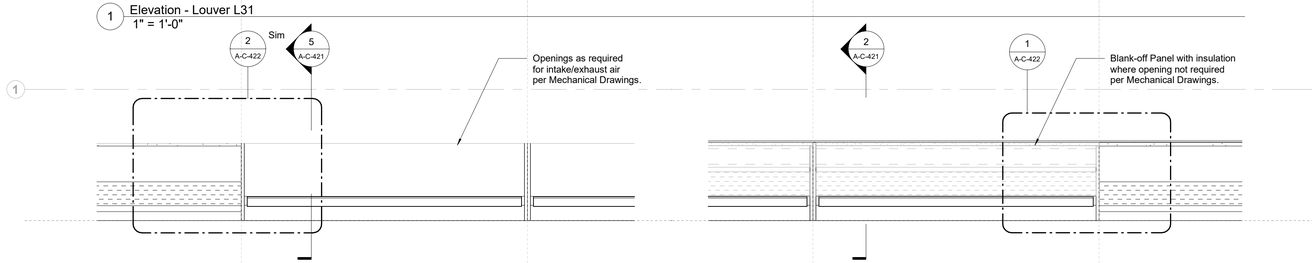

3 Plan - Louver L31, Typ
1" = 1'-0"

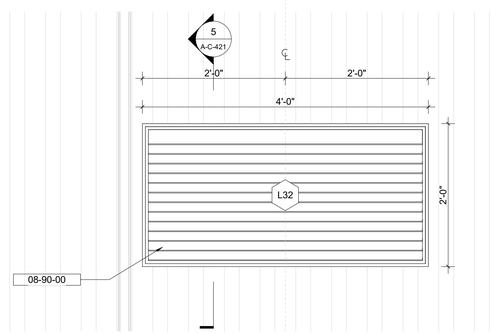

4 Elevation - Louver L33, Typ
1" = 1'-0"

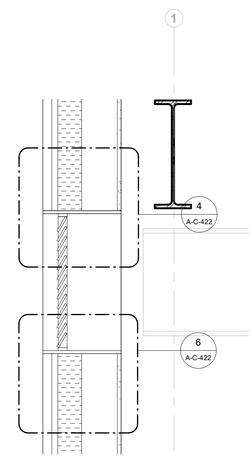

5 Section - Louver L33 Typ
1" = 1'-0"

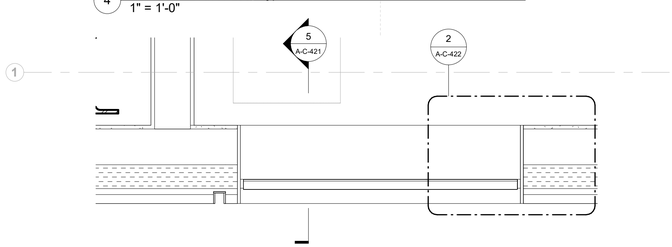

6 Plan - Louver L33, Typ
1" = 1'-0"

Keynote Legend

Keynote	*Description*
08-90-00	Exterior Louvers

Owner
Storm King Art Center
1 Museum Road
New Windsor, NY 12553
+1 (845) 534-3115

Design Architect
heneghan peng architects
14-16 Lord Edward Street
Dublin, D02 YC63
+353 1 633 9000

Executive Architect
WXY Architecture + Urban Design
224 Centre Street, 5th Floor
New York, NY 10013
+1 (212) 219-1953

Landscape Architect
Gustafson Porter + Bowman
1 Cobham Mews
London, MW1 9SB
+44 020 7284 8950

Reed Hilderbrand LLC
33 Whitney Avenue, 3rd Floor
New Haven, CT 06510
+1 (617) 923-2422

Structural & Lighting
ARUP
77 Water Street
New York, NY 10005
+1 (212) 896-3000

MEPF & IT
BuroHappold
100 Broadway #23
New York, NY 10005
+1 (212) 616-0228

Civil
VHB
100 Great Oaks Blvd., Suite 118
Albany, NY 12203
+1 (518) 389-3606

AV & Acoustics
LSTN Consultants
76 Beaver Street, 2nd Floor
New York, NY 10005
+1 (347) 788-0810

Facade
Front Inc.
100 E. Broadway Street, #501
New York, NY 10002
+1 (212) 242-2220

Key Plan

Description	Date
Filing Set	06/17/22

Project

Storm King Art Center

C.F.M. Building

Seal

NOT FOR CONSTRUCTION

Drawing Title

Louver Details

Date	06/17/22
Scale	1" = 1'-0"
Drawing Number	A-C-421
Sheet Size	ARCH D

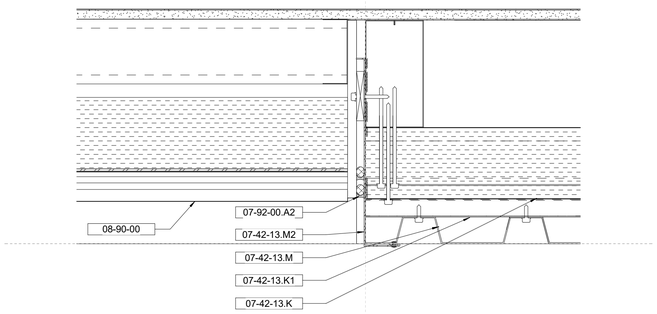

1 Plan - Jamb Detail - Louver w/ Blank-off Panel
3" = 1'-0"

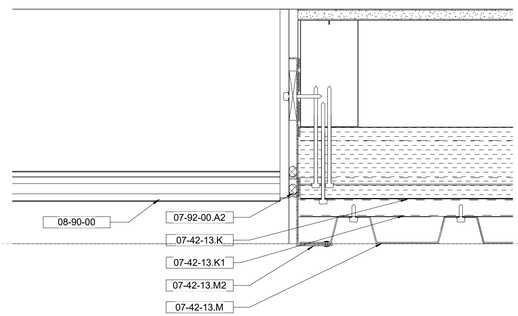

2 Plan - Jamb Detail - Louver
3" = 1'-0"

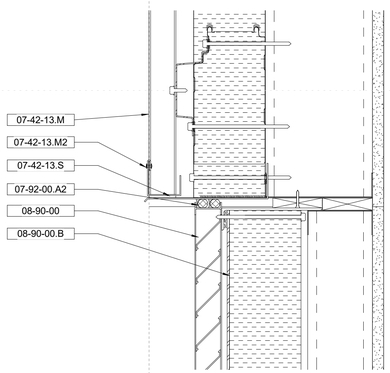

3 Section - Head Detail - Louver w/ Blank-off Panel
3" = 1'-0"

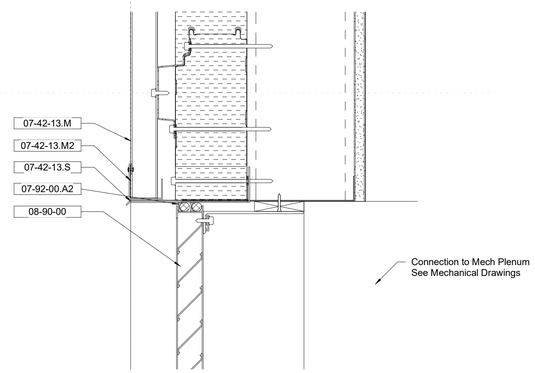

4 Section - Head Detail - Louver
3" = 1'-0"

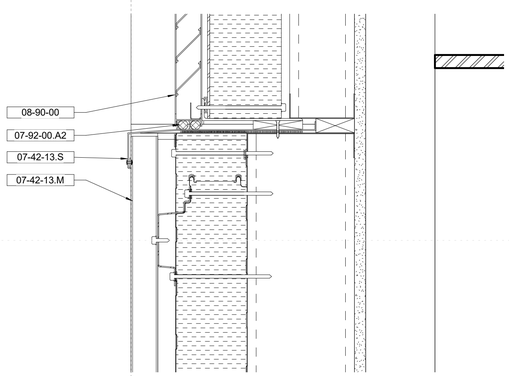

5 Section - Sill Detail - Louver Blank-off Panel
3" = 1'-0"

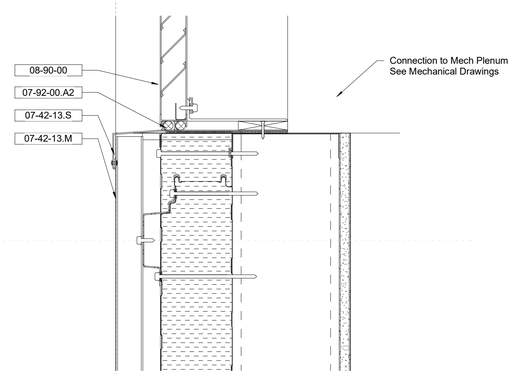

6 Section - Sill Detail - Louver
3" = 1'-0"

Keynote Legend

Keynote	*Description*
07-42-13.K	Insulated Metal Composite Panel
07-42-13.K1	Integrated Hat Channel
07-42-13.M	Corrugated Metal Cladding
07-42-13.M2	End Trim
07-42-13.S	Sheet Metal Flashing, Color-matched to Cladding
07-92-00.A2	Joint Sealant w/ Backer Rod
08-90-00	Exterior Louvers
08-90-00.B	Blank-off Panel

Owner
Storm King Art Center
1 Museum Road
New Windsor, NY 12553
+1 (845) 534-3115

Design Architect
heneghan peng architects
14-16 Lord Edward Street
Dublin, D02 YC63
+353 1 633 9000

Executive Architect
WXY Architecture + Urban Design
224 Centre Street, 5th Floor
New York, NY 10013
+1 (212) 219-1953

Landscape Architect
Gustafson Porter + Bowman
1 Cobham Mews
London, MW1 9SB
+44 020 7284 8950

Reed Hilderbrand LLC
33 Whitney Avenue, 3rd Floor
New Haven, CT 06510
+1 (617) 923-2422

Structural & Lighting
ARUP
77 Water Street
New York, NY 10005
+1 (212) 896-3000

MEPF & IT
BuroHappold
100 Broadway #23
New York, NY 10005
+1 (212) 616-0228

Civil
VHB
100 Great Oaks Blvd., Suite 118
Albany, NY 12203
+1 (518) 389-3606

AV & Acoustics
LSTN Consultants
76 Beaver Street, 2nd Floor
New York, NY 10005
+1 (347) 788-0810

Facade
Front Inc.
100 E. Broadway Street, #501
New York, NY 10002
+1 (212) 242-2220

Key Plan

Description	Date
Filing Set	06/17/22

Project

Storm King Art Center

C.F.M. Building

Seal

NOT FOR CONSTRUCTION

Drawing Title

Louver Details

Date	06/17/22
Scale	3" = 1'-0"
Drawing Number	A-C-422
Sheet Size	ARCH D

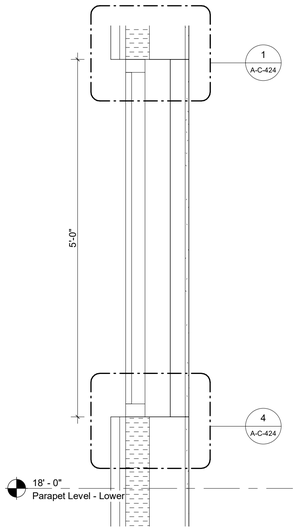

1 Window Section - Spandrel
1" = 1'-0"

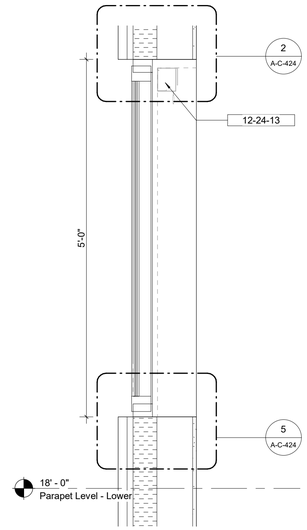

2 Window Section - Outswing Casement
1" = 1'-0"

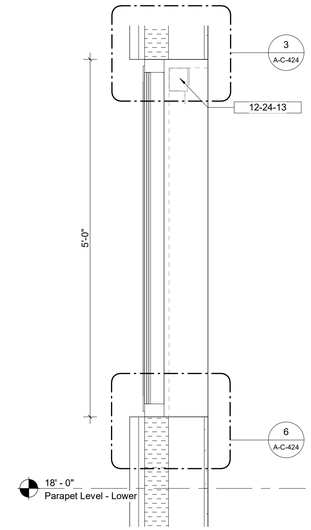

3 Window Section - Fixed Pane
1" = 1'-0"

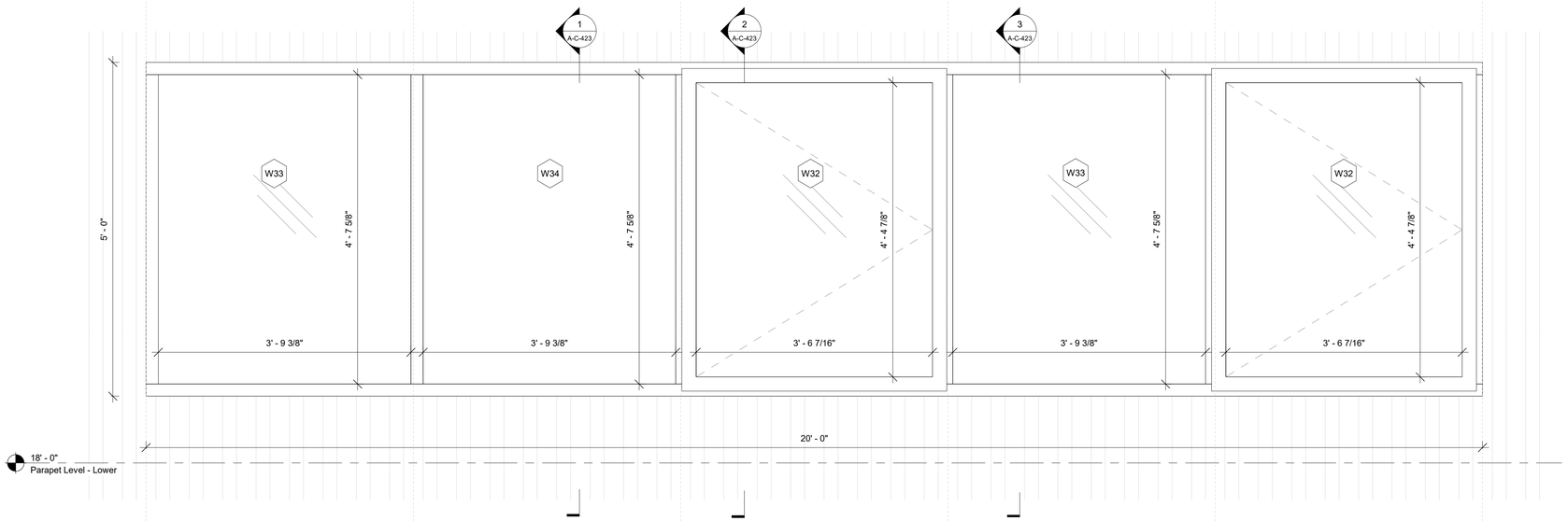

4 Elevation - Window W/ Spandrel
1" = 1'-0"

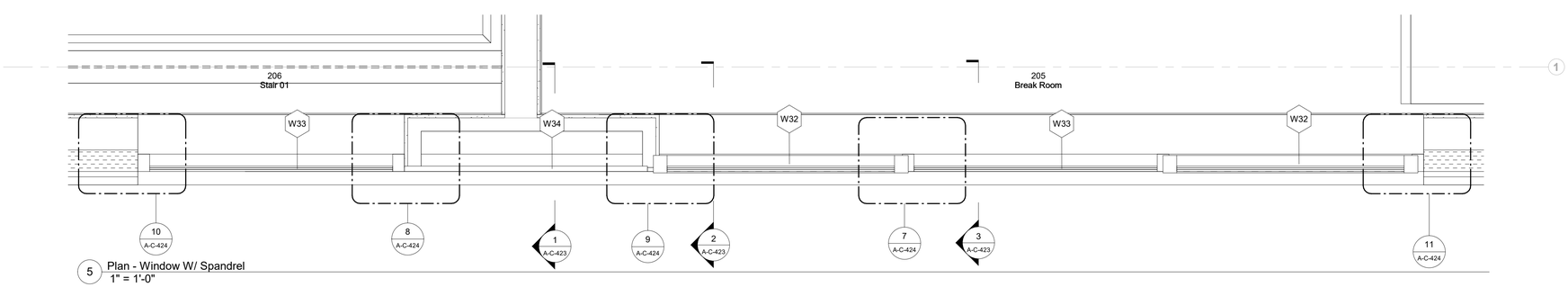

5 Plan - Window W/ Spandrel
1" = 1'-0"

Keynote Legend

Keynote	*Description*
12-24-13	Window Shades

Owner
Storm King Art Center
1 Museum Road
New Windsor, NY 12553
+1 (845) 534-3115

Design Architect
heneghan peng architects
14-16 Lord Edward Street
Dublin, D02 YC63
+353 1 633 9000

Executive Architect
WXY Architecture + Urban Design
224 Centre Street, 5th Floor
New York, NY 10013
+1 (212) 219-1953

Landscape Architect
Gustafson Porter + Bowman
1 Cobham Mews
London, MW1 9SB
+44 020 7284 8950

Reed Hilderbrand LLC
33 Whitney Avenue, 3rd Floor
New Haven, CT 06510
+1 (617) 923-2422

Structural & Lighting
ARUP
77 Water Street
New York, NY 10005
+1 (212) 896-3000

MEPF & IT
BuroHappold
100 Broadway #23
New York, NY 10005
+1 (212) 616-0228

Civil
VHB
100 Great Oaks Blvd., Suite 118
Albany, NY 12203
+1 (518) 389-3606

AV & Acoustics
LSTN Consultants
76 Beaver Street, 2nd Floor
New York, NY 10005
+1 (347) 788-0810

Facade
Front Inc.
100 E. Broadway Street, #501
New York, NY 10002
+1 (212) 242-2220

Key Plan

Description	Date
Filing Set	06/17/22

Project

Storm King Art Center

C.F.M. Building

Seal

NOT FOR CONSTRUCTION

Drawing Title

Window Details

Date	06/17/22
Scale	1" = 1'-0"
Drawing Number	A-C-423
Sheet Size	ARCH D

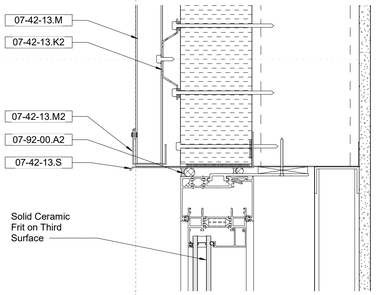

1 Window Head Detail - Spandrel
3" = 1'-0"

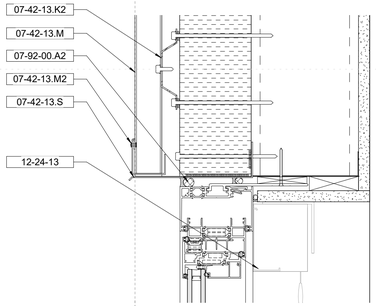

2 Window Head Detail - Outswing Casement
3" = 1'-0"

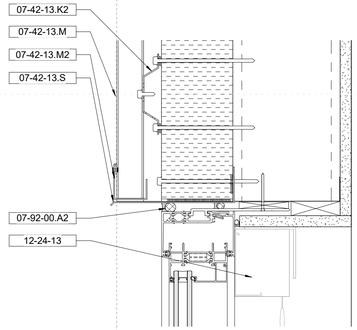

3 Window Head Detail - Fixed Pane
3" = 1'-0"

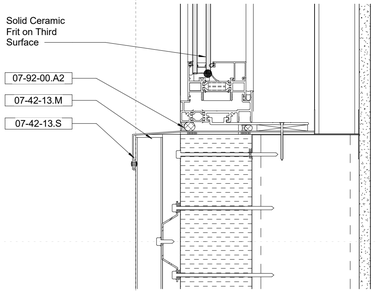

4 Window Sill Detail - Spandrel
3" = 1'-0"

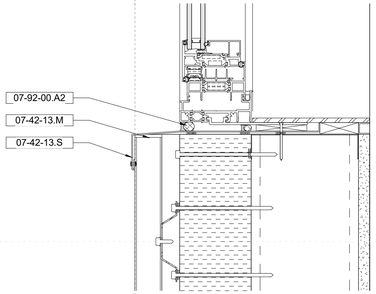

5 Window Sill Detail - Outswing Casement
3" = 1'-0"

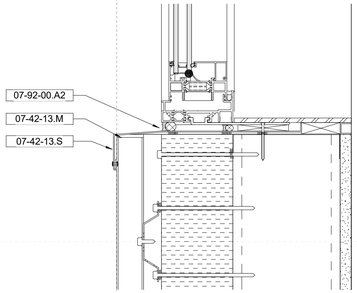

6 Window Sill Detail - Fixed Pane
3" = 1'-0"

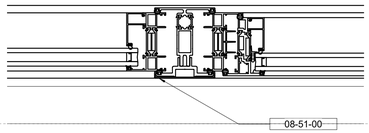

7 Window Mullion Detail - Outswing Casement to Fixed Pane
3" = 1'-0"

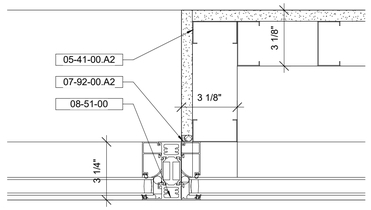

8 Window Mullion Detail - Fixed to Spandrel
3" = 1'-0"

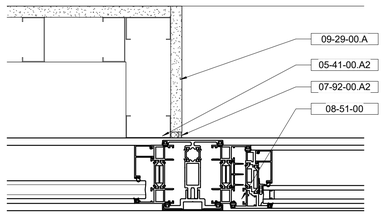

9 Window Mullion Detail - Spandrel to Outswing Casement
3" = 1'-0"

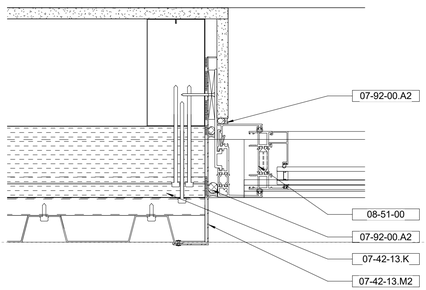

10 Window Jamb Detail - Fixed Pane
3" = 1'-0"

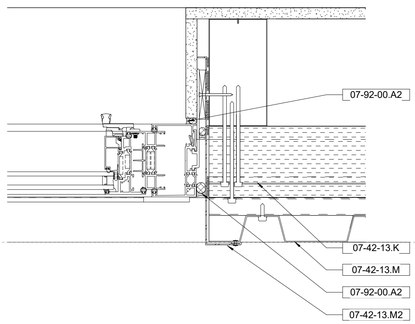

11 Window Jamb Detail - Outswing Casement
3" = 1'-0"

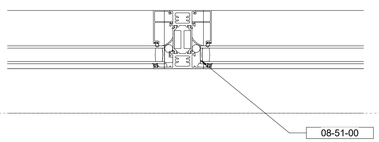

12 Window Mullion Detail - Fixed Pane to Fixed Pane
3" = 1'-0"

Keynote Legend

Keynote	*Description*
05-41-00.A2	2 1/2" Metal Stud
07-42-13.K	Insulated Metal Composite Panel
07-42-13.K2	Hat Channel
07-42-13.M	Corrugated Metal Cladding
07-42-13.M2	End Trim
07-42-13.S	Sheet Metal Flashing, Color-matched to Cladding
07-92-00.A2	Joint Sealant w/ Backer Rod
08-51-00	Exterior Metal-Framed Windows & Doors
09-29-00.A	5/8" Gypsum Wall Board
12-24-13	Window Shades

Owner
Storm King Art Center
1 Museum Road
New Windsor, NY 12553
+1 (845) 534-3115

Design Architect
heneghan peng architects
14-16 Lord Edward Street
Dublin, D02 YC63
+353 1 633 9000

Executive Architect
WXY Architecture + Urban Design
224 Centre Street, 5th Floor
New York, NY 10013
+1 (212) 219-1953

Landscape Architect
Gustafson Porter + Bowman
1 Cobham Mews
London, MW1 9SB
+44 020 7284 8950

Reed Hilderbrand LLC
33 Whitney Avenue, 3rd Floor
New Haven, CT 06510
+1 (617) 923-2422

Structural & Lighting
ARUP
77 Water Street
New York, NY 10005
+1 (212) 896-3000

MEPF & IT
BuroHappold
100 Broadway #23
New York, NY 10005
+1 (212) 616-0228

Civil
VHB
100 Great Oaks Blvd., Suite 118
Albany, NY 12203
+1 (518) 389-3606

AV & Acoustics
LSTN Consultants
76 Beaver Street, 2nd Floor
New York, NY 10005
+1 (347) 788-0810

Facade
Front Inc.
100 E. Broadway Street, #501
New York, NY 10002
+1 (212) 242-2220

Key Plan

Description	Date
Filing Set	06/17/22

Project

Storm King Art Center

C.F.M. Building

Seal

NOT FOR CONSTRUCTION

Drawing Title

Window Details

Date	06/17/22
Scale	3" = 1'-0"
Drawing Number	A-C-424
Sheet Size	ARCH D

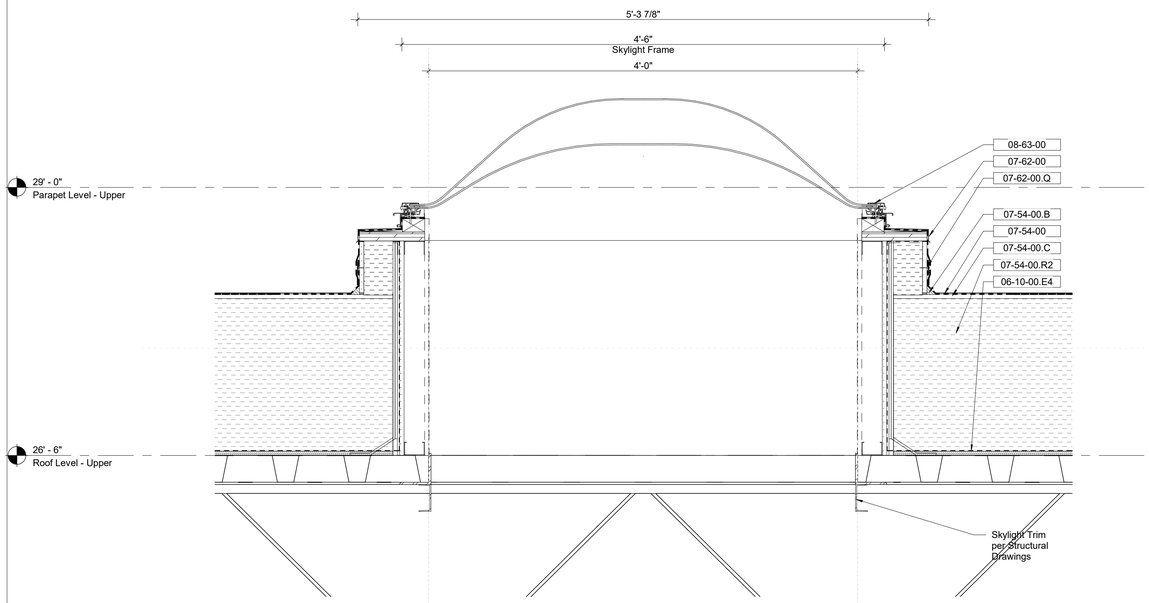

1 Skylight at Upper Roof Detail
1 1/2" = 1'-0"

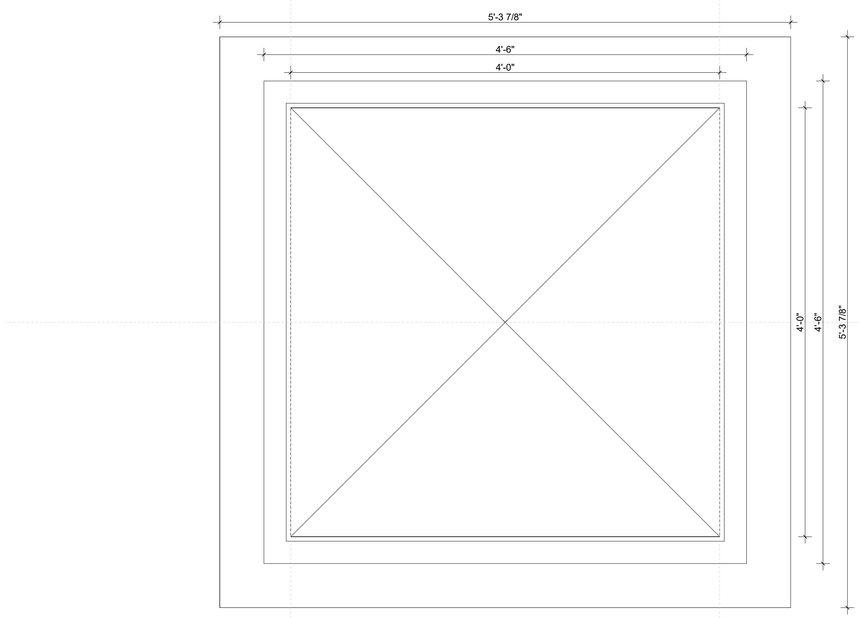

2 Skylight at Upper Roof - Plan Detail
1 1/2" = 1'-0"

Keynote Legend

Keynote	*Description*
06-10-00.E4	1/2" Exterior Grade Plywood
07-54-00	Thermoplastic Membrane Roofing (TPO)
07-54-00.B	Cant Strip
07-54-00.C	Cover Board
07-54-00.R2	Polyiso Insulation, Tapered to Drain
07-62-00	Sheet Metal Flashing
07-62-00.Q	Parapet & Roofing Curb Termination Bar
08-63-00	Metal-Framed Skylights

Owner
Storm King Art Center
1 Museum Road
New Windsor, NY 12553
+1 (845) 534-3115

Design Architect
heneghan peng architects
14-16 Lord Edward Street
Dublin, D02 YC63
+353 1 633 9000

Executive Architect
WXY Architecture + Urban Design
224 Centre Street, 5th Floor
New York, NY 10013
+1 (212) 219-1953

Landscape Architect
Gustafson Porter + Bowman
1 Cobham Mews
London, MW1 9SB
+44 020 7284 8950

Reed Hilderbrand LLC
33 Whitney Avenue, 3rd Floor
New Haven, CT 06510
+1 (617) 923-2422

Structural & Lighting
ARUP
77 Water Street
New York, NY 10005
+1 (212) 896-3000

MEPF & IT
BuroHappold
100 Broadway #23
New York, NY 10005
+1 (212) 616-0228

Civil
VHB
100 Great Oaks Blvd., Suite 118
Albany, NY 12203
+1 (518) 389-3606

AV & Acoustics
LSTN Consultants
76 Beaver Street, 2nd Floor
New York, NY 10005
+1 (347) 788-0810

Facade
Front Inc.
100 E. Broadway Street, #501
New York, NY 10002
+1 (212) 242-2220

Key Plan

Description	Date
Filing Set	06/17/22

Project

Storm King Art Center

C.F.M. Building

Seal

NOT FOR CONSTRUCTION

Drawing Title

Skylight Details

Date	06/17/22
Scale	1 1/2" = 1'-0"
Drawing Number	A-C-425
Sheet Size	ARCH D

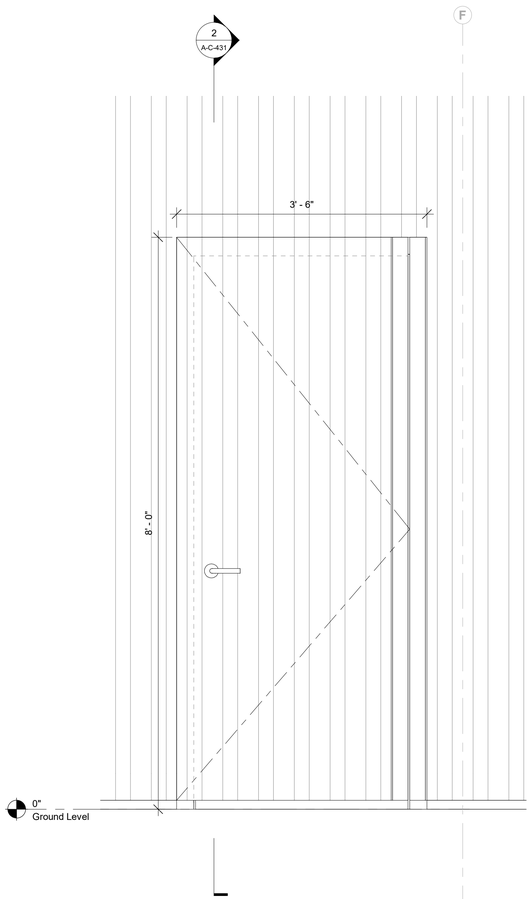

1 Elevation - Typical Exterior Overclad Door
1" = 1'-0"

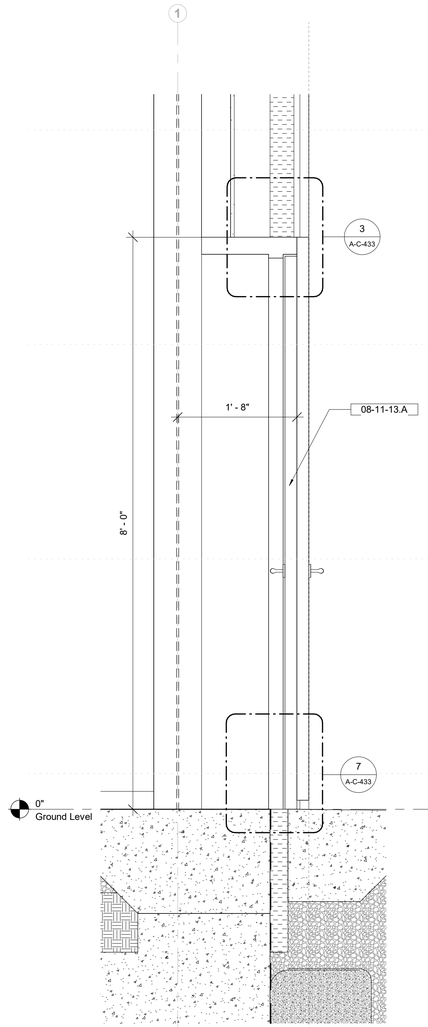

2 Section - Typical Exterior Overclad Door
1" = 1'-0"

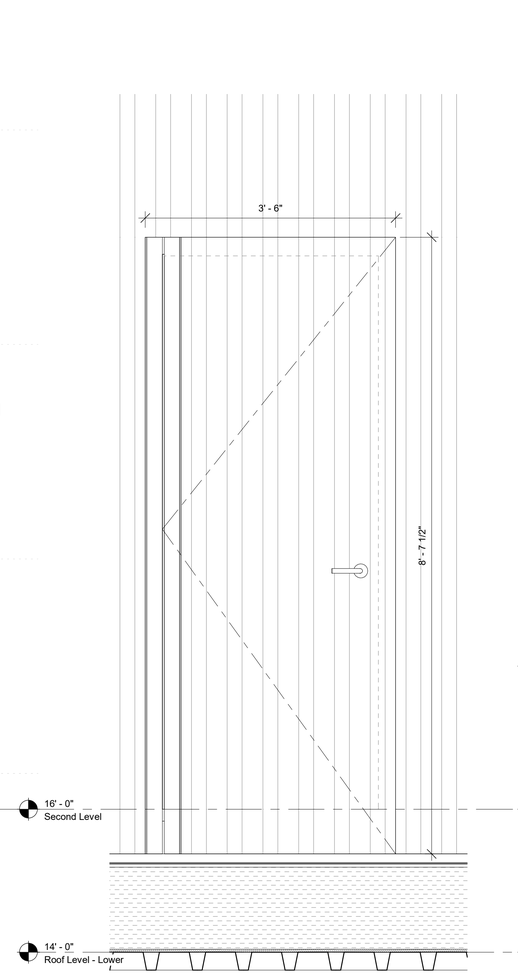

3 Door 204 - Elevation
1" = 1'-0"

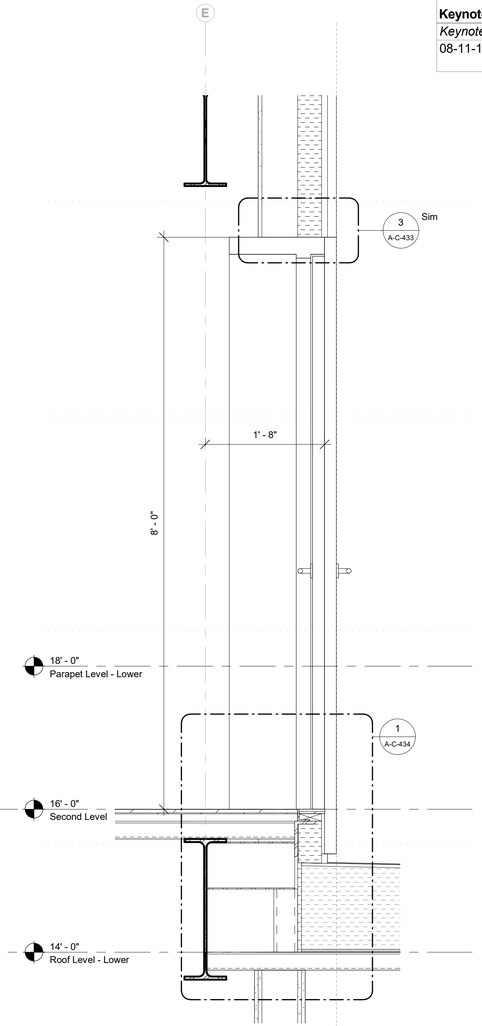

4 Door 204 - Section
1" = 1'-0"

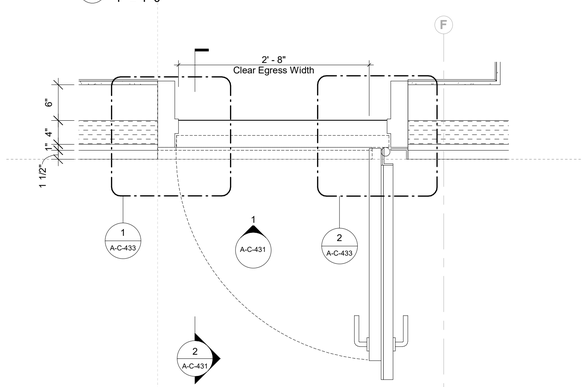

5 Plan - Typical Exterior Overclad Door
1" = 1'-0"

Keynote Legend

Keynote	*Description*
08-11-13.A	Exterior Hollow Metal Door, Insulated

Owner
Storm King Art Center
1 Museum Road
New Windsor, NY 12553
+1 (845) 534-3115

Design Architect
heneghan peng architects
14-16 Lord Edward Street
Dublin, D02 YC63
+353 1 633 9000

Executive Architect
WXY Architecture + Urban Design
224 Centre Street, 5th Floor
New York, NY 10013
+1 (212) 219-1953

Landscape Architect
Gustafson Porter + Bowman
1 Cobham Mews
London, MW1 9SB
+44 020 7284 8950

Reed Hilderbrand LLC
33 Whitney Avenue, 3rd Floor
New Haven, CT 06510
+1 (617) 923-2422

Structural & Lighting
ARUP
77 Water Street
New York, NY 10005
+1 (212) 896-3000

MEPF & IT
BuroHappold
100 Broadway #23
New York, NY 10005
+1 (212) 616-0228

Civil
VHB
100 Great Oaks Blvd., Suite 118
Albany, NY 12203
+1 (518) 389-3606

AV & Acoustics
LSTN Consultants
76 Beaver Street, 2nd Floor
New York, NY 10005
+1 (347) 788-0810

Facade
Front Inc.
100 E. Broadway Street, #501
New York, NY 10002
+1 (212) 242-2220

Key Plan

Description	Date
Filing Set	06/17/22

Project

Storm King Art Center

C.F.M. Building

Seal

NOT FOR CONSTRUCTION

Drawing Title

Door Details - Exterior

Date	06/17/22
Scale	1" = 1'-0"
Drawing Number	A-C-431
Sheet Size	ARCH D

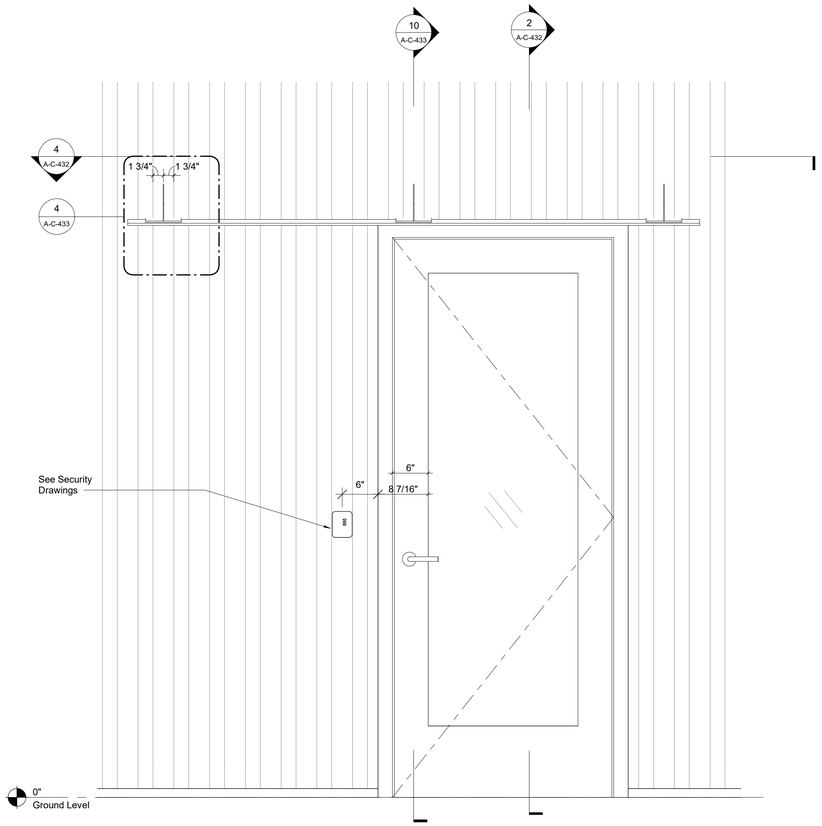

1 Elevation - Door 104.2
1" = 1'-0"

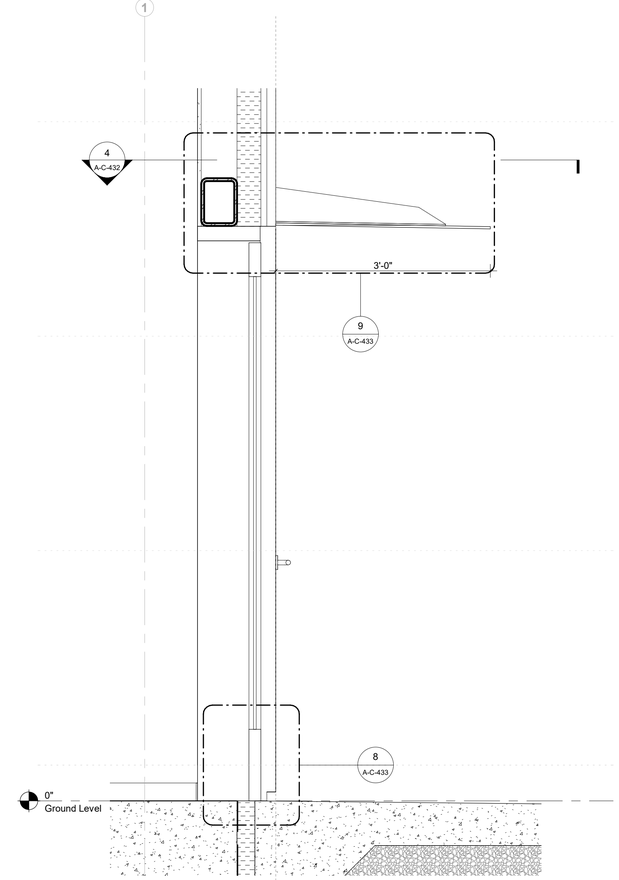

2 Section - Door 104.2 1
1" = 1'-0"

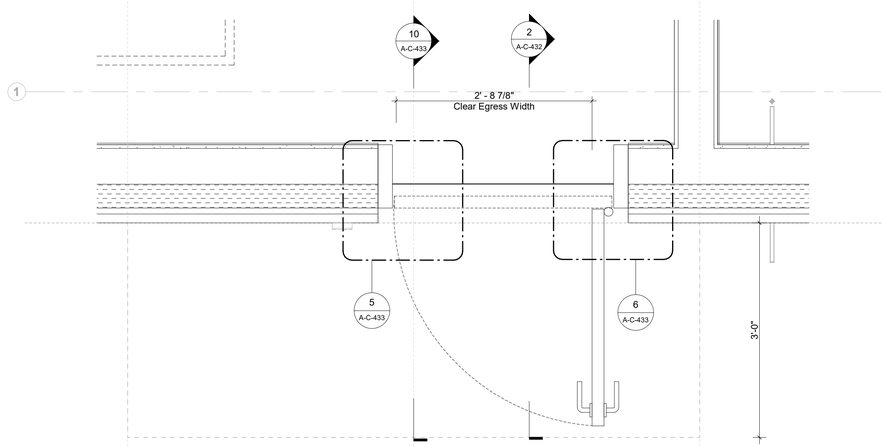

3 Plan - Door 104.2
1" = 1'-0"

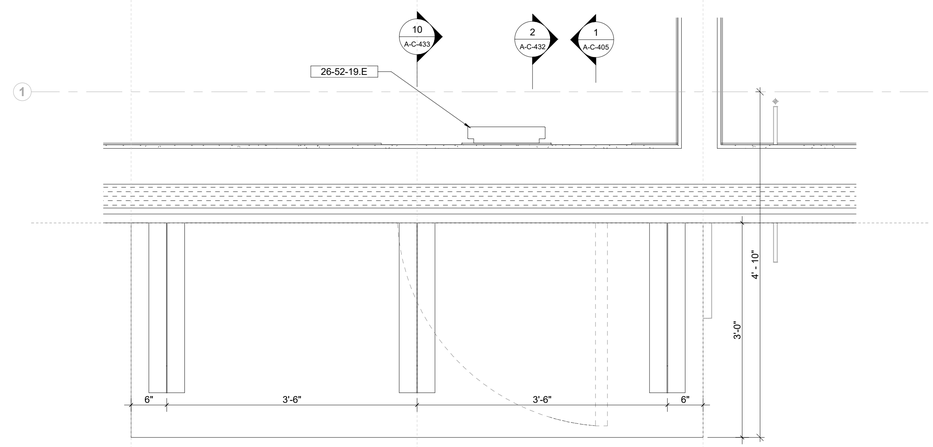

4 Entry Canopy Plan
1" = 1'-0"

Keynote Legend

Keynote	*Description*
26-52-19.E	Exit Signage

Owner
Storm King Art Center
1 Museum Road
New Windsor, NY 12553
+1 (845) 534-3115

Design Architect
heneghan peng architects
14-16 Lord Edward Street
Dublin, D02 YC63
+353 1 633 9000

Executive Architect
WXY Architecture + Urban Design
224 Centre Street, 5th Floor
New York, NY 10013
+1 (212) 219-1953

Landscape Architect
Gustafson Porter + Bowman
1 Cobham Mews
London, MW1 9SB
+44 020 7284 8950

Reed Hilderbrand LLC
33 Whitney Avenue, 3rd Floor
New Haven, CT 06510
+1 (617) 923-2422

Structural & Lighting
ARUP
77 Water Street
New York, NY 10005
+1 (212) 896-3000

MEPF & IT
BuroHappold
100 Broadway #23
New York, NY 10005
+1 (212) 616-0228

Civil
VHB
100 Great Oaks Blvd., Suite 118
Albany, NY 12203
+1 (518) 389-3606

AV & Acoustics
LSTN Consultants
76 Beaver Street, 2nd Floor
New York, NY 10005
+1 (347) 788-0810

Facade
Front Inc.
100 E. Broadway Street, #501
New York, NY 10002
+1 (212) 242-2220

Key Plan

Description	Date
Filing Set	06/17/22

Project

Storm King Art Center

C.F.M. Building

Seal

NOT FOR CONSTRUCTION

Drawing Title

Door Details - Exterior

Date	06/17/22
Scale	1" = 1'-0"
Drawing Number	A-C-432
Sheet Size	ARCH D

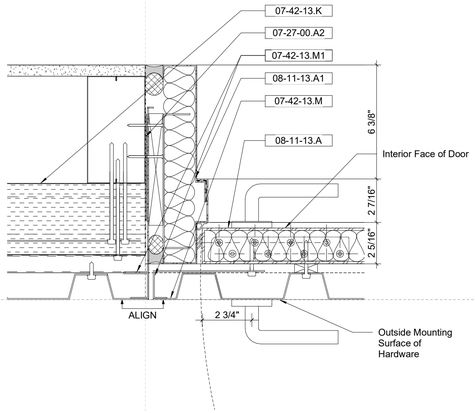

1 Typical Exterior Overclad Door - Jamb Plan Detail - Swing Side
3" = 1'-0"

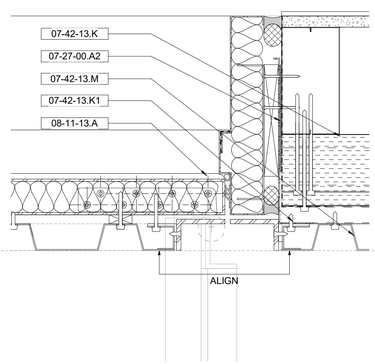

2 Typical Exterior Overclad Door - Jamb Plan Detail - Hinge Side
3" = 1'-0"

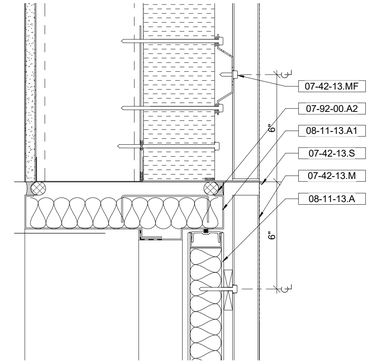

3 Typical Exterior Overclad Door - Head Detail
3" = 1'-0"

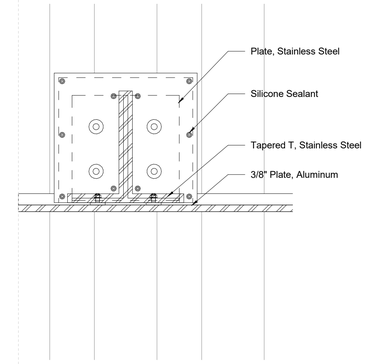

4 Elevation - Canopy Cross Section Detail
3" = 1'-0"

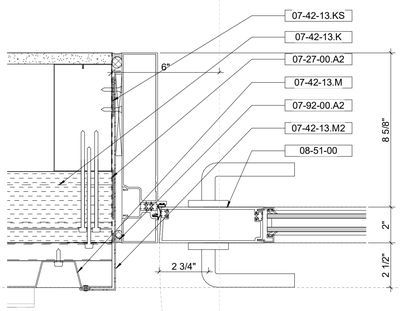

5 Door 104.2 - Swing Side
3" = 1'-0"

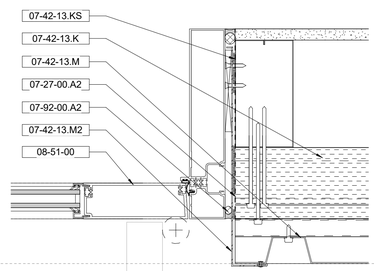

6 Door 104.2 - Hinge Side
3" = 1'-0"

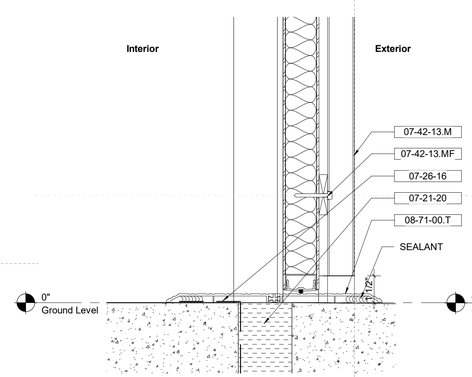

7 Typical Exterior Overclad Door - Threshold Detail
3" = 1'-0"

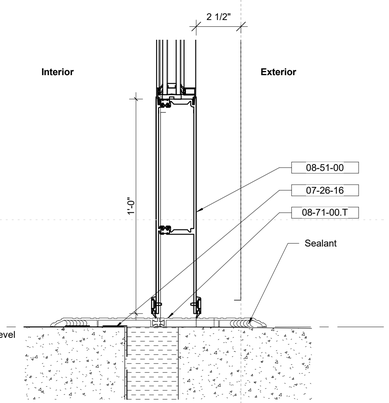

8 Door 104.2 1 - Threshold Detail
3" = 1'-0"

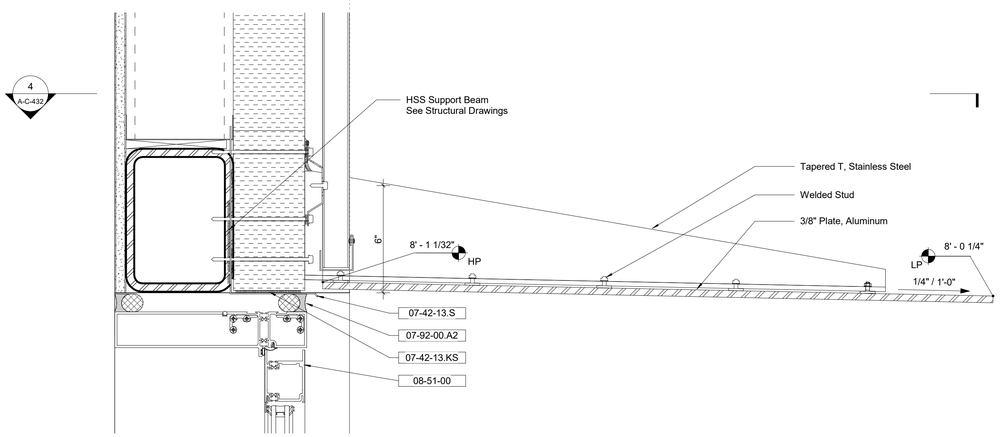

9 Door 104.2 1 - Head Detail A
3" = 1'-0"

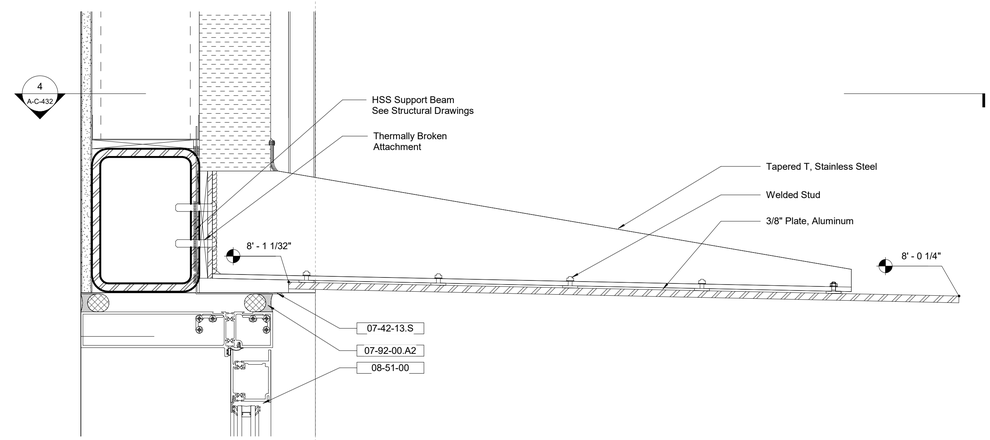

10 Door 104.2 1 - Head Detail B
3" = 1'-0"

Keynote Legend

Keynote	*Description*
07-21-20	XPS Insulation
07-26-16	Below-grade Vapor Retarder
07-27-00.A2	Self-Adhering Vapor-Impermeable Air Barrier
07-42-13.K	Insulated Metal Composite Panel
07-42-13.K1	Integrated Hat Channel
07-42-13.KS	Continuous Butyl Sealant
07-42-13.M	Corrugated Metal Cladding
07-42-13.M1	Closure Trim
07-42-13.M2	End Trim
07-42-13.MF	Exposed Fastener
07-42-13.S	Sheet Metal Flashing, Color-matched to Cladding
07-92-00.A2	Joint Sealant w/ Backer Rod
08-11-13.A	Exterior Hollow Metal Door, Insulated
08-11-13.A1	Exterior Metal Door Frame, Insulated, Thermally-broken
08-51-00	Exterior Metal-Framed Windows & Doors
08-71-00.T	Door Threshold, Thermally-broken

Owner
Storm King Art Center
1 Museum Road
New Windsor, NY 12553
+1 (845) 534-3115

Design Architect
heneghan peng architects
14-16 Lord Edward Street
Dublin, D02 YC63
+353 1 633 9000

Executive Architect
WXY Architecture + Urban Design
224 Centre Street, 5th Floor
New York, NY 10013
+1 (212) 219-1953

Landscape Architect
Gustafson Porter + Bowman
1 Cobham Mews
London, MW1 9SB
+44 020 7284 8950

Reed Hilderbrand LLC
33 Whitney Avenue, 3rd Floor
New Haven, CT 06510
+1 (617) 923-2422

Structural & Lighting
ARUP
77 Water Street
New York, NY 10005
+1 (212) 896-3000

MEPF & IT
BuroHappold
100 Broadway #23
New York, NY 10005
+1 (212) 616-0228

Civil
VHB
100 Great Oaks Blvd., Suite 118
Albany, NY 12203
+1 (518) 389-3606

AV & Acoustics
LSTN Consultants
76 Beaver Street, 2nd Floor
New York, NY 10005
+1 (347) 788-0810

Facade
Front Inc.
100 E. Broadway Street, #501
New York, NY 10002
+1 (212) 242-2220

Key Plan

Description	Date
Filing Set	06/17/22

Project

Storm King Art Center

C.F.M. Building

Seal

NOT FOR CONSTRUCTION

Drawing Title

Door Details - Exterior

Date	06/17/22
Scale	3" = 1'-0"
Drawing Number	A-C-433
Sheet Size	ARCH D

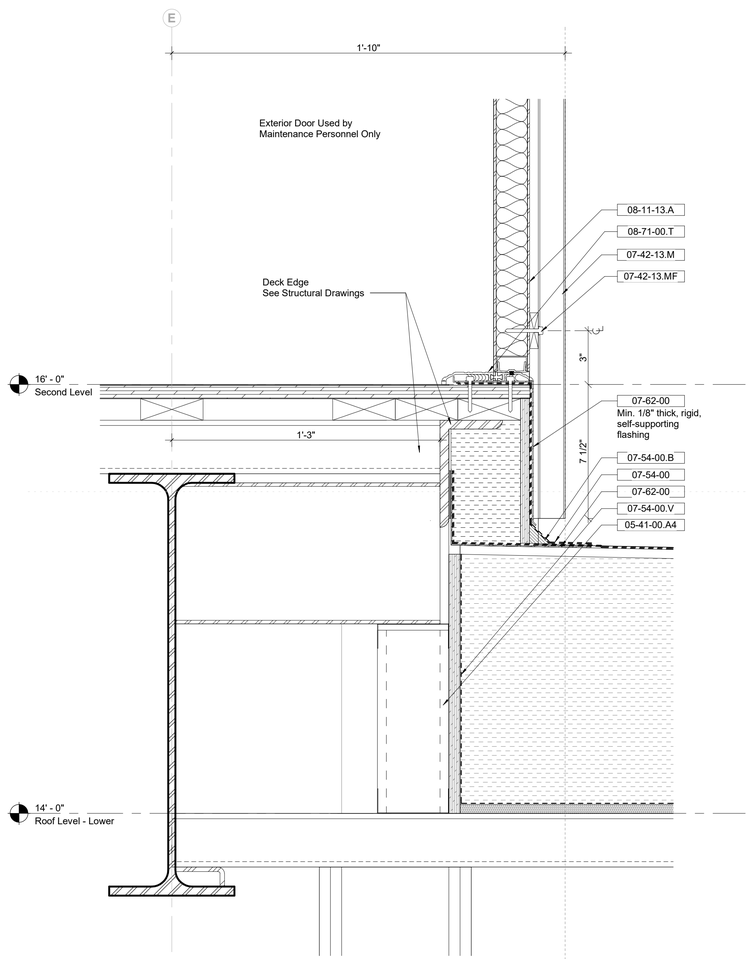

1 Door 204.1 - Threshold Detail
3" = 1'-0"

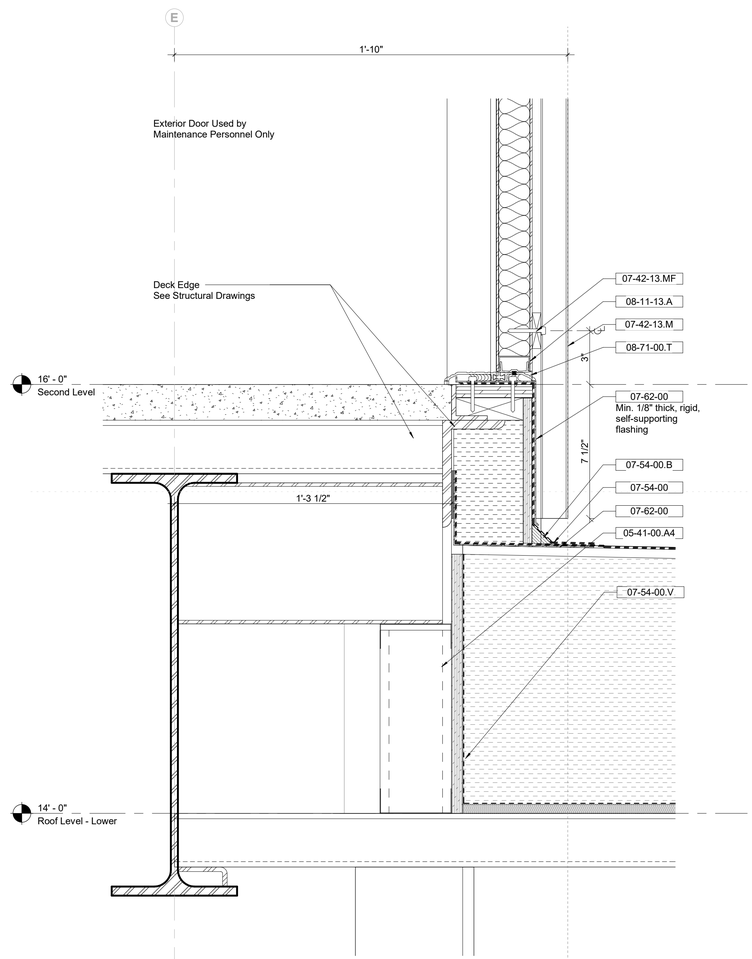

2 Door 212.1 - Threshold Detail
3" = 1'-0"

Keynote Legend

Keynote	*Description*
05-41-00.A4	4" Metal Stud
07-42-13.M	Corrugated Metal Cladding
07-42-13.MF	Exposed Fastener
07-54-00	Thermoplastic Membrane Roofing (TPO)
07-54-00.B	Cant Strip
07-54-00.V	Vapor Retarder
07-62-00	Sheet Metal Flashing
08-11-13.A	Exterior Hollow Metal Door, Insulated
08-71-00.T	Door Threshold, Thermally-broken

Owner
Storm King Art Center
1 Museum Road
New Windsor, NY 12553
+1 (845) 534-3115

Design Architect
heneghan peng architects
14-16 Lord Edward Street
Dublin, D02 YC63
+353 1 633 9000

Executive Architect
WXY Architecture + Urban Design
224 Centre Street, 5th Floor
New York, NY 10013
+1 (212) 219-1953

Landscape Architect
Gustafson Porter + Bowman
1 Cobham Mews
London, MW1 9SB
+44 020 7284 8950

Reed Hilderbrand LLC
33 Whitney Avenue, 3rd Floor
New Haven, CT 06510
+1 (617) 923-2422

Structural & Lighting
ARUP
77 Water Street
New York, NY 10005
+1 (212) 896-3000

MEPF & IT
BuroHappold
100 Broadway #23
New York, NY 10005
+1 (212) 616-0228

Civil
VHB
100 Great Oaks Blvd., Suite 118
Albany, NY 12203
+1 (518) 389-3606

AV & Acoustics
LSTN Consultants
76 Beaver Street, 2nd Floor
New York, NY 10005
+1 (347) 788-0810

Facade
Front Inc.
100 E. Broadway Street, #501
New York, NY 10002
+1 (212) 242-2220

Key Plan

Description	Date
Filing Set	06/17/22

Project

Storm King Art Center

C.F.M. Building

Seal

NOT FOR CONSTRUCTION

Drawing Title

Door Details - Exterior

Date	06/17/22
Scale	3" = 1'-0"
Drawing Number	A-C-434
Sheet Size	ARCH D

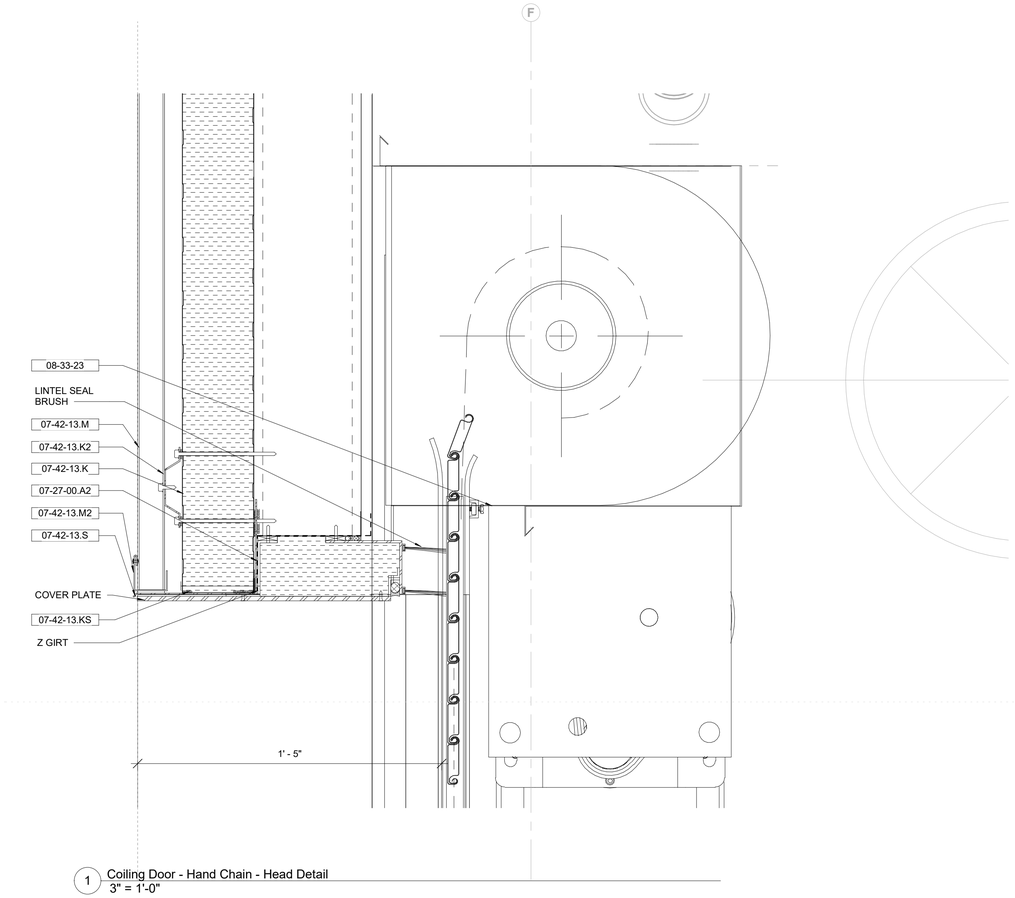

1 Coiling Door - Hand Chain - Head Detail
3" = 1'-0"

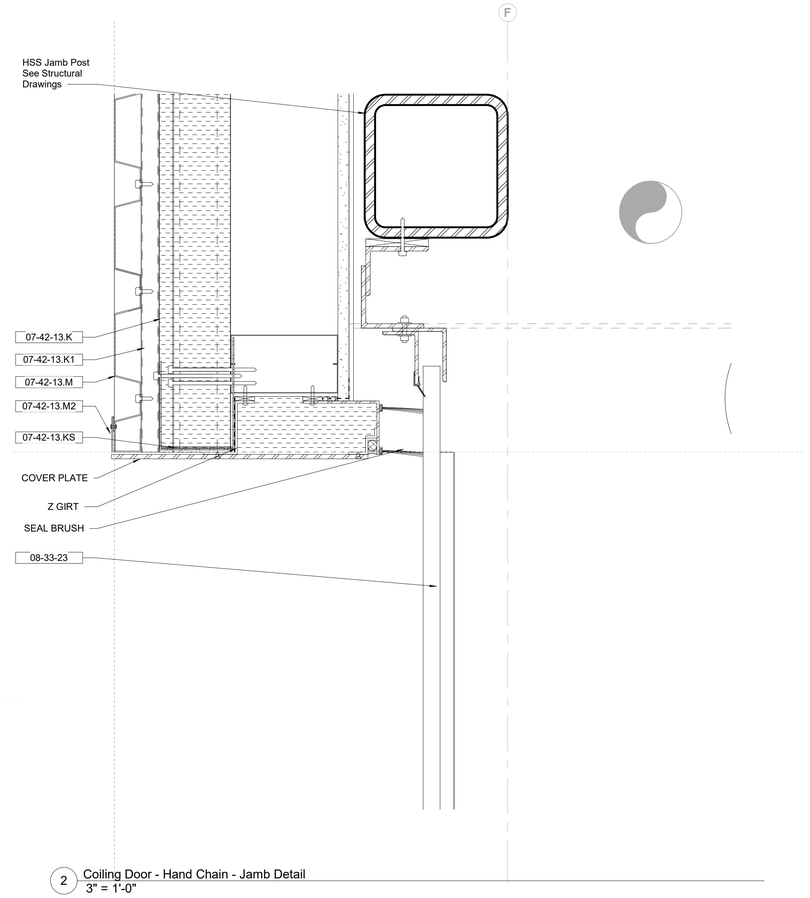

2 Coiling Door - Hand Chain - Jamb Detail
3" = 1'-0"

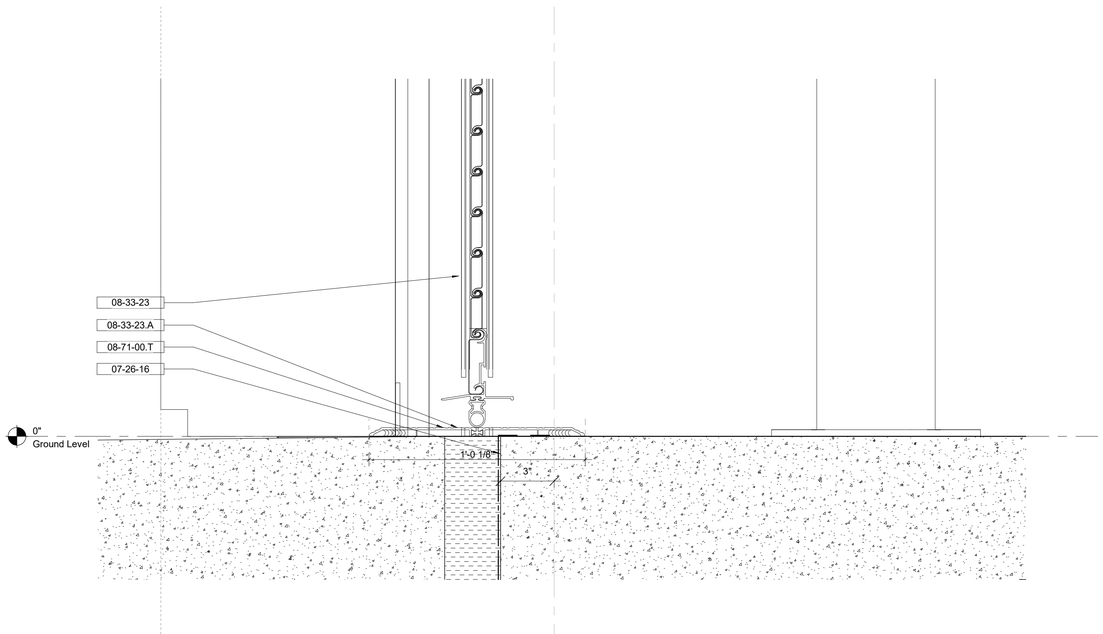

3 Coiling Door - Hand Chain - Sill Detail
3" = 1'-0"

Keynote Legend

Keynote	*Description*
07-26-16	Below-grade Vapor Retarder
07-27-00.A2	Self-Adhering Vapor-Impermeable Air Barrier
07-42-13.K	Insulated Metal Composite Panel
07-42-13.K1	Integrated Hat Channel
07-42-13.K2	Hat Channel
07-42-13.KS	Continuous Butyl Sealant
07-42-13.M	Corrugated Metal Cladding
07-42-13.M2	End Trim
07-42-13.S	Sheet Metal Flashing, Color-matched to Cladding
08-33-23	Overhead Coiling Door
08-33-23.A	Astragal Rubber Seal
08-71-00.T	Door Threshold, Thermally-broken

Owner
Storm King Art Center
1 Museum Road
New Windsor, NY 12553
+1 (845) 534-3115

Design Architect
heneghan peng architects
14-16 Lord Edward Street
Dublin, D02 YC63
+353 1 633 9000

Executive Architect
WXY Architecture + Urban Design
224 Centre Street, 5th Floor
New York, NY 10013
+1 (212) 219-1953

Landscape Architect
Gustafson Porter + Bowman
1 Cobham Mews
London, MW1 9SB
+44 020 7284 8950

Reed Hilderbrand LLC
33 Whitney Avenue, 3rd Floor
New Haven, CT 06510
+1 (617) 923-2422

Structural & Lighting
ARUP
77 Water Street
New York, NY 10005
+1 (212) 896-3000

MEPF & IT
BuroHappold
100 Broadway #23
New York, NY 10005
+1 (212) 616-0228

Civil
VHB
100 Great Oaks Blvd., Suite 118
Albany, NY 12203
+1 (518) 389-3606

AV & Acoustics
LSTN Consultants
76 Beaver Street, 2nd Floor
New York, NY 10005
+1 (347) 788-0810

Facade
Front Inc.
100 E. Broadway Street, #501
New York, NY 10002
+1 (212) 242-2220

Key Plan

Description	Date
Filing Set	06/17/22

Project

Storm King Art Center

C.F.M. Building

Seal

NOT FOR CONSTRUCTION

Drawing Title

Door Details - Exterior

Date	06/17/22
Scale	3" = 1'-0"
Drawing Number	A-C-435
Sheet Size	ARCH D

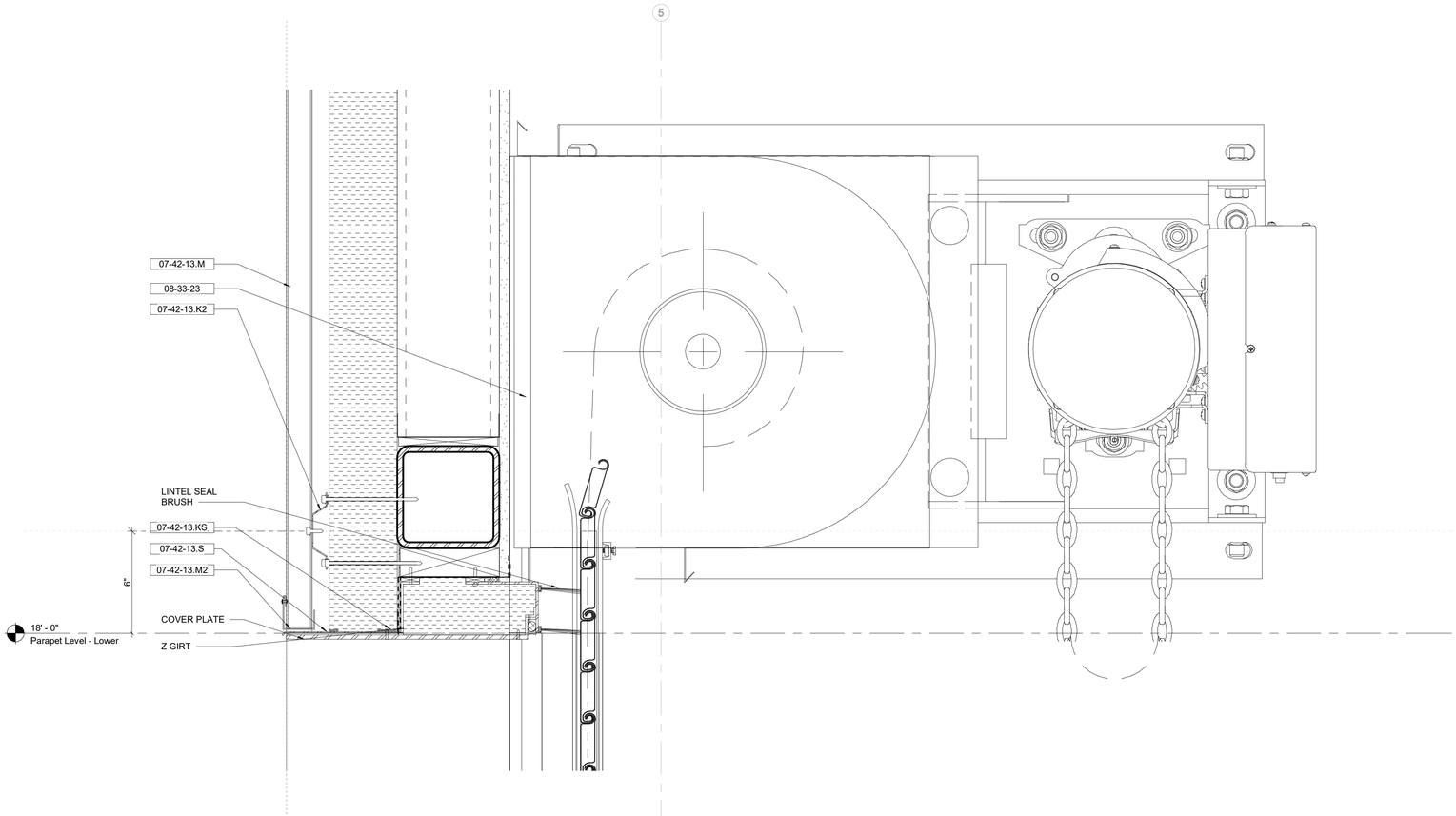

1 Coiling Door - Motor Operator - Head Detail
3" = 1'-0"

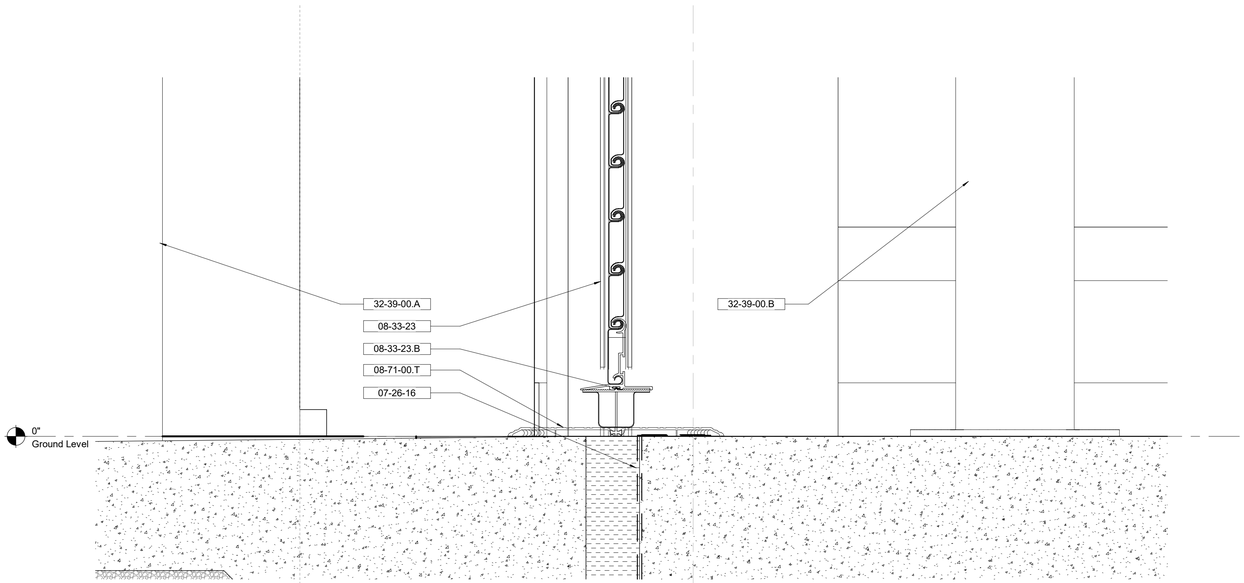

2 Coiling Door - Motor Operator - Sill Detail
3" = 1'-0"

Keynote Legend

Keynote	*Description*
07-26-16	Below-grade Vapor Retarder
07-42-13.K2	Hat Channel
07-42-13.KS	Continuous Butyl Sealant
07-42-13.M	Corrugated Metal Cladding
07-42-13.M2	End Trim
07-42-13.S	Sheet Metal Flashing, Color-matched to Cladding
08-33-23	Overhead Coiling Door
08-33-23.B	Sensing Edge
08-71-00.T	Door Threshold, Thermally-broken
32-39-00.A	Bollard - Fixed
32-39-00.B	Bollard - Fixed Base Plate

Owner
Storm King Art Center
1 Museum Road
New Windsor, NY 12553
+1 (845) 534-3115

Design Architect
heneghan peng architects
14-16 Lord Edward Street
Dublin, D02 YC63
+353 1 633 9000

Executive Architect
WXY Architecture + Urban Design
224 Centre Street, 5th Floor
New York, NY 10013
+1 (212) 219-1953

Landscape Architect
Gustafson Porter + Bowman
1 Cobham Mews
London, MW1 9SB
+44 020 7284 8950

Reed Hilderbrand LLC
33 Whitney Avenue, 3rd Floor
New Haven, CT 06510
+1 (617) 923-2422

Structural & Lighting
ARUP
77 Water Street
New York, NY 10005
+1 (212) 896-3000

MEPF & IT
BuroHappold
100 Broadway #23
New York, NY 10005
+1 (212) 616-0228

Civil
VHB
100 Great Oaks Blvd., Suite 118
Albany, NY 12203
+1 (518) 389-3606

AV & Acoustics
LSTN Consultants
76 Beaver Street, 2nd Floor
New York, NY 10005
+1 (347) 788-0810

Facade
Front Inc.
100 E. Broadway Street, #501
New York, NY 10002
+1 (212) 242-2220

Key Plan

Description	Date
Filing Set	06/17/22

Project

Storm King Art Center

C.F.M. Building

Seal

NOT FOR CONSTRUCTION

Drawing Title

Door Details - Exterior

Date	06/17/22
Scale	3" = 1'-0"
Drawing Number	A-C-436
Sheet Size	ARCH D

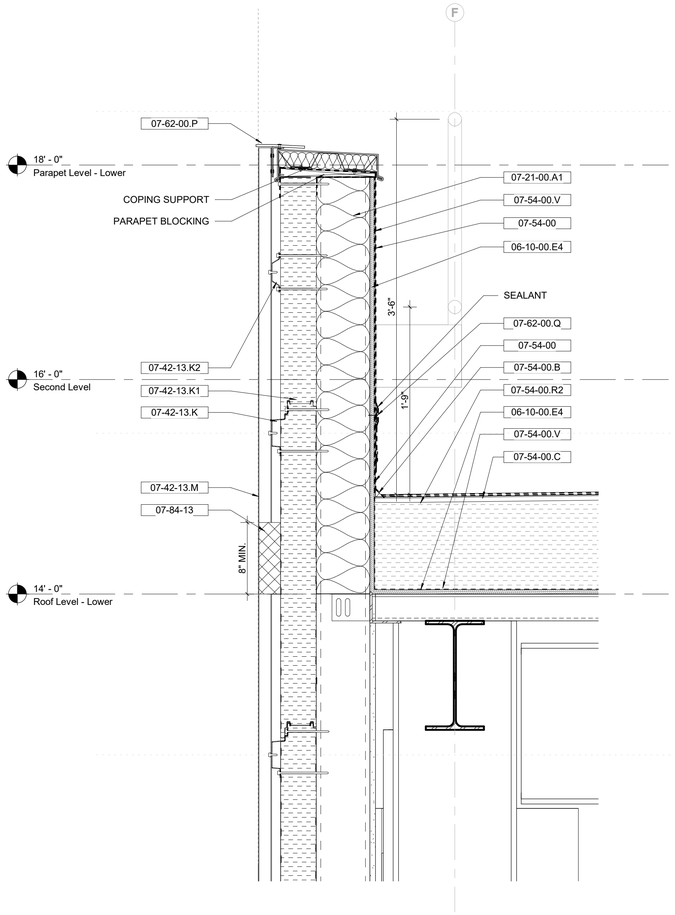

1 Parapet at Lower Roof Detail
1 1/2" = 1'-0"

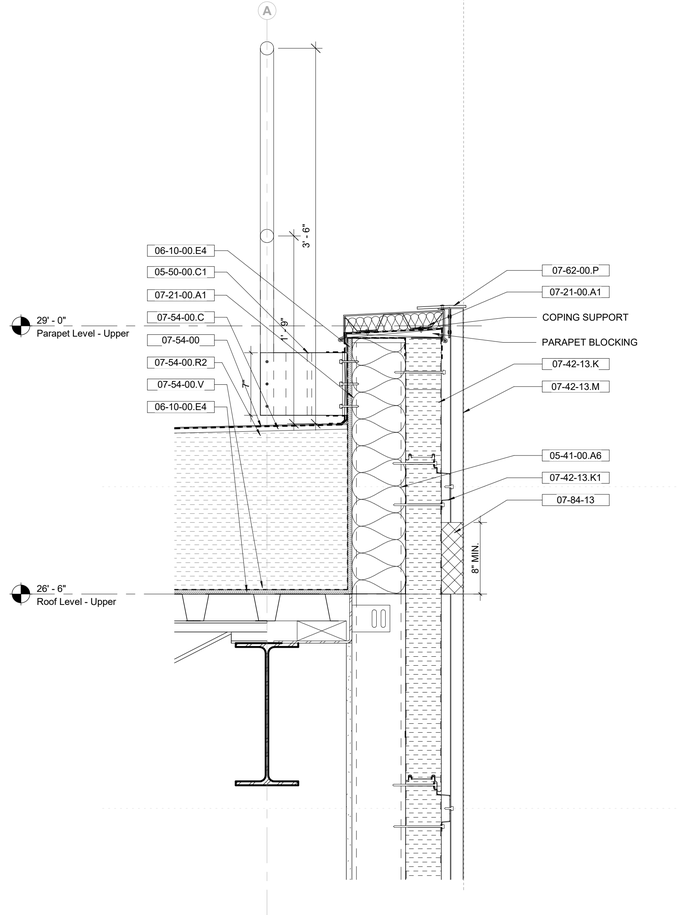

2 Parapet at Upper Roof Detail
1 1/2" = 1'-0"

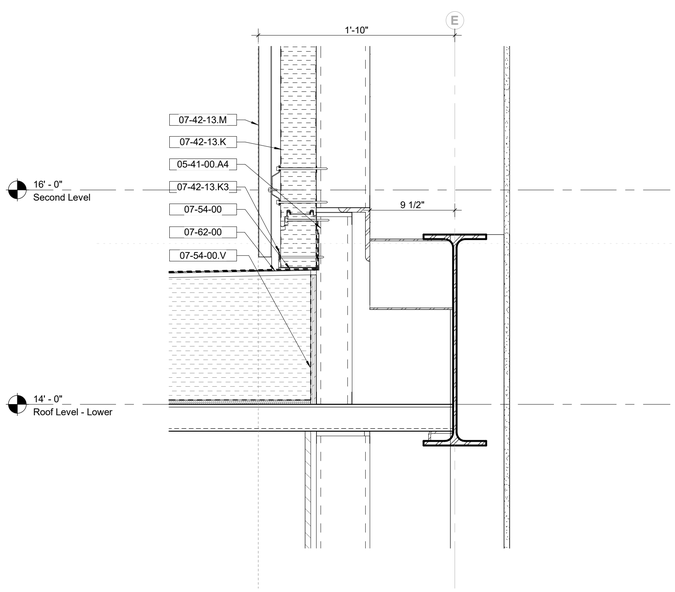

3 Lower Roof to Exterior Wall Connection
1 1/2" = 1'-0"

Keynote Legend

Keynote	*Description*
05-41-00.A4	4" Metal Stud
05-41-00.A6	6" Metal Stud
05-50-00.C1	Roof Guard, Parapet-Mounted
06-10-00.E4	1/2" Exterior Grade Plywood
07-21-00.A1	Mineral Wool Insulation, Exterior
07-42-13.K	Insulated Metal Composite Panel
07-42-13.K1	Integrated Hat Channel
07-42-13.K2	Hat Channel
07-42-13.K3	Base Trim
07-42-13.M	Corrugated Metal Cladding
07-54-00	Thermoplastic Membrane Roofing (TPO)
07-54-00.B	Cant Strip
07-54-00.C	Cover Board
07-54-00.R2	Polyiso Insulation, Tapered to Drain
07-54-00.V	Vapor Retarder
07-62-00	Sheet Metal Flashing
07-62-00.P	Parapet Coping
07-62-00.Q	Parapet & Roofing Curb Termination Bar
07-84-13	Firestopping

Owner
Storm King Art Center
1 Museum Road
New Windsor, NY 12553
+1 (845) 534-3115

Design Architect
heneghan peng architects
14-16 Lord Edward Street
Dublin, D02 YC63
+353 1 633 9000

Executive Architect
WXY Architecture + Urban Design
224 Centre Street, 5th Floor
New York, NY 10013
+1 (212) 219-1953

Landscape Architect
Gustafson Porter + Bowman
1 Cobham Mews
London, MW1 9SB
+44 020 7284 8950

Reed Hilderbrand LLC
33 Whitney Avenue, 3rd Floor
New Haven, CT 06510
+1 (617) 923-2422

Structural & Lighting
ARUP
77 Water Street
New York, NY 10005
+1 (212) 896-3000

MEPF & IT
BuroHappold
100 Broadway #23
New York, NY 10005
+1 (212) 616-0228

Civil
VHB
100 Great Oaks Blvd., Suite 118
Albany, NY 12203
+1 (518) 389-3606

AV & Acoustics
LSTN Consultants
76 Beaver Street, 2nd Floor
New York, NY 10005
+1 (347) 788-0810

Facade
Front Inc.
100 E. Broadway Street, #501
New York, NY 10002
+1 (212) 242-2220

Key Plan

Description	Date
Filing Set	06/17/22

Project

Storm King Art Center

C.F.M. Building

Seal

NOT FOR CONSTRUCTION

Drawing Title

Roof Details

Date	06/17/22
Scale	1 1/2" = 1'-0"
Drawing Number	A-C-441
Sheet Size	ARCH D

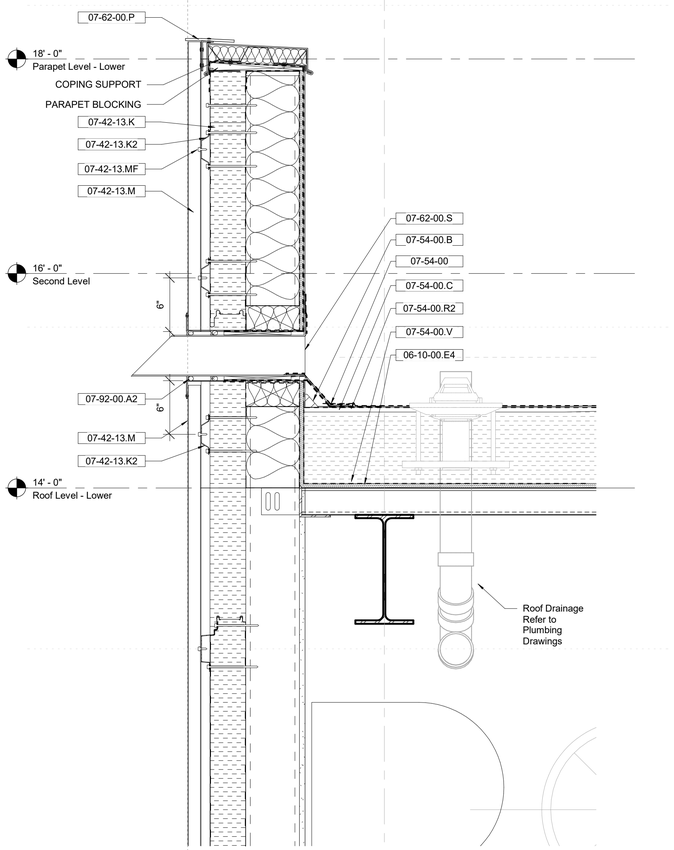

1 Section - Parapet Scupper & Drain at Lower Roof Detail
1 1/2" = 1'-0"

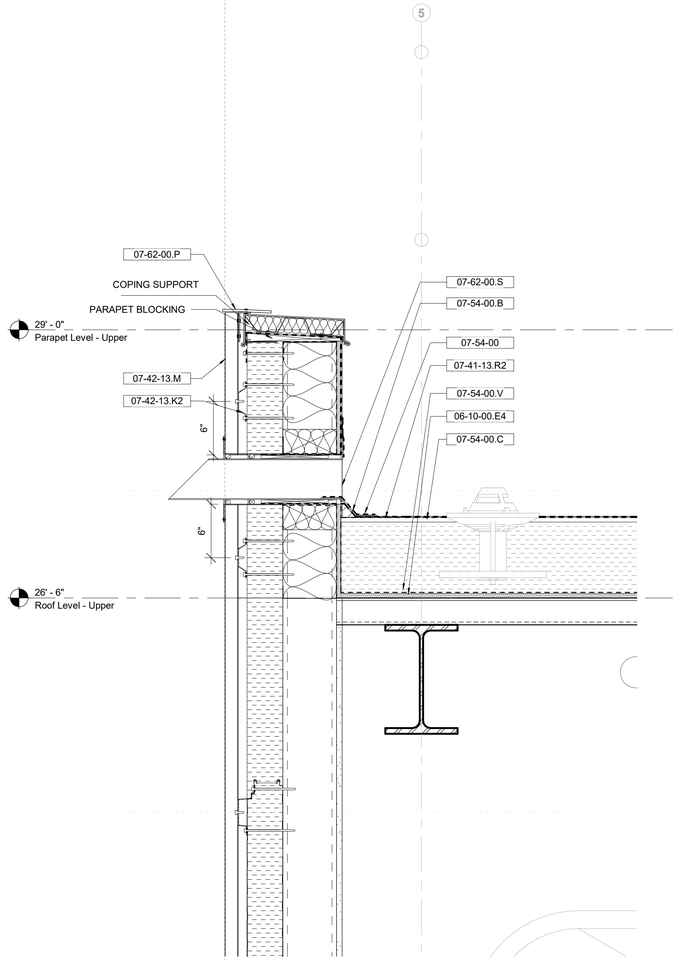

2 Section - Parapet Scupper & Drain at Upper Roof Detail
1 1/2" = 1'-0"

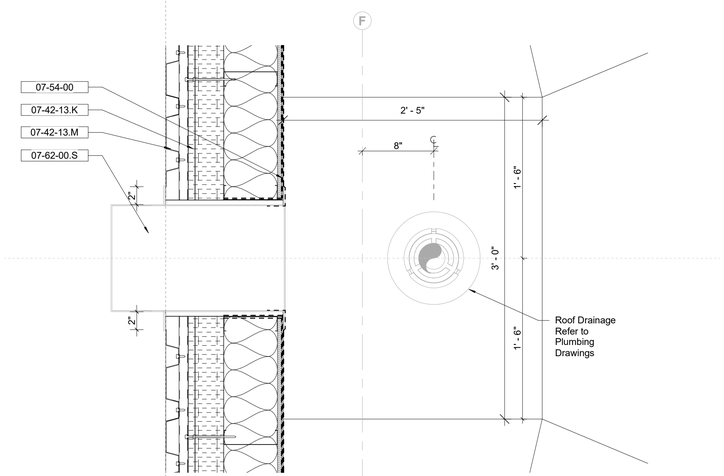

3 Plan - Parapet Scupper & Drain at Lower Roof Detail
1 1/2" = 1'-0"

Keynote Legend

Keynote	*Description*
06-10-00.E4	1/2" Exterior Grade Plywood
07-41-13.R2	Polyiso Insulation, Tapered to Drain
07-42-13.K	Insulated Metal Composite Panel
07-42-13.K2	Hat Channel
07-42-13.M	Corrugated Metal Cladding
07-42-13.MF	Exposed Fastener
07-54-00	Thermoplastic Membrane Roofing (TPO)
07-54-00.B	Cant Strip
07-54-00.C	Cover Board
07-54-00.R2	Polyiso Insulation, Tapered to Drain
07-54-00.V	Vapor Retarder
07-62-00.P	Parapet Coping
07-62-00.S	Through-wall Scupper
07-92-00.A2	Joint Sealant w/ Backer Rod

Owner
Storm King Art Center
1 Museum Road
New Windsor, NY 12553
+1 (845) 534-3115

Design Architect
heneghan peng architects
14-16 Lord Edward Street
Dublin, D02 YC63
+353 1 633 9000

Executive Architect
WXY Architecture + Urban Design
224 Centre Street, 5th Floor
New York, NY 10013
+1 (212) 219-1953

Landscape Architect
Gustafson Porter + Bowman
1 Cobham Mews
London, MW1 9SB
+44 020 7284 8950

Reed Hilderbrand LLC
33 Whitney Avenue, 3rd Floor
New Haven, CT 06510
+1 (617) 923-2422

Structural & Lighting
ARUP
77 Water Street
New York, NY 10005
+1 (212) 896-3000

MEPF & IT
BuroHappold
100 Broadway #23
New York, NY 10005
+1 (212) 616-0228

Civil
VHB
100 Great Oaks Blvd., Suite 118
Albany, NY 12203
+1 (518) 389-3606

AV & Acoustics
LSTN Consultants
76 Beaver Street, 2nd Floor
New York, NY 10005
+1 (347) 788-0810

Facade
Front Inc.
100 E. Broadway Street, #501
New York, NY 10002
+1 (212) 242-2220

Key Plan

Description	Date
Filing Set	06/17/22

Project

Storm King Art Center

C.F.M. Building

Seal

NOT FOR CONSTRUCTION

Drawing Title

Roof Details

Date	06/17/22
Scale	1 1/2" = 1'-0"
Drawing Number	A-C-442
Sheet Size	ARCH D

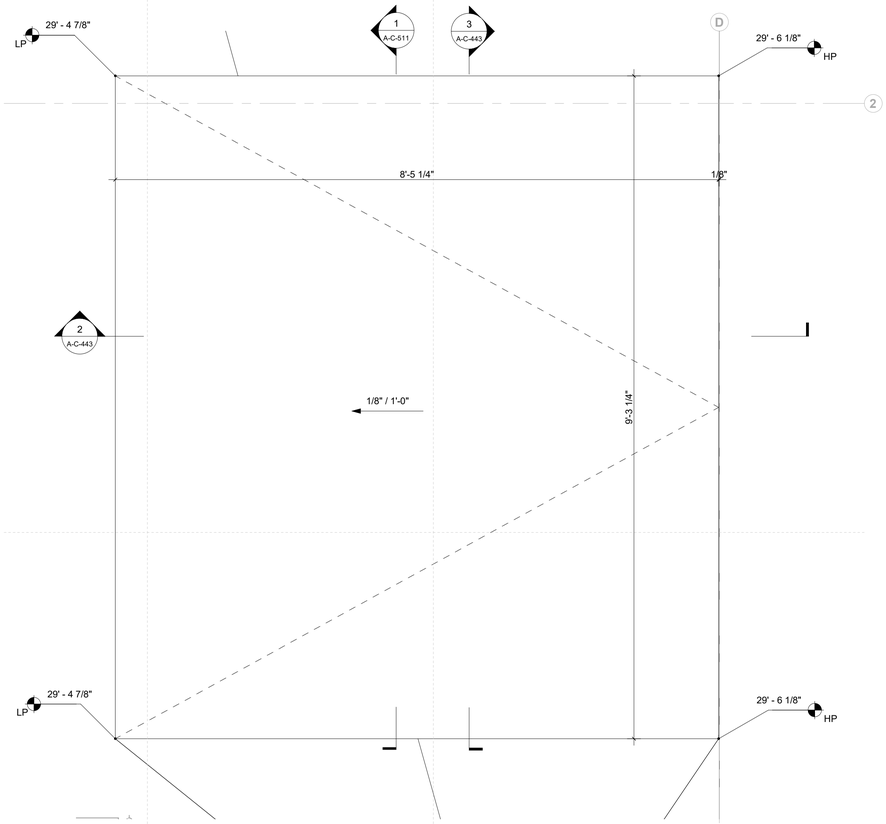

1 LU/LA Roof Bump-out - Plan Detail
1" = 1'-0"

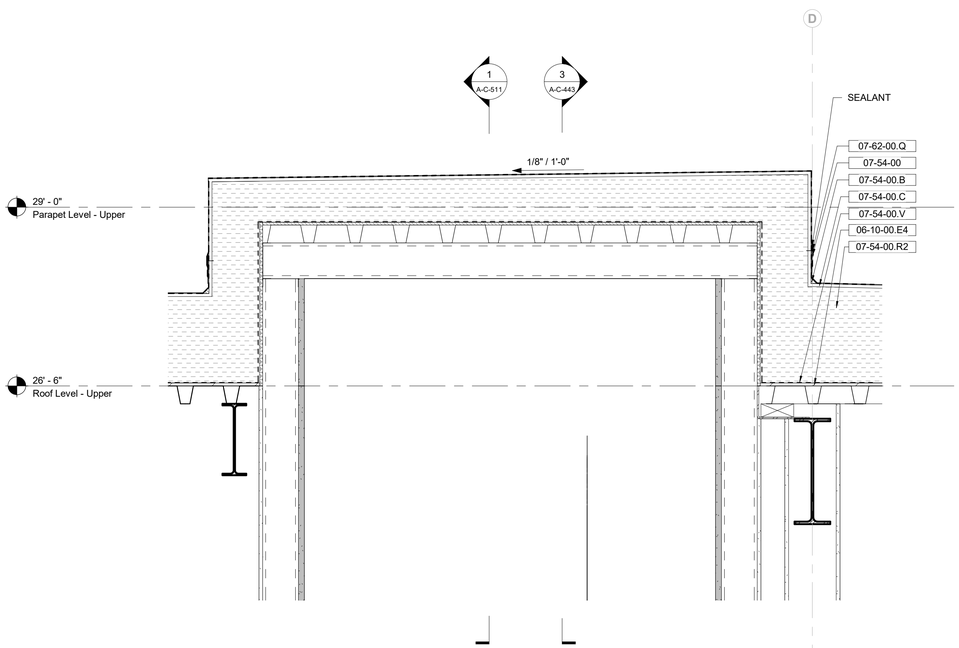

2 LU/LA Roof Bump-out - Detail Section A
1" = 1'-0"

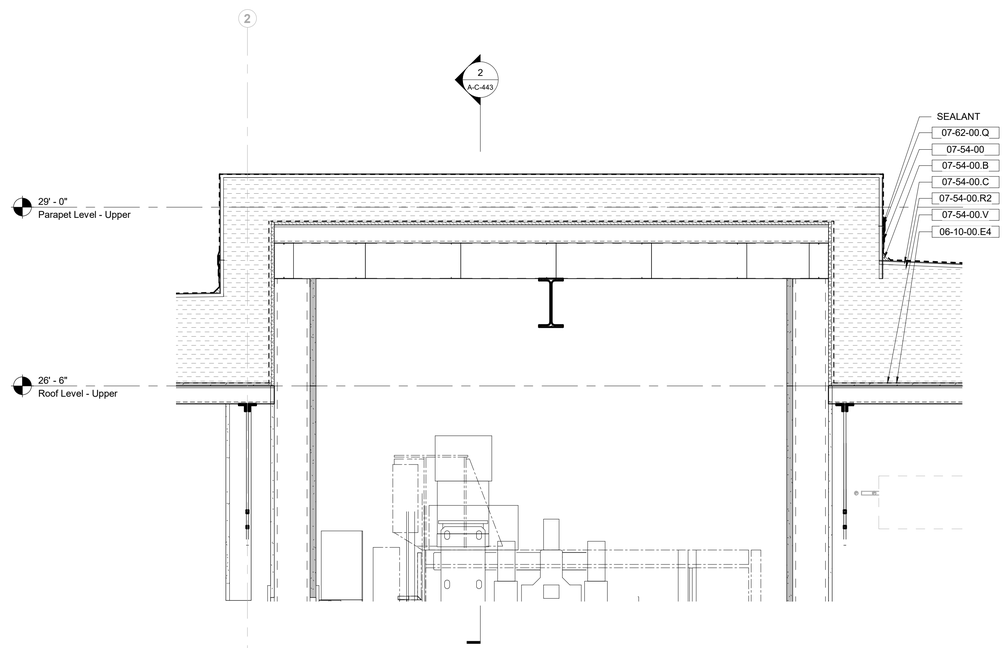

3 LU/LA Roof Bump-out - Detail Section B
1" = 1'-0"

Keynote Legend

Keynote	*Description*
06-10-00.E4	1/2" Exterior Grade Plywood
07-54-00	Thermoplastic Membrane Roofing (TPO)
07-54-00.B	Cant Strip
07-54-00.C	Cover Board
07-54-00.R2	Polyiso Insulation, Tapered to Drain
07-54-00.V	Vapor Retarder
07-62-00.Q	Parapet & Roofing Curb Termination Bar

Owner
Storm King Art Center
1 Museum Road
New Windsor, NY 12553
+1 (845) 534-3115

Design Architect
heneghan peng architects
14-16 Lord Edward Street
Dublin, D02 YC63
+353 1 633 9000

Executive Architect
WXY Architecture + Urban Design
224 Centre Street, 5th Floor
New York, NY 10013
+1 (212) 219-1953

Landscape Architect
Gustafson Porter + Bowman
1 Cobham Mews
London, MW1 9SB
+44 020 7284 8950

Reed Hilderbrand LLC
33 Whitney Avenue, 3rd Floor
New Haven, CT 06510
+1 (617) 923-2422

Structural & Lighting
ARUP
77 Water Street
New York, NY 10005
+1 (212) 896-3000

MEPF & IT
BuroHappold
100 Broadway #23
New York, NY 10005
+1 (212) 616-0228

Civil
VHB
100 Great Oaks Blvd., Suite 118
Albany, NY 12203
+1 (518) 389-3606

AV & Acoustics
LSTN Consultants
76 Beaver Street, 2nd Floor
New York, NY 10005
+1 (347) 788-0810

Facade
Front Inc.
100 E. Broadway Street, #501
New York, NY 10002
+1 (212) 242-2220

Key Plan

Description	Date
Filing Set	06/17/22

Project

Storm King Art Center
C.F.M. Building

Seal

NOT FOR CONSTRUCTION

Drawing Title

Roof Details

Date	06/17/22
Scale	1" = 1'-0"
Drawing Number	A-C-443
Sheet Size	ARCH D

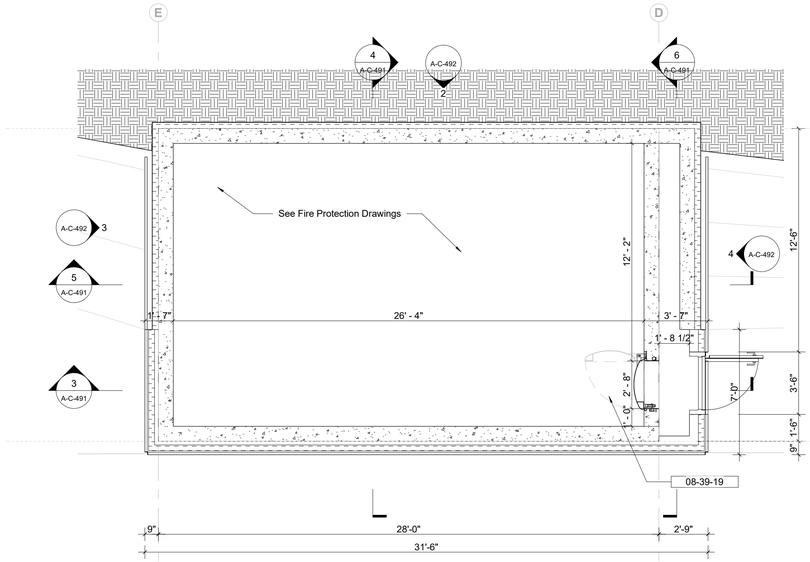

1 Fire Protection Storage Tank - Ground Level
1/4" = 1'-0"

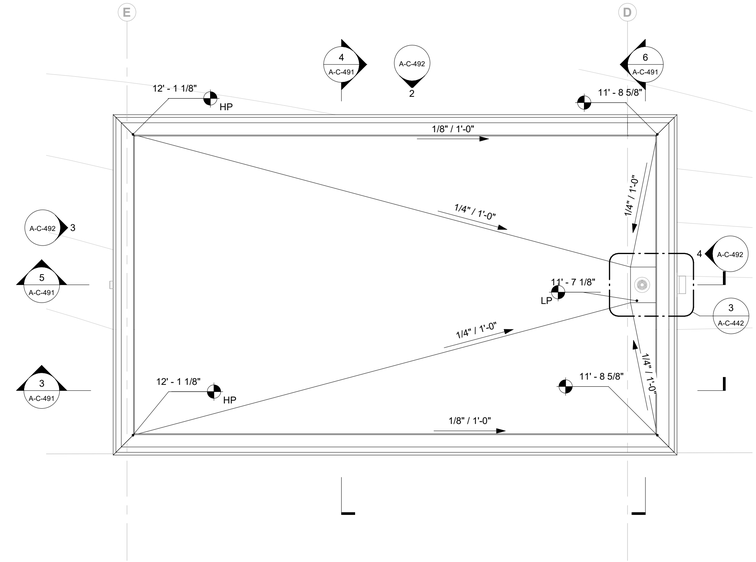

2 Fire Protection Storage Tank - Roof Level
1/4" = 1'-0"

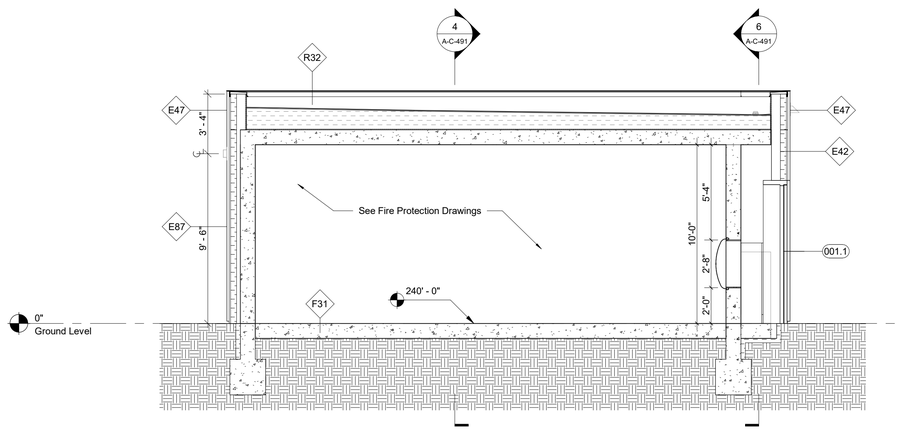

3 Fire Protection Storage Tank - Longitudinal Section A
1/4" = 1'-0"

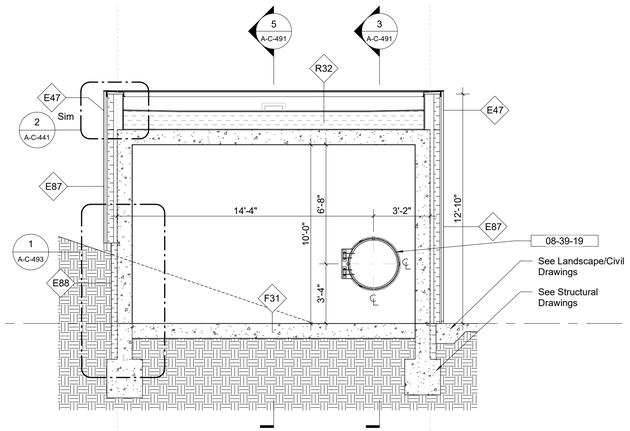

4 Fire Protection Storage Tank - Transverse Section A
1/4" = 1'-0"

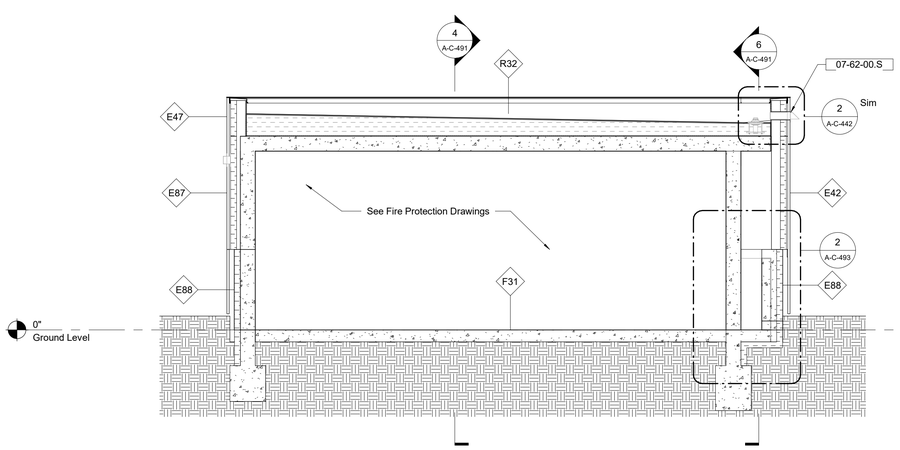

5 Fire Protection Storage Tank - Longitudinal Section B
1/4" = 1'-0"

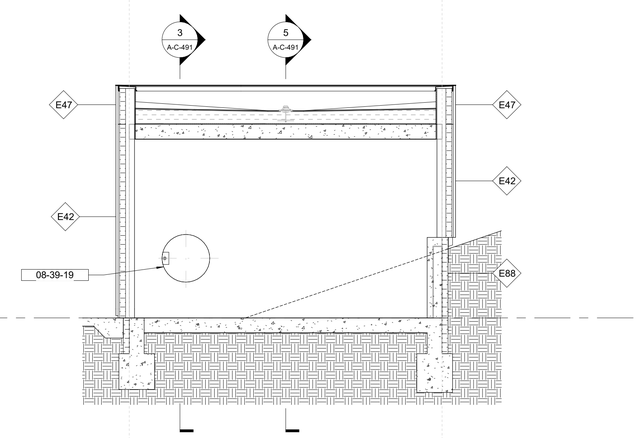

6 Fire Protection Storage Tank - Transverse Section B
1/4" = 1'-0"

Keynote Legend

Keynote	*Description*
07-62-00.S	Through-wall Scupper
08-39-19	Watertight Tank Access Hatch

Owner
Storm King Art Center
1 Museum Road
New Windsor, NY 12553
+1 (845) 534-3115

Design Architect
heneghan peng architects
14-16 Lord Edward Street
Dublin, D02 YC63
+353 1 633 9000

Executive Architect
WXY Architecture + Urban Design
224 Centre Street, 5th Floor
New York, NY 10013
+1 (212) 219-1953

Landscape Architect
Gustafson Porter + Bowman
1 Cobham Mews
London, MW1 9SB
+44 020 7284 8950

Reed Hilderbrand LLC
33 Whitney Avenue, 3rd Floor
New Haven, CT 06510
+1 (617) 923-2422

Structural & Lighting
ARUP
77 Water Street
New York, NY 10005
+1 (212) 896-3000

MEPF & IT
BuroHappold
100 Broadway #23
New York, NY 10005
+1 (212) 616-0228

Civil
VHB
100 Great Oaks Blvd., Suite 118
Albany, NY 12203
+1 (518) 389-3606

AV & Acoustics
LSTN Consultants
76 Beaver Street, 2nd Floor
New York, NY 10005
+1 (347) 788-0810

Facade
Front Inc.
100 E. Broadway Street, #501
New York, NY 10002
+1 (212) 242-2220

Key Plan

N

Description	Date
Filing Set	06/17/22

Project

Storm King Art Center

C.F.M. Building

Seal

NOT FOR CONSTRUCTION

Drawing Title

Fire Protection Storage Tank - Plans & Sections

Date	06/17/22
Scale	1/4" = 1'-0"
Drawing Number	A-C-491
Sheet Size	ARCH D

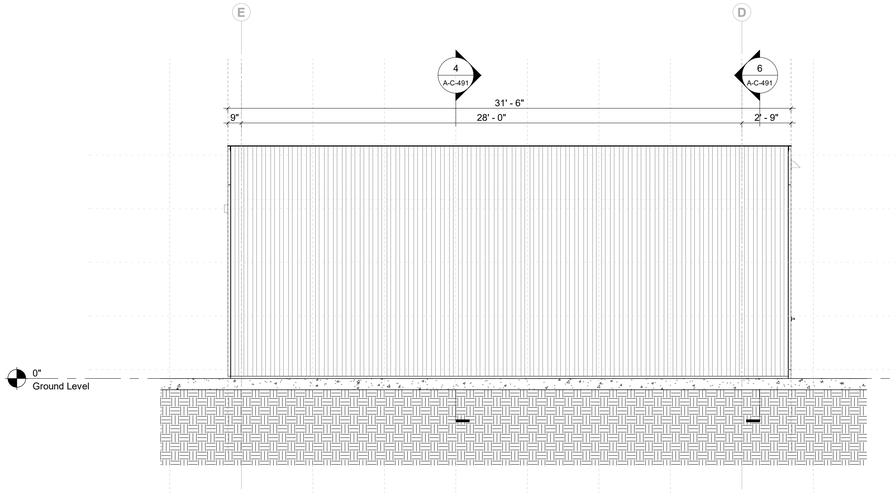

1 Fire Protection Storage Tank - South Elevation
1/4" = 1'-0"

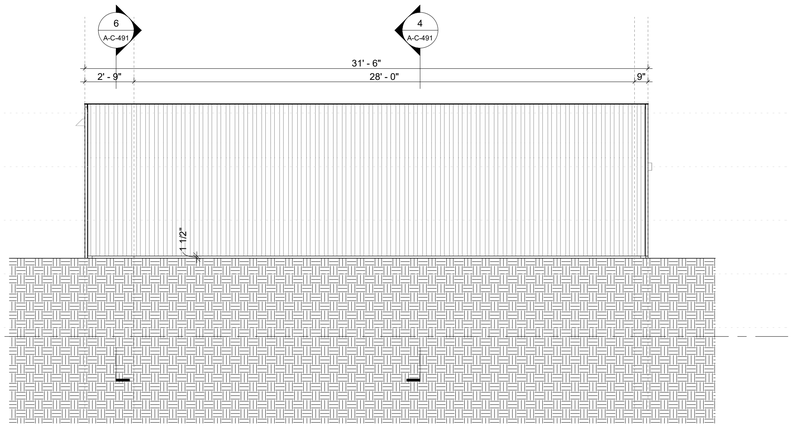

2 Fire Protection Storage Tank - North Elevation
1/4" = 1'-0"

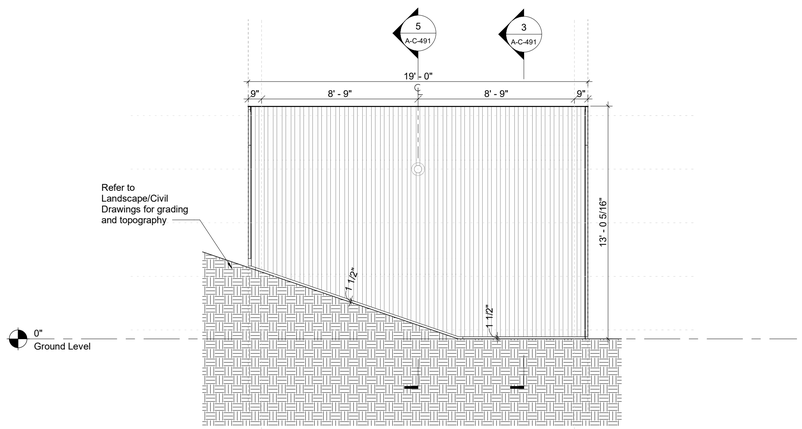

3 Fire Protection Storage Tank - West Elevation
1/4" = 1'-0"

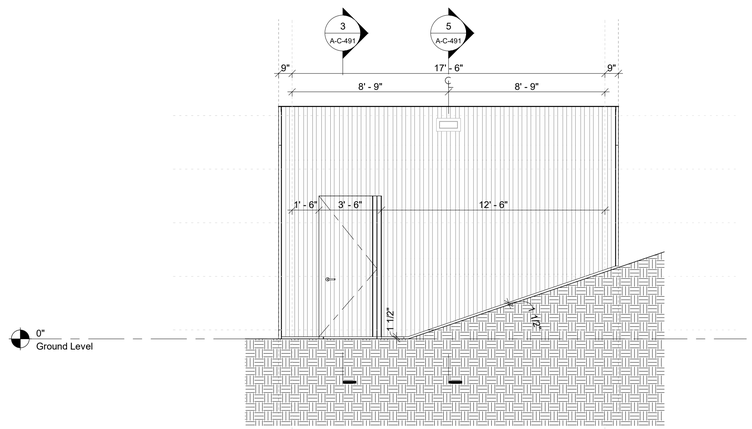

4 Fire Protection Storage Tank - East Elevation
1/4" = 1'-0"

Owner
Storm King Art Center
1 Museum Road
New Windsor, NY 12553
+1 (845) 534-3115

Design Architect
heneghan peng architects
14-16 Lord Edward Street
Dublin, D02 YC63
+353 1 633 9000

Executive Architect
WXY Architecture + Urban Design
224 Centre Street, 5th Floor
New York, NY 10013
+1 (212) 219-1953

Landscape Architect
Gustafson Porter + Bowman
1 Cobham Mews
London, MW1 9SB
+44 020 7284 8950

Reed Hilderbrand LLC
33 Whitney Avenue, 3rd Floor
New Haven, CT 06510
+1 (617) 923-2422

Structural & Lighting
ARUP
77 Water Street
New York, NY 10005
+1 (212) 896-3000

MEPF & IT
BuroHappold
100 Broadway #23
New York, NY 10005
+1 (212) 616-0228

Civil
VHB
100 Great Oaks Blvd., Suite 118
Albany, NY 12203
+1 (518) 389-3606

AV & Acoustics
LSTN Consultants
76 Beaver Street, 2nd Floor
New York, NY 10005
+1 (347) 788-0810

Facade
Front Inc.
100 E. Broadway Street, #501
New York, NY 10002
+1 (212) 242-2220

Key Plan

Description	Date
Filing Set	06/17/22

Project

Storm King Art Center

C.F.M. Building

Seal

NOT FOR CONSTRUCTION

Drawing Title

Fire Protection Storage Tank - Elevations

Date	06/17/22
Scale	1/4" = 1'-0"
Drawing Number	A-C-492
Sheet Size	ARCH D

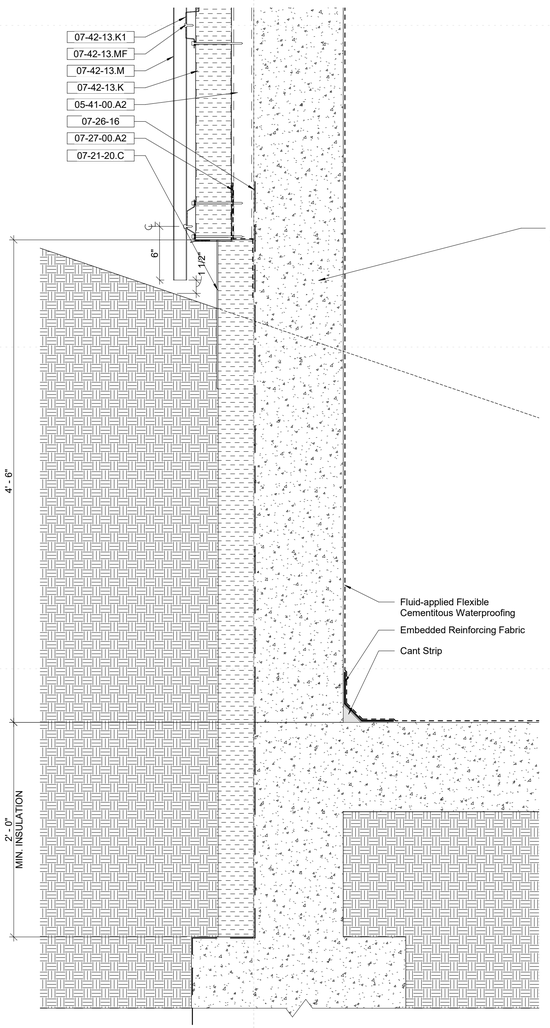

1 Section - Parapet - Fire Protection Storage Tank Foundation Detail A
1 1/2" = 1'-0"

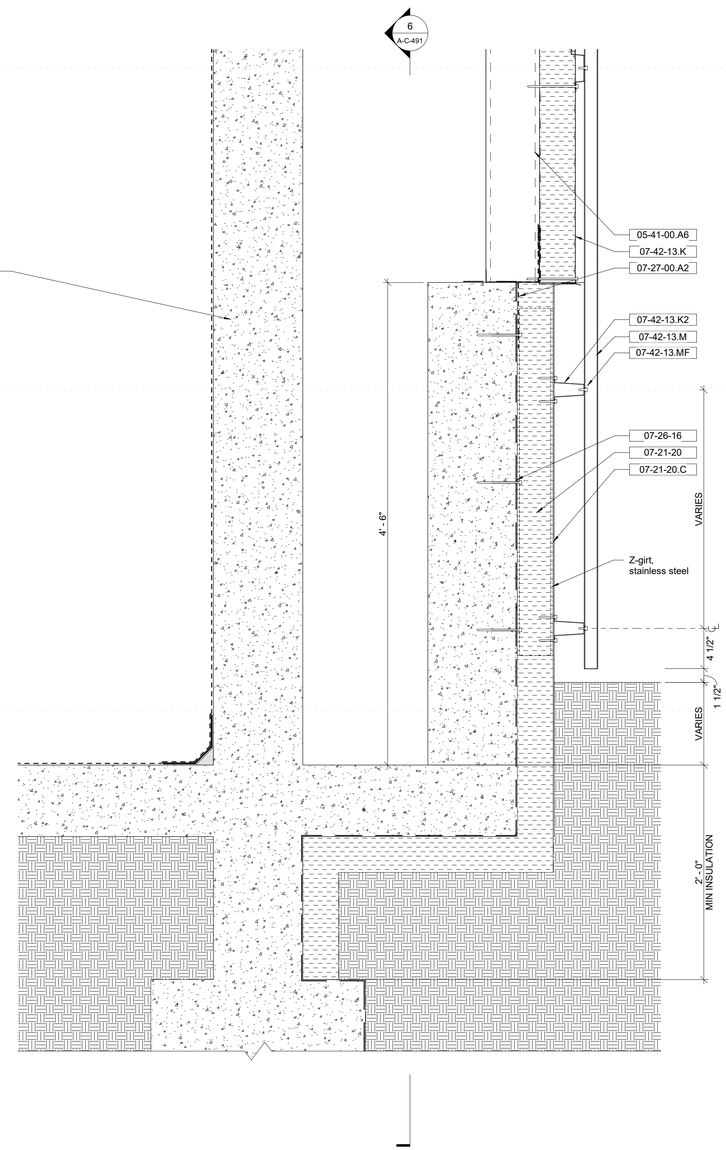

2 Section - Parapet - Fire Protection Storage Tank Foundation Detail B
1 1/2" = 1'-0"

Keynote Legend

Keynote	*Description*
05-41-00.A2	2 1/2" Metal Stud
05-41-00.A6	6" Metal Stud
07-21-20	XPS Insulation
07-21-20.C	Stainless Steel Cover Plate
07-26-16	Below-grade Vapor Retarder
07-27-00.A2	Self-Adhering Vapor-Impermeable Air Barrier
07-42-13.K	Insulated Metal Composite Panel
07-42-13.K1	Integrated Hat Channel
07-42-13.K2	Hat Channel
07-42-13.M	Corrugated Metal Cladding
07-42-13.MF	Exposed Fastener

Owner
Storm King Art Center
1 Museum Road
New Windsor, NY 12553
+1 (845) 534-3115

Design Architect
heneghan peng architects
14-16 Lord Edward Street
Dublin, D02 YC63
+353 1 633 9000

Executive Architect
WXY Architecture + Urban Design
224 Centre Street, 5th Floor
New York, NY 10013
+1 (212) 219-1953

Landscape Architect
Gustafson Porter + Bowman
1 Cobham Mews
London, MW1 9SB
+44 020 7284 8950

Reed Hilderbrand LLC
33 Whitney Avenue, 3rd Floor
New Haven, CT 06510
+1 (617) 923-2422

Structural & Lighting
ARUP
77 Water Street
New York, NY 10005
+1 (212) 896-3000

MEPF & IT
BuroHappold
100 Broadway #23
New York, NY 10005
+1 (212) 616-0228

Civil
VHB
100 Great Oaks Blvd., Suite 118
Albany, NY 12203
+1 (518) 389-3606

AV & Acoustics
LSTN Consultants
76 Beaver Street, 2nd Floor
New York, NY 10005
+1 (347) 788-0810

Facade
Front Inc.
100 E. Broadway Street, #501
New York, NY 10002
+1 (212) 242-2220

Key Plan

Description	Date
Filing Set	06/17/22

Project

Storm King Art Center

C.F.M. Building

Seal

NOT FOR CONSTRUCTION

Drawing Title

Fire Protection Storage Tank - Details

Date	06/17/22
Scale	1 1/2" = 1'-0"
Drawing Number	A-C-493
Sheet Size	ARCH D

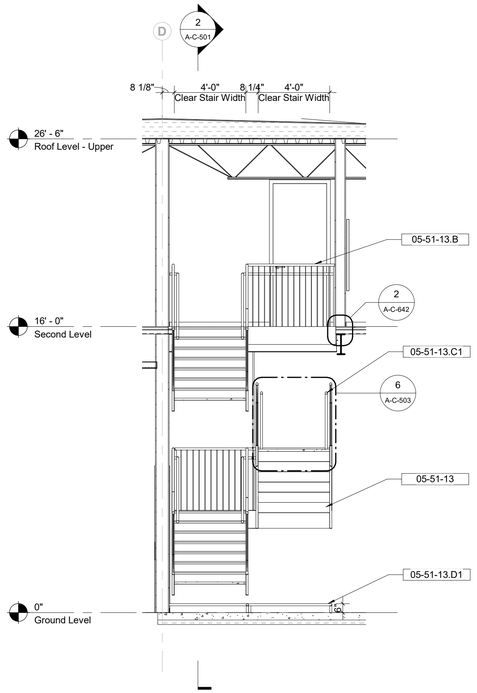

3 Stair 01 Transverse Section
1/4" = 1'-0"

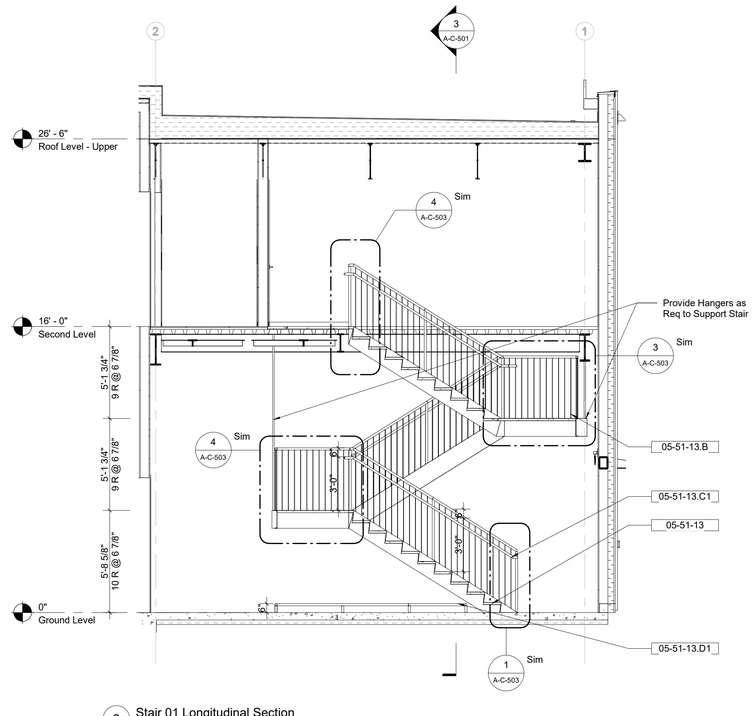

2 Stair 01 Longitudinal Section
1/4" = 1'-0"

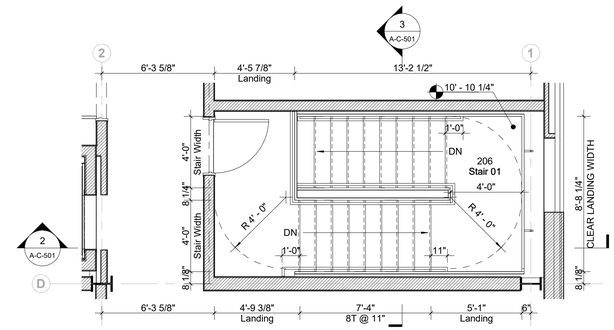

5 Stair 01 Plan - Second Level
1/4" = 1'-0"

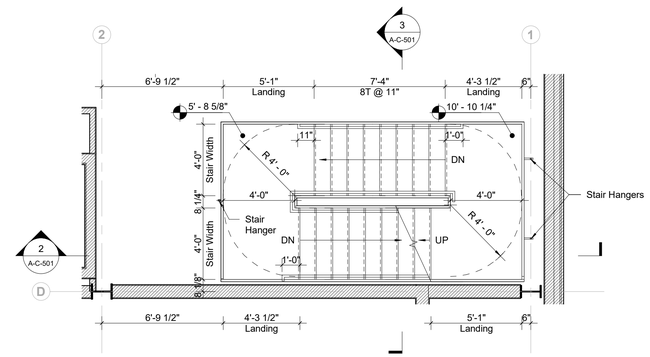

4 Stair 01 Plan - Landing Level
1/4" = 1'-0"

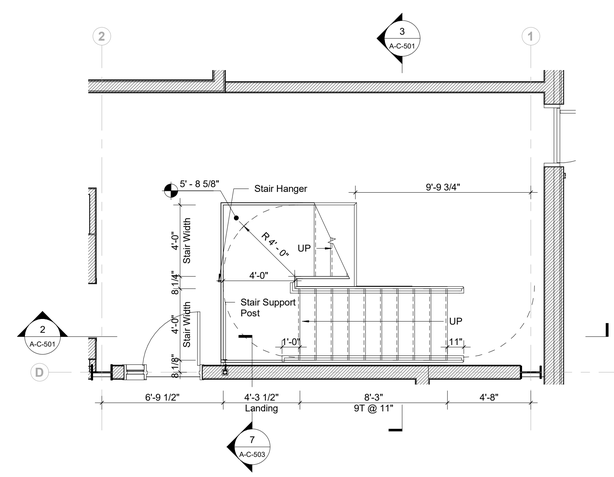

1 Stair 01 Plan - Ground Level
1/4" = 1'-0"

Keynote Legend

Keynote	*Description*
05-51-13	Metal Pan Stair
05-51-13.B	Steel Guardrail (Color to Match Primary Steel)
05-51-13.C1	1 1/2" SS Handrail
05-51-13.D1	SS Cane Rail

Owner
Storm King Art Center
1 Museum Road
New Windsor, NY 12553
+1 (845) 534-3115

Design Architect
heneghan peng architects
14-16 Lord Edward Street
Dublin, D02 YC63
+353 1 633 9000

Executive Architect
WXY Architecture + Urban Design
224 Centre Street, 5th Floor
New York, NY 10013
+1 (212) 219-1953

Landscape Architect
Gustafson Porter + Bowman
1 Cobham Mews
London, MW1 9SB
+44 020 7284 8950

Reed Hilderbrand LLC
33 Whitney Avenue, 3rd Floor
New Haven, CT 06510
+1 (617) 923-2422

Structural & Lighting
ARUP
77 Water Street
New York, NY 10005
+1 (212) 896-3000

MEPF & IT
BuroHappold
100 Broadway #23
New York, NY 10005
+1 (212) 616-0228

Civil
VHB
100 Great Oaks Blvd., Suite 118
Albany, NY 12203
+1 (518) 389-3606

AV & Acoustics
LSTN Consultants
76 Beaver Street, 2nd Floor
New York, NY 10005
+1 (347) 788-0810

Facade
Front Inc.
100 E. Broadway Street, #501
New York, NY 10002
+1 (212) 242-2220

Key Plan

Description	Date
Filing Set	06/17/22

Project

Storm King Art Center

C.F.M. Building

Seal

NOT FOR CONSTRUCTION

Drawing Title

Stair 01 - Plans & Sections

Date	06/17/22
Scale	1/4" = 1'-0"
Drawing Number	A-C-501
Sheet Size	ARCH D

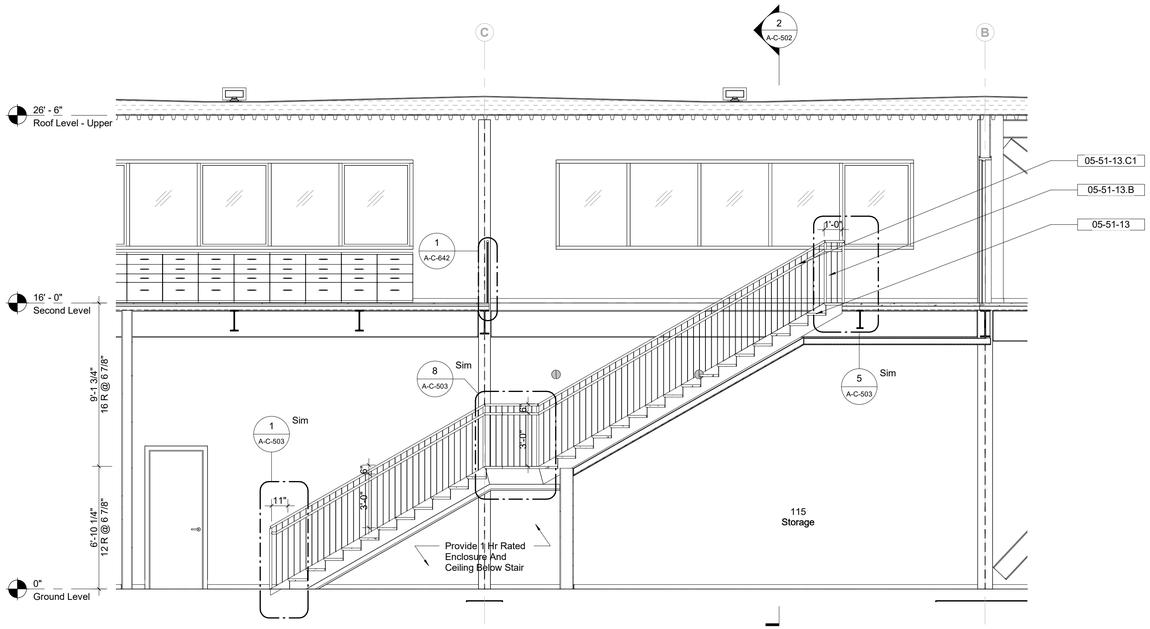

1 Stair 02 - Section A
1/4" = 1'-0"

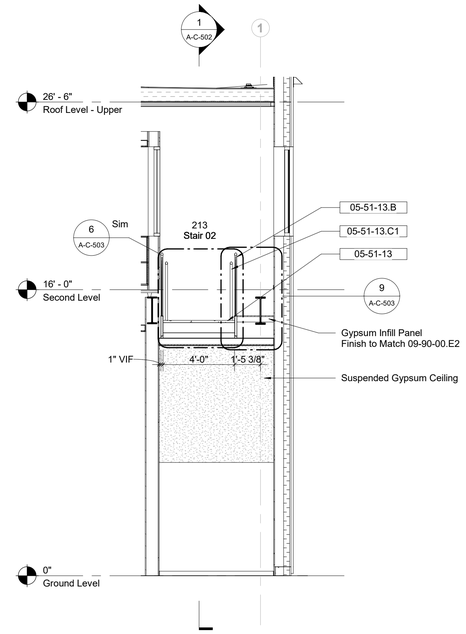

2 Stair 02 - Section B
1/4" = 1'-0"

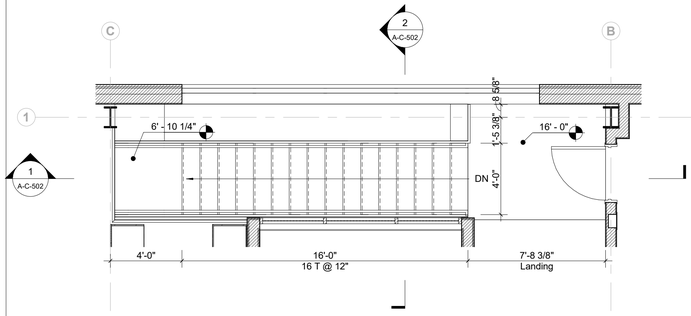

3 Stair 02 Plan - Second Level
1/4" = 1'-0"

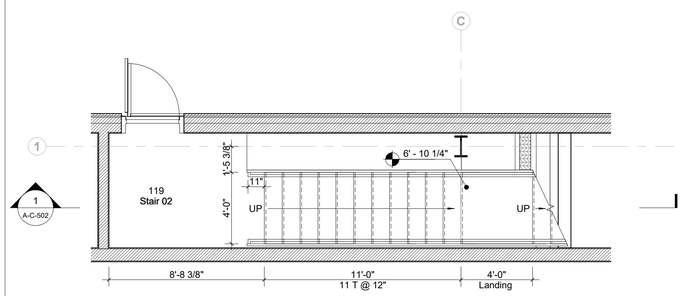

4 Stair 02 Plan - Ground Level
1/4" = 1'-0"

Keynote Legend

Keynote	*Description*
05-51-13	Metal Pan Stair
05-51-13.B	Steel Guardrail (Color to Match Primary Steel)
05-51-13.C1	1 1/2" SS Handrail

Owner
Storm King Art Center
1 Museum Road
New Windsor, NY 12553
+1 (845) 534-3115

Design Architect
heneghan peng architects
14-16 Lord Edward Street
Dublin, D02 YC63
+353 1 633 9000

Executive Architect
WXY Architecture + Urban Design
224 Centre Street, 5th Floor
New York, NY 10013
+1 (212) 219-1953

Landscape Architect
Gustafson Porter + Bowman
1 Cobham Mews
London, MW1 9SB
+44 020 7284 8950

Reed Hilderbrand LLC
33 Whitney Avenue, 3rd Floor
New Haven, CT 06510
+1 (617) 923-2422

Structural & Lighting
ARUP
77 Water Street
New York, NY 10005
+1 (212) 896-3000

MEPF & IT
BuroHappold
100 Broadway #23
New York, NY 10005
+1 (212) 616-0228

Civil
VHB
100 Great Oaks Blvd., Suite 118
Albany, NY 12203
+1 (518) 389-3606

AV & Acoustics
LSTN Consultants
76 Beaver Street, 2nd Floor
New York, NY 10005
+1 (347) 788-0810

Facade
Front Inc.
100 E. Broadway Street, #501
New York, NY 10002
+1 (212) 242-2220

Key Plan

Description	Date
Filing Set	06/17/22

Project

Storm King Art Center

C.F.M. Building

Seal

NOT FOR CONSTRUCTION

Drawing Title

Stair 02 - Plans & Sections

Date	06/17/22
Scale	1/4" = 1'-0"
Drawing Number	A-C-502
Sheet Size	ARCH D

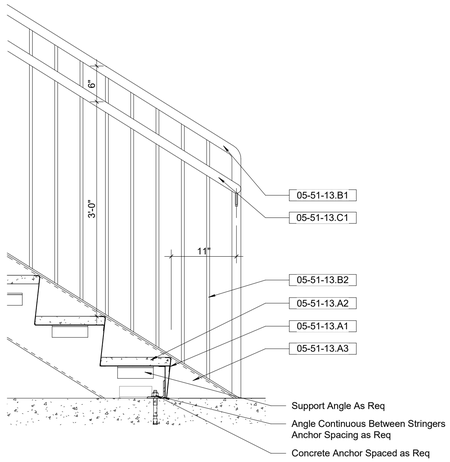

1 Stair Detail - Typ Bottom Connection @ Slab
1" = 1'-0"

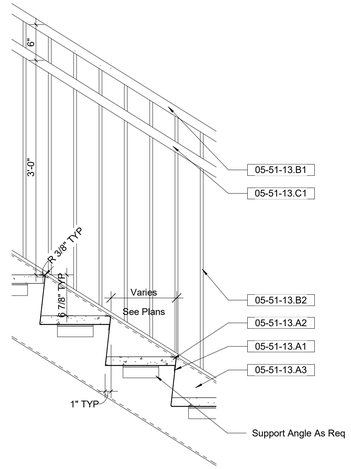

2 Stair Detail - Typ Tread/Riser
1" = 1'-0"

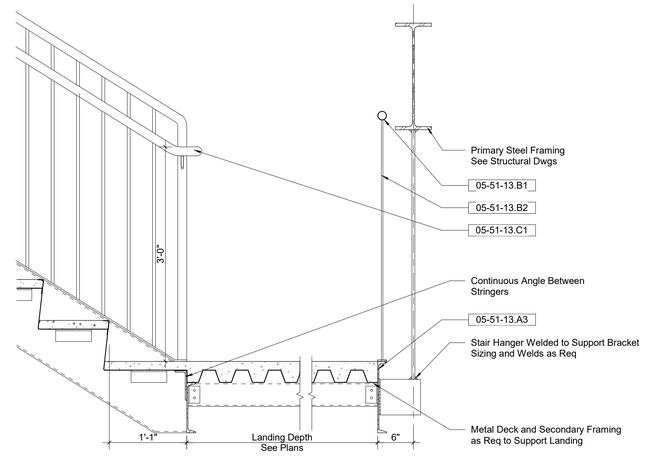

3 Stair Detail - Typ Bottom Connection @ Landing
1" = 1'-0"

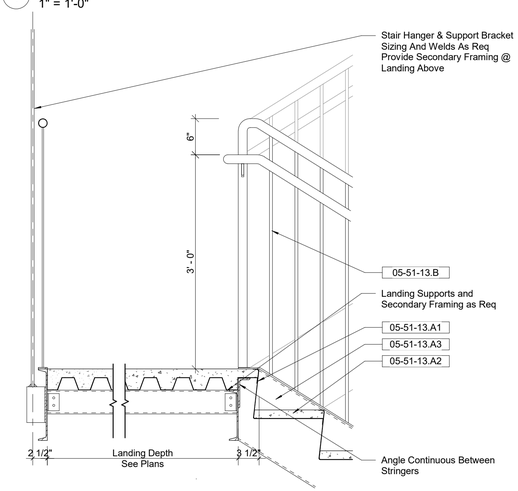

4 Stair Detail - Typ Top Connection @ Landing
1" = 1'-0"

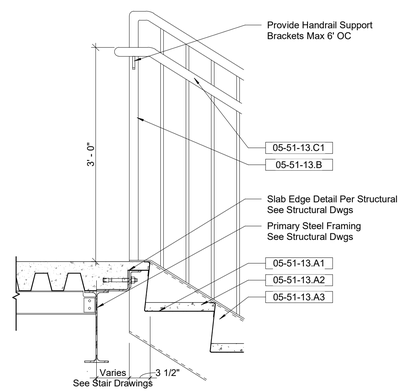

5 Stair Detail - Typ Top Connection
1" = 1'-0"

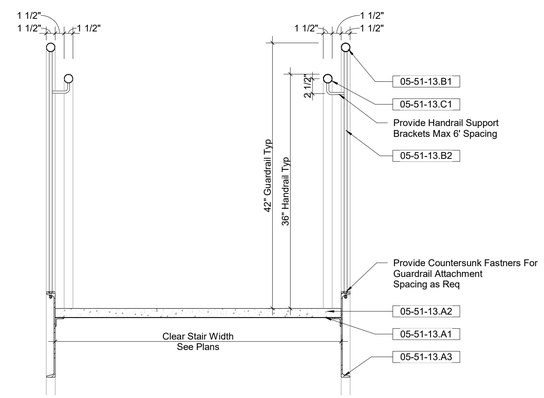

6 Stair Detail - Typ Guardrail Section
1" = 1'-0"

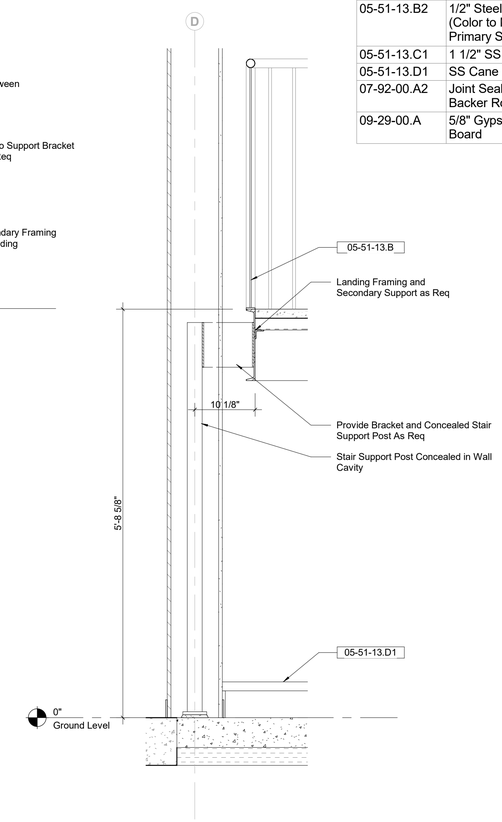

7 Stair Detail - Concealed Support Post
1" = 1'-0"

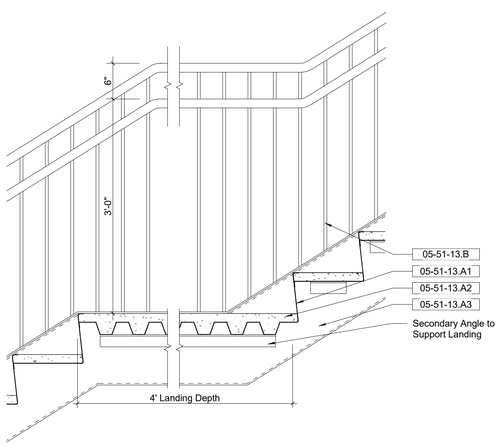

8 Stair Detail - Typ Bottom Connection @ Landing
1" = 1'-0"

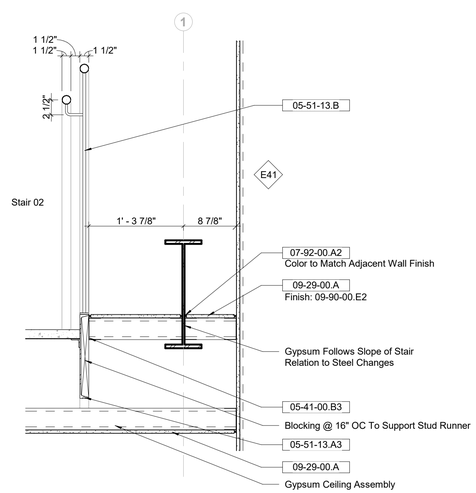

9 Stair 02 - Section B - Callout 1
1" = 1'-0"

Keynote Legend

Keynote	*Description*
05-41-00.B3	3 5/8" Metal Channel Runner
05-51-13.A1	Metal Pan
05-51-13.A2	1 1/2" Concrete Fill
05-51-13.A3	Steel Stringer
05-51-13.B	Steel Guardrail (Color to Match Primary Steel)
05-51-13.B1	1 1/2" Steel Pipe Toprail (Color to Match Primary Steel)
05-51-13.B2	1/2" Steel Pickets (Color to Match Primary Steel)
05-51-13.C1	1 1/2" SS Handrail
05-51-13.D1	SS Cane Rail
07-92-00.A2	Joint Sealant w/ Backer Rod
09-29-00.A	5/8" Gypsum Wall Board

Owner
Storm King Art Center
1 Museum Road
New Windsor, NY 12553
+1 (845) 534-3115

Design Architect
heneghan peng architects
14-16 Lord Edward Street
Dublin, D02 YC63
+353 1 633 9000

Executive Architect
WXY Architecture + Urban Design
224 Centre Street, 5th Floor
New York, NY 10013
+1 (212) 219-1953

Landscape Architect
Gustafson Porter + Bowman
1 Cobham Mews
London, MW1 9SB
+44 020 7284 8950

Reed Hilderbrand LLC
33 Whitney Avenue, 3rd Floor
New Haven, CT 06510
+1 (617) 923-2422

Structural & Lighting
ARUP
77 Water Street
New York, NY 10005
+1 (212) 896-3000

MEPF & IT
BuroHappold
100 Broadway #23
New York, NY 10005
+1 (212) 616-0228

Civil
VHB
100 Great Oaks Blvd., Suite 118
Albany, NY 12203
+1 (518) 389-3606

AV & Acoustics
LSTN Consultants
76 Beaver Street, 2nd Floor
New York, NY 10005
+1 (347) 788-0810

Facade
Front Inc.
100 E. Broadway Street, #501
New York, NY 10002
+1 (212) 242-2220

Key Plan

Description	Date
Filing Set	06/17/22

Project

Storm King Art Center
C.F.M. Building

Seal

NOT FOR CONSTRUCTION

Drawing Title

Stair Details

Date	06/17/22
Scale	1" = 1'-0"
Drawing Number	A-C-503
Sheet Size	ARCH D

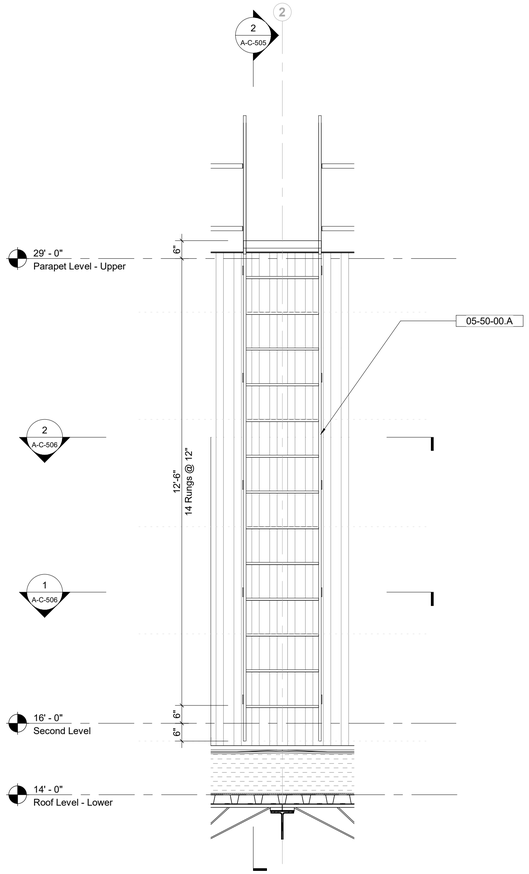

1 Exterior Access Ladder - Elevation
1/2" = 1'-0"

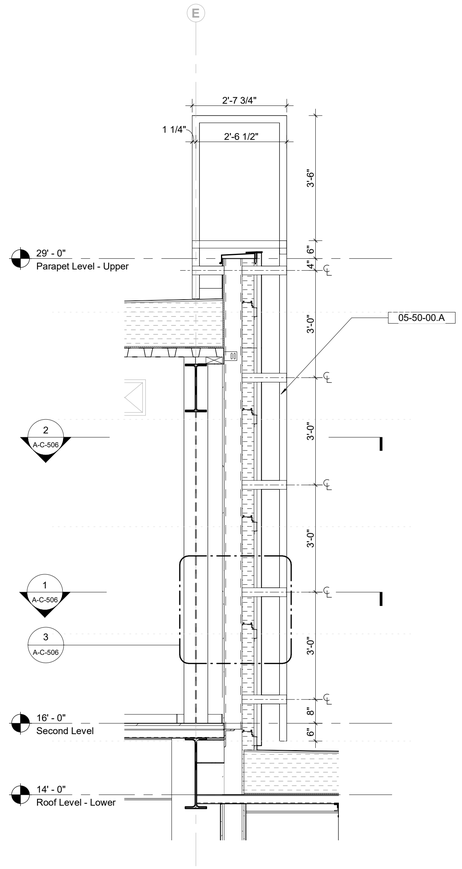

2 Exterior Access Ladder - Section
1/2" = 1'-0"

Keynote Legend

Keynote	*Description*
05-50-00.A	Access Ladder

Owner
Storm King Art Center
1 Museum Road
New Windsor, NY 12553
+1 (845) 534-3115

Design Architect
heneghan peng architects
14-16 Lord Edward Street
Dublin, D02 YC63
+353 1 633 9000

Executive Architect
WXY Architecture + Urban Design
224 Centre Street, 5th Floor
New York, NY 10013
+1 (212) 219-1953

Landscape Architect
Gustafson Porter + Bowman
1 Cobham Mews
London, MW1 9SB
+44 020 7284 8950

Reed Hilderbrand LLC
33 Whitney Avenue, 3rd Floor
New Haven, CT 06510
+1 (617) 923-2422

Structural & Lighting
ARUP
77 Water Street
New York, NY 10005
+1 (212) 896-3000

MEPF & IT
BuroHappold
100 Broadway #23
New York, NY 10005
+1 (212) 616-0228

Civil
VHB
100 Great Oaks Blvd., Suite 118
Albany, NY 12203
+1 (518) 389-3606

AV & Acoustics
LSTN Consultants
76 Beaver Street, 2nd Floor
New York, NY 10005
+1 (347) 788-0810

Facade
Front Inc.
100 E. Broadway Street, #501
New York, NY 10002
+1 (212) 242-2220

Key Plan

Description	Date
Filing Set	06/17/22

Project

Storm King Art Center

C.F.M. Building

Seal

NOT FOR CONSTRUCTION

Drawing Title

Access Ladder Details

Date	06/17/22
Scale	1/2" = 1'-0"
Drawing Number	A-C-505
Sheet Size	ARCH D

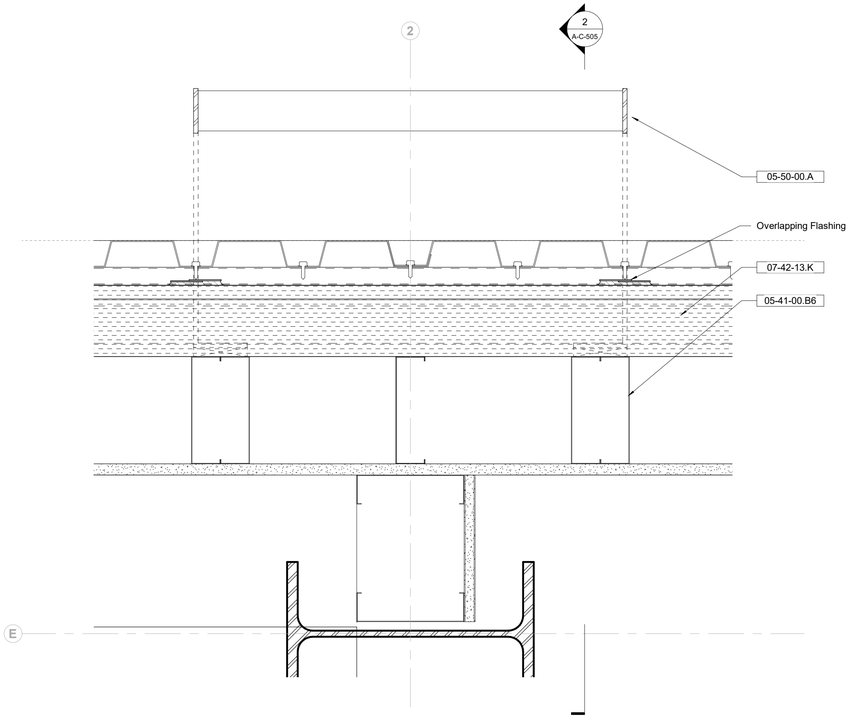

1 Exterior Access Ladder - Plan Detail at Bracket
3" = 1'-0"

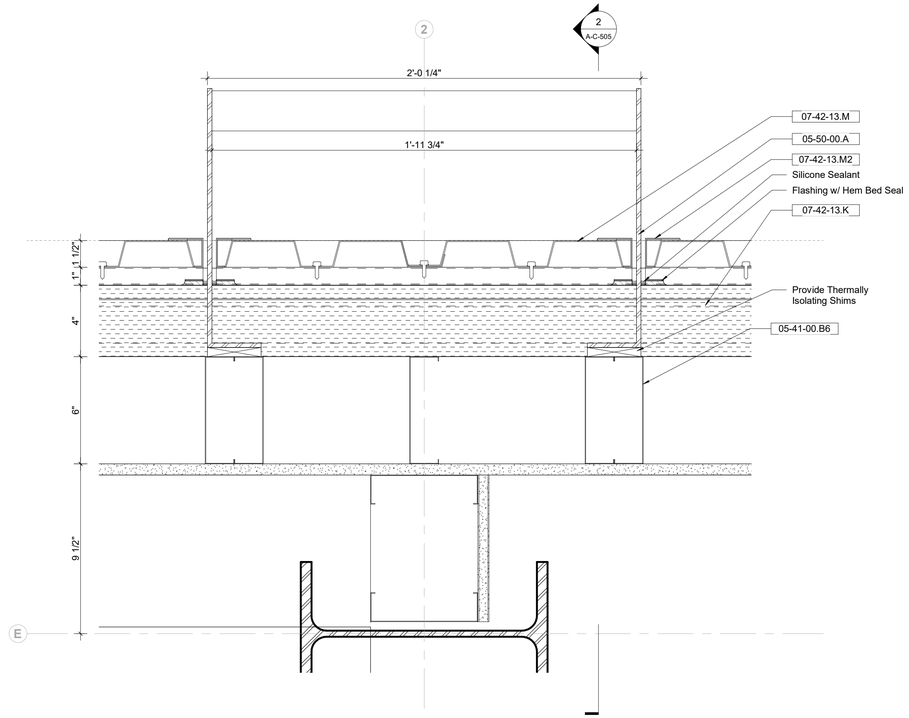

2 Exterior Access Ladder - Plan Detail
3" = 1'-0"

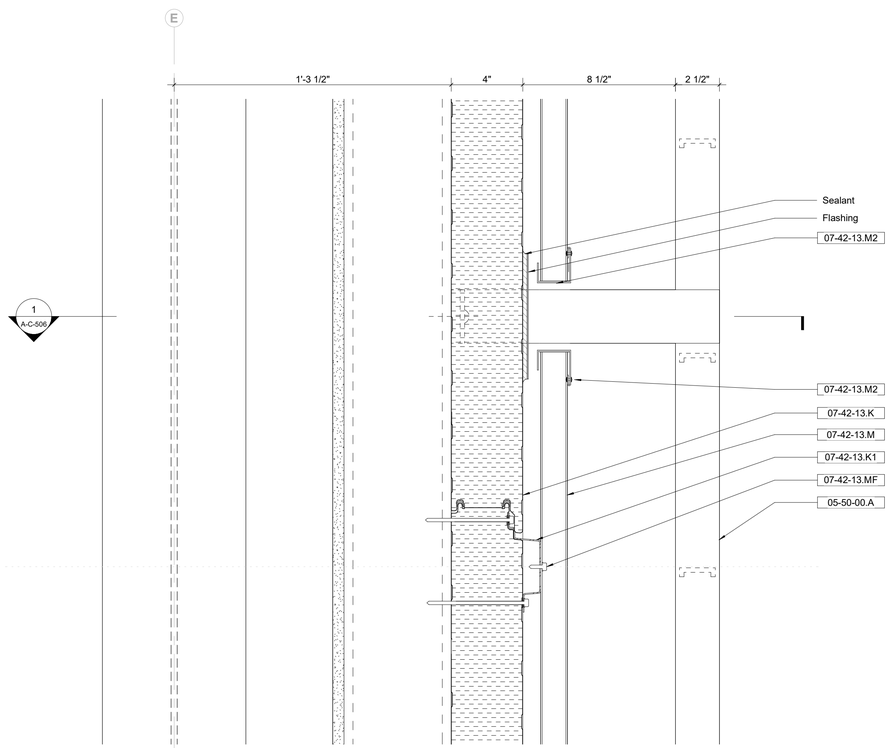

3 Exterior Access Ladder - Detail at Bracket
3" = 1'-0"

Keynote Legend

Keynote	*Description*
05-41-00.B6	6" Metal Channel Runner
05-50-00.A	Access Ladder
07-42-13.K	Insulated Metal Composite Panel
07-42-13.K1	Integrated Hat Channel
07-42-13.M	Corrugated Metal Cladding
07-42-13.M2	End Trim
07-42-13.MF	Exposed Fastener

Owner
Storm King Art Center
1 Museum Road
New Windsor, NY 12553
+1 (845) 534-3115

Design Architect
heneghan peng architects
14-16 Lord Edward Street
Dublin, D02 YC63
+353 1 633 9000

Executive Architect
WXY Architecture + Urban Design
224 Centre Street, 5th Floor
New York, NY 10013
+1 (212) 219-1953

Landscape Architect
Gustafson Porter + Bowman
1 Cobham Mews
London, MW1 9SB
+44 020 7284 8950

Reed Hilderbrand LLC
33 Whitney Avenue, 3rd Floor
New Haven, CT 06510
+1 (617) 923-2422

Structural & Lighting
ARUP
77 Water Street
New York, NY 10005
+1 (212) 896-3000

MEPF & IT
BuroHappold
100 Broadway #23
New York, NY 10005
+1 (212) 616-0228

Civil
VHB
100 Great Oaks Blvd., Suite 118
Albany, NY 12203
+1 (518) 389-3606

AV & Acoustics
LSTN Consultants
76 Beaver Street, 2nd Floor
New York, NY 10005
+1 (347) 788-0810

Facade
Front Inc.
100 E. Broadway Street, #501
New York, NY 10002
+1 (212) 242-2220

Key Plan

Description	Date
Filing Set	06/17/22

Project

Storm King Art Center

C.F.M. Building

Seal

NOT FOR CONSTRUCTION

Drawing Title

Access Ladder Details

Date	06/17/22
Scale	3" = 1'-0"
Drawing Number	A-C-506
Sheet Size	ARCH D

Keynote Legend

Keynote	*Description*
05-50-00.A	Access Ladder
07-26-16	Below-grade Vapor Retarder
14-26-00	Limited-Use/Limited Application Elevators

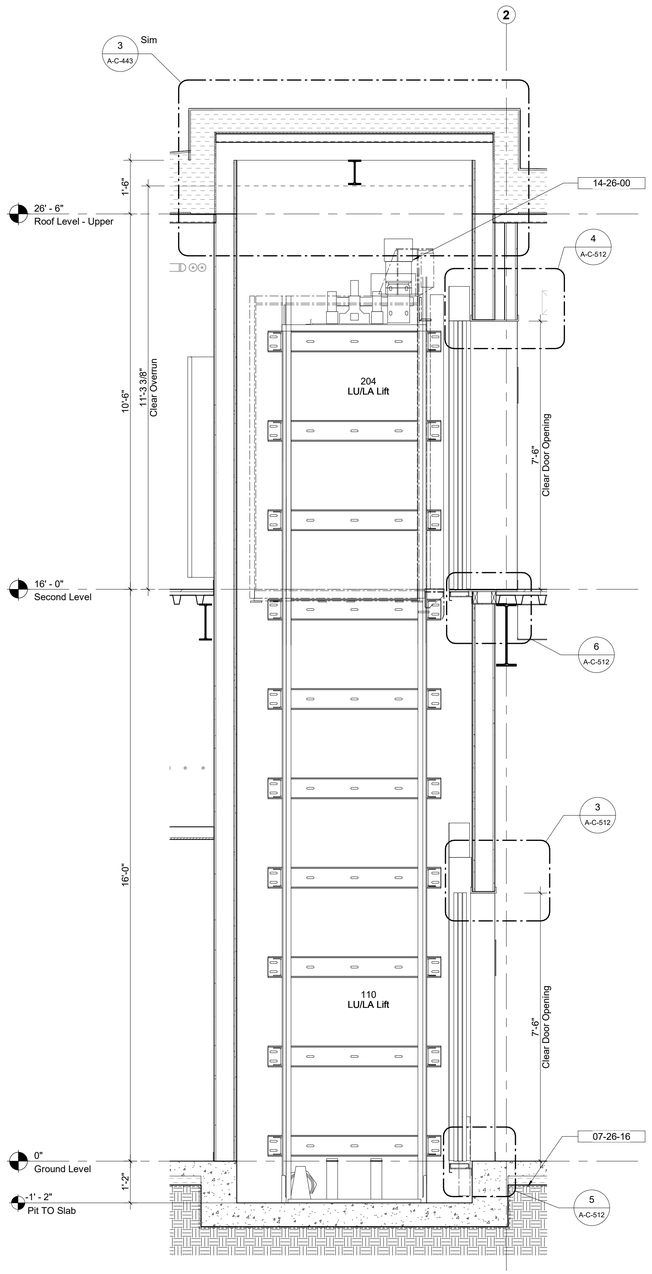

1 LU/LA Lift - Section A
1/2" = 1'-0"

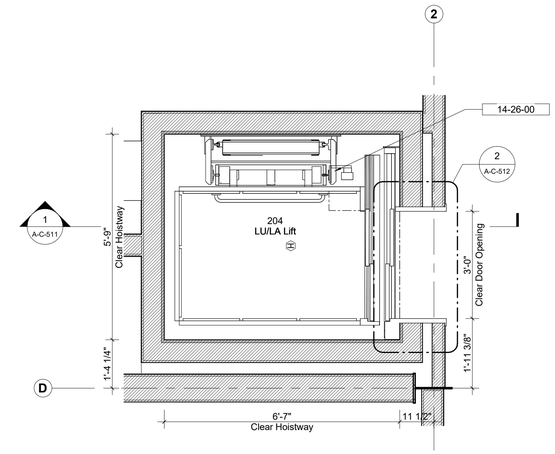

2 LU/LA Lift - Enlarged Plan - Second Level
1/2" = 1'-0"

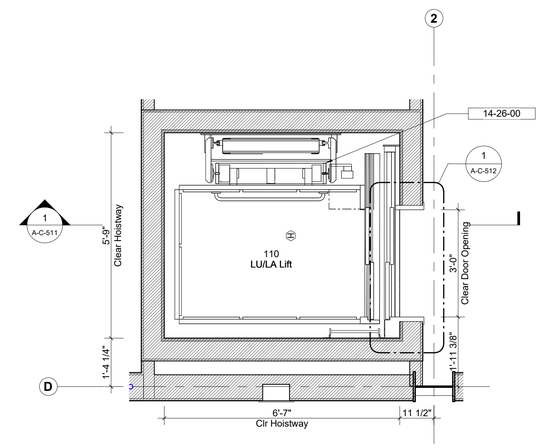

3 LU/LA Lift - Enlarged Plan - Ground Level
1/2" = 1'-0"

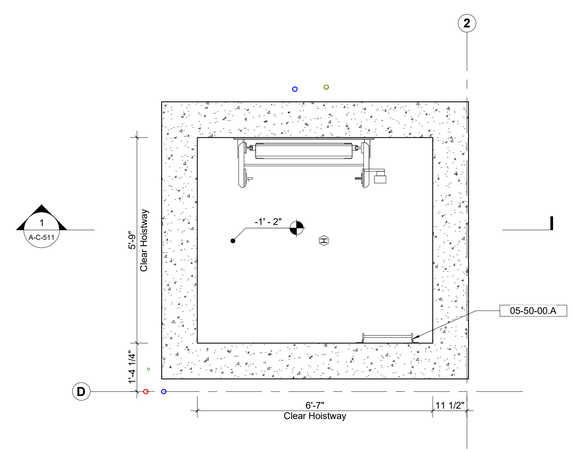

4 LU/LA Lift - Enlarged Plan - Pit Level
1/2" = 1'-0"

Owner
Storm King Art Center
1 Museum Road
New Windsor, NY 12553
+1 (845) 534-3115

Design Architect
heneghan peng architects
14-16 Lord Edward Street
Dublin, D02 YC63
+353 1 633 9000

Executive Architect
WXY Architecture + Urban Design
224 Centre Street, 5th Floor
New York, NY 10013
+1 (212) 219-1953

Landscape Architect
Gustafson Porter + Bowman
1 Cobham Mews
London, MW1 9SB
+44 020 7284 8950

Reed Hilderbrand LLC
33 Whitney Avenue, 3rd Floor
New Haven, CT 06510
+1 (617) 923-2422

Structural & Lighting
ARUP
77 Water Street
New York, NY 10005
+1 (212) 896-3000

MEPF & IT
BuroHappold
100 Broadway #23
New York, NY 10005
+1 (212) 616-0228

Civil
VHB
100 Great Oaks Blvd., Suite 118
Albany, NY 12203
+1 (518) 389-3606

AV & Acoustics
LSTN Consultants
76 Beaver Street, 2nd Floor
New York, NY 10005
+1 (347) 788-0810

Facade
Front Inc.
100 E. Broadway Street, #501
New York, NY 10002
+1 (212) 242-2220

Key Plan

Description	Date
Filing Set	06/17/22

Project

Storm King Art Center

C.F.M. Building

Seal

NOT FOR CONSTRUCTION

Drawing Title

LU/LA Hoistway - Plans & Section

Date	06/17/22
Scale	1/2" = 1'-0"
Drawing Number	A-C-511
Sheet Size	ARCH D

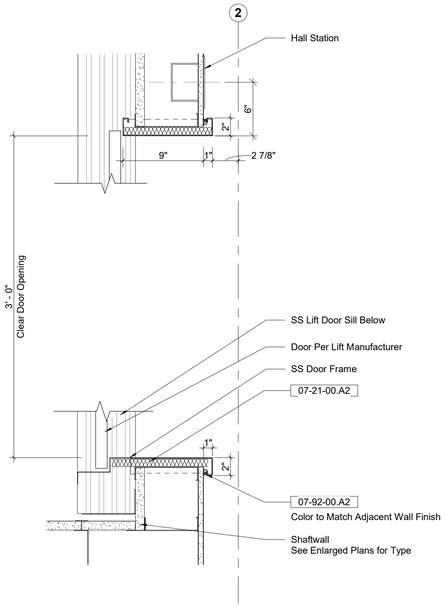

1 Lift Door Jamb Detail @ Ground Floor
1 1/2" = 1'-0"

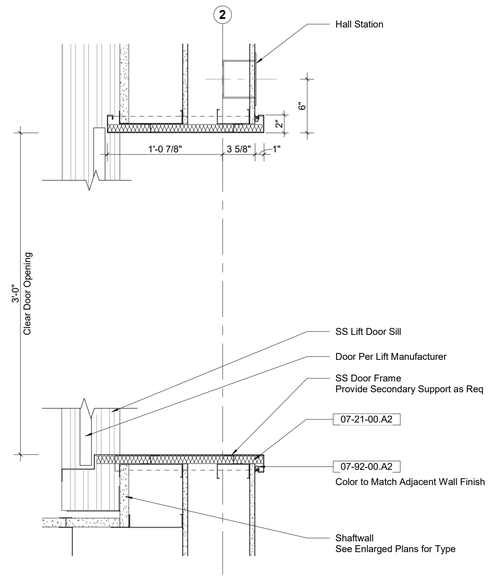

2 Lift Door Jamb Detail @ Second Floor
1 1/2" = 1'-0"

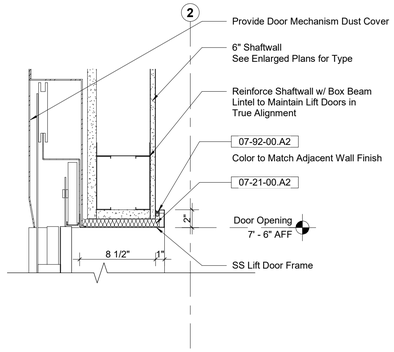

3 Lift Door Head Detail @ Ground Floor
1 1/2" = 1'-0"

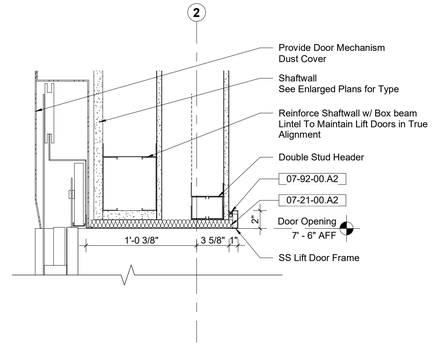

4 Lift Door Sill Detail @ Second Floor
1 1/2" = 1'-0"

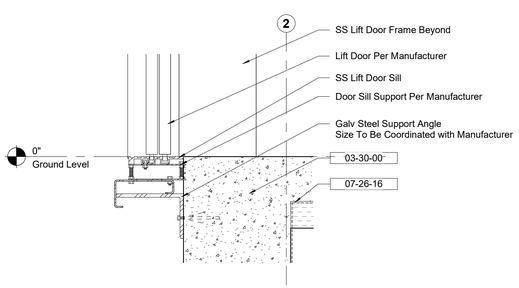

5 Lift Door Sill Detail @ Ground Floor
1 1/2" = 1'-0"

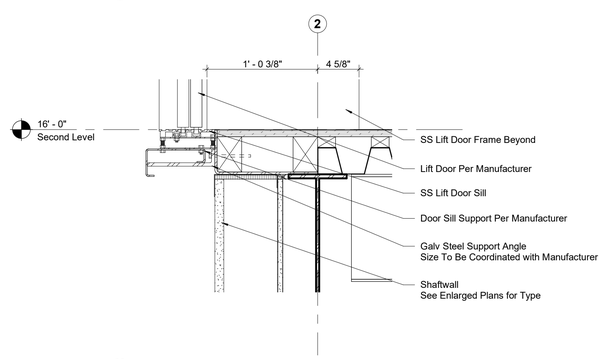

6 Lift Door Sill Detail @ Second Floor
1 1/2" = 1'-0"

Keynote Legend

Keynote	*Description*
03-30-00	Cast-In-Place Concrete
07-21-00.A2	Mineral Wool Insulation, Interior
07-26-16	Below-grade Vapor Retarder
07-92-00.A2	Joint Sealant w/ Backer Rod

Owner
Storm King Art Center
1 Museum Road
New Windsor, NY 12553
+1 (845) 534-3115

Design Architect
heneghan peng architects
14-16 Lord Edward Street
Dublin, D02 YC63
+353 1 633 9000

Executive Architect
WXY Architecture + Urban Design
224 Centre Street, 5th Floor
New York, NY 10013
+1 (212) 219-1953

Landscape Architect
Gustafson Porter + Bowman
1 Cobham Mews
London, MW1 9SB
+44 020 7284 8950

Reed Hilderbrand LLC
33 Whitney Avenue, 3rd Floor
New Haven, CT 06510
+1 (617) 923-2422

Structural & Lighting
ARUP
77 Water Street
New York, NY 10005
+1 (212) 896-3000

MEPF & IT
BuroHappold
100 Broadway #23
New York, NY 10005
+1 (212) 616-0228

Civil
VHB
100 Great Oaks Blvd., Suite 118
Albany, NY 12203
+1 (518) 389-3606

AV & Acoustics
LSTN Consultants
76 Beaver Street, 2nd Floor
New York, NY 10005
+1 (347) 788-0810

Facade
Front Inc.
100 E. Broadway Street, #501
New York, NY 10002
+1 (212) 242-2220

Key Plan

Description	Date
Filing Set	06/17/22

Project

Storm King Art Center

C.F.M. Building

Seal

NOT FOR CONSTRUCTION

Drawing Title

LU/LA Hoistway - Details

Date	06/17/22
Scale	1 1/2" = 1'-0"
Drawing Number	A-C-512
Sheet Size	ARCH D

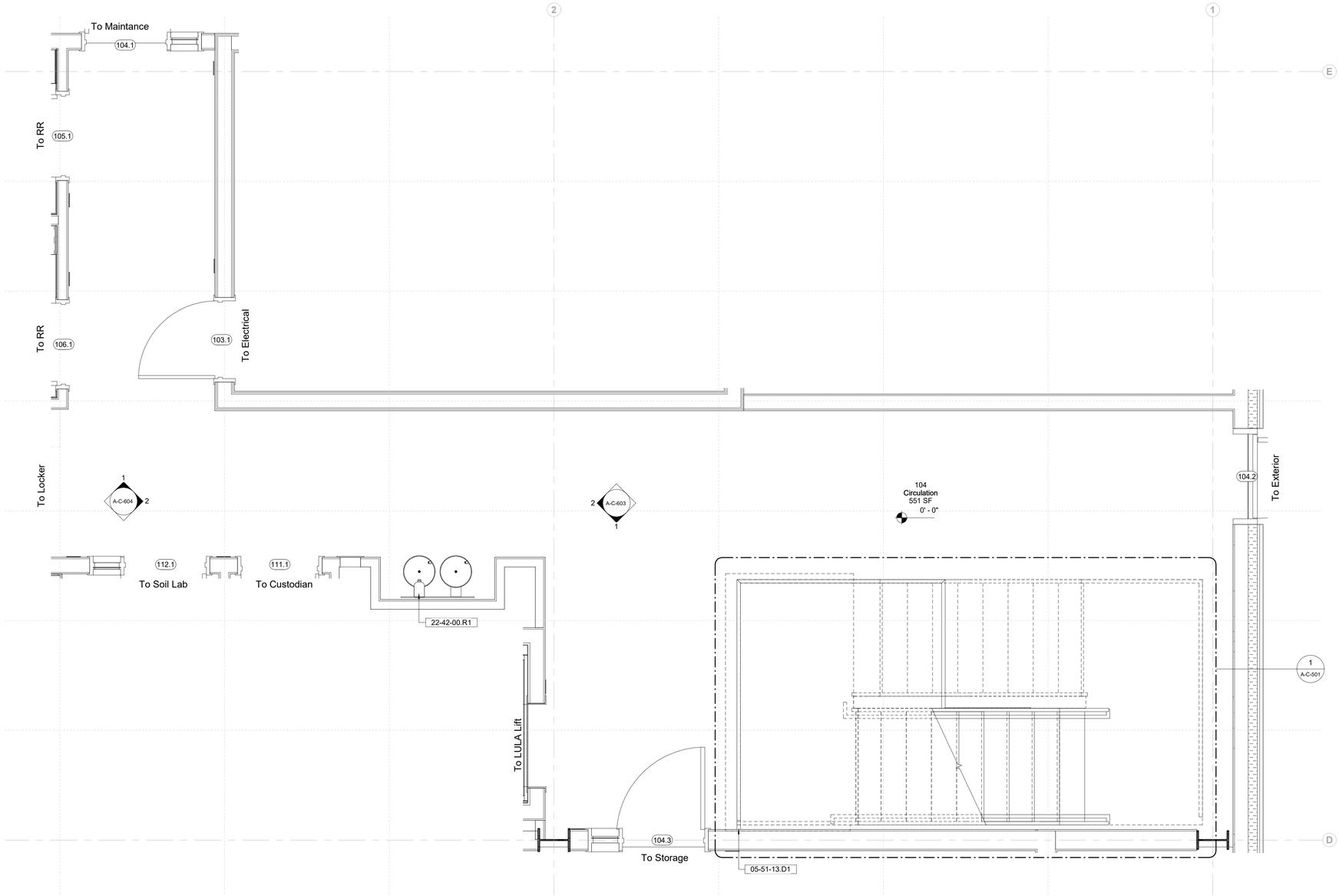

1 Room Plan - 104
1/2" = 1'-0"

Keynote Legend

Keynote	*Description*
05-51-13.D1	SS Cane Rail
22-42-00.R1	Drinking Fountains w/ Bottle-Filling Station, Interior

Plan & RCP Legend

- Floor Drain
- Linear Floor Drain
- Sprinkler Head - Upright
- Sprinkler Head - Concealed Pendent
- Sprinkler Head - Wall Mounted
- Ceiling Mounted Diffuser
- Lighting Fixture

Sheet Notes

1. All Devices To Be Centered/Aligned to Grid References As Shown On Drawings UON. Where Devices Are Located Off Grid All Dimensions Are To Device Centerline UON.
2. See A-C-092 For Grid Set Out Information
3. See A-C-692 For All Device Mounting Heights And Locations.
4. Inside Face Of Partitions At Floor Openings To Be Aligned With Edge Of Floor Opening UON
5. In The Event Of Conflict Between Data Shown On Drawings And Data In The Specification, The Drawings Shall Govern. Detail Drawings Take Precedent Over Drawings Of Larger Scope.

Owner
Storm King Art Center
1 Museum Road
New Windsor, NY 12553
+1 (845) 534-3115

Design Architect
heneghan peng architects
14-16 Lord Edward Street
Dublin, D02 YC63
+353 1 633 9000

Executive Architect
WXY Architecture + Urban Design
224 Centre Street, 5th Floor
New York, NY 10013
+1 (212) 219-1953

Landscape Architect
Gustafson Porter + Bowman
1 Cobham Mews
London, MW1 9SB
+44 020 7284 8950

Reed Hilderbrand LLC
33 Whitney Avenue, 3rd Floor
New Haven, CT 06510
+1 (617) 923-2422

Structural & Lighting
ARUP
77 Water Street
New York, NY 10005
+1 (212) 896-3000

MEPF & IT
BuroHappold
100 Broadway #23
New York, NY 10005
+1 (212) 616-0228

Civil
VHB
100 Great Oaks Blvd., Suite 118
Albany, NY 12203
+1 (518) 389-3606

AV & Acoustics
LSTN Consultants
76 Beaver Street, 2nd Floor
New York, NY 10005
+1 (347) 788-0810

Facade
Front Inc.
100 E. Broadway Street, #501
New York, NY 10002
+1 (212) 242-2220

Key Plan

Description	Date
Filing Set	06/17/22

Project

Storm King Art Center

C.F.M. Building

Seal

NOT FOR CONSTRUCTION

Drawing Title

Room Plan - 104

Date	06/17/22
Scale	As indicated
Drawing Number	A-C-601
Sheet Size	ARCH D

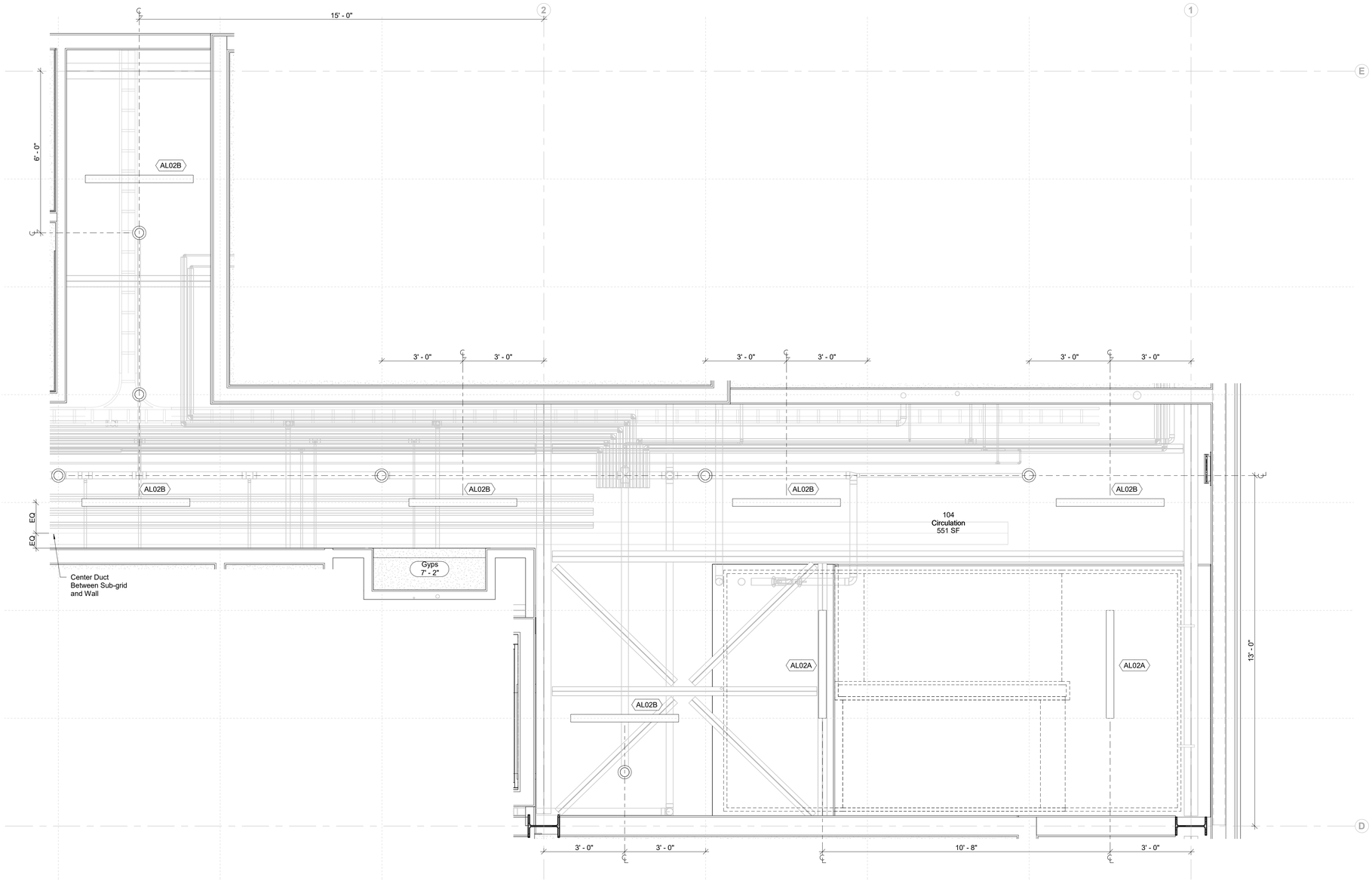

1 Room RCP - Ground Level - 104
1/2" = 1'-0"

Plan & RCP Legend

- Floor Drain
- Linear Floor Drain
- Sprinkler Head - Upright
- Sprinkler Head - Concealed Pendent
- Sprinkler Head - Wall Mounted
- Ceiling Mounted Diffuser
- Lighting Fixture

Sheet Notes

1. All Devices To Be Centered/Aligned to Grid References As Shown On Drawings UON. Where Devices Are Located Off Grid All Dimensions Are To Device Centerline UON.
2. See A-C-092 For Grid Set Out Information
3. See A-C-692 For All Device Mounting Heights And Locations.
4. Inside Face Of Partitions At Floor Openings To Be Aligned With Edge Of Floor Opening UON
5. In The Event Of Conflict Between Data Shown On Drawings And Data In The Specification, The Drawings Shall Govern. Detail Drawings Take Precedent Over Drawings Of Larger Scope.

Owner
Storm King Art Center
1 Museum Road
New Windsor, NY 12553
+1 (845) 534-3115

Design Architect
heneghan peng architects
14-16 Lord Edward Street
Dublin, D02 YC63
+353 1 633 9000

Executive Architect
WXY Architecture + Urban Design
224 Centre Street, 5th Floor
New York, NY 10013
+1 (212) 219-1953

Landscape Architect
Gustafson Porter + Bowman
1 Cobham Mews
London, MW1 9SB
+44 020 7284 8950

Reed Hilderbrand LLC
33 Whitney Avenue, 3rd Floor
New Haven, CT 06510
+1 (617) 923-2422

Structural & Lighting
ARUP
77 Water Street
New York, NY 10005
+1 (212) 896-3000

MEPF & IT
BuroHappold
100 Broadway #23
New York, NY 10005
+1 (212) 616-0228

Civil
VHB
100 Great Oaks Blvd., Suite 118
Albany, NY 12203
+1 (518) 389-3606

AV & Acoustics
LSTN Consultants
76 Beaver Street, 2nd Floor
New York, NY 10005
+1 (347) 788-0810

Facade
Front Inc.
100 E. Broadway Street, #501
New York, NY 10002
+1 (212) 242-2220

Key Plan

Description	Date
Filing Set	06/17/22

Project

Storm King Art Center

C.F.M. Building

Seal

NOT FOR CONSTRUCTION

Drawing Title

Room RCP - 104

Date	06/17/22
Scale	As indicated
Drawing Number	A-C-602
Sheet Size	ARCH D

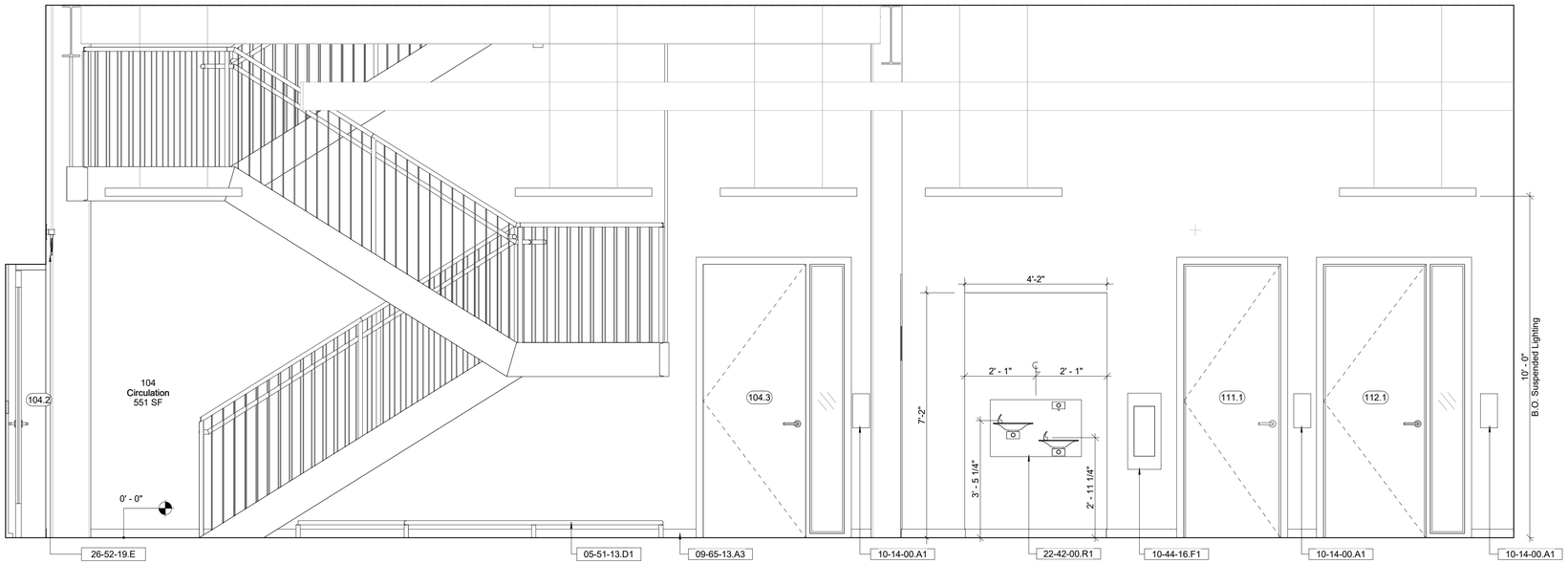

1 Room Elevation - 104 - East
1/2" = 1'-0"

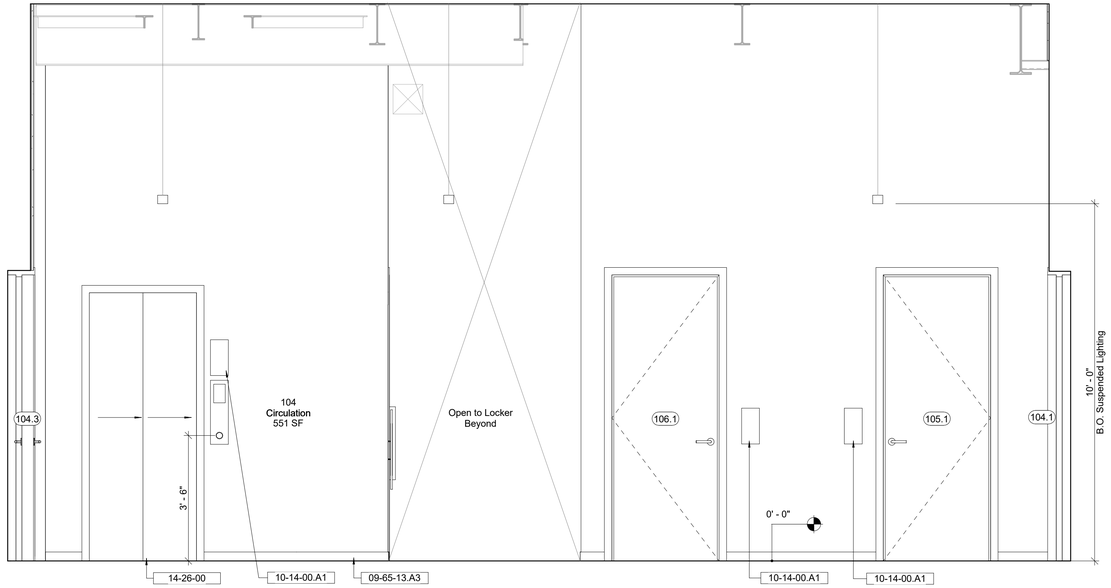

2 Room Elevation - 104 - South
1/2" = 1'-0"

Keynote Legend

Keynote	*Description*
05-51-13.D1	SS Cane Rail
09-65-13.A3	Resilient Base, 3"-high
10-14-00.A1	Interior Signage
10-44-16.F1	Fire Extinguisher and Cabinet, Recessed
14-26-00	Limited-Use/Limited Application Elevators
22-42-00.R1	Drinking Fountains w/ Bottle-Filling Station, Interior
26-52-19.E	Exit Signage

Owner
Storm King Art Center
1 Museum Road
New Windsor, NY 12553
+1 (845) 534-3115

Design Architect
heneghan peng architects
14-16 Lord Edward Street
Dublin, D02 YC63
+353 1 633 9000

Executive Architect
WXY Architecture + Urban Design
224 Centre Street, 5th Floor
New York, NY 10013
+1 (212) 219-1953

Landscape Architect
Gustafson Porter + Bowman
1 Cobham Mews
London, MW1 9SB
+44 020 7284 8950

Reed Hilderbrand LLC
33 Whitney Avenue, 3rd Floor
New Haven, CT 06510
+1 (617) 923-2422

Structural & Lighting
ARUP
77 Water Street
New York, NY 10005
+1 (212) 896-3000

MEPF & IT
BuroHappold
100 Broadway #23
New York, NY 10005
+1 (212) 616-0228

Civil
VHB
100 Great Oaks Blvd., Suite 118
Albany, NY 12203
+1 (518) 389-3606

AV & Acoustics
LSTN Consultants
76 Beaver Street, 2nd Floor
New York, NY 10005
+1 (347) 788-0810

Facade
Front Inc.
100 E. Broadway Street, #501
New York, NY 10002
+1 (212) 242-2220

Key Plan

Description	Date
Filing Set	06/17/22

Project

Storm King Art Center
C.F.M. Building

Seal

NOT FOR CONSTRUCTION

Drawing Title

Room Elevations - 104

Date	06/17/22
Scale	1/2" = 1'-0"
Drawing Number	A-C-603
Sheet Size	ARCH D

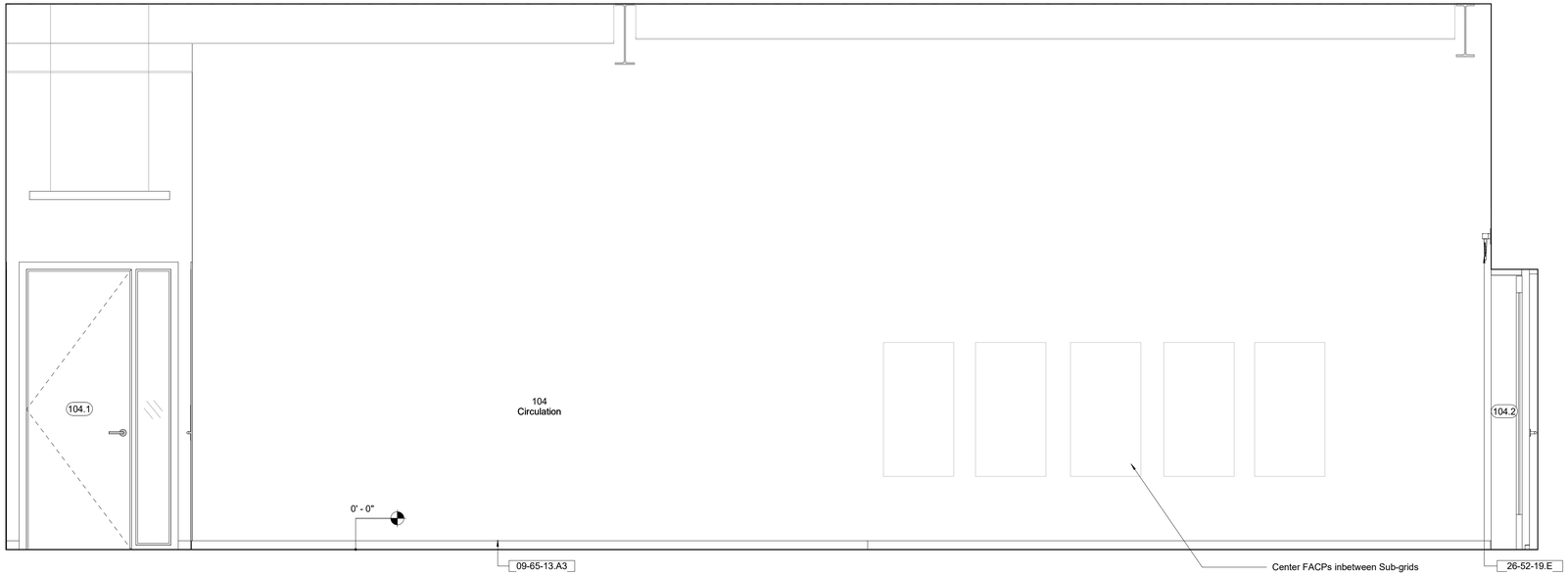

1 Room Elevation - 104 - West
1/2" = 1'-0"

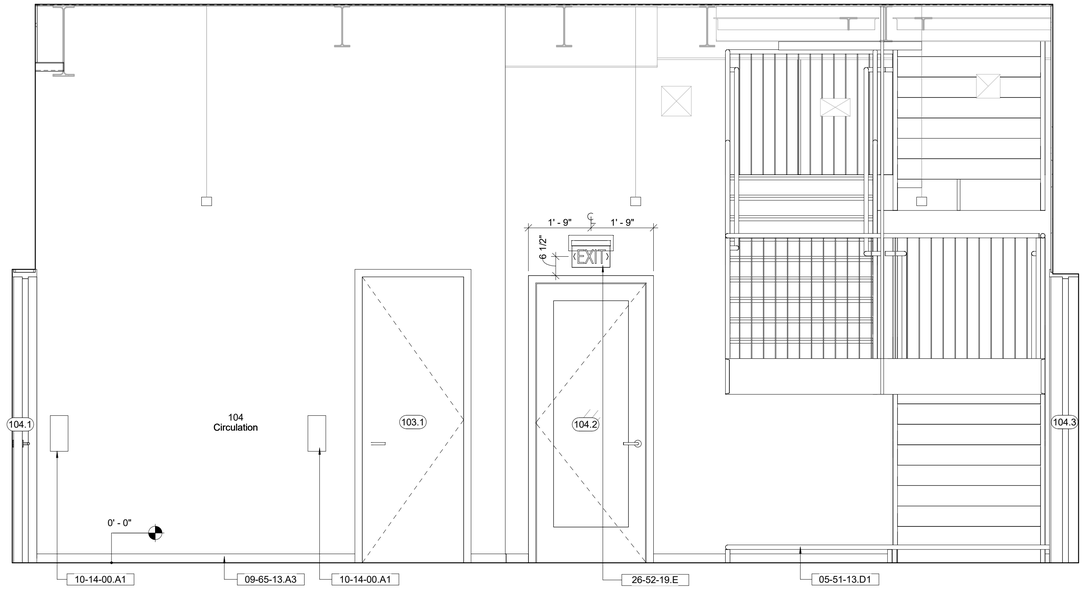

2 Room Elevation - 104 - North
1/2" = 1'-0"

Keynote Legend

Keynote	*Description*
05-51-13.D1	SS Cane Rail
09-65-13.A3	Resilient Base, 3"-high
10-14-00.A1	Interior Signage
26-52-19.E	Exit Signage

Owner
Storm King Art Center
1 Museum Road
New Windsor, NY 12553
+1 (845) 534-3115

Design Architect
heneghan peng architects
14-16 Lord Edward Street
Dublin, D02 YC63
+353 1 633 9000

Executive Architect
WXY Architecture + Urban Design
224 Centre Street, 5th Floor
New York, NY 10013
+1 (212) 219-1953

Landscape Architect
Gustafson Porter + Bowman
1 Cobham Mews
London, MW1 9SB
+44 020 7284 8950

Reed Hilderbrand LLC
33 Whitney Avenue, 3rd Floor
New Haven, CT 06510
+1 (617) 923-2422

Structural & Lighting
ARUP
77 Water Street
New York, NY 10005
+1 (212) 896-3000

MEPF & IT
BuroHappold
100 Broadway #23
New York, NY 10005
+1 (212) 616-0228

Civil
VHB
100 Great Oaks Blvd., Suite 118
Albany, NY 12203
+1 (518) 389-3606

AV & Acoustics
LSTN Consultants
76 Beaver Street, 2nd Floor
New York, NY 10005
+1 (347) 788-0810

Facade
Front Inc.
100 E. Broadway Street, #501
New York, NY 10002
+1 (212) 242-2220

Key Plan

Description	Date
Filing Set	06/17/22

Project

Storm King Art Center

C.F.M. Building

Seal

NOT FOR CONSTRUCTION

Drawing Title

Room Elevations - 104

Date	06/17/22
Scale	1/2" = 1'-0"
Drawing Number	A-C-604
Sheet Size	ARCH D

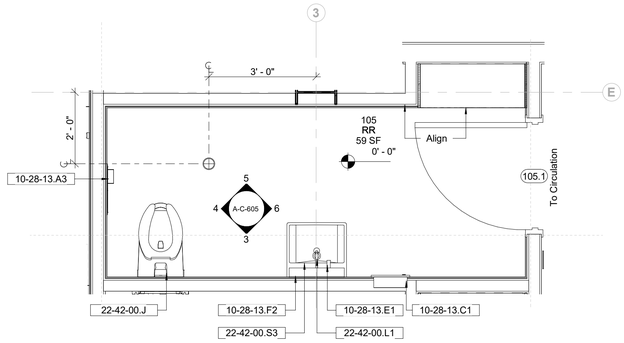

1 Room Plan - 105
1/2" = 1'-0"

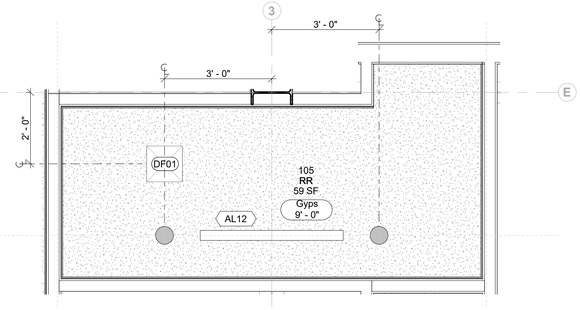

2 Room RCP - 105
1/2" = 1'-0"

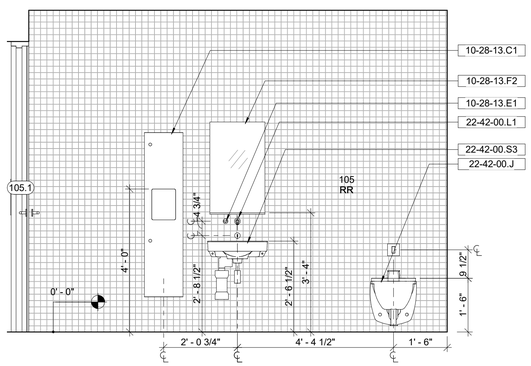

3 Room Elevation - 105 - East
1/2" = 1'-0"

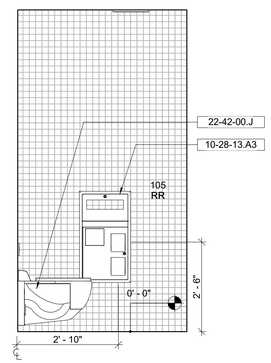

4 Room Elevation - 105 - South
1/2" = 1'-0"

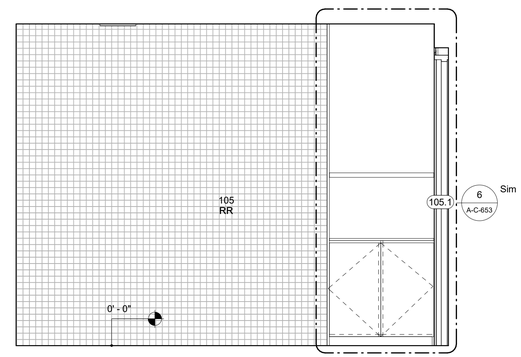

5 Room Elevation - 105 - West
1/2" = 1'-0"

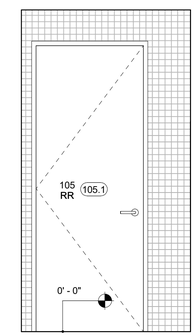

6 Room Elevation - 105 - North
1/2" = 1'-0"

Keynote Legend

Keynote	*Description*
10-28-13.A3	Toilet Paper Holder w/ Seat Cover and Sanitary Receptacle, Recessed
10-28-13.C1	Paper Towel Dispenser w/ Receptacle, Recessed
10-28-13.E1	Soap Dispenser, Interior Touchless
10-28-13.F2	Mirror w/ Shelf, Recessed
22-42-00.J	Wall-Hung Commercial Toilet, w/ Carrier
22-42-00.L1	Restroom Faucet, Interior Touchless
22-42-00.S3	Wall-Hung Commercial Sink, ADA-compliant

Plan & RCP Legend

- Floor Drain
- Linear Floor Drain
- Sprinkler Head - Upright
- Sprinkler Head - Concealed Pendent
- Sprinkler Head - Wall Mounted
- Ceiling Mounted Diffuser
- Lighting Fixture

Sheet Notes

1. All Devices To Be Centered/Aligned to Grid References As Shown On Drawings UON. Where Devices Are Located Off Grid All Dimensions Are To Device Centerline UON.
2. See A-C-092 For Grid Set Out Information
3. See A-C-692 For All Device Mounting Heights And Locations.
4. Inside Face Of Partitions At Floor Openings To Be Aligned With Edge Of Floor Opening UON
5. In The Event Of Conflict Between Data Shown On Drawings And Data In The Specification, The Drawings Shall Govern. Detail Drawings Take Precedent Over Drawings Of Larger Scope.

Owner
Storm King Art Center
1 Museum Road
New Windsor, NY 12553
+1 (845) 534-3115

Design Architect
heneghan peng architects
14-16 Lord Edward Street
Dublin, D02 YC63
+353 1 633 9000

Executive Architect
WXY Architecture + Urban Design
224 Centre Street, 5th Floor
New York, NY 10013
+1 (212) 219-1953

Landscape Architect
Gustafson Porter + Bowman
1 Cobham Mews
London, MW1 9SB
+44 020 7284 8950

Reed Hilderbrand LLC
33 Whitney Avenue, 3rd Floor
New Haven, CT 06510
+1 (617) 923-2422

Structural & Lighting
ARUP
77 Water Street
New York, NY 10005
+1 (212) 896-3000

MEPF & IT
BuroHappold
100 Broadway #23
New York, NY 10005
+1 (212) 616-0228

Civil
VHB
100 Great Oaks Blvd., Suite 118
Albany, NY 12203
+1 (518) 389-3606

AV & Acoustics
LSTN Consultants
76 Beaver Street, 2nd Floor
New York, NY 10005
+1 (347) 788-0810

Facade
Front Inc.
100 E. Broadway Street, #501
New York, NY 10002
+1 (212) 242-2220

Key Plan

Description	Date
Filing Set	06/17/22

Project

Storm King Art Center

C.F.M. Building

Seal

NOT FOR CONSTRUCTION

Drawing Title

Room Plan, RCP & Elevations - 105

Date	06/17/22
Scale	As indicated
Drawing Number	A-C-605
Sheet Size	ARCH D

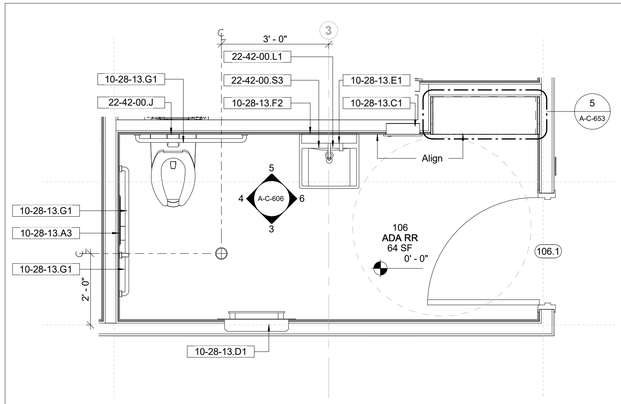

1 Room Plan - 106
1/2" = 1'-0"

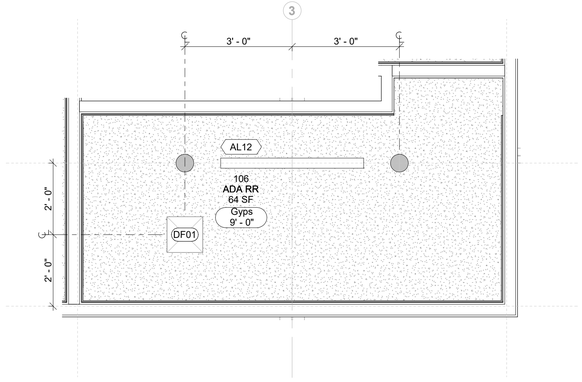

2 Room RCP - 106
1/2" = 1'-0"

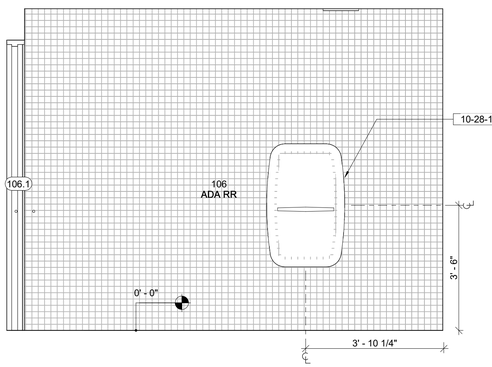

3 Elevation - 105 - East
1/2" = 1'-0"

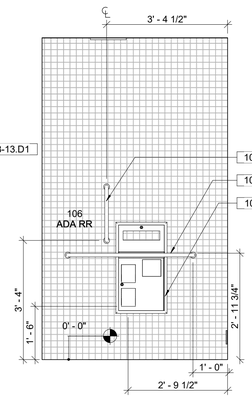

4 Elevation - 105 - South
1/2" = 1'-0"

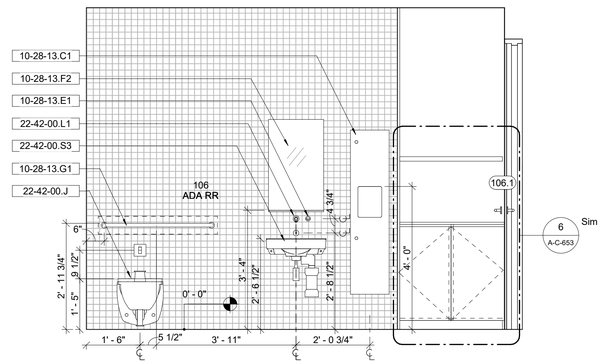

5 Elevation - 105 - West
1/2" = 1'-0"

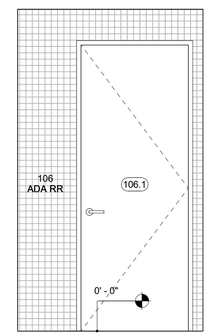

6 Elevation - 105 - North
1/2" = 1'-0"

Keynote Legend

Keynote	*Description*
10-28-13.A3	Toilet Paper Holder w/ Seat Cover and Sanitary Receptacle, Recessed
10-28-13.C1	Paper Towel Dispenser w/ Receptacle, Recessed
10-28-13.D1	Diaper-changing Station, Recessed Vertical
10-28-13.E1	Soap Dispenser, Interior Touchless
10-28-13.F2	Mirror w/ Shelf, Recessed
10-28-13.G1	Grab Rail, ADA-compliant
22-42-00.J	Wall-Hung Commercial Toilet, w/ Carrier
22-42-00.L1	Restroom Faucet, Interior Touchless
22-42-00.S3	Wall-Hung Commercial Sink, ADA-compliant

Plan & RCP Legend

- Floor Drain
- Linear Floor Drain
- Sprinkler Head - Upright
- Sprinkler Head - Concealed Pendent
- Sprinkler Head - Wall Mounted
- Ceiling Mounted Diffuser
- Lighting Fixture

Sheet Notes

1. All Devices To Be Centered/Aligned to Grid References As Shown On Drawings UON. Where Devices Are Located Off Grid All Dimensions Are To Device Centerline UON.
2. See A-C-092 For Grid Set Out Information
3. See A-C-692 For All Device Mounting Heights And Locations.
4. Inside Face Of Partitions At Floor Openings To Be Aligned With Edge Of Floor Opening UON
5. In The Event Of Conflict Between Data Shown On Drawings And Data In The Specification, The Drawings Shall Govern. Detail Drawings Take Precedent Over Drawings Of Larger Scope.

Owner
Storm King Art Center
1 Museum Road
New Windsor, NY 12553
+1 (845) 534-3115

Design Architect
heneghan peng architects
14-16 Lord Edward Street
Dublin, D02 YC63
+353 1 633 9000

Executive Architect
WXY Architecture + Urban Design
224 Centre Street, 5th Floor
New York, NY 10013
+1 (212) 219-1953

Landscape Architect
Gustafson Porter + Bowman
1 Cobham Mews
London, MW1 9SB
+44 020 7284 8950

Reed Hilderbrand LLC
33 Whitney Avenue, 3rd Floor
New Haven, CT 06510
+1 (617) 923-2422

Structural & Lighting
ARUP
77 Water Street
New York, NY 10005
+1 (212) 896-3000

MEPF & IT
BuroHappold
100 Broadway #23
New York, NY 10005
+1 (212) 616-0228

Civil
VHB
100 Great Oaks Blvd., Suite 118
Albany, NY 12203
+1 (518) 389-3606

AV & Acoustics
LSTN Consultants
76 Beaver Street, 2nd Floor
New York, NY 10005
+1 (347) 788-0810

Facade
Front Inc.
100 E. Broadway Street, #501
New York, NY 10002
+1 (212) 242-2220

Key Plan

N

Description	Date
Filing Set	06/17/22

Project

Storm King Art Center

C.F.M. Building

Seal

NOT FOR CONSTRUCTION

Drawing Title

Room Plan, RCP & Elevations - 106

Date	06/17/22
Scale	As indicated
Drawing Number	A-C-606
Sheet Size	ARCH D

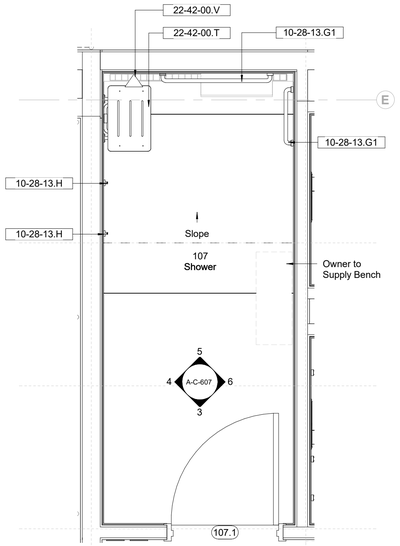

1 Room Plan - 107
1/2" = 1'-0"

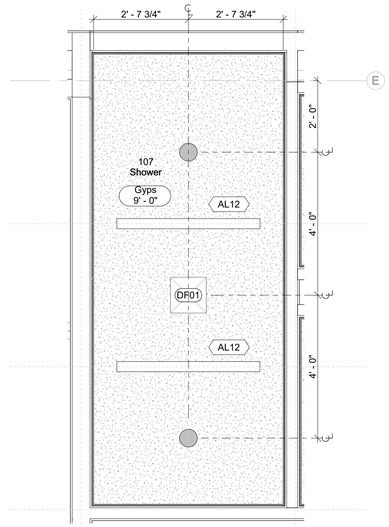

2 Room RCP - 107
1/2" = 1'-0"

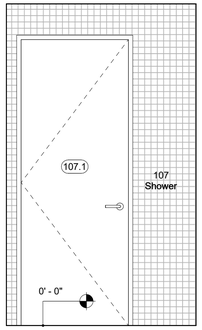

3 Room Elevation - 107 - East
1/2" = 1'-0"

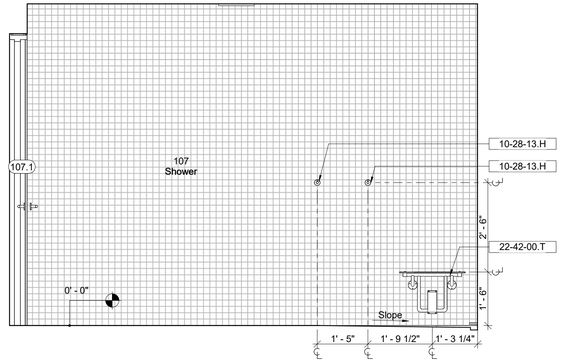

4 Room Elevation - 107 - South
1/2" = 1'-0"

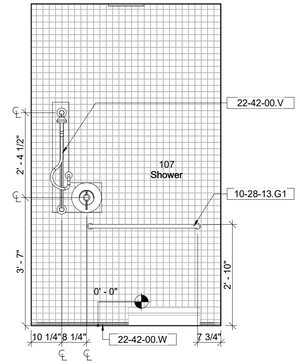

5 Room Elevation - 107 - West
1/2" = 1'-0"

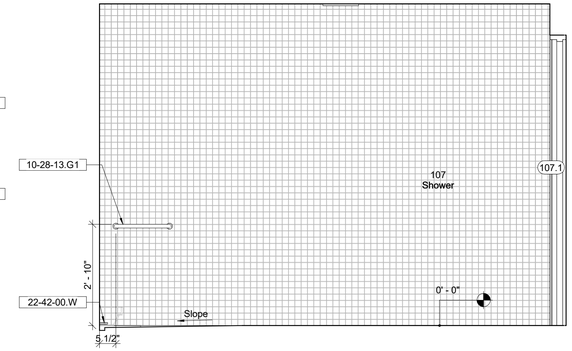

6 Room Elevation - 107 - North
1/2" = 1'-0"

Keynote Legend

Keynote	*Description*
10-28-13.G1	Grab Rail, ADA-compliant
10-28-13.H	Coat/Towel Hook
22-42-00.T	Foldable Shower Seat, ADA-compliant
22-42-00.V	Shower Fixture, ADA-compliant
22-42-00.W	Linear Floor Drain

Plan & RCP Legend

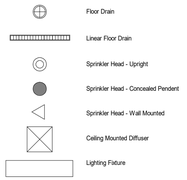

Sheet Notes

1. All Devices To Be Centered/Aligned to Grid References As Shown On Drawings UON. Where Devices Are Located Off Grid All Dimensions Are To Device Centerline UON.
2. See A-C-092 For Grid Set Out Information
3. See A-C-692 For All Device Mounting Heights And Locations.
4. Inside Face Of Partitions At Floor Openings To Be Aligned With Edge Of Floor Opening UON
5. In The Event Of Conflict Between Data Shown On Drawings And Data In The Specification, The Drawings Shall Govern. Detail Drawings Take Precedent Over Drawings Of Larger Scope.

Owner
Storm King Art Center
1 Museum Road
New Windsor, NY 12553
+1 (845) 534-3115

Design Architect
heneghan peng architects
14-16 Lord Edward Street
Dublin, D02 YC63
+353 1 633 9000

Executive Architect
WXY Architecture + Urban Design
224 Centre Street, 5th Floor
New York, NY 10013
+1 (212) 219-1953

Landscape Architect
Gustafson Porter + Bowman
1 Cobham Mews
London, MW1 9SB
+44 020 7284 8950

Reed Hilderbrand LLC
33 Whitney Avenue, 3rd Floor
New Haven, CT 06510
+1 (617) 923-2422

Structural & Lighting
ARUP
77 Water Street
New York, NY 10005
+1 (212) 896-3000

MEPF & IT
BuroHappold
100 Broadway #23
New York, NY 10005
+1 (212) 616-0228

Civil
VHB
100 Great Oaks Blvd., Suite 118
Albany, NY 12203
+1 (518) 389-3606

AV & Acoustics
LSTN Consultants
76 Beaver Street, 2nd Floor
New York, NY 10005
+1 (347) 788-0810

Facade
Front Inc.
100 E. Broadway Street, #501
New York, NY 10002
+1 (212) 242-2220

Key Plan

Description	Date
Filing Set	06/17/22

Project

Storm King Art Center

C.F.M. Building

Seal

NOT FOR CONSTRUCTION

Drawing Title

Room Plan, RCP & Elevations - 107

Date	06/17/22
Scale	As indicated
Drawing Number	A-C-607
Sheet Size	ARCH D

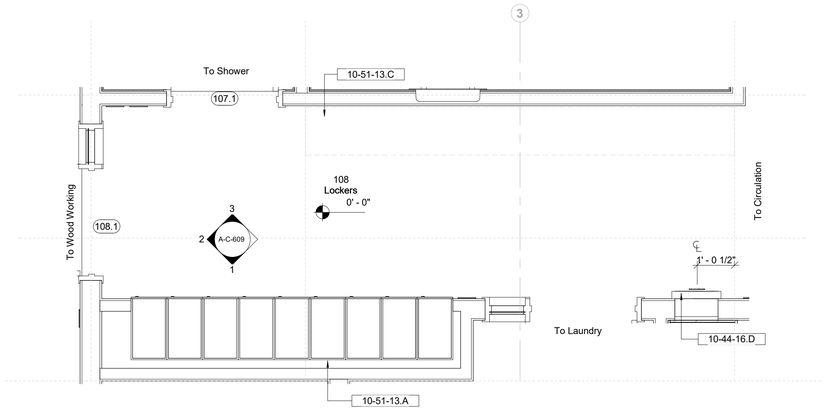

1 Room Plan - 108
1/2" = 1'-0"

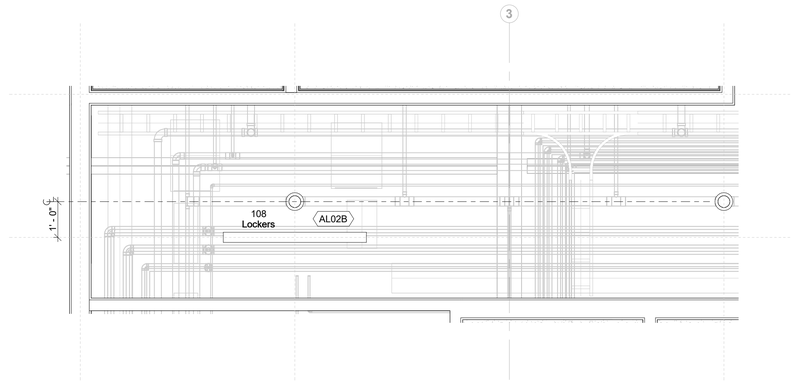

2 Room RCP - 108
1/2" = 1'-0"

Keynote Legend

Keynote	*Description*
10-44-16.D	Defibrillator Cabinet, Recessed
10-51-13.A	Plastic Laminate Lockers, Interior
10-51-13.C	Bench

Plan & RCP Legend

- Floor Drain
- Linear Floor Drain
- Sprinkler Head - Upright
- Sprinkler Head - Concealed Pendent
- Sprinkler Head - Wall Mounted
- Ceiling Mounted Diffuser
- Lighting Fixture

Sheet Notes

1. All Devices To Be Centered/Aligned to Grid References As Shown On Drawings UON. Where Devices Are Located Off Grid All Dimensions Are To Device Centerline UON.
2. See A-C-092 For Grid Set Out Information
3. See A-C-692 For All Device Mounting Heights And Locations.
4. Inside Face Of Partitions At Floor Openings To Be Aligned With Edge Of Floor Opening UON
5. In The Event Of Conflict Between Data Shown On Drawings And Data In The Specification, The Drawings Shall Govern. Detail Drawings Take Precedent Over Drawings Of Larger Scope.

Owner
Storm King Art Center
1 Museum Road
New Windsor, NY 12553
+1 (845) 534-3115

Design Architect
heneghan peng architects
14-16 Lord Edward Street
Dublin, D02 YC63
+353 1 633 9000

Executive Architect
WXY Architecture + Urban Design
224 Centre Street, 5th Floor
New York, NY 10013
+1 (212) 219-1953

Landscape Architect
Gustafson Porter + Bowman
1 Cobham Mews
London, MW1 9SB
+44 020 7284 8950

Reed Hilderbrand LLC
33 Whitney Avenue, 3rd Floor
New Haven, CT 06510
+1 (617) 923-2422

Structural & Lighting
ARUP
77 Water Street
New York, NY 10005
+1 (212) 896-3000

MEPF & IT
BuroHappold
100 Broadway #23
New York, NY 10005
+1 (212) 616-0228

Civil
VHB
100 Great Oaks Blvd., Suite 118
Albany, NY 12203
+1 (518) 389-3606

AV & Acoustics
LSTN Consultants
76 Beaver Street, 2nd Floor
New York, NY 10005
+1 (347) 788-0810

Facade
Front Inc.
100 E. Broadway Street, #501
New York, NY 10002
+1 (212) 242-2220

Key Plan

Description	Date
Filing Set	06/17/22

Project

Storm King Art Center

C.F.M. Building

Seal

NOT FOR CONSTRUCTION

Drawing Title

Room Plan & RCP -108

Date	06/17/22
Scale	As indicated
Drawing Number	A-C-608
Sheet Size	ARCH D

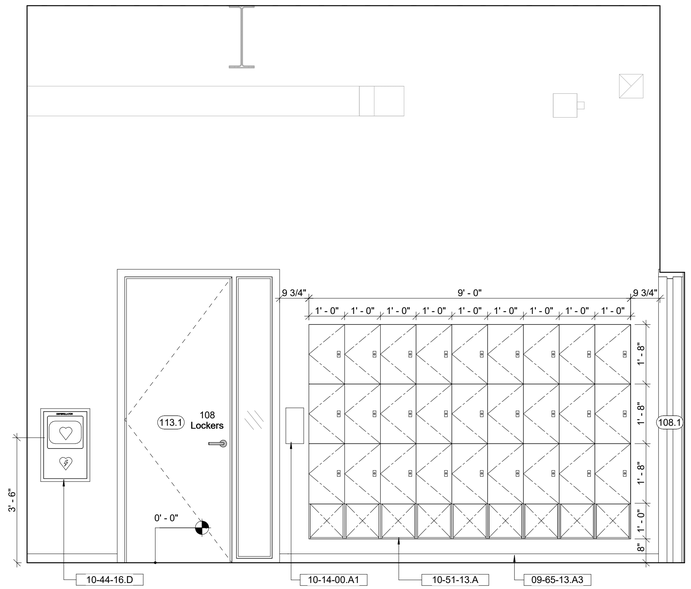

1 Room Elevation - 108 - East
1/2" = 1'-0"

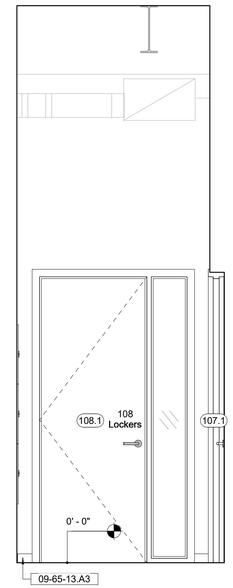

2 Room Elevation - 108 - South
1/2" = 1'-0"

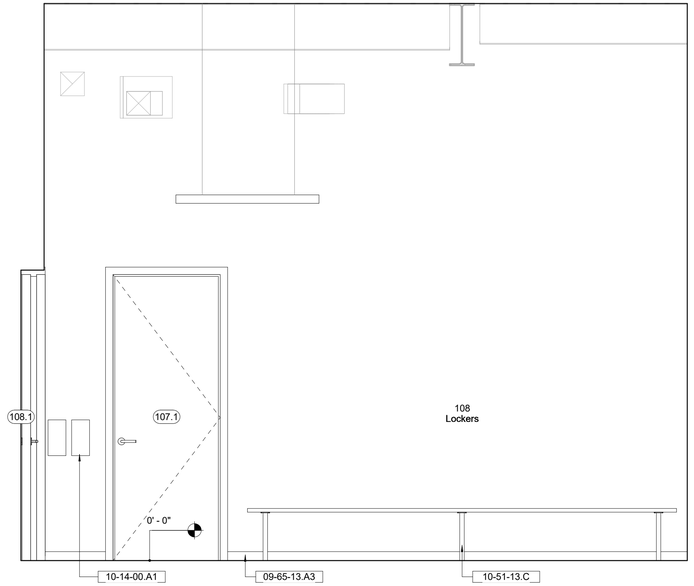

3 Room Elevation - 108 - West
1/2" = 1'-0"

Keynote Legend

Keynote	*Description*
09-65-13.A3	Resilient Base, 3"-high
10-14-00.A1	Interior Signage
10-44-16.D	Defibrillator Cabinet, Recessed
10-51-13.A	Plastic Laminate Lockers, Interior
10-51-13.C	Bench

Owner
Storm King Art Center
1 Museum Road
New Windsor, NY 12553
+1 (845) 534-3115

Design Architect
heneghan peng architects
14-16 Lord Edward Street
Dublin, D02 YC63
+353 1 633 9000

Executive Architect
WXY Architecture + Urban Design
224 Centre Street, 5th Floor
New York, NY 10013
+1 (212) 219-1953

Landscape Architect
Gustafson Porter + Bowman
1 Cobham Mews
London, MW1 9SB
+44 020 7284 8950

Reed Hilderbrand LLC
33 Whitney Avenue, 3rd Floor
New Haven, CT 06510
+1 (617) 923-2422

Structural & Lighting
ARUP
77 Water Street
New York, NY 10005
+1 (212) 896-3000

MEPF & IT
BuroHappold
100 Broadway #23
New York, NY 10005
+1 (212) 616-0228

Civil
VHB
100 Great Oaks Blvd., Suite 118
Albany, NY 12203
+1 (518) 389-3606

AV & Acoustics
LSTN Consultants
76 Beaver Street, 2nd Floor
New York, NY 10005
+1 (347) 788-0810

Facade
Front Inc.
100 E. Broadway Street, #501
New York, NY 10002
+1 (212) 242-2220

Key Plan

Description	Date
Filing Set	06/17/22

Project

Storm King Art Center

C.F.M. Building

Seal

NOT FOR CONSTRUCTION

Drawing Title

Room Elevations - 108

Date	06/17/22
Scale	1/2" = 1'-0"
Drawing Number	A-C-609
Sheet Size	ARCH D

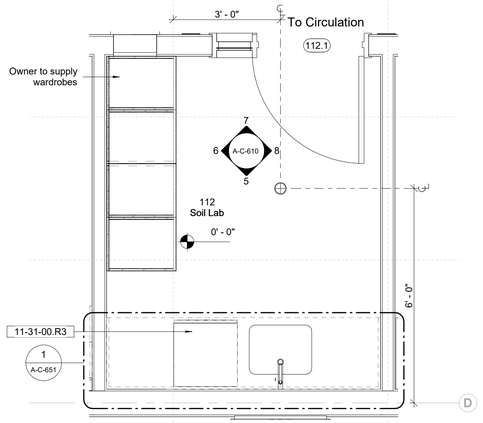

1 Room Plan - 112
1/2" = 1'-0"

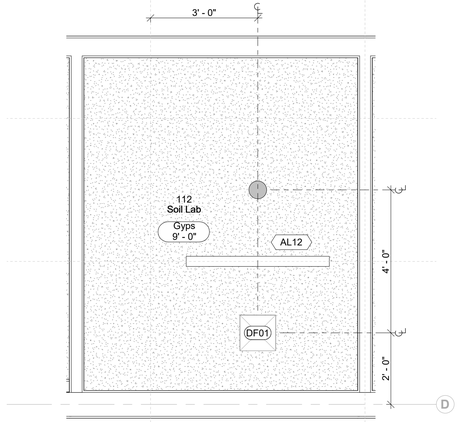

2 Room RCP - 112
1/2" = 1'-0"

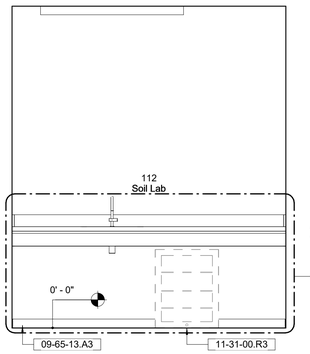

5 Room Elevation - 112 - East
1/2" = 1'-0"

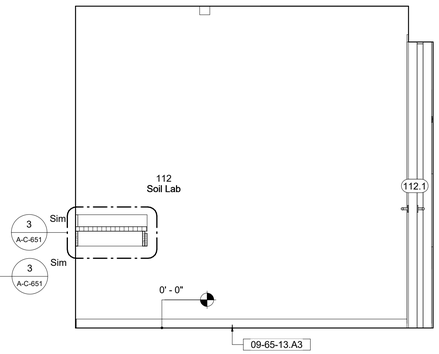

6 Room Elevation - 112 - South
1/2" = 1'-0"

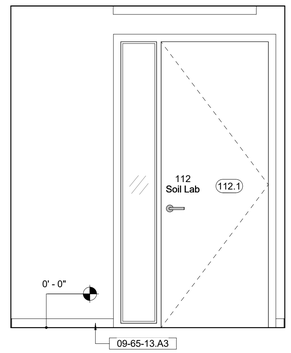

7 Room Elevation - 112 - West
1/2" = 1'-0"

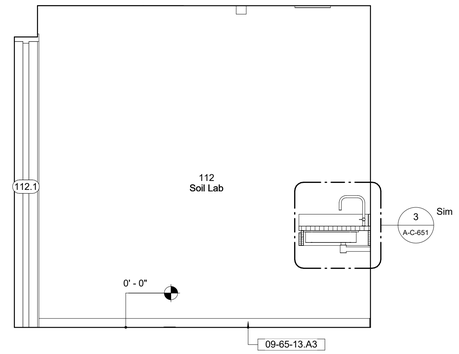

8 Room Elevation - 112 - North
1/2" = 1'-0"

Keynote Legend

Keynote	*Description*
09-65-13.A3	Resilient Base, 3"-high
11-31-00.R3	Refrigerator, Undercounter

Plan & RCP Legend

- Floor Drain
- Linear Floor Drain
- Sprinkler Head - Upright
- Sprinkler Head - Concealed Pendent
- Sprinkler Head - Wall Mounted
- Ceiling Mounted Diffuser
- Lighting Fixture

Sheet Notes

1. All Devices To Be Centered/Aligned to Grid References As Shown On Drawings UON. Where Devices Are Located Off Grid All Dimensions Are To Device Centerline UON.
2. See A-C-092 For Grid Set Out Information
3. See A-C-692 For All Device Mounting Heights And Locations.
4. Inside Face Of Partitions At Floor Openings To Be Aligned With Edge Of Floor Opening UON
5. In The Event Of Conflict Between Data Shown On Drawings And Data In The Specification, The Drawings Shall Govern. Detail Drawings Take Precedent Over Drawings Of Larger Scope.

Owner
Storm King Art Center
1 Museum Road
New Windsor, NY 12553
+1 (845) 534-3115

Design Architect
heneghan peng architects
14-16 Lord Edward Street
Dublin, D02 YC63
+353 1 633 9000

Executive Architect
WXY Architecture + Urban Design
224 Centre Street, 5th Floor
New York, NY 10013
+1 (212) 219-1953

Landscape Architect
Gustafson Porter + Bowman
1 Cobham Mews
London, MW1 9SB
+44 020 7284 8950

Reed Hilderbrand LLC
33 Whitney Avenue, 3rd Floor
New Haven, CT 06510
+1 (617) 923-2422

Structural & Lighting
ARUP
77 Water Street
New York, NY 10005
+1 (212) 896-3000

MEPF & IT
BuroHappold
100 Broadway #23
New York, NY 10005
+1 (212) 616-0228

Civil
VHB
100 Great Oaks Blvd., Suite 118
Albany, NY 12203
+1 (518) 389-3606

AV & Acoustics
LSTN Consultants
76 Beaver Street, 2nd Floor
New York, NY 10005
+1 (347) 788-0810

Facade
Front Inc.
100 E. Broadway Street, #501
New York, NY 10002
+1 (212) 242-2220

Key Plan

Description	Date
Filing Set	06/17/22

Project

Storm King Art Center

C.F.M. Building

Seal

NOT FOR CONSTRUCTION

Drawing Title

Room Plan, RCP & Elevations - 112

Date	06/17/22
Scale	As indicated
Drawing Number	A-C-610
Sheet Size	ARCH D

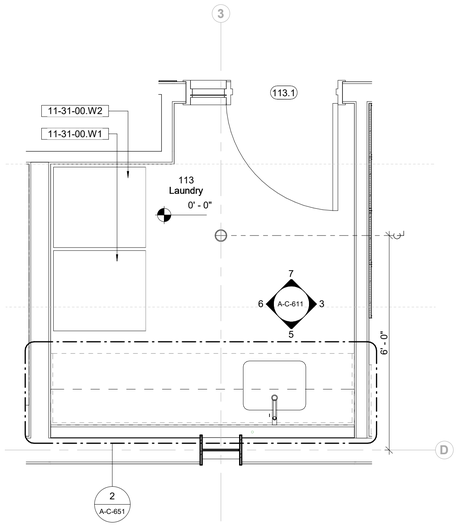

1 Room Plan - 113
1/2" = 1'-0"

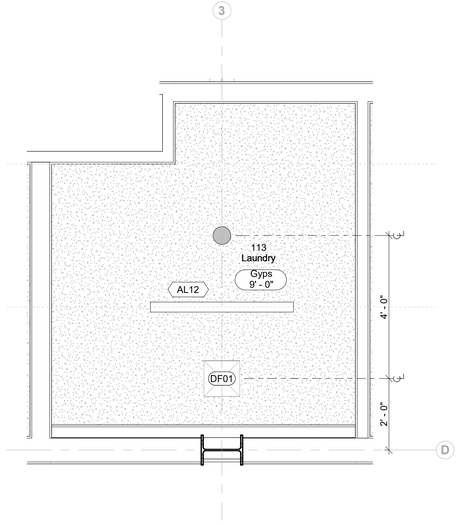

2 Room RCP - 113
1/2" = 1'-0"

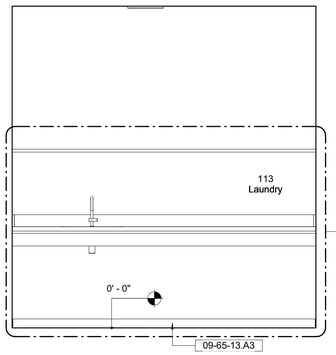

5 Room Elevation - 113 - East
1/2" = 1'-0"

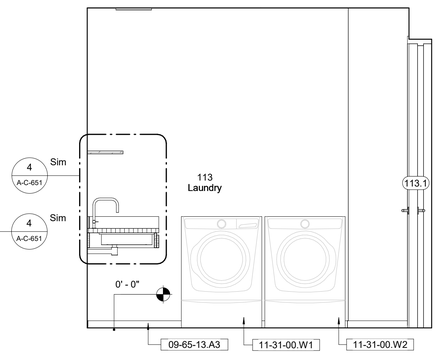

6 Room Elevation - 113 - South
1/2" = 1'-0"

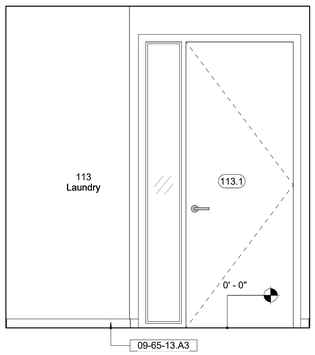

7 Room Elevation - 113 - West
1/2" = 1'-0"

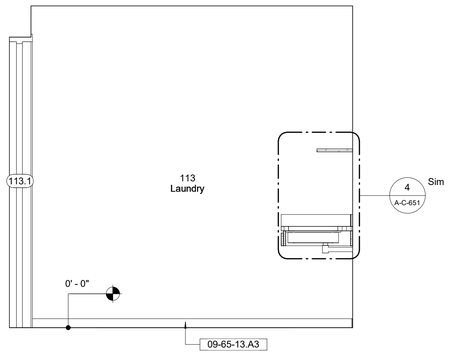

3 Room Elevation - 113 - North
1/2" = 1'-0"

Keynote Legend

Keynote	*Description*
09-65-13.A3	Resilient Base, 3"-high
11-31-00.W1	Washing Machine
11-31-00.W2	Dryer

Plan & RCP Legend

- Floor Drain
- Linear Floor Drain
- Sprinkler Head - Upright
- Sprinkler Head - Concealed Pendent
- Sprinkler Head - Wall Mounted
- Ceiling Mounted Diffuser
- Lighting Fixture

Sheet Notes

1. All Devices To Be Centered/Aligned to Grid References As Shown On Drawings UON. Where Devices Are Located Off Grid All Dimensions Are To Device Centerline UON.
2. See A-C-092 For Grid Set Out Information
3. See A-C-692 For All Device Mounting Heights And Locations.
4. Inside Face Of Partitions At Floor Openings To Be Aligned With Edge Of Floor Opening UON
5. In The Event Of Conflict Between Data Shown On Drawings And Data In The Specification, The Drawings Shall Govern. Detail Drawings Take Precedent Over Drawings Of Larger Scope.

Owner
Storm King Art Center
1 Museum Road
New Windsor, NY 12553
+1 (845) 534-3115

Design Architect
heneghan peng architects
14-16 Lord Edward Street
Dublin, D02 YC63
+353 1 633 9000

Executive Architect
WXY Architecture + Urban Design
224 Centre Street, 5th Floor
New York, NY 10013
+1 (212) 219-1953

Landscape Architect
Gustafson Porter + Bowman
1 Cobham Mews
London, MW1 9SB
+44 020 7284 8950

Reed Hilderbrand LLC
33 Whitney Avenue, 3rd Floor
New Haven, CT 06510
+1 (617) 923-2422

Structural & Lighting
ARUP
77 Water Street
New York, NY 10005
+1 (212) 896-3000

MEPF & IT
BuroHappold
100 Broadway #23
New York, NY 10005
+1 (212) 616-0228

Civil
VHB
100 Great Oaks Blvd., Suite 118
Albany, NY 12203
+1 (518) 389-3606

AV & Acoustics
LSTN Consultants
76 Beaver Street, 2nd Floor
New York, NY 10005
+1 (347) 788-0810

Facade
Front Inc.
100 E. Broadway Street, #501
New York, NY 10002
+1 (212) 242-2220

Key Plan

Description	Date
Filing Set	06/17/22

Project

Storm King Art Center

C.F.M. Building

Seal

NOT FOR CONSTRUCTION

Drawing Title

Room Plan, RCP & Elevations - 113

Date	06/17/22
Scale	As indicated
Drawing Number	A-C-611
Sheet Size	ARCH D

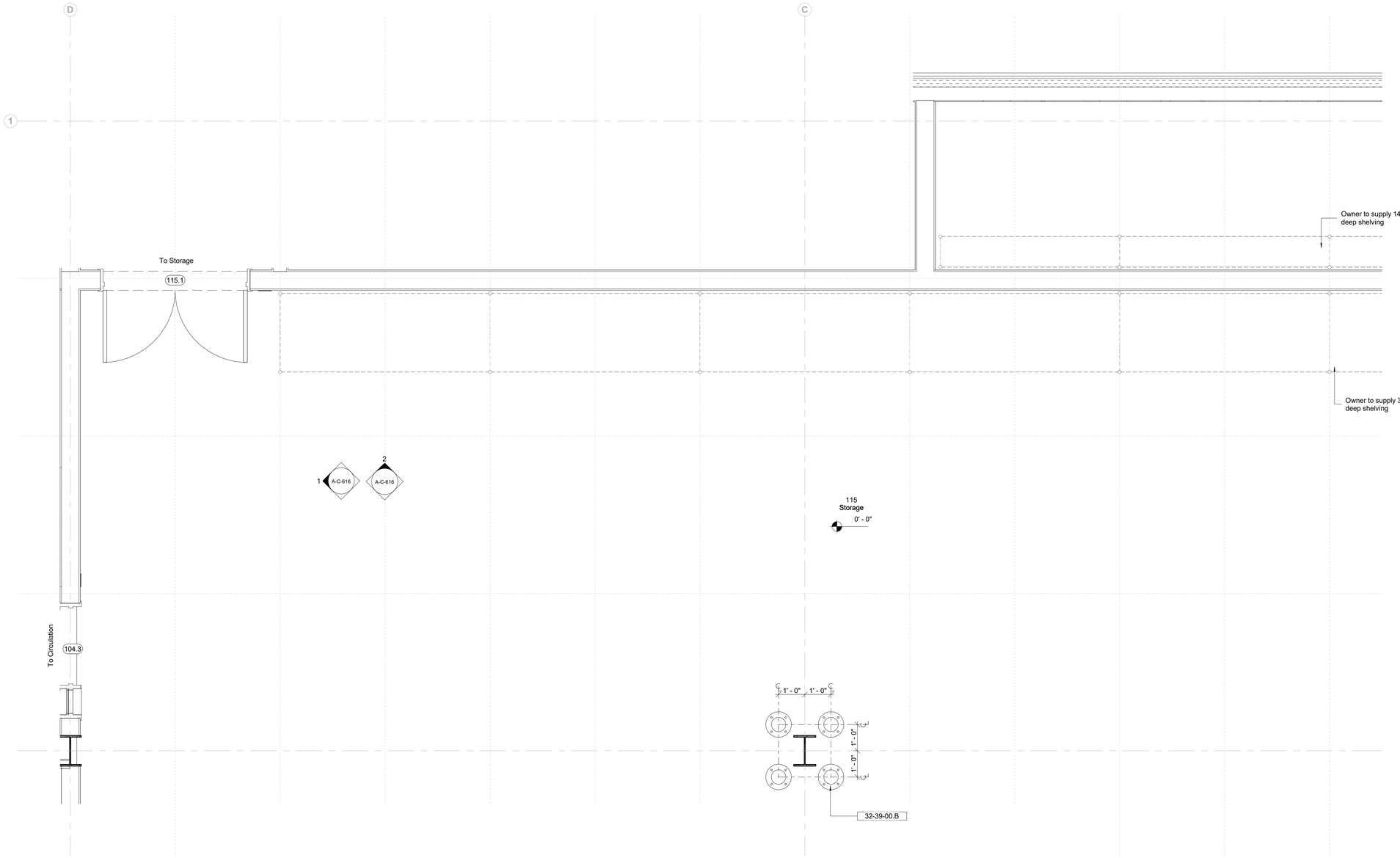

1 Room Plan - 115 - West
1/2" = 1'-0"

Keynote Legend

Keynote	Description
32-39-00.B	Bollard - Fixed Base Plate

Plan & RCP Legend

- Floor Drain
- Linear Floor Drain
- Sprinkler Head - Upright
- Sprinkler Head - Concealed Pendent
- Sprinkler Head - Wall Mounted
- Ceiling Mounted Diffuser
- Lighting Fixture

Sheet Notes

1. All Devices To Be Centered/Aligned to Grid References As Shown On Drawings UON. Where Devices Are Located Off Grid All Dimensions Are To Device Centerline UON.
2. See A-C-092 For Grid Set Out Information
3. See A-C-692 For All Device Mounting Heights And Locations.
4. Inside Face Of Partitions At Floor Openings To Be Aligned With Edge Of Floor Opening UON
5. In The Event Of Conflict Between Data Shown On Drawings And Data In The Specification, The Drawings Shall Govern. Detail Drawings Take Precedent Over Drawings Of Larger Scope.

Owner
Storm King Art Center
1 Museum Road
New Windsor, NY 12553
+1 (845) 534-3115

Design Architect
heneghan peng architects
14-16 Lord Edward Street
Dublin, D02 YC63
+353 1 633 9000

Executive Architect
WXY Architecture + Urban Design
224 Centre Street, 5th Floor
New York, NY 10013
+1 (212) 219-1953

Landscape Architect
Gustafson Porter + Bowman
1 Cobham Mews
London, MW1 9SB
+44 020 7284 8950

Reed Hilderbrand LLC
33 Whitney Avenue, 3rd Floor
New Haven, CT 06510
+1 (617) 923-2422

Structural & Lighting
ARUP
77 Water Street
New York, NY 10005
+1 (212) 896-3000

MEPF & IT
BuroHappold
100 Broadway #23
New York, NY 10005
+1 (212) 616-0228

Civil
VHB
100 Great Oaks Blvd., Suite 118
Albany, NY 12203
+1 (518) 389-3606

AV & Acoustics
LSTN Consultants
76 Beaver Street, 2nd Floor
New York, NY 10005
+1 (347) 788-0810

Facade
Front Inc.
100 E. Broadway Street, #501
New York, NY 10002
+1 (212) 242-2220

Key Plan

N

Description	Date
Filing Set	06/17/22

Project

Storm King Art Center

C.F.M. Building

Seal

NOT FOR CONSTRUCTION

Drawing Title

Room Plan - 115

Date	06/17/22
Scale	As indicated
Drawing Number	A-C-612
Sheet Size	ARCH D

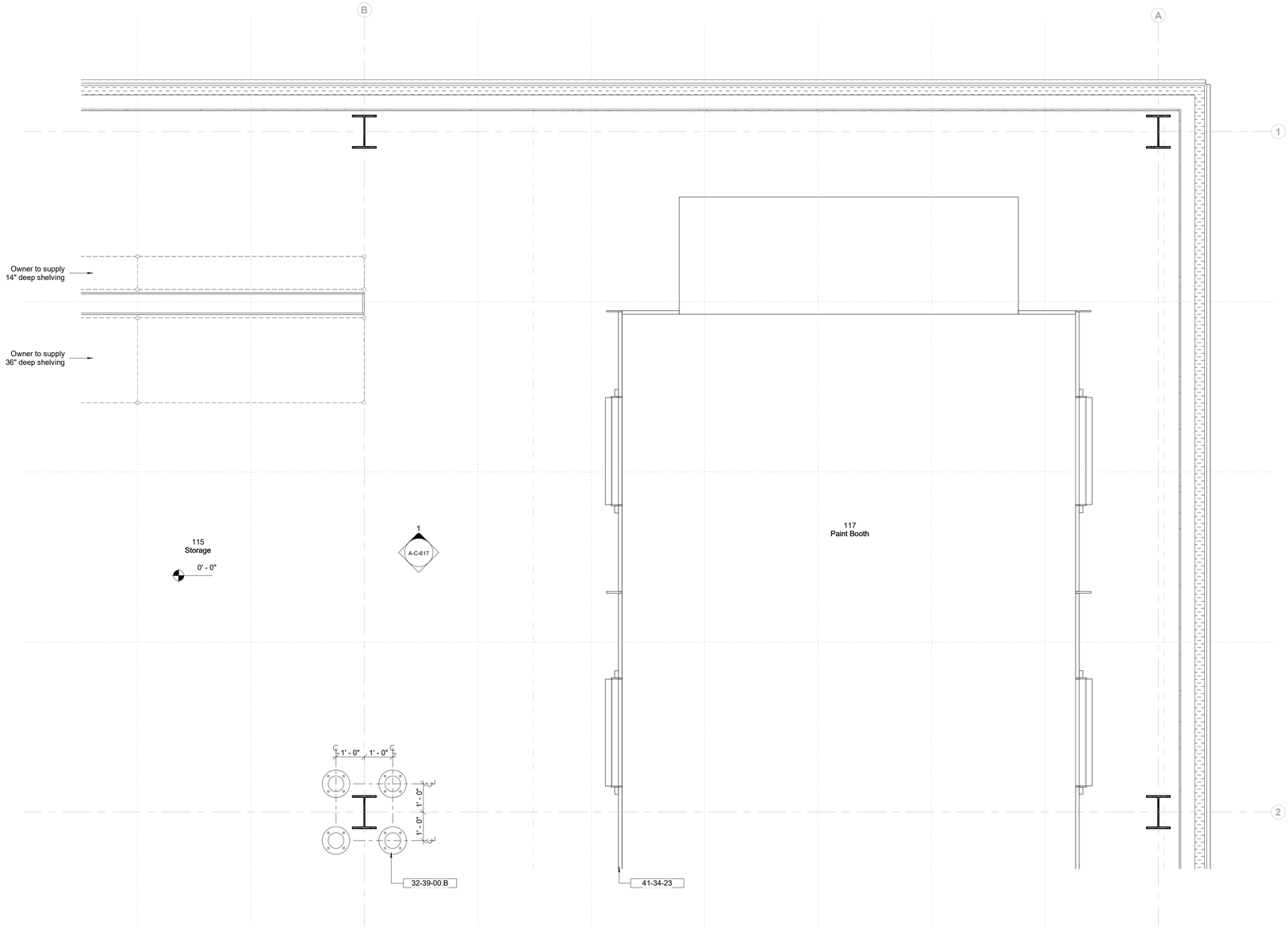

1 Room Plan - 115 - East
1/2" = 1'-0"

Keynote Legend

Keynote	Description
32-39-00.B	Bollard - Fixed Base Plate
41-34-23	Semi-Downdraft Spray Paint Booth

Plan & RCP Legend

- Floor Drain
- Linear Floor Drain
- Sprinkler Head - Upright
- Sprinkler Head - Concealed Pendent
- Sprinkler Head - Wall Mounted
- Ceiling Mounted Diffuser
- Lighting Fixture

Sheet Notes

1. All Devices To Be Centered/Aligned to Grid References As Shown On Drawings UON. Where Devices Are Located Off Grid All Dimensions Are To Device Centerline UON.
2. See A-C-092 For Grid Set Out Information
3. See A-C-692 For All Device Mounting Heights And Locations.
4. Inside Face Of Partitions At Floor Openings To Be Aligned With Edge Of Floor Opening UON
5. In The Event Of Conflict Between Data Shown On Drawings And Data In The Specification, The Drawings Shall Govern. Detail Drawings Take Precedent Over Drawings Of Larger Scope.

Owner
Storm King Art Center
1 Museum Road
New Windsor, NY 12553
+1 (845) 534-3115

Design Architect
heneghan peng architects
14-16 Lord Edward Street
Dublin, D02 YC63
+353 1 633 9000

Executive Architect
WXY Architecture + Urban Design
224 Centre Street, 5th Floor
New York, NY 10013
+1 (212) 219-1953

Landscape Architect
Gustafson Porter + Bowman
1 Cobham Mews
London, MW1 9SB
+44 020 7284 8950

Reed Hilderbrand LLC
33 Whitney Avenue, 3rd Floor
New Haven, CT 06510
+1 (617) 923-2422

Structural & Lighting
ARUP
77 Water Street
New York, NY 10005
+1 (212) 896-3000

MEPF & IT
BuroHappold
100 Broadway #23
New York, NY 10005
+1 (212) 616-0228

Civil
VHB
100 Great Oaks Blvd., Suite 118
Albany, NY 12203
+1 (518) 389-3606

AV & Acoustics
LSTN Consultants
76 Beaver Street, 2nd Floor
New York, NY 10005
+1 (347) 788-0810

Facade
Front Inc.
100 E. Broadway Street, #501
New York, NY 10002
+1 (212) 242-2220

Key Plan

N

Description	Date
Filing Set	06/17/22

Project

Storm King Art Center

C.F.M. Building

Seal

NOT FOR CONSTRUCTION

Drawing Title

Room Plan - 115

Date	06/17/22
Scale	As indicated
Drawing Number	A-C-613
Sheet Size	ARCH D

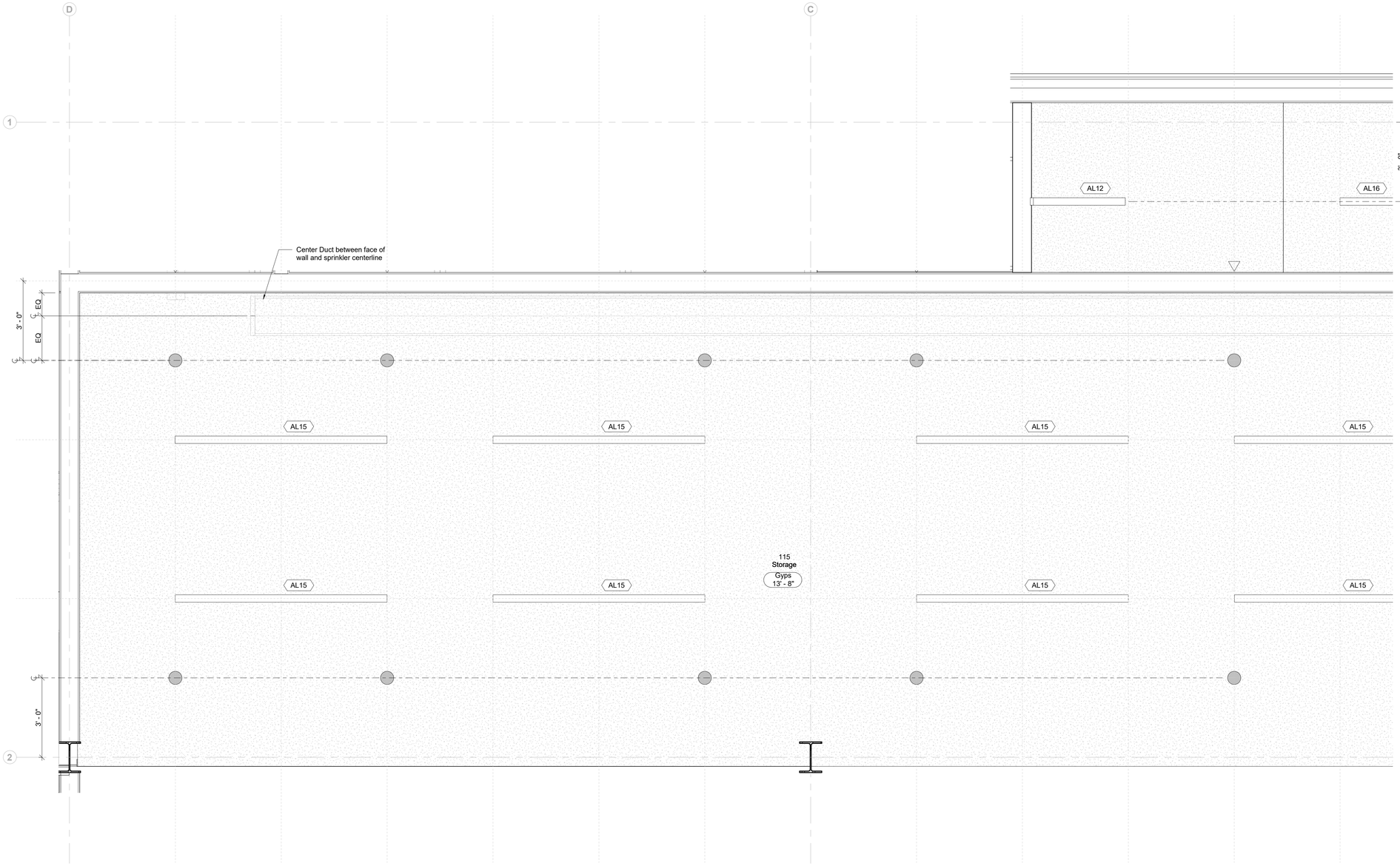

1 Room RCP - 115 - West
1/2" = 1'-0"

Plan & RCP Legend

- Floor Drain
- Linear Floor Drain
- Sprinkler Head - Upright
- Sprinkler Head - Concealed Pendent
- Sprinkler Head - Wall Mounted
- Ceiling Mounted Diffuser
- Lighting Fixture

Sheet Notes

1. All Devices To Be Centered/Aligned to Grid References As Shown On Drawings UON. Where Devices Are Located Off Grid All Dimensions Are To Device Centerline UON.
2. See A-C-092 For Grid Set Out Information
3. See A-C-692 For All Device Mounting Heights And Locations.
4. Inside Face Of Partitions At Floor Openings To Be Aligned With Edge Of Floor Opening UON
5. In The Event Of Conflict Between Data Shown On Drawings And Data In The Specification, The Drawings Shall Govern. Detail Drawings Take Precedent Over Drawings Of Larger Scope.

Owner
Storm King Art Center
1 Museum Road
New Windsor, NY 12553
+1 (845) 534-3115

Design Architect
heneghan peng architects
14-16 Lord Edward Street
Dublin, D02 YC63
+353 1 633 9000

Executive Architect
WXY Architecture + Urban Design
224 Centre Street, 5th Floor
New York, NY 10013
+1 (212) 219-1953

Landscape Architect
Gustafson Porter + Bowman
1 Cobham Mews
London, MW1 9SB
+44 020 7284 8950

Reed Hilderbrand LLC
33 Whitney Avenue, 3rd Floor
New Haven, CT 06510
+1 (617) 923-2422

Structural & Lighting
ARUP
77 Water Street
New York, NY 10005
+1 (212) 896-3000

MEPF & IT
BuroHappold
100 Broadway #23
New York, NY 10005
+1 (212) 616-0228

Civil
VHB
100 Great Oaks Blvd., Suite 118
Albany, NY 12203
+1 (518) 389-3606

AV & Acoustics
LSTN Consultants
76 Beaver Street, 2nd Floor
New York, NY 10005
+1 (347) 788-0810

Facade
Front Inc.
100 E. Broadway Street, #501
New York, NY 10002
+1 (212) 242-2220

Key Plan

N

Description	Date
Filing Set	06/17/22

Project

Storm King Art Center

C.F.M. Building

Seal

NOT FOR CONSTRUCTION

Drawing Title

Room RCP - 115

Date	06/17/22
Scale	As indicated
Drawing Number	A-C-614
Sheet Size	ARCH D

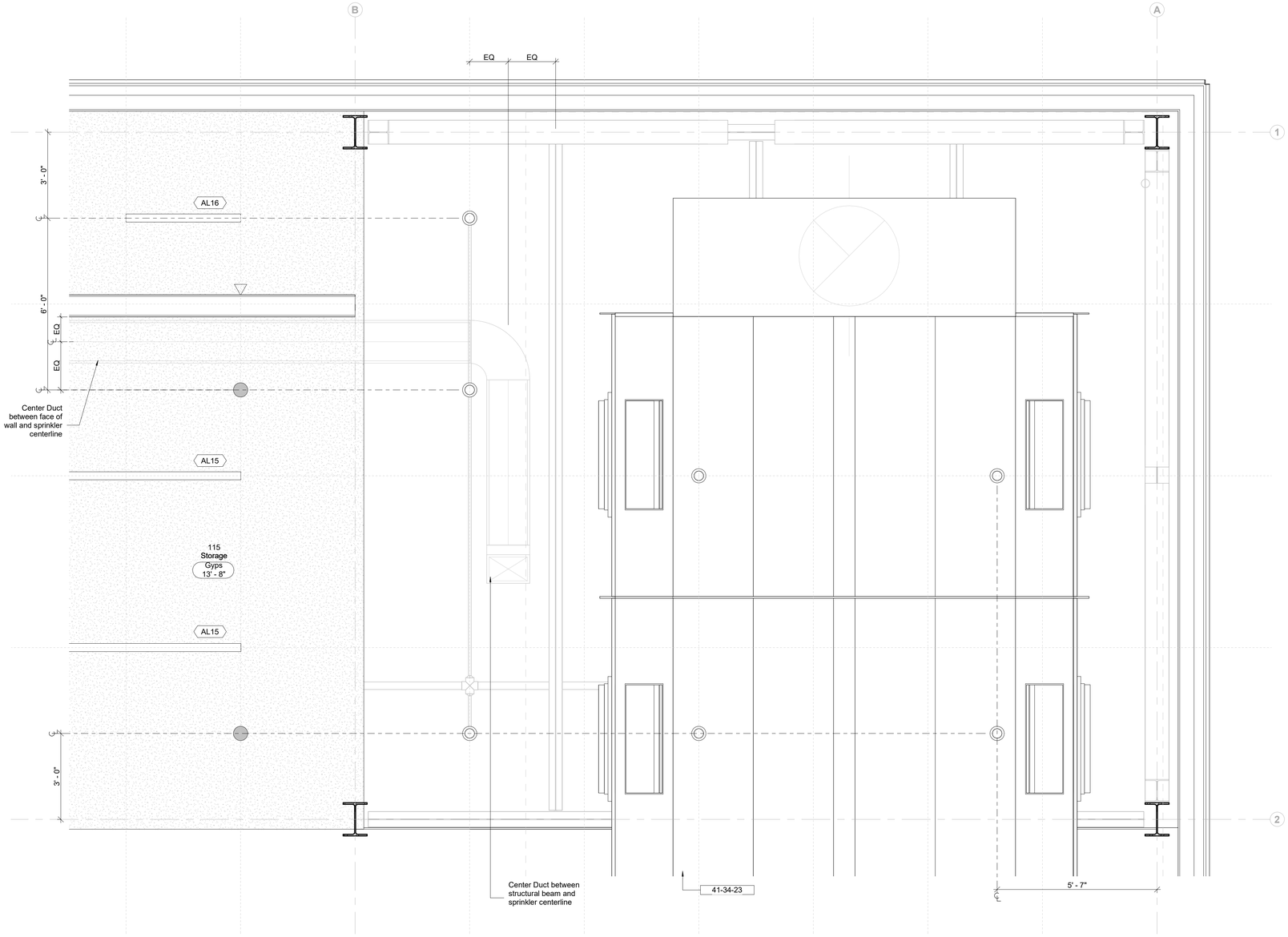

1 Room RCP - 115 - East
1/2" = 1'-0"

Keynote Legend

Keynote	Description
41-34-23	Semi-Downdraft Spray Paint Booth

Plan & RCP Legend

- Floor Drain
- Linear Floor Drain
- Sprinkler Head - Upright
- Sprinkler Head - Concealed Pendent
- Sprinkler Head - Wall Mounted
- Ceiling Mounted Diffuser
- Lighting Fixture

Sheet Notes

1. All Devices To Be Centered/Aligned to Grid References As Shown On Drawings UON. Where Devices Are Located Off Grid All Dimensions Are To Device Centerline UON.
2. See A-C-092 For Grid Set Out Information
3. See A-C-692 For All Device Mounting Heights And Locations.
4. Inside Face Of Partitions At Floor Openings To Be Aligned With Edge Of Floor Opening UON
5. In The Event Of Conflict Between Data Shown On Drawings And Data In The Specification, The Drawings Shall Govern. Detail Drawings Take Precedent Over Drawings Of Larger Scope.

Owner
Storm King Art Center
1 Museum Road
New Windsor, NY 12553
+1 (845) 534-3115

Design Architect
heneghan peng architects
14-16 Lord Edward Street
Dublin, D02 YC63
+353 1 633 9000

Executive Architect
WXY Architecture + Urban Design
224 Centre Street, 5th Floor
New York, NY 10013
+1 (212) 219-1953

Landscape Architect
Gustafson Porter + Bowman
1 Cobham Mews
London, MW1 9SB
+44 020 7284 8950

Reed Hilderbrand LLC
33 Whitney Avenue, 3rd Floor
New Haven, CT 06510
+1 (617) 923-2422

Structural & Lighting
ARUP
77 Water Street
New York, NY 10005
+1 (212) 896-3000

MEPF & IT
BuroHappold
100 Broadway #23
New York, NY 10005
+1 (212) 616-0228

Civil
VHB
100 Great Oaks Blvd., Suite 118
Albany, NY 12203
+1 (518) 389-3606

AV & Acoustics
LSTN Consultants
76 Beaver Street, 2nd Floor
New York, NY 10005
+1 (347) 788-0810

Facade
Front Inc.
100 E. Broadway Street, #501
New York, NY 10002
+1 (212) 242-2220

Key Plan

N

Description	Date
Filing Set	06/17/22

Project

Storm King Art Center

C.F.M. Building

Seal

NOT FOR CONSTRUCTION

Drawing Title

Room RCP - 115

Date	06/17/22
Scale	As indicated
Drawing Number	A-C-615
Sheet Size	ARCH D

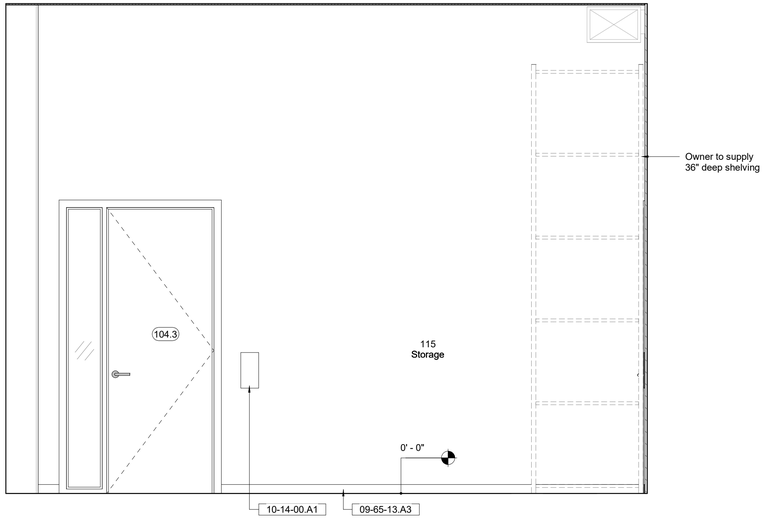

1 Room Elevation - 115 - West
1/2" = 1'-0"

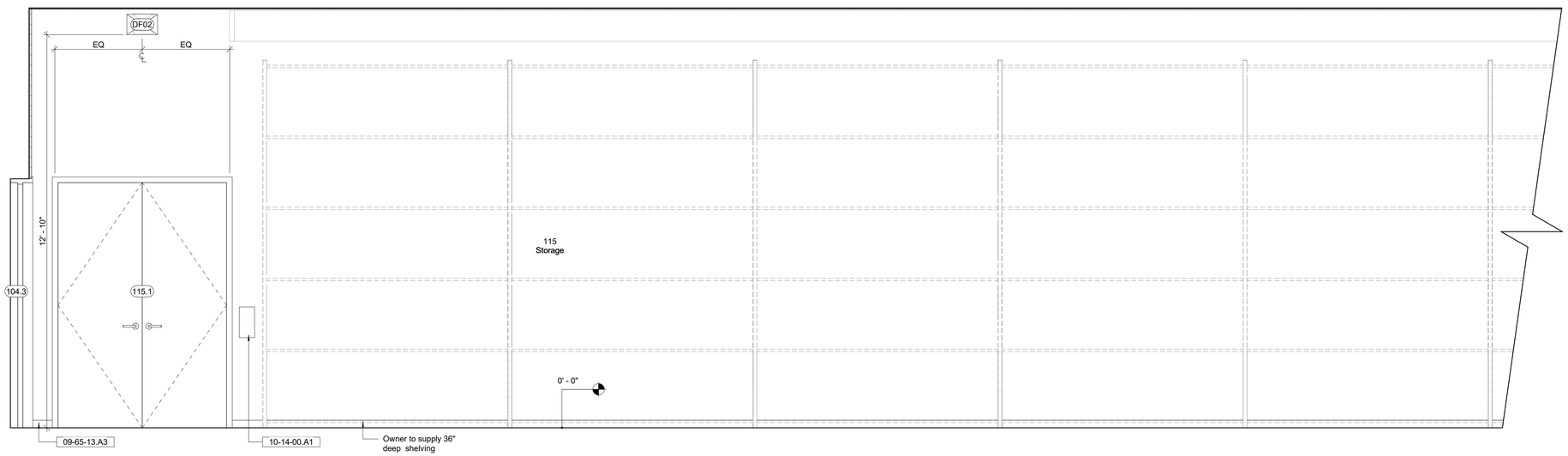

2 Room Elevation - 115 - North 1
1/2" = 1'-0"

Keynote Legend

Keynote	*Description*
09-65-13.A3	Resilient Base, 3"-high
10-14-00.A1	Interior Signage

Owner
Storm King Art Center
1 Museum Road
New Windsor, NY 12553
+1 (845) 534-3115

Design Architect
heneghan peng architects
14-16 Lord Edward Street
Dublin, D02 YC63
+353 1 633 9000

Executive Architect
WXY Architecture + Urban Design
224 Centre Street, 5th Floor
New York, NY 10013
+1 (212) 219-1953

Landscape Architect
Gustafson Porter + Bowman
1 Cobham Mews
London, MW1 9SB
+44 020 7284 8950

Reed Hilderbrand LLC
33 Whitney Avenue, 3rd Floor
New Haven, CT 06510
+1 (617) 923-2422

Structural & Lighting
ARUP
77 Water Street
New York, NY 10005
+1 (212) 896-3000

MEPF & IT
BuroHappold
100 Broadway #23
New York, NY 10005
+1 (212) 616-0228

Civil
VHB
100 Great Oaks Blvd., Suite 118
Albany, NY 12203
+1 (518) 389-3606

AV & Acoustics
LSTN Consultants
76 Beaver Street, 2nd Floor
New York, NY 10005
+1 (347) 788-0810

Facade
Front Inc.
100 E. Broadway Street, #501
New York, NY 10002
+1 (212) 242-2220

Key Plan

Description	Date
Filing Set	06/17/22

Project

Storm King Art Center
C.F.M. Building

Seal

NOT FOR CONSTRUCTION

Drawing Title

Room Elevations - 115

Date	06/17/22
Scale	1/2" = 1'-0"
Drawing Number	A-C-616
Sheet Size	ARCH D

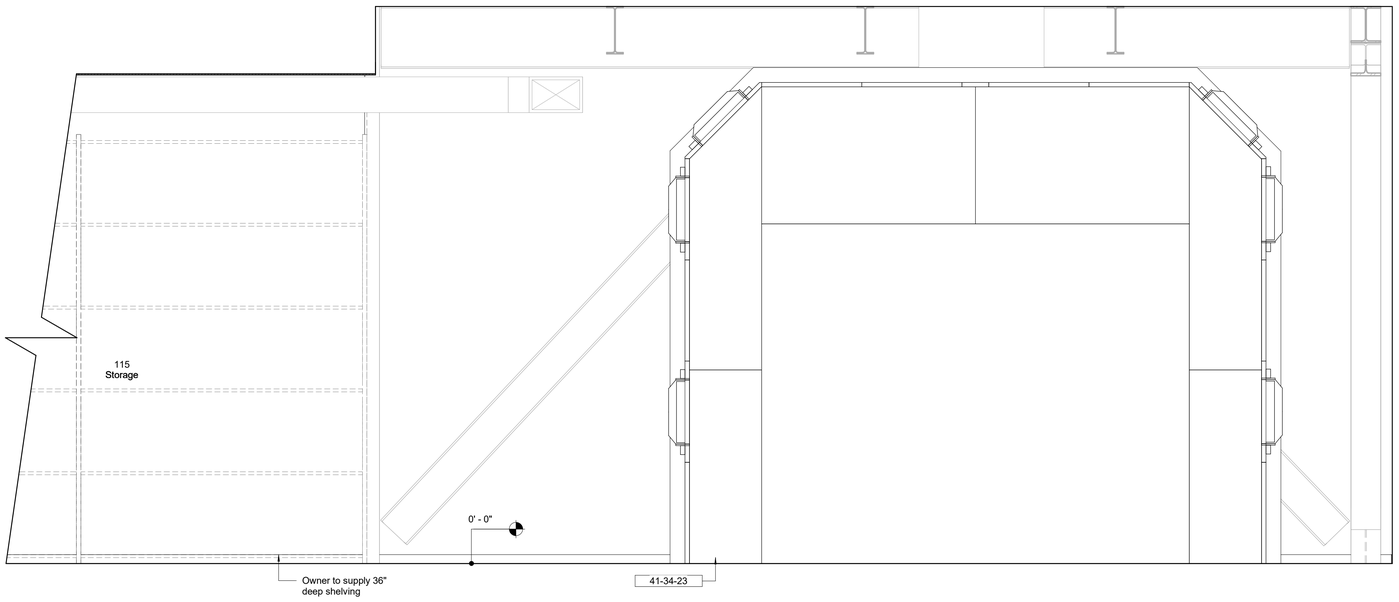

1 Room Elevation - 115 - North 2
1/2" = 1'-0"

Keynote Legend

Keynote	*Description*
41-34-23	Semi-Downdraft Spray Paint Booth

Owner
Storm King Art Center
1 Museum Road
New Windsor, NY 12553
+1 (845) 534-3115

Design Architect
heneghan peng architects
14-16 Lord Edward Street
Dublin, D02 YC63
+353 1 633 9000

Executive Architect
WXY Architecture + Urban Design
224 Centre Street, 5th Floor
New York, NY 10013
+1 (212) 219-1953

Landscape Architect
Gustafson Porter + Bowman
1 Cobham Mews
London, MW1 9SB
+44 020 7284 8950

Reed Hilderbrand LLC
33 Whitney Avenue, 3rd Floor
New Haven, CT 06510
+1 (617) 923-2422

Structural & Lighting
ARUP
77 Water Street
New York, NY 10005
+1 (212) 896-3000

MEPF & IT
BuroHappold
100 Broadway #23
New York, NY 10005
+1 (212) 616-0228

Civil
VHB
100 Great Oaks Blvd., Suite 118
Albany, NY 12203
+1 (518) 389-3606

AV & Acoustics
LSTN Consultants
76 Beaver Street, 2nd Floor
New York, NY 10005
+1 (347) 788-0810

Facade
Front Inc.
100 E. Broadway Street, #501
New York, NY 10002
+1 (212) 242-2220

Key Plan

Description	Date
Filing Set	06/17/22

Project

Storm King Art Center

C.F.M. Building

Seal

NOT FOR CONSTRUCTION

Drawing Title

Room Elevations - 115

Date	06/17/22
Scale	1/2" = 1'-0"
Drawing Number	A-C-617
Sheet Size	ARCH D

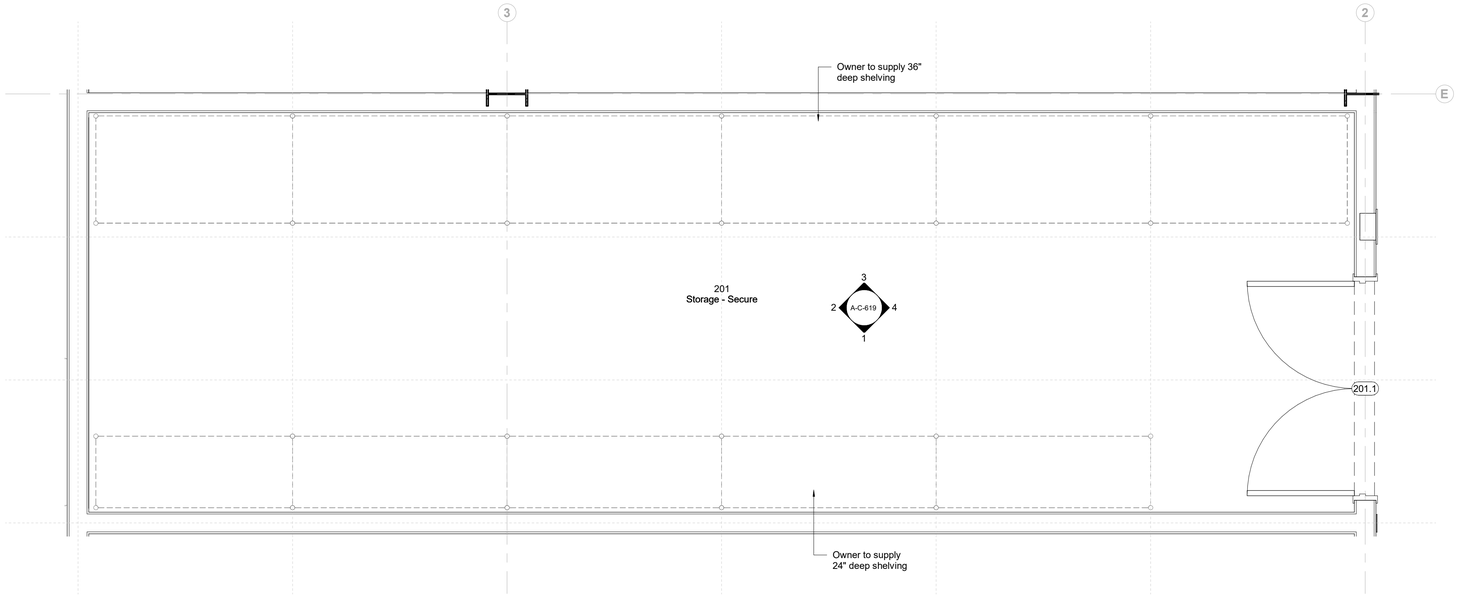

1 Room Plan - 201
1/2" = 1'-0"

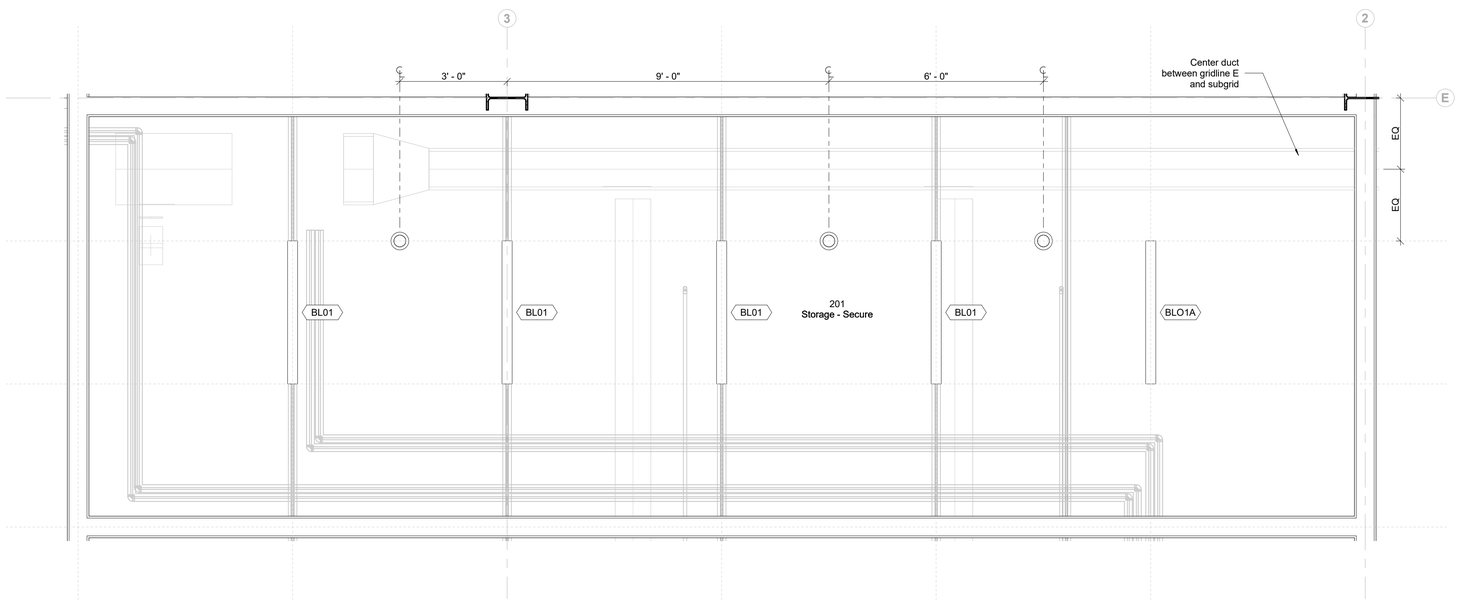

2 Room RCP - 201
1/2" = 1'-0"

Plan & RCP Legend

- Floor Drain
- Linear Floor Drain
- Sprinkler Head - Upright
- Sprinkler Head - Concealed Pendent
- Sprinkler Head - Wall Mounted
- Ceiling Mounted Diffuser
- Lighting Fixture

Sheet Notes

1. All Devices To Be Centered/Aligned to Grid References As Shown On Drawings UON. Where Devices Are Located Off Grid All Dimensions Are To Device Centerline UON.
2. See A-C-092 For Grid Set Out Information
3. See A-C-692 For All Device Mounting Heights And Locations.
4. Inside Face Of Partitions At Floor Openings To Be Aligned With Edge Of Floor Opening UON
5. In The Event Of Conflict Between Data Shown On Drawings And Data In The Specification, The Drawings Shall Govern. Detail Drawings Take Precedent Over Drawings Of Larger Scope.

Owner
Storm King Art Center
1 Museum Road
New Windsor, NY 12553
+1 (845) 534-3115

Design Architect
heneghan peng architects
14-16 Lord Edward Street
Dublin, D02 YC63
+353 1 633 9000

Executive Architect
WXY Architecture + Urban Design
224 Centre Street, 5th Floor
New York, NY 10013
+1 (212) 219-1953

Landscape Architect
Gustafson Porter + Bowman
1 Cobham Mews
London, MW1 9SB
+44 020 7284 8950

Reed Hilderbrand LLC
33 Whitney Avenue, 3rd Floor
New Haven, CT 06510
+1 (617) 923-2422

Structural & Lighting
ARUP
77 Water Street
New York, NY 10005
+1 (212) 896-3000

MEPF & IT
BuroHappold
100 Broadway #23
New York, NY 10005
+1 (212) 616-0228

Civil
VHB
100 Great Oaks Blvd., Suite 118
Albany, NY 12203
+1 (518) 389-3606

AV & Acoustics
LSTN Consultants
76 Beaver Street, 2nd Floor
New York, NY 10005
+1 (347) 788-0810

Facade
Front Inc.
100 E. Broadway Street, #501
New York, NY 10002
+1 (212) 242-2220

Key Plan

Description	Date
Filing Set	06/17/22

Project

Storm King Art Center

C.F.M. Building

Seal

NOT FOR CONSTRUCTION

Drawing Title

Room Plan & RCP - 201

Date	06/17/22
Scale	As indicated
Drawing Number	A-C-618
Sheet Size	ARCH D

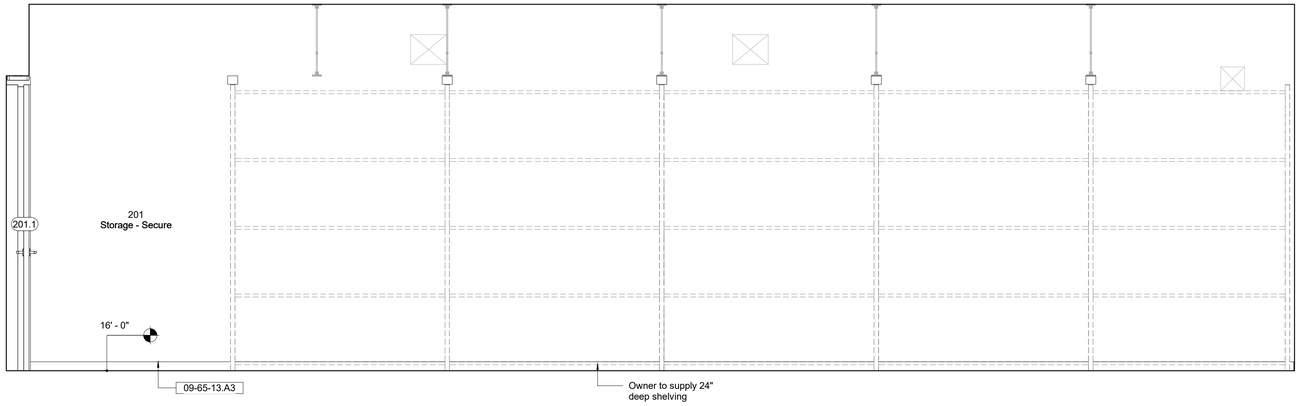

1 Room Elevation - 201 - East
1/2" = 1'-0"

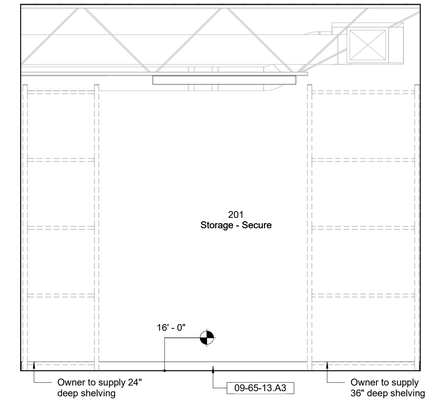

2 Room Elevation - 201 - South
1/2" = 1'-0"

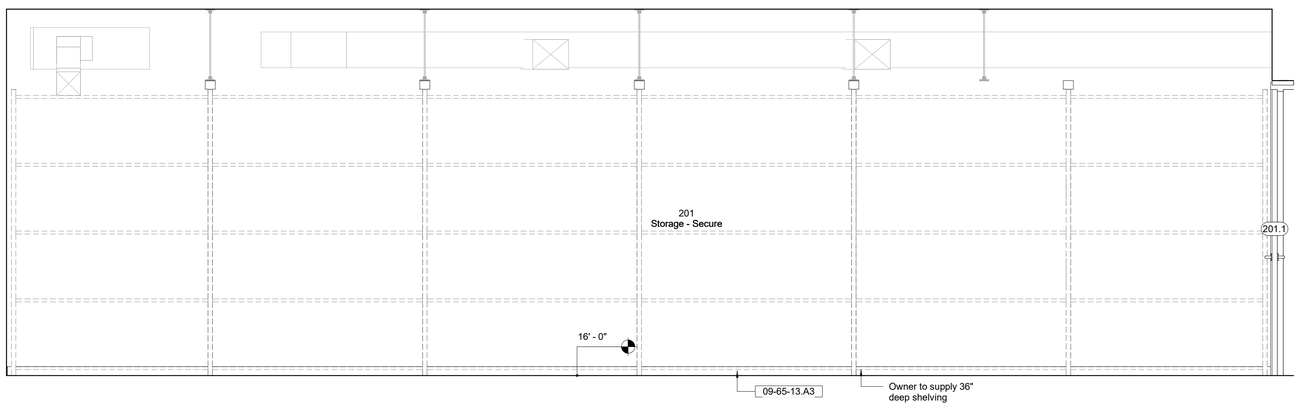

3 Room Elevation - 201 - West
1/2" = 1'-0"

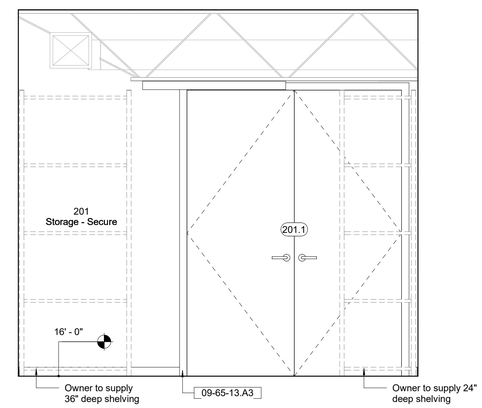

4 Room Elevation - 201 - North
1/2" = 1'-0"

Keynote Legend

Keynote	*Description*
09-65-13.A3	Resilient Base, 3"-high

Owner
Storm King Art Center
1 Museum Road
New Windsor, NY 12553
+1 (845) 534-3115

Design Architect
heneghan peng architects
14-16 Lord Edward Street
Dublin, D02 YC63
+353 1 633 9000

Executive Architect
WXY Architecture + Urban Design
224 Centre Street, 5th Floor
New York, NY 10013
+1 (212) 219-1953

Landscape Architect
Gustafson Porter + Bowman
1 Cobham Mews
London, MW1 9SB
+44 020 7284 8950

Reed Hilderbrand LLC
33 Whitney Avenue, 3rd Floor
New Haven, CT 06510
+1 (617) 923-2422

Structural & Lighting
ARUP
77 Water Street
New York, NY 10005
+1 (212) 896-3000

MEPF & IT
BuroHappold
100 Broadway #23
New York, NY 10005
+1 (212) 616-0228

Civil
VHB
100 Great Oaks Blvd., Suite 118
Albany, NY 12203
+1 (518) 389-3606

AV & Acoustics
LSTN Consultants
76 Beaver Street, 2nd Floor
New York, NY 10005
+1 (347) 788-0810

Facade
Front Inc.
100 E. Broadway Street, #501
New York, NY 10002
+1 (212) 242-2220

Key Plan

Description	Date
Filing Set	06/17/22

Project

Storm King Art Center

C.F.M. Building

Seal

NOT FOR CONSTRUCTION

Drawing Title

Room Elevations - 201

Date	06/17/22
Scale	1/2" = 1'-0"
Drawing Number	A-C-619
Sheet Size	ARCH D

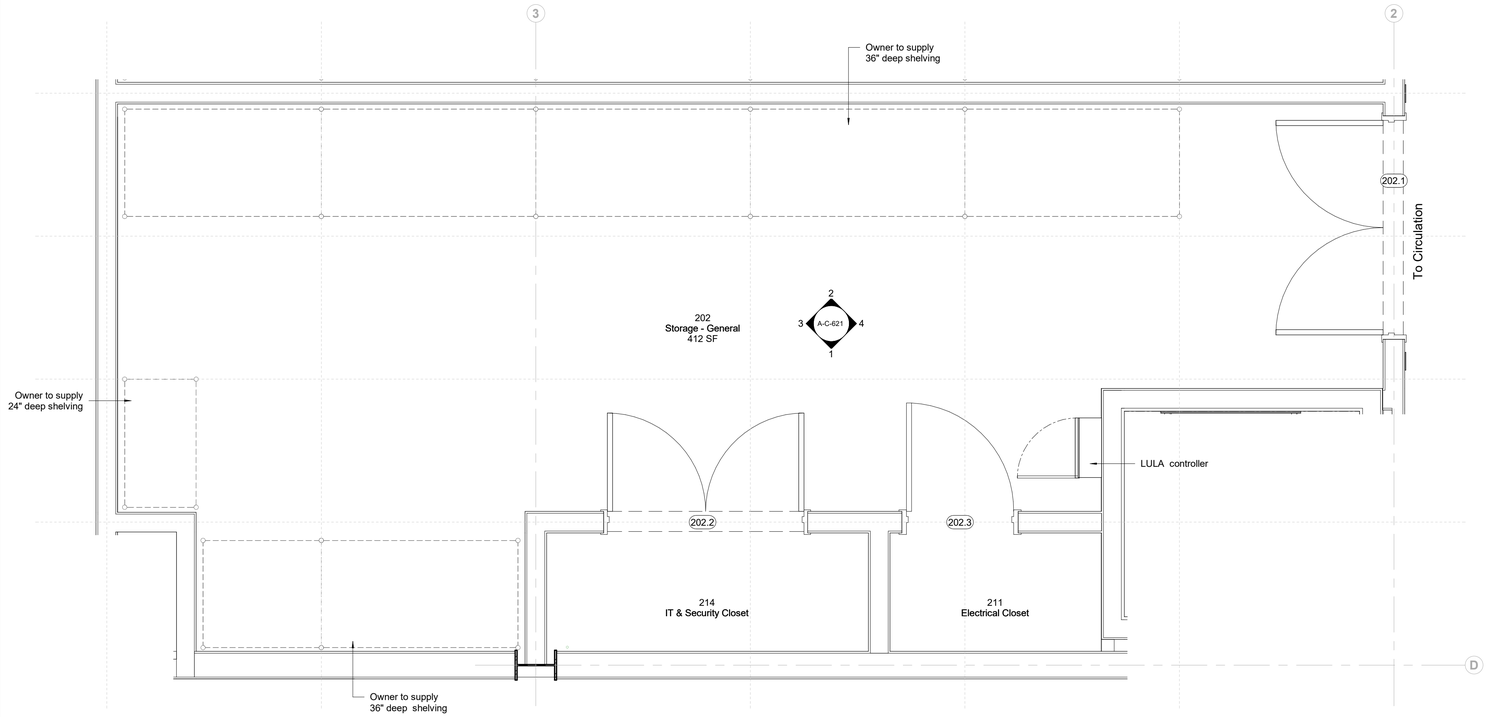

1 Room Plan - 202
1/2" = 1'-0"

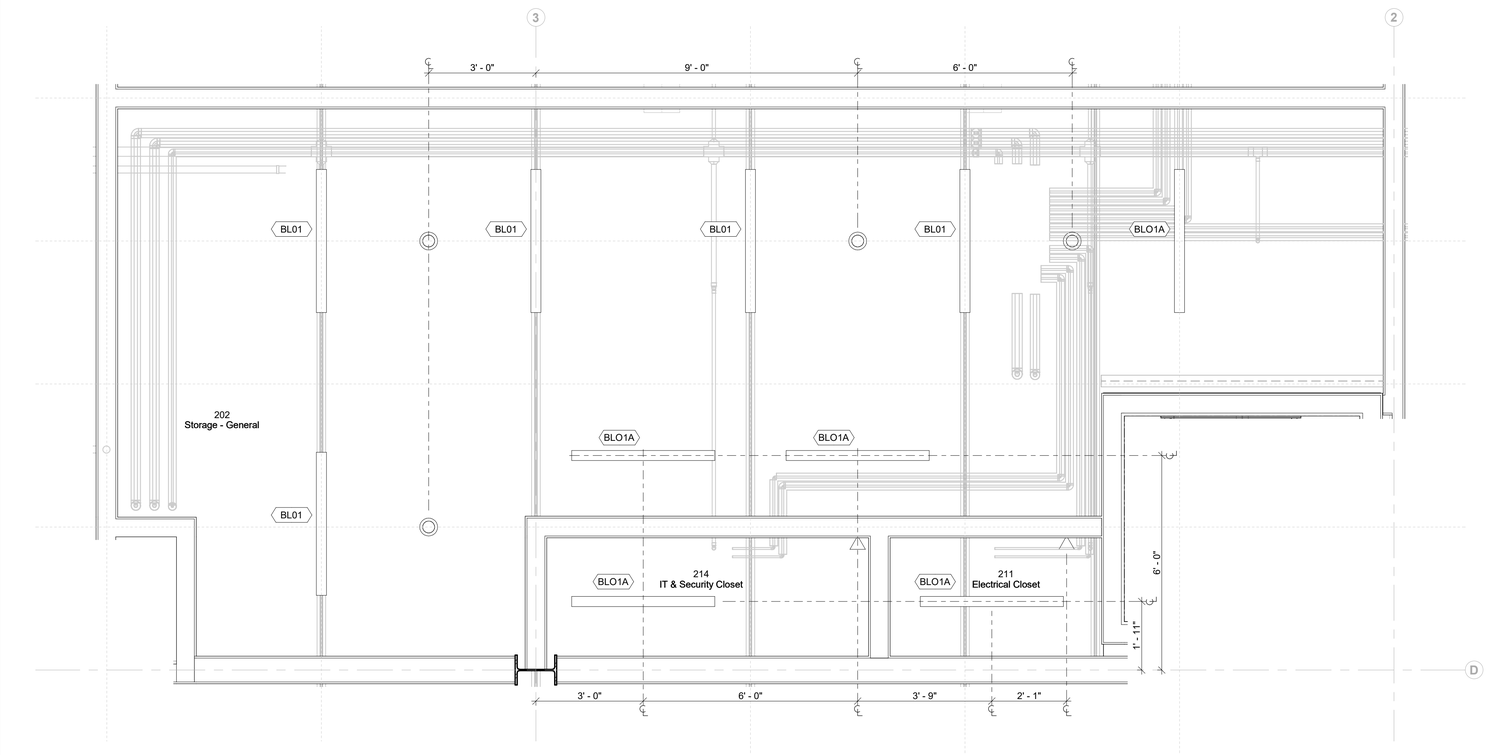

2 Room RCP - 202
1/2" = 1'-0"

Plan & RCP Legend

- Floor Drain
- Linear Floor Drain
- Sprinkler Head - Upright
- Sprinkler Head - Concealed Pendent
- Sprinkler Head - Wall Mounted
- Ceiling Mounted Diffuser
- Lighting Fixture

Sheet Notes

1. All Devices To Be Centered/Aligned to Grid References As Shown On Drawings UON. Where Devices Are Located Off Grid All Dimensions Are To Device Centerline UON.
2. See A-C-092 For Grid Set Out Information
3. See A-C-692 For All Device Mounting Heights And Locations.
4. Inside Face Of Partitions At Floor Openings To Be Aligned With Edge Of Floor Opening UON
5. In The Event Of Conflict Between Data Shown On Drawings And Data In The Specification, The Drawings Shall Govern. Detail Drawings Take Precedent Over Drawings Of Larger Scope.

Owner
Storm King Art Center
1 Museum Road
New Windsor, NY 12553
+1 (845) 534-3115

Design Architect
heneghan peng architects
14-16 Lord Edward Street
Dublin, D02 YC63
+353 1 633 9000

Executive Architect
WXY Architecture + Urban Design
224 Centre Street, 5th Floor
New York, NY 10013
+1 (212) 219-1953

Landscape Architect
Gustafson Porter + Bowman
1 Cobham Mews
London, MW1 9SB
+44 020 7284 8950

Reed Hilderbrand LLC
33 Whitney Avenue, 3rd Floor
New Haven, CT 06510
+1 (617) 923-2422

Structural & Lighting
ARUP
77 Water Street
New York, NY 10005
+1 (212) 896-3000

MEPF & IT
BuroHappold
100 Broadway #23
New York, NY 10005
+1 (212) 616-0228

Civil
VHB
100 Great Oaks Blvd., Suite 118
Albany, NY 12203
+1 (518) 389-3606

AV & Acoustics
LSTN Consultants
76 Beaver Street, 2nd Floor
New York, NY 10005
+1 (347) 788-0810

Facade
Front Inc.
100 E. Broadway Street, #501
New York, NY 10002
+1 (212) 242-2220

Key Plan

Description	Date
Filing Set	06/17/22

Project

Storm King Art Center
C.F.M. Building

Seal

NOT FOR CONSTRUCTION

Drawing Title

Room Plan & RCP - 202/211

Date	06/17/22
Scale	As indicated
Drawing Number	A-C-620
Sheet Size	ARCH D

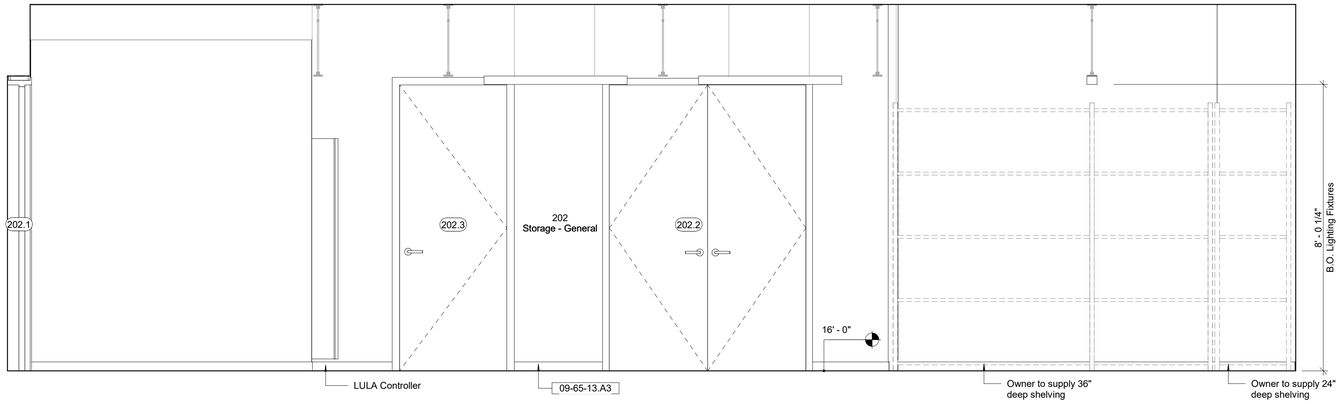

1 Room Elevation - 202 - East
1/2" = 1'-0"

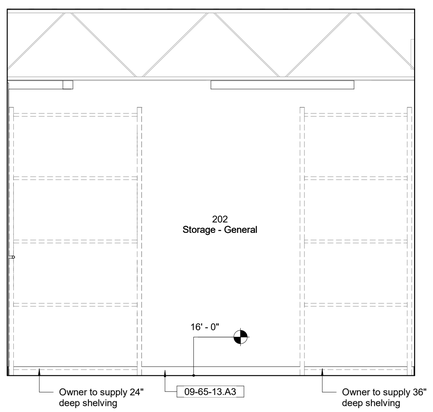

3 Room Elevation - 202 - South
1/2" = 1'-0"

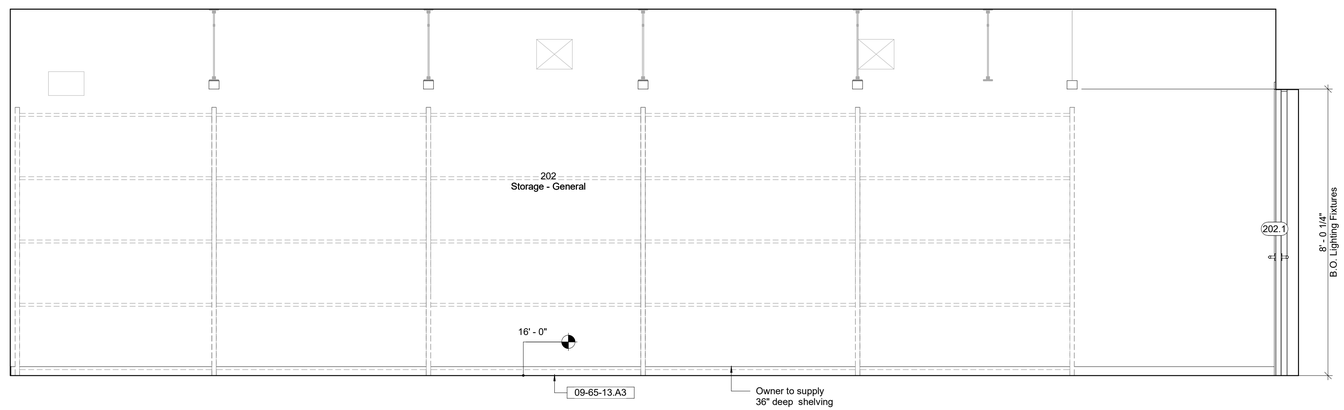

2 Room Elevation - 202 - West
1/2" = 1'-0"

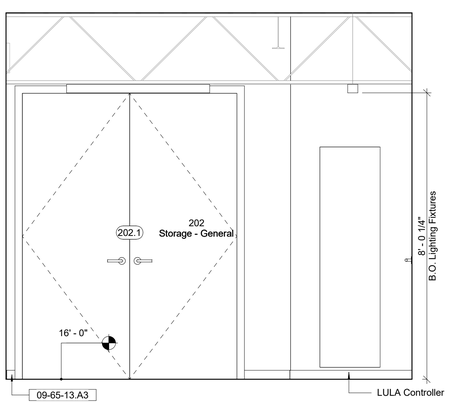

4 Room Elevation - 202 - North
1/2" = 1'-0"

Keynote Legend

Keynote	*Description*
09-65-13.A3	Resilient Base, 3"-high

Owner
Storm King Art Center
1 Museum Road
New Windsor, NY 12553
+1 (845) 534-3115

Design Architect
heneghan peng architects
14-16 Lord Edward Street
Dublin, D02 YC63
+353 1 633 9000

Executive Architect
WXY Architecture + Urban Design
224 Centre Street, 5th Floor
New York, NY 10013
+1 (212) 219-1953

Landscape Architect
Gustafson Porter + Bowman
1 Cobham Mews
London, MW1 9SB
+44 020 7284 8950

Reed Hilderbrand LLC
33 Whitney Avenue, 3rd Floor
New Haven, CT 06510
+1 (617) 923-2422

Structural & Lighting
ARUP
77 Water Street
New York, NY 10005
+1 (212) 896-3000

MEPF & IT
BuroHappold
100 Broadway #23
New York, NY 10005
+1 (212) 616-0228

Civil
VHB
100 Great Oaks Blvd., Suite 118
Albany, NY 12203
+1 (518) 389-3606

AV & Acoustics
LSTN Consultants
76 Beaver Street, 2nd Floor
New York, NY 10005
+1 (347) 788-0810

Facade
Front Inc.
100 E. Broadway Street, #501
New York, NY 10002
+1 (212) 242-2220

Key Plan

Description	Date
Filing Set	06/17/22

Project

Storm King Art Center

C.F.M. Building

Seal

NOT FOR CONSTRUCTION

Drawing Title

Room Elevations - 202

Date	06/17/22
Scale	1/2" = 1'-0"
Drawing Number	A-C-621
Sheet Size	ARCH D

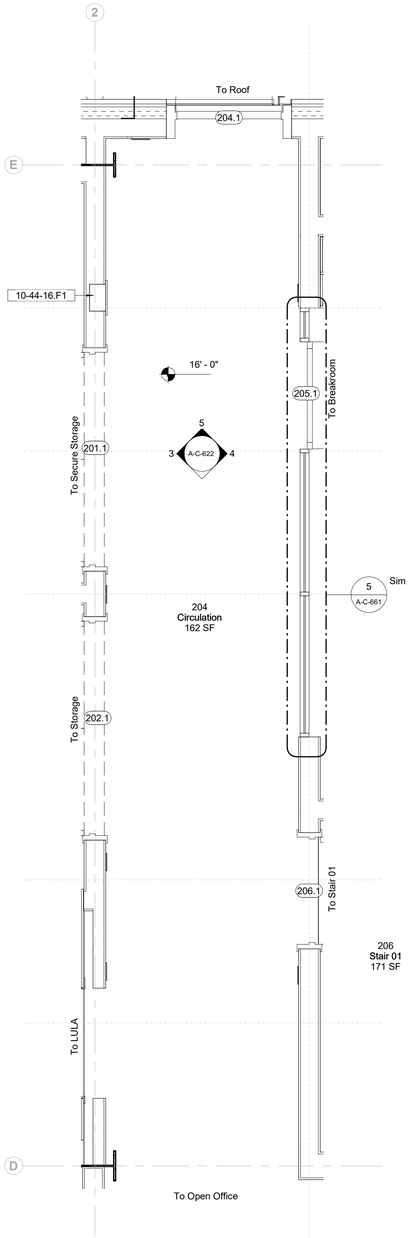

1 Room Plan - 204
1/2" = 1'-0"

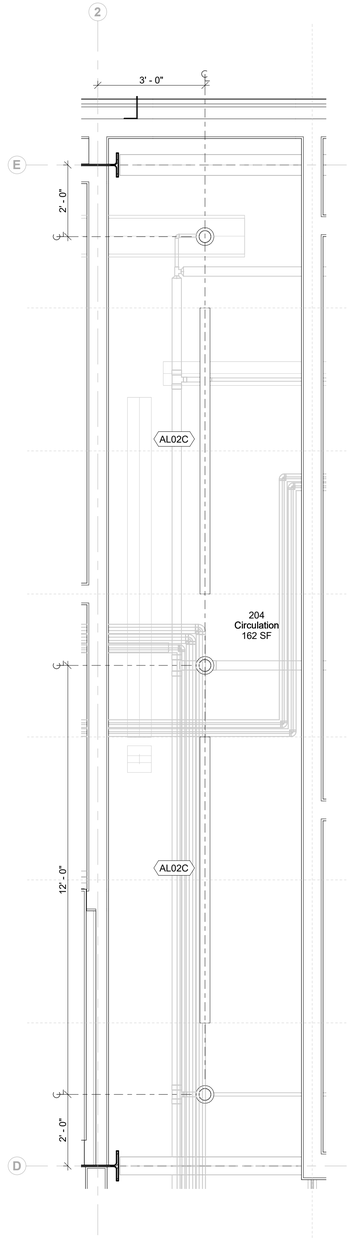

2 Room RCP - 204
1/2" = 1'-0"

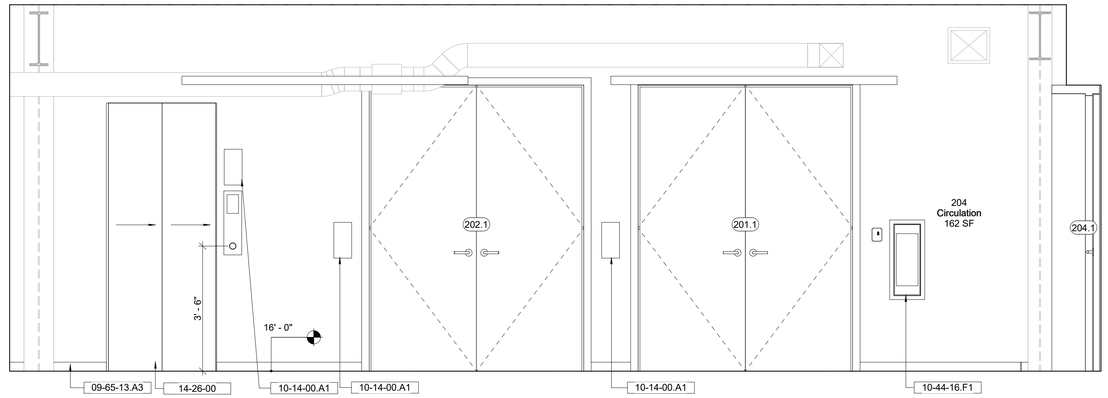

3 Room Elevation - 204 - South
1/2" = 1'-0"

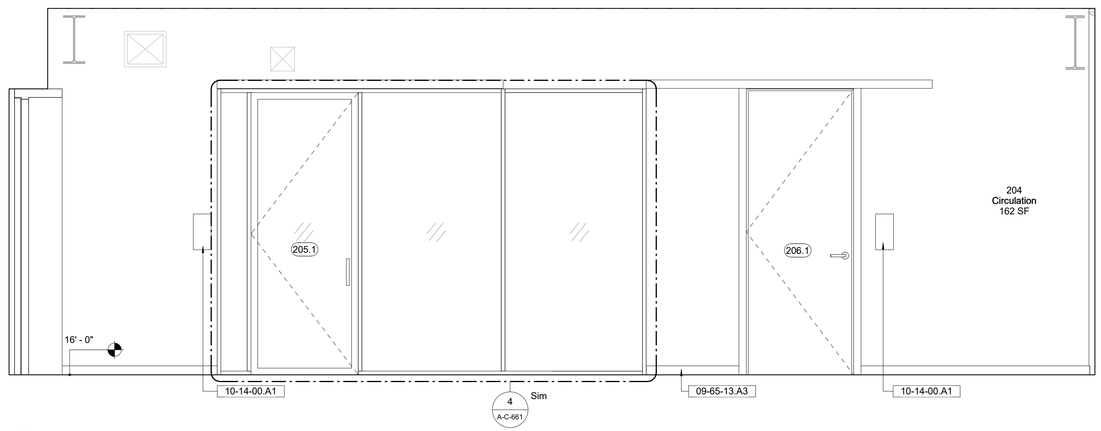

4 Room Elevation - 204 - North
1/2" = 1'-0"

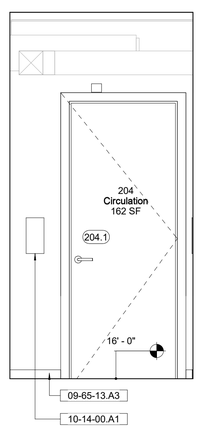

5 Room Elevation - 204 - West
1/2" = 1'-0"

Keynote Legend

Keynote	*Description*
09-65-13.A3	Resilient Base, 3"-high
10-14-00.A1	Interior Signage
10-44-16.F1	Fire Extinguisher and Cabinet, Recessed
14-26-00	Limited-Use/Limited Application Elevators

Plan & RCP Legend

- Floor Drain
- Linear Floor Drain
- Sprinkler Head - Upright
- Sprinkler Head - Concealed Pendent
- Sprinkler Head - Wall Mounted
- Ceiling Mounted Diffuser
- Lighting Fixture

Sheet Notes

1. All Devices To Be Centered/Aligned to Grid References As Shown On Drawings UON. Where Devices Are Located Off Grid All Dimensions Are To Device Centerline UON.
2. See A-C-092 For Grid Set Out Information
3. See A-C-692 For All Device Mounting Heights And Locations.
4. Inside Face Of Partitions At Floor Openings To Be Aligned With Edge Of Floor Opening UON
5. In The Event Of Conflict Between Data Shown On Drawings And Data In The Specification, The Drawings Shall Govern. Detail Drawings Take Precedent Over Drawings Of Larger Scope.

Owner
Storm King Art Center
1 Museum Road
New Windsor, NY 12553
+1 (845) 534-3115

Design Architect
heneghan peng architects
14-16 Lord Edward Street
Dublin, D02 YC63
+353 1 633 9000

Executive Architect
WXY Architecture + Urban Design
224 Centre Street, 5th Floor
New York, NY 10013
+1 (212) 219-1953

Landscape Architect
Gustafson Porter + Bowman
1 Cobham Mews
London, MW1 9SB
+44 020 7284 8950

Reed Hilderbrand LLC
33 Whitney Avenue, 3rd Floor
New Haven, CT 06510
+1 (617) 923-2422

Structural & Lighting
ARUP
77 Water Street
New York, NY 10005
+1 (212) 896-3000

MEPF & IT
BuroHappold
100 Broadway #23
New York, NY 10005
+1 (212) 616-0228

Civil
VHB
100 Great Oaks Blvd., Suite 118
Albany, NY 12203
+1 (518) 389-3606

AV & Acoustics
LSTN Consultants
76 Beaver Street, 2nd Floor
New York, NY 10005
+1 (347) 788-0810

Facade
Front Inc.
100 E. Broadway Street, #501
New York, NY 10002
+1 (212) 242-2220

Key Plan

Description	Date
Filing Set	06/17/22

Project

Storm King Art Center

C.F.M. Building

Seal

NOT FOR CONSTRUCTION

Drawing Title

Room Plan, RCP & Elevations - 204

Date	06/17/22
Scale	As indicated
Drawing Number	A-C-622
Sheet Size	ARCH D

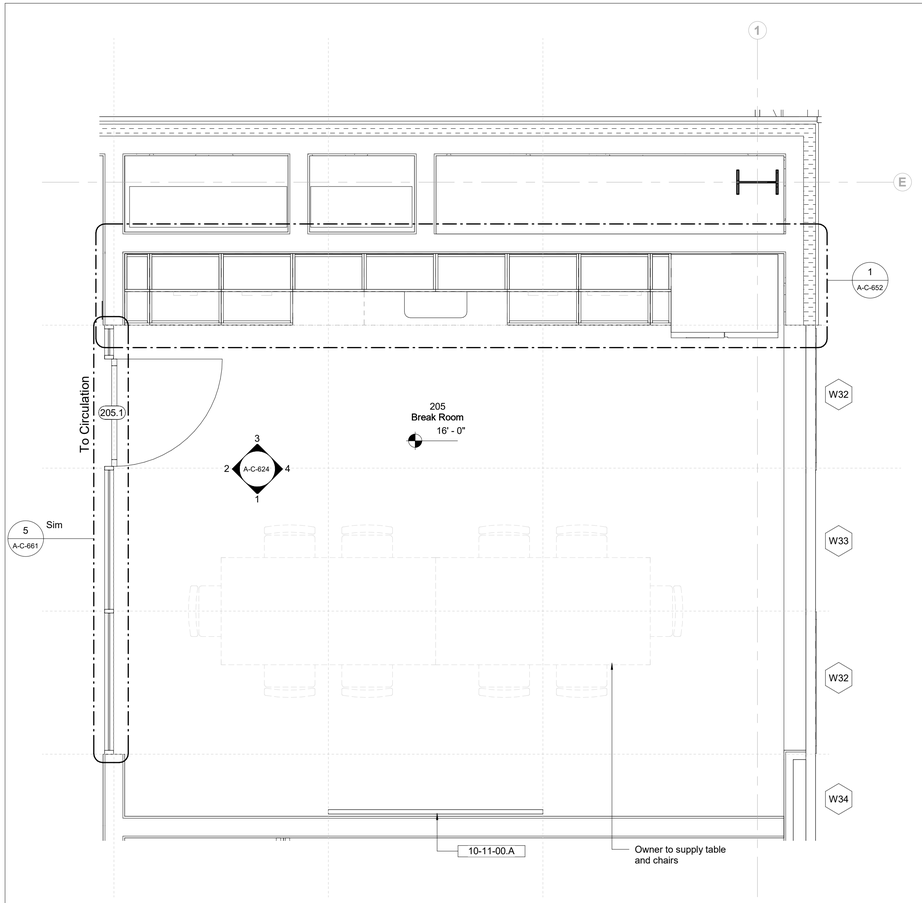

1 Room Plan - 205
1/2" = 1'-0"

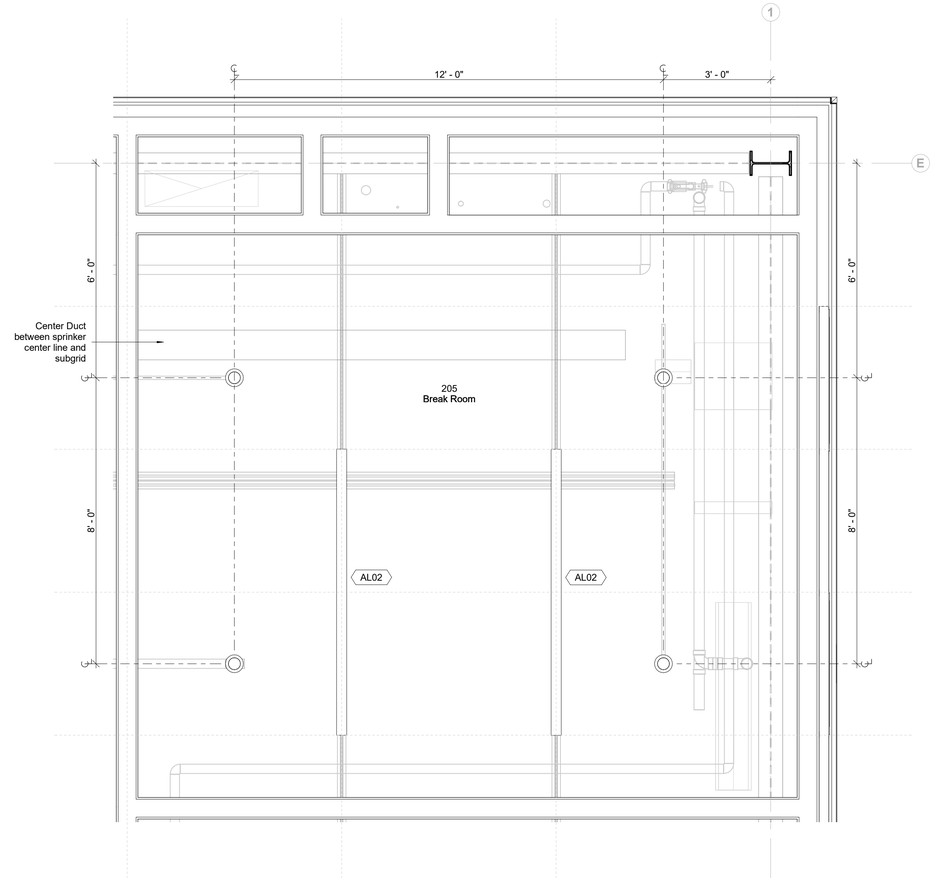

2 Room RCP - 205
1/2" = 1'-0"

Keynote Legend

Keynote	Description
10-11-00.A	Writable/Magnetic Surfaces

Plan & RCP Legend

- Floor Drain
- Linear Floor Drain
- Sprinkler Head - Upright
- Sprinkler Head - Concealed Pendent
- Sprinkler Head - Wall Mounted
- Ceiling Mounted Diffuser
- Lighting Fixture

Sheet Notes

1. All Devices To Be Centered/Aligned to Grid References As Shown On Drawings UON. Where Devices Are Located Off Grid All Dimensions Are To Device Centerline UON.
2. See A-C-092 For Grid Set Out Information
3. See A-C-692 For All Device Mounting Heights And Locations.
4. Inside Face Of Partitions At Floor Openings To Be Aligned With Edge Of Floor Opening UON
5. In The Event Of Conflict Between Data Shown On Drawings And Data In The Specification, The Drawings Shall Govern. Detail Drawings Take Precedent Over Drawings Of Larger Scope.

Owner
Storm King Art Center
1 Museum Road
New Windsor, NY 12553
+1 (845) 534-3115

Design Architect
heneghan peng architects
14-16 Lord Edward Street
Dublin, D02 YC63
+353 1 633 9000

Executive Architect
WXY Architecture + Urban Design
224 Centre Street, 5th Floor
New York, NY 10013
+1 (212) 219-1953

Landscape Architect
Gustafson Porter + Bowman
1 Cobham Mews
London, MW1 9SB
+44 020 7284 8950

Reed Hilderbrand LLC
33 Whitney Avenue, 3rd Floor
New Haven, CT 06510
+1 (617) 923-2422

Structural & Lighting
ARUP
77 Water Street
New York, NY 10005
+1 (212) 896-3000

MEPF & IT
BuroHappold
100 Broadway #23
New York, NY 10005
+1 (212) 616-0228

Civil
VHB
100 Great Oaks Blvd., Suite 118
Albany, NY 12203
+1 (518) 389-3606

AV & Acoustics
LSTN Consultants
76 Beaver Street, 2nd Floor
New York, NY 10005
+1 (347) 788-0810

Facade
Front Inc.
100 E. Broadway Street, #501
New York, NY 10002
+1 (212) 242-2220

Key Plan

Description	Date
Filing Set	06/17/22

Project

Storm King Art Center

C.F.M. Building

Seal

NOT FOR CONSTRUCTION

Drawing Title

Room Plan & RCP - 205

Date	06/17/22
Scale	As indicated
Drawing Number	A-C-623
Sheet Size	ARCH D

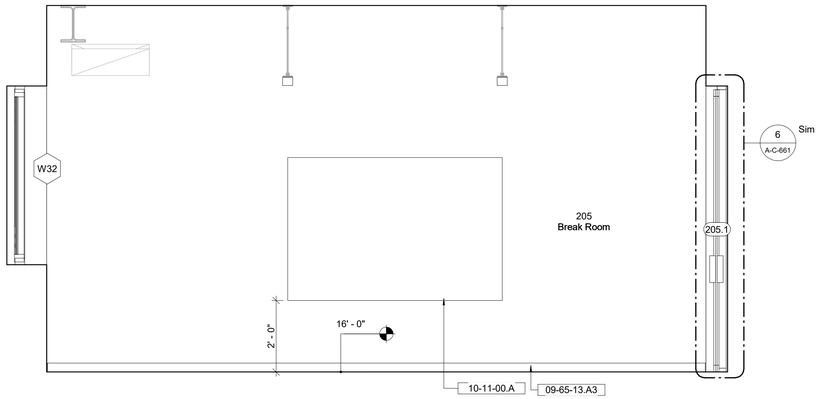

1 Room Elevation - 205 - East
1/2" = 1'-0"

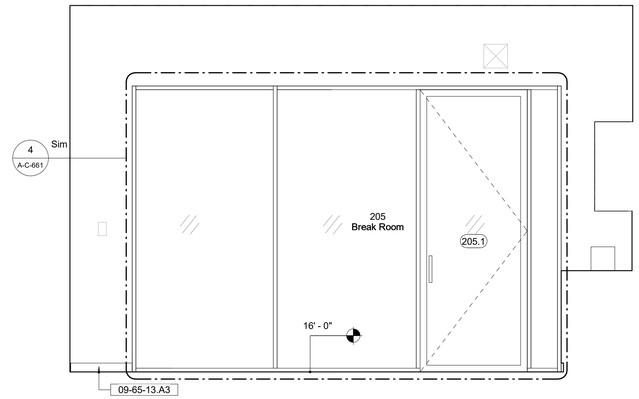

2 Room Elevation - 205 - South
1/2" = 1'-0"

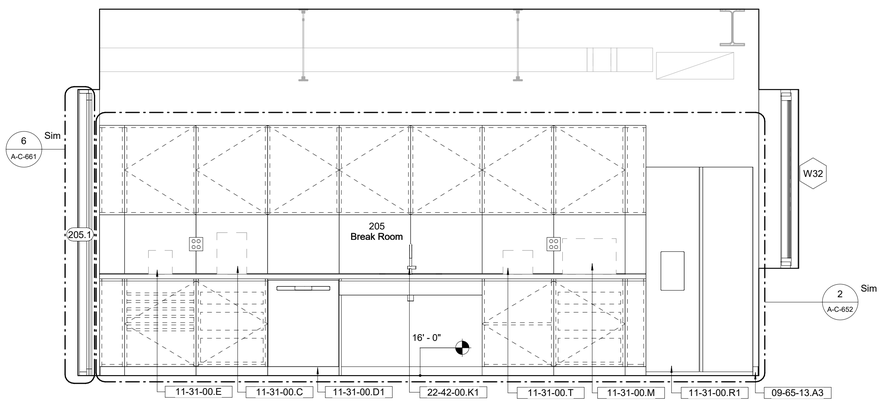

3 Room Elevation - 205 - West
1/2" = 1'-0"

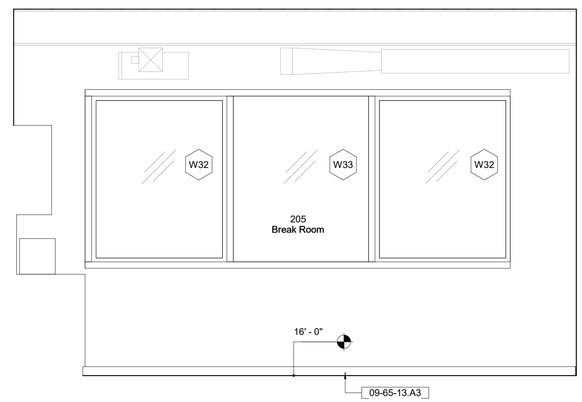

4 Room Elevation - 205 - North
1/2" = 1'-0"

Keynote Legend

Keynote	*Description*
09-65-13.A3	Resilient Base, 3"-high
10-11-00.A	Writable/Magnetic Surfaces
11-31-00.C	Coffee Maker
11-31-00.D1	Dishwasher
11-31-00.E	Electric Kettle
11-31-00.M	Microwave
11-31-00.R1	Refrigerator, Full Height
11-31-00.T	Toaster
22-42-00.K1	Kitchen Faucet

Owner
Storm King Art Center
1 Museum Road
New Windsor, NY 12553
+1 (845) 534-3115

Design Architect
heneghan peng architects
14-16 Lord Edward Street
Dublin, D02 YC63
+353 1 633 9000

Executive Architect
WXY Architecture + Urban Design
224 Centre Street, 5th Floor
New York, NY 10013
+1 (212) 219-1953

Landscape Architect
Gustafson Porter + Bowman
1 Cobham Mews
London, MW1 9SB
+44 020 7284 8950

Reed Hilderbrand LLC
33 Whitney Avenue, 3rd Floor
New Haven, CT 06510
+1 (617) 923-2422

Structural & Lighting
ARUP
77 Water Street
New York, NY 10005
+1 (212) 896-3000

MEPF & IT
BuroHappold
100 Broadway #23
New York, NY 10005
+1 (212) 616-0228

Civil
VHB
100 Great Oaks Blvd., Suite 118
Albany, NY 12203
+1 (518) 389-3606

AV & Acoustics
LSTN Consultants
76 Beaver Street, 2nd Floor
New York, NY 10005
+1 (347) 788-0810

Facade
Front Inc.
100 E. Broadway Street, #501
New York, NY 10002
+1 (212) 242-2220

Key Plan

Description	Date
Filing Set	06/17/22

Project

Storm King Art Center

C.F.M. Building

Seal

NOT FOR CONSTRUCTION

Drawing Title

Room Elevations - 205

Date	06/17/22
Scale	1/2" = 1'-0"
Drawing Number	A-C-624
Sheet Size	ARCH D

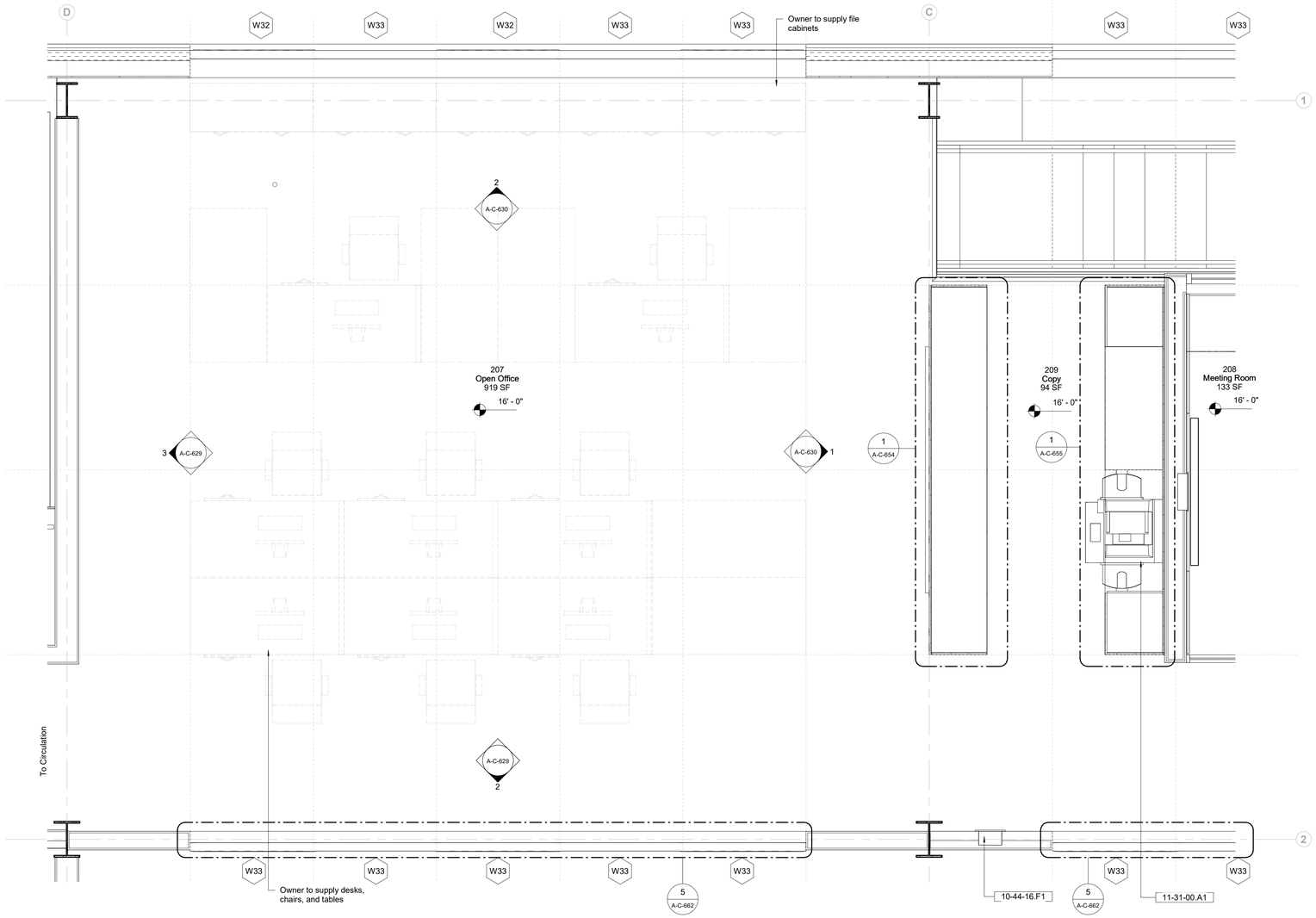

1 Room Plan - 207/208/209 - West
1/2" = 1'-0"

Keynote Legend

Keynote	*Description*
10-44-16.F1	Fire Extinguisher and Cabinet, Recessed
11-31-00.A1	Copy Machine, Full Size

Plan & RCP Legend

- Floor Drain
- Linear Floor Drain
- Sprinkler Head - Upright
- Sprinkler Head - Concealed Pendent
- Sprinkler Head - Wall Mounted
- Ceiling Mounted Diffuser
- Lighting Fixture

Sheet Notes

1. All Devices To Be Centered/Aligned to Grid References As Shown On Drawings UON. Where Devices Are Located Off Grid All Dimensions Are To Device Centerline UON.
2. See A-C-092 For Grid Set Out Information
3. See A-C-692 For All Device Mounting Heights And Locations.
4. Inside Face Of Partitions At Floor Openings To Be Aligned With Edge Of Floor Opening UON
5. In The Event Of Conflict Between Data Shown On Drawings And Data In The Specification, The Drawings Shall Govern. Detail Drawings Take Precedent Over Drawings Of Larger Scope.

Owner
Storm King Art Center
1 Museum Road
New Windsor, NY 12553
+1 (845) 534-3115

Design Architect
heneghan peng architects
14-16 Lord Edward Street
Dublin, D02 YC63
+353 1 633 9000

Executive Architect
WXY Architecture + Urban Design
224 Centre Street, 5th Floor
New York, NY 10013
+1 (212) 219-1953

Landscape Architect
Gustafson Porter + Bowman
1 Cobham Mews
London, MW1 9SB
+44 020 7284 8950

Reed Hilderbrand LLC
33 Whitney Avenue, 3rd Floor
New Haven, CT 06510
+1 (617) 923-2422

Structural & Lighting
ARUP
77 Water Street
New York, NY 10005
+1 (212) 896-3000

MEPF & IT
BuroHappold
100 Broadway #23
New York, NY 10005
+1 (212) 616-0228

Civil
VHB
100 Great Oaks Blvd., Suite 118
Albany, NY 12203
+1 (518) 389-3606

AV & Acoustics
LSTN Consultants
76 Beaver Street, 2nd Floor
New York, NY 10005
+1 (347) 788-0810

Facade
Front Inc.
100 E. Broadway Street, #501
New York, NY 10002
+1 (212) 242-2220

Key Plan

N

Description	Date
Filing Set	06/17/22

Project

Storm King Art Center

C.F.M. Building

Seal

NOT FOR CONSTRUCTION

Drawing Title

Room Plan - 207/208/209

Date	06/17/22
Scale	As indicated
Drawing Number	A-C-625
Sheet Size	ARCH D

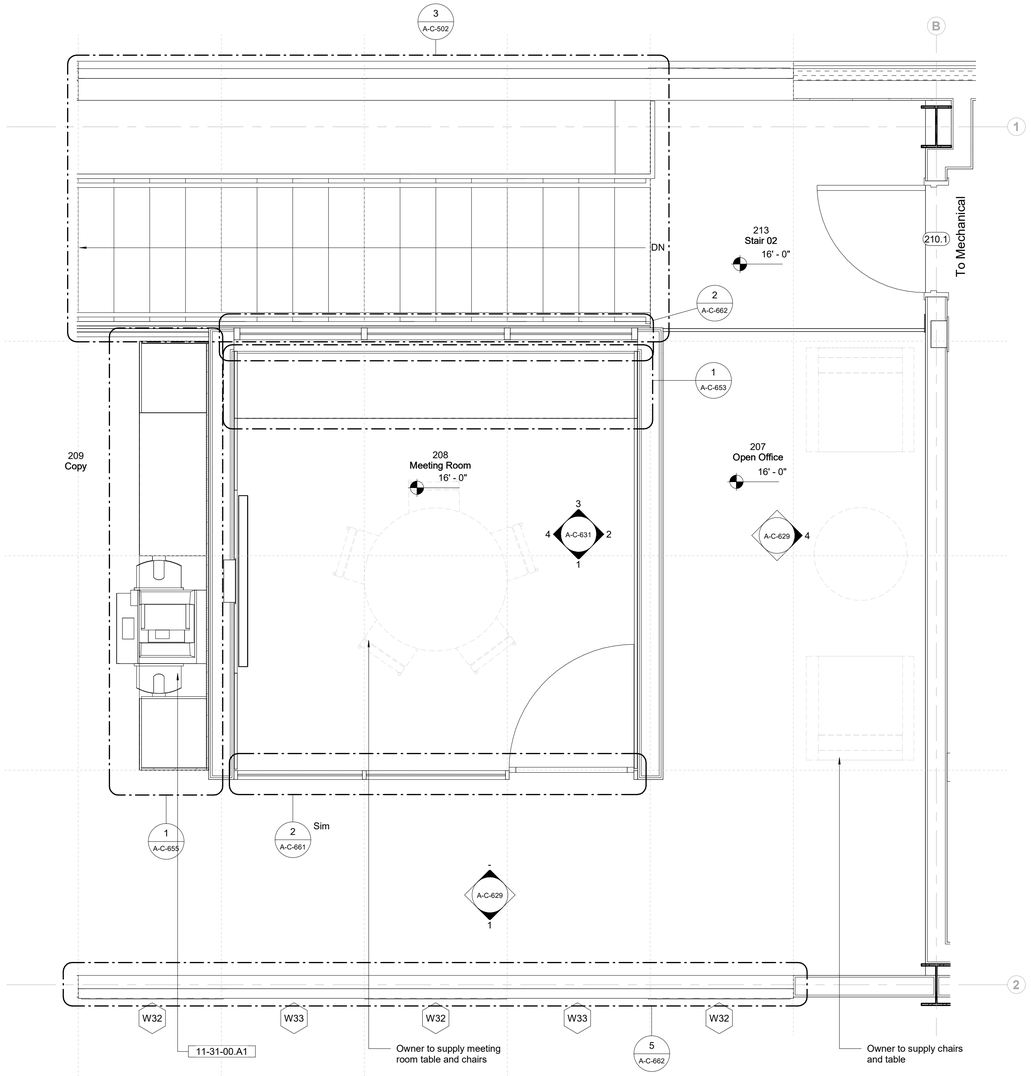

1 Room Plan - 207/208/209 - East
1/2" = 1'-0"

Keynote Legend

Keynote	*Description*
11-31-00.A1	Copy Machine, Full Size

Plan & RCP Legend

- Floor Drain
- Linear Floor Drain
- Sprinkler Head - Upright
- Sprinkler Head - Concealed Pendent
- Sprinkler Head - Wall Mounted
- Ceiling Mounted Diffuser
- Lighting Fixture

Sheet Notes

1. All Devices To Be Centered/Aligned to Grid References As Shown On Drawings UON. Where Devices Are Located Off Grid All Dimensions Are To Device Centerline UON.
2. See A-C-092 For Grid Set Out Information
3. See A-C-692 For All Device Mounting Heights And Locations.
4. Inside Face Of Partitions At Floor Openings To Be Aligned With Edge Of Floor Opening UON
5. In The Event Of Conflict Between Data Shown On Drawings And Data In The Specification, The Drawings Shall Govern. Detail Drawings Take Precedent Over Drawings Of Larger Scope.

Owner
Storm King Art Center
1 Museum Road
New Windsor, NY 12553
+1 (845) 534-3115

Design Architect
heneghan peng architects
14-16 Lord Edward Street
Dublin, D02 YC63
+353 1 633 9000

Executive Architect
WXY Architecture + Urban Design
224 Centre Street, 5th Floor
New York, NY 10013
+1 (212) 219-1953

Landscape Architect
Gustafson Porter + Bowman
1 Cobham Mews
London, MW1 9SB
+44 020 7284 8950

Reed Hilderbrand LLC
33 Whitney Avenue, 3rd Floor
New Haven, CT 06510
+1 (617) 923-2422

Structural & Lighting
ARUP
77 Water Street
New York, NY 10005
+1 (212) 896-3000

MEPF & IT
BuroHappold
100 Broadway #23
New York, NY 10005
+1 (212) 616-0228

Civil
VHB
100 Great Oaks Blvd., Suite 118
Albany, NY 12203
+1 (518) 389-3606

AV & Acoustics
LSTN Consultants
76 Beaver Street, 2nd Floor
New York, NY 10005
+1 (347) 788-0810

Facade
Front Inc.
100 E. Broadway Street, #501
New York, NY 10002
+1 (212) 242-2220

Key Plan

N

Description	Date
Filing Set	06/17/22

Project

Storm King Art Center

C.F.M. Building

Seal

NOT FOR CONSTRUCTION

Drawing Title

Room Plan-
207/208/209

Date	06/17/22
Scale	As indicated
Drawing Number	A-C-626
Sheet Size	ARCH D

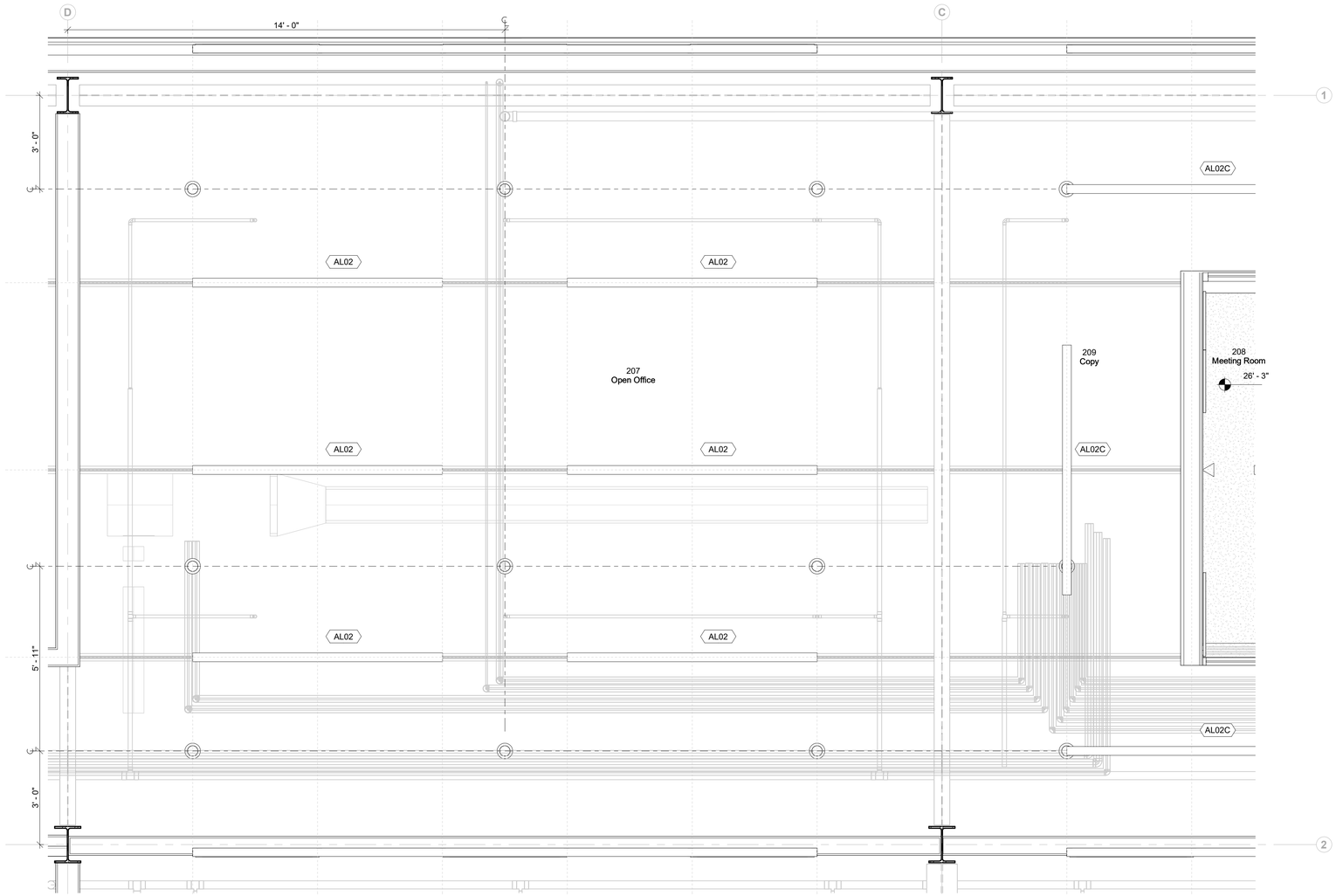

1 Room RCP - 207/208/209 -West
1/2" = 1'-0"

Plan & RCP Legend

- Floor Drain
- Linear Floor Drain
- Sprinkler Head - Upright
- Sprinkler Head - Concealed Pendent
- Sprinkler Head - Wall Mounted
- Ceiling Mounted Diffuser
- Lighting Fixture

Sheet Notes

1. All Devices To Be Centered/Aligned to Grid References As Shown On Drawings UON. Where Devices Are Located Off Grid All Dimensions Are To Device Centerline UON.
2. See A-C-092 For Grid Set Out Information
3. See A-C-692 For All Device Mounting Heights And Locations.
4. Inside Face Of Partitions At Floor Openings To Be Aligned With Edge Of Floor Opening UON
5. In The Event Of Conflict Between Data Shown On Drawings And Data In The Specification, The Drawings Shall Govern. Detail Drawings Take Precedent Over Drawings Of Larger Scope.

Owner
Storm King Art Center
1 Museum Road
New Windsor, NY 12553
+1 (845) 534-3115

Design Architect
heneghan peng architects
14-16 Lord Edward Street
Dublin, D02 YC63
+353 1 633 9000

Executive Architect
WXY Architecture + Urban Design
224 Centre Street, 5th Floor
New York, NY 10013
+1 (212) 219-1953

Landscape Architect
Gustafson Porter + Bowman
1 Cobham Mews
London, MW1 9SB
+44 020 7284 8950

Reed Hilderbrand LLC
33 Whitney Avenue, 3rd Floor
New Haven, CT 06510
+1 (617) 923-2422

Structural & Lighting
ARUP
77 Water Street
New York, NY 10005
+1 (212) 896-3000

MEPF & IT
BuroHappold
100 Broadway #23
New York, NY 10005
+1 (212) 616-0228

Civil
VHB
100 Great Oaks Blvd., Suite 118
Albany, NY 12203
+1 (518) 389-3606

AV & Acoustics
LSTN Consultants
76 Beaver Street, 2nd Floor
New York, NY 10005
+1 (347) 788-0810

Facade
Front Inc.
100 E. Broadway Street, #501
New York, NY 10002
+1 (212) 242-2220

Key Plan

N

Description	Date
Filing Set	06/17/22

Project

Storm King Art Center

C.F.M. Building

Seal

NOT FOR CONSTRUCTION

Drawing Title

Room RCP - 207/208/209

Date	06/17/22
Scale	As indicated
Drawing Number	A-C-627
Sheet Size	ARCH D

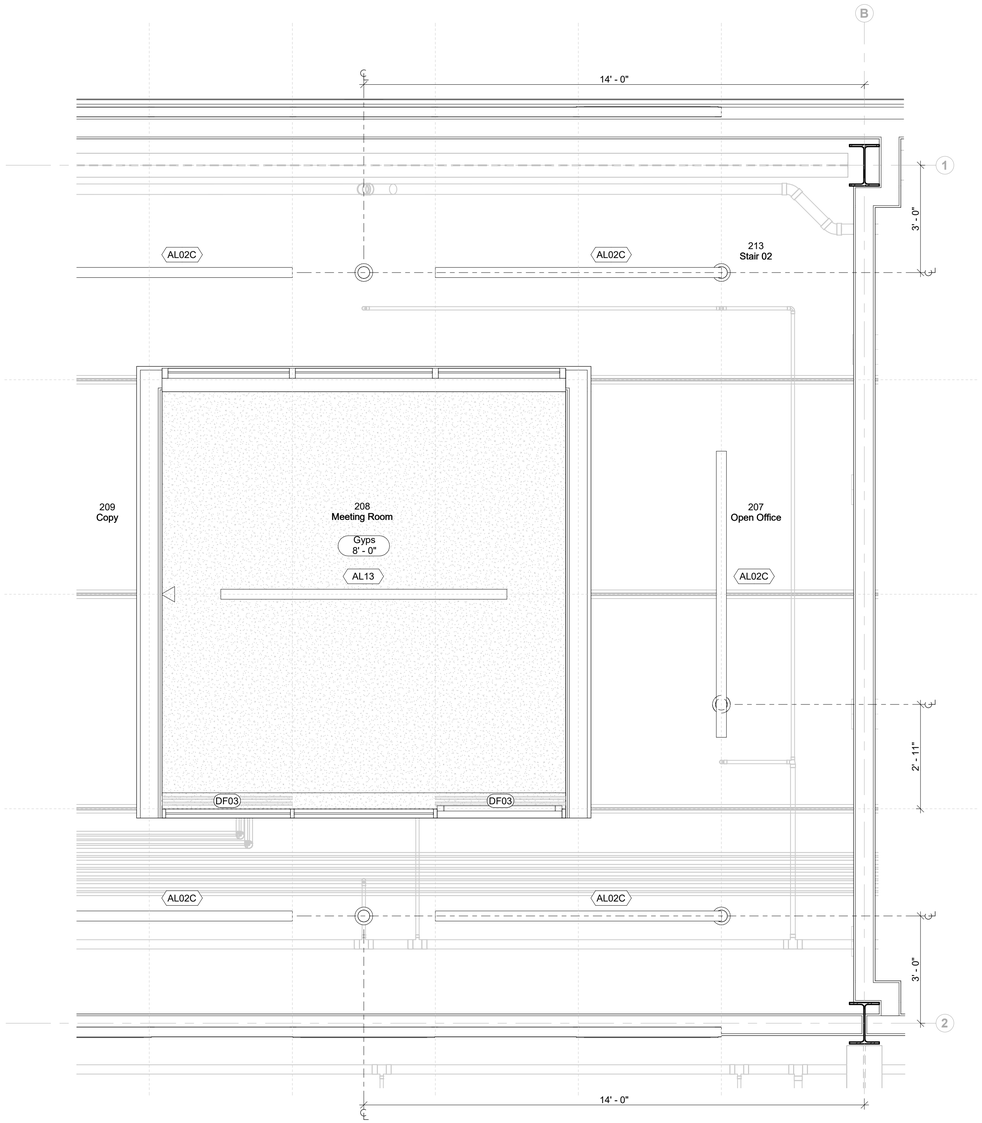

1 Room RCP - 207/208/209 - East
1/2" = 1'-0"

Plan & RCP Legend

- Floor Drain
- Linear Floor Drain
- Sprinkler Head - Upright
- Sprinkler Head - Concealed Pendent
- Sprinkler Head - Wall Mounted
- Ceiling Mounted Diffuser
- Lighting Fixture

Sheet Notes

1. All Devices To Be Centered/Aligned to Grid References As Shown On Drawings UON. Where Devices Are Located Off Grid All Dimensions Are To Device Centerline UON.
2. See A-C-092 For Grid Set Out Information
3. See A-C-692 For All Device Mounting Heights And Locations.
4. Inside Face Of Partitions At Floor Openings To Be Aligned With Edge Of Floor Opening UON
5. In The Event Of Conflict Between Data Shown On Drawings And Data In The Specification, The Drawings Shall Govern. Detail Drawings Take Precedent Over Drawings Of Larger Scope.

Owner
Storm King Art Center
1 Museum Road
New Windsor, NY 12553
+1 (845) 534-3115

Design Architect
heneghan peng architects
14-16 Lord Edward Street
Dublin, D02 YC63
+353 1 633 9000

Executive Architect
WXY Architecture + Urban Design
224 Centre Street, 5th Floor
New York, NY 10013
+1 (212) 219-1953

Landscape Architect
Gustafson Porter + Bowman
1 Cobham Mews
London, MW1 9SB
+44 020 7284 8950

Reed Hilderbrand LLC
33 Whitney Avenue, 3rd Floor
New Haven, CT 06510
+1 (617) 923-2422

Structural & Lighting
ARUP
77 Water Street
New York, NY 10005
+1 (212) 896-3000

MEPF & IT
BuroHappold
100 Broadway #23
New York, NY 10005
+1 (212) 616-0228

Civil
VHB
100 Great Oaks Blvd., Suite 118
Albany, NY 12203
+1 (518) 389-3606

AV & Acoustics
LSTN Consultants
76 Beaver Street, 2nd Floor
New York, NY 10005
+1 (347) 788-0810

Facade
Front Inc.
100 E. Broadway Street, #501
New York, NY 10002
+1 (212) 242-2220

Key Plan

N

Description	Date
Filing Set	06/17/22

Project

Storm King Art Center

C.F.M. Building

Seal

NOT FOR CONSTRUCTION

Drawing Title

Room RCP - 207/208/209

Date	06/17/22
Scale	As indicated
Drawing Number	A-C-628
Sheet Size	ARCH D

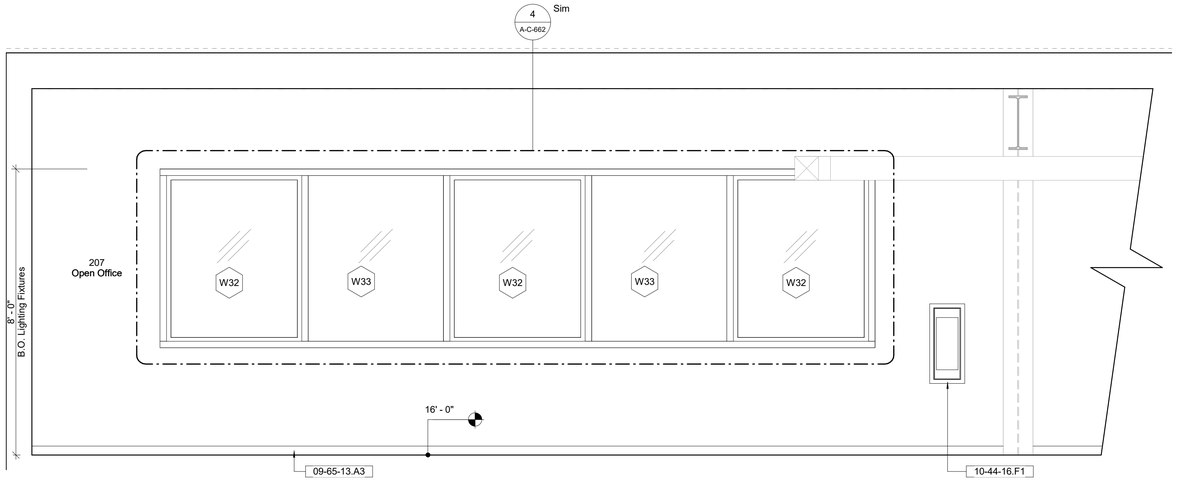

1 Room Elevation - 207 - South 1
1/2" = 1'-0"

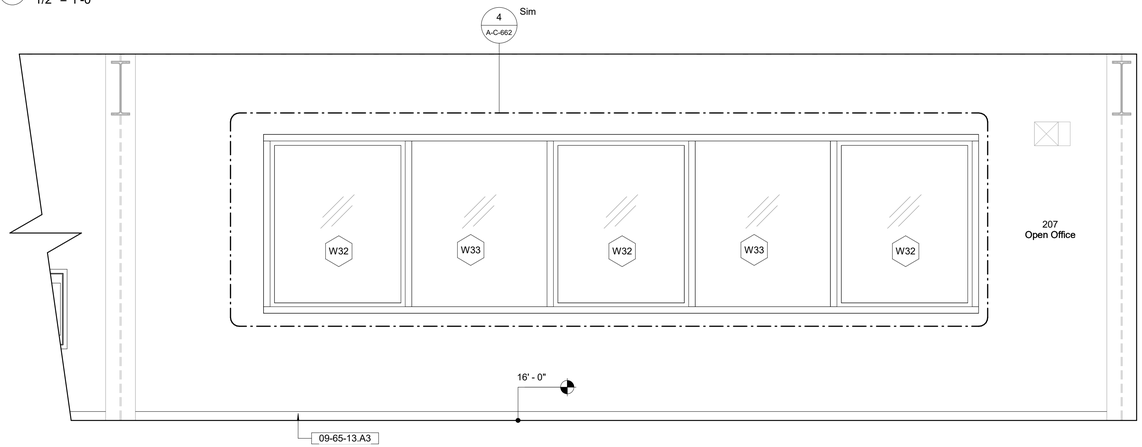

2 Room Elevation - 207 - South 2
1/2" = 1'-0"

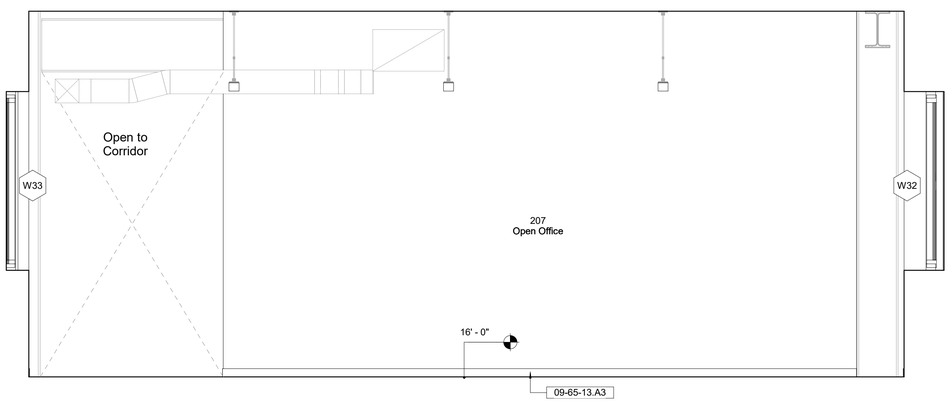

3 Room Elevation - 207 - West
1/2" = 1'-0"

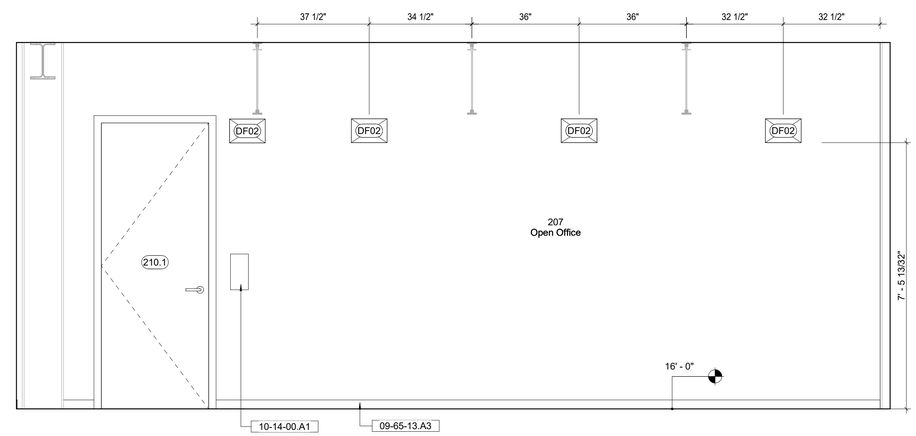

4 Room Elevation - 207 - East
1/2" = 1'-0"

Keynote Legend

Keynote	*Description*
09-65-13.A3	Resilient Base, 3"-high
10-14-00.A1	Interior Signage
10-44-16.F1	Fire Extinguisher and Cabinet, Recessed

Owner
Storm King Art Center
1 Museum Road
New Windsor, NY 12553
+1 (845) 534-3115

Design Architect
heneghan peng architects
14-16 Lord Edward Street
Dublin, D02 YC63
+353 1 633 9000

Executive Architect
WXY Architecture + Urban Design
224 Centre Street, 5th Floor
New York, NY 10013
+1 (212) 219-1953

Landscape Architect
Gustafson Porter + Bowman
1 Cobham Mews
London, MW1 9SB
+44 020 7284 8950

Reed Hilderbrand LLC
33 Whitney Avenue, 3rd Floor
New Haven, CT 06510
+1 (617) 923-2422

Structural & Lighting
ARUP
77 Water Street
New York, NY 10005
+1 (212) 896-3000

MEPF & IT
BuroHappold
100 Broadway #23
New York, NY 10005
+1 (212) 616-0228

Civil
VHB
100 Great Oaks Blvd., Suite 118
Albany, NY 12203
+1 (518) 389-3606

AV & Acoustics
LSTN Consultants
76 Beaver Street, 2nd Floor
New York, NY 10005
+1 (347) 788-0810

Facade
Front Inc.
100 E. Broadway Street, #501
New York, NY 10002
+1 (212) 242-2220

Key Plan

Description	Date
Filing Set	06/17/22

Project

Storm King Art Center

C.F.M. Building

Seal

NOT FOR CONSTRUCTION

Drawing Title

Room Elevations - 207

Date	06/17/22
Scale	1/2" = 1'-0"
Drawing Number	A-C-629
Sheet Size	ARCH D

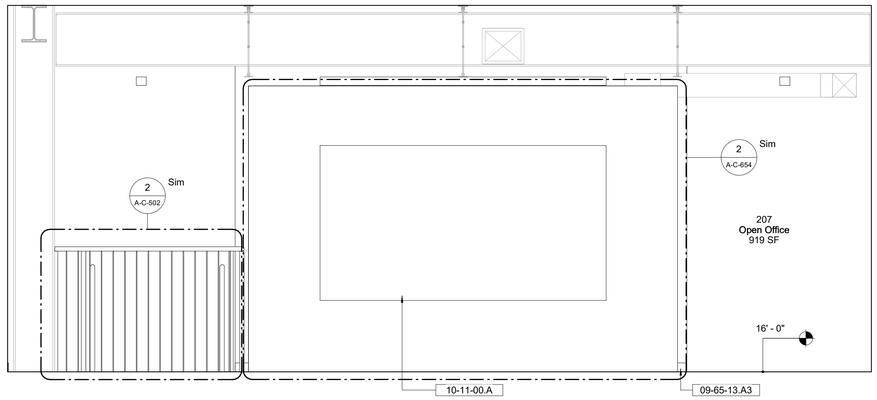

1 Room Elevation - 207 - East 2
1/2" = 1'-0"

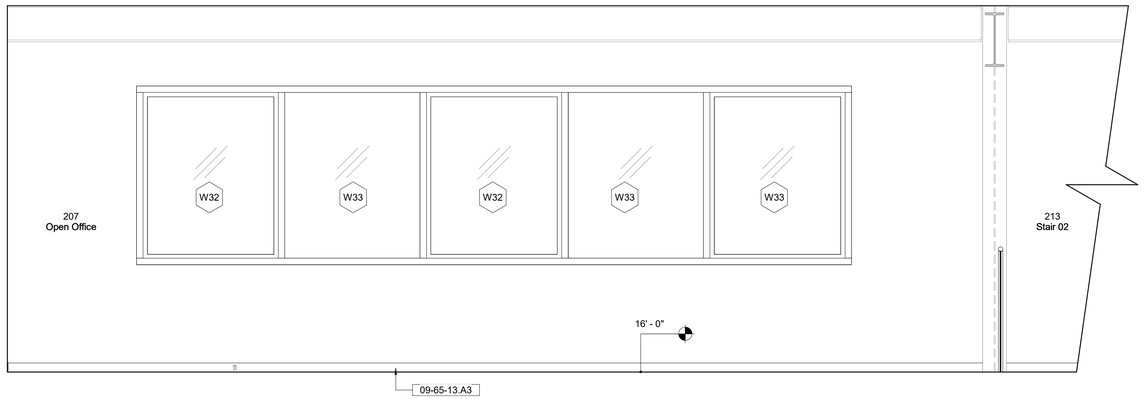

2 Room Elevation - 207 - North 1
1/2" = 1'-0"

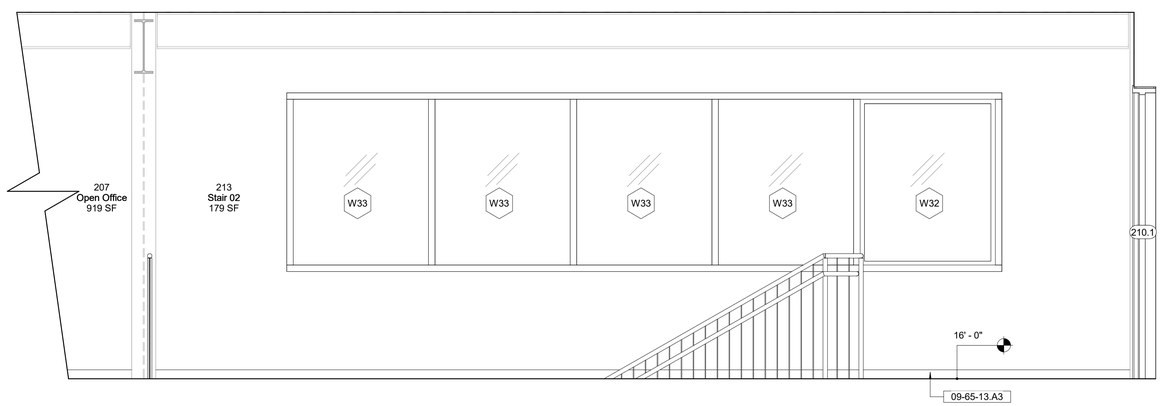

3 Room Elevation - 207 - North 2
1/2" = 1'-0"

Keynote Legend

Keynote	*Description*
09-65-13.A3	Resilient Base, 3"-high
10-11-00.A	Writable/Magnetic Surfaces

Owner
Storm King Art Center
1 Museum Road
New Windsor, NY 12553
+1 (845) 534-3115

Design Architect
heneghan peng architects
14-16 Lord Edward Street
Dublin, D02 YC63
+353 1 633 9000

Executive Architect
WXY Architecture + Urban Design
224 Centre Street, 5th Floor
New York, NY 10013
+1 (212) 219-1953

Landscape Architect
Gustafson Porter + Bowman
1 Cobham Mews
London, MW1 9SB
+44 020 7284 8950

Reed Hilderbrand LLC
33 Whitney Avenue, 3rd Floor
New Haven, CT 06510
+1 (617) 923-2422

Structural & Lighting
ARUP
77 Water Street
New York, NY 10005
+1 (212) 896-3000

MEPF & IT
BuroHappold
100 Broadway #23
New York, NY 10005
+1 (212) 616-0228

Civil
VHB
100 Great Oaks Blvd., Suite 118
Albany, NY 12203
+1 (518) 389-3606

AV & Acoustics
LSTN Consultants
76 Beaver Street, 2nd Floor
New York, NY 10005
+1 (347) 788-0810

Facade
Front Inc.
100 E. Broadway Street, #501
New York, NY 10002
+1 (212) 242-2220

Key Plan

Description	Date
Filing Set	06/17/22

Project

Storm King Art Center

C.F.M. Building

Seal

NOT FOR CONSTRUCTION

Drawing Title

Room Elevations - 207/209

Date	06/17/22
Scale	1/2" = 1'-0"
Drawing Number	A-C-630
Sheet Size	ARCH D

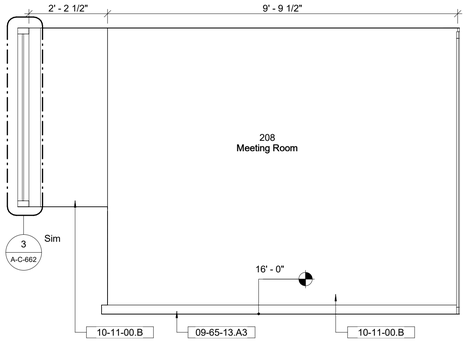

2 Room Elevation - 208 - East
1/2" = 1'-0"

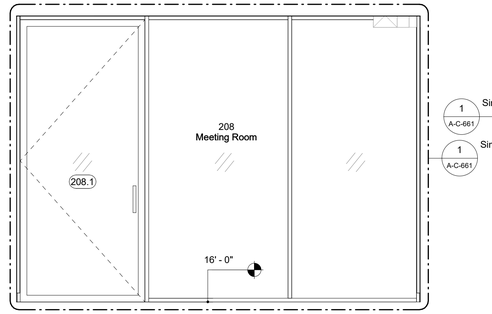

1 Room Elevation - 208 - South
1/2" = 1'-0"

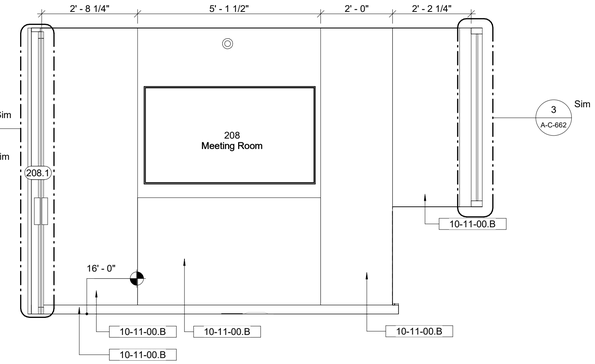

4 Room Elevation - 208 - West
1/2" = 1'-0"

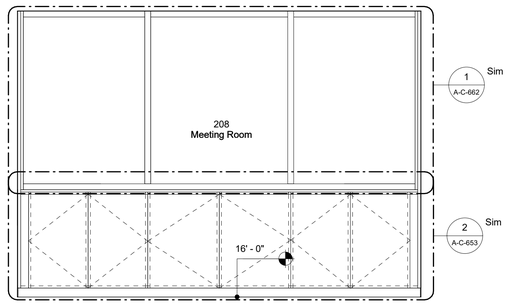

3 Room Elevation - 208 - North
1/2" = 1'-0"

Keynote Legend

Keynote	*Description*
09-65-13.A3	Resilient Base, 3"-high
10-11-00.B	Tackable Acoustic Fabric-Wrapped Panels

Owner
Storm King Art Center
1 Museum Road
New Windsor, NY 12553
+1 (845) 534-3115

Design Architect
heneghan peng architects
14-16 Lord Edward Street
Dublin, D02 YC63
+353 1 633 9000

Executive Architect
WXY Architecture + Urban Design
224 Centre Street, 5th Floor
New York, NY 10013
+1 (212) 219-1953

Landscape Architect
Gustafson Porter + Bowman
1 Cobham Mews
London, MW1 9SB
+44 020 7284 8950

Reed Hilderbrand LLC
33 Whitney Avenue, 3rd Floor
New Haven, CT 06510
+1 (617) 923-2422

Structural & Lighting
ARUP
77 Water Street
New York, NY 10005
+1 (212) 896-3000

MEPF & IT
BuroHappold
100 Broadway #23
New York, NY 10005
+1 (212) 616-0228

Civil
VHB
100 Great Oaks Blvd., Suite 118
Albany, NY 12203
+1 (518) 389-3606

AV & Acoustics
LSTN Consultants
76 Beaver Street, 2nd Floor
New York, NY 10005
+1 (347) 788-0810

Facade
Front Inc.
100 E. Broadway Street, #501
New York, NY 10002
+1 (212) 242-2220

Key Plan

N

Description	Date
Filing Set	06/17/22

Project

Storm King Art Center

C.F.M. Building

Seal

NOT FOR CONSTRUCTION

Drawing Title

Room Elevations - 208

Date	06/17/22
Scale	1/2" = 1'-0"
Drawing Number	A-C-631
Sheet Size	ARCH D

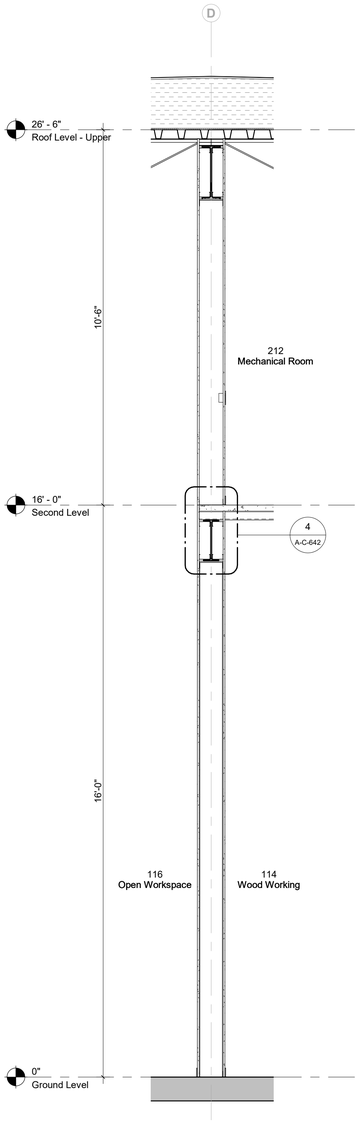

1 NS - Interior Overhead Copy 1
1/2" = 1'-0"

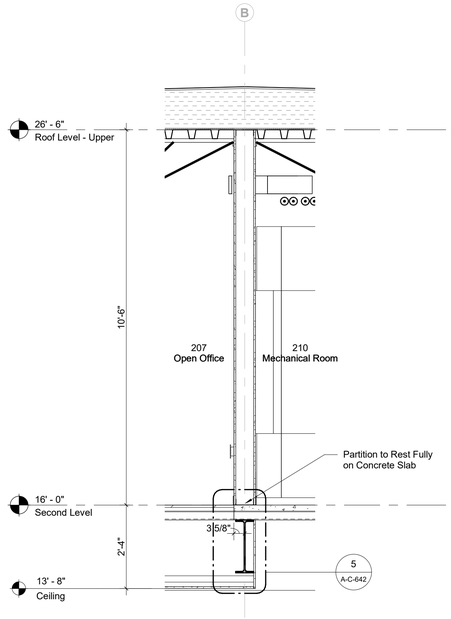

2 NS - Mezzanine Soffit
1/2" = 1'-0"

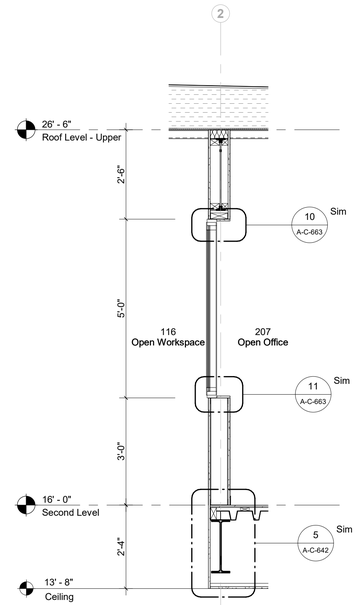

3 EW - Skylights Copy 1
1/2" = 1'-0"

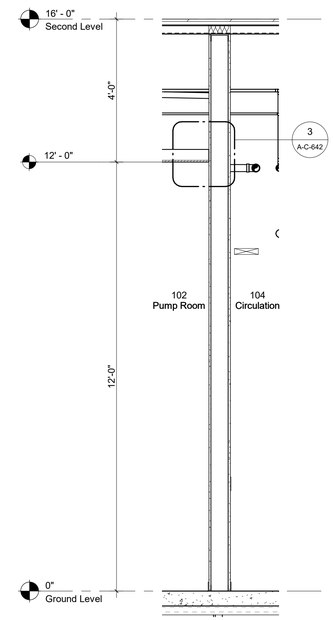

4 NS - Rated Wall and Ceiling Section
1/2" = 1'-0"

Owner
Storm King Art Center
1 Museum Road
New Windsor, NY 12553
+1 (845) 534-3115

Design Architect
heneghan peng architects
14-16 Lord Edward Street
Dublin, D02 YC63
+353 1 633 9000

Executive Architect
WXY Architecture + Urban Design
224 Centre Street, 5th Floor
New York, NY 10013
+1 (212) 219-1953

Landscape Architect
Gustafson Porter + Bowman
1 Cobham Mews
London, MW1 9SB
+44 020 7284 8950

Reed Hilderbrand LLC
33 Whitney Avenue, 3rd Floor
New Haven, CT 06510
+1 (617) 923-2422

Structural & Lighting
ARUP
77 Water Street
New York, NY 10005
+1 (212) 896-3000

MEPF & IT
BuroHappold
100 Broadway #23
New York, NY 10005
+1 (212) 616-0228

Civil
VHB
100 Great Oaks Blvd., Suite 118
Albany, NY 12203
+1 (518) 389-3606

AV & Acoustics
LSTN Consultants
76 Beaver Street, 2nd Floor
New York, NY 10005
+1 (347) 788-0810

Facade
Front Inc.
100 E. Broadway Street, #501
New York, NY 10002
+1 (212) 242-2220

Key Plan

Description	Date
Filing Set	06/17/22

Project

Storm King Art Center

C.F.M. Building

Seal

NOT FOR CONSTRUCTION

Drawing Title

Interior Sections

Date	06/17/22
Scale	1/2" = 1'-0"
Drawing Number	A-C-641
Sheet Size	ARCH D

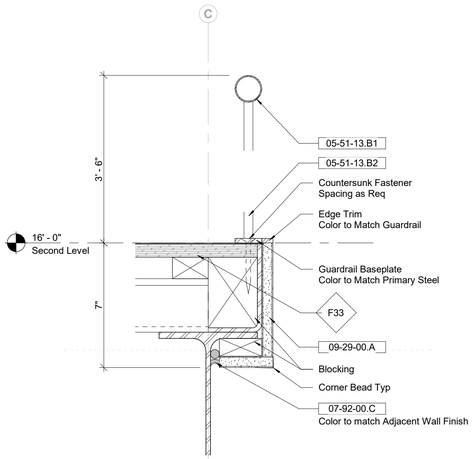

1 Guardrail Detail @ Open Workspace
3" = 1'-0"

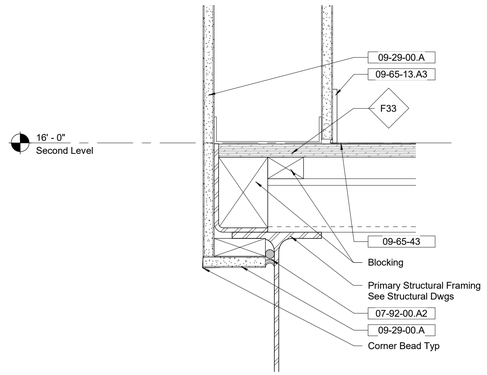

2 Typical Slab Edge Detail @ Exposed Framing
3" = 1'-0"

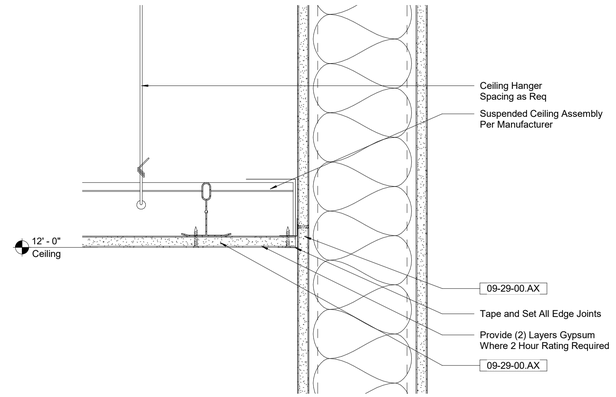

3 Typical Ceiling Detail
3" = 1'-0"

Keynote Legend

Keynote	*Description*
05-41-00.A3	3 5/8" Metal Stud
05-41-00.A4	4" Metal Stud
05-41-00.B8	8" Metal Channel Runner
05-51-13.B1	1 1/2" Steel Pipe Toprail (Color to Match Primary Steel)
05-51-13.B2	1/2" Steel Pickets (Color to Match Primary Steel)
07-21-00.A2	Mineral Wool Insulation, Interior
07-92-00.A2	Joint Sealant w/ Backer Rod
07-92-00.C	Acoustic Sealant w/ Backer Rod
09-29-00.A	5/8" Gypsum Wall Board
09-29-00.AX	5/8" Gypsum Wall Board (Fire-Rated)
09-65-13.A3	Resilient Base, 3"-high
09-65-43	Linoleum Sheet Flooring
10-51-13.A	Plastic Laminate Lockers, Interior

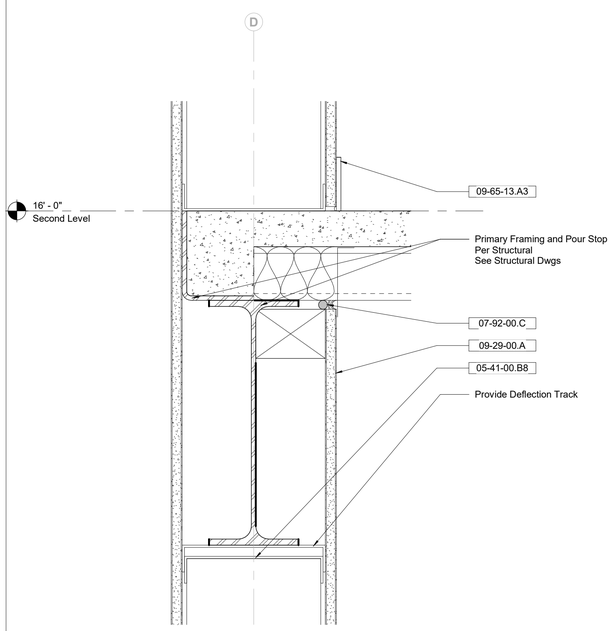

4 Typical Slab Edge Detail @ Multi-Story Wall
3" = 1'-0"

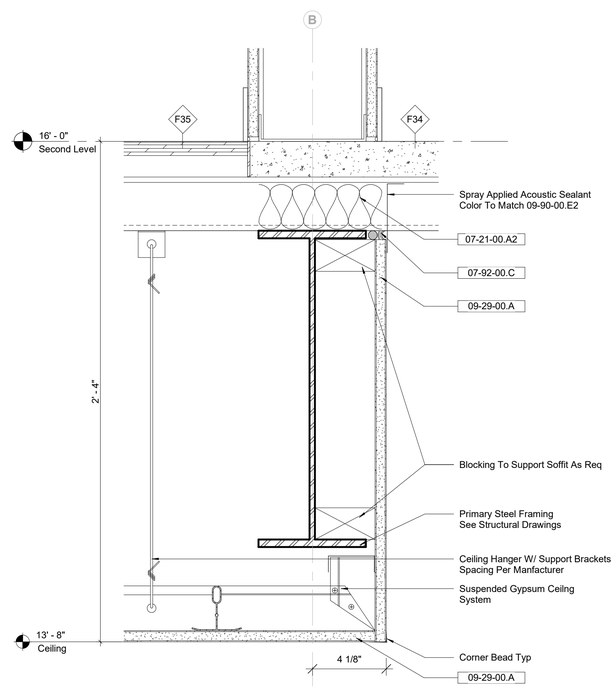

5 Section Detail - Mezzanine Soffit
3" = 1'-0"

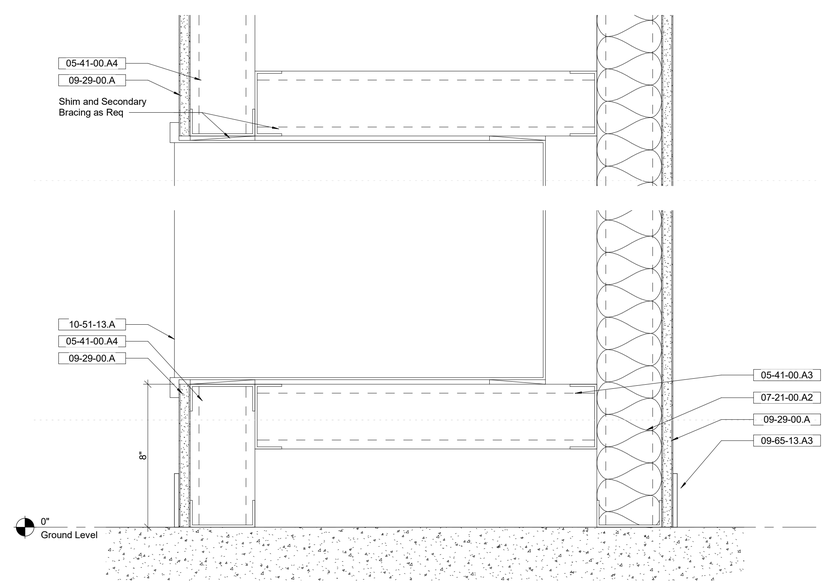

6 Section Detail - Lockers
3" = 1'-0"

Owner
Storm King Art Center
1 Museum Road
New Windsor, NY 12553
+1 (845) 534-3115

Design Architect
heneghan peng architects
14-16 Lord Edward Street
Dublin, D02 YC63
+353 1 633 9000

Executive Architect
WXY Architecture + Urban Design
224 Centre Street, 5th Floor
New York, NY 10013
+1 (212) 219-1953

Landscape Architect
Gustafson Porter + Bowman
1 Cobham Mews
London, MW1 9SB
+44 020 7284 8950

Reed Hilderbrand LLC
33 Whitney Avenue, 3rd Floor
New Haven, CT 06510
+1 (617) 923-2422

Structural & Lighting
ARUP
77 Water Street
New York, NY 10005
+1 (212) 896-3000

MEPF & IT
BuroHappold
100 Broadway #23
New York, NY 10005
+1 (212) 616-0228

Civil
VHB
100 Great Oaks Blvd., Suite 118
Albany, NY 12203
+1 (518) 389-3606

AV & Acoustics
LSTN Consultants
76 Beaver Street, 2nd Floor
New York, NY 10005
+1 (347) 788-0810

Facade
Front Inc.
100 E. Broadway Street, #501
New York, NY 10002
+1 (212) 242-2220

Key Plan

Description	Date
Filing Set	06/17/22

Project

Storm King Art Center
C.F.M. Building

Seal

NOT FOR CONSTRUCTION

Drawing Title

Interior Section Details

Date	06/17/22
Scale	3" = 1'-0"
Drawing Number	A-C-642
Sheet Size	ARCH D

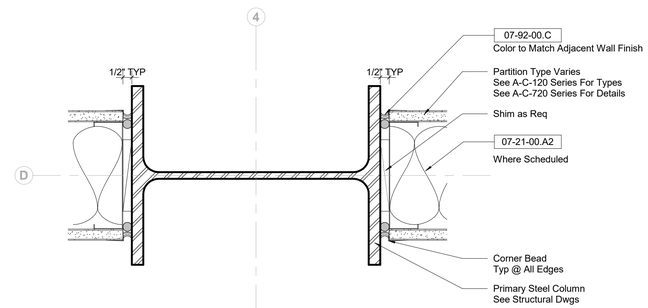

1 Typical Plan Detail @ Column Intersection
3" = 1'-0"

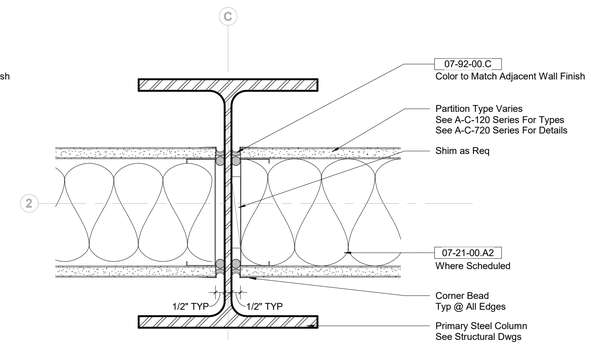

2 Typical Plan Detail @ Column Intersection
3" = 1'-0"

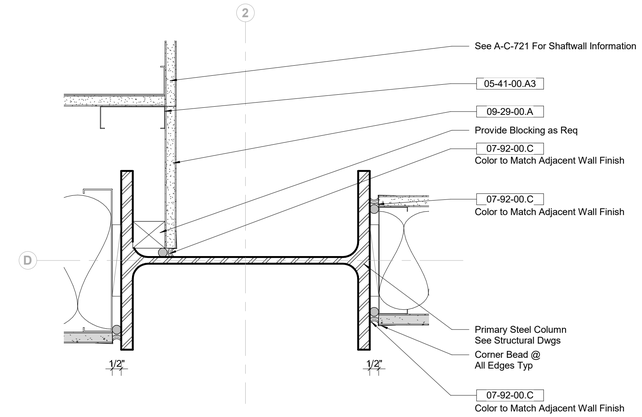

3 Interior Plan Detail - Column at Shaft Wall
3" = 1'-0"

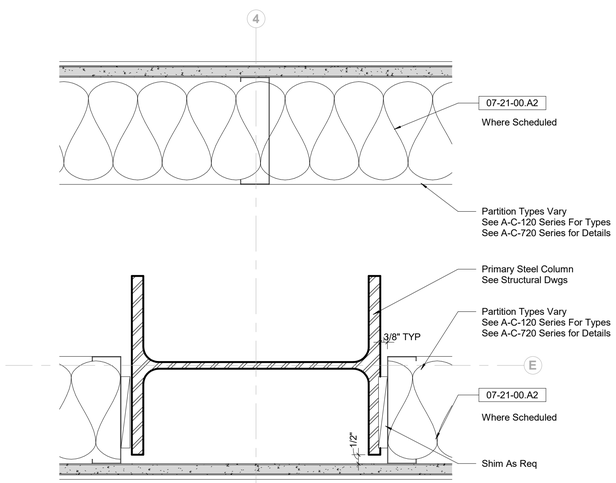

4 Interior Plan Detail - Column at Wall with Structural Brace
3" = 1'-0"

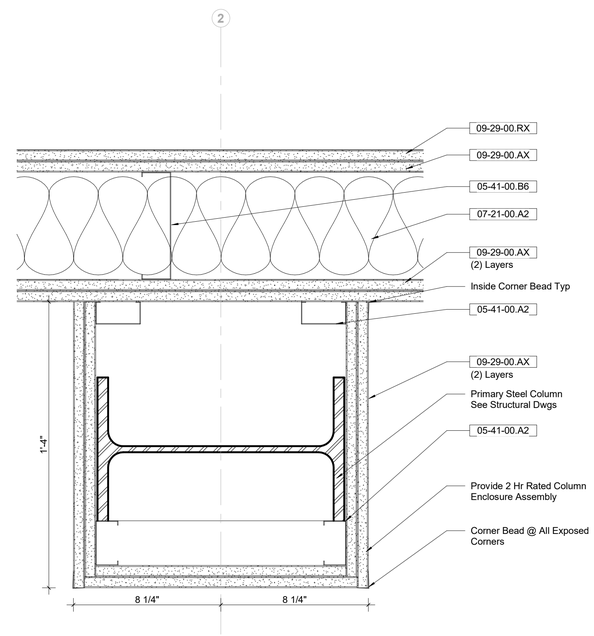

5 Interior Plan Detail - 2 Hr Rated Column Enclosure
3" = 1'-0"

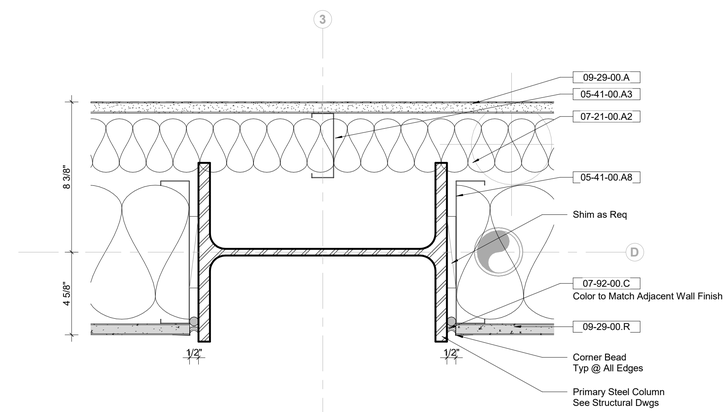

6 Interior Plan Detail - Column @ Chase Wall Intersection
3" = 1'-0"

Keynote Legend

Keynote	*Description*
05-41-00.A2	2 1/2" Metal Stud
05-41-00.A3	3 5/8" Metal Stud
05-41-00.A8	8" Metal Stud
05-41-00.B6	6" Metal Channel Runner
07-21-00.A2	Mineral Wool Insulation, Interior
07-92-00.C	Acoustic Sealant w/ Backer Rod
09-29-00.A	5/8" Gypsum Wall Board
09-29-00.AX	5/8" Gypsum Wall Board (Fire-Rated)
09-29-00.R	5/8" Gypsum Wall Board - Abuse-Resistant
09-29-00.RX	5/8" Gypsum Wall Board - Abuse-Resistant (Fire-Rated)

Owner
Storm King Art Center
1 Museum Road
New Windsor, NY 12553
+1 (845) 534-3115

Design Architect
heneghan peng architects
14-16 Lord Edward Street
Dublin, D02 YC63
+353 1 633 9000

Executive Architect
WXY Architecture + Urban Design
224 Centre Street, 5th Floor
New York, NY 10013
+1 (212) 219-1953

Landscape Architect
Gustafson Porter + Bowman
1 Cobham Mews
London, MW1 9SB
+44 020 7284 8950

Reed Hilderbrand LLC
33 Whitney Avenue, 3rd Floor
New Haven, CT 06510
+1 (617) 923-2422

Structural & Lighting
ARUP
77 Water Street
New York, NY 10005
+1 (212) 896-3000

MEPF & IT
BuroHappold
100 Broadway #23
New York, NY 10005
+1 (212) 616-0228

Civil
VHB
100 Great Oaks Blvd., Suite 118
Albany, NY 12203
+1 (518) 389-3606

AV & Acoustics
LSTN Consultants
76 Beaver Street, 2nd Floor
New York, NY 10005
+1 (347) 788-0810

Facade
Front Inc.
100 E. Broadway Street, #501
New York, NY 10002
+1 (212) 242-2220

Key Plan

Description	Date
Filing Set	06/17/22

Project

Storm King Art Center

C.F.M. Building

Seal

NOT FOR CONSTRUCTION

Drawing Title

Interior Plan Details

Date	06/17/22
Scale	3" = 1'-0"
Drawing Number	A-C-643
Sheet Size	ARCH D

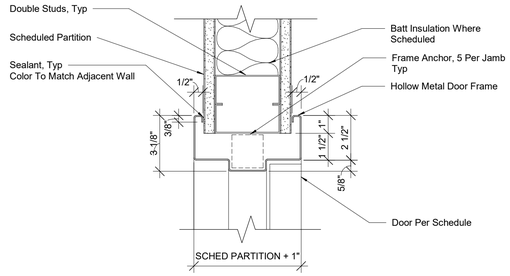

1 GWB Jamb Detail
3" = 1'-0"

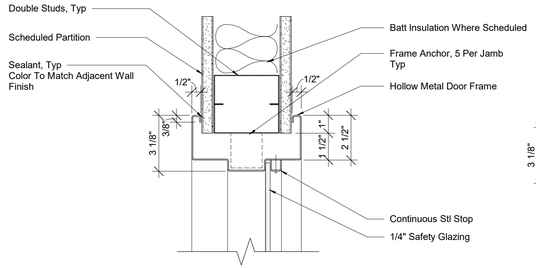

2 Sidelite Jamb Detail
3" = 1'-0"

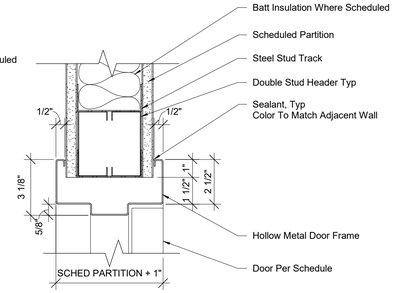

3 GWB Head Detail
3" = 1'-0"

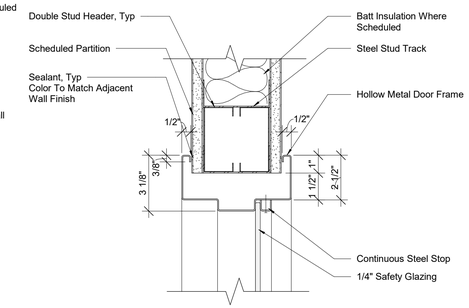

4 Sidelite Head Detail
3" = 1'-0"

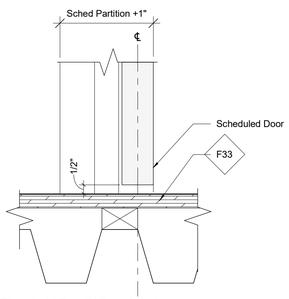

5 Threshold Detail Viny - Vinyl
3" = 1'-0"

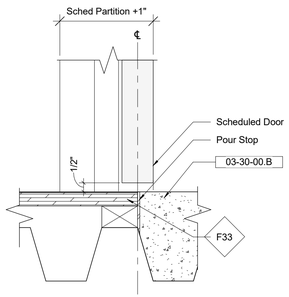

6 Threshold Detail Concrete - Vinyl
3" = 1'-0"

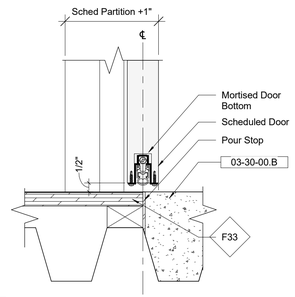

7 Threshold Detail Concrete - Vinyl w/ Sweep
3" = 1'-0"

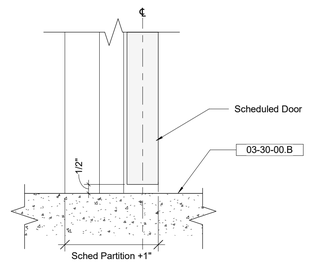

8 Threshold Detail Concrete - Concrete
3" = 1'-0"

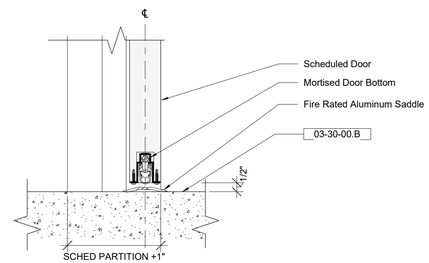

9 Fire Rated Threshold Detail Concrete - Concrete
3" = 1'-0"

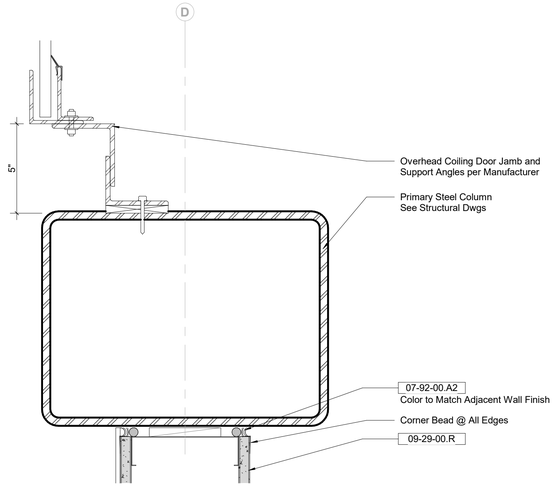

10 Jamb Detail @ Interior Coiling Door
3" = 1'-0"

Keynote Legend

Keynote	*Description*
03-30-00.B	Polished Concrete Finish
07-92-00.A2	Joint Sealant w/ Backer Rod
09-29-00.R	5/8" Gypsum Wall Board - Abuse-Resistant

Owner
Storm King Art Center
1 Museum Road
New Windsor, NY 12553
+1 (845) 534-3115

Design Architect
heneghan peng architects
14-16 Lord Edward Street
Dublin, D02 YC63
+353 1 633 9000

Executive Architect
WXY Architecture + Urban Design
224 Centre Street, 5th Floor
New York, NY 10013
+1 (212) 219-1953

Landscape Architect
Gustafson Porter + Bowman
1 Cobham Mews
London, MW1 9SB
+44 020 7284 8950

Reed Hilderbrand LLC
33 Whitney Avenue, 3rd Floor
New Haven, CT 06510
+1 (617) 923-2422

Structural & Lighting
ARUP
77 Water Street
New York, NY 10005
+1 (212) 896-3000

MEPF & IT
BuroHappold
100 Broadway #23
New York, NY 10005
+1 (212) 616-0228

Civil
VHB
100 Great Oaks Blvd., Suite 118
Albany, NY 12203
+1 (518) 389-3606

AV & Acoustics
LSTN Consultants
76 Beaver Street, 2nd Floor
New York, NY 10005
+1 (347) 788-0810

Facade
Front Inc.
100 E. Broadway Street, #501
New York, NY 10002
+1 (212) 242-2220

Key Plan

Description	Date
Filing Set	06/17/22

Project

Storm King Art Center

C.F.M. Building

Seal

NOT FOR CONSTRUCTION

Drawing Title

Door Details

Date	06/17/22
Scale	3" = 1'-0"
Drawing Number	A-C-645
Sheet Size	ARCH D

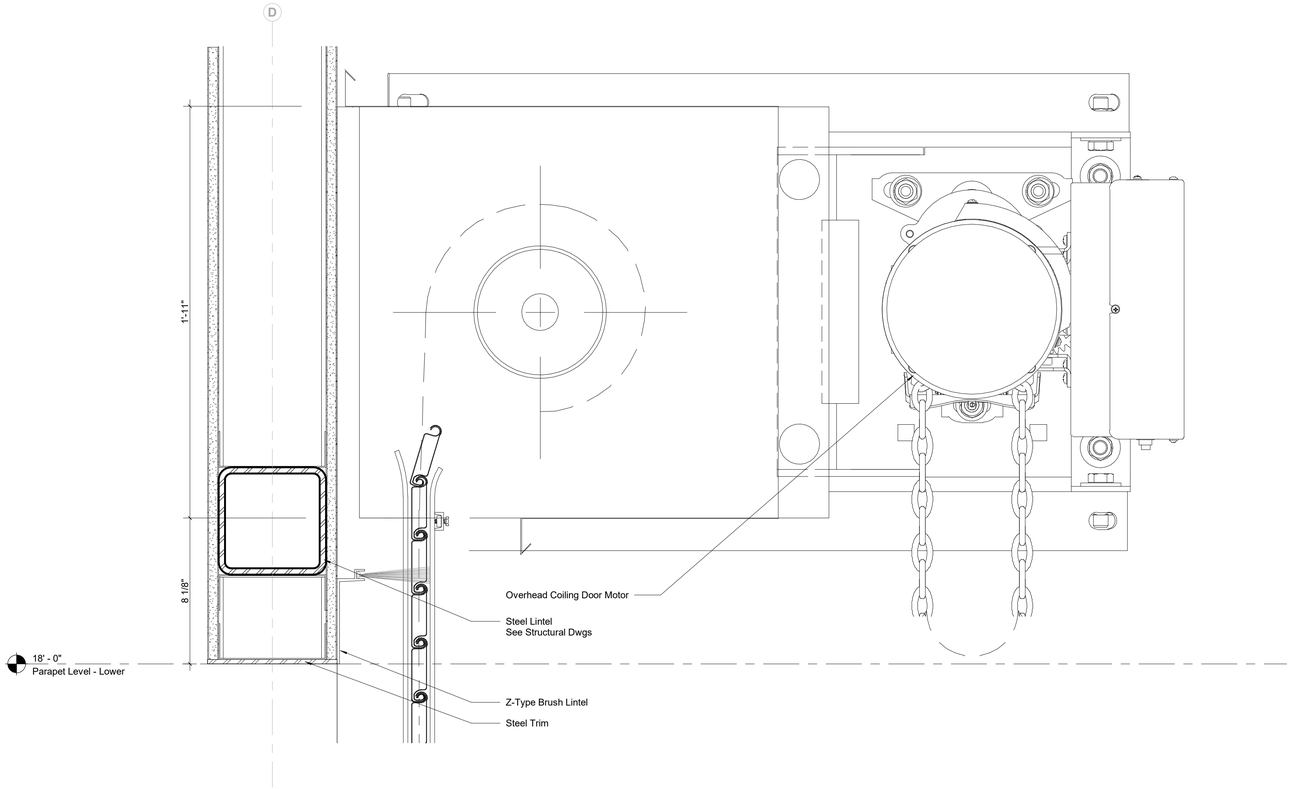

1 Interior Overhead Coiling Door Head Detail
3" = 1'-0"

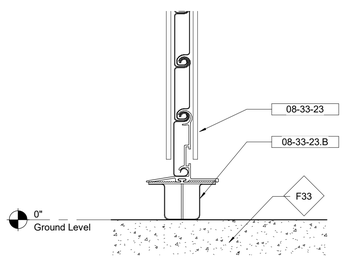

2 Interior Overhead Coiling Door Sill Detail
3" = 1'-0"

Keynote Legend

Keynote	*Description*
08-33-23	Overhead Coiling Door
08-33-23.B	Sensing Edge

Owner
Storm King Art Center
1 Museum Road
New Windsor, NY 12553
+1 (845) 534-3115

Design Architect
heneghan peng architects
14-16 Lord Edward Street
Dublin, D02 YC63
+353 1 633 9000

Executive Architect
WXY Architecture + Urban Design
224 Centre Street, 5th Floor
New York, NY 10013
+1 (212) 219-1953

Landscape Architect
Gustafson Porter + Bowman
1 Cobham Mews
London, MW1 9SB
+44 020 7284 8950

Reed Hilderbrand LLC
33 Whitney Avenue, 3rd Floor
New Haven, CT 06510
+1 (617) 923-2422

Structural & Lighting
ARUP
77 Water Street
New York, NY 10005
+1 (212) 896-3000

MEPF & IT
BuroHappold
100 Broadway #23
New York, NY 10005
+1 (212) 616-0228

Civil
VHB
100 Great Oaks Blvd., Suite 118
Albany, NY 12203
+1 (518) 389-3606

AV & Acoustics
LSTN Consultants
76 Beaver Street, 2nd Floor
New York, NY 10005
+1 (347) 788-0810

Facade
Front Inc.
100 E. Broadway Street, #501
New York, NY 10002
+1 (212) 242-2220

Key Plan

Description	Date
Filing Set	06/17/22

Project

Storm King Art Center

C.F.M. Building

Seal

NOT FOR CONSTRUCTION

Drawing Title

Door Details

Date	06/17/22
Scale	3" = 1'-0"
Drawing Number	A-C-646
Sheet Size	ARCH D

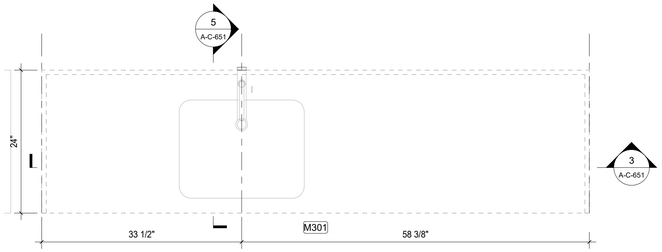

1 Millwork Plan - 112
1" = 1'-0"

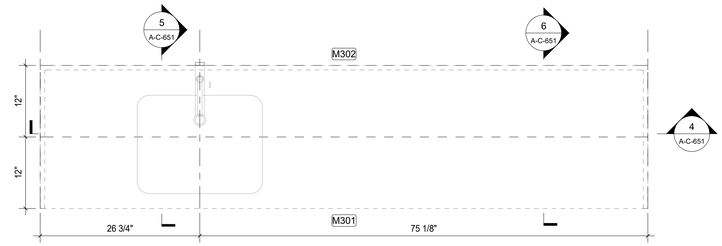

2 Millwork Plan - 113
1" = 1'-0"

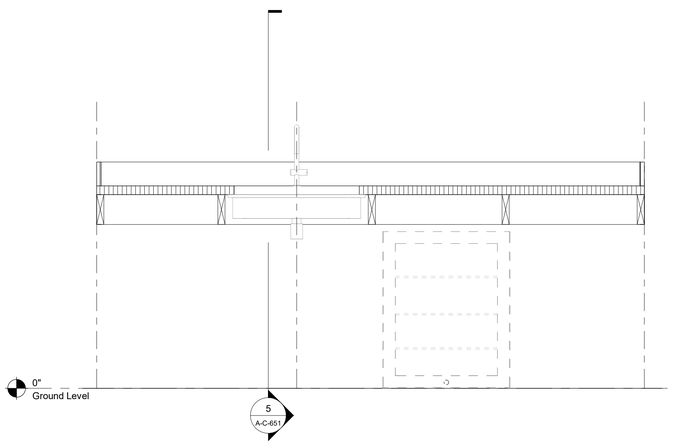

3 Millwork Section - 112
1" = 1'-0"

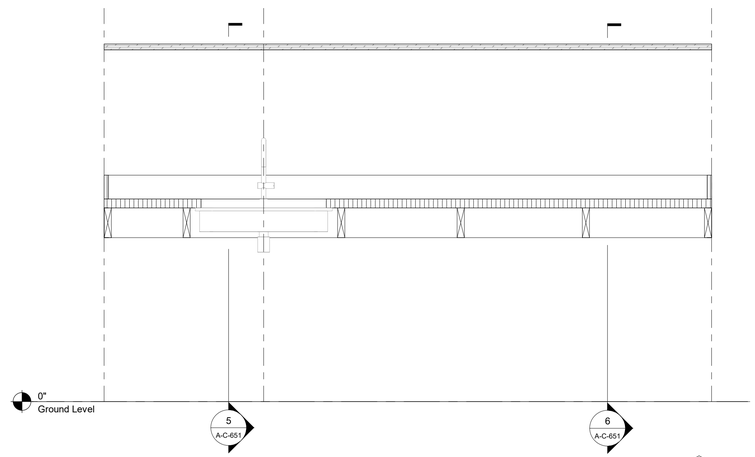

4 Millwork Section - 113
1" = 1'-0"

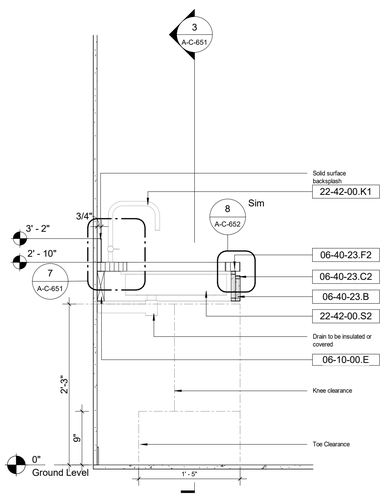

5 Millwork Section - M301
1" = 1'-0"

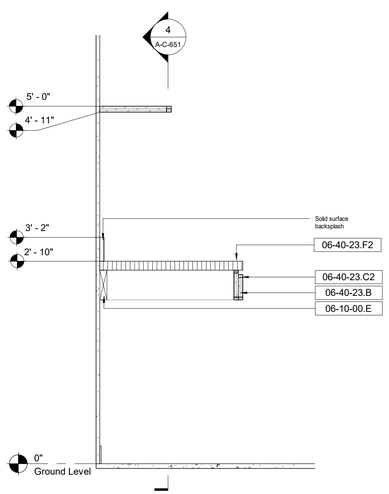

6 Millwork Section - M301/302
1" = 1'-0"

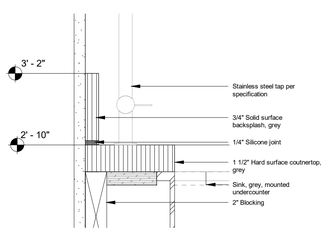

7 Millwork Detail - M301 Back
3" = 1'-0"

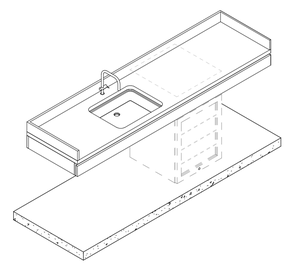

8 Millwork 3D - 112

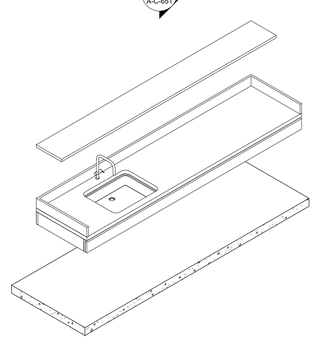

9 Millwork 3D - 113

Keynote Legend

Keynote	*Description*
06-10-00.E	Wood Blocking
06-40-23.B	Melamine Veneered Casework
06-40-23.C2	Hardwood Edge, Painted
06-40-23.F2	Solid Surface Countertop
22-42-00.K1	Kitchen Faucet
22-42-00.S2	Undermount Kitchen Sink, ADA-compliant

Owner
Storm King Art Center
1 Museum Road
New Windsor, NY 12553
+1 (845) 534-3115

Design Architect
heneghan peng architects
14-16 Lord Edward Street
Dublin, D02 YC63
+353 1 633 9000

Executive Architect
WXY Architecture + Urban Design
224 Centre Street, 5th Floor
New York, NY 10013
+1 (212) 219-1953

Landscape Architect
Gustafson Porter + Bowman
1 Cobham Mews
London, MW1 9SB
+44 020 7284 8950

Reed Hilderbrand LLC
33 Whitney Avenue, 3rd Floor
New Haven, CT 06510
+1 (617) 923-2422

Structural & Lighting
ARUP
77 Water Street
New York, NY 10005
+1 (212) 896-3000

MEPF & IT
BuroHappold
100 Broadway #23
New York, NY 10005
+1 (212) 616-0228

Civil
VHB
100 Great Oaks Blvd., Suite 118
Albany, NY 12203
+1 (518) 389-3606

AV & Acoustics
LSTN Consultants
76 Beaver Street, 2nd Floor
New York, NY 10005
+1 (347) 788-0810

Facade
Front Inc.
100 E. Broadway Street, #501
New York, NY 10002
+1 (212) 242-2220

Key Plan

Description	Date
Filing Set	06/17/22

Project

Storm King Art Center

C.F.M. Building

Seal

NOT FOR CONSTRUCTION

Drawing Title

Millwork Details - 112/113

Date	06/17/22
Scale	As indicated
Drawing Number	A-C-651
Sheet Size	ARCH D

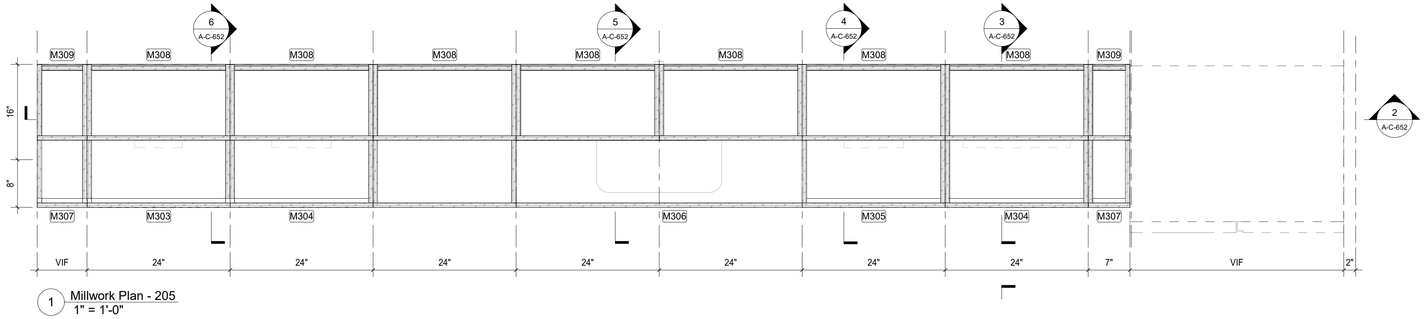

1 Millwork Plan - 205
1" = 1'-0"

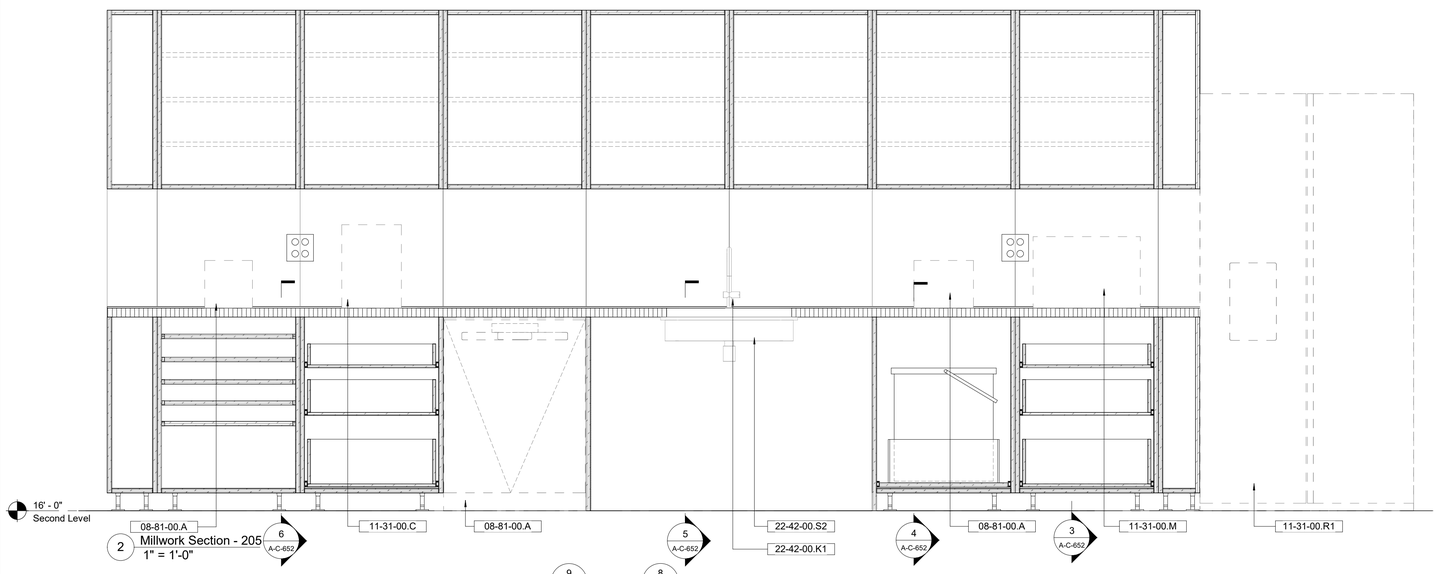

2 Millwork Section - 205
1" = 1'-0"

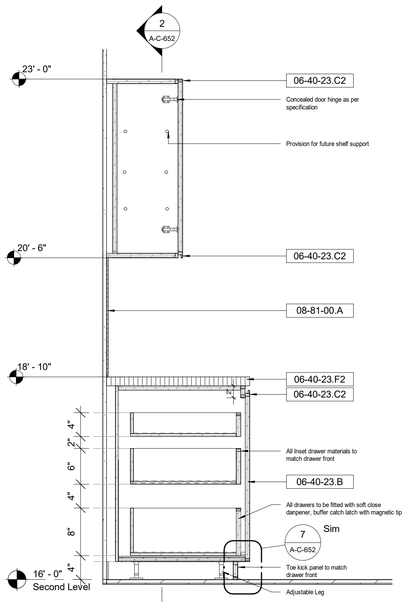

3 Millwork Section - M304/308
1" = 1'-0"

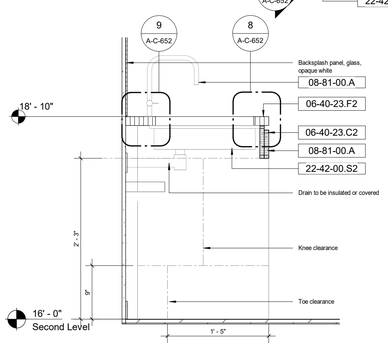

5 Millwork Section - M306
1" = 1'-0"

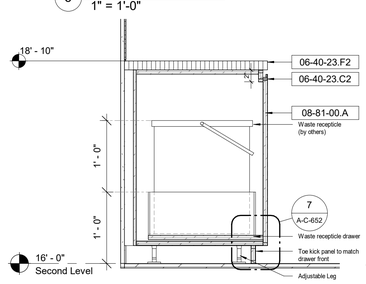

4 Millwork Section - M305
1" = 1'-0"

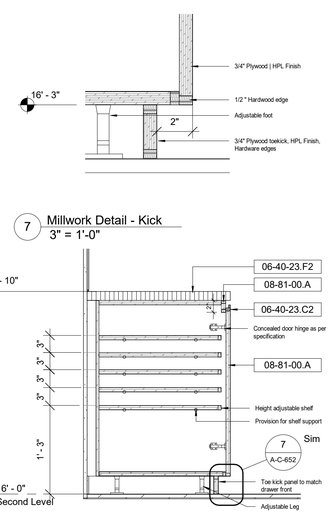

6 Millwork Section - M303
1" = 1'-0"

7 Millwork Detail - Kick
3" = 1'-0"

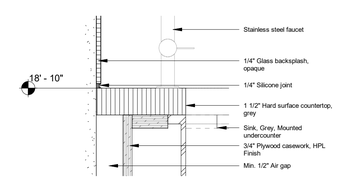

9 Millwork Detail - M304 Back
3" = 1'-0"

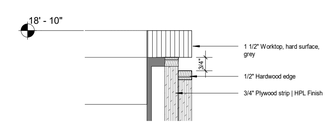

8 Millwork Detail - M304/M308 Sink
3" = 1'-0"

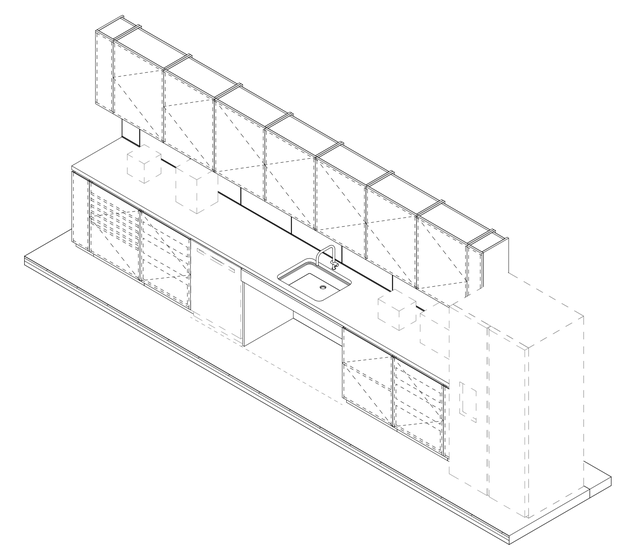

10 Millwork 3D - Break Room

Keynote Legend

Keynote	*Description*
06-40-23.B	Melamine Veneered Casework
06-40-23.C2	Hardwood Edge, Painted
06-40-23.F2	Solid Surface Countertop
08-81-00.A	Glass Backsplash, Back-painted
11-31-00.C	Coffee Maker
11-31-00.M	Microwave
11-31-00.R1	Refrigerator, Full Height
22-42-00.K1	Kitchen Faucet
22-42-00.S2	Undermount Kitchen Sink, ADA-compliant

Owner
Storm King Art Center
1 Museum Road
New Windsor, NY 12553
+1 (845) 534-3115

Design Architect
heneghan peng architects
14-16 Lord Edward Street
Dublin, D02 YC63
+353 1 633 9000

Executive Architect
WXY Architecture + Urban Design
224 Centre Street, 5th Floor
New York, NY 10013
+1 (212) 219-1953

Landscape Architect
Gustafson Porter + Bowman
1 Cobham Mews
London, MW1 9SB
+44 020 7284 8950

Reed Hilderbrand LLC
33 Whitney Avenue, 3rd Floor
New Haven, CT 06510
+1 (617) 923-2422

Structural & Lighting
ARUP
77 Water Street
New York, NY 10005
+1 (212) 896-3000

MEPF & IT
BuroHappold
100 Broadway #23
New York, NY 10005
+1 (212) 616-0228

Civil
VHB
100 Great Oaks Blvd., Suite 118
Albany, NY 12203
+1 (518) 389-3606

AV & Acoustics
LSTN Consultants
76 Beaver Street, 2nd Floor
New York, NY 10005
+1 (347) 788-0810

Facade
Front Inc.
100 E. Broadway Street, #501
New York, NY 10002
+1 (212) 242-2220

Key Plan

Description	Date
Filing Set	06/17/22

Project

Storm King Art Center
C.F.M. Building

Seal

NOT FOR CONSTRUCTION

Drawing Title

Millwork Details - 205

Date	06/17/22
Scale	As indicated
Drawing Number	A-C-652
Sheet Size	ARCH D

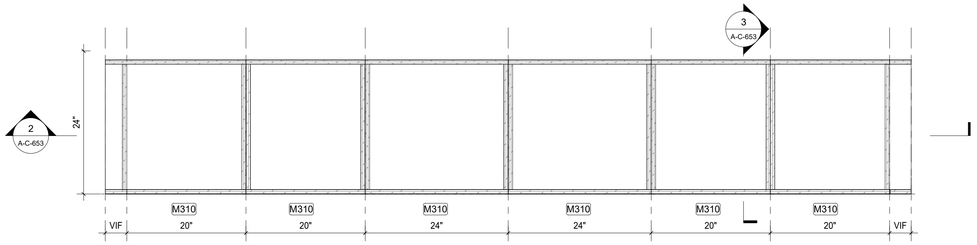

1 Millwork Plan - 208
1" = 1'-0"

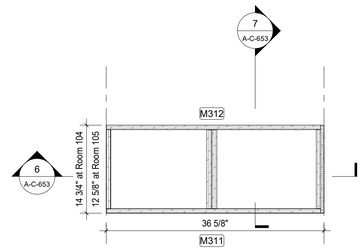

5 Millwork Plan - 105/106
1" = 1'-0"

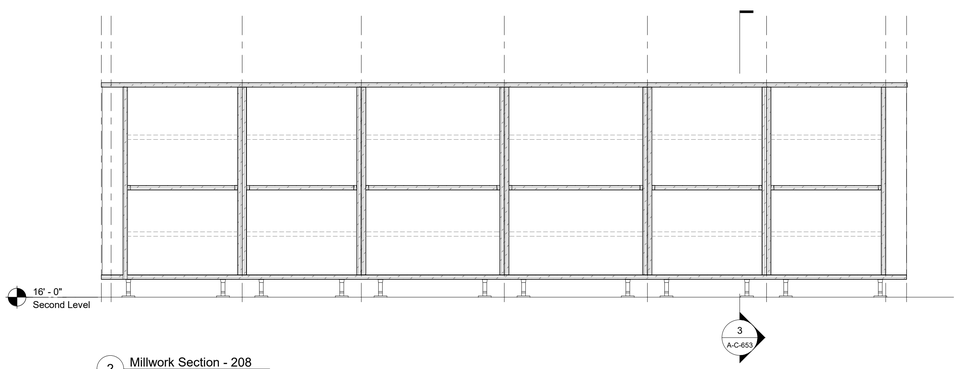

2 Millwork Section - 208
1" = 1'-0"

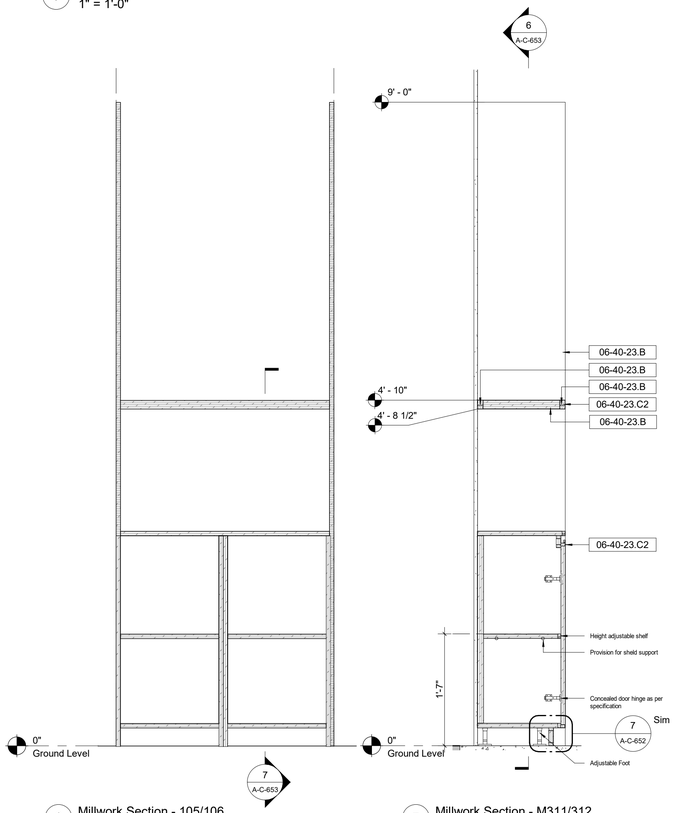

6 Millwork Section - 105/106
1" = 1'-0"

7 Millwork Section - M311/312
1" = 1'-0"

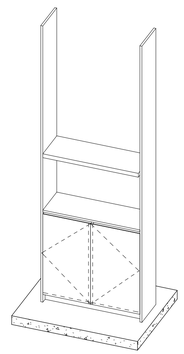

8 Millwork 3D - 105/106

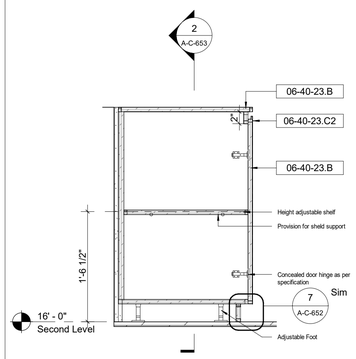

3 Millwork Section - M310
1" = 1'-0"

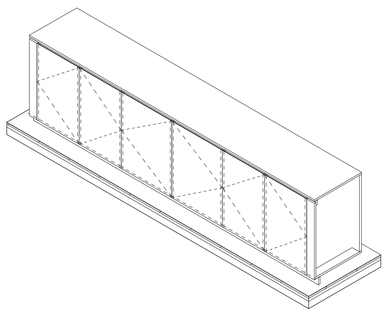

4 Millwork 3D - 208

Keynote Legend

Keynote	*Description*
06-40-23.B	Melamine Veneered Casework
06-40-23.C2	Hardwood Edge, Painted

Owner
Storm King Art Center
1 Museum Road
New Windsor, NY 12553
+1 (845) 534-3115

Design Architect
heneghan peng architects
14-16 Lord Edward Street
Dublin, D02 YC63
+353 1 633 9000

Executive Architect
WXY Architecture + Urban Design
224 Centre Street, 5th Floor
New York, NY 10013
+1 (212) 219-1953

Landscape Architect
Gustafson Porter + Bowman
1 Cobham Mews
London, MW1 9SB
+44 020 7284 8950

Reed Hilderbrand LLC
33 Whitney Avenue, 3rd Floor
New Haven, CT 06510
+1 (617) 923-2422

Structural & Lighting
ARUP
77 Water Street
New York, NY 10005
+1 (212) 896-3000

MEPF & IT
BuroHappold
100 Broadway #23
New York, NY 10005
+1 (212) 616-0228

Civil
VHB
100 Great Oaks Blvd., Suite 118
Albany, NY 12203
+1 (518) 389-3606

AV & Acoustics
LSTN Consultants
76 Beaver Street, 2nd Floor
New York, NY 10005
+1 (347) 788-0810

Facade
Front Inc.
100 E. Broadway Street, #501
New York, NY 10002
+1 (212) 242-2220

Key Plan

Description	Date
Filing Set	06/17/22

Project

Storm King Art Center

C.F.M. Building

Seal

NOT FOR CONSTRUCTION

Drawing Title

Millwork Details - 208/105/106

Date	06/17/22
Scale	1" = 1'-0"
Drawing Number	A-C-653
Sheet Size	ARCH D

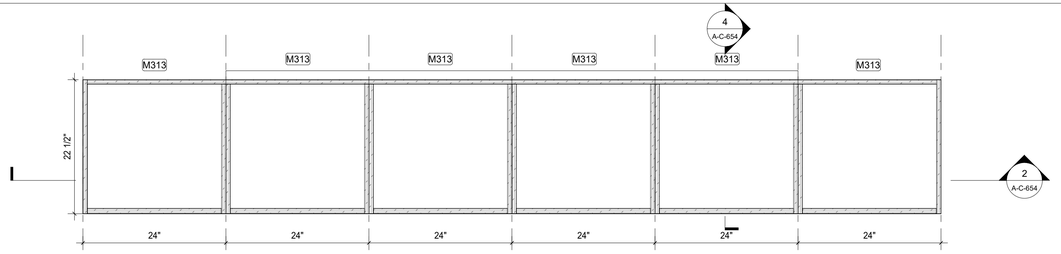

1 Millwork Plan - 209 - South
1" = 1'-0"

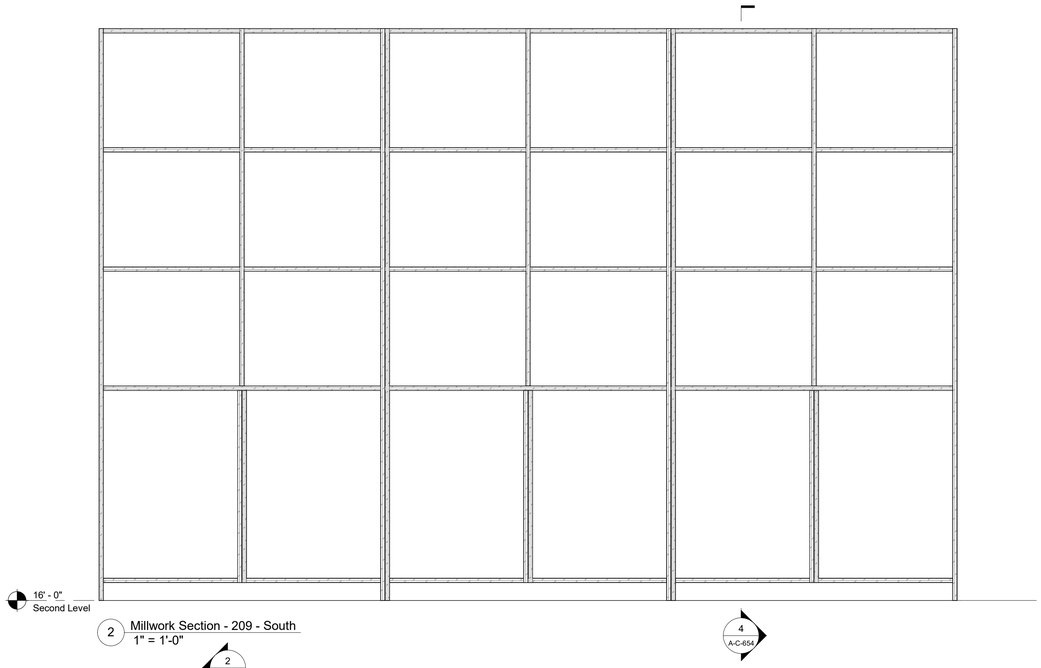

2 Millwork Section - 209 - South
1" = 1'-0"

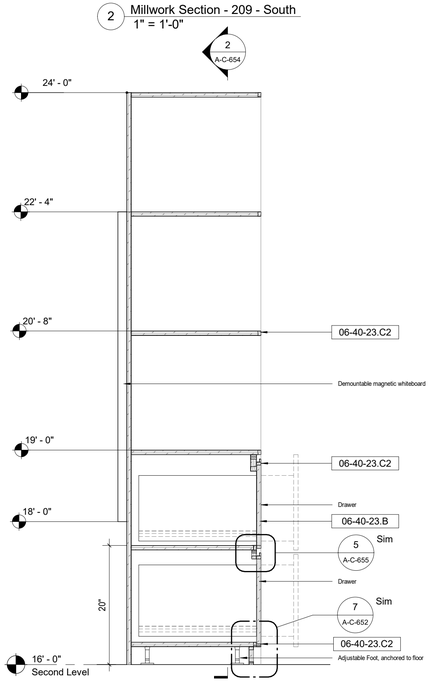

4 Millwork Detail - M313
1" = 1'-0"

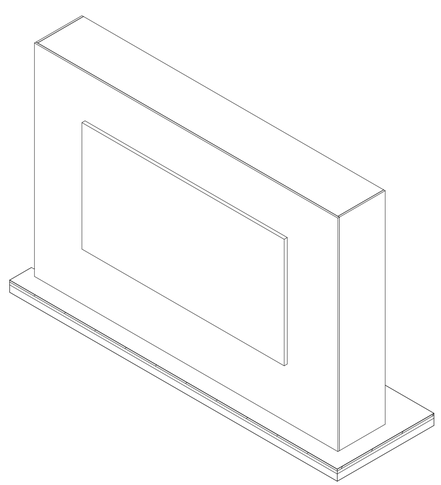

5 Millwork 3D - Copy South - South

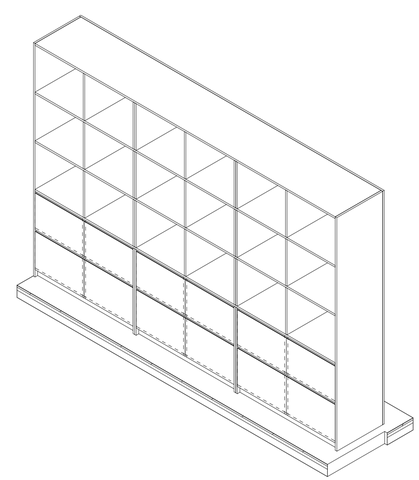

6 Millwork 3D - Copy South - North

Keynote Legend

Keynote	*Description*
06-40-23.B	Melamine Veneered Casework
06-40-23.C2	Hardwood Edge, Painted

Owner
Storm King Art Center
1 Museum Road
New Windsor, NY 12553
+1 (845) 534-3115

Design Architect
heneghan peng architects
14-16 Lord Edward Street
Dublin, D02 YC63
+353 1 633 9000

Executive Architect
WXY Architecture + Urban Design
224 Centre Street, 5th Floor
New York, NY 10013
+1 (212) 219-1953

Landscape Architect
Gustafson Porter + Bowman
1 Cobham Mews
London, MW1 9SB
+44 020 7284 8950

Reed Hilderbrand LLC
33 Whitney Avenue, 3rd Floor
New Haven, CT 06510
+1 (617) 923-2422

Structural & Lighting
ARUP
77 Water Street
New York, NY 10005
+1 (212) 896-3000

MEPF & IT
BuroHappold
100 Broadway #23
New York, NY 10005
+1 (212) 616-0228

Civil
VHB
100 Great Oaks Blvd., Suite 118
Albany, NY 12203
+1 (518) 389-3606

AV & Acoustics
LSTN Consultants
76 Beaver Street, 2nd Floor
New York, NY 10005
+1 (347) 788-0810

Facade
Front Inc.
100 E. Broadway Street, #501
New York, NY 10002
+1 (212) 242-2220

Key Plan

Description	Date
Filing Set	06/17/22

Project

Storm King Art Center

C.F.M. Building

Seal

NOT FOR CONSTRUCTION

Drawing Title

Millwork Details - 209

Date	06/17/22
Scale	1" = 1'-0"
Drawing Number	A-C-654
Sheet Size	ARCH D

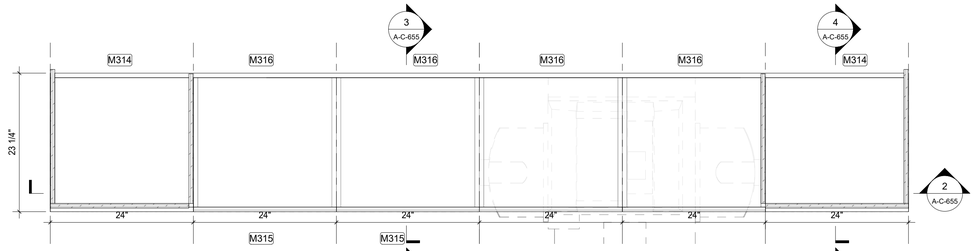

1 Millwork Plan - 209 - North
1" = 1'-0"

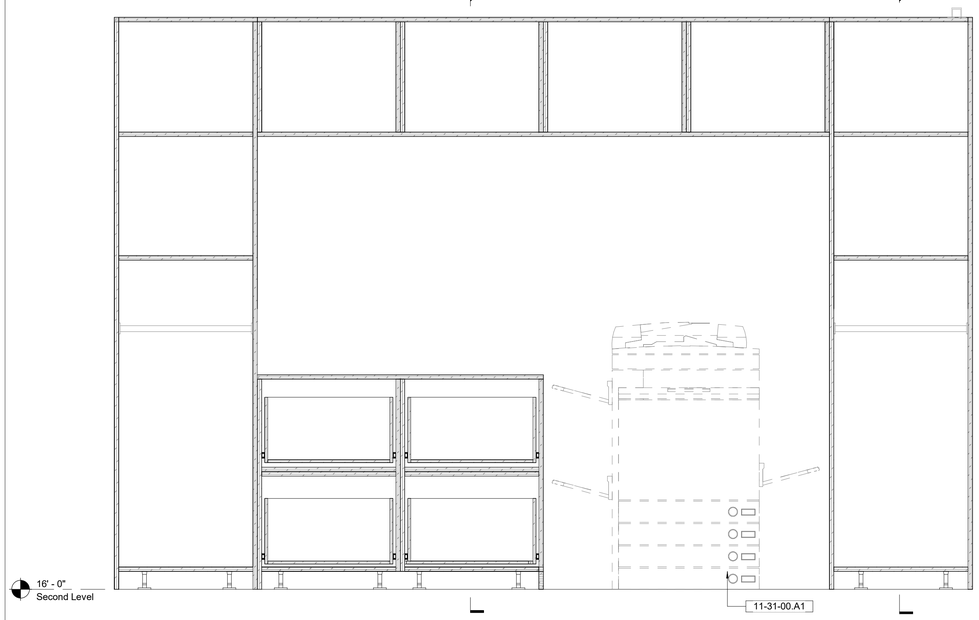

2 Millwork Section - 209 North
1" = 1'-0"

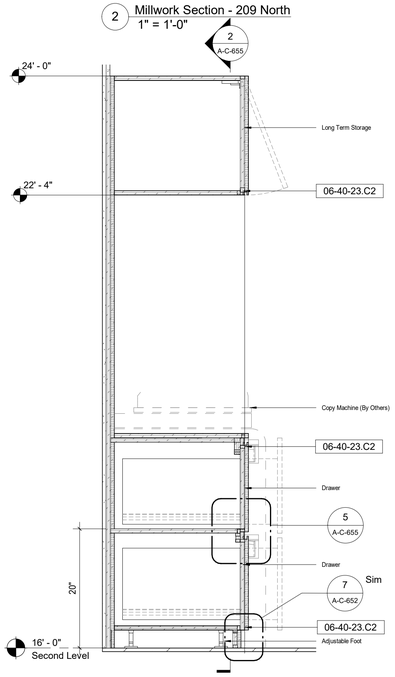

3 Millwork Section - M315/M316
1" = 1'-0"

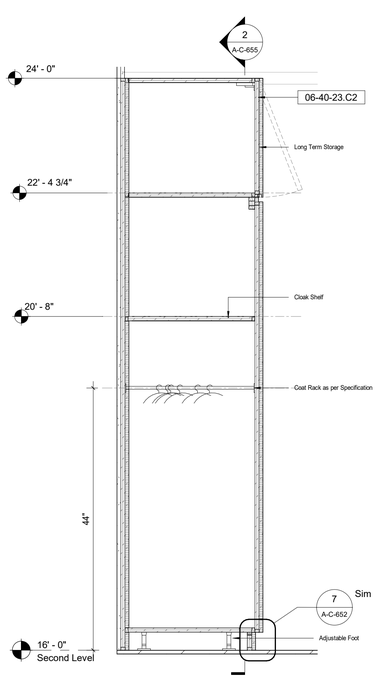

4 Millwork Section - M314
1" = 1'-0"

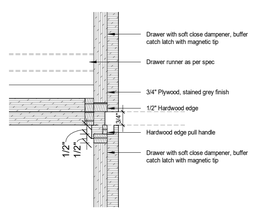

5 Millwork Detail - M315 Drawer
3" = 1'-0"

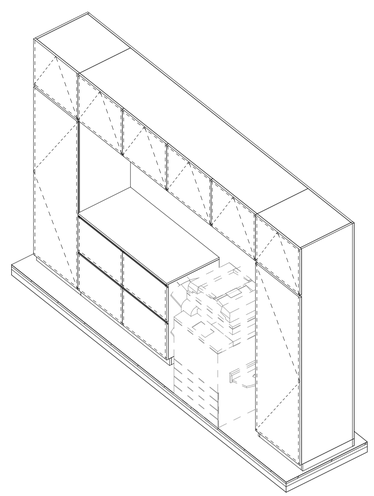

6 Millwork 3D - 209

Keynote Legend

Keynote	*Description*
06-40-23.C2	Hardwood Edge, Painted
11-31-00.A1	Copy Machine, Full Size

Owner
Storm King Art Center
1 Museum Road
New Windsor, NY 12553
+1 (845) 534-3115

Design Architect
heneghan peng architects
14-16 Lord Edward Street
Dublin, D02 YC63
+353 1 633 9000

Executive Architect
WXY Architecture + Urban Design
224 Centre Street, 5th Floor
New York, NY 10013
+1 (212) 219-1953

Landscape Architect
Gustafson Porter + Bowman
1 Cobham Mews
London, MW1 9SB
+44 020 7284 8950

Reed Hilderbrand LLC
33 Whitney Avenue, 3rd Floor
New Haven, CT 06510
+1 (617) 923-2422

Structural & Lighting
ARUP
77 Water Street
New York, NY 10005
+1 (212) 896-3000

MEPF & IT
BuroHappold
100 Broadway #23
New York, NY 10005
+1 (212) 616-0228

Civil
VHB
100 Great Oaks Blvd., Suite 118
Albany, NY 12203
+1 (518) 389-3606

AV & Acoustics
LSTN Consultants
76 Beaver Street, 2nd Floor
New York, NY 10005
+1 (347) 788-0810

Facade
Front Inc.
100 E. Broadway Street, #501
New York, NY 10002
+1 (212) 242-2220

Key Plan

N

Description	Date
Filing Set	06/17/22

Project

Storm King Art Center

C.F.M. Building

Seal

NOT FOR CONSTRUCTION

Drawing Title

Millwork Details - 209

Date	06/17/22
Scale	As indicated
Drawing Number	A-C-655
Sheet Size	ARCH D

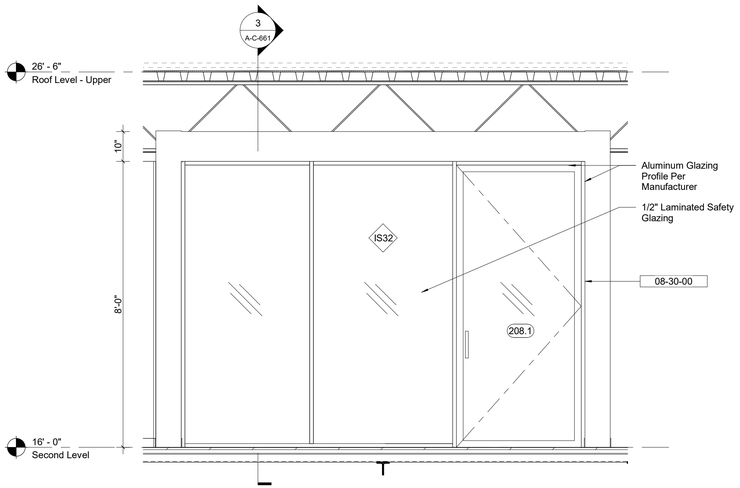

1 Glazing Elevation - Meeting Room South
1/2" = 1'-0"

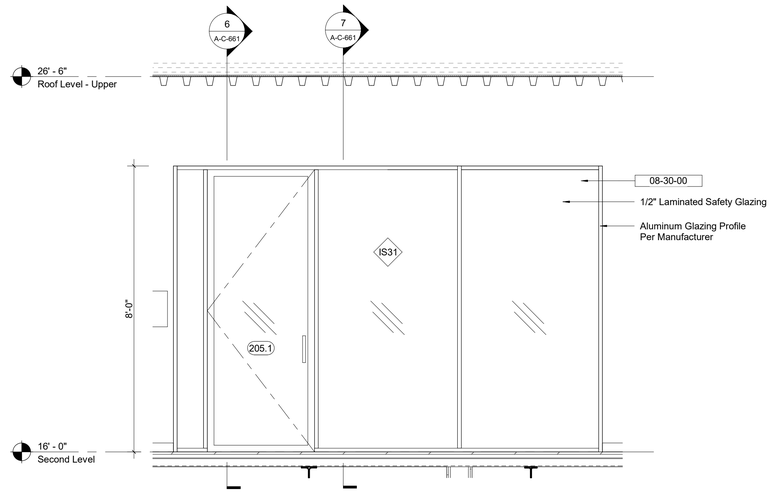

4 Glazing Elevation - Break Room
1/2" = 1'-0"

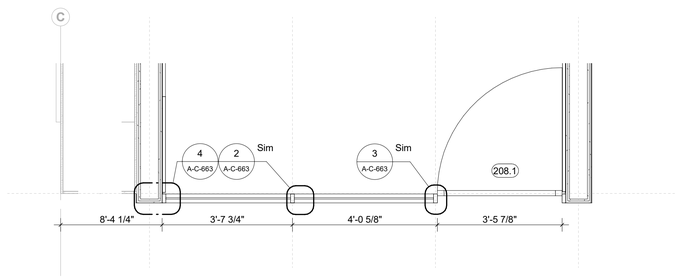

2 Glazing Plan - Meeting Room South
1/2" = 1'-0"

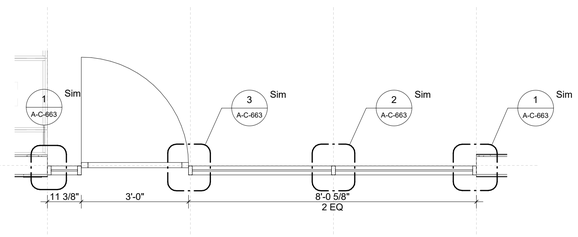

5 Glazing Plan - Break Room
1/2" = 1'-0"

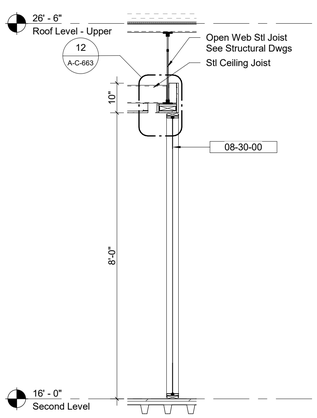

3 Glazing Section - Meeting Room South
1/2" = 1'-0"

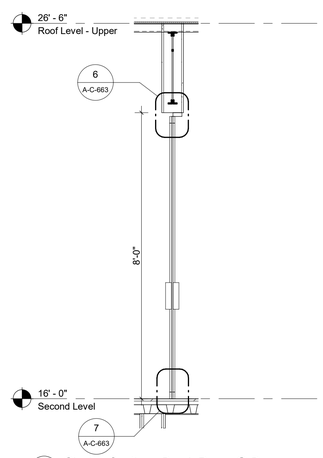

6 Glazing Section - Break Room @ Door
1/2" = 1'-0"

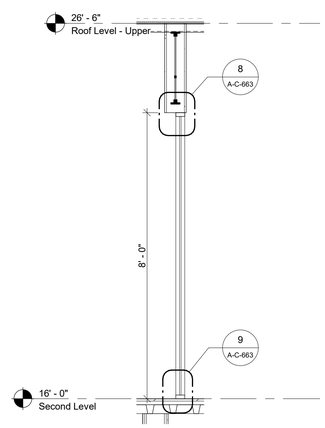

7 Glazing Section - Break Room
1/2" = 1'-0"

Keynote Legend

Keynote	*Description*
08-30-00	Interior Glazed Partition Systems

Owner
Storm King Art Center
1 Museum Road
New Windsor, NY 12553
+1 (845) 534-3115

Design Architect
heneghan peng architects
14-16 Lord Edward Street
Dublin, D02 YC63
+353 1 633 9000

Executive Architect
WXY Architecture + Urban Design
224 Centre Street, 5th Floor
New York, NY 10013
+1 (212) 219-1953

Landscape Architect
Gustafson Porter + Bowman
1 Cobham Mews
London, MW1 9SB
+44 020 7284 8950

Reed Hilderbrand LLC
33 Whitney Avenue, 3rd Floor
New Haven, CT 06510
+1 (617) 923-2422

Structural & Lighting
ARUP
77 Water Street
New York, NY 10005
+1 (212) 896-3000

MEPF & IT
BuroHappold
100 Broadway #23
New York, NY 10005
+1 (212) 616-0228

Civil
VHB
100 Great Oaks Blvd., Suite 118
Albany, NY 12203
+1 (518) 389-3606

AV & Acoustics
LSTN Consultants
76 Beaver Street, 2nd Floor
New York, NY 10005
+1 (347) 788-0810

Facade
Front Inc.
100 E. Broadway Street, #501
New York, NY 10002
+1 (212) 242-2220

Key Plan

N

Description	Date
Filing Set	06/17/22

Project

Storm King Art Center

C.F.M. Building

Seal

NOT FOR CONSTRUCTION

Drawing Title

Interior Glazing Systems

Date	06/17/22
Scale	1/2" = 1'-0"
Drawing Number	A-C-661
Sheet Size	ARCH D

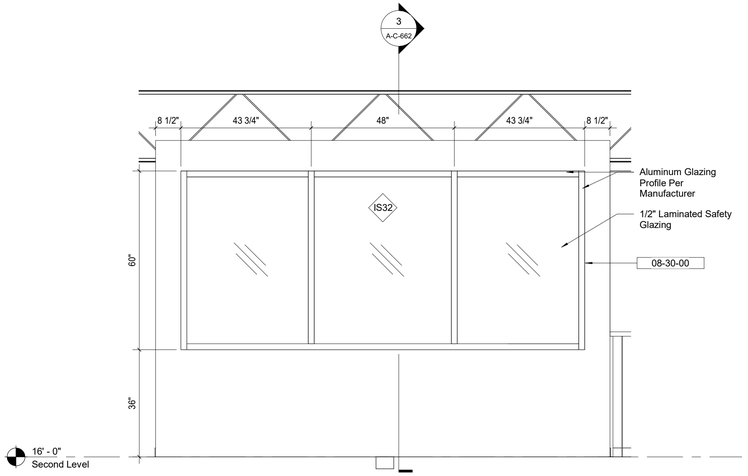

1 Glazing Elevation - Meeting Room North
1/2" = 1'-0"

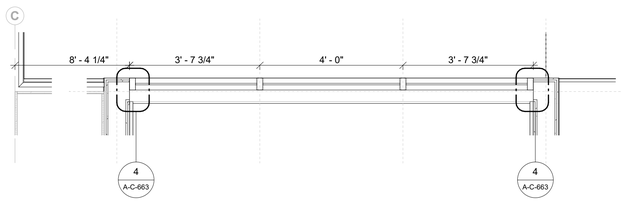

2 Glazing Plan - Meeting Room North
1/2" = 1'-0"

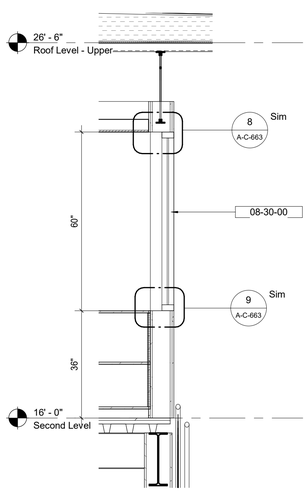

3 Glazing Section - Meeting Room North
1/2" = 1'-0"

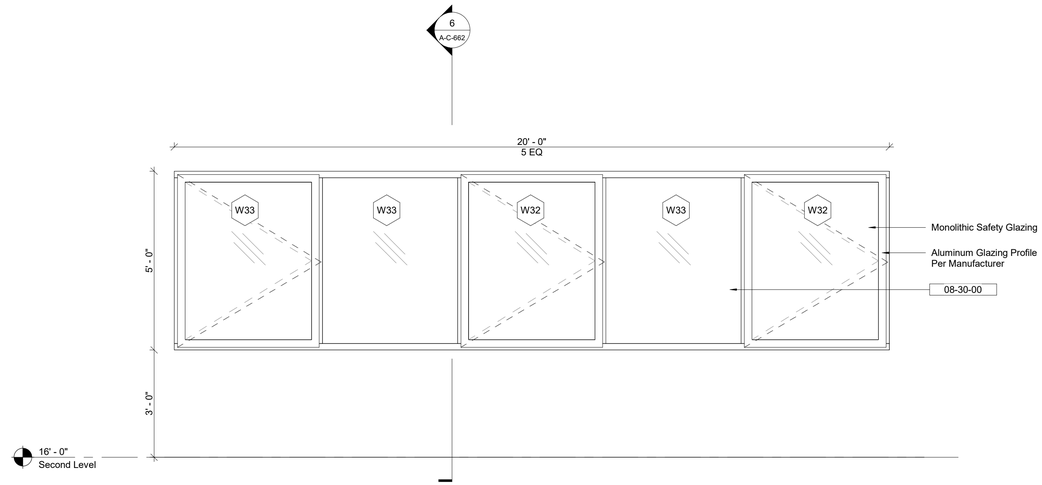

4 Glazing Elevation - Open Office
1/2" = 1'-0"

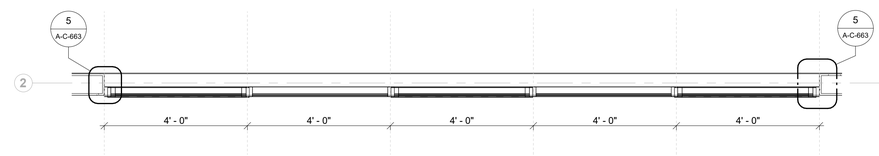

5 Glazing Plan - Open Office
1/2" = 1'-0"

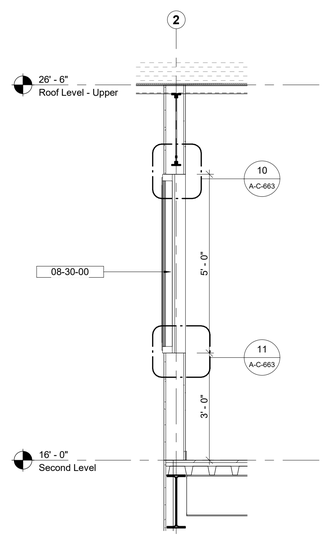

6 Glazing Section - Open Office
1/2" = 1'-0"

Keynote Legend

Keynote	*Description*
08-30-00	Interior Glazed Partition Systems

Owner
Storm King Art Center
1 Museum Road
New Windsor, NY 12553
+1 (845) 534-3115

Design Architect
heneghan peng architects
14-16 Lord Edward Street
Dublin, D02 YC63
+353 1 633 9000

Executive Architect
WXY Architecture + Urban Design
224 Centre Street, 5th Floor
New York, NY 10013
+1 (212) 219-1953

Landscape Architect
Gustafson Porter + Bowman
1 Cobham Mews
London, MW1 9SB
+44 020 7284 8950

Reed Hilderbrand LLC
33 Whitney Avenue, 3rd Floor
New Haven, CT 06510
+1 (617) 923-2422

Structural & Lighting
ARUP
77 Water Street
New York, NY 10005
+1 (212) 896-3000

MEPF & IT
BuroHappold
100 Broadway #23
New York, NY 10005
+1 (212) 616-0228

Civil
VHB
100 Great Oaks Blvd., Suite 118
Albany, NY 12203
+1 (518) 389-3606

AV & Acoustics
LSTN Consultants
76 Beaver Street, 2nd Floor
New York, NY 10005
+1 (347) 788-0810

Facade
Front Inc.
100 E. Broadway Street, #501
New York, NY 10002
+1 (212) 242-2220

Key Plan

N

Description	Date
Filing Set	06/17/22

Project

Storm King Art Center

C.F.M. Building

Seal

NOT FOR CONSTRUCTION

Drawing Title

Interior Glazing Systems

Date	06/17/22
Scale	1/2" = 1'-0"
Drawing Number	A-C-662
Sheet Size	ARCH D

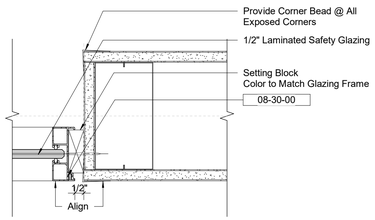

1 Interior Glazing Detail - Jamb @ Break Room
3" = 1'-0"

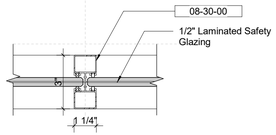

2 Interior Glazing Detail - Intermediate Mullion
3" = 1'-0"

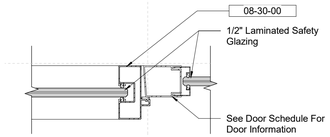

3 Interior Glazing Detail - Jamb @ Door
3" = 1'-0"

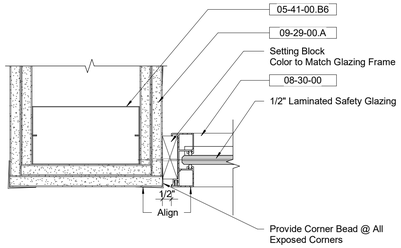

4 Interior Glazing Detail - Jamb @ Meeting Room
3" = 1'-0"

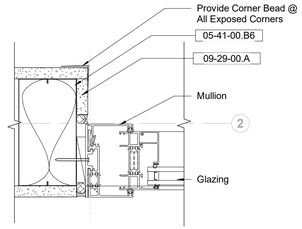

5 Interior Glazing Detail - Jamb @ Open Office Window
3" = 1'-0"

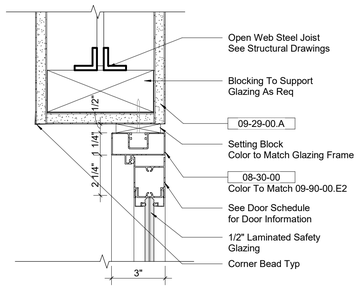

6 Interior Glazing Detail - Head @ Break Room Door
3" = 1'-0"

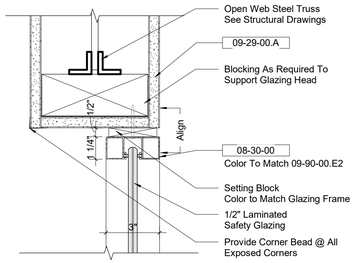

8 Interior Glazing Detail - Head @ Break Room
3" = 1'-0"

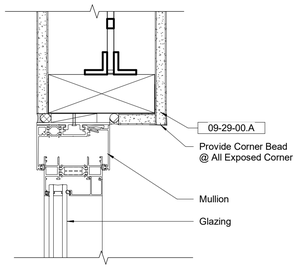

10 Interior Glazing Detail - Head @ Open Office Window
3" = 1'-0"

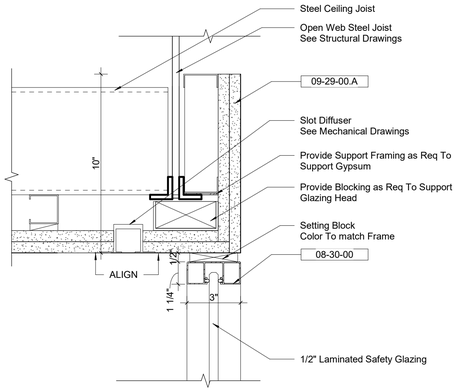

12 Interior Glazing Detail - Head @ Meeting Room South Wall
3" = 1'-0"

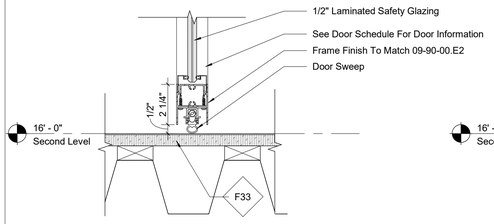

7 Interior Glazing Detail - Sill @ Break Room Door
3" = 1'-0"

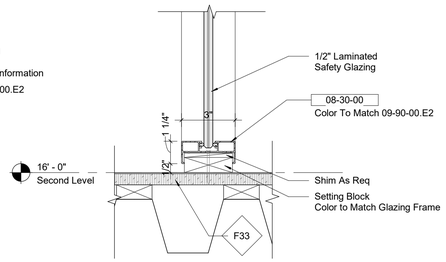

9 Interior Glazing Detail - Still @ Break Room
3" = 1'-0"

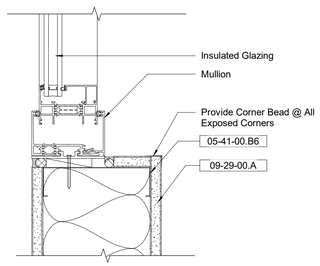

11 Interior Glazing Detail - Sill @ Open Office Window
3" = 1'-0"

Keynote Legend

Keynote	*Description*
05-41-00.B6	6" Metal Channel Runner
08-30-00	Interior Glazed Partition Systems
09-29-00.A	5/8" Gypsum Wall Board

Owner
Storm King Art Center
1 Museum Road
New Windsor, NY 12553
+1 (845) 534-3115

Design Architect
heneghan peng architects
14-16 Lord Edward Street
Dublin, D02 YC63
+353 1 633 9000

Executive Architect
WXY Architecture + Urban Design
224 Centre Street, 5th Floor
New York, NY 10013
+1 (212) 219-1953

Landscape Architect
Gustafson Porter + Bowman
1 Cobham Mews
London, MW1 9SB
+44 020 7284 8950

Reed Hilderbrand LLC
33 Whitney Avenue, 3rd Floor
New Haven, CT 06510
+1 (617) 923-2422

Structural & Lighting
ARUP
77 Water Street
New York, NY 10005
+1 (212) 896-3000

MEPF & IT
BuroHappold
100 Broadway #23
New York, NY 10005
+1 (212) 616-0228

Civil
VHB
100 Great Oaks Blvd., Suite 118
Albany, NY 12203
+1 (518) 389-3606

AV & Acoustics
LSTN Consultants
76 Beaver Street, 2nd Floor
New York, NY 10005
+1 (347) 788-0810

Facade
Front Inc.
100 E. Broadway Street, #501
New York, NY 10002
+1 (212) 242-2220

Key Plan

Description	Date
Filing Set	06/17/22

Project

Storm King Art Center

C.F.M. Building

Seal

NOT FOR CONSTRUCTION

Drawing Title

Interior Glazing Details

Date	06/17/22
Scale	3" = 1'-0"
Drawing Number	A-C-663
Sheet Size	ARCH D

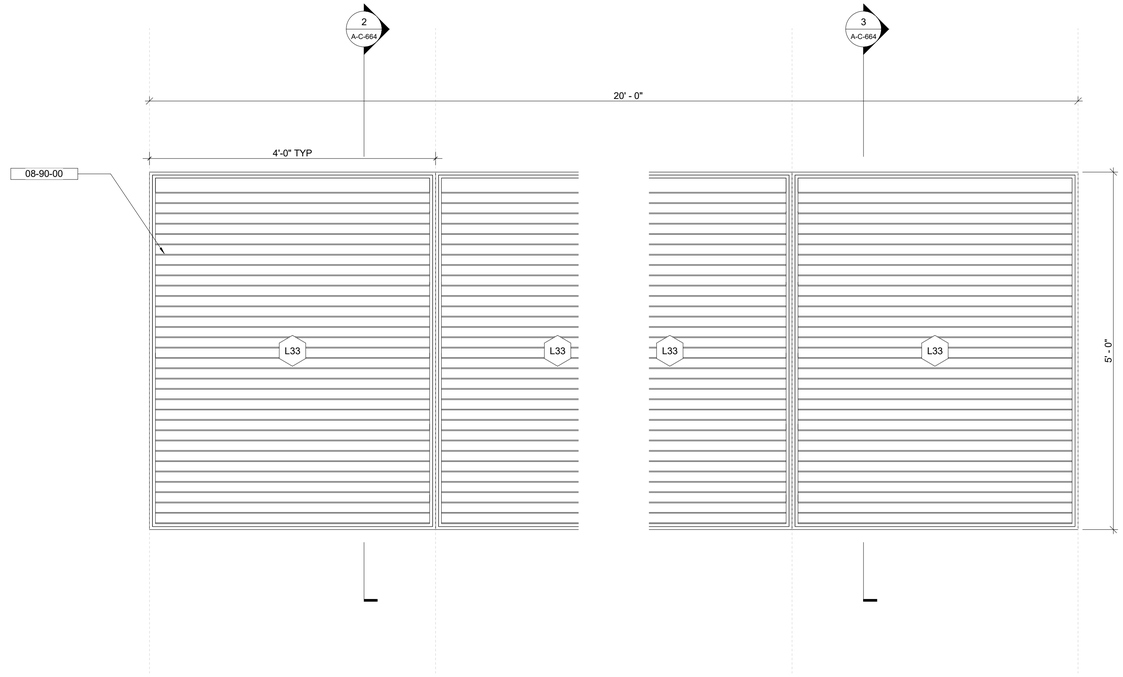

1 Elevation - Louver L33
1" = 1'-0"

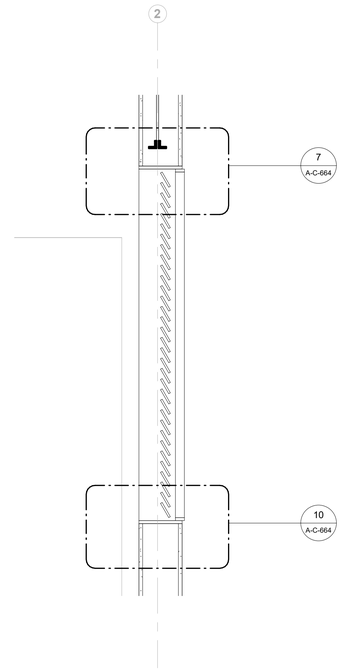

2 Section - Louver L33 w/out Blank-off Panel
1" = 1'-0"

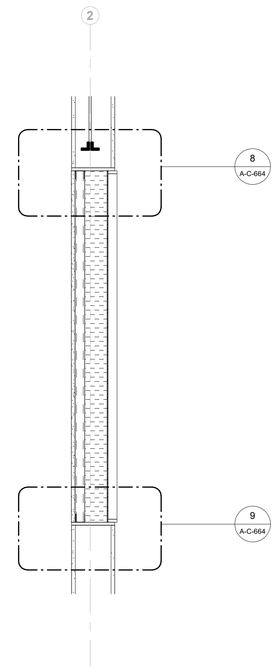

3 Section - Louver L33 w/ Blank-off Panel
1" = 1'-0"

Keynote Legend

Keynote	*Description*
05-41-00	Cold-Formed Metal Framing
05-41-00.B2	2 1/2" Metal Channel Runner
05-41-00.B6	6" Metal Channel Runner
07-21-00	Thermal Insulation
07-92-00.A2	Joint Sealant w/ Backer Rod
08-90-00	Exterior Louvers
08-90-00.B	Blank-off Panel
09-29-00.A	5/8" Gypsum Wall Board

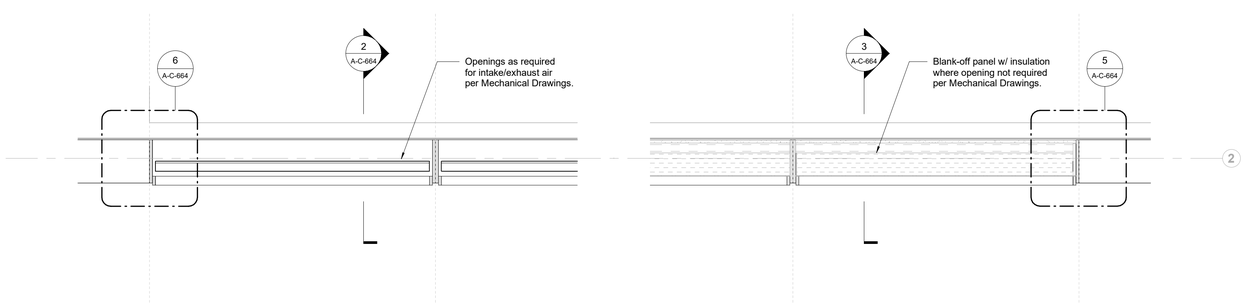

4 Plan - Louver L33
1" = 1'-0"

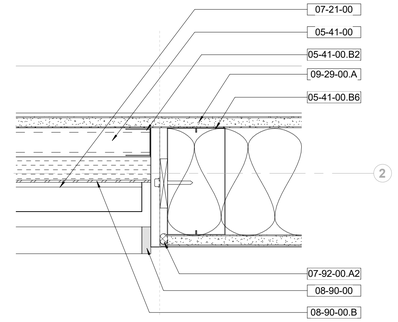

5 Plan - Jamb Detail - Louver L33 w/ Blank-off Panel
3" = 1'-0"

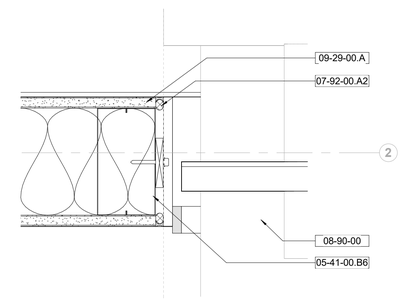

6 Plan - Jamb Detail - Louver L33 w/out Blank-off Panel
3" = 1'-0"

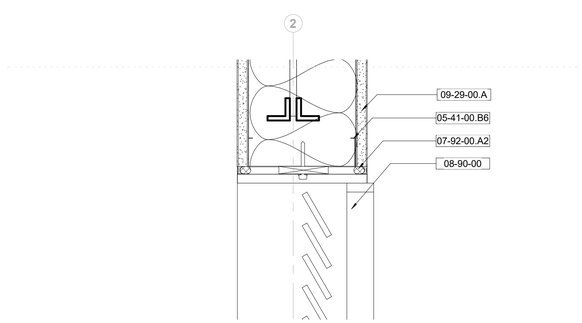

7 Section - Head Detail - Louver L33 w/out Blank-off Panel
3" = 1'-0"

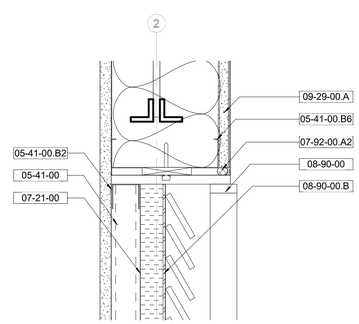

8 Section - Head Detail - Louver L33 w/ Blank-off Panel
3" = 1'-0"

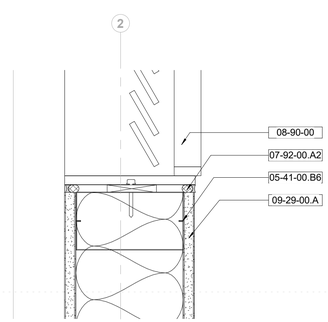

9 Section - Sill Detail - Louver L33 w/out Blank-off Panel
3" = 1'-0"

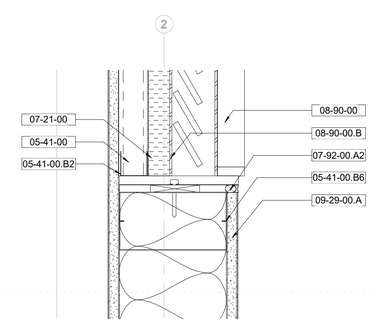

10 Section - Sill Detail - Louver L33 w/ Blank-off Panel
3" = 1'-0"

Owner
Storm King Art Center
1 Museum Road
New Windsor, NY 12553
+1 (845) 534-3115

Design Architect
heneghan peng architects
14-16 Lord Edward Street
Dublin, D02 YC63
+353 1 633 9000

Executive Architect
WXY Architecture + Urban Design
224 Centre Street, 5th Floor
New York, NY 10013
+1 (212) 219-1953

Landscape Architect
Gustafson Porter + Bowman
1 Cobham Mews
London, MW1 9SB
+44 020 7284 8950

Reed Hilderbrand LLC
33 Whitney Avenue, 3rd Floor
New Haven, CT 06510
+1 (617) 923-2422

Structural & Lighting
ARUP
77 Water Street
New York, NY 10005
+1 (212) 896-3000

MEPF & IT
BuroHappold
100 Broadway #23
New York, NY 10005
+1 (212) 616-0228

Civil
VHB
100 Great Oaks Blvd., Suite 118
Albany, NY 12203
+1 (518) 389-3606

AV & Acoustics
LSTN Consultants
76 Beaver Street, 2nd Floor
New York, NY 10005
+1 (347) 788-0810

Facade
Front Inc.
100 E. Broadway Street, #501
New York, NY 10002
+1 (212) 242-2220

Key Plan

Description	Date
Filing Set	06/17/22

Project

Storm King Art Center

C.F.M. Building

Seal

NOT FOR CONSTRUCTION

Drawing Title

Interior Louver Details

Date	06/17/22
Scale	As indicated
Drawing Number	A-C-664
Sheet Size	ARCH D

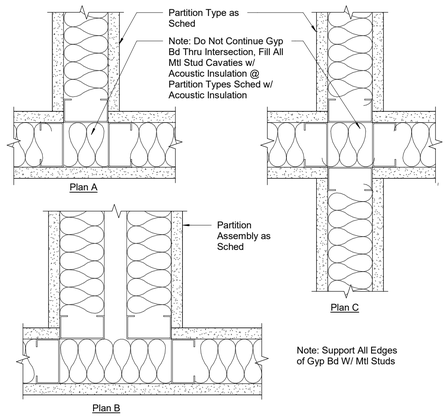

1 Typ Partition Intersections
3" = 1'-0"

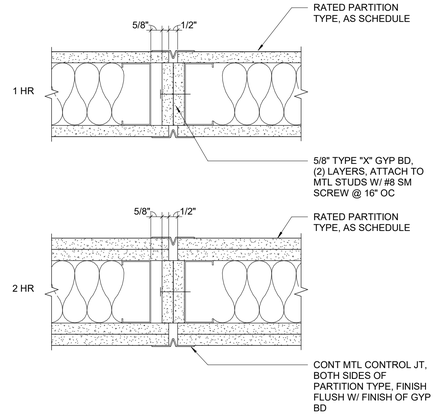

2 Control Joint @Gyp Bd Rated Partition
3" = 1'-0"

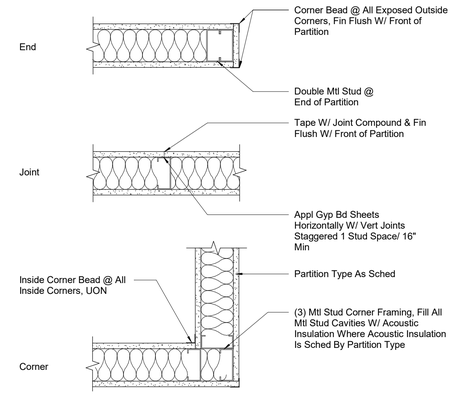

3 Gyp Bd Partition Corner & End Conditions
1 1/2" = 1'-0"

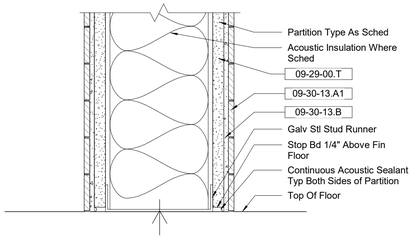

4 Typical Tile Base Detail
3" = 1'-0"

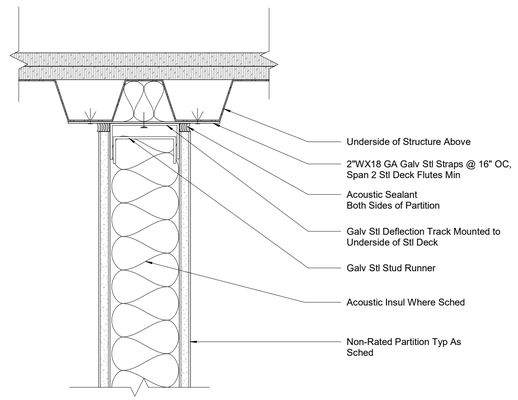

5 Head Detail - Non-Rated Partition Parallel to Deck
3" = 1'-0"

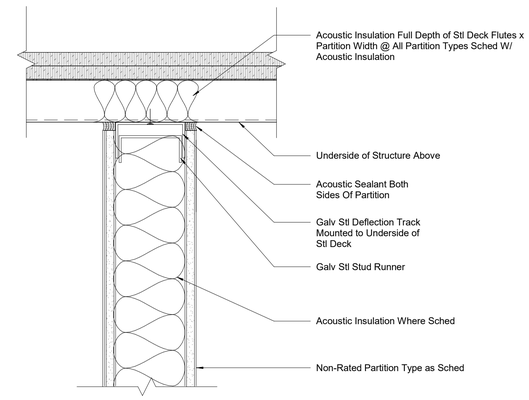

6 Head Detail - Non-Rated Partition Perp to Deck
3" = 1'-0"

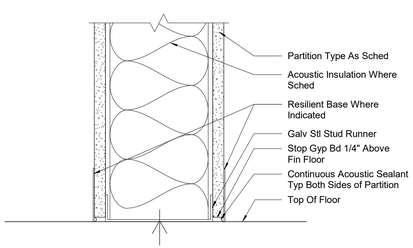

7 Typical Gyp Bd Base Detail
3" = 1'-0"

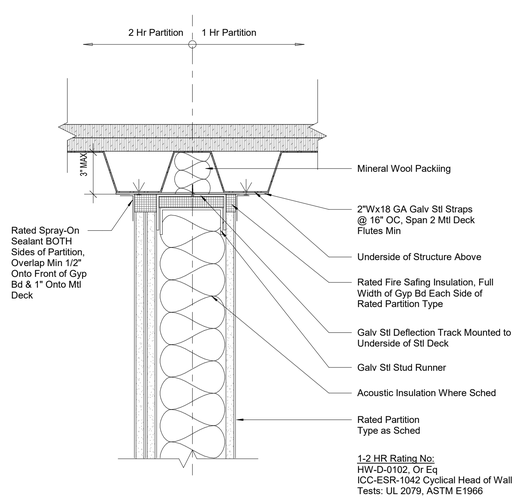

8 Head Detail - Rated Partition Parallel to Deck
3" = 1'-0"

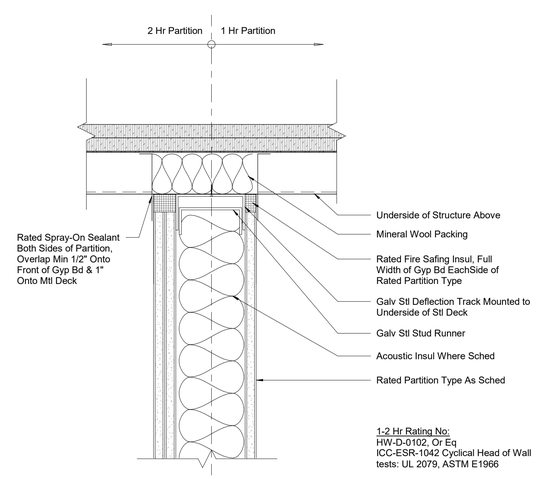

9 Head Detail - Rated Partition Perp to Deck
3" = 1'-0"

Keynote Legend

Keynote	*Description*
09-29-00.T	5/8" Glass-Mat Tile Backerboard
09-30-13.A1	Ceramic Wall Tile
09-30-13.B	Setting Bed

Owner
Storm King Art Center
1 Museum Road
New Windsor, NY 12553
+1 (845) 534-3115

Design Architect
heneghan peng architects
14-16 Lord Edward Street
Dublin, D02 YC63
+353 1 633 9000

Executive Architect
WXY Architecture + Urban Design
224 Centre Street, 5th Floor
New York, NY 10013
+1 (212) 219-1953

Landscape Architect
Gustafson Porter + Bowman
1 Cobham Mews
London, MW1 9SB
+44 020 7284 8950

Reed Hilderbrand LLC
33 Whitney Avenue, 3rd Floor
New Haven, CT 06510
+1 (617) 923-2422

Structural & Lighting
ARUP
77 Water Street
New York, NY 10005
+1 (212) 896-3000

MEPF & IT
BuroHappold
100 Broadway #23
New York, NY 10005
+1 (212) 616-0228

Civil
VHB
100 Great Oaks Blvd., Suite 118
Albany, NY 12203
+1 (518) 389-3606

AV & Acoustics
LSTN Consultants
76 Beaver Street, 2nd Floor
New York, NY 10005
+1 (347) 788-0810

Facade
Front Inc.
100 E. Broadway Street, #501
New York, NY 10002
+1 (212) 242-2220

Key Plan

Description	Date
Filing Set	06/17/22

Project

Storm King Art Center

C.F.M. Building

Seal

NOT FOR CONSTRUCTION

Drawing Title

Partition Details

Date	06/17/22
Scale	As indicated
Drawing Number	A-C-691
Sheet Size	ARCH D

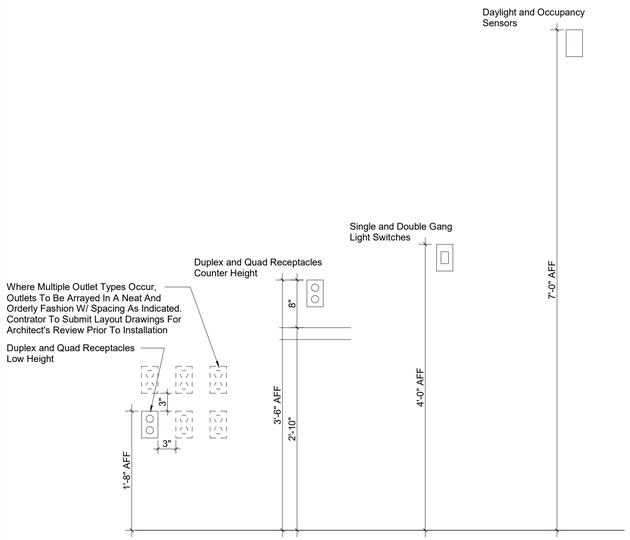

1 Typical Device Mounting Heights
1" = 1'-0"

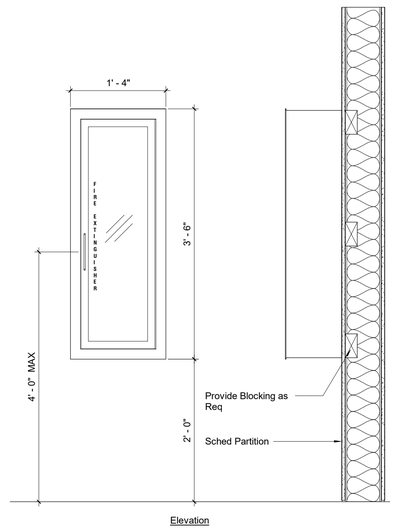

FE Cabinet Surface Mounted
Porter Roemer 1875-SS-A

2 Surface Mounted FE Cabinet Details
1" = 1'-0"

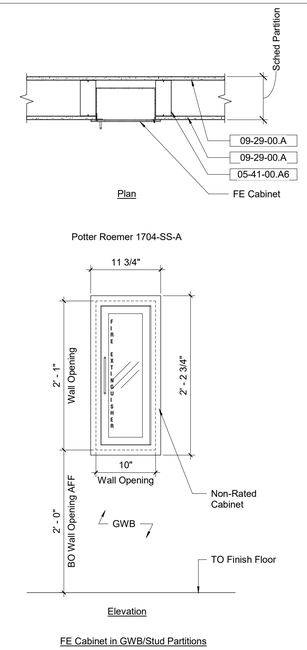

FE Cabinet in GWB/Stud Partitions

3 Recessed FE Cabinet Details
1" = 1'-0"

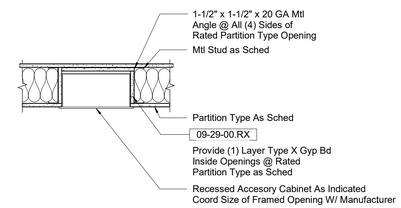

4 Rated Wall Cabinet Detail
1" = 1'-0"

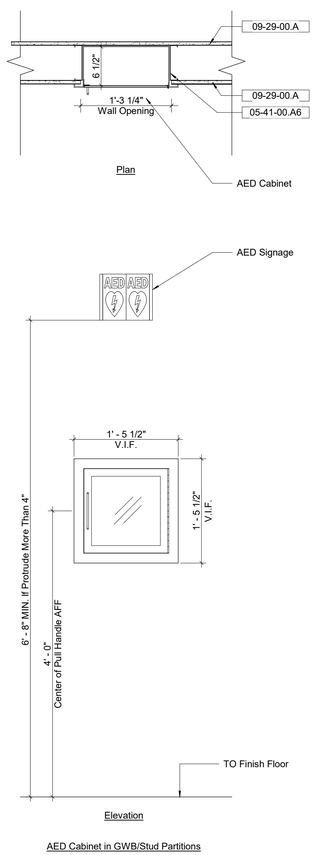

AED Cabinet in GWB/Stud Partitions

5 AED Cabient Details
1" = 1'-0"

Keynote Legend

Keynote	*Description*
05-41-00.A6	6" Metal Stud
09-29-00.A	5/8" Gypsum Wall Board
09-29-00.RX	5/8" Gypsum Wall Board - Abuse-Resistant (Fire-Rated)

Owner
Storm King Art Center
1 Museum Road
New Windsor, NY 12553
+1 (845) 534-3115

Design Architect
heneghan peng architects
14-16 Lord Edward Street
Dublin, D02 YC63
+353 1 633 9000

Executive Architect
WXY Architecture + Urban Design
224 Centre Street, 5th Floor
New York, NY 10013
+1 (212) 219-1953

Landscape Architect
Gustafson Porter + Bowman
1 Cobham Mews
London, MW1 9SB
+44 020 7284 8950

Reed Hilderbrand LLC
33 Whitney Avenue, 3rd Floor
New Haven, CT 06510
+1 (617) 923-2422

Structural & Lighting
ARUP
77 Water Street
New York, NY 10005
+1 (212) 896-3000

MEPF & IT
BuroHappold
100 Broadway #23
New York, NY 10005
+1 (212) 616-0228

Civil
VHB
100 Great Oaks Blvd., Suite 118
Albany, NY 12203
+1 (518) 389-3606

AV & Acoustics
LSTN Consultants
76 Beaver Street, 2nd Floor
New York, NY 10005
+1 (347) 788-0810

Facade
Front Inc.
100 E. Broadway Street, #501
New York, NY 10002
+1 (212) 242-2220

Key Plan

Description	Date
Filing Set	06/17/22

Project

Storm King Art Center

C.F.M. Building

Seal

NOT FOR CONSTRUCTION

Drawing Title

Device Details

Date	06/17/22
Scale	1" = 1'-0"
Drawing Number	A-C-692
Sheet Size	ARCH D

ROOM FINISH SCHEDULE

Room Number	Room Name	Finish - Floor	Finish - Base	Finish - Ceiling	Finish - N Wall	Finish - S Wall	Finish - E Wall	Finish - W Wall	Comment
Ground Level									
101	Maintenance	Concrete (03-30-00.A), sealed (09-90-00.H)	3" Resilient Base (09-65-13.A3)	-	Paint - White Eggshell (09-90-00.E2)	Paint - White Eggshell (09-90-00.E2)	Paint - White Eggshell (09-90-00.E2)	Paint - White Eggshell (09-90-00.E2)	
102	Pump Room	Concrete (03-30-00.A), sealed (09-90-00.H)	3" Resilient Base (09-65-13.A3)	Paint - White Eggshell (09-90-00.E2)	Paint - White Eggshell (09-90-00.E2)	Paint - White Eggshell (09-90-00.E2)	Paint - White Eggshell (09-90-00.E2)	Paint - White Eggshell (09-90-00.E2)	
103	Electrical	Concrete (03-30-00.A), sealed (09-90-00.H)	3" Resilient Base (09-65-13.A3)	Paint - White Eggshell (09-90-00.E2)	Paint - White Eggshell (09-90-00.E2)	Paint - White Eggshell (09-90-00.E2)	Paint - White Eggshell (09-90-00.E2)	Paint - White Eggshell (09-90-00.E2)	
104	Circulation	Concrete (03-30-00.A), sealed (09-90-00.H)	3" Resilient Base (09-65-13.A3)	-	Paint - White Eggshell (09-90-00.E2)	Paint - White Eggshell (09-90-00.E2)	Paint - White Eggshell (09-90-00.E2)	Paint - White Eggshell (09-90-00.E2)	
105	RR	Concrete (03-30-00.A), sealed (09-90-00.H)	-	Paint - White Eggshell (09-90-00.E2)	Ceramic Wall Tile (09-30-13.A1)	Ceramic Wall Tile (09-30-13.A1)	Ceramic Wall Tile (09-30-13.A1)	Ceramic Wall Tile (09-65-13.A3)	
106	ADA RR	Concrete (03-30-00.A), sealed (09-90-00.H)	-	Paint - White Eggshell (09-90-00.E2)	Ceramic Wall Tile (09-30-13.A1)	Ceramic Wall Tile (09-30-13.A1)	Ceramic Wall Tile (09-30-13.A1)	Ceramic Wall Tile (09-30-13.A1)	
107	Shower	Concrete (03-30-00.A), sealed (09-90-00.H)	-	Paint - White Eggshell (09-90-00.E2)	Ceramic Wall Tile (09-30-13.A1)	Ceramic Wall Tile (09-30-13.A1)	Ceramic Wall Tile (09-30-13.A1)	Ceramic Wall Tile (09-30-13.A1)	
108	Lockers	Concrete (03-30-00.A), sealed (09-90-00.H)	3" Resilient Base (09-65-13.A3)	Paint - White Eggshell (09-90-00.E2)	Paint - White Eggshell (09-90-00.E2)	Paint - White Eggshell (09-90-00.E2)	Paint - White Eggshell (09-90-00.E2)	Paint - White Eggshell (09-90-00.E2)	Locker System to be Strom (Grey) finish
109	Air Compressor	Concrete (03-30-00.A), sealed (09-90-00.H)	3" Resilient Base (09-65-13.A3)	Paint - White Eggshell (09-90-00.E2)	Paint - White Eggshell (09-90-00.E2)	Paint - White Eggshell (09-90-00.E2)	Paint - White Eggshell (09-90-00.E2)	Paint - White Eggshell (09-90-00.E2)	
110	LU/LA Lift	-	-	-	-	-	-	-	
111	Custodian	Concrete (03-30-00.A), sealed (09-90-00.H)	3" Resilient Base (09-65-13.A3)	Paint - White Eggshell (09-90-00.E2)	Fiberglass Reinforced Panel (09-78-00.A)	Fiberglass Reinforced Panel (09-78-00.A)	Fiberglass Reinforced Panel (09-78-00.A)	Fiberglass Reinforced Panel (09-78-00.A)	
112	Soil Lab	Concrete (03-30-00.A), sealed (09-90-00.H)	3" Resilient Base (09-65-13.A3)	Paint - White Eggshell (09-90-00.E2)	Paint - White Eggshell (09-90-00.E2)	Paint - White Eggshell (09-90-00.E2)	Paint - White Eggshell (09-90-00.E2)	Paint - White Eggshell (09-90-00.E2)	
113	Laundry	Concrete (03-30-00.A), sealed (09-90-00.H)	3" Resilient Base (09-65-13.A3)	Paint - White Eggshell (09-90-00.E2)	Paint - White Eggshell (09-90-00.E2)	Paint - White Eggshell (09-90-00.E2)	Paint - White Eggshell (09-90-00.E2)	Paint - White Eggshell (09-90-00.E2)	
114	Wood Working	Concrete (03-30-00.A), sealed (09-90-00.H)	3" Resilient Base (09-65-13.A3)	-	Paint - White Eggshell (09-90-00.E2)	Paint - White Eggshell (09-90-00.E2)	Paint - White Eggshell (09-90-00.E2)	Paint - White Eggshell (09-90-00.E2)	
115	Storage	Concrete (03-30-00.A), sealed (09-90-00.H)	3" Resilient Base (09-65-13.A3)	Paint - White Eggshell (09-90-00.E2)	Paint - White Eggshell (09-90-00.E2)	Paint - White Eggshell (09-90-00.E2)	Paint - White Eggshell (09-90-00.E2)	Paint - White Eggshell (09-90-00.E2)	
116	Open Workspace	Concrete (03-30-00.A), sealed (09-90-00.H)	3" Resilient Base (09-65-13.A3)	-	Paint - White Eggshell (09-90-00.E2)	Paint - White Eggshell (09-90-00.E2)	Paint - White Eggshell (09-90-00.E2)	Paint - White Eggshell (09-90-00.E2)	
117	Paint Booth	Concrete (03-30-00.A), sealed (09-90-00.H)	-	White Powder-Coated Finish	White Powder-Coated Finish	White Powder-Coated Finish	White Powder-Coated Finish	White Powder-Coated Finish	
118	Storage	Concrete (03-30-00.A), sealed (09-90-00.H)	3" Resilient Base (09-65-13.A3)	Paint - White Eggshell (09-90-00.E2)	Paint - White Eggshell (09-90-00.E2)	Paint - White Eggshell (09-90-00.E2)	Paint - White Eggshell (09-90-00.E2)	Paint - White Eggshell (09-90-00.E2)	
119	Stair 02	Concrete (03-30-00.A), sealed (09-90-00.H)	3" Resilient Base (09-65-13.A3)	Paint - White Eggshell (09-90-00.E2)	Paint - White Eggshell (09-90-00.E2)	Paint - White Eggshell (09-90-00.E2)	Paint - White Eggshell (09-90-00.E2)	Paint - White Eggshell (09-90-00.E2)	
Second Level									
201	Storage - Secure	Linoleum (09-65-43)	3" Resilient Base (09-65-13.A3)	-	Paint - White Eggshell (09-90-00.E2)	Paint - White Eggshell (09-90-00.E2)	Paint - White Eggshell (09-90-00.E2)	Paint - White Eggshell (09-90-00.E2)	
202	Storage - General	Linoleum (09-65-43)	3" Resilient Base (09-65-13.A3)	-	Paint - White Eggshell (09-90-00.E2)	Paint - White Eggshell (09-90-00.E2)	Paint - White Eggshell (09-90-00.E2)	Paint - White Eggshell (09-90-00.E2)	
204	Circulation	Linoleum (09-65-43)	3" Resilient Base (09-65-13.A3)	-	Paint - White Eggshell (09-90-00.E2)	Paint - White Eggshell (09-90-00.E2)	Paint - White Eggshell (09-90-00.E2)	Paint - White Eggshell (09-90-00.E2)	
204	LU/LA Lift	-	-	-	-	-	-	-	
205	Break Room	Linoleum (09-65-43)	3" Resilient Base (09-65-13.A3)	-	Paint - White Eggshell (09-90-00.E2)	Paint - White Eggshell (09-90-00.E2)	Paint - White Eggshell (09-90-00.E2)	Paint - White Eggshell (09-90-00.E2)	
206	Stair 01	Linoleum (09-65-43)	3" Resilient Base (09-65-13.A3)	-	Paint - White Eggshell (09-90-00.E2)	Paint - White Eggshell (09-90-00.E2)	Paint - White Eggshell (09-90-00.E2)	Paint - White Eggshell (09-90-00.E2)	
207	Open Office	Linoleum (09-65-43)	3" Resilient Base (09-65-13.A3)	-	Paint - White Eggshell (09-90-00.E2)	Paint - White Eggshell (09-90-00.E2)	Paint - White Eggshell (09-90-00.E2)	Paint - White Eggshell (09-90-00.E2)	
208	Meeting Room	Linoleum (09-65-43)	3" Resilient Base (09-65-13.A3)	Paint - White Eggshell (09-90-00.E2)	Paint - White Eggshell (09-90-00.E2)	-	Paint - White Eggshell (09-90-00.E2)	Paint - White Eggshell (09-90-00.E2)	
209	Copy	Linoleum (09-65-43)	3" Resilient Base (09-65-13.A3)	-	-	-	-	-	
210	Mechanical Room	Concrete (03-30-00.A), sealed (09-90-00.H)	3" Resilient Base (09-65-13.A3)	-	Paint - White Eggshell (09-90-00.E2)	Paint - White Eggshell (09-90-00.E2)	Paint - White Eggshell (09-90-00.E2)	Paint - White Eggshell (09-90-00.E2)	
211	Electrical Closet	Linoleum (09-65-43)	3" Resilient Base (09-65-13.A3)	-	Paint - White Eggshell (09-90-00.E2)	Paint - White Eggshell (09-90-00.E2)	Paint - White Eggshell (09-90-00.E2)	Paint - White Eggshell (09-90-00.E2)	
212	Mechanical Room	Concrete (03-30-00.A), sealed (09-90-00.H)	3" Resilient Base (09-65-13.A3)	-	Paint - White Eggshell (09-90-00.E2)	Paint - White Eggshell (09-90-00.E2)	Paint - White Eggshell (09-90-00.E2)	Paint - White Eggshell (09-90-00.E2)	
213	Stair 02	Concrete (03-30-00.A), sealed (09-90-00.H)	3" Resilient Base (09-65-13.A3)	-	Paint - White Eggshell (09-90-00.E2)	Paint - White Eggshell (09-90-00.E2)	Paint - White Eggshell (09-90-00.E2)	Paint - White Eggshell (09-90-00.E2)	
214	IT & Security Closet	Linoleum (09-65-43)	3" Resilient Base (09-65-13.A3)		Paint - White Eggshell (09-90-00.E2)	Paint - White Eggshell (09-90-00.E2)	Paint - White Eggshell (09-90-00.E2)	Paint - White Eggshell (09-90-00.E2)	

Owner
Storm King Art Center
1 Museum Road
New Windsor, NY 12553
+1 (845) 534-3115

Design Architect
heneghan peng architects
14-16 Lord Edward Street
Dublin, D02 YC63
+353 1 633 9000

Executive Architect
WXY Architecture + Urban Design
224 Centre Street, 5th Floor
New York, NY 10013
+1 (212) 219-1953

Landscape Architect
Gustafson Porter + Bowman
1 Cobham Mews
London, MW1 9SB
+44 020 7284 8950

Reed Hilderbrand LLC
33 Whitney Avenue, 3rd Floor
New Haven, CT 06510
+1 (617) 923-2422

Structural & Lighting
ARUP
77 Water Street
New York, NY 10005
+1 (212) 896-3000

MEPF & IT
BuroHappold
100 Broadway #23
New York, NY 10005
+1 (212) 616-0228

Civil
VHB
100 Great Oaks Blvd., Suite 118
Albany, NY 12203
+1 (518) 389-3606

AV & Acoustics
LSTN Consultants
76 Beaver Street, 2nd Floor
New York, NY 10005
+1 (347) 788-0810

Facade
Front Inc.
100 E. Broadway Street, #501
New York, NY 10002
+1 (212) 242-2220

Key Plan

Description	Date
Filing Set	06/17/22

Project

Storm King Art Center

C.F.M. Building

Seal

NOT FOR CONSTRUCTION

Drawing Title

Room Finish Schedule

Date	06/17/22
Scale	Not to Scale
Drawing Number	A-C-701
Sheet Size	ARCH D

Door Schedule

Number	Room Name	Style	Door Material	Door Width	Door Height	Door Thickness	Door Finish	Clear Egress Width	Frame Type	Frame Finish	Frame Detail Head	Frame Detail Jamb	Frame Detail Sill	Fire Rating	Hardware Set	Card Reader	Keypad	Magnetic Contact	Comments
Interior																			
103.1	Electrical	Single Door	HM	2' - 10"	8' - 0"	1 3/8"	09-90-00.E2	32"	HM	09-90-00.E2	3/A-C-645	1/A-C-645	9/A-C-645	90 MIN	08-71-00 #7	No	No	No	Provide Panic Hardware, Refer To Hardware Specifications
103.2	Electrical	Double Door Uneven	HM	4' - 6"	8' - 0"	1 3/4"	09-90-00.E2	50 1/2"	HM	09-90-00.E2	3/A-C-645/4/ A-C-645	1/A-C-645 2/A-C-645	9/A-C-645	90 MIN	08-71-00 #6	No		No	Provide Panic Hardware, Refer To Hardware Specifications
104.1	Circulation	Single Door w/ Sidelite	HM	3' - 0"	8' - 0"	1 3/4"	09-90-00.E2	33 5/8"	HM	09-90-00.E2	3/A-C-645/4/ A-C-645	1/A-C-645 2/A-C-645	8/A-C-645		08-71-00 #10	No	No	No	
104.3	Circulation	Single Door w/ Sidelite	HM	3' - 0"	8' - 0"	1 3/4"	09-90-00.E2	33 5/8"	HM	09-90-00.E2	3/A-C-645	1/A-C-645	8/A-C-645		08-71-00 #11	No	No	Yes	
105.1	RR	Single Door	HM	3' - 0"	8' - 0"	1 3/4"	09-90-00.E2	33 5/8"	HM	09-90-00.E2	3/A-C-645	1/A-C-645	8/A-C-645		08-71-00 #15	No	No	No	
106.1	ADA RR	Single Door	HM	3' - 0"	8' - 0"	1 3/4"	09-90-00.E2	33 5/8"	HM	09-90-00.E2	3/A-C-645	1/A-C-645	8/A-C-645		08-71-00 #15	No	No	No	
107.1	Shower	Single Door	HM	3' - 0"	8' - 0"	1 3/4"	09-90-00.E2	33 5/8"	HM	09-90-00.E2	3/A-C-645	1/A-C-645	8/A-C-645		08-71-00 #15	No	No	No	
108.1	Lockers	Single Door w/ Sidelite	HM	3' - 0"	8' - 0"	1 3/4"	09-90-00.E2	33 5/8"	HM	09-90-00.E2	3/A-C-645/4/ A-C-645	1/A-C-645 2/A-C-645	8/A-C-645		08-71-00 #9	No	Yes	Yes	
109.1	Air Compressor Room	Double Door	HM	5' - 6"	8' - 0"	1 3/4"	09-90-00.E2	62 1/2"	HM	09-90-00.E2	3/A-C-645	1/A-C-645	8/A-C-645		08-71-00 #14	No		No	
111.1	Janitor Closet	Single Door	HM	2' - 10"	8' - 0"	1 3/8"	09-90-00.E2	32"	HM	09-90-00.E2	3/A-C-645	1/A-C-645	8/A-C-645		08-71-00 #12	No	No	No	
112.1	Soil Lab	Single Door w/ Sidelite	HM	3' - 0"	8' - 0"	1 3/4"	09-90-00.E2	33 5/8"	HM	09-90-00.E2	3/A-C-645/4/ A-C-645	1/A-C-645 2/A-C-645	8/A-C-645		08-71-00 #12	No	No	No	
113.1	Laundry	Single Door w/ Sidelite	HM	3' - 0"	8' - 0"	1 3/4"	09-90-00.E2	33 5/8"	HM	09-90-00.E2	3/A-C-645/4/ A-C-645	1/A-C-645 2/A-C-645	8/A-C-645		08-71-00 #12	No	No	No	
115.1	Electrical	Double Door Uneven	HM	5' - 6"	8' - 0"	1 3/4"	09-90-00.E2	62 1/2"	HM	09-90-00.E2	3/A-C-645	1/A-C-645	8/A-C-645		08-71-00 #14	No		No	
116.1	Open Workspace	Single Door w/ Sidelite	HM	3' - 0"	8' - 0"	1 3/4"	09-90-00.E2	33 5/8"	HM	09-90-00.E2	3/A-C-645/4/ A-C-645	1/A-C-645 2/A-C-645	8/A-C-645		08-71-00 #11	No	No	Yes	
201.1	Storage - Secure	Double Door	HM	6' - 0"	8' - 0"	1 3/4"	09-90-00.E2	68 1/2"	HM	09-90-00.E2	3/A-C-645	1/A-C-645	5/A-C-645		08-71-00 #13	Yes		Yes	
202.1	Storage - General	Double Door	HM	6' - 0"	8' - 0"	1 3/4"	09-90-00.E2	68 1/2"	HM	09-90-00.E2	3/A-C-645	1/A-C-645	5/A-C-645		08-71-00 #14	No		No	
202.2	IT Closet	Double Door	HM	5' - 6"	8' - 0"	1 3/4"	09-90-00.E2	62 1/2"	HM	09-90-00.E2	3/A-C-645	1/A-C-645	5/A-C-645		08-71-00 #14	No		No	
202.3	Electrical Closet	Single Door	HM	3' - 0"	8' - 0"	1 3/4"	09-90-00.E2	33 5/8"	HM	09-90-00.E2	3/A-C-645	1/A-C-645	5/A-C-645		08-71-00 #5	No	No	No	
205.1	Break Room	Single Door	AL/GL	3' - 0"	7' - 10 3/4"	1 3/4"	-	36"	AL	Color To Match 09-90-00.E2	6/A-C-663	3/A-C-663	7/A-C-663		08-71-00 #1	No		No	
206.1	Stair	Single Door	HM	3' - 0"	8' - 0"	1 3/4"	09-90-00.E2	33 5/8"	HM	09-90-00.E2	3/A-C-645	1/A-C-645	6/A-C-645		08-71-00 #5	No	No	No	
208.1	Meeting Room	Single Door	AL/GL	3' - 5 7/8"	7' - 10 3/4"	1 3/4"	-	41 7/8"	AL	Color To Match 09-90-00.E2	6/A-C-663	3/A-C-663	7/A-C-663		08-71-00 #1	No		No	
210.1	Mech Equip Room	Single Door	HM	3' - 0"	8' - 0"	1 3/4"	09-90-00.E2	33 5/8"	HM	09-90-00.E2	3/A-C-645	1/A-C-645	7/A-C-645		08-71-00 #8	No	No	Yes	
Exterior																			
001.1	Fire Protection Storage Tank	Single Door	HM	3' - 0 1/4"	7' - 10"	2"	09-90-00.E2 (Interior)	32"	HM	09-90-00.E2 (Interior)	3/A-C-433	1/A-C-433 2/A-C-433	7/A-C-433		08-71-00 #2	No	No	No	3/4" Offset Pivot Hinge, Overclad, Finish to Match 07-42-13.M
101.1	Maintenance	Single Door	HM	3' - 0 1/4"	7' - 10"	2"	09-90-00.E2 (Interior)	32"	HM	09-90-00.E2 (Interior)	3/A-C-433	1/A-C-433 2/A-C-433	7/A-C-433		08-71-00 #4	No	Yes	Yes	3/4" Offset Pivot Hinge, Overclad, Finish to Match 07-42-13.M
101.6	Maintenance	Single Door	HM	3' - 0 1/4"	7' - 10"	2"	09-90-00.E2 (Interior)	32"	HM	09-90-00.E2 (Interior)	3/A-C-433	1/A-C-433 2/A-C-433	7/A-C-433		08-71-00 #4	No	Yes	Yes	3/4" Offset Pivot Hinge, Overclad, Finish to Match 07-42-13.M
102.1	Pump Room	Single Door	HM	3' - 0 1/4"	7' - 10"	2"	09-90-00.E2 (Interior)	32"	HM	09-90-00.E2 (Interior)	3/A-C-433	1/A-C-433 2/A-C-433	7/A-C-433		08-71-00 #3	No	No	No	3/4" Offset Pivot Hinge, Overclad, Finish to Match 07-42-13.M
104.2	Circulation	Single Door	HM/GL	3' - 1 1/8"	7' - 10"	2"	09-90-00.E2 (Interior)	32 7/8"	HM	09-90-00.E2 (Interior)	9/A-C-433 10/A-C-433	5/A-C-433 6/A-C-433	8/A-C-433		08-71-00 #4	Yes	No	Yes	3/4" Offset Pivot Hinge, Finish to Match 07-42-13.M
114.1	Woodworking	Single Door	HM	3' - 0 1/4"	7' - 10"	2"	09-90-00.E2 (Interior)	32"	HM	09-90-00.E2 (Interior)	3/A-C-433	1/A-C-433 2/A-C-433	7/A-C-433		08-71-00 #3	No	No	No	3/4" Offset Pivot Hinge, Overclad, Finish to Match 07-42-13.M
116.5	Open Workspace	Single Door	HM	3' - 0 1/4"	7' - 10"	2"	09-90-00.E2 (Interior)	32"	HM	09-90-00.E2 (Interior)	3/A-C-433	1/A-C-433 2/A-C-433	7/A-C-433		08-71-00 #4	Yes	No	No	3/4" Offset Pivot Hinge, Overclad, Finish to Match 07-42-13.M
119.1	Stair 02	Single Door	HM	3' - 0 1/4"	7' - 10"	2"	09-90-00.E2 (Interior)	32"	HM	09-90-00.E2 (Interior)	3/A-C-433	1/A-C-433 2/A-C-433	7/A-C-433		08-71-00 #3	No	No	No	3/4" Offset Pivot Hinge, Overclad, Finish to Match 07-42-13.M
204.1	Circulation	Single Door	HM	3' - 0 1/4"	7' - 10"	2"	09-90-00.E2 (Interior)	32"	HM	09-90-00.E2 (Interior)	3/A-C-433	1/A-C-433 2/A-C-433	7/A-C-433		08-71-00 #2	No	No	No	3/4" Offset Pivot Hinge, Overclad, Finish to Match 07-42-13.M
212.1	Mech Penthouse	Single Door	HM	3' - 0 1/4"	7' - 10"	2"	09-90-00.E2 (Interior)	32"	HM	09-90-00.E2 (Interior)	3/A-C-433	1/A-C-433 2/A-C-433	7/A-C-433		08-71-00 #2	No	No	No	3/4" Offset Pivot Hinge, Overclad, Finish to Match 07-42-13.M

Rolling Door Schedule

Number	Door Type	Room Name	Style	Count	Dimension: Width Between Structure	Dimension: Overall Door Height	Dimension: Clear Opening Width	Dimension: Clear Opening Height	Detail: Head	Detail: Jamb	Detail: Sill	Hardware Set	Model
Exterior													
101.2	E31	Maintenance	Overhead Rolling Door (08-33-23)	1	14' - 0"	12' - 0"	12' - 0"	10' - 0"	1/A-C-435	2/A-C-435	3/A-C-435	08-71-00 #17	Hand Chain
101.3	E31	Maintenance	Overhead Rolling Door (08-33-23)	1	14' - 0"	12' - 0"	12' - 0"	10' - 0"	1/A-C-435	2/A-C-435	3/A-C-435	08-71-00 #17	Hand Chain
101.4	E31	Maintenance	Overhead Rolling Door (08-33-23)	1	14' - 0"	12' - 0"	12' - 0"	10' - 0"	1/A-C-435	2/A-C-435	3/A-C-435	08-71-00 #17	Hand Chain
101.5	E31	Maintenance	Overhead Rolling Door (08-33-23)	1	14' - 0"	12' - 0"	12' - 0"	10' - 0"	1/A-C-435	2/A-C-435	3/A-C-435	08-71-00 #17	Hand Chain
114.2	E33	Woodworking	Overhead Rolling Door (08-33-23)	1	16' - 0"	20' - 4"	14' - 0"	18' - 0"	1/A-C-436	2/A-C-435	2/A-C-436	08-71-00 #17	Motor Operator
116.3	E35	Open Workspace	Overhead Rolling Door (08-33-23)	1	18' - 0"	20' - 4"	16' - 0"	18' - 0"	1/A-C-436	2/A-C-435	2/A-C-436	08-71-00 #17	Motor Operator
116.4	E35	Open Workspace	Overhead Rolling Door (08-33-23)	1	18' - 0"	20' - 4"	16' - 0"	18' - 0"	1/A-C-436	2/A-C-435	2/A-C-436	08-71-00 #17	Motor Operator
116.6	E33	Open Workspace	Overhead Rolling Door (08-33-23)	1	16' - 0"	20' - 4"	14' - 0"	18' - 0"	1/A-C-436	2/A-C-435	2/A-C-436	08-71-00 #17	Motor Operator
116.7	E32	Open Workspace	Overhead Rolling Door (08-33-23)	1	14' - 0"	20' - 4"	12' - 0"	18' - 0"	1/A-C-436	2/A-C-435	2/A-C-436	08-71-00 #17	Motor Operator
Interior													
116.2	E34	Wood Working	Overhead Rolling Door (08-33-23)	1	14' - 0"	19' - 11"	14' - 0"	18' - 0"	1/A-C-646	10/A-C-645	2/A-C-646	08-71-00 #16	Motor Operator

Interior Storefront Schedule

Number	Description	Height	Length	Frame Material	Comments
IS31	Interior Glazed Partition (08-30-00)	8' - 0"	12' - 0"	AL	1/2" Laminated Glazing, Frame Finish To Match 09-90-00.E2
IS32	Interior Glazed Partition (08-30-00)	5' - 0"	11' - 3 1/2"	AL	1/2" Laminated Glazing, Frame Finish To Match 09-90-00.E2
IS32	Interior Glazed Partition (08-30-00)	8' - 0"	11' - 3 1/2"	AL	1/2" Laminated Glazing, Frame Finish To Match 09-90-00.E2

Window Schedule

Number	Count	Description	Rough Height	Rough Width	Frame Material	U-Vaule	SHGC	Glass Type
W31	10	Acrylic Double Dome Curb-Mounted Skylight		4' - 0"	Aluminum	0.69	0.30	
W32	12	Operable Outswing High Thermal WIndow	5' - 0"	4' - 0"	Aluminum	0.33	0.40	08-30-00
W33	25	Fixed High Thermal Window	5' - 0"	4' - 0"	Aluminum	0.30	0.40	08-30-00
W34	1	Fixed High Thermal Window, Spandrel	5' - 0"	4' - 0"	Aluminum	0.30	0.40	08-80-00.G2

Louver Schedule

Number	Count	Description	Width	Height	Frame and Panel Material
L31	5	Louver	4' - 0"	5' - 0"	SKG_Grey Metal
L32	3	Louver	4' - 0"	2' - 0"	SKG_Grey Metal
L33	8	Louver	4' - 0"	5' - 0"	Metal

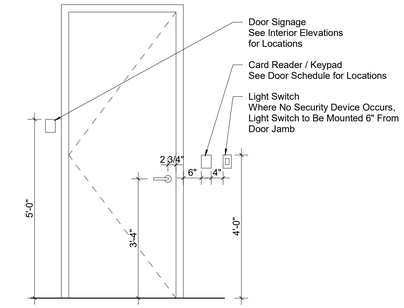

All Door Hardware to be Located as Shown UON

1 Typical Door Hardware Locations
1/2" = 1'-0"

Owner
Storm King Art Center
1 Museum Road
New Windsor, NY 12553
+1 (845) 534-3115

Design Architect
heneghan peng architects
14-16 Lord Edward Street
Dublin, D02 YC63
+353 1 633 9000

Executive Architect
WXY Architecture + Urban Design
224 Centre Street, 5th Floor
New York, NY 10013
+1 (212) 219-1953

Landscape Architect
Gustafson Porter + Bowman
1 Cobham Mews
London, MW1 9SB
+44 020 7284 8950

Reed Hilderbrand LLC
33 Whitney Avenue, 3rd Floor
New Haven, CT 06510
+1 (617) 923-2422

Structural & Lighting
ARUP
77 Water Street
New York, NY 10005
+1 (212) 896-3000

MEPF & IT
BuroHappold
100 Broadway #23
New York, NY 10005
+1 (212) 616-0228

Civil
VHB
100 Great Oaks Blvd., Suite 118
Albany, NY 12203
+1 (518) 389-3606

AV & Acoustics
LSTN Consultants
76 Beaver Street, 2nd Floor
New York, NY 10005
+1 (347) 788-0810

Facade
Front Inc.
100 E. Broadway Street, #501
New York, NY 10002
+1 (212) 242-2220

Key Plan

Description	Date
Filing Set	06/17/22

Project

Storm King Art Center

C.F.M. Building

Seal

NOT FOR CONSTRUCTION

Drawing Title

Window & Door Schedule

Date	06/17/22
Scale	1/2" = 1'-0"
Drawing Number	A-C-702
Sheet Size	ARCH D

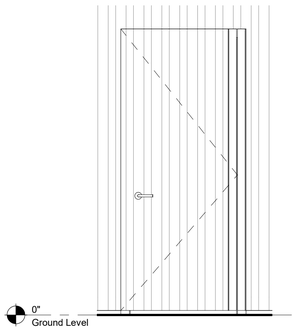

1 Exterior Door 101.1
1/2" = 1'-0"

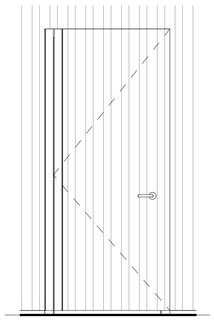

2 Exterior Door 101.6
1/2" = 1'-0"

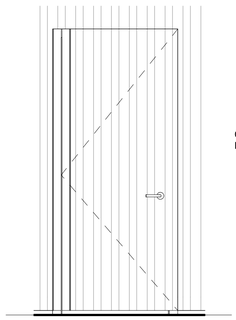

3 Exterior Door 102.1
1/2" = 1'-0"

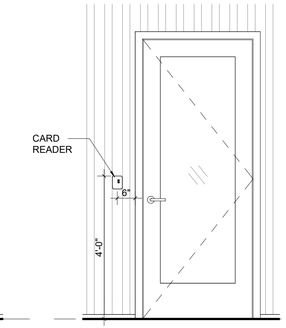

4 Exterior Door 104.2
1/2" = 1'-0"

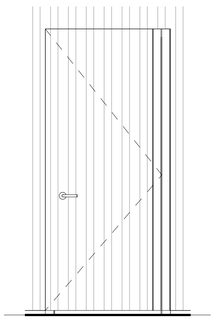

7 Exterior Door 119.1
1/2" = 1'-0"

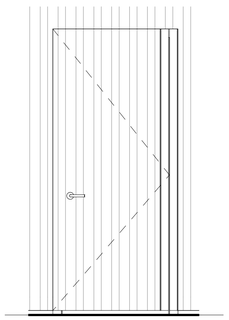

8 Exterior Door 114.1
1/2" = 1'-0"

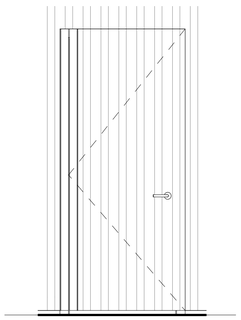

9 Exterior Door 116.5
1/2" = 1'-0"

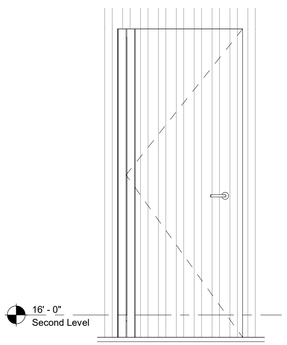

10 Exterior Door 204.1
1/2" = 1'-0"

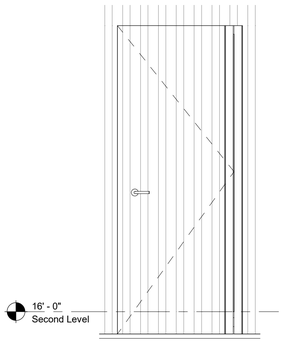

11 Exterior Door 212.1
1/2" = 1'-0"

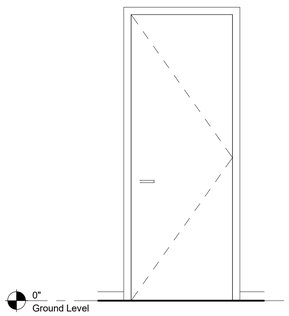

12 Interior Door - 103.1
1/2" = 1'-0"

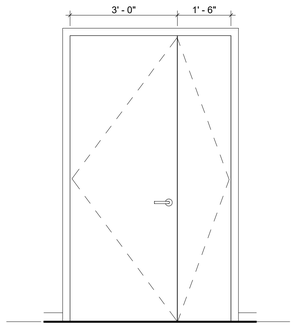

13 Interior Door 103.2
1/2" = 1'-0"

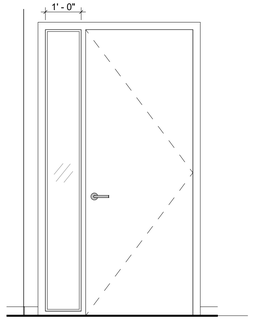

14 Interior Door 104.1
1/2" = 1'-0"

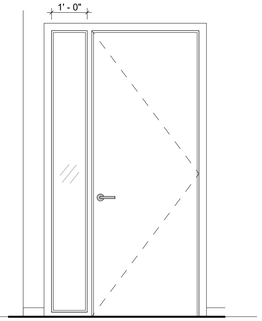

15 Interior Door Elevation - 104.3
1/2" = 1'-0"

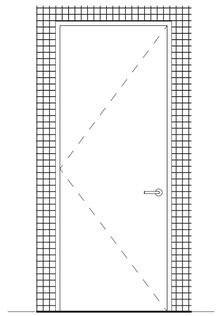

16 Interior Door 105.1
1/2" = 1'-0"

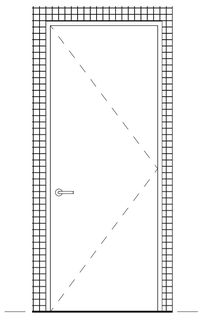

17 Interior Door 106.1
1/2" = 1'-0"

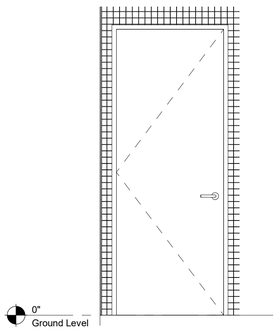

18 Interior Door 107.1
1/2" = 1'-0"

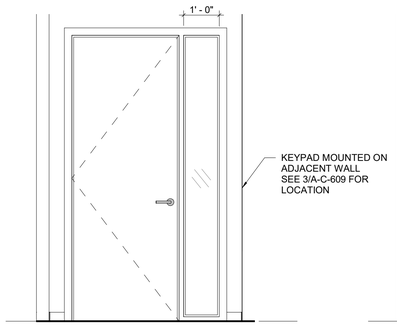

26 Interior Door 108.1
1/2" = 1'-0"

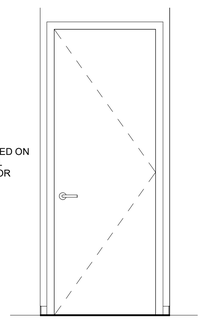

21 Interior Door 111.1
1/2" = 1'-0"

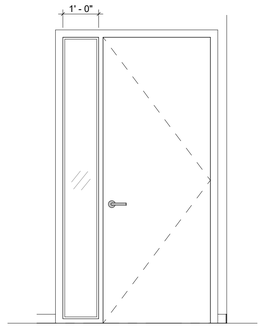

22 Interior Door 112.1
1/2" = 1'-0"

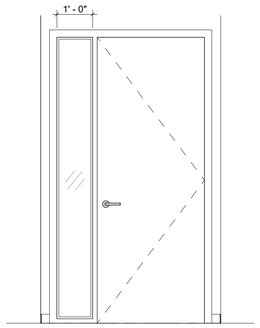

23 Interior Door 113.1
1/2" = 1'-0"

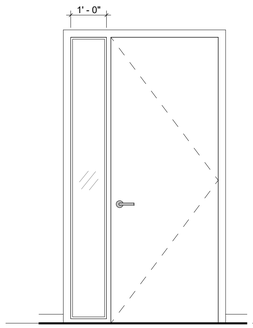

24 Interior Door 116.1
1/2" = 1'-0"

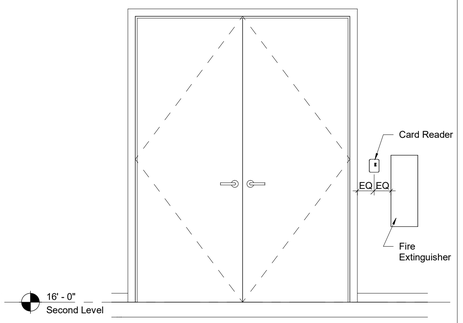

20 Interior Door 201.1
1/2" = 1'-0"

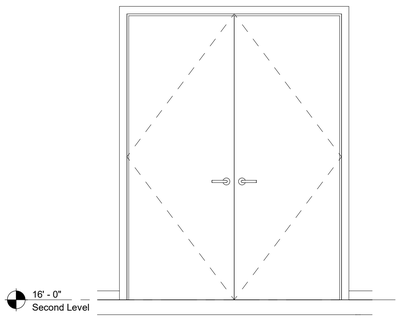

25 Interior Door 202.1
1/2" = 1'-0"

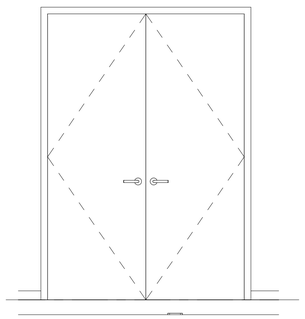

5 Interior Door 202.2
1/2" = 1'-0"

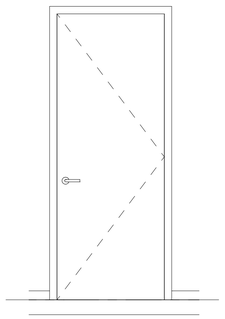

6 Interior Door 202.3
1/2" = 1'-0"

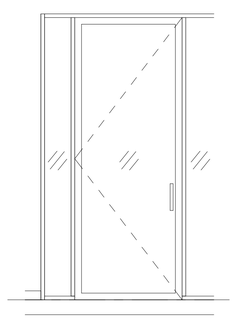

28 Interior Door 205.1
1/2" = 1'-0"

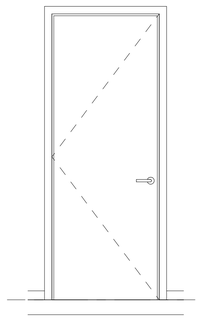

29 Interior Door 206.1
1/2" = 1'-0"

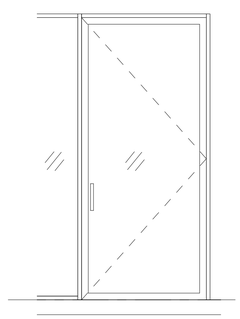

30 Interior Door 208.1
1/2" = 1'-0"

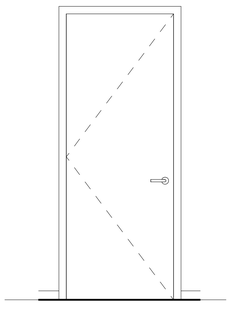

31 Interior Door 210.1
1/2" = 1'-0"

Owner
Storm King Art Center
1 Museum Road
New Windsor, NY 12553
+1 (845) 534-3115

Design Architect
heneghan peng architects
14-16 Lord Edward Street
Dublin, D02 YC63
+353 1 633 9000

Executive Architect
WXY Architecture + Urban Design
224 Centre Street, 5th Floor
New York, NY 10013
+1 (212) 219-1953

Landscape Architect
Gustafson Porter + Bowman
1 Cobham Mews
London, MW1 9SB
+44 020 7284 8950

Reed Hilderbrand LLC
33 Whitney Avenue, 3rd Floor
New Haven, CT 06510
+1 (617) 923-2422

Structural & Lighting
ARUP
77 Water Street
New York, NY 10005
+1 (212) 896-3000

MEPF & IT
BuroHappold
100 Broadway #23
New York, NY 10005
+1 (212) 616-0228

Civil
VHB
100 Great Oaks Blvd., Suite 118
Albany, NY 12203
+1 (518) 389-3606

AV & Acoustics
LSTN Consultants
76 Beaver Street, 2nd Floor
New York, NY 10005
+1 (347) 788-0810

Facade
Front Inc.
100 E. Broadway Street, #501
New York, NY 10002
+1 (212) 242-2220

Key Plan

Description	Date
Filing Set	06/17/22

Project

Storm King Art Center

C.F.M. Building

Seal

NOT FOR CONSTRUCTION

Drawing Title

Door Elevations

Date	06/17/22
Scale	1/2" = 1'-0"
Drawing Number	A-C-703
Sheet Size	ARCH D

Lighting Fixture Schedule

Type Mark	Description	Manufacturer	Model	Fixture Finish	Comments
AL01	96" Surface Mounted Linear	Lithonia Lighting	ZL1N	Anodized Aluminum	
AL01A	48" Surface Mounted Linear	Lithonia Lighting	ZL1N	Anodized Aluminum	
AL01B	48" Surface Mounted Linear	Lithonia Lighting	ZL1N	Anodized Aluminum	
AL02	96" Surface Mounted Linear	Lithonia Lighting	ZL1N	Anodized Aluminum	
AL02A	48" Surface Mounted Linear	Lithonia Lighting	ZL1N	Anodized Aluminum	
AL02B	48" Suspended Linear	Lithonia Lighting	ZL1N	Anodized Aluminum	Suspend B.O. Fixture at 9'-0" from F.F.
AL02C	96" Suspended Linear	Lithonia Lighting	ZL1N	Anodized Aluminum	Suspend B.O. Fixture at 8'-0" from F.F.
AL12	48" Recessed Linear	Coronet	LSR2 LED LTG1	Anodized Aluminum	
AL13	96" Recessed Linear	Coronet	LSR2 LED LTG1	Anodized Aluminum	
AL15	96" Recessed Linear	Coronet	LSR2 LED LTG1	Anodized Aluminum	
AL16	48" Recessed Linear	Coronet	LSR2 LED LTG1	Anodized Aluminum	
AWS04	Wall Mounted Flood Light	iGuzzini	Palco In Out - Q719	Galvanized or RAL 7038	
AWS05	Wall Mounted Flood Light	iGuzzini	Palco In Out - Q719	Galvanized or RAL 7038	
BL01	48" Surface Mounted Linear	Lithonia Lighting	ZL1N	Anodized Aluminum	
BL02	96" Surface Mounted Linear	Lithonia Lighting	ZL1N	Anodized Aluminum	
BLO1A	48" Suspended Linear	Lithonia Lighting	ZL1N	Anodized Aluminum	Suspend B.O. Fixture at 8'-0" from F.F.

Appliance Schedule

Keynote	Description	Manufacturer	Product	Finish	Comments
11-31-00.A1	Copy Printer	-	-	-	Owner Furnished
11-31-00.C	Coffee Maker	-	-	-	Owner Furnished
11-31-00.D1	Dishwasher	Samsung	Smart Linear Wash 39dBA	Stainless Steel	
11-31-00.E	Electric Kettle	-	-	-	Owner Furnished
11-31-00.M	Microwave	-	-	-	Owner Furnished
11-31-00.R1	Side-by-Side Counter-Depth Refrigerator	Samsung	RS22T5201SR/AA	Stainless Steel	
11-31-00.R3	Under-Counter Refrigerator	Exellence Industries	EMM-3HC	Stainless Steel	
11-31-00.T	Toaster	-	-	-	Owner Furnished
11-31-00.W1	Front Load Washer	Whirlpool	WFW5620HW	White	
11-31-00.W2	Front Load Heat Pump Dryer	Whirlpool	WHD560CH	White	

Plumbing Fixture Schedule

Keynote	Description	Manufacturer	Product	Finish	Comments
22-42-00.R1	Drinking Fountains w/ Bottle-Filling Station, Interior	Haws	Barrier-Free Dual Wall Mount Fountian Models 1920 and BP32	Stainless Steel	
22-42-00.L1	Restroom Faucet, Interior Touchless	Kohler	Purist Wall Mounted Bathroom Faucet with Touchless Technology Trim	Vibrant Stainless	
22-42-00.V	Shower Fixture, ADA-compliant	Kohler	Awaken® G11 Deluxe Slidebar Kit	Polished Chrome	
22-42-00.S2	Undermount Kitchen Sink, ADA-compliant	Blanco	Precis ADA	Metallic Gray	
22-42-00.P2	Mop Sink	Plumbing Supply.com	UM-244	Stainless Steel	
22-42-00.M2	Wall-Mounted Mop Sink Faucet	Plumbing Supply.com	Heavy Duty Mop Sink Faucet	Stainless Steel	
22-42-00.W	Shower Drain Linear	Quickdrain	Proline PLD57-N	Stainless Steel	
22-42-00.J	Wall-Hung Commercial Toilet, w/ Carrier	TOTO USA, Inc.	CT708UVG Toilet, TET3UA 1.0 GPF Valve, SC534 Seat	Vitreous China	
22-42-00.P1	Wall-Hung Shop Sink	Elkay	31" x 19.5" x 10-1/2", Wall Hung Single Bowl Hand Wash Sink Kit	Stainless Steel	
22-42-00.S3	Wall-Hung Commercial Sink, ADA-compliant	American Standard	Decorum 20-1/4-in. x 21-in. Sink with Center Hole	White (020)	
22-42-00.K1	Kitchen Faucet	Grohe	Minta Single-Handle Pull-Out Faucet Dual Spray 1.75 GPM	Super Steel Infinity Finish	

Accessories Schedule

Keynote	Description	Manufacturer	Product	Finish	Comments
10-28-13.A3	Toilet Paper Holder w/ Seat Cover and Sanitary Receptacle, Recessed	Bobrick	B-3574	Stainless Steel	
10-28-13.C1	Paper Towel Dispenser w/ Receptacle, Recessed	Bobrick	B-38034	Stainless Steel	
10-28-13.D1	Diaper-changing Station, Recessed Vertical	Koala Kare	KB111-SSR E	Stainless Steel	
10-28-13.E1	Soap Dispenser, Interior Touchless	Kohler	K-22847-CP	Vibrant Brushed Nickel	
10-28-13.F2	Mirror w/ Shelf, Recessed	Bobrick	B-166 1830	Stainless Steel	
10-28-13.G1	Grab Rail, ADA-compliant	Bobrick	B-5806	Satin-Finish Stainless Steel	
10-28-13.H	Coat/Towel Hook	Assa Abloy	Rockwood RM823	Stainless Steel	
22-42-00.T	Foldable Shower Seat, ADA-compliant	Bobrick	B-5191	Ivory/Stainless Steel	

Diffuser Schedule

Type Mark	Description	Manufacturer	Product	Finish	Comments
DF01	Ceiling-Recessed Square Diffuser	Price	SPD,ASPD Square Plaque Diffuser	B12 White	
DF02	Wall-Mounted Bar Grill Diffuser	Price	LBP Linear Bar Grille - 1/4" Spacing	B12 White	
DF03	Linear Slot Diffuser	Price	SDS,SDA Plenum Linear Slot Diffuser, Concealed Plaster Frame	B12 White	

Fan Schedule

Type Mark	Description	Manufacturer	Product	Finish	Comments
ED71	Structure-Mounted Ceiling Fan	Big Ass Fans	Basic 6, 12' Diameter, no extension tube, beam mounted		VFD with wall-mounted speed control

Owner
Storm King Art Center
1 Museum Road
New Windsor, NY 12553
+1 (845) 534-3115

Design Architect
heneghan peng architects
14-16 Lord Edward Street
Dublin, D02 YC63
+353 1 633 9000

Executive Architect
WXY Architecture + Urban Design
224 Centre Street, 5th Floor
New York, NY 10013
+1 (212) 219-1953

Landscape Architect
Gustafson Porter + Bowman
1 Cobham Mews
London, MW1 9SB
+44 020 7284 8950

Reed Hilderbrand LLC
33 Whitney Avenue, 3rd Floor
New Haven, CT 06510
+1 (617) 923-2422

Structural & Lighting
ARUP
77 Water Street
New York, NY 10005
+1 (212) 896-3000

MEPF & IT
BuroHappold
100 Broadway #23
New York, NY 10005
+1 (212) 616-0228

Civil
VHB
100 Great Oaks Blvd., Suite 118
Albany, NY 12203
+1 (518) 389-3606

AV & Acoustics
LSTN Consultants
76 Beaver Street, 2nd Floor
New York, NY 10005
+1 (347) 788-0810

Facade
Front Inc.
100 E. Broadway Street, #501
New York, NY 10002
+1 (212) 242-2220

Key Plan

Description	Date
Filing Set	06/17/22

Project

Storm King Art Center

C.F.M. Building

Seal

NOT FOR CONSTRUCTION

Drawing Title

Fixture & Appliance Schedules

Date	06/17/22
Scale	Not to Scale
Drawing Number	A-C-704
Sheet Size	ARCH D

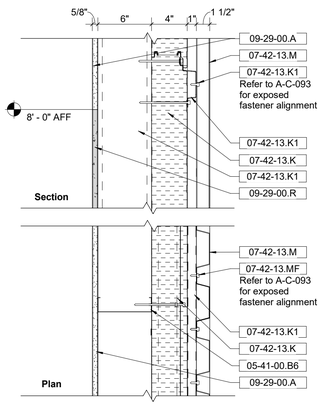

E41	CORE	R-VALUE	FIRE RATING
	MTL. STUD	R-32	NON RATED

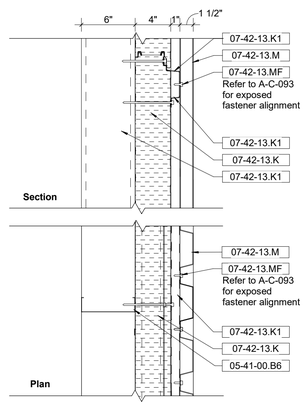

E42	CORE	R-VALUE	FIRE RATING
	MTL. STUD	R-32	NON RATED

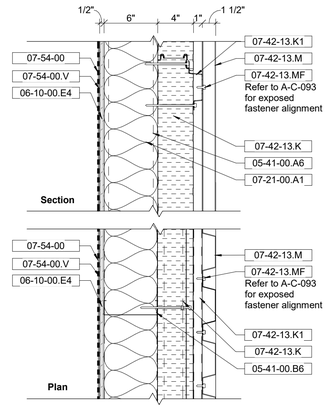

E47	CORE	R-VALUE	FIRE RATING
	MTL. STUD	R-24 / R-32	NON RATED

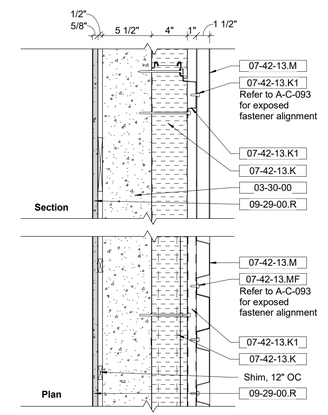

E86	CORE	R-VALUE	FIRE RATING
	CONCRETE	R-32	NON RATED

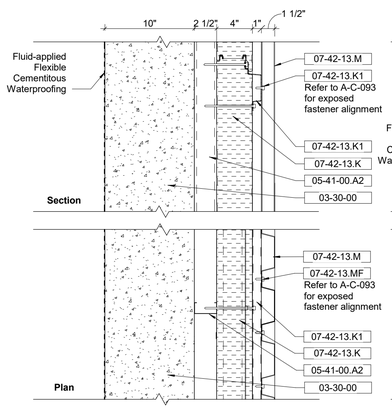

E87	CORE	R-VALUE	FIRE RATING
	CONCRETE	R-32	NON RATED

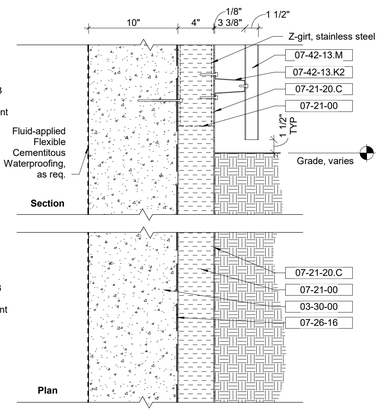

E88	CORE	R-VALUE	FIRE RATING
	CONCRETE	R-20	NON RATED

Keynote Legend

Keynote	*Description*
03-30-00	Cast-In-Place Concrete
05-41-00.A2	2 1/2" Metal Stud
05-41-00.A6	6" Metal Stud
05-41-00.B6	6" Metal Channel Runner
06-10-00.E4	1/2" Exterior Grade Plywood
07-21-00	Thermal Insulation
07-21-00.A1	Mineral Wool Insulation, Exterior
07-21-20.C	Stainless Steel Cover Plate
07-26-16	Below-grade Vapor Retarder
07-42-13.K	Insulated Metal Composite Panel
07-42-13.K1	Integrated Hat Channel
07-42-13.K2	Hat Channel
07-42-13.M	Corrugated Metal Cladding
07-42-13.MF	Exposed Fastener
07-54-00	Thermoplastic Membrane Roofing (TPO)
07-54-00.V	Vapor Retarder
09-29-00.A	5/8" Gypsum Wall Board
09-29-00.R	5/8" Gypsum Wall Board - Abuse-Resistant

Owner
Storm King Art Center
1 Museum Road
New Windsor, NY 12553
+1 (845) 534-3115

Design Architect
heneghan peng architects
14-16 Lord Edward Street
Dublin, D02 YC63
+353 1 633 9000

Executive Architect
WXY Architecture + Urban Design
224 Centre Street, 5th Floor
New York, NY 10013
+1 (212) 219-1953

Landscape Architect
Gustafson Porter + Bowman
1 Cobham Mews
London, MW1 9SB
+44 020 7284 8950

Reed Hilderbrand LLC
33 Whitney Avenue, 3rd Floor
New Haven, CT 06510
+1 (617) 923-2422

Structural & Lighting
ARUP
77 Water Street
New York, NY 10005
+1 (212) 896-3000

MEPF & IT
BuroHappold
100 Broadway #23
New York, NY 10005
+1 (212) 616-0228

Civil
VHB
100 Great Oaks Blvd., Suite 118
Albany, NY 12203
+1 (518) 389-3606

AV & Acoustics
LSTN Consultants
76 Beaver Street, 2nd Floor
New York, NY 10005
+1 (347) 788-0810

Facade
Front Inc.
100 E. Broadway Street, #501
New York, NY 10002
+1 (212) 242-2220

Key Plan

Description	Date
Filing Set	06/17/22

Project

Storm King Art Center

C.F.M. Building

Seal

NOT FOR CONSTRUCTION

Drawing Title

Exterior Wall Types

Date	06/17/22
Scale	1 1/2" = 1'-0"
Drawing Number	A-C-711
Sheet Size	ARCH D

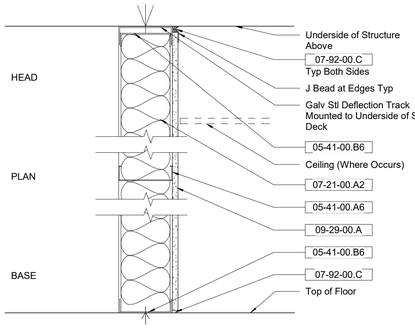

P68	CORE	STC RATING	ACOUSTIC BATT THICKNESS	FIRE RATING	UL NUMBER
	MTL. STUD	-	5 1/2"	NON-RATED	-

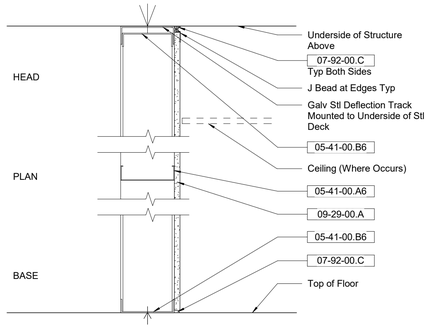

P67	CORE	STC RATING	ACOUSTIC BATT THICKNESS	FIRE RATING	UL NUMBER
	MTL. STUD	-	-	NON-RATED	-

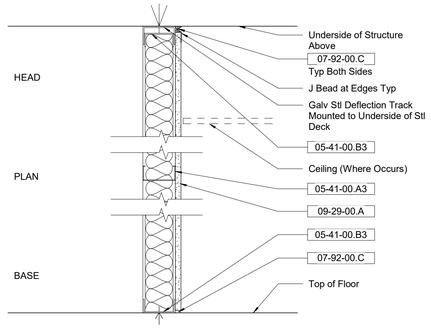

P66	CORE	STC RATING	ACOUSTIC BATT THICKNESS	FIRE RATING	UL NUMBER
	MTL. STUD	-	3"	NON-RATED	-

Sheet Notes

1. These Drawings Describe Typical Conditions Only.
2. All Partitions Are Assume to be Full Height - Extending from Top of Slab to Underside of Structure Above, UON.
3. Refer to Structural Drawings for All Reinforcing and Opening Requirements
4. Use 20 Gauge Min Galv Steel Stud Framing and Refer to ASTM C754 For Limiting Heights Criteria.
5. For Acoustic and Firestopping Requirements At All Penetrations Refer to Specifications.
6. For GWB Partitions: Gyp Bd to be Interrupted At All Partition Intersections; No Layers Are To Be Continuous Between Adjacent Rooms; Multiple Layers of Gyp Bd Are to be Applied With Staggered Joints. All Single Sided Furring Partitions To Be Applied To Side Of Wall At Which The Type Key Is Shown. Provide Metal Furring Channels At Structural Steel To Fasten Metal Stud Framing.
7. Refer To A-C-691 For Partition Head Details. All Partitions To Overhead Structure Shall Allow For Adequate Deflection Of The Structure.
8. Provide Double Studs At Openings, Jambs, And Sills. Do Not Cut For Any Reason.
9. Fire Resistance Rated Partitions Shall Use Fire/Smoke Sealant. Fire Barriers Shall Extend From The Top Of The Floor/Ceiling Assembly Below To The Underside Of The Floor Or Roof Deck Above And Shall Be Securely Attaached Thereto. Such Fire Barrier Shall Be Continuous Through Concealed Spaces, Such As The Space Above A Suspended Ceiling. The Supporting Construction For Fire Barrier Walls Shall Be Protected To Afford The Required Fire Resistance Rating Of the Fire Barrier Supported.
10. Provide Control Joints As Indicated Or As Required. Submit Shop Drawing Layout Diagrams For Architect's Review Prior To Installation
11. Provide Casing Beas At All GWB Exposed Edges.
12. Check Mechanical Drawings For Opening Sizes And Locations. Piping And Duct Penetrations In Non-rated Stud Walls Shall Be Provided With Necessary Frames, Bracing And Acoustical Sealant Around The Openings.
13. Duct Penetrations Of Fire Rated Walls, Floors, Or Roofs Shall Have Fire Dampers. Dampers Must Be Located At The Point Where The Rated Barrier Is Penetrated.
14. Penetrations In Walls, Floors, Or Roofs Requiring Protected Openings Shall Be Fire-stopped.
15. All Exposed Fiberglass Insulation Shall Be Provided With A Backing With A Flame Spread Rating Not Greater Than 25.

Keynote Legend

Keynote	*Description*
05-41-00.A2	2 1/2" Metal Stud
05-41-00.A3	3 5/8" Metal Stud
05-41-00.A6	6" Metal Stud
05-41-00.A8	8" Metal Stud
05-41-00.B2	2 1/2" Metal Channel Runner
05-41-00.B3	3 5/8" Metal Channel Runner
05-41-00.B6	6" Metal Channel Runner
05-41-00.B8	8" Metal Channel Runner
07-21-00.A2	Mineral Wool Insulation, Interior
07-92-00.A2	Joint Sealant w/ Backer Rod
07-92-00.C	Acoustic Sealant w/ Backer Rod
09-29-00.A	5/8" Gypsum Wall Board
09-29-00.AX	5/8" Gypsum Wall Board (Fire-Rated)

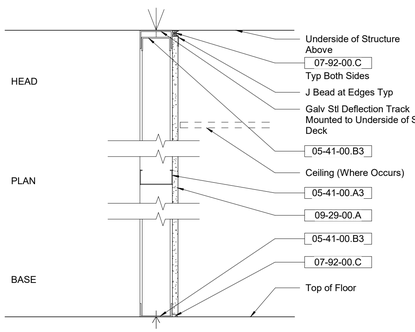

P65	CORE	STC RATING	ACOUSTIC BATT THICKNESS	FIRE RATING	UL NUMBER
	MTL. STUD	-	-	NON-RATED	-

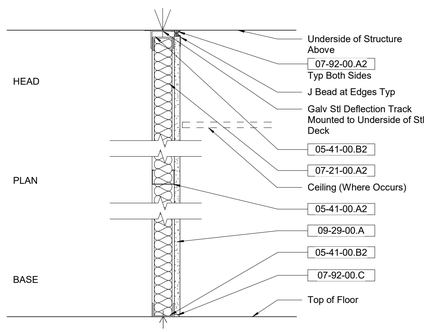

P64	CORE	STC RATING	ACOUSTIC BATT THICKNESS	FIRE RATING	UL NUMBER
	MTL. STUD	-	2"	NON-RATED	-

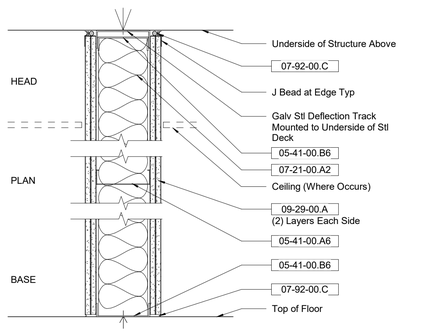

P63	CORE	STC RATING	ACOUSTIC BATT THICKNESS	FIRE RATING	UL NUMBER
	MTL. STUD	51	5 1/2"	-	-

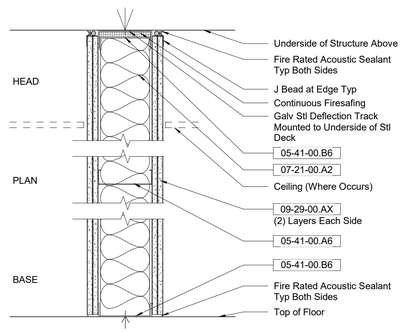

P62	CORE	STC RATING	ACOUSTIC BATT THICKNESS	FIRE RATING	UL NUMBER
	MTL. STUD	51	5 1/2"	2 HR	U411

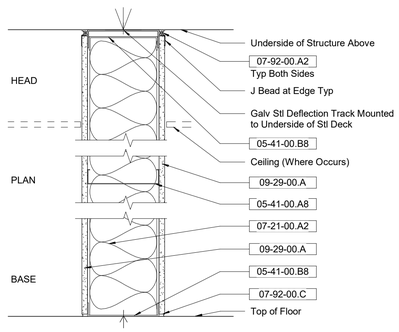

P61	CORE	STC RATING	ACOUSTIC BATT THICKNESS	FIRE RATING	UL NUMBER
	MTL. STUD	42	7 1/2"	NON RATED	-

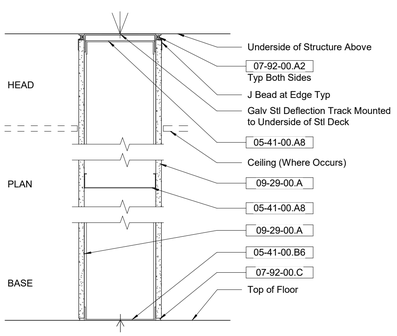

P60	CORE	STC RATING	ACOUSTIC BATT THICKNESS	FIRE RATING	UL NUMBER
	MTL. STUD	-	-	NON RATED	-

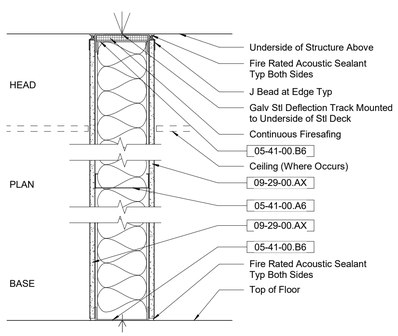

P59	CORE	STC RATING	ACOUSTIC BATT THICKNESS	FIRE RATING	UL NUMBER
	MTL. STUD	41	5 1/2"	1 HR	U419

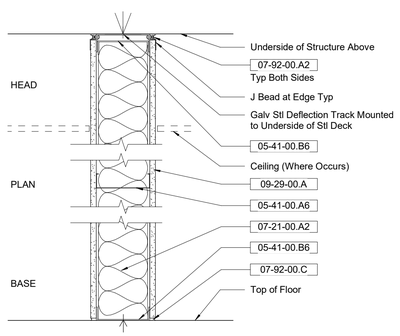

P58	CORE	STC RATING	ACOUSTIC BATT THICKNESS	FIRE RATING	UL NUMBER
	MTL. STUD	41	5 1/2"	NON RATED	-

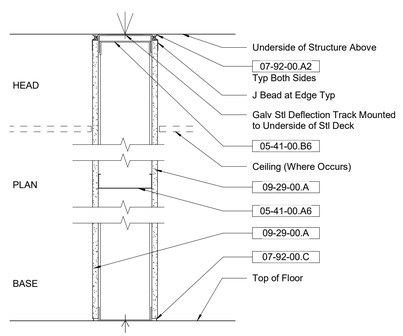

P57	CORE	STC RATING	ACOUSTIC BATT THICKNESS	FIRE RATING	UL NUMBER
	MTL. STUD	-	-	NON RATED	-

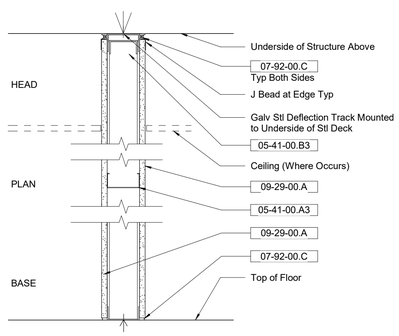

P56	CORE	STC RATING	ACOUSTIC BATT THICKNESS	FIRE RATING	UL NUMBER
	MTL. STUD	-	-	NON RATED	-

Owner
Storm King Art Center
1 Museum Road
New Windsor, NY 12553
+1 (845) 534-3115

Design Architect
heneghan peng architects
14-16 Lord Edward Street
Dublin, D02 YC63
+353 1 633 9000

Executive Architect
WXY Architecture + Urban Design
224 Centre Street, 5th Floor
New York, NY 10013
+1 (212) 219-1953

Landscape Architect
Gustafson Porter + Bowman
1 Cobham Mews
London, MW1 9SB
+44 020 7284 8950

Reed Hilderbrand LLC
33 Whitney Avenue, 3rd Floor
New Haven, CT 06510
+1 (617) 923-2422

Structural & Lighting
ARUP
77 Water Street
New York, NY 10005
+1 (212) 896-3000

MEPF & IT
BuroHappold
100 Broadway #23
New York, NY 10005
+1 (212) 616-0228

Civil
VHB
100 Great Oaks Blvd., Suite 118
Albany, NY 12203
+1 (518) 389-3606

AV & Acoustics
LSTN Consultants
76 Beaver Street, 2nd Floor
New York, NY 10005
+1 (347) 788-0810

Facade
Front Inc.
100 E. Broadway Street, #501
New York, NY 10002
+1 (212) 242-2220

Key Plan

Description	Date
Filing Set	06/17/22

Project

Storm King Art Center

C.F.M. Building

Seal

NOT FOR CONSTRUCTION

Drawing Title

Interior Wall Types

Date	06/17/22
Scale	As indicated
Drawing Number	A-C-721
Sheet Size	ARCH D

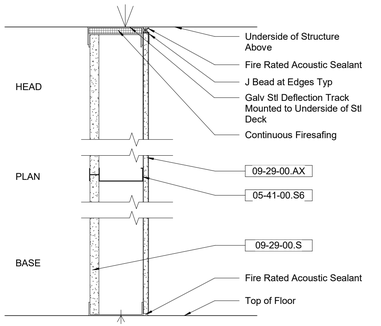

P91	CORE	STC RATING	ACOUSTIC BATT THICKNESS	FIRE RATING	UL NUMBER
	MTL. STUD	-	4 1/2"	1 HR	U415

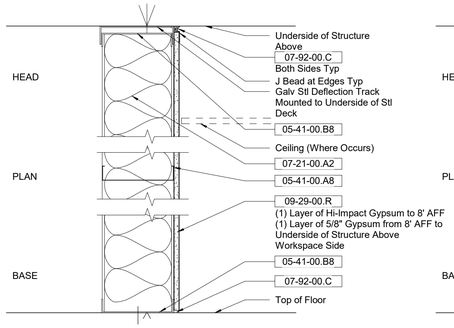

P87	CORE	STC RATING	ACOUSTIC BATT THICKNESS	FIRE RATING	UL NUMBER
	MTL. STUD	-	5 1/2"	NON-RATED	-

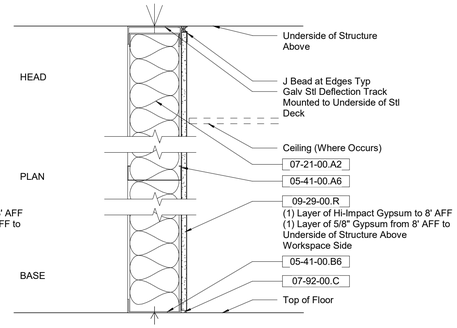

P87	CORE	STC RATING	ACOUSTIC BATT THICKNESS	FIRE RATING	UL NUMBER
	MTL. STUD	-	5 1/2"	NON-RATED	-

Sheet Notes

1. These Drawings Describe Typical Conditions Only.
2. All Partitions Are Assume to be Full Height - Extending from Top of Slab to Underside of Structure Above, UON.
3. Refer to Structural Drawings for All Reinforcing and Opening Requirements
4. Use 20 Gauge Min Galv Steel Stud Framing and Refer to ASTM C754 For Limiting Heights Criteria.
5. For Acoustic and Firestopping Requirements At All Penetrations Refer to Specifications.
6. For GWB Partitions: Gyp Bd to be Interrupted At All Partition Intersections; No Layers Are To Be Continuous Between Adjacent Rooms; Multiple Layers of Gyp Bd Are to be Applied With Staggered Joints. All Single Sided Furring Partitions To Be Applied To Side Of Wall At Which The Type Key Is Shown. Provide Metal Furring Channels At Structural Steel To Fasten Metal Stud Framing.
7. Refer To A-C-691 For Partition Head Details. All Partitions To Overhead Structure Shall Allow For Adequate Deflection Of The Structure.
8. Provide Double Studs At Openings, Jambs, And Sills. Do Not Cut For Any Reason.
9. Fire Resistance Rated Partitions Shall Use Fire/Smoke Sealant. Fire Barriers Shall Extend From The Top Of The Floor/Ceiling Assembly Below To The Underside Of The Floor Or Roof Deck Above And Shall Be Securely Attaached Thereto. Such Fire Barrier Shall Be Continuous Through Concealed Spaces, Such As The Space Above A Suspended Ceiling. The Supporting Construction For Fire Barrier Walls Shall Be Protected To Afford The Required Fire Resistance Rating Of the Fire Barrier Supported.
10. Provide Control Joints As Indicated Or As Required. Submit Shop Drawing Layout Diagrams For Architect's Review Prior To Installation
11. Provide Casing Beas At All GWB Exposed Edges.
12. Check Mechanical Drawings For Opening Sizes And Locations. Piping And Duct Penetrations In Non-rated Stud Walls Shall Be Provided With Necessary Frames, Bracing And Acoustical Sealant Around The Openings.
13. Duct Penetrations Of Fire Rated Walls, Floors, Or Roofs Shall Have Fire Dampers. Dampers Must Be Located At The Point Where The Rated Barrier Is Penetrated.
14. Penetrations In Walls, Floors, Or Roofs Requiring Protected Openings Shall Be Fire-stopped.
15. All Exposed Fiberglass Insulation Shall Be Provided With A Backing With A Flame Spread Rating Not Greater Than 25.

Keynote Legend

Keynote	*Description*
05-41-00.A3	3 5/8" Metal Stud
05-41-00.A6	6" Metal Stud
05-41-00.A8	8" Metal Stud
05-41-00.B3	3 5/8" Metal Channel Runner
05-41-00.B6	6" Metal Channel Runner
05-41-00.B8	8" Metal Channel Runner
05-41-00.S6	6" Metal Shaftwall Stud
07-21-00.A2	Mineral Wool Insulation, Interior
07-92-00.C	Acoustic Sealant w/ Backer Rod
09-29-00.A	5/8" Gypsum Wall Board
09-29-00.AX	5/8" Gypsum Wall Board (Fire-Rated)
09-29-00.R	5/8" Gypsum Wall Board - Abuse-Resistant
09-29-00.RX	5/8" Gypsum Wall Board - Abuse-Resistant (Fire-Rated)
09-29-00.S	1" Gypsum Shaftwall Liner Panels
09-29-00.T	5/8" Glass-Mat Tile Backerboard
09-30-13.A1	Ceramic Wall Tile
09-30-13.B	Setting Bed

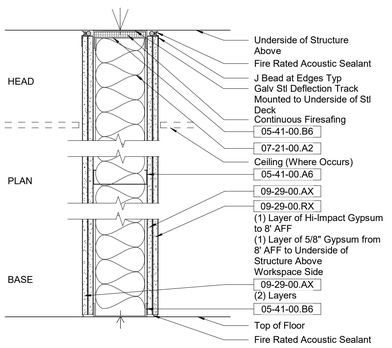

P86	CORE	STC RATING	ACOUSTIC BATT THICKNESS	FIRE RATING	UL NUMBER
	MTL. STUD	51	5 1/2"	2 HR	U411

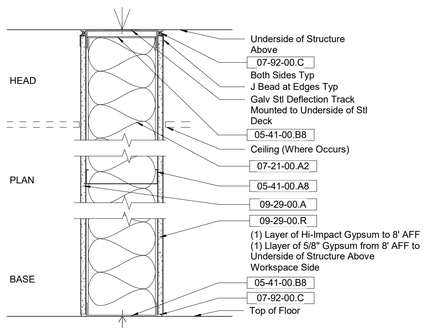

P85	CORE	STC RATING	ACOUSTIC BATT THICKNESS	FIRE RATING	UL NUMBER
	MTL. STUD	42	7 1/2"	NON RATED	-

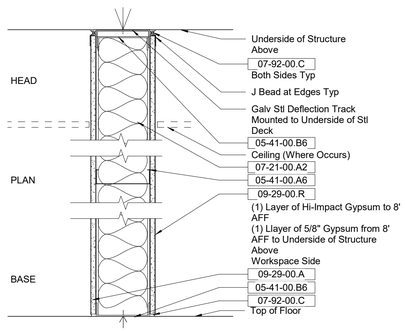

P84	CORE	STC RATING	ACOUSTIC BATT THICKNESS	FIRE RATING	UL NUMBER
	MTL. STUD	41	5 1/2"	NON RATED	-

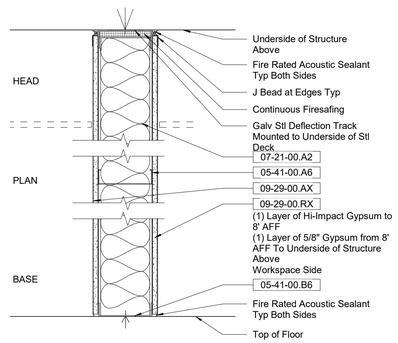

P83	CORE	STC RATING	ACOUSTIC BATT THICKNESS	FIRE RATING	UL NUMBER
	MTL. STUD	41	5 1/2"	1 HOUR	U419

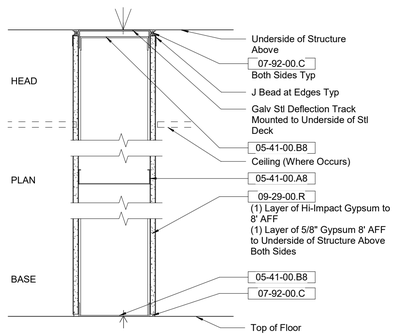

P82	CORE	STC RATING	ACOUSTIC BATT THICKNESS	FIRE RATING	UL NUMBER
	MTL. STUD	-	-	NON RATED	-

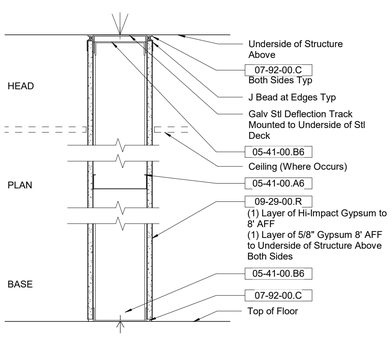

P81	CORE	STC RATING	ACOUSTIC BATT THICKNESS	FIRE RATING	UL NUMBER
	MTL. STUD	-	-	NON RATED	-

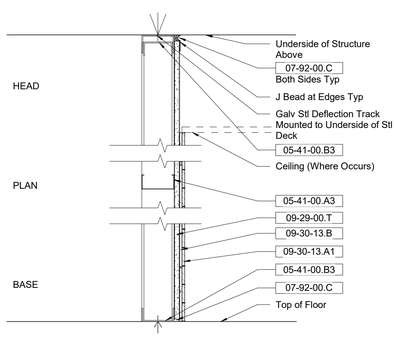

P74	CORE	STC RATING	ACOUSTIC BATT THICKNESS	FIRE RATING	UL NUMBER
	MTL. STUD	-	-	NON-RATED	-

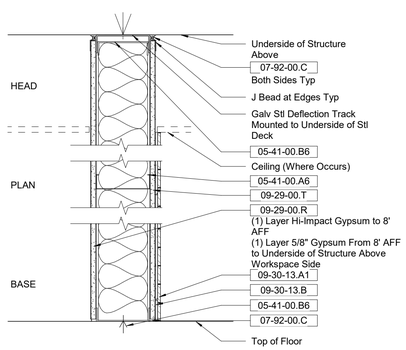

P73	CORE	STC RATING	ACOUSTIC BATT THICKNESS	FIRE RATING	UL NUMBER
	MTL. STUD	-	5 1/2"	NON RATED	-

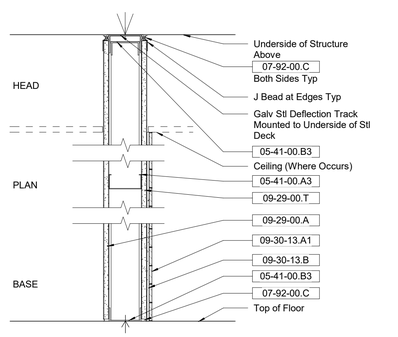

P72	CORE	STC RATING	ACOUSTIC BATT THICKNESS	FIRE RATING	UL NUMBER
	MTL. STUD	-	-	NON RATED	-

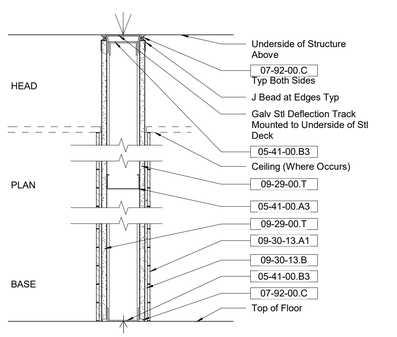

P71	CORE	STC RATING	ACOUSTIC BATT THICKNESS	FIRE RATING	UL NUMBER
	MTL. STUD	-	-	NON RATED	-

Owner
Storm King Art Center
1 Museum Road
New Windsor, NY 12553
+1 (845) 534-3115

Design Architect
heneghan peng architects
14-16 Lord Edward Street
Dublin, D02 YC63
+353 1 633 9000

Executive Architect
WXY Architecture + Urban Design
224 Centre Street, 5th Floor
New York, NY 10013
+1 (212) 219-1953

Landscape Architect
Gustafson Porter + Bowman
1 Cobham Mews
London, MW1 9SB
+44 020 7284 8950

Reed Hilderbrand LLC
33 Whitney Avenue, 3rd Floor
New Haven, CT 06510
+1 (617) 923-2422

Structural & Lighting
ARUP
77 Water Street
New York, NY 10005
+1 (212) 896-3000

MEPF & IT
BuroHappold
100 Broadway #23
New York, NY 10005
+1 (212) 616-0228

Civil
VHB
100 Great Oaks Blvd., Suite 118
Albany, NY 12203
+1 (518) 389-3606

AV & Acoustics
LSTN Consultants
76 Beaver Street, 2nd Floor
New York, NY 10005
+1 (347) 788-0810

Facade
Front Inc.
100 E. Broadway Street, #501
New York, NY 10002
+1 (212) 242-2220

Key Plan

Description	Date
Filing Set	06/17/22

Project

Storm King Art Center

C.F.M. Building

Seal

NOT FOR CONSTRUCTION

Drawing Title

Interior Wall Types

Date	06/17/22
Scale	As indicated
Drawing Number	A-C-722
Sheet Size	ARCH D

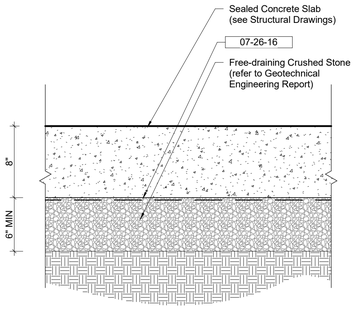

F31	CORE	R-VALUE	FIRE RATING
	CONC SOG	-	NON RATED

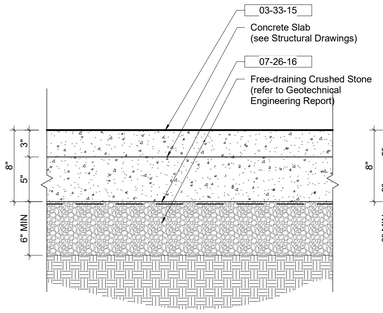

F32	CORE	R-VALUE	FIRE RATING
	CONC SOG	-	NON RATED

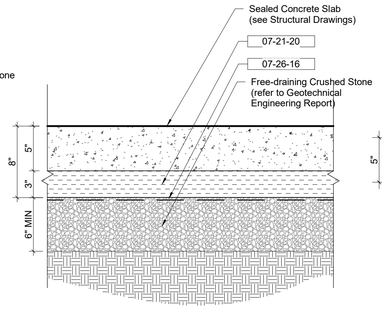

F33	CORE	R-VALUE	FIRE RATING
	CONC SOG	R-15	NON RATED

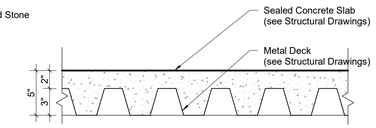

F34	CORE	R-VALUE	FIRE RATING
	DECK W/ FILL	-	NON RATED

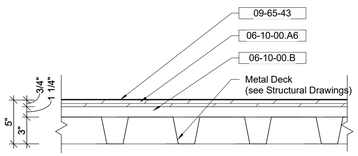

F35	CORE	R-VALUE	FIRE RATING
	MTL DECK	-	NON RATED

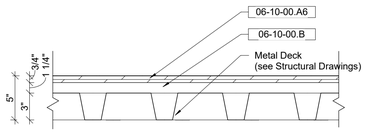

F36	CORE	R-VALUE	FIRE RATING
	MTL DECK	-	NON RATED

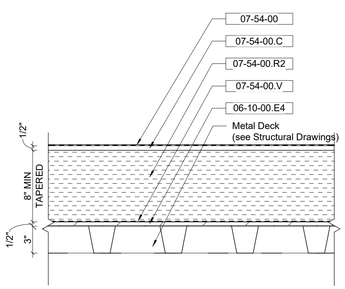

R31	CORE	R-VALUE	FIRE RATING
	MTL DECK	R-40	NON RATED

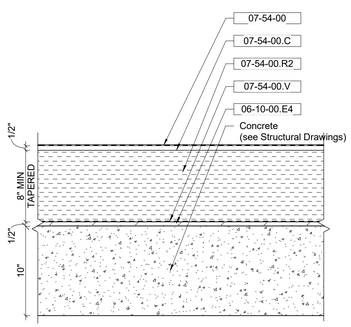

R32	CORE	R-VALUE	FIRE RATING
	CONCRETE	R-40	NON RATED

Keynote Legend

Keynote	*Description*
03-33-15	Architectural Topping Slabs
06-10-00.A6	3/4" Plywood Subfloor
06-10-00.B	Floor Sleeper
06-10-00.E4	1/2" Exterior Grade Plywood
07-21-20	XPS Insulation
07-26-16	Below-grade Vapor Retarder
07-54-00	Thermoplastic Membrane Roofing (TPO)
07-54-00.C	Cover Board
07-54-00.R2	Polyiso Insulation, Tapered to Drain
07-54-00.V	Vapor Retarder
09-65-43	Linoleum Sheet Flooring

Owner
Storm King Art Center
1 Museum Road
New Windsor, NY 12553
+1 (845) 534-3115

Design Architect
heneghan peng architects
14-16 Lord Edward Street
Dublin, D02 YC63
+353 1 633 9000

Executive Architect
WXY Architecture + Urban Design
224 Centre Street, 5th Floor
New York, NY 10013
+1 (212) 219-1953

Landscape Architect
Gustafson Porter + Bowman
1 Cobham Mews
London, MW1 9SB
+44 020 7284 8950

Reed Hilderbrand LLC
33 Whitney Avenue, 3rd Floor
New Haven, CT 06510
+1 (617) 923-2422

Structural & Lighting
ARUP
77 Water Street
New York, NY 10005
+1 (212) 896-3000

MEPF & IT
BuroHappold
100 Broadway #23
New York, NY 10005
+1 (212) 616-0228

Civil
VHB
100 Great Oaks Blvd., Suite 118
Albany, NY 12203
+1 (518) 389-3606

AV & Acoustics
LSTN Consultants
76 Beaver Street, 2nd Floor
New York, NY 10005
+1 (347) 788-0810

Facade
Front Inc.
100 E. Broadway Street, #501
New York, NY 10002
+1 (212) 242-2220

Key Plan

Description	Date
Filing Set	06/17/22

Project

Storm King Art Center

C.F.M. Building

Seal

NOT FOR CONSTRUCTION

Drawing Title

Floor & Roof Types

Date	06/17/22
Scale	1 1/2" = 1'-0"
Drawing Number	A-C-731
Sheet Size	ARCH D

Master Keynote Schedule

Keynote	*Description*
03-30-00	Cast-In-Place Concrete
03-30-00.B	Polished Concrete Finish
03-33-15	Architectural Topping Slabs
05-41-00	Cold-Formed Metal Framing
05-41-00.A2	2 1/2" Metal Stud
05-41-00.A3	3 5/8" Metal Stud
05-41-00.A4	4" Metal Stud
05-41-00.A6	6" Metal Stud
05-41-00.A8	8" Metal Stud
05-41-00.B2	2 1/2" Metal Channel Runner
05-41-00.B3	3 5/8" Metal Channel Runner
05-41-00.B6	6" Metal Channel Runner
05-41-00.B8	8" Metal Channel Runner
05-41-00.S4	4" Metal Shaftwall Stud
05-41-00.S6	6" Metal Shaftwall Stud
05-50-00.A	Access Ladder
05-50-00.C1	Roof Guard, Parapet-Mounted
05-51-13	Metal Pan Stair
05-51-13.A1	Metal Pan
05-51-13.A2	1 1/2" Concrete Fill
05-51-13.A3	Steel Stringer
05-51-13.B	Steel Guardrail (Color to Match Primary Steel)
05-51-13.B1	1 1/2" Steel Pipe Toprail (Color to Match Primary Steel)
05-51-13.B2	1/2" Steel Pickets (Color to Match Primary Steel)
05-51-13.C1	1 1/2" SS Handrail
05-51-13.D1	SS Cane Rail
06-10-00.A6	3/4" Plywood Subfloor
06-10-00.B	Floor Sleeper
06-10-00.E	Wood Blocking
06-10-00.E4	1/2" Exterior Grade Plywood
06-40-23.B	Melamine Veneered Casework
06-40-23.C2	Hardwood Edge, Painted
06-40-23.F2	Solid Surface Countertop
07-21-00	Thermal Insulation
07-21-00.A1	Mineral Wool Insulation, Exterior
07-21-00.A2	Mineral Wool Insulation, Interior
07-21-20	XPS Insulation
07-21-20.C	Stainless Steel Cover Plate
07-26-16	Below-grade Vapor Retarder
07-27-00.A2	Self-Adhering Vapor-Impermeable Air Barrier
07-41-13.R2	Polyiso Insulation, Tapered to Drain
07-42-13.K	Insulated Metal Composite Panel
07-42-13.K1	Integrated Hat Channel
07-42-13.K2	Hat Channel
07-42-13.K3	Base Trim
07-42-13.KS	Continuous Butyl Sealant
07-42-13.M	Corrugated Metal Cladding
07-42-13.M1	Closure Trim
07-42-13.M2	End Trim
07-42-13.M3	Corner Angle Trim
07-42-13.M4	Channel Trim
07-42-13.MF	Exposed Fastener
07-42-13.S	Sheet Metal Flashing, Color-matched to Cladding
07-54-00	Thermoplastic Membrane Roofing (TPO)
07-54-00.A	Roof Walk Pads
07-54-00.B	Cant Strip
07-54-00.C	Cover Board
07-54-00.R2	Polyiso Insulation, Tapered to Drain
07-54-00.V	Vapor Retarder
07-62-00	Sheet Metal Flashing
07-62-00.P	Parapet Coping
07-62-00.Q	Parapet & Roofing Curb Termination Bar
07-62-00.S	Through-wall Scupper
07-84-13	Firestopping
07-92-00.A2	Joint Sealant w/ Backer Rod
07-92-00.C	Acoustic Sealant w/ Backer Rod
08-11-13.A	Exterior Hollow Metal Door, Insulated
08-11-13.A1	Exterior Metal Door Frame, Insulated, Thermally-broken
08-30-00	Interior Glazed Partition Systems
08-33-23	Overhead Coiling Door
08-33-23.A	Astragal Rubber Seal
08-33-23.B	Sensing Edge
08-39-19	Watertight Tank Access Hatch
08-51-00	Exterior Metal-Framed Windows & Doors
08-63-00	Metal-Framed Skylights
08-71-00.T	Door Threshold, Thermally-broken
08-81-00.A	Glass Backsplash, Back-painted
08-90-00	Exterior Louvers
08-90-00.B	Blank-off Panel
09-29-00	Gypsum Drywall
09-29-00.A	5/8" Gypsum Wall Board
09-29-00.AX	5/8" Gypsum Wall Board (Fire-Rated)
09-29-00.R	5/8" Gypsum Wall Board - Abuse-Resistant
09-29-00.RX	5/8" Gypsum Wall Board - Abuse-Resistant (Fire-Rated)
09-29-00.S	1" Gypsum Shaftwall Liner Panels
09-29-00.T	5/8" Glass-Mat Tile Backerboard
09-30-13.A1	Ceramic Wall Tile

Master Keynote Schedule

Keynote	*Description*
09-30-13.B	Setting Bed
09-65-13.A3	Resilient Base, 3"-high
09-65-43	Linoleum Sheet Flooring
10-11-00.A	Writable/Magnetic Surfaces
10-11-00.B	Tackable Acoustic Fabric-Wrapped Panels
10-14-00.A1	Interior Signage
10-28-13.A3	Toilet Paper Holder w/ Seat Cover and Sanitary Receptacle, Recessed
10-28-13.C1	Paper Towel Dispenser w/ Receptacle, Recessed
10-28-13.D1	Diaper-changing Station, Recessed Vertical
10-28-13.E1	Soap Dispenser, Interior Touchless
10-28-13.F2	Mirror w/ Shelf, Recessed
10-28-13.G1	Grab Rail, ADA-compliant
10-28-13.H	Coat/Towel Hook
10-44-16.D	Defibrillator Cabinet, Recessed
10-44-16.F1	Fire Extinguisher and Cabinet, Recessed
10-44-16.F2	Fire Extinguisher and Cabinet, Surface-Mounted
10-51-13.A	Plastic Laminate Lockers, Interior
10-51-13.C	Bench
11-31-00.A1	Copy Machine, Full Size
11-31-00.C	Coffee Maker
11-31-00.D1	Dishwasher
11-31-00.E	Electric Kettle
11-31-00.M	Microwave
11-31-00.R1	Refrigerator, Full Height
11-31-00.R3	Refrigerator, Undercounter
11-31-00.T	Toaster
11-31-00.W1	Washing Machine
11-31-00.W2	Dryer
12-24-13	Window Shades
14-26-00	Limited-Use/Limited Application Elevators
22-42-00.J	Wall-Hung Commercial Toilet, w/ Carrier
22-42-00.K1	Kitchen Faucet
22-42-00.L1	Restroom Faucet, Interior Touchless
22-42-00.M2	Mop Sink Faucet
22-42-00.P1	Shop Sink
22-42-00.P2	Mop Sink
22-42-00.R1	Drinking Fountains w/ Bottle-Filling Station, Interior
22-42-00.S2	Undermount Kitchen Sink, ADA-compliant
22-42-00.S3	Wall-Hung Commercial Sink, ADA-compliant
22-42-00.T	Foldable Shower Seat, ADA-compliant
22-42-00.V	Shower Fixture, ADA-compliant
22-42-00.W	Linear Floor Drain
26-52-19.E	Exit Signage
32-39-00.A	Bollard - Fixed
32-39-00.B	Bollard - Fixed Base Plate
41-34-23	Semi-Downdraft Spray Paint Booth

Owner
Storm King Art Center
1 Museum Road
New Windsor, NY 12553
+1 (845) 534-3115

Design Architect
heneghan peng architects
14-16 Lord Edward Street
Dublin, D02 YC63
+353 1 633 9000

Executive Architect
WXY Architecture + Urban Design
224 Centre Street, 5th Floor
New York, NY 10013
+1 (212) 219-1953

Landscape Architect
Gustafson Porter + Bowman
1 Cobham Mews
London, MW1 9SB
+44 020 7284 8950

Reed Hilderbrand LLC
33 Whitney Avenue, 3rd Floor
New Haven, CT 06510
+1 (617) 923-2422

Structural & Lighting
ARUP
77 Water Street
New York, NY 10005
+1 (212) 896-3000

MEPF & IT
BuroHappold
100 Broadway #23
New York, NY 10005
+1 (212) 616-0228

Civil
VHB
100 Great Oaks Blvd., Suite 118
Albany, NY 12203
+1 (518) 389-3606

AV & Acoustics
LSTN Consultants
76 Beaver Street, 2nd Floor
New York, NY 10005
+1 (347) 788-0810

Facade
Front Inc.
100 E. Broadway Street, #501
New York, NY 10002
+1 (212) 242-2220

Key Plan

Description	Date
Filing Set	06/17/22

Project

Storm King Art Center

C.F.M. Building

Seal

NOT FOR CONSTRUCTION

Drawing Title

Keynote Master Schedule

Date	06/17/22
Scale	Not to Scale
Drawing Number	A-C-791
Sheet Size	ARCH D

SYMBOLS

SYMBOL	DESCRIPTION
[....]	CAMBER
<....>	NUMBER OF STUDS
(...)	TOP ELEVATION OF STRUCTURAL ELEMENT
	STEEL BEAM
	STEEL JOIST
	BRACE FRAME
	MOMENT CONNECTION
	CANTILEVER MOMENT CONNECTION
	DRAG CONNECTION
	PLATE CONNECTION
	STIFFENER PLATE CONNECTION
	SPLICE
	COLUMN STARTS ON THIS LEVEL
	COLUMN FINISHES BELOW THIS LEVEL
H	COLUMN HANGER
P	COLUMN POST
S	SLOPED COLUMN STARTS ON THIS LEVEL
S	SLOPED COLUMN FINISHES BELOW THIS LEVEL
S	SLOPED COLUMN CONTINUES THROUGH THIS LEVEL
	SLAB DROP
	SLAB SLOPE
	CHANGE IN SLAB THICKNESS
	GROUND
	ONE WAY SPANNING SLAB
	TWO WAY SPANNING SLAB
T/SL = X'-XX"	TOP OF SLAB ELEVATION
	WELD TYPE
	CONCRETE WALL (PLAN VIEW)
	CONCRETE BEAM (PLAN VIEW)
	SETTING OUT POINT/WORK POINT
LEVEL	LEVEL

ABBREVIATIONS

ABV.	DESCRIPTION
ALT	ALTERNATE
BET	BETWEEN
BF	BOTH FACES
BLDG	BUILDING
BM	BEAM
BOT	BOTTOM
BPL	BASE PLATE
BS	BOTH SIDES
B/ST	BOTTOM OF STEEL
C	CHANNEL
CANT	CANTILEVER
CJ	CONSTRUCTION JOINT
CJP	COMPLETE JOINT PENETRATION (WELD)
CL	CENTERLINE
CLR	CLEAR
COL	COLUMN
CONC	CONCRETE
CONN	CONNECTION
CONST	CONSTRUCTION
CONT	CONTINUOUS
CPL	COVERPLATE
CTRL JT	CONTROL JOINT
D	DEPTH, DEEP, DECK
DEMO	DEMOLITION
DET	DETAIL
DIA	DIAMETER
DIAG	DIAGONAL
DIM	DIMENSION
DJ	DOWEL JOINT
DL	DEAD LOAD
DO	DITTO
DWG	DRAWING
E	MODULUS OF ELASTICITY
EA	EACH
EF	EACH FACE
EJ	EXPANSION JOINT
EL	ELEVATION
EMB	EMBEDMENT
EQ	EQUAL
EW	EACH WAY
EXIST	EXISTING
EXP	EXPANSION
EXT	EXTERIOR
FF	FAR FACE
FFL	FINISH FLOOR LEVEL
FDN	FOUNDATION
FIN	FINISHED
FL	FLOOR
FS	FAR SIDE
FT	FEET
FTG	FOOTING
FY	YIELD STRESS
GA	GAUGE
GALV	GALVANISED
GR	GRADE
H	HORIZONTAL OR WEAK AXIS SHEAR FORCE
HEX	HEXAGON, HEXAGONAL
HORIZ	HORIZONTAL
HP	HIGH POINT
HSB	HIGH-STRENGTH BOLT
HSS	HOLLOW STRUCTURAL SECTION
HT	HEIGHT
ID	INSIDE DIAMETER
IF	INSIDE FACE
IJ	ISOLATION JOINT
IN	INCH
INT	INTERIOR
JT	JOINT
K	KIP = 1000 LBS
KSF	KIPS PER SQUARE FOOT

ABBREVIATIONS

ABV.	DESCRIPTION
L	LENGTH
LB	POUND
LG	LONG
LIN	LINEAR OR LINEAL
LL	LIVE LOAD
LLH	LONG LEG HORIZONTAL
LLV	LONG LEG VERTICAL
LP	LOW POINT
LSL	LONG SLOTTED (BOLT HOLE)
LT	LIGHT
LW	LIGHT WEIGHT
M	MOMENT FORCE
MD	METAL DECK
MF	MOMENT FRAME
MJ	MOVEMENT JOINT
NF	NEAR FACE
NIC	NOT IN CONTRACT
NO	NUMBER
NOM	NOMINAL
NS	NEAR SIDE
NTS	NOT TO SCALE
NW	NORMAL WEIGHT
OC	ON CENTER
OD	OUTSIDE DIAMETER
OF	OUTSIDE FACE
OH	OPPOSITE HAND
OPNG	OPENING
OPP	OPPOSITE
OVS	OVERSIZE (BOLT HOLE)
P	AXIAL FORCE
PCF	POUNDS PER CUBIC FOOT
PERP	PERPENDICULAR
PL	PLATE
PP	PARTIAL PENETRATION (WELD)
PSF	POUNDS PER SQUARE FOOT
PSI	POUNDS PER SQUARE INCH
PT	POINT
R	RADIUS
REBAR	REINFORCING BAR
REINF	REINFORCE(ING)
REV	REVISION
S	SLAB
SIM	SIMILAR
SL	SLAB
SOG	SLAB ON GRADE
SQ FT	SQUARE FOOT
SQ IN	SQUARE INCH
SS	STAINLESS STEEL
SSL	SHORT SLOTTED (BOLT HOLE)
STD	STANDARD
STIFF	STIFFENER
ST	STEEL
STRUCT	STRUCTURAL
T&B	TOP & BOTTOM
THK	THICK
T/CONC	TOP OF CONCRETE
T/D	TOP OF METAL DECK
T	TORSION FORCE
T/SL	TOP OF SLAB
T/ST	TOP OF STEEL
TS	STRUCTURAL STEEL TUBE
T/WALL	TOP OF WALL
TYP	TYPICAL
UON	UNLESS OTHERWISE NOTED
V	SHEAR FORCE
VERT, V	VERTICAL (FORCE)
VIF	VERIFY IN FIELD
W/	WITH
W/O	WITHOUT
WP	WORK POINT
WWF	WELDED WIRE FABRIC
XS	EXTRA STRONG (PIPE)
XXS	DOUBLE EXTRA STRONG (PIPE)

Owner
Storm King Art Center
1 Museum Road
New Windsor, NY 12553
+1 (845) 534-3115

Design Architect
heneghan peng architects
14-16 Lord Edward Street
Dublin, D02 YC63
+353 1 633 9000

Executive Architect
WXY Architecture + Urban Design
224 Centre Street, 5th Floor
New York, NY 10013
+1 (212) 219-1953

Landscape Architect
Gustafson Porter + Bowman
1 Cobham Mews
London, MW1 9SB
+44 020 7284 8950

Reed Hilderbrand LLC
33 Whitney Avenue, 3rd Floor
New Haven, CT 06510
+1 (617) 923-2422

Structural & Lighting
ARUP
77 Water Street
New York, NY 10005
+1 (212) 896-3000

MEPF & IT
BuroHappold
100 Broadway #23
New York, NY 10005
+1 (212) 616-0228

Civil
VHB
100 Great Oaks Blvd., Suite 118
Albany, NY 12203
+1 (518) 389-3606

AV & Acoustics
LSTN Consultants
76 Beaver Street, 2nd Floor
New York, NY 10005
+1 (347) 788-0810

Facade
Front Inc.
100 E. Broadway Street, #501
New York, NY 10002
+1 (212) 242-2220

Key Plan

Description	Date
Filing Set	06/17/22

Project

Storm King Art Center

C.F.M. Building

Seal

NOT FOR CONSTRUCTION

Drawing Title

Structural Symbols and Abbreviations

Date	06/17/22
Scale	NTS
Drawing Number	S-C-001
Sheet Size	ARCH D

GENERAL NOTES

1. ALL CONSTRUCTION SHALL BE IN ACCORDANCE WITH THE FOLLOWING:

   A. PROJECT GOVERNING CODE(S) AND STANDARDS.
   B. DRAWINGS.
   C. SPECIFICATIONS.

2. THE STRUCTURAL DRAWINGS ARE INTENDED TO WORK WITH AND BE COMPLEMENTARY TO THE PROJECT SPECIFICATIONS. REFER TO THE SPECIFICATIONS FOR ADDITIONAL REQUIREMENTS.

3. IN THE EVENT THAT CERTAIN DETAILS OF THE CONSTRUCTION ARE NOT FULLY SHOWN OR NOTED ON DRAWINGS, THEIR CONSTRUCTION SHALL BE OF THE SAME TYPE AS FOR SIMILAR CONDITIONS THAT ARE SHOWN OR NOTED, SUBJECT TO THE STRUCTURAL ENGINEER'S APPROVAL.

4. THE CONTRACTOR SHALL VERIFY ALL EXISTING CONDITIONS AND DIMENSIONS BEFORE COMMENCING WITH THE WORK AND NOTIFY THE ARCHITECT AND ENGINEER OF ANY DISCREPANCIES WITH THE INFORMATION SHOWN ON THE DRAWINGS.

5. THE CONTRACTOR SHALL USE STRUCTURAL DRAWINGS IN CONJUNCTION WITH ARCHITECTURAL, MECHANICAL, ELECTRICAL, PLUMBING, FIRE PROTECTION AND ALL OTHER RELEVANT CONSULTANT DRAWINGS.

6. SEE ARCHITECTURAL DRAWINGS FOR THE FOLLOWING:

   A. SIZE AND LOCATION OF ALL DOOR AND WINDOW OPENINGS, EXCEPT AS NOTED.
   B. SIZE AND LOCATION OF ALL INTERIOR AND EXTERIOR NON-BEARING PARTITIONS, FAÇADE, LOUVERS ETC., EXCEPT AS NOTED.
   C. SIZE AND LOCATION OF ALL CONCRETE CURBS, FLOOR DRAINS, SLOPES, DEPRESSED AREAS, CHANGE IN LEVEL, CHAMFERS, GROOVES, INSERTS, ETC., EXCEPT AS SHOWN.
   D. SIZE AND LOCATION OF ALL FLOOR AND ROOF OPENINGS EXCEPT AS SHOWN.
   E. FLOOR AND ROOF FINISHES.
   F. EDGE OF SLAB LOCATIONS AROUND THE PERIMETER AND AT INTERIOR OPENINGS, EXCEPT AS SHOWN.
   G. DIMENSIONS NOT SHOWN ON THE STRUCTURAL DRAWINGS.
   H. STAIRS EXCEPT AS SHOWN.
   I. FIREPROOFING.
   J. WATERPROOFING.
   K. MISCELLANEOUS STEEL REQUIRED FOR SUPPORT OF ARCHITECTURAL ELEMENTS. ALL STEEL NOT ON STRUCTURAL DRAWINGS IS REGARDED AS MISCELLANEOUS METALS AND THE DESIGN SHALL BE DELEGATED BY THE CONTRACTOR.

7. SEE MECHANICAL, ELECTRICAL AND PLUMBING DRAWINGS FOR THE FOLLOWING:

   A. PIPE RUNS, SLEEVES, HANGERS, TRENCHES EXCEPT AS SHOWN OR NOTED.
   B. ELECTRICAL CONDUIT RUNS, BOXES, OUTLETS IN WALLS AND SLABS. CONDUITS SHALL NOT BE CAST IN CONCRETE MEMBERS UNLESS SPECIFICALLY INDICATED ON THE STRUCTURAL DRAWINGS.
   C. CONCRETE INSERTS FOR ELECTRICAL, MECHANICAL, OR PLUMBING FIXTURES.
   D. SIZE AND LOCATION OF EQUIPMENT PADS AND EQUIPMENT ANCHORAGE EXCEPT AS SHOWN OR NOTED.
   E. ALL LIGHTNING PROTECTION AND/OR GROUND/EARTHING REQUIREMENTS INCLUDING ANY ASSOCIATED ITEMS EMBEDDED IN OR ATTACHED TO STRUCTURE.
   F. VERIFY AND COORDINATE ALL OPENINGS, EQUIPMENT PADS, SLEEVES AND INSERTS WITH REVIEWED SUBMITTALS, AND NOTIFY THE STRUCTURAL ENGINEER USING HIGHLIGHTED DRAWINGS PRODUCED TO SCALE WHERE THESE DEVIATE IN SIZE OR LOCATION FROM THE STRUCTURAL DRAWINGS.

8. OPENINGS, POCKETS, ETC., LARGER THAN 6" SHALL NOT BE PLACED IN CONCRETE SLABS, DECKS, WALLS, UNLESS SPECIFICALLY DETAILED ON THE STRUCTURAL DRAWINGS. NOTIFY THE STRUCTURAL ENGINEER WHEN DRAWINGS BY OTHERS SHOW OPENINGS, POCKETS, ETC. LARGER THAN 6" WHICH ARE NOT SHOWN ON THE STRUCTURAL DRAWINGS BUT WHICH ARE LOCATED IN STRUCTURAL MEMBERS.

9. DEPRESSIONS IN SLABS SHALL NOT BE PLACED UNLESS SPECIFICALLY SHOWN ON THE STRUCTURAL DRAWINGS. NOTIFY THE STRUCTURAL ENGINEER WHEN DRAWINGS BY OTHERS SHOW DEPRESSIONS WHICH ARE NOT SHOWN ON THE STRUCTURAL DRAWINGS BUT WHICH ARE LOCATED IN STRUCTURAL SLABS.

10. THE INFORMATION SHOWN FOR NON-STRUCTURAL ELEMENTS/FINISHES IS GIVEN FOR REFERENCE ONLY, THE CONTRACTOR SHALL REFER TO ARCHITECTURAL DRAWINGS FOR THIS INFORMATION.

11. SCALES NOTED ON STRUCTURAL DRAWINGS ARE FOR REFERENCE ONLY. NO DIMENSIONAL INFORMATION SHALL BE OBTAINED BY SCALING FROM THE DRAWINGS. THE CONTRACTOR SHALL VERIFY DIMENSIONS NOT NOTED WITH THE ARCHITECT PRIOR TO PROCEEDING WITH WORK.

12. CLADDING/FAÇADE/STAIR CONNECTIONS TO THE STRUCTURE SHALL NOT INTRODUCE TORSION AND UNACCEPTABLE LOAD ECCENTRICITIES TO STRUCTURAL MEMBERS. SUCH CONDITIONS SHOULD BE BROUGHT TO THE ATTENTION OF THE STRUCTURAL ENGINEER WHO MAY REQUIRE ADDITIONAL BRACING TO BE PROVIDED BY THE CLADDING/FAÇADE CONTRACTOR AT NO ADDITIONAL COST TO THE CONTRACT.

CODES AND STANDARDS

1. WHERE CODES AND STANDARDS ARE REFERENCED IN THE CONTRACT DOCUMENTS, THEY SHALL BE THE LATEST EDITIONS, UNLESS NOTED OTHERWISE.

2. ALL WORK SHALL CONFORM TO THE REQUIREMENTS OF 2018 INTERNATIONAL BUILDING CODE (IBC) INCLUDING REFERENCE STANDARDS, ADDENDA AND APPENDICES WITH 2020 NEW YORK STATE UNIFORM CODE SUPPLEMENT.

3. IN ADDITION, THE FOLLOWING CODES, STANDARDS AND SPECIFICATIONS SHALL APPLY WHERE MORE STRINGENT AND AS MODIFIED BY THE BUILDING CODE:

   A. ACI 318-14: BUILDING CODE REQUIREMENTS FOR STRUCTURAL CONCRETE AND COMMENTARY.
   B. AISC: STEEL CONSTRUCTION MANUAL, 14TH EDITION.
   C. AISC 303-16: CODE OF STANDARD PRACTICE FOR STRUCTURAL STEEL BUILDINGS AND BRIDGE
   D. ANSI/AISC 360-16: SPECIFICATIONS FOR STRUCTURAL STEEL BUILDINGS.
   E. ASCE 7-16: MINIMUM DESIGN LOADS FOR BUILDINGS AND OTHER STRUCTURES.
   F. AWS D1.1/D1.1M:2015: STRUCTURAL WELDING CODE-STEEL.

4. THE ASTM STANDARDS REFERRED TO IN THE DRAWINGS AND SPECIFICATIONS AND USED IN DESIGN ARE THOSE INCLUDED AS REFERENCED STANDARDS TO THE PROJECT GOVERNING CODE(S). WHERE AN ASTM STANDARD HAS SUBSEQUENTLY BEEN REVISED, CONSTRUCTION SHALL COMPLY WITH BOTH THE LATEST EDITION OF THAT STANDARD AND THE EDITION OF THAT STANDARD REFERENCED IN DESIGN. WHERE IT IS NOT POSSIBLE TO SATISFY THE REQUIREMENTS OF BOTH EDITIONS OF THE STANDARDS DUE TO A CONFLICT BETWEEN THEM, NOTIFY THE ARCHITECT AND ENGINEER BEFORE PROCEEDING.

TEMPORARY WORK

1. ALL TEMPORARY WORK SHALL BE DESIGNED, INSTALLED AND CARRIED OUT BY THE CONTRACTOR IN ACCORDANCE WITH THE REQUIREMENTS OF THE PROJECT GOVERNING CODE(S).

2. THE DRAWINGS INDICATE THE COMPLETED STRUCTURE. THE CONTRACTOR IS FULLY RESPONSIBLE FOR ALL TEMPORARY MEASURES NECESSARY FOR ERECTION.

3. IT IS THE RESPONSIBILITY OF THE CONTRACTOR TO PROVIDE PROPER SHORING AND BRACING WHEREVER NECESSARY. ALL TEMPORARY SHORING/BRACING SHALL BE DESIGNED BY A CIVIL AND/OR STRUCTURAL ENGINEER REGISTERED IN NEW YORK STATE.

4. THE CONTRACTOR IS RESPONSIBLE FOR SUBMITTING THE SHORING DRAWINGS AND CALCULATIONS TO THE AUTHORITY HAVING JURISDICTION AS REQUIRED.

5. CONSTRUCTION LOADS SHALL NOT EXCEED THE DESIGN LIVE LOADS PER SQUARE FOOT AS SHOWN ON THE DRAWINGS. PROVIDE SHORING AND/OR BRACING WHERE THE STRUCTURE HAS NOT ATTAINED ITS DESIGN STRENGTH.

DESIGN BASIS

1. SUPERIMPOSED DEAD LOADS: REFER TO LOADING DIAGRAMS.

2. LIVE LOADS: REFER TO LOADING DIAGRAMS.

3. WIND LOADS:

PARAMETER	VALUE
BASIC WIND SPEED, V	115 MPH
WIND IMPORTANCE FACTOR, I	1.00
WIND EXPOSURE CATEGORY	C
OCCUPANCY CATEGORY	II
GUST FACTOR, G	0.85
DIRECTIONALITY FACTOR, Kd	0.85

4. SNOW LOADS:

PARAMETER	VALUE
GROUND SNOW LOAD	30 PSF
SNOW IMPORTANCE FACTOR, I	1.00
EXPOSURE FACTOR	0.9
THERMAL FACTOR	1.2
UNBALACED DRIFT PER CODE	89 PSF

5. SEISMIC LOADS:

PARAMETER	VALUE
SEISMIC IMPORTANCE FACTOR, I	1.00
SITE CLASS	D
Sms	0.360g
Sm1	0.164g
Sds	0.240g
Sd1	0.109g
OCCUPANCY CATEGORY	II
SEISMIC DESIGN CATEGORY	B
SEISMIC FORCE-RESISTING SYSTEM	NOT SPECIFICALLY DETAILED FOR SEISMIC
RESPONSE MODIFICATION COEFFICIENT, R	3
SEISMIC RESPONSE COEFFICIENT, Cs	0.080
DESIGN BASE SHEAR, V	52KIP
SYSTEM OVERSTRENGTH FACTOR, Ω0	3
DEFLECTION AMPLIFICATION FACTOR, Cd	3
ANALYSIS PROCEDURE	EQUIVALENT LATERAL FORCE

FOUNDATIONS

1. THE FOUNDATION DESIGN IS BASED ON THE GEOTECHNICAL REPORT BY TECTONIC ENGINEERING & SURVEYING CONSULTANTS P.C. DATED APRIL 15, 2020.

2. THE FOLLOWING PARAMETERS WERE USED IN THE DESIGN OF FOUNDATIONS:

PARAMETER	VALUE
BEARING PRESSURE, B/FTG ≥ 4'-0" FROM EX GRADE	6000 PSF
SUBGRADE MODULUS	125 PCI

3. REFER TO THE GEOTECHNICAL REPORT FOR INFORMATION ON GENERAL SUBSURFACE PROFILES, SOIL PROPERTIES, EXISTING SITE FEATURES AND ALL OTHER CONDITIONS AFFECTING FOUNDATION INSTALLATION.

4. REFER TO THE GEOTECHNICAL REPORT FOR INFORMATION ON SUBGRADE PREPARATION FOR SLAB-ON-GRADE CONSTRUCTION.

5. REFER TO THE GEOTECHNICAL REPORT FOR REQUIREMENTS FOR EXCAVATIONS, GRADING, COMPACTION AND BACKFILLING BEHIND WALLS RETAINING EARTH.

6. BACKFILLING AGAINST RETAINING/BASEMENT WALLS WHERE THERE IS GRADE ON BOTH SIDES OF THE WALL SHALL BE CARRIED OUT IN SUCH A MANNER THAT THE DIFFERENCE IN SOIL LEVEL IS NEVER MORE THAN 3.0 FEET.DO NOT PLACE BACKFILL BEHIND WALLS RETAINING EARTH BEFORE CONCRETE HAS ATTAINED FULL DESIGN STRENGTH UNLESS TEMPORARY BRACING IS PROVIDED.

7. BACKFILL SHALL NOT BE PLACED AGAINST WALLS RETAINING EARTH (OTHER THAN CANTILEVER WALLS) UNTIL THE ATTACHING FLOORS/SLABS (AT TOP AND BOTTOM OF THE WALL) ARE COMPLETELY IN PLACE AND HAVE ATTAINED FULL DESIGN STRENGTH.

8. NEW FOOTINGS WHICH ARE LOCATED IMMEDIATELY ADJACENT TO EXISTING FOOTINGS SHALL BE FOUNDED AT THE SAME ELEVATION AS THE EXISTING FOOTINGS UNLESS NOTED OTHERWISE. EXISTING ADJACENT FOOTINGS SHALL NOT BE UNDERMINED BY EXCAVATION OR NEW CONSTRUCTION.

9. WATER SHALL NOT BE ALLOWED TO STAND IN TRENCHES BEFORE OR AFTER CONCRETE IS PLACED. IF TRENCHES BECOME SOFTENED DUE TO RAIN OR OTHER WATER BEFORE THE FOOTINGS ARE CAST, THE GEOTECHNICAL ENGINEER SHALL REVIEW THE CONDITIONS AND PROVIDE THE NECESSARY MITIGATION REQUIREMENTS TO THE CONTRACTOR.

10. ALL EXCAVATIONS, COMPACTIONS AND BACKFILLING SHALL BE INSPECTED AND APPROVED BY THE GEOTECHNICAL ENGINEER BEFORE PLACEMENT OF CONCRETE.

11. REFER TO PLUMBING AND/OR CIVIL DRAWINGS FOR UNDER-FLOOR AND PERIMETER WALL DRAINAGE SYSTEMS AND SPECIAL GRANULAR FILL MATERIALS FOR SUCH DRAINAGE.

SUBMITTALS

1. CONTRACTOR SHALL SUBMIT SHOP DRAWINGS AND CALCULATIONS AS BOTH SIGNED AND STAMPED BY A PROFESSIONAL ENGINEER AS REQUIRED BY THE SPECIFICATIONS, FOR ENGINEER'S APPROVAL.

2. ONLY SHOP DRAWINGS MARKED "NO EXCEPTIONS TAKEN", "REVISE AS NOTED" OR "SEE COMMENTS NOTED" MAY BE USED BY CONTRACTOR IN THE WORK. SHOP DRAWINGS MARKED "REJECTED" OR "RESUBMIT FOR REVIEW" SHALL BE CORRECTED AND COMPLETED AS REQUIRED AND RESUBMITTED TO THE ARCHITECT BEFORE THEY ARE USED IN THE WORK.

3. CONTRACTOR SHALL PREPARE AND MAINTAIN A SCHEDULE OF ALL SUBMITTALS INCLUDING INTENDED DATES OF SUBMISSION AND NUMBER OF DRAWINGS TO BE SUBMITTED EACH WEEK.

4. THE CONTRACTOR SHALL BE AWARE THAT SUBMITTALS WILL BE REVIEWED IN THE ORDER IN WHICH THEY ARE RECEIVED. THE CONTRACTOR SHALL PLAN ACCORDINGLY.

5. SUBMIT ALL ITEMS IN ACCORDANCE WITH THE SPECIFICATIONS. THE ENGINEER RESERVES THE RIGHT TO NOT REVIEW ANY OTHER ITEMS.

CONCRETE

1. STRUCTURAL CONCRETE STRENGTHS AND TYPES USED IN THIS PROJECT SHALL BE AS FOLLOWS:

LOCATION IN STRUCTURE	f'c	DENSITY
SLAB ON GRADE	4500 PSI	150 PCF
LIGHTWEIGHT CONCRETE FILL ON METAL DECK (INCLUDING		
CURBS, EQUIPMENT PADS, ETC. ON METAL DECK SLABS)	4000 PSI	115 PCF
FOUNDATIONS (FOOTINGS, PILE CAPS, GRADE BEAMS)	4000 PSI	150 PCF
WALLS	4000 PSI	150 PCF
FORMED SLABS, COLUMNS AND BEAMS (INCLUDING CURBS,		
EQUIPMENT PADS, ETC. ON FORMED SLABS)	4000 PSI	150 PCF
ALL OTHER CONCRETE	4000 PSI	150 PCF

f'c IS THE 28-DAY COMPRESSIVE STRENGTH AS DEFINED IN ACI 318.

2. ALL CONCRETE MIXES SHALL COMPLY WITH THE REQUIREMENTS OF THE PROJECT GOVERNING CODE(S). MIX DESIGNS FOR EACH TYPE AND STRENGTH SHALL BE PREPARED BY CONTRACTOR ADN TESTED BY AN INDEPENDENT TESTING LABORATORY. THE MIX DESIGNS SHALL THEN BE SUBMITTED TO THE ENGINEER FOR REVIEW.

3. NORMAL WEIGHT AGGREGATE SHALL CONFORM TO THE REQUIREMENTS OF ASTM C33. LIGHTWEIGHT AGGREGATE SHALL CONFORM TO THE REQUIREMENTS OF ASTM C330 AND ASTM C157.

4. ALL CONSTRUCTION JOINTS SHALL BE CONSTRUCTED IN ACCORDANCE WITH THE TYPICAL CONSTRUCTION JOINT DETAILS SHOWN ON THE STRUCTURAL AND ARCHITECTURAL DRAWINGS.

5. CLEAN AND ROUGHEN TO 1/4" AMPLITUDE ALL CONCRETE CONSTRUCTION JOINT SURFACES AGAINST WHICH CONCRETE IS TO BE PLACED. ALL CONSTRUCTION JOINTS SHALL BE WETTED AND STANDING WATER SHALL BE REMOVED IMMEDIATELY BEFORE NEW CONCRETE IS PLACED. PROVIDE CLASS "B" SPLICE AT ALL REINFORCEMENT CROSSING CONSTRUCTION JOINTS, TYPICAL UNLESS NOTED OTHERWISE.

6. CONTRACTOR SHALL COORDINATE AND INSTALL ALL REQUIRED EMBEDDED ITEMS, SLEEVES, POCKETS, ETC. PRIOR TO CONCRETE PLACEMENT. PROVIDE SLEEVES FOR PLUMBING AND ELECTRICAL OPENINGS IN CONCRETE WALLS/SLABS BEFORE PLACING CONCRETE. DO NOT CUT ANY REINFORCING WHICH MAY CONFLICT. PIPES AND/OR CONDUITS SHALL NOT PASS THROUGH COLUMNS AND BEAMS UNLESS SPECIFICALLY DETAILED ON THE STRUCTURAL DRAWINGS.

7. CORING OF CONCRETE AFTER PLACEMENT IS NOT PERMITTED.

8. THE PROJECTING CORNERS OF COLUMNS, BEAMS, WALLS, ETC. SHALL BE FORMED WITH 3/4" CHAMFER, UNLESS NOTED OTHERWISE ON ARCHITECTURAL DRAWINGS.

9. THE CONTRACTOR SHALL NOTIFY THE TESTING AGENCY AND OWNER 48 HOURS BEFORE POURING OF CONCRETE FOR INSPECTION OF REINFORCEMENT LAYOUT. NO CONCRETE SHALL BE POURED UNLESS ALL REINFORCEMENT AND INSTALLATIONS HAVE BEEN INSPECTED AND APPROVED BY THE TESTING AGENCEY.

10. LOCATION OF CONSTRUCTION JOINTS SHALL BE AS INDICATED ON STRUCTURAL DRAWINGS.

11. CONCRETE CAST ON SLOPED SURFACES SHALL BEGIN AT THE LOWEST ELEVATION AND CONTINUE MONOLITHICALLY TOWARD THE HIGHER ELEVATION UNTIL THE INTENDED CAST IS COMPLETED.

12. NO ALUMINUM SHALL BE CAST IN CONCRETE.

13. REFER TO ARCHITECTURAL DRAWINGS FOR FINISHING OF ALL EXPOSED CONCRETE SURFACES.

14. REINFORCING BARS SHALL CONFORM TO THE REQUIREMENTS OF ASTM A615, GRADE 60. REINFORCING BARS WHICH ARE TO BE WELDED SHALL CONFORM TO APPLICABLE ASTM AND AWS SPECIFICATIONS.

15. WELDED WIRE FABRIC SHALL CONFORM TO ASTM A185. USE ONLY FLAT SHEETS. MINIMUM LAP OF WELDED WIRE REINFORCEMENT SHALL BE 6" OR ONE FULL MESH PLUS 2", WHICHEVER IS GREATER.

16. PROVIDE DEVELOPMENT AND SPLICES OF REINFORCEMENT ACCORDING TO THE TYPICAL DETAILS TABLE. LAP SPLICES SHALL BE SECURELY TIED AT ALL SIDE AND END LAPS.

17. REINFORCING BARS MARKED AS "CONTINUOUS" SHALL BE TENSION SPLICED, UNLESS OTHERWISE SHOWN ON DRAWINGS.

18. REINFORCING BAR SPLICES SHALL BE MADE ONLY WHERE INDICATED ON THE DRAWINGS. WHERE SPLICE LOCATIONS ARE NOT SHOWN ON THE DRAWINGS, THE CONTRACTOR SHALL SHOW THEIR PROPOSED SPLICE LOCATIONS ON THE SHOP DRAWINGS.

19. ALL BARS AT NON-CONTINUOUS ENDS SHALL HAVE A STANDARD HOOK.

20. WELDING OF REINFORCING STEEL BARS SHALL BE IN ACCORDANCE WITH AWS D1.4. WELD REINFORCING BARS ONLY WHERE INDICATED ON THE DRAWINGS. TACK WELDING OR WELDING OF BARS TO PLATES, TEMPLATES, ETC. IS PROHIBITED, UNLESS SPECIFICALLY SHOWN ON THE STRUCTURAL DRAWINGS.

21. DOWELS CONNECTING WALLS OR COLUMNS TO FOUNDATIONS SHALL BE THE SAME GRADE, SIZE AND SPACING AS THE VERTICAL REINFORCING BARS IN THE WALLS OR COLUMNS, UNLESS NOTED OTHERWISE.

22. ALL DOWELS SHALL BE FULLY DEVELOPED IN TENSION UNLESS NOTED OTHERWISE.

23. BARS SHALL NOT BE BENT OR TWISTED IN THE FIELD, UNLESS SPECIFICALLY DETAILED ON THE STRUCTURAL DRAWINGS.

24. ALL REINFORCING BARS, INSERTS, EMBEDS ETC. SHALL BE SECURELY HELD IN PLACE TO MAINTAIN THEIR POSITIONS WHILE CONCRETE IS POURED. PROVIDE SUITABLE CHAIRS, TIES, SPACERS, ADDITIONAL BARS AND STIRRUPS AS REQUIRED.

SPECIAL INSPECTIONS

1. SPECIAL INSPECTIONS SHALL BE PROVIDED BY OWNER'S INDEPENDENT TESTING AGENCY IN ACCORDANCE WITH THE PROJECT CODE, ALL APPLICABLE LOCAL ORDINANCES AND THE PROJECT SPECIFICATIONS. THE SPECIAL INSPECTOR SHALL OBSERVE THE WORK FOR CONFORMANCE WITH THE CONSTRUCTION DOCUMENTS. THIS WORK IS TO BE PERFORMED BY A SPECIAL INSPECTOR WHO IS CERTIFIED BY THE BUILDING OFFICIAL TO PERFORM THE SPECIFIED TYPES OF INSPECTIONS AND TESTS. THE SPECIAL INSPECTOR SHALL SEND REPORTS TO THE BUILDING OFFICIAL, INSPECTOR OF RECORD, ARCHITECT, ENGINEER, CONTRACTOR AND OWNER. ALL DISCREPANCIES SHALL BE BROUGHT TO THE ATTENTION OF THE CONTRACTOR FOR CORRECTION. WHEN WORK IS DONE TO THE SATISFACTION OF THE INSPECTOR AND BUILDING OFFICIAL, THE SPECIAL INSPECTOR SHALL SUBMIT A FINAL SIGNED REPORT STATING THAT, TO THE BEST OF THEIR KNOWLEDGE, THE WORK WAS COMPLETED IN CONFORMANCE WITH THE CONSTRUCTION DOCUMENTS AND THE APPLICABLE WORKMANSHIP PROVISIONS OF THE CODES.

2. FOR THIS PROJECT SPECIAL INSPECTION OF THE FOLLOWING STRUCTURAL RELATED CONSTRUCTION ACTIVITIES IS REQUIRED.

   A. SITE SOILS — NYSBC 1705.6
   B. CAST-IN-PLACE CONCRETE (INCLUDING POST INSTALLED ANCHORS) — NYSBC 1705.3
   C. STRUCTURAL STEEL (INCLUDING HIGH-STRENGTH BOLTING AND FIELD/SHOP WELDING) — NYSBC 1705.2.1
   D. COLD FORMED STEEL DECK — NYSBC 1705.2.2
   E. OPEN-WEB STEEL JOISTS AND GIRDERS — NYSBC 1705.2.3
   F. FABRICATED ITEMS — NYSBC 1705.10

Owner
Storm King Art Center
1 Museum Road
New Windsor, NY 12553
+1 (845) 534-3115

Design Architect
heneghan peng architects
14-16 Lord Edward Street
Dublin, D02 YC63
+353 1 633 9000

Executive Architect
WXY Architecture + Urban Design
224 Centre Street, 5th Floor
New York, NY 10013
+1 (212) 219-1953

Landscape Architect
Gustafson Porter + Bowman
1 Cobham Mews
London, MW1 9SB
+44 020 7284 8950

Reed Hilderbrand LLC
33 Whitney Avenue, 3rd Floor
New Haven, CT 06510
+1 (617) 923-2422

Structural & Lighting
ARUP
77 Water Street
New York, NY 10005
+1 (212) 896-3000

MEPF & IT
BuroHappold
100 Broadway #23
New York, NY 10005
+1 (212) 616-0228

Civil
VHB
100 Great Oaks Blvd., Suite 118
Albany, NY 12203
+1 (518) 389-3606

AV & Acoustics
LSTN Consultants
76 Beaver Street, 2nd Floor
New York, NY 10005
+1 (347) 788-0810

Facade
Front Inc.
100 E. Broadway Street, #501
New York, NY 10002
+1 (212) 242-2220

Key Plan

Description	Date
Filing Set	06/17/22

Project

Storm King Art Center

C.F.M. Building

Seal

NOT FOR CONSTRUCTION

Drawing Title

Structural General Notes, Sheet 1

Date	06/17/22
Scale	NTS
Drawing Number	S-C-002
Sheet Size	ARCH D

STRUCTURAL STEEL

1. STRUCTURAL STEEL MEMBERS SHALL CONFORM TO THE FOLLOWING UNLESS NOTED OTHERWISE:

SHAPE	GRADE	YIELD STRENGTH Fy (KSI)
WIDE FLANGE SHAPES	ASTM A992	50
TEES	ASTM A992	50
CHANNELS	ASTM A572	50
ANGLES	ASTM A572	50
PLATES	ASTM A572 GRADE 50	50
BARS	ASTM A500 GRADE 50	50
SQUARE & RECTANGULAR HSS	ASTM A500 GRADE B	46
ROUND HSS	ASTM A500 GRADE B	42
STEEL PIPE	ASTM A53 GRADE B	35

2. HIGH-STRENGTH BOLTS SHALL CONFORM TO THE FOLLOWING UNLESS NOTED OTHERWISE:

BOLT TYPE	REMARKS
ASTM A325	WHERE NOTED ON DRAWINGS
ASTM A490	WHERE NOTED ON DRAWINGS
ASTM A307 GRADE A	MACHINE BOLTS WHERE NOTED ON DRAWINGS

3. WHERE NON-SLIP CRITICAL BOLTS ARE SPECIFIED THEY SHALL BE TIGHTENED TO A SNUG TIGHT CONDITION. SEE DETAILS AND SCHEDULES FOR BOLT DIAMETERS AND SCHEDULES.
4. ALL BOLT HOLES SHALL BE STANDARD SIZE HOLES (1/16" LARGER IN DIAMETER THAN THE DIAMETER OF THE BOLT) UNLESS NOTED OTHERWISE.
5. ALL BOLTS SPECIFIED AS SLIP CRITICAL BOLTS (A325-SC OR A490-SC) SHALL HAVE CLASS A FAYING SURFACES UNLESS NOTED OTHERWISE.
6. AT ALL SLIP CRITICAL CONNECTIONS SLIP IS CHECKED AT THE FACTORED LOAD LEVEL UNLESS NOTED OTHERWISE.
7. ALL STEEL MEMBERS FRAMING INTO CONCRETE WALLS/COLUMNS/BEAMS SHALL BE DETAILED TO SUIT CONCRETE FIELD TOLERANCES. COORDINATE WITH CONCRETE CONTRACTOR AND/OR CONDUCT FIELD SURVEYS AS NECESSARY PRIOR TO STEEL FABRICATION.
8. CUTTING AND DRILLING OF STRUCTURAL STEEL MEMBERS IN THE FIELD IS NOT PERMITTED.
9. NO OPENINGS AND/OR PENETRATIONS SHALL BE PLACED IN STEEL MEMBERS UNLESS SPECIFICALLY SHOWN AND DETAILED ON THE STRUCTURAL DRAWINGS.
10. ALL STEEL MEMBERS RELATED TO ELEVATORS SHALL BE COORDINATED WITH THE ELEVATOR CONTRACTOR PRIOR TO FABRICATION.
11. REFER TO SPECIFICATIONS FOR STEELWORK PROTECTION AND COATINGS.
12. SPLICES SHALL BE DESIGNED TO DEVELOP THE FULL CAPACITY OF THE MEMBER AT THE POINT OF SPLICE. SPLICES SHALL BE MADE ONLY AT LOCATIONS INDICATED ON DRAWINGS. FULL DETAIL AND BACK-UP CALCULATIONS OF SPLICES REQUIRE REVIEW AND APPROVAL BY THE ENGINEER.
13. CONTRACTOR SHALL PROVIDE ALL NECESSARY TEMPORARY BRACING, GUYING AND CONNECTION MEMBERS REQUIRED TO ERECT TEH STRUCTURE, MAINTAIN CORRECT ALIGNMENT AND SAFELY RESIST ALL REQUIRED COMBINATIONS OF DEAD, CONSTRUCTION, ERECTION, WIND AND OTHER LATERAL LOADS.
14. SHAPE AND SIZE GUSSET PLATES IN SUCH A MANNER AS TO CLEAR ALL ARCHITECTURAL FINISHES AND MECHANICAL FIXTURES (DUCTS, PIPES, ETC.).
15. WELDS SHALL BE MADE USING LOW-HYDROGEN ELECTRODES WITH MINIMUM TENSILE STRENGTH OF 70 KSI (E70XX ELECTRODES) UNLESS NOTED OTHERWISE.
16. WELD LENGTHS CALLED FOR ON DRAWINGS ARE THE NET EFFECTIVE LENGTH REQUIRED. WHERE LENGTH OF WELD IS NOT SHOWN IT SHALL BE THE FULL LENGTH OF JOINT.
17. ALL PARTIAL PENETRATION GROOVE WELD SIZES SHOWN ON THE DRAWINGS REFER TO THE EFFECTIVE THROAT THICKNESS.
18. FILLET WELD SIZES SHOWN ON DRAWINGS ARE MINIMUM SIZES. INCREASE WELD SIZE TO AWS MINIMUM SIZES BASED ON PLATE THICKNESSES. THE MINIMUM FILLET WELD SIZE SHALL BE 3/16".
19. THE CONTRACTOR SHALL DETERMINE THE SEQUENCE AND PROCEDURES OF WELDING TO MINIMIZE THE EFFECT WELD SHRINKAGE, RESIDUAL STRESSES AND TO MAINTAIN ERECTION TOLERANCES.
20. ALL STEEL EXPOSED TO WEATHER SHALL HAVE ADDITIONAL SEAL WELDING TO PROTECT THE MEMBERS (PIPES, TUBES, BUILT-UPS) AND THE CONNECTIONS FROM MOISTURE INFILTRATION. THESE ADDITIONAL SEAL WELDS SHALL BE SHOWN ON SHOP DRAWINGS.

METAL DECK

1. METAL DECK TYPES SHALL BE AS INDICATED IN THE METAL DECK SCHEDULE (SEE TYPICAL METAL DECK DETAILS) OR EQUAL. ALL METAL DECK TYPES SHALL HAVE A CURRENT ICC CERTIFICATION.
2. MATERIALS FOR METAL DECK AND ACCESSORIES SHALL BE GALVANIZED STEEL CONFORMING TO ASTM A653-SS WITH GRADE AS INDICATED IN THE METAL DECK SCHEDULE AND ZINC COATING CONFORMING TO ASTM A653, G60 UNLESS NOTED OTHERWISE.
3. METAL DECK ACCESSORIES SHALL BE THE SAME GAGE AS DECKING UNLESS NOTED OTHERWISE.
4. WELDING SHALL BE PER AWS D1.3 AND PERFORMED BY AWS CERTIFIED WELDERS.
5. PROVIDE MISCELLANEOUS TRIMMING STEEL AS REQUIRED TO SUPPORT THE DECK WHERE NOT SPECIFICALLY SHOWN ON DRAWINGS.
6. CONCRETE FILL THICKNESSES SHOWN ARE MINIMUM THICKNESSES. NO ALLOWANCE HAS BEEN SHOWN FOR ADDITIONAL CONCRETE FILL REQUIRED TO COMPENSATE FOR FRAME AND/OR DECK DEFLECTION. CONTRACTOR IS TO PROVIDE ADDITIONAL FILL, AS REQUIRED, TO MAINTAIN SURFACE TOLERANCES AND MINIMUM THICKNESSES SPECIFIED.
7. DECK UNITS, WHETHER PARALLEL OR PERPENDICULAR TO SUPPORTS, SHALL BEAR A MINIMUM OF 2 INCHES ON SUPPORTING MEMBERS.
8. DECK UNITS SHALL BE CONTINUOUS OVER THREE OR MORE SPANS, EXCEPT WHERE THE FRAMING DOES NOT PERMIT.
9. ATTACHMENT OF DECK UNITS SHALL BE AS INDICATED IN THE METAL DECK SCHEDULE.
10. PROVIDE SIDE LAPS BETWEEN ADJACENT UNITS SHALL BE FASTENED BY BUTTON PUNCHING AT 6 INCHES ON CENTER OR BY #10 SCREWS AT 12 INCHES ON CENTER. FOR DECK WITHOUT CONCRETE FILL, USE #10 SCREWS AT 12 INCHES ON CENTER.
11. CONCRETE FOR TOPPING SLABS SHALL NOT BE PLACED UNTIL CONCRETE FILL ON METAL DECK REQUIRED FOR COMPOSITE ACTION HAS REACHED FULL 28-DAY COMPRESSIVE STRENGTH.

STEEL FRAMING NOTES

1. STEEL BEAMS ARE PLACED WITH THEIR WEBS IN THE VERTICAL PLANE UNLESS NOTED OTHERWISE.
2. DIMENSIONS TO STEEL MEMBERS ARE TO THEIR CENTERLINES UNLESS NOTED OTHERWISE.
3. BEAMS NOT LOCATED IN PLAN BY A DIMENSION LINE SHALL BE EQUALLY SPACED BETWEEN DIMENSIONED MEMBERS.
4. ALL STEEL BEAMS, INCLUDING BEAMS SHOWN ON FRAME ELEVATIONS, WITH DECKING AND CONCRETE FILL FOR WHICH SHEAR STUDS ARE NOT SPECIFIED SHALL HAVE A MINIMUM OF ONE SHEAR STUD AT 12" ON CENTER UNLESS NOTED OTHERWISE.
5. FOR SLOPING MEMBERS, THE TOP OF STEEL ELEVATIONS AT THE LOW AND HIGH POINTS SHALL COINCIDE WITH THE TOP OF STEEL ELEVATIONS OF THE MEMBERS THEY FRAME TO AT THESE LOCATIONS, UNLESS NOTED OTHERWISE.
6. CAMBERS INDICATED FOR MEMBERS ARE UPWARD. DOWNWARD CAMBERS ARE GIVEN AS NEGATIVE.
7. ALL CONNECTIONS SHALL BE COMPLETED PRIOR TO CASTING SLABS.

OPEN WEB STEEL JOISTS

1. OPEN WEB STEEL JOIST (OWSJ) MEMBERS TO COMPLY WITH STEEL JOIST INSTITUTE'S "STANDARD SPECIFICATIONS, LOAD TABLES AND WEIGHT TABLES FOR STEEL JOISTS AND JOIST GIRDERS."
2. MANUFACTURE STEEL JOISTS OF TYPE INDICATED ACCORDING TO "STANDARD SPECIFICATION FOR OPEN WEB STEEL JOISTS, K-SERIES" IN SJI'S "SPECIFICATIONS," WITH STEEL-ANGLE TOP- AND BOTTOM-CHORD MEMBERS, UNDERSLUNG ENDS, AND PARALLEL TOP CHORD.
3. PROVIDE JOISTS AND CONNECTIONS CAPABLE OF WITHSTANDING DESIGN LOADS INDICATED ON DRAWINGS.

OPEN WEB STEEL JOISTS

1. OPEN WEB STEEL JOIST (OWSJ) MEMBERS TO COMPLY WITH STEEL JOIST INSTITUTE'S "STANDARD SPECIFICATIONS, LOAD TABLES AND WEIGHT TABLES FOR STEEL JOISTS AND JOIST GIRDERS."
2. MANUFACTURE STEEL JOISTS OF TYPE INDICATED ACCORDING TO "STANDARD SPECIFICATION FOR OPEN WEB STEEL JOISTS, K-SERIES" IN SJI'S "SPECIFICATIONS," WITH STEEL-ANGLE TOP- AND BOTTOM-CHORD MEMBERS, UNDERSLUNG ENDS, AND PARALLEL TOP CHORD.
3. PROVIDE JOISTS AND CONNECTIONS CAPABLE OF WITHSTANDING DESIGN LOADS INDICATED ON DRAWINGS.

Owner
Storm King Art Center
1 Museum Road
New Windsor, NY 12553
+1 (845) 534-3115

Design Architect
heneghan peng architects
14-16 Lord Edward Street
Dublin, D02 YC63
+353 1 633 9000

Executive Architect
WXY Architecture + Urban Design
224 Centre Street, 5th Floor
New York, NY 10013
+1 (212) 219-1953

Landscape Architect
Gustafson Porter + Bowman
1 Cobham Mews
London, MW1 9SB
+44 020 7284 8950

Reed Hilderbrand LLC
33 Whitney Avenue, 3rd Floor
New Haven, CT 06510
+1 (617) 923-2422

Structural & Lighting
ARUP
77 Water Street
New York, NY 10005
+1 (212) 896-3000

MEPF & IT
BuroHappold
100 Broadway #23
New York, NY 10005
+1 (212) 616-0228

Civil
VHB
100 Great Oaks Blvd., Suite 118
Albany, NY 12203
+1 (518) 389-3606

AV & Acoustics
LSTN Consultants
76 Beaver Street, 2nd Floor
New York, NY 10005
+1 (347) 788-0810

Facade
Front Inc.
100 E. Broadway Street, #501
New York, NY 10002
+1 (212) 242-2220

Key Plan

Description	Date
Filing Set	06/17/22

Project

Storm King Art Center

C.F.M. Building

Seal

NOT FOR CONSTRUCTION

Drawing Title

Structural General Notes, Sheet 2

Date	06/17/22
Scale	NTS
Drawing Number	S-C-003
Sheet Size	ARCH D

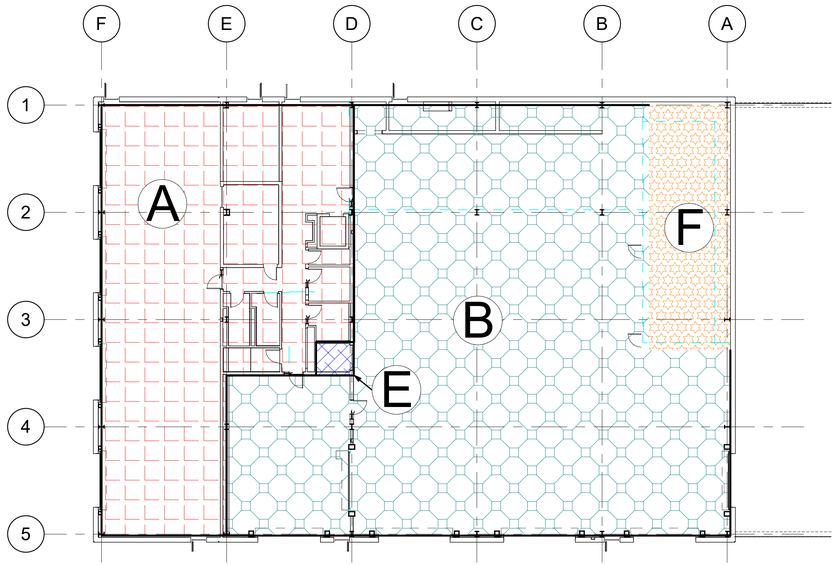

1 GROUND LEVEL
1/16" = 1'-0"

AREA	A	B	C	D	E	F	G
DESCRIPTION	GROUND	ART STORAGE	MEZZANINE	ROOF	MECHANICAL	PAINT BOOTH	STAIRS
TOTAL DEAD LOAD (PSF)	20	-	11	25	0	-	20
LIVE LOAD (PSF)	100	300 (1)	65	20	150	300	100
SNOW LOAD (PSF)	-	-	-	23 (2)	-	-	-

NOTES:
1. WORST CASE OF NOTED AREA LOAD OR A POINT LOAD OF 9 KIPS OVER A 1 SQ FOOT AREA USED FOR DESIGN OF TELEHANDLER WITH MAX 13880LB AXLE LOAD.
2. ADDITIONAL SNOW DRIFT LOADS ACCOUNTED FOR PER ASCE 07-16 REQUIREMENTS. SEE SNOW DRIFT DIAGRAM FOR VALUES.
3. ALLOW FOR 25PSF NET ULTIMATE UPLIFT (LRFD) ON ALL OWSJ.
4. ALL LOADS INDICATED ARE IN ADDITION TO SELF-WEIGHT OF THE STRUCTURE AND TO BE CALCULATED PER STRUCTURAL DRAWINGS.
5. ALL LOADS ARE UNFACTORED SERVICE LOADS.
6.. WHERE SNOW EXCEEDS ROOF LIVE LOAD, SNOW LOAD CONTROLS.
7. SNOW DRIFT AREAS TO TAPER FROM SNOW DRIFT PSF TO FLAT ROOF PSF ALONG DRIFT WIDTH DIMENSION NOTED. SNOW DRIFT VALUES ARE AS NOTED:
   SECOND LEVEL: 89 PSF
   ROOF: 54 PSF

SNOW DRIFT DIAGRAM

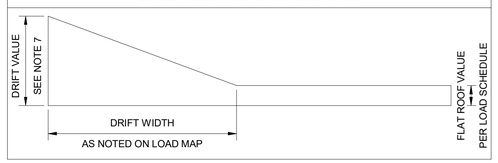

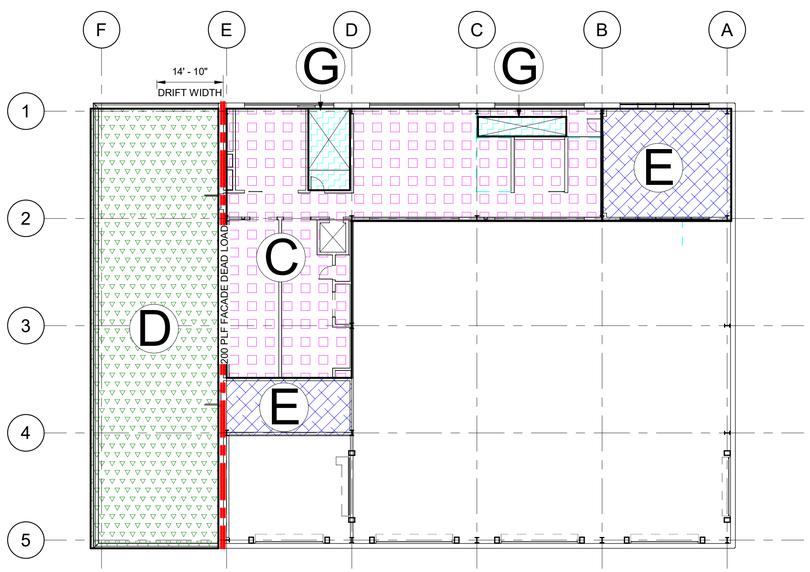

2 SECOND LEVEL
1/16" = 1'-0"

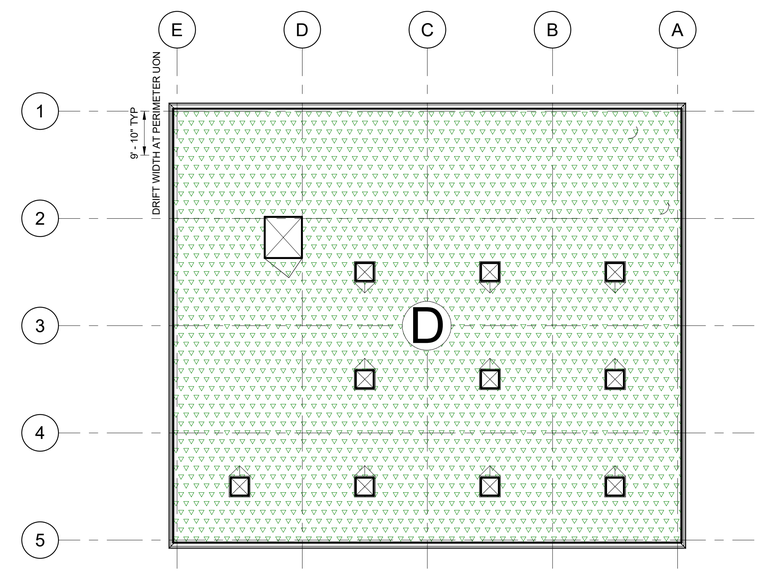

3 ROOF LOADING PLAN
1/16" = 1'-0"

Owner
Storm King Art Center
1 Museum Road
New Windsor, NY 12553
+1 (845) 534-3115

Design Architect
heneghan peng architects
14-16 Lord Edward Street
Dublin, D02 YC63
+353 1 633 9000

Executive Architect
WXY Architecture + Urban Design
224 Centre Street, 5th Floor
New York, NY 10013
+1 (212) 219-1953

Landscape Architect
Gustafson Porter + Bowman
1 Cobham Mews
London, MW1 9SB
+44 020 7284 8950

Reed Hilderbrand LLC
33 Whitney Avenue, 3rd Floor
New Haven, CT 06510
+1 (617) 923-2422

Structural & Lighting
ARUP
77 Water Street
New York, NY 10005
+1 (212) 896-3000

MEPF & IT
BuroHappold
100 Broadway #23
New York, NY 10005
+1 (212) 616-0228

Civil
VHB
100 Great Oaks Blvd., Suite 118
Albany, NY 12203
+1 (518) 389-3606

AV & Acoustics
LSTN Consultants
76 Beaver Street, 2nd Floor
New York, NY 10005
+1 (347) 788-0810

Facade
Front Inc.
100 E. Broadway Street, #501
New York, NY 10002
+1 (212) 242-2220

Key Plan

Description	Date
Filing Set	06/17/22

Project

Storm King Art Center

C.F.M. Building

Seal

NOT FOR CONSTRUCTION

Drawing Title

Structural Loading Plans

Date	06/17/22
Scale	1/16" = 1'-0"
Drawing Number	S-C-011
Sheet Size	ARCH D

NOTES:
1. FOR GENERAL NOTES AND LOADING DIAGRAMS, REFER TO DRAWINGS S-C-0XX SERIES.
2. FOR TYPICAL DETAILS, REFER TO DRAWINGS S-C-7XX SERIES.
3. B/FTG AT -4'-0" BELOW FINISHED GRADE U.N.O.
4. REFER TO S-C-801 FOR FOOTING SCHEDULE.
5. REFER TO ARCH DRAWINGS FOR BOLLARD LOCATIONS. SLAB AT BOLLARDS TO BE 12" THICK.
6. #4 @ 6" EW IN 8" SOG
7. #4 @ 12" EW IN 5" SOG
8. #4 @ 6" EW TOP & BOTT AT ELEVATOR PIT SLAB
9. REFER TO TYPICAL DETAILS FOR REBAR PLACEMENT

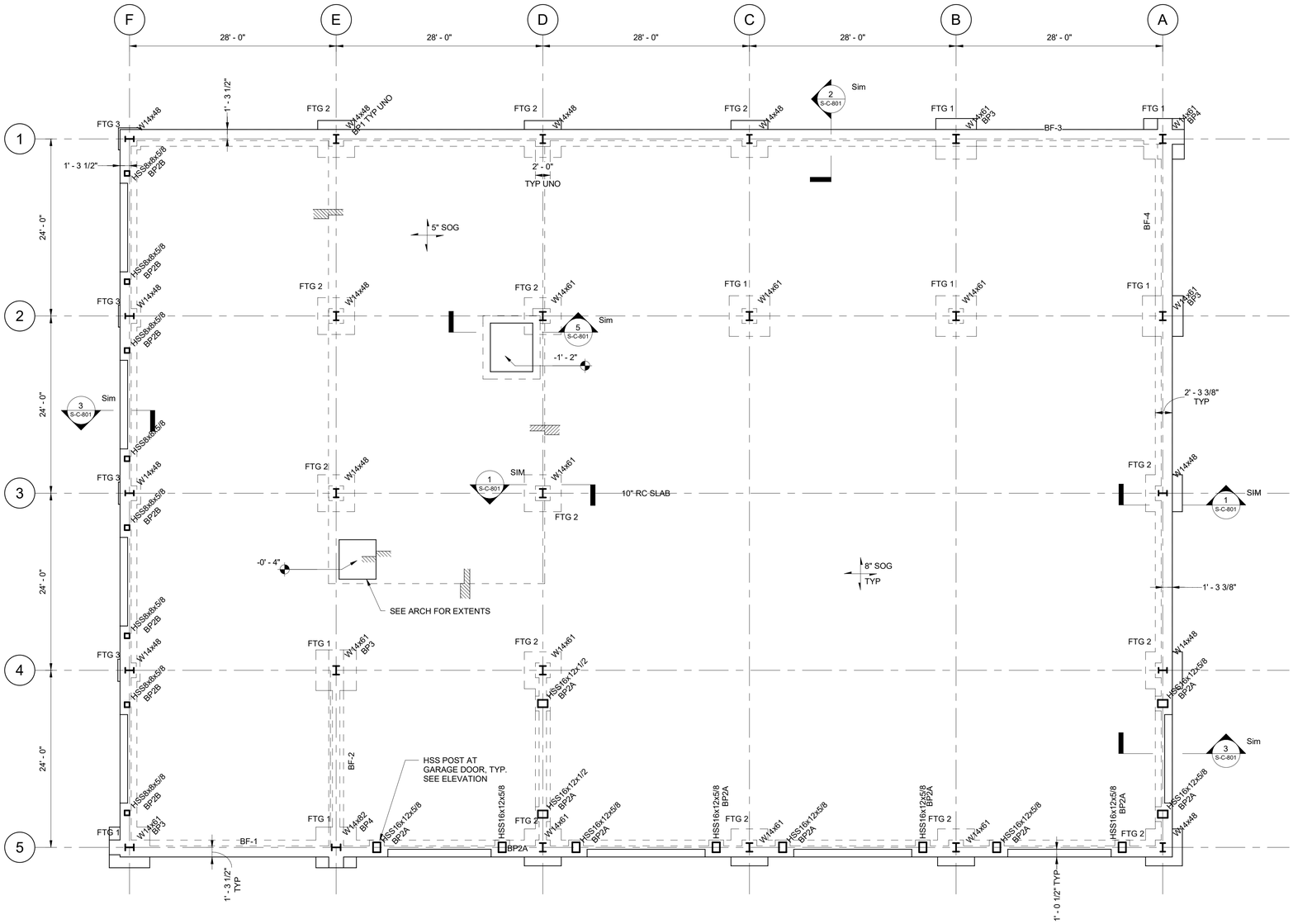

Owner
Storm King Art Center
1 Museum Road
New Windsor, NY 12553
+1 (845) 534-3115

Design Architect
heneghan peng architects
14-16 Lord Edward Street
Dublin, D02 YC63
+353 1 633 9000

Executive Architect
WXY Architecture + Urban Design
224 Centre Street, 5th Floor
New York, NY 10013
+1 (212) 219-1953

Landscape Architect
Gustafson Porter + Bowman
1 Cobham Mews
London, MW1 9SB
+44 020 7284 8950

Reed Hilderbrand LLC
33 Whitney Avenue, 3rd Floor
New Haven, CT 06510
+1 (617) 923-2422

Structural & Lighting
ARUP
77 Water Street
New York, NY 10005
+1 (212) 896-3000

MEPF & IT
BuroHappold
100 Broadway #23
New York, NY 10005
+1 (212) 616-0228

Civil
VHB
100 Great Oaks Blvd., Suite 118
Albany, NY 12203
+1 (518) 389-3606

AV & Acoustics
LSTN Consultants
76 Beaver Street, 2nd Floor
New York, NY 10005
+1 (347) 788-0810

Facade
Front Inc.
100 E. Broadway Street, #501
New York, NY 10002
+1 (212) 242-2220

Key Plan

Description	Date
Filing Set	06/17/22

Project

Storm King Art Center

C.F.M. Building

Seal

NOT FOR CONSTRUCTION

Drawing Title

Foundation Plan, Ground Level

Date	06/17/22
Scale	1/8" = 1' - 0"
Drawing Number	S-C-101
Sheet Size	ARCH D

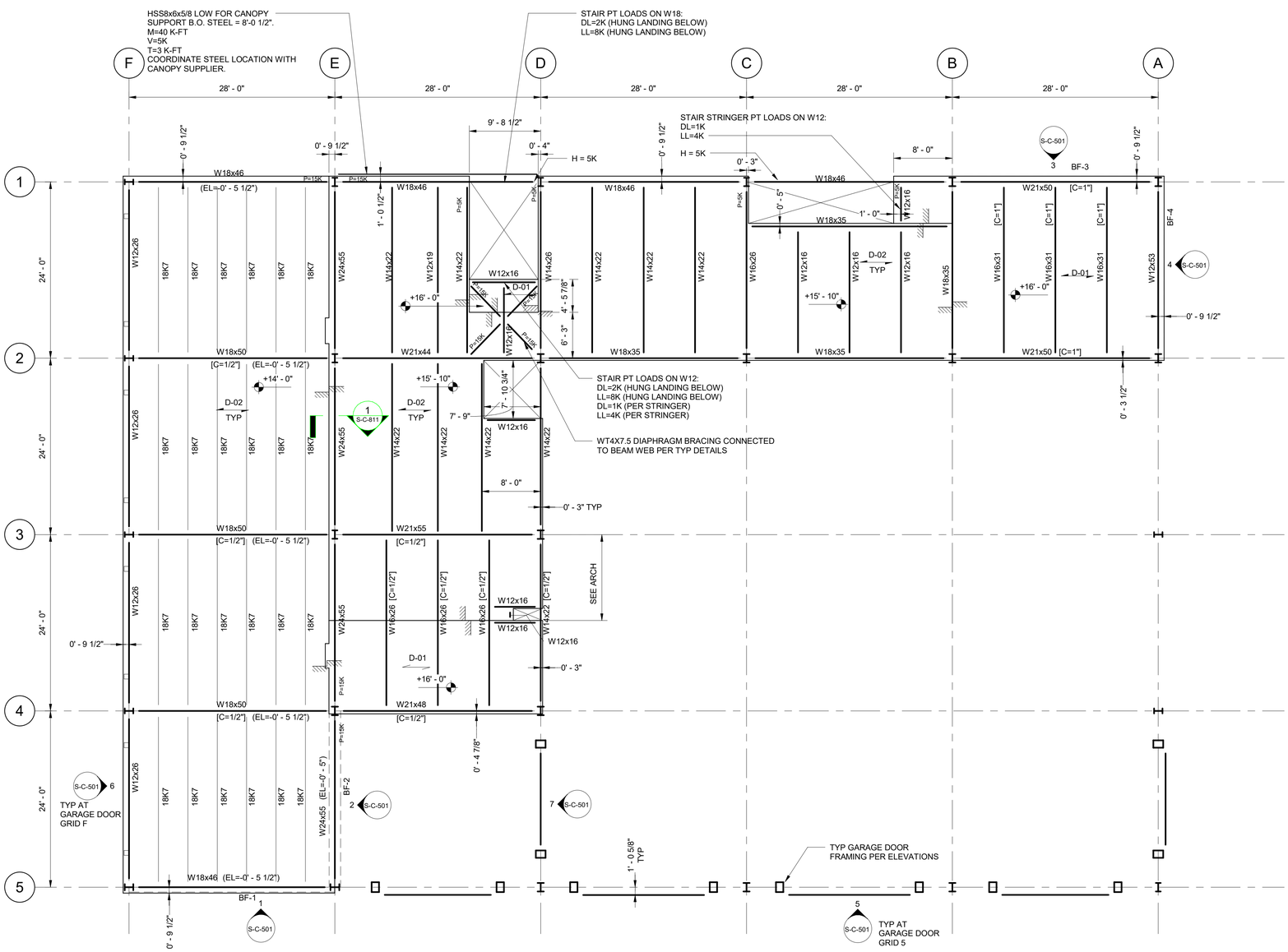

NOTES:

1. FOR GENERAL NOTES AND LOADING DIAGRAMS, REFER TO DRAWINGS S-C-0XX SERIES.
2. FOR TYPICAL DETAILS, REFER TO DRAWINGS S-C-7XX SERIES.
3. ELEVATOR DESIGN PENDING. ALLOW FOR ELEVATOR STEEL FRAMING.
4. TOP OF BEAM ELEV IS BOT OF DECK U.N.O. OFFSET FROM TYPICAL TOP OF BEAM IS NOTED AS (EL=+X'-X").
5. FACADE ATTACHMENT ASSUMED TO BE WITHIN d/2 OF TOP FLANGE, WHERE d=DEPTH OF BEAM.
6. ALL AXIAL COLLECTOR LOADS GIVEN BY "P" ARE REVERSIBLE, TENSION OR COMPRESSION.
7. COORDINATE SLAB AND DECK OPENINGS WITH ARCHITECTURAL AND SERVICES DWGS. ALLOW FOR TRIMMING FRAMING AT OPENINGS > 18".
8. SEE 7/S-C-711 FOR BEAM PENETRATION DETAILS. ALLOW FOR THE FOLLOWING BEAM PENETRATIONS:
   (18) TYPE PEN1 @ L2
   (3) TYPE PEN2 @ L2
   (4) TYPE PEN2 @ ROOF
9. REFER TO ARCHITECTURAL SETTING OUT DRAWINGS FOR DECK FLUTE LAYOUT REQUIREMENTS.
10. DECK TYPES TO BE:
    D-01 - 2" LWC ON 3" 22GA METAL DECK, 12" STUD SPACING TYP
    D-02 - 3" TYPE N 22 GA FORM DECK, 24/4 FASTENER PATTERN

Owner
Storm King Art Center
1 Museum Road
New Windsor, NY 12553
+1 (845) 534-3115

Design Architect
heneghan peng architects
14-16 Lord Edward Street
Dublin, D02 YC63
+353 1 633 9000

Executive Architect
WXY Architecture + Urban Design
224 Centre Street, 5th Floor
New York, NY 10013
+1 (212) 219-1953

Landscape Architect
Gustafson Porter + Bowman
1 Cobham Mews
London, MW1 9SB
+44 020 7284 8950

Reed Hilderbrand LLC
33 Whitney Avenue, 3rd Floor
New Haven, CT 06510
+1 (617) 923-2422

Structural & Lighting
ARUP
77 Water Street
New York, NY 10005
+1 (212) 896-3000

MEPF & IT
BuroHappold
100 Broadway #23
New York, NY 10005
+1 (212) 616-0228

Civil
VHB
100 Great Oaks Blvd., Suite 118
Albany, NY 12203
+1 (518) 389-3606

AV & Acoustics
LSTN Consultants
76 Beaver Street, 2nd Floor
New York, NY 10005
+1 (347) 788-0810

Facade
Front Inc.
100 E. Broadway Street, #501
New York, NY 10002
+1 (212) 242-2220

Key Plan

Description	Date
Filing Set	06/17/22

Project

Storm King Art Center

C.F.M. Building

Seal

NOT FOR CONSTRUCTION

Drawing Title

Framing Plan, Second Level

Date	06/17/22
Scale	1/8" = 1' - 0"
Drawing Number	S-C-301
Sheet Size	ARCH D

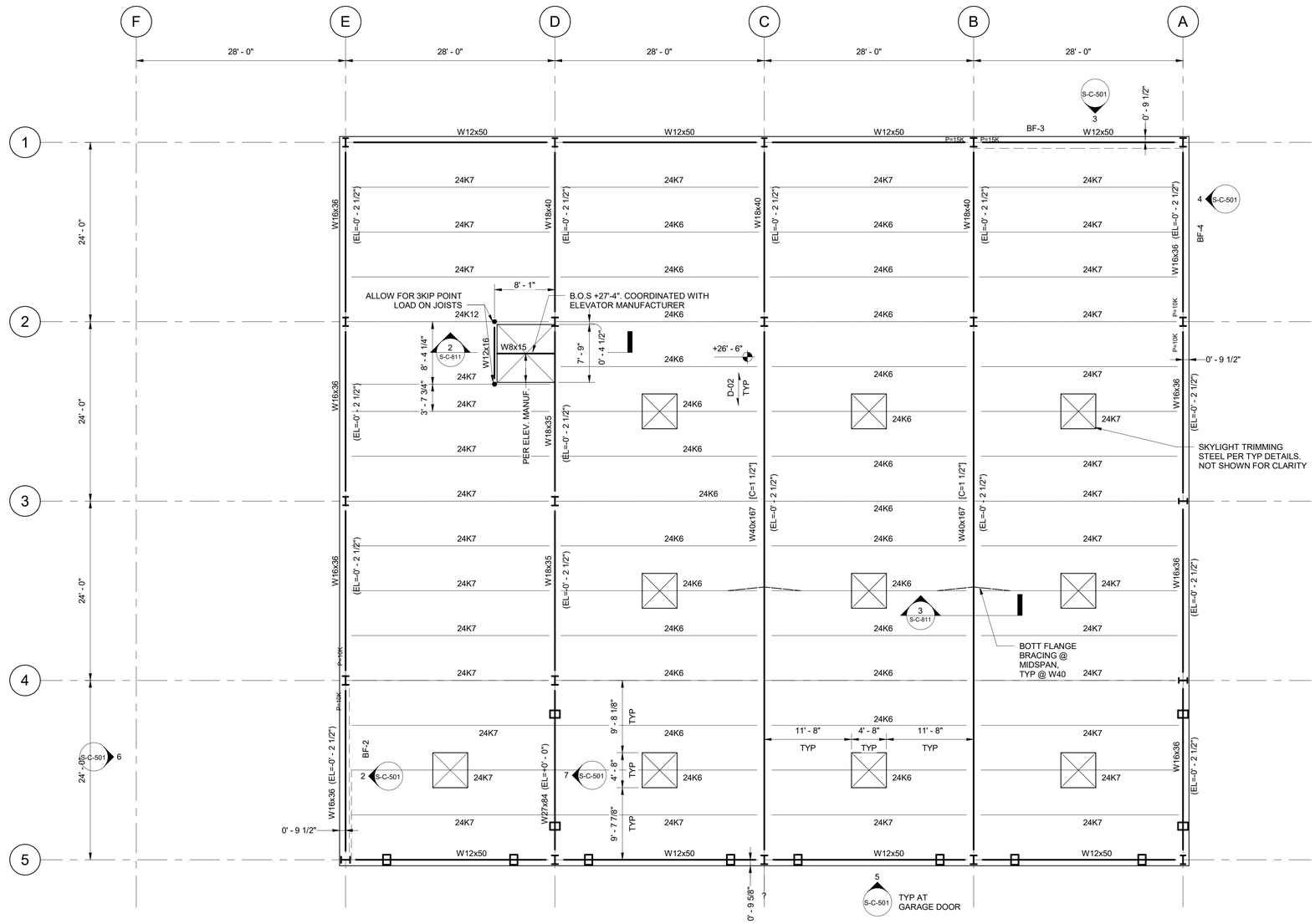

NOTES:

1. FOR GENERAL NOTES AND LOADING DIAGRAMS, REFER TO DRAWINGS S-C-0XX SERIES.
2. FOR TYPICAL DETAILS, REFER TO DRAWINGS S-C-7XX SERIES.
3. ELEVATOR DESIGN PENDING. ALLOW FOR ELEVATOR STEEL FRAMING.
4. TOP OF BEAM ELEV IS BOT OF DECK U.N.O. OFFSET FROM TYPICAL TOP OF BEAM IS NOTED AS (EL=+X'-X")
5. FACADE ATTACHMENT ASSUMED TO BE WITHIN d/2 OF TOP FLANGE, WHERE d=DEPTH OF BEAM.
6. ALL AXIAL COLLECTOR LOADS GIVEN BY "P" ARE REVERSIBLE, TENSION OR COMPRESSION.
7. COORDINATE SLAB AND DECK OPENINGS WITH ARCHITECTURAL AND SERVICES DWGS. ALLOW FOR TRIMMING FRAMING AT OPENINGS > 18".
8. SEE 7/S-C-711 FOR BEAM PENETRATION DETAILS. ALLOW FOR THE FOLLOWING BEAM PENETRATIONS:
   (18) TYPE PEN1 @ L2
   (3) TYPE PEN2 @ L2
   (4) TYPE PEN2 @ ROOF
9. REFER TO ARCHITECTURAL SETTING OUT DRAWINGS FOR DECK FLUTE LAYOUT REQUIREMENTS.
10. DECK TYPES TO BE:
    D-01 - 2" LWC ON 3" 22GA METAL DECK, 12" STUD SPACING TYP
    D-02 - 3" TYPE N 22 GA FORM DECK, 24/4 FASTENER PATTERN

Owner
Storm King Art Center
1 Museum Road
New Windsor, NY 12553
+1 (845) 534-3115

Design Architect
heneghan peng architects
14-16 Lord Edward Street
Dublin, D02 YC63
+353 1 633 9000

Executive Architect
WXY Architecture + Urban Design
224 Centre Street, 5th Floor
New York, NY 10013
+1 (212) 219-1953

Landscape Architect
Gustafson Porter + Bowman
1 Cobham Mews
London, MW1 9SB
+44 020 7284 8950

Reed Hilderbrand LLC
33 Whitney Avenue, 3rd Floor
New Haven, CT 06510
+1 (617) 923-2422

Structural & Lighting
ARUP
77 Water Street
New York, NY 10005
+1 (212) 896-3000

MEPF & IT
BuroHappold
100 Broadway #23
New York, NY 10005
+1 (212) 616-0228

Civil
VHB
100 Great Oaks Blvd., Suite 118
Albany, NY 12203
+1 (518) 389-3606

AV & Acoustics
LSTN Consultants
76 Beaver Street, 2nd Floor
New York, NY 10005
+1 (347) 788-0810

Facade
Front Inc.
100 E. Broadway Street, #501
New York, NY 10002
+1 (212) 242-2220

Key Plan

Description	Date
Filing Set	06/17/22

Project

Storm King Art Center

C.F.M. Building

Seal

NOT FOR CONSTRUCTION

Drawing Title

Framing Plan, Roof Level

Date	06/17/22
Scale	1/8" = 1' - 0"
Drawing Number	S-C-302
Sheet Size	ARCH D

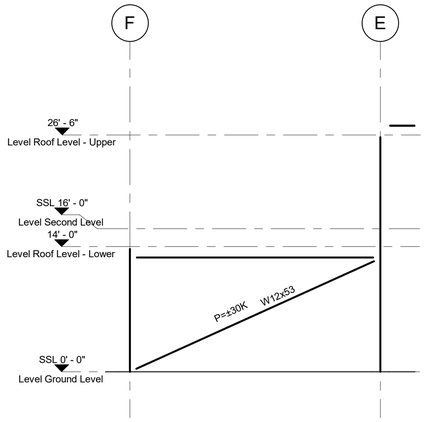

NOTE:
FOR BEAM CONNECTION FORCES SEE PLAN

1 BF-1
1/8" = 1'-0"

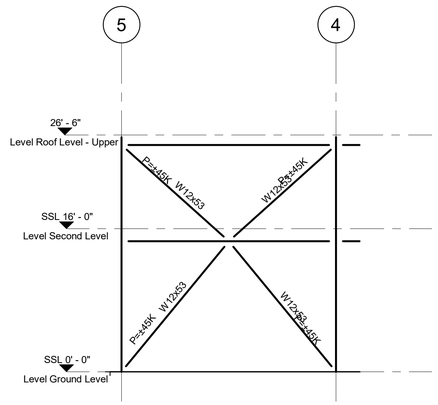

NOTE:
FOR BEAM CONNECTION FORCES SEE PLAN

2 BF-2
1/8" = 1'-0"

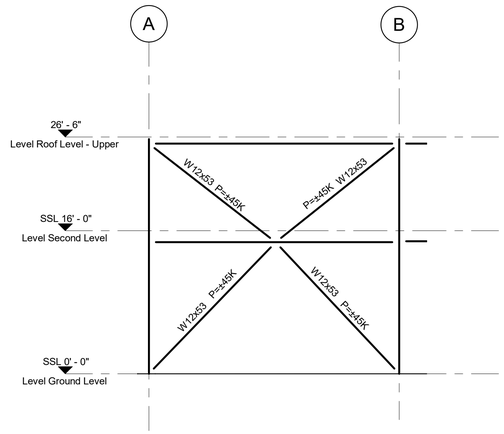

NOTE:
FOR BEAM CONNECTION FORCES SEE PLAN

3 BF-3
1/8" = 1'-0"

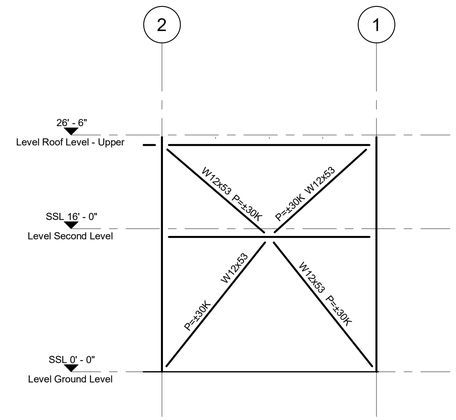

NOTE:
FOR BEAM CONNECTION FORCES SEE PLAN

4 BF-4
1/8" = 1'-0"

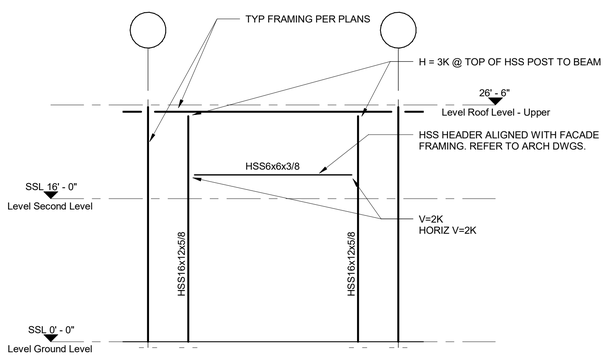

5 TYP GARAGE DOOR FRAMING AT GRID LINES A & 5
1/8" = 1'-0"

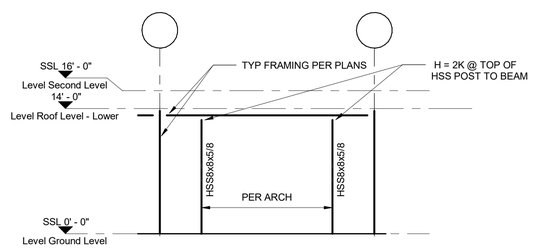

6 TYP GARAGE DOOR FRAMING AT GRID LINE F
1/8" = 1'-0"

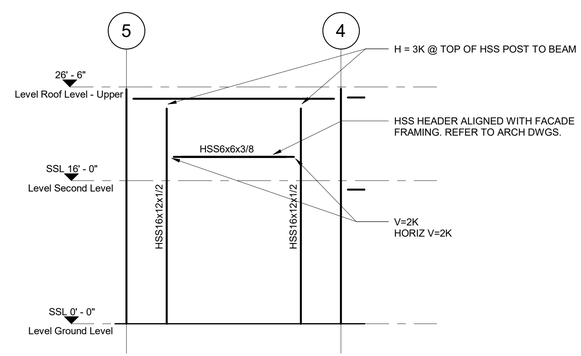

7 GARAGE DOOR FRAMING AT GRID D
1/8" = 1'-0"

NOTES:

1. SEE S-C-714 FOR TYPICAL BRACED FRAME CONNECTION DETAILS.
2. REFER TO PLAN DRAWINGS FOR AXIAL FORCES IN COLLECTOR BEAMS.
3. REFER TO STEEL BRACED FRAME DETAILS AND TOP OF STEEL ELEVATIONS IN PLAN TO CORRELATE HORIZONTAL AND DIAGONAL MEMEBR CENTERLINES.
4. FORCES PROVIDED ARE FACTORED FORCES IN KIPS. IF NO CONNECTION FORCE IS SHOWN, CONNECT FOR 90% OF ITS GROSS TENSION CAPACITY. CONNECT ALL BRACES FOR A MIN OF 25 KIPS SHEAR IN EACH DIRECTION. ALL BRACE AND COLLECTOR FORCES GIVEN BY "P" ARE REVERSIBLE, TENSION OR COMPRESSION.
5. FOR CONNECTION DESIGN, ALL FORCES SHOWN ON ELEVATION MUST BE COMBINED WITH FORCES SHOWN ON PLAN OR IN TYPICAL DETAILS INCLUDING SHEAR FORCES, AXIAL FORCES, AND BENDING MOMENTS.

Owner
Storm King Art Center
1 Museum Road
New Windsor, NY 12553
+1 (845) 534-3115

Design Architect
heneghan peng architects
14-16 Lord Edward Street
Dublin, D02 YC63
+353 1 633 9000

Executive Architect
WXY Architecture + Urban Design
224 Centre Street, 5th Floor
New York, NY 10013
+1 (212) 219-1953

Landscape Architect
Gustafson Porter + Bowman
1 Cobham Mews
London, MW1 9SB
+44 020 7284 8950

Reed Hilderbrand LLC
33 Whitney Avenue, 3rd Floor
New Haven, CT 06510
+1 (617) 923-2422

Structural & Lighting
ARUP
77 Water Street
New York, NY 10005
+1 (212) 896-3000

MEPF & IT
BuroHappold
100 Broadway #23
New York, NY 10005
+1 (212) 616-0228

Civil
VHB
100 Great Oaks Blvd., Suite 118
Albany, NY 12203
+1 (518) 389-3606

AV & Acoustics
LSTN Consultants
76 Beaver Street, 2nd Floor
New York, NY 10005
+1 (347) 788-0810

Facade
Front Inc.
100 E. Broadway Street, #501
New York, NY 10002
+1 (212) 242-2220

Key Plan

Description	Date
Filing Set	06/17/22

Project

Storm King Art Center

C.F.M. Building

Seal

NOT FOR CONSTRUCTION

Drawing Title

Frame Elevations

Date	06/17/22
Scale	1/8" = 1' - 0"
Drawing Number	S-C-501
Sheet Size	ARCH D

TENSION DEVELOPMENT LENGTH (Ld) AND TENSION LAP SPLICES - CLASS "A" (LTA) - 60 KSI REBARS

BAR	TYPE 1 - f'c (KSI)						TYPE 2 - f'c (KSI)						TYPE 3 - f'c (KSI)					
NUMBER	3000	4000	5000	6000	7000	8000	3000	4000	5000	6000	7000	8000	3000	4000	5000	6000	7000	8000
#3	17	15	13	12	12	12	25	22	20	18	17	16	13	12	12	12	12	12
#4	22	19	17	16	15	14	33	29	26	24	22	21	17	15	13	12	12	12
#5	28	24	22	20	18	17	42	36	32	30	27	26	21	18	16	15	14	13
#6	33	29	26	24	22	21	50	43	39	35	33	31	25	22	20	18	17	16
#7	48	42	38	34	32	30	72	63	56	51	48	45	29	25	23	21	19	18
#8	55	48	43	39	36	34	83	72	64	59	54	51	33	29	26	24	22	21
#9	62	54	48	44	41	38	93	81	72	66	61	57	38	33	29	27	25	23
#10	70	61	54	50	46	43	105	91	81	74	69	64	42	37	33	30	28	26
#11	78	67	60	55	51	48	116	101	90	82	76	71	47	41	36	33	31	29
#14	93	81	72	66	61	57	140	121	108	99	92	86	56	49	44	40	37	35
#18	124	108	96	88	81	76	186	161	144	132	122	114	75	65	58	53	49	46

TENSION LAP SPLICES - CLASS "B" (LTB) - 60 KSI REBARS

BAR	TYPE 1 - f'c (KSI)						TYPE 2 - f'c (KSI)						TYPE 3 - f'c (KSI)					
NUMBER	3000	4000	5000	6000	7000	8000	3000	4000	5000	6000	7000	8000	3000	4000	5000	6000	7000	8000
#3	22	19	17	16	14	14	33	28	25	23	21	20	13	12	12	12	12	12
#4	29	25	23	21	19	18	43	37	34	31	28	27	18	15	14	13	12	12
#5	36	31	28	26	24	22	54	47	42	38	35	33	22	19	17	16	14	14
#6	43	37	34	31	28	27	65	56	50	46	42	40	26	23	20	19	17	16
#7	63	54	49	45	41	39	94	81	73	67	62	58	38	33	29	27	25	23
#8	72	62	56	51	47	44	107	93	83	76	70	66	43	37	34	31	28	27
#9	81	70	63	57	53	50	121	105	94	86	79	74	49	42	38	35	32	30
#10	91	79	71	64	60	56	136	118	106	96	89	84	55	47	43	39	36	34
#11	101	87	78	71	66	62	151	131	117	107	99	93	61	53	47	43	40	37
#14	NOT PERMITTED. REFER TO NOTES.						NOT PERMITTED. REFER TO NOTES.						NOT PERMITTED. REFER TO NOTES.					
#18	NOT PERMITTED. REFER TO NOTES.						NOT PERMITTED. REFER TO NOTES.						NOT PERMITTED. REFER TO NOTES.					

COMPRESSION DEVELOPMENT LENGTH (Ldc) 60 KSI REBARS

BAR	TYPE 4 - f'c (KSI)			TYPE 4 - f'c (KSI)		
NUMBER	3000	4000	5000	3000	4000	5000
#3	9	8	8	8	8	8
#4	11	10	9	9	8	8
#5	14	12	12	11	9	9
#6	17	15	14	13	11	11
#7	20	17	16	15	13	12
#8	22	19	18	17	15	14
#9	25	22	21	19	17	16
#10	28	25	23	21	19	18
#11	31	27	26	24	21	20
#14	38	33	31	28	25	23
#18	50	43	41	38	33	31

COMPRESSION LAP SPLICES

BAR	STEEL - fy (KSI)	
NUMBER	60000	75000
#3	12	15
#4	15	19
#5	19	24
#6	23	29
#7	27	33
#8	30	38
#9	34	43
#10	39	48
#11	43	53
#14	REFER TO NOTES.	
#18	REFER TO NOTES.	

"d_b"	"D"
#3	2 1/4"
#4	3"
#5	3 3/4"
#6	4 1/2"
#7	5 1/4"
#8	6"
#9	9"
#10	10 1/4"
#11	11 1/4"
#14	17"
#18	22 1/2"

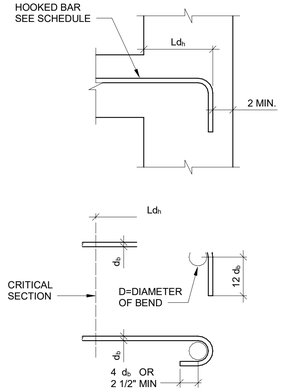

"d_b"	"D"
#3	1 1/2"
#4	2"
#5	2 1/2"

NOTE: MIN DIA OF BEND FOR STIRRUPS & TIES FOR LARGER BARS SEE STANDARD HOOK DETAIL

STANDARD

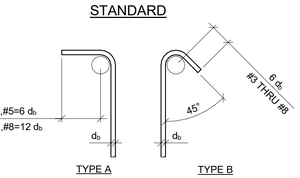

STIRRUPS & TIES

USE TYPE B STIRRUPS IN BEAMS AT CONC EDGES (OPGS, ETC) AND WHERE BEAM DEPTH IS TOO SHALLOW FOR TYPE A. SEE SCHED IN TYP STIRRUP DETAIL

STANDARD HOOKS IN TENSION (Ldh)

BAR SIZE	f'c (PSI)					
	3000	4000	5000	6000	7000	8000
#3	9	8	7	6	6	6
#4	11	10	9	8	8	7
#5	14	12	11	10	9	9
#6	17	15	13	12	11	11
#7	20	17	15	14	13	12
#8	22	19	17	16	15	14
#9	25	22	20	18	17	16
#10	28	25	22	20	19	18
#11	31	27	24	22	21	19
#14	38	33	29	27	25	23
#18	50	43	39	35	33	31

NOTES FOR DEVELOPMENT OF STANDARD HOOKS IN TENSION

1. REF CODE ACI 318-14
2. TABLES ARE IN INCHES, d_b =BAR DIAMETER
3. DEVELOPMENT LENGTHS OF STANDARD TENSION HOOKS, AS LISTED IN STANDARD HOOK IN TENSION TABLE, SHALL BE MULTIPLIED BY THE FOLLOWING FACTORS:

	MODIFICATION FACTOR
A. SIDE CLEAR COVER LARGER OR EQUAL THAN 2 ½ INCHES	0.7
B. 90° HOOK - CLEAR COVER ON BAR EXTENSION BEYOND HOOK LARGER OR EQUAL THAN 2 INCHES	0.7
C. HOOK ENCLOSED WITHIN TIES OR STIRRUPS AND SPACED AT LESS OR EQUAL TO 3 x d_b ALONG THE HOOK LENGTH	0.7
D. LIGHTWEIGHT AGGREGATE CONCRETE	1.3
E. EPOXY COATED REINFORCEMENT	1.2

MODIFICATION FACTORS GIVEN BY B AND C SHALL ONLY BE USED FOR #11 BARS OR SMALLER

4. HOOKS SHALL NOT BE CONSIDERED EFFECTIVE IN DEVELOPING BARS IN COMPRESSION.
5. CONCRETE: REGULAR WEIGHT (W = 145-150 pcf)
6. REINFORCING STEEL: Fy=60,000 PSI

1 TYPICAL SPLICE, DEVELOPMENT AND HOOK DETAILS
1/2" = 1'-0"

NOTES FOR SPLICES AND DEVELOPMENT

1. REF CODE ACI 318-14. TABLES ARE IN INCHES. d_b = BAR DIAMETER.
2. REINFORCING STEEL GRADES ARE NOTED IN THE TABLES.
3. CONCRETE: NORMAL WEIGHT (W = 150 PCF).
4. DEVELOPMENT OF BARS IN TENSION SHALL NOT BE LESS THAN 12".
5. TYPE 1, 2 AND, 3 BARS IN TENSION ARE DEFINED AS FOLLOWS. THESE DEFINITIONS APPLY TO DEVELOPMENT OF BARS IN TENSION AND TENSION LAP SPLICES:

   TYPE 1 - BARS SATISFYING EITHER OF THE FOLLOWING CONDITIONS:
   A. BARS IN CIP BEAMS AND COLUMNS HAVING CLEAR COVER NOT LESS THAN d_b, CLEAR SPACING OF BARS NOT LESS THAN d_b AND STIRRUPS OR TIES THROUGHOUT Ld NOT LESS THAN THE CODE
   B. BARS WITH COVER NOT LESS THAN d_b AND CLEAR SPACING NOT LESS THAN 2 x d_b

   TYPE 2 - BARS WITH COVER NOT LESS THAN d_b AND CLEAR SPACING LESS THAN 2 x d_b
   TYPE 3 - BARS WITH COVER NOT LESS THAN 2d_b AND CLEAR SPACING LESS THAN 4 x d_b
6. DEVELOPMENT OF INDIVIDUAL BARS WITHIN A BUNDLE SHALL BE THAT OF THE INDIVIDUAL BAR INCREASED 20% FOR 3 BAR BUNDLES AND 33% FOR 4 BAR BUNDLES.
7. DEVELOPMENT LENGTHS OF BARS IN TENSION LISTED IN TENSION DEVELOPMENT LENGTH TABLES SHALL BE MULTIPLIED WITH THE FOLLOWING FACTORS FOR:

	MODIFICATION FACTOR
A. TOP BARS (WITH 12" OR MORE CONCRETE CAST BELOW)	1.3
B. LIGHT WEIGHT AGGREGATE CONCRETE	1.3
C. EPOXY COATED BARS:	
- BARS WITH COVER LESS THAN 3DB AND CLEAR SPACING LESS THAN 6 x d_b	1.5
- ALL OTHER CONDITIONS	1.2
- EPOXY COATED BARS SHALL NOT BE MORE THAN	1.7

8. DEVELOPMENT OF BARS IN COMPRESSION SHALL NOT BE LESS THAN 8".
9. TYPE 4 AND 5 BARS IN COMPRESSION ARE DEFINED AS FOLLOWS:

   TYPE 4 - BASIC DEVELOPMENT LENGTH Ldc FOR BARS IN COMPRESSION

   TYPE 5 - BARS ENCLOSED WITHIN A COLUMN TYPE SPIRAL OR AN INDIVIDUAL SPIRAL AROUND EACH BAR OR GROUP OF BARS.
10. TENSION LAP SPLICES ARE DEFINED AS FOLLOWS:

    CLASS "A" - APPLICABLE WHEN REINFORCING PROVIDED IS AT LEAST TWICE THAT REQUIRED BY ANALYSIS OVER THE ENTIRE LENGTH OF THE SPLICE AND NO MORE THAN ONE HALF IS SPLICED WITHIN THE REQUIRED LAP LENGTH.

    CLASS "B" - APPLICABLE UNLESS NOTED OTHERWISE ON DRAWINGS.
11. TENSION LAP SPLICES SHALL NOT BE LESS THAN 12".
12. TENSION LAP SPLICES FOR #14 AND GREATER BARS ARE NOT PERMITTED. PROVIDE WELDED SPLICES OR MECHANICAL COUPLERS.
13. TENSION LAP SPLICE LENGTHS LISTED IN THE TENSION LAP SPLICE TABLES SHALL BE MULTIPLIED BY THE MODIFICATION FACTORS PROVIDED FOR DEVELOPMENT LENGTHS OF BARS IN TENSION.
14. TENSION LAP SPLICES PROVIDED WITH NON CONTACT LAP SPLICES SHALL NOT BE SPACED FURTHER APART THAN THE LESSER OF ONE-FIFTH THE REQUIRED LAP SPLICE OR 6".
15. TENSION LAP SPLICES OF BARS IN BUNDLES SHALL BE BASED ON THE LAP SPLICE LENGTH REQUIRED FOR INDIVIDUAL BARS WITHIN THE BUNDLE, INCREASED 20% FOR 3 BAR BUNDLES AND 33% FOR 4 BAR BUNDLES. ENTIRE BUNDLE SHALL NOT BE LAP SPLICED WITHIN ONE LAP LENGTH.
16. WHEN BARS OF DIFFERENT SIZE ARE LAP SPLICED IN TENSION, SPLICE LENGTH SHALL BE THE LARGER OF Ld OF LARGER BAR AND TENSION LAP SPLICE LENGTH OF SMALLER BAR.
17. COMPRESSION LAP SPLICES SHALL NOT BE LESS THAN 12".
18. COMPRESSION LAP SPLICES FOR #14 AND GREATER BARS ARE NOT PERMITTED. PROVIDE WELDED SPLICES OR MECHANICAL COUPLERS. COMPRESSION LAP SPLICES OF #14 AND #18 BARS TO #11 AND SMALLER BARS ARE PERMITTED.
19. WHEN BARS OF DIFFERENT SIZE ARE LAP SPLICED IN COMPRESSION, SPLICE LENGTH SHALL BE THE LARGER OF Ld OF LARGER BAR OR COMPRESSION LAP SPLICE LENGTH OF SMALLER BAR.
20. LAP SPLICE LENGTHS LISTED IN THE COMPRESSION LAP SPLICE TABLE SHALL BE MULTIPLIED WITH THE FOLLOWING FACTORS AS APPLICABLE:

	MODIFICATION FACTOR
SPIRALLY REINFORCED COMPRESSION MEMBERS:	0.75
TIES THROUGHOUT THE LAP SPLICE LENGTH HAVING AN EFFECTIVE AREA NOT LESS THAN DEFINED IN ACI 318-14, SECTION 12.17.2.4:	0.83

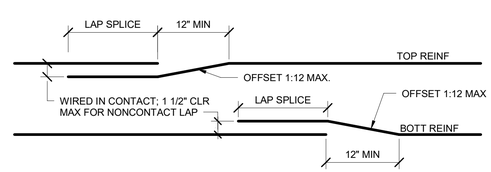

BEAM SPLICE DETAIL

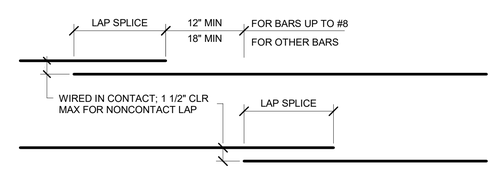

STAGGERED WALL OR SLAB SPLICE DETAIL

2 TENSION LAP SPLICE LENGTH (Ls) SCHEDULE
12" = 1'-0"

Owner
Storm King Art Center
1 Museum Road
New Windsor, NY 12553
+1 (845) 534-3115

Design Architect
heneghan peng architects
14-16 Lord Edward Street
Dublin, D02 YC63
+353 1 633 9000

Executive Architect
WXY Architecture + Urban Design
224 Centre Street, 5th Floor
New York, NY 10013
+1 (212) 219-1953

Landscape Architect
Gustafson Porter + Bowman
1 Cobham Mews
London, MW1 9SB
+44 020 7284 8950

Reed Hilderbrand LLC
33 Whitney Avenue, 3rd Floor
New Haven, CT 06510
+1 (617) 923-2422

Structural & Lighting
ARUP
77 Water Street
New York, NY 10005
+1 (212) 896-3000

MEPF & IT
BuroHappold
100 Broadway #23
New York, NY 10005
+1 (212) 616-0228

Civil
VHB
100 Great Oaks Blvd., Suite 118
Albany, NY 12203
+1 (518) 389-3606

AV & Acoustics
LSTN Consultants
76 Beaver Street, 2nd Floor
New York, NY 10005
+1 (347) 788-0810

Facade
Front Inc.
100 E. Broadway Street, #501
New York, NY 10002
+1 (212) 242-2220

Key Plan

Description	Date
Filing Set	06/17/22

Project

Storm King Art Center

C.F.M. Building

Seal

NOT FOR CONSTRUCTION

Drawing Title

Structural Typ Concrete Details, Sheet 1

Date	06/17/22
Scale	AS NOTED
Drawing Number	S-C-701
Sheet Size	ARCH D

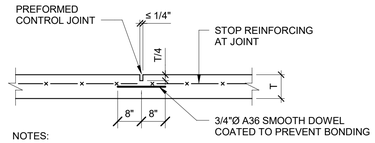

NOTES:

1. OPTIONALLY SAW-CUT CONTRACTION JOINTS MAY BE USED. SAW-CUT WITHIN 3 HOURS OF POUR.
2. FILL JOINTS WITH ELASTOMERIC JOINT FILLER.
3. WHERE CONSTRUCTION JOINTS DO NOT COINCIDE WITH CONTRACTION JOINT LOCATIONS PROVIDE REINFORCING CONTINUOUS THROUGH JOINT.

CONTRACTION / CONSTRUCTION JOINT - T<6"

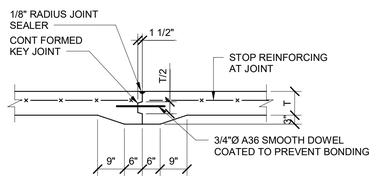

NOTES:

1. WHERE CONSTRUCTION JOINTS DO NOT COINCIDE WITH CONTRACTION JOINT LOCATIONS PROVIDE REINFORCING CONTINUOUS THROUGH JOINT.

CONTRACTION / CONSTRUCTION JOINT - T>=6"

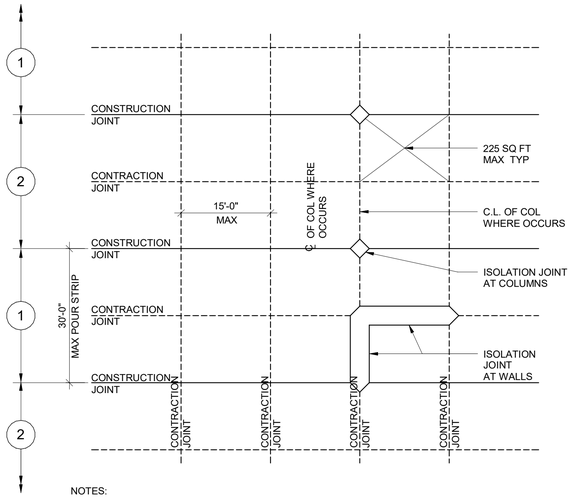

NOTES:

1. SLAB SLAB SHALL BE PLACED IN A STRIP PATTERN AS SHOWN:
   1 = FIRST
   2 = SECOND
2. STRIPS SHALL BE DIVIDED BY CONSTRUCTION OR CONTRACTION JOINTS AT COLUMN CENTERLINES WHERE THEY OCCUR AND SUBDIVIDED AS REQUIRED INTO AREAS NOT EXCEEDING 225 SQ FT BY CONTRACTION OR CONSTRUCTION JOINTS.
3. ALL JOINT LOCATIONS SHALL BE REVIEWED BY ENGINEER OF RECORD AND ARCHITECT OF RECORD PRIOR TO CONCRETE POUR.

POUR SEQUENCE & LAYOUT PLAN

1 TYPICAL SLAB ON GRADE JOINTS, POUR SEQUENCE & LAYOUT

1/2" = 1'-0"

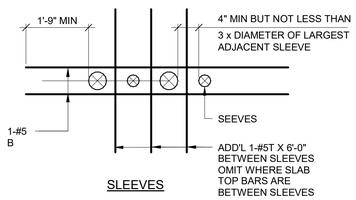

SLEEVES

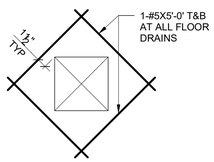

FLOOR DRAIN

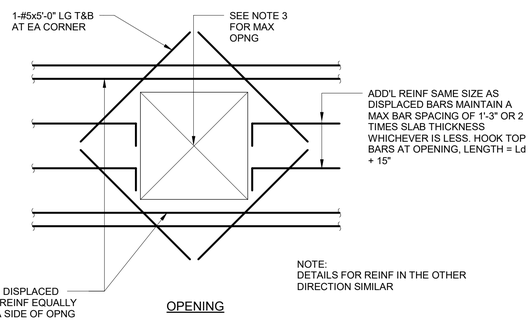

OPENING

NOTES:

1. UNLESS OTHERWISE NOTED ON THE STRUCTURAL DRAWINGS. REINFORCE AROUND OPENINGS AS PER DETAILS ABOVE.
2. DO NOT MAKE OPENINGS LARGER THAN THE MAXIMUM DIMENSIONS NOTED BELOW WITHOUT PRIOR APPROVAL FROM THE ARCHITECT OR UNLESS NOTED ON STRUCTURAL DRAWINGS.
3. RESTRICTIONS ON OPENING SIZE AND LOCATIONS:
   A. ONE-WAY SLAB AND TWO-WAY SLABS - MAXIMUM OPENING SIZE IS 2'-6" SQUARE.
4. CONTRACTOR TO PROVIDE WATER TIGHT SEAL OPENING AND SERVICE RUNS.

3 OPENINGS IN SLAB ON GRADE

1/2" = 1'-0"

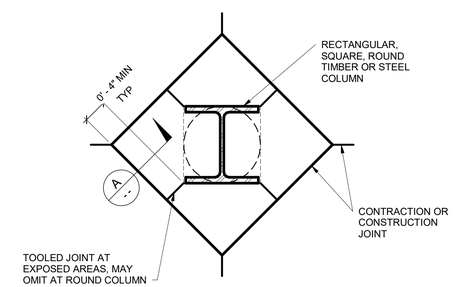

PLAN

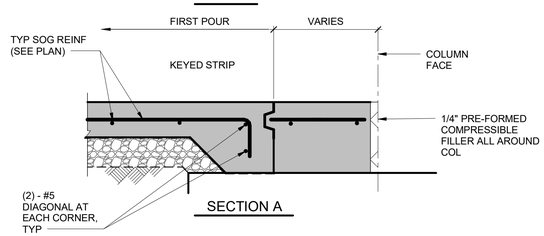

SECTION A

4 CONSTRUCTION JOINTS AT COLUMN SLAB ON GRADE

1" = 1'-0"

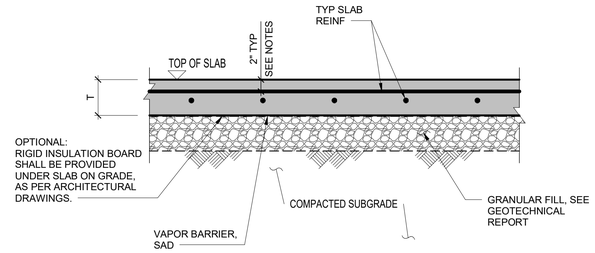

NOTES:

1. SEE PLAN FOR SLAB THICKNESS AND REINFORCING.
2. SEE GEOTECHNICAL REPORT FOR SLAB ON GRADE SUPPORT, COMPACTION AND SUBGRADE PREPARATION.
3. REINFORCEMENT TO EXTEND TO WITHIN 2 IN OF THE SLAB SIDE EDGE. ALSO REFER TO SLAB EDGE DETAILS.
4. REINFIRCING STEEL IS TO BE PLACED WITHIN 2 IN OF THE TOP OF THE SLAB OR UPPER ONE-THIRD OF SLAB THICKNESS, WHICHEVER IS CLOSER TO THE SLAB TOP SURFACE.

2 TYPICAL SLAB ON GRADE

1" = 1'-0"

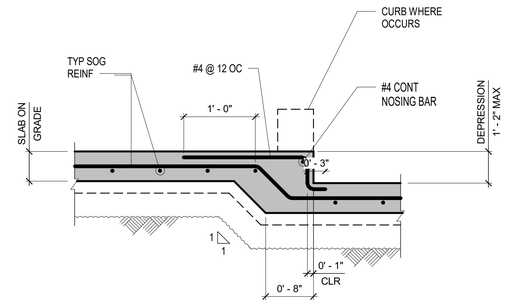

SLAB DEPRESSION < 1' - 0" HIGH

5 TYPICAL SLAB DEPRESSION

1" = 1'-0"

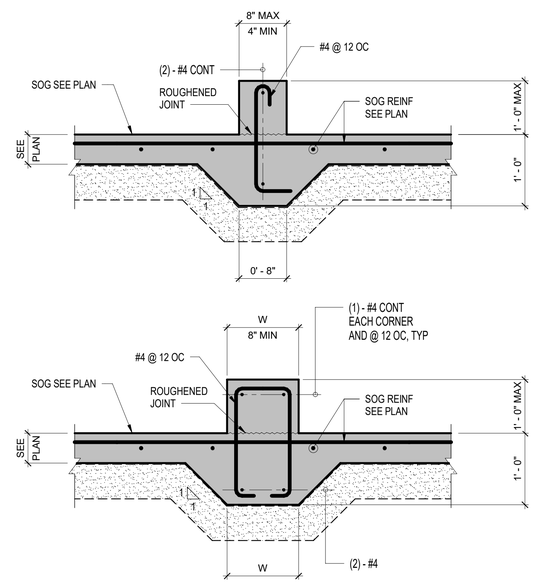

6 TYPICAL CONCRETE CURB ON GRADE

1" = 1'-0"

Owner
Storm King Art Center
1 Museum Road
New Windsor, NY 12553
+1 (845) 534-3115

Design Architect
heneghan peng architects
14-16 Lord Edward Street
Dublin, D02 YC63
+353 1 633 9000

Executive Architect
WXY Architecture + Urban Design
224 Centre Street, 5th Floor
New York, NY 10013
+1 (212) 219-1953

Landscape Architect
Gustafson Porter + Bowman
1 Cobham Mews
London, MW1 9SB
+44 020 7284 8950

Reed Hilderbrand LLC
33 Whitney Avenue, 3rd Floor
New Haven, CT 06510
+1 (617) 923-2422

Structural & Lighting
ARUP
77 Water Street
New York, NY 10005
+1 (212) 896-3000

MEPF & IT
BuroHappold
100 Broadway #23
New York, NY 10005
+1 (212) 616-0228

Civil
VHB
100 Great Oaks Blvd., Suite 118
Albany, NY 12203
+1 (518) 389-3606

AV & Acoustics
LSTN Consultants
76 Beaver Street, 2nd Floor
New York, NY 10005
+1 (347) 788-0810

Facade
Front Inc.
100 E. Broadway Street, #501
New York, NY 10002
+1 (212) 242-2220

Key Plan

Description	Date
Filing Set	06/17/22

Project

Storm King Art Center

C.F.M. Building

Seal

NOT FOR CONSTRUCTION

Drawing Title

Structural Typ Concrete Details, Sheet 2

Date	06/17/22
Scale	AS NOTED
Drawing Number	S-C-702
Sheet Size	ARCH D

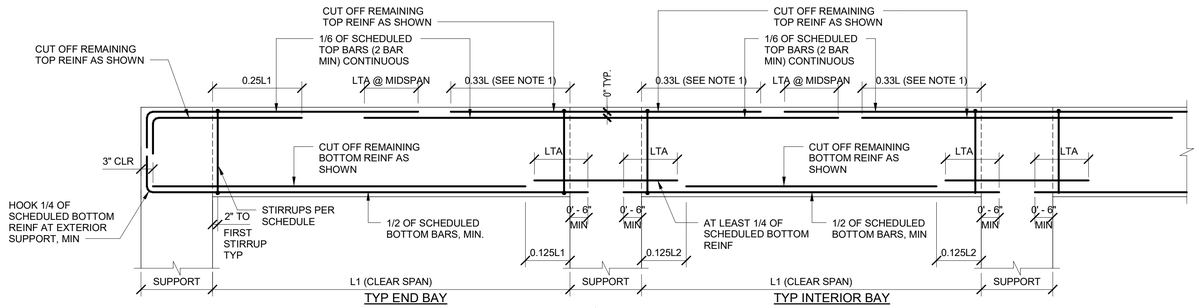

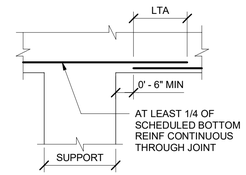

ALTERNATE LAP OF BOTTOM REINF AT SUPPORT

NOTES:

1. L IS LONGER OF L1 OR L2.
2. REFER TO CONCRETE GRADE BEAM REINFORCING SCHEDULE FOR BEAM DEPTH, WIDTH, BOTTOM REINFORCING, TOP (L) REINFORCING, TOP (R) REINFORCING, STIRRUP SIZE AND SPACING. SCHEDULED TOP (L) AND TOP (R) REINFORCING OCCUR AT LEFT AND RIGHT ENDS OF BEAM (RESPECTIVELY) AS MARK READS ON PLAN (SEE EXAMPLE TO RIGHT).
3. REINFORCING CUT OFF POINTS INDICATED ARE MINIMUM DEFAULT VALUES.

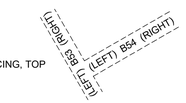

TOP (L)/TOP (R) EXAMPLE

4. SPLICE SCHEDULED MIDBARS AT MIDSPAN WITH LTA AND PROVIDE STD HOOKS AT DISCONTINUOUS ENDS.
5. WHERE REINFORCING BARS ARE DEVELOPED BY STANDARD HOOKS AT THE END OF MEMBERS AND BOTH SIDE COVER AND TOP (OR BOTTOM) COVER OVER THE HOOK ARE LESS THAN 2 1/2", THE HOOK SHALL BE ENCLOSED WITHIN AT LEAST THREE TIES OR STIRRUP TIES AS SHOWN BELOW:
6. SEE S07.15 FOR LAP, SPLICE, AND DEVELOPMENT LENGTHS OF REBAR

1 CONCRETE GRADE BEAM REINFORCING DETAIL
1/2" = 1'-0"

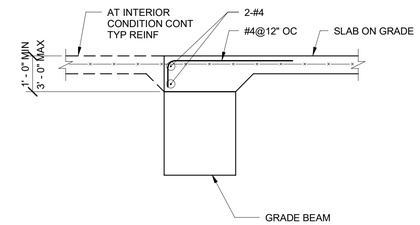

2 SLAB ON GRADE AT GRADE BEAM
1/2" = 1'-0"

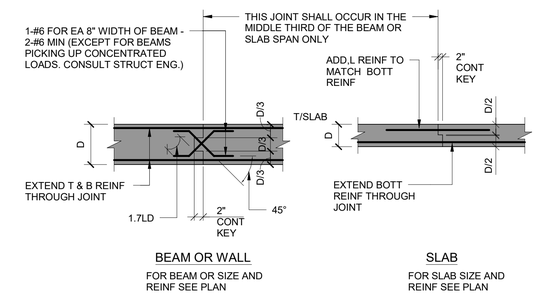

5 TYPICAL CONSTRUCTION JOINT DETAILS
1/2" = 1'-0"

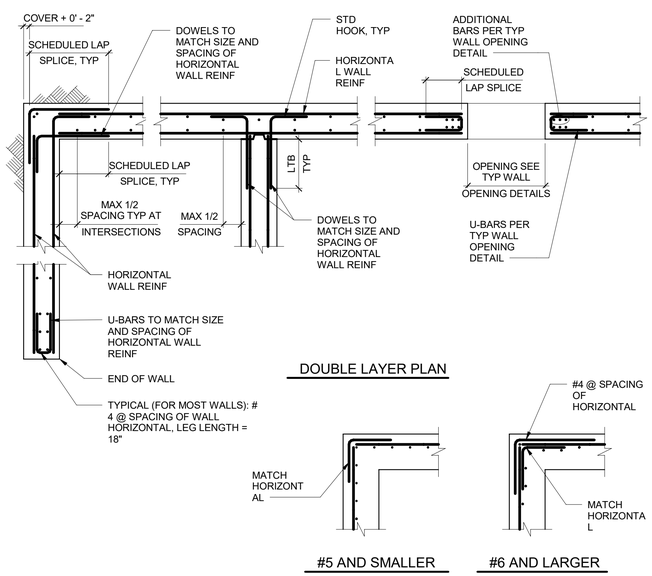

3 TYPICAL WALL REINFORCING PLAN DETAIL
1/2" = 1'-0"

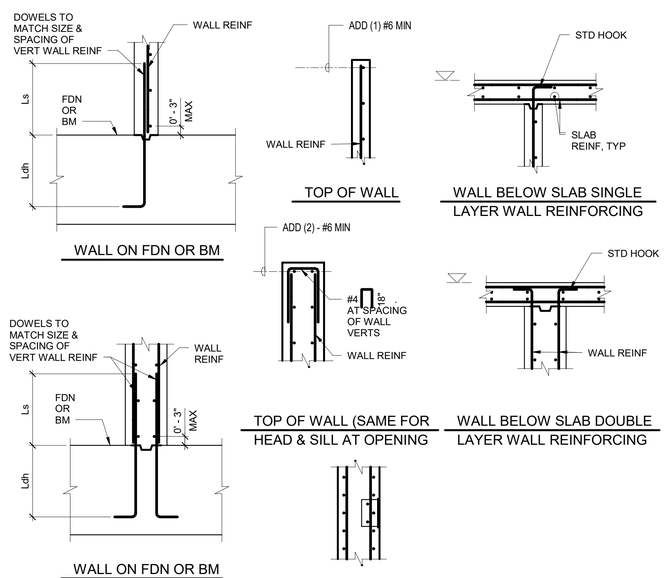

4 TYPICAL CONCRETE WALL REINFORCING SECTIONS
1/2" = 1'-0"

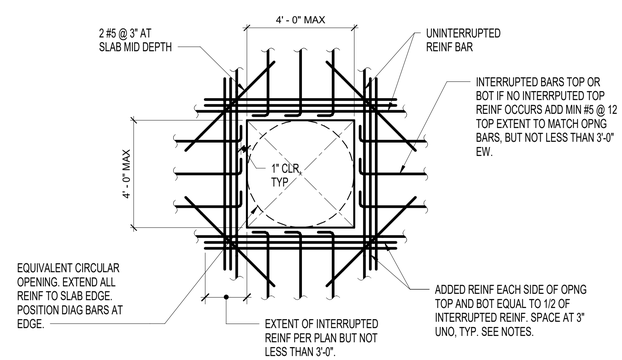

NOTES:
1. THE CONTRACTOR SHALL SUBMIT ALL OPENINGS GREATER THAN 8" WHICH ARE NOT SHOWN ON THE STRUCTURAL DRAWINGS TO THE STRUCTURAL ENGINEER FOR REVIEW PRIOR TO PLACEMENT. ADDITIONAL REINFORCING MAY BE REQUIRED.
2. EXCEPT WHERE SHOWN ON THE STRUCTURAL DRAWINGS, ALL OPENINGS IN 2 WAY FLAT SLABS SHALL HAVE THE FOLLOWING ADDITIONAL RESTRICTIONS:
   I) MAKE NO OPENINGS WITH TWICE THE SLAB DEPTH FROM THE FACE OF A COLUMN OR EDGE OF A CAPITAL EXCEPT AS NOTED ON THE STRUCTURAL DRAWINGS
   II) MAXIMUM OPENING SIZES:
      IN AREAS COMMON TO 2 COLUMNS STRIPS - NOT GREATER THAN 1/8 OF THE SMALLER OF THE TWO COLUMN STRIP WIDTHS.
      IN AREAS COMMON TO ONE COLUMN STRIP AND MIDDLE STRIP - NOT GREATER THAN 1/4 OF THE SMALLER OF THE TWO STRIP WIDTHS.
      IN AREAS COMMON TO 2 MIDDLE STRIPS - NOT GREATER THAN 1/2 THE WIDTH OF THE SMALLER OF THE TWO STRIP WIDTHS.
3. FOR ADDITIONAL REINFORCEMENT EQUAL TO 1/2 OF INTERRUPTED REINFORCEMENT, DO NOT INCLUDE REINFORCEMENT WHERE REINFORCEMENT ENDS INSIDE THE OPENING AND ≤ 2'-0" FROM EDGE OF OPENING.
4. MINIMUM CLEAR SPACING BETWEEN ADJACENT OPENINGS SHALL NOT BE LESS THAN THREE X THE OPENING DIMENSION

6 TYPICAL > 8" TO MAX 4' - 0" SLAB AND WALL OPENING DETAIL
1/2" = 1'-0"

Owner
Storm King Art Center
1 Museum Road
New Windsor, NY 12553
+1 (845) 534-3115

Design Architect
heneghan peng architects
14-16 Lord Edward Street
Dublin, D02 YC63
+353 1 633 9000

Executive Architect
WXY Architecture + Urban Design
224 Centre Street, 5th Floor
New York, NY 10013
+1 (212) 219-1953

Landscape Architect
Gustafson Porter + Bowman
1 Cobham Mews
London, MW1 9SB
+44 020 7284 8950

Reed Hilderbrand LLC
33 Whitney Avenue, 3rd Floor
New Haven, CT 06510
+1 (617) 923-2422

Structural & Lighting
ARUP
77 Water Street
New York, NY 10005
+1 (212) 896-3000

MEPF & IT
BuroHappold
100 Broadway #23
New York, NY 10005
+1 (212) 616-0228

Civil
VHB
100 Great Oaks Blvd., Suite 118
Albany, NY 12203
+1 (518) 389-3606

AV & Acoustics
LSTN Consultants
76 Beaver Street, 2nd Floor
New York, NY 10005
+1 (347) 788-0810

Facade
Front Inc.
100 E. Broadway Street, #501
New York, NY 10002
+1 (212) 242-2220

Key Plan

Description	Date
Filing Set	06/17/22

Project

Storm King Art Center
C.F.M. Building

Seal

NOT FOR CONSTRUCTION

Drawing Title

Structural Typ Concrete Details, Sheet 3

Date	06/17/22
Scale	AS NOTED
Drawing Number	S-C-703
Sheet Size	ARCH D

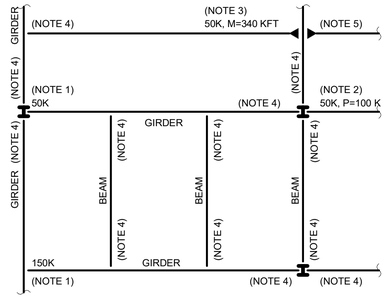

NOTES:
1. NUMBER INDICATES FACTORED VERTICAL REACTION IN KIPS. DESIGN AND PROVIDE CONNECTION FOR VERTICAL REACTION PER TYPICAL DETAILS SHOWN IN THIS SET OF DRAWINGS.
2. NUMBER INDICATES FACTORED VERTICAL REACTION AND AXIAL FORCE IN KIPS. DESIGN AND PROVIDE CONNECTION FOR THE ABOVE FORCES PER TYPICAL DETAILS SHOWN IN THIS SET OF DRAWINGS.
3. NUMBER INDICATES FACTORED VERTICAL REACTION IN KIPS AND MOMENT IN KIP-FT. DESIGN AND PROVIDE CONNECTION FOR THE ABOVE FORCES PER TYPICAL DETAILS SHOW IN THIS SET OF DRAWINGS.
4. WHERE NO NUMBERS ARE SHOWN AT THE MEMBER ENDS, REFER TO 'MINIMUM VERTICAL REACTIONS SCHEDULE' IN THIS SHEET. DESIGN AND PROVIDE CONNECTION PER TYPICAL DETAILS FOR THE REACTION DETERMINED FROM THE SCHEDULE.
5. WHERE NO NUMBERS ARE SHOWN AT MOMENT CONNECTIONS, DESIGN AND PROVIDE MOMENT CONNECTION FOR THE BENDING MOMENT STRENGTH OF THE SMALLER MEMBER IN THE CONNECTION.

1 BEAM CONNECTION TYPICAL REQUIREMENTS KEY PLAN
3/4" = 1'-0"

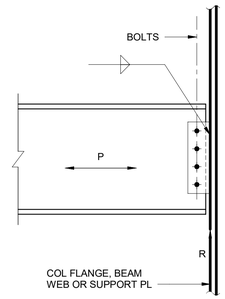

NOTES:
1. PROVIDE CONNECTION TO RESIST VERTICAL REACTION 'R' AND HORIZONTAL FORCE 'H', WHERE IT OCCURS, AS PER BEAM CONNECTION REQUIREMENTS TYPICAL DETAIL.
2. FOLLOW THE AISC DESIGN PROCEDURES FOR SINGLE PLATE CONNECTIONS.
3. BOLTS SHALL BE A325-N AND BE FULLY TENSIONED.
4. PROVIDE REINFORCING IN THE BEAM WHERE COPES HAVE REDUCED ITS CAPACITY BELOW THAT REQUIRED TO SUSTAIN THE REACTIONS. PROVIDE ELEMENTS WHERE LOCAL CAPACITY TO RESIST THE REACTIONS IS INADEQUATE.
5. ALTERNATE CONNECTION SYSTEM (DOUBLE ANGLE, SHEAR END-PLATE) MAY BE USED UPON WRITTEN REQUEST BY CONTRACTOR AND APPROVAL BY ENGINEER.

2 SINGLE-PLATE (SHEAR TAB) CONNECTION
1" = 1'-0"

MINIMUM FACTORED REACTION SCHEDULE

NOMINAL BEAM DEPTH	TOP OF CONNECTION		MIN NUMBER OF BOLT ROWS "N"
	BEAM FRAMING TO GIRDER OR WALL (KIPS)	BEAM FRAMING TO COLUMN GIRDER CONNECTION (KIPS)	
W8x	18	24	2
W10x	24	30	2
W12x	30	39	3
W14x	35	45	3
W16x	40	51	3
W18x	45	60	4
W21x	53	70	4
W24x	60	80	5
W27x	68	90	5
W30x	75	105	6
W33x	83	130	6
W36x	90	150	8
W40x	100	150	8
W44x	120	200	10

3 MINIMUM VERTICAL REACTION SCHEDULE
3/4" = 1'-0"

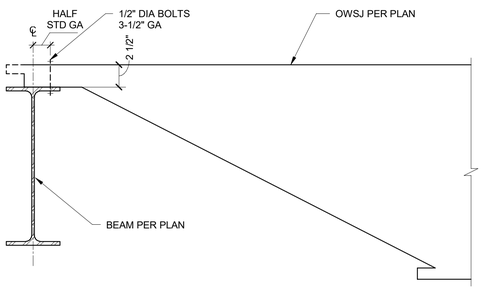

4 TYPICAL OWSJ CONNECTION
1 1/2" = 1'-0"

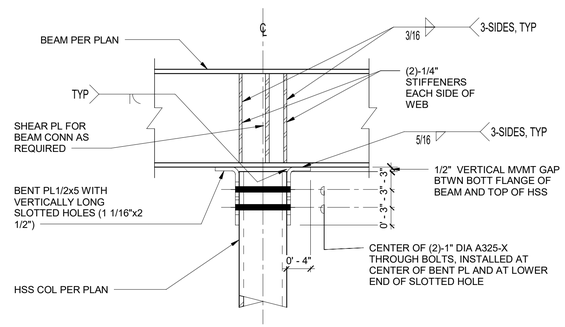

5 TYPICAL HSS POST TOP CONNECTION
1" = 1'-0"

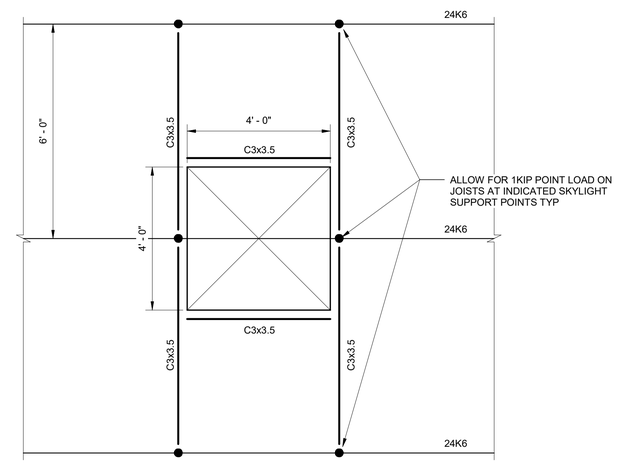

6 HIGH ROOF SKYLIGHT TRIMMING STEEL
1/2" = 1'-0"

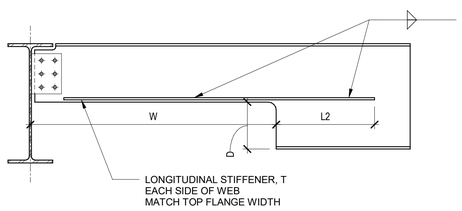

TYPICAL NOTCH, TYPE N

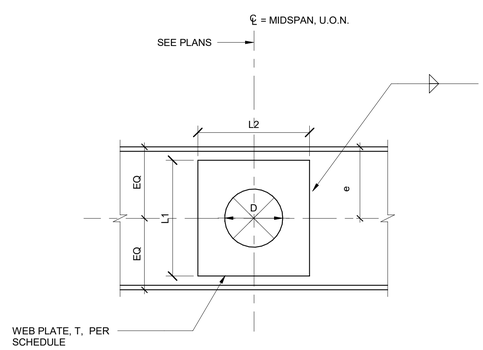

OPENING TYPE A

SCHEDULE OF PENETRATION/NOTCH

MARK	OPENING TYPE	D (IN)	W (IN)	H (IN)	L (IN)	L1 (IN)	L2 (IN)	T (IN)	B (IN)	e (IN)	WELD (IN)	COMMENTS
PEN1	A	4								6		LOCATE IN MIDDLE THIRD BEAM SPAN
PEN2	A	4				6	6					

NOTES:
1. WHERE 'T' NOT NOTED IN SCHEDULE, MATCH 'T' TO BEAM WEB THICKNESS.
2. WHERE 'e' NOT NOTED IN SCHEDULE, CENTERE PENETRATION IN DEPTH OF BEAM.

7 TYPICAL BEAM WEB PENETRATION DETAILS
3/4" = 1'-0"

Owner
Storm King Art Center
1 Museum Road
New Windsor, NY 12553
+1 (845) 534-3115

Design Architect
heneghan peng architects
14-16 Lord Edward Street
Dublin, D02 YC63
+353 1 633 9000

Executive Architect
WXY Architecture + Urban Design
224 Centre Street, 5th Floor
New York, NY 10013
+1 (212) 219-1953

Landscape Architect
Gustafson Porter + Bowman
1 Cobham Mews
London, MW1 9SB
+44 020 7284 8950

Reed Hilderbrand LLC
33 Whitney Avenue, 3rd Floor
New Haven, CT 06510
+1 (617) 923-2422

Structural & Lighting
ARUP
77 Water Street
New York, NY 10005
+1 (212) 896-3000

MEPF & IT
BuroHappold
100 Broadway #23
New York, NY 10005
+1 (212) 616-0228

Civil
VHB
100 Great Oaks Blvd., Suite 118
Albany, NY 12203
+1 (518) 389-3606

AV & Acoustics
LSTN Consultants
76 Beaver Street, 2nd Floor
New York, NY 10005
+1 (347) 788-0810

Facade
Front Inc.
100 E. Broadway Street, #501
New York, NY 10002
+1 (212) 242-2220

Key Plan

Description	Date
Filing Set	06/17/22

Project

Storm King Art Center

C.F.M. Building

Seal

NOT FOR CONSTRUCTION

Drawing Title

Structural Typ Steel Details, Sheet 1

Date	06/17/22
Scale	AS NOTED
Drawing Number	S-C-711
Sheet Size	ARCH D

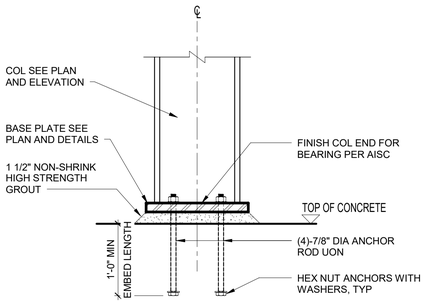

1 TYPICAL BASE PLATE ELEVATION
1" = 1'-0"

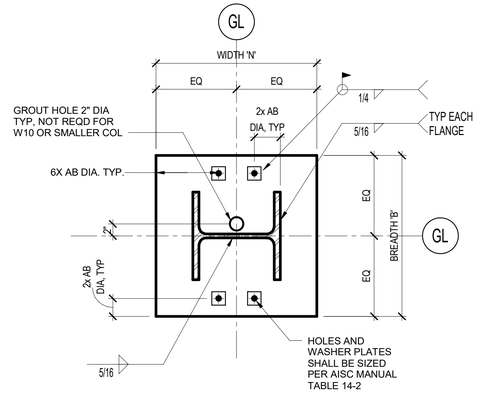

1A TYPICAL WF GRAVITY BASE PLATE DETAIL TYPE BP1
1" = 1'-0"

BASE PLATE SCHEDULE					
BASE PLATE TYPE	COL MARK	WIDTH 'N' (IN)	BREADTH 'B' (IN)	THICKNESS 'T' (IN)	ANCHOR ROD GRADE
BP1	W14x	16	16	1	ASTM F1554 GR 36
BP2A	HSS16X12X	18	18	3/4	ASTM F1554 GR 36
BP2B	HSS8X8X	14	10	3/4	ASTM F1554 GR 36
BP3	W14x	PER DETAIL	PER DETAIL	1 1/4	ASTM F1554 GR 36
BP4	W14x	PER DETAIL	PER DETAIL	1 1/4	ASTM F1554 GR 36

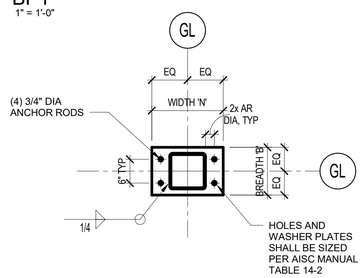

1B TYPICAL HSS BASE PLATE DETAIL TYPE BP2
1" = 1'-0"

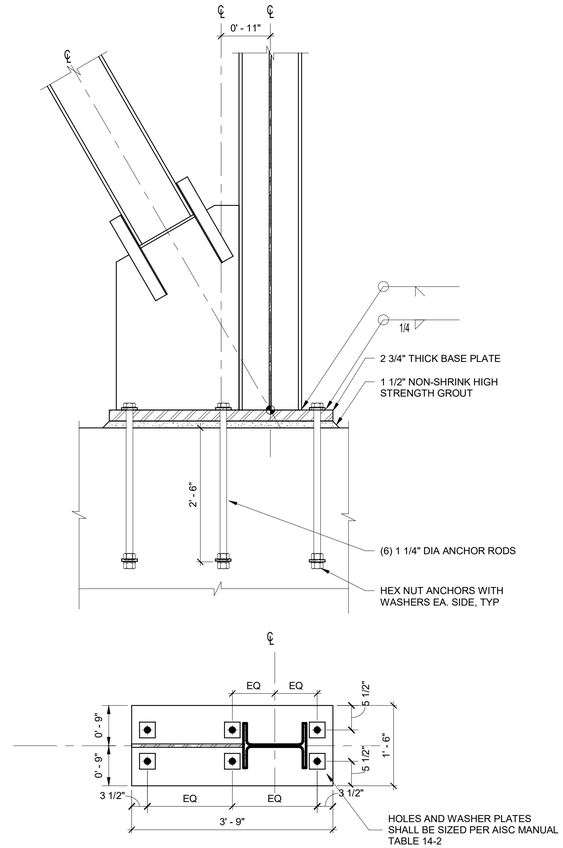

2 TYPICAL 1-WAY WF BRACED FRAME BASE PLATE DETAIL TYPE BP3
3/4" = 1'-0"

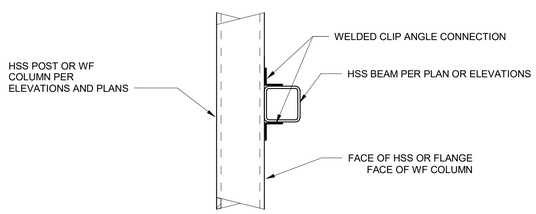

NOTE: CONNECTION LOADS PER ELEVATIONS ON S-C-501

3 TYPICAL HSS BEAM TO POST OR COLUMN CONNECTION
1" = 1'-0"

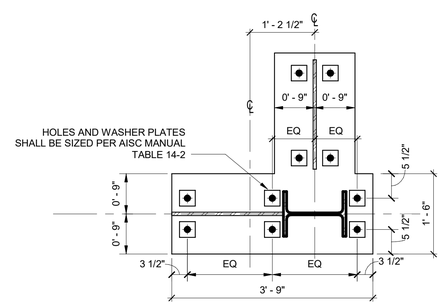

2A TYPICAL 2-WAY WF BRACED FRAME BASE PLATE DETAIL TYPE BP4
3/4" = 1'-0"

Owner
Storm King Art Center
1 Museum Road
New Windsor, NY 12553
+1 (845) 534-3115

Design Architect
heneghan peng architects
14-16 Lord Edward Street
Dublin, D02 YC63
+353 1 633 9000

Executive Architect
WXY Architecture + Urban Design
224 Centre Street, 5th Floor
New York, NY 10013
+1 (212) 219-1953

Landscape Architect
Gustafson Porter + Bowman
1 Cobham Mews
London, MW1 9SB
+44 020 7284 8950

Reed Hilderbrand LLC
33 Whitney Avenue, 3rd Floor
New Haven, CT 06510
+1 (617) 923-2422

Structural & Lighting
ARUP
77 Water Street
New York, NY 10005
+1 (212) 896-3000

MEPF & IT
BuroHappold
100 Broadway #23
New York, NY 10005
+1 (212) 616-0228

Civil
VHB
100 Great Oaks Blvd., Suite 118
Albany, NY 12203
+1 (518) 389-3606

AV & Acoustics
LSTN Consultants
76 Beaver Street, 2nd Floor
New York, NY 10005
+1 (347) 788-0810

Facade
Front Inc.
100 E. Broadway Street, #501
New York, NY 10002
+1 (212) 242-2220

Key Plan

Description	Date
Filing Set	06/17/22

Project
Storm King Art Center
C.F.M. Building

Seal

NOT FOR CONSTRUCTION

Drawing Title
Structural Typ Steel Details, Sheet 2

Date	06/17/22
Scale	AS NOTED
Drawing Number	S-C-712
Sheet Size	ARCH D

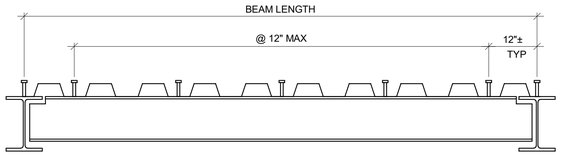

PERPENDICULAR DECK CONDITIONS

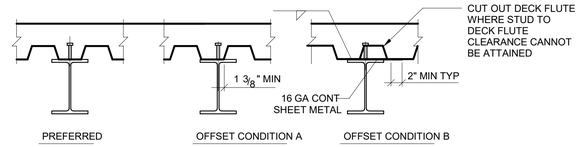

PARALLEL DECK CONDITIONS

STUD NOTES:

1. ON ALL MEMBERS WITH CONCRETE COVER PROVIDE STUDS @ 12" MAX

1 HEADED SHEAR CONNECTOR (STUDS) LAYOUT DETAILS

3/4" = 1'-0"

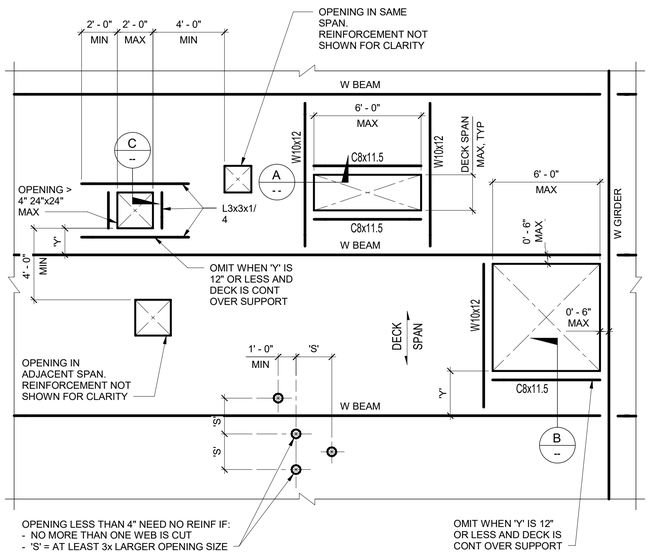

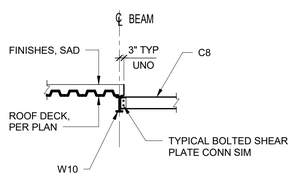

SECTION 'A'

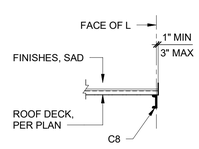

SECTION 'B'

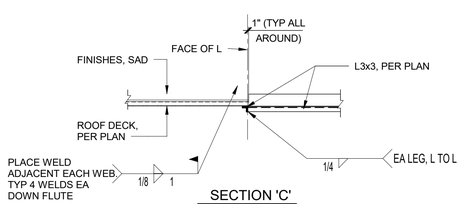

SECTION 'C'

NOTES:

1. PRIOR TO CUTTING OPENINGS IN ROOF DECK, INSTALL OPENING REINFORCEMENT AND FRAMING.
2. CONCTRACTOR SHALL COORDINATE OPENING SIZES AND LOCATIONS WITH MEP CONTRACTORS AND ARCHITECTURAL DRAWINGS.
3. OPENING FRAMING SIZES SHOWN ARE TYPICAL MIN SIZE UNO ON DRAWINGS.
4. THESE TYPICAL OPENING SIZES REFER TO A MINIMUM DECK THICKNESS OF 18 GA.

3 TYPICAL ROOF DECK PENETRATIONS

1/4" = 1'-0"

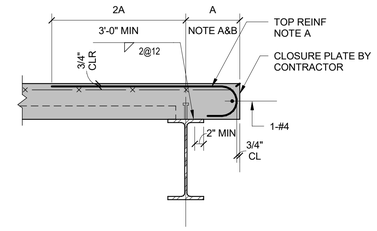

DECK SPAN - PERPENDICULAR

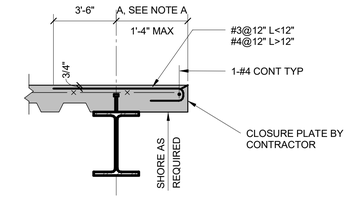

DECK SPAN - PARALLEL
(L < 1'-4")

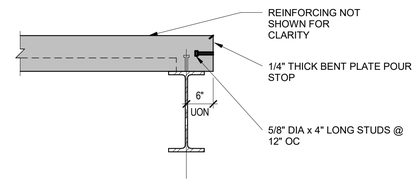

LEVEL 2 SLAB EDGE AT STAIRS AND MEZZANINE

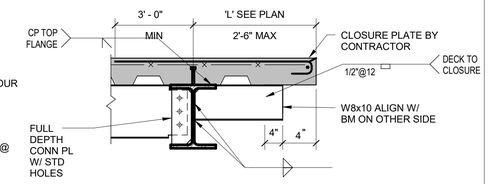

DECK SPAN - PARALLEL
(1'-4" < L < 2'-6")

NOTES

1. A=6" UNLESS OTHERWISE NOTED IN PLAN
2. PROVIDE #3@12 TOP REINFORCING WHERE "A" UP TO 1'-0". PROVIDE #4@12 TOP REINFORCING WHERE "A" IS GREATER THAN 1'-0" UP TO 2'-6". WHERE "A" IS GREATER THAN 2'-6", PROVIDE ADDITIONAL SUPPORT AS REQUIRED

2 TYPICAL SLAB EDGE DETAILS

3/4" = 1'-0"

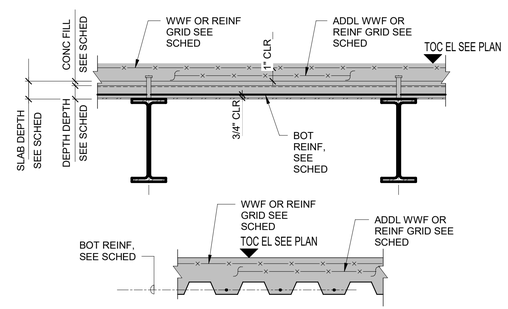

NOTES

1. SEE PLANS FOR EXTENT OF STEEL DECK TYPE AND DETAILS AND SCHEDULE FOR DECK CONSTRCUTION.
2. DECK SHALL EXTEND OVER THREE OR MORE SPANS IF POSSIBLE.
3. PROVIDE STEEL DECK WITH THE DEPTH INDICATED IN THE SCHEDULE. DECK GAGE SHALL BE SELECTED USING THE FOLLOWING CRITERIA:
   A. DECK DEFLECTION CAUSED BY THE DEAD LOAD OF WET CONCRETE AND DECK SHALL NOT EXCEED 1/180 OF THE SPAN OR 3/4 INCH WHICHEVER IS SMALLER.
   B. DECK STRENGTH USING LRFD METHODS SHALL BE GREATER THAN THE DECK ULTIMATE FORCES AND BENDING MOMENTS CALCULATED USING CONSTRUCTION LOADS RECOMMENDED BY STEEL DECK INSTITUTE (SDI).
   C. DECK STRENGTH, ACTING COMPOSITELY WITH THE CONCRETE, USING LRFD AND THE SDI COMPOSITEDECK DESIGN HANDBOOK, SHALL BE GREATER THAN THE ULTIMATE FORCES AND BENDING MOMENTS CALCULATED FROM THE SDL + LL GIVEN IN THE DECK SCHEDULE.
4. WHERE BOTTOM BARS ARE PROVIDED IN THE SCHEDULE THE SLAB HAS BEEN DESIGNED TO CARRY SDL + LL THE LOADS GIVEN IN THE DECK SCHEDULE WITHOUT ACTING COMPOSITELY WITH THE DECK. IN THIS CASE, PROVIDE DECK IN ACCORDANCE WITH NOTES 3A AND B.
5. PROVIDE ADDITIONAL CONCRETE AS REQUIRED TO COMPENSATE FOR THE STEEL BEAMS AND DECK DEFLECTIONS CAUSED BY THE DEAD LOAD OF WET CONCRETE.

4 TYPICAL METAL DECK DETAILS

3/4" = 1'-0"

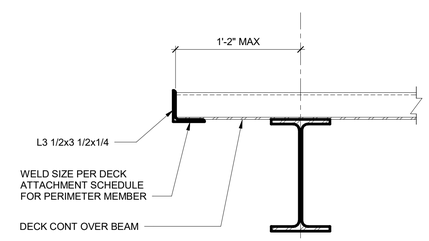

DECK PERPENDICULAR TO BEAM

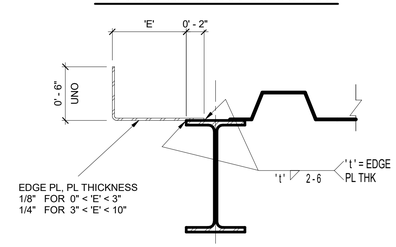

DECK PARALLEL TO BEAM

5 TYPICAL EDGE WITHOUT FILL

1 1/2" = 1'-0"

Owner
Storm King Art Center
1 Museum Road
New Windsor, NY 12553
+1 (845) 534-3115

Design Architect
heneghan peng architects
14-16 Lord Edward Street
Dublin, D02 YC63
+353 1 633 9000

Executive Architect
WXY Architecture + Urban Design
224 Centre Street, 5th Floor
New York, NY 10013
+1 (212) 219-1953

Landscape Architect
Gustafson Porter + Bowman
1 Cobham Mews
London, MW1 9SB
+44 020 7284 8950

Reed Hilderbrand LLC
33 Whitney Avenue, 3rd Floor
New Haven, CT 06510
+1 (617) 923-2422

Structural & Lighting
ARUP
77 Water Street
New York, NY 10005
+1 (212) 896-3000

MEPF & IT
BuroHappold
100 Broadway #23
New York, NY 10005
+1 (212) 616-0228

Civil
VHB
100 Great Oaks Blvd., Suite 118
Albany, NY 12203
+1 (518) 389-3606

AV & Acoustics
LSTN Consultants
76 Beaver Street, 2nd Floor
New York, NY 10005
+1 (347) 788-0810

Facade
Front Inc.
100 E. Broadway Street, #501
New York, NY 10002
+1 (212) 242-2220

Key Plan

N

Description	Date
Filing Set	06/17/22

Project

Storm King Art Center

C.F.M. Building

Seal

NOT FOR CONSTRUCTION

Drawing Title

Structural Typ Metal Deck Details

Date	06/17/22
Scale	AS NOTED
Drawing Number	S-C-713
Sheet Size	ARCH D

NOTES:
1. REFER TO S-C-501 FOR BRACED FRAME ELEVATIONS
2. WELDS, BOLTS, CONNECTION PLATES AND ANGLES CAPACITIES SHALL BE AS REQUIRED BY AISC SPECIFICATIONS. WEB REINFORCING AND/OR STIFFENERS SHALL BE PROVIDED IF AND AS REQUIRED BY THE AISC SPECIFICATIONS FOR MAGNITUDE OF BRACING FORCES (P).
3. THE DETAILS ON THIS SHEET ARE REPRESENTATIVE AND ARE ONLY INTENDED TO DESCRIBE GENERAL DESIGN INTENT. BOLTED OR WELDED CONNECTIONS MAY BE USED AT CONTRACTORS OPTION SUBJECT TO REVIEW AND APPROVAL BY EOR.
4. WELD TYPES SHOWN FOR CONNECTIONS ARE CONCEPTUAL AND CAN BE MODIFIED BY STEEL FABRICATOR DURING DESIGN OF CONNECTION WITH APPROVAL FROM EOR.
5. ENGINEERING AND DETAILS OF CONNECTIONS SHOULD TAKE INTO ACCOUNT ALL ECCENTRICITIES RESULTING FROM:
   A. OFFSET OF BEAM CENTLERLINES IN ADJACENT BAYS (DEEP BEAM ADJACENT TO A SHALLOW BEAM)
   B. OFFSET FROM FRACE OF COLUMN TO CENTERLINE OF COLUMN
   C. OFFSET FROM FACE OF BEAM TO CENTERLINE OF BEAM
   D. ANY OTHER OFFSETS THAT RESULT FROM GEOMETRY OF THE CONNECTION ITSELF
6. ALL WEBS OF BEAMS AND BRACES ARE VERTICAL

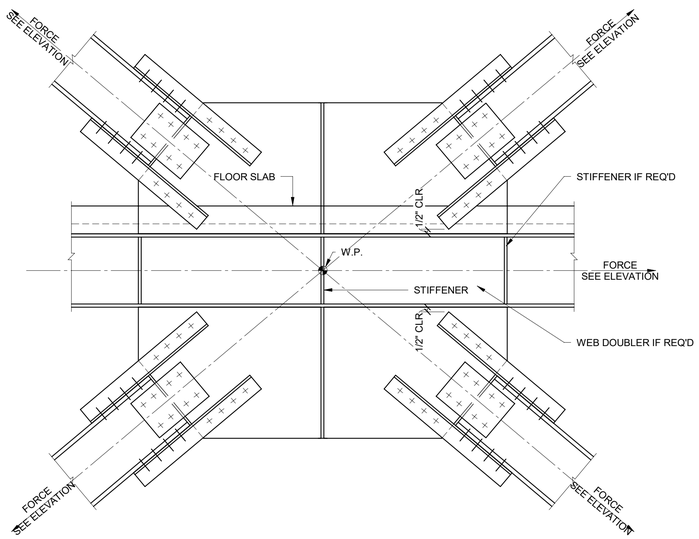

1 TYPICAL BRACED FRAME CONNECTION AT BEAM MID-POINT
3/4" = 1'-0"

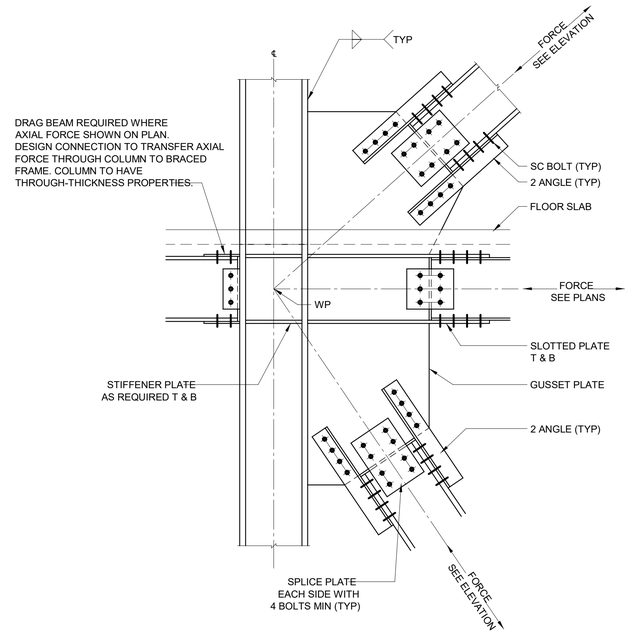

2 TYPICAL BRACE FRAME COLUMN FLANGE CONNECTION
3/4" = 1'-0"

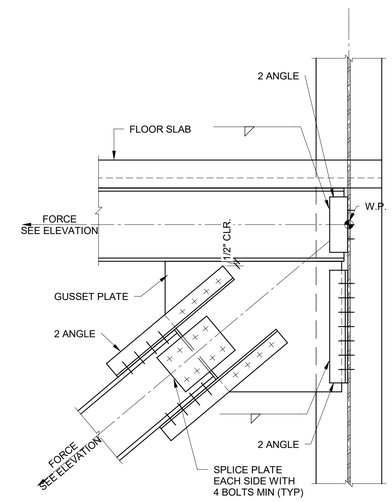

3 TYPICAL BRACED FRAME COLUMN WEB CONNECTION
3/4" = 1'-0"

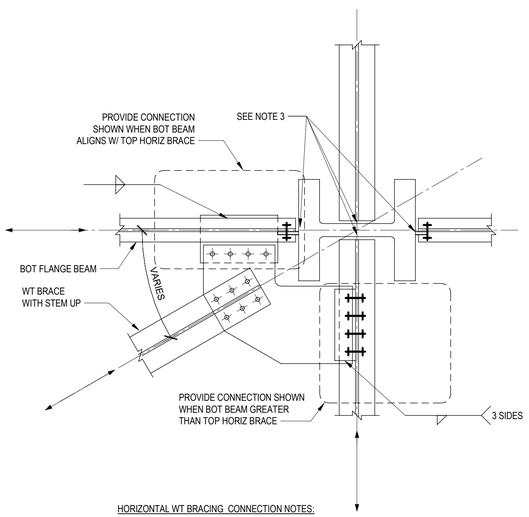

HORIZONTAL WT BRACING CONNECTION NOTES:

1. DESIGN HORIZONTAL CONNECTIONS FOR AXIAL FORCES INDICATED ON DRAWINGS. CONNECTIONS TO BEAMS TO BE DESIGNED FOR COMPONENT FORCE ON EACH BEAM.
2. HORIZONTAL BRACE CONNECTIONS SHALL RESIST MINIMUM 5 KIP VERTICAL LOAD.
3. BEAM END CONNECTION SHALL RESIST RESULTANT COMPONENT AXIAL FORCE.

4 HORIZONTAL WT BRACE CONN AT BEAM TO COL CONN
NTS

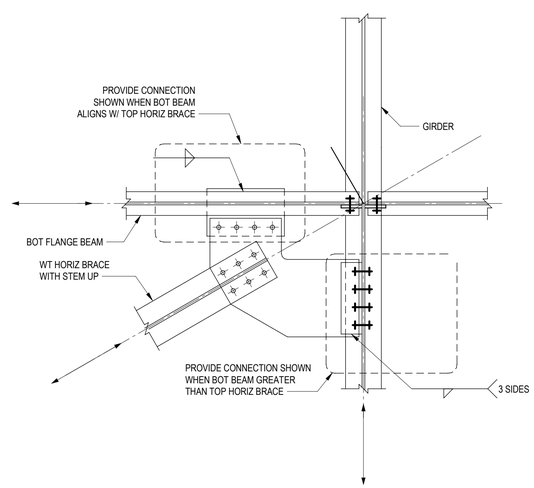

HORIZONTAL WT BRACE CONNECTION AT BEAM TO GIRDER CONNECTION

5 HORIZONTAL WT BRACE CONN AT BEAM TO GIRDER CONN
1" = 1'-0"

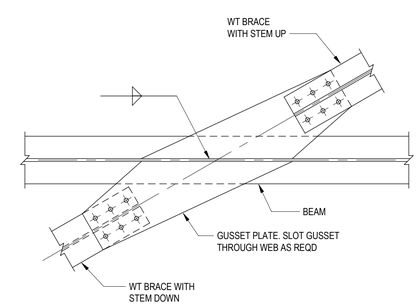

6 HORIZ. WT BRACE CONN TO BEAM WEB
1" = 1'-0"

Owner
Storm King Art Center
1 Museum Road
New Windsor, NY 12553
+1 (845) 534-3115

Design Architect
heneghan peng architects
14-16 Lord Edward Street
Dublin, D02 YC63
+353 1 633 9000

Executive Architect
WXY Architecture + Urban Design
224 Centre Street, 5th Floor
New York, NY 10013
+1 (212) 219-1953

Landscape Architect
Gustafson Porter + Bowman
1 Cobham Mews
London, MW1 9SB
+44 020 7284 8950

Reed Hilderbrand LLC
33 Whitney Avenue, 3rd Floor
New Haven, CT 06510
+1 (617) 923-2422

Structural & Lighting
ARUP
77 Water Street
New York, NY 10005
+1 (212) 896-3000

MEPF & IT
BuroHappold
100 Broadway #23
New York, NY 10005
+1 (212) 616-0228

Civil
VHB
100 Great Oaks Blvd., Suite 118
Albany, NY 12203
+1 (518) 389-3606

AV & Acoustics
LSTN Consultants
76 Beaver Street, 2nd Floor
New York, NY 10005
+1 (347) 788-0810

Facade
Front Inc.
100 E. Broadway Street, #501
New York, NY 10002
+1 (212) 242-2220

Key Plan

N

Description	Date
Filing Set	06/17/22

Project

Storm King Art Center

C.F.M. Building

Seal

NOT FOR CONSTRUCTION

Drawing Title

Structural Typ Braced Frame Details

Date	06/17/22
Scale	AS NOTED
Drawing Number	S-C-714
Sheet Size	ARCH D

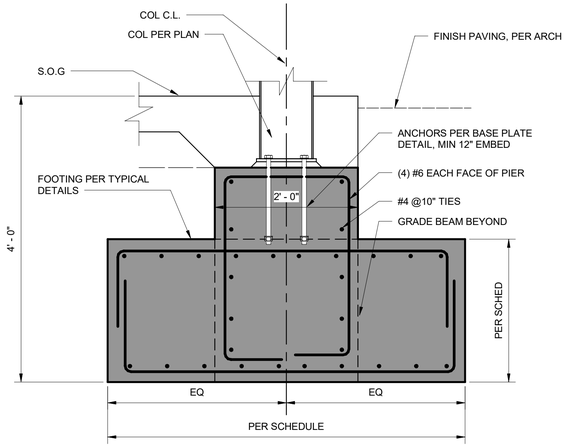

1 SECTION
1" = 1'-0"

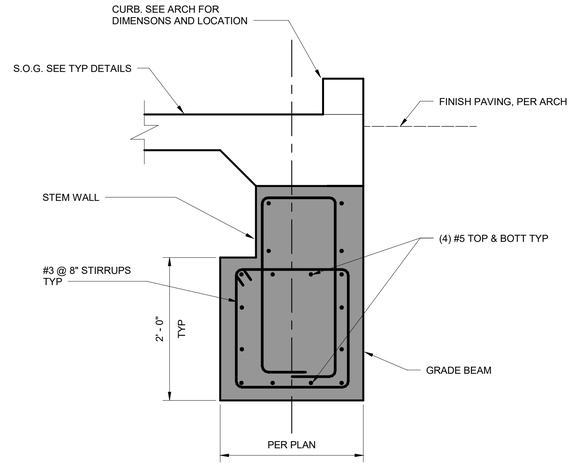

2 GRADE BEAM SECTION
1" = 1'-0"

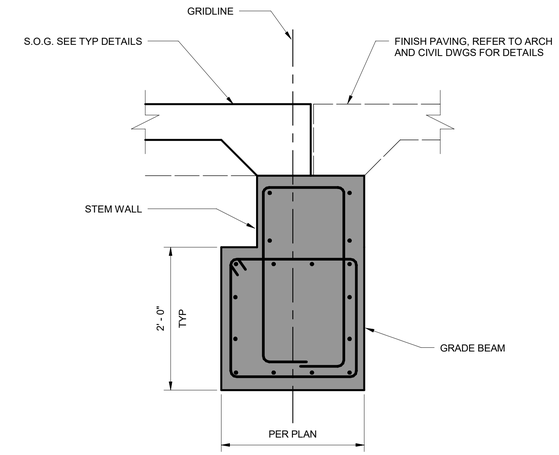

3 GRADE BEAM SECTION AT DOOR
1" = 1'-0"

COLUMN FOOTING SCHEDULE

Mark	Size	Bott Bars	Top Bars
FTG 1	5'-6"X5'-6"X2'-0"	(8)-#6 EW	(8)-#6 EW
FTG 2	5'-0"X5'-0"X2'-0"	(6)-#6 EW	(5)-#3 EW
FTG 3	3'-0"X3'-0"X2'-0"	(4)-#6 EW	(3)-#3 EW

4 FOOTING SCHEDULE
12" = 1'-0"

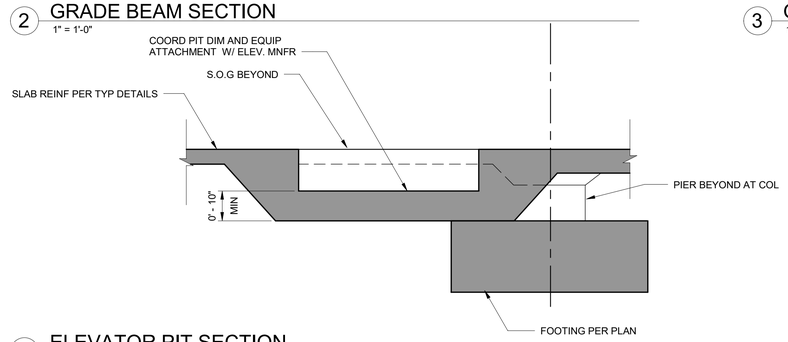

5 ELEVATOR PIT SECTION
1/2" = 1'-0"

Owner
Storm King Art Center
1 Museum Road
New Windsor, NY 12553
+1 (845) 534-3115

Design Architect
heneghan peng architects
14-16 Lord Edward Street
Dublin, D02 YC63
+353 1 633 9000

Executive Architect
WXY Architecture + Urban Design
224 Centre Street, 5th Floor
New York, NY 10013
+1 (212) 219-1953

Landscape Architect
Gustafson Porter + Bowman
1 Cobham Mews
London, MW1 9SB
+44 020 7284 8950

Reed Hilderbrand LLC
33 Whitney Avenue, 3rd Floor
New Haven, CT 06510
+1 (617) 923-2422

Structural & Lighting
ARUP
77 Water Street
New York, NY 10005
+1 (212) 896-3000

MEPF & IT
BuroHappold
100 Broadway #23
New York, NY 10005
+1 (212) 616-0228

Civil
VHB
100 Great Oaks Blvd., Suite 118
Albany, NY 12203
+1 (518) 389-3606

AV & Acoustics
LSTN Consultants
76 Beaver Street, 2nd Floor
New York, NY 10005
+1 (347) 788-0810

Facade
Front Inc.
100 E. Broadway Street, #501
New York, NY 10002
+1 (212) 242-2220

Key Plan

Description	Date
Filing Set	06/17/22

Project

Storm King Art Center

C.F.M. Building

Seal

NOT FOR CONSTRUCTION

Drawing Title

Foundation Details

Date	06/17/22
Scale	As Noted
Drawing Number	S-C-801
Sheet Size	ARCH D

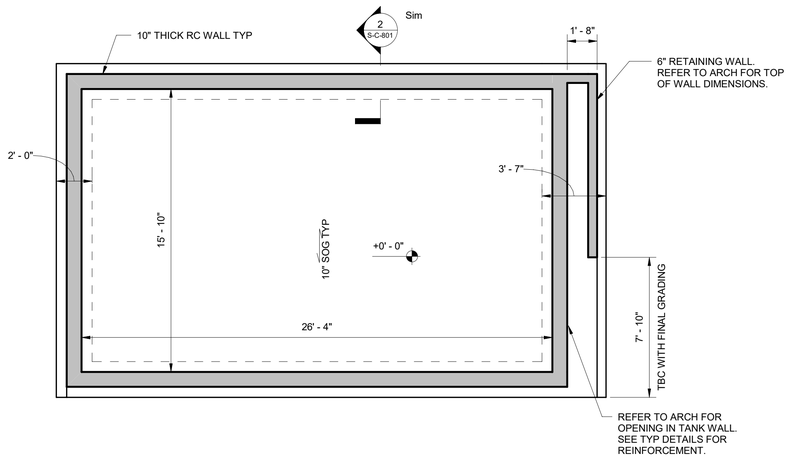

1 TANK FOUNDATION
1/4" = 1'-0"

NOTES:
1. PROVIDE #4 @ 8" EW EF AT 10" WALLS AND SLABS
2. REFER TO ARCH FOR WATERPROOFING DETAILS AND REQUIREMENTS.

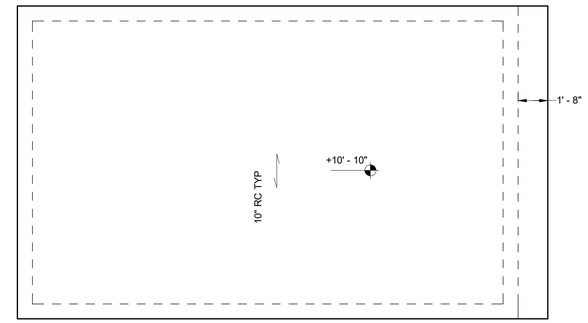

2 TANK LID
1/4" = 1'-0"

Owner
Storm King Art Center
1 Museum Road
New Windsor, NY 12553
+1 (845) 534-3115

Design Architect
heneghan peng architects
14-16 Lord Edward Street
Dublin, D02 YC63
+353 1 633 9000

Executive Architect
WXY Architecture + Urban Design
224 Centre Street, 5th Floor
New York, NY 10013
+1 (212) 219-1953

Landscape Architect
Gustafson Porter + Bowman
1 Cobham Mews
London, MW1 9SB
+44 020 7284 8950

Reed Hilderbrand LLC
33 Whitney Avenue, 3rd Floor
New Haven, CT 06510
+1 (617) 923-2422

Structural & Lighting
ARUP
77 Water Street
New York, NY 10005
+1 (212) 896-3000

MEPF & IT
BuroHappold
100 Broadway #23
New York, NY 10005
+1 (212) 616-0228

Civil
VHB
100 Great Oaks Blvd., Suite 118
Albany, NY 12203
+1 (518) 389-3606

AV & Acoustics
LSTN Consultants
76 Beaver Street, 2nd Floor
New York, NY 10005
+1 (347) 788-0810

Facade
Front Inc.
100 E. Broadway Street, #501
New York, NY 10002
+1 (212) 242-2220

Key Plan

N

Description	Date
Filing Set	06/17/22

Project

Storm King Art Center

C.F.M. Building

Seal

NOT FOR CONSTRUCTION

Drawing Title

Storage Tank - Plans, Sections and Elevations

Date	06/17/22
Scale	As Noted
Drawing Number	S-C-802
Sheet Size	ARCH D

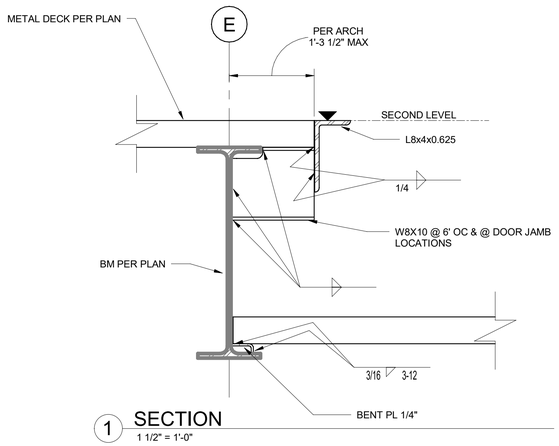

1 SECTION
1 1/2" = 1'-0"

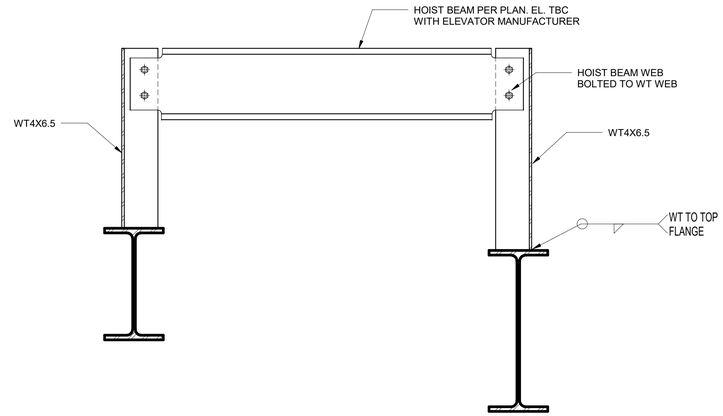

2 HOIST BEAM DETAIL
1 1/2" = 1'-0"

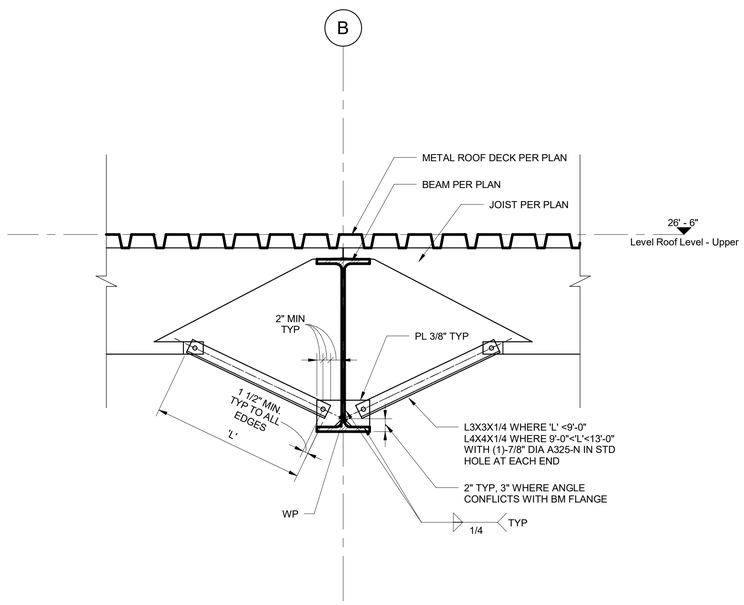

3 TYPICAL BOTTOM FLANGE BRACING
3/4" = 1'-0"

Owner
Storm King Art Center
1 Museum Road
New Windsor, NY 12553
+1 (845) 534-3115

Design Architect
heneghan peng architects
14-16 Lord Edward Street
Dublin, D02 YC63
+353 1 633 9000

Executive Architect
WXY Architecture + Urban Design
224 Centre Street, 5th Floor
New York, NY 10013
+1 (212) 219-1953

Landscape Architect
Gustafson Porter + Bowman
1 Cobham Mews
London, MW1 9SB
+44 020 7284 8950

Reed Hilderbrand LLC
33 Whitney Avenue, 3rd Floor
New Haven, CT 06510
+1 (617) 923-2422

Structural & Lighting
ARUP
77 Water Street
New York, NY 10005
+1 (212) 896-3000

MEPF & IT
BuroHappold
100 Broadway #23
New York, NY 10005
+1 (212) 616-0228

Civil
VHB
100 Great Oaks Blvd., Suite 118
Albany, NY 12203
+1 (518) 389-3606

AV & Acoustics
LSTN Consultants
76 Beaver Street, 2nd Floor
New York, NY 10005
+1 (347) 788-0810

Facade
Front Inc.
100 E. Broadway Street, #501
New York, NY 10002
+1 (212) 242-2220

Key Plan

N

Description	Date
Filing Set	06/17/22

Project

Storm King Art Center

C.F.M. Building

Seal

NOT FOR CONSTRUCTION

Drawing Title

Framing Details

Date	06/17/22
Scale	As Noted
Drawing Number	S-C-811
Sheet Size	ARCH D

ABBREVIATIONS

ABV.	ABOVE
AC	AIR CONDITIONER
AD	ACCESS DOOR
AFF	ABOVE FINISHED FLOOR
AHU	AIR HANDLING UNIT
AL	ACOUSTICAL LINING
ALD	AUTOMATIC LOUVER DAMPER (MOTORIZED)
ATC	AUTOMATIC TEMPERATURE CONTROL
B.D.D.	BACK DRAFT DAMPER
BMS	BUILDING MANAGEMENT SYSTEM
BOD	BOTTOM OF DUCT
BHP	BRAKE HORSE POWER
BRD	BAROMETRIC RELIEF DAMPER
BTU	BRITISH THERMAL UNIT
CC	COOLING COIL
CD	CEILING DIFFUSER
CFM	CUBIC FEET PER MINUTE
CG	CEILING GRILLE
CO2	CARBON DIOXIDE
CHW	CHILLED WATER
CO	CLEAN OUT
COD	CABLE OPERATED VOLUME DAMPER
CDP	CONDENSATE DRAIN PIPING
CP	CONDENSATE PUMP RETURN
CAV	CONSTANT AIR VOLUME TERMINAL
DN	DOWN
EAT	ENTERING AIR TEMPERATURE
EXH FN	EXHAUST FAN
EHC	ELECTRIC HEATING COIL
EV	EXPANSION VESSEL/EXPANSION TANK
EWT	ENTERING WATER TEMPERATURE
ETK	EXPANSION TANK
FC	FLEXIBLE CONNECTION
FCU	FAN COIL UNIT
FD/AD	FIRE DAMPER/ACCESS DOOR
FD/GA	FIRE DAMPER/GRILLE ACCESS
FTR	FIN TUBE RADIATOR
FL	FLOOR
FLA	FULL LOAD AMPS
FSD	FIRE SMOKE DAMPER
FSD/AD	FIRE SMOKE DAMPER/ACCESS DOOR
FSD/GA	FIRE SMOKE DAMPER/GRILLE ACCESS
GPM	GALLONS PER MINUTE
GX	GENERAL EXHAUST
HC	HEATING COIL
HHW	HEATING HOT WATER
HPS	HIGH PRESSURE STEAM
HP	HORSE POWER
HX	HEAT EXCHANGER (SHELL & TUBE)
ID	INSIDE DIMENSION
KW	KILOWATT
LAT	LEAVING AIR TEMPERATURE
LED	LINEAR EXHAUST DIFFUSER (CEILING, WALL, SILL, OR FLOOR)

LRD	LINEAR RETURN DIFFUSER (CEILING, WALL, SILL, OR FLOOR)
LSD	LINEAR SUPPLY DIFFUSER (CEILING, WALL, SILL, OR FLOOR)
LTHW	LOW TEMPERATURE HOT WATER
LVL	LEVEL
LWS	LOUVER WITH WIRE SCREEN
LWT	LEAVING WATER TEMPERATURE
MAT	MIXED AIR TEMPERATURE
MAX	MAXIMUM
MBH	THOUSAND BTU PER HOUR
MBTU	BRITISH THERMAL UNIT (1000 BTU)
MIN	MINIMUM
MO (WO)	MASONRY OPENING (WALL OPENING)
NC	NORMALLY CLOSED
NFA	NET FREE AREA
NIC	NOT IN THIS CONTRACT
NO	NORMALLY OPEN
NTS	NOT TO SCALE
OA	OUTSIDE AIR
OAT	OUTSIDE AIR TEMPERATURE
OBD	OPPOSED BLADE DAMPER
OED	OPEN ENDED DUCT
P	PUMP
PHC	PRE-HEAT COIL
PHX	PLATE & FRAME HEAT EXCHANGE
PSI	POUNDS PER SQUARE INCH (GAUGE)
RA	RETURN AIR
RF	RETURN FAN
RHC	REHEAT COIL
RPM	REVOLUTIONS PER MINUTE
RR	RETURN REGISTER
RX	RECYCLING ROOM EXHAUST
SA	SUPPLY AIR
SCHW	SECONDARY CHILLED WATER
SD	SMOKE DAMPER
SD/ALD	SMOKE DAMPER AND AUTOMATIC LOUVER COMBINATION
SF	SUPPLY FAN
SG	SUPPLY GRILLE
ST	SOUND TRAP
SEF	SMOKE EXHAUST FAN
TOD	TOP OF DUCT
TF	TRANSFER FAN
TG	TOP GRILLE
TR	TOP REGISTER
TD	TRANSFER DUCT
TRX	TRASH EXHAUST
TX	TOILET EXHAUST
UH	UNIT HEATER
VAV	VARIABLE AIR VOLUME
VD	VOLUME DAMPER
VFC	VOLUME FLOW CONTROLLER
VFD	VARIABLE FREQUENCY DRIVE
WMS	WIRE MESH SCREEN
(300)	CUBIC FEET OF AIR PER MINUTE OR GALLONS PER MINUTE

HVAC SYMBOLS (DUCTWORK)

	RECTANGULAR DUCT SUPPLY
	RECTANGULAR DUCT RETURN
	RECTANGULAR DUCT EXHAUST
	ROUND DUCT SUPPLY
	ROUND DUCT RETURN
	ROUND DUCT EXHAUST
	FALT OVAL DUCT SUPPLY
	FLAT OVAL DUCT RETURN
	FLAT OVAL DUCT EXHAUST
	DOUBLE WALL DUCTWORK
	DUCT WITH ACOUSTIC LINING
	DUCT WRAPPED WITH FIRE RATED INSULATION
X" TH	BRANCH DUCT WITH RADIUSED SIDE SPLIT - RECTANGULAR DUCT
	BRANCH DUCT TAP, SINGLE BOOT - RECTANGULAR DUCT
	BRANCH DUCT TAP, DOUBLE BOOT - RECTANGULAR DUCT
	BRANCH DUCT TAP, SINGLE BOOT - ROUND & FLAT OVAL DUCT
	BRANCH DUCT TAP, DOUBLE BOOT - ROUND & FLAT OVAL DUCT
	FLEXIBLE DUCT
	FLEXIBLE CONNECTION
AD	ACCESS DOOR
C.O.	CLEAN OUT
	DUCT THROUGH BEAM PENETRATION
	AUTOMATIC DAMPER - OPPOSED BLADE
	AUTOMATIC DAMPER - PARALLEL BLADE
FSD	FIRE SMOKE DAMPER
FD	FIRE DAMPER
BD.D	BACKDRAFT DAMPER
BR.D	BAROMETRIC DAMPER
A2	SQUARE CEILING DIFFUSER (SHADED SECTORS INDICATE BLANK OFFS)
B2	ROUND CEILING DIFFUSER (SHADED SECTORS INDICATE BLANK OFFS)
C2	ROUND FLOOR DIFFUSER (UFAD)
	REGISTER - SIDEWALL/CEILING/FLOOR - SUPPLY
	REGISTER/GRILLE - SIDEWALL/CEILING/FLOOR - RETURN/EXHAUST
	WALL TRANSFER GRILLES
	LINEAR DIFFUSER/GRILLE - SUPPLY/RETUN/EXHAUST (UNSHADED SECTIONS INDICATE ACTIVE LINEAR, SHADED SECTIONS INDICATE BLANK OFF)
	PLENUM FOR LINEAR DIFFUSER/GRILLE
SD	DUCT SMOKE DETECTOR
FS	DUCT FIRESTAT
AFS	AIRFLOW STATION
	SOUND TRAP
TR.D.	ACOUSTIC TRANSFER DUCT
	TERMINAL UNIT - VAV BOX - WITH/WITHOUT HEATING COIL
	TERMINAL UNIT - FAN COIL UNIT
	TERMINAL UNIT - FAN POWERED BOX WITH/WITHOUT HEATING COIL
	TERMINAL UNIT - FAN POWERED CHILLED BEAM - WITH HEATING & COOLING COILS
	TERMINAL UNIT - ACTIVE CHILLED BEAM - CEILING MOUNTED (SEE EQUIPMENT SCHEDULES)

HVAC SYMBOLS (DUCTWORK)

H	TERMINAL UNIT - ACTIVE CHILLED BEAM - HORIZONTAL ABOVE CEILING MOUNTED (SEE EQUIPMENT SCHEDULES)
V	TERMINAL UNIT - ACTIVE CHILLED BEAM - VERTICAL ABOVE CEILING MOUNTED (SEE EQUIPMENT SCHEDULES)
	TERMINAL UNIT - AIRFLOW REGULATOR (SLIP IN TYPE)
	TERMINAL UNIT - FAN BOOSTER UNIT (UFAD)
	LINT TRAP
	DUCT MOUNTED COIL
	DUCT MOUNTED UVGI
	DUCT MOUNTED HUMIDIFIER

HVAC SYMBOLS (PIPING)

	PIPE TURNING UP
	PIPE TURNING DOWN
	SLOPE RISE IN DIRECTION OF FLOW
	SLOPE DROP IN DIRECTION OF FLOW
	PIPE THROUGH BEAM PENETRATION
	WALL SLEEVE WITH WATER STOP
	ELBOW
	TEE
	BRANCH PIPE TOP CONNECTION
	BRANCH PIPE BOTTOM CONNECTION
	REDUCER/INCREASER CONCENTRIC
	REDUCER/DECREASER ECCENTRIC
	UNION
	FLANGED JOINT
	BLIND FLANGE
	END CAP
	PIPE GUIDE
	PIPE ANCHOR
	BALL VALVE - MANUAL (LEVER HANDLE)
	BALL VALVE - MANUAL (TEE HANDLE)
	BALL VALVE - MOTORIZED
	GENERAL DUTY ISOLATION VALVE (SEE SPEC FOR TYPE)
	GATE VALVE
	GLOBE VALVE
	BUTTERFLY VALVE - MANUAL
	BUTTERFLY VALVE - MOTORIZED
	ORBIT VALVE
	FLOWSETTER VALVE (BALANCING)
	CARTRIDGE FLOW BALANCER
	PRESSURE REDUCING VALVE
	PLUG VALVE
	CHECK VALVE (SWING TYPE)
	CHECK VALVE (SILENT TYPE, CENTER GUIDED)
PICV	PRESSURE INDEPENDENT CONTROL VALVE (PICV)
	2 WAY CONTROL VALVE
	3 WAY CONTROL VALVE (MIXING TYPE)
	3 WAY CONTROL VALVE (DIVERTING TYPE)
S	SOLENOID VALVE
	RELIEF VALVE
BFP	BACKFLOW PREVENTOR
RPZ	BACKFLOW PREVENTER (RPZ TYPE)
	AIR VENT (AUTOMATIC)
	TEMPERATURE GAUGE (DUCT MOUNTED)
	PRESSURE GAUGE W/ PIGTAIL AND PETCOCK

HVAC SYMBOLS (PIPING)

	SIGHTGLASS
	SIGHTGLASS WITH MOISTURE INDICATOR (REFRIGERANT)
	FILTER-DRYER
LD	LEAK DETECTOR, PROBE TYPE
LD	LEAK DETECTOR, CABLE TYPE
M	METER
	AIR VENT (MANUAL)
	Y-STRAINER WITH HOSE END
	Y-STRAINER WITH BLOW OFF BALL VALVE
	Y-STRAINER
	DRAIN VALVE WITH CAPPED HOSE END
	DUPLEX BASKET STRAINER
	NOISE SUPRESSOR (STEAM PRV)
	TEMPERATURE GAUGE
	PRESSURE GAUGE W/ PIGTAIL AND PETCOCK
	FLEXIBLE COUPLING
	PIPE IN PIPE (FUEL OIL)
	HEAT TRACED PIPE
AS	AIR SEPARATOR
XT	EXPANSION TANK
	CHEM SHOT FEEDER
	SHELL AND TUBE HEAT EXCHANGER
	PLATE AND FRAME HEAT EXCHANGER
	PUMP

CONTROLS SYMBOLS

T	THERMOSTAT
T	TEMPERATURE SENSOR
H	HUMIDISTAT
H	HUMIDITY SENSOR
CO	CARBON MONOXIDE SENSOR
CO2	CARBON DIOXIDE SENSOR
NO2	NITROGEN DIOXIDE SENSOR
H1	HYDROGEN SENSOR
R	REFRIGERANT SENSOR
EPO	EMERGENCY POWER OFF SWITCH
	TEMPERATURE GAUGE WITH PIPE WELL

Owner
Storm King Art Center
1 Museum Road
New Windsor, NY 12553
+1 (845) 534-3115

Design Architect
heneghan peng architects
14-16 Lord Edward Street
Dublin, D02 YC63, IE
+353 1 633 9000

Executive Architect
WXY Architecture + Urban Design
224 Centre Street, 5th Floor
New York, NY 10013
+1 (212) 219-1953

Landscape Architect
Gustafson Porter + Bowman
1 Cobham Mews
London, MW1 9SB, UK
+44 020 7284 8950

Reed Hilderbrand LLC
33 Whitney Avenue, 3rd Floor
New Haven, CT, US 06510
+1 (617) 923-2422

Structural & Lighting
ARUP
77 Water Street
New York, NY, US 10005
+1 (212) 896-3000

MEPF & IT
BuroHappold
100 Broadway #23
New York, NY, US 10005
+1 (212) 616-0228

Civil
VHB
100 Great Oaks Blvd., Suite 118
Albany, NY, US 12203
+1 (518) 389-3606

AV & Acoustics
LSTN Consultants
76 Beaver Street, 2nd Floor
New York, NY, US 10005
+1 (347) 788-0810

Facade
Front Inc.
100 E. Broadway Street, #501
New York, NY, US 10002
+1 (212) 242-2220

Key Plan

Description	Date
Filing Set	06/17/22

Project

Storm King Art Center
C.F.M. Building

Seal

NOT FOR CONSTRUCTION

Drawing Title

Abbreviations, Symbols & Legends

Date	06/17/22
Scale	Not to Scale
Drawing Number	M-C-001
Sheet Size	ARCH D

A. GENERAL NOTES

1. EXECUTE THE WORK IN THE BEST AND MOST THOROUGH MANNER AND TO THE SATISFACTION OF THE CONSULTING ENGINEER, WHO WILL JOINTLY INTERPRET THE MEANING OF THE DRAWINGS AND SPECIFICATIONS AND SHALL HAVE THE POWER TO REJECT ANY WORK AND MATERIALS, WHICH IN THEIR JUDGMENT ARE NOT IN FULL ACCORDANCE THEREWITH.

2. EXCEPT FOR CHANGES AS MAY BE SPECIFICALLY APPROVED BY THE CONSULTING ENGINEERS, IN ACCORDANCE WITH ALTERNATES OF OPTIONS STATED HEREINAFTER, ALL WORK MUST BE IN FULL ACCORDANCE WITH THE INTENT OF THE PLANS AND SPECIFICATIONS, COMPLETE IN EVERY WAY AND READY FOR SATISFACTORY AND EFFICIENT OPERATION WHEN DELIVERED TO THE OWNER.

3. WHERE DISAGREEMENTS OCCUR BETWEEN THE PLANS AND THE SPECIFICATIONS, OR WITHIN EITHER DOCUMENT ITSELF, THE ITEM OR ARRANGEMENT OF BETTER QUALITY, GREATER QUANTITY OR HIGHER COST SHALL BE INCLUDED IN THE BASE BID.

4. THE CONTRACTOR COVENANTS AND AGREES THAT THEY AND THEIR SUBCONTRACTORS AND THEY AND THEIR AGENTS, SERVANTS AND EMPLOYEES WILL PROVIDE AND MAINTAIN A SAFE PLACE TO WORK AND THAT THEY AND THEIR WILL COMPLY WITH ALL LAWS AND REGULATIONS OF ANY GOVERNMENTAL AUTHORITY HAVING JURISDICTION THEREOF AND THE CONTRACTOR AGREES TO INDEMNIFY, DEFEND AND HOLD HARMLESS THE CONSULTING ENGINEER, ARCHITECT AND OWNER FROM AND AGAINST ANY LIABILITY, LOSS, DAMAGE OR EXPENSE, INCLUDING ATTORNEY'S FEES ARISING FROM FAILURE OR ALLEGED FAILURE ON THE PART OF THE CONTRACTOR, THEIR SUBCONTRACTORS AND THEY AND THEIR AGENTS, SERVANTS AND EMPLOYEES TO PROVIDE AND MAINTAIN A SAFE PLACE TO WORK OR TO COMPLY WITH ALL LAWS AND REGULATIONS OF ANY GOVERNMENTAL AUTHORITY HAVING JURISDICTION THEREOF.

5. THE CONTRACTOR AND EACH SUBCONTRACTOR COVENANTS AND AGREES TO INDEMNIFY, DEFEND AND HOLD HARMLESS THE CONSULTING ENGINEER, ARCHITECT AND OWNER FROM AND AGAINST ANY LIABILITY, LOSS, DAMAGE OR EXPENSE, INCLUDING ATTORNEY'S ARISING FROM A FAILURE OR ALLEGED FAILURE ON THE PART OF THE CONTRACTOR, THEIR SUBCONTRACTORS AND THEY AND THEIR AGENTS, SERVANTS AND EMPLOYEES PROPERLY TO DISCHARGE THE OBLIGATIONS ASSUMED BY HIM OR THEM IN THE PERFORMANCE OF THE WORK, INCLUDING ANY ACT OR OMISSION ALLEGEDLY RESULTING IN DEATH OR PERSONAL INJURY OR PROPERTY DAMAGE OR IMPROPER CONSTRUCTION, CONSTRUCTION TECHNIQUES OR THE USE OF IMPROPER OR INAPPROPRIATE MATERIAL OR TOOLS.

6. THE CONTRACTOR AGREES THAT ANY CONTROVERSY OR DISPUTE TO WHICH THE CONTRACTOR, THE ARCHITECT, AND THE CONSULTING ENGINEERS ARE PARTIES SHALL BE SUBMITTED TO ARBITRATION FOR DECISION IN ACCORDANCE WITH THE RULES OF SUCH ASSOCIATION FOR CONSTRUCTION INDUSTRY DISPUTES. ALL SUBCONTRACTORS LIKEWISE AGREE TO SUBMIT TO SUCH ARBITRATION ANY DISPUTE BETWEEN OR AMONG THEM, THE CONTRACTOR, THE ARCHITECT AND THE CONSULTING ENGINEERS, AND THE CONTRACTOR AGREES TO MAKE AVAILABLE TO THE CONSULTING ENGINEERS ON DEMAND SIGNED COPIES OF THE CONTRACT BETWEEN THE OWNER AND THE CONTRACTOR AND BETWEEN THE CONTRACTOR AND THEIR SUBCONTRACTORS. THE CONTRACTOR AND EACH SUBCONTRACTOR AGREE THAT BY SUBMITTING A BID WHICH IS ACCEPTED, THIS PARAGRAPH SHALL BE DEEMED A WRITTEN AGREEMENT TO SUBMIT ANY CONTROVERSY THEREAFTER ARISING ARBITRATION.

7. ALL WORK SHALL BE DONE IN CONFORMANCE WITH ALL GOVERNING CODES, INCLUDING AMENDMENTS, BULLETINS, ETC., AS WELL AS STANDARDS OF INSTALLATION AND EQUIPMENT ESTABLISHED FOR THE BUILDINGS, AND REQUIREMENTS OF THE OWNER.

8. OBTAIN ALL NECESSARY PERMITS AND APPROVAL FROM GOVERNING AUTHORITIES AND FILE ALL NECESSARY FORMS. PAY ALL INSPECTION FEES.

9. COORDINATE SCHEDULING OF ALL WORK TO BE PERFORMED WITH OWNER AND/OR THEIR AGENT AND INCLUDE ALL NECESSARY PREMIUM TIME REQUIRED FOR SHUTDOWNS, WORK IN OCCUPIED AREAS, ETC.

10. BEFORE COMMENCING WORK, EXAMINE ALL ADJOINING WORK ON WHICH THIS WORK IS IN ANY WAY DEPENDENT FOR PERFECT WORKMANSHIP ACCORDING TO THE INTENT OF THIS SPECIFICATION, AND REPORT TO THE CONSTRUCTION MANAGER ANY CONDITION WHICH PREVENTS PERFORMANCE OF FIRST-CLASS WORK. NO "WAIVER OF RESPONSIBILITY" FOR INCOMPLETE, INADEQUATE OR DEFECTIVE ADJOINING WORK WILL BE CONSIDERED UNLESS NOTICE HAS BEEN FILED BEFORE SUBMITTAL OF A PROPOSAL.

11. COORDINATE ALL WORK WITH OTHER TRADES TO INSURE INSTALLATION IS MADE IN ACCORDANCE WITH THE CONTRACT DOCUMENTS.

12. FURNISH ADEQUATE LIABILITY INSURANCE AND BONDING AS REQUIRED BY OWNER.

13. INCLUDE ALL LABOR, MATERIALS, AND APPURTENANCES REQUIRED FOR THE FURNISHING, INSTALLING AND TESTING OF ALL WORK. COMPLETE AND MAKE READY FOR OPERATION IN A MANNER SATISFACTORY TO THE ARCHITECT AND CONSULTING ENGINEER, ALL WORK SHOWN ON DRAWINGS AND SPECIFIED HEREIN.

14. ALL WORK SHALL BE GUARANTEED FOR TWO (2) FULL YEARS FROM THE DATE WHEN THE OWNER HAS ISSUED A "CERTIFICATE OF SUBSTANTIAL COMPLETION".

15. PROVIDE TEMPERATURE CONTROL DEVICES FOR ALL EQUIPMENT, THERMAL ZONE. HEATING & COOLING COILS AND EACH

16. DIMENSIONS INDICATED ON THESE DRAWINGS ARE CLEAR, INSIDE DIMENSIONS.

17. CONTRACTOR SHALL ALLOW FOR ADEQUATE FLEXIBLE DUCT AND PIPE CONNECTIONS. CONNECTION SHALL CONFORM TO THE REQUIREMENTS OF THE MECHANICAL DETAILS AND SPECIFICATIONS.

18. IN ADDITION TO ROTATING EQUIPMENT CONNECTIONS, FLEXIBLE ACOUSTIC ISOLATION, BUILDING CONNECTIONS SHALL OCCUR AT ALL MOVEMENT JOINTS, AND AT ALL "BOX-IN BOX" CONSTRUCTION. COORDINATE REQUIREMENTS WITH ALL OTHER DRAWINGS.

19. ALL SUSPENDED EQUIPMENT TO BE HUNG WITH VIBRATION ISOLATORS PER SPECIFICATION SECTION. MECHANICAL DETAILS AND

20. CONTRACTOR SHALL FAMILIARIZE HIMSELF WITH THE VIBRATION ISOLATION REQUIREMENTS IN THE SPECIFICATIONS & STANDARD DETAILS.

21. PROVIDE FIRE DAMPERS WHEN CROSSING RATED WALLS. REFER TO RATED WALL LOCATIONS AND ARCHITECTURAL DRAWINGS FOR FIRE TYPES.

22. BUILDING SMOKE PURGE SYSTEMS SHALL COMPLY WITH THE REQUIREMENTS OF ANY LOCAL AHJ REQUIREMENTS..

23. SUPPORT ANCHORS SECURED TO THE BOTTOM OF FLOOR SLABS SHALL BE OF THE DROP-IN OR SLEEVE ANCHOR VARIETY. POWDER CHARGED ANCHORING METHODS SHALL NOT BE USED.

24. COORDINATE WITH ARCHITECT FOR FINAL LOCATIONS OF ALL THERMOSTATS PRIOR TO INSTALLATION AND SEEK ENGINEER CONFIRMATION.

25. ALL CONTROL POWER WIRING AND TRANSFORMERS FOR DAMPERS, ACTUATORS, VAV PANELS, ETC SHALL BE PROVIDED BY THE CONTROLS CONTRACTOR. BOXES, CONTROL POWER FOR CONTROL DEVICES SHALL BE DERIVED FROM SOURCE DESIGNATED BY THE ELECTRICAL CONTRACTOR.

26. PROVIDE ACCESS PANELS IN CEILINGS FOR ACCESS TO EQUIPMENT WHERE NECESSARY. CONTRACTOR SHALL ALLOW FOR ADEQUATE ACCESS FOR ALL BALANCING COMPONENTS AND HVAC EQUIPMENT. ENSURE ALL MECHANICAL ELEMENTS ARE A MINIMUM 8" ABOVE FALSE CEILING.

27. ALL MECHANICAL EQUIPMENT SHALL BE MOUNTED ON HOUSEKEEPING PADS AS INDICATED IN THE DRAWINGS COMPLETE WITH ACOUSTIC AND VIBRATION MOUNTS AS INDICATED IN THE STANDARD DETAILS.

28. ALL SUPPLY & RETURN / EXHAUST GRILLES SHALL BE VISION PROOF WHERE REQUIRED.

29. REFER TO ARCHITECTS DRAWINGS FOR CEILING AND FLOOR MOUNTED GRILLE & DIFFUSER SETTING OUT DIMENSIONS.

30. THESE DRAWINGS ARE DIAGRAMMATIC IN NATURE. REFERENCE ARCHITECTURAL DRAWINGS FOR DIMENSIONS/RELATIONSHIPS OF ALL EXPOSED ELEMENTS. COORDINATE ALL HIDDEN WORK WITH ALL OTHER TRADES AND WITH THE FINAL DIMENSIONED LAYOUT OF ELEMENTS FROM ALL TRADES PRIOR TO THE START OF ANY WORK. REPORT ANY CONFLICTS TO ARCHITECT FOR RESOLUTION PRIOR TO START OF ANY WORK.

31. ALLOW FOR ACCESS GRATINGS TO EQUIPMENT AND DAMPERS HIGHER THAN 10 FEET ABOVE FLOOR LEVEL IN MECHANICAL ROOMS.

32. PROVIDE ACCESS PANEL IN CEILINGS FOR ACCESS TO EQUIPMENT WHERE NECESSARY. REFER TO ARCHITECTS CEILING PLANS AND DETAILS.

33. DRAIN LINES FROM ROOF MOUNTED EQUIPMENT SHALL BE PIPED TO THE NEAREST ROOF DRAIN.

B MECHANICAL DUCTWORK

1. COMBINATION FIRE SMOKE DAMPERS SHALL BE INSTALLED WHEREVER DUCTWORK PENETRATES A SHAFT ENCLOSURE.

2. MAXIMUM LENGTH OF FLEXIBLE DUCTWORK BETWEEN BRANCH AND AIR TERMINAL SHALL BE 3'-0".

3. PROVIDE VOLUME DAMPERS IN BRANCH AND RUN OUT DUCTWORK FOR ALL AIR OUTLETS AND INLETS. WHERE DAMPERS ARE ABOVE NON-ACCESSIBLE CEILINGS OR ARE WITHIN CONSTRUCTION, CABLE OPERATED, WORM-GEAR TYPE, REMOTE NON-ACCESSIBLE VOLUME DAMPERS SHALL BE PROVIDED.

4. PROVIDE 1" INTERNAL DUCT ACOUSTICAL & THERMAL LINING (TYPE: JOHNS MANVILLE PERMACOTE LINACOUSTIC R-300 TYPE II BOARD OR EQUAL AND APPROVED) ON ALL SUPPLY DUCTWORK FOR THE FIRST 18ft FROM SUPPLY FAN.

5. SUPPORT ANCHORS SECURED TO THE BOTTOM OF FLOOR SLABS SHALL BE OF THE DROP-IN OR SLEEVE ANCHOR VARIETY. POWDER CHARGED ANCHORING METHODS SHALL NOT BE USED.

6. PROVIDE DUCT ACCESS DOORS AND CEILING ACCESS PANELS FOR ALL FIRE, SMOKE AND. COMBINATION FIRE/SMOKE DAMPERS. CEILING ACCESS PANELS SHALL BE COORDINATED WITH ARCHITECTS REQUIREMENTS.

7. PROVIDE SMOKE DETECTORS IN ALL DUCTWORK WHERE REQUIRED BY CODE. COORDINATE ALL SMOKE DETECTORS WITH THE ELECTRICAL CONTRACTOR AND THE FIRE ALARM.

8. AIR OUTLETS LOCATED IN HIGH CEILINGS SHALL BE FIELD ADJUSTED FOR OPTIMUM DRAFT AND THROW PERFORMANCE.

9. ALL EXPOSED DUCTWORK SHALL BE INTERNALLY LINED, CLEAN, STICKER FREE AND FREE OF DEFORMITIES AND MARKS.

10. LINEAR FLOOR GRILLES AND DIFFUSERS SHALL BE SHOWN ON ARCHITECTURAL DRAWINGS AND SHALL BE HEAVY DUTY.

11. MOUNT ALL SIDEWALL REGISTERS AT THE SAME ELEVATION OR AS SHOWN ON ARCHITECTURAL DRAWINGS.

12. ALL SUPPLY AND RETURN GRILLES AND OPENINGS MUST BE COORDINATED WITH ARCHITECTURE USING THE DESIGN REQUIREMENTS SHOWN ON THE MECHANICAL DRAWINGS AND SCHEDULES.

13. APPROVED COORDINATION DRAWINGS TO BE USED FOR ELEVATIONS AND LOCATIONS OF DUCTWORK AND EQUIPMENT.

14. ALL OPEN ENDED DUCTS TO HAVE WIRE MESH SCREENS.

15. OUTDOOR AIR OPENINGS WITHIN 10' OF CONTAMINANTS SHALL POSITIONED TO CONFORM TO ASHRAE 62.1 2007 REQUIREMENTS.

16. ALL AIR PLENUM SHALL BE 18 GAGE SHEET METAL.

C MECHANICAL PIPEWORK

1. ALL PIPING TO ALLOW FOR EXPANSION BY MEANS OF EXPANSION LOOP AND PIPE ANCHORS.

2. ALL GAS-FIRED APPLIANCES SHALL BE VENTED IN ACCORDANCE WITH NFPA-54, REFERENCED IN THE NYC BUILDING CODE AND WITH LOCAL E-DESIGNATION CODE.

3. PROVIDE GAS SAFETY SHUT-OFF VALVES ON BOTH THE FIRM AND INTERRUPTIBLE GAS MAINS LOCATED IN THE BOILER ROOM. THE CONTRACTOR SHALL PRESSURE TEST ALL PIPING AS PER THE SPECIFICATION.

4. ALL PIPING IN UNHEATED AREAS OR OUTSIDE SHALL BE HEAT TRACED.

5. COORDINATE WITH PLUMBING CONTRACTOR FOR ALL GAS CONNECTIONS TO GAS FIRED EQUIPMENT.

6. DRAIN LINES FROM CEILING MOUNTED EQUIPMENT SHALL BE PIPED TO THE NEAREST FLOOR DRAIN OR SANITARY LINE.

7. HEAT TRACE ALL HEATING HOT WATER PIPE LOCATED ABOVE GRADE OUTSIDE OF BUILDINGS, OR IN COVERED WALKWAYS.

8. ALL PIPING PASSING THROUGH MASONRY WALLS SHALL HAVE A SLEEVE, SEE SPECIFICATIONS.

9. ALL PIPING PASSING THROUGH FIRE-RATED WALLS SHALL HAVE A FIRE-RATED SLEEVE - SEE SPECIFICATIONS.

10. REFRIGERANT PIPE INSULATION AND VAPOR BARRIERS SHALL BE CONTINUOUS THROUGH PIPE HANGERS.

11. ALL BLACK STEEL PIPE HANGERS SHALL BE PAINTED PRIOR TO INSTALLATION.

12. PROVIDE A STRAIGHT RUN OF PIPING AT PUMP SUCTIONS OF LENGTH AT LEAST 5 PIPE DIAMETERS.

D. DIRECT DIGITAL CONTROL (DDC) OVERAL SYSTEM

(BASES OF DESIGN : DISTECH CONTROLS BY AUTOMATED BUILDING SOLUTIONS)
CONTRACTOR SHALL INCLUDE A NEW AND OPEN COMMUNICATION PROTOCOL STATE OF THE ART DIRECT DIGITAL CONTROL (DDC) SYSTEM. COMPOSEDOF AN OPERATING SYSTEM CAPABLE TO TREND READING DATA, ALARM CONTROL SETPOINTS OUT OF RANGE, SCHEDULE SPECIAL AND REGULAR EVENTS AND DISPLAY 3D GRAPHICS. THIS OPERATING SYSTEM SHALL BE HOSTED BY A RACK SERVER WITH ALL THE NECESSARY ACCESSORIES IN ORDER TO BE SEATED INTO THE OWNER'S BUILDING IT NETWORK OR DEDICATED DDC FOR PASSWORD PROTECTED REMOTE ACCESS AND ACT AS A VIRTUAL SERVER. THE OPERATING DDC SYSTEM SHALL BE THE LATEST VENDOR'S VERSION AND ANY FUTURE UPGRADES SHALL BE INCLUDED AS PART OF THE SCOPE FOR AT LEAST THE PERIOD OF THE WARRANTY. THE SYSTEM SHALL SUPPORT API PROTOCOLS

TRAINING SHALL BE INCLUDED AND IT SHALL INCLUDE THREE PHASES:
1. A GENERAL SYSTEM OVERALL TRAINING.
2. HANDS-ON TRAINING.
3. FOLLOW UP TRAINING –THIS FOLLOW UP TRAINING SHALL BE SIX MONTHS AFTER FINAL CONSTRUCTION.

THE DDC SYSTEM SHALL INCLUDE DATA MANAGER CONTROLLERS PER EACH LEVEL OR FLOOR WITH NETWORK LOOPS OF A MINIMUM OF 64 DEVICES OR UNITARY CONTROLLERS. THE DDC SYSTEM ALSO SHALL BE CAPABLE OF EXPANSION. DEDICATED UNITARY CONTROLLERS SHALL BE PROVIDED FORALL TYPE OF MECHANICAL SYSTEMS AS WELL AS ALL THE ASSOCIATED END DEVICES. EACH DDC CONTROLLER SHALL HAVE UNIVERSAL INPUTS AND OUTPUTS.

CONTROLS WILL HAVE THE CAPABILITY OF TREND LOGGING SPECIFIC PARAMETERS IN ORDER TO COMMISSION THE SYSTEM AND TRACK ENERGY COSTS AS REQUIRED (THIS INCLUDES ANY METERING STRATEGIES REQUIRED BY LEED E.G. MEASUREMENT & VERIFICATION). IT IS ENVISAGED THAT AN ENERGY "DASHBOARD"WILL BE PROVIDED IN THE FACILITY FOR THE BUILDING MANAGERS TO VIEW THE CURRENT ENERGY USAGE AND HISTORICAL ENERGY USAGE AND BE CONFIGURE PER THE OWNER'S DIRECTION.

THE DDC SYSTEM SHALL HAVE INTEGRATION CAPABILITIES; THE INTENT OF THE INTEGRATION IS TO FORM THE ABILITY TO HAVE A SINGLE ACCESS TO ALL INTEGRATED SYSTEMS. THIS IS NOT LIMITED TO THE FOLLOWING: BOILER MASTER PANELS, VRF INTERFACES, CHILLERS, CRAC UNITS, VFD'S , GAS AND WATER FLOW METERS, WATER TREATMENT SYSTEM, SECURITY, ACCESS CONTROL, CCTV, VIDEO SURVEILLANCE, LIGHTING CONTROL, UPS/BATTERY POWER SYSTEM, ATS SWITCHES, POWER METERS, DIGITAL SIGNAGE, ELEVATOR CONTROLS AND PACKAGED HVAC EQUIPMENT SUCH AS AHUS AND RTUS. ALTHOUGHALL FEATURES MAY NOT BE INSTALLED IN THIS PROJECT, THE DDC SHALL HAVE THE CAPABILITY. IF NECESSARY THE DDC SYSTEM SHALL ALSO BE CAPABLE TO MANAGE WIRELESS COMMUNICATION SYSTEMS. THIS APPLIES TO DATA-MANAGERS AS WELL AS UNITARY CONTROLLERS AND CRITICAL SENSORS.

THE DDC VENDOR SHALL INCLUDE A SEQUENCE OF OPERATIONS GRAPHIC AND DEDICATED PAGE(S). ALL THE SEQUENCES SHOULD BE IN A SEPARATE PART OF THE NAVIGATION TREE, BUT ALSO ORGANIZED BY INDIVIDUAL ROOM, BY AHU EQUIPMENT , AND/OR BY SYSTEM. THE SEQUENCE SHOULD BE THE AS-BUILT

SEQUENCE THAT MATCHES EXACTLY WHAT IS PROGRAMMED. AS COMMISSIONING OCCURS AND SEQUENCE CHANGES ARE MADE, THESE PAGES SHALL BE UPDATED.

SMART BUILDING FEATURE
THE DDC SYSTEM SHALL BE CAPABLE TO ACT AS "THE DRIVER" IN COLLECTING DATA, MONITOR PERFOMANCE AND ENERGY USAGE OF SEVERAL THIRD PARTY SYSTEM VIA DDC INTEGRATION. THE DDC SYSTEM SHALL HAVE INTEGRATION CAPABILITIES, THE INTENT OF THE INTEGRATION IS TO FORM THE ABILITY TO HAVE A SINGLE ACCESS TO ALL INTEGRATED SYSTEMS. THIS IS NOT LIMITED TO THE FOLLOWING: HEAT PUMPS, AIR HANDLING UNITS, VRF INTERFACES, FAN COIL UNITS UNITS, UNIT HEATERS, VFD'S , WATER FLOW METERS, WATER TREATMENT SYSTEM, SECURITY, ACCESS CONTROL, CCTV, VIDEO SURVEILLANCE, LIGHTING CONTROL, UPS/BATTERY POWER SYSTEM, ATS SWITCHES, POWER METERS, DIGITAL SIGNAGE, ELEVATOR CONTROLS, SHADES AND PACKAGED HVAC EQUIPMENT SUCH AS AHUS AND RTUS. IF NECESSARY THE DDC SYSTEM SHALL ALSO BE CAPABLE TO MANAGE WIRELESS COMMUNICATION SYSTEMS THIS APPLIES TO DATA-MANAGERS AS WELL AS UNITARY CONTROLLERS AND CRITICAL SENSORS.

DDC GENERAL NOTES
1. THE DDC CONTRACTOR SHALL FURNISH AND INSTALL ALL STATE OF THE ART HARDWARE AND ALL THE LATEST OPERATING AND APPLICATIONS SOFTWARE NECESSARY TO PERFORM THE CONTROL SEQUENCES OF OPERATION AS CALLED FOR IN THIS SPECIFICATION.
2. AS A MINIMUM, ONE DEDICATED DDCP SHALL BE PROVIDED FOR EACH MAIN HVAC EQUIPMENT (AHU, RTU, WATER SYSTEMS, VAV, FAN POWEREDVAV BOXES, FCU), IT IS ACCEPTABLE TO HAVE EXPANSION DDC CONTROLLER WITHIN THE SAME SYSTEM DDCP.
3. ALL SETPOINTS INDICATED IN THE SEQUENCES SHALL BE ADJUSTABLE AT THE FRONT END DDC MAIN SOFTWARE SYSTEM OR ANY USER INTERFACE STATION CONNECTED TO ANY MAIN DATA MANAGER CONTROLLER.
4. UNLESS OTHERWISED NOTED, THE DDC SYSTEM ARCHITECTURE SHALL TIE INTO THE BUILDING IT INFRASTRUCTURE AND IT SHALL INTERACT BETWEEN EACH OTHER FOR REMOTE ACCESS. BUILDING IT SHALL PROVIDE STATIC IP ADDRESS AS REQUIRE BY THE DDC CONTRACTOR DDC DESIGN.
5. THE DDC CONTRACTOR SHALL COMPLY WITH ALL BUILDING IT INFRASTRUCTURE SECURITY POLICIES FROM REMOTE ACCESS.
6. UNLESS OTHERWISE NOTED, THE DDC CONTRACTOR SHALL PROVIDE, FOR THE PRIMARY NETWORK, AN INDIVIDUAL ETHERNET VERTICAL HOMERUNS FROM DDC SERVER SWITCH/HUB TO EACH DATA MANAGER OR PRIMARY CONTROLLER AS LONG AS ETHERNET MAXIMUM DISTANCE LIMITATION ARE NOT EXCEEDED.
7. THE DDC CONTRACTOR SHALL BE RESPONSIBLE TO FOLLOW ALL THE TECHNICAL REQUIREMENTS IN A DDC SYSTEM ARCHITECTURE DESIGN FOR DISTANCE LIMITATIONS ON ETHERNET AND FIBER NETWORK. ALL ETHERNET SWITCHES OR FIBER TO ETHERNET CONVERTERS AND ASSOCIATED ACCESSORIES TO BE FURNISH BY THE DDC CONTRACTOR. THE DDC VENDOR SHALL PROVIDE PRIMARLY 24VAC POWER INPUT SWITCHES OR CONVERTER'S TYPE.
8. THE DDC BMS SYSTEM SHALL ALLOW THE DISTRIBUTION OF SYSTEM FUNCTIONS SUCH AS MONITORING AND CONTROL AND GRAPHICAL USER INTERFACE ETC. ACROSS THE NETWORK TO ACHIEVE MAXIMUM FLEXIBILITY, ACCESSIBILITY AND PERFORMANCE.
9. IT IS NOT ACCEPTABLE TO UTILIZE THE NETWORK TO SEND CRITICAL DATA REQUIRED BY A CONTROL ALGORITHM FROM ONE CONTROLLER TO ANOTHER. CRITICAL DATA SHALL BE A DIRECT HARDWIRE INPUT TO THE CONTROLLER CONTAINING THE CONTROL ALGORITHM. IF MULTIPLE CONTROLLERS REQUIRE THE SAME PIECE OF DATA FOR A CONTROL ALGORITHM, THE DATA SHALL BE A DIRECT HARDWIRE INPUT TO EACH CONTROLLER.
10. IT IS NOT ACCEPTABLE TO RESTRICTED ACCESS TO DDC SYSTEM DATA BY THE HARDWARE CONFIGURATION OF THE BMS. HARDWARE CONFIGURATION OF THE BMS NETWORK SHALL BE TOTALLY OPEN AND TRANSPARENT TO THE USER WHEN ACCESSING DATA OR DEVELOPING CONTROL PROGRAMS.
11 THE DDC CONTRACTOR BMS DESIGN SHALL BE MADE TO ALLOW THE CO-EXISTENCE OF CURRENT (IF APPLICABLE) AND FUTURE EXPANSION OF DATA MANAGER CONTROLLERS AND PERSONAL COMPUTER OPERATOR WORKSTATIONS ON THE SAME PRIMARY NETWORK.
12. IT IS NOT ACCEPTABLE TO RESTRICTED ACCESS TO A DDC SYSTEM DATA BY THE HARDWARE CONFIGURATION OF THE BMS. HARDWARE CONFIGURATION OF THE BMS NETWORK SHALL BE TOTALLY OPEN AND TRANSPARENT TO THE USER WHEN ACCESSING DATA OR DEVELOPING CONTROL PROGRAMS.
13. THE DDC CONTRACTOR SHALL PROVIDE NETWORK WIRING AS REQUIRED TO ENSURE TOTAL SYSTEM OPERATION AND COMMUNICATION WITHOUT INTERRUPTION, EVEN IF THE NETWORK WIRING IS OPEN IN ONE (1) LOCATION.
14. THE PRIMARY NETWORK SHALL ALLOW ANY DATA MANAGER CONTROL PANEL TO ACCESS ANY DATA FROM, OR SEND CONTROL COMMANDS AND ALARM REPORTS DIRECTLY TO, ANY OTHER PRIMARY CONTROL PANEL OR COMBINATION OF CONTROLLERS ON THE NETWORK WITHOUT DEPENDENCE UPON A CENTRAL OR INTERMEDIATE PROCESSING DEVICE.
15. THE PEER-TO-PEER NETWORK SHALL ALSO ALLOW ANY PRIMARY CONTROL PANEL TO ACCESS, EDIT, MODIFY, ADD, DELETE, BACK UP, RESTORE ALL SYSTEM POINT DATABASE AND ALL PROGRAMS, ASSIGN PASSWORD ACCESS AND CONTROL PRIORITIES TO EACH SYSTEM INDIVIDUALLY. THE LOGON PASSWORD (AT ANY PC WORKSTATION OR PORTABLE OPERATOR TERMINAL) SHALL ENABLE THE OPERATOR TO MONITOR, ADJUST AND CONTROL ONLY THE SYSTEM THAT THE OPERATOR IS AUTHORIZED FOR.
16. A RACK SERVER WITH BUILT-IN MONITOR SHALL BE FURNISHED LOADED WITH THE DDC CONTRACTOR OPERATING BUILDING MANAGEMENT SYSTEM (BMS) SOFTWARE PLUS ALL THE NECESSARY ACCESSORIES FOR MOUNTING AND CONNECTING TO AN IT NETWORK. AN ADDITIONAL UI STATION TO ACCESS DDC SERVER AT THE MAIN LOCATION POINTS OF CONTROL OF THE DDC SYSTEM SHOULD BE ALSO PROVIDED AND SET UP BY THE DDC CONTRACTOR.
17. ALL GLOBAL COMMON INFORMATION (OUTSIDE AIR TEMP & HUMIDITY, ETC) SHALL BE MEASURED AND COMMUNICATED FROM THE CENTRAL WEATHER STATION.
18. WEATHER STATION SHALL BE VAISALA WXT536 & IT SHALL BE PROVIDED WITH ALL NECESSARY ACCESSORIES TO MEASURE PRESSURE, TEMPERATURE, HUMIDITY, RAIN, WIND. INTERFACE CONNECTIVITY AS WELL AS HARDWIRE TERMINATIONS ARE ACCEPTABLE .
19. THE DDC CONTRACTOR SHALL FURNISH COMMUNICATIONS INTERFACE (INCLUDING NECESSARY SOFTWARE) BETWEEN THE DDC SYSTEM AND EACH MANUFACTURER SUPPLIED CONTROL PANEL SPECIFIED. THE DDC SYSTEM SHALL BE CAPABLE OF READING AND DISPLAYING ALL DATA USED BY THE MANUFACTURER'S CONTROL PANEL. SOFTWARE INTERFACE SHALL BE THROUGH LONMARK/BACNET/MOD BUS COMPLIANT PROTOCOL. WHERE THE DDC SYSTEM IS REQUIRED TO CONTROL THE OPERATION OF THE EQUIPMENT, PROVIDE INPUT AND OUTPUT INTERFACE AS REQUIRED.
20. DDC SYSTEM SHALL BE EXPANDABLE WITHOUT HAVING TO PHYSICALLY RECONFIGURE THE NETWORK.
21. AN UNINTERRUPTIBLE POWER SUPPLY (UPS) SHALL BE PROVIDED AND INSTALLED BY THE DDC CONTRACTOR FOR EACH OF THE FOLLOWING DEVICES THAT ARE POWERED BY THE BMS INCLUDING; NETWORK SWITCHES, BMS PRIMARY CONTROL PANEL, BMS SECONDARY CONTROL PANEL, OPERATOR'S WORKSTATION, PRINTER AND FIELD DEVICE. EACH UPS SHALL POWER THE DEVICE FOR A MINIMUM OF 30 MINUTES, IN THE CASE OF POWER INTERRUPTION.
22. EACH UPS SHALL BE PROVIDED WITH DRY CONTACTS FOR STATUS, RECOMMENDED MANUFACTURER: FUNCTIONAL DEVICES PART# PSH850-UPS-STAT.

PRIMARY NETWORK
1. ALL OPERATOR WORKSTATIONS AND DATA MANAGER CONTROLLERS SHALL DIRECTLY RESIDE ON A NETWORK SUCH THAT COMMUNICATIONS (I.E., ABILITY TO ACCESS, EDIT, MODIFY, ADD, DELETE, BACK UP, REPORT, TREND, RESTORE ALL SYSTEM POINT DATABASE AND ALL PROGRAMS) MAY BE EXECUTED DIRECTLY BETWEEN SERVERS, PRIMARY CONTROL PANELS, AND OPERATOR WORKSTATIONS ON A PEER-TO-PEER BASIS.
2. ALL OPERATOR DEVICES EITHER NETWORK RESIDENT OR CONNECTED VIA INTRANET AND INTERNET, SHALL HAVE THE ABILITY TO ACCESS ALL POINT STATUS AND APPLICATION REPORT DATA OR EXECUTE CONTROL FUNCTIONS FOR ANY AND ALL OTHER DEVICES VIA THE PRIMARY NETWORK OR THE SECONDARY NETWORK.
3. ACCESS TO DATA SHALL BE BASED UPON LOGICAL IDENTIFICATION OF BUILDING EQUIPMENT.
4. THE PRIMARY NETWORK SHALL PROVIDE A HIGH-SPEED DATA TRANSFER RATES FOR ALARM REPORTING, QUICK REPORT GENERATION FROM MULTIPLE CONTROLLERS AND UPLOAD/DOWNLOAD EFFICIENCY BETWEEN NETWORK DEVICES. SYSTEM PERFORMANCE SHALL INSURE THAT AN ALARM OCCURRING AT ANY CONTROL PANEL IS DISPLAYED AT ANY PC WORKSTATION, STANDALONE ALARM PRINTER AND/OR CONTROL PANEL WITHIN 5 SECONDS.
5. THE PRIMARY NETWORK SHALL PROVIDE MESSAGE AND ALARM BUFFERING TO PREVENT INFORMATION FROM BEING LOST, ERROR DETECTION, CORRECTION AND RE-TRANSMISSIONTO GUARANTEE DATA INTEGRITY.
6. THE PRIMARY NETWORK SHOULD BE CAPABLE TO DO SYNCHRONIZATION OF REAL-TIME CLOCKS BETWEEN SERVER, PRIMARY CONTROL PANELS, AND OPERATOR WORKSTATIONS, INCLUDING AUTOMATIC DAYLIGHT SAVINGS TIME CORRECTIONS.
7. THE DDC CONTRACTOR SHALL PROVIDE NETWORK WIRING AS REQUIRED TO ENSURE TOTAL SYSTEM OPERATION AND COMMUNICATION WITHOUT INTERRUPTION, EVEN IF THE NETWORK WIRING IS OPEN IN ONE (1) LOCATION.
8. THE PRIMARY NETWORK SHALL ALLOW THE PRIMARY CONTROL PANELS TO ACCESS ANY DATA FROM, OR SEND CONTROL COMMANDS AND ALARM REPORTS DIRECTLY TO, ANY OTHER PRIMARY CONTROL PANEL OR COMBINATION OF CONTROLLERS ON THE NETWORK WITHOUT DEPENDENCE UPON A CENTRAL OR INTERMEDIATE PROCESSING DEVICE.
9. THE PRIMARY CONTROL PANEL SHALL SEND ALARM REPORTS TO MULTIPLE OPERATOR WORKSTATIONS WITHOUT DEPENDENCE UPON A CENTRAL OR INTERMEDIATE PROCESSING DEVICE.
10. THE PEER-TO-PEER NETWORK SHALL ALSO ALLOW ANY DATA MANAGER CONTROL PANEL TO ACCESS, EDIT, MODIFY, ADD, DELETE, BACK UP, RESTORE ALL SYSTEM POINT DATABASE AND ALL PROGRAMS, ASSIGN PASSWORD ACCESS AND CONTROL PRIORITIES TO EACH SYSTEM INDIVIDUALLY. THE LOGON PASSWORD (AT ANY PC WORKSTATION OR PORTABLE OPERATOR TERMINAL) SHALL ENABLE THE OPERATOR TO MONITOR, ADJUST AND CONTROL ONLY THE SYSTEM THAT THE OPERATOR IS AUTHORIZED FOR.

SECONDARY NETWORK
1. THIS NETWORK SHALL CONNECT AND SUPPORT STAND-ALONE SECONDARY CONTROL PANELS AND SHALL COMMUNICATE BI-DIRECTIONALLY WITH THE PRIMARY NETWORK THROUGH ANY DATA MANAGER CONTROL PANELS FOR TRANSMISSION OF GLOBAL DATA. SUFFICIENT NUMBER OF DATA MANAGER CONTROL PANELS SHALL BE PROVIDED FOR CONNECTION OF SECONDARY NETWORKS BASED ON QUANTITY OF SECONDARY CONTROLS PANELS AND DISTANCE LIMITATIONS.
2. SECONDARY CONTROL PANELS SHALL BE ARRANGED ON THE SECONDARY NETWORK IN A FUNCTIONAL RELATIONSHIP MANNER WITH THE DATAMANAGER CONTROL PANELS. FOR EXAMPLE, A VAV SECONDARY CONTROL PANEL ON A SECONDARY NETWORK OF A PRIMARY CONTROL PANEL THAT IS CONTROLLING THE VAV'S CORRESPONDING AHU. PRIMARY CONTROL PANEL HARDWARE (DATA MANAGER)

PRIMARY CONTROL PANEL HARDARE (DATA MANAGER)
1. PROVIDE ONE (1) DATA MANAGER OR PRIMARY CONTROL PANEL AT EACH FLOOR OR LEVEL TO MONITOR AND SEQUENCING EQUIPMENT WITHIN ASSOCIATED FLOOR.
2. IT IS NOT ACCEPTABLE TO HAVE (1) DATA MANAGER OR PRIMARY CONTROLLER SERVING SEVERAL FLOORS UNLESS THE MECHANICAL EQUIPMENT IS INTERACTING WITH EACH OTHER FOR EXAMPLE: AN AHU UNIT IS LOCATED ON THE FIRST FLOOR AND ALL ASSOCIATED VAV BOXES ARE ON A SECOND FLOOR IF THIS IS THE CASE THEN IT IS ACCEPTABLE.
3. HVAC EQUIPMENT THAT INTERACT WITH EACH OTHER SHALL BE WITHIN THE SAME DATA MANAGER OR PRIMARY CONTROLLER.
4. DATA MANAGER CONTROLLER SHALL BE ASHRAE 135 COMPLIANCE AND USE THE LATEST VERSION OF BACNET/ASHRAE 135 PROTOCOL AND COMMUNICATE USING ISO 8802-3 (ETHERNET) DATALINK/PHYSICAL LAYER PROTOCOL.
5. ALL PRIMARY CONTROL PANELS SHALL BE INSTALLED WITH 30% SPARE MEMORY CAPACITY FOR FUTURE CONNECTIONS. PROVIDE ALL HARDWARE MODULES, SOFTWARE MODULES, PROCESSORS, POWER SUPPLIES, REPEATERS ETC. REQUIRED TO ENSURE ADDING A CONTROLLER TO THE SPARE MEMORY.
6. PROVIDE ALL PROCESSORS, POWER SUPPLIES AND COMMUNICATION CONTROLLERS SO THAT THE IMPLEMENTATION OF ADDING A CONTROLLER TO THE SPARE MEMORY ONLY REQUIRES THE ADDITION OF THE APPROPRIATE: END DEVICES AND FIELD WIRING.
7. THE DATA MANAGER OR PRIMARY NETWORK CONTROLLER SHALL BE PROVIDED WITH ALL COMMUNICATION CARDS NEEDED FOR PROJECT INCLUDING CARDS FOR SPARE PORTS LEFT ON CONTROLLER.
8. EACH DATA MANAGER SHALL BE EQUIPPED TO MONITOR ALL INDUSTRY STANDARD TYPES OF INTERFACE PROTOCOLS WITHOUT THE ADDITION OF EQUIPMENT TO THE DATA MANAGER CONTROL PANEL OR ADDITIONAL SOFTWARE DRIVERS.
9. THE OPERATOR SHALL HAVE THE ABILITY TO MANUALLY OVERRIDE AUTOMATIC OR CENTRALLY EXECUTED COMMANDS AT THE DATA MANAGER OR PRIMARY CONTROL PANELS VIA A DISPLAY MOUNTED ON THE FRONT DOOR (FOR EXAMPLE: DISTECH CONTROLS' HORYZON-C DISPLAYS OR EQUAL).
10. EACH DATA MANAGER PRIMARY CONTROL PANEL SHALL CONTINUOUSLY PERFORM SELF-DIAGNOSTICS ON ALL HARDWARE MODULES AND NETWORKCOMMUNICATIONS. THE PRIMARY CONTROL PANEL SHALL PROVIDE BOTH LOCAL AND REMOTE ANNUNCIATION OF ANY DETECTED COMPONENT FAILURES, OR REPEATED FAILURE TO ESTABLISH COMMUNICATION WITH ANY SYSTEM.

DATA MANAGER SOFTWARE
1. FURNISH SOFTWARE TO FORM COMPLETE OPERATING SYSTEM FOR BUILDING AND ENERGY MANAGEMENT.DATA MANAGER SOFTWARE
2. DDC SOFTWARE SHALL BE CAPABLE TO HOST AN UNLIMITED AMOUNT OF DATA MANAGER OR PRIMARY CONTROLLER FOR EXPANDABILITY (E.G., EC-NET 4 SUPERVISOR UNL OR EQUAL).
3. ALL PROGRAMS POINTS SHALL BE IDENTIFIED BY A 30 CHARACTER NAME AND A 16 CHARACTER POINT DESCRIPTOR. THE SAME NAMES SHALL BE DISPLAYED AT BOTH THE DATA MANAGER CONTROL PANEL(S) (VIA PORTABLE TERMINAL) AND THE VIRTUAL RACK SERVER OR ANY UI WORKSTATION(S). MULTI-SYSTEM CONSISTENCY ON POINT NAMES SHOULD BE MAINTAINED.
4. TREND DATA SHALL BE STORED AT THE DATAMANAGER CONTROL PANELS AND AUTOMATICALLY UPLOADED TO THE VIRTUAL DDC RACK SERVER.
5. UPLOADS SHALL OCCUR BASED ON USER-DEFINED INTERVALS, MANUAL COMMANDS, OR AUTOMATICALLY WHEN THE TREND BUFFER IS 80% FULL. ALL TREND DATA SHALL BE AVAILABLE FOR USE IN ANY 3RD PARTY PERSONAL COMPUTER APPLICATIONS LOCATED IN THE DDC.

SECONDARY CONTROL PANEL HARDWARE
1. EACH SECONDARY CONTROL PANEL SHALL OPERATE AS A STAND-ALONE CONTROLLER CAPABLE OF PERFORMING ITS USER SELECTABLE CONTROL ROUTINES INDEPENDENTLY OF ANY OTHER CONTROLLER IN THE SYSTEM. EACH SECONDARY CONTROL PANEL SHALL BE A MICROPROCESSOR-BASED, MULTI-TASKING, REAL-TIME DIGITAL CONTROL PROCESSOR.
2. EACH SECONDARY CONTROLLER SHALL INCLUDE ALL POINT INPUTS AND OUTPUTS NECESSARY TO PERFORM THE SPECIFIED CONTROL SEQUENCES. THE SECONDARY
CONTROLLER SHALL ACCEPT INPUT AND PROVIDE OUTPUT SIGNALS THAT COMPLY WITH INDUSTRY STANDARDS. CONTROLLERS UTILIZING PROPRIETARY CONTROL SIGNALS SHALL NOT BE ACCEPTABLE. OUTPUTS MAY BE UTILIZED EITHER FOR 2-STATE, MODULATING, FLOATING OR PROPORTIONAL CONTROL, ALLOWING FOR ADDITIONAL SYSTEM FLEXIBILITY.
3. CONTROL APPLICATIONS. OPERATING PROGRAMS SHALL BE FIELD-SELECTABLE FOR SPECIFIC APPLICATIONS. IN ADDITION, SPECIFIC APPLICATIONS MAY BE MODIFIED TO MEET THE USER'S EXACT CONTROL STRATEGY REQUIREMENTS, ALLOWING FOR ADDITIONAL SYSTEM FLEXIBILITY. CONTROLLERS THAT REQUIRE FACTORY CHANGES OF ALL APPLICATIONS ARE NOT ACCEPTABLE.
4. CONTROLLERS SHALL INCLUDE ALL POINT INPUTS AND OUTPUTS NECESSARY TO PERFORM THE SPECIFIED CONTROL SEQUENCES. AS A MINIMUM, 50% OF THE POINT OUTPUTS SHALL BE OF THE UNIVERSAL TYPE; THAT IS, THE OUTPUTS MAY BE UTILIZED EITHER AS MODULATING OR TWO-STATE, ALLOWING FOR ADDITIONAL SYSTEM FLEXIBILITY. IN LIEU OF UNIVERSAL OUTPUTS, PROVIDE A MINIMUM OF 50% SPARE OUTPUTS OF EACH TYPE VIA ADDITIONAL POINT TERMINATION BOARDS OR CONTROLLERS. ANALOG OUTPUTS SHALL BE INDUSTRY STANDARD, ALLOWING FOR INTERFACE TO A VARIETY OF END DEVICES. TERMINAL EQUIPMENT CONTROLLERS UTILIZING PROPRIETARY CONTROL SIGNALS AND ACTUATORS SHALL NOT BE ACCEPTABLE.
5. PROVIDE A SECONDARY CONTROL PANEL FOR EACH OF THE FOLLOWING TYPES OF EQUIPMENT (IF APPLICABLE):
• ROOFTOP UNITS (UNLESS IT HAS BEEN SPECIFIED AS A FACTORY PROVIDED SECONDARY CONTROLLER WITH INTEGRATED CAPABILITY)
• AHU (UNLESS IT HAS BEEN SPECIFIED AS A FACTORY PROVIDED SECONDARY CONTROLLER WITH INTEGRATED CAPABILITY)
• VARIABLE AIR VOLUME (VAV) BOXES.
• VRF CONDENSING UNITS AND FAN COIL UNITS
• PERIMETER HEATING CONTROLS
• HEAT EXCHANGER SYSTEM.
• HEAT PUMP SYSTEMS
• HYDRONIC PUMPS
• RADIANT FLOOR SYSTEM
• AC UNITS (UNLESS IT IS A FACTORY PROVIDED SECONDARY CONTROLLER WITH INTEGRATED CAPABILITY)
• UNIT/CABINET UNIT HEATERS.
• EXHAUST FANS.
• OTHER TERMINAL CRITICAL EQUIPMENT.
6. EACH SECONDARY CONTROL PANEL SHALL, AT A MINIMUM, BE PROVIDED WITH:
• APPROPRIATE NEMA RATED ENCLOSURE FOR ITS APPLICATION.
• A STAND-ALONE REAL-TIME DIGITAL CONTROL MICROPROCESSOR MODULE.
• BUILT-IN DISPLAY OR DOOR MOUNTED TYPE (WITH THE EXCEPTION OF VAV CONTROLLERS)
• SECONDARY NETWORK COMMUNICATIONS ABILITY.
• POWER SUPPLIES AS REQUIRED FOR ALL ASSOCIATED MODULES, SENSORS, ACTUATORS, ETC.
• EXPANSION CAPABILITIES
7. THERE SHALL BE PROVISIONS FOR BURO HAPPOLD TO HAVE REMOTE ACCESS VIA A USERNAME AND PASSWORD TO THE DDC SYSTEM FOR THE COLLECTION OF DATA PERFOMANCE OF ALL SYSTEM.

Owner
Storm King Art Center
1 Museum Road
New Windsor, NY 12553
+1 (845) 534-3115

Design Architect
heneghan peng architects
14-16 Lord Edward Street
Dublin, D02 YC63, IE
+353 1 633 9000

Executive Architect
WXY Architecture + Urban Design
224 Centre Street, 5th Floor
New York, NY 10013
+1 (212) 219-1953

Landscape Architect
Gustafson Porter + Bowman
1 Cobham Mews
London, MW1 9SB, UK
+44 020 7284 8950

Reed Hilderbrand LLC
33 Whitney Avenue, 3rd Floor
New Haven, CT, US 06510
+1 (617) 923-2422

Structural & Lighting
ARUP
77 Water Street
New York, NY, US 10005
+1 (212) 896-3000

MEPF & IT
BuroHappold
100 Broadway #23
New York, NY, US 10005
+1 (212) 616-0228

Civil
VHB
100 Great Oaks Blvd., Suite 118
Albany, NY, US 12203
+1 (518) 389-3606

AV & Acoustics
LSTN Consultants
76 Beaver Street, 2nd Floor
New York, NY, US 10005
+1 (347) 788-0810

Facade
Front Inc.
100 E. Broadway Street, #501
New York, NY, US 10002
+1 (212) 242-2220

Key Plan

Description	Date
Filing Set	06/17/22

Project

Storm King Art Center

C.F.M. Building

Seal

NOT FOR CONSTRUCTION

Drawing Title

General Notes

Date	06/17/22
Scale	Not to Scale
Drawing Number	M-C-002
Sheet Size	ARCH D

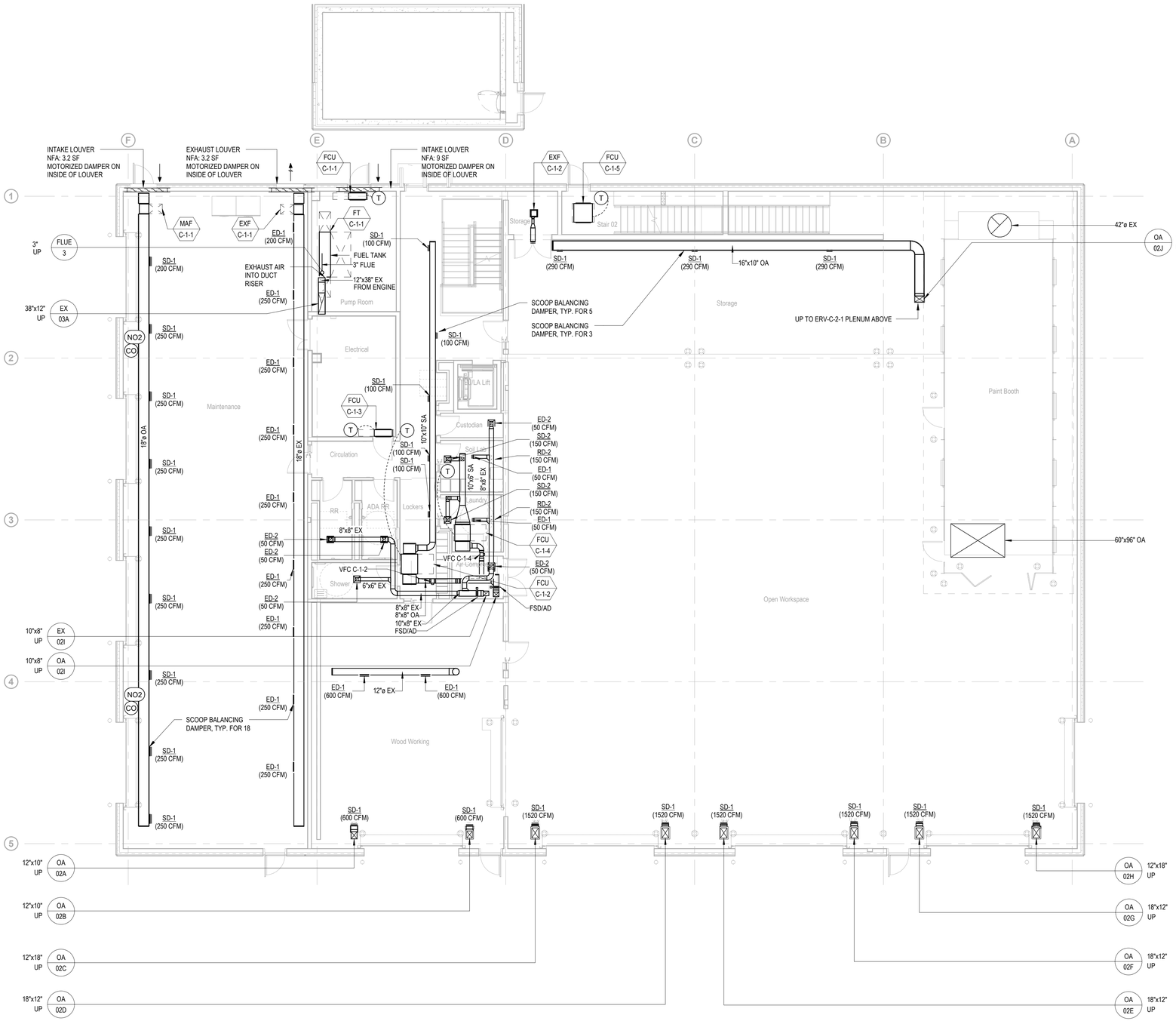

GENERAL NOTES

DRAWINGS ARE PRESENTED HERE AT A 90% CONSTRUCTION DOCUMENTS LEVEL. WHERE DETAIL IS NOT YET SHOWN, PROVIDE ALL COMPONENTS REQUIRED FOR A FULLY FUNCTIONAL HVAC SYSTEM INCLUDING, BUT NOT LIMITED TO:

- THERMOSTATS FOR ALL ZONES ASSOCIATED WITH HEATING AND COOLING UNITS
- C02 SENSORS IN ALL DENSELY OCCUPIABLE AREAS
- FACTORY PACKAGED CONTROLS FOR ALL COMPLEX EQUIPMENT.
- FULL STORM KING FACILITY CENTRAL BUILDING MANAGEMENT SYSTEM, CONNECTING ALL CURRENT AND FUTURE BUILDINGS, AS DESCRIBED ON THE MECHANICAL COVER SHEET
- BALANCING DAMPERS AT ALL AIR TERMINALS
- ACOUSTIC DUCT LINING 10FT UPSTREAM AND DOWNSTREAM OF ALL FANS
- DUCT SILENCERS AT ALL DUCT CONNECTIONS TO AIR HANDLING UNITS AND ROOF MOUNTED UNITS
- FIRE DAMPERS AND FIRE/SMOKE DAMPERS AT ALL DUCT PENETRATIONS THROUGH RATED WALLS.
- INSULATION ON ALL AIR DUCT, HYDRONIC PIPES AND REFRIGERANT PIPES
- DOUBLE-WALL CONSTRUCTION ON ALL EXPOSED DUCT VISIBLE FROM OCCUPIED SPACES.
- SHUTOFF VALVES AT ALL PIPED COMPONENTS
- SPRING VIBRATION ISOLATION AT ALL EQUIPMENT WITH MOVING PARTS
- FIRESTOPPING OF ALL DUCT AND PIPE PENETRATIONS THROUGH ALL WALLS
- HEAT TRACING FOR ALL HYDRONIC PIPING OUTSIDE OF THE BUILDING ENVELOPE
- CONDENSATE DRAIN PIPING FROM ALL COOLING COILS TO DRAIN (INCLUDE CONDENSATE PUMPS WHERE NECESSARY FOR GRAVITY DRAIN)
- AUXILIARY DRIP PANS AND LEAK DETECTION UNDERNEATH ANY HYDRONIC EQUIPMENT (INCLUDING ASSOCIATED VALVING/TRIM)
- AIRFLOW MONITORING STATIONS ON AHUS
- VFDS FOR ANY FAN OR PUMP MOTOR WHICH IS NOT AN ECM
- ACOUSTICALLY LINED RETURN AIR TRANSFER DUCTWORK ABOVE CEILINGS WHERE WALLS EXTEND TO UNDERSIDE OF STRUCTURE ABOVE.
- ALL COMPONENTS REQUIRED FOR A FULLY FUNCTIONAL VRF SYSTEM INCLUDING VALVING AND CONTROL WIRING
- DIFFUSERS TO BE DURABLE INDUSTRIAL GRADE

Owner
Storm King Art Center
1 Museum Road
New Windsor, NY 12553
+1 (845) 534-3115

Design Architect
heneghan peng architects
14-16 Lord Edward Street
Dublin, D02 YC63, IE
+353 1 633 9000

Executive Architect
WXY Architecture + Urban Design
224 Centre Street, 5th Floor
New York, NY 10013
+1 (212) 219-1953

Landscape Architect
Gustafson Porter + Bowman
1 Cobham Mews
London, MW1 9SB, UK
+44 020 7284 8950

Reed Hilderbrand LLC
33 Whitney Avenue, 3rd Floor
New Haven, CT, US 06510
+1 (617) 923-2422

Structural & Lighting
ARUP
77 Water Street
New York, NY, US 10005
+1 (212) 896-3000

MEPF & IT
BuroHappold
100 Broadway #23
New York, NY, US 10005
+1 (212) 616-0228

Civil
VHB
100 Great Oaks Blvd., Suite 118
Albany, NY, US 12203
+1 (518) 389-3606

AV & Acoustics
LSTN Consultants
76 Beaver Street, 2nd Floor
New York, NY, US 10005
+1 (347) 788-0810

Facade
Front Inc.
100 E. Broadway Street, #501
New York, NY, US 10002
+1 (212) 242-2220

Key Plan

N

Description	Date
Filing Set	06/17/22

Project

Storm King Art Center

C.F.M. Building

Seal

NOT FOR CONSTRUCTION

Drawing Title

Duct Plan - Ground Level

Date	06/17/22
Scale	1/8" = 1'-0"
Drawing Number	M-C-101
Sheet Size	ARCH D

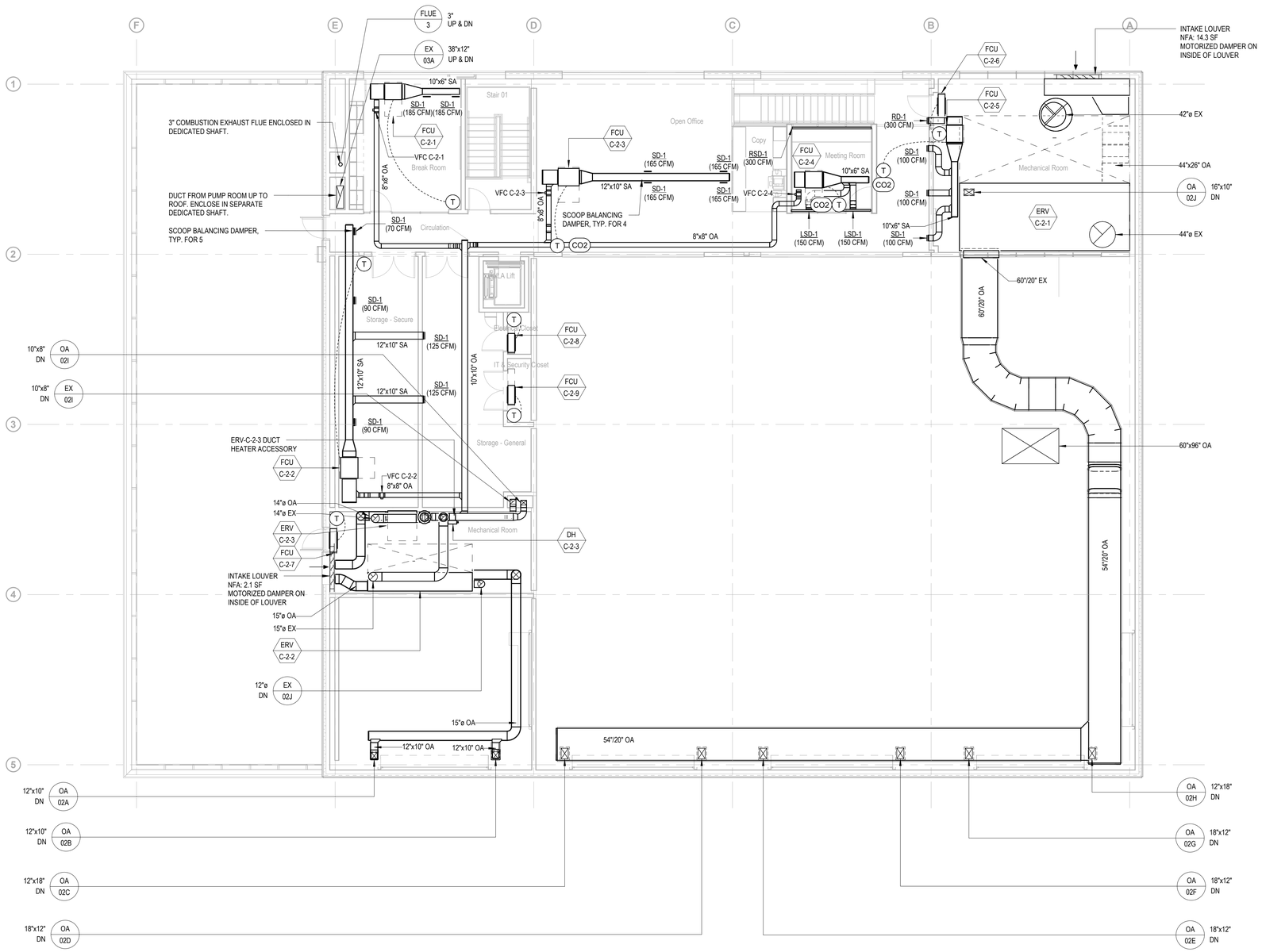

GENERAL NOTES

DRAWINGS ARE PRESENTED HERE AT A 90% CONSTRUCTION DOCUMENTS LEVEL. WHERE DETAIL IS NOT YET SHOWN, PROVIDE ALL COMPONENTS REQUIRED FOR A FULLY FUNCTIONAL HVAC SYSTEM INCLUDING, BUT NOT LIMITED TO:

- THERMOSTATS FOR ALL ZONES ASSOCIATED WITH HEATING AND COOLING UNITS
- CO2 SENSORS IN ALL DENSELY OCCUPIABLE AREAS
- FACTORY PACKAGED CONTROLS FOR ALL COMPLEX EQUIPMENT.
- FULL STORM KING FACILITY CENTRAL BUILDING MANAGEMENT SYSTEM, CONNECTING ALL CURRENT AND FUTURE BUILDINGS, AS DESCRIBED ON THE MECHANICAL COVER SHEET
- BALANCING DAMPERS AT ALL AIR TERMINALS
- ACOUSTIC DUCT LINING 10FT UPSTREAM AND DOWNSTREAM OF ALL FANS
- DUCT SILENCERS AT ALL DUCT CONNECTIONS TO AIR HANDLING UNITS AND ROOF MOUNTED UNITS
- FIRE DAMPERS AND FIRE/SMOKE DAMPERS AT ALL DUCT PENETRATIONS THROUGH RATED WALLS.
- INSULATION ON ALL AIR DUCT, HYDRONIC PIPES AND REFRIGERANT PIPES
- DOUBLE-WALL CONSTRUCTION ON ALL EXPOSED DUCT VISIBLE FROM OCCUPIED SPACES.
- SHUTOFF VALVES AT ALL PIPED COMPONENTS
- SPRING VIBRATION ISOLATION AT ALL EQUIPMENT WITH MOVING PARTS
- FIRESTOPPING OF ALL DUCT AND PIPE PENETRATIONS THROUGH ALL WALLS
- HEAT TRACING FOR ALL HYDRONIC PIPING OUTSIDE OF THE BUILDING ENVELOPE
- CONDENSATE DRAIN PIPING FROM ALL COOLING COILS TO DRAIN (INCLUDE CONDENSATE PUMPS WHERE NECESSARY FOR GRAVITY DRAIN)
- AUXILIARY DRIP PANS AND LEAK DETECTION UNDERNEATH ANY HYDRONIC EQUIPMENT (INCLUDING ASSOCIATED VALVING/TRIM)
- AIRFLOW MONITORING STATIONS ON AHUS
- VFDS FOR ANY FAN OR PUMP MOTOR WHICH IS NOT AN ECM
- ACOUSTICALLY LINED RETURN AIR TRANSFER DUCTWORK ABOVE CEILINGS WHERE WALLS EXTEND TO UNDERSIDE OF STRUCTURE ABOVE.
- ALL COMPONENTS REQUIRED FOR A FULLY FUNCTIONAL VRF SYSTEM INCLUDING VALVING AND CONTROL WIRING
- DIFFUSERS TO BE DURABLE INDUSTRIAL GRADE

Owner
Storm King Art Center
1 Museum Road
New Windsor, NY 12553
+1 (845) 534-3115

Design Architect
heneghan peng architects
14-16 Lord Edward Street
Dublin, D02 YC63, IE
+353 1 633 9000

Executive Architect
WXY Architecture + Urban Design
224 Centre Street, 5th Floor
New York, NY 10013
+1 (212) 219-1953

Landscape Architect
Gustafson Porter + Bowman
1 Cobham Mews
London, MW1 9SB, UK
+44 020 7284 8950

Reed Hilderbrand LLC
33 Whitney Avenue, 3rd Floor
New Haven, CT, US 06510
+1 (617) 923-2422

Structural & Lighting
ARUP
77 Water Street
New York, NY, US 10005
+1 (212) 896-3000

MEPF & IT
BuroHappold
100 Broadway #23
New York, NY, US 10005
+1 (212) 616-0228

Civil
VHB
100 Great Oaks Blvd., Suite 118
Albany, NY, US 12203
+1 (518) 389-3606

AV & Acoustics
LSTN Consultants
76 Beaver Street, 2nd Floor
New York, NY, US 10005
+1 (347) 788-0810

Facade
Front Inc.
100 E. Broadway Street, #501
New York, NY, US 10002
+1 (212) 242-2220

Key Plan

N

Description	Date
Filing Set	06/17/22

Project

Storm King Art Center

C.F.M. Building

Seal

NOT FOR CONSTRUCTION

Drawing Title

Duct Plan - Second Level

Date	06/17/22
Scale	1/8" = 1'-0"
Drawing Number	M-C-102
Sheet Size	ARCH D

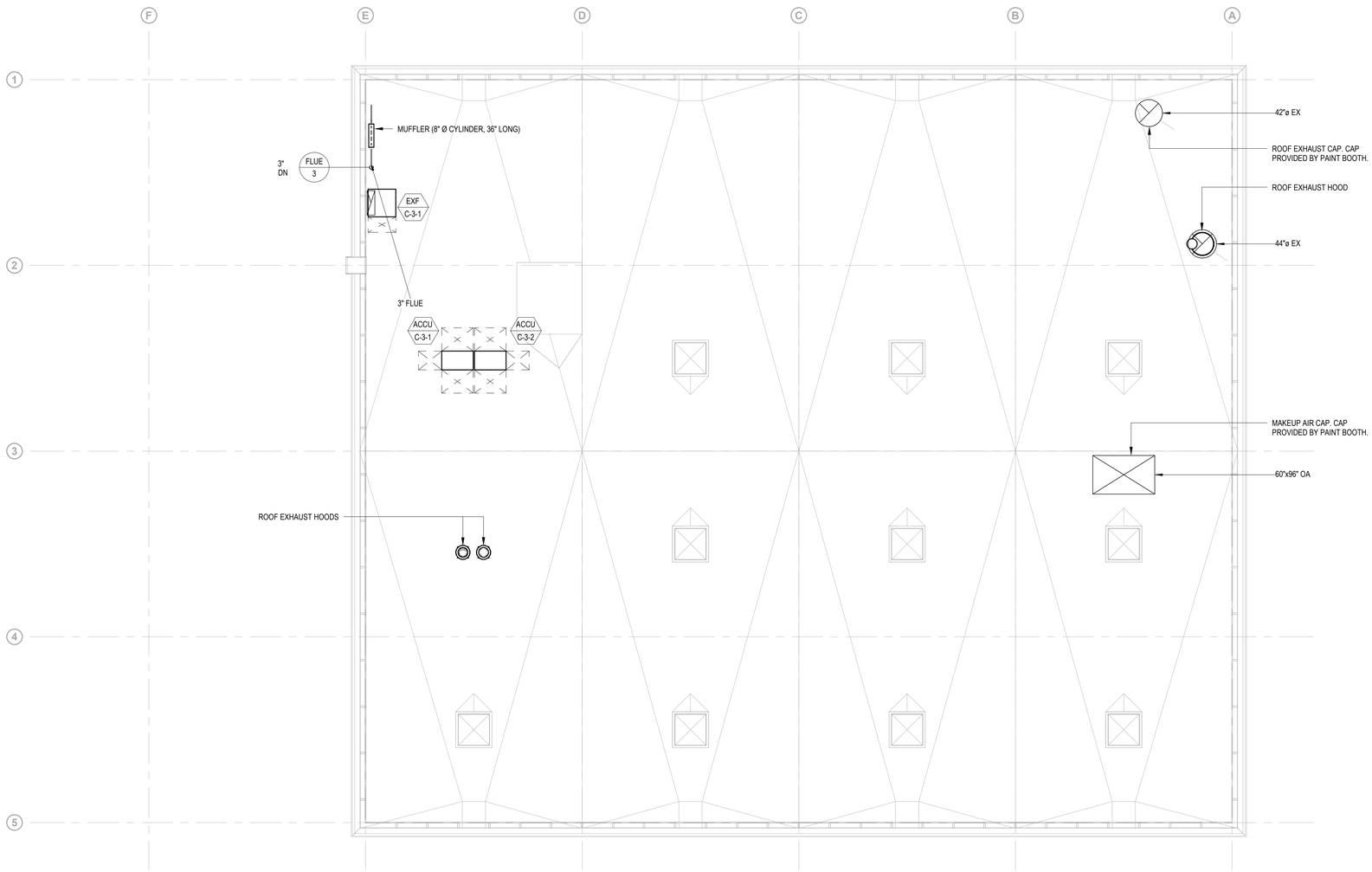

GENERAL NOTES

DRAWINGS ARE PRESENTED HERE AT A 90% CONSTRUCTION DOCUMENTS LEVEL. WHERE DETAIL IS NOT YET SHOWN, PROVIDE ALL COMPONENTS REQUIRED FOR A FULLY FUNCTIONAL HVAC SYSTEM INCLUDING, BUT NOT LIMITED TO:

- THERMOSTATS FOR ALL ZONES ASSOCIATED WITH HEATING AND COOLING UNITS
- C02 SENSORS IN ALL DENSELY OCCUPIABLE AREAS
- FACTORY PACKAGED CONTROLS FOR ALL COMPLEX EQUIPMENT.
- FULL STORM KING FACILITY CENTRAL BUILDING MANAGEMENT SYSTEM, CONNECTING ALL CURRENT AND FUTURE BUILDINGS, AS DESCRIBED ON THE MECHANICAL COVER SHEET
- BALANCING DAMPERS AT ALL AIR TERMINALS
- ACOUSTIC DUCT LINING 10FT UPSTREAM AND DOWNSTREAM OF ALL FANS
- DUCT SILENCERS AT ALL DUCT CONNECTIONS TO AIR HANDLING UNITS AND ROOF MOUNTED UNITS
- FIRE DAMPERS AND FIRE/SMOKE DAMPERS AT ALL DUCT PENETRATIONS THROUGH RATED WALLS.
- INSULATION ON ALL AIR DUCT, HYDRONIC PIPES AND REFRIGERANT PIPES
- DOUBLE-WALL CONSTRUCTION ON ALL EXPOSED DUCT VISIBLE FROM OCCUPIED SPACES.
- SHUTOFF VALVES AT ALL PIPED COMPONENTS
- SPRING VIBRATION ISOLATION AT ALL EQUIPMENT WITH MOVING PARTS
- FIRESTOPPING OF ALL DUCT AND PIPE PENETRATIONS THROUGH ALL WALLS
- HEAT TRACING FOR ALL HYDRONIC PIPING OUTSIDE OF THE BUILDING ENVELOPE
- CONDENSATE DRAIN PIPING FROM ALL COOLING COILS TO DRAIN (INCLUDE CONDENSATE PUMPS WHERE NECESSARY FOR GRAVITY DRAIN)
- AUXILIARY DRIP PANS AND LEAK DETECTION UNDERNEATH ANY HYDRONIC EQUIPMENT (INCLUDING ASSOCIATED VALVING/TRIM)
- AIRFLOW MONITORING STATIONS ON AHUS
- VFDS FOR ANY FAN OR PUMP MOTOR WHICH IS NOT AN ECM
- ACOUSTICALLY LINED RETURN AIR TRANSFER DUCTWORK ABOVE CEILINGS WHERE WALLS EXTEND TO UNDERSIDE OF STRUCTURE ABOVE.
- ALL COMPONENTS REQUIRED FOR A FULLY FUNCTIONAL VRF SYSTEM INCLUDING VALVING AND CONTROL WIRING
- DIFFUSERS TO BE DURABLE INDUSTRIAL GRADE

Owner
Storm King Art Center
1 Museum Road
New Windsor, NY 12553
+1 (845) 534-3115

Design Architect
heneghan peng architects
14-16 Lord Edward Street
Dublin, D02 YC63, IE
+353 1 633 9000

Executive Architect
WXY Architecture + Urban Design
224 Centre Street, 5th Floor
New York, NY 10013
+1 (212) 219-1953

Landscape Architect
Gustafson Porter + Bowman
1 Cobham Mews
London, MW1 9SB, UK
+44 020 7284 8950

Reed Hilderbrand LLC
33 Whitney Avenue, 3rd Floor
New Haven, CT, US 06510
+1 (617) 923-2422

Structural & Lighting
ARUP
77 Water Street
New York, NY, US 10005
+1 (212) 896-3000

MEPF & IT
BuroHappold
100 Broadway #23
New York, NY, US 10005
+1 (212) 616-0228

Civil
VHB
100 Great Oaks Blvd., Suite 118
Albany, NY, US 12203
+1 (518) 389-3606

AV & Acoustics
LSTN Consultants
76 Beaver Street, 2nd Floor
New York, NY, US 10005
+1 (347) 788-0810

Facade
Front Inc.
100 E. Broadway Street, #501
New York, NY, US 10002
+1 (212) 242-2220

Key Plan

N

Description	Date
Filing Set	06/17/22

Project

Storm King Art Center

C.F.M. Building

Seal

NOT FOR CONSTRUCTION

Drawing Title

Duct Plan - Roof Level

Date	06/17/22
Scale	1/8" = 1'-0"
Drawing Number	M-C-103
Sheet Size	ARCH D

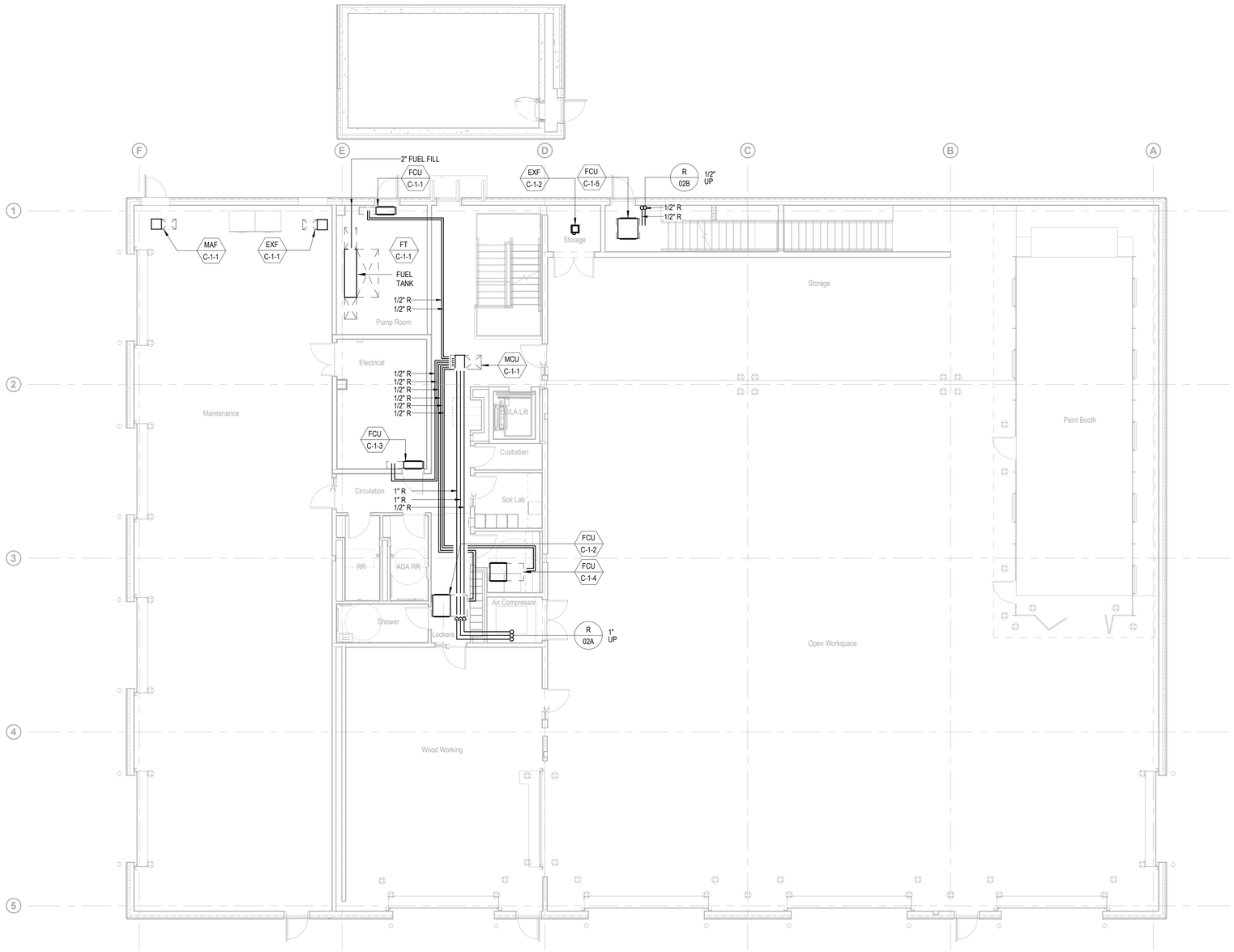

GENERAL NOTES

DRAWINGS ARE PRESENTED HERE AT A 90% CONSTRUCTION DOCUMENTS LEVEL. WHERE DETAIL IS NOT YET SHOWN, PROVIDE ALL COMPONENTS REQUIRED FOR A FULLY FUNCTIONAL HVAC SYSTEM INCLUDING, BUT NOT LIMITED TO:

- THERMOSTATS FOR ALL ZONES ASSOCIATED WITH HEATING AND COOLING UNITS
- C02 SENSORS IN ALL DENSELY OCCUPIABLE AREAS
- FACTORY PACKAGED CONTROLS FOR ALL COMPLEX EQUIPMENT.
- FULL STORM KING FACILITY CENTRAL BUILDING MANAGEMENT SYSTEM, CONNECTING ALL CURRENT AND FUTURE BUILDINGS, AS DESCRIBED ON THE MECHANICAL COVER SHEET
- BALANCING DAMPERS AT ALL AIR TERMINALS
- ACOUSTIC DUCT LINING 10FT UPSTREAM AND DOWNSTREAM OF ALL FANS
- DUCT SILENCERS AT ALL DUCT CONNECTIONS TO AIR HANDLING UNITS AND ROOF MOUNTED UNITS
- FIRE DAMPERS AND FIRE/SMOKE DAMPERS AT ALL DUCT PENETRATIONS THROUGH RATED WALLS.
- INSULATION ON ALL AIR DUCT, HYDRONIC PIPES AND REFRIGERANT PIPES
- DOUBLE-WALL CONSTRUCTION ON ALL EXPOSED DUCT VISIBLE FROM OCCUPIED SPACES.
- SHUTOFF VALVES AT ALL PIPED COMPONENTS
- SPRING VIBRATION ISOLATION AT ALL EQUIPMENT WITH MOVING PARTS
- FIRESTOPPING OF ALL DUCT AND PIPE PENETRATIONS THROUGH ALL WALLS
- HEAT TRACING FOR ALL HYDRONIC PIPING OUTSIDE OF THE BUILDING ENVELOPE
- CONDENSATE DRAIN PIPING FROM ALL COOLING COILS TO DRAIN (INCLUDE CONDENSATE PUMPS WHERE NECESSARY FOR GRAVITY DRAIN)
- AUXILIARY DRIP PANS AND LEAK DETECTION UNDERNEATH ANY HYDRONIC EQUIPMENT (INCLUDING ASSOCIATED VALVING/TRIM)
- AIRFLOW MONITORING STATIONS ON AHUS
- VFDS FOR ANY FAN OR PUMP MOTOR WHICH IS NOT AN ECM
- ACOUSTICALLY LINED RETURN AIR TRANSFER DUCTWORK ABOVE CEILINGS WHERE WALLS EXTEND TO UNDERSIDE OF STRUCTURE ABOVE.
- ALL COMPONENTS REQUIRED FOR A FULLY FUNCTIONAL VRF SYSTEM INCLUDING VALVING AND CONTROL WIRING
- DIFFUSERS TO BE DURABLE INDUSTRIAL GRADE

Owner
Storm King Art Center
1 Museum Road
New Windsor, NY 12553
+1 (845) 534-3115

Design Architect
heneghan peng architects
14-16 Lord Edward Street
Dublin, D02 YC63, IE
+353 1 633 9000

Executive Architect
WXY Architecture + Urban Design
224 Centre Street, 5th Floor
New York, NY 10013
+1 (212) 219-1953

Landscape Architect
Gustafson Porter + Bowman
1 Cobham Mews
London, MW1 9SB, UK
+44 020 7284 8950

Reed Hilderbrand LLC
33 Whitney Avenue, 3rd Floor
New Haven, CT, US 06510
+1 (617) 923-2422

Structural & Lighting
ARUP
77 Water Street
New York, NY, US 10005
+1 (212) 896-3000

MEPF & IT
BuroHappold
100 Broadway #23
New York, NY, US 10005
+1 (212) 616-0228

Civil
VHB
100 Great Oaks Blvd., Suite 118
Albany, NY, US 12203
+1 (518) 389-3606

AV & Acoustics
LSTN Consultants
76 Beaver Street, 2nd Floor
New York, NY, US 10005
+1 (347) 788-0810

Facade
Front Inc.
100 E. Broadway Street, #501
New York, NY, US 10002
+1 (212) 242-2220

Key Plan

N

Description	Date
Filing Set	06/17/22

Project

Storm King Art Center

C.F.M. Building

Seal

NOT FOR CONSTRUCTION

Drawing Title

Pipe Plan - Ground Level

Date	06/17/22
Scale	1/8" = 1'-0"
Drawing Number	M-C-201
Sheet Size	ARCH D

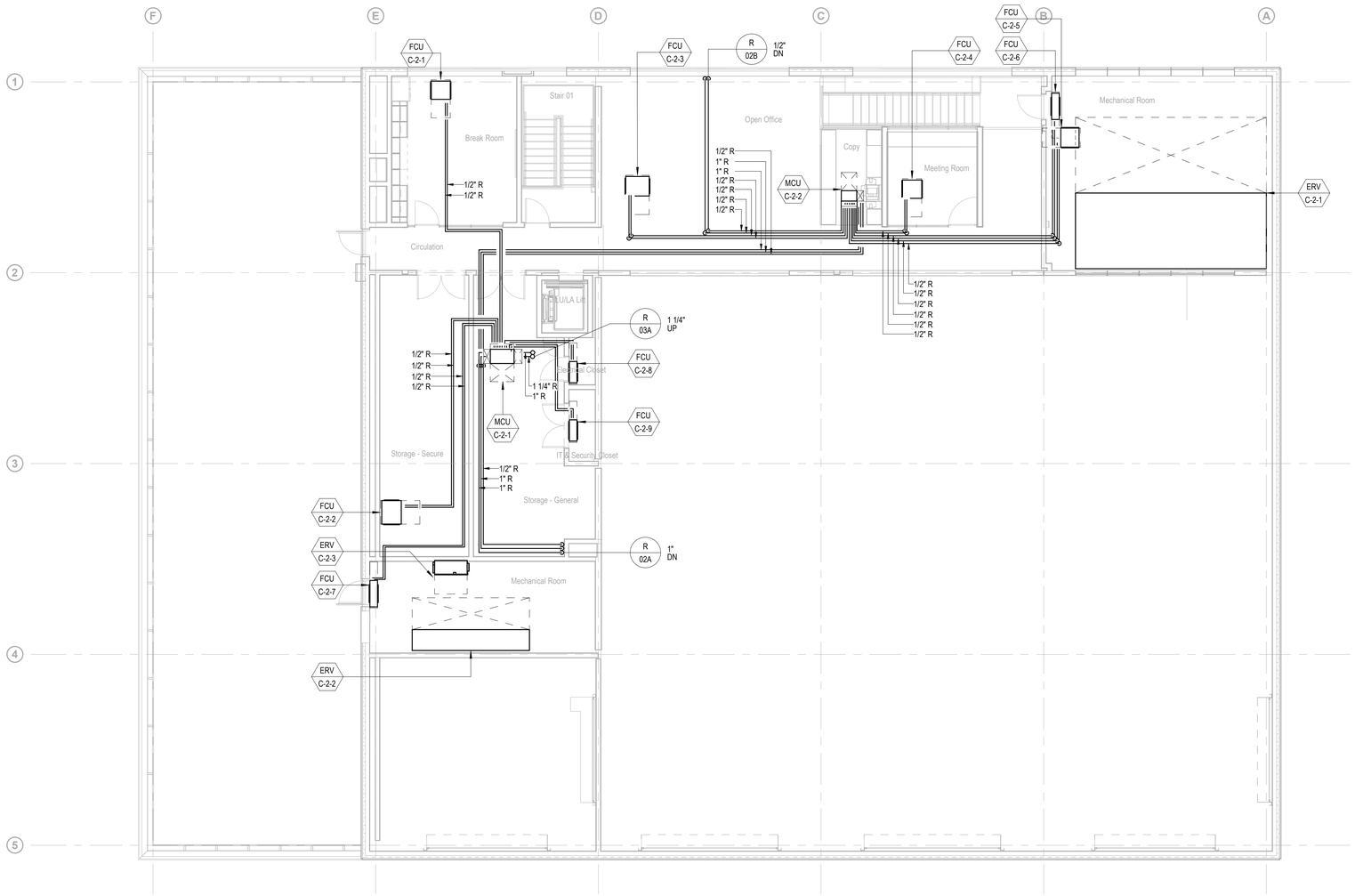

GENERAL NOTES

DRAWINGS ARE PRESENTED HERE AT A 90% CONSTRUCTION DOCUMENTS LEVEL. WHERE DETAIL IS NOT YET SHOWN, PROVIDE ALL COMPONENTS REQUIRED FOR A FULLY FUNCTIONAL HVAC SYSTEM INCLUDING, BUT NOT LIMITED TO:

- THERMOSTATS FOR ALL ZONES ASSOCIATED WITH HEATING AND COOLING UNITS
- C02 SENSORS IN ALL DENSELY OCCUPIABLE AREAS
- FACTORY PACKAGED CONTROLS FOR ALL COMPLEX EQUIPMENT.
- FULL STORM KING FACILITY CENTRAL BUILDING MANAGEMENT SYSTEM, CONNECTING ALL CURRENT AND FUTURE BUILDINGS, AS DESCRIBED ON THE MECHANICAL COVER SHEET
- BALANCING DAMPERS AT ALL AIR TERMINALS
- ACOUSTIC DUCT LINING 10FT UPSTREAM AND DOWNSTREAM OF ALL FANS
- DUCT SILENCERS AT ALL DUCT CONNECTIONS TO AIR HANDLING UNITS AND ROOF MOUNTED UNITS
- FIRE DAMPERS AND FIRE/SMOKE DAMPERS AT ALL DUCT PENETRATIONS THROUGH RATED WALLS.
- INSULATION ON ALL AIR DUCT, HYDRONIC PIPES AND REFRIGERANT PIPES
- DOUBLE-WALL CONSTRUCTION ON ALL EXPOSED DUCT VISIBLE FROM OCCUPIED SPACES.
- SHUTOFF VALVES AT ALL PIPED COMPONENTS
- SPRING VIBRATION ISOLATION AT ALL EQUIPMENT WITH MOVING PARTS
- FIRESTOPPING OF ALL DUCT AND PIPE PENETRATIONS THROUGH ALL WALLS
- HEAT TRACING FOR ALL HYDRONIC PIPING OUTSIDE OF THE BUILDING ENVELOPE
- CONDENSATE DRAIN PIPING FROM ALL COOLING COILS TO DRAIN (INCLUDE CONDENSATE PUMPS WHERE NECESSARY FOR GRAVITY DRAIN)
- AUXILIARY DRIP PANS AND LEAK DETECTION UNDERNEATH ANY HYDRONIC EQUIPMENT (INCLUDING ASSOCIATED VALVING/TRIM)
- AIRFLOW MONITORING STATIONS ON AHUS
- VFDS FOR ANY FAN OR PUMP MOTOR WHICH IS NOT AN ECM
- ACOUSTICALLY LINED RETURN AIR TRANSFER DUCTWORK ABOVE CEILINGS WHERE WALLS EXTEND TO UNDERSIDE OF STRUCTURE ABOVE.
- ALL COMPONENTS REQUIRED FOR A FULLY FUNCTIONAL VRF SYSTEM INCLUDING VALVING AND CONTROL WIRING
- DIFFUSERS TO BE DURABLE INDUSTRIAL GRADE

Owner
Storm King Art Center
1 Museum Road
New Windsor, NY 12553
+1 (845) 534-3115

Design Architect
heneghan peng architects
14-16 Lord Edward Street
Dublin, D02 YC63, IE
+353 1 633 9000

Executive Architect
WXY Architecture + Urban Design
224 Centre Street, 5th Floor
New York, NY 10013
+1 (212) 219-1953

Landscape Architect
Gustafson Porter + Bowman
1 Cobham Mews
London, MW1 9SB, UK
+44 020 7284 8950

Reed Hilderbrand LLC
33 Whitney Avenue, 3rd Floor
New Haven, CT, US 06510
+1 (617) 923-2422

Structural & Lighting
ARUP
77 Water Street
New York, NY, US 10005
+1 (212) 896-3000

MEPF & IT
BuroHappold
100 Broadway #23
New York, NY, US 10005
+1 (212) 616-0228

Civil
VHB
100 Great Oaks Blvd., Suite 118
Albany, NY, US 12203
+1 (518) 389-3606

AV & Acoustics
LSTN Consultants
76 Beaver Street, 2nd Floor
New York, NY, US 10005
+1 (347) 788-0810

Facade
Front Inc.
100 E. Broadway Street, #501
New York, NY, US 10002
+1 (212) 242-2220

Key Plan

N

Description	Date
Filing Set	06/17/22

Project

Storm King Art Center

C.F.M. Building

Seal

NOT FOR CONSTRUCTION

Drawing Title

Pipe Plan - Second Level

Date	06/17/22
Scale	1/8" = 1'-0"
Drawing Number	M-C-202
Sheet Size	ARCH D

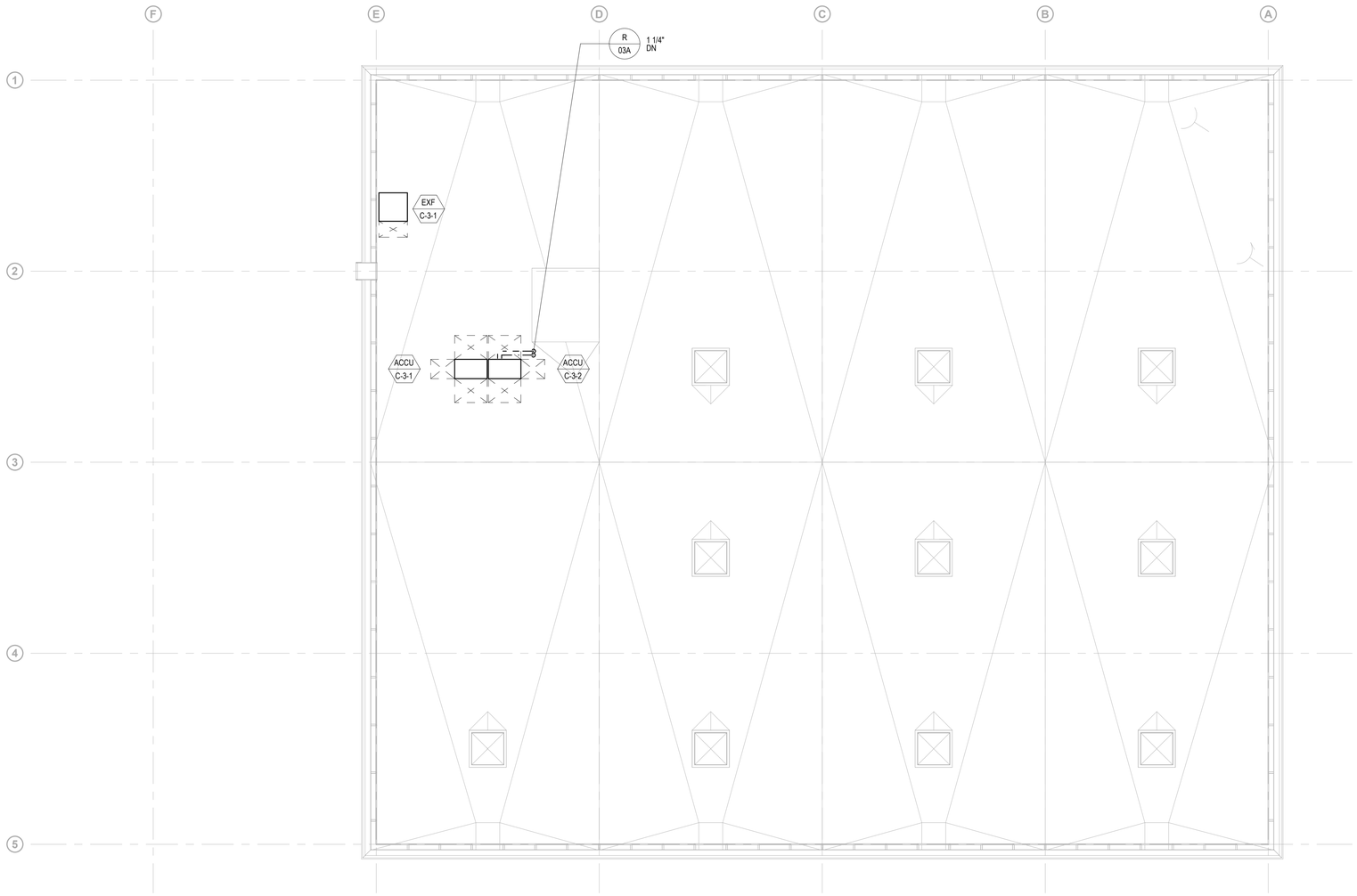

GENERAL NOTES

DRAWINGS ARE PRESENTED HERE AT A 90% CONSTRUCTION DOCUMENTS LEVEL. WHERE DETAIL IS NOT YET SHOWN, PROVIDE ALL COMPONENTS REQUIRED FOR A FULLY FUNCTIONAL HVAC SYSTEM INCLUDING, BUT NOT LIMITED TO:

- THERMOSTATS FOR ALL ZONES ASSOCIATED WITH HEATING AND COOLING UNITS
- C02 SENSORS IN ALL DENSELY OCCUPIABLE AREAS
- FACTORY PACKAGED CONTROLS FOR ALL COMPLEX EQUIPMENT.
- FULL STORM KING FACILITY CENTRAL BUILDING MANAGEMENT SYSTEM, CONNECTING ALL CURRENT AND FUTURE BUILDINGS, AS DESCRIBED ON THE MECHANICAL COVER SHEET
- BALANCING DAMPERS AT ALL AIR TERMINALS
- ACOUSTIC DUCT LINING 10FT UPSTREAM AND DOWNSTREAM OF ALL FANS
- DUCT SILENCERS AT ALL DUCT CONNECTIONS TO AIR HANDLING UNITS AND ROOF MOUNTED UNITS
- FIRE DAMPERS AND FIRE/SMOKE DAMPERS AT ALL DUCT PENETRATIONS THROUGH RATED WALLS.
- INSULATION ON ALL AIR DUCT, HYDRONIC PIPES AND REFRIGERANT PIPES
- DOUBLE-WALL CONSTRUCTION ON ALL EXPOSED DUCT VISIBLE FROM OCCUPIED SPACES.
- SHUTOFF VALVES AT ALL PIPED COMPONENTS
- SPRING VIBRATION ISOLATION AT ALL EQUIPMENT WITH MOVING PARTS
- FIRESTOPPING OF ALL DUCT AND PIPE PENETRATIONS THROUGH ALL WALLS
- HEAT TRACING FOR ALL HYDRONIC PIPING OUTSIDE OF THE BUILDING ENVELOPE
- CONDENSATE DRAIN PIPING FROM ALL COOLING COILS TO DRAIN (INCLUDE CONDENSATE PUMPS WHERE NECESSARY FOR GRAVITY DRAIN)
- AUXILIARY DRIP PANS AND LEAK DETECTION UNDERNEATH ANY HYDRONIC EQUIPMENT (INCLUDING ASSOCIATED VALVING/TRIM)
- AIRFLOW MONITORING STATIONS ON AHUS
- VFDS FOR ANY FAN OR PUMP MOTOR WHICH IS NOT AN ECM
- ACOUSTICALLY LINED RETURN AIR TRANSFER DUCTWORK ABOVE CEILINGS WHERE WALLS EXTEND TO UNDERSIDE OF STRUCTURE ABOVE.
- ALL COMPONENTS REQUIRED FOR A FULLY FUNCTIONAL VRF SYSTEM INCLUDING VALVING AND CONTROL WIRING
- DIFFUSERS TO BE DURABLE INDUSTRIAL GRADE

Owner
Storm King Art Center
1 Museum Road
New Windsor, NY 12553
+1 (845) 534-3115

Design Architect
heneghan peng architects
14-16 Lord Edward Street
Dublin, D02 YC63, IE
+353 1 633 9000

Executive Architect
WXY Architecture + Urban Design
224 Centre Street, 5th Floor
New York, NY 10013
+1 (212) 219-1953

Landscape Architect
Gustafson Porter + Bowman
1 Cobham Mews
London, MW1 9SB, UK
+44 020 7284 8950

Reed Hilderbrand LLC
33 Whitney Avenue, 3rd Floor
New Haven, CT, US 06510
+1 (617) 923-2422

Structural & Lighting
ARUP
77 Water Street
New York, NY, US 10005
+1 (212) 896-3000

MEPF & IT
BuroHappold
100 Broadway #23
New York, NY, US 10005
+1 (212) 616-0228

Civil
VHB
100 Great Oaks Blvd., Suite 118
Albany, NY, US 12203
+1 (518) 389-3606

AV & Acoustics
LSTN Consultants
76 Beaver Street, 2nd Floor
New York, NY, US 10005
+1 (347) 788-0810

Facade
Front Inc.
100 E. Broadway Street, #501
New York, NY, US 10002
+1 (212) 242-2220

Key Plan

N

Description	Date
Filing Set	06/17/22

Project

Storm King Art Center

C.F.M. Building

Seal

NOT FOR CONSTRUCTION

Drawing Title

Pipe Plan - Roof Level

Date	06/17/22
Scale	1/8" = 1'-0"
Drawing Number	M-C-203
Sheet Size	ARCH D

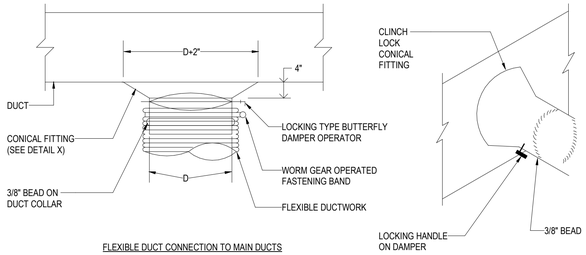

FLEXIBLE DUCT CONNECTION TO MAIN DUCTS

DETAIL X

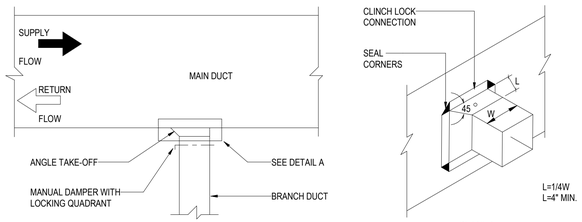

BRANCH DUCT CONNECTION

DETAIL A

1 LOW PRESSURE BRANCH DUCT CONNECTIONS

NOT TO SCALE

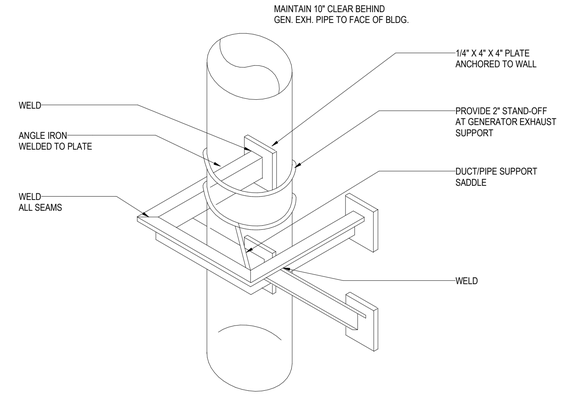

3 SUPPORT SYSTEM FOR VERTICAL DUCTS

NOT TO SCALE

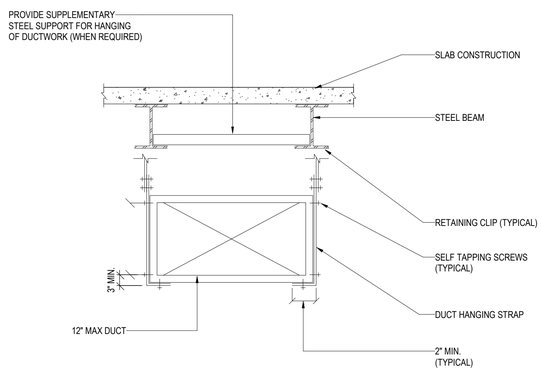

NOTES:
1. DUCT SHALL BE SUSPENDED WITH GALVANIZED BAND IRON STRAPS SECURELY FASTENED TO THE BOTTOM AND SIDE OF THE DUCT. STRAPS TO BE SIZED IN ACCORDANCE WITH SMACNA TABLE 4-1 OR ACCORDING TO LOCAL CODES, WHICHEVER IS MORE STRINGENT.
2. DUCTS WIDER THEN 60 INCHES TO BE SUPPORTED BY THE TRAPEZE ANGLES IN ACCORDANCE WITH SMACNA TABLE 4-3.
3. REFRENCE SHALL ALSO BE MADE TO SPECIFICATION SECTION 230548

4 DUCT HANGING FROM STRUCTURAL STEEL

NOT TO SCALE

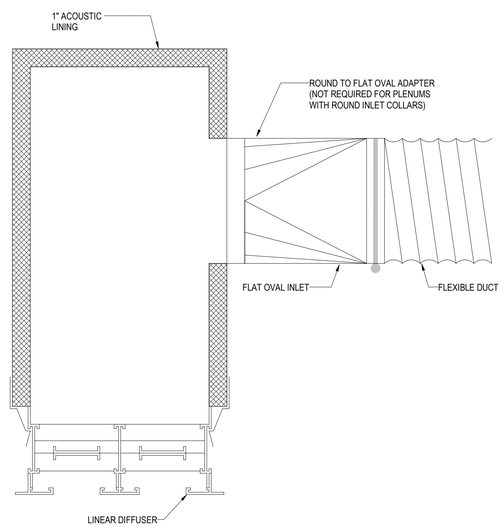

5 LINEAR DIFFUSER PLENUM

NOT TO SCALE

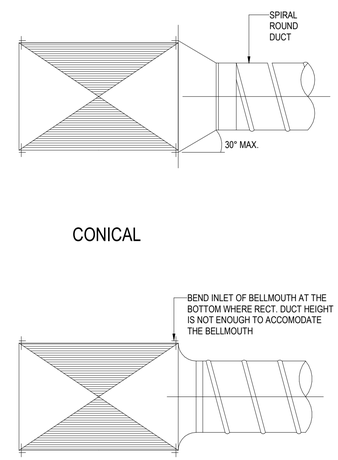

NOTE:
1. SECURE ALL CONNECTIONS TO COMPLY WITH THE REQUIREMENTS OF THE PRESSURE CLASS SPECIFIED.
2. SUPPLY ROUND DUCT TAKE-OFF IS SHOWN. RETURN/EXHAUST SIMILAR.
3. "SPIN-INS" PERMITTED ONLY W/DUCT CONSTRUCTION OF 2" W.C. OR LESS.

6 ROUND TAKE OFF CONNECTION FROM RECTANGULAR

NOT TO SCALE

Owner
Storm King Art Center
1 Museum Road
New Windsor, NY 12553
+1 (845) 534-3115

Design Architect
heneghan peng architects
14-16 Lord Edward Street
Dublin, D02 YC63, IE
+353 1 633 9000

Executive Architect
WXY Architecture + Urban Design
224 Centre Street, 5th Floor
New York, NY 10013
+1 (212) 219-1953

Landscape Architect
Gustafson Porter + Bowman
1 Cobham Mews
London, MW1 9SB, UK
+44 020 7284 8950

Reed Hilderbrand LLC
33 Whitney Avenue, 3rd Floor
New Haven, CT, US 06510
+1 (617) 923-2422

Structural & Lighting
ARUP
77 Water Street
New York, NY, US 10005
+1 (212) 896-3000

MEPF & IT
BuroHappold
100 Broadway #23
New York, NY, US 10005
+1 (212) 616-0228

Civil
VHB
100 Great Oaks Blvd., Suite 118
Albany, NY, US 12203
+1 (518) 389-3606

AV & Acoustics
LSTN Consultants
76 Beaver Street, 2nd Floor
New York, NY, US 10005
+1 (347) 788-0810

Facade
Front Inc.
100 E. Broadway Street, #501
New York, NY, US 10002
+1 (212) 242-2220

Key Plan

Description	Date
Filing Set	06/17/22

Project

Storm King Art Center

C.F.M. Building

Seal

NOT FOR CONSTRUCTION

Drawing Title

Mechanical Details

Date	06/17/22
Scale	Not to Scale
Drawing Number	M-C-501
Sheet Size	ARCH D

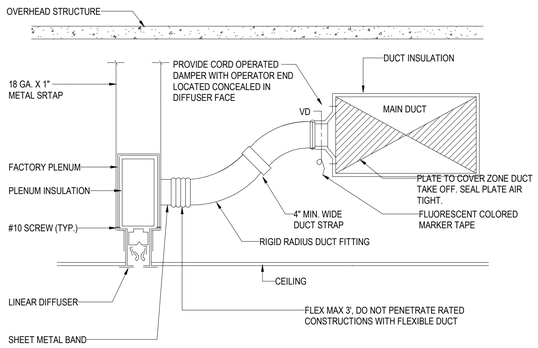

NOTE:
1. FLEX DUCT INSTALLED PER MANUFACTURERS LISTING.

1 LINEAR DIFFUSER CONNECTION

NOT TO SCALE

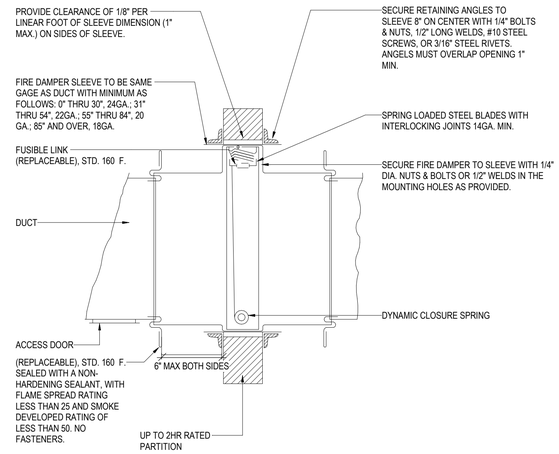

2 DYNAMIC FIRE DAMPER

NOT TO SCALE

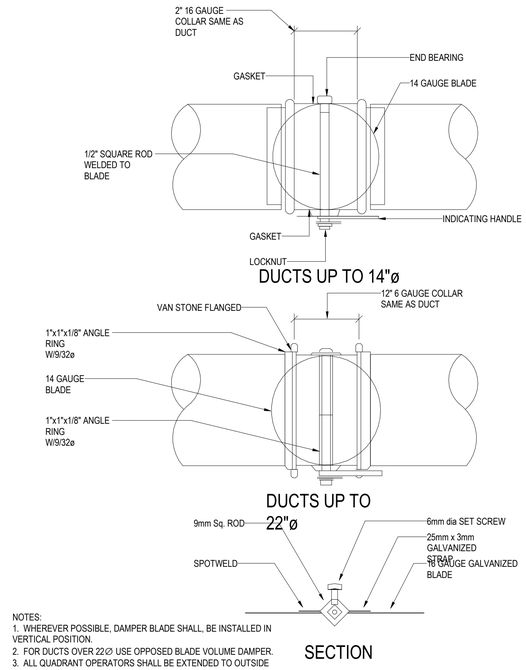

NOTES:
1. WHEREVER POSSIBLE, DAMPER BLADE SHALL, BE INSTALLED IN VERTICAL POSITION.
2. FOR DUCTS OVER 22∅ USE OPPOSED BLADE VOLUME DAMPER.
3. ALL QUADRANT OPERATORS SHALL BE EXTENDED TO OUTSIDE OF INSULATION

3 ROUND VOLUME DAMPER

NOT TO SCALE

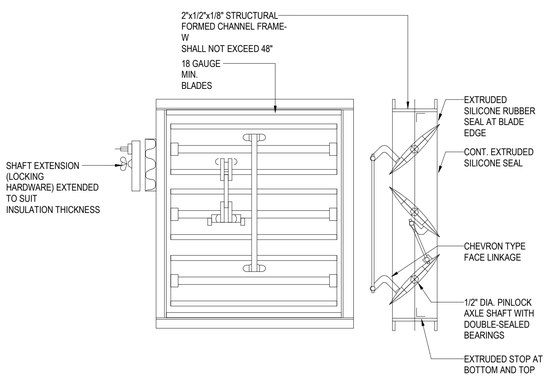

OPPOSED BLADE ACTION DAMPER

NOTES:
1. ALL BRANCH DUCTS SHALL HAVE VOLUME DAMPERS.

4 OPPOSED BLADE ACTION DAMPER

NOT TO SCALE

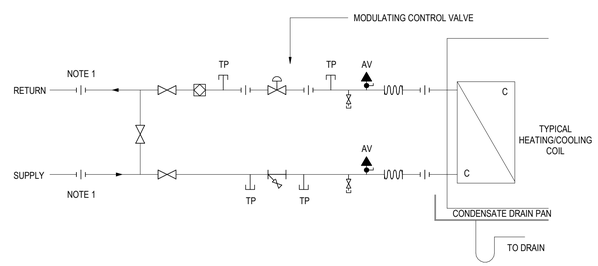

NOTE:
1. ELECTROLYTICALLY ISOLATED COUPLING

ADDITIONALLY:
ALL VALVES AND FITTINGS SHALL BE LINE SIZE

5 FCU AND VAV HEATING OR COOLING 2 WAY VALVE

NOT TO SCALE

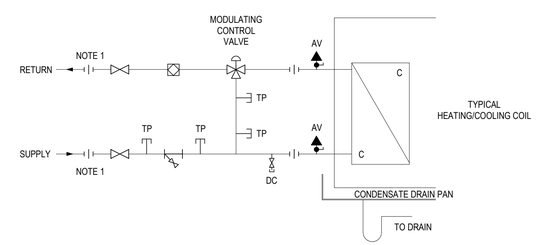

NOTE:
1. ELECTROLYTICALLY ISOLATED COUPLING

ADDITIONALLY:
- ALL VALVES AND FITTINGS SHALL BE LINE SIZE

6 FCU AND VAV HEATING OR COOLING 3 WAY VALVE

NOT TO SCALE

Owner
Storm King Art Center
1 Museum Road
New Windsor, NY 12553
+1 (845) 534-3115

Design Architect
heneghan peng architects
14-16 Lord Edward Street
Dublin, D02 YC63, IE
+353 1 633 9000

Executive Architect
WXY Architecture + Urban Design
224 Centre Street, 5th Floor
New York, NY 10013
+1 (212) 219-1953

Landscape Architect
Gustafson Porter + Bowman
1 Cobham Mews
London, MW1 9SB, UK
+44 020 7284 8950

Reed Hilderbrand LLC
33 Whitney Avenue, 3rd Floor
New Haven, CT, US 06510
+1 (617) 923-2422

Structural & Lighting
ARUP
77 Water Street
New York, NY, US 10005
+1 (212) 896-3000

MEPF & IT
BuroHappold
100 Broadway #23
New York, NY, US 10005
+1 (212) 616-0228

Civil
VHB
100 Great Oaks Blvd., Suite 118
Albany, NY, US 12203
+1 (518) 389-3606

AV & Acoustics
LSTN Consultants
76 Beaver Street, 2nd Floor
New York, NY, US 10005
+1 (347) 788-0810

Facade
Front Inc.
100 E. Broadway Street, #501
New York, NY, US 10002
+1 (212) 242-2220

Key Plan

Description	Date
Filing Set	06/17/22

Project

Storm King Art Center
C.F.M. Building

Seal

NOT FOR CONSTRUCTION

Drawing Title

Mechanical Details

Date	06/17/22
Scale	Not to Scale
Drawing Number	M-C-502
Sheet Size	ARCH D

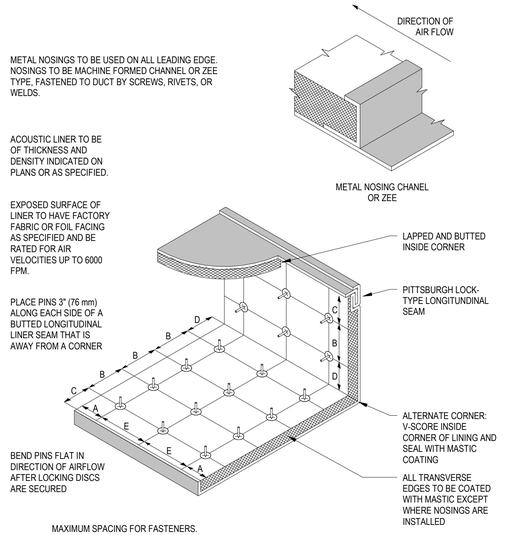

MAXIMUM SPACING FOR FASTENERS.
ACTUAL INTERVALS ARE APPROXIMATE.

VELOCITY	DIMENSIONS				
	A	B	C	D	E
0-2500 FPM (0-12.7 MPS)	3" (76.2)	12" (305)	4" (102)	6" (152)	18" (457)
2501-6000 FPM (12.7-30.5 MPS)	3" (76.2)	6" (152)	4" (102)	6" (152)	16" (406)

REFERENCE SMACNA FIG. 2-19, AS MODIFIED

LINER TO BE ADHERED TO THE DUCT WITH 90% MIN. AREA COVERAGE OF ADHESIVE, AND BE FASTENED WITH MECHANICAL WELD PINS. DO NOT USE ADHESIVE BASE PINS.

ALL DIMENSIONS SHOWN ON PLANS ARE INSIDE CLEAR

U.O.N. EXTERNAL THERMAL INSULATION MAY BE OMITTED WHERE DUCTS ARE INTERNALLY LINED

2 DUCTWORK ACOUSTIC LINING

NOT TO SCALE

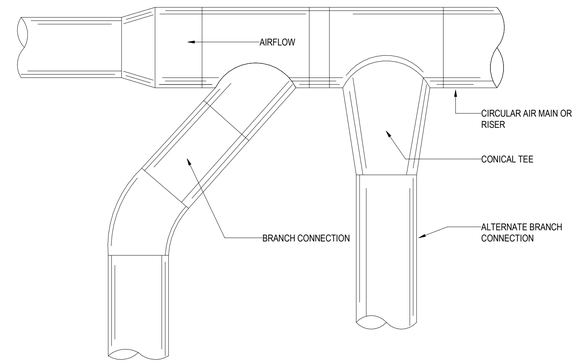

3 CIRCULAR DUCT CONNECTIONS

NOT TO SCALE

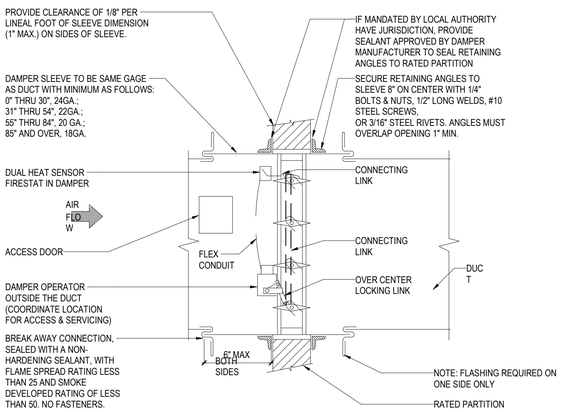

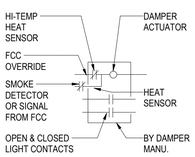

WIRING DIAGRAM

NOTES:

1. DAMPER TO BE U.L. LABELED N.F.P.A. 90A APPROVED.

2. N.F.P.A. APPROVED INSTALLATION DETAILS TO BE PART OF SUBMISSION OF COMBINATION FIRE & SMOKE DAMPER FOR APPROVAL, WHICH SHALL MEET N.F.P.A. STANDARD 90A.

3. DETAILS SHOWN ARE FOR COMBINATION FIRE SMOKE DAMPERS IN HORIZONTAL DUCTWORK. FOR DAMPERS IN VERTICAL DUCTWORK, DETAIL IS SIMILAR.

4. INSTALL DAMPER IN ACCORDANCE WITH MANUFACTURERS REQUIREMENTS.

5. ACTUATOR TO HAVE AN ADDRESSABLE DAMPER POSITION INDICATOR.

4 COMBINATION FIRE AND SMOKE DAMPER

NOT TO SCALE

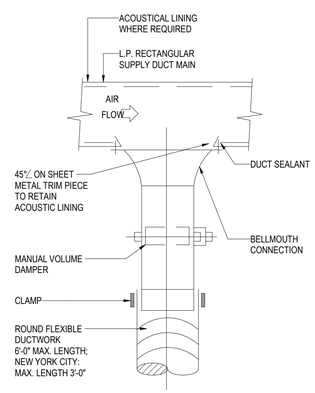

NOTE:

FLEXIBLE DUCT CONNECTIONS ARE ONLY PERMITTED IN AREAS WITH PNC-35 OR GREATER.

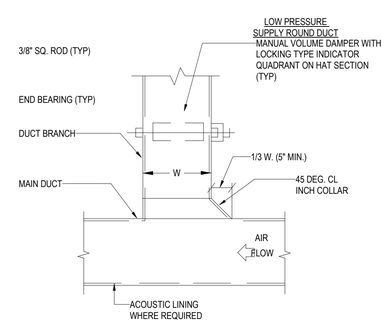

NOTE:

FURNISH THIS TYPE CONNECTION WHEN SINGLE-LINE DUCTWORK IS INDICATED AS THIS FOR ⊥ BRANCHES WITH LESS THAN 25% OF THE TOTAL AIR FLOW.

LOW PRESSURE SUPPLY RECTANGULAR DUCT

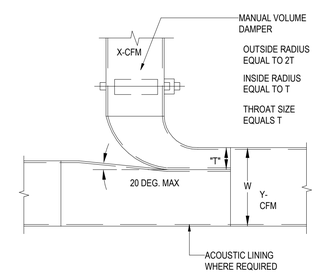

NOTES:

1. FURNISH THIS TYPE CONNECTION WHEN SINGLE-LINE DUCTWORK IS INDICATED AS THIS FOR BRANCHES WITH LESS THAN 25% OF THE TOTAL AIR FLOW.
2. THIS TYPE OF CONNECTION MUST BE USED WHEN W 36 IN.
3. T=X (BRANCH DUCT) x W
   Y (TOTAL CFM)

5 LOW PRESSURE SUPPLY CONNECTION DETAILS

NOT TO SCALE

Owner
Storm King Art Center
1 Museum Road
New Windsor, NY 12553
+1 (845) 534-3115

Design Architect
heneghan peng architects
14-16 Lord Edward Street
Dublin, D02 YC63, IE
+353 1 633 9000

Executive Architect
WXY Architecture + Urban Design
224 Centre Street, 5th Floor
New York, NY 10013
+1 (212) 219-1953

Landscape Architect
Gustafson Porter + Bowman
1 Cobham Mews
London, MW1 9SB, UK
+44 020 7284 8950

Reed Hilderbrand LLC
33 Whitney Avenue, 3rd Floor
New Haven, CT, US 06510
+1 (617) 923-2422

Structural & Lighting
ARUP
77 Water Street
New York, NY, US 10005
+1 (212) 896-3000

MEPF & IT
BuroHappold
100 Broadway #23
New York, NY, US 10005
+1 (212) 616-0228

Civil
VHB
100 Great Oaks Blvd., Suite 118
Albany, NY, US 12203
+1 (518) 389-3606

AV & Acoustics
LSTN Consultants
76 Beaver Street, 2nd Floor
New York, NY, US 10005
+1 (347) 788-0810

Facade
Front Inc.
100 E. Broadway Street, #501
New York, NY, US 10002
+1 (212) 242-2220

Key Plan

Description	Date
Filing Set	06/17/22

Project

Storm King Art Center
C.F.M. Building

Seal

NOT FOR CONSTRUCTION

Drawing Title

Mechanical Details

Date	06/17/22
Scale	Not to Scale
Drawing Number	M-C-503
Sheet Size	ARCH D

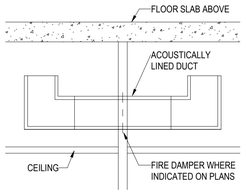

NOTES:

1. REFER TO DRAWINGS AND SPECIFICATIONS FOR ACOUSTICAL INSULATION THICKNESS AND DENSITY.

2. PROVIDE TRANSFER DUCT WHERE INDICATED ON PLANS.

3. REFER TO SCHEDULE BELOW FOR TRANSFER DUCT SIZE.

4. FOR AIR QUANTITIES IN EXCESS OF 2000 CFM USE MULTIPLE TRANSFER DUCTS

5. TRANSFER DUCT SIZES ARE INSIDE CLEAR

6. EQUIVALENT DUCT SIZES ALLOWED

TRANSFER AIR QUANTITY (CFM)	TRANSFER AIR DUCT SIZE (W x H)
0-500	18 x 10
501-1000	20 x 18
1001-1500	30 x 20
1501-2000	30 x 24

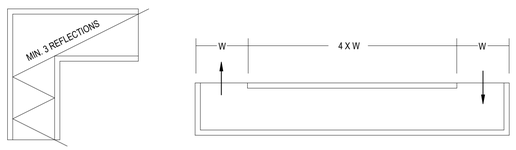

1 ACOUSTIC AIR TRANSFER DUCT

NOT TO SCALE

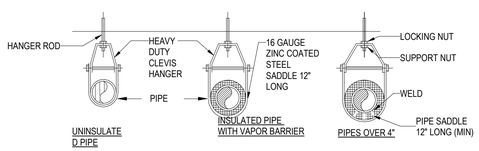

INDIVIDUAL PIPE HANGER ROD & SPACING SCHEDULE											
NOMINAL PIPE OR TUBE SIZE-INCHES	3/4	1	1 1/2	2	2 1/2	3	4	5	6	8	--
HANGER ROD SIZE-INCHES	3/8	3/8	3/8	3/8	1/2	1/2	5/8	5/8	7/8	7/8	--
MAXIMUM SPACING BETWEEN PIPE SUPPORT-FEET	6	7	9	10	11	12	14	16	17	19	--
MAXIMUM SPACING BETWEEN CU, TUBE SUPPORT-FEET	6	6	8	9	10	10	12	14	14	16	--
NOTES: TRAPEZE SPACING SHALL BE BASED ON SPACING OF SMALLEST PIPE ON TRAPEZE. TRAPEZE SHALL BE DESIGNED WITH A FACTOR OF SAFETY 5 FOR CENTER OF SPAN CONCENTRATED LOAD. METHOD OF HANGING, TYPE OF INSERT, BEAM CLAMP, ROD, ETC. MUST BE APPROVED BY STRUCTURAL ENGINEER PER SHOP DRAWINGS.											

4 TYPICAL CLEVIS HANGER SUPPORTS

NOT TO SCALE

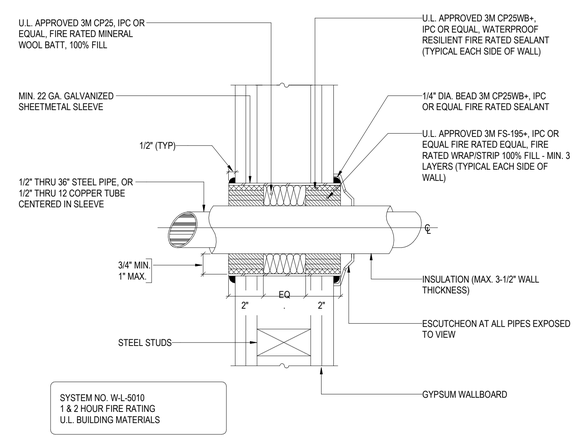

6 INSULATED PIPE THROUGH FIRE RATED GYPSUM WALLS

NOT TO SCALE

Owner
Storm King Art Center
1 Museum Road
New Windsor, NY 12553
+1 (845) 534-3115

Design Architect
heneghan peng architects
14-16 Lord Edward Street
Dublin, D02 YC63, IE
+353 1 633 9000

Executive Architect
WXY Architecture + Urban Design
224 Centre Street, 5th Floor
New York, NY 10013
+1 (212) 219-1953

Landscape Architect
Gustafson Porter + Bowman
1 Cobham Mews
London, MW1 9SB, UK
+44 020 7284 8950

Reed Hilderbrand LLC
33 Whitney Avenue, 3rd Floor
New Haven, CT, US 06510
+1 (617) 923-2422

Structural & Lighting
ARUP
77 Water Street
New York, NY, US 10005
+1 (212) 896-3000

MEPF & IT
BuroHappold
100 Broadway #23
New York, NY, US 10005
+1 (212) 616-0228

Civil
VHB
100 Great Oaks Blvd., Suite 118
Albany, NY, US 12203
+1 (518) 389-3606

AV & Acoustics
LSTN Consultants
76 Beaver Street, 2nd Floor
New York, NY, US 10005
+1 (347) 788-0810

Facade
Front Inc.
100 E. Broadway Street, #501
New York, NY, US 10002
+1 (212) 242-2220

Key Plan

Description	Date
Filing Set	06/17/22

Project

Storm King Art Center
C.F.M. Building

Seal

NOT FOR CONSTRUCTION

Drawing Title

Mechanical Details

Date	06/17/22
Scale	Not to Scale
Drawing Number	M-C-504
Sheet Size	ARCH D

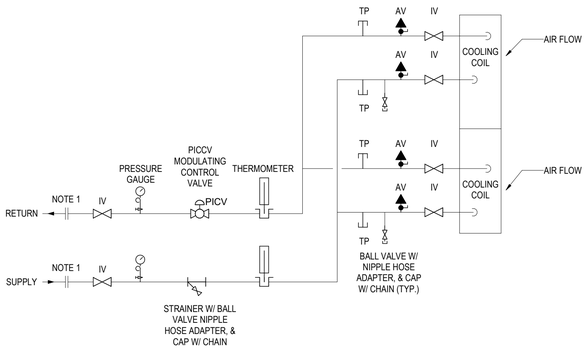

NOTES:

1. ELECTROLYTICALLY ISOLATED COUPLING. (ONLY REQUIRED WHERE THERE IS A CHANGE IN PIPING MATERIAL.)
2. ALL VALVES AND FITTINGS SHALL BE LINE SIZE
3. MODULATING CONTROL VALVE TO BE SELECTED BY CONTROLS CONTRACTOR TO PROVIDE APPROPRIATE CONTROL VALVE AUTHORITY.
4. PROVIDE EXTENSIONS FOR ALL PIPING ACCESSORIES IN ORDER TO PERTRUDE BEYOND AND AVOID DAMAGE TO PIPE INSULATION.
5. PROVIDE APPROPRIATELY FITTED REMOVABLE INSULATION COVERS AT ALL PIPING ACCESSORY LOCATIONS REQUIRING FUTURE
6. ACCESS.
   CONNECT HHWS DOWN STREAM OF COIL IN RELATION TO AIR FLOW.

1 COOLING COILS (AHU)

SCALE 12" = 1'-0"

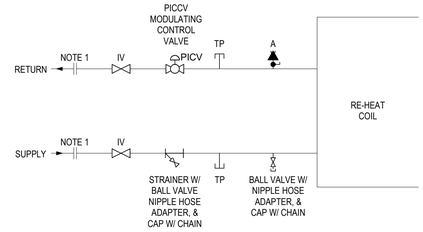

NOTES:

1. ELECTROLYTICALLY ISOLATED COUPLING. (ONLY REQUIRED WHERE THERE IS A CHANGE IN PIPING MATERIAL.)
2. ALL VALVES AND FITTINGS SHALL BE LINE SIZE
3. MODULATING CONTROL VALVE TO BE SELECTED BY CONTROLS CONTRACTOR TO PROVIDE APPROPRIATE CONTROL VALVE AUTHORITY.
4. PROVIDE EXTENSIONS FOR ALL PIPING ACCESSORIES IN ORDER TO PERTRUDE BEYOND AND AVOID DAMAGE TO PIPE INSULATION.
5. PROVIDE APPROPRIATELY FITTED REMOVABLE INSULATION COVERS AT ALL PIPING ACCESSORY LOCATIONS REQUIRING FUTURE
6. ACCESS.
   CONNECT HHWS DOWN STREAM OF COIL IN RELATION TO AIR FLOW.

2 RE-HEAT COIL & AHU HEATING COILS

SCALE 12" = 1'-0"

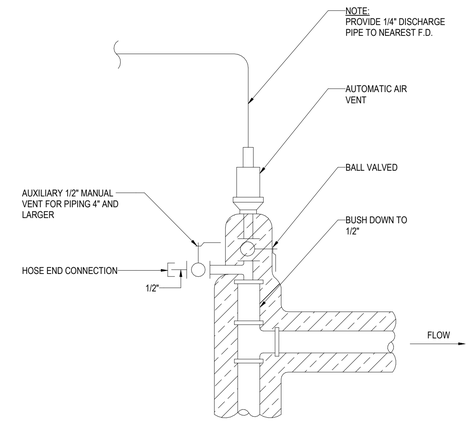

NOTES:

1. DETAIL TO BE USED AT ALL AUTOMATIC AIR VENT LOCATIONS, INCLUDING AT THE TOP OF ALL PIPE RISERS CONNECTING TWO OR MORE FLOORS.
2. AAV TO BE INSTALLED AT ALL PIPING HIGH POINTS.

3 AUTOMATIC AIR VENT DETAIL

SCALE 12" = 1'-0"

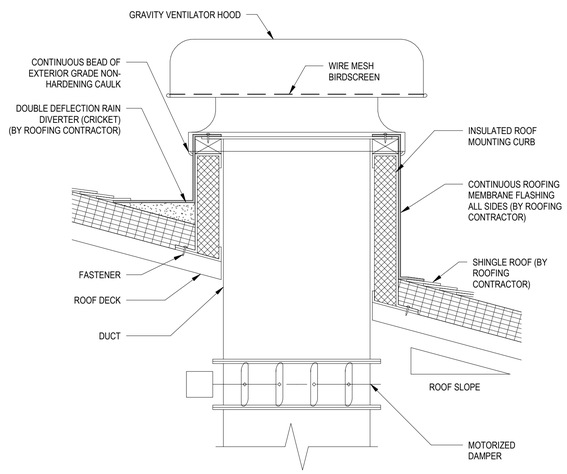

5 GRAVITY VENTILATOR AND ROOF CURB (SLOPED ROOFS)

SCALE 12" = 1'-0"

Owner
Storm King Art Center
1 Museum Road
New Windsor, NY 12553
+1 (845) 534-3115

Design Architect
heneghan peng architects
14-16 Lord Edward Street
Dublin, D02 YC63, IE
+353 1 633 9000

Executive Architect
WXY Architecture + Urban Design
224 Centre Street, 5th Floor
New York, NY 10013
+1 (212) 219-1953

Landscape Architect
Gustafson Porter + Bowman
1 Cobham Mews
London, MW1 9SB, UK
+44 020 7284 8950

Reed Hilderbrand LLC
33 Whitney Avenue, 3rd Floor
New Haven, CT, US 06510
+1 (617) 923-2422

Structural & Lighting
ARUP
77 Water Street
New York, NY, US 10005
+1 (212) 896-3000

MEPF & IT
BuroHappold
100 Broadway #23
New York, NY, US 10005
+1 (212) 616-0228

Civil
VHB
100 Great Oaks Blvd., Suite 118
Albany, NY, US 12203
+1 (518) 389-3606

AV & Acoustics
LSTN Consultants
76 Beaver Street, 2nd Floor
New York, NY, US 10005
+1 (347) 788-0810

Facade
Front Inc.
100 E. Broadway Street, #501
New York, NY, US 10002
+1 (212) 242-2220

Key Plan

Description	Date
Filing Set	06/17/22

Project

Storm King Art Center

C.F.M. Building

Seal

NOT FOR CONSTRUCTION

Drawing Title

Mechanical Details

Date	06/17/22
Scale	Not to Scale
Drawing Number	M-C-505
Sheet Size	ARCH D

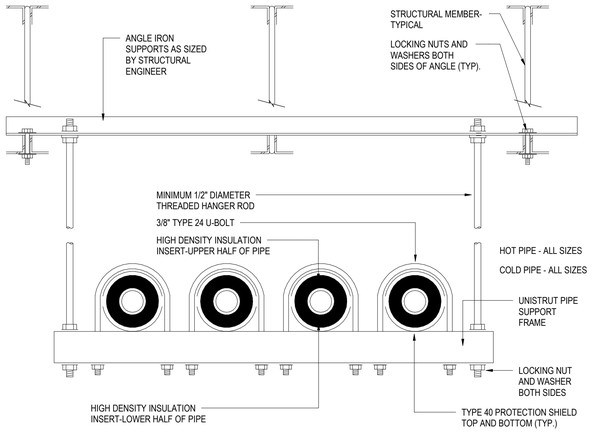

INDIVIDUAL PIPE HANGER ROD & SPACING SCHEDULE											
NOMINAL PIPE OR TUBE SIZE-INCHES	3/4	1	1 1/2	2	2 1/2	3	4	5	6	8	--
HANGER ROD SIZE-INCHES	3/8	3/8	3/8	3/8	1/2	1/2	5/8	5/8	7/8	7/8	--
MAXIMUM SPACING BETWEEN INCHES	6	7	9	10	11	12	14	16	17	19	--
MAXIMUM SPACING BETWEEN CU, TUBE SUPPORT IN FEET	6	6	8	9	10	10	12	14	14	16	--

NOTES:
TRAPEZE HANGER ROD SPACING SHALL BE BASED ON SPACING OF SMALLEST PIPE ON TRAPEZE. TRAPEZE SHALL BE DESIGNED WITH A FACTOR OF
SAFETY OF 5 FOR CENTER OF SPAN CONCENTRATED LOAD. METHOD OF HANGING, TYPE OF INSERT, BEAM CLAMP, ROD, ETC. MUST BE APPROVED BY STRUCTURAL ENGINEER PER SHOP DRAWINGS

1 TRAPEZE PIPE HANGER (MULTIPLE PIPES)

NOT TO SCALE

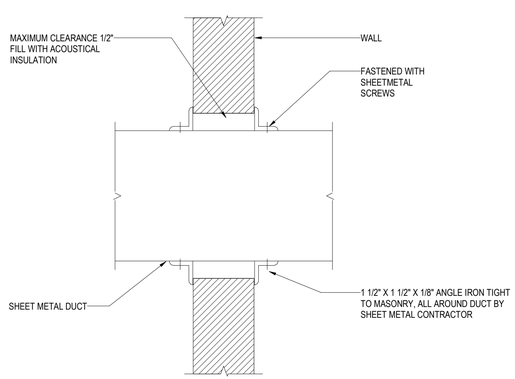

4 DUCT PENETRATING NON - RATED WALLS

NOT TO SCALE

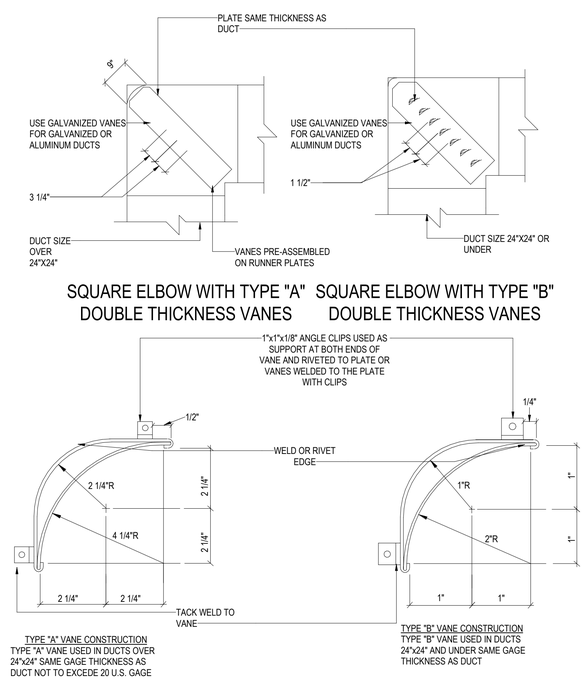

5 TURNING VANE CONSTRUCTION (RECTANGULAR)

NOT TO SCALE

Owner
Storm King Art Center
1 Museum Road
New Windsor, NY 12553
+1 (845) 534-3115

Design Architect
heneghan peng architects
14-16 Lord Edward Street
Dublin, D02 YC63, IE
+353 1 633 9000

Executive Architect
WXY Architecture + Urban Design
224 Centre Street, 5th Floor
New York, NY 10013
+1 (212) 219-1953

Landscape Architect
Gustafson Porter + Bowman
1 Cobham Mews
London, MW1 9SB, UK
+44 020 7284 8950

Reed Hilderbrand LLC
33 Whitney Avenue, 3rd Floor
New Haven, CT, US 06510
+1 (617) 923-2422

Structural & Lighting
ARUP
77 Water Street
New York, NY, US 10005
+1 (212) 896-3000

MEPF & IT
BuroHappold
100 Broadway #23
New York, NY, US 10005
+1 (212) 616-0228

Civil
VHB
100 Great Oaks Blvd., Suite 118
Albany, NY, US 12203
+1 (518) 389-3606

AV & Acoustics
LSTN Consultants
76 Beaver Street, 2nd Floor
New York, NY, US 10005
+1 (347) 788-0810

Facade
Front Inc.
100 E. Broadway Street, #501
New York, NY, US 10002
+1 (212) 242-2220

Key Plan

Description	Date
Filing Set	06/17/22

Project

Storm King Art Center

C.F.M. Building

Seal

NOT FOR CONSTRUCTION

Drawing Title

Mechanical Details

Date	06/17/22
Scale	Not to Scale
Drawing Number	M-C-506
Sheet Size	ARCH D

WITHOUT INCOMPRESSIBLE INSULATING BLOCK AT HANGER		
PIPE DIAMETER	SHIELD LENGTH	SHIELD THICKNESS USSG
UP TO 3"	6"	18

WITHOUT INCOMPRESSIBLE INSULATING BLOCK AT HANGER		
PIPE DIAMETER	SHIELD LENGTH	SHIELD THICKNESS USSG
UP TO 3"	12"	18

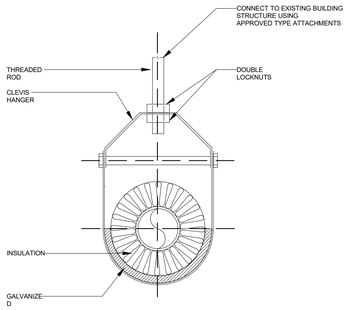

NOTE:
HANGER, ROD & INSERT SHALL BE DIPPED IN ZINC CHROMATE PRIMER PRIOR TO INSTALLATION

1 TYPICAL INSULATION OF PIPES SMALLER THAN 3

NOT TO SCALE

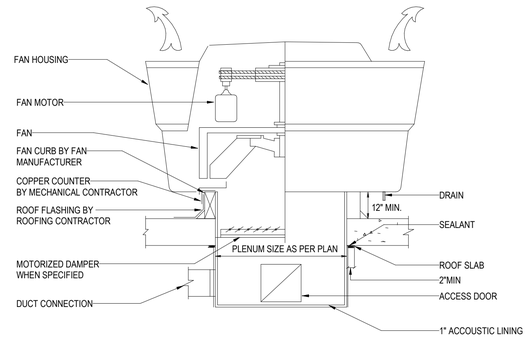

2 ROOF EXHAUST FAN UPBLAST

NOT TO SCALE

CONDENSATE PIPE SIZE	
EQUIPMENT CAPACITY	MIN. PIPE SIZE
TONS	INCH
UP TO 20	3/4
21-40	1
41-90	1 1/4
91-125	1 1/2
126-250	2

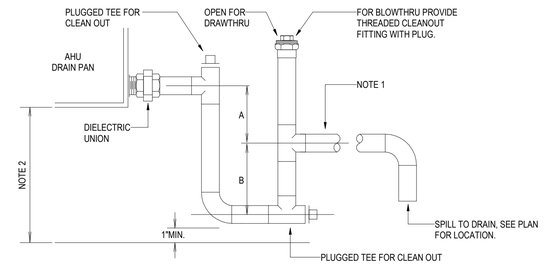

DRAWTHRU :

A = GREATER OF 4" OR 1/2" PLUS AHU TOTAL PRESSURE IN INCHES-WC

BLOWTHRU :

B = GREATER OF 4" OR 1/2" PLUS AHU TOTAL PRESSURE IN INCHES-WC

NOTES:

1. REF. PLAN DWG'S FOR CONDENSATE DRAIN PIPE SIZE, (1"MIN. AT EACH AHU DRAIN CONNECTION POINT). REF. SPECIFICATIONS FOR PIPE AND INSULATION MATERIAL REQUIREMENTS.
2. AHU TO BE ELEVATED ON HOUSEKEEPING PAD OR MOUNTING STRUCTURE AS REQUIRED FOR TRAP HEIGHT ABOVE FLOOR

3 MECHANICAL UNIT CONDENSATE DRAIN

NOT TO SCALE

Owner
Storm King Art Center
1 Museum Road
New Windsor, NY 12553
+1 (845) 534-3115

Design Architect
heneghan peng architects
14-16 Lord Edward Street
Dublin, D02 YC63, IE
+353 1 633 9000

Executive Architect
WXY Architecture + Urban Design
224 Centre Street, 5th Floor
New York, NY 10013
+1 (212) 219-1953

Landscape Architect
Gustafson Porter + Bowman
1 Cobham Mews
London, MW1 9SB, UK
+44 020 7284 8950

Reed Hilderbrand LLC
33 Whitney Avenue, 3rd Floor
New Haven, CT, US 06510
+1 (617) 923-2422

Structural & Lighting
ARUP
77 Water Street
New York, NY, US 10005
+1 (212) 896-3000

MEPF & IT
BuroHappold
100 Broadway #23
New York, NY, US 10005
+1 (212) 616-0228

Civil
VHB
100 Great Oaks Blvd., Suite 118
Albany, NY, US 12203
+1 (518) 389-3606

AV & Acoustics
LSTN Consultants
76 Beaver Street, 2nd Floor
New York, NY, US 10005
+1 (347) 788-0810

Facade
Front Inc.
100 E. Broadway Street, #501
New York, NY, US 10002
+1 (212) 242-2220

Key Plan

Description	Date
Filing Set	06/17/22

Project

Storm King Art Center

C.F.M. Building

Seal

NOT FOR CONSTRUCTION

Drawing Title

Mechanical Details

Date	06/17/22
Scale	Not to Scale
Drawing Number	M-C-507
Sheet Size	ARCH D

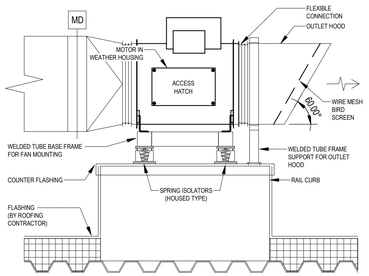

NOTES:
1. ALL EXTERIOR DUCTWORK TO BE STAINLESS STEEL

1 MIXED FLOW INLINE FAN
NOT TO SCALE

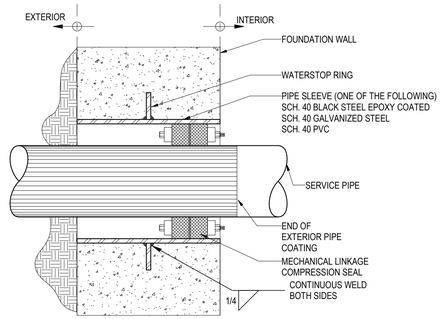

2 PIPE PENETRATION THROUGH FOUNDATION WALLS
NOT TO SCALE

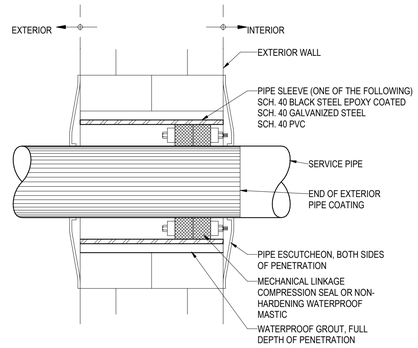

3 PIPE PENETRATIONS THROUGH EXTERIOR WALLS ABOVE GRADE
NOT TO SCALE

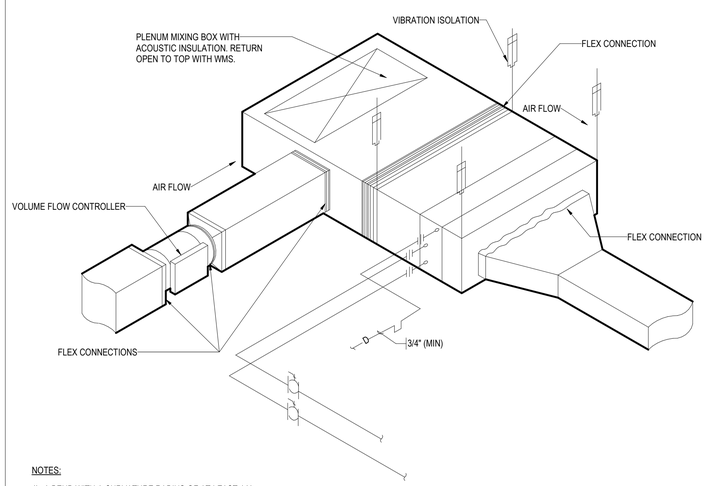

NOTES:

1) A BEND WITH A CURVATURE RADIUS OF AT LEAST 1 X DIAMETER, WITHOUT AN ADDITIONAL STRAIGHT DUCT SECTION UPSTREAM OF THE FLOW CONTROLLER, IS RECOMMENDED BY THE MANUFACTURER AS HAVING A NEGLIGIBLE EFFECT ON VOLUME FLOW RATE ACCURACY.
2) A STRAIGHT DUCT SECTION OF AT LEAST 1.5 X DIAMETER IS REQUIRED UPSTREAM THE FLOW CONTROLLER. SHORTER UPSTREAM SECTIONS REQUIRE A PERFORATED PLATE IN THE BRANCH AND BEFORE THE FLOW CONTROLLER.
3) FLOW CONTROLLER REQUIRES AT LEAST 1' OF CLEARANCE IN ALL DIRECTIONS FOR COMMISSIONING AND MAINTENANCE.
4) INSTALL COMPONENTS SUCH THAT A SINGLE COMMON CLEARANCE AREA FOR MAINTENANCE ACCESS IS PROVIDED TO FCU, FLOW CONTROLLER, FILTER REPLACEMENT AND REFRIGERANT VALVING.
5) PROVIDE ACOUSTIC LINING IN SUPPLY DUCT FOR 10 FT DOWN STREAM FROM FCU.

4 HORIZONTAL VRF FAN COIL UNIT
NOT TO SCALE

Owner
Storm King Art Center
1 Museum Road
New Windsor, NY 12553
+1 (845) 534-3115

Design Architect
heneghan peng architects
14-16 Lord Edward Street
Dublin, D02 YC63, IE
+353 1 633 9000

Executive Architect
WXY Architecture + Urban Design
224 Centre Street, 5th Floor
New York, NY 10013
+1 (212) 219-1953

Landscape Architect
Gustafson Porter + Bowman
1 Cobham Mews
London, MW1 9SB, UK
+44 020 7284 8950

Reed Hilderbrand LLC
33 Whitney Avenue, 3rd Floor
New Haven, CT, US 06510
+1 (617) 923-2422

Structural & Lighting
ARUP
77 Water Street
New York, NY, US 10005
+1 (212) 896-3000

MEPF & IT
BuroHappold
100 Broadway #23
New York, NY, US 10005
+1 (212) 616-0228

Civil
VHB
100 Great Oaks Blvd., Suite 118
Albany, NY, US 12203
+1 (518) 389-3606

AV & Acoustics
LSTN Consultants
76 Beaver Street, 2nd Floor
New York, NY, US 10005
+1 (347) 788-0810

Facade
Front Inc.
100 E. Broadway Street, #501
New York, NY, US 10002
+1 (212) 242-2220

Key Plan

Description	Date
Filing Set	06/17/22

Project

Storm King Art Center

C.F.M. Building

Seal

NOT FOR CONSTRUCTION

Drawing Title

Mechanical Details

Date	06/17/22
Scale	Not to Scale
Drawing Number	M-C-508
Sheet Size	ARCH D

M - VRF OUTDOOR UNIT SCHEDULE

DESIGNATION	SERVICE	LOCATION	TOTAL COOLING CAPACITY (MBH)	TOTAL HEATING CAPACITY (MBH)	COOLING EER	HEATING COP	ELECTRICAL					REFRIGERANT TYPE	DIMENSIONS			WEIGHT (LB)	MANUFACTURER	MODEL NUMBER	REMARKS
							VOLTAGE	PHASE	FREQUENCY	MCA	MOCP		LENGTH (IN)	WIDTH (IN)	HEIGHT (IN)				
ACCU - C-3-1	VRF ZONES	OUTSIDE	96	108	12.7	3.66	460 V	3	60	14 A	20	R410A	4' - 0 7/8"	2' - 5 5/32"	5' - 11 5/8"	649	TRANE	TURYE0964AN40A	AIR-COOLED
ACCU - C-3-2	VRF ZONES	OUTSIDE	96	108	12.7	3.66	460 V	3	60	14 A	20	R410A	4' - 0 7/8"	2' - 5 5/32"	5' - 11 5/8"	649	TRANE	TURYE0964AN40A	AIR-COOLED

M - VRF FCU SCHEDULE

DESIGNATION	SERVICE	LOCATION	COOLING AT AHRI		HEATING AT AHRI	ELECTRICAL				FAN			MANUFACTURER	MODEL NUMBER	REMARKS
			TOTAL COOLING CAPACITY (MBH)	SENSIBLE COOLING CAPACITY (MBH)	TOTAL HEATING CAPACITY (MBH)	VOLTAGE	PHASE	FREQUENCY	MCA	MOTOR CONTROL	CFM	EXTERNAL STATIC PRESSURE (IN WG)			
FCU-C-1-1	PUMP ROOM	LEVEL 01	6.0	-	6.7	208 V	1	60	0 A	ECM	210 CFM	-	MITSUBISHI	TPKFYP006BM142B	WALL MOUNTED
FCU-C-1-2	CIRCULATION	LEVEL 01	15.0	11.4	17	208 V	1	60	1 A	ECM	494 CFM	0.6	MITSUBISHI	TPEFYP015MA143A	
FCU-C-1-3	ELECTRICAL RM	LEVEL 01	6.0	-	6.7	208 V	1	60	0 A	ECM	210 CFM	-	MITSUBISHI	TPKFYP006BM142B	WALL MOUNTED
FCU-C-1-4	LAUNDRY/SOIL LAB	LEVEL 01	6.0	4.9	6.7	208 V	1	60	1 A	ECM	300 CFM	0.6	MITSUBISHI	TPEFYP006MA143A	
FCU-C-1-5	STAIR 02	LEVEL 01	15.4	-	17.1	220 V	1	60	1 A	ECM	636 CFM	0	MITSUBISHI	PLFY-P40VEM-A	CEILING CASSETTE
FCU-C-2-1	BREAK ROOM	LEVEL 02	12.0	9.1	13.5	208 V	1	60	1 A	ECM	371 CFM	0.6	MITSUBISHI	TPEFYP012MA143A	
FCU-C-2-2	STORAGE/CIRCULATION	LEVEL 02	15.0	11.4	17	208 V	1	60	1 A	ECM	494 CFM	0.6	MITSUBISHI	TPEFYP015MA143A	
FCU-C-2-3	OPEN OFFICE	LEVEL 02	24.0	19.2	27.0	208 V	1	60	2 A	ECM	671 CFM	1.0	MITSUBISHI	TPEFYP024MH142A	
FCU-C-2-4	MEETING ROOM	LEVEL 02	6.0	4.9	6.7	208 V	1	60	1 A	ECM	300 CFM	0.6	MITSUBISHI	TPEFYP006MA143A	
FCU-C-2-5	OPEN OFFICE	LEVEL 02	6.0	4.9	6.7	208 V	1	60	1 A	ECM	300 CFM	0.6	MITSUBISHI	TPEFYP006MA143A	
FCU-C-2-6	MECHANICAL RM	LEVEL 02	8.0	-	9.0	208 V	1	60	0 A	ECM	413 CFM	-	MITSUBISHI	TPKFYP008HM142A	WALL MOUNTED
FCU-C-2-7	MECHANICAL RM	LEVEL 02	8.0	-	9.0	208 V	1	60	0 A	ECM	413 CFM	-	MITSUBISHI	TPKFYP008HM142A	WALL MOUNTED
FCU-C-2-8	ELECTRICAL CLOSET	LEVEL 02	6.0	-	6.7	208 V	1	60	0 A	ECM	210 CFM	-	MITSUBISHI	TPKFYP006BM142B	WALL MOUNTED
FCU-C-2-9	IT/SECURITY CLOSET	LEVEL 02	6.0	-	6.7	208 V	1	60	0 A	ECM	210 CFM	-	MITSUBISHI	TPKFYP006BM142B	WALL MOUNTED

M - FAN SCHEDULE

DESIGNATION	SERVICE	LOCATION	AIR QUANTITY (CFM)	EXTERNAL STATIC PRESSURE (IN WG)	MAX FAN SPEED (RPM)	FAN TYPE	MOTOR/ELECTRICAL DATA					APPROXIMATE WEIGHT (LB)	EMERGENCY POWER	STANDBY POWER	VFD	MANUFACTURER	MODEL NUMBER	REMARKS
							HP	RPM	VOLTAGE	PHASE	FREQUENCY							
EXF - C-1-1	MAINTENANCE EXHAUST	LEVEL 01	2,200	1	3,500	AXIAL	3/4	3,500	460 V	3	60	89	Yes	Yes	Yes	GREENHECK	AX-36-160-0413	CEILING-HUNG
EXF - C-1-2	STORAGE 118	LEVEL 01	50	0.5	820	DIRECT DRIVE	0.015	820	115 V	1	60	10	Yes	Yes	Yes	GREENHECK	SP-AP0511W	CEILING-HUNG
EXF - C-3-1	PUMP ROOM	ROOF	6,000	1.5	1,189	CENTRIFUGAL	3	1,189	460 V	3	60	161	Yes	Yes	Yes	GREENHECK	GB-240HP	ROOF-MOUNTED
MAF - C-1-1	MAINTENANCE MAKEUP	LEVEL 01	2,200	1	3,500	AXIAL	3/4	3,500	460 V	3	60	89	Yes	Yes	Yes	GREENHECK	AX-36-160-0413	CEILING-HUNG

M - VRF MODE CONTROL UNIT SCHEDULE

DESIGNATION	LOCATION	TOTAL CAPACITY (MBH)	NUMBER OF PORTS	DIMENSIONS			ELECTRICAL DATA					MANUFACTURER	MODEL NUMBER	REMARKS
				HEIGHT	LENGTH	WIDTH	VOLTAGE	PHASE	FREQUENCY	MCA	MOCP			
MCU-C-1-1	LEVEL 1	126	8	0' - 9 7/8"	2' - 0"	1' - 4"	208 V	1	60	1 A	15	TRANE	TCMBS0108KB11N4	SUB BC CONTROLLER
MCU-C-2-1	LEVEL 1	336	8	0' - 9 7/8"	3' - 0"	1' - 10"	208 V	1	60	1 A	15	TRANE	TCMBM0108JA11N4	MAIN BC CONTROLLER
MCU-C-2-2	LEVEL 1	126	8	0' - 9 7/8"	2' - 0"	1' - 4"	208 V	1	60	1 A	15	TRANE	TCMBS0108KB11N4	SUB BC CONTROLLER

M - DIFFUSER AND GRILLE SCHEDULE

DESIGNATION	USAGE	MAX CFM	MAX CFM/FT	MAX NC	FACE SIZE	DIFFUSER HEIGHT (IN)	SLOT SIZE	LENGTH (IN)	MANUFACTURER	MODEL NUMBER	REMARKS
ED-1	OED EXHAUST	-	-	25	-	-	-	-	PRICE	RPD	
ED-2	EXHAUST	250	-	25	12"x12"	-	-	-	PRICE	SCD	
LSD-1	SUPPLY	-	30	25	-	6	1	48	PRICE	SDS	2
RD-1	OED RETURN	-	-	25	-	-	-	-	PRICE	RPD	
RD-2	RETURN	250	-	25	12"x12"	6"	-	-	PRICE	SCD	
RSD-1	RETURN	-	30	25	-	6	1	48	PRICE	SDS	2
SD-1	OED SUPPLY	-	-	25	-	-	-	-	PRICE	RPD	
SD-2	SUPPLY	250	-	25	12"x12"	-	-	-	PRICE	SCD	

NOTES:
1. LINEAR BAR DIFFUSERS IN SOFFITS TO BE CONTINUOUS WITH ACTIVE SECTIONS FOR SUPPLY AND INACTIVE SECTIONS FOR RETURN BACK TO FCU.
2. PROVIDE WITH PLENUM.
3. DIFFUSERS TO BE DURABLE INDUSTRIAL GRADE.

M - VFC SCHEDULE

DESIGNATION	SERVES	DESIGN CFM	DROP AT MIN FLOW (IN W.G)	ROUND DUCT CONNECTION SIZE (IN)	MOTORIZED DAMPER CONTROL VIA	MANUFACTURER	MODEL NUMBER	REMARKS
VFC C-1-2	FCU C-1-2	250 CFM	0.20	8"	CO2	ALDES	18147	
VFC C-1-4	FCU C-1-4	100 CFM	0.20	6"	CO2	ALDES	18133	
VFC C-2-1	FCU C-2-1	110 CFM	0.20	6"	CO2	ALDES	18134	
VFC C-2-2	FCU C-2-2	190 CFM	0.20	8"	CO2	ALDES	18145	
VFC C-2-3	FCU C-2-3	180 CFM	0.20	8"	CO2	ALDES	18145	
VFC C-2-4	FCU C-2-4	70 CFM	0.20	5"	CO2	ALDES	18124	

Owner
Storm King Art Center
1 Museum Road
New Windsor, NY 12553
+1 (845) 534-3115

Design Architect
heneghan peng architects
14-16 Lord Edward Street
Dublin, D02 YC63, IE
+353 1 633 9000

Executive Architect
WXY Architecture + Urban Design
224 Centre Street, 5th Floor
New York, NY 10013
+1 (212) 219-1953

Landscape Architect
Gustafson Porter + Bowman
1 Cobham Mews
London, MW1 9SB, UK
+44 020 7284 8950

Reed Hilderbrand LLC
33 Whitney Avenue, 3rd Floor
New Haven, CT, US 06510
+1 (617) 923-2422

Structural & Lighting
ARUP
77 Water Street
New York, NY, US 10005
+1 (212) 896-3000

MEPF & IT
BuroHappold
100 Broadway #23
New York, NY, US 10005
+1 (212) 616-0228

Civil
VHB
100 Great Oaks Blvd., Suite 118
Albany, NY, US 12203
+1 (518) 389-3606

AV & Acoustics
LSTN Consultants
76 Beaver Street, 2nd Floor
New York, NY, US 10005
+1 (347) 788-0810

Facade
Front Inc.
100 E. Broadway Street, #501
New York, NY, US 10002
+1 (212) 242-2220

Key Plan

Description	Date
Filing Set	06/17/22

Project

Storm King Art Center

C.F.M. Building

Seal

NOT FOR CONSTRUCTION

Drawing Title

Mechanical Schedules

Date	06/17/22
Scale	Not to Scale
Drawing Number	M-C-601
Sheet Size	ARCH D

M - ENERGY RECOVERY VENTILATOR SCHEDULE

DESIGNATION	SERVICE	LOCATION	SUPPLY AIR QUANTITY (CFM)	EXHAUST AIR QUANTITY (CFM)	SUPPLY AIR QUANTITY ENTERING	ENERGY RECOVERY PERFORMANCE DATA																		% EFFECTIVENESS WINTER/SUMMER	SUPPLY FAN DATA						RETURN FAN DATA						ELECTRICAL				APPROXIMATE WEIGHT (LB)	MANUFACTURER	MODEL NUMBER	REMARKS
						SUMMER								WINTER																													
						OUTDOOR AIR		SUPPLY AIR		RETURN AIR		EXHAUST AIR		OUTDOOR AIR		SUPPLY AIR		RETURN AIR		EXHAUST AIR																							
						DB	WB	DB	WB	DB	WB	DB	WB	DB	WB	DB	WB	DB	WB	DB	WB		CFM	SUPPLY FAN QTY	EXTERNAL STATIC PRESSURE (IN WG)	BHP	HP	VFD	CFM	RETURN FAN QTY	EXTERNAL STATIC PRESSURE (IN WG)	BHP	HP	VFD	VOLTAGE	PHASE	FREQ	SINGLE POINT CONNECTION				
ERV - C-2-1	OPEN WORKSPACE	MECHANICAL ROOM 210	10,000	10,000	10,000	89 °F	73 °F	80 °F	70 °F	75 °F	63 °F	85 °F	66 °F	-2 °F	-2 °F	34 °F	25 °F	50 °F	38 °F	17 °F	16 °F	60.1 / 27.1	5,000	2	4.97	5.97	7.5	YES	5,000	2	5.990	7.14	10	YES	460 V	3	60	Yes	4,024	TRANE	CUSTOM	
ERV - C-2-2	WOOD WORKING	MECHANICAL ROOM 212	1,200	1,200	1,200	89 °F	73 °F	80 °F	70 °F	75 °F	63 °F	84 °F	66 °F	-2 °F	-2 °F	33 °F	25 °F	50 °F	38 °F	17 °F	17 °F	68.2 / 65.4	1,200	1	3.93	1.366	1.5	YES	1,200	1	4.44	1.54	2	YES	460 V	3	60	Yes	2,566	TRANE	CUSTOM	
ERV - C-2-3	OFFICES, STORAGE, RESTROOMS	MECHANICAL ROOM 212	900	900	900	89 °F	73 °F	79 °F	67 °F	75 °F	63 °F	85 °F	69 °F	-2 °F	-2 °F	49 °F	45 °F	70 °F	58 °F	19 °F	19 °F	-	900	1	1.00	-	0.5	YES	900	1	1.00	-	0.5	YES	208 V	1	60	Yes	278	RENEWAIRE	HE1XINH EC	INCLUDE 11.5 KW DUCT HEATER ACCESSORY

M - ELECTRIC DUCT HEATER SCHEDULE

DESIGNATION	SERVICE	LOCATION	CFM	EAT (°F)	LAT (°F)	CAPACITY (kW)	MANUFACTURER	MODEL NUMBER	REMARKS
DH-C-2-3	OFFICES, STORAGE, RESTROOMS	MECHANICAL ROOM 212	900	0 °F	50 °F	11.5	RENEWAIRE	RH SERIES	PROVIDE SCR CONTROL

ERV-C-2-1 EQUIPMENT LIST:

1 OA DAMPER 26x38
2 FILTERS
  2" MERV 8
  24x24 QTY 4
  24x12 QTY 4
3 ATA HEAT EXCHANGER
4 ELECTRIC HEATER
5 SUPPLY FAN: MPQN 182 CLASS II
  QTY 2
6 SA OPENING 30x32
7 RA OPENING 30x32
8 FILTERS
  2" MERV 8
  4" MERV 14
  24x24 QTY 4
  24x12 QTY 4
9 EXHAUST FAN: MPQN 182 CLASS II
  QTY 2
10 EA DAMPER 24x50

ERV-C-2-1

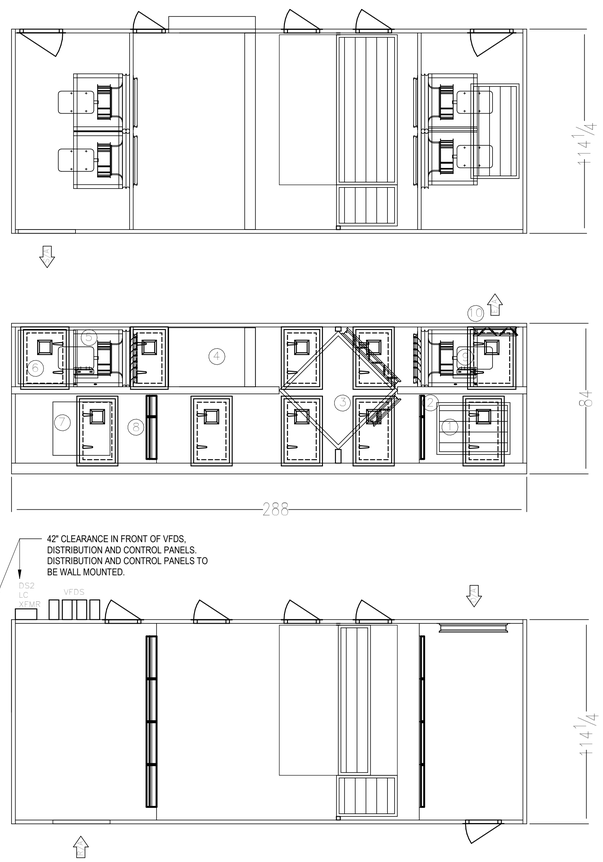

UPPER LEVEL PLAN

ELEVATION

LOWER LEVEL PLAN

ERV-C-2-2

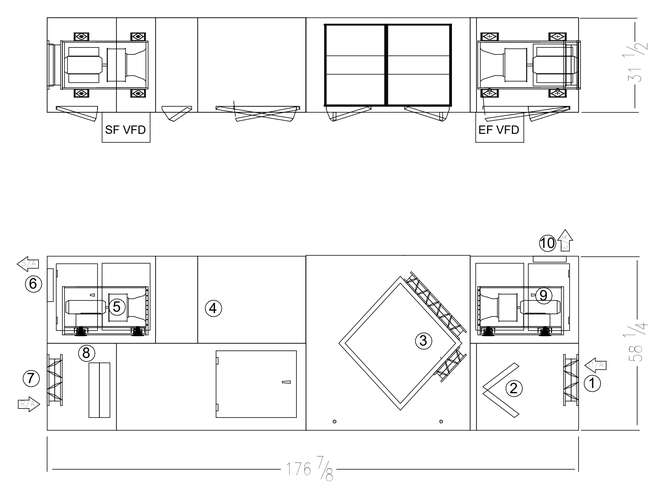

ERV-C-2-2 EQUIPMENT LIST:

1 OA DAMPER 17x16.25
2 ANGLED FILTERS
3 ATA HEAT EXCHANGER
  W/ BACK BYPASS DAMPER
  W/ BACK-BOTTOM FROST DAMPER
4 ELECTRIC HEATER
5 SUPPLY FAN W/ PLENUM
6 SA OPENING 11x14
7 RA DAMPER 17x16.25
8 COMBO FILTERS
9 EXHAUST FAN W/ PLENUM
10 EA OPENING 14x11

Owner
Storm King Art Center
1 Museum Road
New Windsor, NY 12553
+1 (845) 534-3115

Design Architect
heneghan peng architects
14-16 Lord Edward Street
Dublin, D02 YC63, IE
+353 1 633 9000

Executive Architect
WXY Architecture + Urban Design
224 Centre Street, 5th Floor
New York, NY 10013
+1 (212) 219-1953

Landscape Architect
Gustafson Porter + Bowman
1 Cobham Mews
London, MW1 9SB, UK
+44 020 7284 8950

Reed Hilderbrand LLC
33 Whitney Avenue, 3rd Floor
New Haven, CT, US 06510
+1 (617) 923-2422

Structural & Lighting
ARUP
77 Water Street
New York, NY, US 10005
+1 (212) 896-3000

MEPF & IT
BuroHappold
100 Broadway #23
New York, NY, US 10005
+1 (212) 616-0228

Civil
VHB
100 Great Oaks Blvd., Suite 118
Albany, NY, US 12203
+1 (518) 389-3606

AV & Acoustics
LSTN Consultants
76 Beaver Street, 2nd Floor
New York, NY, US 10005
+1 (347) 788-0810

Facade
Front Inc.
100 E. Broadway Street, #501
New York, NY, US 10002
+1 (212) 242-2220

Key Plan

Description	Date
Filing Set	06/17/22

Project

Storm King Art Center

C.F.M. Building

Seal

NOT FOR CONSTRUCTION

Drawing Title

Mechanical Schedules

Date	06/17/22
Scale	Not to Scale
Drawing Number	M-C-602
Sheet Size	ARCH D

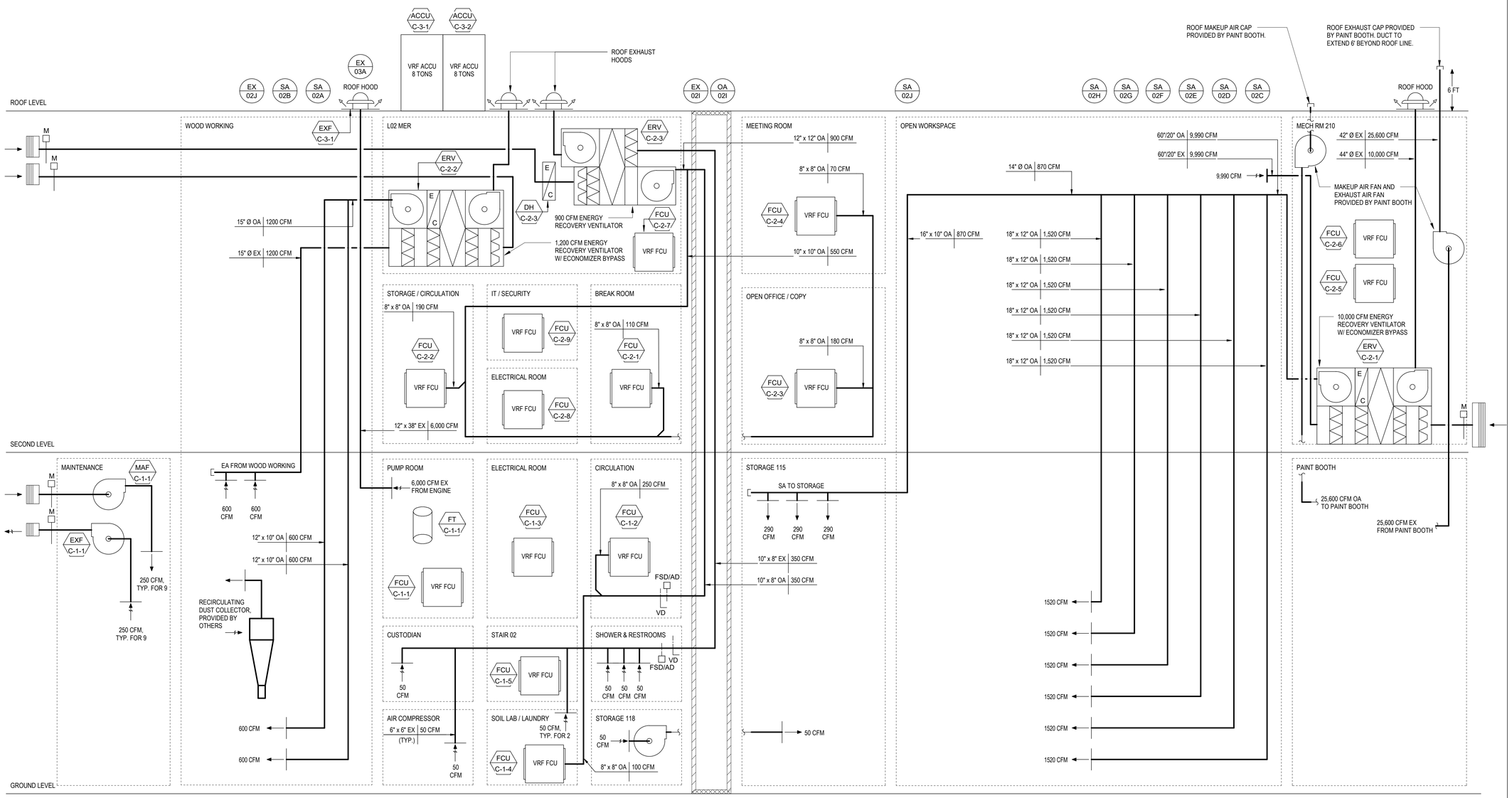

Owner
Storm King Art Center
1 Museum Road
New Windsor, NY 12553
+1 (845) 534-3115

Design Architect
heneghan peng architects
14-16 Lord Edward Street
Dublin, D02 YC63, IE
+353 1 633 9000

Executive Architect
WXY Architecture + Urban Design
224 Centre Street, 5th Floor
New York, NY 10013
+1 (212) 219-1953

Landscape Architect
Gustafson Porter + Bowman
1 Cobham Mews
London, MW1 9SB, UK
+44 020 7284 8950

Reed Hilderbrand LLC
33 Whitney Avenue, 3rd Floor
New Haven, CT, US 06510
+1 (617) 923-2422

Structural & Lighting
ARUP
77 Water Street
New York, NY, US 10005
+1 (212) 896-3000

MEPF & IT
BuroHappold
100 Broadway #23
New York, NY, US 10005
+1 (212) 616-0228

Civil
VHB
100 Great Oaks Blvd., Suite 118
Albany, NY, US 12203
+1 (518) 389-3606

AV & Acoustics
LSTN Consultants
76 Beaver Street, 2nd Floor
New York, NY, US 10005
+1 (347) 788-0810

Facade
Front Inc.
100 E. Broadway Street, #501
New York, NY, US 10002
+1 (212) 242-2220

Key Plan

Description	Date
Filing Set	06/17/22

Project

Storm King Art Center

C.F.M. Building

Seal

NOT FOR CONSTRUCTION

Drawing Title

Duct Riser

Date	06/17/22
Scale	Not to Scale
Drawing Number	M-C-701
Sheet Size	ARCH D

GENERAL NOTES

SINGLE LINES ARE INTENDED TO SHOW CONNECTIVITY OF REFRIGERANT SYSTEM. EACH LINE REPRESENTS 3X REFRIGERANT PIPES. MODE CONTROL UNIT (MCU) LAYOUT IS PRELIMINARY AND SUBJECT TO MANUFACTURER REQUIREMENTS.

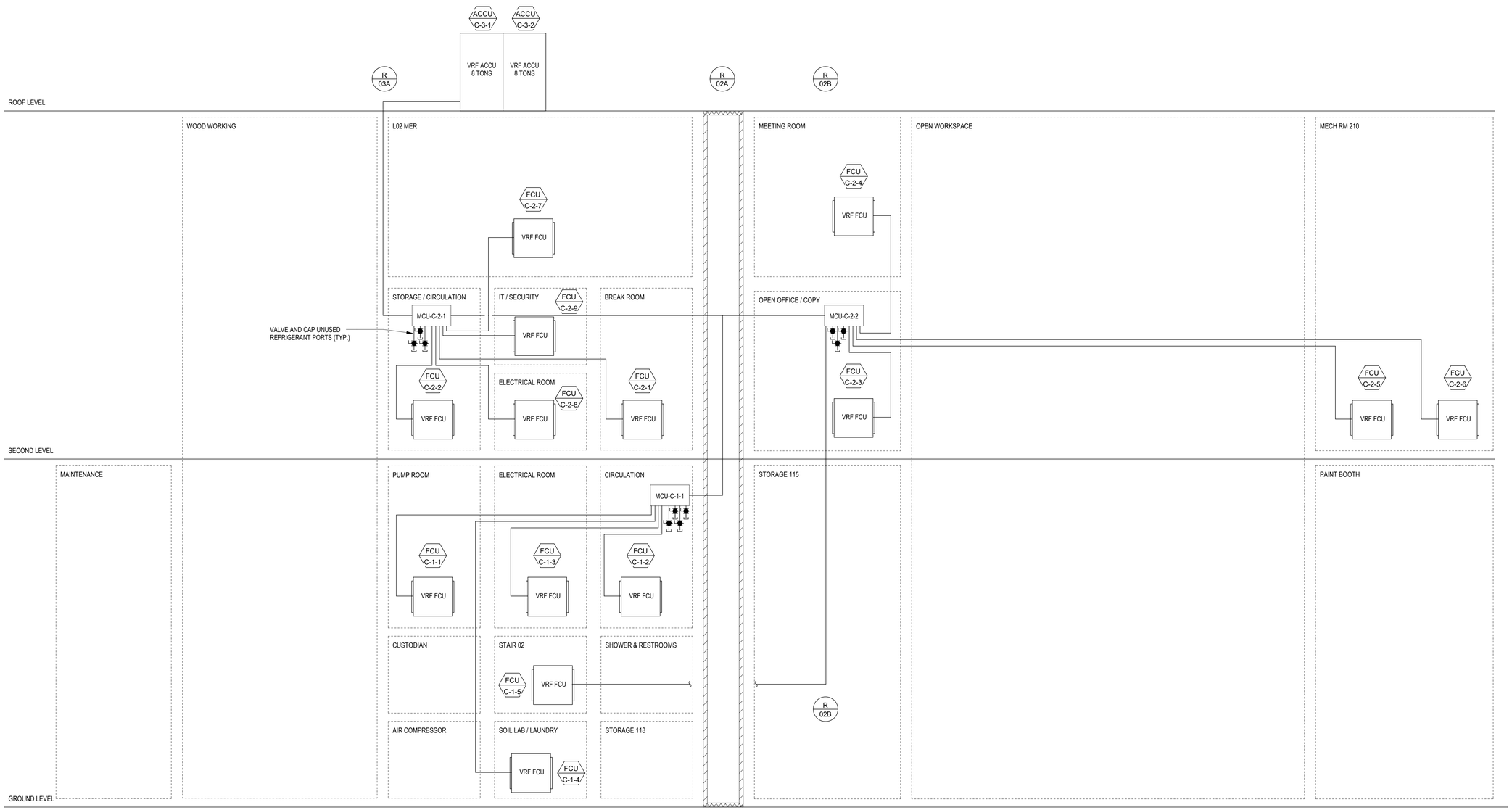

Owner
Storm King Art Center
1 Museum Road
New Windsor, NY 12553
+1 (845) 534-3115

Design Architect
heneghan peng architects
14-16 Lord Edward Street
Dublin, D02 YC63, IE
+353 1 633 9000

Executive Architect
WXY Architecture + Urban Design
224 Centre Street, 5th Floor
New York, NY 10013
+1 (212) 219-1953

Landscape Architect
Gustafson Porter + Bowman
1 Cobham Mews
London, MW1 9SB, UK
+44 020 7284 8950

Reed Hilderbrand LLC
33 Whitney Avenue, 3rd Floor
New Haven, CT, US 06510
+1 (617) 923-2422

Structural & Lighting
ARUP
77 Water Street
New York, NY, US 10005
+1 (212) 896-3000

MEPF & IT
BuroHappold
100 Broadway #23
New York, NY, US 10005
+1 (212) 616-0228

Civil
VHB
100 Great Oaks Blvd., Suite 118
Albany, NY, US 12203
+1 (518) 389-3606

AV & Acoustics
LSTN Consultants
76 Beaver Street, 2nd Floor
New York, NY, US 10005
+1 (347) 788-0810

Facade
Front Inc.
100 E. Broadway Street, #501
New York, NY, US 10002
+1 (212) 242-2220

Key Plan

Description	Date
Filing Set	06/17/22

Project

Storm King Art Center

C.F.M. Building

Seal

NOT FOR CONSTRUCTION

Drawing Title

Refrigerant Riser

Date	06/17/22
Scale	Not to Scale
Drawing Number	M-C-703
Sheet Size	ARCH D

WELCOME PAVILIONS

- ERV-W-1-1
- DH-W-1-1
- VRF INTERFACE
- POWER METER MONITORING
- PLUMBING EQUIPMENT MONITORING
- WATER METER MONITORING
- RADIANT FLOOR MONITORING
- UNIT HEATERS

T

BUILDING IT

CONSERVATION, FABRICATION & MAINTENANCE BUILDING

- EXF-C-3-1 VFD INTEGRATION
- PAINT BOOTH CONTROL PANEL
- ERV-C-2-1
- ERV-C-2-2
- ERV-C-2-3
- DH-C-2-3
- EXF-C-1-1 VFD INTEGRATION
- MAF-C-1-1 VFD INTEGRATION
- VRF INTERFACE
- POWER METER MONITORING
- PLUMBING EQUIPMENT MONITORING

T

BUILDING IT

1 SITE PLAN

SCALE 1 : 6000

BMS ALARMS / MODES (ALL BLDGS/SYSTEMS)

- FREEZE PROTECTION
- HIGH/LOW SPACE TEMPERATURE
- HIGH/LOW SPACE HUMIDITY
- FILTER STATUS
- UNIT FAILURE
- ONLINE/OFFLINE
- OCCUPIED/UNOCCUPIED
- MORNING WARMUP/COOLDOWN
- HIGH/LOW DISCHARGE AIR TEMPERATURE
- VFD FAILURE
- HIGH/LOW CO2

Owner
Storm King Art Center
1 Museum Road
New Windsor, NY 12553
+1 (845) 534-3115

Design Architect
heneghan peng architects
14-16 Lord Edward Street
Dublin, D02 YC63, IE
+353 1 633 9000

Executive Architect
WXY Architecture + Urban Design
224 Centre Street, 5th Floor
New York, NY 10013
+1 (212) 219-1953

Landscape Architect
Gustafson Porter + Bowman
1 Cobham Mews
London, MW1 9SB, UK
+44 020 7284 8950

Reed Hilderbrand LLC
33 Whitney Avenue, 3rd Floor
New Haven, CT, US 06510
+1 (617) 923-2422

Structural & Lighting
ARUP
77 Water Street
New York, NY, US 10005
+1 (212) 896-3000

MEPF & IT
BuroHappold
100 Broadway #23
New York, NY, US 10005
+1 (212) 616-0228

Civil
VHB
100 Great Oaks Blvd., Suite 118
Albany, NY, US 12203
+1 (518) 389-3606

AV & Acoustics
LSTN Consultants
76 Beaver Street, 2nd Floor
New York, NY, US 10005
+1 (347) 788-0810

Facade
Front Inc.
100 E. Broadway Street, #501
New York, NY, US 10002
+1 (212) 242-2220

Key Plan

N

Description	Date
Filing Set	06/17/22

Project

Storm King Art Center

C.F.M. Building

Seal

NOT FOR CONSTRUCTION

Drawing Title

Controls Site Plan

Date	06/17/22
Scale	As indicated
Drawing Number	M-C-900
Sheet Size	ARCH D

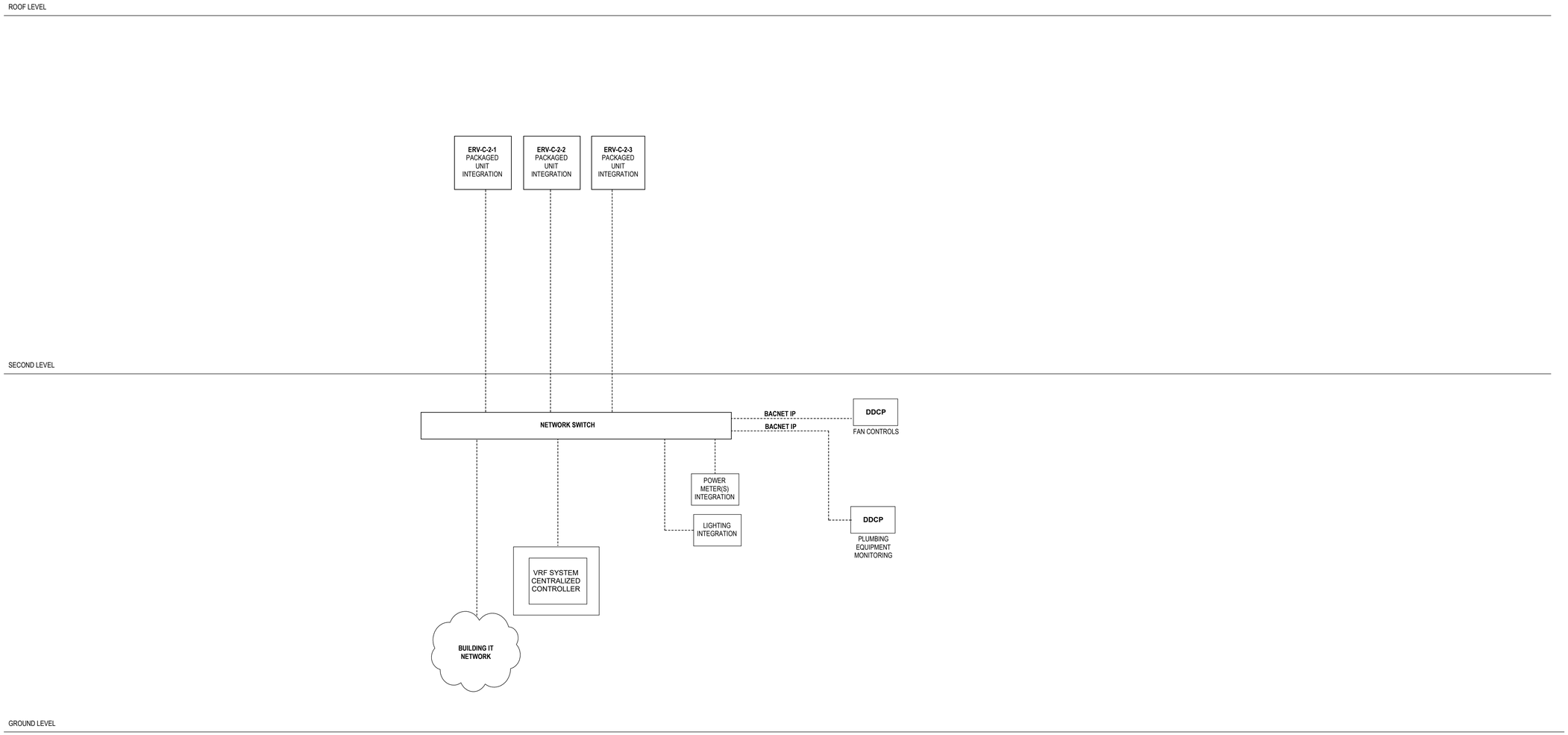

Owner
Storm King Art Center
1 Museum Road
New Windsor, NY 12553
+1 (845) 534-3115

Design Architect
heneghan peng architects
14-16 Lord Edward Street
Dublin, D02 YC63, IE
+353 1 633 9000

Executive Architect
WXY Architecture + Urban Design
224 Centre Street, 5th Floor
New York, NY 10013
+1 (212) 219-1953

Landscape Architect
Gustafson Porter + Bowman
1 Cobham Mews
London, MW1 9SB, UK
+44 020 7284 8950

Reed Hilderbrand LLC
33 Whitney Avenue, 3rd Floor
New Haven, CT, US 06510
+1 (617) 923-2422

Structural & Lighting
ARUP
77 Water Street
New York, NY, US 10005
+1 (212) 896-3000

MEPF & IT
BuroHappold
100 Broadway #23
New York, NY, US 10005
+1 (212) 616-0228

Civil
VHB
100 Great Oaks Blvd., Suite 118
Albany, NY, US 12203
+1 (518) 389-3606

AV & Acoustics
LSTN Consultants
76 Beaver Street, 2nd Floor
New York, NY, US 10005
+1 (347) 788-0810

Facade
Front Inc.
100 E. Broadway Street, #501
New York, NY, US 10002
+1 (212) 242-2220

Key Plan

Description	Date
Filing Set	06/17/22

Project

Storm King Art Center

C.F.M. Building

Seal

NOT FOR CONSTRUCTION

Drawing Title

Control Details

Date	06/17/22
Scale	Not to Scale
Drawing Number	M-C-901
Sheet Size	ARCH D

ERV-C-2-1, ERV-C-2-2 AND ERV-C-2-3 FLOW DIAGRAM

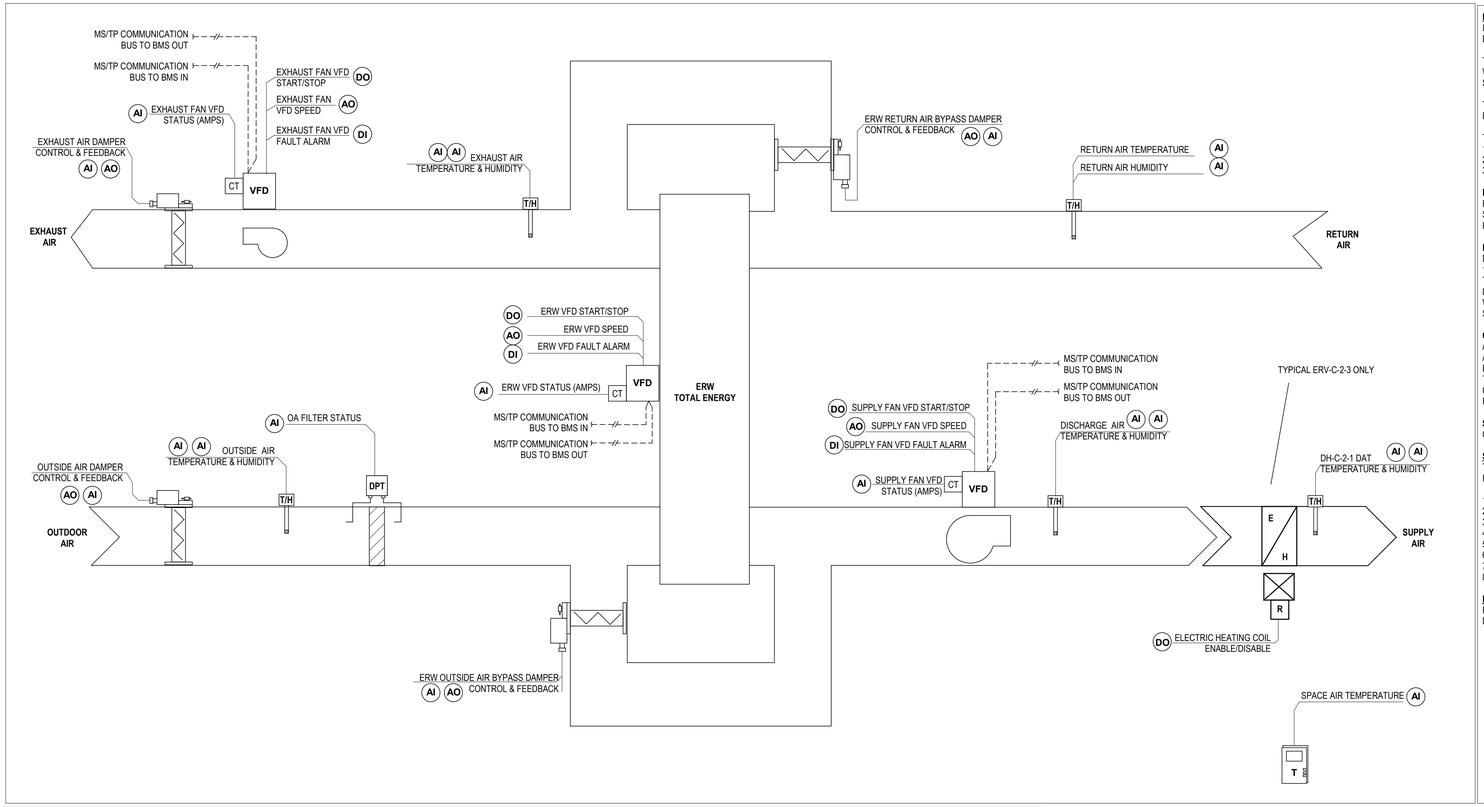

SEQUENCE OF OPERATIONS

ENERGY RECOVERY WHEEL CONTROL: ENERGY WHEEL IS EQUIPPED WITH BYPASS DAMPERS ON THE RETURN AND EXHAUST SIDE WITH END SWITCH TO INDICATE FULL OPEN, A VARIABLE FREQUENCY DRIVE TO CONTROLL ROTATION SPEED, AND A ROTATION DECTECTION MODULE. ALL VALUES SHALL BE DISPLAY AS 0% TO 100% WHERE 0% IS 0% OPEN MINIMUM, AND 100% IS FULL OPEN / MAXIMUM.

THE ENERGY WHEEL SHALL BE ENABLED/ DISABLED WITH THE AIR HANDLING UNIT SUPPLY FAN AND RETURN FAN.
WHEN THE AIR HANDLING UNIT SUPPLY AND RETURN FAN HAS PROVEN "ON" AND THE ENERGY WHEEL VARIABLE FREQUENCY DRIVE IS NOT IN FAULT THE DDC SYSTEM SHALL SEND A START COMMAND TO THE ENERGY WHEEL.

THE PROGRAM SHALL CALCULATE THE ENERGY WHEEL'S ENTHALPY, DEWPOINT, AND WETBULB TEMPERATURE FOR THE LEAVING SUPPLY SIDE AND THE ENTERING AND LEAVING EXHAUST SIDE. THESE VALUES SHALL BE BASED ON THE RESPECTIVE TEMPERATURE AND HUMIDITY INPUT VALUES.

THERE SHALL BE FOUR OPERATIONAL MODES FOR THE ENERGY WHEEL
1. FROST/CONDENSATE PREVENTION MODE
2. HEAT RECOVERY MODE
3. COOLING RECOVERY MODE

FROST/CONDENSATE PREVENTION MODE… SHALL BE CONTROLED WITH A DIRECT ACTING PROPOTIONAL AND INTEGRAL LOOP WITH THE LOOP OUT PUT REPRESENTED IN 0% TO 100% UNITS CALCULATED WITH THE DEVIATION BETWEEN THE PROCESS SET POINT AND THE PROCESS VARIABLE. THE PROCESS SET POINT SHALL BE THE VALUE OF THE ENERGY WHEEL'S CALCULATED FROST DEWPOINT PLUS FIVE DEGREES F. THE PROCESS VARIABLE SHALL BE REPRESENTED BY THE VALUE OF THE ENERGY WHEEL'S LEAVING EXHAUST TEMP.

HEAT RECOVERY MODE… SHALL BE ENABLED BY A DEAD BAND SWITCH BASED ON OUTDOOR AIR TEMPERATURE, "ON" AT 48 DEGREES F. AND "OFF" AT 52 DEGREES F. AND SHALL BE CONTROLED WITH A REVERSE ACTING PROPOTIONAL AND INTEGRAL LOOP WITH THE LOOP OUT PUT REPRESENTED IN 0% TO 100% UNITS CALCULATED WITH THE DEVIATION BETWEEN THE PROCESS SET POINT AND THE PROCESS VARIABLE. THE PROCESS SET POINT IS THE VALUE OF THE AIR HANDLING UNIT'S DISCHARGE AIR TEMPERATURE SET POINT. THE PROCESS VARIABLE SHALL BE REPRESENT BY THE VALUE OF THE ENERGY WHEEL LEAVING SUPPLY TEMPERATURE. THE COMMAND FOR THE ENERGY WHEEL'S VARIABLE FREQUENCY DRIVE SHALL BE THE MINIMUM VALUE OF THE ENERGY WHEEL ACCELL RAMP, FROST/CONDENSATE PREVENTION LOOP OUTPUT, AND THE HEAT RECOVERY LOOP OUTPUT, AND SHALL MODULATE TO MAINTAIN SETPOINT.

COOLING RECOVERY MODE… DURING THIS MODE A DEAD BAND SWITCH BASED ON OUTDOOR AIR TEMPERATURE MINUS THE AIR HANDLING UNIT'S RETURN AIR TEMPERATURE WILL BE ENABLED "ON" AT 5 DEGREES F. DEVIATION AND "OFF" AT 2 DEGREES F. DEVIATION. ADDITIONALLY IT SHALL BE CONTROLED WITH A DIRECT ACTING PROPOTIONAL AND INTEGRAL LOOP WITH THE LOOP OUT PUT REPRESENTED IN 0% TO 100% UNITS CALCULATED WITH THE DEVIATION BETWEEN THE PROCESS SET POINT AND THE PROCESS VARIABLE. THE PROCESS SET POINT IS THE VALUE OF THE AIR HANDLING UNIT'S DISCHARGE AIR TEMPERATURE SET POINT. THE PROCESS VARIABLE SHALL BE REPRESENT BY THE VALUE OF THE ENERGY WHEEL LEAVING SUPPLY TEMPERATURE. THE COMMAND FOR THE ENERGY WHEEL'S VARIABLE FREQUENCY DRIVE SHALL BE THE MINIMUM VALUE OF THE ENERGY WHEEL ACCELL RAMP, FROST/CONDENSATE PREVENTION LOOP OUTPUT, AND THE COOLING RECOVERY LOOP OUTPUT, AND SHALL MODULATE TO MAINTAIN SETPOINT.

SYSTEM SHUT DOWN…THE DDC SYSTEM SHALL STOP THE ENERGY WHEEL AND OPEN THE BYPASS DAMPERS TO FULL BYPASS, SET ZERO IN ALL RAMPS AND CONTROLL OUTPUTS, AND DISABLE THE RATATION DETECTION CONTROL MODULE.

SUPPLY, RETURN AND ERW VFD COMMUNICATIONS BAS INTERFACE:
THE VFD INTERFACE SHALL BE CONNECT DIRECTLY TO THE MAIN DDC SYSTEM MS/TP NETWORK TRUNK TO MONITOR, DISPLAY, TREND AND REPORT THE FOLLOWING MINIMUM POINTS:

1. SPEED OUTPUT
2. HAND/AUTO SELECTION INDICATION
3. DRIVE AMPS
4. KW (COMPARE INSTANTANEOUS VALUE, THE CONNECTED MOTOR NAMPEPLATE HP/KW (CONSTANT) AND THE RATIO)
5. KWHRS (INCLUDE CALCULATED ENERGY SAVINGS FROM BASELINE IF MOTOR KW AT FULL SPEED KW RAN CONTINUOUSLY AT FULL SPEED)
6. OPERATING HOURS
7. WARNINGS
8. FAULTS

FILTER: THERE SHALL BE A DIFFERENTIAL PRESSURE TRANSMITTER MEASURING THE PRESSURE DIFFERENTIAL ACROSS THE FILTER BANKS. IF THE PRESSURE DIFFERENTIAL PRESSURE ACROSS THE FILTER BANKS IS ABOVE THE FILTER DP SETPOINT (ADJUSTABLE) THEN AN ALARM SHALL BE SEND TO THE DDC SYSTEM.

MAF-C-1-1 AND EXF-C-1-1 FLOW DIAGRAM

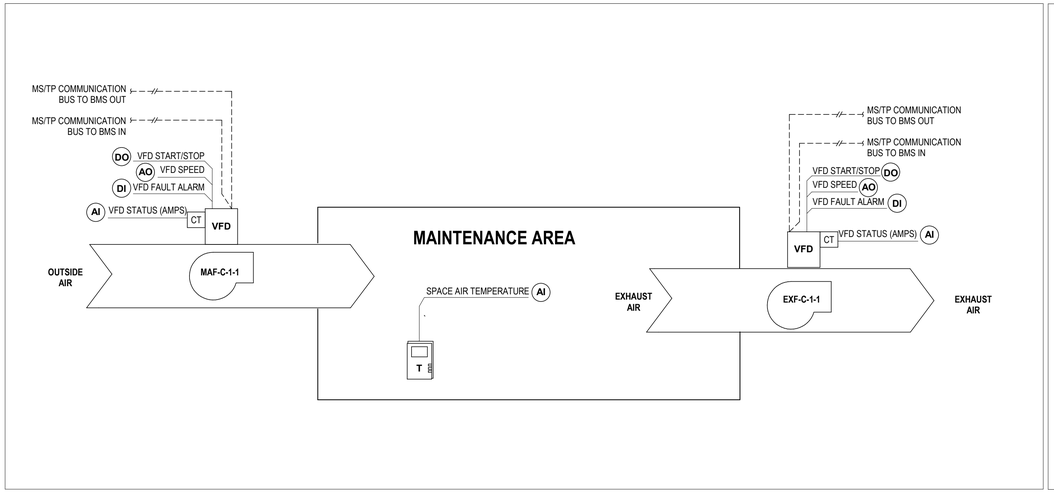

TYPICAL FLOW DIAGRAM FOR EXF-C-1-2 AND EXF-C-3-1

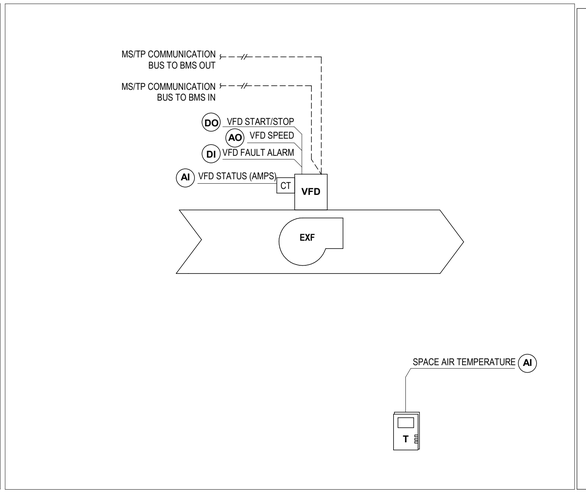

TYPICAL DOMESTIC WATER CONTROL STRATEGY

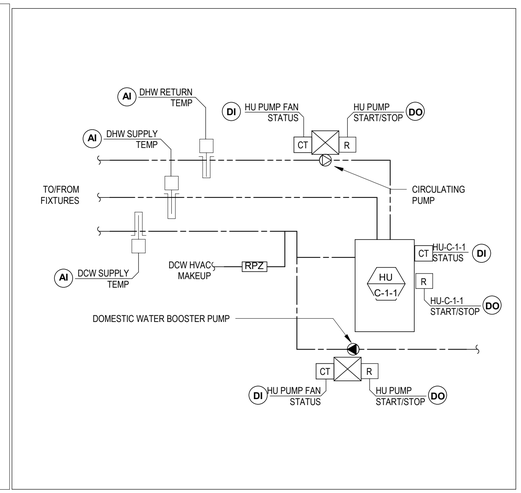

Owner
Storm King Art Center
1 Museum Road
New Windsor, NY 12553
+1 (845) 534-3115

Design Architect
heneghan peng architects
14-16 Lord Edward Street
Dublin, D02 YC63, IE
+353 1 633 9000

Executive Architect
WXY Architecture + Urban Design
224 Centre Street, 5th Floor
New York, NY 10013
+1 (212) 219-1953

Landscape Architect
Gustafson Porter + Bowman
1 Cobham Mews
London, MW1 9SB, UK
+44 020 7284 8950

Reed Hilderbrand LLC
33 Whitney Avenue, 3rd Floor
New Haven, CT, US 06510
+1 (617) 923-2422

Structural & Lighting
ARUP
77 Water Street
New York, NY, US 10005
+1 (212) 896-3000

MEPF & IT
BuroHappold
100 Broadway #23
New York, NY, US 10005
+1 (212) 616-0228

Civil
VHB
100 Great Oaks Blvd., Suite 118
Albany, NY, US 12203
+1 (518) 389-3606

AV & Acoustics
LSTN Consultants
76 Beaver Street, 2nd Floor
New York, NY, US 10005
+1 (347) 788-0810

Facade
Front Inc.
100 E. Broadway Street, #501
New York, NY, US 10002
+1 (212) 242-2220

Key Plan

Description	Date
Filing Set	06/17/22

Project

Storm King Art Center

C.F.M. Building

Seal

NOT FOR CONSTRUCTION

Drawing Title

Control Details

Date	06/17/22
Scale	Not to Scale
Drawing Number	M-C-902
Sheet Size	ARCH D

FCU VRF SYSTEM FLOW DIAGRAM

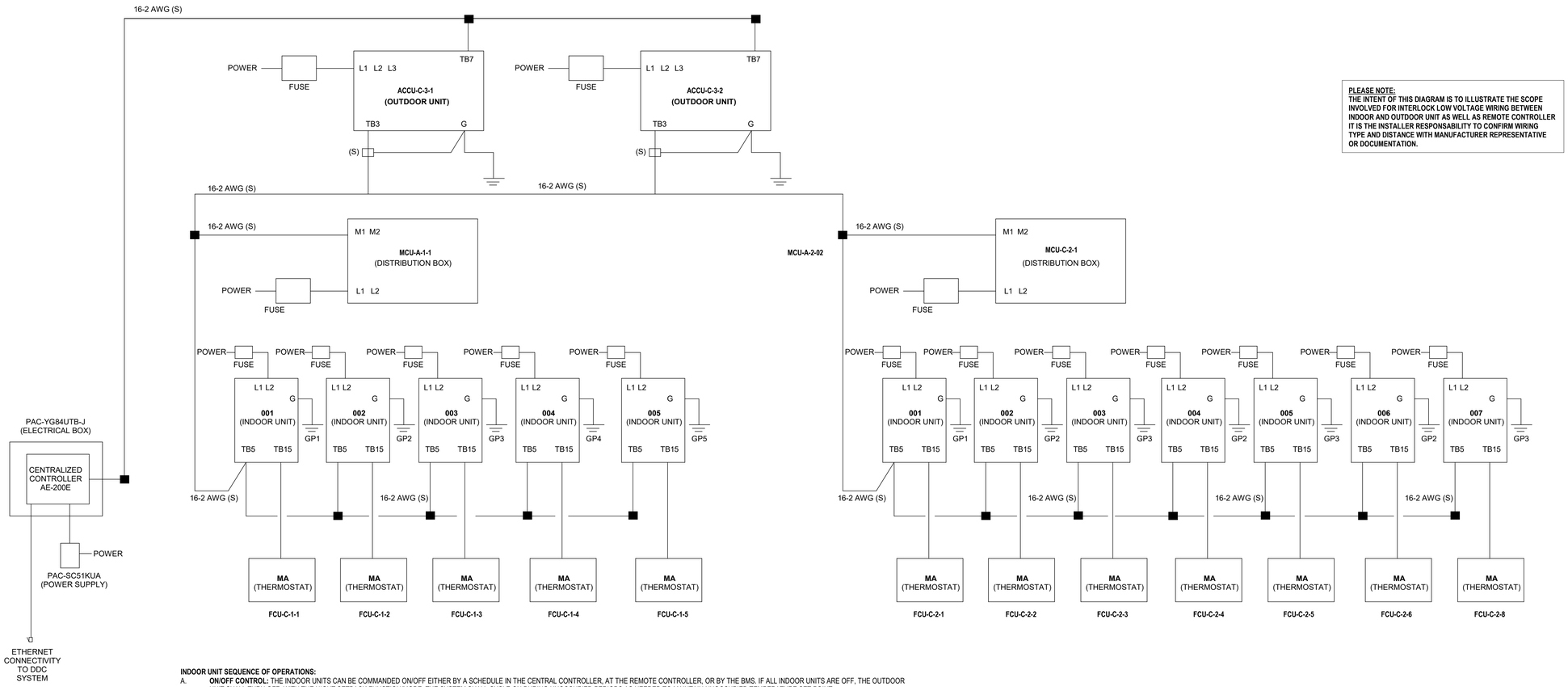

PLEASE NOTE:
THE INTENT OF THIS DIAGRAM IS TO ILLUSTRATE THE SCOPE INVOLVED FOR INTERLOCK LOW VOLTAGE WIRING BETWEEN INDOOR AND OUTDOOR UNIT AS WELL AS REMOTE CONTROLLER IT IS THE INSTALLER RESPONSABILITY TO CONFIRM WIRING TYPE AND DISTANCE WITH MANUFACTURER REPRESENTATIVE OR DOCUMENTATION.

INDOOR UNIT SEQUENCE OF OPERATIONS:

A. **ON/OFF CONTROL:** THE INDOOR UNITS CAN BE COMMANDED ON/OFF EITHER BY A SCHEDULE IN THE CENTRAL CONTROLLER, AT THE REMOTE CONTROLLER, OR BY THE BMS. IF ALL INDOOR UNITS ARE OFF, THE OUTDOOR UNIT SHALL TURN OFF. WITH THE NIGHT SETBACK FUNCTION/MODE, THE SYSTEM SHALL CYCLE ON DURING UNOCCUPIED PERIODS AS NEEDED TO MAINTAIN UNOCCUPIED TEMPERATURE SET POINT.

B. **SPACE TEMPERATURE CONTROL:** THE INDOOR UNIT SHALL MODULATE ITS INTERNAL LINEAR EXPANSION VALVE (LEV) TO MAINTAIN THE TEMPERATURE SET POINT VIA THE INDOOR UNIT'S INTERNAL CONTROLS.
   1. THE SET POINT IS ADJUSTABLE AT THE REMOTE CONTROLLER, CENTRAL CONTROLLER, OR THROUGH A BMS INTERFACE. THE TEMPERATURE SET POINT CAN ALSO BE SCHEDULED AT THE REMOTE CONTROLLER OR THE CENTRAL CONTROLLER.

C. **MODE CONTROL:**
   1. **AUTO MODE:**
   2. THE INDOOR UNIT SHALL DETERMINE WHETHER IT SHOULD BE IN AUTO-HEAT MODE OR AUTO-COOL MODE BASED ON SPACE TEMPERATURE RELATIVE TO TEMPERATURE SET POINT. IF THE INDOOR UNIT IS IN AUTO HEAT MODE, THE INDOOR UNIT CONTROL BOARD SHALL FOLLOW THE HEAT MODE SEQUENCE. IF THE INDOOR UNIT IS IN AUTO COOL MODE, THE INDOOR UNIT CONTROL BOARD SHALL FOLLOW THE COOL MODE SEQUENCE.
   3. THE INDOOR UNIT SHALL SWITCH FROM AUTOHEAT TO AUTOCOOL WHEN THE SPACE TEMPERATURE RISES ABOVE AND REMAINS ABOVE THE TEMPERATURE SET POINT PLUS THE DEAD BAND FOR 3 MINUTES.
   4. THE INDOOR UNIT WILL SWITCH FROM AUTOCOOL TO AUTOHEAT WHEN THE SPACE TEMPERATURE DROPS BELOW AND REMAINS BELOW THE TEMPERATURE SET POINT MINUS THE DEAD BAND FOR 3 MINUTES.
   2. **HEATING MODE:** THE INDOOR UNIT SHALL MODULATE ITS LINEAR EXPANSION VALVE (LEV) TO MAINTAIN TEMPERATURE SET POINT.
   3. **COOLING MODE:** THE INDOOR UNIT SHALL MODULATE ITS LINEAR EXPANSION VALVE (LEV) TO MAINTAIN TEMPERATURE SET POINT.

D. **FAN/VANE CONTROL:** FAN SPEED AND VANE DIRECTION (IF APPLICABLE) SHALL BE ADJUSTABLE BY THE USER AT THE REMOTE CONTROLLER AND/OR THE CENTRAL CONTROLLER.

E. **SUPPLEMENTAL HEAT DURING DEFROST/ERROR:**
   1. **DUCTED INDOOR UNITS:** WHEN THE INDOOR UNIT IS OPERATING IN DEFROST OR ERROR CONDITIONS, A SERIES OF DIP SWITCH SETTINGS AND FAN SPEED JUMPER REMOVAL, THE FAN CAN EITHER BE DISABLED OR ENABLED, AND THE SUPPLEMENTAL HEATING CONTACT CAN EITHER BE ENERGIZED OR DE-ENERGIZED. IF THE FAN IS PERMITTED TO RUN, THE FAN SPEED SETTING DURING DEFROST AND ERROR CONDITIONS IS ADJUSTABLE VIA DIP SWITCHES.
   2. **NON-DUCTED INDOOR UNITS:** WHEN INDOOR UNIT IS OPERATING IN DEFROST OR ERROR CONDITIONS, THE FAN SHALL BE DISABLED AND THE SUPPLEMENTAL HEATING CONTACT SHALL BE ENERGIZED.

Owner
Storm King Art Center
1 Museum Road
New Windsor, NY 12553
+1 (845) 534-3115

Design Architect
heneghan peng architects
14-16 Lord Edward Street
Dublin, D02 YC63, IE
+353 1 633 9000

Executive Architect
WXY Architecture + Urban Design
224 Centre Street, 5th Floor
New York, NY 10013
+1 (212) 219-1953

Landscape Architect
Gustafson Porter + Bowman
1 Cobham Mews
London, MW1 9SB, UK
+44 020 7284 8950

Reed Hilderbrand LLC
33 Whitney Avenue, 3rd Floor
New Haven, CT, US 06510
+1 (617) 923-2422

Structural & Lighting
ARUP
77 Water Street
New York, NY, US 10005
+1 (212) 896-3000

MEPF & IT
BuroHappold
100 Broadway #23
New York, NY, US 10005
+1 (212) 616-0228

Civil
VHB
100 Great Oaks Blvd., Suite 118
Albany, NY, US 12203
+1 (518) 389-3606

AV & Acoustics
LSTN Consultants
76 Beaver Street, 2nd Floor
New York, NY, US 10005
+1 (347) 788-0810

Facade
Front Inc.
100 E. Broadway Street, #501
New York, NY, US 10002
+1 (212) 242-2220

Key Plan

Description	Date
Filing Set	06/17/22

Project

Storm King Art Center

C.F.M. Building

Seal

NOT FOR CONSTRUCTION

Drawing Title

Control Details

Date	06/17/22
Scale	Not to Scale
Drawing Number	M-C-903
Sheet Size	ARCH D

ABBREVIATIONS

AD	AREA DRAIN
BFP	BACKFLOW PREVENTOR
BT	BATHTUB
CI	CAST IRON
CL	CENTER LINE
CLG	CEILING
CO	CLEANOUT
CODP	CLEANOUT DECK PLATE
COWP	CLEAN OUT WALL PLATE
COL	COLUMN
CP	CONTROL PANEL
CW	COLD WATER
DCV	DOUBLE CHECK VALVE
DCDA	DOUBLE CHECK DETECTOR ASSEMBLY
DF	DRINKING FOUNTAIN
DFU	DRAINAGE FIXTURE UNIT
DIA	DIAMETER
DN	PIPE DOWN THRU FLOOR
DR	DRAIN
DW	DISH WASHER
DWG	DRAWING
EL	ELEVATION
ELEC	ELECTRIC
ETBR	EXISTING TO BE REMOVED
ETR	EXISTING TO REMAIN
EWC	ELECTRIC WATER COOLER
EWH	ELECTRIC WATER HEATER
EXIST	EXISTING
F	FIRE SERVICE
FAI	FRESH AIR INTAKE
FD	FLOOR DRAIN
FFD	FUNNEL FLOOR DRAIN
FL	FLOOR
FU	FIXTURE UNIT
FS	FLOOR SINK
G	GAS
GAL	GALLON
GC	GENERAL CONTRACTOR
GI	GREASE INTERCEPTOR
GM	GAS METER
GV	GATE VALVE
GW	GRAY WASTE
HB	HOSE BIB
HC	HANDICAPPED
HVAC	HEATING, VENTILATION & AIR CONDITIONING
HW	HOT WATER
HWH	HOT WATER HEATER
HWR	HOT WATER RETURN
IG	IRRIGATION PIPING
IE	INVERT ELEVATION
IW	INDIRECT WASTE
JS	JANITOR SINK

KS	KITCHEN SINK
L	LEADER
LAV	LAVATORY
LP	LOW PRESSURE
MAX	MAXIMUM
MIN	MINIMUM
MGCV	MASTER GAS CONTRAL VALVE
MICV	METER INLET CONTROL VALVE
MS	MOP SINK
NFWH	NON-FREEZE WALL HYDRANT
NIC	NOT IN CONTRACT
NTS	NOT TO SCALE
OD	OVERFLOW DRAIN
OS&Y	OUTSIDE SCREW & YOKE
PG	PRESSURE GAUGE
PLMB	PLUMBING
PO	PLUGGED OUTLET
POE	POINT OF ENTRY
PS	PANTRY SINK
RD	ROOF DRAIN
REF	REFRIGERATOR
RPZ	REDUCED PRESSURE ZONE
RM	ROOM
S	SOIL
SA	SHOCK OBSORBER
SS, SAN	SANITARY
ST	STORM DRAIN
SE	SEWAGE EJECTOR
SP	SUMP PUMP
SH	SHOWER
SPEC	SPECIFICATIONS
SQ. FT.	SQUARE FEET
TD	TRENCH DRAIN
TMV	THERMOSTATIC MIXING VALVE
TR	TRAP
TYP	TYPICAL
UR	URINAL
V	VENT
VTR	VENT THROUGH ROOF
VB	VACUUM BREAKER
W	WASTE
WC	WATER CLOSET
WH	WALL HUNG
WHA	WATER HAMMER ARRESTER
WSFU	WATER SUPPLY FIXTURE UNIT

PLUMBING SYMBOLS

SYMBOL	DESCRIPTION	
SAN	PROPOSED	SANITARY PIPING BELOW GRADE
SAN	EXISTING	
SAN	PROPOSED	SANITARY WASTE (S OR W)
SAN	EXISTING	
ST SD	PROPOSED	STORM DRAINAGE (ST)
ST SD	EXISTING	
OD	PROPOSED	OVERFLOW STORM DRAINAGE
OD	EXISTING	
V	PROPOSED	VENT
V	EXISTING	
CW	PROPOSED	DOMESTIC COLD WATER
CW	EXISTING	
HW	PROPOSED	DOMESTIC HOT WATER
HW	EXISTING	
HWR	PROPOSED	DOMESTIC HOT WATER RETURN
HWR	EXISTING	
G	PROPOSED	NATURAL GAS
G	EXISTING	
GW	RAINWATER REUSE	
SED	SEWAGE EJECTOR DISCHARGE	
PD	PUMP DISCHARGE PIPING	
GRW	GRAY WATER (LA ONLY)	
GW	GREASE WASTE	
SCW	SOFTENED WATER	
PW	PURIFIED WATER	
CA	COMPRESSED AIR	
OX	OXYGEN	
N	NITROGEN	
LV	LAB VACUUM	
LA	LAB AIR	
LG	LAB GAS	
TW	TEPID WATER	
-X—X—X-	REMOVE EXISTING PIPING	
	PIPING WITH ELECTRIC TRACE HEATING	
	PIPING INTERRUPTED OR TO BE CONTINUED	
	CAP OR END OF PIPE	
P400 XXX	SECTION SHEET No. SECTION NUMBER	
P #	SYSTEM DESCRIPTION RISER NUMBER	PLUMBING RISER
ST #	SYSTEM DESCRIPTION RISER NUMBER	STORM RISER
G #	SYSTEM DESCRIPTION RISER NUMBER	GAS RISER
P #	EQUIPMENT DESCRIPTION EQUIPMENT NUMBER	EQUIPMENT REFERENCE
	POINT OF DISCONNECT	
	CONNECT NEW TO EXISTING	
	HOT WATER BALANCING ASSEMBLY	
	CLEANOUT	
	CLEANOUT DECK PLATE	
	DRAIN	
	HOUSE TRAP	
	P-TRAP	
	SHOCK ABSORBER	
TP	TRAP PRIMER	
	ARROW INDICATES DIRECTION OF FLOW	
	ELBOW UP OR RISE	
	ELBOW DN OR DROP	

PLUMBING SYMBOLS

SYMBOL	DESCRIPTION
	BOTTOM CONNECTION
	TOP CONNECTION
	UNION SCREWED
	PIPE SLEEVE
	WATERPROOF PIPE SLEEVE
	NON FREEZE WALL HYDRANT
	VALVE ON PIPE RISE
	BACK FLOW PREVENTER
	DOUBLE CHECK DETECTOR ASSEMBLY (FIRE PROTECTION)
	REDUCED PRESSURE ZONE VALVE ASSEMBLY (FIRE PROTECTION)
	DOUBLE CHECK ASSEMBLY (FIRE PROTECTION)
	CHECK VALVE
	GATE VALVE
	BALL VALVE
	GAS VALVE
	GLOBE VALVE
	PRESSURE REDUCING VALVE
	TEMPERATURE & PRESSURE RELIEF VALVE
	PRESSURE REGULATING VALVE
	THERMOSTATIC MIXING VALVE
	VALVED CAPPED OUTET
	CURB VALVE
S	SOLENOID VALVE
	OUTSIDE STEM AND YOKE VALVE
	OUTSIDE STEM AND YOKE VALVE W/ TAMPER SWITCH
	STRAINER
P	PRESSURE GAUGE
	HOSE BIB
	VACUUM BREAKER
	THERMOMETER
	PUMP
	CIRCULATOR PUMP
	SCHEMATIC PUMP
	FLOOR SINK
	VENT THRU ROOF
M	METER
F	FILTER
	FAI
	VENT INCREASER

Owner
Storm King Art Center
1 Museum Road
New Windsor, NY 12553
+1 (845) 534-3115

Design Architect
heneghan peng architects
14-16 Lord Edward Street
Dublin, D02 YC63, IE
+353 1 633 9000

Executive Architect
WXY Architecture + Urban Design
224 Centre Street, 5th Floor
New York, NY 10013
+1 (212) 219-1953

Landscape Architect
Gustafson Porter + Bowman
1 Cobham Mews
London, MW1 9SB, UK
+44 020 7284 8950

Reed Hilderbrand LLC
33 Whitney Avenue, 3rd Floor
New Haven, CT, US 06510
+1 (617) 923-2422

Structural & Lighting
ARUP
77 Water Street
New York, NY, US 10005
+1 (212) 896-3000

MEPF & IT
BuroHappold
100 Broadway #23
New York, NY, US 10005
+1 (212) 616-0228

Civil
VHB
100 Great Oaks Blvd., Suite 118
Albany, NY, US 12203
+1 (518) 389-3606

AV & Acoustics
LSTN Consultants
76 Beaver Street, 2nd Floor
New York, NY, US 10005
+1 (347) 788-0810

Facade
Front Inc.
100 E. Broadway Street, #501
New York, NY, US 10002
+1 (212) 242-2220

Key Plan

Description	Date
Filing Set	06/17/22

Project

Storm King Art Center

C.F.M. Building

Seal

NOT FOR CONSTRUCTION

Drawing Title

Abbreviations, Symbols & Legends

Date	06/17/22
Scale	Not to Scale
Drawing Number	P-C-001
Sheet Size	ARCH D

PLUMBING NOTES:

1. CONTRACTOR SHALL VERIFY ALL DIMENSIONS AND JOB CONDITIONS AND SHALL REPORT TO ENGINEER ANY DISCREPANCIES OR OMISSIONS THAT WOULD INTERFERE WITH SATISFACTORY COMPLETION OF THE WORK.

2. CONTRACTOR SHALL VISIT THE JOB SITE AND THOROUGHLY FAMILIARIZE THEMSELVES WITH ALL EXISTING CONDITIONS PRIOR TO THE BEGINNING OF CONSTRUCTION.

3. ALL WORK SHALL BE PERFORMED BY A LICENSED PLUMBING CONTRACTOR IN A FIRST CLASS WORKPERSON LIKE MANNER. THE COMPLETED SYSTEM SHALL BE FULLY OPERATIVE AND FUNCTIONAL.

4. NOTIFY BUILDING MANAGER AT LEAST 48 HOURS BEFORE NEW WORK OR BEFORE SHUT DOWN OF EXISTING SERVICES. RISER SHUT DOWNS SHALL BE PERFORMED AT TENANT'S COST, AT DESIGNATED TIMES UNDER BUILDING MANAGER'S SUPERVISION AND ONLY WITH THEIR APPROVAL.

5. CONTRACTOR SHALL BE RESPONSIBLE FOR ARRANGING WITH BUILDING MANAGEMENT FOR HANDLING MATERIALS, AS WELL AS FOR ALLOWABLE WORKING HOURS AND DELIVERIES.

6. PLUMBING CONTRACTOR SHALL COORDINATE ALL WORK WITH RESPECT TO ALL OTHER TRADES, INCLUDING STRUCTURE AND CEILING HEIGHTS. CONTRACTOR SHALL COORDINATE ALL WORK WITH ARCHITECTURAL LAYOUTS, INCLUDING CEILING HEIGHTS.

7. CONTRACTOR SHALL SUBMIT ALL SHOP DRAWINGS AND MANUFACTURERS' CUTS AND SAMPLES TO ARCHITECT PRIOR TO COMMENCEMENT OF SUCH WORK.

8. CONTRACT DRAWINGS ARE NOT TO BE SCALED.

9. CONTRACTOR SHALL COMPLY WITH ALL NEW YORK STATE AND LOCAL BUILDING DEPARTMENT AND REGULATORY AGENCIES AND CODE REQUIREMENTS. BE RESPONSIBLE FOR SECURING ALL NECESSARY PERMITS AND APPROVALS OF ALL TRADES.

10. CONTRACTOR SHALL CARRY AND DOCUMENT LIABILITY, ACCIDENT AND PROPERTY DAMAGE INSURANCE AS REQUIRED BY COOPERATIVE CORPORATION AND OBSERVE THEIR PERMITTED HOURS FOR WORK.

11. CONTRACTOR SHALL EXERCISE EXTREME CARE IN PROTECTING AREAS ADJACENT TO CONSTRUCTION AREAS, SHALL FULLY PROTECT THEM FROM ANY DAMAGE RESULTING FROM CONTRACTOR'S WORKPERSONS, SUBCONTRACTORS OR AGENTS, AND SHALL BE RESPONSIBLE FOR REPAIRING, CLEANING OR REPLACING ANY SUCH DAMAGE.

12. ALL DIMENSIONS GIVEN ARE FINISH DIMENSIONS UNLESS OTHERWISE STATED.

13. REFER TO ARCHITECTURAL DRAWINGS FOR DIMENSIONS.UNLESS SPECIFICALLY STATED OTHERWISE, CONTRACTOR SHALL FURNISH ALL LABOR, MATERIALS, APPURTENANCES, EQUIPMENT AND SERVICES TO COMPLETE ALL WORK AS INDICATED ON DRAWINGS AND/OR SPECIFIED ON NOTES.

14. UNLESS SPECIFICALLY STATED OTHERWISE, CONTRACTOR SHALL FOLLOW MANUFACTURERS' DIRECTIONS WITH APPLICABLE CODES, INSTRUCTIONS AND RECOMMENDATIONS FOR ALL MATERIALS AND PROCESSES USED IN THIS CONTRACT.PROVIDE ALL FITTINGS, TRANSITIONS, VALVES, AND OTHER DEVICES REQUIRED FOR A COMPLETE WORKABLE INSTALLATION.

15. UPON COMPLETION OF THE WORK, COMPLETELY CLEAN THE CONSTRUCTION AREA SUITABLE FOR THE OWNER'S USE, INCLUDING REMOVAL OF ALL LABELS (AFTER ARCHITECT'S INSPECTION), CLEANING OF ALL THE EQUIPMENT, CONSTRUCTION WORK, WINDOWS AND OTHER WORK, NEW AND OLD, IN THAT CONSTRUCTION AREA. MAINTENANCE MANUAL SHALL BE PROVIDED TO THE OWNER.

16. BUILDING DEPARTMENT APPROVED PLANS SHALL BE TURNED OVER TO OWNER AT THE COMPLETION OF THE JOB.

17. AT THE FINAL COMPLETION OF THE JOB, CONTRACTOR SHALL SUBMIT TO THE OWNER AND TO ENGINEER A NOTARIZED AFFIDAVIT STATING COMPLIANCE WITH ALL PROVISIONS OF THIS CONTRACT, INCLUDING ALL NOTES, EXCEPT FOR THOSE CHANGES SPECIFICALLY APPROVED IN WRITING BY THE ARCHITECT.

18. VACUUM BREAKER AND RELATED PIPING SHALL BE INSTALLED BEHIND WALL; PROVIDE AN ACCESS PANEL TO THE VACUUM BREAKER. ALL EXPOSED PIPING AT THE PANTRY SHALL BE STEEL WITH CHROME PLATED FINISH.

19. CONTRACTOR SHALL GUARANTEE ALL WORK PERFORMED UNDER THIS CONTRACT FOR ONE YEAR, STARTING FROM DATE OF FINAL COMPLETION OF ALL WORK.

20. PROVIDE CLEANOUTS FOR CHANGES IN DIRECTION FOR ALL SANITARY PIPING.

21. CONTRACTOR SHALL COORDINATE ALL FLOOR CORING SLEEVES AND FLOOR OPENINGS WITH STRUCTURAL DRAWINGS.

22. ALL PIPING PENETRATIONS THROUGH WALLS OR CEILINGS SHALL BE PROVIDED WITH APPROPRIATE FIRE RETARDANT SEALANT AND ESCUTCHEONS.

23. PLUMBING CONTRACTOR SHALL OBTAIN THE BUILDINGS RULES AND REGULATIONS PRIOR TO BID AND SHALL MEET ALL REQUIREMENTS. NO EXTRA MONEY WILL BE BE AWARDED FOR ANY WORK PERFORMED AND MATERIAL PURCHASED THAT DOES NOT MEET THE REQUIREMENTS.

24. ALL FIXTURES MUST BE PROVIDED WITH READILY ACCESSIBLE STOPS AND APPROPRIATELY MARKED ACCESS PANELS. COORDINATE LOCATIONS WITH GENERAL CONTRACTOR PRIOR TO INSTALLATION.

25. PLATFORMS, CURBS, AND FLASHINGS FOR PLUMBING EQUIPMENT SHALL BE AS INDICATED ON THE STRUCTURAL AND ARCHITECTURAL PLANS, UNLESS NOTED OTHERWISE. COORDINATE EXACT SIZES OF REQUIRED OPENINGS AND SUPPORTS FOR FURNISHED EQUIPMENT.

26. PROVIDE DRAIN DRIP PANS UNDER ALL PLUMBING DRAINAGE PIPING TO BE INSTALLED WITHIN THE ELECTRICAL AND TELEPHONE EQUIPMENT, KITCHEN, PANTRY OR FOOD PREPARATION AND DINING ROOM CEILINGS. PROVIDE TELLTALE DRAINAGE PIPE AND SPILL OVER CLOSET FLOOR DRAIN OR SERVICE SINK.

27. PROVIDE ACCESS DOORS FOR SHUTOFF VALVES, SHOCK ABSORBERS, HOT WATER RETURN BALANCING RIGS, TRAP PRIMERS AND CLEANOUTS.

28. CONTRACTOR TO VERIFY SYSTEM WORKING PRESSURE AND PROVIDE PRESSURE REDUCING VALVES WHERE APPLICABLE.

29. CONTRACTOR TO PROVIDE SHOCK ABSORBERS PRIOR TO ALL QUICK CLOSING VALVES.

Owner
Storm King Art Center
1 Museum Road
New Windsor, NY 12553
+1 (845) 534-3115

Design Architect
heneghan peng architects
14-16 Lord Edward Street
Dublin, D02 YC63, IE
+353 1 633 9000

Executive Architect
WXY Architecture + Urban Design
224 Centre Street, 5th Floor
New York, NY 10013
+1 (212) 219-1953

Landscape Architect
Gustafson Porter + Bowman
1 Cobham Mews
London, MW1 9SB, UK
+44 020 7284 8950

Reed Hilderbrand LLC
33 Whitney Avenue, 3rd Floor
New Haven, CT, US 06510
+1 (617) 923-2422

Structural & Lighting
ARUP
77 Water Street
New York, NY, US 10005
+1 (212) 896-3000

MEPF & IT
BuroHappold
100 Broadway #23
New York, NY, US 10005
+1 (212) 616-0228

Civil
VHB
100 Great Oaks Blvd., Suite 118
Albany, NY, US 12203
+1 (518) 389-3606

AV & Acoustics
LSTN Consultants
76 Beaver Street, 2nd Floor
New York, NY, US 10005
+1 (347) 788-0810

Facade
Front Inc.
100 E. Broadway Street, #501
New York, NY, US 10002
+1 (212) 242-2220

Key Plan

Description	Date
Filing Set	06/17/22

Project

Storm King Art Center

C.F.M. Building

Seal

NOT FOR CONSTRUCTION

Drawing Title

General Notes

Date	06/17/22
Scale	Not to Scale
Drawing Number	P-C-002
Sheet Size	ARCH D

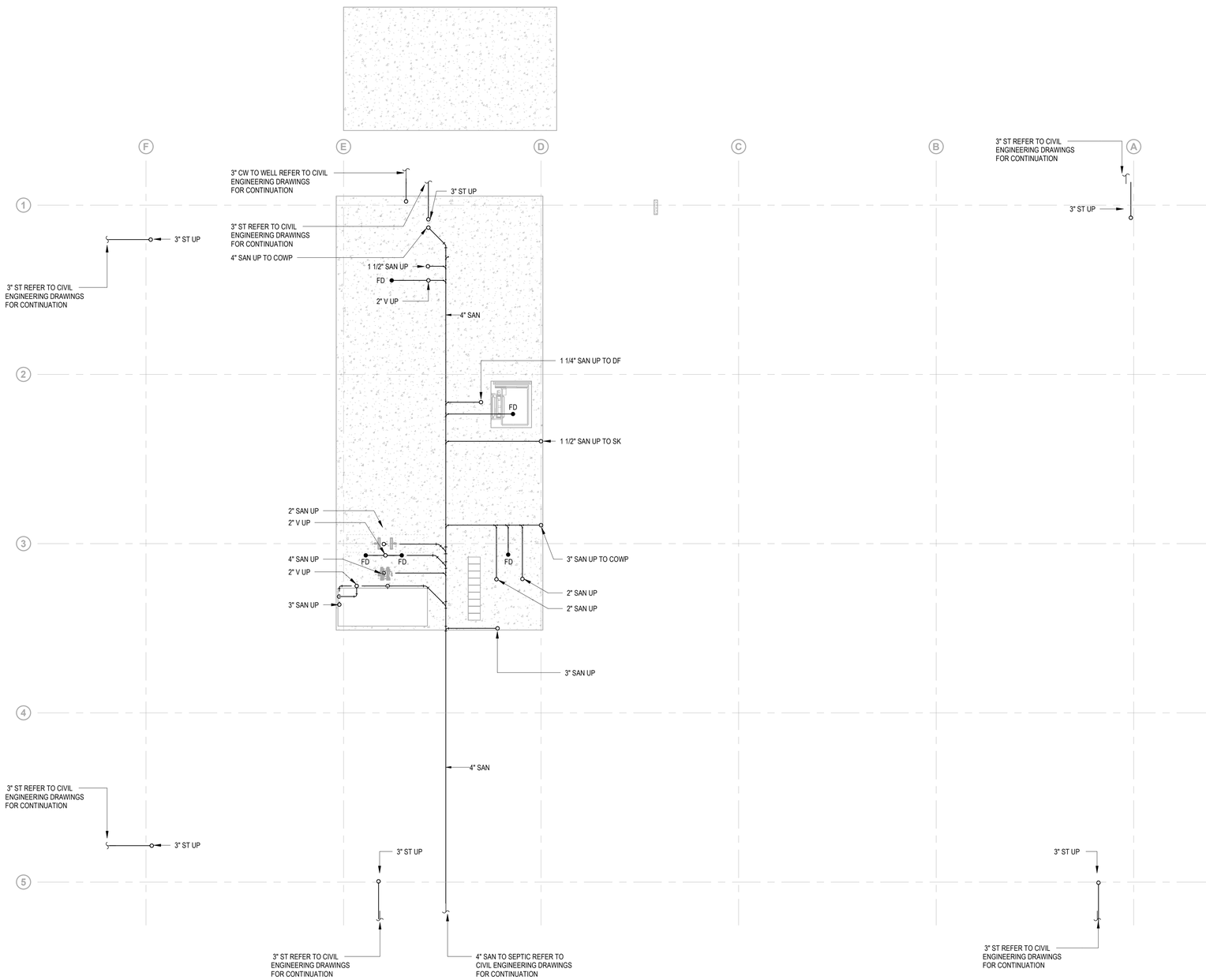

Owner
Storm King Art Center
1 Museum Road
New Windsor, NY 12553
+1 (845) 534-3115

Design Architect
heneghan peng architects
14-16 Lord Edward Street
Dublin, D02 YC63, IE
+353 1 633 9000

Executive Architect
WXY Architecture + Urban Design
224 Centre Street, 5th Floor
New York, NY 10013
+1 (212) 219-1953

Landscape Architect
Gustafson Porter + Bowman
1 Cobham Mews
London, MW1 9SB, UK
+44 020 7284 8950

Reed Hilderbrand LLC
33 Whitney Avenue, 3rd Floor
New Haven, CT, US 06510
+1 (617) 923-2422

Structural & Lighting
ARUP
77 Water Street
New York, NY, US 10005
+1 (212) 896-3000

MEPF & IT
BuroHappold
100 Broadway #23
New York, NY, US 10005
+1 (212) 616-0228

Civil
VHB
100 Great Oaks Blvd., Suite 118
Albany, NY, US 12203
+1 (518) 389-3606

AV & Acoustics
LSTN Consultants
76 Beaver Street, 2nd Floor
New York, NY, US 10005
+1 (347) 788-0810

Facade
Front Inc.
100 E. Broadway Street, #501
New York, NY, US 10002
+1 (212) 242-2220

Key Plan

N

Description	Date
Filing Set	06/17/22

Project

Storm King Art Center

C.F.M. Building

Seal

NOT FOR CONSTRUCTION

Drawing Title

Piping Plan - Underslab

Date	06/17/22
Scale	1/8" = 1'-0"
Drawing Number	P-C-100
Sheet Size	ARCH D

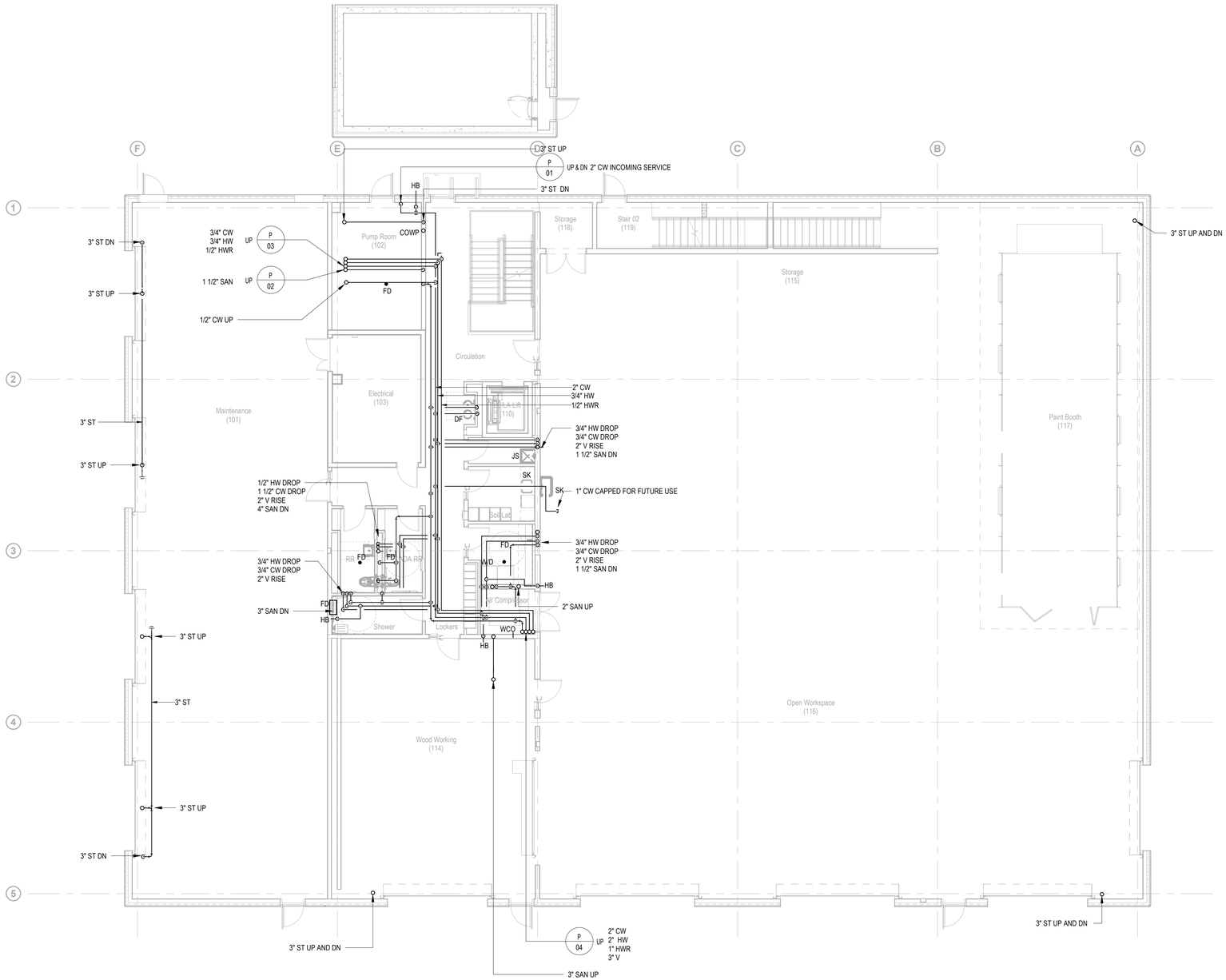

Owner
Storm King Art Center
1 Museum Road
New Windsor, NY 12553
+1 (845) 534-3115

Design Architect
heneghan peng architects
14-16 Lord Edward Street
Dublin, D02 YC63, IE
+353 1 633 9000

Executive Architect
WXY Architecture + Urban Design
224 Centre Street, 5th Floor
New York, NY 10013
+1 (212) 219-1953

Landscape Architect
Gustafson Porter + Bowman
1 Cobham Mews
London, MW1 9SB, UK
+44 020 7284 8950

Reed Hilderbrand LLC
33 Whitney Avenue, 3rd Floor
New Haven, CT, US 06510
+1 (617) 923-2422

Structural & Lighting
ARUP
77 Water Street
New York, NY, US 10005
+1 (212) 896-3000

MEPF & IT
BuroHappold
100 Broadway #23
New York, NY, US 10005
+1 (212) 616-0228

Civil
VHB
100 Great Oaks Blvd., Suite 118
Albany, NY, US 12203
+1 (518) 389-3606

AV & Acoustics
LSTN Consultants
76 Beaver Street, 2nd Floor
New York, NY, US 10005
+1 (347) 788-0810

Facade
Front Inc.
100 E. Broadway Street, #501
New York, NY, US 10002
+1 (212) 242-2220

Key Plan

N

Description	Date
Filing Set	06/17/22

Project

Storm King Art Center

C.F.M. Building

Seal

NOT FOR CONSTRUCTION

Drawing Title

Piping Plan - Ground Level

Date	06/17/22
Scale	1/8" = 1'-0"
Drawing Number	P-C-101
Sheet Size	ARCH D

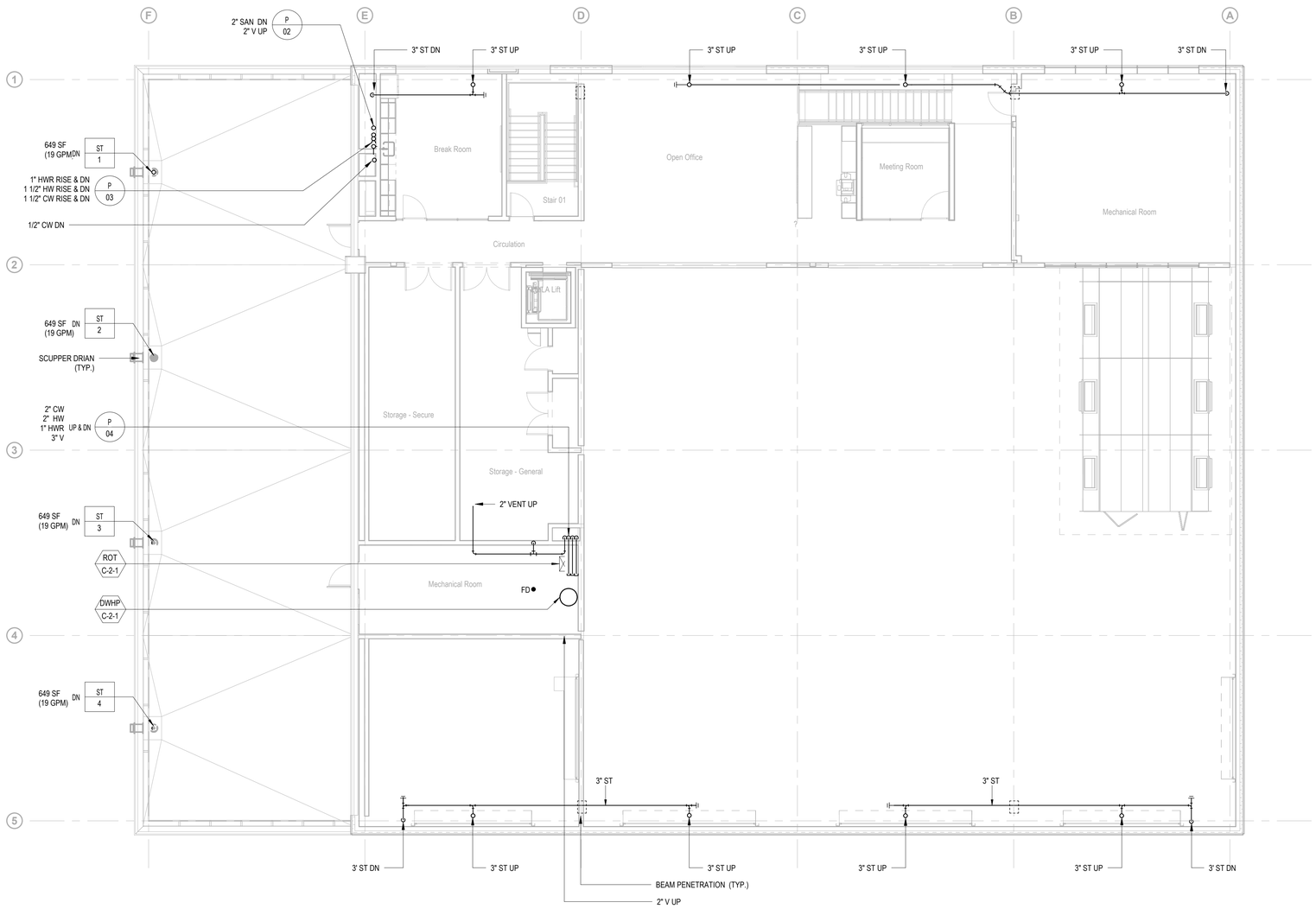

Owner
Storm King Art Center
1 Museum Road
New Windsor, NY 12553
+1 (845) 534-3115

Design Architect
heneghan peng architects
14-16 Lord Edward Street
Dublin, D02 YC63, IE
+353 1 633 9000

Executive Architect
WXY Architecture + Urban Design
224 Centre Street, 5th Floor
New York, NY 10013
+1 (212) 219-1953

Landscape Architect
Gustafson Porter + Bowman
1 Cobham Mews
London, MW1 9SB, UK
+44 020 7284 8950

Reed Hilderbrand LLC
33 Whitney Avenue, 3rd Floor
New Haven, CT, US 06510
+1 (617) 923-2422

Structural & Lighting
ARUP
77 Water Street
New York, NY, US 10005
+1 (212) 896-3000

MEPF & IT
BuroHappold
100 Broadway #23
New York, NY, US 10005
+1 (212) 616-0228

Civil
VHB
100 Great Oaks Blvd., Suite 118
Albany, NY, US 12203
+1 (518) 389-3606

AV & Acoustics
LSTN Consultants
76 Beaver Street, 2nd Floor
New York, NY, US 10005
+1 (347) 788-0810

Facade
Front Inc.
100 E. Broadway Street, #501
New York, NY, US 10002
+1 (212) 242-2220

Key Plan

N

Description	Date
Filing Set	06/17/22

Project

Storm King Art Center

C.F.M. Building

Seal

NOT FOR CONSTRUCTION

Drawing Title

Piping Plan - Second Level

Date	06/17/22
Scale	1/8" = 1'-0"
Drawing Number	P-C-102
Sheet Size	ARCH D

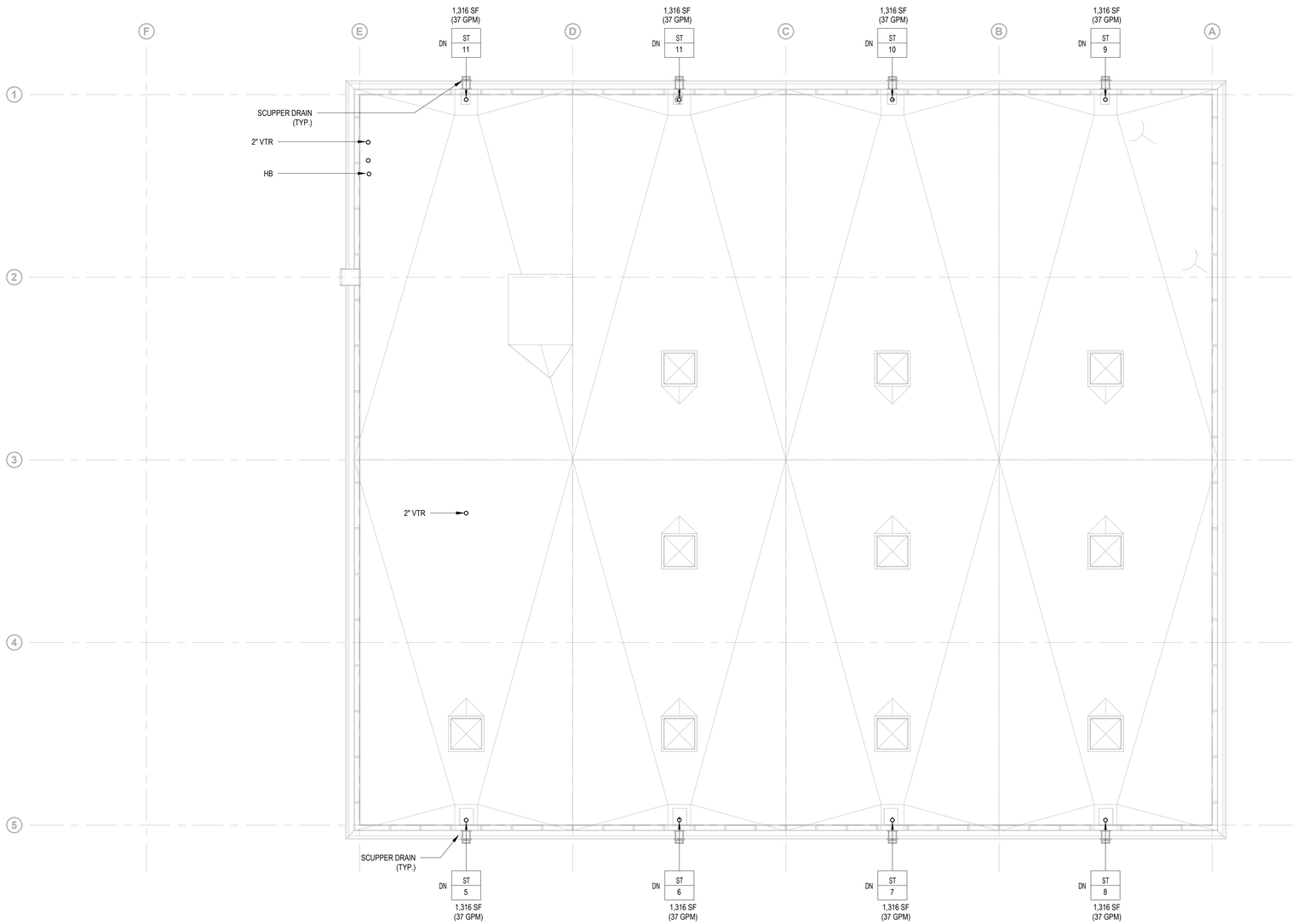

Owner
Storm King Art Center
1 Museum Road
New Windsor, NY 12553
+1 (845) 534-3115

Design Architect
heneghan peng architects
14-16 Lord Edward Street
Dublin, D02 YC63, IE
+353 1 633 9000

Executive Architect
WXY Architecture + Urban Design
224 Centre Street, 5th Floor
New York, NY 10013
+1 (212) 219-1953

Landscape Architect
Gustafson Porter + Bowman
1 Cobham Mews
London, MW1 9SB, UK
+44 020 7284 8950

Reed Hilderbrand LLC
33 Whitney Avenue, 3rd Floor
New Haven, CT, US 06510
+1 (617) 923-2422

Structural & Lighting
ARUP
77 Water Street
New York, NY, US 10005
+1 (212) 896-3000

MEPF & IT
BuroHappold
100 Broadway #23
New York, NY, US 10005
+1 (212) 616-0228

Civil
VHB
100 Great Oaks Blvd., Suite 118
Albany, NY, US 12203
+1 (518) 389-3606

AV & Acoustics
LSTN Consultants
76 Beaver Street, 2nd Floor
New York, NY, US 10005
+1 (347) 788-0810

Facade
Front Inc.
100 E. Broadway Street, #501
New York, NY, US 10002
+1 (212) 242-2220

Key Plan

N

Description	Date
Filing Set	06/17/22

Project

Storm King Art Center

C.F.M. Building

Seal

NOT FOR CONSTRUCTION

Drawing Title

Piping Plan - Roof Level

Date	06/17/22
Scale	1/8" = 1'-0"
Drawing Number	P-C-103
Sheet Size	ARCH D

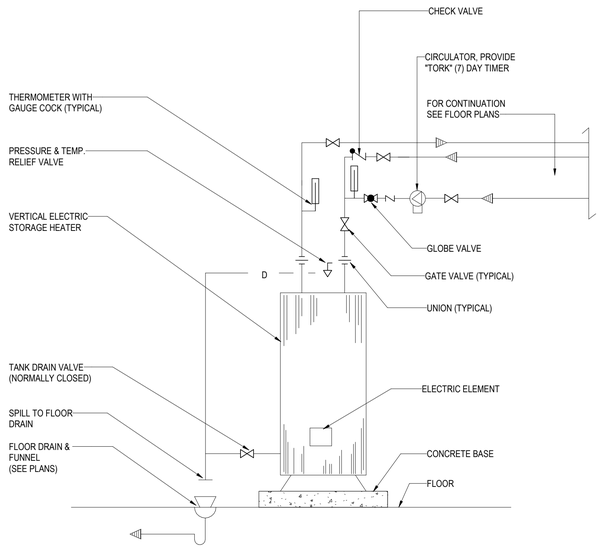

2 ELECTRIC DOMESTIC WATER HEATER W/CIRCULATION

NOT TO SCALE

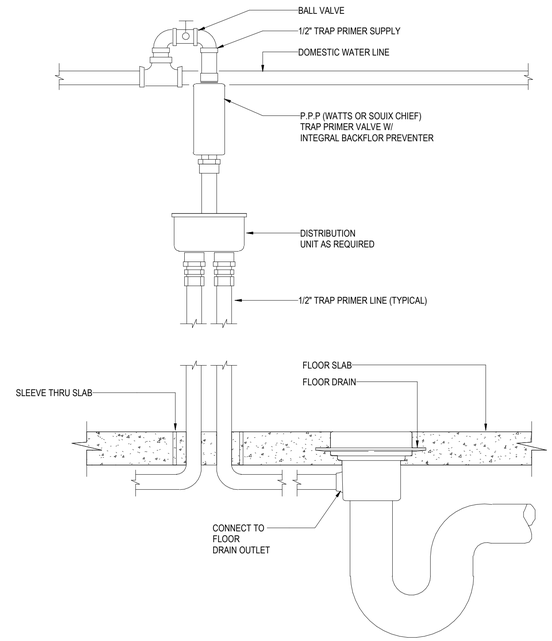

3 TRAP PRIMER FOR MECHANICAL ROOM DRAINS

NOT TO SCALE

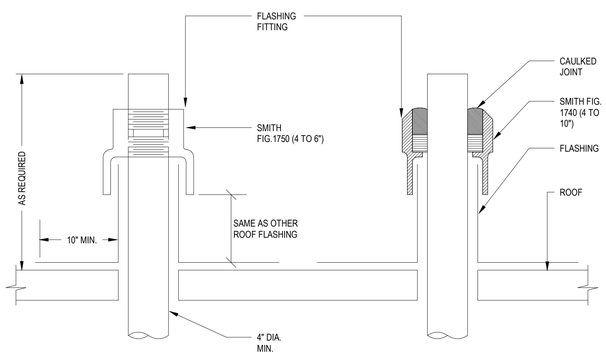

4 FLASHINGS FOR VENT TERMINALS ABOVE ROOF

NOT TO SCALE

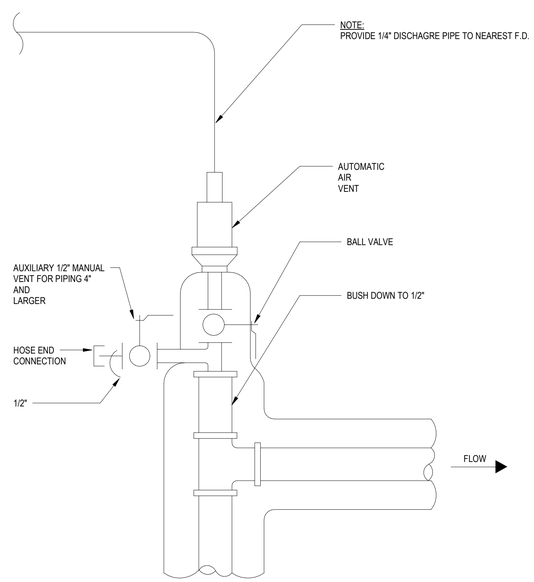

NOTE:
1. DETAIL TO BE USED AT ALL AUTOMATIC AIR VENT LOCATIONS, INCLUDING AT THE TOP OF ALL PIPE RISERS CONNECTING TO TWO OR MORE FLOORS.
2. AAV. TO BE INSTALLED AT

5 AUTOMATIC AIR VENT

NOT TO SCALE

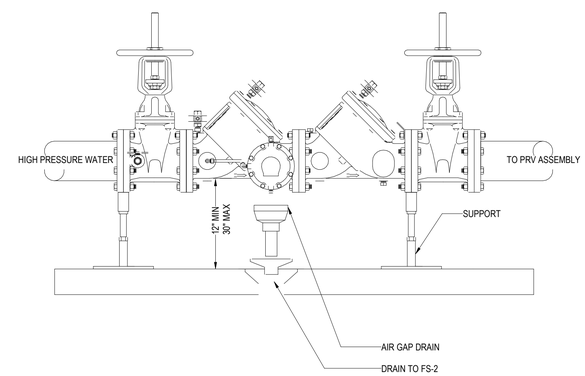

NOTE:
1. BACKFLOW PREVENTOR TO BE PAINTED HUNTER GREEN 4372 OR HUNTER GREEN 08SF.
2. TO BE INSTALLED PER WATER SERVICE STANDARD SPECIFICATION W-221A.
3. PROPER SCREENING OF BACKFLOW PREVENTION DEVICE SHALL COMPLY WITH WATER SERVICE STANDARD SPECIFICATION SECTION 4-10.
4. BACKFLOW PREVENTION DEVICE SHOULD BE LEAD FREE.

6 BACKFLOW PREVENTER

NOT TO SCALE

Owner
Storm King Art Center
1 Museum Road
New Windsor, NY 12553
+1 (845) 534-3115

Design Architect
heneghan peng architects
14-16 Lord Edward Street
Dublin, D02 YC63, IE
+353 1 633 9000

Executive Architect
WXY Architecture + Urban Design
224 Centre Street, 5th Floor
New York, NY 10013
+1 (212) 219-1953

Landscape Architect
Gustafson Porter + Bowman
1 Cobham Mews
London, MW1 9SB, UK
+44 020 7284 8950

Reed Hilderbrand LLC
33 Whitney Avenue, 3rd Floor
New Haven, CT, US 06510
+1 (617) 923-2422

Structural & Lighting
ARUP
77 Water Street
New York, NY, US 10005
+1 (212) 896-3000

MEPF & IT
BuroHappold
100 Broadway #23
New York, NY, US 10005
+1 (212) 616-0228

Civil
VHB
100 Great Oaks Blvd., Suite 118
Albany, NY, US 12203
+1 (518) 389-3606

AV & Acoustics
LSTN Consultants
76 Beaver Street, 2nd Floor
New York, NY, US 10005
+1 (347) 788-0810

Facade
Front Inc.
100 E. Broadway Street, #501
New York, NY, US 10002
+1 (212) 242-2220

Key Plan

Description	Date
Filing Set	06/17/22

Project

Storm King Art Center
C.F.M. Building

Seal

NOT FOR CONSTRUCTION

Drawing Title

Plumbing Details

Date	06/17/22
Scale	Not to Scale
Drawing Number	P-C-501
Sheet Size	ARCH D

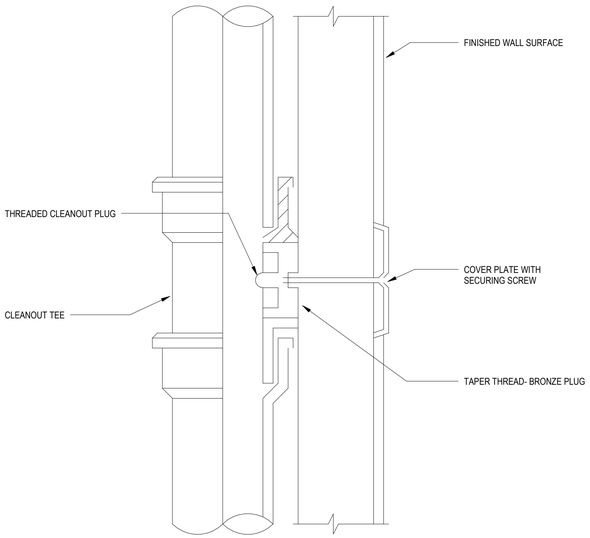

NOTE:
ACCESS PANELS SHALL BE PROVIDED ON ALL VERTICAL FOUL DRAINAGE STACKS AT 4' (1200MM) ABOVE EACH FINISHED FINISHED FLOOR LEVEL, TO THE CENTERLINE OF THE CLEANOUT.

1 CLEANOUT CONCEALED
NOT TO SCALE

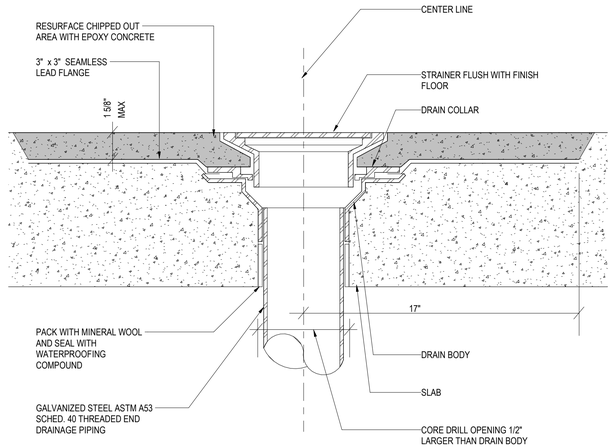

NOTES:

1. WATERPROOF EXISTING FLOOR OF ROOM WHERE FLOOR DRAIN IS TO BE LOCATED USING THOROSEAL SEALANT OR APPROVED EQUAL.

2 TYPICAL FLOOR DRAIN INSTALLATION
NOT TO SCALE

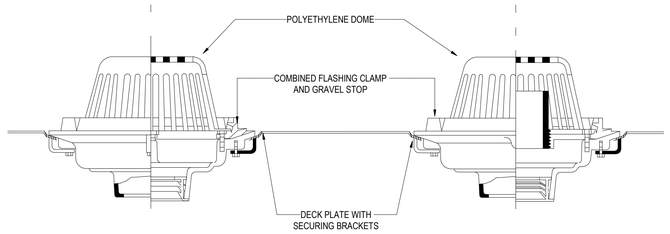

3 ROOF DRAIN AND OVERFLOW DRAIN
NOT TO SCALE

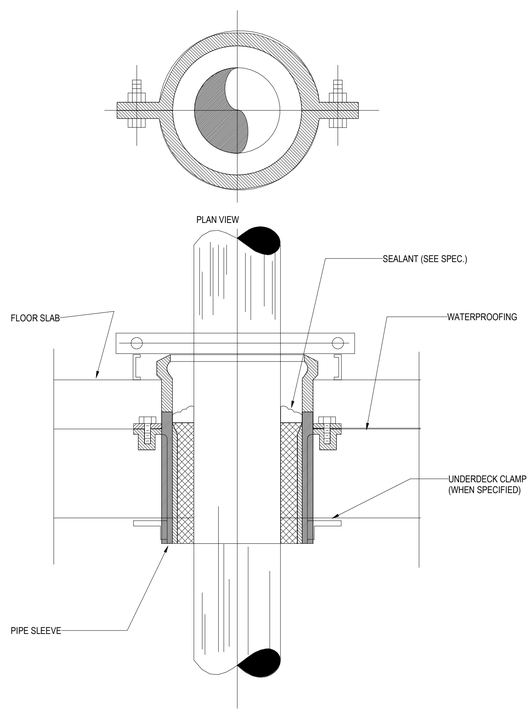

4 PIPE SLEEVE THRU WATERPROOF FLOOR SLAB
NOT TO SCALE

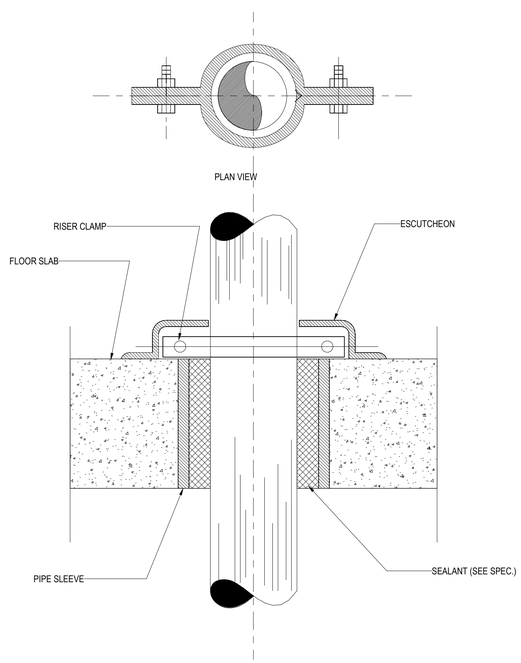

5 PIPE SLEEVE THRU EXPOSED FLOOR SLAB
NOT TO SCALE

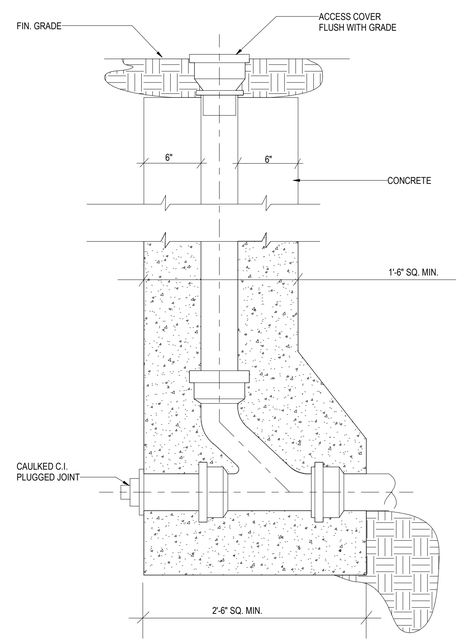

6 OUTSIDE BUILDING GRADE CLEANOUT
NOT TO SCALE

Owner
Storm King Art Center
1 Museum Road
New Windsor, NY 12553
+1 (845) 534-3115

Design Architect
heneghan peng architects
14-16 Lord Edward Street
Dublin, D02 YC63, IE
+353 1 633 9000

Executive Architect
WXY Architecture + Urban Design
224 Centre Street, 5th Floor
New York, NY 10013
+1 (212) 219-1953

Landscape Architect
Gustafson Porter + Bowman
1 Cobham Mews
London, MW1 9SB, UK
+44 020 7284 8950

Reed Hilderbrand LLC
33 Whitney Avenue, 3rd Floor
New Haven, CT, US 06510
+1 (617) 923-2422

Structural & Lighting
ARUP
77 Water Street
New York, NY, US 10005
+1 (212) 896-3000

MEPF & IT
BuroHappold
100 Broadway #23
New York, NY, US 10005
+1 (212) 616-0228

Civil
VHB
100 Great Oaks Blvd., Suite 118
Albany, NY, US 12203
+1 (518) 389-3606

AV & Acoustics
LSTN Consultants
76 Beaver Street, 2nd Floor
New York, NY, US 10005
+1 (347) 788-0810

Facade
Front Inc.
100 E. Broadway Street, #501
New York, NY, US 10002
+1 (212) 242-2220

Key Plan

Description	Date
Filing Set	06/17/22

Project

Storm King Art Center
C.F.M. Building

Seal

NOT FOR CONSTRUCTION

Drawing Title

Plumbing Details

Date	06/17/22
Scale	Not to Scale
Drawing Number	P-C-502
Sheet Size	ARCH D

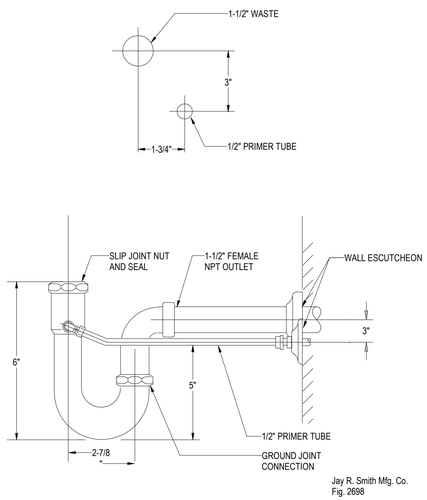

1 PRIM-EZE WATER SAVER

NOT TO SCALE

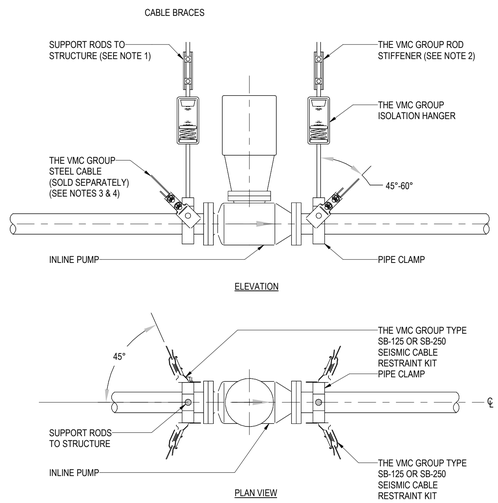

NOTES:

1. DOUBLE-SIDED BEAM CLAMP ATTACHMENTS AT SEISMIC RESTRAINT LOCATIONS.
2. FOR APPLICABILITY OF THE VMC GROUP SRBC (SEISMIC ROD BRACING CLAMP REFER TO SGMEC-190).
3. SLACK CABLE 1/2" IN CENTER IF DUCT IS ISOLATED.
4. FOR DETAILS OF CONNECTION, REFER TO SGMEC-191 OR -193
5. APPLICATION USED WITH 1/8" & 1/4" CABLE ONLY.

2 INLINE PUMPS

NOT TO SCALE

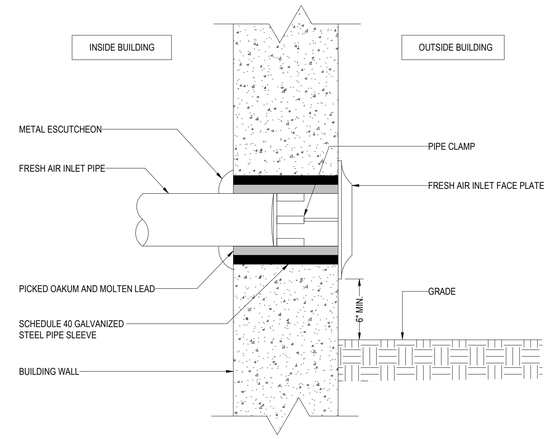

3 FAI

NOT TO SCALE

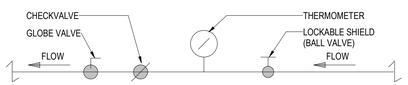

PROCEDURE FOR BALANCING HOT WATER RETURN PIPING

1. IN ORDER TO BALANCE HOT WATER RETURN TEMPERATURES IN THE RETURN PIPING THIS IS THE PROCEDURE TO BE FOLLOWED:

   BEFORE A RETURN CIRCULATION SYSTEM IS PUT INTO SERVICE, IT SHOULD BE ADJUSTED FOR RETURN LINE TEMPERATURE BALANCE UNDER CONDITIONS WHEREBY NO WATER IS DRAWN AT FIXTURE OUTLETS. THE ADJUSTMENT PROCEDURE IS SIMPLE AND MAY BE ACCURATELY DONE USING THERMOMETERS. FIRST, CLOSE ALL BALANCING VALVES SO THAT ALL CIRCULATION GOES THROUGH BRANCH 1. THEN, OPEN THE BALANCING VALVE ON BRANCH 2 TO THE DEGREE NECESSARY SO THAT IT RETURNS WATER CONSTANTLY AT THE SAME TEMPERATURE AS BRANCH 1. SIMILARLY, ADJUSTMENT MAY BE MADE WITH BALANCING VALVE ON ANY OTHER RISERS OR BRANCHES SO THAT ALL RETURN WATER IS AT THE SAME TEMPERATURE.

2. CONTRACTOR, AT THE END OF THE PROJECT, TO SUBMIT A REPORT FOR RECORD TO THE ENGINEER THAT THE HOT WATER RETURN CIRCULATION SYSTEM HAS BEEN BALANCED PROPERLY.

4 HW BALANCING VALVE

NOT TO SCALE

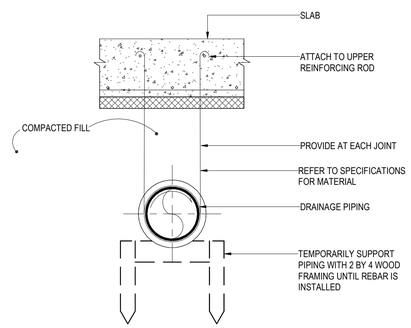

PIPE DIAMETER	ROD DIAMETER
UP TO 2IN.	3/8 IN.
2-1/2" - 4IN.	1/2 IN.
5 AND 6IN.	5/8 IN.

5 UNDERGROUND BELOW SLAB

NOT TO SCALE

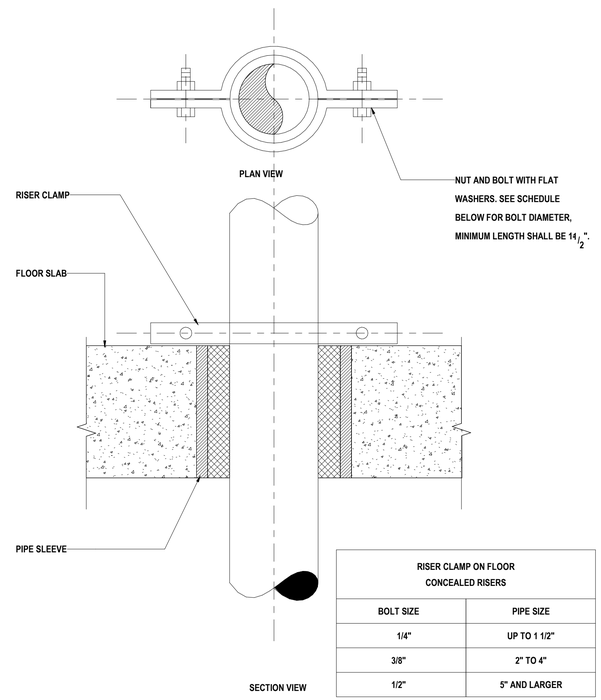

RISER CLAMP ON FLOOR CONCEALED RISERS	
BOLT SIZE	PIPE SIZE
1/4"	UP TO 1 1/2"
3/8"	2" TO 4"
1/2"	5" AND LARGER

6 RISER SUPPORT DETAIL

NOT TO SCALE

Owner
Storm King Art Center
1 Museum Road
New Windsor, NY 12553
+1 (845) 534-3115

Design Architect
heneghan peng architects
14-16 Lord Edward Street
Dublin, D02 YC63, IE
+353 1 633 9000

Executive Architect
WXY Architecture + Urban Design
224 Centre Street, 5th Floor
New York, NY 10013
+1 (212) 219-1953

Landscape Architect
Gustafson Porter + Bowman
1 Cobham Mews
London, MW1 9SB, UK
+44 020 7284 8950

Reed Hilderbrand LLC
33 Whitney Avenue, 3rd Floor
New Haven, CT, US 06510
+1 (617) 923-2422

Structural & Lighting
ARUP
77 Water Street
New York, NY, US 10005
+1 (212) 896-3000

MEPF & IT
BuroHappold
100 Broadway #23
New York, NY, US 10005
+1 (212) 616-0228

Civil
VHB
100 Great Oaks Blvd., Suite 118
Albany, NY, US 12203
+1 (518) 389-3606

AV & Acoustics
LSTN Consultants
76 Beaver Street, 2nd Floor
New York, NY, US 10005
+1 (347) 788-0810

Facade
Front Inc.
100 E. Broadway Street, #501
New York, NY, US 10002
+1 (212) 242-2220

Key Plan

Description	Date
Filing Set	06/17/22

Project

Storm King Art Center

C.F.M. Building

Seal

NOT FOR CONSTRUCTION

Drawing Title

Plumbing Details

Date	06/17/22
Scale	Not to Scale
Drawing Number	P-C-503
Sheet Size	ARCH D

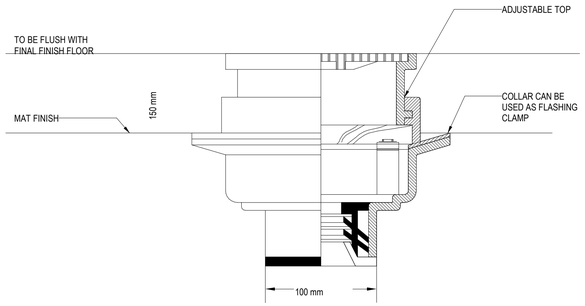

1 FLOOR DRAIN WITH ADJUSTABLE TOP

NOT TO SCALE

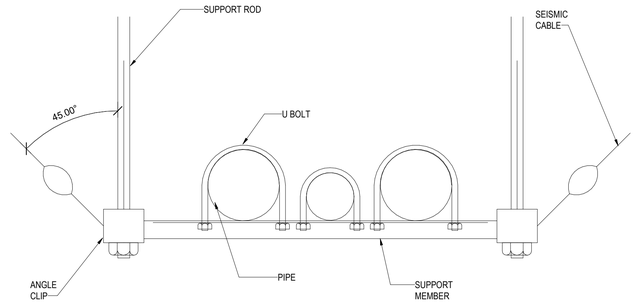

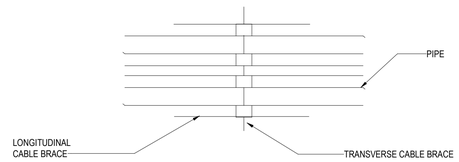

PLAN VIEW OF BRACE

TRANSVERSE AND LONGITUDINAL CABLE BRACE

FOR TRAPEZE HUNG PIPE

2 TRANSVS AND LONGIT CBL BRACE FOR TRPZE HUNG PIPE

NOT TO SCALE

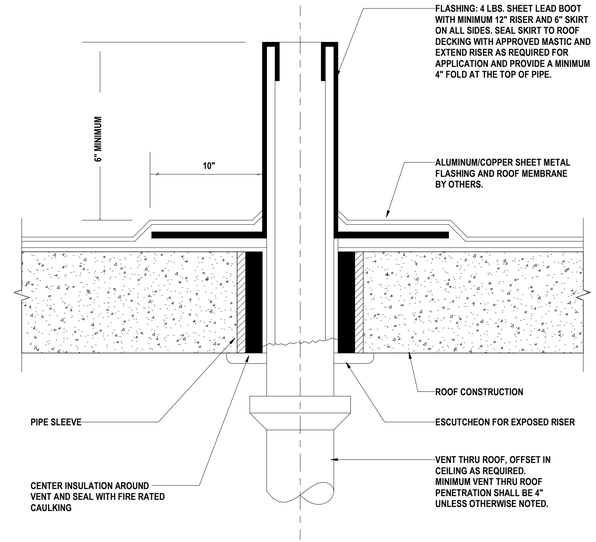

NOTE:
ALL VENT THRU ROOF PENETRATIONS SHALL BE LOCATED A MINIMUM OF 10'-0" IN ALL DIRECTIONS FROM ALL FRESH AIR INTAKES AND/OR OPERABLE DOORS AND WINDOWS.

3 VENT THRU ROOF DETAIL

NOT TO SCALE

Owner
Storm King Art Center
1 Museum Road
New Windsor, NY 12553
+1 (845) 534-3115

Design Architect
heneghan peng architects
14-16 Lord Edward Street
Dublin, D02 YC63, IE
+353 1 633 9000

Executive Architect
WXY Architecture + Urban Design
224 Centre Street, 5th Floor
New York, NY 10013
+1 (212) 219-1953

Landscape Architect
Gustafson Porter + Bowman
1 Cobham Mews
London, MW1 9SB, UK
+44 020 7284 8950

Reed Hilderbrand LLC
33 Whitney Avenue, 3rd Floor
New Haven, CT, US 06510
+1 (617) 923-2422

Structural & Lighting
ARUP
77 Water Street
New York, NY, US 10005
+1 (212) 896-3000

MEPF & IT
BuroHappold
100 Broadway #23
New York, NY, US 10005
+1 (212) 616-0228

Civil
VHB
100 Great Oaks Blvd., Suite 118
Albany, NY, US 12203
+1 (518) 389-3606

AV & Acoustics
LSTN Consultants
76 Beaver Street, 2nd Floor
New York, NY, US 10005
+1 (347) 788-0810

Facade
Front Inc.
100 E. Broadway Street, #501
New York, NY, US 10002
+1 (212) 242-2220

Key Plan

Description	Date
Filing Set	06/17/22

Project

Storm King Art Center

C.F.M. Building

Seal

NOT FOR CONSTRUCTION

Drawing Title

Plumbing Details

Date	06/17/22
Scale	Not to Scale
Drawing Number	P-C-504
Sheet Size	ARCH D

P - ELECTRIC HEAT PUMP WATER HEATER SCHEDULE

DESIGNATION	LOCATION	VOLUME (GAL)	DIMENSIONS		ELECTRICAL			WEIGHT (LB)	MODEL NUMBER	MANUFACTURER	REMARKS
			DIAMETER	HEIGHT	VOLTAGE	FREQUENCY	PHASE				
DWHP - C-2-1	LEVEL 02	80	2' 3"	5' 9"	208 V	60 Hz	1	307	HPTU-80N	AO SMITH	

P - REVERSE OSMOSIS TREATMENT PACKAGE SCHEDULE

DESIGNATION	LOCATION	MANUFACTURER	MODEL NUMBER	SERVICE	QUANTITY	DEMAND (GPM)	ELECTRICAL					SYSTEM WEIGHT (LBS)	REMARKS
							FLA	FREQUENCY	KW	PHASE	VOLTAGE		
ROT - C-2-1	LEVEL 02	US WATER SYSTEMS	AR-5-2000	DOMESTIC WATER	1	6	6 A	60 Hz	0.6	1	220 V	115	

Owner
Storm King Art Center
1 Museum Road
New Windsor, NY 12553
+1 (845) 534-3115

Design Architect
heneghan peng architects
14-16 Lord Edward Street
Dublin, D02 YC63, IE
+353 1 633 9000

Executive Architect
WXY Architecture + Urban Design
224 Centre Street, 5th Floor
New York, NY 10013
+1 (212) 219-1953

Landscape Architect
Gustafson Porter + Bowman
1 Cobham Mews
London, MW1 9SB, UK
+44 020 7284 8950

Reed Hilderbrand LLC
33 Whitney Avenue, 3rd Floor
New Haven, CT, US 06510
+1 (617) 923-2422

Structural & Lighting
ARUP
77 Water Street
New York, NY, US 10005
+1 (212) 896-3000

MEPF & IT
BuroHappold
100 Broadway #23
New York, NY, US 10005
+1 (212) 616-0228

Civil
VHB
100 Great Oaks Blvd., Suite 118
Albany, NY, US 12203
+1 (518) 389-3606

AV & Acoustics
LSTN Consultants
76 Beaver Street, 2nd Floor
New York, NY, US 10005
+1 (347) 788-0810

Facade
Front Inc.
100 E. Broadway Street, #501
New York, NY, US 10002
+1 (212) 242-2220

Key Plan

Description	Date
Filing Set	06/17/22

Project

Storm King Art Center

C.F.M. Building

Seal

NOT FOR CONSTRUCTION

Drawing Title

Plumbing Schedules

Date	06/17/22
Scale	Not to Scale
Drawing Number	P-C-601
Sheet Size	ARCH D

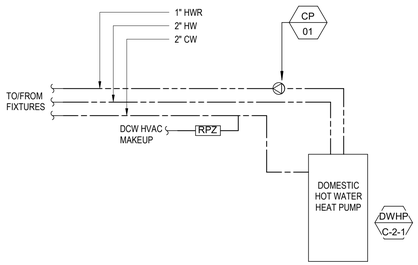

2 PLUMBING EQUIPMENT ROOM RISER DIAGRAM

NOT TO SCALE

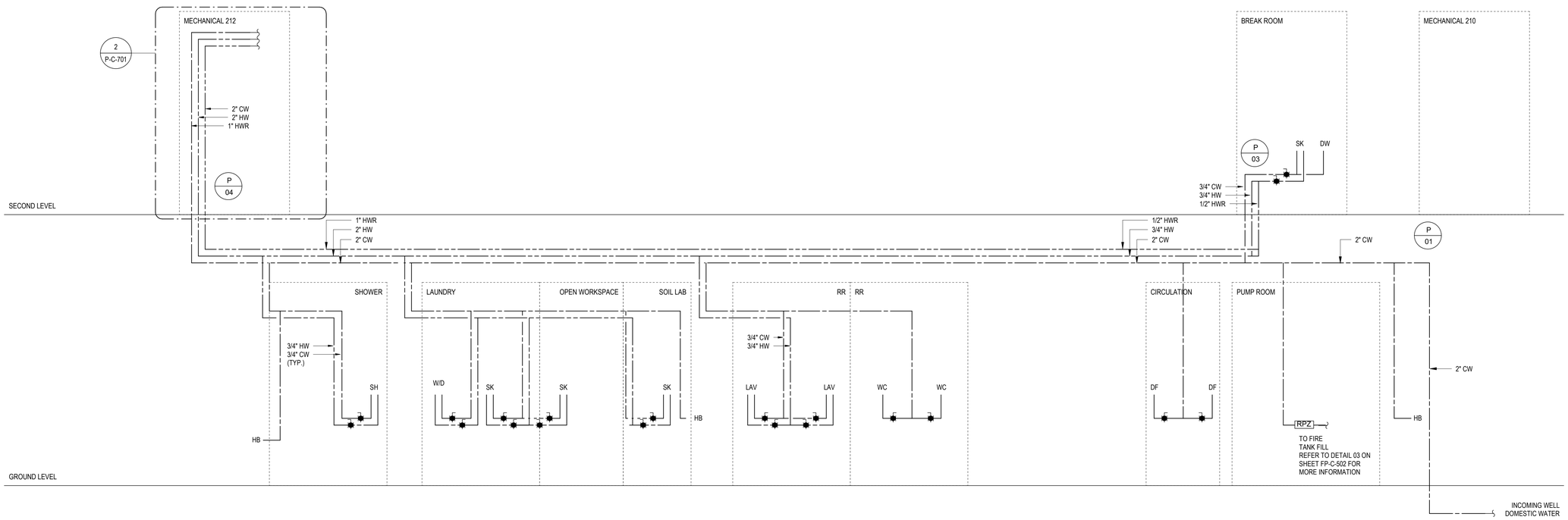

1 PLUMBING DOMESTIC WATER RISER DIAGRAM

NOT TO SCALE

Owner
Storm King Art Center
1 Museum Road
New Windsor, NY 12553
+1 (845) 534-3115

Design Architect
heneghan peng architects
14-16 Lord Edward Street
Dublin, D02 YC63, IE
+353 1 633 9000

Executive Architect
WXY Architecture + Urban Design
224 Centre Street, 5th Floor
New York, NY 10013
+1 (212) 219-1953

Landscape Architect
Gustafson Porter + Bowman
1 Cobham Mews
London, MW1 9SB, UK
+44 020 7284 8950

Reed Hilderbrand LLC
33 Whitney Avenue, 3rd Floor
New Haven, CT, US 06510
+1 (617) 923-2422

Structural & Lighting
ARUP
77 Water Street
New York, NY, US 10005
+1 (212) 896-3000

MEPF & IT
BuroHappold
100 Broadway #23
New York, NY, US 10005
+1 (212) 616-0228

Civil
VHB
100 Great Oaks Blvd., Suite 118
Albany, NY, US 12203
+1 (518) 389-3606

AV & Acoustics
LSTN Consultants
76 Beaver Street, 2nd Floor
New York, NY, US 10005
+1 (347) 788-0810

Facade
Front Inc.
100 E. Broadway Street, #501
New York, NY, US 10002
+1 (212) 242-2220

Key Plan

Description	Date
Filing Set	06/17/22

Project

Storm King Art Center

C.F.M. Building

Seal

NOT FOR CONSTRUCTION

Drawing Title

Domestic Water Riser

Date	06/17/22
Scale	Not to Scale
Drawing Number	P-C-701
Sheet Size	ARCH D

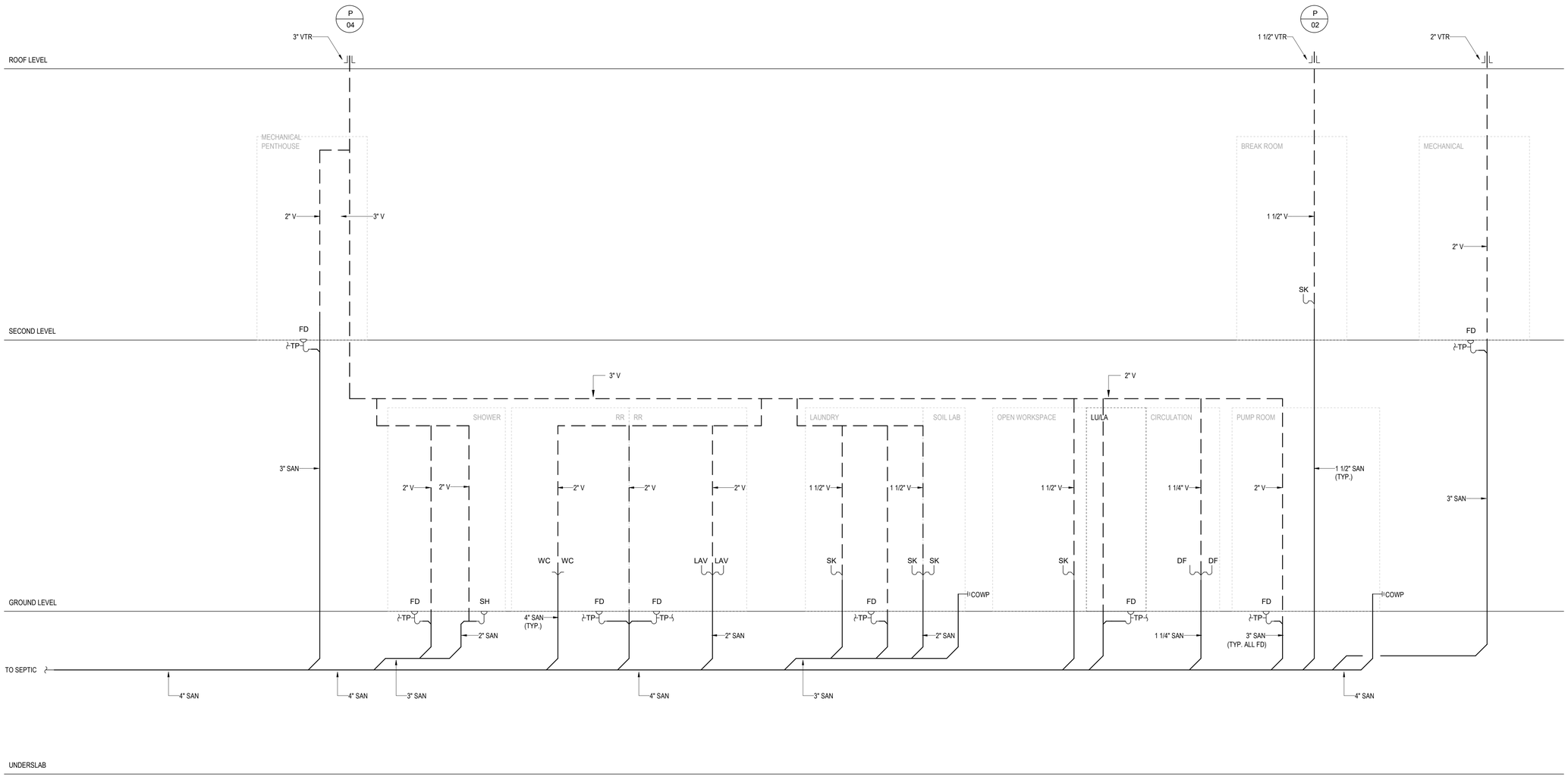

Owner
Storm King Art Center
1 Museum Road
New Windsor, NY 12553
+1 (845) 534-3115

Design Architect
heneghan peng architects
14-16 Lord Edward Street
Dublin, D02 YC63, IE
+353 1 633 9000

Executive Architect
WXY Architecture + Urban Design
224 Centre Street, 5th Floor
New York, NY 10013
+1 (212) 219-1953

Landscape Architect
Gustafson Porter + Bowman
1 Cobham Mews
London, MW1 9SB, UK
+44 020 7284 8950

Reed Hilderbrand LLC
33 Whitney Avenue, 3rd Floor
New Haven, CT, US 06510
+1 (617) 923-2422

Structural & Lighting
ARUP
77 Water Street
New York, NY, US 10005
+1 (212) 896-3000

MEPF & IT
BuroHappold
100 Broadway #23
New York, NY, US 10005
+1 (212) 616-0228

Civil
VHB
100 Great Oaks Blvd., Suite 118
Albany, NY, US 12203
+1 (518) 389-3606

AV & Acoustics
LSTN Consultants
76 Beaver Street, 2nd Floor
New York, NY, US 10005
+1 (347) 788-0810

Facade
Front Inc.
100 E. Broadway Street, #501
New York, NY, US 10002
+1 (212) 242-2220

Key Plan

Description	Date
Filing Set	06/17/22

Project

Storm King Art Center

C.F.M. Building

Seal

NOT FOR CONSTRUCTION

Drawing Title

Drain & Vent Riser

Date	06/17/22
Scale	Not to Scale
Drawing Number	P-C-702
Sheet Size	ARCH D

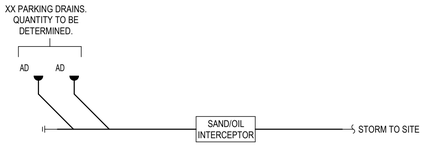

2 PARKING YARD RISER DIAGRAM

NOT TO SCALE

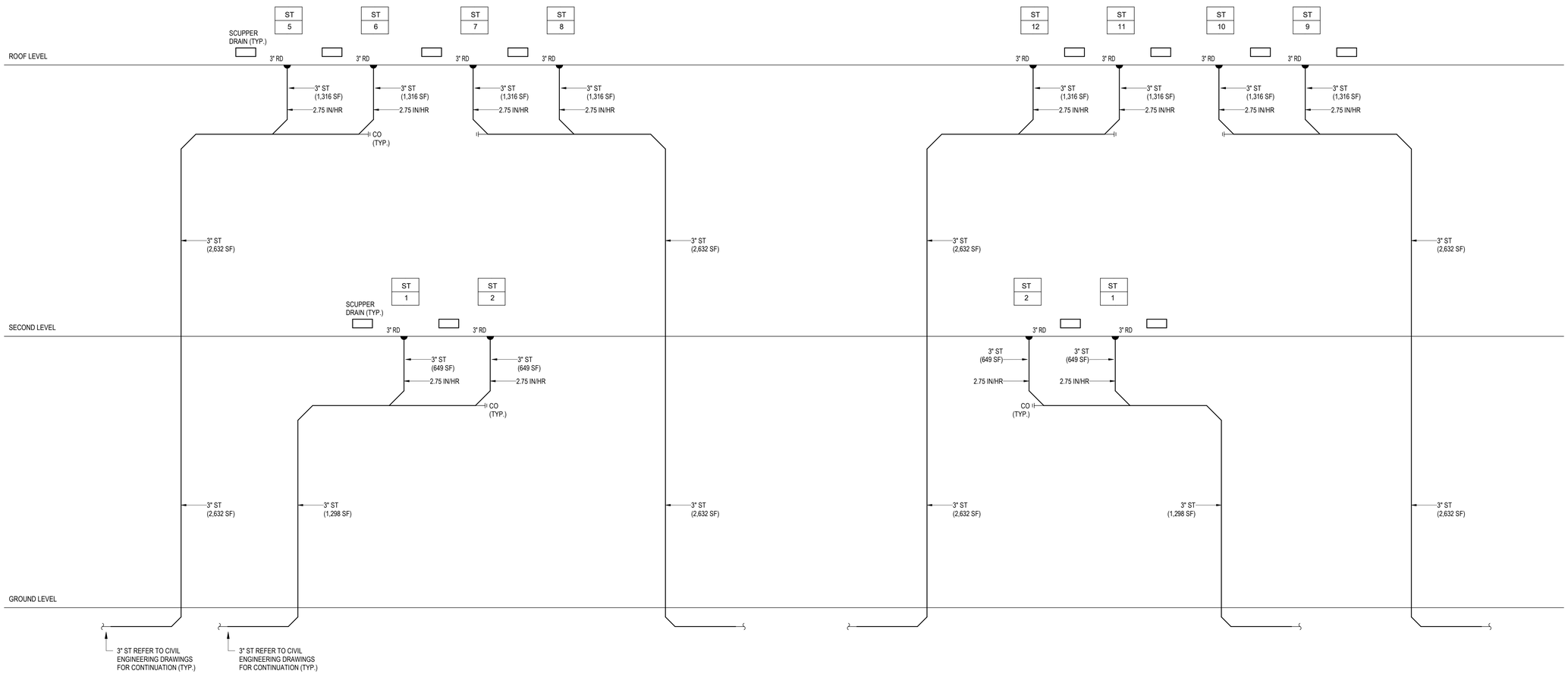

1 PLUMBING STORMWATER RISER DIAGRAM

NOT TO SCALE

Owner
Storm King Art Center
1 Museum Road
New Windsor, NY 12553
+1 (845) 534-3115

Design Architect
heneghan peng architects
14-16 Lord Edward Street
Dublin, D02 YC63, IE
+353 1 633 9000

Executive Architect
WXY Architecture + Urban Design
224 Centre Street, 5th Floor
New York, NY 10013
+1 (212) 219-1953

Landscape Architect
Gustafson Porter + Bowman
1 Cobham Mews
London, MW1 9SB, UK
+44 020 7284 8950

Reed Hilderbrand LLC
33 Whitney Avenue, 3rd Floor
New Haven, CT, US 06510
+1 (617) 923-2422

Structural & Lighting
ARUP
77 Water Street
New York, NY, US 10005
+1 (212) 896-3000

MEPF & IT
BuroHappold
100 Broadway #23
New York, NY, US 10005
+1 (212) 616-0228

Civil
VHB
100 Great Oaks Blvd., Suite 118
Albany, NY, US 12203
+1 (518) 389-3606

AV & Acoustics
LSTN Consultants
76 Beaver Street, 2nd Floor
New York, NY, US 10005
+1 (347) 788-0810

Facade
Front Inc.
100 E. Broadway Street, #501
New York, NY, US 10002
+1 (212) 242-2220

Key Plan

Description	Date
Filing Set	06/17/22

Project

Storm King Art Center

C.F.M. Building

Seal

NOT FOR CONSTRUCTION

Drawing Title

Storm Drain Riser

Date	06/17/22
Scale	Not to Scale
Drawing Number	P-C-703
Sheet Size	ARCH D

WIRED DEVICES

SYMBOL	DESCRIPTION
	20A NEMA 5-20R, WALL MOUNTED SIMPLEX RECEPTACLE OUTLET
	20A NEMA 5-20R, WALL MOUNTED DUPLEX RECEPTACLE OUTLET
	20A NEMA 5-20R, WALL MOUNTED DUPLEX SWITCHED RECEPTACLE OUTLET
	20A NEMA 5-20R, WALL MOUNTED QUADRUPLEX RECEPTACLE OUTLET
	SPECIAL RECEPTACLE WALL MOUNTED NEMA CONFIGURATION PER PLAN REFER TO ARCHITECTURAL DRAWINGS FOR ELEVATION AND ORIENTATION
	RECEPTACLE OUTLET MOUNTED ABOVE COUNTER TOP
	MULTIOUTLET ASSEMBLY - SPACING AND QUANTITY AS NOTED ON DRAWINGS
	CEILING MOUNTED RECEPTACLE OUTLET
	FLOOR BOX APPROVAL BY ARCHITECT AND ENGINEER - FB'#' DENOTES TYPE FB0 - 4-GANG FOR POWER AND 4-GANG FOR DATA FB1 - 1-GANG FOR POWER AND 1-GANG FOR DATA
ABBREVIATIONS	**DESCRIPTION**
AFCI	ARC-FAULT CIRCUIT INTERRUPTER
AV	DEDICATED OUTLET FOR AUDIO VISUAL EQUIPMENT
C	CONTROLLED RECEPTACLE
TV	TELEVISION
IG	ISOLATED GROUND
GFCI	GROUND-FAULT CIRCUIT INTERRUPTER
MS	MOTORIZED SHADE
MW	DEDICATED OUTLET FOR MICROWAVE
OS	OCCUPANCY SENSOR CONTROLLED 20 MINUTE AUTO SHUT-OFF VIA A 20A RELAY.
WP	GFCI AND WR OUTLET WITH WHILE-IN-USE WEATHERPROOF COVER
REF	DEDICATED OUTLET FOR REFRIGERATOR

CABLE AND CONDUIT SYSTEMS

SYMBOL	DESCRIPTION
	HEAVY LINES INDICATE NEW WORK
	LIGHT LINES INDICATE EXISTING WORK TO REMAIN
	CONDUIT TURNED UP
	CONDUIT TURNED DOWN
	CONDUIT STUB WITH WIRE PULL AND CAP
	UNDERGROUND CONDUIT OR DUCT BANK

LIGHTING

SYMBOL	DESCRIPTION

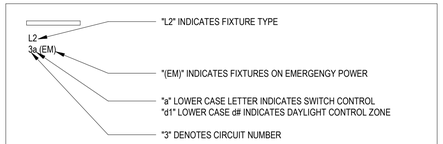

	RECTANGULAR LIGHT FIXTURE
	CIRCULAR LIGHT FIXTURE
	EXIT SIGN REFER TO ARCHITECTURAL EGRESS DRAWINGS FOR ORIENTATION OF EXIT SIGN ARROWS AND FACES

ONE LINE AND RISER DIAGRAM

SYMBOL	DESCRIPTION

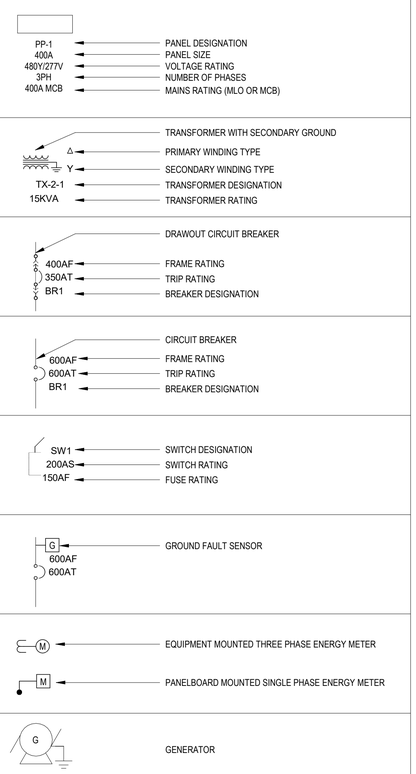

NOTE - REFER TO EQUIPMENT SCHEDULE FOR FUSE, CIRCUIT BREAKER AND DISCONNECT RATING

TYPICAL DEVICE MOUNTING HEIGHTS DETAIL

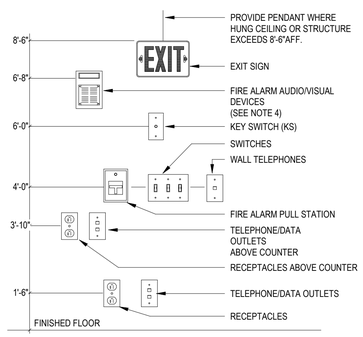

NOTE:

1. ELECTRICAL CONTRACTOR SHALL COORDINATE WITH ARCHITECT AND ARCH. PLAN ELEVATIONS PRIOR TO ROUGHING IN ANY DEVICES ABOVE COUNTERS. ALL MOUNTING HEIGHTS SHALL BE CONFIRM WITH ARCH. PLANS AND ELEVATIONS.
2. ALL MOUNTING HEIGHTS SHALL BE MEASURED FROM FINISHED FLOOR TO CENTERLINE OF DEVICE EXCEPT EXIT SIGNS AND FIRE ALARM VISUAL DEVICES
3. DEVICES SHALL BE INSTALLED ON A COMMON VERTICAL CENTERLINE WHEREVER POSSIBLE
4. FIRE ALARM AUDIO/VISUAL DEVICE TO BE MOUNTED AT 6'-8" ABOVE FINISHED FLOOR OR AT 6" BELOW FINISHED CEILING, WHICHEVER IS LOWER. DIMENSION IS TO THE BOTTOM OF THE VISUAL PORTION OF THE DEVICE

POWER

SYMBOL	DESCRIPTION

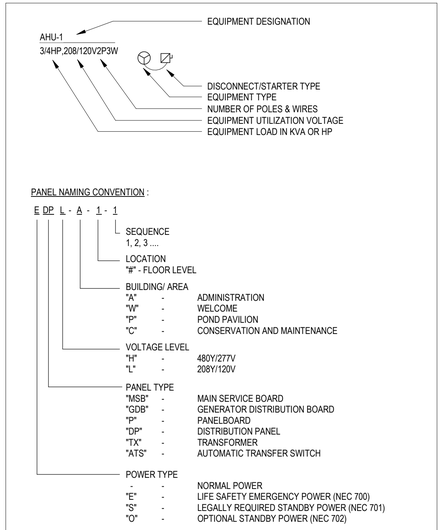

	PANELBOARD - DASHED OUTLINE DENOTES WORKING SPACE CLEARANCES.
	NORMAL POWER PANEL
	EMERGENCY (NEC BRANCH 700) POWER PANEL
	CRITICAL (NEC BRANCH 701 LEGALLY REQUIRED STANDBY) POWER PANEL
	STANDBY (NEC BRANCH 702 OPTIONAL STANDBY) POWER PANEL
	DRY TYPE ENERGY EFFICIENT TRANSFORMER PROVIDE PRIMARY AND/OR SECONDARY FUSED DISCONNECT AS REQUIRED COORDINATE CONCRETE HOUSE KEEPING PAD WITH STRUCTURAL CONTRACTOR
FSD J VAV	JUNCTION BOX "FSD" DENOTES FIRE SMOKE DAMPER "VAV" DENOTES VARIABLE AIR VOLUME DEVICE
	HARD-WIRED CONNECTION
	MOTOR
	FUSED DISCONNECT SWITCH
	NON-FUSED DISCONNECT SWITCH
	ENCLOSED CIRCUIT BREAKER SWITCH
VFD	VARIABLE FREQUENCY DRIVE WITH FUSE DISCONNECT SWITCH
	COMBINATION MOTOR STARTER
	MOTOR STARTER
S M T	DISCONNECT SWITCH "M" DENOTES MANUAL MOTOR STARTER "T" DENOTES HEAVY DUTY TOGGLE SWITCH
	CIRCUIT HOMERUN - SHORT TICK MARKS INDICATES NUMBER OF HOT WIRES, LONG TICK MARK INDICATES NEUTRAL WIRE AND THE DOT INDICATES THE GROUND WIRE.

LIGHTNING PROTECTION

	AIR TERMINAL LOCATION
	CONNECTION
	GROUNDING CONNECTION TO TRIPOD GROUNDING RING WITH INSPECTION TEST WELL
	COUNTERPOISE LOOP BELOW GRADE. NO. LPC120 COPPER CABLE, U.L. LABELED, 29 ST., 17 GA., 192 LBS./1,000 FT., 59,450 CM. (2# AWG)
	NO. LPC120 COPPER CABLE, U.L. LABELED, 29 ST., 17 GA., 192 LBS./1,000 FT., 59,450 CM. (2# AWG)
	DOWN CONDUCTOR IN PVC CONDUIT
	GROUND CONNECTION TO BUILDING GROUNDING LOOP
	THRU-ROOF CABLE CONNECTION
	THRU-WALL LOCATION
	STEEL COLUMN GROUNDING CONNECTION TO TRIPOD GROUNDING RING WITH INSPECTION TEST WELL
	GROUND CONNECTION TO BUILDING SERVICE PANEL FROM HANDHOLE
	GROUND CONNECTION TO BUILDING STEEL WHERE REQUIRED
	GROUND BUS BAR

LIGHTING CONTROL DEVICES

SYMBOL	DESCRIPTION
$ 3 a	LINE VOLTAGE LIGHT SWITCH LOWER CASE LETTER DENOTES LIGHTING ZONE "3" DENOTES THREE WAY SWITCH
	CEILING MOUNTED PIR OCCUPANCY SENSOR
	CEILING MOUNTED ULTRASOUND OCCUPANCY SENSOR
	CEILING MOUNTED DUAL TECH. OCCUPANCY SENSOR
	PIR OCCUPANCY SENSOR SWITCH
	ULTRASOUND OCCUPANCY SENSOR SWITCH
	DUAL TECH. OCCUPANCY SENSOR SWITCH
	WALL MOUNTED PIR OCCUPANCY SENSOR
D	DAYLIGHT SENSOR SEE LIGHTING SPECIFICATION
D	WALL MOUNTED DAYLIGHT SENSOR SEE LIGHTING SPECIFICATION
	WALL MOUNTED PILOT LIGHT
	DUAL TECH. OCCUPANCY SENSOR
ABBREVIATION	**DESCRIPTION**
a	LOWER CASE LETTER DENOTES LIGHTING ZONE
3	THREE WAY SWITCH
4	FOUR WAY SWITCH
D	LINE VOLTAGE DIMMER SWITCH
W	WIRELESS SWITCH
WD	WIRELESS DIMMER
WSS	WIRELESS SCENE SELECT SWITCH
LV	LOW VOLTAGE SWITCH

ELECTRICAL ABBREVIATIONS

ABBREVIATION	DEFINITION
A	AMPERE
AF	AMPERE FRAME
A.F.F.	ABOVE FINISHED FLOOR
AHU	AIR HANDLING UNIT
AIC	AMPERE INTERRUPTING CAPACITY
AT	AMPERE TRIP
ATS	AUTOMATIC TRANSFER SWITCH
BKR	BREAKER
C	CONDUIT
CB	CIRCUIT BREAKER
CCTV	CLOSED CIRCUIT TELEVISION
COMM	COMMUNICATION
CKT	CIRCUIT
DIA	DIAMETER
DISC	DISCONNECT
DN	DOWN
EM	EMERGENCY
EC	EMPTY CONDUIT
EF	EXHAUST FAN
ELEC	ELECTRICAL
EMT	ELECTRICAL METAL TUBING
EX	EXISTING
ETR	EXISTING TO REMAIN
FBO	FURNISHED BY OTHER
FDR	FEEDER
FLEX	FLEXIBLE
FMC	FLEXIBLE METAL CONDUIT
FSD	FIRE SMOKE DAMPER
FT	FEET OR FOOT
GND	GROUND
GFCI	GROUND FAULT CIRCUIT INTERRUPTER
GSC	GALVANIZED STEEL CONDUIT
HP	HORSE POWER
HZ	HERTZ
IMC	INTERMEDIATE METAL CONDUIT
IG	ISOLATED GROUND
KAIC	KILO-AMPS INTERUPTING CAPACITY
KV	KILOVOLT
KVA	KILOVOLT AMPERE
KW	KILOWATT
LTG	LIGHTING
MCB	MAIN CIRCUIT BREAKER
MCM,KCML	THOUSAND CIRCULAR MILS
MD	MOTORIZED DAMPER
ML	MAGNETIC DOOR HOLDER
MLC	MOTOR LOGIC CONTROL
MLO	MAIN LUGS ONLY
MTD	MOUNTED
MTG	MOUNTING
MTS	MANUAL TRANSFER SWITCH
N	NORMAL
NEMA	NATIONAL ELECTRICAL MANUFACTURERS ASSOCIATION
NIC	NOT IN CONTRACT
NTS	NOT TO SCALE
PC	PERSONAL COMPUTER
PH,Ø	PHASE
PNL	PANEL
PWR	POWER
RL	RELOCATED EXISTING DEVICE
REF	REFRIGERATOR
SCCR	SHORT CIRCUIT CURRENT RATING
SD	SMOKE DAMPER
SP	SMOKE PURGE
SS	STAINLESS STEEL
TYP	TYPICAL
TVSS	TRANSIENT VOLTAGE SURGE SUPPRESSOR
U/C	UNDERCOUNTER
UH	UNIT HEATER
U.O.N.	UNLESS OTHERWISE NOTED
V	VOLTAGE
VB	VIEWBOX
VFD	VARIABLE FREQUENCY DRIVE
W	WIRE
WOS	WITHOUT SUBSTITUTION
WP	WEATHERPROOF
WR	WEATHER-RESISTANT

Owner
Storm King Art Center
1 Museum Road
New Windsor, NY 12553
+1 (845) 534-3115

Design Architect
heneghan peng architects
14-16 Lord Edward Street
Dublin, D02 YC63, IE
+353 1 633 9000

Executive Architect
WXY Architecture + Urban Design
224 Centre Street, 5th Floor
New York, NY 10013
+1 (212) 219-1953

Landscape Architect
Gustafson Porter + Bowman
1 Cobham Mews
London, MW1 9SB, UK
+44 020 7284 8950

Reed Hilderbrand LLC
33 Whitney Avenue, 3rd Floor
New Haven, CT, US 06510
+1 (617) 923-2422

Structural & Lighting
ARUP
77 Water Street
New York, NY, US 10005
+1 (212) 896-3000

MEPF & IT
BuroHappold
100 Broadway #23
New York, NY, US 10005
+1 (212) 616-0228

Civil
VHB
100 Great Oaks Blvd., Suite 118
Albany, NY, US 12203
+1 (518) 389-3606

AV & Acoustics
LSTN Consultants
76 Beaver Street, 2nd Floor
New York, NY, US 10005
+1 (347) 788-0810

Facade
Front Inc.
100 E. Broadway Street, #501
New York, NY, US 10002
+1 (212) 242-2220

Key Plan

Description	Date
Filing Set	06/17/22

Project

Storm King Art Center
C.F.M. Building

Seal

NOT FOR CONSTRUCTION

Drawing Title

Abbreviations, Symbols & Legends

Date	06/17/22
Scale	Not to Scale
Drawing Number	E-C-001
Sheet Size	ARCH D

A. CONTRACT PERFORMANCE

1. EXECUTE THE WORK IN THE BEST AND MOST THOROUGH MANNER AND TO THE SATISFACTION OF THE CONSULTING ENGINEER, WHO WILL JOINTLY INTERPRET THE MEANING OF THE DRAWINGS AND SPECIFICATIONS AND SHALL HAVE THE POWER TO REJECT ANY WORK AND MATERIALS, WHICH IN THEIR JUDGMENT ARE NOT IN FULL ACCORDANCE THEREWITH.

2. EXCEPT FOR CHANGES AS MAY BE SPECIFICALLY APPROVED BY THE CONSULTING ENGINEERS, IN ACCORDANCE WITH ALTERNATES OF OPTIONS STATED HEREINAFTER, ALL WORK MUST BE IN FULL ACCORDANCE WITH THE INTENT OF THE PLANS AND SPECIFICATIONS, COMPLETE IN EVERY WAY AND READY FOR SATISFACTORY AND EFFICIENT OPERATION WHEN DELIVERED TO THE OWNER.

3. WHERE DISAGREEMENTS OCCUR BETWEEN THE PLANS AND THE SPECIFICATIONS, OR WITHIN EITHER DOCUMENT ITSELF, THE ITEM OR ARRANGEMENT OF BETTER QUALITY, GREATER QUANTITY OR HIGHER COST SHALL BE INCLUDED IN THE BASE BID.

4. THE DRAWINGS SHOW THE VARIOUS CONDUIT AND PIPING SYSTEMS SCHEMATICALLY. CONTRACTOR SHALL FURNISH AND INSTALL ALL NECESSARY JUNCTION BOXES, PULL BOXES, SUPPORT AND ACCESSORIES TO MEET APPLICABLE CODES, BUILDING STANDARDS AND FULFILL CONTRACT DOCUMENTS. NO ADDED COMPENSATION WILL BE PERMITTED FOR VARIATIONS DUE TO FIELD CONDITIONS.

5. THE CONTRACTOR COVENANTS AND AGREES THAT THEY AND THEIR SUBCONTRACTORS AND THEY AND THEIR AGENTS, SERVANTS AND EMPLOYEES WILL PROVIDE AND MAINTAIN A SAFE PLACE TO WORK AND THAT THEY WILL COMPLY WITH ALL LAWS AND REGULATIONS OF ANY GOVERNMENTAL AUTHORITY HAVING JURISDICTION THEREOF AND THE CONTRACTOR AGREES TO INDEMNIFY, DEFEND AND HOLD HARMLESS THE CONSULTING ENGINEER, ARCHITECT AND OWNER FROM AND AGAINST ANY LIABILITY, LOSS, DAMAGE OR EXPENSE, INCLUDING ATTORNEY'S FEES ARISING FROM FAILURE OR ALLEGED FAILURE ON THE PART OF THE CONTRACTOR, THEIR SUBCONTRACTORS AND THEIR AGENTS, SERVANTS AND EMPLOYEES TO PROVIDE AND MAINTAIN A SAFE PLACE TO WORK OR TO COMPLY WITH ALL LAWS AND REGULATIONS OF ANY GOVERNMENTAL AUTHORITY HAVING JURISDICTION THEREOF.

6. THE CONTRACTOR AND EACH SUBCONTRACTOR COVENANTS AND AGREES TO INDEMNIFY, DEFEND AND HOLD HARMLESS THE CONSULTING ENGINEER, ARCHITECT AND OWNER FROM AND AGAINST ANY LIABILITY, LOSS, DAMAGE OR EXPENSE, INCLUDING ATTORNEY'S ARISING FROM A FAILURE OR ALLEGED FAILURE ON THE PART OF THE CONTRACTOR, THEIR SUBCONTRACTORS AND THEIR AGENTS, SERVANTS AND EMPLOYEES PROPERLY TO DISCHARGE THE OBLIGATIONS ASSUMED BY THEM IN THE PERFORMANCE OF THE WORK, INCLUDING ANY ACT OR OMISSION ALLEGEDLY RESULTING IN DEATH OR PERSONAL INJURY OR PROPERTY DAMAGE OR IMPROPER CONSTRUCTION, CONSTRUCTION TECHNIQUES OR THE USE OF IMPROPER OR INAPPROPRIATE MATERIAL OR TOOLS.

7. THE CONTRACTOR AGREES THAT ANY CONTROVERSY OR DISPUTE TO WHICH THE CONTRACTOR, THE ARCHITECT, AND THE CONSULTING ENGINEERS ARE PARTIES SHALL BE SUBMITTED TO ARBITRATION FOR DECISION IN ACCORDANCE WITH THE RULES OF SUCH ASSOCIATION FOR CONSTRUCTION INDUSTRY DISPUTES. ALL SUBCONTRACTORS LIKEWISE AGREE TO SUBMIT TO SUCH ARBITRATION ANY DISPUTE BETWEEN OR AMONG THEM, THE CONTRACTOR, THE ARCHITECT AND THE CONSULTING ENGINEERS, AND THE CONTRACTOR AGREES TO MAKE AVAILABLE TO THE CONSULTING ENGINEERS ON DEMAND SIGNED COPIES OF THE CONTRACT BETWEEN THE OWNER AND THE CONTRACTOR AND BETWEEN THE CONTRACTOR AND THEIR SUBCONTRACTORS. THE CONTRACTOR AND EACH SUBCONTRACTOR AGREE THAT BY SUBMITTING A BID WHICH IS ACCEPTED, THIS PARAGRAPH SHALL BE DEEMED A WRITTEN AGREEMENT TO SUBMIT ANY CONTROVERSY THEREAFTER ARISING ARBITRATION.

8. ALL WORK SHALL BE DONE IN CONFORMANCE WITH THE FOLLOWING STANDARDS:

A. THE NATIONAL ELECTRICAL CODE.
B. THE NEW YORK STATE BUILDING CODE.
C. THE REQUIREMENTS OF UNDERWRITERS' LABORATORIES INC.
D. AMERICAN NATIONAL STANDARD INSTITUTE
E. ILLUMINATING ENGINEERING SOCEITY
F. CERTIFIED BALLAST MANUFACTURERS
G. O.S.H.A. AND ALL AGENCIES HAVING JURISDICTION.
H. NEW YORK STATE ENERGY CONSERVATION CONSTRUCTION CODE (NYSECCC)

9. OBTAIN ALL NECESSARY PERMITS AND APPROVAL FROM GOVERNING AUTHORITIES AND FILE ALL NECESSARY FORMS. PAY ALL INSPECTION FEES.

10. COORDINATE SCHEDULING OF ALL WORK TO BE PERFORMED WITH OWNER AND/OR THEIR AGENT AND INCLUDE ALL NECESSARY PREMIUM TIME REQUIRED FOR SHUTDOWNS, WORK IN OCCUPIED AREAS, ETC.

11. ALL AREAS ASSOCIATED WITH WORK TO BE PERFORMED SHALL BE EXAMINED PRIOR TO BID SUBMISSION. NO ADDITIONAL COMPENSATION SHALL BE MADE FOR CONDITIONS FOUND DURING INSTALLATION.

12. BEFORE COMMENCING WORK, EXAMINE ALL ADJOINING WORK ON WHICH THIS WORK IS IN ANY WAY DEPENDENT FOR PERFECT WORKMANSHIP ACCORDING TO THE INTENT OF THIS SPECIFICATION, AND REPORT TO THE CONSTRUCTION MANAGER ANY CONDITION WHICH PREVENTS PERFORMANCE OF FIRST-CLASS WORK. NO "WAIVER OF RESPONSIBILITY" FOR INCOMPLETE, INADEQUATE OR DEFECTIVE ADJOINING WORK WILL BE CONSIDERED UNLESS NOTICE HAS BEEN FILED BEFORE SUBMITTAL OF A PROPOSAL.

13. COORDINATE ALL WORK WITH OTHER TRADES TO INSURE INSTALLATION IS MADE IN ACCORDANCE WITH THE CONTRACT DOCUMENTS.

14. FURNISH ADEQUATE LIABILITY INSURANCE AND BONDING AS REQUIRED BY OWNER.

15. INCLUDE ALL LABOR, MATERIALS, AND APPURTENANCES REQUIRED FOR THE FURNISHING, INSTALLING AND TESTING OF ALL WORK. COMPLETE AND MAKE READY FOR OPERATION IN A MANNER SATISFACTORY TO THE ARCHITECT AND CONSULTING ENGINEER, ALL WORK SHOWN ON DRAWINGS AND SPECIFIED HEREIN.

16. ALL WORK SHALL BE GUARANTEED FOR TWO (2) FULL YEARS FROM THE DATE WHEN THE OWNER HAS ISSUED A "CERTIFICATE OF SUBSTANTIAL COMPLETION".

INSTALLATION PROCEDURE

1. THIS CONTRACTOR'S WORK SHALL INCLUDE, BUT NOT BE LIMITED TO THE FOLLOWING: FURNISHING AND INSTALLATION OF ALL ELECTRICAL WORK, INCLUDING ELECTRICAL AND COMMUNICATIONS OUTLETS IN WALLS AND FLOOR, LIGHTING FIXTURES WITH LAMPS, SWITCHES, DIMMERS, EMERGENCY BATTERY UNITS, ETC., AND ASSOCIATED BRANCH CIRCUIT WIRING, DISCONNECT SWITCHES, SPECIAL RECEPTACLES, ETC. ALL SPECIAL EQUIPMENT, SUCH AS FANS, AIR CONDITIONING UNITS, COPIERS, ETC. WILL BE FURNISHED BY OTHERS (U.O.N.). WHERE EQUIPMENT REQUIRES PERMANENT CONNECTIONS, THESE CONNECTIONS SHALL BE PROVIDED WITH APPROPRIATE DISCONNECTING MEANS.

2. ELECTRICAL CONTRACTOR SHALL COORDINATE ALL WORK SHOWN ON DRAWINGS WITH OTHER TRADES TO ASSURE THAT ALL SYSTEMS ARE COMPLETE AND OPERATIONAL. THIS CONTRACTOR SHALL COORDINATE ALL EQUIPMENT LOCATIONS AND CONDUIT RUNS SUPPLIED AND/OR INSTALLED UNDER THIS SECTION TO AVOID CONFLICTS OR OBSTRUCTIONS TO OTHER TRADES. THIS CONTRACTOR SHALL PROVIDE ALL NECESSARY PULL BOXES, VERTICAL SUPPORT BOXES, AND CONDUIT OFFSETS REQUIRED TO ACCOMPLISH THE ABOVE NOTED COORDINATION AT NO ADDITIONAL COST TO THE OWNER, WHETHER OR NOT INDICATED ON PLANS. ALL VERTICAL SUPPORT BOXES, PULL BOXES, ETC. SHALL BE INSTALLED WHERE REQUIRED TO FACILITATE PULLS AND AT CODE REQUIRED INTERVALS, AT A MINIMUM.

3. CONDUIT RUNS INDICATED ON PLAN ARE FOR REFERENCE ONLY. EXACT LOCATIONS AND ELEVATION SHALL BE DETERMINED AFTER COORDINATION WITH OTHER TRADES. THIS CONTRACTOR SHALL SUPPLY, AS PART OF THEIR SHOP DRAWING SUBMISSION, THE EXACT LOCATION OF ALL CEILING MOUNTED EQUIPMENT AND CONDUIT RUNS INCLUDING PROPOSED LOCATIONS AND MEANS OF SUPPORT AS WELL AS THE EXPECTED LOAD CONCENTRATION AT THE POINTS OF ATTACHMENT. THE ABOVE NOTED INFORMATION SHALL BE REVIEWED BY THE STRUCTURAL ENGINEER BEFORE ANY WORK IS TO COMMENCE.

4. FURNISH AND INSTALL ALL NECESSARY CABLE SUPPORT BOXES, PULL BOXES AND CONDUIT SUPPORTS, WHERE NOTED AND AS REQUIRED BY APPLICABLE CODES. ALL LOW TENSION (COMMUNICATIONS, SECURITY, A/V, ETC.) CONDUIT, FIRE ALARM CONDUIT, ETC., WHICH HAVE RUNS IN EXCESS OF 100 FEET IN LENGTH AND/OR CONTAINING BENDS IN EXCESS OF 180 DEGREES SHALL BE PROVIDED WITH A PULLBOX. ALL PULLBOXES SHALL BE LABELED FOR THEIR INTENDED USE. DECALS SHALL BE PROVIDED TO INDICATE VOLTAGE LEVEL. FIRE ALARM SYSTEM BOXES SHALL BE PAINTED RED, AND ALL WIRE AND CABLE PROVIDED UNDER THIS SECTION SHALL BE TAGGED (WITH FEEDER OR BRANCH CIRCUIT DESIGNATION) AT ALL BOXES. WHERE CONDUIT BENDS ARE REQUIRED IN COMMUNICATIONS RACEWAY SYSTEMS, THE RADIUS OF THE RACEWAY BEND SHALL NOT BE LESS THAN TEN TIMES THE DIAMETER OF THE RACEWAY. PULL BOXES FOR COMMUNICATION RACEWAYS WILL BE PROVIDED IN STRAIGHT PULLS ONLY. LABEL EACH RACEWAY (PER TECHNOLOGY DEPT. REQUIREMENTS) EVERY 50 FEET HORIZONTALLY AND ON EACH FLOOR VERTICALLY. SUBMIT LABELING SYSTEM FOR REVIEW.

5. SURVEY EXISTING SPACE, CLOSETS AND PANELBOARDS TO VERIFY SUITABILITY OF INSTALLATION DESIGN INDICATED. ANY MODIFICATIONS NECESSARY TO COMPLY WITH THE DESIGN INTENT SHALL BE INCLUDED IN BID SUBMITTED AND SHALL BE HIGHLIGHTED SO THAT CONSIDERATION TO SAME IS GIVEN DURING BID EVALUATION. INCLUDED IN THIS REQUIREMENT, SHALL BE THE EVALUATION OF THE AVAILABILITY OF BRANCH CIRCUIT CAPACITY TO ACCOMMODATE THE NUMBER OF BRANCH CIRCUITS REQUIRED ON THE DESIGN DOCUMENTS. REROUTING OF CIRCUITS TO ALTERNATE PANELS WITHIN THE SAME CLOSET OR AREA, SHALL BE INCLUDED IN BID PROPOSAL. CIRCUIT NUMBERS INDICATED ARE FOR REFERENCE ONLY.

6. UNLESS SPECIFICALLY APPROVED, NO WIRES SHALL BE PULLED IN UNTIL THE CONDUIT SYSTEM IS COMPLETED. NO GREASE OR OIL SHALL BE USED TO FACILITATE THE PULLING OF WIRES; ONLY APPROVED PULLING COMPOUND SHALL BE USED. ALL WIRES SHALL BE CONTINUOUS BETWEEN OUTLET AND OUTLET, OR FROM PANELBOARD TO THE FIRST OUTLET. JOINTS THAT BECOME NECESSARY IN CIRCUIT WORK AT THE OUTLETS SHALL BE MADE WITH APPROVED PRESSURE CONNECTORS. ALL JOINTS SHALL BE COVERED WITH AN INSULATION EQUAL TO THAT ON THE CONDUCTORS. APPROVED PRESSURE CONNECTORS, IDEAL WINGNUTS, SCOTCH-LOCK, BUCHANAN, OR AS APPROVED, SHALL BE USED.

7. EXACT LOCATIONS AND MOUNTING HEIGHTS OF ALL LIGHTING FIXTURES, SWITCHES, WALL OUTLETS, ETC., SHALL BE IN ACCORDANCE WITH ARCHITECTURAL DRAWINGS. ANY DEVICE OR OUTLET WHICH IS SHOWN ON THE ARCHITECTURAL DRAWINGS AS EXISTING TO REMAIN, WHICH IS NOT SHOWN ON THE ELECTRICAL DRAWINGS, SHALL BE LEFT AS EXISTING AND RELOCATED TO A HEIGHT AS INDICATED ON THE ARCHITECTURAL DRAWINGS.

8. ALL EXISTING DEVICES (RECEPTACLES, TEL/DATA OUTLETS, SWITCHES, FIRE ALARM SYSTEM DEVICES, ETC.) WHICH ARE LOCATED ON WALL WHICH WILL BE RE-FINISHED (SEE ARCHITECTURAL DRAWINGS), SHALL BE TEMPORARILY REMOVED AND REINSTALLED TO MATCH NEW SURFACE CONDITIONS. PROVIDE ANY ADDITIONAL CABLING NEEDED TO RELOCATE AS REQUIRED.

9. NO ELECTRICAL CONNECTIONS SHALL BE MADE TO, OR WORK PERFORMED ON, ENERGIZED EQUIPMENT.

10. FINAL CONNECTIONS TO EQUIPMENT SHALL BE MADE ACCORDING TO VENDOR APPROVED SHOP DRAWINGS.

11. VERIFY ELECTRICAL REQUIREMENTS OF ALL EXISTING AND NEW EQUIPMENT TO BE USED. ALL SPECIAL PURPOSE OUTLETS INDICATED ON PLAN SHALL BE VERIFIED WITH EQUIPMENT MANUFACTURER PRIOR TO INSTALLATION, TO ENSURE PROPER WIRING AND COMPATIBILITY WITH ATTACHMENT PLUGS OR JUNCTION BOXES THAT MAY BE FURNISHED AS AN INTEGRAL PART OF THE EQUIPMENT.

12. COORDINATE ALL LOCATIONS AND HEIGHTS OF STUB-UPS AND OUTLETS IN FIELD WITH VENDORS AND/OR FURNITURE MANUFACTURERS' APPROVED SHOP DRAWINGS. ALL RECEPTACLES ARE TO BE ACCESSIBLE.

13. ELECTRICAL CONTRACTOR SHALL VERIFY AVAILABILITY OF EXISTING CIRCUIT BREAKERS AFTER DEMOLITION OF EXISTING CONDITIONS TO MEET NEW REQUIREMENTS, AND REPORT ANY RESULTING DISCREPANCIES TO THE ARCHITECT AND CONSULTING ENGINEER IMMEDIATELY PRIOR TO PROCEEDING WITH WORK.

14. ALL RECEPTACLES SHALL BE ACCESSIBLE BELOW COUNTERS OR BEHIND EQUIPMENT. CONTRACTOR SHALL COORDINATE EXACT LOCATION OF EQUIPMENT RECEPTACLES WITH EQUIPMENT MANUFACTURER'S REQUIREMENTS AND THE LOCAL INSPECTOR.

15. ELECTRICAL CONTRACTOR SHALL PROVIDE DISCONNECTS FOR ALL EQUIPMENT PER CODE AND SHALL COORDINATE ALL DISCONNECT SWITCH REQUIREMENTS AND LOCATIONS WITH THE ELECTRICAL INSPECTOR, VENDORS APPROVED SHOP DRAWING AND FINAL EQUIPMENT LOCATIONS.

16. ELECTRICAL CONTRACTOR SHALL VERIFY PHASE LOAD BALANCING ON POWER PANELS UPON COMPLETION OF THE ELECTRICAL INSTALLATION. INCLUDE RE-DISTRIBUTION OF CIRCUITS WITHIN PANELS TO BALANCE WITHIN A 10% WINDOW (±5%).

17. ALL CONDUIT AND CABLE "HOMERUNS" SHALL CONSIST OF A SINGLE CIRCUIT PER CONDUIT FOR FEEDERS SERVED BY AN OVERCURRENT PROTECTIVE (OCP) DEVICE IN EXCESS OF 20 AMPERES, SINGLE POLE. WHERE WIRE AND CONDUIT BRANCH CIRCUITS SHARE A CONDUIT HOMERUN, (OCP LESS THAN OR EQUAL TO 20 AMPERES SINGLE POLE) THERE SHALL BE A MAXIMUM OF SIX CIRCUITS COMBINED IN A RACEWAY TO THE PANELBOARD, UNLESS OTHERWISE NOTED. ALL CONDUCTORS SHALL BE DERATED PER NATIONAL ELECTRICAL CODE (LATEST VERSION). COMBINING OF MULTIPLE HOMERUNS (MORE THAN SIX) IN A SINGLE CONDUIT SHALL NOT BE PERMITTED.

18. ALL CONDUIT SHOWN FOR INDOOR WORK SHALL BE EMT (3/4" MINIMUM) WITH SET-SCREW TYPE COUPLINGS UNLESS OTHERWISE NOTED OR PERMITTED BY THE BUILDING RULES AND REGULATIONS.

19. PROVIDE IMC CONDUIT WITH THREADED COUPLINGS WHERE REQUIRED BY CODE.

20. TYPE MC CABLE MAY BE UTILIZED FOR BRANCH LIGHTING AND RECEPTACLE CIRCUITRY, WHERE PERMITTED BY CODE AND PROVIDED THAT:
a. T IS IN ACCORDANCE WITH THE BUILDING RULES AND REGULATIONS.
b. CONTAINS AN INSULATED GROUND WIRE.
c. CONDUIT IS RUN TO THE FIRST DEVICE DOWN-LINE OF THE PANEL (I.E. RECEPTACLE, LIGHT FIXTURE, ETC.).

SPLICE BOXES MOUNTED ADJACENT TO THE ELECTRICAL CLOSET SHALL NOT BE PERMITTED TO CONVERT FROM A CONDUIT HOMERUN TO TYPE MC CABLE.

21. INCLUDE ALL LABOR, MATERIALS, AND APPLICATIONS REQUIRED FOR THE FURNISHING, INSTALLING AND TESTING OF ALL WORK SHOWN ON THE DRAWINGS AND SPECIFIED HEREIN, IN A MANNER SATISFACTORY TO THE ARCHITECT.

22. ELECTRICAL CONTRACTOR SHALL BE RESPONSIBLE FOR DETERMINING EXISTING CIRCUITRY ORIGIN, DISTRIBUTION AND REVISING EXISTING CIRCUITRY TO COMPLY WITH NEW CIRCUITRY AS INDICATED ON PLANS.

23. ALL WORK AND/OR EQUIPMENT INSTALLED OUTDOORS SHALL BE APPROVED FOR USE IN WET LOCATIONS.

24. ALL WORK AND/OR EQUIPMENT IN MER'S SHALL BE SUITABLE FOR DAMP LOCATIONS.

25. WHERE CONDUITS, CABLE TRAY OR OTHER ELECTRICAL EQUIPMENT PENETRATE FIRE OR SMOKE RATED WALLS, PARTITIONS, FLOOR SLABS, ETC., THE SPACE BETWEEN THE SLEEVE OR CUTOUT AND THE ELECTRICAL EQUIPMENT SHALL BE CAULKED WITH A UL LISTED, INTUMESCENT TYPE, APPROVED FIRESTOP SYSTEM. SPACE BETWEEN THE SLEEVE OR CUTOUT AND THE ELECTRICAL EQUIPMENT SHALL BE SIZED IN ACCORDANCE WITH THE MANUFACTURER'S REQUIREMENTS FOR CONDUIT SIZE AND DAMMING MATERIAL THICKNESS FOR THE TYPE OF RATED CONSTRUCTION FOR WHICH THE SYSTEM IS TO BE USED. THE FIRESTOP SYSTEM SHALL BE AS MANUFACTURED BY 3M FIRE PROTECTION PRODUCTS OR AS APPROVED. SEE ARCHITECTURAL DRAWINGS FOR FIRE RATING OF WALLS AND FLOORS.

26. WHERE WORK IS ONGOING IN ELECTRICAL PANELS THE COVERS ARE NOT TO BE LEFT OFF UNLESS WORK IS CURRENTLY BEING PERFORMED ON THE PANEL. COVERS SHALL BE REPLACED EACH NIGHT AT THE END OF SHIFT.

27. TEMPORARY POWER FROM EXISTING PANELS FOR LIGHTS, DRILLS, WELDING EQUIPMENT, ETC., SHALL BE LABELED ON THE PANEL AND PRE-APPROVED BY BUILDING OWNER/MANAGER 48 HOURS PRIOR TO INSTALLATION.

C. ARCHITECT'S AND/OR ENGINEER'S REVIEW

1. SUBMIT SHOP DRAWINGS FOR REVIEW PRIOR TO THE START OF ANY WORK. ANY WORK OR EQUIPMENT INSTALLED PRIOR TO REVIEW OF SHOP DRAWINGS AND FOUND TO BE UNACCEPTABLE SHALL BE REMOVED AND MODIFIED AT THE CONTRACTOR'S SOLE EXPENSE INCLUDING ANY RESULTANT SCHEDULING DELAYS EXPERIENCED BY ANY TRADE.

2. THE ARCHITECT AND/OR ENGINEER WILL REVIEW SHOP DRAWINGS AND SAMPLES FOR CONFORMANCE WITH THE DESIGN CONCEPT OF THE PROJECT AND THE INFORMATION CONTAINED IN THE CONTRACT DOCUMENTS. THE ARCHITECT'S AND/OR ENGINEER'S REVIEW OF SHOP DRAWINGS AND SAMPLES IS ONLY FOR THE CONVENIENCE OF THE OWNER IN FOLLOWING THE WORK AND DOES NOT RELIEVE THE CONTRACTOR OF RESPONSIBILITY FOR DEVIATIONS FROM THE REQUIREMENTS OF THE CONTRACT DOCUMENTS. THE ARCHITECT'S AND/OR ENGINEER'S REVIEW SHALL NOT BE CONSTRUED AS A COMPLETE OR DETAILED CHECK OF THE WORK SUBMITTED, NOR SHALL IT RELIEVE THE CONTRACTOR OF RESPONSIBILITY FOR ERRORS OF ANY SORT IN THE SHOP DRAWINGS AND SAMPLES, OR FROM THE NECESSITY OF FURNISHING ANY WORK REQUIRED BY THE CONTRACT DOCUMENTS WHICH MAY HAVE BEEN OMITTED FROM SHOP DRAWING SUBMITTALS.

3. THE REVIEW OF A SEPARATE ITEM SHALL NOT INDICATE REVIEW OF THE COMPLETE ASSEMBLY IN WHICH IT FUNCTIONS. NOTHING IN THE ARCHITECT'S AND/OR ENGINEER'S REVIEW OF SHOP DRAWINGS AND SAMPLES SHALL BE CONSIDERED AS AUTHORIZING:
a. A DEPARTURE FROM CONTRACT DOCUMENTS OR SPECIFICATIONS, OR,
b. ADDITIONAL COST TO THE OWNER, OR,
c. INCREASED TIME FOR COMPLETION OF THE WORK.

4. NO PART OF THE WORK SHALL BE STARTED IN THE SHOP OR IN THE FIELD UNTIL THE ARCHITECT AND/OR ENGINEER HAS REVIEWED THE SHOP DRAWINGS AND SAMPLES FOR THAT PORTION OF THE WORK. THEREAFTER, THE WORK SHALL BE EXECUTED IN ACCORDANCE WITH THE CONTRACT DOCUMENTS AND THE INDICATED STATUS OF THE REVIEWED SHOP DRAWING.

5. SAMPLES SHALL BE SUBMITTED FOR REVIEW WHEN REQUESTED BY THE ARCHITECT AND/OR ENGINEER.

6. TWO WEEKS AFTER AWARD OF CONTRACT SUBMIT A SHOP DRAWING LOG FOR REVIEW WITH SUBMITTAL DATES AND SUBMITTAL TYPE.

7. PROVIDE OPERATIONS AND MAINTENANCE MANUALS FOR ALL EQUIPMENT AND MATERIALS.

D. RECORD DRAWINGS

1. PREPARE AND FURNISH TO OWNER "AS BUILT" PLANS FOR ALL WORK INSTALLED. PROVIDE CAD DRAWINGS AND CAD FILES ON A COMPACT DISC COMPLETED IN THE LATEST VERSION OF AUTOCAD. ALL DRAWINGS SHALL BE IN A STYLE COMMENSURATE WITH THE ENGINEERING DESIGN. THE ENGINEERING DESIGN CAD DRAWINGS OR BACKGROUNDS WILL BE FURNISHED FOR USE TO THIS CONTRACTOR FOR THE PURPOSE OF THIS SUBMISSION (SUBMIT A CAD INDEMNIFICATION AGREEMENT).

2. DURING CONSTRUCTION, KEEP AN ACCURATE RECORD OF ALL DEVIATIONS BETWEEN THE WORK AS SHOWN ON DRAWINGS AND THAT WHICH IS ACTUALLY INSTALLED. THIS RECORD SET OF PRINTS SHALL BE KEPT AT JOB SITE FOR INSPECTION.

3. UPON COMPLETION OF THE INSTALLATION. SUBMIT ONE SET OF BLACK AND WHITE PRINTS OF THESE "AS-BUILT" RECORD DRAWINGS TO THE CONSULTING ENGINEER FOR REVIEW. AFTER REVIEW BY THE CONSULTING ENGINEER, MAKE NECESSARY CHANGES TO THESE PRINTS AND THEN DELIVER THEM TO THE OWNER FOR RECORD. FINAL PAYMENT WILL BE WITHHELD UNTIL COMPLETION OF "AS-BUILT" DRAWINGS.

4. AS-BUILT DRAWINGS SHALL CONTAIN EXACT ROUTING AND ELEVATIONS OF ALL CONDUIT BANKS, ACTUAL PANELBOARD CIRCUIT BREAKER POLE POSITIONS USED FOR EACH CIRCUIT, AND EXACT LOCATION OF ALL EQUIPMENT. ALL DIMENSIONS SHALL BE REFERENCED TO BUILDING STRUCTURE CENTERLINES.

E. EQUIPMENT SPECIFICATIONS

1. ALL EQUIPMENT AND MATERIALS SHALL BE NEW, UL LISTED AND SHALL CONFORM TO ANY ADDITIONAL LABELING, TESTING AND CONSTRUCTION REQUIREMENTS ESTABLISHED BY THE GOVERNING AUTHORITIES. SAME SHALL BE GUARANTEED FOR 1 YEAR SUBSEQUENT TO FINAL ACCEPTANCE.

2. ALL EQUIPMENT (ELECTRICAL AND MECHANICAL) SHALL BE SPECIFIED TO HAVE VOLTAGE RATINGS COMPATIBLE WITH THE PROVISIONS OF ANSI C84.

3. ALL EXISTING EQUIPMENT TO BE RELOCATED, OR TO BE INSTALLED FROM STORAGE SHALL BE CLEANED.

4. ALL LOW TENSION CONDUIT FOR DATA, TELEPHONE, SECURITY, A/V, TELEVISION, ETC., SHALL BE 1" MINIMUM EMT OR ALUMINUM U.O.N. TERMINATE WITH BUSHED OPENING IN HUNG CEILING OR UNDER RAISED FLOOR. EMPTY FLEXIBLE CONDUIT SHALL NOT BE PERMITTED FOR LOW TENSION CABLING UNLESS WRITTEN APPROVAL IS OBTAINED FROM THE ARCHITECT AND ENGINEER. ALL LOW TENSION EMPTY CONDUIT SHALL BE PROVIDED WITH TRU-MEASURE TYPE DRAG LINES FOR FUTURE CABLE INSTALLATION.

5. ALL WALL MOUNTED TELEPHONE AND COMMUNICATIONS OUTLETS SHALL HAVE THE EMPTY CONDUIT STUBBED AND BUSHED INTO AN ACCESSIBLE AREA IN THE HUNG CEILING OR RAISED FLOOR. (NOTE: ACCESSIBLE AREA MAY BE OUTSIDE THE ROOM/AREA IF AN INACCESSIBLE CEILING IS UTILIZED.)

6. INTERMEDIATE METAL CONDUIT SHALL BE USED WHERE SUBJECTED TO ANY WATER OR MOISTURE CONDITIONS, OR WHERE BURIED IN SLAB.

7. PROVIDE CONDUIT EXPANSION FITTINGS TOGETHER WITH BONDING JUMPER AND SUITABLE SLEEVES WHERE REQUIRED. CONDUIT EXPANSION FITTING SHALL BE INSTALLED IN EACH CONDUIT RUN WHEREVER IT CROSSES AN EXPANSION JOINT IN THE STRUCTURE. THE EXPANSION FITTING SHALL BE INSTALLED ON ONE SIDE OF THE JOINT WITH ITS SLIDING SLEEVE END FLUSH WITH THE JOINT AND WITH A LENGTH OF BONDING JUMPER IN THE EXPANSION JOINT EQUAL TO AT LEAST THREE TIMES THE NORMAL WIDTH OF THE JOINT.

8. ALL 20A, SINGLE POLE, 120 VOLT OR 208 VOLT BRANCH CIRCUIT RUNS IN EXCESS OF 100 FEET FROM THE PANEL TO THE DEVICE SHALL BE PROVIDED WITH #10 MINIMUM AWG WIRE FOR ITS ENTIRE LENGTH.

9. JUNCTION OR PULL BOXES SHALL BE FURNISHED AND INSTALLED WHERE INDICATED ON PLANS AND WHEREVER ELSE SUCH A BOX MAY BE NECESSARY TO FACILITATE INSTALLATION OR CONFORM TO CODE REQUIREMENTS. COORDINATE LOCATIONS OF SAME WITH ARCHITECT FOR ACCESSIBILITY AND AESTHETIC CONSIDERATIONS. GENERALLY, JUNCTION BOXES AND PULL BOXES SHALL BE INSTALLED EVERY 100 FEET IN CONDUIT HORIZONTAL RUNS AND SHALL NOT BE EXPOSED IN FINISHED SPACES. ALL CABLES WITHIN PULL BOXES SHALL BE PROPERLY TAGGED FOR IDENTIFICATION. LABEL ALL CONDUITS WITH FEEDER DESIGNATION, AT ENTRY AND EXIT TO THE BOX.

10. PROVIDE A #10 AWG NEUTRAL FOR ALL 20A CIRCUITS WHERE EITHER TWO OR THREE PHASES SHARE A SINGLE CONDUCTOR NEUTRAL.

11. PROVIDE WIRE TROUGHS WHERE A RACEWAY IS REQUIRED TO ACCESS THE FLOOR SYSTEM.

12. INSULATING BUSHINGS OR INSULATING THROATS SHALL BE INSTALLED ON ALL FITTINGS.

13. COORDINATE WITH PUBLIC ADDRESS SYSTEM VENDOR FOR EMERGENCY CONTROL PANEL REQUIREMENTS.

14. ANY VFDS SHALL HAVE LINE AND LOAD SIDE POWER FILTERING.

F. LIGHTING FIXTURES

1. ALL FLUORESCENT LIGHT FIXTURES SHALL BE PROVIDED WITH HIGH POWER FACTOR, HIGH FREQUENCY ELECTRONIC BALLASTS. BALLASTS SHALL BE UL LISTED, CLASS P, SOUND RATED A.

2. ALL LIGHTING FIXTURES SHALL BE CONNECTED USING MAXIMUM 6 FOOT LENGTH OF FLEXIBLE METAL CONDUIT FROM ACCESSIBLE CEILING OUTLET BOX USING LOCK NUT TYPE FITTINGS WITH GROUNDING AS REQUIRED BY GOVERNING CODES. PROVIDE #12 GROUND WIRE.

3. ALL EMERGENCY LIGHTING FIXTURES SHALL CONTAIN AN INTEGRAL EMERGENCY BATTERY UNIT, CONSISTING OF NICKEL-CADMIUM BATTERY AND AN AUTOMATIC SOLID STATE CHARGER WITH VISIBLE CHARGING LED. UNIT SHALL ILLUMINATE (1) ONE LAMP PER FIXTURE AT A NORMAL LAMP LUMEN OUTPUT OF 30 PERCENT MINIMUM RATED LUMEN OUTPUT FOR MINIMUM 90 MINUTES. EMERGENCY BATTERY UNIT SHALL BE AS MANUFACTURED BY LIGHT ALARMS ELECTRONICS CORP., EMERGI-LITE OR DUAL-LITE.

4. ALL EXIT SIGNS SHALL BE PROVIDED WITH AN EMERGENCY BATTERY BALLAST WITH 90 MINUTES (MIN.) OF BATTERY LIFE. BATTERY BALLAST SHALL BE SPECIFIC TO EXIT SIGN MANUFACTURER.

5. WHERE LIGHT FIXTURES ARE DENOTED AS EMERGENCY LIGHTS TO BE SWITCHED, A HOT LEG SHALL BE BROUGHT TO THE EMERGENCY BATTERY BALLAST TO SIGNAL AND CHARGE THE BATTERY BALLAST, WHETHER THE SWITCH LEG IS "ON" OR "OFF". THEREFORE, THE FIXTURE SHALL BE SWITCHABLE. EMERGENCY BATTERY BALLAST SHALL BE BODINE TYPE B50 FOR ALL 2'x4' FLUORESCENT FIXTURES AND BODINE TYPE B94 FOR ALL COMPACT FLUORESCENT DOWNLIGHTS.

6. BRANCH CIRCUITS SHALL IN ALL CASES CONTAIN THE NECESSARY NUMBER OF WIRES TO AFFORD THE SWITCH CONTROL INDICATED. ALL LIGHTING CIRCUITS WHICH ARE CONTROLLED BY DIMMERS SHALL NOT SHARE A NEUTRAL WITH ANOTHER CIRCUIT, BUT SHALL HAVE A SEPARATE NEUTRAL CONDUCTOR TO THE PANEL, WHETHER OR NOT INDICATED ON PLAN. EACH DIMMER SHALL BE SEPARATELY GANGED (FULLY ENCLOSED).

7. PROVIDE NEW LAMPS FOR ALL EXISTING FIXTURES WHICH HAVE BEEN RELOCATED.

8. ALL LIGHT FIXTURES SHALL BE SPECIFIED ON THE ELECTRICAL AND/OR ARCHITECTURAL DOCUMENTS. IT SHALL BE THIS CONTRACTORS RESPONSIBILITY TO OBTAIN THE EXACT FIXTURE SPECIFICATIONS FOR THE PROJECT PRIOR TO THE SUBMISSION OF BID. REGARDLESS OF WHERE THE FIXTURE, LAMPS AND BALLASTS ARE SPECIFIED, THIS CONTRACTOR SHALL INCLUDE HIGH POWER FACTOR/ENERGY EFFICIENT BALLASTS AND HIGH EFFICIENCY LAMPS WHICH MEET OR EXCEED THE REQUIREMENTS OF THE NEW YORK STATE CONSERVATION CONSTRUCTION CODE AND ANY CURRENT REBATE REQUIREMENTS FOR CON EDISON, NYSERDA, ETC. FOR ALL FIXTURE TYPES.

9. THIS CONTRACTOR SHALL BE RESPONSIBLE FOR COMPLETING AND FILING ALL LIGHTING REBATE FORMS, ON BEHALF OF THE CLIENT, AND IN COORDINATION WITH THE ENGINEER AND ARCHITECT, REQUIRED FOR A REBATE WITH THE GOVERNING AUTHORITY AND/OR UTILITY AS REQUIRED PRIOR TO THE PURCHASE OF FIXTURES IN ORDER TO ACHIEVE THE MAXIMUM REBATE AMOUNT. THIS CONTRACTOR SHALL ALSO INCLUDE FILING FOR MOTION/OCCUPANCY SENSORS, TIMECLOCKS, ETC. AS PART OF THE REBATE PROCESS WHERE APPLICABLE.

10. ALL FIXTURES DENOTED AS NIGHTLIGHTS SHALL BE FED WITH AN UNSWITCHED HOT LEG. ALL LIGHTING CIRCUITS SHOWN TO BE ROUTED VIA A LIGHTING CONTACTOR OR TIMECLOCK AND RELAY COMBINATION SHALL HAVE THE HOT LEG TAPPED AHEAD OF THE RELAY CONTACT IN ORDER TO FEED NIGHTLIGHTS, EMERGENCY BATTERY UNITS AND OCCUPANCY SENSORS SO THAT THE RELAY CONTACT DOES NOT AFFECT THE CIRCUIT LEG TO THESE DEVICES.

G. SLEEVES

1. PROVIDE SLEEVES FOR ALL CONDUIT PASSING THROUGH FLOORS, WALLS, PARTITIONS AND ROOFS. SLEEVED ASSEMBLIES SHALL BE APPROVED FOR INTENDED USE FOR ALL WATERPROOF INSTALLATIONS (ROOF, FOUNDATION WALL, ETC.). PROVIDE OZ GEDNEY ASSEMBLIES, OR AS REVIEWED.

2. PROVIDE SLEEVES WITH AN I.D. AT LEAST 1/2 INCH GREATER THAN OUTSIDE OF CONDUIT SERVED.

3. WHERE PLENUM CABLING PENETRATES FIRE OR SMOKE RATED WALLS, PARTITIONS, FLOOR SLAB, ETC., PROVIDE SLEEVES (AS DESCRIBED HEREINBEFORE) THROUGH RATED CONSTRUCTION. ALL CABLING SHALL BE RUN THROUGH THESE SLEEVES. SLEEVES SHALL BE LOCATED AS REQUIRED AND SHALL BE FILLED WITH A UL LISTED, INTUMESCENT TYPE, APPROVED FIRESTOP SYSTEM. QUANTITY OF CABLES, CONFIGURATIONS OF CABLES, ETC., SHALL BE IN ACCORDANCE WITH THE MANUFACTURER'S REQUIREMENTS FOR THE TYPE OF RATED CONSTRUCTION FOR WHICH THE SYSTEM IS TO BE USED. THE FIRESTOP SYSTEMS SHALL BE AS MANUFACTURED BY 3M FIRE PROTECTION PRODUCTS, SPEC SEAL FIRE STOP PRODUCTS OR AS APPROVED. SEE ARCHITECTURAL DRAWINGS FOR FIRE RATINGS OF WALLS AND FLOORS.

H. PANELBOARDS

1. ALL PANELBOARDS SHALL BE OF THE ENCLOSED TYPE, FLUSH OR SURFACE MOUNTED, AS REQUIRED, IN CODE GAUGE STEEL CABINETS, WITH STEEL TRIM, CONCEALED HINGES, DOORS AND FLUSH TYPE LOCKS, ALL KEYED ALIKE. PROVIDE DUAL CONCEALED HINGED DOORS (DOOR-IN-DOOR CONSTRUCTION) WITH TWO KEYED LATCHES, AND WITHOUT BOLTS OR SCREWS ON THE NON-HINGED SIDE OF THE DOOR. ALL EXISTING PANELS SHALL BE RETROFITTED WITH DOOR-IN-DOOR COVERS. PROVIDE FLUSH DOORS WHERE INDICATED ON DOCUMENTS (SEE ARCHITECTURAL DRAWINGS.)

2. ALL BUSES, INCLUDING NEUTRAL, SHALL BE ELECTRICAL GRADE HARD- DRAWN COPPER AND SIZED IN CONFORMANCE WITH NEMA STANDARDS. BUSES SHALL BE ARRANGED FOR SEQUENCE PHASING AND LOADS SHALL BE BALANCED AS EQUALLY AS POSSIBLE AMONGST THE THREE PHASES.

3. PANELBOARDS SHALL BE EQUIPPED WITH QUICK-MAKE, QUICK-BREAK FUSED SWITCHES OR BOLT-ON MOLDED CASE CIRCUIT BREAKERS, OF VOLTAGE REQUIRED, AND OF SIZE AND NUMBER OF POLES INDICATED ON THE SCHEDULES.

4. A TYPE WRITTEN DIRECTORY OF 5 INCHES x 8 INCHES WITH METAL FRAME AND LEXAN FACE SHALL BE PROVIDED ON THE INSIDE OF THE DOOR OF EACH CABINET, INDICATING THE LOAD SERVED BY EACH CIRCUIT. UTILIZE ARCHITECTURAL DRAWINGS TO INDICATE ROOM NAMES AND NUMBERS OF ALL EQUIPMENT SERVED. UPDATE PANEL DIRECTORIES OF ALL EXISTING PANELS.

5. POWER, LIGHTING AND UTILITY PANELS FOR 120/208 VOLT SHALL BE BOLT-ON CIRCUIT BREAKER TYPE UNLESS OTHERWISE NOTED. SINGLE POLE BRANCHES SHALL BE BOLT-ON TYPE OF AT LEAST 10,000 AMPERES RMS SYMMETRICAL INTERRUPTING CAPACITY (OR AS INDICATED ON THE DRAWINGS). MULTIPLE POLE BREAKERS SHALL BE COMMON TRIP, OF THE CAPACITY AND NUMBER OF POLES AS INDICATED IN SCHEDULES. PANELBOARDS SHALL BE EQUIPPED WITH 200% SOLID NEUTRAL BAR AND CONTAIN THE NUMBER OF POLES, OVERCURRENT DEVICES AND BUSED SPACES AS SPECIFIED IN SCHEDULE. PANELBOARDS SHALL INCLUDE A SEPARATE GROUND BUS ISOLATED FROM THE CASING. FUSIBLE TYPE PANELS SHALL CONFORM TO REQUIREMENTS OF ABOVE PARAGRAPH.

6. PROVIDE ISOLATED GROUND BUSES ON STAND-OFF ISOLATORS WHERE INDICATED ON SCHEDULES.

7. PROVIDE NEW CIRCUIT BREAKERS IN BOTH NEW AND EXISTING PANELS AS REQUIRED TO MEET THE SCHEDULES OR CIRCUIT DESIGN INTENT.

8. GUTTER SPACE SHALL BE INCREASED WHEN CONTAINING FEEDER TAPS.

9. PROVIDE WIRE TROUGHS WHERE ACCESS TO THE FLOOR SYSTEM IS REQUIRED.

10. WHERE SPACE LIMITATIONS REQUIRE REDUCED PANEL WIDTH, PROVIDE VERTICAL (SINGLE ROW) BREAKER TYPE PANELS AS PART OF THE INITIAL SCOPE PRICE.

11. ALL PANEL BUS BARS SHALL CONSIST OF A MINIMUM 1/8 INCH DEPTH COOPER BUS.

12. PROVIDE GFI TYPE BRANCH CIRCUIT BREAKERS FOR ALL CIRCUITS SERVING HEAT TRACING CIRCUITS, H-WATT CIRCUITS, FREEZE PROTECTION CIRCUITS, WINDOW WASHING CIRCUITS, OUTDOOR CIRCUITS, ETC. AND AS REQUIRED BY CODE.

Owner
Storm King Art Center
1 Museum Road
New Windsor, NY 12553
+1 (845) 534-3115

Design Architect
heneghan peng architects
14-16 Lord Edward Street
Dublin, D02 YC63, IE
+353 1 633 9000

Executive Architect
WXY Architecture + Urban Design
224 Centre Street, 5th Floor
New York, NY 10013
+1 (212) 219-1953

Landscape Architect
Gustafson Porter + Bowman
1 Cobham Mews
London, MW1 9SB, UK
+44 020 7284 8950

Reed Hilderbrand LLC
33 Whitney Avenue, 3rd Floor
New Haven, CT, US 06510
+1 (617) 923-2422

Structural & Lighting
ARUP
77 Water Street
New York, NY, US 10005
+1 (212) 896-3000

MEPF & IT
BuroHappold
100 Broadway #23
New York, NY, US 10005
+1 (212) 616-0228

Civil
VHB
100 Great Oaks Blvd., Suite 118
Albany, NY, US 12203
+1 (518) 389-3606

AV & Acoustics
LSTN Consultants
76 Beaver Street, 2nd Floor
New York, NY, US 10005
+1 (347) 788-0810

Facade
Front Inc.
100 E. Broadway Street, #501
New York, NY, US 10002
+1 (212) 242-2220

Key Plan

Description	Date
Filing Set	06/17/22

Project

Storm King Art Center

C.F.M. Building

Seal

NOT FOR CONSTRUCTION

Drawing Title

General Notes

Date	06/17/22
Scale	Not to Scale
Drawing Number	E-C-002
Sheet Size	ARCH D

J. FUSES

1. ALL FUSES SHALL BE OF THE SAME MANUFACTURER, BUSSMANN, OR AS APPROVED, AND SHALL BE INSTALLED, AS REQUIRED, IN ALL CUTOUTS, PANELS AND SAFETY SWITCHES.

2. UNLESS OTHERWISE NOTED, FUSES SHALL BE BUSSMAN TYPE LPN, LPS OR KRP-C.

K. OCCUPANCY SENSORS

1. OCCUPANCY SENSORS SHALL BE UTILIZED TO AUTOMATICALLY TURN OFF LIGHT FIXTURES WHEN THE AREA SENSED IS NOT OCCUPIED. OCCUPANCY SENSORS SHALL HAVE A TIME DELAY BEFORE TURNING OFF, WHICH SHALL BE CONTINUOUSLY ADJUSTABLE FROM 30 SECONDS TO 12 MINUTES. OCCUPANCY SENSORS SHALL HAVE A SENSITIVITY ADJUSTMENT TO MODIFY THE FIELD OF VIEW.

2. WALL MOUNTED OCCUPANCY SENSORS SHALL OPERATE AS FOLLOWS: RED LED WILL INDICATE WHEN UNIT IS BEING TRIGGERED PLUS IT WILL GLOW WHEN OFF TO FACILITATE LOCATION IN AN UNLIT ROOM. WALL MOUNTED AREA SENSORS SHALL UTILIZE PASSIVE INFRARED OPERATION. THE SENSOR SHALL EMIT A "BEEP" WARNING TONE BEFORE SHUTTING OFF. SENSOR OPERATION SHALL BE AS FOLLOWS: TAP TOP OF SWITCH TO TURN ON; AUTOMATIC TURN OFF; TAP BOTTOM OF SWITCH TO TURN OFF. SENSOR SHALL BE ABLE TO BE MOUNTED IN A SINGLE GANG WALL BOX AND BE GANGABLE WITH OTHER DESIGNER STYLE ELECTRICAL DEVICES AND FACEPLATES. SENSOR SHALL BE PROVIDED WITH A DESIGNER STYLE SCREWLESS FACEPLATE, COLOR AS SELECTED BY THE ARCHITECT.

3. CEILING MOUNTED AREA SENSOR SHALL UTILIZE PASSIVE INFRARED OPERATION. WHEN THE SENSOR DETECTS THE PRESENCE OF AN OCCUPANT, THE LIGHTS WILL AUTOMATICALLY TURN ON. IF NO OCCUPANT MOTION OCCURS WITHIN THE ADJUSTABLE TIME DELAY PERIOD, THE LIGHTS SHALL AUTOMATICALLY BE TURNED OFF. THE SENSOR SHALL HAVE A LED INDICATOR TO PROVIDE FEEDBACK TO THE POWER PACK WHEN DETECTING MOVEMENT AND SHALL HAVE A SENSITIVITY AND TIMING ADJUSTMENT. ALL COMPONENTS TO BE CONTAINED WITHIN A 1 INCH HIGH BY 6 INCH LONG WHITE PLASTIC HOUSING, USING FOUR (4) HEAD SENSORS AT FIXED ANGLES. PROVIDE THREE (3) FREQUENCY DEVICES FOR ALTERNATE PATTERN INSTALLATION. PROVIDE ACCOMPANYING SWITCHPACK WITH PROPER HEAD QUANTITY AS SPECIFIED BY MANUFACTURER. UNIT SHALL NOT DETECT MOTION THROUGH GLASS AND SHALL BE MOUNTED A MINIMUM OF SIX (6) FEET FROM STRONG AIR TURBULENT DEVICES.

L. LIGHTING CONTRACTOR

1. THE REMOTE CONTROL LIGHTING CONTACTOR SHALL BE ELECTRICALLY OPERATED BY A DUAL-ACTING, SINGLE-SOLENOID MECHANISM THAT IS INHERENTLY INTERLOCKED AND MECHANICALLY HELD IN BOTH THE OPEN AND CLOSED POSITIONS. THE MAIN CONTACTS SHALL BE POWER DRIVEN IN BOTH DIRECTIONS. POSITIVE LOCKING AND CONTACT POSITIONS SHALL NOT BE DEPENDENT ON GRAVITY, HOOKS, LATCHES OR SEMI-PERMANENT MAGNETS.

2. THE REMOTE CONTROL LIGHTING CONTACTOR SHALL BE CAPABLE OF OPERATING IN ANY POSITION. PROVISIONS SHALL BE INCORPORATED FOR MANUAL OPERATION DURING INSPECTION AND MAINTENANCE.

3. THE REMOTE CONTROL LIGHTING CONTACTOR SHALL BE UNDERWRITERS' LABORATORIES LISTED UNDER UL 508. MAIN CONTACTS SHALL BE DOUBLE BREAK, CONTINUOUS DUTY RATED 20 AMPS TO 600 VOLTS AC, AND BE MARKED FOR BALLAST LIGHTING, TUNGSTEN AND GENERAL PURPOSE LOADS. LIGHTING CONTACTORS REQUIRING DERATING WHEN USED IN AN ENCLOSURE OR WITH TUNGSTEN LAMP LOADS SHALL NOT BE ACCEPTABLE.

4. THE REMOTE CONTROL LIGHTING CONTACTOR SHALL BE PROVIDED WITH CLAMP-TYPE, SELF-RISING TERMINAL PLATES FOR SOLDERLESS CONNECTION OF LINE, LOAD AND CONTROL CONDUCTORS. TERMINALS SHALL ACCEPT A WIRE RANGE OF #18 TO #10 AWG CU.

5. THE NUMBER OF POLES, UP TO A MAXIMUM OF 12, ON A SINGLE REMOTE CONTROL LIGHTING CONTACTOR, SHALL BE PROVIDED AS INDICATED ON PLANS.

6. THE REMOTE CONTROL LIGHTING CONTACTOR SHALL BE UL LISTED FOR THE FOLLOWING SHORT-CIRCUIT WITHSTAND CURRENT RATINGS WHEN COORDINATED WITH A UL-LISTED MOLDED CASE CIRCUIT BREAKER RATED 30 AMPERES: 10000 AMPS RMS SYMMETRICAL 600 VOLTS, 60HZ.

7. THE OPERATING COIL AND MAIN CONTACTS SHALL BE REPLACEABLE FROM THE FRONT WIHTOUT MAJOR DISASSEMBLY AND VISUAL INDICATION SHALL BE PROVIDED FOR EACH MAIN CONTACT.

8. PROVISIONS SHALL BE INCLUDED TO PERMIT REMOTE PILOT LAMP-TYPE VISUAL INDICATIONS WITHOUT THE NECESSITY FOR AUXILIARY CONTACTS OR ADDITIONAL WIRING.

9. EACH REMOTE CONTROL LIGHTING CONTACTOR SHALL BE FURNISHED WITH AN OWNER'S MANUAL PROVIDING INSTALLATION AND OPERATING INSTRUCTIONS.

10. THE REMOTE CONTROL LIGHTING CONTACTOR SHALL BE AN ASCO 917 OR APPROVED EQUAL IN NEMA 1 ENCLOSURE.

M. TIME CLOCK

1. TIME CLOCK SHALL BE DIGITAL TYPE, WITH ASTRONOMIC AND PULSE SWITCHING CAPABILITY, LCD DISPLAY, AM/PM FORMAT, MANUAL OVERRIDE, SEPARATE SCHEDULING FOR EACH DAY OF THE WEEK, DIFFERENT DAILY SCHEDULES PROGRAMMABLE WITHIN EACH SEASON.

2. ENCLOSURE SHALL BE NEMA 1 TYPE.

3. TERMINALS SHALL BE CAPABLE OF RECEIVING #8AWG WIRE.

4. TIME CLOCK SHALL BE TORK MODEL DLC400BP OR APPROVED EQUAL.

O. GENERAL

1. OUTLET BOXES SHALL BE CODE GAUGE GALVANIZED STAMPED STEEL, 4 INCH SQUARE BY 1-1/2 INCHES DEEP FOR POWER AND 4 INCHES SQUARE BY 2-1/2 INCHES DEEP FOR COMMUNICATION, FIRMLY ANCHORED IN PLACE. BOX VOLUME SHALL BE AS REQUIRED BY GOVERNING CODES WITH BLANK COVERS PROVIDED FOR ALL BOXES USED FOR JUNCTION PURPOSES. GEM BOXES SHALL ONLY BE USED WHERE DIMENSIONAL RESTRAINTS EXIST AND WHERE THE CONTRACTOR HAS OBTAINED PERMISSION FROM THE ENGINEER. MULTI-GANG BOXES SHALL BE PROVIDED WITH EXTENSION COLLARS MOUNTED WITHIN 1/8 INCH OF OUTER SURFACE. WHERE OUTLET BOXES ARE SHOWN FOR FLUSH MOUNTED DEVICES, A SINGLE GANG PLASTER RING SHALL BE PROVIDED, AND MOUNTED WITHIN 1/8 INCH OF OUTER SURFACE.

2. DISCONNECT SWITCHES SHALL BE QMQB FUSIBLE OR NONFUSIBLE WITH CURRENT AND VOLTAGE RATING AS INDICATED ON PLANS. SWITCHES SHALL BE HORSEPOWER RATED, ENCLOSED TYPE, SUITABLE FOR PADLOCKING IN OPEN POSITION.

3. HORSEPOWER RATED THERMAL SWITCHES (BRYANT OR AS APPROVED) SHALL BE USED FOR ALL MOTOR CIRCUITS. ELECTRICAL CONTRACTOR SHALL INSTALL WHERE APPLICABLE TOGGLE SWITCHES FOR USE AS DISCONNECT. THESE SWITCHES SHALL BE "T" RATED FOR RESISTANCE LOADS AND "M" RATED FOR MOTOR LOADS.

4. STANDARD DUPLEX CONVENIENCE RECEPTACLES SHALL BE SPECIFICATION GRADE NEMA 5-15R, 5-20R, 2 POLE, 3 WIRE, GROUNDED, 15 OR 20 AMPERE RATED FOR DEVICES SHOWN ON A 15 OR 20 AMPERE CIRCUIT (RESPECTIVELY). PROVIDE DEVICES RATED TO THE EQUIVALENT CIRCUIT BREAKER SIZE UNLESS OTHERWISE NOTED. GROUND FAULT TYPE SHALL BE USED WHERE REQUIRED BY GOVERNING CODES INCLUDING ALL DEVICES SHOWN TO BE WITHIN SIX FEET OF A SINK/WATER.

5. SWITCHES SHALL BE FLUSH, SPECIFICATION GRADE, QUIET TUMBLER TYPE, GROUNDED, BEHIND COMMON PLATE WITH BARRIERED BACK BOX WHERE REQUIRED BY CODE FOR MULTIPLE CIRCUITS GREATER THAN 250 VOLTS. SINGLE POLE SWITCHES SHALL BE 20 AMPERES, 277 VOLT.

6. DEVICE TYPES, MANUFACTURERS AND COLORS SHALL BE SPECIFIED BY THE ARCHITECT. IF NO SPECIFICATION HAS BEEN PROVIDED, THIS CONTRACTOR SHALL OBTAIN ALL INFORMATION REGARDING THE ABOVE FROM THE ARCHITECT PRIOR TO THE SUBMISSION OF BID, OR SHALL INCLUDE THE ABILITY TO FURNISH ANY MANUFACTURER SELECTED BY THE ARCHITECT DURING THE SHOP DRAWING SUBMISSION PHASE.

7. DEVICE PLATES SHALL BE AS INDICATED ON THE ARCHITECTURAL DRAWINGS. COORDINATE EXACT COLOR WITH ARCHITECT.

8. ALL CABLE SHALL BE COPPER WITH THWN OR THHN INSULATION FOR HORIZONTAL APPLICATIONS AND XHHW FOR VERTICAL APPLICATIONS (I.E. WHEN PASSING THROUGH A CABLE SUPPORT BOX), EMPLOYED AT THE 75°C CODE RATED AMPACITY. NO SMALLER THAN No.12 AWG SHALL BE USED UNLESS SPECIFICALLY NOTED ON PLANS. COLOR CODING SHALL CONFORM TO CODE REQUIREMENTS. DERATE ALL CABLES PER LATEST VERSION OF THE NATIONAL ELECTRICAL CODE.

9. ALL CONDUCTORS #10 AND SMALLER SHALL BE SOLID CU CONDUCTORS. ALL CONDUCTORS #8 AND LARGER SHALL BE STRANDED COPPER.

10. ALL CABLING FURNISHED FOR INSTALLATION EXPOSED (NOT IN AN ENCLOSED RACEWAY) IN AN AIR PLENUM CEILING OR FLOOR SHALL BE APPROVED FOR USE BY GOVERNING AUTHORITIES, AND SHALL CONFORM TO UL 910 WITH A MINIMUM OF 125 DEGREES CELSIUS RATED JACKET.

11. ALL SUPPLIED LUGS FOR EQUIPMENT REQUIRING HARD-WIRED CONNECTIONS, ETC. SHALL BE DOUBLE INDENT, 2 BOLT HOLE, LONG BARREL AND COMPRESSION TYPE. PROVIDE DOUBLE INDENT "HEXAGONAL" COMPRESSION DIES AND TOOL (T & B OR BURNDY OR AS REVIEWED). MECHANICAL LUGS, SINGLE INDENT COMPRESSION TOOLS AND UNIVERSAL DIES SHALL NOT BE PERMITTED. ALL COMPRESSION TOOLS AND DIES SHALL BE MANUFACTURED BY THE LUG VENDOR.

12. ALL SUPPLIED IN-LINE SPLICE CONNECTORS, "T" CONNECTORS, ETC., SHALL BE DOUBLE INDENT (PER CONDUCTOR), LONG BARREL AND COMPRESSION TYPE. PROVIDE DOUBLE INDENT "HEXAGONAL" COMPRESSION DIES AND TOOL (T & B, BURNDY OR AS REVIEWED). MECHANICAL CONNECTORS, SINGLE INDENT COMPRESSION TOOLS AND UNIVERSAL DIES SHALL NOT BE PERMITTED. ALL COMPRESSION TOOLS AND DIES SHALL BE MANUFACTURED BY THE CONNECTOR VENDOR.

13. ALL NEW AND RELOCATED ELECTRIFIED FURNITURE SYSTEM COMPONENTS SHALL BE DISCONNECTED, RECEIVED, STORED, INSTALLED AND WIRED BY THIS CONTRACTOR IN ORDER TO CONFORM WITH THE DESIGN AS INDICATED ON THESE DRAWINGS AND THE ARCHITECTURAL DRAWINGS. ANY MODIFICATIONS TO FURNITURE SYSTEM NECESSARY TO COMPLY WITH LOCAL CODES AND INSTALLATION STANDARDS SHALL BE BROUGHT TO THE ATTENTION OF THE ARCHITECT PRIOR TO FIELD MODIFICATION AND ELECTRIFICATION.

14. ALL UPS SYSTEM RECEPTACLES OR RECEPTACLES DENOTED AS BEING ISOLATED GROUND TYPE SHALL BE PROVIDED WITH A GREEN ISOLATED GROUND WIRE. THIS CONTRACTOR SHALL PROVIDE A COMPLETE ISOLATED GROUND WIRE SYSTEM FROM THE LAST RECEPTACLE TO THE TRANSFORMER X/O POINT (WHERE THE SERVICE GROUND IS ESTABLISHED). THIS SHALL INCLUDE THE PROVISION OF ISOLATED GROUND WIRES AND BUS BARS IN NEW AND EXISTING DISTRIBUTION ALONG THE ENTIRE PATH AS STATED ABOVE, WHETHER OR NOT SHOWN ON THE PLANS. ALL ISOLATED GROUND CIRCUITS SHALL HAVE DEDICATED NEUTRAL AND GROUND WIRES. I.G. WIRES SHALL BE RUN WITH PHASE AND NEUTRAL CONDUCTORS. REPLACE EXISTING FEEDERS AS REQUIRED.

15. PROVIDE LOCAL DISCONNECTS FOR ALL MOTORS, HARD-WIRED PANTRY/KITCHEN EQUIPMENT AND HOT WATER HEATERS, WHETHER OR NOT SHOWN ON PLAN. DISCONNECTS SHALL BE SIZED PER THE OVERCURRENT PROTECTION AND LOCATED PER THE ENGINEER AND ARCHITECT.

16. PROVIDE A 120 VOLT DEDICATED CIRCUIT FOR EACH CONDENSATE PUMP FOR ALL AC UNITS. COORDINATE WITH THE ENGINEER, THE PANEL AND BREAKER POSITION, PRIOR TO INSTALLATION.

17. ALL EQUIPMENT MATERIALS SHALL BE NEW, UL LISTED AND SHALL CONFORM TO ANY ADDITIONAL LABELING, TESTING AND CONSTRUCTION REQUIREMENTS ESTABLISHED BY THE GOVERNING AUTHORITIES. SAME SHALL BE GUARANTEED FOR 1 YEAR SUBSEQUENT TO FINAL ACCEPTANCE.

18. ALL EQUIPMENT (ELECTRICAL AND MECHANICAL) SHALL BE SPECIFIED TO HAVE VOLTAGE RATINGS COMPATIBLE WITH THE PROVISIONS OF ANSI C84.

19. ALL WORK SHALL BE IN CONDUIT.

20. DISCONNECTS FOR INCOMING SERVICE SHALL BE SERVICE RATED.

P. UNIT PRICES

1. AT THE SUBMISSION OF BID, PROVIDE A COMPREHENSIVE UNIT PRICE LIST TO FURNISH AND INSTALL CABLE, CONDUIT, PANELS, TRANSFORMERS, DISCONNECTS, CIRCUIT BREAKERS, RECEPTACLES, FIXTURES, SWITCHES, ETC. THE LIST SHALL CONSIST, AS A MINIMUM, OF ALL TYPES AND SIZES OF EQUIPMENT AS INCLUDED IN THE BASE PROJECT. ONLY THOSE BIDS CONTAINING A UNIT PRICE LIST SHALL BE CONSIDERED UNLESS WRITTEN PERMISSION HAS BEEN GRANTED ON BEHALF OF THE OWNER, ARCHITECT, ENGINEER AND/OR CONSTRUCTION MANAGER (OR GENERAL CONTRACTOR).

Owner
Storm King Art Center
1 Museum Road
New Windsor, NY 12553
+1 (845) 534-3115

Design Architect
heneghan peng architects
14-16 Lord Edward Street
Dublin, D02 YC63, IE
+353 1 633 9000

Executive Architect
WXY Architecture + Urban Design
224 Centre Street, 5th Floor
New York, NY 10013
+1 (212) 219-1953

Landscape Architect
Gustafson Porter + Bowman
1 Cobham Mews
London, MW1 9SB, UK
+44 020 7284 8950

Reed Hilderbrand LLC
33 Whitney Avenue, 3rd Floor
New Haven, CT, US 06510
+1 (617) 923-2422

Structural & Lighting
ARUP
77 Water Street
New York, NY, US 10005
+1 (212) 896-3000

MEPF & IT
BuroHappold
100 Broadway #23
New York, NY, US 10005
+1 (212) 616-0228

Civil
VHB
100 Great Oaks Blvd., Suite 118
Albany, NY, US 12203
+1 (518) 389-3606

AV & Acoustics
LSTN Consultants
76 Beaver Street, 2nd Floor
New York, NY, US 10005
+1 (347) 788-0810

Facade
Front Inc.
100 E. Broadway Street, #501
New York, NY, US 10002
+1 (212) 242-2220

Key Plan

Description	Date
Filing Set	06/17/22

Project

Storm King Art Center

C.F.M. Building

Seal

NOT FOR CONSTRUCTION

Drawing Title

General Notes

Date	06/17/22
Scale	Not to Scale
Drawing Number	E-C-003
Sheet Size	ARCH D

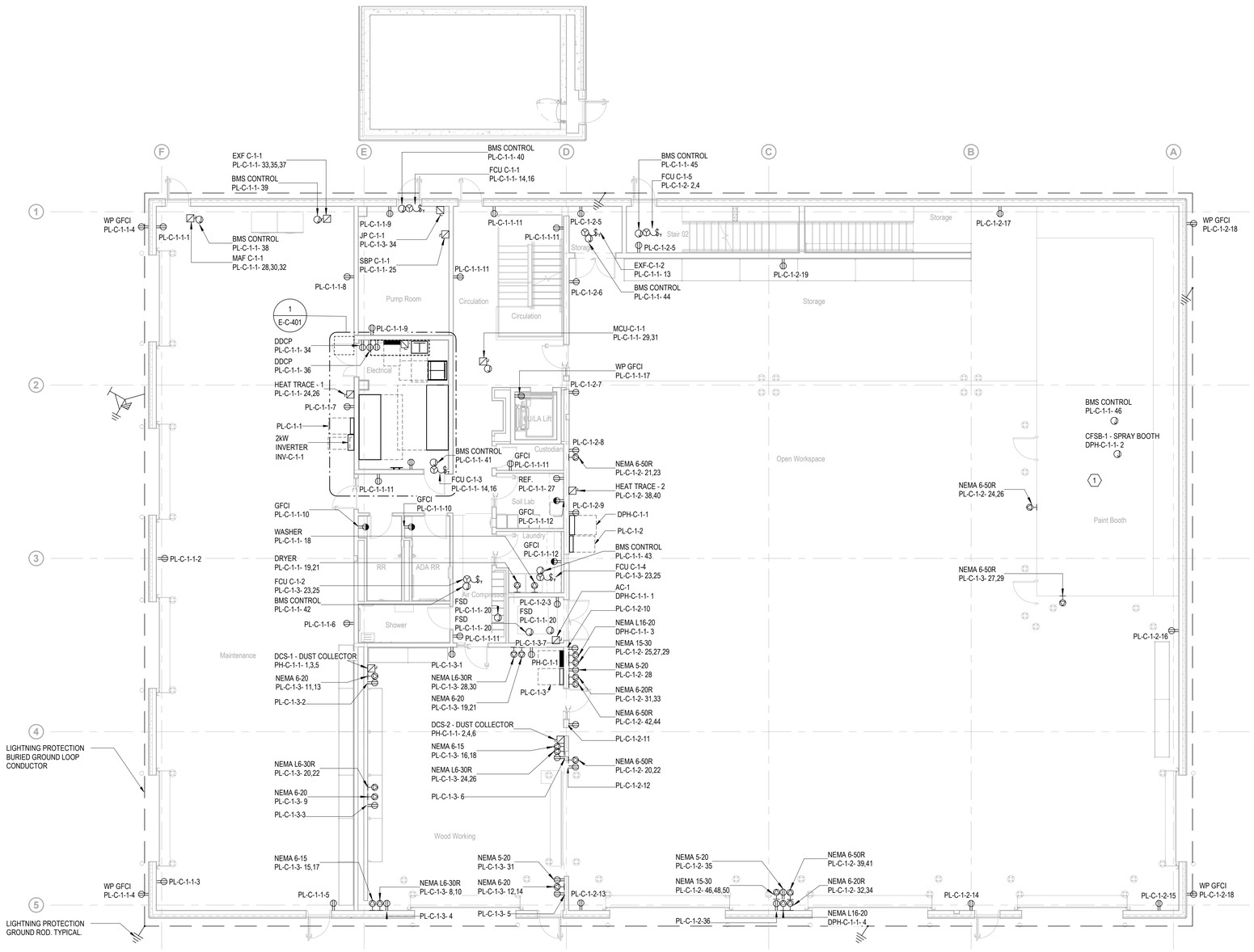

GENERAL NOTES

A. FOR ALL SYSTEMS, PROVIDE ALLOWANCES FOR ALL COMPONENTS AND ACCESSORIES REQUIRED FOR A COMPLETE AND OPERATING SYSTEM.

B. EXTERIOR EQUIPMENT - PROVIDE NEMA 3R MINIMUM RATING FOR ALL EXTERIOR AND ROOF MOUNTED EQUIPMENT INCLUDING DISCONNECT SWITCHES.

C. BMS - PROVIDE DEDICATED 20A-1P, 120V CIRCUITS FOR BMS NETWORK CONTROLLER.

D. FIRE ALARM CABINETS - PROVIDE (1) DEDICATED 20A-1P, 120V CIRCUIT TO EACH FIRE ALARM CABINET.

E. FIRE SMOKE DAMPERS - PROVIDE DEDICATED 20A-1P, 120V CIRCUIT FOR FIRE SMOKE DAMPERS.

F. PROJECTORS AND PROJECT SCREENS - PROVIDE DEDICATED 20A-2P, 208V CIRCUITS FOR MOTORIZED PROJECTION SCREENS IN EACH MEETING ROOM. PROVIDE DEDICATED 20A-1P, 120V CIRCUITS FOR PROJECTORS.

G. THE CONTRACTOR SHALL REVIEW ALL DESIGN DRAWINGS FROM OTHER TRADES TO COVER ALL POWER NECESSARY FOR EQUIPMENT SHOWN BY OTHERS.

KEY NOTES (#)

1 PAINT BOOTH PROVIDED BY OTHERS. PROVIDE (4) DEDICATED 20A-1P, 120V, CIRCUITS FOR PAINT BOOTH RECEPTACLES AND LIGHTING. ALL ELECTRICAL CONNECTIONS, DEVICES AND EQUIPMENT IN PAINT BOOTH SHALL COMPLY WITH NFPA33 6.4 AND DEVICES WITHIN 3 FEET OF PAINT BOOTH SHALL COMPLY WITH NFPA33 6.5.2.

Owner
Storm King Art Center
1 Museum Road
New Windsor, NY 12553
+1 (845) 534-3115

Design Architect
heneghan peng architects
14-16 Lord Edward Street
Dublin, D02 YC63, IE
+353 1 633 9000

Executive Architect
WXY Architecture + Urban Design
224 Centre Street, 5th Floor
New York, NY 10013
+1 (212) 219-1953

Landscape Architect
Gustafson Porter + Bowman
1 Cobham Mews
London, MW1 9SB, UK
+44 020 7284 8950

Reed Hilderbrand LLC
33 Whitney Avenue, 3rd Floor
New Haven, CT, US 06510
+1 (617) 923-2422

Structural & Lighting
ARUP
77 Water Street
New York, NY, US 10005
+1 (212) 896-3000

MEPF & IT
BuroHappold
100 Broadway #23
New York, NY, US 10005
+1 (212) 616-0228

Civil
VHB
100 Great Oaks Blvd., Suite 118
Albany, NY, US 12203
+1 (518) 389-3606

AV & Acoustics
LSTN Consultants
76 Beaver Street, 2nd Floor
New York, NY, US 10005
+1 (347) 788-0810

Facade
Front Inc.
100 E. Broadway Street, #501
New York, NY, US 10002
+1 (212) 242-2220

Key Plan

N

Description	Date
Filing Set	06/17/22

Project

Storm King Art Center

C.F.M. Building

Seal

NOT FOR CONSTRUCTION

Drawing Title

Power Plan - Ground Level

Date	06/17/22
Scale	1/8" = 1'-0"
Drawing Number	E-C-101
Sheet Size	ARCH D

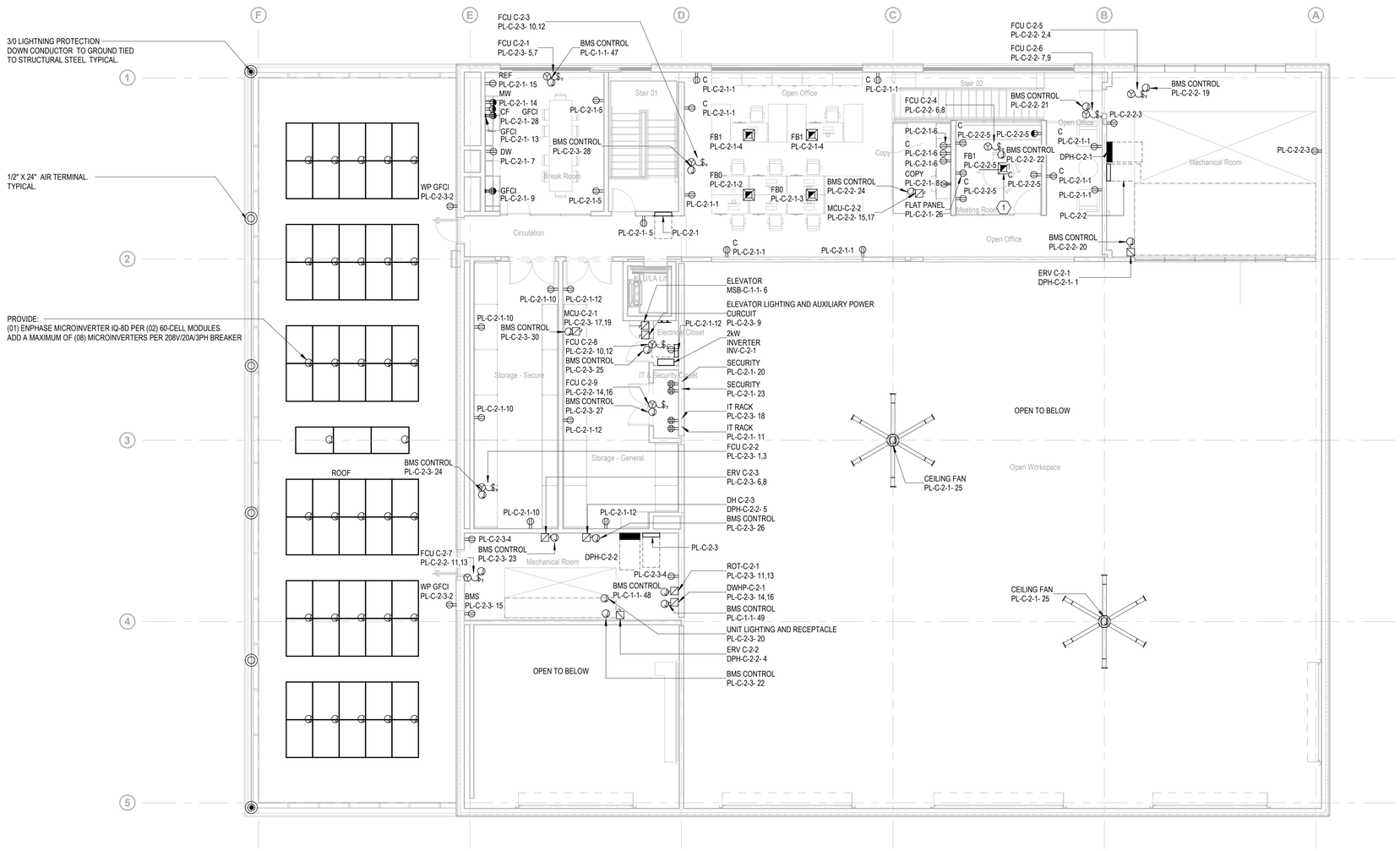

GENERAL NOTES

A. FOR ALL SYSTEMS, PROVIDE ALLOWANCES FOR ALL COMPONENTS AND ACCESSORIES REQUIRED FOR A COMPLETE AND OPERATING SYSTEM.

B. EXTERIOR EQUIPMENT - PROVIDE NEMA 3R MINIMUM RATING FOR ALL EXTERIOR AND ROOF MOUNTED EQUIPMENT INCLUDING DISCONNECT SWITCHES.

C. BMS - PROVIDE DEDICATED 20A-1P, 120V CIRCUITS FOR BMS NETWORK CONTROLLER.

D. FIRE ALARM CABINETS - PROVIDE (1) DEDICATED 20A-1P, 120V CIRCUIT TO EACH FIRE ALARM CABINET.

E. FIRE SMOKE DAMPERS - PROVIDE DEDICATED 20A-1P, 120V CIRCUIT FOR FIRE SMOKE DAMPERS.

F. PROJECTORS AND PROJECT SCREENS - PROVIDE DEDICATED 20A-2P, 208V CIRCUITS FOR MOTORIZED PROJECTION SCREENS IN EACH MEETING ROOM. PROVIDE DEDICATED 20A-1P, 120V CIRCUITS FOR PROJECTORS.

G. THE CONTRACTOR SHALL REVIEW ALL DESIGN DRAWINGS FROM OTHER TRADES TO COVER ALL POWER NECESSARY FOR EQUIPMENT SHOWN BY OTHERS.

KEY NOTES

1 FLOORBOXES WITH FURNITURE FEEDS SERVING WORKSTATIONS SHALL BE SUPPLIED WITH (2) CIRCUITS, ONE OF WHICH SHALL BE AUTOMATICALLY CONTROLLED BASED ON OCCUPANCY. TYP. FOR ALL FLOORBOXES AT WORKSTATIONS.

Owner
Storm King Art Center
1 Museum Road
New Windsor, NY 12553
+1 (845) 534-3115

Design Architect
heneghan peng architects
14-16 Lord Edward Street
Dublin, D02 YC63, IE
+353 1 633 9000

Executive Architect
WXY Architecture + Urban Design
224 Centre Street, 5th Floor
New York, NY 10013
+1 (212) 219-1953

Landscape Architect
Gustafson Porter + Bowman
1 Cobham Mews
London, MW1 9SB, UK
+44 020 7284 8950

Reed Hilderbrand LLC
33 Whitney Avenue, 3rd Floor
New Haven, CT, US 06510
+1 (617) 923-2422

Structural & Lighting
ARUP
77 Water Street
New York, NY, US 10005
+1 (212) 896-3000

MEPF & IT
BuroHappold
100 Broadway #23
New York, NY, US 10005
+1 (212) 616-0228

Civil
VHB
100 Great Oaks Blvd., Suite 118
Albany, NY, US 12203
+1 (518) 389-3606

AV & Acoustics
LSTN Consultants
76 Beaver Street, 2nd Floor
New York, NY, US 10005
+1 (347) 788-0810

Facade
Front Inc.
100 E. Broadway Street, #501
New York, NY, US 10002
+1 (212) 242-2220

Key Plan

N

Description	Date
Filing Set	06/17/22

Project

Storm King Art Center

C.F.M. Building

Seal

NOT FOR CONSTRUCTION

Drawing Title

Power Plan - Second Level

Date	06/17/22
Scale	1/8" = 1'-0"
Drawing Number	E-C-102
Sheet Size	ARCH D

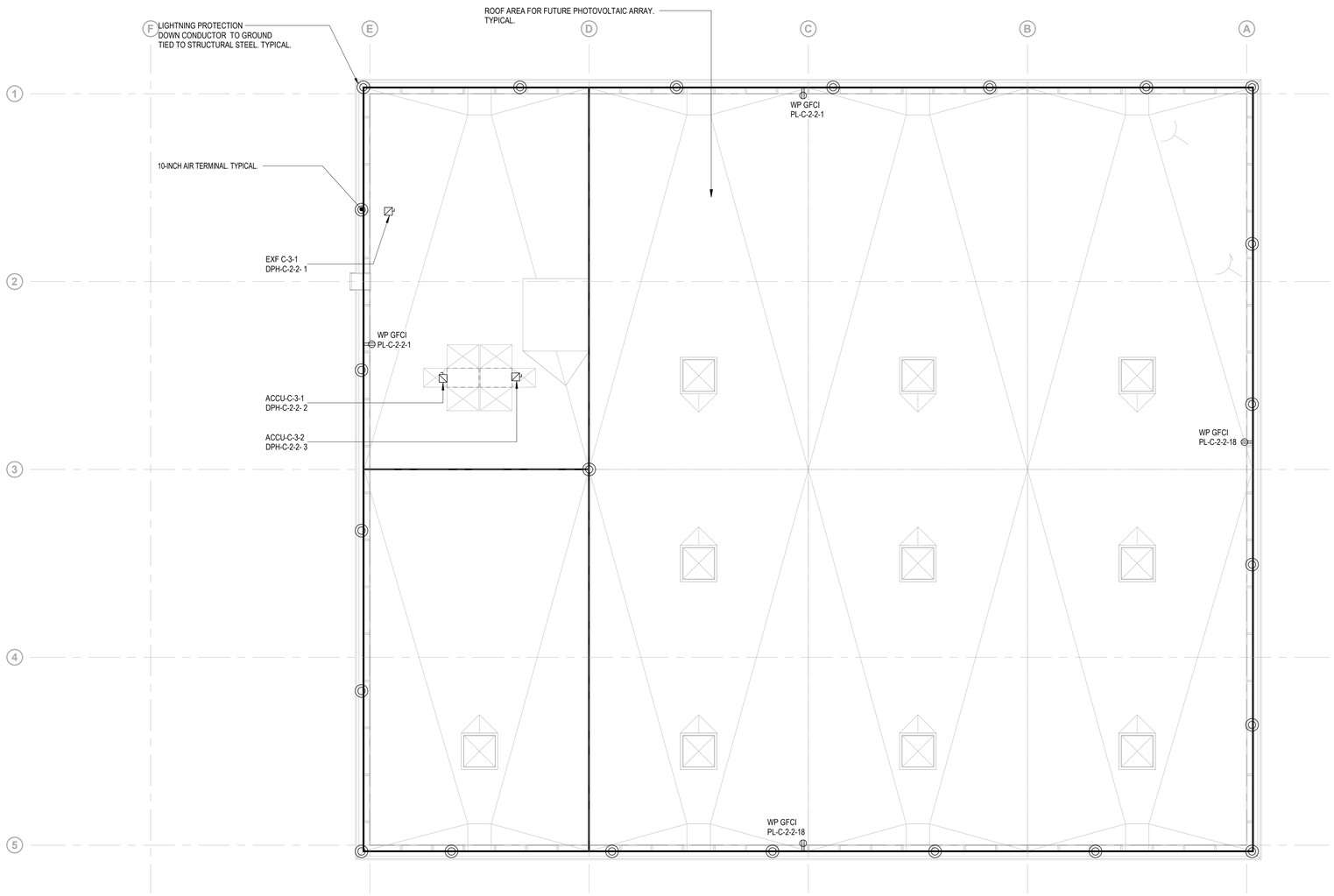

GENERAL NOTES

A. FOR ALL SYSTEMS, PROVIDE ALLOWANCES FOR ALL COMPONENTS AND ACCESSORIES REQUIRED FOR A COMPLETE AND OPERATING SYSTEM.

B. EXTERIOR EQUIPMENT - PROVIDE NEMA 3R MINIMUM RATING FOR ALL EXTERIOR AND ROOF MOUNTED EQUIPMENT INCLUDING DISCONNECT SWITCHES.

C. BMS - PROVIDE DEDICATED 20A-1P, 120V CIRCUITS FOR BMS NETWORK CONTROLLER.

D. FIRE ALARM CABINETS - PROVIDE (1) DEDICATED 20A-1P, 120V CIRCUIT TO EACH FIRE ALARM CABINET.

E. FIRE SMOKE DAMPERS - PROVIDE DEDICATED 20A-1P, 120V CIRCUIT FOR FIRE SMOKE DAMPERS.

F. PROJECTORS AND PROJECT SCREENS - PROVIDE DEDICATED 20A-2P, 208V CIRCUITS FOR MOTORIZED PROJECTION SCREENS IN EACH MEETING ROOM. PROVIDE DEDICATED 20A-1P, 120V CIRCUITS FOR PROJECTORS.

G. THE CONTRACTOR SHALL REVIEW ALL DESIGN DRAWINGS FROM OTHER TRADES TO COVER ALL POWER NECESSARY FOR EQUIPMENT SHOWN BY OTHERS.

Owner
Storm King Art Center
1 Museum Road
New Windsor, NY 12553
+1 (845) 534-3115

Design Architect
heneghan peng architects
14-16 Lord Edward Street
Dublin, D02 YC63, IE
+353 1 633 9000

Executive Architect
WXY Architecture + Urban Design
224 Centre Street, 5th Floor
New York, NY 10013
+1 (212) 219-1953

Landscape Architect
Gustafson Porter + Bowman
1 Cobham Mews
London, MW1 9SB, UK
+44 020 7284 8950

Reed Hilderbrand LLC
33 Whitney Avenue, 3rd Floor
New Haven, CT, US 06510
+1 (617) 923-2422

Structural & Lighting
ARUP
77 Water Street
New York, NY, US 10005
+1 (212) 896-3000

MEPF & IT
BuroHappold
100 Broadway #23
New York, NY, US 10005
+1 (212) 616-0228

Civil
VHB
100 Great Oaks Blvd., Suite 118
Albany, NY, US 12203
+1 (518) 389-3606

AV & Acoustics
LSTN Consultants
76 Beaver Street, 2nd Floor
New York, NY, US 10005
+1 (347) 788-0810

Facade
Front Inc.
100 E. Broadway Street, #501
New York, NY, US 10002
+1 (212) 242-2220

Key Plan

N

Description	Date
Filing Set	06/17/22

Project

Storm King Art Center

C.F.M. Building

Seal

NOT FOR CONSTRUCTION

Drawing Title

Power Plan - Roof Level

Date	06/17/22
Scale	1/8" = 1'-0"
Drawing Number	E-C-103
Sheet Size	ARCH D

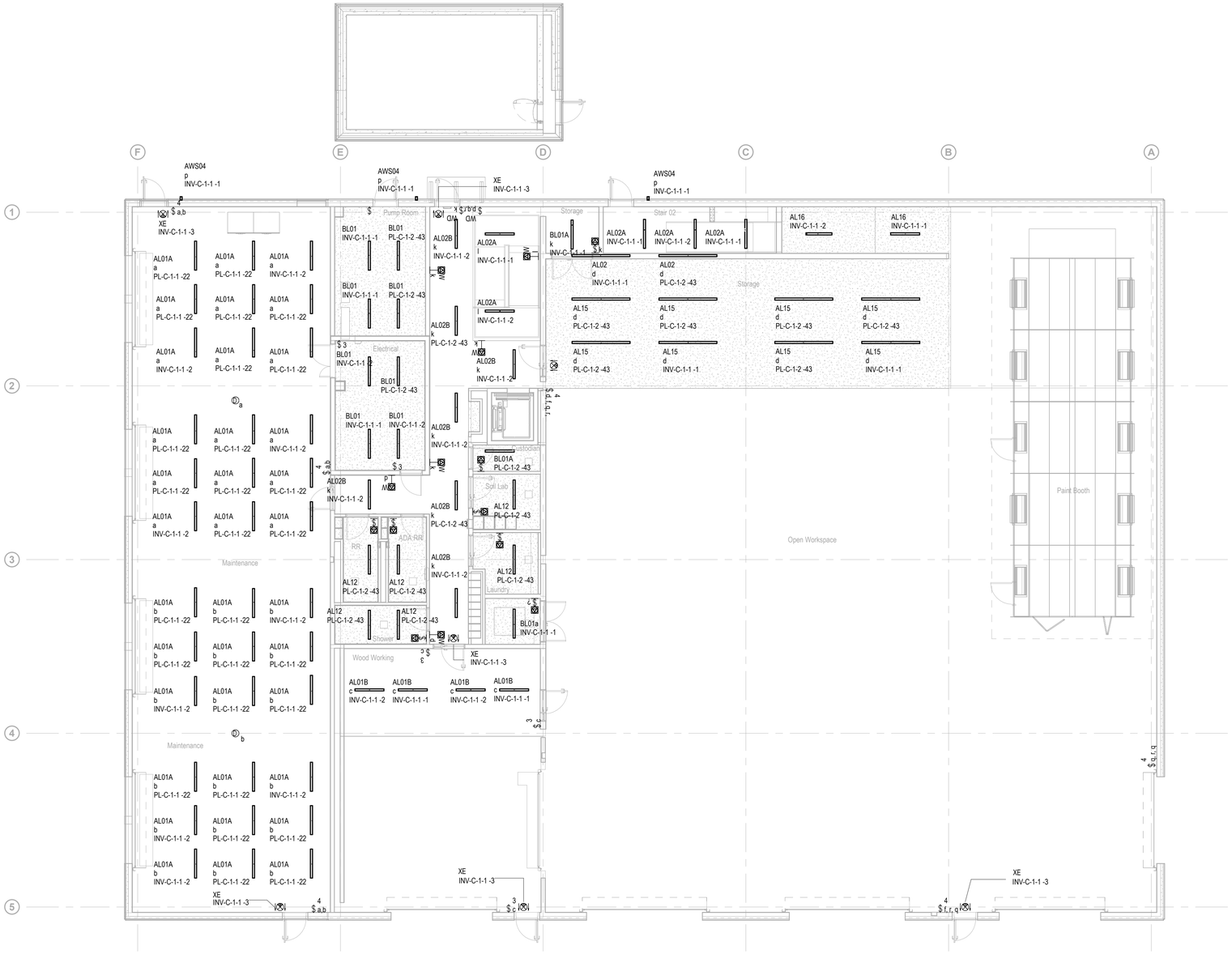

GENERAL NOTES

CONSTRUCTION DEVELOPMENT NOTES:

A. PROVIDE AND INSTALL LOW VOLTAGE DIMMING WIRING FOR ALL CONTROL ZONES CONNECTED TO LIGHTING CONTROL SYSTEM INCLUDING SWITCHED-ONLY ZONES.

B. FLOOR PLANS ARE DIAGRAMMATIC TO REPRESENT REQUIRED OCCUPANCY SENSORS AND SWITCHES TO ACHIEVE CONTROL INTENT. LIGHTING CONTROL PANELS, POWER PACKS, POWER SUPPLIES, WIRELESS RECEIVERS, INTERFACES, ETC. ARE NOT EXPLICITLY SHOWN ON PLOOR PLANS. PROVIDE ALL DEVICES AND ACCESSORIES FOR A COMPLETE SYSTEM TO ACHIEVE DESIGN INTENT. REFER TO LIGHTING CONTROL DETAILS FOR FURTHER INFORATION.

C. WHEN NORMAL POWER IS AVAILABLE, LIGHT FIXTURES ON EMERGENCY POWER SHALL BE CONTROLLED WITH LIGHTING FIXTURES ON NORMAL POWER IN THE SAME ZONE. IN THE EVENT OF A POWER OUTAGE, EMERGENCY BY-PASS RELAYS SHALL OVERRIDE NORMAL CONTROL AND SWITCH FIXTURES ON EMERGENCY POWER TO FULL BRIGHTNESS. FIXTURES DESIGNATED 'EM' ON THE LIGHTING CONTROL SYSTEM SHALL BE CONNECTED TO EMERGENCY BATTERY INVERTER. REFER TO LIGHTING CONTROL DETAILS.

D. PROVIDE HIGH BAY DAYLIGHT SENSORS IN DOUBLE HEIGHT SPACE WORKSHOPS AND MAINTENANCE SHOP, WAVELINX MODEL SWPD3-WH.

E. THE CONTRACTOR SHALL REVIEW ALL DESIGN DRAWINGS FROM OTHER TRADES TO COVER ALL POWER NECESSARY FOR EQUIPMENT SHOWN BY OTHERS.

Owner
Storm King Art Center
1 Museum Road
New Windsor, NY 12553
+1 (845) 534-3115

Design Architect
heneghan peng architects
14-16 Lord Edward Street
Dublin, D02 YC63, IE
+353 1 633 9000

Executive Architect
WXY Architecture + Urban Design
224 Centre Street, 5th Floor
New York, NY 10013
+1 (212) 219-1953

Landscape Architect
Gustafson Porter + Bowman
1 Cobham Mews
London, MW1 9SB, UK
+44 020 7284 8950

Reed Hilderbrand LLC
33 Whitney Avenue, 3rd Floor
New Haven, CT, US 06510
+1 (617) 923-2422

Structural & Lighting
ARUP
77 Water Street
New York, NY, US 10005
+1 (212) 896-3000

MEPF & IT
BuroHappold
100 Broadway #23
New York, NY, US 10005
+1 (212) 616-0228

Civil
VHB
100 Great Oaks Blvd., Suite 118
Albany, NY, US 12203
+1 (518) 389-3606

AV & Acoustics
LSTN Consultants
76 Beaver Street, 2nd Floor
New York, NY, US 10005
+1 (347) 788-0810

Facade
Front Inc.
100 E. Broadway Street, #501
New York, NY, US 10002
+1 (212) 242-2220

Key Plan

N

Description	Date
Filing Set	06/17/22

Project

Storm King Art Center

C.F.M. Building

Seal

NOT FOR CONSTRUCTION

Drawing Title

Lighting Plan - Ground Level

Date	06/17/22
Scale	1/8" = 1'-0"
Drawing Number	E-C-201
Sheet Size	ARCH D

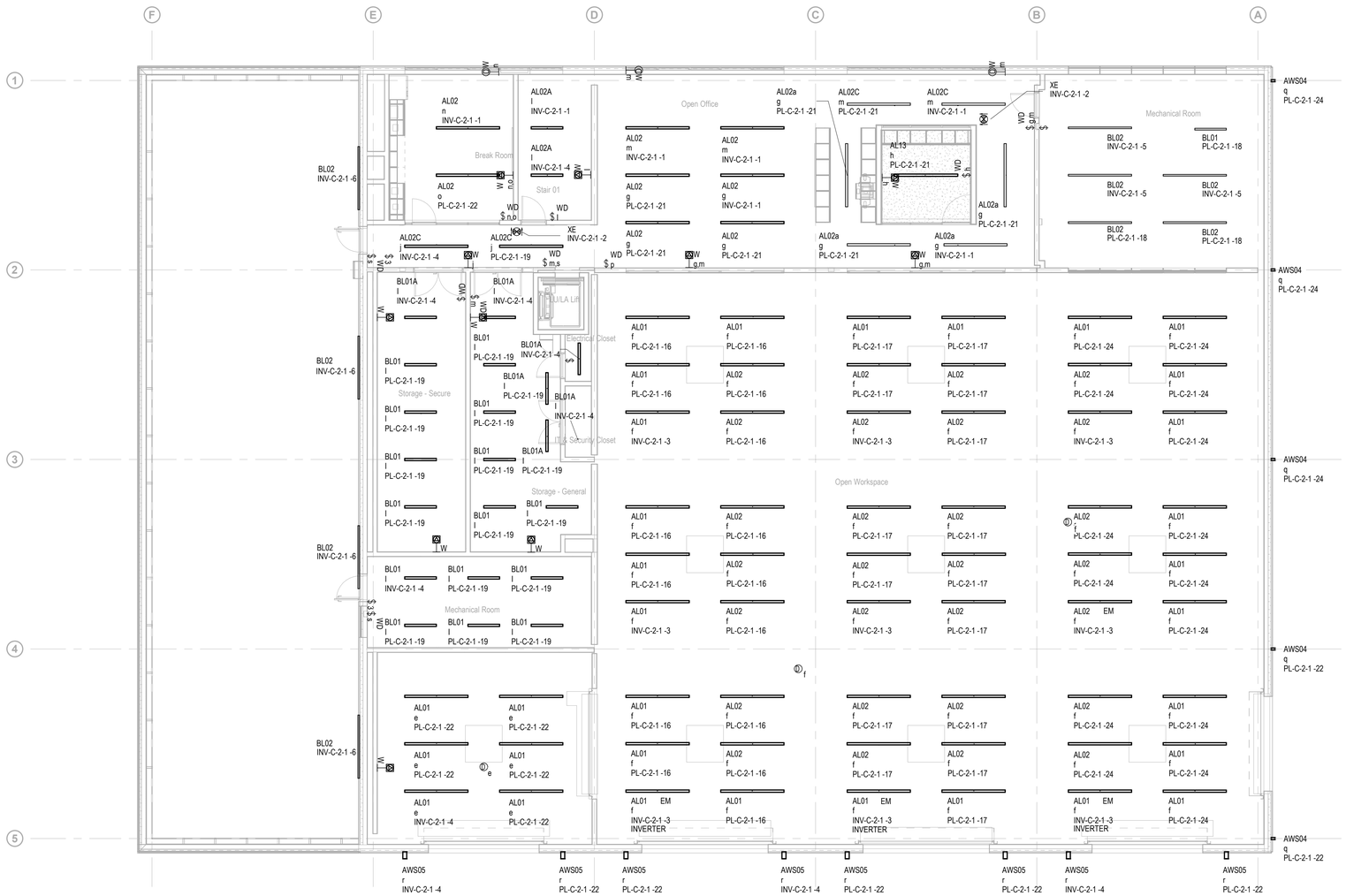

GENERAL NOTES

CONSTRUCTION DEVELOPMENT NOTES:

A. PROVIDE AND INSTALL LOW VOLTAGE DIMMING WIRING FOR ALL CONTROL ZONES CONNECTED TO LIGHTING CONTROL SYSTEM INCLUDING SWITCHED-ONLY ZONES.

B. FLOOR PLANS ARE DIAGRAMMATIC TO REPRESENT REQUIRED OCCUPANCY SENSORS AND SWITCHES TO ACHIEVE CONTROL INTENT. LIGHTING CONTROL PANELS, POWER PACKS, POWER SUPPLIES, WIRELESS RECEIVERS, INTERFACES, ETC. ARE NOT EXPLICITLY SHOWN ON PLOOR PLANS. PROVIDE ALL DEVICES AND ACCESSORIES FOR A COMPLETE SYSTEM TO ACHIEVE DESIGN INTENT. REFER TO LIGHTING CONTROL DETAILS FOR FURTHER INFORATION.

C. WHEN NORMAL POWER IS AVAILABLE, LIGHT FIXTURES ON EMERGENCY POWER SHALL BE CONTROLLED WITH LIGHTING FIXTURES ON NORMAL POWER IN THE SAME ZONE. IN THE EVENT OF A POWER OUTAGE, EMERGENCY BY-PASS RELAYS SHALL OVERRIDE NORMAL CONTROL AND SWITCH FIXTURES ON EMERGENCY POWER TO FULL BRIGHTNESS. FIXTURES DESIGNATED 'EM' ON THE LIGHTING CONTROL SYSTEM SHALL BE CONNECTED TO EMERGENCY BATTERY INVERTER. REFER TO LIGHTING CONTROL DETAILS.

D. PROVIDE HIGH BAY DAYLIGHT SENSORS IN DOUBLE HEIGHT SPACE WORKSHOPS AND MAINTENANCE SHOP, WAVELINX MODEL SWPD3-WH.

E. THE CONTRACTOR SHALL REVIEW ALL DESIGN DRAWINGS FROM OTHER TRADES TO COVER ALL POWER NECESSARY FOR EQUIPMENT SHOWN BY OTHERS.

Owner
Storm King Art Center
1 Museum Road
New Windsor, NY 12553
+1 (845) 534-3115

Design Architect
heneghan peng architects
14-16 Lord Edward Street
Dublin, D02 YC63, IE
+353 1 633 9000

Executive Architect
WXY Architecture + Urban Design
224 Centre Street, 5th Floor
New York, NY 10013
+1 (212) 219-1953

Landscape Architect
Gustafson Porter + Bowman
1 Cobham Mews
London, MW1 9SB, UK
+44 020 7284 8950

Reed Hilderbrand LLC
33 Whitney Avenue, 3rd Floor
New Haven, CT, US 06510
+1 (617) 923-2422

Structural & Lighting
ARUP
77 Water Street
New York, NY, US 10005
+1 (212) 896-3000

MEPF & IT
BuroHappold
100 Broadway #23
New York, NY, US 10005
+1 (212) 616-0228

Civil
VHB
100 Great Oaks Blvd., Suite 118
Albany, NY, US 12203
+1 (518) 389-3606

AV & Acoustics
LSTN Consultants
76 Beaver Street, 2nd Floor
New York, NY, US 10005
+1 (347) 788-0810

Facade
Front Inc.
100 E. Broadway Street, #501
New York, NY, US 10002
+1 (212) 242-2220

Key Plan

N

Description	Date
Filing Set	06/17/22

Project

Storm King Art Center

C.F.M. Building

Seal

NOT FOR CONSTRUCTION

Drawing Title

Lighting Plan - Second Level

Date	06/17/22
Scale	1/8" = 1'-0"
Drawing Number	E-C-202
Sheet Size	ARCH D

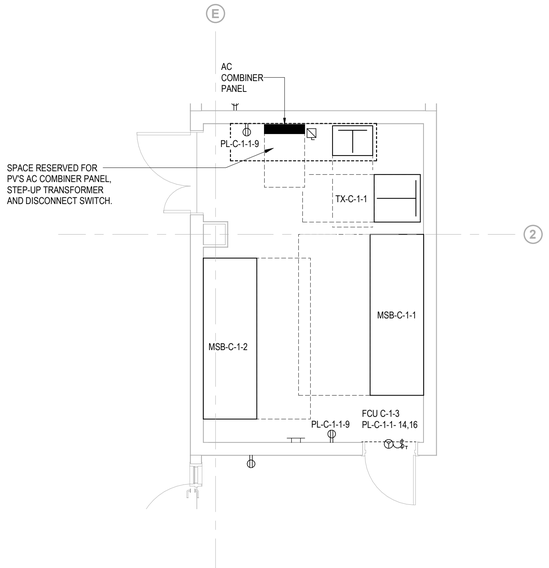

1 GROUND LEVEL - ELECTRICAL AND MECHANICAL ROOMS

SCALE 1/4" = 1'-0"

Owner
Storm King Art Center
1 Museum Road
New Windsor, NY 12553
+1 (845) 534-3115

Design Architect
heneghan peng architects
14-16 Lord Edward Street
Dublin, D02 YC63, IE
+353 1 633 9000

Executive Architect
WXY Architecture + Urban Design
224 Centre Street, 5th Floor
New York, NY 10013
+1 (212) 219-1953

Landscape Architect
Gustafson Porter + Bowman
1 Cobham Mews
London, MW1 9SB, UK
+44 020 7284 8950

Reed Hilderbrand LLC
33 Whitney Avenue, 3rd Floor
New Haven, CT, US 06510
+1 (617) 923-2422

Structural & Lighting
ARUP
77 Water Street
New York, NY, US 10005
+1 (212) 896-3000

MEPF & IT
BuroHappold
100 Broadway #23
New York, NY, US 10005
+1 (212) 616-0228

Civil
VHB
100 Great Oaks Blvd., Suite 118
Albany, NY, US 12203
+1 (518) 389-3606

AV & Acoustics
LSTN Consultants
76 Beaver Street, 2nd Floor
New York, NY, US 10005
+1 (347) 788-0810

Facade
Front Inc.
100 E. Broadway Street, #501
New York, NY, US 10002
+1 (212) 242-2220

Key Plan

Description	Date
Filing Set	06/17/22

Project

Storm King Art Center

C.F.M. Building

Seal

NOT FOR CONSTRUCTION

Drawing Title

Enlarged Plans

Date	06/17/22
Scale	1/4" = 1'-0"
Drawing Number	E-C-401
Sheet Size	ARCH D

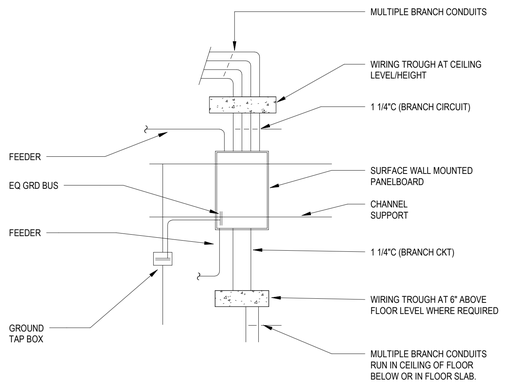

1 TYPICAL PANELBOARD INSTALLATION

NOT TO SCALE

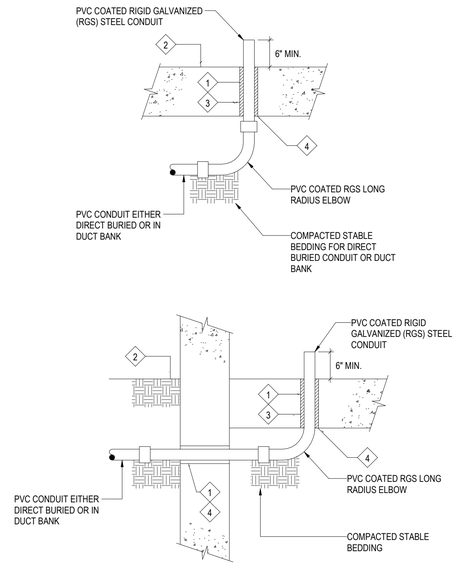

NOTE:

1. PROVIDE SLEEVE AND WATERTIGHT CONDUIT SEAL.
2. TOP OF A CONCRETE FLOOR SLAB OR HOUSEKEEPING PAD.
3. PROVIDE U.L. LISTED SEALANT TO PREVENT THE TRANSFER OF METHANE GAS.
4. CONTRACTOR TO COORDINATE ALL PENETRATIONS WITH STRUCTURAL ENGINEER.

2 ON-GRADE FLOOR SLAB CONDUIT STUB-UP DETAILS

NOT TO SCALE

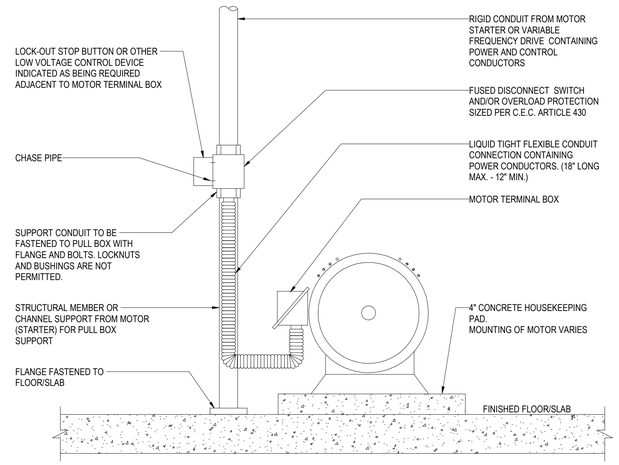

NOTES:

1. MOTOR SHALL BE FURNISHED AND INSTALLED BY OTHERS U.O.N. AND WIRED BY DIVISION 26.
2. INSTALL FLEXIBLE CONDUIT SLACK-TO-THE-TOUCH TO ALLOW FREE MOTION OF THE MOTOR SKID.

3 TYPICAL FLOOR MOUNTED MOTOR CONNECTION

NOT TO SCALE

UL SYSTEM No. W-L-1164

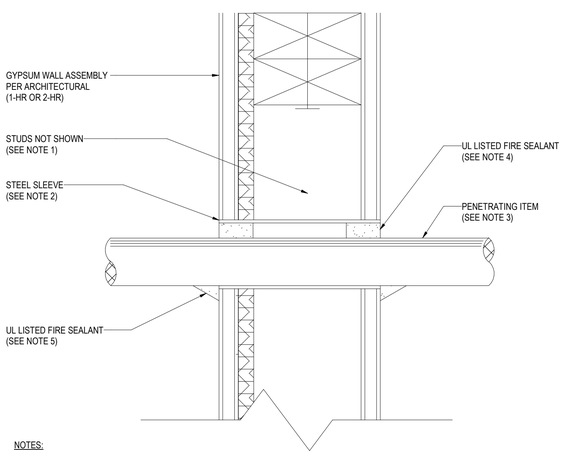

NOTES:

1. WOOD STUDS TO CONSIST OF NOMINAL 2" x 4" LUMBER. STEEL STUDS TO BE MINIMUM 2-1/2" WIDE. REFER TO ARCHITECTURAL DETAILS.
2. MAXIMUM 32" DIAMETER STEEL PIPE SLEEVE. MAXIMUM DIAMETER OPENING = 32" FOR STEEL STUD WALLS AND 14-1/2" FOR WOOD STUD WALLS. ANNULAR SPACE = 0" MINIMUM AND 1-7/8" MAXIMUM.
3. MAXIMUM 6" NOMINAL DIAMETER STEEL CONDUIT AND/OR MAXIMUM 4" NOMINAL DIAMETER EMT CONDUIT.
4. MINIMUM 5/8" DEPTH FOR 1-HR FIRE RATING AND 1-1/4" FOR 2-HR FIRE RATING HILTI FS-ONE INTUMESCENT FIRESTOP SEALANT OR EQUAL FLUSH WITH WALL. MATCH THE FIRE RATING OF ASSEMBLY PER ARCHITECTURAL DRAWINGS.
5. MINIMUM 1/2" BEAD HILTI FS-ONE INTUMESCENT FIRESTOP SEALANT OR EQUAL AT POINT OF CONTACT.
6. MAXIMUM 32" DIAMETER STEEL PIPE SLEEVE. MAXIMUM DIAMETER OPENING = 32" FOR STEEL STUD WALLS AND 14-1/2" FOR WOOD STUD WALLS. ANNULAR SPACE = 0" MINIMUM AND 1-7/8" MAXIMUM.
7. MAXIMUM 6" NOMINAL DIAMETER STEEL CONDUIT AND/OR MAXIMUM 4" NOMINAL DIAMETER EMT CONDUIT.
8. MINIMUM 5/8" DEPTH FOR 1-HR FIRE RATING AND 1-1/4" FOR 2-HR FIRE RATING HILTI FS-ONE INTUMESCENT FIRESTOP SEALANT OR EQUAL FLUSH WITH WALL. MATCH THE FIRE RATING OF ASSEMBLY PER ARCHITECTURAL DRAWINGS.
9. MINIMUM 1/2" BEAD HILTI FS-ONE INTUMESCENT FIRESTOP SEALANT OR EQUAL AT POINT OF CONTACT.

4 CONDUIT PENETRATION THRU RATED INTERIOR WALL

NOT TO SCALE

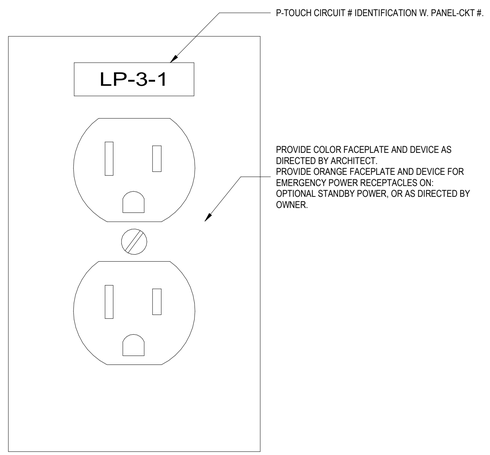

5 RECEPTACLE IDENTIFICATION DETAIL

NOT TO SCALE

Owner
Storm King Art Center
1 Museum Road
New Windsor, NY 12553
+1 (845) 534-3115

Design Architect
heneghan peng architects
14-16 Lord Edward Street
Dublin, D02 YC63, IE
+353 1 633 9000

Executive Architect
WXY Architecture + Urban Design
224 Centre Street, 5th Floor
New York, NY 10013
+1 (212) 219-1953

Landscape Architect
Gustafson Porter + Bowman
1 Cobham Mews
London, MW1 9SB, UK
+44 020 7284 8950

Reed Hilderbrand LLC
33 Whitney Avenue, 3rd Floor
New Haven, CT, US 06510
+1 (617) 923-2422

Structural & Lighting
ARUP
77 Water Street
New York, NY, US 10005
+1 (212) 896-3000

MEPF & IT
BuroHappold
100 Broadway #23
New York, NY, US 10005
+1 (212) 616-0228

Civil
VHB
100 Great Oaks Blvd., Suite 118
Albany, NY, US 12203
+1 (518) 389-3606

AV & Acoustics
LSTN Consultants
76 Beaver Street, 2nd Floor
New York, NY, US 10005
+1 (347) 788-0810

Facade
Front Inc.
100 E. Broadway Street, #501
New York, NY, US 10002
+1 (212) 242-2220

Key Plan

Description	Date
Filing Set	06/17/22

Project

Storm King Art Center

C.F.M. Building

Seal

NOT FOR CONSTRUCTION

Drawing Title

Electrical Details

Date	06/17/22
Scale	Not to Scale
Drawing Number	E-C-501
Sheet Size	ARCH D

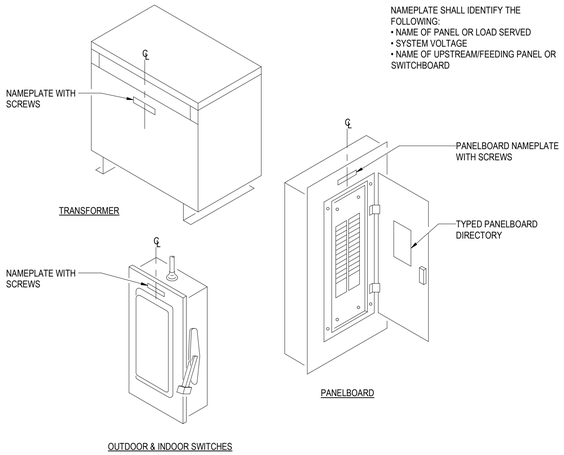

NOTE:

NAMEPLATE SHALL IDENTIFY THE FOLLOWING:
- NAME OF PANEL OR LOAD SERVED
- SYSTEM VOLTAGE
- NAME OF UPSTREAM/FEEDING PANEL OR SWITCHBOARD

NOTES:

1. REFER TO SPECIFICATION 260553 FOR LABELING REQUIREMENTS.
2. PROVIDE LAMINATED, ENGRAVED PLASTIC NAMEPLATES WITH ⅜ INCH HIGH LETTERS FOR ALL SWITCHGEAR, SWITCHBOARDS, MOTOR CONTROL CENTERS, TRANSFER SWITCHES, PANELBOARDS, SIGNAL SYSTEM EQUIPMENT CABINETS, AND TERMINAL CABINETS.
3. PROVIDE SIMILAR NAMEPLATES WITH ⅜ INCH HIGH LETTERS FOR TRANSFORMERS, TIME SWITCHES, INDIVIDUALLY MOUNTED BREAKERS, SWITCHES AND CONTROLS, SWITCHBOARDS, AND MOTOR CENTER BRANCH DEVICES.
4. ATTACH NAMEPLATES TO GEAR WITH SHEET METAL SCREWS. ADHESIVE MOUNTED NAMEPLATES ARE NOT ACCEPTABLE.
5. REFER TO SINGLE LINE DIAGRAMS AND SCHEDULES FOR ACTUAL DESIGNATIONS AND CIRCUIT NUMBERS THAT APPLY TO THIS PROJECT.

1 IDENTIFICATION OF ELECTRICAL EQUIPMENT

NOT TO SCALE

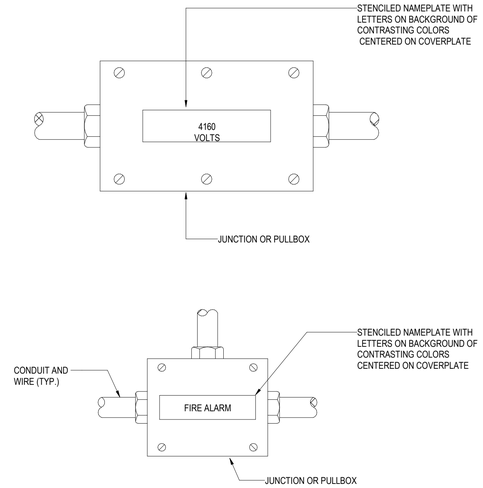

NOTES:

1. REFER TO SPECIFICATION 260553 FOR LABELING REQUIREMENTS.
2. PROVIDE READILY VISIBLE BLOCK LETTER STENCILED DESIGNATIONS FOR THE FOLLOWING WITH ⅜ INCH HIGH MINIMUM LETTERS ON BACKGROUND OF CONTRASTING COLORS:
A. JUNCTION AND PULL BOXES OF SIGNAL AND COMMUNICATION SYSTEMS IDENTIFYING SYSTEM AND VOLTAGE.
B. LIGHTING OUTLET AND JUNCTION BOXES: IDENTIFY VOLTAGE AND CIRCUITS CONTAINED WITHIN BOX.
C. 480V OUTLET AND JUNCTION BOXES: 480V. IDENTIFY CIRCUIT(S).
D. EACH 10 FOOT LENGTH OF MEDIUM VOLTAGE CONDUIT, EXPOSED OR IN ACCESSIBLE CEILING SPACE AND ASSOCIATED JUNCTION AND PULL BOXES: DANGER HIGH VOLTAGE
E. FEEDER CONDUIT RUNS ON 25 FOOT CENTERS ON BOTH SIDES OF WALL AND FLOOR PENETRATIONS AND ABOVE DEMOUNTABLE CEILINGS. INDICATE CIRCUIT DESIGNATION AND NUMBER ON ALL FEEDERS. INDICATE SYSTEM ON ALL SIGNAL AND COMMUNICATIONS SYSTEM CONDUIT SIZED 1 1/2" AND LARGER.

2 IDENTIFICATION OF ELECTRICAL BOXES

NOT TO SCALE

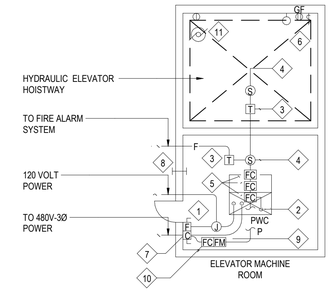

NOTES:

1. 240V- 30A FUSIBLE SWITCH WITH 20A FUSES FOR ELEVATOR CAR. PROVIDE NAMEPLATE "LIGHT/ ACCESSORIES".
2. ALL CONNECTIONS TO PWCPs BY ELEVATOR SUB-CONTRACTOR.
3. ADDRESSABLE THERMAL DETECTOR AT EACH SPRINKLER HEAD IN MACH. RM & HOISTWAY.
4. SMOKE DETECTOR IN MACH. ROOM FOR ELEVATOR RECALL.
5. ELEVATOR RECALL ADDRESSABLE CONTROL MODULES FOR PRIMARY, ALTERNATE FLOOR, AND FIREMAN'S HAT SELECTION.
6. PROVIDE LIGHT, SWITCH AND GFCI DUPLEX RECEPTACLE IN ELEVATOR PIT, SEE PLAN FOR DETAILS.
7. ELEVATOR POWER MODULE SWITCH REFERENCE "ELEVATOR AUTOMATIC POWER DISCONNECTION DETAIL" FOR ADDITIONAL WIRING REQUIREMENTS AND SPECIFICATIONS.
8. TELEPHONE WIRING SLEEVE 1/2 INCH EMT WITH INSULATION BUSHINGS ON BOTH ENDS, VERIFY LOCATION.
9. ADDRESSABLE MONITOR MONITOR MODULES FOR VOLTAGE MONITORING AT ELEVATOR POWER MODULE SWITCH.
10. ADDRESSABLE CONTROL MODULE FOR CONTROLLING SHUNT TRIP ACTIVATION.
11. PROVIDE SIMPLEX RECEPTACLE FOR SUMP PUMP.

3 TYPICAL ELEVATOR WIRING REQUIREMENTS

NOT TO SCALE

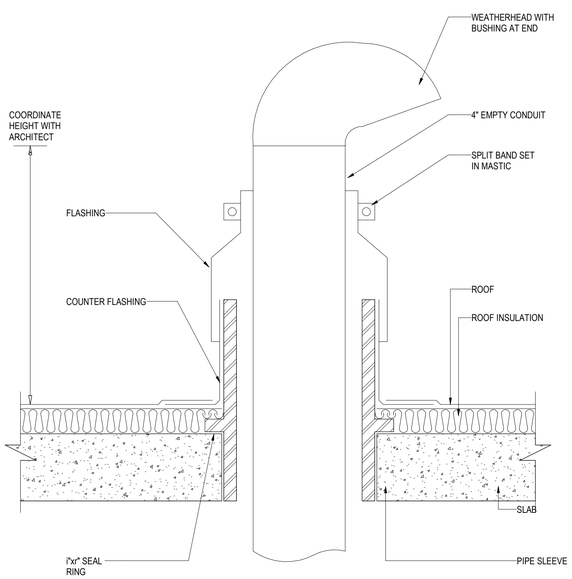

4 CONDUIT PENETRATION THRU ROOF DETAIL

NOT TO SCALE

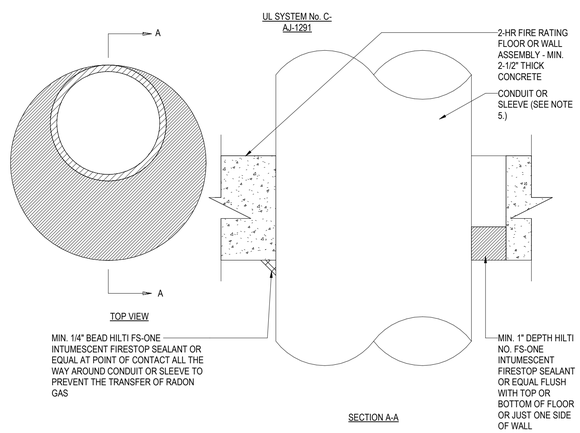

NOTES:

1. CONDUIT MAY BE CENTERED OR OFFSET IN HOLE. MAXIMUM DIAMETER OF HOLE OPENING IS 14 INCHES.
2. TEMPORARY FORMS MA BE REQUIRED TO SUPPORT THE FIRESTOP SEALANT WHILE IT CURES.
3. FOR CONDUIT SLEEVE INSTALLATIONS PROVIDE AROUND CONDUCTORS WITHIN SLEEVE.
4. CONTRACTOR SHALL BE RESPONSIBLE FOR ALL PATCHING AND EXTERNAL FIRESTOPPING AROUND SLEEVES (WHERE APPLICABLE) AND CONDUIT.
5. MAXIMUM 6" NOMINAL DIAMETER STEEL CONDUIT AND MAXIMUM 4" NOMINAL DIAMETER EMT CONDUIT.

5 CONDUIT THROUGH 2-HR CONCRETE WALL/SLAB

NOT TO SCALE

Owner
Storm King Art Center
1 Museum Road
New Windsor, NY 12553
+1 (845) 534-3115

Design Architect
heneghan peng architects
14-16 Lord Edward Street
Dublin, D02 YC63, IE
+353 1 633 9000

Executive Architect
WXY Architecture + Urban Design
224 Centre Street, 5th Floor
New York, NY 10013
+1 (212) 219-1953

Landscape Architect
Gustafson Porter + Bowman
1 Cobham Mews
London, MW1 9SB, UK
+44 020 7284 8950

Reed Hilderbrand LLC
33 Whitney Avenue, 3rd Floor
New Haven, CT, US 06510
+1 (617) 923-2422

Structural & Lighting
ARUP
77 Water Street
New York, NY, US 10005
+1 (212) 896-3000

MEPF & IT
BuroHappold
100 Broadway #23
New York, NY, US 10005
+1 (212) 616-0228

Civil
VHB
100 Great Oaks Blvd., Suite 118
Albany, NY, US 12203
+1 (518) 389-3606

AV & Acoustics
LSTN Consultants
76 Beaver Street, 2nd Floor
New York, NY, US 10005
+1 (347) 788-0810

Facade
Front Inc.
100 E. Broadway Street, #501
New York, NY, US 10002
+1 (212) 242-2220

Key Plan

Description	Date
Filing Set	06/17/22

Project

Storm King Art Center

C.F.M. Building

Seal

NOT FOR CONSTRUCTION

Drawing Title

Electrical Details

Date	06/17/22
Scale	Not to Scale
Drawing Number	E-C-502
Sheet Size	ARCH D

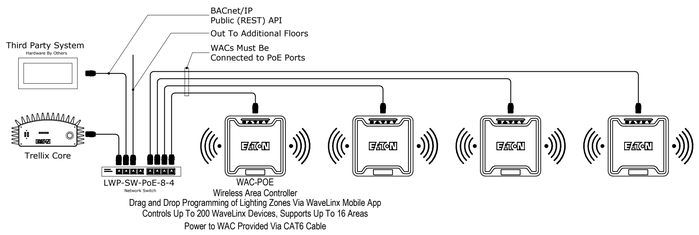

1 NETWORKED LIGHTING CONTROL DETAIL - TYPICAL FOR ALL AREAS

NOT TO SCALE

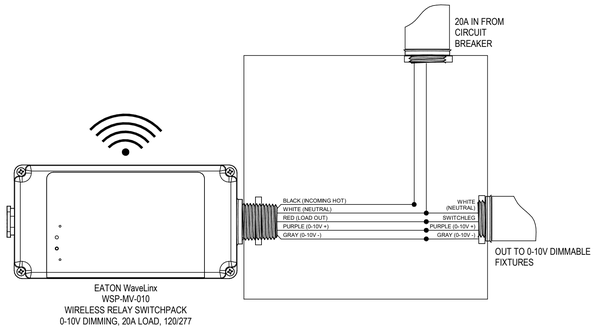

2 TYPICAL WIRELESS SWITCHPACK WIRING DETAIL

NOT TO SCALE

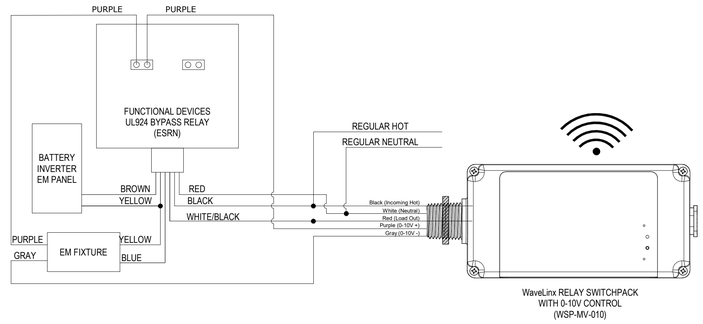

3 EMERGENCY BYPASS RELAY AND WIRELESS SWITCHPACK DETAIL

NOT TO SCALE

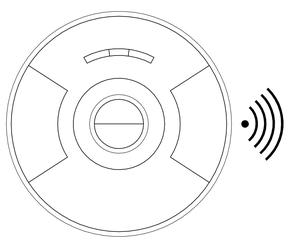

EATON WaveLinx
CWPD-1500
VACANCY/OCCUPANCY/DAYLIGHT SENSOR WITH
OPEN LOOP
PHOTOCELL, BATTERY POWERED
WITH MASKING LENS FOR WALL-MOUNT
APPLICATION

4 WIRELESS BATTERY POWERED OCCUPANCY/DAYLIGHT SENSOR DETAIL

NOT TO SCALE

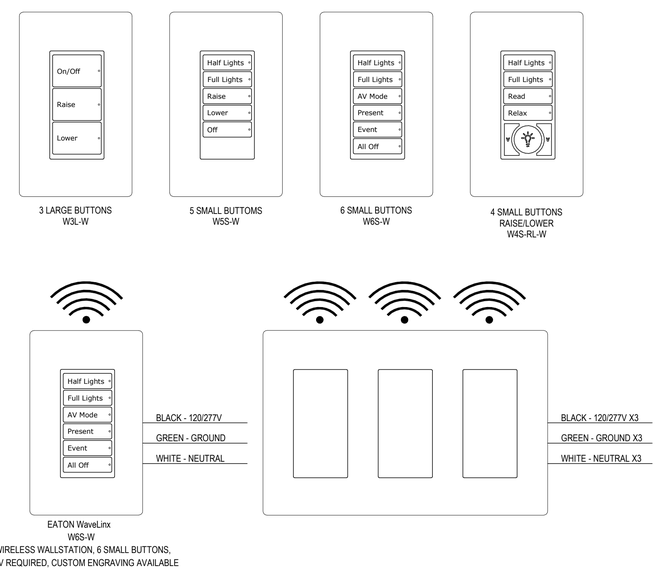

5 WIRELESS WALL STATION DETAILS

NOT TO SCALE

Owner
Storm King Art Center
1 Museum Road
New Windsor, NY 12553
+1 (845) 534-3115

Design Architect
heneghan peng architects
14-16 Lord Edward Street
Dublin, D02 YC63, IE
+353 1 633 9000

Executive Architect
WXY Architecture + Urban Design
224 Centre Street, 5th Floor
New York, NY 10013
+1 (212) 219-1953

Landscape Architect
Gustafson Porter + Bowman
1 Cobham Mews
London, MW1 9SB, UK
+44 020 7284 8950

Reed Hilderbrand LLC
33 Whitney Avenue, 3rd Floor
New Haven, CT, US 06510
+1 (617) 923-2422

Structural & Lighting
ARUP
77 Water Street
New York, NY, US 10005
+1 (212) 896-3000

MEPF & IT
BuroHappold
100 Broadway #23
New York, NY, US 10005
+1 (212) 616-0228

Civil
VHB
100 Great Oaks Blvd., Suite 118
Albany, NY, US 12203
+1 (518) 389-3606

AV & Acoustics
LSTN Consultants
76 Beaver Street, 2nd Floor
New York, NY, US 10005
+1 (347) 788-0810

Facade
Front Inc.
100 E. Broadway Street, #501
New York, NY, US 10002
+1 (212) 242-2220

Key Plan

Description	Date
Filing Set	06/17/22

Project

Storm King Art Center

C.F.M. Building

Seal

NOT FOR CONSTRUCTION

Drawing Title

Electrical Details

Date	06/17/22
Scale	Not to Scale
Drawing Number	E-C-503
Sheet Size	ARCH D

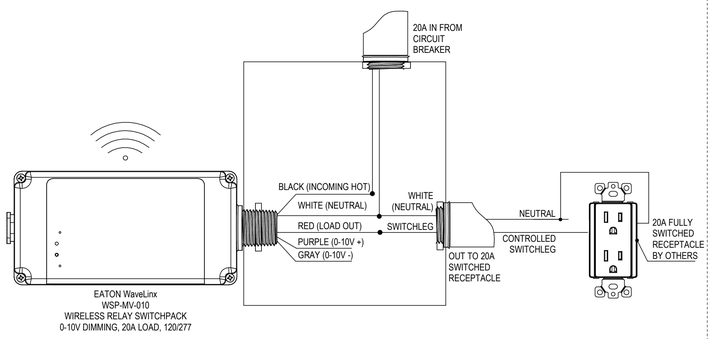

AUTOMATIC RECEPTACLE CONTROL VIA LIGHTING CONTROL:

1. AUTOMATIC RECEPTACLE CONTROL SHALL BE PROVIDED IN ACCORDANCE WITH ASHRAE 8.4.2 TO ALL REQUIRED SPACES, INDIVIDUAL WORKSTATIONS, AND ENERGIZED MODULAR FURNITURE.
2. EACH CONTROLLED RECEPTACLE SHALL TURN OFF WITHIN 20 MINUTES OF ALL OCCUPANTS LEAVING THE SPACE CONTAINING THE CONTROLLED RECEPTACLES.
3. AT LEAST 50% OF ALL 120V 15A-20A RECEPTACLES IN EACH OF THE FOLLOWING SPACES IDENTIFIED SHALL BE AUTOMATICALLY CONTROLLED:

   PRIVATE OFFICES
   CONFERENCE ROOMS
   COPY/PRINT ROOMS
   BREAK ROOMS
   WORKSTATIONS

4. AT LEAST 25% OF OF ALL 120V 15A-20A BRANCH CIRCUIT FEEDERS INSTALLED FOR MODULAR FURNITURE SHALL BE AUTOMATICALLY CONTROLLED.
5. EACH CONTROLLED RECEPTACLE SHALL BE PERMANENTLY MARKED TO VISUALLY DIFFERENTIATE THEM FROM UNCONTROLLED RECEPTACLES.

1 RECEPTACLE CONTROL WIRELESS RELAY SWITCHPACK TYPICAL DETAIL

NOT TO SCALE

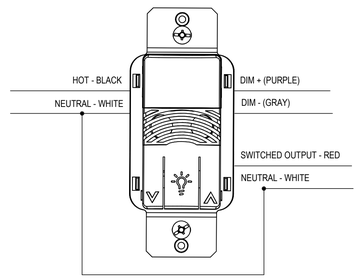

2 DUAL TECH VACANCY SENSOR DIMMING WALL STATION

NOT TO SCALE

Owner
Storm King Art Center
1 Museum Road
New Windsor, NY 12553
+1 (845) 534-3115

Design Architect
heneghan peng architects
14-16 Lord Edward Street
Dublin, D02 YC63, IE
+353 1 633 9000

Executive Architect
WXY Architecture + Urban Design
224 Centre Street, 5th Floor
New York, NY 10013
+1 (212) 219-1953

Landscape Architect
Gustafson Porter + Bowman
1 Cobham Mews
London, MW1 9SB, UK
+44 020 7284 8950

Reed Hilderbrand LLC
33 Whitney Avenue, 3rd Floor
New Haven, CT, US 06510
+1 (617) 923-2422

Structural & Lighting
ARUP
77 Water Street
New York, NY, US 10005
+1 (212) 896-3000

MEPF & IT
BuroHappold
100 Broadway #23
New York, NY, US 10005
+1 (212) 616-0228

Civil
VHB
100 Great Oaks Blvd., Suite 118
Albany, NY, US 12203
+1 (518) 389-3606

AV & Acoustics
LSTN Consultants
76 Beaver Street, 2nd Floor
New York, NY, US 10005
+1 (347) 788-0810

Facade
Front Inc.
100 E. Broadway Street, #501
New York, NY, US 10002
+1 (212) 242-2220

Key Plan

Description	Date
Filing Set	06/17/22

Project

Storm King Art Center

C.F.M. Building

Seal

NOT FOR CONSTRUCTION

Drawing Title

Electrical Details

Date	06/17/22
Scale	Not to Scale
Drawing Number	E-C-504
Sheet Size	ARCH D

FEEDER SCHEDULE

DEVICE	FEEDER
20	
INV-C-1-1	3/4"C, 3#12, #12N, #12G
INV-C-2-1	3/4"C, 3#12, #12N, #12G
100	
PH-C-1-1	1-1/2"C, 3#1, #1N, #8G
PL-C-2-2	1-1/2"C, 3#1, #1N, #8G
150	
DPH-C-2-2	1-1/2"C, 3-1/0, 1/0N, #6G
PL-C-2-1	1-1/2"C, 3-1/0, 1/0N, #6G
200	
DPH-C-1-1	2"C, 3-3/0, 3/0N, #6G
PL-C-1-1	2"C, 3-3/0, 3/0N, #6G
PL-C-1-3	2"C, 3-3/0, 3/0N, #6G
225	
PL-C-1-2	2-1/2"C, 3-4/0, 4/0N, #4G
PL-C-2-3	2-1/2"C, 3-4/0, 4/0N, #4G
400	
DPH-C-2-1	3-1/2"C, 3-600kcmil, 600kcmil N, #2G
500	
TX-C-1-1	(2)2-1/2"C, 3-250kcmil, 250kcmil N, #2G
800	
MSB-C-1-1	(3)3"C, 3-300kcmil, 300kcmil N, #2G
1200	
MSB-C-1-2	(3)3-1/2"C, 3-600kcmil, 600kcmil N, 1/0G

E - EQUIPMENT (MECHANICAL, PLUMBING, FIRE PROTECTION) SCHEDULE

EQUIPMENT	LEVEL	HP RATING	kVA	FLA	DISCONNECT SIZE	VOLTAGE	PHASE	POLES	PANELBOARD	CIRCUIT NUMBER	CONDUIT AND CONDUCTOR SIZE
AC-1	Ground Level		11.640 kVA	14 A	30	480 V	3	3	DPH-C-1-1	1	3/4"C, 3#12, #12N, #12G
ACCU-C-3-1	Roof Level - Upper		9.307 kVA	11 A	30	480 V	3	3	DPH-C-2-2	2	3/4"C, 3#12, #12N, #12G
ACCU-C-3-2	Roof Level - Upper		9.307 kVA	11 A	30	480 V	3	3	DPH-C-2-2	3	3/4"C, 3#12, #12N, #12G
DH C-2-3	Second Level		15.500 kVA	19 A	30	480 V	3	3	DPH-C-2-2	5	3/4"C, 3#10, #10N, #10G
DWHP-C-2-1	Second Level		6.240 kVA	30 A	60	208 V	1	2	PL-C-2-3	14,16	3/4"C, 2#8, #8N, #10G
ELEVATOR	Second Level	40	45.000 kVA	52 A	100	480 V	3	3	MSB-C-1-1	6	1-1/4"C, 3#4, #4N, #8G
ELEVATOR LIGHTING AND AUXILIARY POWER CURCUIT	Second Level		0.480 kVA	4 A	30	120 V	1	1	PL-C-2-3	9	3/4"C, 1#12, #12N, #12G
ERV C-2-1	Second Level		143.830 kVA	173 A	200	480 V	3	3	DPH-C-2-1	1	2-1/2"C, 3-4/0, 4/0N, #4G
ERV C-2-2	Second Level		19.120 kVA	23 A	30	480 V	3	3	DPH-C-2-2	4	3/4"C, 3#10, #10N, #10G
ERV C-2-3	Second Level	0.5	2.250 kVA	5 A	30	208 V	1	2	PL-C-2-3	6,8	3/4"C, 2#12, #12N, #12G
EXF C-1-1	Ground Level	3/4	1.330 kVA	2 A	30	208 V	3	3	PL-C-1-1	33,35,37	3/4"C, 3#12, #12N, #12G
EXF C-3-1	Roof Level - Upper		4.000 kVA	5 A	60	480 V	3	3	DPH-C-2-2	1	3/4"C, 3#12, #12N, #12G
EXF-C-1-2	Ground Level		0.120 kVA	1 A	20	120 V	1	1	PL-C-1-1	13	3/4"C, 1#12, #12N, #12G
FCU C-1-1	Ground Level		0.270 kVA	1 A	20	208 V	1	2	PL-C-1-1	14,16	3/4"C, 2#12, #12N, #12G
FCU C-1-2	Ground Level		0.270 kVA	30 A	20	208 V	1	2	PL-C-1-3	23,25	3/4"C, 2#12, #12N, #12G
FCU C-1-3	Ground Level		0.220 kVA	1 A	20	208 V	1	2	PL-C-1-1	14,16	3/4"C, 2#12, #12N, #12G
FCU C-1-4	Ground Level		0.220 kVA	1 A	20	208 V	1	2	PL-C-1-3	23,25	3/4"C, 2#12, #12N, #12G
FCU C-1-5	Ground Level		0.220 kVA	1 A	20	208 V	1	2	PL-C-1-2	2,4	3/4"C, 2#12, #12N, #12G
FCU C-2-1	Second Level		0.220 kVA	1 A	20	208 V	1	2	PL-C-2-3	5,7	3/4"C, 2#12, #12N, #12G
FCU C-2-2	Second Level		0.450 kVA	2 A	20	208 V	1	2	PL-C-2-3	1,3	3/4"C, 2#12, #12N, #12G
FCU C-2-3	Second Level		0.450 kVA	2 A	20	208 V	1	2	PL-C-2-3	10,12	3/4"C, 2#12, #12N, #12G
FCU C-2-4	Second Level		0.220 kVA	1 A	20	208 V	1	2	PL-C-2-2	6,8	3/4"C, 2#12, #12N, #12G
FCU C-2-5	Second Level		0.220 kVA	1 A	20	208 V	1	2	PL-C-2-2	2,4	3/4"C, 2#12, #12N, #12G
FCU C-2-6	Second Level		0.220 kVA	1 A	20	208 V	1	2	PL-C-2-2	7,9	3/4"C, 2#12, #12N, #12G
FCU C-2-7	Second Level		0.208 kVA	1 A	20	208 V	1	2	PL-C-2-2	11,13	3/4"C, 2#12, #12N, #12G
FCU C-2-8	Second Level		0.208 kVA	1 A	20	208 V	1	2	PL-C-2-2	10,12	3/4"C, 2#12, #12N, #12G
FCU C-2-9	Second Level		0.208 kVA	1 A	20	208 V	1	2	PL-C-2-2	14,16	3/4"C, 2#12, #12N, #12G
JP C-1-1	Ground Level		1.000 kVA	8 A	30	120 V	1	1	PL-C-1-3	34	3/4"C, 1#12, #12N, #12G
MAF C-1-1	Ground Level	3/4	1.330 kVA	2 A	30	208 V	3	3	PL-C-1-1	28,30,32	3/4"C, 3#12, #12N, #12G
MCU-C-1-1	Ground Level		0.208 kVA	1 A	30	208 V	1	2	PL-C-1-1	29,31	3/4"C, 2#12, #12N, #12G
MCU-C-2-1	Second Level		0.208 kVA	1 A	30	208 V	1	2	PL-C-2-3	17,19	3/4"C, 2#12, #12N, #12G
MCU-C-2-2	Second Level		0.208 kVA	1 A	30	208 V	1	2	PL-C-2-2	15,17	3/4"C, 2#12, #12N, #12G
ROT-C-2-1	Second Level		1.160 kVA	6 A	30	208 V	1	2	PL-C-2-3	11,13	3/4"C, 2#12, #12N, #12G
SBP C-1-1	Ground Level		2.400 kVA	20 A	30	120 V	1	1	PL-C-1-1	25	3/4"C, 1#10, #10N, #10G

NOTES:

A. EQUIPMENT SCHEDULE (MECHANICAL, PLUMBING, FIRE PROTECTION) PROVIDED FOR PRICING. REFER TO MECHANICAL, PLUMBING AND FIRE PROTECTION DRAWINGS FOR EQUIPMENT LOCATIONS. ALLOW FOR ALL FINAL CONNECTIONS WITH LOCAL DISCONNECT SWITCHES, OVERCURRENT PROTECTION AND HOOK UPS.

B. REFER TO LIGHTING FIXTURE SPECIFICATION FOR REFERENCED CONTROL NARRATIVE AND LIGHTING FIXTURE SCHEDULE.

BACK OF HOUSE LIGHTING FIXTURE SCHEDULE

FIXTURE TYPE	SYMBOL	FIXTURE DESCRIPTION	MANUFACTURER	CATALOG NUMBER	UNITS	LAMPS			CONTROL		TOTAL WATTAGE
						QTY PER UNIT	TYPE	WATTS	VOLTAGE	TYPE	
BL01		4' SUSPENDED/SURFACE MOUNTED INDUSTRIAL	CREE - LS SERIES	LS4-40L-90CRI-3500K-120-10V	EACH	1	3500K LED	31 W	UNV	INTEGRAL 0-10V DIMMING	31 W
BL01A		4' SUSPENDED/SURFACE MOUNTED INDUSTRIAL	CREE - LS SERIES	LS4-40L-90CRI-3500K-120-10V	EACH	1	3500K LED	31 W	UNV	INTEGRAL 0-10V DIMMING	31 W
BL01A		8' SUSPENDED/SURFACE MOUNTED INDUSTRIAL	CREE - LS SERIES	LS8-80L-90CRI-5000K-120-10V	EACH	1	5000K LED	61 W	UNV	INTEGRAL 0-10V DIMMING	61 W
XE		RED EXIT SIGN WITH BACKUP BATTERY.	LITHONIA LIGHTING	EXR LED EL M6 -120V	EACH	1	LED	1 W	UNV	-	1 W

E - WORKSHOP EQUIPMENT SCHEDULE

EQUIPMENT NAME	LOCATION	kVA	VOLTAGE	FLA	PHASE	POLES	PANELBOARD	CIRCUIT NUMBER	CONDUIT AND CABLE SIZE
NEMA 6-50R	Open WorkSpace	8.320 kVA	208 V	50 A	1	2	PL-C-1-2	20,22	3/4"C, 2#6, #6N, #10G
NEMA 6-50R	Open WorkSpace	8.320 kVA	208 V	50 A	1	2	PL-C-1-2	24,26	3/4"C, 2#6, #6N, #10G
NEMA 6-50R	Open WorkSpace	8.320 kVA	208 V	50 A	1	2	PL-C-1-3	27,29	3/4"C, 2#6, #6N, #10G
NEMA 6-20R	Open WorkSpace	2.230 kVA	208 V	19 A	1	2	PL-C-1-2	31,33	3/4"C, 2#12, #12N, #12G
NEMA 5-20	Open WorkSpace	3.075 kVA	120 V	4 A	1	1	PL-C-1-2	28	3/4"C, 1#8, #8N, #10G
NEMA 15-30	Open WorkSpace	10.800 kVA	208 V	30 A	3	3	PL-C-1-2	25,27,29	3/4"C, 3#8, #8N, #10G
NEMA L16-20	Open WorkSpace	2.900 kVA	480 V	24 A	1	3	DPH-C-1-1	3	3/4"C, 3#12, #12N, #12G
NEMA 6-50R	Open WorkSpace	1.680 kVA	208 V	11 A	1	2	PL-C-1-2	42,44	3/4"C, 2#12, #12N, #12G
NEMA 15-30	Open WorkSpace	1.680 kVA	208 V	11 A	1	3	PL-C-1-2	46,48,50	3/4"C, 3#12, #12N, #12G
NEMA 5-20	Open WorkSpace	2.230 kVA	120 V	19 A	1	1	PL-C-1-2	35	3/4"C, 1#10, #10N, #10G
NEMA 6-50R	Open WorkSpace	8.320 kVA	208 V	50 A	1	2	PL-C-1-2	39,41	3/4"C, 2#6, #6N, #10G
NEMA L16-20	Open WorkSpace	3.075 kVA	480 V	4 A	1	3	DPH-C-1-1	4	3/4"C, 3#12, #12N, #12G
NEMA 6-20R	Open WorkSpace	10.800 kVA	208 V	30 A	1	2	PL-C-1-2	32,34	1"C, 2#4, #4N, #8G
NEMA 6-50R	Open WorkSpace	8.320 kVA	208 V	50 A	1	2	PL-C-1-2	21,23	3/4"C, 2#6, #6N, #10G

E - WOOD WORKING EQUIPMENT SCHEDULE

EQUIPMENT NAME	LOCATION	kVA	VOLTAGE	FLA	PHASE	POLES	PANELBOARD	CIRCUIT NUMBER	CONDUIT AND CABLE SIZE
NEMA L6-30R	Wood Working	4.784 kVA	208 V	23 A	1	2	PL-C-1-3	8,10	3/4"C, 2#10, #10N, #10G
NEMA 6-20	Wood Working	1.896 kVA	120 V	16 A	1	1	PL-C-1-3	9	3/4"C, 1#12, #12N, #12G
NEMA 6-20	Wood Working	2.662 kVA	208 V	13 A	1	2	PL-C-1-3	11,13	3/4"C, 2#12, #12N, #12G
NEMA 6-20	Wood Working	2.662 kVA	208 V	13 A	1	2	PL-C-1-3	12,14	3/4"C, 2#12, #12N, #12G
DCS-1 - DUST COLLECTOR	Wood Working	7.900 kVA	480 V	10 A	3	3	PH-C-1-1	1,3,5	3/4"C, 3#12, #12N, #12G
NEMA 6-15	Wood Working	1.809 kVA	208 V	9 A	1	2	PL-C-1-3	16,18	3/4"C, 2#12, #12N, #12G
NEMA L6-30R	Wood Working	4.780 kVA	208 V	23 A	1	2	PL-C-1-3	20,22	3/4"C, 2#10, #10N, #10G
NEMA 6-15	Wood Working	1.809 kVA	208 V	16 A	1	2	PL-C-1-3	15,17	3/4"C, 2#12, #12N, #12G
NEMA 5-20	Wood Working	1.896 kVA	120 V	16 A	1	1	PL-C-1-3	31	3/4"C, 1#12, #12N, #12G
NEMA L6-30R	Wood Working	4.784 kVA	208 V	23 A	1	2	PL-C-1-3	24,26	3/4"C, 2#10, #10N, #10G
NEMA 6-20	Wood Working	2.662 kVA	208 V	13 A	1	2	PL-C-1-3	19,21	3/4"C, 2#12, #12N, #12G
NEMA L6-30R	Wood Working	4.780 kVA	208 V	23 A	1	2	PL-C-1-3	28,30	3/4"C, 2#10, #10N, #10G
DCS-2 - DUST COLLECTOR	Wood Working	7.900 kVA	480 V	10 A	3	3	PH-C-1-1	2,4,6	3/4"C, 3#12, #12N, #12G

Owner
Storm King Art Center
1 Museum Road
New Windsor, NY 12553
+1 (845) 534-3115

Design Architect
heneghan peng architects
14-16 Lord Edward Street
Dublin, D02 YC63, IE
+353 1 633 9000

Executive Architect
WXY Architecture + Urban Design
224 Centre Street, 5th Floor
New York, NY 10013
+1 (212) 219-1953

Landscape Architect
Gustafson Porter + Bowman
1 Cobham Mews
London, MW1 9SB, UK
+44 020 7284 8950

Reed Hilderbrand LLC
33 Whitney Avenue, 3rd Floor
New Haven, CT, US 06510
+1 (617) 923-2422

Structural & Lighting
ARUP
77 Water Street
New York, NY, US 10005
+1 (212) 896-3000

MEPF & IT
BuroHappold
100 Broadway #23
New York, NY, US 10005
+1 (212) 616-0228

Civil
VHB
100 Great Oaks Blvd., Suite 118
Albany, NY, US 12203
+1 (518) 389-3606

AV & Acoustics
LSTN Consultants
76 Beaver Street, 2nd Floor
New York, NY, US 10005
+1 (347) 788-0810

Facade
Front Inc.
100 E. Broadway Street, #501
New York, NY, US 10002
+1 (212) 242-2220

Key Plan

Description	Date
Filing Set	06/17/22

Project

Storm King Art Center

C.F.M. Building

Seal

NOT FOR CONSTRUCTION

Drawing Title

Electrical Schedules

Date	06/17/22
Scale	Not to Scale
Drawing Number	E-C-601
Sheet Size	ARCH D

PH-C-1-1

ROOM: Wood Working 114
MOUNTING: SURFACE
FED FROM: MSB-C-1-1
NOTE:

VOLTS: 480Y/277V, 3P 4W
BUS AMPS: 225 A
NEUTRAL: 100%

A.I.C.: 65,000
MCB: 100 A MCB
LUGS: STANDARD

CONDUIT & CONDUCTOR	CKT #	CKT BKR	# OF POLES	CIRCUIT DESCRIPTION	A		B		C		CIRCUIT DESCRIPTION	# OF POLES	CKT BKR	CKT #	CONDUIT & CONDUCTOR
3/4"C,3#12,#12N,#12G	1	20 A	3	DCS-1 - DUST COLLECTOR	2633	2633					DCS-1 - DUST COLLECTOR	3	20 A	2	3/4"C,3#12,#12N,#12G
--	3	--	--	--			2633	2633			--	--	--	4	--
--	5	--	--	--					2633	2633	--	--	--	6	--
--	7	20 A	1	Spare	0	0					Spare	1	20 A	8	--
--	9	20 A	1	Spare			0	0			Spare	1	20 A	10	--
--	11	20 A	1	Spare					0	0	Spare	1	20 A	12	--
--	13	20 A	1	Spare	0	0					Spare	1	20 A	14	--
--	15	--	--	Space			0	0			Space	--	--	16	--
--	17	--	--	Space					0	0	Space	--	--	18	--
--	19	--	--	Space	0	0					Space	--	--	20	--
--	21	--	--	Space			0	0			Space	--	--	22	--
--	23	--	--	Space					0	0	Space	--	--	24	--
					5,267 VA		5,267 VA		5,267 VA						
					19 A		19 A		19 A						

LOAD CLASSIFICATION	CONNECTED LOAD	DEMAND	CALCULATED DEMAND	TOTALS
LIGHTING	0.000 kVA	125%	0.000 kVA	
MOTORS	0.000 kVA	125% LARGEST + 100% REMAINDER	0.000 kVA	
RECEPTACLES	0.000 kVA	100% FIRST 10kVA, 50% REMAINDER	0.000 kVA	**TOTAL CONNECTED LOAD:** 15,800 VA
HEATING/COOLING	0.000 kVA	100%	0.000 kVA	**TOTAL CALCULATED DEMAND:** 19,750 VA
KITCHEN	0.000 kVA	PER NEC TABLE 220.56	0.000 kVA	**BALANCED THREE PHASE AMPS:** 24 A
CONTINUOUS	15.800 kVA	125%	19.750 kVA	
NONCONTINUOUS	0.000 kVA	100%	0.000 kVA	
NONCOINCIDENTAL	0.000 kVA	0%	0.000 kVA	

0.1

DPH-C-1-1

ROOM: Open Workspace 116
MOUNTING: SURFACE
FED FROM: MSB-C-1-1
NOTES:

VOLTS: 480Y/277V, 3P 4W
BUS AMPS: 400 A
NEUTRAL: 100%

A.I.C.: 65,000
MAINS: 200 A MCB
LUGS: STANDARD

CKT #	CIRCUIT DESCRIPTION	A	B	C	CKT BKR	# OF POLES	FEEDER RACEWAY AND CONDUCTORS
1	AC-1	3880	3880	3880	20 A	3	3/4"C, 3#12, #12N, #12G
2	CFSB-1 - SPRAY BOOTH	12470	12470	12470	60 A	3	1-1/4"C, 3#4, #4N, #10G
3	NEMA L16-20	967	967	967	20 A	3	3/4"C, 3#12, #12N, #12G
4	NEMA L16-20	1025	1025	1025	20 A	3	3/4"C, 3#12, #12N, #12G
5	Spare	0			20 A	1	--
6	Spare	0			20 A	1	--
7	Spare	0			20 A	1	--
8	Spare	0			20 A	1	--
9	Space	0			--	--	--
10	Space	0			--	--	--
11	Space	0			--	--	--
12	Space	0			--	--	--
		18,342 VA	18,342 VA	18,342 VA			
		66 A	66 A	66 A			

LOAD CLASSIFICATION	CONNECTED LOAD	DEMAND	CALCULATED LOAD	TOTALS
LIGHTING	0.000 kVA	125%	0.000 kVA	
MOTORS	0.000 kVA	125% LARGEST, 100% REMAINDER	0.000 kVA	
RECEPTACLES	0.000 kVA	100% FIRST 10kVA, 50% REMAINDER	0.000 kVA	**TOTAL CONNECTED :** 55,025 VA
HEATING/COOLING	49.050 kVA	100%	49.050 kVA	**TOTAL CALCULATED DEMAND:** 52,675 VA
KITCHEN	0.000 kVA	PER NEC TABLE 220.56	0.000 kVA	**BALANCED THREE PHASE AMPS:** 63 A
CONTINUOUS	2.900 kVA	125%	3.625 kVA	
NONCONTINUOUS	0.000 kVA	100%	0.000 kVA	
NONCOINCIDENTAL	3.075 kVA	0%	0.000 kVA	

0.1

DPH-C-2-1

ROOM: Mechanical Room 210
MOUNTING: SURFACE
FED FROM: MSB-C-1-1
NOTES:

VOLTS: 480Y/277V, 3P 4W
BUS AMPS: 400 A
NEUTRAL: 100%

A.I.C.: 65,000
MAINS: 400 A MCB
LUGS: STANDARD

CKT #	CIRCUIT DESCRIPTION	A	B	C	CKT BKR	# OF POLES	FEEDER RACEWAY AND CONDUCTORS
1	ERV C-2-1	47943	47943	47943	225 A	3	2-1/2"C, 3-4/0, 4/0N, #4G
2	Spare	0			20 A	1	--
3	Spare	0			20 A	1	--
4	Spare	0			20 A	1	--
5	Spare	0			20 A	1	--
6	Spare	0			20 A	1	--
7	Space	0			--	--	--
8	Space	0			--	--	--
9	Space	0			--	--	--
10	Space	0			--	--	--
11	Space	0			--	--	--
12	Space	0			--	--	--
		47,943 VA	47,943 VA	47,943 VA			
		173 A	173 A	173 A			

LOAD CLASSIFICATION	CONNECTED LOAD	DEMAND	CALCULATED LOAD	TOTALS
LIGHTING	0.000 kVA	125%	0.000 kVA	
MOTORS	0.000 kVA	125% LARGEST, 100% REMAINDER	0.000 kVA	
RECEPTACLES	0.000 kVA	100% FIRST 10kVA, 50% REMAINDER	0.000 kVA	**TOTAL CONNECTED :** 143,830 VA
HEATING/COOLING	143.830 kVA	100%	143.830 kVA	**TOTAL CALCULATED DEMAND:** 143,830 VA
KITCHEN	0.000 kVA	PER NEC TABLE 220.56	0.000 kVA	**BALANCED THREE PHASE AMPS:** 173 A
CONTINUOUS	0.000 kVA	125%	0.000 kVA	
NONCONTINUOUS	0.000 kVA	100%	0.000 kVA	
NONCOINCIDENTAL	0.000 kVA	0%	0.000 kVA	

0.1

Owner
Storm King Art Center
1 Museum Road
New Windsor, NY 12553
+1 (845) 534-3115

Design Architect
heneghan peng architects
14-16 Lord Edward Street
Dublin, D02 YC63, IE
+353 1 633 9000

Executive Architect
WXY Architecture + Urban Design
224 Centre Street, 5th Floor
New York, NY 10013
+1 (212) 219-1953

Landscape Architect
Gustafson Porter + Bowman
1 Cobham Mews
London, MW1 9SB, UK
+44 020 7284 8950

Reed Hilderbrand LLC
33 Whitney Avenue, 3rd Floor
New Haven, CT, US 06510
+1 (617) 923-2422

Structural & Lighting
ARUP
77 Water Street
New York, NY, US 10005
+1 (212) 896-3000

MEPF & IT
BuroHappold
100 Broadway #23
New York, NY, US 10005
+1 (212) 616-0228

Civil
VHB
100 Great Oaks Blvd., Suite 118
Albany, NY, US 12203
+1 (518) 389-3606

AV & Acoustics
LSTN Consultants
76 Beaver Street, 2nd Floor
New York, NY, US 10005
+1 (347) 788-0810

Facade
Front Inc.
100 E. Broadway Street, #501
New York, NY, US 10002
+1 (212) 242-2220

Key Plan

Description	Date
Filing Set	06/17/22

Project

Storm King Art Center

C.F.M. Building

Seal

NOT FOR CONSTRUCTION

Drawing Title

Electrical Schedules

Date	06/17/22
Scale	Not to Scale
Drawing Number	E-C-602
Sheet Size	ARCH D

PL-C-1-1

ROOM: Maintenance 101 **VOLTS:** 208Y/120V, 3P 4W **A.I.C.:** 22,000
MOUNTING: SURFACE **BUS AMPS:** 225 A **MCB:** 200 A MCB
FED FROM: MSB-C-1-2 **NEUTRAL:** 100% **LUGS:** STANDARD
NOTE:

CONDUIT & CONDUCTOR	CKT #	CKT BKR	# OF POLES	CIRCUIT DESCRIPTION	A		B		C		CIRCUIT DESCRIPTION	# OF POLES	CKT BKR	CKT #	CONDUIT & CONDUCTOR
3/4"C,1#12,#12N,#12G	1	20 A	1	RECEPTACLES	180	180					RECEPTACLES	1	20 A	2	3/4"C,1#12,#12N,#12G
3/4"C,1#12,#12N,#12G	3	20 A	1	RECEPTACLES			180	360			RECEPTACLES	1	20 A	4	3/4"C,1#12,#12N,#12G
3/4"C,1#12,#12N,#12G	5	20 A	1	RECEPTACLES					180	180	RECEPTACLES	1	20 A	6	3/4"C,1#12,#12N,#12G
3/4"C,1#12,#12N,#12G	7	20 A	1	RECEPTACLES	180	180					RECEPTACLES	1	20 A	8	3/4"C,1#12,#12N,#12G
3/4"C,1#12,#12N,#12G	9	20 A	1	RECEPTACLES			720	360			RECEPTACLES	1	20 A	10	3/4"C,1#12,#12N,#12G
3/4"C,1#12,#12N,#12G	11	20 A	1	RECEPTACLES					1080	360	RECEPTACLES	1	20 A	12	3/4"C,1#12,#12N,#12G
3/4"C,1#12,#12N,#12G	13	20 A	1	EXF-C-1-2	120	245					FCU C-1-1 & 3	2	20 A	14	3/4"C,2#12,#12N,#12G
3/4"C,3#12,#12N,#12G	15	20 A	1	INV-C-1			2240	245			--	--	--	16	--
3/4"C,1#12,#12N,#12G	17	20 A	1	RECEPTACLES					180	600	WASHER	1	20 A	18	3/4"C,1#12,#12N,#12G
3/4"C,2#8,#8N,#10G	19	40 A	2	DRYER	2500	150					FSD	1	20 A	20	3/4"C,1#12,#12N,#12G
--	21	--	--	--			2500	1512			LIGHTING	1	20 A	22	3/4"C,1#12,#12N,#12G
3/4"C,1#12,#12N,#12G	23	20 A	1	GATE SECURITY CAMERA					500	2000	HEAT TRACE-1	2	30 A	24	3/4"C,2#10,#10N,#10G
3/4"C,1#10,#10N,#10G	25	30 A	1	SBP C-1-1	2400	2000					--	--	--	26	--
3/4"C,1#12,#12N,#12G	27	20 A	1	REC.			480	443			MAF C-1-1	3	20 A	28	3/4"C,3#12,#12N,#12G
3/4"C,2#12,#12N,#12G	29	20 A	2	MCU-C-1-1					104	443	--	--	--	30	--
--	31	--	--	--	104	443					--	--	--	32	
3/4"C,3#12,#12N,#12G	33	20 A	3	EXF C-1-1			443	1000			DDCP (FAN CONTROLS)	1	20 A	34	3/4"C,1#12,#12N,#12G
--	35	--	--	--					443	1000	DDCP (PLUMBING EQUIPMENT...	1	20 A	36	3/4"C,1#12,#12N,#12G
--	37	--	--	--	443	500					BMS CONTROL (MAF-C-1-1)	1	20 A	38	3/4"C,1#12,#12N,#12G
3/4"C,1#12,#12N,#12G	39	20 A	1	BMS CONTROL (EXF-C-1-1)			500	500			BMS CONTROL (FCU-C-1-1)	1	20 A	40	3/4"C,1#12,#12N,#12G
3/4"C,1#12,#12N,#12G	41	20 A	1	BMS CONTROL (FCU-C-1-3)					500	500	BMS CONTROL (FCU-C-1-2)	1	20 A	42	3/4"C,1#12,#12N,#12G
3/4"C,1#12,#12N,#12G	43	20 A	1	BMS CONTROL (FCU-C-1-4)	500	500					BMS CONTROL (EXF-C-1-2)	1	20 A	44	3/4"C,1#12,#12N,#12G
3/4"C,1#12,#12N,#12G	45	20 A	1	BMS CONTROL (FCU-C-1-5)			500	500			BMS CONTROL (PAINTBOOTH)	1	20 A	46	3/4"C,1#12,#12N,#12G
3/4"C,1#12,#12N,#12G	47	20 A	1	BMS CONTROL (FCU-C-2-1)					500	500	BMS CONTROL (ROT-C-2-1)	1	20 A	48	3/4"C,1#12,#12N,#12G
3/4"C,1#12,#12N,#12G	49	20 A	1	BMS CONTROL (DWHP-P-2-1)	500	500					BMS CONTROL (MCU-C-1-1)	1	20 A	50	3/4"C,1#12,#12N,#12G
--	51	20 A	1	Spare			0	0			Spare	1	20 A	52	--
--	53	20 A	1	Spare					0	0	Spare	1	20 A	54	--
--	55	20 A	1	Spare	0	0					Spare	1	20 A	56	--
--	57	20 A	1	Spare			0	0			Spare	1	20 A	58	--
--	59	20 A	1	Spare					0	0	Spare	1	20 A	60	--
--	61	--	--	Space	0	0					Space	--	--	62	--
--	63	--	--	Space			0	0			Space	--	--	64	--
--	65	--	--	Space					0	0	Space	--	--	66	--
					11,626 VA		12,484 VA		9,131 VA						
					100 A		107 A		76 A						

LOAD CLASSIFICATION	CONNECTED LOAD	DEMAND	CALCULATED DEMAND	TOTALS
LIGHTING	3.812 kVA	125%	4.765 kVA	
MOTORS	0.000 kVA	125% LARGEST + 100% REMAINDER	0.000 kVA	
RECEPTACLES	10.900 kVA	100% FIRST 10kVA, 50% REMAINDER	10.450 kVA	TOTAL CONNECTED LOAD: 33,240 VA
HEATING/COOLING	7.528 kVA	100%	7.528 kVA	TOTAL CALCULATED DEMAND: 34,843 VA
KITCHEN	0.000 kVA	PER NEC TABLE 220.56	0.000 kVA	BALANCED THREE PHASE AMPS: 97 A
CONTINUOUS	4.400 kVA	125%	5.500 kVA	
NONCONTINUOUS	6.550 kVA	100%	6.550 kVA	
NONCOINCIDENTAL	0.000 kVA	0%	0.000 kVA	

0.1

PL-C-2-1

ROOM: Circulation 204 **VOLTS:** 208Y/120V, 3P 4W **A.I.C.:** 22,000
MOUNTING: RECESSED **BUS AMPS:** 150 **MCB:** 150 A MCB
FED FROM: MSB-C-1-2 **NEUTRAL:** 100% **LUGS:** STANDARD
NOTE:

CONDUIT & CONDUCTOR	CKT #	CKT BKR	# OF POLES	CIRCUIT DESCRIPTION	A		B		C		CIRCUIT DESCRIPTION	# OF POLES	CKT BKR	CKT #	CONDUIT & CONDUCTOR
3/4"C,1#12,#12N,#12G	1	20 A	1	RECEPTACLES	1620	1080					RECEPTACLES	1	20 A	2	3/4"C,1#12,#12N,#12G
3/4"C,1#12,#12N,#12G	3	20 A	1	RECEPTACLES			1080	360			RECEPTACLES	1	20 A	4	3/4"C,1#12,#12N,#12G
3/4"C,1#12,#12N,#12G	5	20 A	1	RECEPTACLES					540	540	RECEPTACLES	1	20 A	6	3/4"C,1#12,#12N,#12G
3/4"C,1#12,#12N,#12G	7	20 A	1	DW	1800	1000					COPY	1	20 A	8	3/4"C,1#12,#12N,#12G
3/4"C,1#12,#12N,#12G	9	20 A	1	RECEPTACLES			360	720			RECEPTACLES	1	20 A	10	3/4"C,1#12,#12N,#12G
3/4"C,1#12,#12N,#12G	11	20 A	1	IT RACK - RECEPTACLES					1000	720	RECEPTACLES	1	20 A	12	3/4"C,1#12,#12N,#12G
3/4"C,1#12,#12N,#12G	13	20 A	1	RECEPTACLES	360	1400					MW - MICROWAVE	1	20 A	14	3/4"C,1#12,#12N,#12G
3/4"C,1#12,#12N,#12G	15	20 A	1	REF			840	840			LIGHTING	1	20 A	16	3/4"C,1#12,#12N,#12G
3/4"C,1#12,#12N,#12G	17	20 A	1	LIGHTING					840	120	LIGHTING	1	20 A	18	3/4"C,1#12,#12N,#12G
3/4"C,1#12,#12N,#12G	19	20 A	1	LIGHTING	952	1000					SECURITY	1	20 A	20	3/4"C,1#12,#12N,#12G
3/4"C,1#12,#12N,#12G	21	20 A	1	LIGHTING			672	840			LIGHTING	1	20 A	22	3/4"C,1#12,#12N,#12G
3/4"C,1#12,#12N,#12G	23	20 A	1	SECURITY					1000	1008	LIGHTING	1	20 A	24	3/4"C,1#12,#12N,#12G
3/4"C,1#12,#12N,#12G	25	20 A	1	CEILING FAN	200	500					FLAT PANEL	1	20 A	26	3/4"C,1#12,#12N,#12G
3/4"C,3#12,#12N,#12G	27	20 A	1	INV-C-2			524	0			CF	1	20 A	28	3/4"C,1#12,#12N,#12G
--	29	20 A	1	Spare					0	0	Spare	1	20 A	30	--
--	31	20 A	1	Spare	0	0					Spare	1	20 A	32	--
--	33	20 A	1	Spare			0	0			Spare	1	20 A	34	--
--	35	20 A	1	Spare					0	0	Spare	1	20 A	36	--
--	37	--	--	Space	0	0					Space	--	--	38	--
--	39	--	--	Space			0	0			Space	--	--	40	--
--	41	--	--	Space					0	0	Space	--	--	42	--
					10,192 VA		6,236 VA		6,888 VA						
					86 A		52 A		58 A						

LOAD CLASSIFICATION	CONNECTED LOAD	DEMAND	CALCULATED DEMAND	TOTALS
LIGHTING	7.196 kVA	125%	8.995 kVA	
MOTORS	0.000 kVA	125% LARGEST + 100% REMAINDER	0.000 kVA	
RECEPTACLES	13.120 kVA	100% FIRST 10kVA, 50% REMAINDER	11.560 kVA	TOTAL CONNECTED LOAD: 23,316 VA
HEATING/COOLING	0.000 kVA	100%	0.000 kVA	TOTAL CALCULATED DEMAND: 24,255 VA
KITCHEN	0.000 kVA	PER NEC TABLE 220.56	0.000 kVA	BALANCED THREE PHASE AMPS: 67 A
CONTINUOUS	2.800 kVA	125%	3.500 kVA	
NONCONTINUOUS	0.200 kVA	100%	0.200 kVA	
NONCOINCIDENTAL	0.000 kVA	0%	0.000 kVA	

0.1

PL-C-1-3

ROOM: Wood Working 114 **VOLTS:** 208Y/120V, 3P 4W **A.I.C.:** 22,000
MOUNTING: SURFACE **BUS AMPS:** 225 A **MCB:** 200 A MCB
FED FROM: MSB-C-1-2 **NEUTRAL:** 100% **LUGS:** STANDARD
NOTE:

CONDUIT & CONDUCTOR	CKT #	CKT BKR	# OF POLES	CIRCUIT DESCRIPTION	A		B		C		CIRCUIT DESCRIPTION	# OF POLES	CKT BKR	CKT #	CONDUIT & CONDUCTOR
3/4"C,1#12,#12N,#12G	1	20 A	1	RECEPTACLES	180	180					RECEPTACLES	1	20 A	2	3/4"C,1#12,#12N,#12G
3/4"C,1#12,#12N,#12G	3	20 A	1	RECEPTACLES			180	180			RECEPTACLES	1	20 A	4	3/4"C,1#12,#12N,#12G
3/4"C,1#12,#12N,#12G	5	20 A	1	RECEPTACLES					180	180	RECEPTACLES	1	20 A	6	3/4"C,1#12,#12N,#12G
3/4"C,1#12,#12N,#12G	7	20 A	1	RECEPTACLES	180	2392					NEMA L6-30R	2	30 A	8	3/4"C,2#10,#10N,#10G
3/4"C,1#12,#12N,#12G	9	20 A	1	NEMA 6-20			1896	2392			--	--	--	10	--
3/4"C,2#12,#12N,#12G	11	20 A	2	NEMA 6-20					1331	1331	TS-1 - TABLE SAW	2	20 A	12	3/4"C,2#12,#12N,#12G
--	13	--	--	--	1331	1331					--	--	--	14	--
3/4"C,2#12,#12N,#12G	15	20 A	2	NEMA 6-15			905	905			NEMA 6-15	2	20 A	16	3/4"C,2#12,#12N,#12G
--	17	--	--	--					905	905	--	--	--	18	--
3/4"C,2#12,#12N,#12G	19	20 A	2	NEMA 6-20	1331	2390					NEMA L6-30R	2	30 A	20	3/4"C,2#10,#10N,#10G
--	21	--	--	--			1331	2390			--	--	--	22	--
3/4"C,2#12,#12N,#12G	23	20 A	2	FCU C-1-2 & 4					245	2392	NEMA L6-30R	2	30 A	24	3/4"C,2#10,#10N,#10G
--	25	--	--	--	245	2392					--	--	--	26	--
3/4"C,2#6,#6N,#10G	27	50 A	2	NEMA 6-50R			4160	2390			NEMA L6-30R	2	30 A	28	3/4"C,2#10,#10N,#10G
--	29	--	--	--					4160	2390	--	--	--	30	--
3/4"C,1#12,#12N,#12G	31	20 A	1	NEMA 5-20	1896									32	
--	33	20 A	1	Spare			0	1000			JP C-1-1	1	20 A	34	3/4"C,1#12,#12N,#12G
--	35	20 A	1	Spare					0	0	Spare	1	20 A	36	--
--	37	20 A	1	Spare	0	0					Spare	1	20 A	38	--
--	39	20 A	1	Spare			0	0			Spare	1	20 A	40	--
--	41	20 A	1	Spare					0	0	Spare	1	20 A	42	--
--	43	20 A	1	Spare	0	0					Spare	1	20 A	44	--
--	45	20 A	1	Spare			0	0			Spare	1	20 A	46	--
--	47	20 A	1	Spare					0	0	Spare	1	20 A	48	--
--	49	--	--	Space	0	0					Space	--	--	50	--
--	51	--	--	Space			0	0			Space	--	--	52	--
--	53	--	--	Space					0	0	Space	--	--	54	--
--	55	--	--	Space	0	0					Space	--	--	56	--
--	57	--	--	Space			0	0			Space	--	--	58	--
--	59	--	--	Space					0	0	Space	--	--	60	--
--	61	--	--	Space	0	0					Space	--	--	62	--
--	63	--	--	Space			0	0			Space	--	--	64	--
--	65	--	--	Space					0	0	Space	--	--	66	--
					13,848 VA		17,728 VA		14,018 VA						
					115 A		148 A		117 A						

LOAD CLASSIFICATION	CONNECTED LOAD	DEMAND	CALCULATED DEMAND	TOTALS
LIGHTING	0.000 kVA	125%	0.000 kVA	
MOTORS	0.000 kVA	125% LARGEST + 100% REMAINDER	0.000 kVA	
RECEPTACLES	1.260 kVA	100% FIRST 10kVA, 50% REMAINDER	1.260 kVA	TOTAL CONNECTED LOAD: 45,594 VA
HEATING/COOLING	0.490 kVA	100%	0.490 kVA	TOTAL CALCULATED DEMAND: 36,643 VA
KITCHEN	0.000 kVA	PER NEC TABLE 220.56	0.000 kVA	BALANCED THREE PHASE AMPS: 102 A
CONTINUOUS	27.913 kVA	125%	34.891 kVA	
NONCONTINUOUS	0.000 kVA	100%	0.000 kVA	
NONCOINCIDENTAL	15.931 kVA	0%	0.002 kVA	

0.1

Owner
Storm King Art Center
1 Museum Road
New Windsor, NY 12553
+1 (845) 534-3115

Design Architect
heneghan peng architects
14-16 Lord Edward Street
Dublin, D02 YC63, IE
+353 1 633 9000

Executive Architect
WXY Architecture + Urban Design
224 Centre Street, 5th Floor
New York, NY 10013
+1 (212) 219-1953

Landscape Architect
Gustafson Porter + Bowman
1 Cobham Mews
London, MW1 9SB, UK
+44 020 7284 8950

Reed Hilderbrand LLC
33 Whitney Avenue, 3rd Floor
New Haven, CT, US 06510
+1 (617) 923-2422

Structural & Lighting
ARUP
77 Water Street
New York, NY, US 10005
+1 (212) 896-3000

MEPF & IT
BuroHappold
100 Broadway #23
New York, NY, US 10005
+1 (212) 616-0228

Civil
VHB
100 Great Oaks Blvd., Suite 118
Albany, NY, US 12203
+1 (518) 389-3606

AV & Acoustics
LSTN Consultants
76 Beaver Street, 2nd Floor
New York, NY, US 10005
+1 (347) 788-0810

Facade
Front Inc.
100 E. Broadway Street, #501
New York, NY, US 10002
+1 (212) 242-2220

Key Plan

Description	Date
Filing Set	06/17/22

Project

Storm King Art Center

C.F.M. Building

Seal

NOT FOR CONSTRUCTION

Drawing Title

Electrical Schedules

Date	06/17/22
Scale	Not to Scale
Drawing Number	E-C-603
Sheet Size	ARCH D

PL-C-2-3

ROOM: Mechanical Room 212 **VOLTS:** 208Y/120V, 3P 4W **A.I.C.:** 22,000
MOUNTING: SURFACE **BUS AMPS:** 225 A **MCB:** 225 A MCB
FED FROM: MSB-C-1-2 **NEUTRAL:** 100% **LUGS:** STANDARD
NOTE:

CONDUIT & CONDUCTOR	CKT #	CKT BKR	# OF POLES	CIRCUIT DESCRIPTION	A		B		C		CIRCUIT DESCRIPTION	# OF POLES	CKT BKR	CKT #	CONDUIT & CONDUCTOR
3/4"C,2#12,#12N,#12G	1	20 A	2	FCU C-2-2	225	360					RECEPTACLES	1	20 A	2	3/4"C,1#12,#12N,#12G
--	3	--	--	--			225	360			RECEPTACLES	1	20 A	4	3/4"C,1#12,#12N,#12G
3/4"C,2#12,#12N,#12G	5	20 A	2	FCU C-2-1					110	1125	ERV C-2-3	2	20 A	6	3/4"C,2#12,#12N,#12G
--	7	--	--	--	110	1125					--	--	--	8	--
3/4"C,1#12,#12N,#12G	9	20 A	1	CAB LIGHTING			480	225			FCU C-2-3	2	20 A	10	3/4"C,2#12,#12N,#12G
3/4"C,2#12,#12N,#12G	11	20 A	2	ROT-C-2-1					580	225	--	--	--	12	--
--	13	--	--	--	580	3120					DWHP-C-1-1	2	40 A	14	3/4"C,2#8,#8N,#10G
3/4"C,1#12,#12N,#12G	15	20 A	1	BMS			1000	3120			--	--	--	16	--
3/4"C,2#12,#12N,#12G	17	20 A	2	MCU-C-1-1					104	1000	IT RACK - RECEPTACLES	1	20 A	18	3/4"C,1#12,#12N,#12G
--	19	--	--	--	104	300					UNIT LIGHTING AND RECEPTACLES	1	20 A	20	3/4"C,1#12,#12N,#12G
3/4"C,1#12,#12N,#12G	21	20 A	1	BMS CONTROL (FCU-C-2-7)			500	500			BMS CONTROL (ERV-C-2-2)	1	20 A	22	3/4"C,1#12,#12N,#12G
3/4"C,1#12,#12N,#12G	23	20 A	1	BMS CONTROL (ERV-C-2-3)					500	500	BMS CONTROL (FCU-C-2-2))	1	20 A	24	3/4"C,1#12,#12N,#12G
3/4"C,1#12,#12N,#12G	25	20 A	1	BMS CONTROL (FCU-C-2-8)	500	500					BMS CONTROL (DH-2-3)	1	20 A	26	3/4"C,1#12,#12N,#12G
3/4"C,1#12,#12N,#12G	27	20 A	1	BMS CONTROL (FCU-C-2-9)			500	500			BMS CONTROL (FCU-C-2-3)	1	20 A	28	3/4"C,1#12,#12N,#12G
--	29	20 A	1	Spare					0	500	BMS CONTROL (MCU-C-2-1)	1	20 A	30	3/4"C,1#12,#12N,#12G
--	31	20 A	1	Spare	0	0					Spare	1	20 A	32	--
--	33	20 A	1	Spare			0	0			Spare	1	20 A	34	--
--	35	20 A	1	Spare					0	0	Spare	1	20 A	36	--
--	37	20 A	1	Spare	0	0					Spare	1	20 A	38	--
--	39	20 A	1	Spare			0	0			Spare	1	20 A	40	--
--	41	20 A	1	Spare					0	0	Spare	1	20 A	42	--
--	43	20 A	1	Spare	0	0					Spare	1	20 A	44	--
--	45	--	--	Space			0	0			Space	--	--	46	--
--	47	--	--	Space					0	0	Space	--	--	48	--
--	49	--	--	Space	0	0					Space	--	--	50	--
--	51	--	--	Space			0	0			Space	--	--	52	--
--	53	--	--	Space					0	0	Space	--	--	54	--
--	55	--	--	Space	0	0					Space	--	--	56	--
--	57	--	--	Space			0	0			Space	--	--	58	--
--	59	--	--	Space					0	0	Space	--	--	60	--
--	61	--	--	Space	0	0					Space	--	--	62	--
--	63	--	--	Space			0	0			Space	--	--	64	--
--	65	--	--	Space					0	0	Space	--	--	66	--
					6,924 VA		7,410 VA		4,644 VA						
					61 A		65 A		39 A						

LOAD CLASSIFICATION	CONNECTED LOAD	DEMAND	CALCULATED DEMAND	TOTALS
LIGHTING	0.780 kVA	125%	0.975 kVA	
MOTORS	0.000 kVA	125% LARGEST + 100% REMAINDER	0.000 kVA	
RECEPTACLES	1.720 kVA	100% FIRST 10kVA, 50% REMAINDER	1.720 kVA	**TOTAL CONNECTED LOAD:** 18,978 VA
HEATING/COOLING	10.978 kVA	100%	10.978 kVA	**TOTAL CALCULATED DEMAND:** 19,423 VA
KITCHEN	0.000 kVA	PER NEC TABLE 220.56	0.000 kVA	**BALANCED THREE PHASE AMPS:** 54 A
CONTINUOUS	1.000 kVA	125%	1.250 kVA	
NONCONTINUOUS	4.500 kVA	100%	4.500 kVA	
NONCOINCIDENTAL	0.000 kVA	0%	0.000 kVA	

0.1

PL-C-2-2

ROOM: Mechanical Room 210 **VOLTS:** 208Y/120V, 3P 4W **A.I.C.:** 22,000
MOUNTING: SURFACE **BUS AMPS:** 150 **MCB:** 100 A MCB
FED FROM: MSB-C-1-2 **NEUTRAL:** 100% **LUGS:** STANDARD
NOTE:

CONDUIT & CONDUCTOR	CKT #	CKT BKR	# OF POLES	CIRCUIT DESCRIPTION	A		B		C		CIRCUIT DESCRIPTION	# OF POLES	CKT BKR	CKT #	CONDUIT & CONDUCTOR
3/4"C,1#12,#12N,#12G	1	20 A	1	RECEPTACLES	360	110					FCU C-2-5	2	20 A	2	3/4"C,2#12,#12N,#12G
3/4"C,1#12,#12N,#12G	3	20 A	1	RECEPTACLES			360	110			--	--	--	4	--
3/4"C,1#12,#12N,#12G	5	20 A	1	RECEPTACLES					900	110	FCU C-2-4	2	20 A	6	3/4"C,2#12,#12N,#12G
3/4"C,2#12,#12N,#12G	7	20 A	2	FCU C-2-2	110	110					--	--	--	8	--
--	9	--	--	--			110	104			FCU C-2-8	2	20 A	10	3/4"C,2#12,#12N,#12G
3/4"C,2#12,#12N,#12G	11	20 A	2	FCU C-2-7					104	104	--	--	--	12	--
--	13	--	--	--	104	104					FCU C-2-9	2	20 A	14	3/4"C,2#12,#12N,#12G
3/4"C,2#12,#12N,#12G	15	20 A	2	MCU-C-2-2			104	104			--	--	--	16	--
--	17	--	--	--					104	360	RECEPTACLES	1	20 A	18	3/4"C,1#12,#12N,#12G
3/4"C,1#12,#12N,#12G	19	20 A	1	BMS CONTROL (FCU-C-2-5)	500	500					BMS CONTROL (ERV-C-2-1)	1	20 A	20	3/4"C,1#12,#12N,#12G
3/4"C,1#12,#12N,#12G	21	20 A	1	BMS CONTROL (FCU-C-2-6)			500	500			BMS CONTROL (FCU-C-2-4))	1	20 A	22	3/4"C,1#12,#12N,#12G
--	23	20 A	1	Spare					0	500	BMS CONTROL (MCU-C-2-2)	1	20 A	24	3/4"C,1#12,#12N,#12G
--	25	20 A	1	Spare	0	0					Spare	1	20 A	26	--
--	27	20 A	1	Spare			0	0			Spare	1	20 A	28	--
--	29	20 A	1	Spare					0	0	Spare	1	20 A	30	--
--	31	20 A	1	Spare	0	0					Spare	1	20 A	32	--
--	33	20 A	1	Spare			0	0			Spare	1	20 A	34	--
--	35	20 A	1	Spare					0	0	Spare	1	20 A	36	--
--	37	20 A	1	Spare	0	0					Spare	1	20 A	38	--
--	39	20 A	1	Spare			0	0			Spare	1	20 A	40	--
--	41	20 A	1	Spare					0	0	Spare	1	20 A	42	--
--	43	20 A	1	Spare	0	0					Spare	1	20 A	44	--
--	45	--	--	Space			0	0			Space	--	--	46	--
--	47	--	--	Space					0	0	Space	--	--	48	--
--	49	--	--	Space	0	0					Space	--	--	50	--
--	51	--	--	Space			0	0			Space	--	--	52	--
--	53	--	--	Space					0	0	Space	--	--	54	--
--	55	--	--	Space	0	0					Space	--	--	56	--
--	57	--	--	Space			0	0			Space	--	--	58	--
--	59	--	--	Space					0	0	Space	--	--	60	--
--	61	--	--	Space	0	0					Space	--	--	62	--
--	63	--	--	Space			0	0			Space	--	--	64	--
--	65	--	--	Space					0	0	Space	--	--	66	--
					1,898 VA		1,892 VA		2,182 VA						
					16 A		16 A		18 A						

LOAD CLASSIFICATION	CONNECTED LOAD	DEMAND	CALCULATED DEMAND	TOTALS
LIGHTING	0.000 kVA	125%	0.000 kVA	
MOTORS	0.000 kVA	125% LARGEST + 100% REMAINDER	0.000 kVA	
RECEPTACLES	1.980 kVA	100% FIRST 10kVA, 50% REMAINDER	1.980 kVA	**TOTAL CONNECTED LOAD:** 5,972 VA
HEATING/COOLING	1.492 kVA	100%	1.492 kVA	**TOTAL CALCULATED DEMAND:** 5,972 VA
KITCHEN	0.000 kVA	PER NEC TABLE 220.56	0.000 kVA	**BALANCED THREE PHASE AMPS:** 17 A
CONTINUOUS	0.000 kVA	125%	0.000 kVA	
NONCONTINUOUS	2.500 kVA	100%	2.500 kVA	
NONCOINCIDENTAL	0.000 kVA	0%	0.000 kVA	

0.1

PL-C-1-2

ROOM: Open Workspace 116 **VOLTS:** 208Y/120V, 3P 4W **A.I.C.:** 22,000
MOUNTING: SURFACE **BUS AMPS:** 225 A **MCB:** 225 A MCB
FED FROM: MSB-C-1-2 **NEUTRAL:** 100% **LUGS:** STANDARD
NOTE:

CONDUIT & CONDUCTOR	CKT #	CKT BKR	# OF POLES	CIRCUIT DESCRIPTION	A		B		C		CIRCUIT DESCRIPTION	# OF POLES	CKT BKR	CKT #	CONDUIT & CONDUCTOR
	1					110					FCU C-1-5	2	20 A	2	3/4"C,2#12,#12N,#12G
3/4"C,1#12,#12N,#12G	3	20 A	1	RECEPTACLES			180	110			--	--	--	4	--
3/4"C,1#12,#12N,#12G	5	20 A	1	RECEPTACLES					360	180	RECEPTACLES	1	20 A	6	3/4"C,1#12,#12N,#12G
3/4"C,1#12,#12N,#12G	7	20 A	1	RECEPTACLES	180	180					RECEPTACLES	1	20 A	8	3/4"C,1#12,#12N,#12G
3/4"C,1#12,#12N,#12G	9	20 A	1	RECEPTACLES			180	180			RECEPTACLES	1	20 A	10	3/4"C,1#12,#12N,#12G
3/4"C,1#12,#12N,#12G	11	20 A	1	RECEPTACLES					180	180	RECEPTACLES	1	20 A	12	3/4"C,1#12,#12N,#12G
3/4"C,1#12,#12N,#12G	13	20 A	1	RECEPTACLES	180	180					RECEPTACLES	1	20 A	14	3/4"C,1#12,#12N,#12G
3/4"C,1#12,#12N,#12G	15	20 A	1	RECEPTACLES			180	180			RECEPTACLES	1	20 A	16	3/4"C,1#12,#12N,#12G
3/4"C,1#12,#12N,#12G	17	20 A	1	RECEPTACLES					180	360	RECEPTACLES	1	20 A	18	3/4"C,1#12,#12N,#12G
3/4"C,1#12,#12N,#12G	19	20 A	1	RECEPTACLES	180	4160					NEMA 6-50R	2	50 A	20	3/4"C,2#6,#6N,#10G
3/4"C,2#6,#6N,#10G	21	50 A	2	NEMA 6-50R			4160	4160			--	--	--	22	--
--	23	--	--	--					4160	4160	NEMA 6-50R	2	50 A	24	3/4"C,2#6,#6N,#10G
3/4"C,3#6,#6N,#10G	25	40 A	3	NEMA 15-30	3600	4160					--	--	--	26	--
--	27	--	--	--			3600	3075			NEMA 5-20	1	40 A	28	3/4"C,1#6,#8N,#10G
--	29	--	--	--					3600					30	
3/4"C,2#12,#12N,#12G	31	20 A	2	NEMA 6-20R	1115	5400					NEMA 6-20R	2	70 A	32	1"C,2#4,#4N,#8G
--	33	--	--	--			1115	5400			--	--	--	34	--
3/4"C,1#10,#10N,#10G	35	30 A	1	NEMA 5-20					2230	180	RECEPTACLES	1	20 A	36	3/4"C,1#12,#12N,#12G
	37					2000					HEAT TRACE 2	2	30 A	38	3/4"C,2#10,#10N,#10G
3/4"C,2#6,#6N,#10G	39	50 A	2	NEMA 6-50R			4160	2000			--	--	--	40	--
--	41	--	--	--					4160	840	NEMA 6-50R	2	20 A	42	3/4"C,2#12,#12N,#12G
3/4"C,1#12,#12N,#12G	43	20 A	1	LIGHTING	1064	840					--	--	--	44	
--	45	20 A	1	Spare			0	560			NEMA 15-30	3	20 A	46	3/4"C,3#12,#12N,#12G
--	47	20 A	1	Spare					0	560	--	--	--	48	--
--	49	20 A	1	Spare	0	560					--	--	--	50	--
--	51	20 A	1	Spare			0	0			Spare	1	20 A	52	--
--	53	20 A	1	Spare					0	0	Spare	1	20 A	54	--
--	55	20 A	1	Spare	0	0					Spare	1	20 A	56	--
--	57	20 A	1	Spare			0	0			Spare	1	20 A	58	--
--	59	--	--	Space					0	0	Space	--	--	60	--
--	61	--	--	Space	0	0					Space	--	--	62	--
--	63	--	--	Space			0	0			Space	--	--	64	--
--	65	--	--	Space					0	0	Space	--	--	66	--
					23,909 VA		29,240 VA		21,330 VA						
					203 A		247 A		178 A						

LOAD CLASSIFICATION	CONNECTED LOAD	DEMAND	CALCULATED DEMAND	TOTALS
LIGHTING	1.064 kVA	125%	1.330 kVA	
MOTORS	0.000 kVA	125% LARGEST + 100% REMAINDER	0.000 kVA	
RECEPTACLES	3.420 kVA	100% FIRST 10kVA, 50% REMAINDER	3.420 kVA	**TOTAL CONNECTED LOAD:** 74,479 VA
HEATING/COOLING	4.220 kVA	100%	4.220 kVA	**TOTAL CALCULATED DEMAND:** 52,004 VA
KITCHEN	0.000 kVA	PER NEC TABLE 220.56	0.000 kVA	**BALANCED THREE PHASE AMPS:** 144 A
CONTINUOUS	34.425 kVA	125%	43.031 kVA	
NONCONTINUOUS	0.000 kVA	100%	0.000 kVA	
NONCOINCIDENTAL	31.350 kVA	0%	0.003 kVA	

0.1

Owner
Storm King Art Center
1 Museum Road
New Windsor, NY 12553
+1 (845) 534-3115

Design Architect
heneghan peng architects
14-16 Lord Edward Street
Dublin, D02 YC63, IE
+353 1 633 9000

Executive Architect
WXY Architecture + Urban Design
224 Centre Street, 5th Floor
New York, NY 10013
+1 (212) 219-1953

Landscape Architect
Gustafson Porter + Bowman
1 Cobham Mews
London, MW1 9SB, UK
+44 020 7284 8950

Reed Hilderbrand LLC
33 Whitney Avenue, 3rd Floor
New Haven, CT, US 06510
+1 (617) 923-2422

Structural & Lighting
ARUP
77 Water Street
New York, NY, US 10005
+1 (212) 896-3000

MEPF & IT
BuroHappold
100 Broadway #23
New York, NY, US 10005
+1 (212) 616-0228

Civil
VHB
100 Great Oaks Blvd., Suite 118
Albany, NY, US 12203
+1 (518) 389-3606

AV & Acoustics
LSTN Consultants
76 Beaver Street, 2nd Floor
New York, NY, US 10005
+1 (347) 788-0810

Facade
Front Inc.
100 E. Broadway Street, #501
New York, NY, US 10002
+1 (212) 242-2220

Key Plan

Description	Date
Filing Set	06/17/22

Project

Storm King Art Center

C.F.M. Building

Seal

NOT FOR CONSTRUCTION

Drawing Title

Electrical Schedules

Date	06/17/22
Scale	Not to Scale
Drawing Number	E-C-604
Sheet Size	ARCH D

MSB-C-1-1

ROOM: Electrical 103 **VOLTS:** 480Y/277V, 3P 4W **A.I.C.:** 65,000
MOUNTING: FLOOR **BUS AMPS:** 1200 A **MAINS:** 800 A
FED FROM: 750 kVA, 277 V/480 V, Three Phase, 4 Wires, Wye **NEUTRAL:** 100% **LUGS:** MCB
NOTES: PROVIDE BACK-FEED RATED BREAKER SERVING PV ARRAY AND SWITCHBOARD MAIN.

CKT #	CIRCUIT DESCRIPTION	A	B	C	CKT BKR	# OF POLES	FEEDER RACEWAY AND CONDUCTORS
1	DPH-C-2-3	19078	19078	19078	150 A	3	1-1/2"C, 3-1/0, 1/0N, #6G
2	DPH-C-2-1	47943	47943	47943	400 A	3	3-1/2"C, 3-600kcmil, 600kcmil N, #2G
3	DPH-C-1-2	18342	18342	18342	200 A	3	2"C, 3-3/0, 3/0N, #6G
4	TX-C-1-1	68397	74990	58193	500 A	3	(2)2-1/2"C, 3-250kcmil, 250kcmil N, #2G
5	PH-C-1-1	5267	5267	5267	100 A	3	1-1/2"C, 3#1, #1N, #8G
6	ELEVATOR	15000	15000	15000	70 A	3	1-1/4"C, 3#4, #4N, #8G
7	Spare	0	0	0	100 A	3	--
8	Spare	0	0	0	100 A	3	--
9	Spare	0	0	0	100 A	3	--
10	Space	0			--	--	--
11	Space	0			--	--	--
12	Space	0			--	--	--
		174,026 VA	180,619 VA	163,822 VA			
		634 A	658 A	591 A			

LOAD CLASSIFICATION	CONNECTED LOAD	DEMAND	CALCULATED LOAD	TOTALS
LIGHTING	12.852 kVA	125%	16.065 kVA	
MOTORS	0.000 kVA	125% LARGEST, 100% REMAINDER	0.000 kVA	
RECEPTACLES	32.400 kVA	100% FIRST 10kVA, 50% REMAINDER	21.200 kVA	**TOTAL CONNECTED :** 518,468 VA
HEATING/COOLING	274.822 kVA	100%	274.822 kVA	**TOTAL CALCULATED DEMAND:** 493,690 VA
KITCHEN	0.000 kVA	PER NEC TABLE 220.56	0.000 kVA	**BALANCED THREE PHASE AMPS:** 594 A
CONTINUOUS	134.238 kVA	125%	167.798 kVA	
NONCONTINUOUS	13.750 kVA	100%	13.750 kVA	
NONCOINCIDENTAL	50.356 kVA	0%	0.005 kVA	

0.1

MSB-C-1-2

ROOM: Electrical 103 **VOLTS:** 208Y/120V, 3P 4W **A.I.C.:** 65,000
MOUNTING: FLOOR **BUS AMPS:** 1200 A **MAINS:** 1,200 A
FED FROM: TX-C-1-1 **NEUTRAL:** 100% **LUGS:** MSB
NOTES:

CKT #	CIRCUIT DESCRIPTION	A	B	C	CKT BKR	# OF POLES	FEEDER RACEWAY AND CONDUCTORS
1	PL-C-1-1	11626	12484	9131	200 A	3	2"C, 3-3/0, 3/0N, #6G
2	PL-C-1-3	13848	17728	14018	200 A	3	2"C, 3-3/0, 3/0N, #6G
3	PL-C-1-4	23909	29240	21330	225 A	3	2-1/2"C, 3-4/0, 4/0N, #4G
4	PL-C-2-3	6924	7410	4644	225 A	3	2-1/2"C, 3-4/0, 4/0N, #4G
5	PL-C-2-1	10192	6236	6888	150 A	3	1-1/2"C, 3-1/0, 1/0N, #6G
6	PL-C-2-2	1898	1892	2182	100 A	3	1-1/2"C, 3#1, #1N, #8G
7	Spare	0	0	0	100 A	3	--
8	Spare	0	0	0	100 A	3	--
9	Spare	0	0	0	100 A	3	--
10	Space	0			--	--	--
11	Space	0			--	--	--
12	Space	0			--	--	--
		68,397 VA	74,990 VA	58,193 VA			
		583 A	638 A	485 A			

LOAD CLASSIFICATION	CONNECTED LOAD	DEMAND	CALCULATED LOAD	TOTALS
LIGHTING	12.852 kVA	125%	16.065 kVA	
MOTORS	0.000 kVA	125% LARGEST, 100% REMAINDER	0.000 kVA	
RECEPTACLES	32.400 kVA	100% FIRST 10kVA, 50% REMAINDER	21.200 kVA	**TOTAL CONNECTED :** 201,579 VA
HEATING/COOLING	24.708 kVA	100%	24.708 kVA	**TOTAL CALCULATED DEMAND:** 163,950 VA
KITCHEN	0.000 kVA	PER NEC TABLE 220.56	0.000 kVA	**BALANCED THREE PHASE AMPS:** 455 A
CONTINUOUS	70.538 kVA	125%	88.173 kVA	
NONCONTINUOUS	13.750 kVA	100%	13.750 kVA	
NONCOINCIDENTAL	47.281 kVA	0%	0.005 kVA	

0.1

Owner
Storm King Art Center
1 Museum Road
New Windsor, NY 12553
+1 (845) 534-3115

Design Architect
heneghan peng architects
14-16 Lord Edward Street
Dublin, D02 YC63, IE
+353 1 633 9000

Executive Architect
WXY Architecture + Urban Design
224 Centre Street, 5th Floor
New York, NY 10013
+1 (212) 219-1953

Landscape Architect
Gustafson Porter + Bowman
1 Cobham Mews
London, MW1 9SB, UK
+44 020 7284 8950

Reed Hilderbrand LLC
33 Whitney Avenue, 3rd Floor
New Haven, CT, US 06510
+1 (617) 923-2422

Structural & Lighting
ARUP
77 Water Street
New York, NY, US 10005
+1 (212) 896-3000

MEPF & IT
BuroHappold
100 Broadway #23
New York, NY, US 10005
+1 (212) 616-0228

Civil
VHB
100 Great Oaks Blvd., Suite 118
Albany, NY, US 12203
+1 (518) 389-3606

AV & Acoustics
LSTN Consultants
76 Beaver Street, 2nd Floor
New York, NY, US 10005
+1 (347) 788-0810

Facade
Front Inc.
100 E. Broadway Street, #501
New York, NY, US 10002
+1 (212) 242-2220

Key Plan

Description	Date
Filing Set	06/17/22

Project

Storm King Art Center

C.F.M. Building

Seal

NOT FOR CONSTRUCTION

Drawing Title

Electrical Schedules

Date	06/17/22
Scale	Not to Scale
Drawing Number	E-C-605
Sheet Size	ARCH D

METERING NOTES

A. A CENTRALIZED POWER MONITORING SYSTEM SHALL BE PROVIDED AND CONFIGURED SUCH THAT SEPARATE MONITORING OF THE FOLLOWING LOAD TYPES IS RECORDED AND REPORTED AT OR ABOVE THE MINIMUM REQUIREMENTS:

TOTAL ELECTRICAL ENERGY, HVAC SYSTEMS, INTERIOR LIGHTING, AND RECEPTACLE CIRCUITS.

B. PROVIDE BRANCH CIRCUIT POWER MONITORING WITH ETHERNET CONNECTIVITY WITH PANELS. METER AND MONITORING EQUIPMENT SHALL BE INTEGRAL TO THE FOLLOWING NEW PANELS:

PL-SERIES AND DPH-SERIES

C. PROVIDE POWER MONITORING WITH ETHERNET CONNECTIVITY AT THE SWITCHBOARD FOR CIRCUITS FEEDING THE FOLLOWING DISTRIBUTION EQUIPMENT:

PL-SERIES AND DPH-SERIES

D. PROVIDE POWER MONITORING WITH ETHERNET CONNECTIVITY FOR THE INCOMING SERVICE IN ADDITION TO CENTRAL HUDSON APROVED UTILITY METER.

E. ALL METERING WITH ETHERNET CONNECTIVITY SHALL BE COMPATIBLE AS PART OF A SINGLE CENTRALIZED POWER MONITORING SYSTEM.

GENERAL NOTES

A. LOCATION FOR TRANSFORMER,TO BE CONFIRMED WITH UTILITY, CIVIL AND LANDSCAPE.

B. SHORT CIRCUIT EQUIPMENT RATINGS: ASSUME THE FOLLOWING SHORT CIRCUIT CURRENT RATINGS FOR EQUIPMENT LOCATED:

a. 200 KAIC: FOR MEDIUM VOLTAGE EQUIPMENT, PENDING CONFIRMATION FROM UTILITY ON AVAILABLE FAULT CURRENT.

b. 65 KAIC: 480V EQUIPMENT TRHOUGHOUT.

c. 22 KAIC: 208V EQUIPMENT THROUGHOUT.

C. CONNECTION FOR FUTURE PV ARRAY ASSUMES PV PANELS WITH INTEGRAL MICRO-INVERTERS WITH 208V OUTPUT TO CENTRAL AC CONBINER PANEL.

D. THE CONTRACTOR SHALL REVIEW ALL DESIGN DRAWINGS FROM OTHER TRADES TO COVER ALL POWER NECESSARY FOR EQUIPMENT SHOWN BY OTHERS.

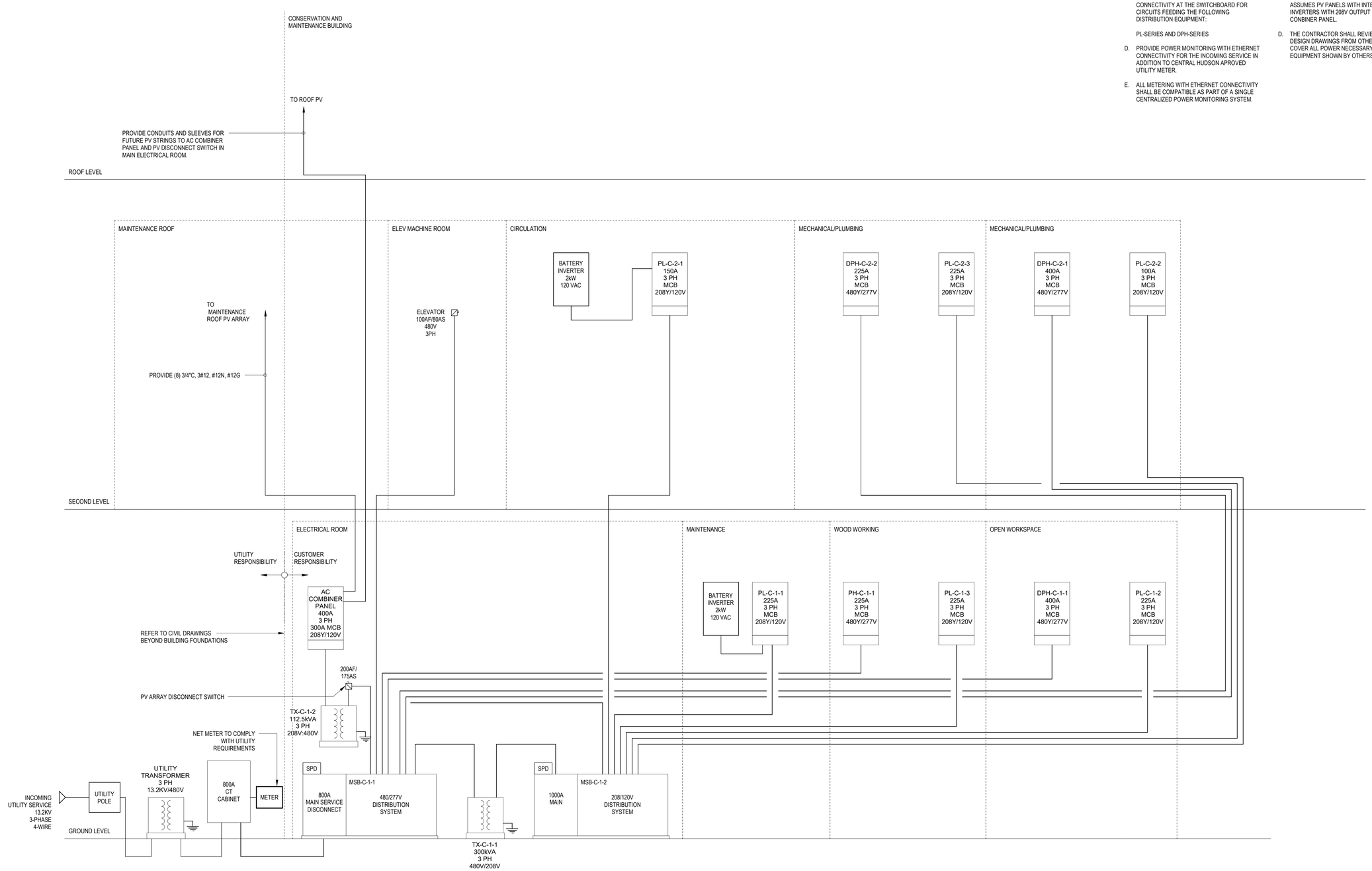

Owner
Storm King Art Center
1 Museum Road
New Windsor, NY 12553
+1 (845) 534-3115

Design Architect
heneghan peng architects
14-16 Lord Edward Street
Dublin, D02 YC63, IE
+353 1 633 9000

Executive Architect
WXY Architecture + Urban Design
224 Centre Street, 5th Floor
New York, NY 10013
+1 (212) 219-1953

Landscape Architect
Gustafson Porter + Bowman
1 Cobham Mews
London, MW1 9SB, UK
+44 020 7284 8950

Reed Hilderbrand LLC
33 Whitney Avenue, 3rd Floor
New Haven, CT, US 06510
+1 (617) 923-2422

Structural & Lighting
ARUP
77 Water Street
New York, NY, US 10005
+1 (212) 896-3000

MEPF & IT
BuroHappold
100 Broadway #23
New York, NY, US 10005
+1 (212) 616-0228

Civil
VHB
100 Great Oaks Blvd., Suite 118
Albany, NY, US 12203
+1 (518) 389-3606

AV & Acoustics
LSTN Consultants
76 Beaver Street, 2nd Floor
New York, NY, US 10005
+1 (347) 788-0810

Facade
Front Inc.
100 E. Broadway Street, #501
New York, NY, US 10002
+1 (212) 242-2220

Key Plan

Description	Date
Filing Set	06/17/22

Project

Storm King Art Center
C.F.M. Building

Seal

NOT FOR CONSTRUCTION

Drawing Title

Electrical Riser

Date	06/17/22
Scale	Not to Scale
Drawing Number	E-C-701
Sheet Size	ARCH D

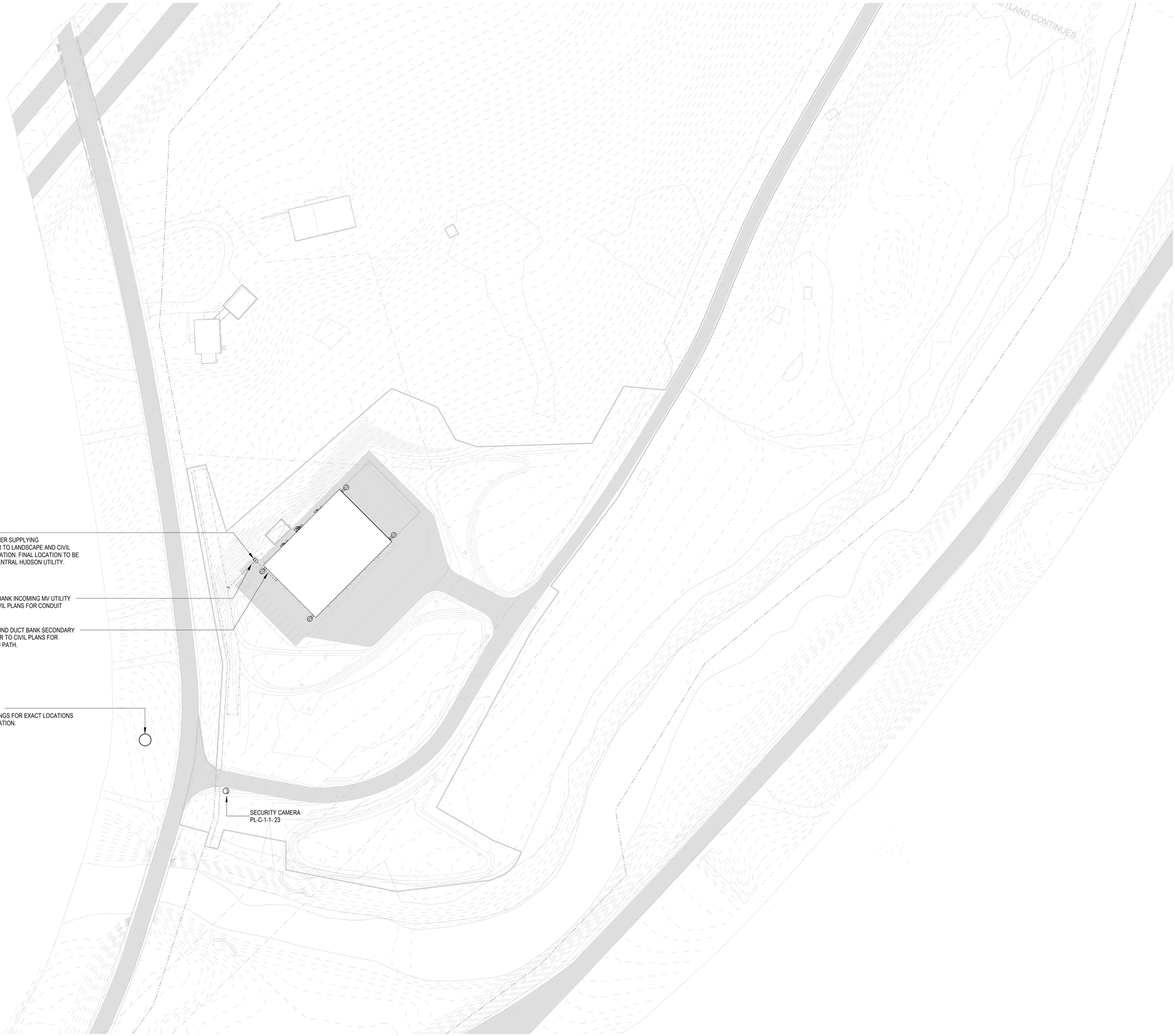

GENERAL NOTES

SITE CONSTRUCTION NOTES:

A. REFER TO CIVIL PLANS FOR EXACT ROUTING CONNECTIONS AND EXACT INFORMATION. THIS PLAN IS PROVIDED FOR GUIDE ONLY.

B. THE CONTRACTOR SHALL REVIEW ALL DESIGN DRAWINGS FROM OTHER TRADES TO COVER ALL POWER NECESSARY FOR EQUIPMENT SHOWN BY OTHERS.

Owner
Storm King Art Center
1 Museum Road
New Windsor, NY 12553
+1 (845) 534-3115

Design Architect
heneghan peng architects
14-16 Lord Edward Street
Dublin, D02 YC63, IE
+353 1 633 9000

Executive Architect
WXY Architecture + Urban Design
224 Centre Street, 5th Floor
New York, NY 10013
+1 (212) 219-1953

Landscape Architect
Gustafson Porter + Bowman
1 Cobham Mews
London, MW1 9SB, UK
+44 020 7284 8950

Reed Hilderbrand LLC
33 Whitney Avenue, 3rd Floor
New Haven, CT, US 06510
+1 (617) 923-2422

Structural & Lighting
ARUP
77 Water Street
New York, NY, US 10005
+1 (212) 896-3000

MEPF & IT
BuroHappold
100 Broadway #23
New York, NY, US 10005
+1 (212) 616-0228

Civil
VHB
100 Great Oaks Blvd., Suite 118
Albany, NY, US 12203
+1 (518) 389-3606

AV & Acoustics
LSTN Consultants
76 Beaver Street, 2nd Floor
New York, NY, US 10005
+1 (347) 788-0810

Facade
Front Inc.
100 E. Broadway Street, #501
New York, NY, US 10002
+1 (212) 242-2220

Key Plan

N

Description	Date
Filing Set	06/17/22

Project

Storm King Art Center

C.F.M. Building

Seal

NOT FOR CONSTRUCTION

Drawing Title

Site Plan - Property - Electrical Power

Date	06/17/22
Scale	1/64" = 1'-0"
Drawing Number	E-C-900
Sheet Size	ARCH D

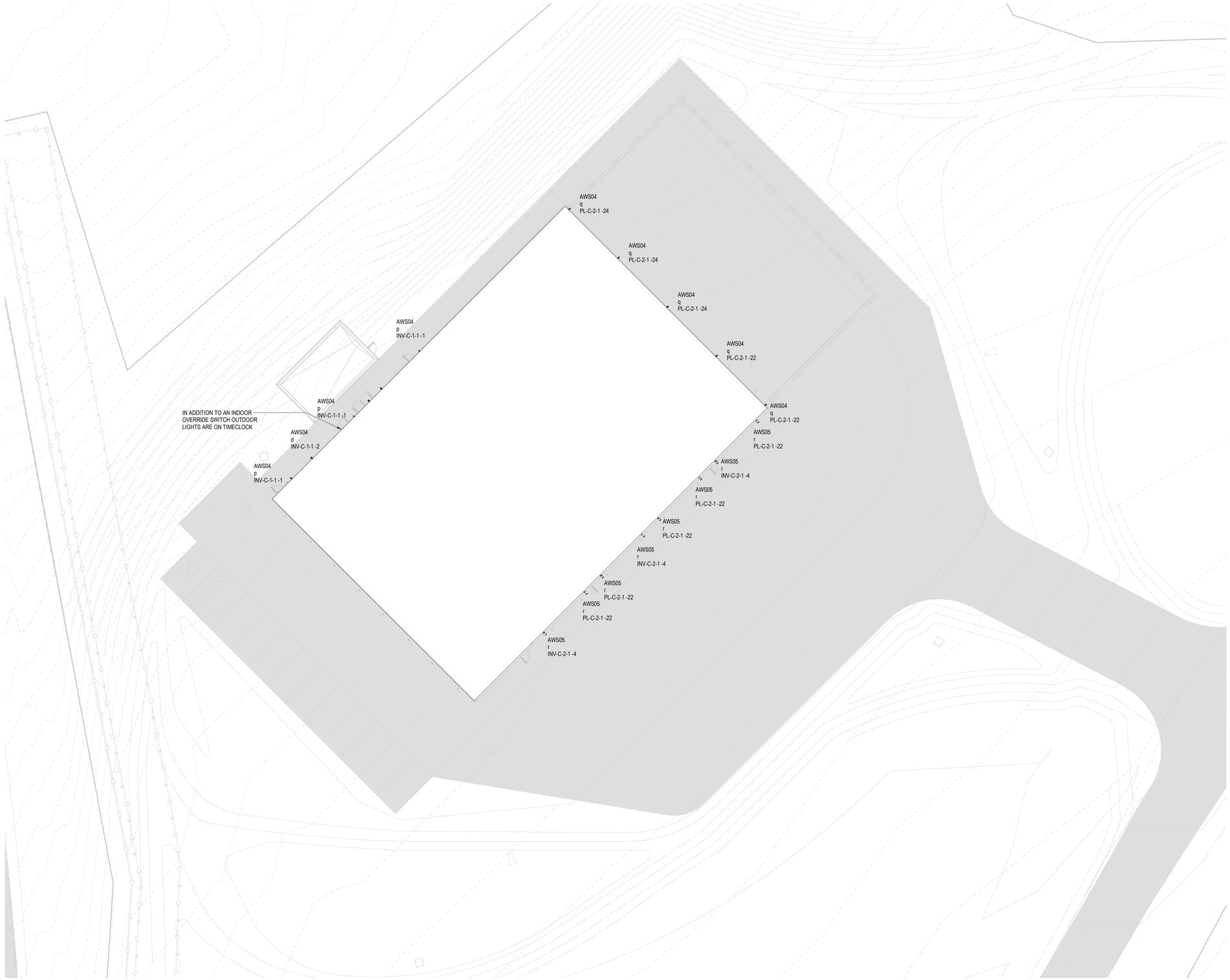

GENERAL NOTES

CONSTRUCTION DEVELOPMENT NOTES:

A. PROVIDE AND INSTALL LOW VOLTAGE DIMMING WIRING FOR ALL CONTROL ZONES CONNECTED TO LIGHTING CONTROL SYSTEM INCLUDING SWITCHED-ONLY ZONES.

B. FLOOR PLANS ARE DIAGRAMMATIC TO REPRESENT REQUIRED OCCUPANCY SENSORS AND SWITCHES TO ACHIEVE CONTROL INTENT. LIGHTING CONTROL PANELS, POWER PACKS, POWER SUPPLIES, WIRELESS RECEIVERS, INTERFACES, ETC. ARE NOT EXPLICITLY SHOWN ON PLOOR PLANS. PROVIDE ALL DEVICES AND ACCESSORIES FOR A COMPLETE SYSTEM TO ACHIEVE DESIGN INTENT. REFER TO LIGHTING CONTROL DETAILS FOR FURTHER INFORATION.

C. WHEN NORMAL POWER IS AVAILABLE, LIGHT FIXTURES ON EMERGENCY POWER SHALL BE CONTROLLED WITH LIGHTING FIXTURES ON NORMAL POWER IN THE SAME ZONE. IN THE EVENT OF A POWER OUTAGE, EMERGENCY BY-PASS RELAYS SHALL OVERRIDE NORMAL CONTROL AND SWITCH FIXTURES ON EMERGENCY POWER TO FULL BRIGHTNESS. FIXTURES DESIGNATED 'EM' ON THE LIGHTING CONTROL SYSTEM SHALL BE CONNECTED TO EMERGENCY BATTERY INVERTER. REFER TO LIGHTING CONTROL DETAILS.

D. PROVIDE HIGH BAY DAYLIGHT SENSORS IN DOUBLE HEIGHT SPACE WORKSHOPS AND MAINTENANCE SHOP, WAVELINX MODEL SWPD3-WH.

E. THE CONTRACTOR SHALL REVIEW ALL DESIGN DRAWINGS FROM OTHER TRADES TO COVER ALL POWER NECESSARY FOR EQUIPMENT SHOWN BY OTHERS.

Owner
Storm King Art Center
1 Museum Road
New Windsor, NY 12553
+1 (845) 534-3115

Design Architect
heneghan peng architects
14-16 Lord Edward Street
Dublin, D02 YC63, IE
+353 1 633 9000

Executive Architect
WXY Architecture + Urban Design
224 Centre Street, 5th Floor
New York, NY 10013
+1 (212) 219-1953

Landscape Architect
Gustafson Porter + Bowman
1 Cobham Mews
London, MW1 9SB, UK
+44 020 7284 8950

Reed Hilderbrand LLC
33 Whitney Avenue, 3rd Floor
New Haven, CT, US 06510
+1 (617) 923-2422

Structural & Lighting
ARUP
77 Water Street
New York, NY, US 10005
+1 (212) 896-3000

MEPF & IT
BuroHappold
100 Broadway #23
New York, NY, US 10005
+1 (212) 616-0228

Civil
VHB
100 Great Oaks Blvd., Suite 118
Albany, NY, US 12203
+1 (518) 389-3606

AV & Acoustics
LSTN Consultants
76 Beaver Street, 2nd Floor
New York, NY, US 10005
+1 (347) 788-0810

Facade
Front Inc.
100 E. Broadway Street, #501
New York, NY, US 10002
+1 (212) 242-2220

Key Plan

N

Description	Date
Filing Set	06/17/22

Project

Storm King Art Center

C.F.M. Building

Seal

NOT FOR CONSTRUCTION

Drawing Title

Site Plan - Building - Lighting

Date	06/17/22
Scale	1/16" = 1'-0"
Drawing Number	E-C-911
Sheet Size	ARCH D

		CONTROL UNIT ANNUNCIATION									NOTIFICATION									REQUIRED FIRE SAFETY CONTROL										
	SYSTEM INPUTS	A ACTUATE COMMON ALARM SIGNAL	B ACTUATE AUDIBLE ALARM SIGNAL	C ACTUATE COMMON SUPERVISORY SIGNAL INDICATOR	D ACTUATE AUDIBLE SUPERVISORY SIGNAL	E ACTUATE COMMON TROUBLE SIGNAL INDICATOR	F ACTUATE AUDIBLE COMMON TROUBLE SIGNAL	G ACTUATE VISUAL AND AUDIBLE HORNS WITH EVACUATION SIGNAL	H NOT USED	I NOT USED	J DISPLAY/PRINT CHANGE OF STATUS	K TRANSMIT AUTOMATIC ALARM SIGNAL TO SUPERVISING STATION	L TRANSMIT MANUAL SIGNAL TO SUPERVISING STATION	M TRANSMIT WATERFLOW SIGNAL TO SUPERVISING STATION	N TRANSMIT SUPERVISORY SIGNAL TO SUPERVISING STATION	O TRANSMIT PUMP RUNNING SIGNAL TO SUPERVISING STATION	P TRANSMIT PUMP TROUBLE SIGNAL TO SUPERVISING STATION	Q TRANSMIT TROUBLE SIGNAL TO SUPERVISING STATION	R RELEASE MAGNETICALLY HELD DOORS	S RECALL ELEVATORS TO GROUND FLOOR	T NOT USED	U RECALL ELEVATORS TO GROUND FLOOR, OPEN CAB DOOR AND REMOVE ELEVATOR POWER	V CLOSE ALL FSD/SD DAMPERS	W UNLOCK EXITS SHOWN ON DOOR HARDWARE SCHEDULE	X OPEN APPROPRIATE SMOKE HATCH	Y SHUT DOWN ASSOCIATED FAN/AHU	Z OPERATE APPROPRIATE SMOKE PURGE FAN	
1	MANUAL FIRE ALARM BOX	X	X					X			X		X						X				X	X				1
2	SMOKE DETECTORS	X	X					X			X	X							X				X	X	X			2
3	ELEVATOR RECALL SMOKE DETECTOR - OTHER THAN GROUND FLOOR	X	X					X			X	X							X	X			X	X	X			3
4	ELEVATOR RECALL SMOKE DETECTOR - GROUND FLOOR	X	X					X			X	X							X				X	X	X			4
5	DUCT SMOKE DETECTORS	X	X					X			X	X							X				X	X		X		5
6	SMOKE DETECTOR - ELEVATOR MACHINE ROOM	X	X					X			X	X							X	X			X	X	X			6
7	SMOKE DETECTOR - TOP OF ELEVATOR SHAFT	X	X					X			X	X							X	X			X	X	X			7
8	HEAT DETECTORS	X	X					X			X	X							X				X	X				8
9	ELEVATOR SHAFT HEAT DETECTOR	X	X					X			X	X							X			X	X	X				9
10	SPRINKLER WATERFLOW SWITCHES	X	X					X			X			X					X	X			X	X		X		10
11	SPRINKLER TAMPER SWITCHES			X	X						X				X													11
12	SPRINKLER PRESSURE SWITCHES			X	X						X				X													12
13	FIRE PUMP RUNNING	X	X								X					X			X									13
14	FIRE PUMP POWER FAILURE					X	X				X						X											14
15	FIRE PUMP PHASE REVERSAL					X	X				X						X											15
16	FIRE ALARM AC FAILURE					X	X				X							X										16
17	FIRE ALARM SYSTEM LOW BATTERY					X	X				X							X										17
18	OPEN CIRCUIT					X	X				X							X										18
19	GROUND FAULT					X	X				X							X										19
20	NOTIFICATION APPLIANCE CIRCUIT SHORT					X	X				X							X										20
21																											X	21

FIRE ALARM LEGEND

SYMBOL	DESCRIPTION
	WALL MOUNTED FIRE ALARM STROBE LIGHT
	WALL MOUNTED FIRE ALARM COMBINATION HORN/STROBE
	WALL MOUNTED FIRE ALARM HORN
	CEILING MOUNTED FIRE ALARM HORN
	CEILING MOUNTED FIRE ALARM HORN/STROBE
F	ADDRESSABLE FIRE ALARM PULL STATION
S	ADDRESSABLE FIRE ALARM SMOKE DETECTOR
	ADDRESSABLE COMBINATION SMOKE AND CO DETECTOR WITH SOUNDER BASE
D	FIRE ALARM SMOKE DETECTOR - DUCT MOUNTED - PROVIDE REMOTE TEST
H	ADDRESSABLE FIRE ALARM HEAT DETECTOR
R	FIRE ALARM SMOKE DETECTOR - ELEVATOR RECALL
FS	FIRE SPRINKLER FLOW SWITCH WITH MONITOR MODULE
TS	FIRE SPRINKLER TAMPER SWITCH WITH MONITOR MODULE
PS	FIRE SPRINKLER PRESSURE SWITCH WITH MONITOR MODULE
MM	MONITOR MODULE
R	RELAY MODULE
FCS	FIRE COMMAND STATION WITH GRAPHIC ANNUNCIATOR
FACP	FIRE ALARM CONTROL PANEL WITH GRAPHIC ANNUNCIATOR
RA	FIRE ALARM REMOTE ANNUNCIATOR
WP	WEATHER PROOF
FCS	FIRE SMOKE DAMPERS (FSD) / SMOKE DAMPERS (SD) WITH INDIVIDUAL MONITOR MODULE, RELAY MODULE, END SWITCH AND DUCT SMOKE DETECTOR.

Owner
Storm King Art Center
1 Museum Road
New Windsor, NY 12553
+1 (845) 534-3115

Design Architect
heneghan peng architects
14-16 Lord Edward Street
Dublin, D02 YC63, IE
+353 1 633 9000

Executive Architect
WXY Architecture + Urban Design
224 Centre Street, 5th Floor
New York, NY 10013
+1 (212) 219-1953

Landscape Architect
Gustafson Porter + Bowman
1 Cobham Mews
London, MW1 9SB, UK
+44 020 7284 8950

Reed Hilderbrand LLC
33 Whitney Avenue, 3rd Floor
New Haven, CT, US 06510
+1 (617) 923-2422

Structural & Lighting
ARUP
77 Water Street
New York, NY, US 10005
+1 (212) 896-3000

MEPF & IT
BuroHappold
100 Broadway #23
New York, NY, US 10005
+1 (212) 616-0228

Civil
VHB
100 Great Oaks Blvd., Suite 118
Albany, NY, US 12203
+1 (518) 389-3606

AV & Acoustics
LSTN Consultants
76 Beaver Street, 2nd Floor
New York, NY, US 10005
+1 (347) 788-0810

Facade
Front Inc.
100 E. Broadway Street, #501
New York, NY, US 10002
+1 (212) 242-2220

Key Plan

Description	Date
Filling Set	06/17/22

Project

Storm King Art Center

C.F.M. Building

Seal

NOT FOR CONSTRUCTION

Drawing Title

Abbreviations, Symbols, and General Notes

Date	06/17/22
Scale	Not to Scale
Drawing Number	FA-C-001
Sheet Size	ARCH D

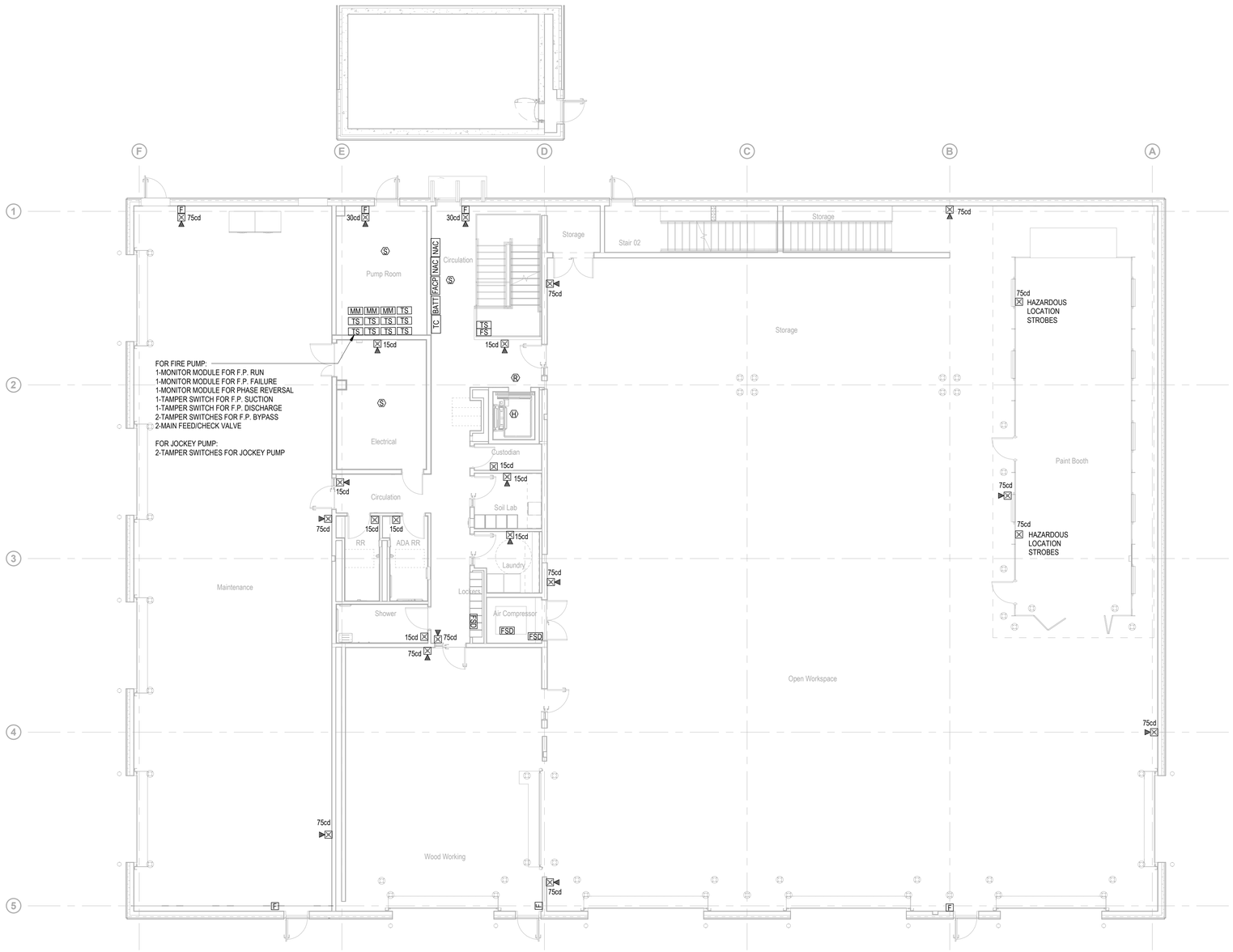

Owner
Storm King Art Center
1 Museum Road
New Windsor, NY 12553
+1 (845) 534-3115

Design Architect
heneghan peng architects
14-16 Lord Edward Street
Dublin, D02 YC63, IE
+353 1 633 9000

Executive Architect
WXY Architecture + Urban Design
224 Centre Street, 5th Floor
New York, NY 10013
+1 (212) 219-1953

Landscape Architect
Gustafson Porter + Bowman
1 Cobham Mews
London, MW1 9SB, UK
+44 020 7284 8950

Reed Hilderbrand LLC
33 Whitney Avenue, 3rd Floor
New Haven, CT, US 06510
+1 (617) 923-2422

Structural & Lighting
ARUP
77 Water Street
New York, NY, US 10005
+1 (212) 896-3000

MEPF & IT
BuroHappold
100 Broadway #23
New York, NY, US 10005
+1 (212) 616-0228

Civil
VHB
100 Great Oaks Blvd., Suite 118
Albany, NY, US 12203
+1 (518) 389-3606

AV & Acoustics
LSTN Consultants
76 Beaver Street, 2nd Floor
New York, NY, US 10005
+1 (347) 788-0810

Facade
Front Inc.
100 E. Broadway Street, #501
New York, NY, US 10002
+1 (212) 242-2220

Key Plan

N

Description	Date
Filling Set	06/17/22

Project

Storm King Art Center

C.F.M. Building

Seal

NOT FOR CONSTRUCTION

Drawing Title

Fire Alarm - Ground Level

Date	06/17/22
Scale	1/8" = 1'-0"
Drawing Number	FA-C-101
Sheet Size	ARCH D

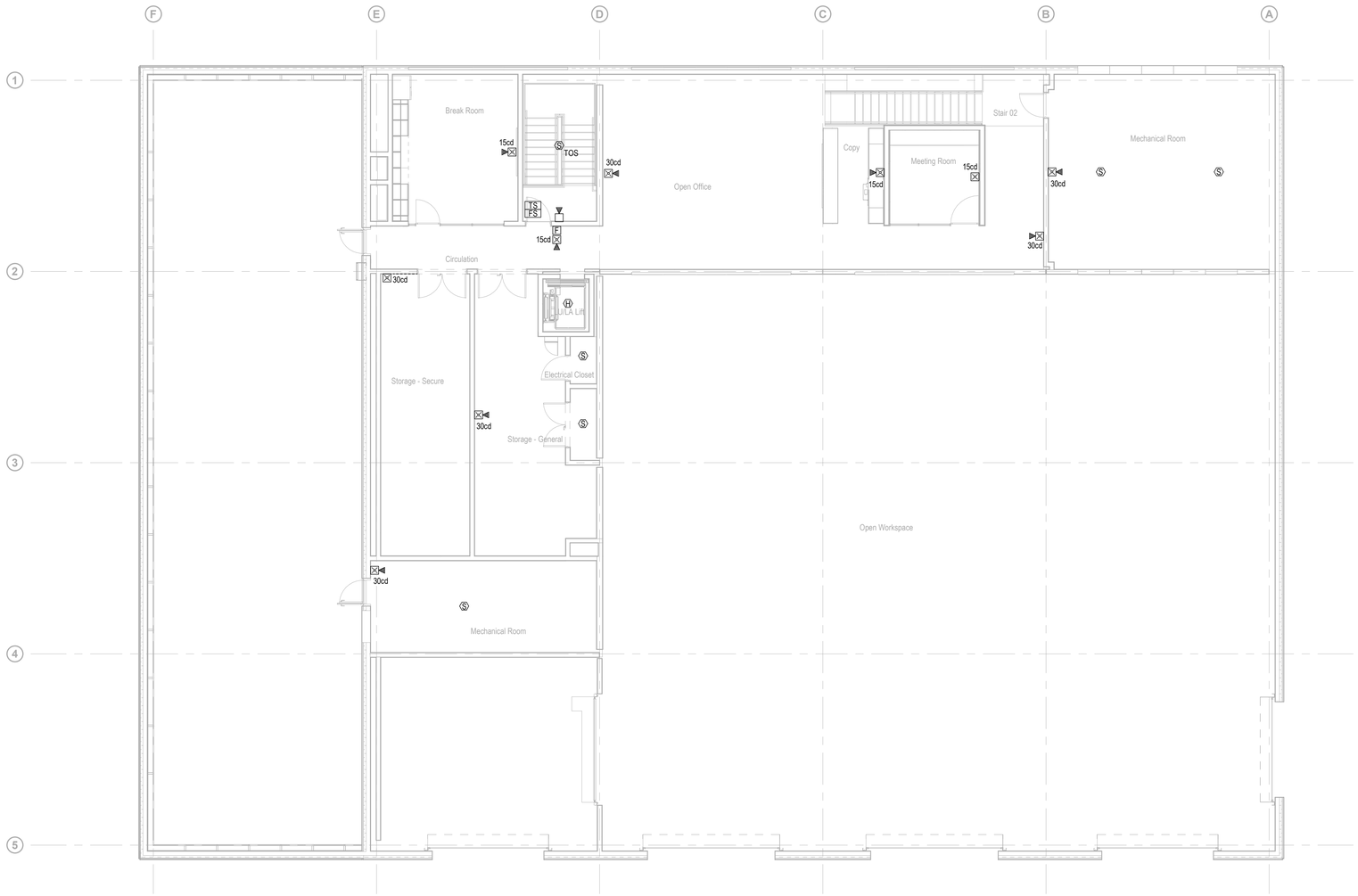

Owner
Storm King Art Center
1 Museum Road
New Windsor, NY 12553
+1 (845) 534-3115

Design Architect
heneghan peng architects
14-16 Lord Edward Street
Dublin, D02 YC63, IE
+353 1 633 9000

Executive Architect
WXY Architecture + Urban Design
224 Centre Street, 5th Floor
New York, NY 10013
+1 (212) 219-1953

Landscape Architect
Gustafson Porter + Bowman
1 Cobham Mews
London, MW1 9SB, UK
+44 020 7284 8950

Reed Hilderbrand LLC
33 Whitney Avenue, 3rd Floor
New Haven, CT, US 06510
+1 (617) 923-2422

Structural & Lighting
ARUP
77 Water Street
New York, NY, US 10005
+1 (212) 896-3000

MEPF & IT
BuroHappold
100 Broadway #23
New York, NY, US 10005
+1 (212) 616-0228

Civil
VHB
100 Great Oaks Blvd., Suite 118
Albany, NY, US 12203
+1 (518) 389-3606

AV & Acoustics
LSTN Consultants
76 Beaver Street, 2nd Floor
New York, NY, US 10005
+1 (347) 788-0810

Facade
Front Inc.
100 E. Broadway Street, #501
New York, NY, US 10002
+1 (212) 242-2220

Key Plan

N

Description	Date
Filling Set	06/17/22

Project

Storm King Art Center

C.F.M. Building

Seal

NOT FOR CONSTRUCTION

Drawing Title

Fire Alarm - Second Level

Date	06/17/22
Scale	1/8" = 1'-0"
Drawing Number	FA-C-102
Sheet Size	ARCH D

FIRE ALARM GENERAL NOTES

1. INSTALL FIRE ALARM EQUIPMENT, FIRE ALARM SPEAKERS AND STROBE LIGHTS (ADA TYPE) UNITS AT THE LOCATION INDICATED ON THE PLAN.

2. THE OPERATION OF THE FIRE ALARM INSTALLATION DOES NOT CONSTITUTE AN ACCEPTANCE OF THE WORK BY THE OWNER. FINAL ACCEPTANCE IS TO BE MADE AFTER THE CONTRACTOR HAS DEMONSTRATED THAT THE WORK FULFILLS ALL THE REQUIREMENTS OF THE PLANS AND SPECIFICATIONS AND HAS FURNISHED ALL REQUIRED CERTIFICATES OF APPROVAL FROM THE STATE AUTHORITIES, MUNICIPAL AUTHORITIES AND UNDERWRITERS.

3. INCLUDE ALL FEES FOR FILING APPROVALS AND SELF-CERTIFICATION OF THE FIRE ALARM INSTALLATION.

4. ALL WIRING, POWER, CONDUCTORS, CONDUITS ETC. SHALL MEET NATIONAL ELECTRICAL CODE ARTICLE 760.

5. ALL WORK SHALL BE IN ACCORDANCE WITH THE 2020 NEW YORK STATE BUILDING CODE AND IN ACCORDANCE WITH APPENDIX K, 2020 NEW YORK STATE FIRE CODE FIRE ALARM RULES, AND 2016 NFPA 72.

6. ALL FIRE ALARM EQUIPMENT SHALL BE APPROVED 2020 NEW YORK STATE BUILDING CODE (MEA, BSA OR COA APPROVED).

7. ALL FIRE ALARM CIRCUITS SHALL BE SIZED TO A MAXIMUM OF 80% OF CAPACITY.

8. ALL FIRE ALARM CIRCUITS SHALL BE WIRED PER NFPA CLASS A WITH THE EXCEPTION OF THE NETWORK CIRCUIT WHICH SHALL BE NFPA STYLE 7 (CLASS A WITH ISOLATION). ALL AUDIBLE AND VISUAL CIRCUITS SHALL BE SPLIT A/B. A/B CIRCUITS SHALL BE WIRED SO THAT EVERY OTHER DEVICE IS WIRED ON AN ALTERNATE CIRCUIT.

9. CONDUITS MAY NOT ENTER THE TOP OF ANY FIRE ALARM EQUIPMENT CABINET.

10. ALL FIRE ALARM EQUIPMENT SHALL BE INSTALLED WITH AESTHETICS IN MIND. CABINETS SHALL BE SEMI FLUSH MOUNTED AND CABLE TRAYS SHALL BE HIDDEN.

11. ALL FIRE ALARM CABINETS AND JUNCTION BOXES SHALL BE PAINTED FIRE DEPARTMENT RED. ALL FIRE ALARM CABINETS SHALL BE CLEARLY LABELED WITH A 2020 NEW YORK STATE BUILDING CODE APPROVED LAMINATE ENGRAVED LABEL.

12. ALL FIRE ALARM WIRE SHALL BE CLEARLY LABELED IN JUNCTION BOXES AND CABINETS. ALL TERMINALS SHALL BE NUMBERED AND LABELED. ALL CONNECTIONS SHALL BE EITHER SOLDERED, APPROVED TERMINAL STRIPS OR SCOTCH LOCKS.

13. ALL LOW VOLTAGE FIRE ALARM CONDUCTORS SHALL BE IN RIGID METAL CONDUIT.

14. FIRE ALARM CABLES SHALL NOT BE MIXED WITH NON FIRE ALARM CABLING. LOW VOLTAGE FIRE ALARM CABLING SHALL NOT BE MIXED OR WIRED NEAR ANY AC CIRCUIT.

15. ALL LOW VOLTAGE WIRING SHALL BE FPLP 150 DEGREE C CERTIFIED WIRE. ALL NOTIFICATION CIRCUITS SHALL BE A MINIMUM OF 14 AWG AND ALL OTHER LOW VOLTAGE FIRE ALARM CIRCUITS SHALL BE 16 AWG MINIMUM.

16. VERTICAL RISER CABLE FOR ALL SYSTEMS SHALL INCLUDE 2-HOUR PROTECTION CABLE PER THE 2017 NATIONAL ELECTRICAL CODE OR BE INSTALLED IN A 2 HOUR RATED SHAFT.

17. POLARITY SHALL BE OBSERVED ON ALL CIRCUITS. T-TAPPING SHALL NOT BE ALLOWED ON ANY NOTIFICATION CIRCUITS (HORN, STROBE OR SPEAKER). T-TAPPING SHALL NOT BE PERMITTED ON ADDRESSABLE CIRCUITS WITHOUT THE EXPRESS PERMISSION OF THE ENGINEER.

18. ALL WIRING SHALL BE INSPECTED TO ASSURE THERE ARE NO OPENS, SHORTS OR EARTH GROUNDS.

19. SHIELDED CONDUCTORS OR RUNNING IN SEPARATE RACEWAY SHALL BE AS INSTRUCTED BY THE FIRE ALARM MANUFACTURER'S DOCUMENTATION. ALL NON-POWER LIMITED WIRING, INCLUDING CIRCUITS FOR CENTRALIZED AMPLIFIERS SHALL BE RUN IN A SEPARATE RACEWAY (NOTE: CENTRALIZED AMPLIFIERS "AMP RACKS" ARE NOT PERMITTED ON NEW SYSTEMS).

20. FIRE ALARM EQUIPMENT SHALL BE POWERED THROUGH AN APPROVED FUSE DISCONNECT SWITCH (FDS). THE FDS SHALL BE HEAVY DUTY (200,000 RMS SHORT CIRCUIT AMPS) SAFETY SWITCH @30 AMPS MINIMUM, PAINTED RED, INCLUDE A GROUND AND NEUTRAL KIT WITH GROUNDING SCREW (TO BOND NEUTRAL), INCLUDE A PADLOCK WITH Y1 CYLINDER KEYED TO A 2020 NEW YORK STATE FIRE CODE APPROVED KEY. ALL WIRING SHALL BE #10 MINIMUM THHN OR EQUIVALENT RUN IN ¾ INCH EMT/RGS AND IN ACCORDANCE WITH 2020 NEW YORK STATE BUILDING CODE REQUIREMENTS. THE GROUND TO THE FDS SHALL BE MADE USING A 2020 NEW YORK STATE BUILDING CODE ACCEPTED METHOD (SEE 2017 NATIONAL ELECTRICAL CODE), AND THE GROUND WIRE TO THE FDS SHALL BE #10 MINIMUM (LARGER IF NECESSARY TO MEET FEED SIZE). THE EQUIPMENT GROUND LEAVING FROM THE FDS CONNECTING TO THE FIRE ALARM EQUIPMENT SHALL INCLUDE A #10 GREEN GROUND. THE FDS PANEL SHALL BEAR AN ENGRAVED WHITE-CORE PHENOLIC OR BAKELITE IDENTIFICATION NAMEPLATE STATING IN MINIMUM ONE-QUARTER INCH (1/4") HIGH WHITE LETTERS ON A RED BACKGROUND "FIRE ALARM FUSED DISCONNECT".

21. WHERE ADDITIONAL CIRCUITS ARE REQUIRED BY THE FIRE ALARM SYSTEM, A FUSED CUTOUT, PROPERLY SIZED SHALL BE INCLUDED, WIRED AFTER THE FDS. THE SIZE OF THE FUSES SHALL BE SIZED APPROPRIATELY BUT BE TWENTY (20) AMPERES MINIMUM AND EACH CIRCUIT SHALL ONLY FEED ONE "INDIVIDUAL" FIRE ALARM SYSTEM COMPONENT. THE FUSED CUT-OUT PANEL SHALL BEAR AN ENGRAVED WHITE-CORE PHENOLIC OR BAKELITE IDENTIFICATION NAMEPLATE STATING IN MINIMUM ONE-QUARTER INCH (1/4") HIGH WHITE LETTERS ON A RED BACKGROUND "FIRE ALARM FUSED CUT-OUT". THE NEUTRAL SHALL NOT BE BONDED IN THE FUSED CUTOUT.

22. A CENTRAL STATION DIALER AND TWO DEDICATED PHONE LINES SHALL BE PROVIDED. THE DIALER SHALL BE CAPABLE OF SENDING THE FOLLOWING EVENTS: ALARM, MANUAL STATION, WATERFLOW, SUPERVISORY, TROUBLE, PUMP RUNNING AND PUMP TROUBLE.

23. ALL AREA OR DUCT SMOKE DETECTORS SHALL BE PHOTO-ELECTRIC TYPE.

24. SMOKE DETECTORS MUST BE MOUNTED AT LEAST 3 FT AWAY FROM ANY AIR REGISTER.

25. ALL CEILING MOUNT DEVICES MUST BE SECURELY FASTENED TO BUILDING CONSTRUCTION.

26. DEVICE LOCATIONS MUST BE READILY ACCESSIBLE TO ALLOW FOR MAINTENANCE AND REPAIR.

27. DUCT MOUNTED SMOKE DETECTORS SHALL BE MOUNTED ON THE DUCTWORK IN STRICT ACCORDANCE WITH THE MANUFACTURERS INSTRUCTIONS. ALL DUCT DETECTORS SHALL BE PROVIDED WITH A REMOTE LED.

28. MANUAL STATIONS SHALL BE MOUNTED 48 INCHES ABOVE THE FINISHED FLOOR TO THE HANDLE OF THE STATION AND SHALL BE PAINTED FIRE DEPARTMENT RED. ALL MANUAL STATION SHALL BE INSTALLED SO THAT THEY ARE KEPT UN-OBSTRUCTED AT ALL TIMES.

29. ALL STROBE LIGHTS SHALL BE ADA AND UL-1971 APPROVED/LISTED. THE MINIMUM CANDELA IS 75 UNLESS OTHERWISE NOTED. A 15/75 STROBE MAY BE UTILIZED WHERE 15 CANDELA STROBES MEET NFPA REQUIREMENTS (CORRIDORS AND 20 X 20 SPACES).THE SAME CANDELA SETTING SHALL ALSO BE APPLIED TO THE DESIGNATED H&V APARTMENTS.

30. NOTIFICATION DEVICES THAT INCLUDE A STROBE SHALL BE MOUNTED 80 INCHES OFF THE FINISHED FLOOR TO THE BOTTOM OF THE STROBE, NOT NECESSARILY THE ELECTRICAL BOX.

31. ALL AUXILIARY RELAYS FOR FAN SHUTDOWN, DOOR RELEASE, DAMPER CONTROL, ELEVATOR CONTROL, ETC SHALL BE WIRED A MAXIMUM OF 3 FT FROM THE CONTROLLED DEVICE. THE AUXILIARY RELAY SHALL FUNCTION WITHIN THE REQUIRED VOLTAGE AND CURRENT OF THE CONTROLLED DEVICE. SLAVE OR INTERPOSING RELAYS SHALL BE INCLUDED AND POWERED BY THE FIRE ALARM CONTROL PANEL IN A FAIL-SAFE (FIRE FUNCTION) POSITION. POWER TO THE INTERPOSING RELAY SHALL BE MONITORED BY THE FIRE ALARM SYSTEM.

32. THE FIRE DEPARTMENT SHALL APPROVE THE PLANS PRIOR TO THE BEGINNING OF ANY WORK.

33. LOCATIONS OF ALL FIRE ALARM EQUIPMENT SHALL BE SUBJECT TO THE DEPARTMENT OF BUILDINGS AND FD APPROVAL. NO CHANGE OR MODIFICATION TO THE SYSTEM OR PLANS SHALL BE PERMITTED WITHOUT WRITTEN APPROVAL FROM THE ENGINEER OF RECORD. IF ANY CHANGES ARE MADE TO THE DRAWINGS PRIOR TO OR DURING INSTALLATION, AS BUILT PLANS SHALL BE PREPARED BY THE FIRE ALARM CONTRACTOR AND FILED WITH THE APPROPRIATE AGENCIES FOR FINAL ACCEPTANCE.

34. THE CONTRACTOR SHALL RETAIN A NEW YORK STATE PE TO SIGN AND SEAL ALL NECESSARY DOCUMENTS REQUIRED FOR INSPECTION AND TO OBTAIN A FINAL LETTER OF APPROVAL. THIS SHALL INCLUDE A SIGNED AND SEALED 11X17 AS-BUILT DRAWING, STATEMENT OF OPERATION, AN NFPA PROGRAMMING MATRIX, AND THE CONTRACTORS SIGNED AND SEALED FORMS. THESE DOCUMENTS SHALL BE SUBMITTED AS NECESSARY TO THE FIRE DEPARTMENT/ DEPARTMENT OF BUILDINGS TO OBTAIN A FIRE ALARM INSPECTION. IF A LETTER OF DEFECT IS ISSUED, THE CONTRACTOR SHALL CORRECT ALL ITEMS AND SUBMIT A SIGNED AND SEALED CERTIFICATE OF CORRECTION TO THE FIRE DEPARTMENT TO OBTAIN A FINAL LETTER OF APPROVAL AT NO ADDITIONAL COST TO THE PROJECT.

35. THE CONTRACTOR SHALL BE RESPONSIBLE FOR REMOVING ANY AND ALL ABANDONED FIRE ALARM CABINETS, DEVICES, AND WIRE. PAINT, PATCH AND CLEANUP SHALL ALSO BE INCLUDED.

36. CARBON MONOXIDE (CO) AND COMBINATION SMOKE AND CO DETECTORS SHALL BE FULLY ADDRESSABLE (EST SIGA2 SERIES OR EQUAL) AND INCLUDE A SOUNDER BASE. MANUFACTURERS THAT DO NOT OFFER AN ADDRESSABLE CO OR SMOKE/CO TYPE DEVICE SHALL INCLUDE SEPARATE CO AND SMOKE DETECTORS, EACH WITH AN INTERNAL SOUNDER, AND THE NECESSARY MONITORING DEVICES SO THAT THE FIRE ALARM SYSTEM MAY MONITOR BOTH TYPES SEPARATELY AT NO ADDITIONAL COST TO THE PROJECT. IF POWERED SEPARATELY (24VDC), POWER TO THE DEVICE SHALL ALSO BE SUPERVISED.

37. BATTERY BACKUP SHALL BE PROVIDED FOR A MINIMUM OF 24 HOURS STANDBY FOLLOWED BY 45 HOURS OF FULL ALARM WITH ALL CALL VOICE PAGING CAPABILITY PLUS REQUIRED SPARE CAPACITY AND TEN PERCENT DEGREDATION OF BATTERIES.

38. WHERE DISAGREEMENTS OR DISCREPANCIES OCCUR BETWEEN THE PLANS AND THE SPECIFICATIONS, OR WITHIN EITHER DOCUMENT ITSELF, THE ITEM OR ARRANGEMENT OF BETTER QUALITY, GREATER QUANTITY OR HIGHER COST SHALL BE INCLUDED IN THE BASE BID.

39. LEVEL OF SURVIVABILITY; VERTICAL RISER CABLE FOR ALL SYSTEMS THAT INCLUDE PARTIAL EVACUATION (ANYTHING OTHER THAN A GENERAL ALARM SEQUENCE - SEE SEQUENCE / MATRIX) SHALL INCLUDE A LEVEL 2 PATHWAY OF SURVIVABLITY (NOT FULLY SPRINKLERED) OR LEVEL 3 (FULY SPRINKLERED) AND A 2 HOUR RATED SHAFT OR RISER. ALL OTHERS SHALL INCLUDE A PATHWAY LEVEL 0 (UNSPRINKLERED) OR LEVEL 1 (FULLY SPRINKLERED).

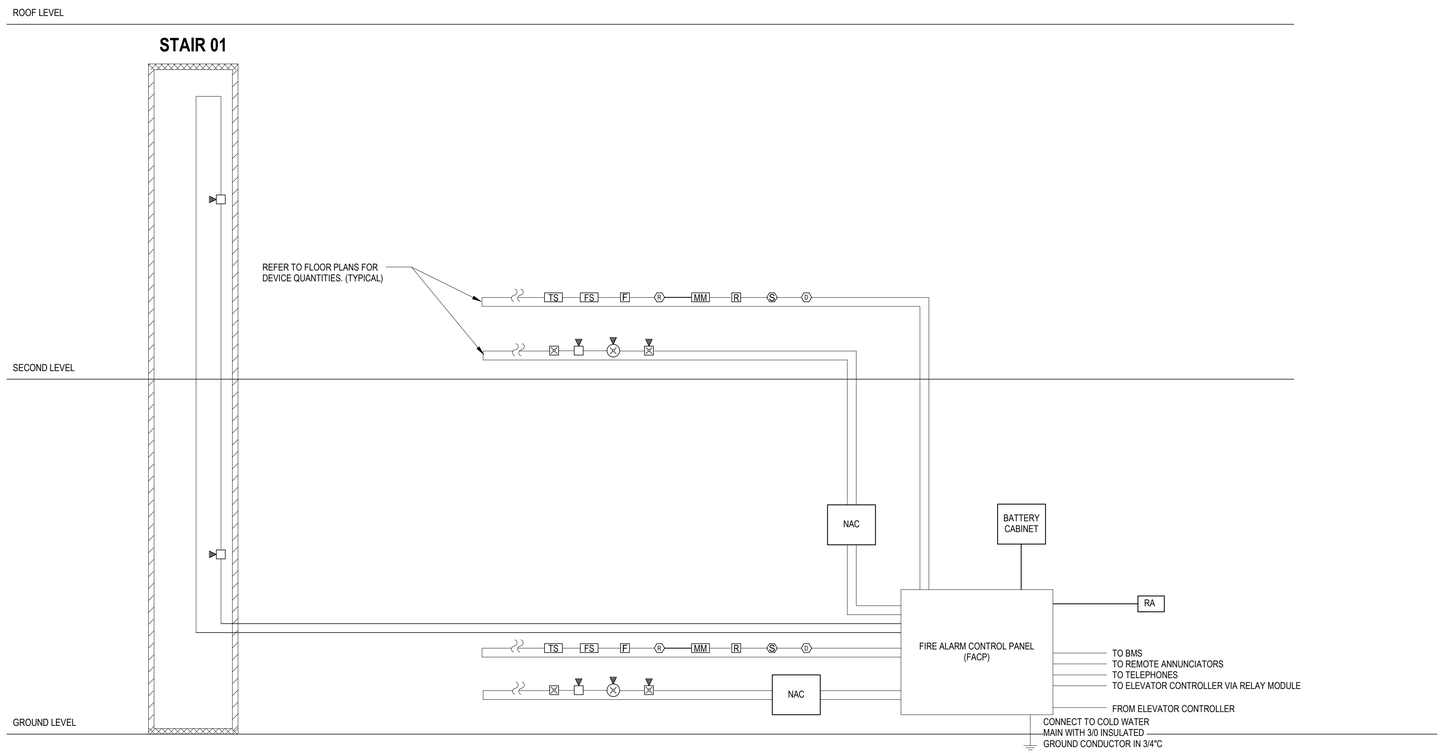

Owner
Storm King Art Center
1 Museum Road
New Windsor, NY 12553
+1 (845) 534-3115

Design Architect
heneghan peng architects
14-16 Lord Edward Street
Dublin, D02 YC63, IE
+353 1 633 9000

Executive Architect
WXY Architecture + Urban Design
224 Centre Street, 5th Floor
New York, NY 10013
+1 (212) 219-1953

Landscape Architect
Gustafson Porter + Bowman
1 Cobham Mews
London, MW1 9SB, UK
+44 020 7284 8950

Reed Hilderbrand LLC
33 Whitney Avenue, 3rd Floor
New Haven, CT, US 06510
+1 (617) 923-2422

Structural & Lighting
ARUP
77 Water Street
New York, NY, US 10005
+1 (212) 896-3000

MEPF & IT
BuroHappold
100 Broadway #23
New York, NY, US 10005
+1 (212) 616-0228

Civil
VHB
100 Great Oaks Blvd., Suite 118
Albany, NY, US 12203
+1 (518) 389-3606

AV & Acoustics
LSTN Consultants
76 Beaver Street, 2nd Floor
New York, NY, US 10005
+1 (347) 788-0810

Facade
Front Inc.
100 E. Broadway Street, #501
New York, NY, US 10002
+1 (212) 242-2220

Key Plan

Description	Date
Filling Set	06/17/22

Project

Storm King Art Center

C.F.M. Building

Seal

NOT FOR CONSTRUCTION

Drawing Title

Fire Alarm Riser

Date	06/17/22
Scale	Not to Scale
Drawing Number	FA-C-701
Sheet Size	ARCH D

ABBREVIATIONS

ABD	AUTOMATIC BALL DRIP
AFC	ABOVE FINISHED CEILING
AFF	ABOVE FINISHED FLOOR
BFP	BACK FLOW PREVENTER
BOP	BOTTOM OF PIPE
CL	CENTERLINE
CLG	CEILING
COMB	COMBINATION
CP	CONTROL PANEL
DCDA	DOUBLE CHECK DETECTOR ASSEMBLY
DCV	DOUBLE CHECK VALVE
DN	DOWN
DPS	DRY PIPE SYSTEM
DPV	DRY PIPE VALVE
DR	DRAIN
DU	DRYER UNIT
DWG	DRAWING
EL	ELEVATION
ETR	EXISTING TO REMAIN
ETBR	EXISTING TO BE REMOVED
EX	EXISTING
F	FIRE SERVICE
FCVA	FLOOR CONTROL VALVE ASSEMBLY
FD	FLOOR DRAIN
FDC	FIRE DEPARTMENT CONNECTION
FFE	FINISHED FLOOR ELEVATION
FHC	FIRE HOSE CABINET
FHR	FIRE HOSE RACK
FHV	FIRE HOSE VALVE
FM	FACTORY MUTUAL
FP	FIRE PUMP
FS	FLOW SWITCH
FSP	FIRE STAND PIPE
FT	FOOT, FEET
HDS	HEADS
HR	HOUR
HZ	HIGH ZONE
IE	INVERT ELEVATION
INV	INVERT
JP	JOCKEY PUMP
JS	JANITORS SINK
LZ	LOW ZONE
MS	MOP SINK
MTD	MOUNTED
NIC	NOT IN CONTRACT
NTS	NOT TO SCALE
OD	OVERFLOW DRAIN
OS&Y	OUTSIDE SCREW & YOKE
PG	PRESSURE GAUGE
PLMB	PLUMBING

PO	PLUGGED OUTLET
PRV	PRESSURE REDUCING VALVE
PS	PRESSURE SWITCH
RCV	RISER CONTROL VALVE
RPZ	REDUCED PRESSURE ZONE BFP ASSEMBLY
SQ.FT.	SQUARE FOOT (FEET)
SPECS	SPECIFICATIONS
SPR	SPRINKLER
SS	SERVICE SINK
STD	STANDARD
TEMP	TEMPERATURE
TS	TAMPER SWITCH
TYP	TYPICAL
UL	UNDERWRITERS LABORATORIES
VO	VALVED OUTLET
WM	WATER METER
WP	WATER PROOF

PIPING SYMBOLS

SP #	SYSTEM DESCRIPTION RISER NUMBER	SPRINKLER RISER TAG
FP400 XXX	SECTION SHEET No. SECTION NUMBER	DETAIL REFERENCE IN 400 SERIES
FSP #	SYSTEM DESCRIPTION RISER NUMBER	FIRE STANDPIPE RISER TAG
	FLOOR DRAIN	
	ARROW INDICATES DIRECTION OF FLOW	
	PIPE UP	
	PIPE DROP	
	PIPE DROP OR RISE	
	TOP CONNECTION	
	BOTTOM CONNECTION	
	CAPPED CONNECTION	
	BREAK	
	UNION	
	PIPE SLEEVE	
	WATERPROOF PIPE SLEEVE	

FIRE PROTECTION SYMBOLS

	DOUBLE CHECK DETECTOR VALVE ASSEMBLY
	REDUCED PRESSURE ZONE VALVE ASSEMBLY
	DOUBLE CHECK VALVE ASSEMBLY
	FLOOR CONTROL VALVE ASSEMBLY WITH TS AND WFS
	CHECK VALVE
	GATE VALVE
	BALL VALVE
	PRESSURE GAUGE
	FIRE HOSE VALVE
	FIRE HOSE VALVE IN CABINET
	FLOW SWITCH
	PUMP
M	MODLATING CONTROL VALVE
	FLOOR CONTROL VALVE ASSEMBLY AND FIRE HOSE VALVE IN FIRE RATED CABINET
	STRAINER
	OUTSIDE STEM AND YOKE VALVE W/ TAMPER SWITCH
	PRESSURE REDUCING VALVE
	PEDESTAL FIRE DEPARTMENT CONNECTION
	FLUSH FIRE DEPARTMENT CONNECTION
	FIRE PUMP TEST HEADER (FLUSH TYPE)
	FIRE EQUIPMENT CABINET
	FIRE HOSE CABINET
	3 WAY ROOF MANIFOLD
	DRY PIPE VALVE
	ALARM CHECK VALVE
	POINT OF DISCONNECT
	CONNECT NEW PIPING TO EXISTING

FIRE PROTECTION SYMBOLS

	UPRIGHT SPRINKLER HEAD
	CONCEALED PENDENT SPRINKLER HEAD
	SPRINKLER HEAD BELOW DUCT/EQUIPMENT
	SIDEWALL SPRINKLER HEAD
	DRY PENDENT SPRINKLER HEAD
	DRY SIDEWALL SPRINKLER HEAD
	EXPOSED PENDANT SPRINKLER HEAD
	SEMI-RECESSED PENDENT SPRINKLER HEAD
	EXISTING SPRINKLER HEAD TO BE REMOVED
1"	REMOVE EXISTING SPRINKLER HEAD, NEW 1" ARM OVER SPRINKLER PIPING TO NEW SPRINKLER HEAD LOCATION
	VALVE ON RISE
F	FIRE MAIN
F	EXISTING FIRE MAIN
F	FIRE MAIN WITH HEAT TRACE
FSP	FIRE STAND PIPE
FSP	EXISTING FIRE STAND PIPE
DFSP	DRY FIRE STAND PIPE
DFSP	EXISTING DRY FIRE STAND PIPE
SP	SPRINKLER PIPING
SP	EXISTING SPRINKLER PIPING
DSP	DRY SPRINKLER PIPING
PA	PREACTION SPRINKLER PIPING
PA	EXISTING PREACTION SPRINKLER PIPING
DR	DRAIN PIPING
DR	EXISTING DRAIN PIPING
X X X X X X X X	REMOVE EXISTING PIPING

Owner
Storm King Art Center
1 Museum Road
New Windsor, NY 12553
+1 (845) 534-3115

Design Architect
heneghan peng architects
14-16 Lord Edward Street
Dublin, D02 YC63, IE
+353 1 633 9000

Executive Architect
WXY Architecture + Urban Design
224 Centre Street, 5th Floor
New York, NY 10013
+1 (212) 219-1953

Landscape Architect
Gustafson Porter + Bowman
1 Cobham Mews
London, MW1 9SB, UK
+44 020 7284 8950

Reed Hilderbrand LLC
33 Whitney Avenue, 3rd Floor
New Haven, CT, US 06510
+1 (617) 923-2422

Structural & Lighting
ARUP
77 Water Street
New York, NY, US 10005
+1 (212) 896-3000

MEPF & IT
BuroHappold
100 Broadway #23
New York, NY, US 10005
+1 (212) 616-0228

Civil
VHB
100 Great Oaks Blvd., Suite 118
Albany, NY, US 12203
+1 (518) 389-3606

AV & Acoustics
LSTN Consultants
76 Beaver Street, 2nd Floor
New York, NY, US 10005
+1 (347) 788-0810

Facade
Front Inc.
100 E. Broadway Street, #501
New York, NY, US 10002
+1 (212) 242-2220

Key Plan

Description	Date
Filing Set	06/17/22

Project

Storm King Art Center

C.F.M. Building

Seal

NOT FOR CONSTRUCTION

Drawing Title

Abbreviations, Symbols & Legends

Date	06/17/22
Scale	Not to Scale
Drawing Number	FP-C-001
Sheet Size	ARCH D

GENERAL SPRINKLER NOTES

1. CONTRACTOR SHALL VERIFY ALL DIMENSIONS AND JOB CONDITIONS AND SHALL REPORT TO ENGINEER ANY DISCREPANCIES OR OMISSIONS THAT WOULD INTERFERE WITH SATISFACTORY COMPLETION OF THE WORK.

2. COORDINATE THE FIRE PROTECTION SYSTEM WITH WORK OF ALL OTHER TRADES PRIOR TO ANY FABRICATION OR INSTALLATION. PROVIDE ALL FITTINGS, OFFSETS, AND TRANSITIONS AS REQUIRED FOR A COMPLETE WORKABLE INSTALLATION.

3. THE CONTRACTOR SHALL BE RESPONSIBLE FOR REVIEWING A FULL SET OF BID DOCUMENTS AND VISIT THE SITE TO MAKE HIMSELF AWARE OF THE TOTAL JOB BEFORE SUBMITTING HIS PRICE. FAILURE TO COMPLY SHALL NOT HOLD THE OWNER RESPONSIBLE FOR ANY ADDITIONAL COST. CONTRACTOR SHALL BE RESPONSIBLE FOR ARRANGING WITH FACILITY'S BUILDING MANAGEMENT FOR HANDLING MATERIALS, AS WELL AS FOR ALLOWABLE WORKING HOURS AND DELIVERIES.

4. CONTRACTOR SHALL SUBMIT ALL SHOP DRAWINGS AND MANUFACTURERS' CUTS AND SAMPLES TO ARCHITECT PRIOR TO COMMENCEMENT OF SUCH WORK.

5. THE CONTRACTOR SHALL INDICATE ON HIS SHOP DRAWING THAT ALL PIPING LAYOUTS ARE COORDINATED WITH THE MEP AND STRUCTURAL CONDITIONS. INCLUDE ON EACH WORKING DRAWING LAYOUT CERTIFICATE, THAT ALL RELATED CONDITIONS HAVE BEEN CHECKED, AND THAT NO CONFLICT EXISTS. SUBMISSION WILL NOT BE APPROVED WITHOUT SUCH CERTIFICATION.

6. CONTRACTOR SHALL SUBMIT SPRINKLER HYDRAULIC CALCULATIONS FOR THE ENGINEER'S REVIEW TO VERIFY THE ADEQUACY OF THE INDICATED PIPE SIZES.

7. DRAWINGS ARE NOT TO BE SCALED.

8. CONTRACTOR SHALL COMPLY WITH ALL NEW YORK STATE BUILDING DEPARTMENT AND REGULATORY AGENCIES AND CODE REQUIREMENTS. CONTRACTOR SHALL BE RESPONSIBLE FOR SECURING ALL NECESSARY PERMITS AND APPROVALS OF ALL TRADES.

9. CONTRACTOR SHALL CARRY AND DOCUMENT LIABILITY, ACCIDENT AND PROPERTY DAMAGE INSURANCE AS REQUIRED BY COOPERATIVE CORPORATION AND OBSERVE THEIR PERMITTED HOURS FOR WORK.

10. CONTRACTOR SHALL EXERCISE EXTREME CARE IN PROTECTING AREAS ADJACENT TO CONSTRUCTION AREAS SHALL FULLY PROTECT THEM FROM ANY DAMAGE RESULTING FROM CONTRACTOR'S WORKERS, SUBCONTRACTORS OR AGENTS, AND SHALL BE RESPONSIBLE FOR REPAIRING, CLEANING OR REPLACING ANY SUCH DAMAGE.

11. ALL DIMENSIONS GIVEN ARE FINISH DIMENSIONS UNLESS OTHERWISE STATED. REFER TO ARCHITECTURAL DRAWINGS FOR DIMENSIONED RCPS.

12. UNLESS SPECIFICALLY STATED OTHERWISE, CONTRACTOR SHALL FURNISH ALL LABOR, MATERIALS, APPURTENANCES, EQUIPMENT AND SERVICES TO COMPLETE ALL WORK AS INDICATED ON DRAWINGS AND/OR SPECIFIED ON NOTES.

13. UNLESS SPECIFICALLY STATED OTHERWISE, CONTRACTOR SHALL FOLLOW MANUFACTURER'S DIRECTIONS, INSTRUCTIONS AND RECOMMENDATIONS FOR ALL MATERIALS AND PROCESSES USED IN THIS CONTRACT.

14. THE CONTRACTOR SHALL ALLOW FOUR (4) ADDITIONAL SPRINKLERS PER BRANCH TO BE INSTALLED BELOW AND ABOVE THE DUCTS IN MECHANICAL ROOMS AND SPACES WITHOUT CEILINGS.

15. SPRINKLER HEADS SHALL NOT BE LOCATED DIRECTLY OVER ANY ELECTRICAL AND TELEPHONE EQUIPMENT.

16. ELECTRICAL AND TELEPHONE EQUIPMENT SHALL BE PROTECTED BY A SHIELD TO DEFLECT WATER AWAY FROM SUCH EQUIPMENT. SHIELD SHALL BE GALVANIZED STEEL, ALUMINUM OR BRASS.

17. ACCESS DOORS ARE TO BE PROVIDED ADJACENT TO ALL VALVES.

18. SPRINKLERS IN MECHANICAL ROOM SHALL HAVE A TEMPERATURE RATING OF 212°F. LOCATIONS, NECESSARY FOR INSPECTION AND MAINTENANCE.

19. SPRINKLER PIPING SHALL BE INSTALLED AS PER APPROVED SHOP DRAWINGS.

20. CONTRACTOR SHALL BASE ALL HYDRAULIC CALCULATIONS ON THE AVAILABLE PRESSURE AND WATER FLOW DATA AT EXISTING FLOOR CONTROL ASSEMBLY.

21. EACH CONTRACTOR IS RESPONSIBLE TO PROVIDE ALL PENETRATIONS, CUTTING, PATCHING, SLEEVES, AND FIRESTOPPING REQUIRED TO COMPLETE THE INSTALLATION OF ALL WORK INCLUDED UNDER THEIR CONTRACT IN ACCORDANCE WITH THE FIRE EGRESS AND SECURITY PLAN DRAWINGS.

22. ALL SPRINKLER HEADS IN MECHANICAL AND STORAGE ROOMS SHALL HAVE HEAD GUARDS.

23. PROVIDE HYDRAULICALLY DESIGNED SPRINKLER SYSTEM FOR ALL PIPING NOT SIZED.

24. LOCATE ALL HORIZONTAL PIPING ABOVE SUSPENDED CEILING, UNLESS THERE IS NO CEILING.

25. AUTOMATIC SPRINKLERS SHALL NOT BE INSTALLED IN ELEVATOR MACHINE ROOMS AS PER NEW YORK STATE BUILDING CODE.

26. PROVIDE SPRINKLER HEADS UNDER DUCTS OVER 4'-0" IN WIDTH IN AREAS WITHOUT HUNG CEILING.

27. UPON COMPLETION OF THE WORK, CONTRACTOR SHALL COMPLETELY CLEAN THE CONSTRUCTION AREA SUITABLE FOR THE OWNER'S USE, INCLUDING REMOVAL OF ALL LABELS (AFTER ARCHITECT'S INSPECTION), CLEANING OF ALL THE EQUIPMENT, CONSTRUCTION WORK, WINDOWS AND OTHER WORK, NEW AND OLD, IN THAT CONSTRUCTION AREA.

28. BUILDING DEPARTMENT APPROVED PLANS SHALL BE TURNED OVER TO OWNER AT THE COMPLETION OF THE JOB.

29. AT THE FINAL COMPLETION OF THE JOB, CONTRACTOR SHALL SUBMIT TO THE FACILITY AND TO ENGINEER A NOTARIZED AFFIDAVIT STATING COMPLIANCE WITH ALL PROVISIONS OF THIS CONTRACT, INCLUDING ALL NOTES, EXCEPT FOR THOSE CHANGES SPECIFICALLY APPROVED IN WRITING BY THE ARCHITECT.

30. CONTRACTOR SHALL GUARANTEE ALL WORK PERFORMED UNDER THIS CONTRACT FOR ONE YEAR, STARTING FROM DATE OF FINAL ACCEPTANCE OF ALL WORK.

31. THE MINIMUM SPRINKLER BRANCH PIPE SIZE SHALL BE 1".

32. SPRINKLER HEADS SHALL BE ± 1/2" FROM CENTER OF TILE CONTRACTOR SHALL ALLOW FOR ALL REQUIRED FITTINGS TO ACHIEVE THIS GOAL AND INCLUDE IT IN HIS CONTRACT PRICE.

33. ALL DRY TYPE SPRINKLER HEADS SHALL BE INSTALLED IN TEE TYPE FITTINGS ONLY.

SPRINKLER DESIGN CRITERIA

1. THE SPRINKLER SYSTEM IN THIS BUILDING SHALL BE IN ACCORDANCE WITH NEW YORK STATE BUILDING CODE AND THE ADOPTED VERSION OF NFPA-13.

2. THE PROPOSED HYDRAULIC DEMAND OF THE SYSTEM IS EQUAL TO, OR LESS THAN, THE HYDRAULIC DEMAND OF THE EXISTING SYSTEM.

3. OCCUPANCY CRITERIA

A. LIGHT HAZARD - OFFICE SPACE, SEATING AREA, AND CONFERENCE ROOMS DENSITY 0.10 GPM/ SQ. FT. OVER MOST HYDRAULICALLY REMOTE 1500 SQ. FT. MAXIMUM COVERAGE PER SPRINKLER HEAD 225 SQ. FT. 52,000 SQ.FT. MAXIMUM AREA LIMITATION.

B. ORDINARY HAZARD GROUP 1 - MECHANICAL AND ELECTRICAL EQUIPMENT ROOMS. DENSITY 0.16 GPM PER SQ. FT OVER MOST HYDRAULICALLY REMOTE 1500 SQ. FT. MAXIMUM COVERAGE PER SPRINKLER HEAD 130 SQ. FT. 52,000 SQ. FT. MAXIMUM AREA LIMITATION.

4. MINIMUM PRESSURE AND WATER DISCHARGE:

A. LIGHT HAZARD MINIMUM PRESSURE AT SPRINKLER HEAD 7 PSI OR 14.87 GPM.

B. ORDINARY HAZARD GROUP 1 - MINIMUM PRESSURE AT SPRINKLER HEAD 13.7 PSI OR 20.8 GPM.

5. HYDRAULICALLY CALCULATED SYSTEMS SHALL MEET THE FOLLOWING CRITERIA:

A. EXACT LOCATION OF SPRINKLER HEADS IN FINISHED AREAS WITH SUSPENDED CEILINGS SHALL BE AS INDICATED ON ARCHITECTURAL REFLECTED CEILING PLANS WITH HEADS IN CENTER OF TILES.

B. WHENEVER ROLLED GROOVED CONNECTIONS ARE USED, ALLOWANCE FOR ADDITIONAL PRESSURE LOSS AT GROOVES SHALL BE MADE AS FOLLOWS:
B.1. FOR EACH COUPLING ON STRAIGHT RUN INCLUDING STRAIGHT FLOW THROUGH TEE OR CROSS: ADD 1 EQUIVALENT FOOT OF PIPE.
B.2. FOR EACH COUPLING AT ELBOW, TEE OR CROSS WHERE DIRECTION OF FLOW CHANGES: ADD 2 EQUIVALENT FEET OF PIPE.

C. EQUIVALENT FITTING LENGTHS USED IN HYDRAULIC CALCULATIONS SHALL BE IN ACCORDANCE WITH NFPA STANDARD NO. 13, 2007 AS REFERENCED BY THE NEW YORK STATE BUILDING CODE. WHEREVER FITTINGS ARE USED IN CONJUNCTION WITH SCHEDULE 40 PIPE, EQUIVALENT FITTING LENGTHS INDICATED IN NFPA 13 SHALL BE INCREASED BY 30%

D. DISCHARGE FROM EACH SPRINKLER HEAD SHALL NOT BE LESS THAN REQUIRED FOR AREA COVERED BY THE HEAD. AREA COVERAGE PER HEAD SHALL BE DETERMINED IN ACCORDANCE WITH NFPA 13, PARAGRAPH 22.4.4.6.1, AS REFERENCED BY NEW YORK STATE BUILDING CODE.

E. HYDRAULIC CALCULATIONS SHALL BE BROUGHT BACK TO CONNECTION TO WATER SUPPLY.

F. FLOW VELOCITY IN PIPING SHALL NOT EXCEED 20 FPS.

6. THESE HYDRAULIC CALCULATIONS ALONG WITH PUMP OR WATER FLOW TEST ARE TO BE SUBMITTED FOR APPROVAL TO THE ENGINEER AND TO THE INSURANCE UNDERWRITER HYDRAULIC CALCULATIONS SHALL BE BROUGHT BACK TO THE LOCATION OF THE PUMP OR WATER FLOW TEST.

7. CONSTRUCTION MAY ONLY BEGIN WHEN APPROVALS ARE GRANTED.

8. RESULT OF HYDRAULIC CALCULATIONS SHALL INDICATE MINIMUM 10% PRESSURE SAFETY MARGIN, I.E., EXCESS OF PRESSURE AVAILABLE OVER PRESSURE REQUIRED.

Owner
Storm King Art Center
1 Museum Road
New Windsor, NY 12553
+1 (845) 534-3115

Design Architect
heneghan peng architects
14-16 Lord Edward Street
Dublin, D02 YC63, IE
+353 1 633 9000

Executive Architect
WXY Architecture + Urban Design
224 Centre Street, 5th Floor
New York, NY 10013
+1 (212) 219-1953

Landscape Architect
Gustafson Porter + Bowman
1 Cobham Mews
London, MW1 9SB, UK
+44 020 7284 8950

Reed Hilderbrand LLC
33 Whitney Avenue, 3rd Floor
New Haven, CT, US 06510
+1 (617) 923-2422

Structural & Lighting
ARUP
77 Water Street
New York, NY, US 10005
+1 (212) 896-3000

MEPF & IT
BuroHappold
100 Broadway #23
New York, NY, US 10005
+1 (212) 616-0228

Civil
VHB
100 Great Oaks Blvd., Suite 118
Albany, NY, US 12203
+1 (518) 389-3606

AV & Acoustics
LSTN Consultants
76 Beaver Street, 2nd Floor
New York, NY, US 10005
+1 (347) 788-0810

Facade
Front Inc.
100 E. Broadway Street, #501
New York, NY, US 10002
+1 (212) 242-2220

Key Plan

Description	Date
Filing Set	06/17/22

Project

Storm King Art Center

C.F.M. Building

Seal

NOT FOR CONSTRUCTION

Drawing Title

General Notes

Date	06/17/22
Scale	Not to Scale
Drawing Number	FP-C-002
Sheet Size	ARCH D

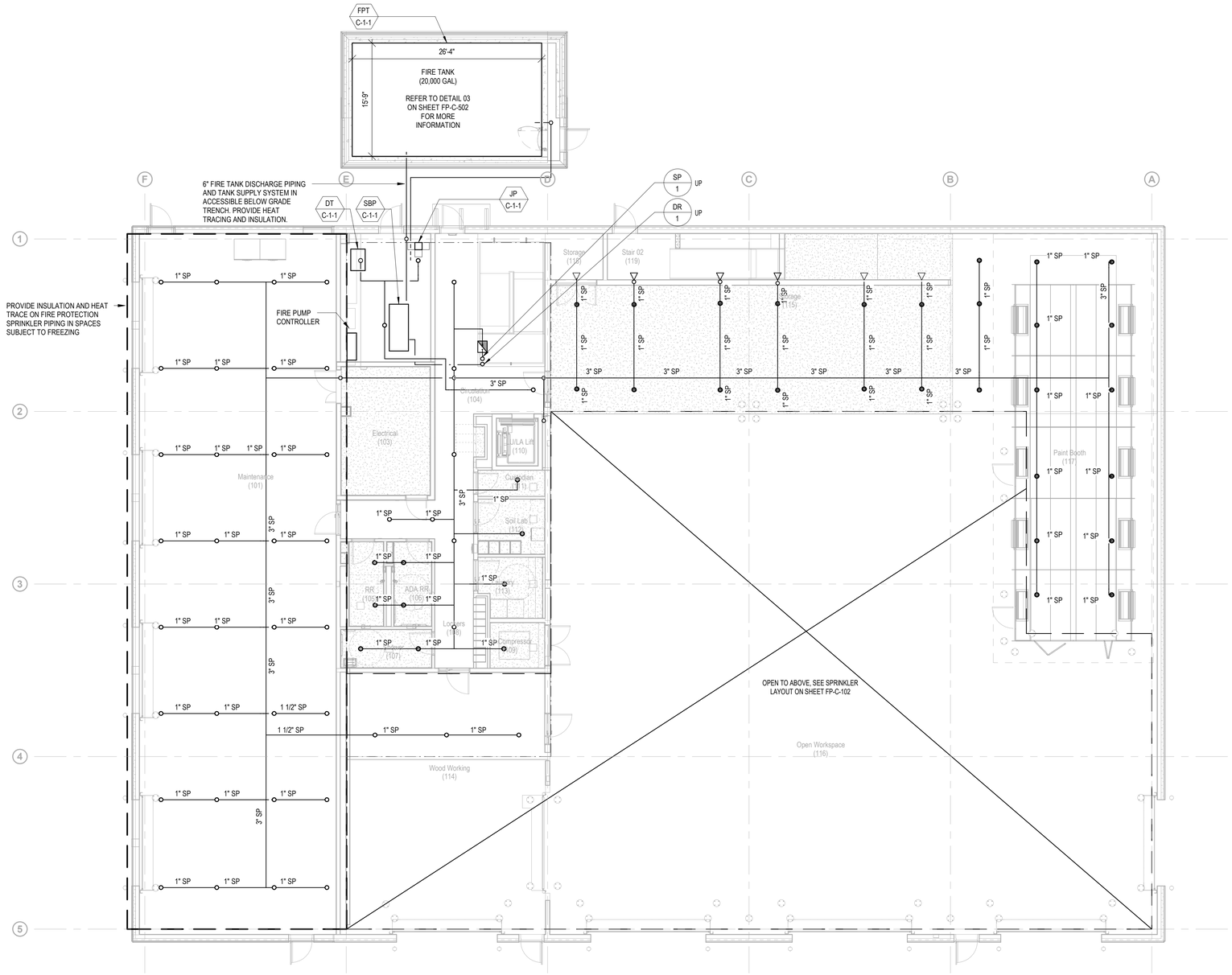

Owner
Storm King Art Center
1 Museum Road
New Windsor, NY 12553
+1 (845) 534-3115

Design Architect
heneghan peng architects
14-16 Lord Edward Street
Dublin, D02 YC63, IE
+353 1 633 9000

Executive Architect
WXY Architecture + Urban Design
224 Centre Street, 5th Floor
New York, NY 10013
+1 (212) 219-1953

Landscape Architect
Gustafson Porter + Bowman
1 Cobham Mews
London, MW1 9SB, UK
+44 020 7284 8950

Reed Hilderbrand LLC
33 Whitney Avenue, 3rd Floor
New Haven, CT, US 06510
+1 (617) 923-2422

Structural & Lighting
ARUP
77 Water Street
New York, NY, US 10005
+1 (212) 896-3000

MEPF & IT
BuroHappold
100 Broadway #23
New York, NY, US 10005
+1 (212) 616-0228

Civil
VHB
100 Great Oaks Blvd., Suite 118
Albany, NY, US 12203
+1 (518) 389-3606

AV & Acoustics
LSTN Consultants
76 Beaver Street, 2nd Floor
New York, NY, US 10005
+1 (347) 788-0810

Facade
Front Inc.
100 E. Broadway Street, #501
New York, NY, US 10002
+1 (212) 242-2220

Key Plan

N

Description	Date
Filing Set	06/17/22

Project

Storm King Art Center

C.F.M. Building

Seal

NOT FOR CONSTRUCTION

Drawing Title

Fire Protection - Ground Level

Date	06/17/22
Scale	1/8" = 1'-0"
Drawing Number	FP-C-101
Sheet Size	ARCH D

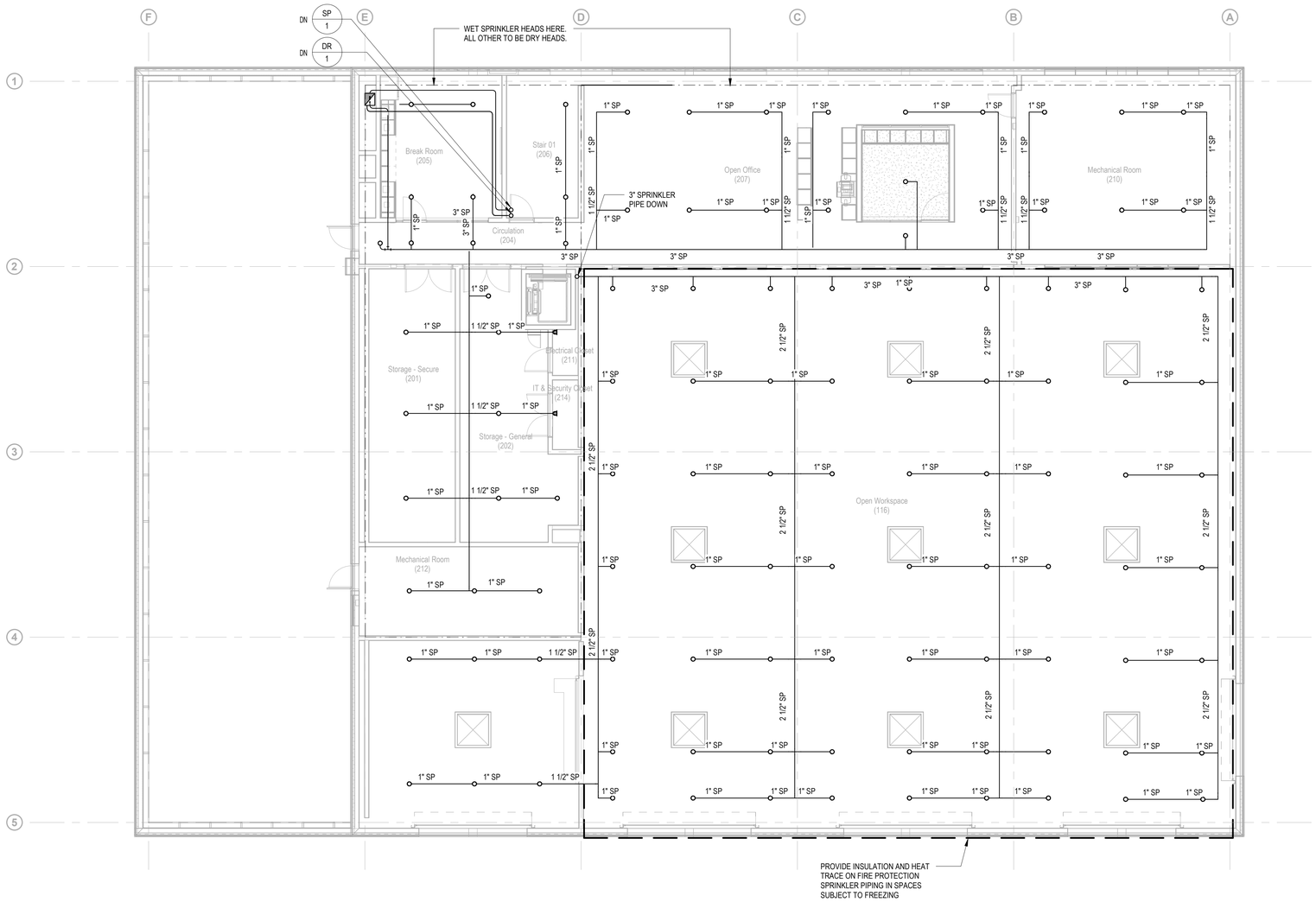

Owner
Storm King Art Center
1 Museum Road
New Windsor, NY 12553
+1 (845) 534-3115

Design Architect
heneghan peng architects
14-16 Lord Edward Street
Dublin, D02 YC63, IE
+353 1 633 9000

Executive Architect
WXY Architecture + Urban Design
224 Centre Street, 5th Floor
New York, NY 10013
+1 (212) 219-1953

Landscape Architect
Gustafson Porter + Bowman
1 Cobham Mews
London, MW1 9SB, UK
+44 020 7284 8950

Reed Hilderbrand LLC
33 Whitney Avenue, 3rd Floor
New Haven, CT, US 06510
+1 (617) 923-2422

Structural & Lighting
ARUP
77 Water Street
New York, NY, US 10005
+1 (212) 896-3000

MEPF & IT
BuroHappold
100 Broadway #23
New York, NY, US 10005
+1 (212) 616-0228

Civil
VHB
100 Great Oaks Blvd., Suite 118
Albany, NY, US 12203
+1 (518) 389-3606

AV & Acoustics
LSTN Consultants
76 Beaver Street, 2nd Floor
New York, NY, US 10005
+1 (347) 788-0810

Facade
Front Inc.
100 E. Broadway Street, #501
New York, NY, US 10002
+1 (212) 242-2220

Key Plan

N

Description	Date
Filing Set	06/17/22

Project

Storm King Art Center

C.F.M. Building

Seal

NOT FOR CONSTRUCTION

Drawing Title

Fire Protection - Second Level

Date	06/17/22
Scale	1/8" = 1'-0"
Drawing Number	FP-C-102
Sheet Size	ARCH D

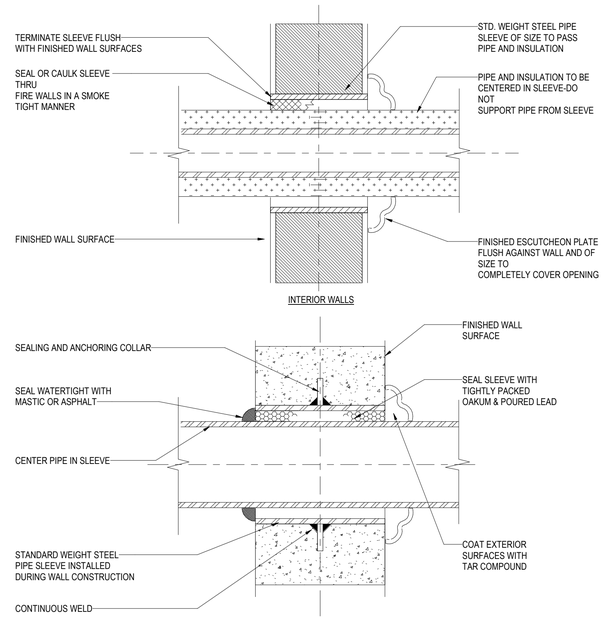

NOTES

1. PIPE SLEEVE FOR EXTERIOR WALL ABOVE OR BELOW GRADE.
2. FOR GAS SERVICE, EXTEND SLEEVE 25mm PAST INSIDE FACE OF WALL & 100mm PAST OUTSIDE FACE OF WALL.

1 TYPICAL PIPE SLEEVES THRU WALL

NOT TO SCALE

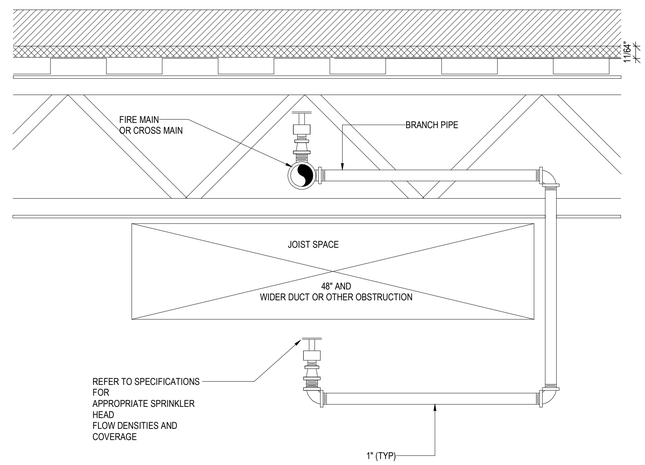

2 OBSTRUCTED HEAD DETAIL

NOT TO SCALE

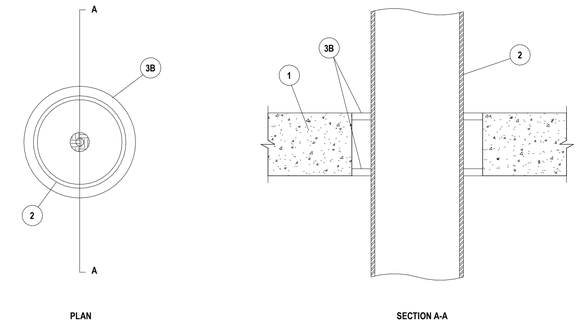

UL SYSTEM NO. C-AJ-1080
F-RATING - 3 HR
T-RATING - 0 HR
L RATING AT AMBIENT - LESS THAN 1 CFM/SQ FT
L RATING AT 400 F - LESS THAN 1 CFM/SQ FT

NOTES

1. FLOOR AND WALL ASSEMBLY - MINIMUM 4 1/2" THICK REINFORCED LIGHTWEIGHT OR NORMAL WEIGHT (100-150 PCF) CONCRETE. WALL MAY ALSO BE CONSTRUCTED OF ANY UL CLASSIFIED CONCRETE BLOCKS. MAXIMUM DIAMETER OF OPENING IS 8".
2. THROUGH PENETRANTS - ONE METALLIC PIPE, CONDUIT OR TUBING TO BE CENTERED WITHIN THE FIRESTOP SYSTEM. A NOMINAL ANNULAR SPACE OF 11/16" IS REQUIRED WITHIN THE FIRESTOP SA NOMINAL ANNULAR SPACE OF 11/16" IS REQUIRED WITHIN THE FIRESTOP SYSTEM. PIPE, CONDUIT OR TUBING TO BE RIGIDLY SUPPORTED ON BOTH SIDES OF FLOOR OR WALL ASSEMBLY. THE FOLLOWING TYPES AND SIZES OF METALLIC PIPES, CONDUITS OR TUBING MAY BE USED:
   A. STEEL PIPE - NOMINAL 6" DIA. (OR SMALLER) SCHEDULE 5 (OR HEAVIER) COPPER TUBING.
   B. IRON PIPE - NOMINAL 6" DIA. (OR SMALLER) CAST OR DUCTILE IRON PIPE.
   C. CONDUIT - NOMINAL 4" DIA. (OR SMALLER) ELECTRICAL METALLIC TUBING OR NOMINAL 6" DIA. (OR SMALLER) RIGID GALVANIZED STEEL CONDUIT.
   D. COPPER TUBING - NOMINAL 6" DIA. (OR SMALLER) TYPE M (OR HEAVIER) COPPER TUBING.
   E. COPPER PIPE - NOMINAL 6" DIA. (OR SMALLER) REGULAR (OR HEAVIER) COPPER PIPE.
   3. FIRESTOP MATERIAL - THE FIRESTOP SYSTEM SHALL CONSIST OF THE FOLLOWING:
   A. PACKING MATERIAL - (NOT SHOWN, OPTIONAL) - MINIMUM 1 1/2" THICKNESS OF MINIMUM 6 PCF MINERAL WOOL BATT INSULATION FIRMLY PACKED INTO OPENING AS PERMANENT FORM. PACKING MATERIAL TO BE RECESSED FROM TOP SURFACE OF FLOOR OF FROM BOTH SURFACES OF WALL AS REQUIRED TO ACCOMMODATE THE REQUIRED THICKNESS OF FILL MATERIAL.
   B. UL CLASSIFIED FILL, VOID OR CAVITY MATERIAL - CAULK - MINIMUM 1" THICKNESS OF FILL MATERIAL APPLIED WITHIN THE ANNULUS, FLUSH WITH TOP SURFACE OF FLOOR OR WITH BOTH SURFACES OF WALL. SPECIFIED TECHNOLOGIES INC. - SPECSEAL 100, 101, 105 SEALANT.

3 THROUGH PENETRATION FIRESTOP DETAIL

NOT TO SCALE

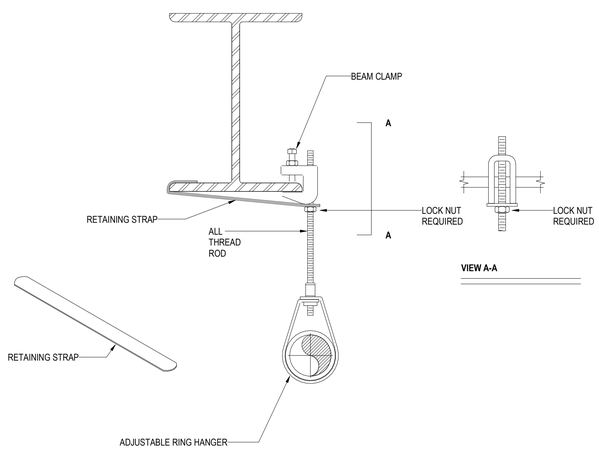

4 RETAINING STRAP & BEAM CLAMP DETAIL

NOT TO SCALE

NFPA13 - TABLE 4-2.4.6	
HORIZONTAL DISTANCE	VERTICAL DISTANCE
1'-0" TO 1'-11"	1"
2'-0" TO 1'-5"	2"
2'-6" TO 2'-11"	3"
3'-0" TO 3'-5"	4"
3'-6" TO 3'-11"	6"
4'-0" TO 4'-5"	7"
4'-6" TO 4'-11"	9"
5'-0" TO 5'-5"	11"
5'-6" TO 5'-11"	14"

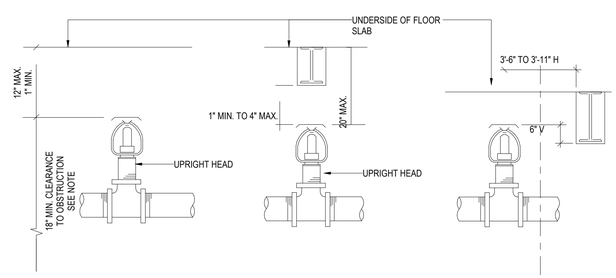

NOTE:
WHEN OBSTRUCTION (DUCT, PIPES OR CABLE TRAY) HORIZONTAL DIMENSION IS OVER 4 FEET, A SPRINKLER SHALL BE INSTALLED BENEATH THE OBSTRUCTION.

5 TYPICAL UPRIGHT SPRINKLER

NOT TO SCALE

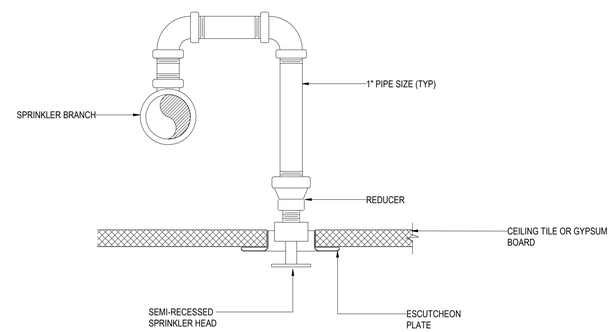

6 SPLINKLER HEAD DETAIL

NOT TO SCALE

Owner
Storm King Art Center
1 Museum Road
New Windsor, NY 12553
+1 (845) 534-3115

Design Architect
heneghan peng architects
14-16 Lord Edward Street
Dublin, D02 YC63, IE
+353 1 633 9000

Executive Architect
WXY Architecture + Urban Design
224 Centre Street, 5th Floor
New York, NY 10013
+1 (212) 219-1953

Landscape Architect
Gustafson Porter + Bowman
1 Cobham Mews
London, MW1 9SB, UK
+44 020 7284 8950

Reed Hilderbrand LLC
33 Whitney Avenue, 3rd Floor
New Haven, CT, US 06510
+1 (617) 923-2422

Structural & Lighting
ARUP
77 Water Street
New York, NY, US 10005
+1 (212) 896-3000

MEPF & IT
BuroHappold
100 Broadway #23
New York, NY, US 10005
+1 (212) 616-0228

Civil
VHB
100 Great Oaks Blvd., Suite 118
Albany, NY, US 12203
+1 (518) 389-3606

AV & Acoustics
LSTN Consultants
76 Beaver Street, 2nd Floor
New York, NY, US 10005
+1 (347) 788-0810

Facade
Front Inc.
100 E. Broadway Street, #501
New York, NY, US 10002
+1 (212) 242-2220

Key Plan

Description	Date
Filing Set	06/17/22

Project

Storm King Art Center
C.F.M. Building

Seal

NOT FOR CONSTRUCTION

Drawing Title

Fire Protection Details

Date	06/17/22
Scale	Not to Scale
Drawing Number	FP-C-501
Sheet Size	ARCH D

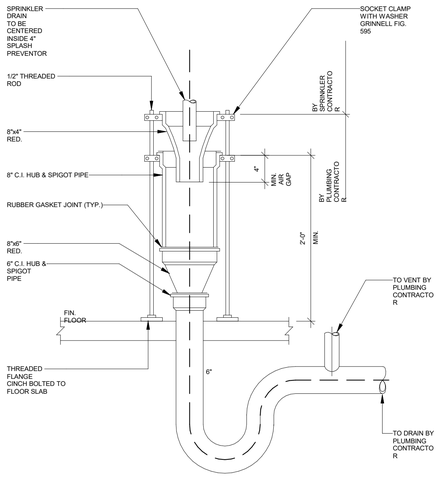

1 STANDPIPE DRAIN DETAIL

NOT TO SCALE

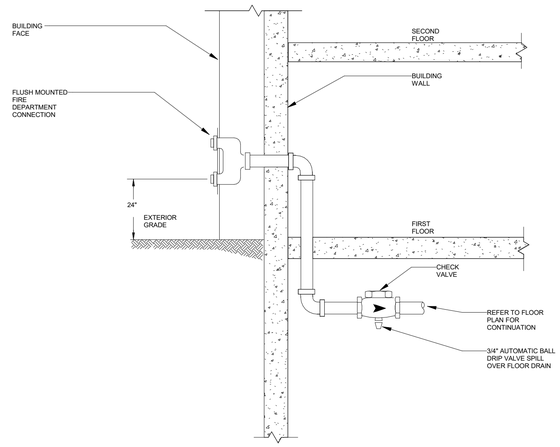

2 VERTICAL FLUSH MOUNTED FIRE DEPARTMENT (SIAMESE) CONNECTION

NOT TO SCALE

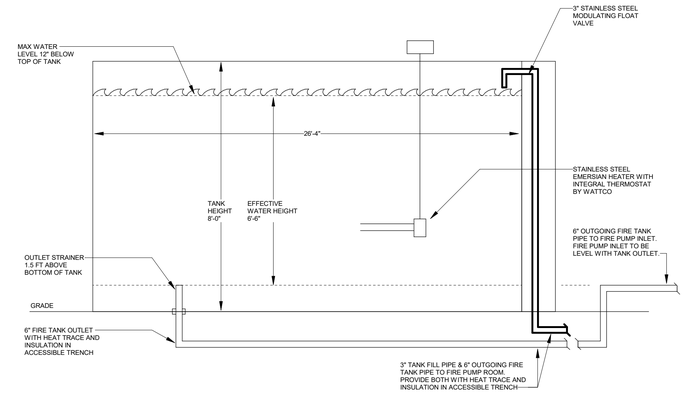

3 FIRE TANK

NOT TO SCALE

Owner
Storm King Art Center
1 Museum Road
New Windsor, NY 12553
+1 (845) 534-3115

Design Architect
heneghan peng architects
14-16 Lord Edward Street
Dublin, D02 YC63, IE
+353 1 633 9000

Executive Architect
WXY Architecture + Urban Design
224 Centre Street, 5th Floor
New York, NY 10013
+1 (212) 219-1953

Landscape Architect
Gustafson Porter + Bowman
1 Cobham Mews
London, MW1 9SB, UK
+44 020 7284 8950

Reed Hilderbrand LLC
33 Whitney Avenue, 3rd Floor
New Haven, CT, US 06510
+1 (617) 923-2422

Structural & Lighting
ARUP
77 Water Street
New York, NY, US 10005
+1 (212) 896-3000

MEPF & IT
BuroHappold
100 Broadway #23
New York, NY, US 10005
+1 (212) 616-0228

Civil
VHB
100 Great Oaks Blvd., Suite 118
Albany, NY, US 12203
+1 (518) 389-3606

AV & Acoustics
LSTN Consultants
76 Beaver Street, 2nd Floor
New York, NY, US 10005
+1 (347) 788-0810

Facade
Front Inc.
100 E. Broadway Street, #501
New York, NY, US 10002
+1 (212) 242-2220

Key Plan

Description	Date
Filing Set	06/17/22

Project

Storm King Art Center

C.F.M. Building

Seal

NOT FOR CONSTRUCTION

Drawing Title

Fire Protection Details

Date	06/17/22
Scale	Not to Scale
Drawing Number	FP-C-502
Sheet Size	ARCH D

FP - PUMP SCHEDULE

DESIGNATION	TYPE	QUANTITY	LOCATION	FLOW RATE (GPM) PER PUMP	T.D.H. (FT)	SPEED (RPM)	ELECTRICAL POWER	ELECTRICAL VOLTAGE	ELECTRICAL PHASE	MANUFACTURER	MODEL NUMBER	REMARKS
JP - C-1-1	JOCKEY PUMP	1	LEVEL 01	5 GPM	150	3500	0.75 hp	115 V	1	AURORA PUMP	PVM1-6	ELECTRIC JOCKEY PUMP
SBP - C-1-1	DIESEL SPRINKLER BOOSTER PUMP	1	LEVEL 01	500 GPM	127	1760	37.00 hp	110 V	1	AURORA PUMP	MODEL 4-481-11A	20,000 GALLON TANK EXTERNAL BY STRUCTURAL, 5"SUCTION x 4" DISCHARGE, DIESEL POWERED, CONTROLLER SHALL BE PROVIDED WITH A 110V SINGLE PHASE POWER FAILURE RELAY OR PRESSURE SWITCH, ACTIVATES WHEN SYSTEM DROPS TO 45PSIG

FP - DIESEL HOLDING TANK

DESIGNATION	LOCATION	VOLUME (GAL)	DIMENSIONS HEIGHT (FT)	DIMENSIONS LENGTH (FT)	DIMENSIONS WIDTH (FT)	REMARKS
DT - C-1-1	LEVEL 01	61	21"	21"	56"	DIESEL TANK PROVIDED WITH FIRE PUMP PACKAGE

FP - FIRE WATER TANK

DESIGNATION	LOCATION	VOLUME (GAL)	DIMENSIONS HEIGHT (FT)	DIMENSIONS LENGTH (FT)	DIMENSIONS WIDTH (FT)	REMARKS
FPT - C-1-1	LEVEL 01	20000	8	27	16	BY STRUCTURAL. PROVIDE EMERSIAN HEATER WITH INTEGRAL THERMOSTAT BY WATTCO.

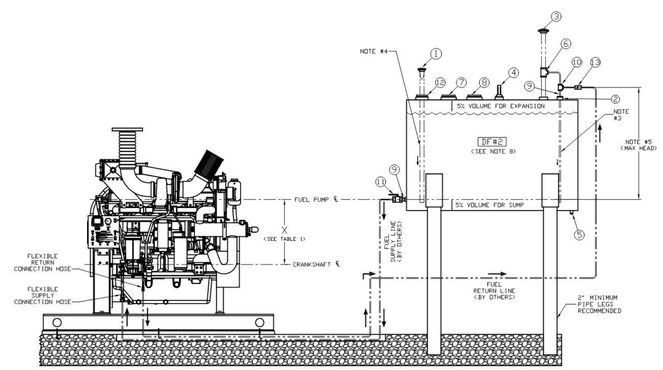

FIRE PUMP SCHEMATIC WITH DIESEL FUEL TANK

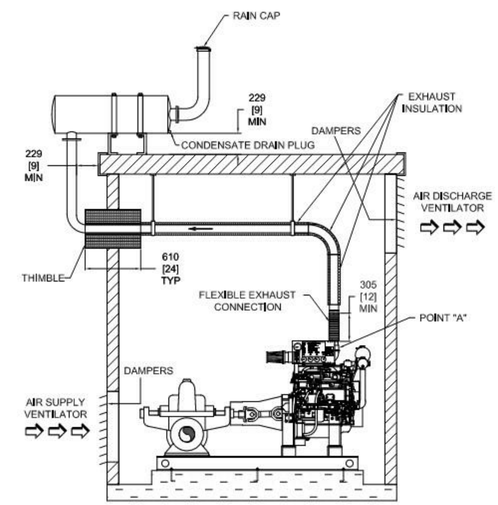

FIRE PUMP EXHAUST SYSTEM SCHEMATIC

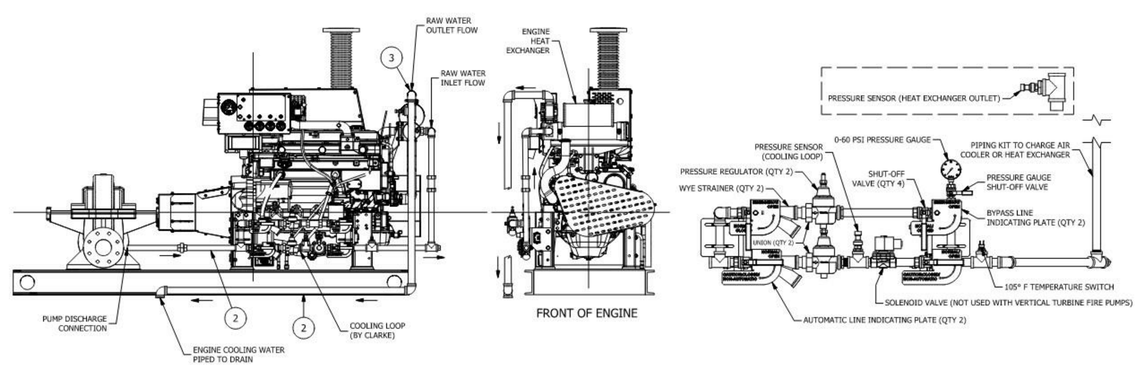

FIRE PUMP WATER COOLING SYSTEM SCHEMATIC

Owner
Storm King Art Center
1 Museum Road
New Windsor, NY 12553
+1 (845) 534-3115

Design Architect
heneghan peng architects
14-16 Lord Edward Street
Dublin, D02 YC63, IE
+353 1 633 9000

Executive Architect
WXY Architecture + Urban Design
224 Centre Street, 5th Floor
New York, NY 10013
+1 (212) 219-1953

Landscape Architect
Gustafson Porter + Bowman
1 Cobham Mews
London, MW1 9SB, UK
+44 020 7284 8950

Reed Hilderbrand LLC
33 Whitney Avenue, 3rd Floor
New Haven, CT, US 06510
+1 (617) 923-2422

Structural & Lighting
ARUP
77 Water Street
New York, NY, US 10005
+1 (212) 896-3000

MEPF & IT
BuroHappold
100 Broadway #23
New York, NY, US 10005
+1 (212) 616-0228

Civil
VHB
100 Great Oaks Blvd., Suite 118
Albany, NY, US 12203
+1 (518) 389-3606

AV & Acoustics
LSTN Consultants
76 Beaver Street, 2nd Floor
New York, NY, US 10005
+1 (347) 788-0810

Facade
Front Inc.
100 E. Broadway Street, #501
New York, NY, US 10002
+1 (212) 242-2220

Key Plan

Description	Date
Filing Set	06/17/22

Project

Storm King Art Center

C.F.M. Building

Seal

NOT FOR CONSTRUCTION

Drawing Title

Fire Protection Schedules

Date	06/17/22
Scale	Not to Scale
Drawing Number	FP-C-601
Sheet Size	ARCH D

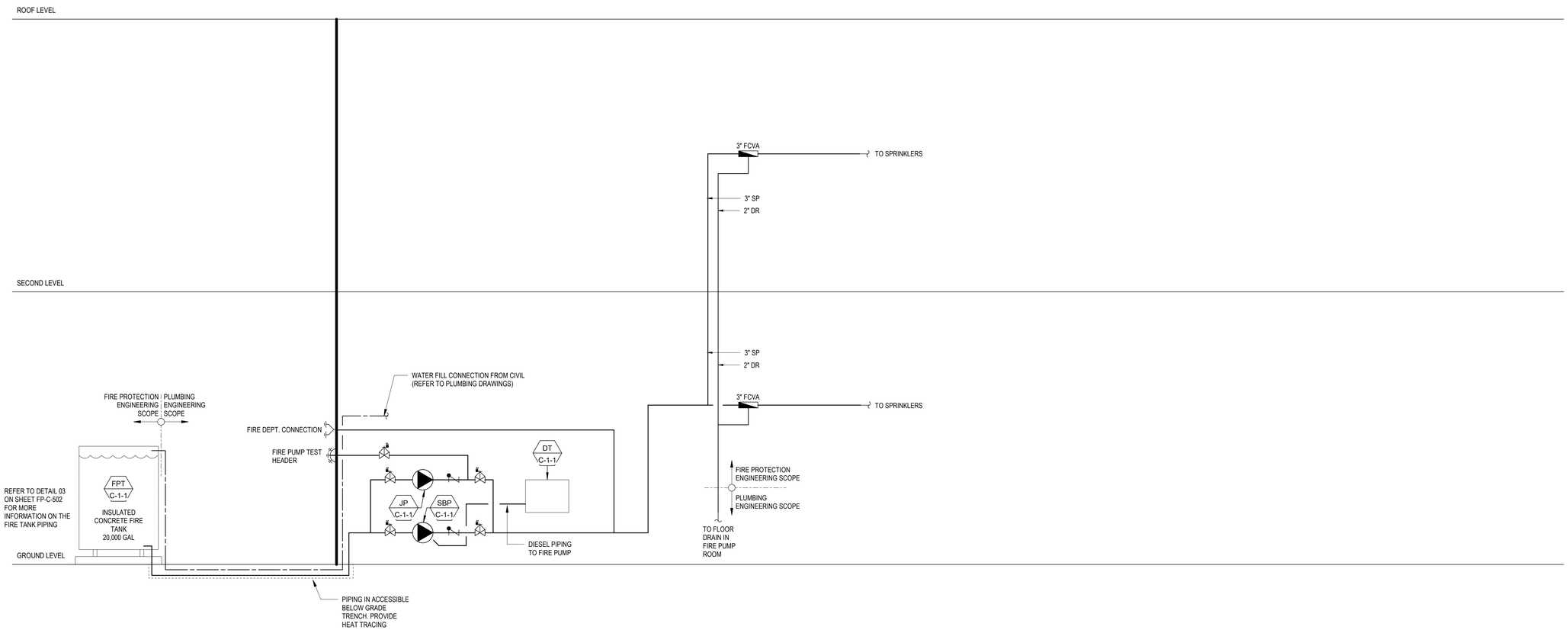

Owner
Storm King Art Center
1 Museum Road
New Windsor, NY 12553
+1 (845) 534-3115

Design Architect
heneghan peng architects
14-16 Lord Edward Street
Dublin, D02 YC63, IE
+353 1 633 9000

Executive Architect
WXY Architecture + Urban Design
224 Centre Street, 5th Floor
New York, NY 10013
+1 (212) 219-1953

Landscape Architect
Gustafson Porter + Bowman
1 Cobham Mews
London, MW1 9SB, UK
+44 020 7284 8950

Reed Hilderbrand LLC
33 Whitney Avenue, 3rd Floor
New Haven, CT, US 06510
+1 (617) 923-2422

Structural & Lighting
ARUP
77 Water Street
New York, NY, US 10005
+1 (212) 896-3000

MEPF & IT
BuroHappold
100 Broadway #23
New York, NY, US 10005
+1 (212) 616-0228

Civil
VHB
100 Great Oaks Blvd., Suite 118
Albany, NY, US 12203
+1 (518) 389-3606

AV & Acoustics
LSTN Consultants
76 Beaver Street, 2nd Floor
New York, NY, US 10005
+1 (347) 788-0810

Facade
Front Inc.
100 E. Broadway Street, #501
New York, NY, US 10002
+1 (212) 242-2220

Key Plan

Description	Date
Filing Set	06/17/22

Project

Storm King Art Center

C.F.M. Building

Seal

NOT FOR CONSTRUCTION

Drawing Title

Fire Protection Riser

Date	06/17/22
Scale	Not to Scale
Drawing Number	FP-C-701
Sheet Size	ARCH D

ARCHITECTURAL NOTES

1 VERIFY SIZES, DIMENSIONS, AND LOCATIONS WITH ARCHITECTURAL AND INTERIORS DRAWINGS. WHERE CONFLICTS OCCUR, ARCHITECTURAL DRAWINGS TAKE PRECEDENCE.

2 WHERE EXACT DIMENSIONS ARE NOT CALLED FOR, THE SCALE OF THIS DRAWING IS SUFFICIENTLY ACCURATE FOR DETERMINING THE LOCATIONS OF EQUIPMENT. WHERE EXACT DIMENSIONS ARE CALLED FOR, THE REFERENCE SURFACE SHALL BE THE FINAL FINISHED SURFACE INCLUDING ANY ACOUSTIC FINSHES

3 WHERE METAL OR PLASTIC LOUDSPEAKER GRILLES ARE SHOWN INSTALLED IN PAINTED CEILING OR WALL SURFACES, THE GENERAL CONTRACTOR SHALL PAINT THE GRILLES TO MATCH THE ADJACENT SURFACE PRIOR TO ASSEMBLY AND INSTALLATION.

ELECTRICAL NOTES

1 VERIFY SIZES, DIMENSIONS, AND LOCATIONS WITH THE ARCHITECTURAL AND INTERIOR DRAWINGS. WHERE CONFLICTS OCCUR, ARCHITECTURAL DRAWINGS TAKE PRECEDENCE.

2 ALL WORK SHALL BE PERFORMED IN ACCORDANCE WITH NATIONAL, LOCAL, AND OTHER APPLICABLE CODES.

3 ALL AUDIOVISUAL (AV) SYSTEM EQUIPMENT IS FOR REFERENCE ONLY. SUCH EQUIPMENT WILL BE PROVIDED AND INSTALLED BY THE AV INTEGRATOR, NOT THE ELECTRICAL CONTRACTOR. ALL OTHER CONSTRUCTION WORK ON THESE DRAWINGS IS BY THE GENERAL CONTRACTOR, IT CONTRACTOR, OR ELECTRICAL CONTRACTOR, UNLESS OTHERWISE NOTED.

4 WHERE EXACT DIMENSIONS ARE NOT CALLED FOR, THE SCALE OF THIS DRAWING IS SUFFICIENTLY ACCURATE FOR DETERMINING LOCATIONS OF EQUIPMENT, JUNCTION BOXES, OUTLETS, RACEWAY, ETC. WHERE EXACT DIMENSIONS ARE CALLED FOR, THE REFERENCE SURFACE SHALL BE THE FINAL FINISHED SURFACE INCLUDING ANY ACOUSTIC TREATMENT.

5 WHERE POWER, COMMUNICATION, OR AV JUNCTION BOXES MUST COORDINATE WITH FIXED MILLWORK OR ARCHITECTURAL FEATURES, REFER TO THE ARCHITECTURAL DRAWINGS FOR EXACT DIMENSIONS AND DETAILS.

6 WHERE POWER, COMMUNICATION, AND AV JUNCTION BOXES ARE GROUPED TOGETHER AT THE SAME LOCATION AND ELEVATION, INSTALL AS CLOSE TOGETHER AS PHYSICALLY POSSIBLE WITH SUFFICIENT SEPARATION FOR INDIVIDUAL DEVICE COVER PLATES.

7 POWER SOCKET OUTLETS SHOWN ON THESE DRAWINGS ARE SHOWN FOR REFERENCE ONLY AND DEDICATED FOR USE WITH SPECIFIC AV EQUIPMENT. ADDITIONAL UTILITY SOCKET OUTLETS MAY BE INDICATED ON ARCHITECTURAL DRAWINGS OR REQUIRED BY CODE.

8 ALL AV SYSTEM POWER CIRCUITS SHALL BE PROTECTED BY 20AMP BREAKERS UNLESS OTHERWISE NOTED.

9 WHERE DUPLEX AND QUAD POWER SOCKET OUTLETS ARE SHOWN ON THESE DRAWINGS WITHOUT REFERENCE TO A SPECIFIC CIRCUIT, PANEL OR ISOLATED EARTH, THESE SOCKET OUTLETS MAY BE POWERED FROM STANDARD BUILDING POWER PANELS AND MAY BE COMBINED WITH OTHER CIRCUITS AND CONVENIENCE SOCKET OUTLETS AS CODES AND GOOD ENGINEERING PRACTICE ALLOW.

10 WHERE POWER CIRCUITS ARE SHOWN TERMINATING IN JUNCTION BOXES WITHOUT RECEPTACLES, THE WIRES SHALL BE TAPED AND THE BOXES COVERED; THESE WILL BE CONNECTED BY THE ELECTRICAL CONTRACTOR DURING THE INSTALLATION
OF SPECIAL AV EQUIPMENT, TO BE COORDINATED WITH THE AV CONTRACTOR.

11 AV SYSTEM POWER CIRCUITS SHALL BE KEPT ISOLATED FROM LIGHTING DIMMERS, LARGE MOTORIZED EQUIPMENT, AND OTHER INDUCTIVE OR 'NOISY' ELECTRICAL LOADS.

12 EMPTY CONDUIT RUNS SHOWN ON THESE DRAWINGS SHOW ONLY INTERCONNECTIONS BETWEEN TERMINATION POINTS. THE EXACT PATH OF THE CONDUIT IS TO BE COORDINATED ON SITE.

13 WHERE POSSIBLE, EMPTY CONDUIT RUNS FOR AV SIGNAL CIRCUITS SHALL BE KEPT 3' FROM PARALLEL POWER CIRCUITS IN RUNS UNDER 80', AND 6FT IN RUNS OVER 80'. AV WIRING, RACEWAYS, AND CONDUIT MUST NOT RUN PARALLEL TO POWER MAINS OF POTENTIAL IN EXCESS OF 600V.

14 ALL EMPTY CONDUIT SHALL BE 3/4" UNLESS OTHERWISE NOTED. ALL CONDUIT SHALL BE EMT, DEBURRED, CLEANED, CAPPED, TAGGED, AND FURNISHED WITH PULL STRINGS.

15 THERE SHALL BE A MINIMUM OF ONE PULL BOX FOR EVERY 100' OF STRAIGHT EMPTY CONDUIT AND EXTRA PULL BOXES FOR EVERY TWO 90 DEGREE BENDS IN A CONDUIT RUN.

16 THE METHOD OF INSTALLATION OF BOXES AND THE PASSAGE OF CONDUIT THROUGH ACOUSTICALLY SENSITIVE WALLS SHALL BE COORDINATED WITH THE ACOUSTICAL CONSULTANT. ELECTRICAL JUNCTION BOXES RECESSED INTO ACOUSTICALLY SENSITIVE WALLS SHALL HAVE THEIR BACKS SEALED WITH AIRTIGHT ADHESIVE OUTLET PADS. JUNCTION BOXES PLACED BACK-TO-BACK ON ACOUSTICALLY SENSITIVE WALLS SHALL NOT SHARE THE SAME STUD CAVITY.

AUDIOVISUAL SHEET LIST

AV-C-001	Audiovisual General Notes
AV-C-002	Audiovisual Schedules
AV-C-101	Audiovisual Plan Ground Level
AV-C-102	Audiovisual Plan Second Level
AV-C-301	Audiovisual Enlarged Plans
AV-C-501	Audiovisual Details
AV-C-601	Audiovisual Functional Diagrams

Owner
Storm King Art Center
1 Museum Road
New Windsor, NY 12553
+1 (845) 534-3115

Design Architect
heneghan peng architects
14-16 Lord Edward Street
Dublin, D02 YC63
+353 1 633 9000

Executive Architect
WXY Architecture + Urban Design
224 Centre Street, 5th Floor
New York, NY 10013
+1 (212) 219-1953

Landscape Architect
Gustafson Porter + Bowman
1 Cobham Mews
London, MW1 9SB
+44 020 7284 8950

Reed Hilderbrand LLC
33 Whitney Avenue, 3rd Floor
New Haven, CT 06510
+1 (617) 923-2422

Structural & Lighting
ARUP
77 Water Street
New York, NY 10005
+1 (212) 896-3000

MEPF & IT
BuroHappold
100 Broadway #23
New York, NY 10005
+1 (212) 616-0228

Civil
VHB
100 Great Oaks Blvd., Suite 118
Albany, NY 12203
+1 (518) 389-3606

AV & Acoustics
LSTN Consultants
76 Beaver Street, 2nd Floor
New York, NY 10005
+1 (347) 788-0810

Facade
Front Inc.
100 E. Broadway Street, #501
New York, NY 10002
+1 (212) 242-2220

Key Plan

Description	Date

Project

Storm King Art Center

C.F.M. Building

Seal

NOT FOR CONSTRUCTION

Drawing Title

Audiovisual General Notes

Date	06/17/22
Scale	Not to Scale
Drawing Number	AV-C-001
Sheet Size	ARCH D

AUDIOVISUAL INFRASTRUCTURE SCHEDULE							
INFRASTRUCTURE MARK	DESCRIPTION	SPECIFICATION	MOUNTING HEIGHT	FLUSH/SURFACE	CONDUIT	POWER	DATA
FB-B	FLOOR BOX	FSR FL-500P	0' - 0"	FLUSH	(1) 1" TO LOCAL FP-B	(1) DUPLEX, 500W	(2) PORTS
FP-B	BACK BOX FOR FLAT PANEL DISPLAY	CHIEF PAC526F	5' - 0"	FLUSH	N/A	(1) DUPLEX, 500W	(2) PORTS

AUDIOVISUAL EQUIPMENT SCHEDULE	
EQUIP MARK	DESCRIPTION
FPD-65	FLAT PANEL DISPLAY, 65" DIAGONAL

Owner
Storm King Art Center
1 Museum Road
New Windsor, NY 12553
+1 (845) 534-3115

Design Architect
heneghan peng architects
14-16 Lord Edward Street
Dublin, D02 YC63
+353 1 633 9000

Executive Architect
WXY Architecture + Urban Design
224 Centre Street, 5th Floor
New York, NY 10013
+1 (212) 219-1953

Landscape Architect
Gustafson Porter + Bowman
1 Cobham Mews
London, MW1 9SB
+44 020 7284 8950

Reed Hilderbrand LLC
33 Whitney Avenue, 3rd Floor
New Haven, CT 06510
+1 (617) 923-2422

Structural & Lighting
ARUP
77 Water Street
New York, NY 10005
+1 (212) 896-3000

MEPF & IT
BuroHappold
100 Broadway #23
New York, NY 10005
+1 (212) 616-0228

Civil
VHB
100 Great Oaks Blvd., Suite 118
Albany, NY 12203
+1 (518) 389-3606

AV & Acoustics
LSTN Consultants
76 Beaver Street, 2nd Floor
New York, NY 10005
+1 (347) 788-0810

Facade
Front Inc.
100 E. Broadway Street, #501
New York, NY 10002
+1 (212) 242-2220

Key Plan

Description	Date

Project

Storm King Art Center

C.F.M. Building

Seal

NOT FOR CONSTRUCTION

Drawing Title

Audiovisual Schedules

Date	06/17/22
Scale	Not to Scale
Drawing Number	AV-C-002
Sheet Size	ARCH D

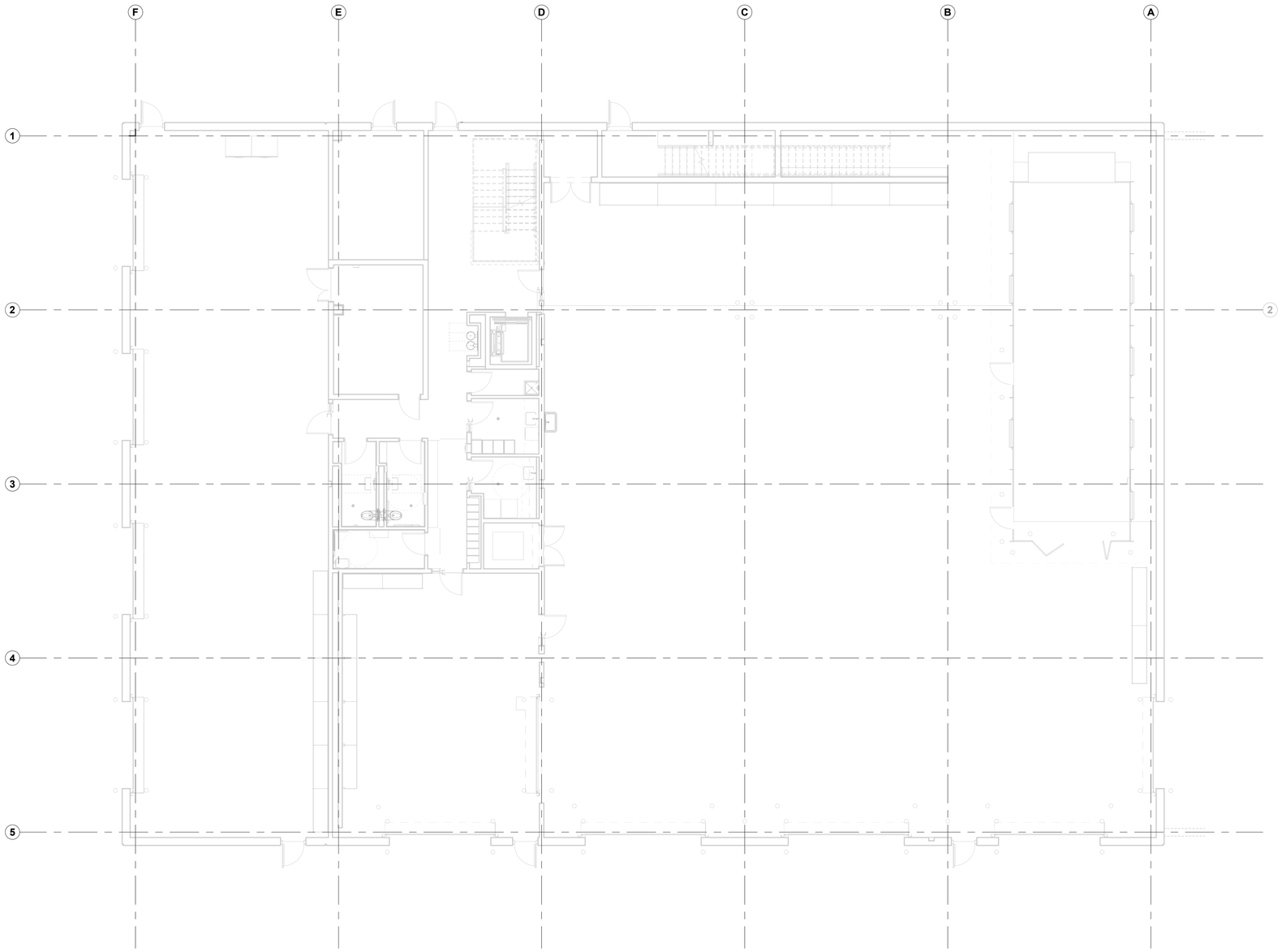

Owner
Storm King Art Center
1 Museum Road
New Windsor, NY 12553
+1 (845) 534-3115

Design Architect
heneghan peng architects
14-16 Lord Edward Street
Dublin, D02 YC63
+353 1 633 9000

Executive Architect
WXY Architecture + Urban Design
224 Centre Street, 5th Floor
New York, NY 10013
+1 (212) 219-1953

Landscape Architect
Gustafson Porter + Bowman
1 Cobham Mews
London, MW1 9SB
+44 020 7284 8950

Reed Hilderbrand LLC
33 Whitney Avenue, 3rd Floor
New Haven, CT 06510
+1 (617) 923-2422

Structural & Lighting
ARUP
77 Water Street
New York, NY 10005
+1 (212) 896-3000

MEPF & IT
BuroHappold
100 Broadway #23
New York, NY 10005
+1 (212) 616-0228

Civil
VHB
100 Great Oaks Blvd., Suite 118
Albany, NY 12203
+1 (518) 389-3606

AV & Acoustics
LSTN Consultants
76 Beaver Street, 2nd Floor
New York, NY 10005
+1 (347) 788-0810

Facade
Front Inc.
100 E. Broadway Street, #501
New York, NY 10002
+1 (212) 242-2220

Key Plan

N

Description	Date

Project

Storm King Art Center

C.F.M. Building

Seal

NOT FOR CONSTRUCTION

Drawing Title

Audiovisual Plan Ground Level

Date	06/17/22
Scale	1/8" = 1'-0"
Drawing Number	AV-C-101
Sheet Size	ARCH D

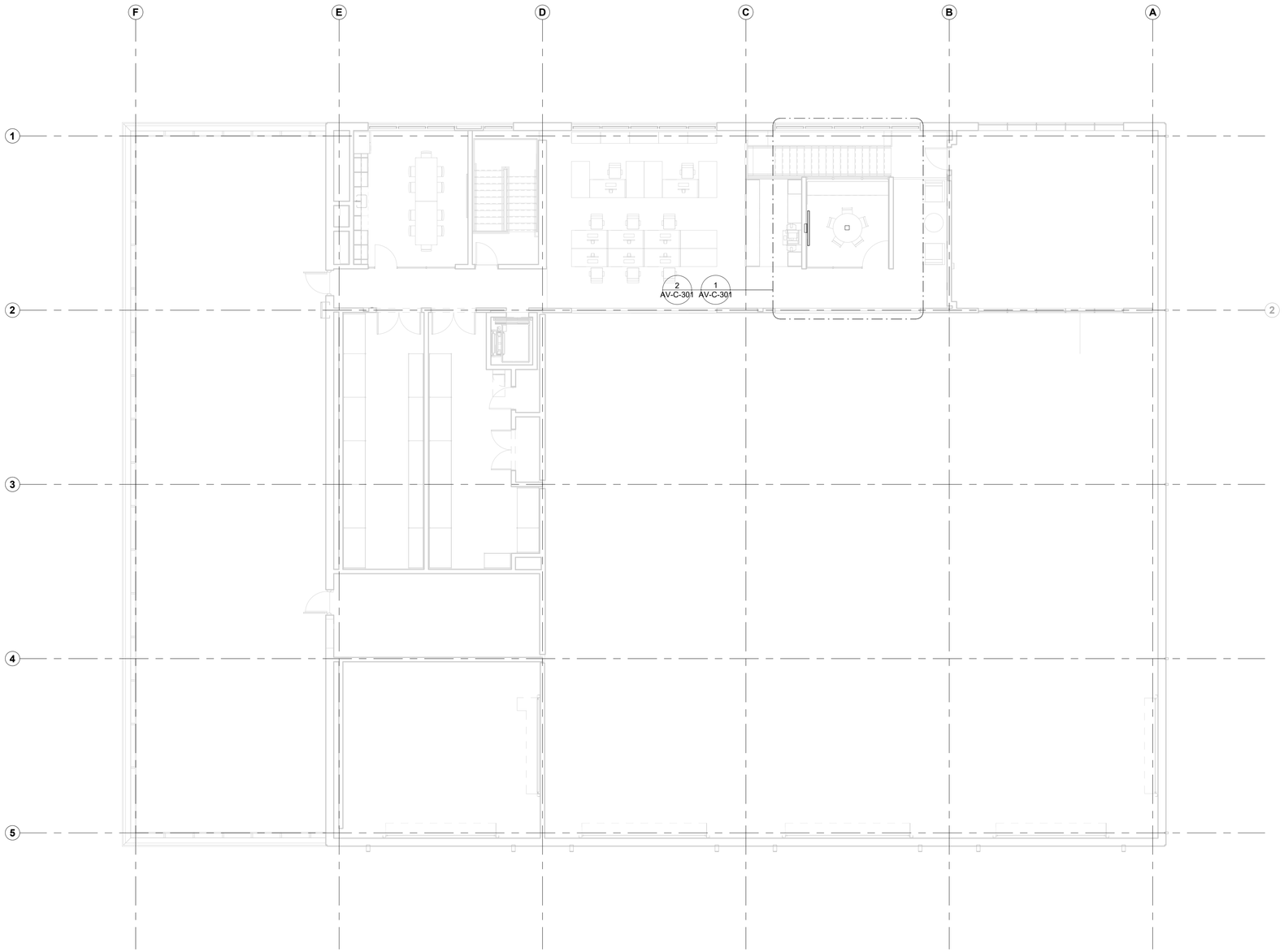

Owner
Storm King Art Center
1 Museum Road
New Windsor, NY 12553
+1 (845) 534-3115

Design Architect
heneghan peng architects
14-16 Lord Edward Street
Dublin, D02 YC63
+353 1 633 9000

Executive Architect
WXY Architecture + Urban Design
224 Centre Street, 5th Floor
New York, NY 10013
+1 (212) 219-1953

Landscape Architect
Gustafson Porter + Bowman
1 Cobham Mews
London, MW1 9SB
+44 020 7284 8950

Reed Hilderbrand LLC
33 Whitney Avenue, 3rd Floor
New Haven, CT 06510
+1 (617) 923-2422

Structural & Lighting
ARUP
77 Water Street
New York, NY 10005
+1 (212) 896-3000

MEPF & IT
BuroHappold
100 Broadway #23
New York, NY 10005
+1 (212) 616-0228

Civil
VHB
100 Great Oaks Blvd., Suite 118
Albany, NY 12203
+1 (518) 389-3606

AV & Acoustics
LSTN Consultants
76 Beaver Street, 2nd Floor
New York, NY 10005
+1 (347) 788-0810

Facade
Front Inc.
100 E. Broadway Street, #501
New York, NY 10002
+1 (212) 242-2220

Key Plan

N

Description	Date

Project

Storm King Art Center

C.F.M. Building

Seal

NOT FOR CONSTRUCTION

Drawing Title

Audiovisual Plan Second Level

Date	06/17/22
Scale	1/8" = 1'-0"
Drawing Number	AV-C-102
Sheet Size	ARCH D

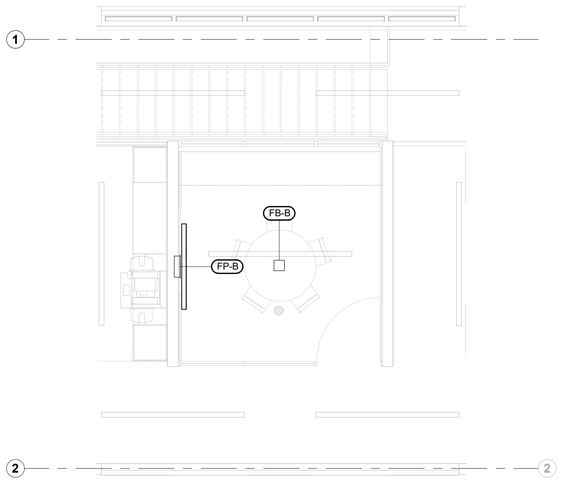

1 AV ENLARGED INFRASTUCTURE PLAN - 208
1/4" = 1'-0"

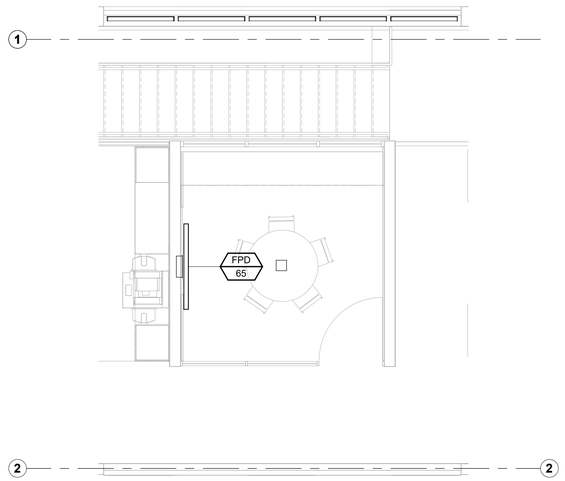

2 AV ENLARGED EQUIPMENT PLAN - 208
1/4" = 1'-0"

SYMBOL	DESCRIPTION
XX	AV INFRASTRUCTURE (BACKBOX) SYMBOL
YYY ###	AV EQUIPMENT SYMBOL

Owner
Storm King Art Center
1 Museum Road
New Windsor, NY 12553
+1 (845) 534-3115

Design Architect
heneghan peng architects
14-16 Lord Edward Street
Dublin, D02 YC63
+353 1 633 9000

Executive Architect
WXY Architecture + Urban Design
224 Centre Street, 5th Floor
New York, NY 10013
+1 (212) 219-1953

Landscape Architect
Gustafson Porter + Bowman
1 Cobham Mews
London, MW1 9SB
+44 020 7284 8950

Reed Hilderbrand LLC
33 Whitney Avenue, 3rd Floor
New Haven, CT 06510
+1 (617) 923-2422

Structural & Lighting
ARUP
77 Water Street
New York, NY 10005
+1 (212) 896-3000

MEPF & IT
BuroHappold
100 Broadway #23
New York, NY 10005
+1 (212) 616-0228

Civil
VHB
100 Great Oaks Blvd., Suite 118
Albany, NY 12203
+1 (518) 389-3606

AV & Acoustics
LSTN Consultants
76 Beaver Street, 2nd Floor
New York, NY 10005
+1 (347) 788-0810

Facade
Front Inc.
100 E. Broadway Street, #501
New York, NY 10002
+1 (212) 242-2220

Key Plan

Description	Date

Project

Storm King Art Center

C.F.M. Building

Seal

NOT FOR CONSTRUCTION

Drawing Title

Audiovisual Enlarged Plans

Date	06/17/22
Scale	1/4" = 1'-0"
Drawing Number	AV-C-301
Sheet Size	ARCH D

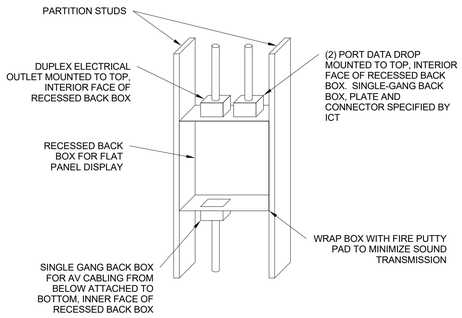

1 TYPICAL FLAT PANEL DISPLAY BACK BOX
1" = 1'-0"

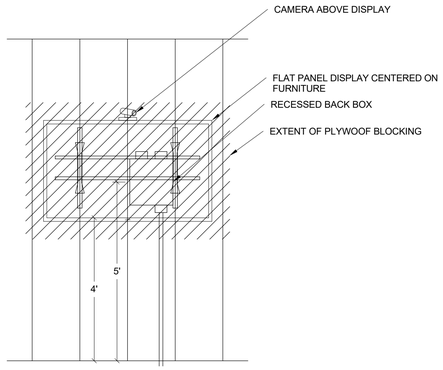

2 TYPICAL FLAT PANEL DISPLAY ELEVATION
1/2" = 1'-0"

Owner
Storm King Art Center
1 Museum Road
New Windsor, NY 12553
+1 (845) 534-3115

Design Architect
heneghan peng architects
14-16 Lord Edward Street
Dublin, D02 YC63
+353 1 633 9000

Executive Architect
WXY Architecture + Urban Design
224 Centre Street, 5th Floor
New York, NY 10013
+1 (212) 219-1953

Landscape Architect
Gustafson Porter + Bowman
1 Cobham Mews
London, MW1 9SB
+44 020 7284 8950

Reed Hilderbrand LLC
33 Whitney Avenue, 3rd Floor
New Haven, CT 06510
+1 (617) 923-2422

Structural & Lighting
ARUP
77 Water Street
New York, NY 10005
+1 (212) 896-3000

MEPF & IT
BuroHappold
100 Broadway #23
New York, NY 10005
+1 (212) 616-0228

Civil
VHB
100 Great Oaks Blvd., Suite 118
Albany, NY 12203
+1 (518) 389-3606

AV & Acoustics
LSTN Consultants
76 Beaver Street, 2nd Floor
New York, NY 10005
+1 (347) 788-0810

Facade
Front Inc.
100 E. Broadway Street, #501
New York, NY 10002
+1 (212) 242-2220

Key Plan

Description	Date

Project

Storm King Art Center

C.F.M. Building

Seal

NOT FOR CONSTRUCTION

Drawing Title

Audiovisual Details

Date	06/17/22
Scale	As indicated
Drawing Number	AV-C-501
Sheet Size	ARCH D

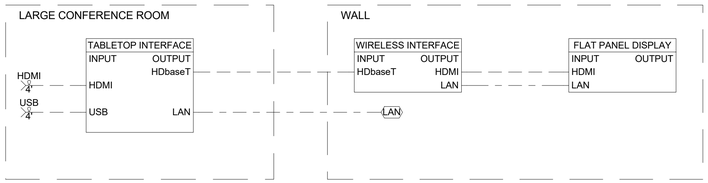

1 SMALL/MEDIUM MEETING (TYP)
12" = 1'-0"

Owner
Storm King Art Center
1 Museum Road
New Windsor, NY 12553
+1 (845) 534-3115

Design Architect
heneghan peng architects
14-16 Lord Edward Street
Dublin, D02 YC63
+353 1 633 9000

Executive Architect
WXY Architecture + Urban Design
224 Centre Street, 5th Floor
New York, NY 10013
+1 (212) 219-1953

Landscape Architect
Gustafson Porter + Bowman
1 Cobham Mews
London, MW1 9SB
+44 020 7284 8950

Reed Hilderbrand LLC
33 Whitney Avenue, 3rd Floor
New Haven, CT 06510
+1 (617) 923-2422

Structural & Lighting
ARUP
77 Water Street
New York, NY 10005
+1 (212) 896-3000

MEPF & IT
BuroHappold
100 Broadway #23
New York, NY 10005
+1 (212) 616-0228

Civil
VHB
100 Great Oaks Blvd., Suite 118
Albany, NY 12203
+1 (518) 389-3606

AV & Acoustics
LSTN Consultants
76 Beaver Street, 2nd Floor
New York, NY 10005
+1 (347) 788-0810

Facade
Front Inc.
100 E. Broadway Street, #501
New York, NY 10002
+1 (212) 242-2220

Key Plan

Description	Date

Project

Storm King Art Center

C.F.M. Building

Seal

NOT FOR CONSTRUCTION

Drawing Title

Audiovisual Functional Diagrams

Date	06/17/22
Scale	12" = 1'-0"
Drawing Number	AV-C-601
Sheet Size	ARCH D

GENERAL NOTES

1.	PROVIDE ELECTRICAL METALLIC TUBING (EMT) SLEEVES WITH INSULATED BUSHINGS ON EACH END FOR ALL CABLES PASSING THROUGH WALLS AND FLOORS. ALL PENETRATIONS SHALL BE FIRESTOPPED BY ELECTRICAL CONTRACTOR. ALL PENETRATIONS THROUGH RATED WALLS SHALL BE FIRESTOPPED. SEAL AROUND OUTSIDE OF CONDUITS AND SEAL INSIDE OF CONDUIT SLEEVES AS REGISTERED BY APPLICABLE CODES AND STANDARDS. APPLY SEALS AFTER WIRE/CABLE INSTALLATION.
2.	DO NOT ROUTE CONDUITS CONCEALED IN ABOVE GRADE SLABS. CONDUITS SHALL BE ROUTED EXPOSED AND SECURED TO THE SLAB AND STUBBED THROUGH TO THE EQUIPMENT BEING SERVED.
3.	CONDUIT AND BOX LABELS SHALL BE HEAVY-DUTY PRE-PRINTED LAMINATED LABELS SUITABLE FOR THE ENVIRONMENT THE LABEL WILL RESIDE WITHIN. HAND-WRITTEN LABELS SHALL NOT BE PERMITTED.
4.	CONTRACTOR SHALL INSTALL AND MOUNT ALL EQUIPMENT CABINETS AND RACKS PER MANUFACTURERS AND SEISMIC REQUIREMENTS.
5.	ALL EXPOSED CONDUIT, BOXES, SUPPORTING HARDWARE, ETC. LOCATED IN FINISHED AREAS SHALL BE PAINTED TO MATCH. COORDINATE FINISH WITH ARCHITECT.
6.	PROVIDE ACCESS PANEL IN CONCEALED CEILINGS FOR ACCESS TO ELECTRICAL MATERIAL AND EQUIPMENT. COORDINATE ACCESS PANEL LOCATIONS WITH ARCHITECT AND OTHER TRADES PRIOR TO INSTALLATION.
7.	REFER TO T-SERIES SHEETS FOR OUTLET BOX LOCATIONS. REFER TO S-SERIES DRAWINGS FOR CCTV CAMERA LOCATIONS THAT REQUIRE STRUCTURED CABLING INFRASTRUCTURE.
8.	ALL LOW VOLTAGE OUTLETS SHALL BE COORDINATED WITH ARCHITECT.
9.	COORDINATE CONDUIT LOCATIONS (VERTICALLY & HORIZONTALLY) OUTSIDE THE TELECOM ROOM WITH CABLE TRAY/LADDER RACK LOCATIONS INSIDE THE TELECOM ROOM.
10.	ELECTRICAL SCOPE: CONTRACTOR SHALL FURNISH AND INSTALL CONDUITS/RISER, CABLE TRAYS, JUNCTION BOXES, AND OUTLET BOXES.
11.	TELECOM SCOPE: CONTRACTOR SHALL FURNISH AND INSTALL STRUCTURED CABLES, JACKS, RACKS, EQUIPMENT, CABINETS, TERMINATION AND TESTING PER EIA STANDARDS. PROVIDE 20' SLACK AT WIRELESS ACCESS POINT TO RELOCATE FINAL LOCATION BASED ON SITE CONDITIONS.

CONDUIT FILL GUIDE

NUMBER OF CABLES AT 40% CONDUIT FILL BASED ON TRADE SIZE OF CONDUIT.

CABLE	TYPE	O.D.	0.75"	1"	1.25"	1.5"	2"	2.5"	3"	3.5"	4"
CAT6A	4 PAIR UTP	0.295	2	4	7	10	18	28	41	56	73
CAT6E	4 PAIR UTP	0.244	3	6	10	15	27	42	60	82	107
CAT6e	4 PAIR UTP	0.228	4	7	12	17	30	48	69	94	123
CAT6	4 PAIR F/UTP	0.255	3	6	9	14	24	38	55	75	98
CAT6	4 PAIR UTP	0.208	5	9	14	21	37	57	83	113	148
CAT5E	4 PAIR UTP	0.190	6	11	17	25	44	69	99	135	177
CAT5E	4 PAIR F/UTP	0.224	4	8	12	18	32	50	71	97	127
CAT5e	4 PAIR UTP	0.180	7	12	19	27	49	77	111	151	197
CAT5e	4 PAIR F/UTP	0.218	4	8	13	19	33	52	75	103	134
CAT5e	25 PAIR UTP	0.430	1	2	3	5	8	13	19	26	34
CAT5e	25 PAIR F/UTP	0.472	1	1	2	4	7	11	16	22	28
CAT5	4 PAIR UTP	0.180	7	12	19	27	49	77	111	151	197
CAT5	4 PAIR F/UTP	0.230	4	7	12	17	30	47	68	92	121
CAT5	25 PAIR UTP	0.430	1	2	3	5	8	13	19	26	34
CAT5	25 PAIR F/UTP	0.472	1	1	2	4	7	11	16	22	28

CABLE TRAY FILL GUIDE

CABLE TRAY HEIGHT X WIDTH	CAT 5e FILL RATIO AT:		CAT 6 FILL RATIO AT:		CAT 6A FILL RATIO AT:	
	25%	40%	25%	40%	25%	40%
2" X 4"	33	52	21	34	15	23
2" X 6"	49	79	32	50	22	35
2" X 8"	66	106	42	68	29	47
2" X 12"	99	158	63	101	44	70
2" X 16"	133	213	85	136	59	94
2" X 18"	150	239	96	153	67	106
2" X 20"	166	266	107	170	74	118
2" X 24"	200	320	128	204	89	142
4" X 4"	62	21	40	64	28	44
4" X 6"	94	150	60	96	42	67
4" X 8"	126	201	81	129	56	90
4" X 12"	188	300	120	192	84	134
4" X 16"	253	405	162	259	113	180
4" X 18"	285	456	182	292	127	202
4" X 20"	317	507	203	324	141	225
4" X 24"	381	609	244	390	169	270
6" X 8"	189	302	121	193	84	134
6" X 12"	282	451	180	288	125	200
6" X 16"	380	607	243	389	169	270
6" X 18"	427	684	274	438	190	304
6" X 20"	475	760	304	486	211	338
6" X 24"	571	913	365	584	254	406

GENERAL SYMBOLS

SYMBOL	DESCRIPTION
X	KEYNOTE IDENTIFIER X - KEYNOTE NUMBER
X	REVISION CHANGE X - DELTA NUMBER
X / TXXX	DETAIL/ENLARGED PLAN CALLOUT X - DETAIL/REFERENCE# TXXX - SHEET #
X / TXXX	SECTION IDENTIFIER X - SECTION # TXXX - SHEET #

CONDUIT AND CABLE TRAY

	CONDUIT CONCEALED IN CEILING OR WALL.
	CONDUIT CONCEALED UNDER FLOOR OR UNDERGROUND
	CONDUIT TURNING UP
	CONDUIT TURNING DOWN
	CONDUIT STUB WITH CAP
CSB	CABLE SUPPORT BOX
	TELECOM CABLE TRAY, REFER TO T-SERIES SHEETS FOR SIZE, UON. COORDINATE LOCATION WITH DUCTWORK, PLUMBING, FIRE PROTECTION, ELECTRICAL, AND LIGHT FIXTURES.

TELECOM DEVICES

IP INT	WALL MOUNTED SINGLE TELECOM OUTLET AT 48" AFF UON. PROVIDE A 5S BACKBOX WITH SINGLE GANG MUD RING. PROVIDE (1) CAT6A IN 1-1/4" CONDUIT TO NEAREST CABLE TRAY OR RUN DIRECT TO TELECOM ROOM. PROVIDE NON-METALLIC BUSHING ON END OF CONDUIT. IP = IP PHONE INT = INTERCOM
BMS SM	WALL MOUNTED SINGLE TELECOM OUTLET AT 18" AFF UON - REFER TO ELECTRICAL FOR BOX TYPE. PROVIDE (1) CAT6A IN 1-1/4" CONDUIT TO NEAREST CABLE TRAY OR RUN DIRECT TO TELECOM ROOM. PROVIDE NON-METALLIC BUSHING ON END OF CONDUIT. BMS = CONNECTION FOR BULDING MANAGEMENT SYSTEM SM = CONNECTION FOR SMART METER
	WALL MOUNTED DUPLEX TELECOM OUTLET AT 18" AFF UON, - REFER TO ELECTRICAL FOR BOX TYPE. PROVIDE (2) CAT6A IN 1-1/4" CONDUIT TO NEAREST CABLE TRAY OR RUN DIRECT TO TELECOM ROOM PROVIDE NON-METALLIC BUSHING ON END OF CONDUIT.
# FA AV WP	AS ABOVE, WHERE # = NUMBER OF PORTS (3, 5, ETC.) FA = ANALOG LINE FOR FIRE ALARM AV = OUTLET DEDICATED FOR AV WP = WEATHERPROOF OUTLET
WAP	CEILING MOUNTED WIRELESS ACCESS POINT WITH 5S BACK BOX ABOVE CEILING. PROVIDE (2) CAT6A IN 1-1/4" CONDUIT TO NEAREST TELECOM ROOM. CONTRACTOR SHALL COORDINATE MOUNTING OPTIONS WITH ARCHITECT
WAP	WALL MOUNTED WIRELESS ACCESS POINT. PROVIDE (2) CAT6A IN 1-1/4" CONDUIT TO NEAREST TELECOM ROOM. CONTRACTOR SHALL COORDINATE MOUNTING OPTIONS WITH ARCHITECT
#	MULTI-SERVICE FLOOR BOX/CAST - REFER TO ELECTRICAL AND AV PLANS FOR FLOOR BOX TYPE. PROVIDE ONE (4) DATA PORT, UNLESS OTHERWISE NOTED ON PLANS, VIA CAT6A IN 1-1/4" CONDUIT TO NEAREST TELECOM ROOM. # = NUMBER OF PORTS
J	JUNCTION BOX/FLOOR FEED BOX - AV AND TELECOM MAY BE COMBINED IN SAME BOX. PROVIDE METALLIC BARRIER WHEN POWER CIRCUITS ARE FED BY BOX. COORDINATE WITH ELECTRICAL AND AV.

TELECOMMUNICATIONS ABBREVIATIONS

A	ACCESS CONTROL SYSTEM USE	LS	LOUDSPEAKER
AC	ALTERNATING CURRENT	LTG	LIGHTING
AFF	ABOVE FINISHED FLOOR	MA	MILLIAMPS
AFG	ABOVE FINISHED GRADE	MAX	MAXIMUM
AIR COND	AIR CONDITIONING	MDF	MAIN DISTRIBUTION FRAME
ARCH	ARCHITECTURAL	MECH	MECHANICAL/ELECTRICAL/PLUMBING
AV	AUDIOVISUAL	MIC	MICROPHONE
AVG	AVERAGE	MIN	MINIMUM
AWG	AMERICAN WIRE GAUGE	MISC	MISCELLANEOUS
BL	BLANK	MTD	MOUNTED
BLDG.	BUILDING	NA	NOT APPLICABLE
B.O.	BY OTHERS	NEC	NATIONAL ELECTRICAL CODE
C	CENTER LINE	NEMA	NATIONAL ELECTRICAL MANUFACTURERS ASSOCIATION
CATV	CABLE TELEVISION	NO	NUMBER
CCTV	CLOSED CIRCUIT TELEVISION	NTS	NOT TO SCALE
CKT	CIRCUIT	OD	OUTSIDE DIAMETER
CLG	CEILING	PB	PULL BOX
CLOS	CLOSET	PBX	PRIVATE BRANCH EXCHANGE
CM	CIRCUIT MIL	PCU	POWER CONDITIONING UNIT
COAX	COAXIAL CABLE	PDU	POWER DISTRIBUTION UNIT
COL	COLUMN	PG	PAGING
CONC	CONCRETE	PH	PHASE
COND	CONDUIT	PLB	PLUMBING
CONST	CONSTRUCTION	PNL	PANEL
CONT	CONTINUOUS	PSU	POWER SUPPLY UNIT
CONV	CONVENIENCE	PWR	POWER
DC	DIRECT CURRENT	RDP	RESIDENTIAL DISTRIBUTION PANEL
DIA	DIAMETER	RCP	REFLECTED CEILING PLAN
DN	DOWN	RECP	RECEPTACLE
DTL	DETAIL	REQ	REQUIRED
DSS	DISH SATELLITE SYSTEM	RMS	RACK MOUNTED SPACES
DWG	DRAWING	S	SECURITY
EA	EACH	SEC	SECURITY
EMT	ELECTRO MECHANICAL TUBING	SEP	SEPARATE
E.C.	ELECTRICAL CONTRACTOR	SPECS	SPECIFICATIONS
EIA/TIA	ELECTRONIC INDUSTRIES ASSOCIATION	SPKLR	SPRINKLER
EL	ELEVATION	SPKR	SPEAKER
ELEC	ELECTRIC	STA	STATION
ELEV	ELEVATOR	STD	STANDARD
EM	EMERGENCY USE DESIGNATION	STP	SHIELDING TWISTED PAIR
EQ	EQUAL	SURF	SURFACE
EQUIP	EQUIPMENT	SYM	SYMMETRICAL
EXIST	EXISTING	TBD	TO BE DETERMINED
F	FLOOR	TEL	TELEPHONE
FA	FIRE ALARM	TERM	TERMINATION
F&I	FURNISH & INSTALL	TELCO	TELEPHONE COMPANY
FIN	FINISH	TV	TELEVISION
F.O.	FIBER OPTIC	TYP	TYPICAL
FT	FEET	UFD	UNDER FLOOR DUCT
GA	GAUGE	UON	UNLESS OTHERWISE NOTED
G.C.	GENERAL CONTRACTOR	UPS	UNINTERRUPTIBLE POWER SUPPLY
GD	GROUND	UTP	UNSHIELDED TWISTED PAIR
HGT	HEIGHT	V	VOLTS
HOR	HORIZONTAL	VA	VOLT-AMPERES
HVAC	HEATING DISTRIBUTION FRAME	VENT	VENTILATING
IOIP	INTERCOM OVER INTERNET PROTOCOL (IP)	VERT	VERTICAL
IDF	INTERMEDIATE DISTRIBUTION FRAME	VIF	VERIFY IN FIELD
IN	INCHES	W	WATTS
INT	INTERCOM	W/	WITH
ISP	INTERNET SERVICE PROVIDER	W/O	WITHOUT
JBOX	JUNCTION BOX	WKSTA	WORKSTATION

ELECTRICAL NOTES FOR TELECOM

1.	ALL ELECTRICAL RECEPTACLES, GROUND BARS, CONDUITS, FLOOR BOXES, RACEWAYS, STEEL STRUT, AND SLEEVES ARE TO BE FURNISHED AND INSTALLED BY THE ELECTRICAL CONTRACTOR AS OUTLINED BELOW.
2.	PULL-BOXES FOR COMMUNICATIONS SYSTEMS SHALL BE PROVIDED WHERE THE COMBINED SUM OF THE BENDS EXCEEDS 180 DEGREES.
3.	THE BEND RADIUS FOR COMMUNICATIONS CONDUITS SHALL BE 10 TIMES THE INSIDE DIAMETER OF THE CONDUITS. FOR CONDUITS GREATER THAN 2" IN DIAMETER.
4.	CONDUIT RUNS FOR COMMUNICATIONS CABLING SHALL NOT EXCEED 90 FEET WITHOUT A PULL-BOX.
5.	JUNCTION BOXES FOR COMMUNICATIONS CABLING SHALL HAVE TAMPER-PROOF SCREWS.
6.	INCLUDE ALL REQUIRED JUNCTION AND PULL-BOXES REGARDLESS OF QUANTITIES INDICATED ON THE DRAWINGS.
7.	ALL EMPTY CONDUITS ARE TO BE PROVIDED WITH A MINIMUM OF (2) NYLON DRAG LINES OR PULL STRINGS, AND FITTED WITH BUSHED ENDS.
8.	PROVIDE PULL-BOXES ON ALL VERTICAL RISER CONDUIT RUNS REGARDLESS OF THE DRAWING INTERVALS. NO GREATER THAN 50FT. PULL-BOX AND JUNCTION-BOX SIZES ARE SHOWN FOR COORDINATION PURPOSES ONLY. ELECTRICAL CONTRACTOR TO SIZE PULL-BOXES AND JUNCTION-BOXES IN ACCORDANCE WITH FIELD CONDITIONS, AND EQUIPMENT STANDARDS.
9.	ALL CABLE TRAY, LADDER RACKS, AND STEEL STRUTS SHALL BE FURNISHED AND INSTALLED BY THE ELECTRICAL CONTRACTOR.
10.	REGARDLESS OF THEIR REPRESENTATION ON THE FLOOR PLANS, SLEEVES (EZPATH OR EQUIV.) SHALL BE PROVIDED AT ALL LOCATIONS WHERE CABLE PASSES THROUGH FIRE-RATED WALLS OR FLOORS. EXACT LOCATIONS SHALL BE COORDINATED BETWEEN THE COMMUNICATIONS CABLING CONTRACTOR AND THE ELECTRICAL CONTRACTOR. OPENING SIZES SHALL BE NO LESS THAN 1.5 TIMES THE CABLE CROSS SECTION PASSING THROUGH THE OPENING.
11.	ELECTRICAL CONTRACTOR TO COORDINATE CABLE TRAY, LADDER RACKS, AND/OR STEEL STRUT SUPPORT SYSTEM LOCATIONS WITH COMMUNICATIONS CABLING CONTRACTOR.
12.	COORDINATE CONDUIT LOCATIONS (VERTICALLY & HORIZONTALLY) OUTSIDE THE TELECOM ROOM WITH CABLE TRAY/LADDER RACK LOCATIONS INSIDE THE TELECOM ROOM.
13.	DEDICATED ELECTRICAL CIRCUITS SHALL BE PROVIDED FOR EACH COMMUNICATIONS CABINET OR RACK AS NOTED ON THE TELECOM ROOM DRAWING.
14.	ALL VOICE/DATA INFORMATION OUTLET BOXES SHALL BE 4 11/16" x 4 11/16" x 2 1/8" DEEP W/ 1/2" DEEP SINGLE GANG ADJUSTABLE MUD RING AND 1-1/4" CONDUIT TO NEAREST ACCESSIBLE CEILING UNLESS OTHERWISE NOTED.
15.	CONDUITS USED TO FEED COMMUNICATIONS WORKSTATIONS IN INACCESSIBLE CEILING AREAS SHALL BE EXTENDED TO NEAREST ACCESSIBLE CEILING AREA.
16.	FLOOR BOXES SHALL HAVE ONE (1) 1-1/4" CONDUIT EXTENDED TO ACCESSIBLE CEILING FOR COMMUNICATIONS CABLING. ADDITIONAL CONDUITS MAY BE REQUIRED TO SUPPORT A/V OR OTHER SYSTEMS CABLING AND ARE NOTED ON THE FLOOR PLANS.
17.	ALL EXTERNAL COMMUNICATIONS OUTLETS ARE TO BE INSTALLED IN A WEATHERPROOF ELECTRICAL BOX WITH A WEATHERPROOF-WHILE-IN-USE COVER. CONDUIT BY ELECTRICAL CONTRACTOR FOR ALL EXTERIOR LOCATIONS TO NEAREST IDF LOCATION.

MDF/IDF NOTES

1.	ALL COORDINATION IN THE CEILING OF THE TELECOM ROOM SHALL BE THE RESPONSIBILITY OF THE GENERAL CONTRACTOR.
2.	TELECOM ROOM SHALL BE PROVIDED WITH EXPOSED CEILINGS UNLESS OTHERWISE NOTED.
3.	ANY EXPOSED FIREPROOFING WITHIN TELECOM ROOM SHALL BE SEALED TO REDUCE DUST FROM DISLODGED MATERIAL.
4.	CABLE LADDER SHALL BE USED TO SUPPORT CABLES WITHIN THE TELECOM ROOM. LADDER SIZE SHALL BE AS INDICATED ON FLOOR/PART PLANS OR BASED UPON CABLING FILL REQUIREMENTS.
5.	CABLES ROUTED ON CABLE LADDER (VERTICAL OR HORIZONTAL) SHALL BE SECURED TO TRAY OR LADDER WITH REUSABLE VELCRO-BASED CABLE WRAPS EVERY RUNG.
6.	VERTICAL CABLE LADDER SHALL BE USED AT WALLS TO SUPPORT VERTICAL CABLE TRANSITIONS WITHIN THE TELECOM ROOM.
7.	A MINIMUM OF 6" CLEARANCE SHALL BE MAINTAINED ABOVE AND BELOW THE HORIZONTAL CABLE LADDER. LADDER ABOVE ALL RACKS TO ALL WALLS IN MDF LOCATIONS. ELECTRICALLY BOND AS REQUIRED.
8.	TELECOM ROOM WALLS SHALL BE CONTINUOUS FROM SLAB (FLOOR) TO SLAB (CEILING) WITH ALL THROUGH - WALL PENETRATIONS SEALED.
9.	THE GENERAL CONTRACTOR SHALL SEAL ALL OPENINGS AROUND WALL PENETRATIONS TO MAINTAIN THE INTEGRITY OF CONDITIONED SPACES. ALL WORK PERFORMED SHALL MAINTAIN THE PRESCRIBED FIRE RATING OF THE SPACE.
10.	PLYWOOD FOR WALL FIELDS SHALL BE FIRE-RATED GRADE A - C WITH "A" SIDE FACING OUT.
11.	WALL PHONE OUTLETS MECHANICAL AND TELECOM ROOMS SHALL BE MOUNTED AT 54" A.F.F.
12.	ALL RACKS, CABINETS AND CABLE TRAY/LADDER RACKS SHALL BE ELECTRICALLY CONNECTED, VIA #6 AWG GREEN JACKETED WIRE, TO A PRE-DRILLED AND TAPPED GROUND BAR TO BE LOCATED WITHIN THE ROOM. GROUND BAD SHALL BE CADWELD CONNECTED TO BUILDING STEEL BY WAY OF THE LOCAL TELECOMMUNICATIONS GROUNDING BAR. (2) HOLE CRIMP CONNECTORS SHALL BE USED.

ELECTRICAL AND LOW VOLTAGE SYSTEMS DIVISION OF WORK

SYSTEM	RISER CONDUIT	CABLE TRAYS	OUTLET BOXES	DEVICES	WIRING	STRUCTURED CABLING	RJ-45 JACKS	SPECIAL TERMINATIONS	WALL PLATES
ELECTRICAL	DIV 26	DIV 26	DIV 26	DIV 26	DIV 26	NA	NA	NA	DIV 26
FIRE ALARM	DIV 26	DIV 26	DIV 26	DIV 26	DIV 26	DIV 27/IT	DIV 26	NA	DIV 26
IT	DIV 26 *	DIV 26 *	DIV 26 *	NA	NA	DIV 27/IT	DIV 27/IT	NA	DIV 27/IT
AV	DIV 26 ***	DIV 26 *	DIV 26 *	DIV 27/AV	DIV 27/AV	DIV 27/IT	DIV 27/IT	DIV 27/AV	DIV 27/IT
BMS	DIV 25/CONTROLS	DIV 25/CONTROLS	DIV 25/CONTROLS	DIV 25/CONTROLS	DIV 25/CONTROLS	DIV 27/IT	DIV 27/IT	DIV 25/BMS	DIV 27/IT

ABBREVIATIONS

- ELECTRICAL CONTRACTOR
- INFORMATION TECHNOLOGY CONTRACTOR
- AUDIO VISUAL CONTRACTOR
- BUILDING MANAGEMENT CONTRACTOR

* IT - REFER TO IT-SERIES DRAWINGS
** AV - REFER TO AV-SERIES DRAWINGS
*** BMS - REFER TO M-SERIES DRAWINGS

MATRIX OF RESPONSIBILITY	WIFI - SCOPE
BURO HAPPOLD	LOCATION OF CONNECTION POINTS
TELECOM CONTRACTOR	INSTALLATION OF TELECOM CABLES, COORDINATING EXACT LOCATIONS BASED ON FIELD CONDITION AND COVERAGE REQUIREMENTS INSTALLATION OF ACTIVE EQUIPMENT

Owner
Storm King Art Center
1 Museum Road
New Windsor, NY 12553
+1 (845) 534-3115

Design Architect
heneghan peng architects
14-16 Lord Edward Street
Dublin, D02 YC63, IE
+353 1 633 9000

Executive Architect
WXY Architecture + Urban Design
224 Centre Street, 5th Floor
New York, NY 10013
+1 (212) 219-1953

Landscape Architect
Gustafson Porter + Bowman
1 Cobham Mews
London, MW1 9SB, UK
+44 020 7284 8950

Reed Hilderbrand LLC
33 Whitney Avenue, 3rd Floor
New Haven, CT, US 06510
+1 (617) 923-2422

Structural & Lighting
ARUP
77 Water Street
New York, NY, US 10005
+1 (212) 896-3000

MEPF & IT
BuroHappold
100 Broadway #23
New York, NY, US 10005
+1 (212) 616-0228

Civil
VHB
100 Great Oaks Blvd., Suite 118
Albany, NY, US 12203
+1 (518) 389-3606

AV & Acoustics
LSTN Consultants
76 Beaver Street, 2nd Floor
New York, NY, US 10005
+1 (347) 788-0810

Facade
Front Inc.
100 E. Broadway Street, #501
New York, NY, US 10002
+1 (212) 242-2220

Key Plan

Description	Date

Project

Storm King Art Center

C.F.M. Building

Seal

NOT FOR CONSTRUCTION

Drawing Title

Abbreviations, Symbols and Legends

Date	06/17/22
Scale	Not to Scale
Drawing Number	IT-C-001
Sheet Size	ARCH D

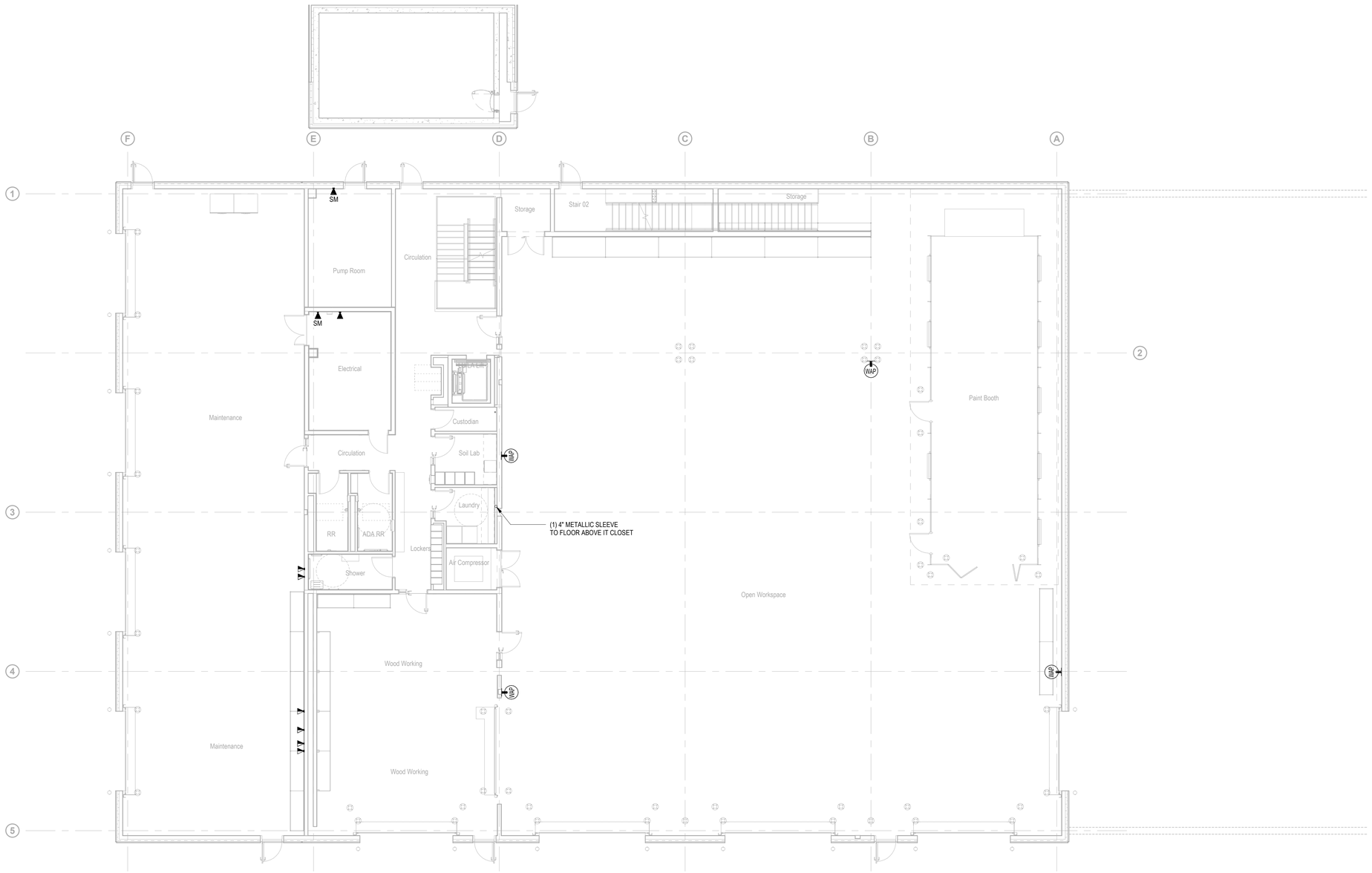

Owner
Storm King Art Center
1 Museum Road
New Windsor, NY 12553
+1 (845) 534-3115

Design Architect
heneghan peng architects
14-16 Lord Edward Street
Dublin, D02 YC63, IE
+353 1 633 9000

Executive Architect
WXY Architecture + Urban Design
224 Centre Street, 5th Floor
New York, NY 10013
+1 (212) 219-1953

Landscape Architect
Gustafson Porter + Bowman
1 Cobham Mews
London, MW1 9SB, UK
+44 020 7284 8950

Reed Hilderbrand LLC
33 Whitney Avenue, 3rd Floor
New Haven, CT, US 06510
+1 (617) 923-2422

Structural & Lighting
ARUP
77 Water Street
New York, NY, US 10005
+1 (212) 896-3000

MEPF & IT
BuroHappold
100 Broadway #23
New York, NY, US 10005
+1 (212) 616-0228

Civil
VHB
100 Great Oaks Blvd., Suite 118
Albany, NY, US 12203
+1 (518) 389-3606

AV & Acoustics
LSTN Consultants
76 Beaver Street, 2nd Floor
New York, NY, US 10005
+1 (347) 788-0810

Facade
Front Inc.
100 E. Broadway Street, #501
New York, NY, US 10002
+1 (212) 242-2220

Key Plan

N

Description	Date

Project

Storm King Art Center

C.F.M. Building

Seal

NOT FOR CONSTRUCTION

Drawing Title

Telecom Plan - Ground Level

Date	06/17/22
Scale	1/8" = 1'-0"
Drawing Number	IT-C-101
Sheet Size	ARCH D

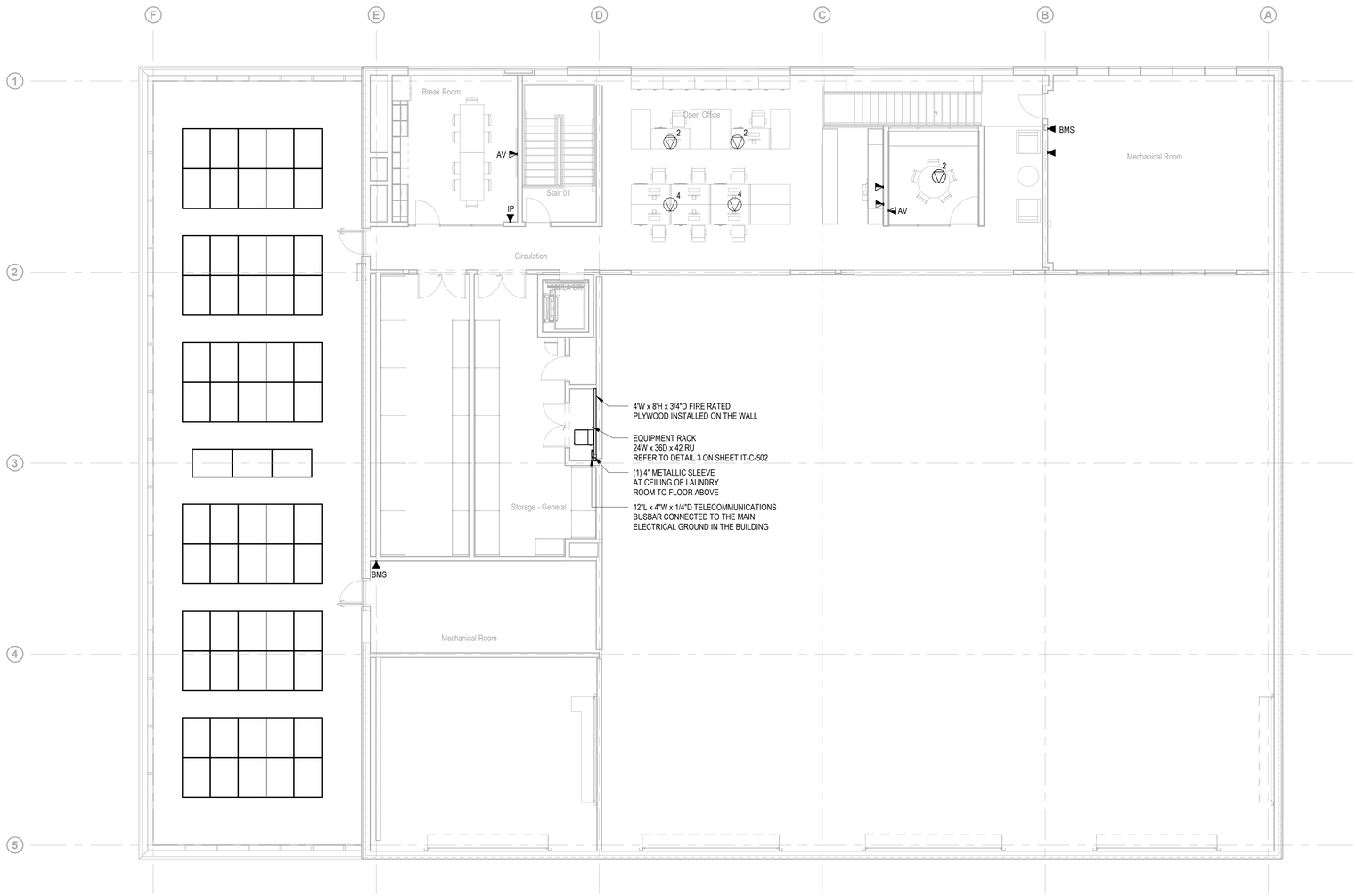

Owner
Storm King Art Center
1 Museum Road
New Windsor, NY 12553
+1 (845) 534-3115

Design Architect
heneghan peng architects
14-16 Lord Edward Street
Dublin, D02 YC63, IE
+353 1 633 9000

Executive Architect
WXY Architecture + Urban Design
224 Centre Street, 5th Floor
New York, NY 10013
+1 (212) 219-1953

Landscape Architect
Gustafson Porter + Bowman
1 Cobham Mews
London, MW1 9SB, UK
+44 020 7284 8950

Reed Hilderbrand LLC
33 Whitney Avenue, 3rd Floor
New Haven, CT, US 06510
+1 (617) 923-2422

Structural & Lighting
ARUP
77 Water Street
New York, NY, US 10005
+1 (212) 896-3000

MEPF & IT
BuroHappold
100 Broadway #23
New York, NY, US 10005
+1 (212) 616-0228

Civil
VHB
100 Great Oaks Blvd., Suite 118
Albany, NY, US 12203
+1 (518) 389-3606

AV & Acoustics
LSTN Consultants
76 Beaver Street, 2nd Floor
New York, NY, US 10005
+1 (347) 788-0810

Facade
Front Inc.
100 E. Broadway Street, #501
New York, NY, US 10002
+1 (212) 242-2220

Key Plan

N

Description	Date

Project

Storm King Art Center

C.F.M. Building

Seal

NOT FOR CONSTRUCTION

Drawing Title

Telecom Plan - Second Level

Date	06/17/22
Scale	1/8" = 1'-0"
Drawing Number	IT-C-102
Sheet Size	ARCH D

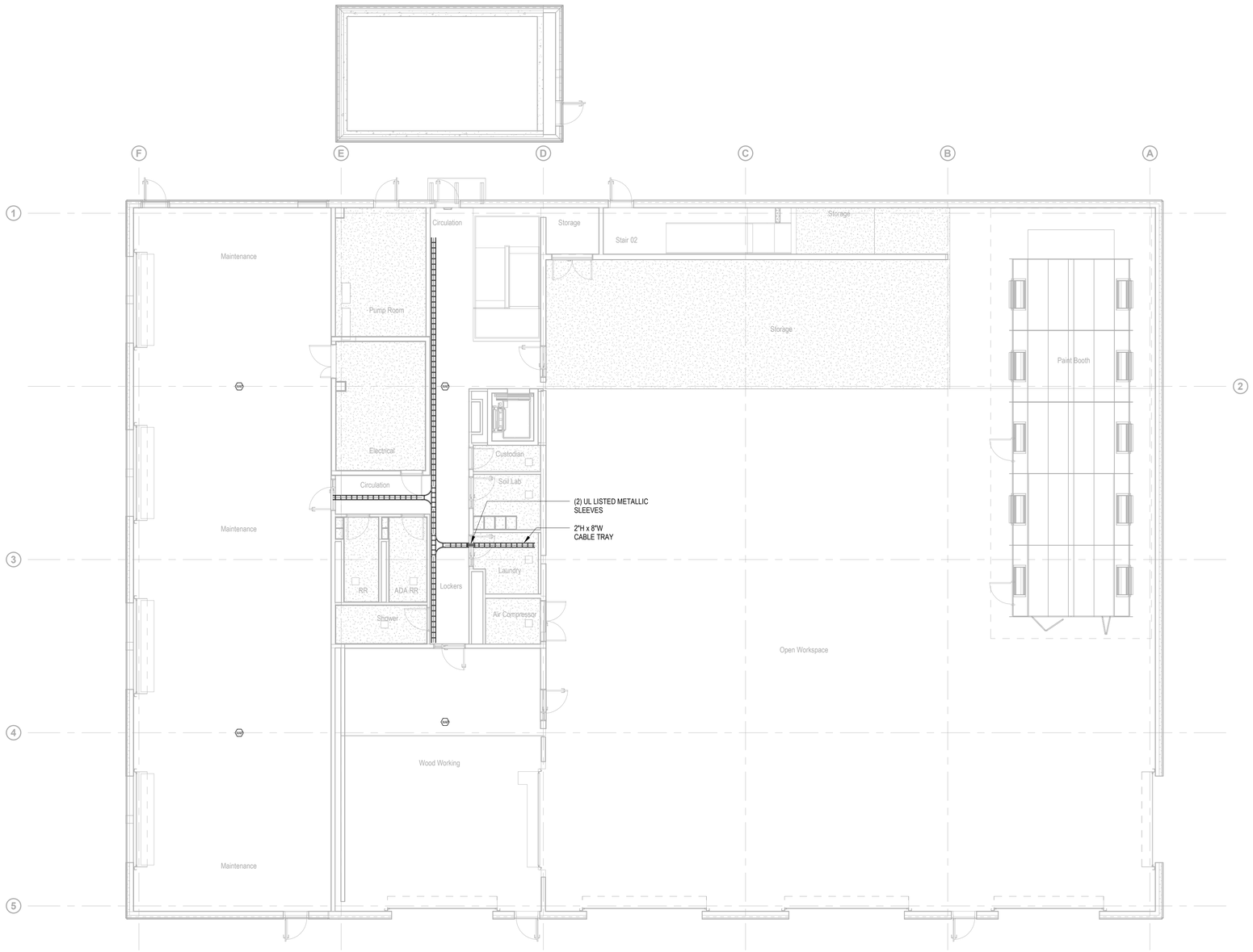

Owner
Storm King Art Center
1 Museum Road
New Windsor, NY 12553
+1 (845) 534-3115

Design Architect
heneghan peng architects
14-16 Lord Edward Street
Dublin, D02 YC63, IE
+353 1 633 9000

Executive Architect
WXY Architecture + Urban Design
224 Centre Street, 5th Floor
New York, NY 10013
+1 (212) 219-1953

Landscape Architect
Gustafson Porter + Bowman
1 Cobham Mews
London, MW1 9SB, UK
+44 020 7284 8950

Reed Hilderbrand LLC
33 Whitney Avenue, 3rd Floor
New Haven, CT, US 06510
+1 (617) 923-2422

Structural & Lighting
ARUP
77 Water Street
New York, NY, US 10005
+1 (212) 896-3000

MEPF & IT
BuroHappold
100 Broadway #23
New York, NY, US 10005
+1 (212) 616-0228

Civil
VHB
100 Great Oaks Blvd., Suite 118
Albany, NY, US 12203
+1 (518) 389-3606

AV & Acoustics
LSTN Consultants
76 Beaver Street, 2nd Floor
New York, NY, US 10005
+1 (347) 788-0810

Facade
Front Inc.
100 E. Broadway Street, #501
New York, NY, US 10002
+1 (212) 242-2220

Key Plan

N

Description	Date

Project

Storm King Art Center

C.F.M. Building

Seal

NOT FOR CONSTRUCTION

Drawing Title

Telecom RCP - Ground Level

Date	06/17/22
Scale	1/8" = 1'-0"
Drawing Number	IT-C-201
Sheet Size	ARCH D

Owner
Storm King Art Center
1 Museum Road
New Windsor, NY 12553
+1 (845) 534-3115

Design Architect
heneghan peng architects
14-16 Lord Edward Street
Dublin, D02 YC63, IE
+353 1 633 9000

Executive Architect
WXY Architecture + Urban Design
224 Centre Street, 5th Floor
New York, NY 10013
+1 (212) 219-1953

Landscape Architect
Gustafson Porter + Bowman
1 Cobham Mews
London, MW1 9SB, UK
+44 020 7284 8950

Reed Hilderbrand LLC
33 Whitney Avenue, 3rd Floor
New Haven, CT, US 06510
+1 (617) 923-2422

Structural & Lighting
ARUP
77 Water Street
New York, NY, US 10005
+1 (212) 896-3000

MEPF & IT
BuroHappold
100 Broadway #23
New York, NY, US 10005
+1 (212) 616-0228

Civil
VHB
100 Great Oaks Blvd., Suite 118
Albany, NY, US 12203
+1 (518) 389-3606

AV & Acoustics
LSTN Consultants
76 Beaver Street, 2nd Floor
New York, NY, US 10005
+1 (347) 788-0810

Facade
Front Inc.
100 E. Broadway Street, #501
New York, NY, US 10002
+1 (212) 242-2220

Key Plan

N

Description	Date

Project

Storm King Art Center

C.F.M. Building

Seal

NOT FOR CONSTRUCTION

Drawing Title

Telecom RCP - Second Level

Date	06/17/22
Scale	1/8" = 1'-0"
Drawing Number	IT-C-202
Sheet Size	ARCH D

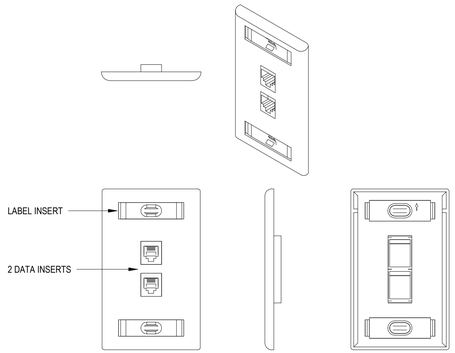

NOTES:

1. COORDINATE ALL COLORS AND FINSHES WITH ARCHITECTURAL DRAWINGS
2. COORDINATE NAMING CONVENTION WITH CLIENT

1 2 PORT TELECOM OUTLET FACE PLATE

NOT TO SCALE

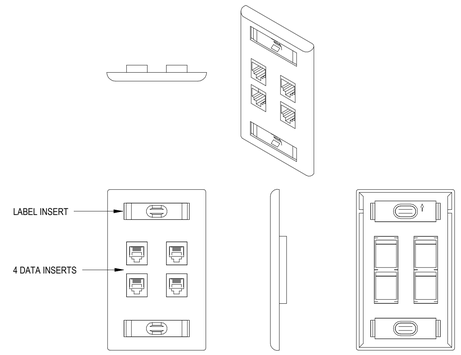

NOTES:

1. COORDINATE ALL COLORS AND FINSHES WITH ARCHITECTURAL DRAWINGS
2. COORDINATE NAMING CONVENTION WITH CLIENT

2 4 PORT TELECOM OUTLET FACE PLATE

NOT TO SCALE

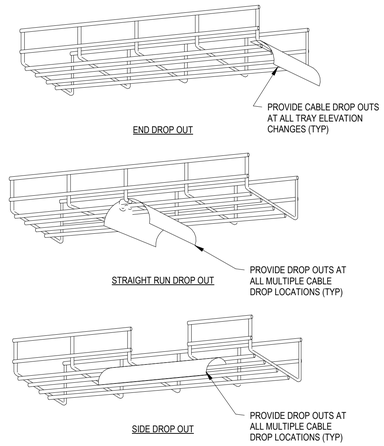

3 CABLE TRAY CABLE DROPOUT

NOT TO SCALE

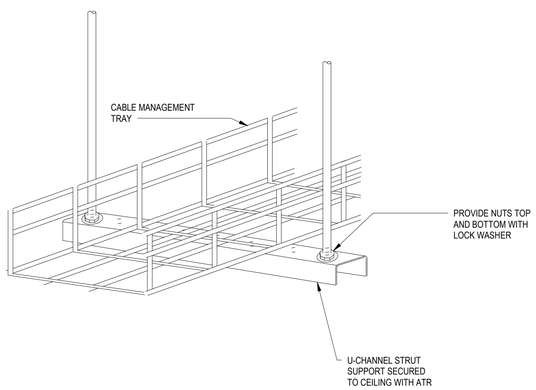

4 CABLE TRAY TRAPEZE HUNG

NOT TO SCALE

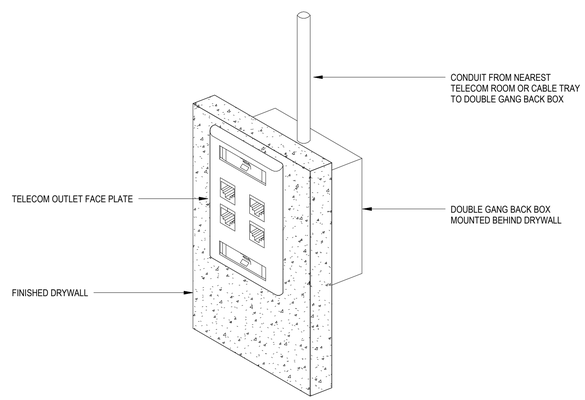

5 DOUBLE GANG BACKBOX FOR TELECOM OUTLET

NOT TO SCALE

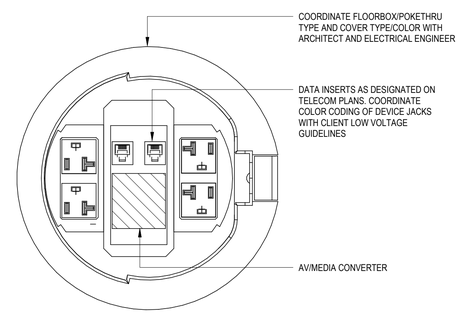

6 FLOOR BOX

NOT TO SCALE

Owner
Storm King Art Center
1 Museum Road
New Windsor, NY 12553
+1 (845) 534-3115

Design Architect
heneghan peng architects
14-16 Lord Edward Street
Dublin, D02 YC63, IE
+353 1 633 9000

Executive Architect
WXY Architecture + Urban Design
224 Centre Street, 5th Floor
New York, NY 10013
+1 (212) 219-1953

Landscape Architect
Gustafson Porter + Bowman
1 Cobham Mews
London, MW1 9SB, UK
+44 020 7284 8950

Reed Hilderbrand LLC
33 Whitney Avenue, 3rd Floor
New Haven, CT, US 06510
+1 (617) 923-2422

Structural & Lighting
ARUP
77 Water Street
New York, NY, US 10005
+1 (212) 896-3000

MEPF & IT
BuroHappold
100 Broadway #23
New York, NY, US 10005
+1 (212) 616-0228

Civil
VHB
100 Great Oaks Blvd., Suite 118
Albany, NY, US 12203
+1 (518) 389-3606

AV & Acoustics
LSTN Consultants
76 Beaver Street, 2nd Floor
New York, NY, US 10005
+1 (347) 788-0810

Facade
Front Inc.
100 E. Broadway Street, #501
New York, NY, US 10002
+1 (212) 242-2220

Key Plan

Description	Date

Project

Storm King Art Center

C.F.M. Building

Seal

NOT FOR CONSTRUCTION

Drawing Title

Telecom Details

Date	06/17/22
Scale	Not to Scale
Drawing Number	IT-C-501
Sheet Size	ARCH D

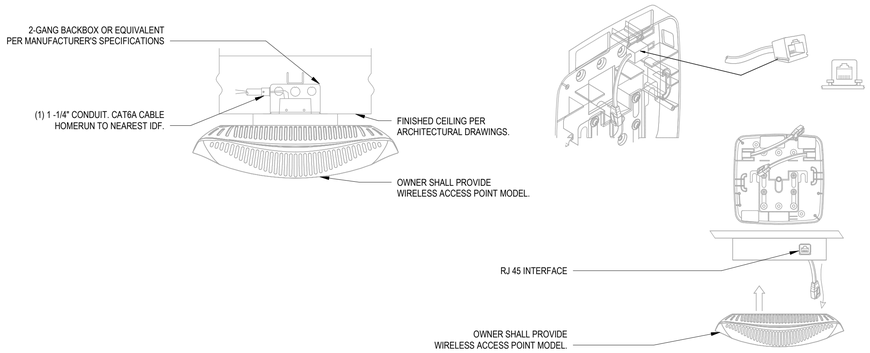

NOTES:

1. REFER TO SPECIFICATIONS FOR WIRELESS ACCESS POINT MAKE AND MODEL
2. INSTALL PER MANUFACTURER RECOMMENDATIONS & COORDINATE FINAL INSTALLATION WITH ARCHITECT

1 CEILING MOUNTED WAP

NOT TO SCALE

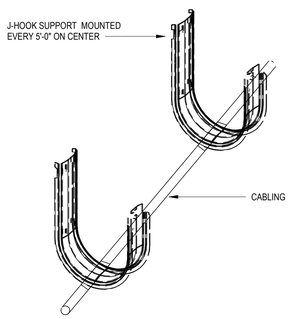

NOTES:

1. CONTRACTOR TO INSTALL CABLES NEATLY WITH VELCRO STRAPS TO HOLD THE BUNDLES TOGETHER

2 JHOOKS

NOT TO SCALE

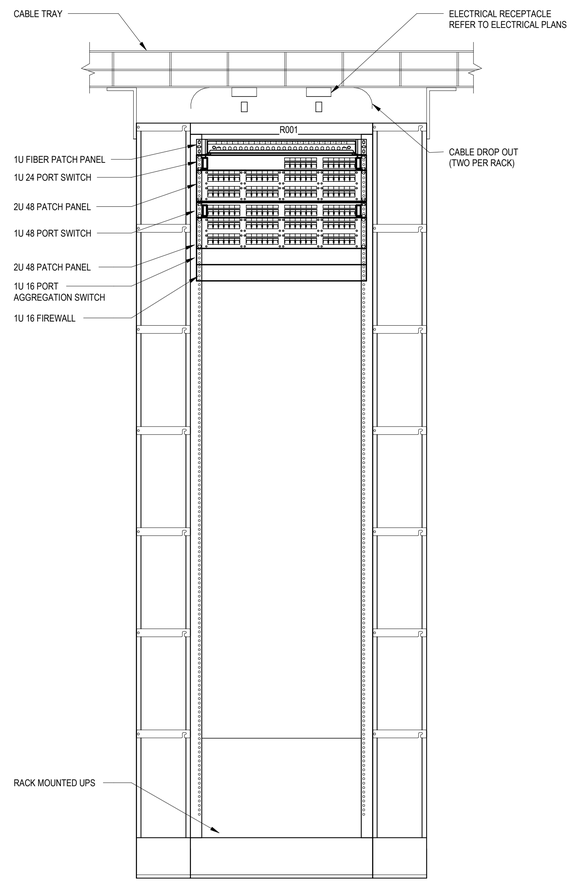

3 FRONT RACK ELEVATION - IDF - SECOND FLOOR

NOT TO SCALE

Owner
Storm King Art Center
1 Museum Road
New Windsor, NY 12553
+1 (845) 534-3115

Design Architect
heneghan peng architects
14-16 Lord Edward Street
Dublin, D02 YC63, IE
+353 1 633 9000

Executive Architect
WXY Architecture + Urban Design
224 Centre Street, 5th Floor
New York, NY 10013
+1 (212) 219-1953

Landscape Architect
Gustafson Porter + Bowman
1 Cobham Mews
London, MW1 9SB, UK
+44 020 7284 8950

Reed Hilderbrand LLC
33 Whitney Avenue, 3rd Floor
New Haven, CT, US 06510
+1 (617) 923-2422

Structural & Lighting
ARUP
77 Water Street
New York, NY, US 10005
+1 (212) 896-3000

MEPF & IT
BuroHappold
100 Broadway #23
New York, NY, US 10005
+1 (212) 616-0228

Civil
VHB
100 Great Oaks Blvd., Suite 118
Albany, NY, US 12203
+1 (518) 389-3606

AV & Acoustics
LSTN Consultants
76 Beaver Street, 2nd Floor
New York, NY, US 10005
+1 (347) 788-0810

Facade
Front Inc.
100 E. Broadway Street, #501
New York, NY, US 10002
+1 (212) 242-2220

Key Plan

Description	Date

Project

Storm King Art Center

C.F.M. Building

Seal

NOT FOR CONSTRUCTION

Drawing Title

Telecom Details

Date	06/17/22
Scale	Not to Scale
Drawing Number	IT-C-502
Sheet Size	ARCH D

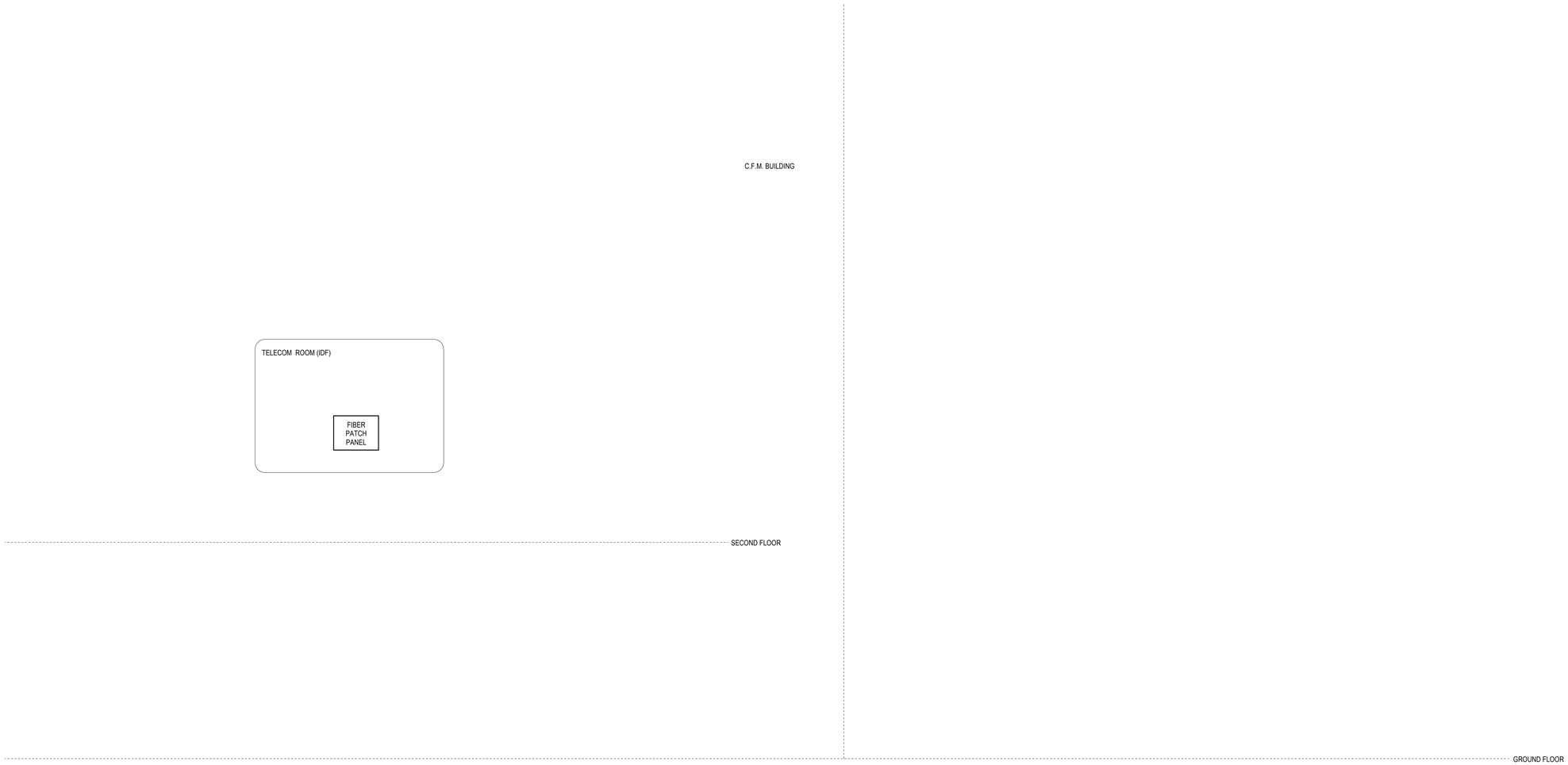

Owner
Storm King Art Center
1 Museum Road
New Windsor, NY 12553
+1 (845) 534-3115

Design Architect
heneghan peng architects
14-16 Lord Edward Street
Dublin, D02 YC63, IE
+353 1 633 9000

Executive Architect
WXY Architecture + Urban Design
224 Centre Street, 5th Floor
New York, NY 10013
+1 (212) 219-1953

Landscape Architect
Gustafson Porter + Bowman
1 Cobham Mews
London, MW1 9SB, UK
+44 020 7284 8950

Reed Hilderbrand LLC
33 Whitney Avenue, 3rd Floor
New Haven, CT, US 06510
+1 (617) 923-2422

Structural & Lighting
ARUP
77 Water Street
New York, NY, US 10005
+1 (212) 896-3000

MEPF & IT
BuroHappold
100 Broadway #23
New York, NY, US 10005
+1 (212) 616-0228

Civil
VHB
100 Great Oaks Blvd., Suite 118
Albany, NY, US 12203
+1 (518) 389-3606

AV & Acoustics
LSTN Consultants
76 Beaver Street, 2nd Floor
New York, NY, US 10005
+1 (347) 788-0810

Facade
Front Inc.
100 E. Broadway Street, #501
New York, NY, US 10002
+1 (212) 242-2220

Key Plan

Description	Date

Project

Storm King Art Center

C.F.M. Building

Seal

NOT FOR CONSTRUCTION

Drawing Title

Telecom Riser

Date	06/17/22
Scale	Not to Scale
Drawing Number	IT-C-701
Sheet Size	ARCH D

Owner
Storm King Art Center
1 Museum Road
New Windsor, NY 12553
+1 (845) 534-3115

Design Architect
heneghan peng architects
14-16 Lord Edward Street
Dublin, D02 YC63, IE
+353 1 633 9000

Executive Architect
WXY Architecture + Urban Design
224 Centre Street, 5th Floor
New York, NY 10013
+1 (212) 219-1953

Landscape Architect
Gustafson Porter + Bowman
1 Cobham Mews
London, MW1 9SB, UK
+44 020 7284 8950

Reed Hilderbrand LLC
33 Whitney Avenue, 3rd Floor
New Haven, CT, US 06510
+1 (617) 923-2422

Structural & Lighting
ARUP
77 Water Street
New York, NY, US 10005
+1 (212) 896-3000

MEPF & IT
BuroHappold
100 Broadway #23
New York, NY, US 10005
+1 (212) 616-0228

Civil
VHB
100 Great Oaks Blvd., Suite 118
Albany, NY, US 12203
+1 (518) 389-3606

AV & Acoustics
LSTN Consultants
76 Beaver Street, 2nd Floor
New York, NY, US 10005
+1 (347) 788-0810

Facade
Front Inc.
100 E. Broadway Street, #501
New York, NY, US 10002
+1 (212) 242-2220

Key Plan

N

Description	Date

Project

Storm King Art Center

C.F.M. Building

Seal

NOT FOR CONSTRUCTION

Drawing Title

Site Plan - Property - Telecom

Date	06/17/22
Scale	1/64" = 1'-0"
Drawing Number	IT-C-900
Sheet Size	ARCH D

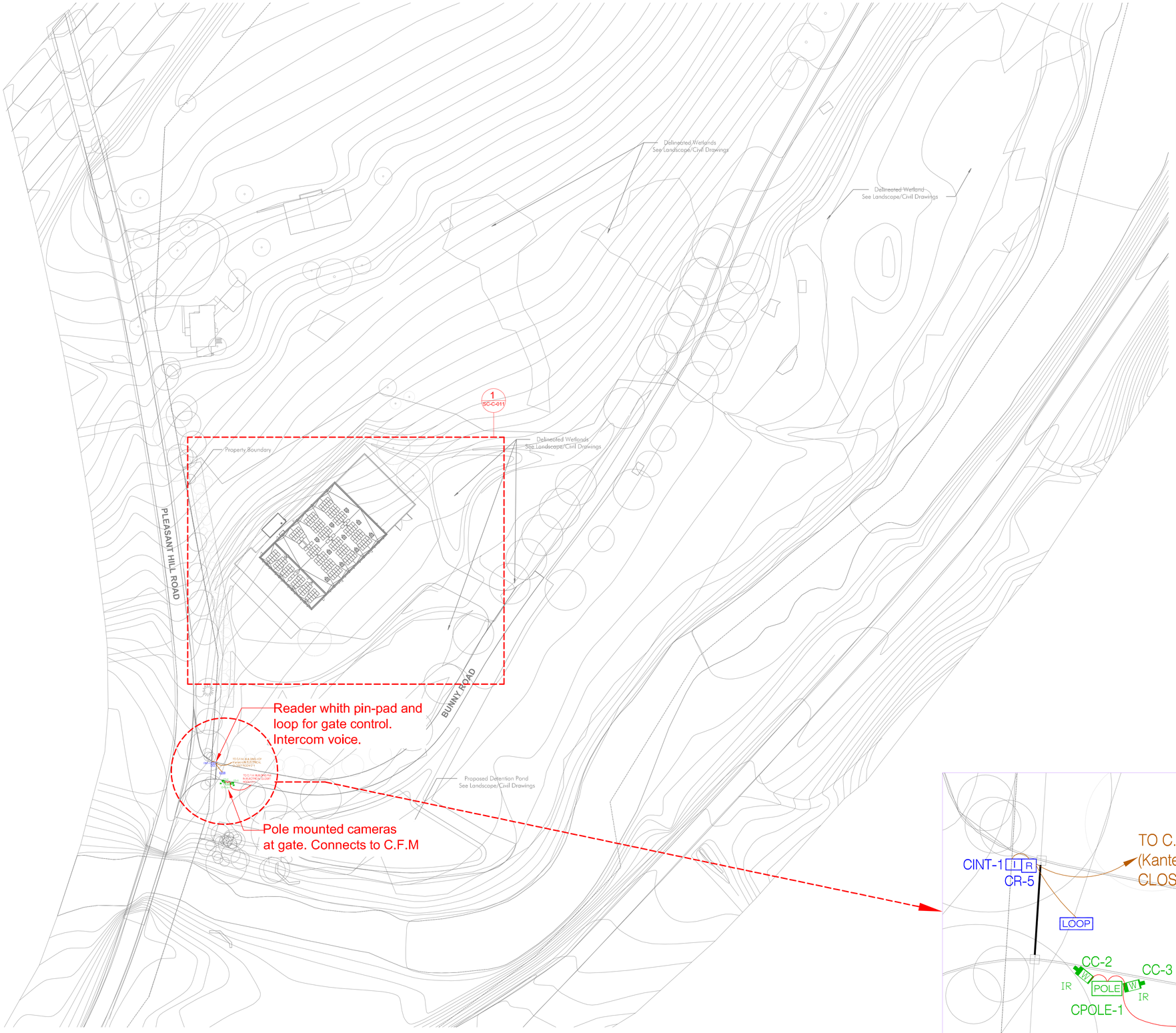

1 Site Plan - Propety
1/64" = 1'-0"

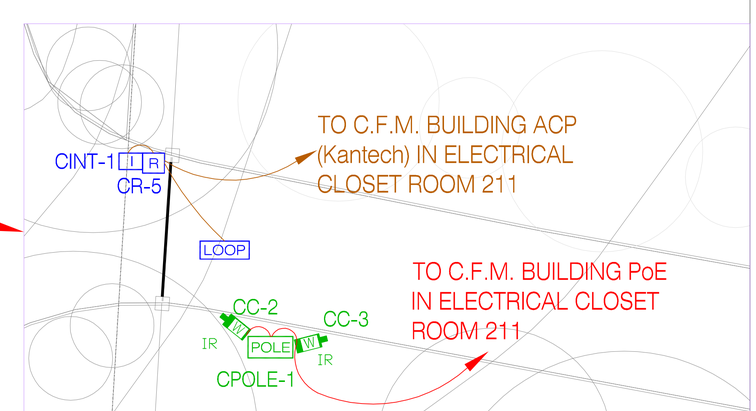

2 Site Plan - Propety - Enlarged View
1/32" = 1'-0"

SYMBOL LIST

- WALL MOUNTED MOTION DETECTOR (30' RANGE)
- WALL MOUNTED MOTION DETECTOR (70' RANGE)
- CEILING MOUNTED MOTION DETECTOR
- MAGNETIC DOOR CONTACT
- OMC OVERHEAD MAGNETIC DOOR CONTACT
- LAA LOCAL AUDIBLE ALARM
- ELECTRIC LOCKSET W/ INTEGRATED REQUEST TO EXIT
- R CARD READER
- K KEYPAD
- I INTERCOM STATION
- IR MINI DOME CAMERA
- IR POLE MOUNTED EXTERIOR CAMERA
- POLE CAMERA POLE
- PoE PoE SWITCH
- DPS DOOR POWER SUPPLY
- ACP ALARM CONTROL PANEL (Kantech)
- BUPG ALARM CONTROL PANEL (DSC)
- R SHUNTS CARD READER
- LOOP DRIVE LOOP

Owner
Storm King Art Center
1 Museum Road
New Windsor, NY 12553
+1 (845) 534-3115

Design Architect
heneghan peng architects
14-16 Lord Edward Street
Dublin, D02 YC63
+353 1 633 9000

Executive Architect
WXY Architecture + Urban Design
224 Centre Street, 5th Floor
New York, NY 10013
+1 (212) 219-1953

Landscape Architect
Gustafson Porter + Bowman
1 Cobham Mews
London, MW1 9SB
+44 020 7284 8950

Reed Hilderbrand LLC
33 Whitney Avenue, 3rd Floor
New Haven, CT 06510
+1 (617) 923-2422

Structural & Lighting
ARUP
77 Water Street
New York, NY 10005
+1 (212) 896-3000

MEPF & IT
BuroHappold
100 Broadway #23
New York, NY 10005
+1 (212) 616-0228

Civil
VHB
100 Great Oaks Blvd., Suite 118
Albany, NY 12203
+1 (518) 389-3606

AV & Acoustics
LSTN Consultants
76 Beaver Street, 2nd Floor
New York, NY 10005
+1 (347) 788-0810

Facade
Front Inc.
100 E. Broadway Street, #501
New York, NY 10002
+1 (212) 242-2220

Security
Steve Keller and Associates, Inc.
555 W. Granada Blvd. Suite G-4
Ormond Beach, FL 32174
+1 (386) 673-5034

N

Description	Date

Project

Storm King Art Center

C.F.M. Building

Seal

NOT FOR CONSTRUCTION

Drawing Title

Site Plan - Propety

Security & CCTV System

Date	06/17/22
Scale	1/64" = 1'-0"
Drawing Number	SC-C-011
Sheet Size	ARCH D

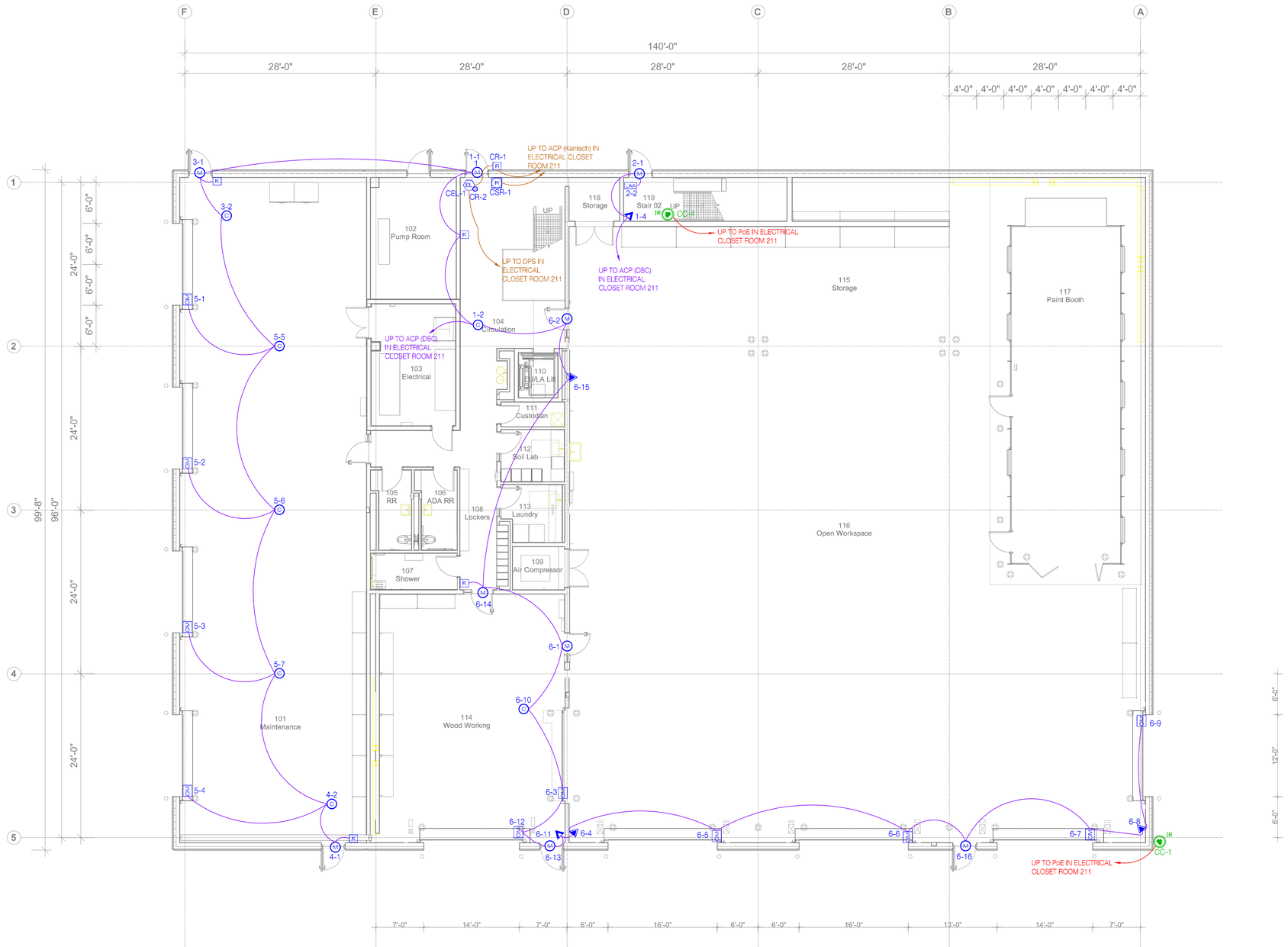

1 Ground Level
1/8" = 1'-0"

SYMBOL LIST

- WALL MOUNTED MOTION DETECTOR (30' RANGE)
- WALL MOUNTED MOTION DETECTOR (70' RANGE)
- CEILING MOUNTED MOTION DETECTOR
- MAGNETIC DOOR CONTACT
- OVERHEAD MAGNETIC DOOR CONTACT
- LAA LOCAL AUDIBLE ALARM
- ELECTRIC LOCKSET W/ INTEGRATED REQUEST TO EXIT
- R CARD READER
- K KEYPAD
- I INTERCOM STATION
- MINI DOME CAMERA
- POLE MOUNTED EXTERIOR CAMERA
- POLE CAMERA POLE
- PoE PoE SWITCH
- DPS DOOR POWER SUPPLY
- ACP ALARM CONTROL PANEL (Kantech)
- BURG ALARM CONTROL PANEL (DSC)
- SHUNTS CARD READER
- LOOP DRIVE LOOP

ADMIN PARTITION SCHEDULE

ZONE 1	MAIN STAFF ENTRY, MOTION DETECTORS AT 104, 119, & 204
ZONE 2	STAIR 2 EGRESS DOOR
ZONE 3	STAFF ENTRY MAINTENANCE
ZONE 4	STAFF ENTRY 2 MAINTENANCE
ZONE 5	MAINTENANCE ROLLUP DOORS
ZONE 6	OPEN WORKSPACE/WOOD WORKING
ZONE 7	SECURE STORAGE LEVEL 2
ZONE 8	CIRCULATION 204 ROOF DOOR & 210 & 212 MECHANICAL RM.

Owner
Storm King Art Center
1 Museum Road
New Windsor, NY 12553
+1 (845) 534-3115

Design Architect
heneghan peng architects
14-16 Lord Edward Street
Dublin, D02 YC63
+353 1 633 9000

Executive Architect
WXY Architecture + Urban Design
224 Centre Street, 5th Floor
New York, NY 10013
+1 (212) 219-1953

Landscape Architect
Gustafson Porter + Bowman
1 Cobham Mews
London, MW1 9SB
+44 020 7284 8950

Reed Hilderbrand LLC
33 Whitney Avenue, 3rd Floor
New Haven, CT 06510
+1 (617) 923-2422

Structural & Lighting
ARUP
77 Water Street
New York, NY 10005
+1 (212) 896-3000

MEPF & IT
BuroHappold
100 Broadway #23
New York, NY 10005
+1 (212) 616-0228

Civil
VHB
100 Great Oaks Blvd., Suite 118
Albany, NY 12203
+1 (518) 389-3606

AV & Acoustics
LSTN Consultants
76 Beaver Street, 2nd Floor
New York, NY 10005
+1 (347) 788-0810

Facade
Front Inc.
100 E. Broadway Street, #501
New York, NY 10002
+1 (212) 242-2220

Security
Steve Keller and Associates, Inc.
555 W. Granada Blvd. Suite G-4
Ormond Beach, FL 32174
+1 (386) 673-5034

N

Description	Date

Project

Storm King Art Center

C.F.M. Building

Seal

NOT FOR CONSTRUCTION

Drawing Title

Floor Plan - Ground Level Security & CCTV System

Date	06/17/22
Scale	1/8" = 1'-0"
Drawing Number	SC-C-101
Sheet Size	ARCH D

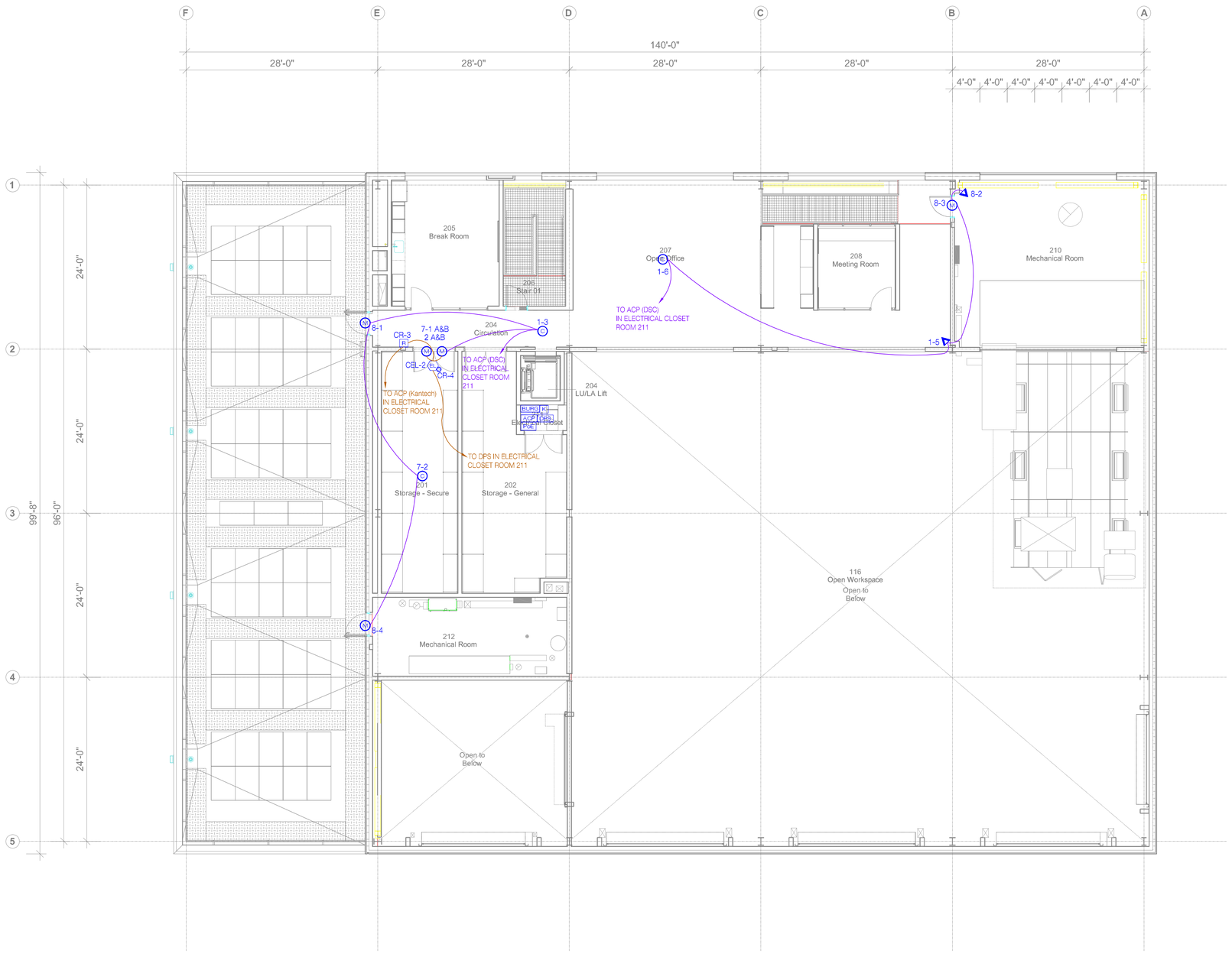

1 Second Level
1/8" = 1'-0"

SYMBOL LIST

- WALL MOUNTED MOTION DETECTOR (30' RANGE)
- WALL MOUNTED MOTION DETECTOR (70' RANGE)
- CEILING MOUNTED MOTION DETECTOR
- MAGNETIC DOOR CONTACT
- OVERHEAD MAGNETIC DOOR CONTACT
- LOCAL AUDIBLE ALARM
- ELECTRIC LOCKSET W/ INTEGRATED REQUEST TO EXIT
- CARD READER
- KEYPAD
- INTERCOM STATION
- MINI DOME CAMERA
- POLE MOUNTED EXTERIOR CAMERA
- CAMERA POLE
- PoE SWITCH
- DOOR POWER SUPPLY
- ALARM CONTROL PANEL (Kantech)
- ALARM CONTROL PANEL (DSC)
- SHUNTS CARD READER
- DRIVE LOOP

ADMIN PARTITION SCHEDULE

ZONE 1	MAIN STAFF ENTRY, MOTION DETECTORS AT 104, 119, & 204
ZONE 2	STAIR 2 EGRESS DOOR
ZONE 3	STAFF ENTRY MAINTENANCE
ZONE 4	STAFF ENTRY 2 MAINTENANCE
ZONE 5	MAINTENANCE ROLLUP DOORS
ZONE 6	OPEN WORKSPACE/WOOD WORKING
ZONE 7	SECURE STORAGE LEVEL 2
ZONE 8	CIRCULATION 204 ROOF DOOR & 210 & 212 MECHANICAL RM.

Owner
Storm King Art Center
1 Museum Road
New Windsor, NY 12553
+1 (845) 534-3115

Design Architect
heneghan peng architects
14-16 Lord Edward Street
Dublin, D02 YC63
+353 1 633 9000

Executive Architect
WXY Architecture + Urban Design
224 Centre Street, 5th Floor
New York, NY 10013
+1 (212) 219-1953

Landscape Architect
Gustafson Porter + Bowman
1 Cobham Mews
London, MW1 9SB
+44 020 7284 8950

Reed Hilderbrand LLC
33 Whitney Avenue, 3rd Floor
New Haven, CT 06510
+1 (617) 923-2422

Structural & Lighting
ARUP
77 Water Street
New York, NY 10005
+1 (212) 896-3000

MEPF & IT
BuroHappold
100 Broadway #23
New York, NY 10005
+1 (212) 616-0228

Civil
VHB
100 Great Oaks Blvd., Suite 118
Albany, NY 12203
+1 (518) 389-3606

AV & Acoustics
LSTN Consultants
76 Beaver Street, 2nd Floor
New York, NY 10005
+1 (347) 788-0810

Facade
Front Inc.
100 E. Broadway Street, #501
New York, NY 10002
+1 (212) 242-2220

Security
Steve Keller and Associates, Inc.
555 W. Granada Blvd. Suite G-4
Ormond Beach, FL 32174
+1 (386) 673-5034

N

Description	Date

Project

Storm King Art Center

C.F.M. Building

Seal

NOT FOR CONSTRUCTION

Drawing Title

Floor Plan - Second Level
Security & CCTV System

Date	06/17/22
Scale	1/8" = 1'-0"
Drawing Number	SC-C-102
Sheet Size	ARCH D

NO SECURITY THIS LEVEL

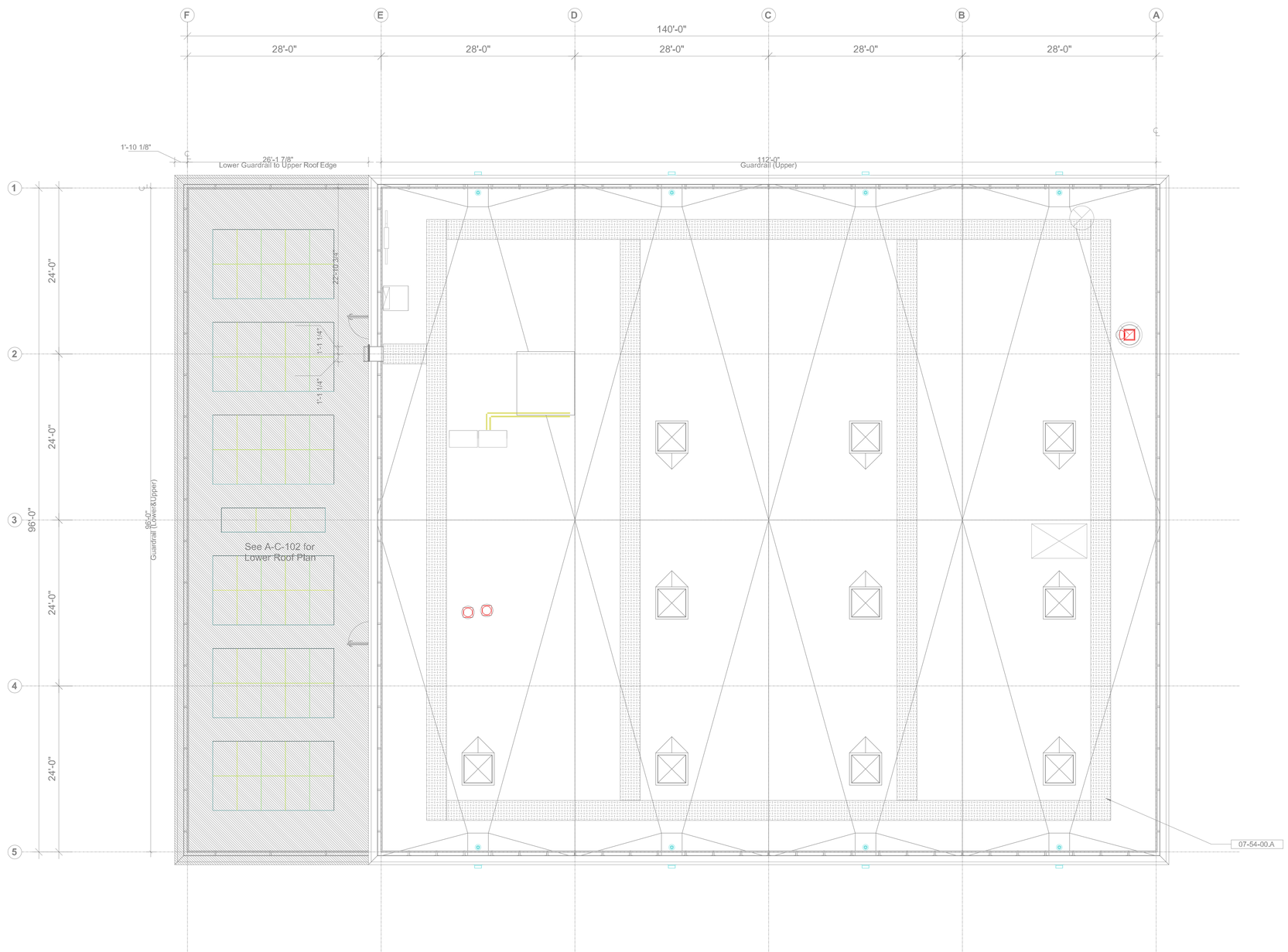

1 Roof Level
1/8" = 1'-0"

SYMBOL LIST

- WALL MOUNTED MOTION DETECTOR (30' RANGE)
- WALL MOUNTED MOTION DETECTOR (70' RANGE)
- CEILING MOUNTED MOTION DETECTOR
- MAGNETIC DOOR CONTACT
- OVERHEAD MAGNETIC DOOR CONTACT
- LAA LOCAL AUDIBLE ALARM
- ELECTRIC LOCKSET W/ INTEGRATED REQUEST TO EXIT
- R CARD READER
- K KEYPAD
- I INTERCOM STATION
- MINI DOME CAMERA
- POLE MOUNTED EXTERIOR CAMERA
- POLE CAMERA POLE
- PoE PoE SWITCH
- DPS DOOR POWER SUPPLY
- ACP ALARM CONTROL PANEL (Kantech)
- BURG ALARM CONTROL PANEL (DSC)
- SHUNTS CARD READER
- LOOP DRIVE LOOP

ADMIN PARTITION SCHEDULE

ZONE 1	MAIN STAFF ENTRY, MOTION DETECTORS AT 104, 119, & 204
ZONE 2	STAIR 2 EGRESS DOOR
ZONE 3	STAFF ENTRY MAINTENANCE
ZONE 4	STAFF ENTRY 2 MAINTENANCE
ZONE 5	MAINTENANCE ROLLUP DOORS
ZONE 6	OPEN WORKSPACE/WOOD WORKING
ZONE 7	SECURE STORAGE LEVEL 2
ZONE 8	CIRCULATION 204 ROOF DOOR & 210 & 212 MECHANICAL RM.

Owner
Storm King Art Center
1 Museum Road
New Windsor, NY 12553
+1 (845) 534-3115

Design Architect
heneghan peng architects
14-16 Lord Edward Street
Dublin, D02 YC63
+353 1 633 9000

Executive Architect
WXY Architecture + Urban Design
224 Centre Street, 5th Floor
New York, NY 10013
+1 (212) 219-1953

Landscape Architect
Gustafson Porter + Bowman
1 Cobham Mews
London, MW1 9SB
+44 020 7284 8950

Reed Hilderbrand LLC
33 Whitney Avenue, 3rd Floor
New Haven, CT 06510
+1 (617) 923-2422

Structural & Lighting
ARUP
77 Water Street
New York, NY 10005
+1 (212) 896-3000

MEPF & IT
BuroHappold
100 Broadway #23
New York, NY 10005
+1 (212) 616-0228

Civil
VHB
100 Great Oaks Blvd., Suite 118
Albany, NY 12203
+1 (518) 389-3606

AV & Acoustics
LSTN Consultants
76 Beaver Street, 2nd Floor
New York, NY 10005
+1 (347) 788-0810

Facade
Front Inc.
100 E. Broadway Street, #501
New York, NY 10002
+1 (212) 242-2220

Security
Steve Keller and Associates, Inc.
555 W. Granada Blvd. Suite G-4
Ormond Beach, FL 32174
+1 (386) 673-5034

N

Description	Date

Project

Storm King Art Center

C.F.M. Building

Seal

NOT FOR CONSTRUCTION

Drawing Title

Floor Plan - Roof Level Security & CCTV System

Date	06/17/22
Scale	1/8" = 1'-0"
Drawing Number	SC-C-103
Sheet Size	ARCH D

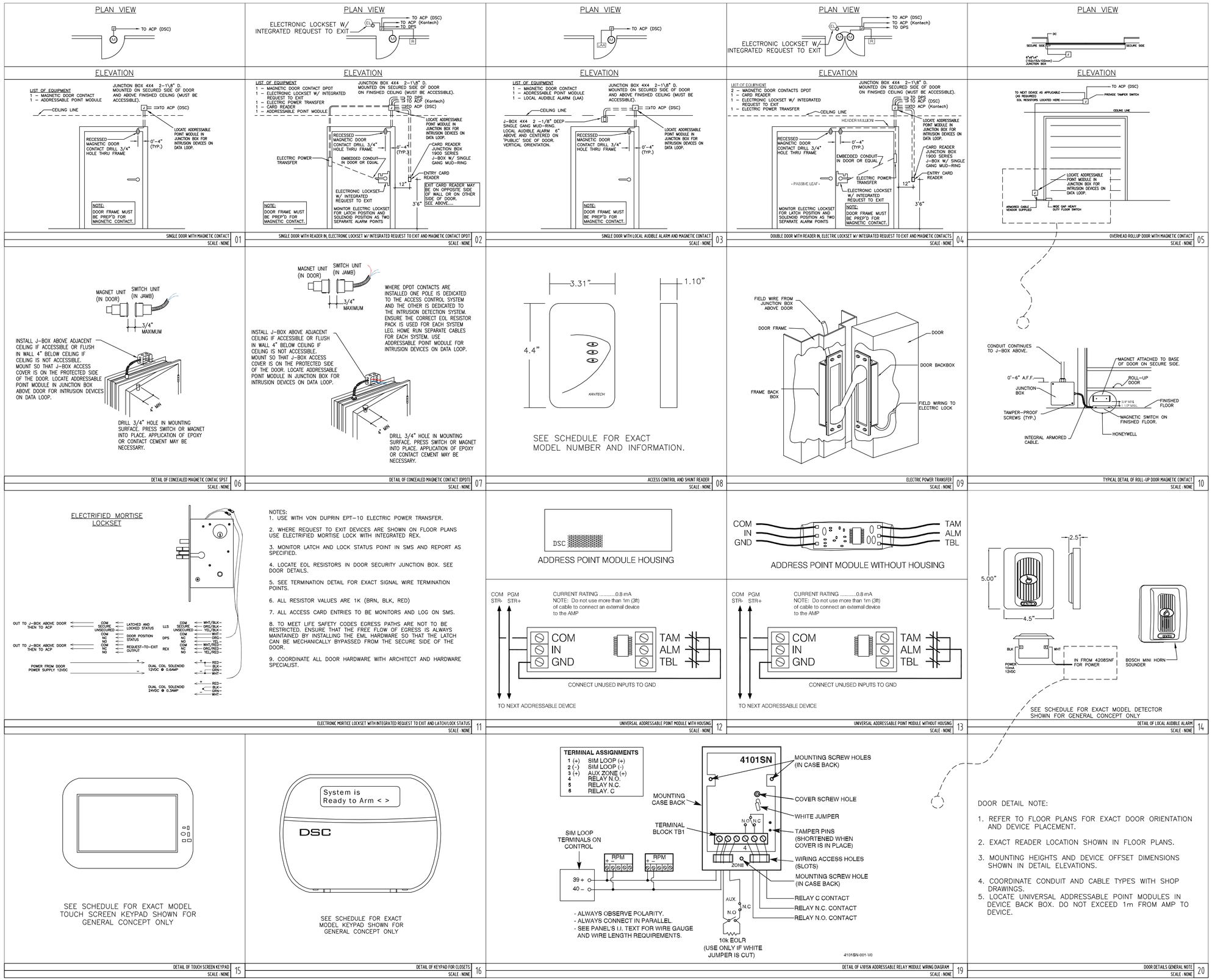

Owner
Storm King Art Center
1 Museum Road
New Windsor, NY 12553
+1 (845) 534-3115

Design Architect
heneghan peng architects
14-16 Lord Edward Street
Dublin, D02 YC63
+353 1 633 9000

Executive Architect
WXY Architecture + Urban Design
224 Centre Street, 5th Floor
New York, NY 10013
+1 (212) 219-1953

Landscape Architect
Gustafson Porter + Bowman
1 Cobham Mews
London, MW1 9SB
+44 020 7284 8950

Reed Hilderbrand LLC
33 Whitney Avenue, 3rd Floor
New Haven, CT 06510
+1 (617) 923-2422

Structural & Lighting
ARUP
77 Water Street
New York, NY 10005
+1 (212) 896-3000

MEPF & IT
BuroHappold
100 Broadway #23
New York, NY 10005
+1 (212) 616-0228

Civil
VHB
100 Great Oaks Blvd., Suite 118
Albany, NY 12203
+1 (518) 389-3606

AV & Acoustics
LSTN Consultants
76 Beaver Street, 2nd Floor
New York, NY 10005
+1 (347) 788-0810

Facade
Front Inc.
100 E. Broadway Street, #501
New York, NY 10002
+1 (212) 242-2220

Security
Steve Keller and Associates, Inc.
555 W. Granada Blvd. Suite G-4
Ormond Beach, FL 32174
+1 (386) 673-5034

Description	Date

Project

Storm King Art Center

C.F.M. Building

Seal

NOT FOR CONSTRUCTION

Drawing Title

Details Security & CCTV System

Date	06/17/22
Scale	1/8" = 1'-0"
Drawing Number	SC-C-200
Sheet Size	ARCH D

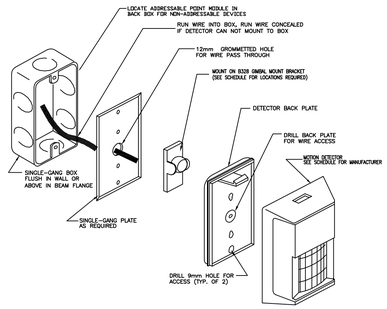

TYPICAL WALL MOUNTED MOTION DETECTOR ON GIMBAL MOUNT 17
SCALE : NONE

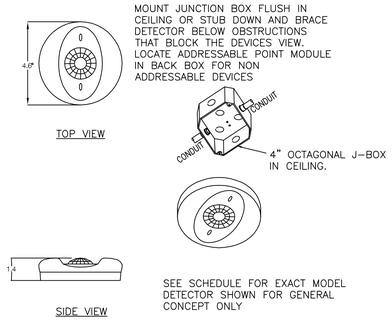

CEILING MOUNTED MOTION DETECTOR 18
SCALE : NONE

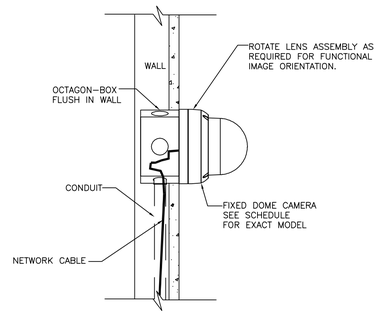

MOUNTING DETAIL OF WALL MOUNTED FIXED INDOOR MINI DOME CAMERA 19
SCALE : NONE

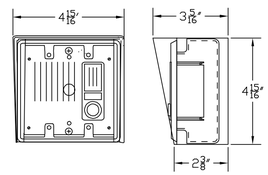

AUDIO INTERCOM DETAIL 03
SCALE : NONE

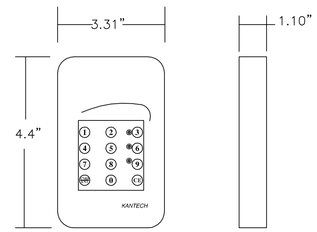

SEE SCHEDULE FOR EXACT MODEL NUMBER AND INFORMATION.

DETAIL OF CARD READER WITH KEYPAD 04
SCALE : NONE

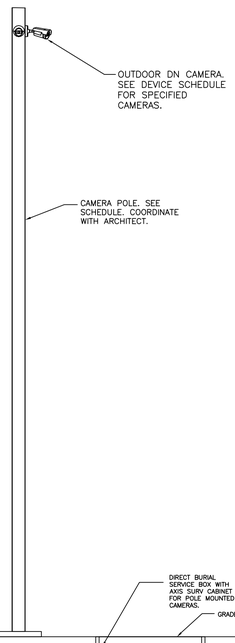

POLE MOUNTED FIXED DAY/NIGHT BULLET CAMERAS WITH DIRECT BURIED CONTROL PANEL ELEVATION DETAIL 05
SCALE : NONE

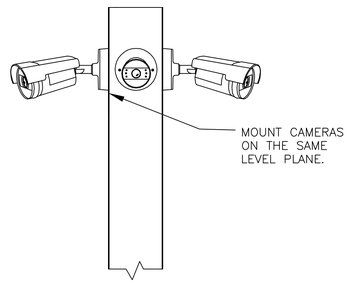

POLE MOUNTED CAMERA ELEVATION DETAIL 06
SCALE : NONE

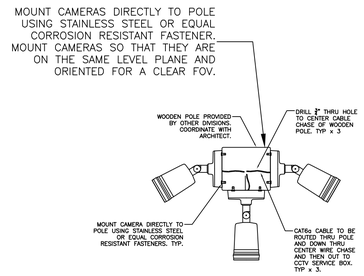

POLE MOUNTED CAMERA ORIENTATION PLAN VIEW DETAIL 07
SCALE : NONE

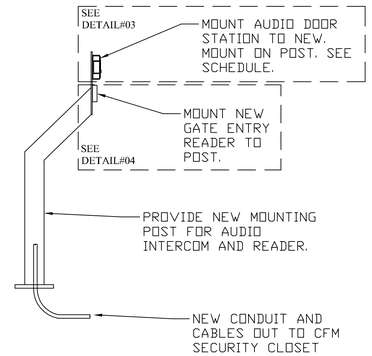

ENTRY GATE ACCESS MOUNTING POST DETAL WITH READER WITH KEYPAD AND AUDIO INTERCOM 08
SCALE : NONE

SCALE : NONE 09

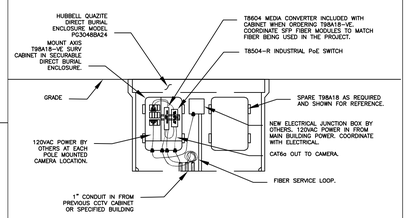

DIRECT BURIED CCTV CONTROL PANEL EQUIPMENT VAULT DETAIL 10
SCALE : NONE

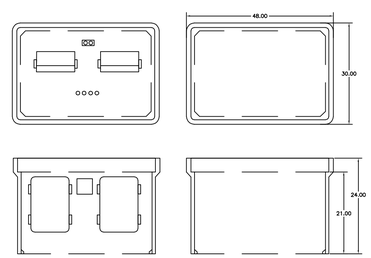

DIRECT BURIAL EQUIPMENT VAULT DETAIL 11
SCALE : NONE

SCALE : NONE 13

SCALE : NONE 14

SCALE : NONE 15

SCALE : NONE 16

SCALE : NONE 17

SCALE : NONE 18

SCALE : NONE 19

Owner
Storm King Art Center
1 Museum Road
New Windsor, NY 12553
+1 (845) 534-3115

Design Architect
heneghan peng architects
14-16 Lord Edward Street
Dublin, D02 YC63
+353 1 633 9000

Executive Architect
WXY Architecture + Urban Design
224 Centre Street, 5th Floor
New York, NY 10013
+1 (212) 219-1953

Landscape Architect
Gustafson Porter + Bowman
1 Cobham Mews
London, MW1 9SB
+44 020 7284 8950

Reed Hilderbrand LLC
33 Whitney Avenue, 3rd Floor
New Haven, CT 06510
+1 (617) 923-2422

Structural & Lighting
ARUP
77 Water Street
New York, NY 10005
+1 (212) 896-3000

MEPF & IT
BuroHappold
100 Broadway #23
New York, NY 10005
+1 (212) 616-0228

Civil
VHB
100 Great Oaks Blvd., Suite 118
Albany, NY 12203
+1 (518) 389-3606

AV & Acoustics
LSTN Consultants
76 Beaver Street, 2nd Floor
New York, NY 10005
+1 (347) 788-0810

Facade
Front Inc.
100 E. Broadway Street, #501
New York, NY 10002
+1 (212) 242-2220

Security
Steve Keller and Associates, Inc.
555 W. Granada Blvd. Suite G-4
Ormond Beach, FL 32174
+1 (386) 673-5034

Description	Date

Project

Storm King Art Center

C.F.M. Building

Seal

NOT FOR CONSTRUCTION

Drawing Title

Details
Security & CCTV System

Date	06/17/22
Scale	N.T.S.
Drawing Number	SC-C-201
Sheet Size	ARCH D

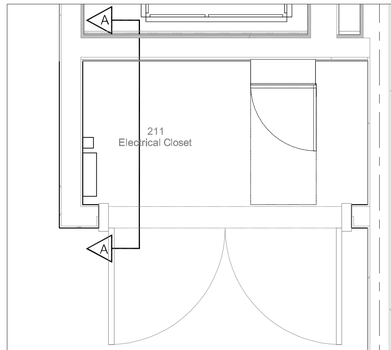

C.F.M. BUILDING - ELECTRICAL RM 211 LAYOUT 01
SCALE : NONE

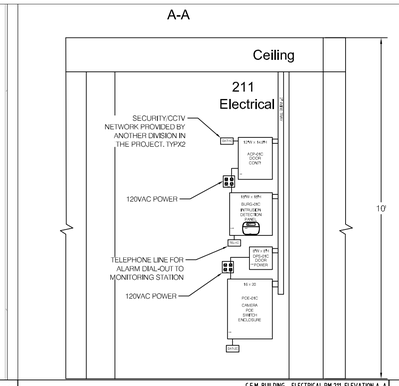

C.F.M. BUILDING - ELECTRICAL RM 211 ELEVATION A-A 02
SCALE : NONE

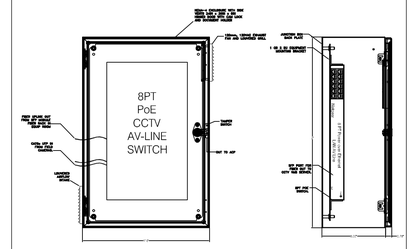

DETAIL OF POE FIELD PANEL 03
SCALE : NONE

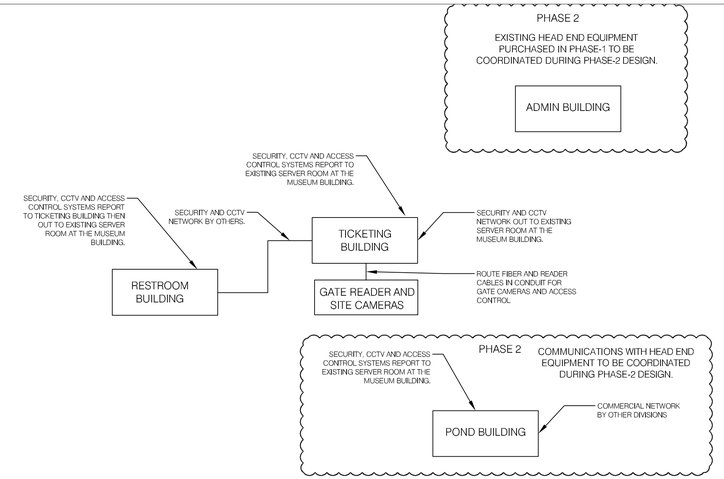

SCALE : NONE 04

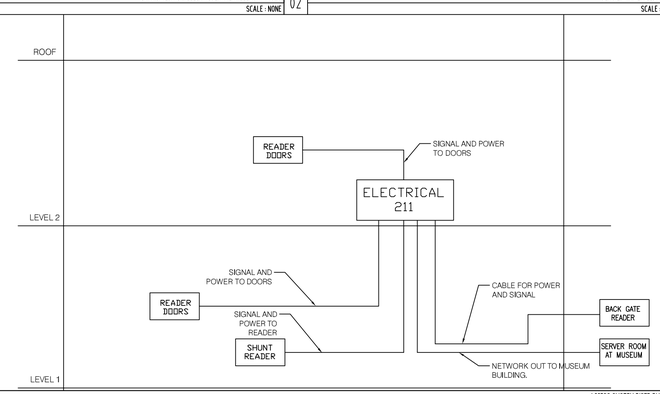

ACCESS SYSTEM RISER DIAGRAM 05
SCALE : NONE

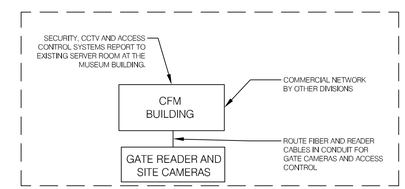

SECURITY COMMUNICATIONS BACKBONE 06
SCALE : NONE

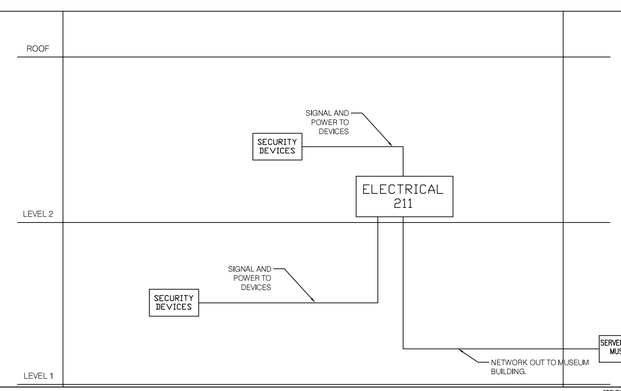

SCALE : NONE 07

SECURITY SYSTEM RISER DIAGRAM 08
SCALE : NONE

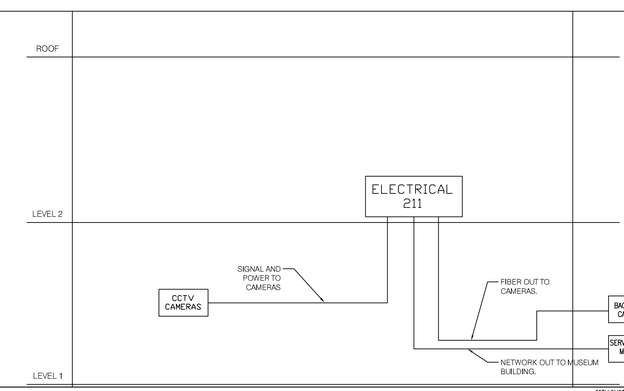

CCTV SYSTEM RISER DIAGRAM 09
SCALE : NONE

SCALE : NONE 10

SCALE : NONE 11

SCALE : NONE 12

SCALE : NONE 13

SCALE : NONE 14

Owner
Storm King Art Center
1 Museum Road
New Windsor, NY 12553
+1 (845) 534-3115

Design Architect
heneghan peng architects
14-16 Lord Edward Street
Dublin, D02 YC63
+353 1 633 9000

Executive Architect
WXY Architecture + Urban Design
224 Centre Street, 5th Floor
New York, NY 10013
+1 (212) 219-1953

Landscape Architect
Gustafson Porter + Bowman
1 Cobham Mews
London, MW1 9SB
+44 020 7284 8950

Reed Hilderbrand LLC
33 Whitney Avenue, 3rd Floor
New Haven, CT 06510
+1 (617) 923-2422

Structural & Lighting
ARUP
77 Water Street
New York, NY 10005
+1 (212) 896-3000

MEPF & IT
BuroHappold
100 Broadway #23
New York, NY 10005
+1 (212) 616-0228

Civil
VHB
100 Great Oaks Blvd., Suite 118
Albany, NY 12203
+1 (518) 389-3606

AV & Acoustics
LSTN Consultants
76 Beaver Street, 2nd Floor
New York, NY 10005
+1 (347) 788-0810

Facade
Front Inc.
100 E. Broadway Street, #501
New York, NY 10002
+1 (212) 242-2220

Security
Steve Keller and Associates, Inc.
555 W. Granada Blvd. Suite G-4
Ormond Beach, FL 32174
+1 (386) 673-5034

Description	Date

Project

Storm King Art Center

C.F.M. Building

Seal

NOT FOR CONSTRUCTION

Drawing Title

Details
Security & CCTV System

Date	06/17/22
Scale	N.T.S.
Drawing Number	SC-C-202
Sheet Size	ARCH D

TAG	DOOR #	TYPE	MODEL	NOTE	WORKS WITH	WORK WILL OCCUR
1		Magnetic Contact	GRI 195-12 DPDT	GRI 195-12 Recessed Steel Door Contact w/Wire Leads DPDT, 1" Diameter, 1/2" Gap Size, Closed Loop. See Spec. See Detail.	CR-1, CR-2	PH-1
1-1		Magnetic Contact	GRI 195-12 DPDT	Use Universal Addressable Point Module (AMP-701 or AMP-701NP) located in the junction box above the door to provide a unique ID on the data loop.		PH-1
1-2		Ceiling Mounted Motion Detector	DSC AMB-500	Addressable Ceiling mount PIR, 18 curtains, Form C relay, mounting height from 8-12 ft. Dual Optic Technology. Surface mount on ceiling if 8-12' AFF or stubdown to 12' AFF. See Detail.		PH-1
1-3		Ceiling Mounted Motion Detector	DSC AMB-500	Addressable Ceiling mount PIR, 18 curtains, Form C relay, mounting height from 8-12 ft. Dual Optic Technology. Surface mount on ceiling if 8-12' AFF or stubdown to 12' AFF. See Detail.		PH-1
1-4		Wall-Mounted Motion Detector	DSC AMB-600	Addressable wall mount PIR, Multi-Level signal processing, Form C relay, mounting height 7.5' AFF. Dual Optic Technology. See Spec. See Detail.		PH-1
1-5		Wall-Mounted Motion Detector	DSC AMB-600	Addressable wall mount PIR, Multi-Level signal processing, Form C relay, mounting height 7.5' AFF. Dual Optic Technology. See Spec. See Detail.		PH-1
1-6		Ceiling Mounted Motion Detector	DSC AMB-500	Addressable Ceiling mount PIR, 18 curtains, Form C relay, mounting height from 8-12 ft. Dual Optic Technology. Surface mount on ceiling if 8-12' AFF or stubdown to 12' AFF. See Detail.		PH-1
2-1		Magnetic Contact	GRI 184-Closed Loop	GRI 184-12 Recessed Steel Door Contact w/Wire Leads DPDT, 1" Diameter, 1/2" Gap Size, Closed Loop. See Spec. See Detail. Use Universal Addressable Point Module (AMP-701 or AMP-701NP) located in the junction box above the door to provide a unique ID on the data loop.	Outputs to device 2-2	PH-1
2-2		Local Audible Alarm	GEH12WW	Bosch GEH12WW White, 12 VDC horn; field□selectable for high or low frequency, high or low volume, and temporal (Code 3) or continuous tone pattern. Utilize Honeywell 4101SN V-plex Addressable relay module.	Annunciates when point 2-1 is in Alarm	PH-1
3-1		Magnetic Contact	GRI 184-Closed Loop	GRI 184-12 Recessed Steel Door Contact w/Wire Leads DPDT, 1" Diameter, 1/2" Gap Size, Closed Loop. See Spec. See Detail. Use Universal Addressable Point Module (AMP-701 or AMP-701NP) located in the junction box above the door to provide a unique ID on the data loop.		PH-1
3-2		Ceiling Mounted Motion Detector	DSC AMB-500	Addressable Ceiling mount PIR, 18 curtains, Form C relay, mounting height from 8-12 ft. Dual Optic Technology. Surface mount on ceiling if 8-12' AFF or stubdown to 12' AFF. See Detail.		PH-1
4-1		Magnetic Contact	GRI 184-Closed Loop	GRI 184-12 Recessed Steel Door Contact w/Wire Leads DPDT, 1" Diameter, 1/2" Gap Size, Closed Loop. See Spec. See Detail. Use Universal Addressable Point Module (AMP-701 or AMP-701NP) located in the junction box above the door to provide a unique ID on the data loop.		PH-1
4-2		DSC AMB-500	DSC AMB-500	Addressable Ceiling mount PIR, 18 curtains, Form C relay, mounting height from 8-12 ft. Dual Optic Technology. Surface mount on ceiling if 8-12' AFF or stubdown to 12' AFF. See Detail.		PH-1
5-1		Overhead Door Magnetic Contact	ISN-CMET-4418	BOSCH ISN-CMET-4418 Overhead door contact with 2" gap, 18" metal clad cable. See Spec. See Detail. Use Universal Addressable Point Module (AMP-701 or AMP-701NP) located in the junction box adjacnet to the door to provide a unique ID on the data loop.		PH-1
5-2		Overhead Door Magnetic Contact	ISN-CMET-4418	BOSCH ISN-CMET-4418 Overhead door contact with 2" gap, 18" metal clad cable. See Spec. See Detail. Use Universal Addressable Point Module (AMP-701 or AMP-701NP) located in the junction box adjacnet to the door to provide a unique ID on the data loop.		PH-1
5-3		Overhead Door Magnetic Contact	ISN-CMET-4418	BOSCH ISN-CMET-4418 Overhead door contact with 2" gap, 18" metal clad cable. See Spec. See Detail. Use Universal Addressable Point Module (AMP-701 or AMP-701NP) located in the junction box adjacnet to the door to provide a unique ID on the data loop.		PH-1
5-4		Overhead Door Magnetic Contact	ISN-CMET-4418	BOSCH ISN-CMET-4418 Overhead door contact with 2" gap, 18" metal clad cable. See Spec. See Detail. Use Universal Addressable Point Module (AMP-701 or AMP-701NP) located in the junction box adjacnet to the door to provide a unique ID on the data loop.		PH-1
5-5		Ceiling Mounted Motion Detector	DSC AMB-500	Addressable Ceiling mount PIR, 18 curtains, Form C relay, mounting height from 8-12 ft. Dual Optic Technology. Surface mount on ceiling if 8-12' AFF or stubdown to 12' AFF. See Detail.		PH-1
5-6		Ceiling Mounted Motion Detector	DSC AMB-500	Addressable Ceiling mount PIR, 18 curtains, Form C relay, mounting height from 8-12 ft. Dual Optic Technology. Surface mount on ceiling if 8-12' AFF or stubdown to 12' AFF. See Detail.		PH-1
5-7		Ceiling Mounted Motion Detector	DSC AMB-500	Addressable Ceiling mount PIR, 18 curtains, Form C relay, mounting height from 8-12 ft. Dual Optic Technology. Surface mount on ceiling if 8-12' AFF or stubdown to 12' AFF. See Detail.		PH-1
6-1		Magnetic Contact	GRI 184-Closed Loop	GRI 184-12 Recessed Steel Door Contact w/Wire Leads DPDT, 1" Diameter, 1/2" Gap Size, Closed Loop. See Spec. See Detail. Use Universal Addressable Point Module (AMP-701 or AMP-701NP) located in the junction box above the door to provide a unique ID on the data loop.		PH-1
6-2		Magnetic Contact	GRI 184-Closed Loop	GRI 184-12 Recessed Steel Door Contact w/Wire Leads DPDT, 1" Diameter, 1/2" Gap Size, Closed Loop. See Spec. See Detail. Use Universal Addressable Point Module (AMP-701 or AMP-701NP) located in the junction box above the door to provide a unique ID on the data loop.		PH-1
6-3		Overhead Door Magnetic Contact	ISN-CMET-4418	BOSCH ISN-CMET-4418 Overhead door contact with 2" gap, 18" metal clad cable. See Spec. See Detail. Use Universal Addressable Point Module (AMP-701 or AMP-701NP) located in the junction box adjacnet to the door to provide a unique ID on the data loop.		PH-1
6-4		Wall-Mounted 70' Motion Detector	ISC-PDL1-WA18G	Bosch ISC-PDL1-WA18G Professional Series TriTech+ Motion Detector with Anti□mask. PIR and microwave, 18 m x 25 m (60 ft x 80ft) coverage with anti-mask. 10.525 GHz frequency.Mount at 9' AFF. See Spec. See Detail. Use Universal Addressable Point Module (AMP-701 or AMP-701NP) located in the device junction box to provide a unique ID on the data loop.		PH-1
6-5		Overhead Door Magnetic Contact	ISN-CMET-4418	BOSCH ISN-CMET-4418 Overhead door contact with 2" gap, 18" metal clad cable. See Spec. See Detail. Use Universal Addressable Point Module (AMP-701 or AMP-701NP) located in the junction box adjacnet to the door to provide a unique ID on the data loop.		PH-1
6-6		Overhead Door Magnetic Contact	ISN-CMET-4418	BOSCH ISN-CMET-4418 Overhead door contact with 2" gap, 18" metal clad cable. See Spec. See Detail. Use Universal Addressable Point Module (AMP-701 or AMP-701NP) located in the junction box adjacnet to the door to provide a unique ID on the data loop.		PH-1
6-7		Overhead Door Magnetic Contact	ISN-CMET-4418	BOSCH ISN-CMET-4418 Overhead door contact with 2" gap, 18" metal clad cable. See Spec. See Detail. Use Universal Addressable Point Module (AMP-701 or AMP-701NP) located in the junction box adjacnet to the door to provide a unique ID on the data loop.		PH-1
6-8		Wall-Mounted 70' Motion Detector	ISC-PDL1-WA18G	Bosch ISC-PDL1-WA18G Professional Series TriTech+ Motion Detector with Anti□mask. PIR and microwave, 18 m x 25 m (60 ft x 80ft) coverage with anti-mask. 10.525 GHz frequency.Mount at 9' AFF. See Spec. See Detail. Use Universal Addressable Point Module (AMP-701 or AMP-701NP) located in the device junction box to provide a unique ID on the data loop.		PH-1
6-9		Overhead Door Magnetic Contact	ISN-CMET-4418	BOSCH ISN-CMET-4418 Overhead door contact with 2" gap, 18" metal clad cable. See Spec. See Detail. Use Universal Addressable Point Module (AMP-701 or AMP-701NP) located in the junction box adjacnet to the door to provide a unique ID on the data loop.		PH-1
6-10		Ceiling Mounted Motion Detector	DSC AMB-500	Addressable Ceiling mount PIR, 18 curtains, Form C relay, mounting height from 8-12 ft. Dual Optic Technology. Surface mount on ceiling if 8-12' AFF or stubdown to 12' AFF. See Detail.		PH-1
6-11		Wall-Mounted Motion Detector	DSC AMB-600	Addressable wall mount PIR, Multi-Level signal processing, Form C relay, mounting height 7.5' AFF. Dual Optic Technology. See Spec. See Detail.		PH-1
6-12		Overhead Door Magnetic Contact	ISN-CMET-4418	BOSCH ISN-CMET-4418 Overhead door contact with 2" gap, 18" metal clad cable. See Spec. See Detail. Use Universal Addressable Point Module (AMP-701 or AMP-701NP) located in the junction box adjacnet to the door to provide a unique ID on the data loop.		PH-1
6-13		Magnetic Contact	GRI 184-Closed Loop	GRI 184-12 Recessed Steel Door Contact w/Wire Leads DPDT, 1" Diameter, 1/2" Gap Size, Closed Loop. See Spec. See Detail. Use Universal Addressable Point Module (AMP-701 or AMP-701NP) located in the junction box above the door to provide a unique ID on the data loop.		PH-1
6-14		Magnetic Contact	GRI 184-Closed Loop	GRI 184-12 Recessed Steel Door Contact w/Wire Leads DPDT, 1" Diameter, 1/2" Gap Size, Closed Loop. See Spec. See Detail. Use Universal Addressable Point Module (AMP-701 or AMP-701NP) located in the junction box above the door to provide a unique ID on the data loop.		PH-1
6-15		Wall-Mounted 70' Motion Detector	ISC-PDL1-WA18G	Bosch ISC-PDL1-WA18G Professional Series TriTech+ Motion Detector with Anti□mask. PIR and microwave, 18 m x 25 m (60 ft x 80ft) coverage with anti-mask. 10.525 GHz frequency.Mount at 9' AFF. See Spec. See Detail. Use Universal Addressable Point Module (AMP-701 or AMP-701NP) located in the device junction box to provide a unique ID on the data loop.		PH-1

Owner
Storm King Art Center
1 Museum Road
New Windsor, NY 12553
+1 (845) 534-3115

Design Architect
heneghan peng architects
14-16 Lord Edward Street
Dublin, D02 YC63
+353 1 633 9000

Executive Architect
WXY Architecture + Urban Design
224 Centre Street, 5th Floor
New York, NY 10013
+1 (212) 219-1953

Landscape Architect
Gustafson Porter + Bowman
1 Cobham Mews
London, MW1 9SB
+44 020 7284 8950

Reed Hilderbrand LLC
33 Whitney Avenue, 3rd Floor
New Haven, CT 06510
+1 (617) 923-2422

Structural & Lighting
ARUP
77 Water Street
New York, NY 10005
+1 (212) 896-3000

MEPF & IT
BuroHappold
100 Broadway #23
New York, NY 10005
+1 (212) 616-0228

Civil
VHB
100 Great Oaks Blvd., Suite 118
Albany, NY 12203
+1 (518) 389-3606

AV & Acoustics
LSTN Consultants
76 Beaver Street, 2nd Floor
New York, NY 10005
+1 (347) 788-0810

Facade
Front Inc.
100 E. Broadway Street, #501
New York, NY 10002
+1 (212) 242-2220

Security
Steve Keller and Associates, Inc.
555 W. Granada Blvd. Suite G-4
Ormond Beach, FL 32174
+1 (386) 673-5034

Description	Date

Project

Storm King Art Center

C.F.M. Building

Seal

NOT FOR CONSTRUCTION

Drawing Title

Schedule Security & CCTV System

Date	06/17/22
Scale	N.T.S.
Drawing Number	SC-C-300
Sheet Size	ARCH D

6-16		Magnetic Contact	GRI 184-Closed Loop	GRI 184-12 Recessed Steel Door Contact w/Wire Leads DPDT, 1" Diameter, 1/2" Gap Size, Closed Loop. See Spec. See Detail. Use Universal Addressable Point Module (AMP-701 or AMP-701NP) located in the junction box above the door to provide a unique ID on the data loop.		PH-1
2 A&B		Dual Magnetic Contacts	GRI 195-12 DPDT	GRI 195-12 Recessed Steel Door Contact w/Wire Leads DPDT, 1" Diameter, 1/2" Gap Size, Closed Loop. See Spec. See Detail. Use Universal Addressable Point Module (AMP-701 or AMP-701NP) located in the junction box above the door to provide a unique ID on the data loop.	CR-3, CR-4	PH-1
7-1 A&B		Dual Magnetic Contacts	GRI 195-12 DPDT	Use Universal Addressable Point Module (AMP-701 or AMP-701NP) located in the junction box above the door to provide a unique ID on the data loop.		PH-1
7-2		Ceiling Mounted Motion Detector	DSC AMB-500	Addressable Ceiling mount PIR, 18 curtains, Form C relay, mounting height from 8-12 ft. Dual Optic Technology. Surface mount on ceiling if 8-12' AFF or stubdown to 12' AFF. See Detail.		PH-1
8-1		Magnetic Contact	GRI 184-Closed Loop	GRI 184-12 Recessed Steel Door Contact w/Wire Leads DPDT, 1" Diameter, 1/2" Gap Size, Closed Loop. See Spec. See Detail. Use Universal Addressable Point Module (AMP-701 or AMP-701NP) located in the junction box above the door to provide a unique ID on the data loop.		PH-1
8-2		Wall-Mounted Motion Detector	DSC AMB-600	Addressable wall mount PIR, Multi-Level signal processing, Form C relay, mounting height 7.5' AFF. Dual Optic Technology. See Spec. See Detail.		PH-1
8-3		Magnetic Contact	GRI 184-Closed Loop	GRI 184-12 Recessed Steel Door Contact w/Wire Leads DPDT, 1" Diameter, 1/2" Gap Size, Closed Loop. See Spec. See Detail. Use Universal Addressable Point Module (AMP-701 or AMP-701NP) located in the junction box above the door to provide a unique ID on the data loop.		PH-1
8-4		Magnetic Contact	GRI 184-Closed Loop	GRI 184-12 Recessed Steel Door Contact w/Wire Leads DPDT, 1" Diameter, 1/2" Gap Size, Closed Loop. See Spec. See Detail. Use Universal Addressable Point Module (AMP-701 or AMP-701NP) located in the junction box above the door to provide a unique ID on the data loop.		PH-1
CK-1-1		Keypad	DSC PK5500	DSC PK5500 keypad with backlite buttons and LCD display. Refer to Equipment schedule for additional information.		PH-1
CK-1-2		Touch Screen Keypad	DSC PTK5507	DSC PTK5507 Touch screen Keypad.		PH-1
CK-1-3		Touch Screen Keypad	DSC PTK5507	DSC PTK5507 Touch screen Keypad.		PH-1
CK-1-4		Touch Screen Keypad	DSC PTK5507	DSC PTK5507 Touch screen Keypad.		PH-1
CEL-1		Electronic Lockset	SDC Z7800-RS	Electronic Lockset with integrated Request to Exit and Lock/Latch Status or equal. See Spec.	CR-1, CR-2	PH-1
CEL-2		Electronic Lockset	SDC Z7800-RS	Electronic Lockset with integrated Request to Exit and Lock/Latch Status or equal. See Spec.	CR-3, CR-4	PH-1
CR-1		Card Reader	Kantech P345MTR	Multi-Technology reader; See spec. Coordinate with architect. Color: Black Mount at 4ft AFF. See Detail.	CR-2, CEL-1, Shunts point 1	PH-1
CR-2		Request to Exit	INTEGRATED	Integrated in Lockset	CR-1, Shunts point 1	PH-1
CR-3		Card Reader	Kantech P345MTR	Multi-Technology reader; See spec. Coordinate with architect. Color: Black Mount at 4ft AFF. See Detail.	CR-4, CEL-2, Shunts point 2 A&B	PH-1
CR-4		Request to Exit	INTEGRATED	Integrated in Lockset	CR-3, Shunts point 2 A&B	PH-1
CRP-5		Card Reader with Pin-Pad	Kantech P345KPMTR	Multi-Technology reader with keypad; See spec. Coordinate with architect. Color: Black. Mount at Gate on mounting post provided by others. Coordinate with gate control specifier.		PH-1
CSR-1		Shunts Card Reader	Kantech P345MTR	Multi-Technology reader; See spec. Coordinate with architect. Color: Black Mount at 4ft AFF. See Detail.	Shunts ZONE 1	PH-1

CLOOP-1		Drive Loop	CP3-100-3W CP3	Gate control exit inductive coil loop for REX interface on secure side of drive. Provided by others. See Spec. Coordinate with architect and gate control equipment being provided by others.		PH-1
CINT-1		Intercom Station	Aiphone IE-JA or Equivalent	Aiphone AX series weather esistant audio intercom door station, stainless steel, surface mount. See Spec. Mount at Gate on mounting post provided by others. Coordinate with architect. Surface mount into SBX-2G, sold separately. See Detail.		PH-1
CC-1		Wall Mt Mini-Dome Camera Day/Night	Illustra IES02-D12-O104	Illustra IES02-D12-O104 Day/Night Dome Camera w/IR illumiator, 1/2.8" Sony CMOS, Verifocal F2.7~13.5mm POE 9.9W. Mount camera on wall 12" below roof overhang. See Spec and details.		PH-1
CC-2		Pole Mt Bullet Camera - Day/Night	Illustra IES02-B12-B104	Illustra IES02-B12-B104 Day/Night Bullet Camera w/IR illumiator, 1/2.8" Sony CMOS, Verifocal F2.7~13.5mm POE 9.9W. Mount camera on pole at 17' AFF. See detail and layout for camera placement.		PH-1
CC-3		Pole Mt Bullet Camera - Day/Night	Illustra IES02-B12-B104	Illustra IES02-B12-B104 Day/Night Bullet Camera w/IR illumiator, 1/2.8" Sony CMOS, Verifocal F2.7~13.5mm POE 9.9W. Mount camera on pole at 17' AFF. See detail and layout for camera placement.		PH-1
CC-4		Wall Mt Mini-Dome Camera Day/Night	Illustra IES02-D12-O104	Illustra IES02-D12-O104 Day/Night Dome Camera w/IR illumiator, 1/2.8" Sony CMOS, Verifocal F2.7~13.5mm POE 9.9W. Mount camera on wall at 7' 6" AFF. See Spec and details.		PH-1
CPOLE-1		Camera Pole	P1800 Or Equal	Moog-Videolarm Fixed Steel 4in Sq. x 16ft steel pole. Use PV4 anchor JIG. Coordinate exact location with architect. See Spec. See Detail.		PH-1

Owner
Storm King Art Center
1 Museum Road
New Windsor, NY 12553
+1 (845) 534-3115

Design Architect
heneghan peng architects
14-16 Lord Edward Street
Dublin, D02 YC63
+353 1 633 9000

Executive Architect
WXY Architecture + Urban Design
224 Centre Street, 5th Floor
New York, NY 10013
+1 (212) 219-1953

Landscape Architect
Gustafson Porter + Bowman
1 Cobham Mews
London, MW1 9SB
+44 020 7284 8950

Reed Hilderbrand LLC
33 Whitney Avenue, 3rd Floor
New Haven, CT 06510
+1 (617) 923-2422

Structural & Lighting
ARUP
77 Water Street
New York, NY 10005
+1 (212) 896-3000

MEPF & IT
BuroHappold
100 Broadway #23
New York, NY 10005
+1 (212) 616-0228

Civil
VHB
100 Great Oaks Blvd., Suite 118
Albany, NY 12203
+1 (518) 389-3606

AV & Acoustics
LSTN Consultants
76 Beaver Street, 2nd Floor
New York, NY 10005
+1 (347) 788-0810

Facade
Front Inc.
100 E. Broadway Street, #501
New York, NY 10002
+1 (212) 242-2220

Security
Steve Keller and Associates, Inc.
555 W. Granada Blvd. Suite G-4
Ormond Beach, FL 32174
+1 (386) 673-5034

Description	Date

Project

Storm King Art Center

C.F.M. Building

Seal

NOT FOR CONSTRUCTION

Drawing Title

Schedule Security & CCTV System

Date	06/17/22
Scale	N.T.S.
Drawing Number	SC-C-301
Sheet Size	ARCH D

Equipment List - C.F.M. Building

Equipment ID	Model #	Description	Purpose	Room #	Unit size	Voltage	NEMA Rating	Watts	Power	Work will Occur	Status
Panel Array	**Room 211**	**Electrical 211 - A-A**									
ACP-01C	KT-400	Kantech Door Controller panel	Door Control Panel	Ele 211	Wall	16.5 VAC		75mA	Rec-1C	Phase 1	New
BURG-01C	PC1864	DSC PowerSeries PC1864 Intrusion Detection Panel - 8 partition	Electonic Security	Ele 211	Wall	16.5 VAC		85mA	Rec-1C	Phase 1	New
DPS-01C	ACM4E	Altronix 4dr fused power supply	4dr Power Supply	Ele 211	Wall	12/24 VAC		2-3 BTU/HR	Rec-2C	Phase 1	New
PoE-01C	M4250-10G2F-POE+	Custom POE field panel with Netgear AV Line Managed Switch. 8pt POE/2pt standard. Use Hoffman enclosure or equal	Power IP cameras	Ele 211	Wall	110VAC		125 Watts	Rec-2C	Phase 1	New
CK-1-1	PK5500	64-Zone Full-Message LCD Keypad	Tech Interface	Ele 211	Panel				BURG-01C	Phase 1	New
Data/Tel	**Room 211**	**Electrical 211 - A-A**									
DAT-1C	RJ45	DATA PORT	DATA	Ele 211	Panel				SEC	Phase 1	TelCom
DAT-2C	RJ45	DATA PORT	DATA	Ele 211	Panel				SEC	Phase 1	TelCom
TEL-1C	RJ11	TELCOM PORT	TELEPHONE	Ele 211	Panel				POTS	Phase 1	TelCom
Power	**Room 211**	**Electrical 211 - A-A**									
Rec-1C	Double Duplex Receptical	2 Gang Double Duplex 120VAC Receptical	Power	Ele 211	4 Rec.	120VAC	5-20R			Phase 1	Division 26
Rec-2C	Double Duplex Receptical	2 Gang Double Duplex 120VAC Receptical	Power	Ele 211	4 Rec.	120VAC	5-20R			Phase 1	Division 26

Owner
Storm King Art Center
1 Museum Road
New Windsor, NY 12553
+1 (845) 534-3115

Design Architect
heneghan peng architects
14-16 Lord Edward Street
Dublin, D02 YC63
+353 1 633 9000

Executive Architect
WXY Architecture + Urban Design
224 Centre Street, 5th Floor
New York, NY 10013
+1 (212) 219-1953

Landscape Architect
Gustafson Porter + Bowman
1 Cobham Mews
London, MW1 9SB
+44 020 7284 8950

Reed Hilderbrand LLC
33 Whitney Avenue, 3rd Floor
New Haven, CT 06510
+1 (617) 923-2422

Structural & Lighting
ARUP
77 Water Street
New York, NY 10005
+1 (212) 896-3000

MEPF & IT
BuroHappold
100 Broadway #23
New York, NY 10005
+1 (212) 616-0228

Civil
VHB
100 Great Oaks Blvd., Suite 118
Albany, NY 12203
+1 (518) 389-3606

AV & Acoustics
LSTN Consultants
76 Beaver Street, 2nd Floor
New York, NY 10005
+1 (347) 788-0810

Facade
Front Inc.
100 E. Broadway Street, #501
New York, NY 10002
+1 (212) 242-2220

Security
Steve Keller and Associates, Inc.
555 W. Granada Blvd. Suite G-4
Ormond Beach, FL 32174
+1 (386) 673-5034

Description	Date

Project

Storm King Art Center

C.F.M. Building

Seal

NOT FOR CONSTRUCTION

Drawing Title

Schedule
Security & CCTV System

Date	06/17/22
Scale	N.T.S.
Drawing Number	SC-C-302
Sheet Size	ARCH D

HIGH PERFORMANCE PORTABLE CLASS II RATED VACUUM SCHEDULE

TAG	MANUFACTURER	MODEL	SERVES	MATERIAL	CFM	MAX WATERLIFT (IN. H20)	FILTER AREA (SQ.FT)	TANK CAPACITY (GAL)	ELECTRICAL			
									VOLTS	PHASE	RATED AMPS	RATED KW
V-1	NILFISK	VHT456 EXPN4AXX	WOODWORKING	SS	367	72.8	21	26	460	3	9.5	7.5

GENERAL NOTES:

1. RATED FOR OPERATION IN CLASS II DIVISION 2 ENVIRONMENTS
2. DESIGNED FOR CONTINUOUS DUTY OPERATION
3. PROVIDE ANTISTATIC POLYESTER MAIN FILTER
4. PROVIDE WITH UPSTREAM HEPA FILTER
5. PROVIDE WITH MANUAL FILTER SHAKER
6. PROVIDE WITH MANOMETER
7. PROVIDE WITH ANTISTATIC CASTERS AND HANDLE
8. PROVIDE WITH 30FT POWER CORD WITH PLUG
9. PROVIDE WITH UL/CSA RECOGNIZED COMPONENTS
10. PROVIDE WITH 50mm (2") ANTISTATIC HOSE
11. PROVIDE LOW SPARKING INLET AND DEFLECTOR
12. PROVIDE ALL COMPONENTS FOR A COMPLETE SYSTEM COMPLIANT WITH NFPA 664 AND 652
13. OR EQUAL. SUBMIT OR EQUAL REQUESTS TO ARCHITECT.

PORTABLE DUST COLLECTOR SCHEDULE

TAG	MANUFACTURER	MODEL	SERVES	CFM	ELECTRICAL			COMMENTS
					VOLTS	PHASE	HP	
DC-1	AIRFLOW SYSTEMS	PCH-2	WELDERS/PLASMA	1150	208	1	3	1
DC-2	AIRFLOW SYSTEMS	PCH-1	METAL SANDER	700	208	1	1	2

GENERAL NOTES:

1. PROVIDE WITH 8" EXTRACTION ARM
2. PROVIDE WITH 4" STATIC DISSIPATIVE FLEXIBLE DUCT. CONNECT DIRECTLY TO THE METAL SANDER
3. PROVIDE WITH MANOMETER
4. OR EQUAL. SUBMIT OR EQUAL REQUESTS TO ARCHITECT.

1 Ground Level
1/8" = 1'-0"

KEY NOTES:

WOODWORKING:

1. TABLE SAW (BY OTHERS): GRIZZLY MODEL G0690, 10" DIAMETER BLADE, 3450 RPM, MOBILE UNIT (CASTERS) 4"ø EXHAUST PORT.
2. FURNISH AND INSTALL A 4"ø TO 2"ø REDUCER ON TABLE SAW CAPABLE OF CONNECTING TO 50mm CONDUCTIVE HOSE SUPPLIED WITH V-1. THE CONNECTION SHALL BE MADE OF CONDUCTIVE MATERIAL (GALVANIZED, OR EQUAL) OR A GROUNDING STRAP SHALL BE INSTALLED.
3. PLANER (BY OTHERS): GRIZZLY MODEL G1033Z, PLANER SIZE 20", MAX CUT WIDTH: 20", CUTTERHEAD SPEED 5,000 RPM, MOBILE UNIT (CASTERS) 5"ø DUST COLLECTION PORT.
4. FURNISH AND INSTALL A 5"ø TO 2"ø REDUCER ON TABLE SAW CAPABLE OF CONNECTING TO 50mm CONDUCTIVE HOSE SUPPLIED WITH V-1. THE CONNECTION SHALL BE MADE OF CONDUCTIVE MATERIAL (GALVANIZED, OR EQUAL) OR A GROUNDING STRAP SHALL BE INSTALLED.
5. BAND SAW (BY OTHERS): GRIZZLY MODEL G0513X2BF, BLADE WIDTH: 1/2"-1", BLADE SPEEDS: 1,700/3,500 FPM, MOBILE UNIT (CASTERS) 4"ø EXHAUST PORT.
6. FURNISH AND INSTALL A 4"ø TO 2"ø REDUCER ON FRONT CONNECTION TO BAND SAW CAPABLE OF CONNECTING TO 50mm CONDUCTIVE HOSE SUPPLIED WITH V-1. THE CONNECTION SHALL BE MADE OF CONDUCTIVE MATERIAL (GALVANIZED, OR EQUAL) OR A GROUNDING STRAP SHALL BE INSTALLED. CAP ALL OTHER DUST COLLECTION PORTS.
7. DRILL PRESS (BY OTHERS): GRIZZLY MODEL G7948
8. NO DUST COLLECTION
9. WOODWORKING IS NOT DESIGNATED AS CLASS II ELECTRICAL CONSTRUCTION. OPERATORS TO DISCONTINUE PRODUCTION IF SURFACE DUST ACCUMULATIONS GREATER THAN 1/32" OR ENOUGH TO OBSCURE SURFACE COLOR ARE PRESENT ON 10% OR GREATER OF THE SURFACES OR A SIGNIFICANT DUST CLOUD, ENOUGH TO OBSCURE VISIBILITY IS PRESENT.

OPEN WORKSPACE:

10. METAL SANDER: GRIZZLY MODEL G0489, 4"ø EXHAUST CONNECTION.
11. CONNECT DIRECTLY TO DC-2 WITH 4"ø STATIC DISSIPATIVE FLEXIBLE DUCT. MAX 10'-0" LONG.
12. METAL BAND SAW: GRIZZLY MODEL G9743, WITH COOLANT/LUBRICANT
13. NO DUST COLLECTION
14. PORTABLE WELDER
15. PORTABLE PLASMA CUTTER
16. DC-1 TO BE UTILIZED WITH PORTABLE WELDERS AND PLASMA CUTTERS. LOCATE EXTRACTION ARM OPENING A MAXIMUM OF 12" FROM THE WELDING/CUTTING SURFACE.

PAINT BOOTH:

17. ALL ELECTRICAL CONSTRUCTION WITHIN 36" IN ALL DIRECTION OF ANY PAINT BOOTH OPENING TO BE CLASS I DIVISION II CONSTRUCTION.
18. MAINTAIN AN OSHA REQUIRED MINIMUM 20 FEET FROM THE PAINT BOOTH FOR ANY SOURCE OF SPARKS INCLUDING WELDING AND METAL CUTTING.

Owner
Storm King Art Center
1 Museum Road
New Windsor, NY 12553
+1 (845) 534-3115

Design Architect
heneghan peng architects
14-16 Lord Edward Street
Dublin, D02 YC63
+353 1 633 9000

Executive Architect
WXY Architecture + Urban Design
224 Centre Street, 5th Floor
New York, NY 10013
+1 (212) 219-1953

Landscape Architect
Gustafson Porter + Bowman
1 Cobham Mews
London, MW1 9SB
+44 020 7284 8950

Reed Hilderbrand LLC
33 Whitney Avenue, 3rd Floor
New Haven, CT 06510
+1 (617) 923-2422

Structural & Lighting
ARUP
77 Water Street
New York, NY 10005
+1 (212) 896-3000

MEPF & IT
BuroHappold
100 Broadway #23
New York, NY 10005
+1 (212) 616-0228

Civil
VHB
100 Great Oaks Blvd., Suite 118
Albany, NY 12203
+1 (518) 389-3606

AV & Acoustics
LSTN Consultants
76 Beaver Street, 2nd Floor
New York, NY 10005
+1 (347) 788-0810

Facade
Front Inc.
100 E. Broadway Street, #501
New York, NY 10002
+1 (212) 242-2220

IH Consultant
Gallagher Basset Technical Services
1350 Broadway Street, Suite 1904
New York, NY 10018
+1 (212) 631-9000

N

Description	Date

Project

Storm King Art Center

C.F.M. Building

Seal

NOT FOR CONSTRUCTION

Drawing Title

Industrial Hygiene Plan - Ground Level

Date	06/17/22
Scale	1/8" = 1'-0"
Drawing Number	IH-C-101
Sheet Size	ARCH D