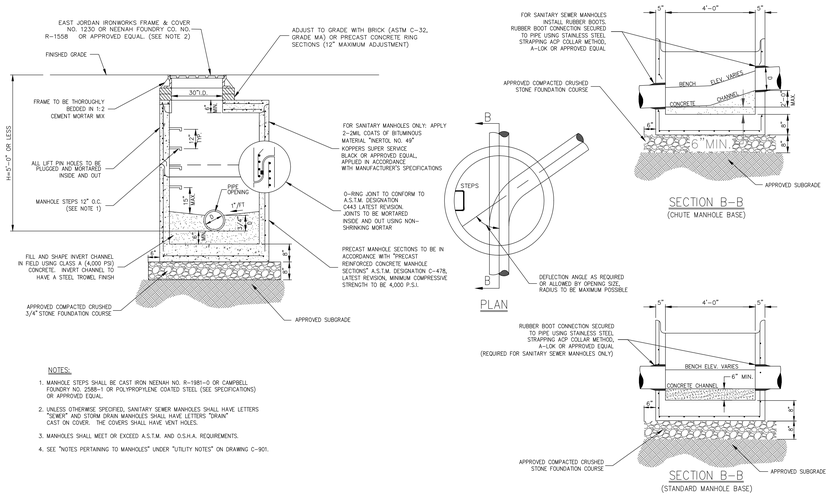

NOTES:

1. MANHOLE STEPS SHALL BE CAST IRON NEENAH NO. R-1981-0 OR CAMPBELL FOUNDRY NO. 2588-1 OR POLYPROPYLENE COATED STEEL (SEE SPECIFICATIONS) OR APPROVED EQUAL.
2. UNLESS OTHERWISE SPECIFIED, SANITARY SEWER MANHOLES SHALL HAVE LETTERS "SEWER" AND STORM DRAIN MANHOLES SHALL HAVE LETTERS "DRAIN" CAST ON COVER. THE COVERS SHALL HAVE VENT HOLES.
3. MANHOLES SHALL MEET OR EXCEED A.S.T.M. AND O.S.H.A. REQUIREMENTS.
4. SEE "NOTES PERTAINING TO MANHOLES" UNDER "UTILITY NOTES" ON DRAWING C-901.

MANHOLE (TYPE A)
(H < 5'-0")

13

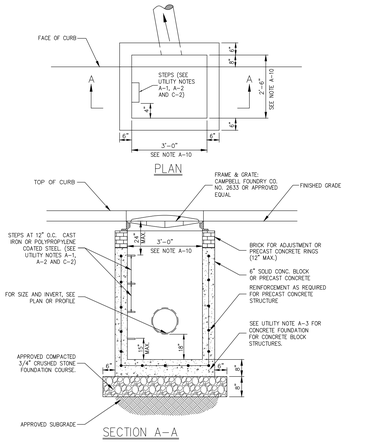

NOTE:

1. SEE NOTES PERTAINING TO DRAIN INLETS UNDER UTILITY NOTES ON DRAWING C-901.

DRAIN INLET (TYPE CI)
(WITH SUMP – WITHOUT FINGER UNDERDRAINS)

14

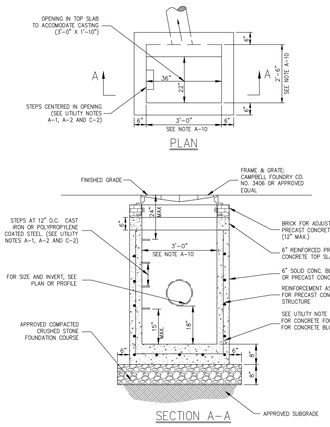

NOTE

1. REINFORCE PRECAST CONCRETE TOP SLAB AND REINFORCE PRECAST CONCRETE STRUCTURE SHALL BE DESIGNED TO ACCOMMODATE AN H-20 DESIGN LOAD.
2. SEE NOTES PERTAINING TO DRAIN INLETS UNDER UTILITY NOTES ON DRAWING C-901.

DRAIN INLET (TYPE DI)
(WITH SUMP – WITHOUT FINGER UNDERDRAINS)

15

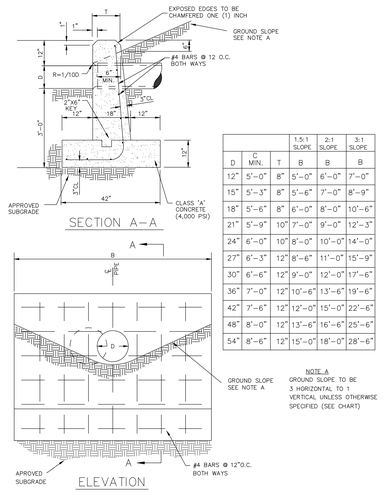

D	C MIN.	T	1.5:1 SLOPE B	2:1 SLOPE B	3:1 SLOPE B
12"	5'-0"	8"	5'-0"	6'-0"	7'-0"
15"	5'-3"	8"	5'-6"	7'-0"	8'-9"
18"	5'-6"	8"	6'-0"	8'-0"	10'-6"
21"	5'-9"	10"	7'-0"	9'-0"	12'-3"
24"	6'-0"	10"	8'-0"	10'-0"	14'-0"
27"	6'-3"	12"	8'-6"	11'-0"	15'-9"
30"	6'-6"	12"	9'-0"	12'-0"	17'-6"
36"	7'-0"	12"	10'-6"	13'-6"	19'-6"
42"	7'-6"	12"	12'-0"	15'-0"	22'-6"
48"	8'-0"	12"	13'-6"	16'-6"	25'-6"
54"	8'-6"	12"	15'-0"	18'-0"	28'-6"

NOTE A
GROUND SLOPE TO BE 3 HORIZONTAL TO 1 VERTICAL UNLESS OTHERWISE SPECIFIED (SEE CHART)

STRAIGHT CONCRETE HEADWALL

16

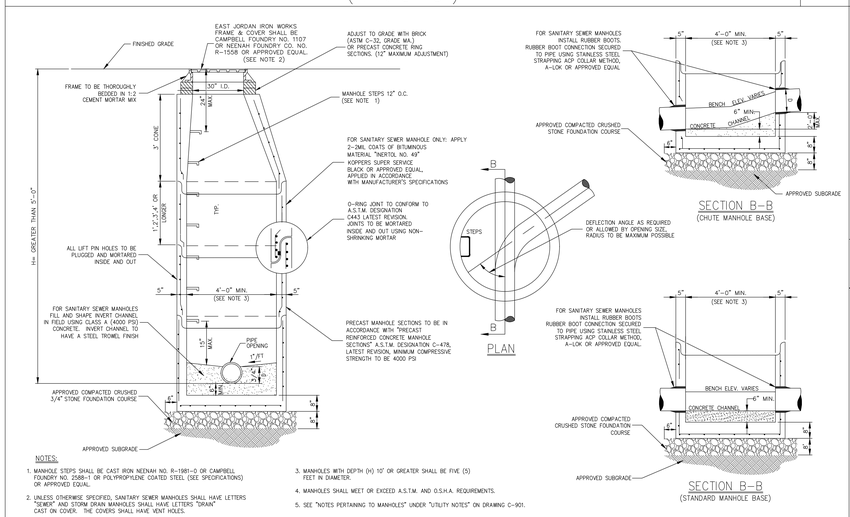

NOTES:

1. MANHOLE STEPS SHALL BE CAST IRON NEENAH NO. R-1981-0 OR CAMPBELL FOUNDRY NO. 2588-1 OR POLYPROPYLENE COATED STEEL (SEE SPECIFICATIONS) OR APPROVED EQUAL.
2. UNLESS OTHERWISE SPECIFIED, SANITARY SEWER MANHOLES SHALL HAVE LETTERS "SEWER" AND STORM DRAIN MANHOLES SHALL HAVE LETTERS "DRAIN" CAST ON COVER. THE COVERS SHALL HAVE VENT HOLES.
3. MANHOLES WITH DEPTH (H) 10' OR GREATER SHALL BE FIVE (5) FEET IN DIAMETER.
4. MANHOLES SHALL MEET OR EXCEED A.S.T.M. AND O.S.H.A. REQUIREMENTS.
5. SEE "NOTES PERTAINING TO MANHOLES" UNDER "UTILITY NOTES" ON DRAWING C-901.

MANHOLE (TYPE B)
(H > 5'-0")<10'-0")

17

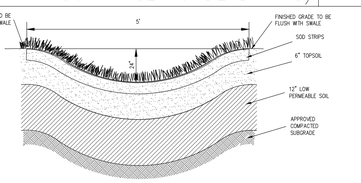

NOTES:

1. IMMEDIATELY AFTER GRADING OPERATIONS, THE GRASS SWALE SHALL BE STABILIZED WITH SOD CONTAINING A MIXTURE OF 50% KENTUCKY BLUEGRASS, 25% CREEPING RED FESCUE AND 25% PERENNIAL RYEGRASS. SOD SHALL BE CUT IN UNIFORM WIDTH STRIPS OF LIVE GRASS.
2. FOR SWALE SLOPES EXCEEDING 8%, JUTE MESH SHALL BE UTILIZED TO STABILIZE THE SWALE BASE.
3. AREA ADJACENT TO SWALE TO BE BROUGHT TO FINISHED GRADE IMMEDIATELY AS REQUIRED, TOPSOILED, SEEDED AND MAINTAINED FOR EROSION CONTROL.
4. LOW PERMEABILITY SOIL SHALL HAVE A MAXIMUM PERMEABILITY OF 1.0E-09 M/S

VEGETATIVE SWALE WITH LINER

18

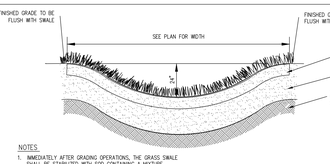

NOTES:

1. IMMEDIATELY AFTER GRADING OPERATIONS, THE GRASS SWALE SHALL BE STABILIZED WITH SOD CONTAINING A MIXTURE OF 50% KENTUCKY BLUEGRASS, 25% CREEPING RED FESCUE AND 25% PERENNIAL RYEGRASS. SOD SHALL BE CUT IN UNIFORM WIDTH STRIPS OF LIVE GRASS.
2. FOR SWALE SLOPES EXCEEDING 8%, JUTE MESH SHALL BE UTILIZED TO STABILIZE THE SWALE BASE.
3. AREA ADJACENT TO SWALE TO BE BROUGHT TO FINISHED GRADE IMMEDIATELY AS REQUIRED, TOPSOILED, SEEDED AND MAINTAINED FOR EROSION CONTROL.

VEGETATIVE SWALE

20

NOTES PERTAINING TO DRAIN INLETS

A-1 STEPS WILL NOT BE REQUIRED IN INLETS LESS THAN FOUR (4) FEET IN DEPTH. STEPS WILL BE REQUIRED IN INLETS FOUR (4) FEET OR GREATER IN DEPTH. DEPTHS FOR DRAIN INLETS SHALL BE MEASURED FROM FINISHED GRADE TO INSIDE BOTTOM OF STRUCTURE (INCLUDING SUMP AS APPLICABLE).

A-2 WHEN STEPS ARE REQUIRED, STEPS SHALL COMPLY WITH THE SAME REQUIREMENTS OF ASTM STANDARD C-478, ARTICLE 13 ENTITLED "MANHOLE STEPS & LADDERS".

A-3 FOR MASONRY STRUCTURES, THE FIRST COURSE OF MASONRY SHALL BE SET IN THE CONCRETE FOUNDATION BEFORE THE CONCRETE HAS SET. CONCRETE FOUNDATION SHALL BE CLASS "A"(4000 PSI) CONCRETE, TWELVE (12) INCHES THICK AND SHALL EXTEND SIX (6) INCHES BEYOND THE OUTSIDE FACE THE STRUCTURE.

A-4 IT SHALL BE THE CONTRACTOR'S RESPONSIBILITY TO FURNISH AND CONSTRUCT THE PROPER SIZE STRUCTURE INCLUDING THE NECESSARY OPENINGS TO ACCOMMODATE THE WORK AS SHOWN ON THE PLANS OR ORDERED BY THE ENGINEER, AT NO ADDITIONAL COST TO THE OWNER.

A-5 ALL NECESSARY PATCHING FOR DRAIN STRUCTURES SHALL BE ACCOMPLISHED WITH NON-SHRINKING CEMENT MORTAR GROUT, APPROVED EQUAL TO SIKA-SET AS MANUFACTURED BY THE SIKA CHEMICAL CORP.

A-6 FOUNDATIONS FOR PRECAST CONCRETE STRUCTURES SHALL BE SET ON A COMPACTED LAYER OF APPROVED CRUSHED STONE HAVING A MINIMUM COMPACTED THICKNESS OF EIGHT (8) INCHES.

A-7 ALL PIPES SHALL BE CUT FLUSH WITH THE INSIDE WALL OF THE STRUCTURE.

A-8 PROVIDE REINFORCED CONCRETE TOP SLAB FOR OVERSIZED DRAIN INLETS WITH PROPER SIZE OPENING TO ACCOMMODATE INSTALLATION OF FRAME & GRATE.

A-9 FOR MASONRY STRUCTURES GREATER THAN TEN (10) FEET IN DEPTH, THICKNESS OF MASONRY WALLS SHALL BE INCREASED TO TWELVE (12) INCHES.

A-10 FOR ALL STRUCTURES GREATER THAN 10 FEET IN DEPTH, STRUCTURES SHALL PROVIDE MINIMUM INSIDE DIMENSIONS OF 4 FEET X 4 FEET.

NOTES PERTAINING TO MANHOLES

B-1 PRECAST CONCRETE MANHOLES SHALL COMPLY WITH ASTM STANDARD C-478. MANHOLE JOINTS SHALL COMPLY WITH ASTM STANDARD C-443.

B-2 FOR PRECAST CONCRETE MANHOLES FIVE (5) FEET OR LESS IN HEIGHT, TOP CONE SECTION SHALL BE REPLACED WITH PRECAST REINFORCED CONCRETE SLAB (6" MIN. THICKNESS) WITH OPENING OF SUFFICIENT SIZE TO ACCOMMODATE MANHOLE CASTING.

B-3 FOR MANHOLES 10 FEET OR MORE IN DEPTH, MANHOLE DIAMETER SHALL BE FIVE (5) FEET.

B-4 TERMINAL MANHOLE FLOORS SHALL BE SLOPED TOWARD OUTFALL PIPE.

B-5 INVERT CHANNELS FOR PRECAST CONCRETE MANHOLES SHALL BE CONSTRUCTED OF CONCRETE.

B-6 NOTES A-1, A-2, A-4, A-5, A-6 & A-7 UNDER "NOTES PERTAINING TO DRAIN INLETS" ABOVE SHALL APPLY TO MANHOLES.

NOTES PERTAINING TO PRECAST CONCRETE STRUCTURES FOR STORM DRAINS, SANITARY SEWERS AND WATER LINES

C-1 ALL PRECAST CONCRETE STRUCTURES SHALL BE DESIGNED TO ACCOMMODATE AN H-20 DESIGN LOAD.

C-2 STEPS SHALL BE LOCATED WITHIN STRUCTURE TO AVOID PLACEMENT OVER PIPES WHEN PRACTICABLE.

UTILITY NOTES

22

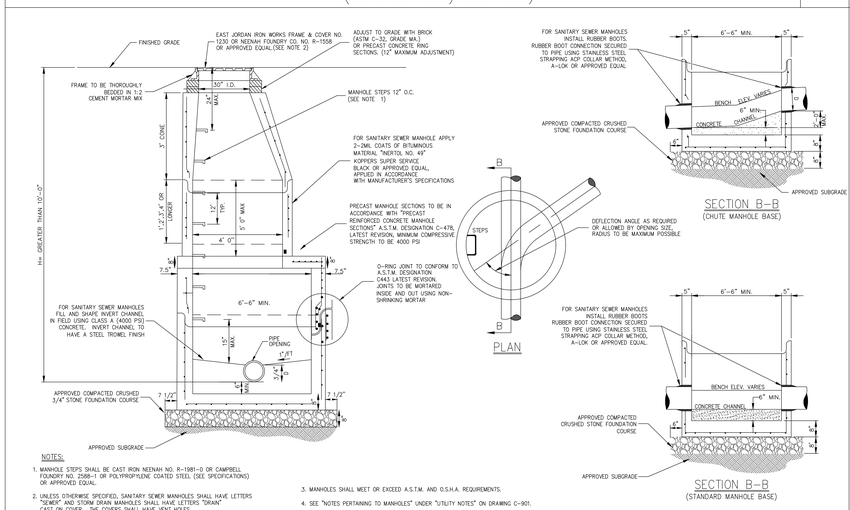

NOTES:

1. MANHOLE STEPS SHALL BE CAST IRON NEENAH NO. R-1981-0 OR CAMPBELL FOUNDRY NO. 2588-1 OR POLYPROPYLENE COATED STEEL (SEE SPECIFICATIONS) OR APPROVED EQUAL.
2. UNLESS OTHERWISE SPECIFIED, SANITARY SEWER MANHOLES SHALL HAVE LETTERS "SEWER" AND STORM DRAIN MANHOLES SHALL HAVE LETTERS "DRAIN" CAST ON COVER. THE COVERS SHALL HAVE VENT HOLES.
3. MANHOLES SHALL MEET OR EXCEED A.S.T.M. AND O.S.H.A. REQUIREMENTS.
4. SEE "NOTES PERTAINING TO MANHOLES" UNDER "UTILITY NOTES" ON DRAWING C-901.

MANHOLE (TYPE D)
(H > 10'-0")

23

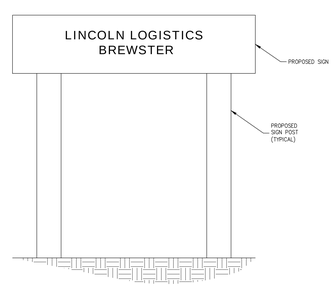

NY 312 FREESTANDING SIGN SCHEMATIC

24

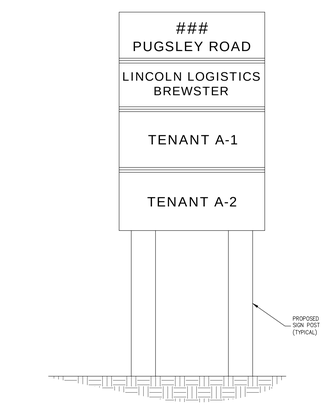

BUILDING A FREESTANDING SIGN SCHEMATIC

25

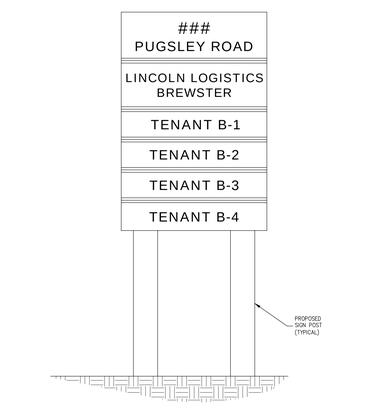

BUILDING B FREESTANDING SIGN SCHEMATIC

26

Date	Description	No.
12/16/2022	REV. PER WATERSHED INSPECTOR GENERAL COMMENTS	5
12/05/2022	REV. SITE GRADING	4
10/14/2022	REV. FOR NYCDEP SUBMISSION	3
03/25/2022	REV. PER TOWN COMMENTS	2

Revisions

WARNING: IT IS A VIOLATION OF THE NYS EDUCATION LAW ARTICLE 145 FOR ANY PERSON, UNLESS HE IS ACTING UNDER THE DIRECTION OF A LICENSED PROFESSIONAL ENGINEER, LAND SURVEYOR OR GEOLOGIST, TO ALTER THIS ITEM IN ANY WAY.

STATE OF NEW YORK · MICHAEL J. TRAN · 081473 · LICENSED PROFESSIONAL ENGINEER

Signature Date 12/16/2022

MICHAEL J. TRAN, PE, LEED-AP
PROFESSIONAL ENGINEER NY Lic. No. 081473

LANGAN
Langan Engineering, Environmental, Surveying, Landscape Architecture, and Geology, D.P.C.
One North Broadway, Suite 910
White Plains, NY 10601
T: 914.323.7400 F: 914.323.7401 www.langan.com

Project: LINCOLN LOGISTICS BREWSTER
TOWN OF SOUTHEAST
PUTNAM COUNTY NEW YORK

Drawing Title: DETAIL SHEET (2 OF 11)

Project No. 190065201
Date 1/28/2022
Drawn By JMSK
Checked By CZ/MF

Drawing No. C-901

Sheet 88 of 97

Project No. 190065201

LANGAN

© 2020 Langan