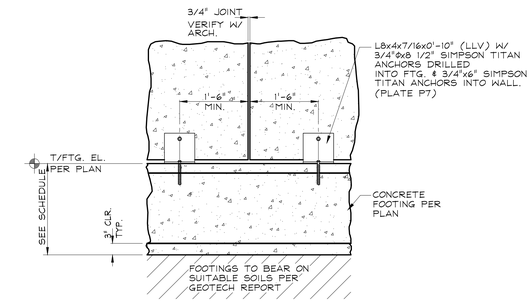

SECTION 1 T2.1
SCALE: 3/4" = 1'-0"

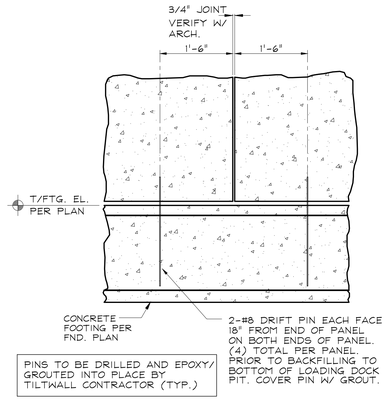

SECTION 1A T2.1
SCALE: 3/4" = 1'-0"

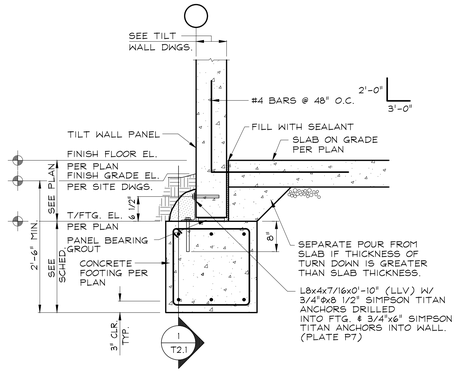

SECTION 2 T2.1
SCALE: 3/4" = 1'-0"

(ARCO DETAIL S1.12- WALL SECTION WITH HIGH FOUNDATION AND TURNDOWN 11/12/18)

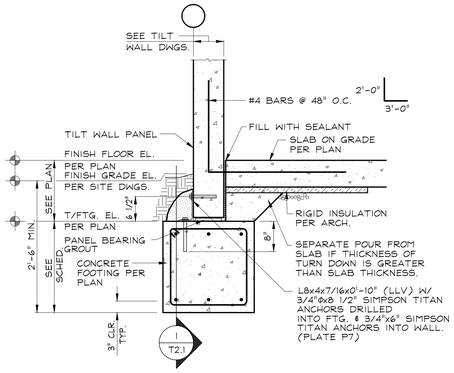

SECTION 2A T2.1
SCALE: 3/4" = 1'-0"

(ARCO DETAIL S1.12- WALL SECTION WITH HIGH FOUNDATION AND TURNDOWN 11/12/18)

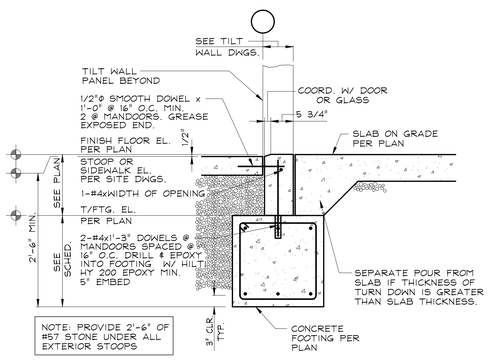

SECTION 3 T2.1
SCALE: 3/4" = 1'-0"

(ARCO DETAIL S1.13- WALL SECTION WITH MAN DOOR 11/12/18)

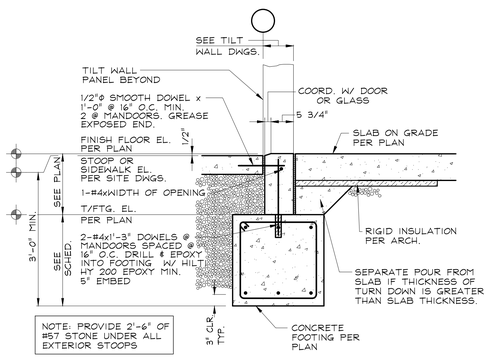

SECTION 3A F2.1
SCALE: 3/4" = 1'-0"

(ARCO DETAIL S1.13- WALL SECTION WITH MAN DOOR 11/12/18)

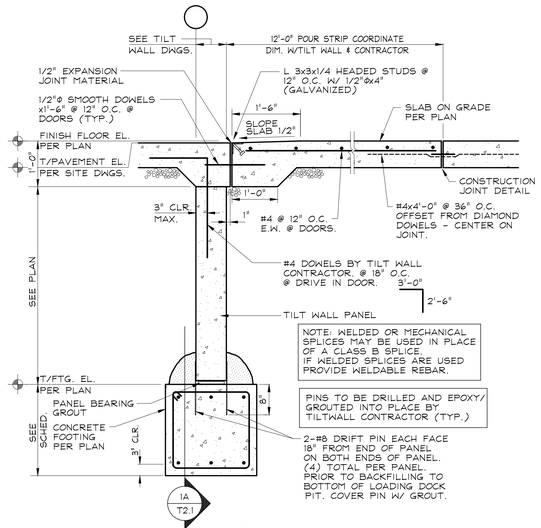

SECTION 4 T2.1
SCALE: 3/4" = 1'-0"

(ARCO DETAIL S1.6 - DRIVE IN DOOR SILL CONDITION 11/12/18)

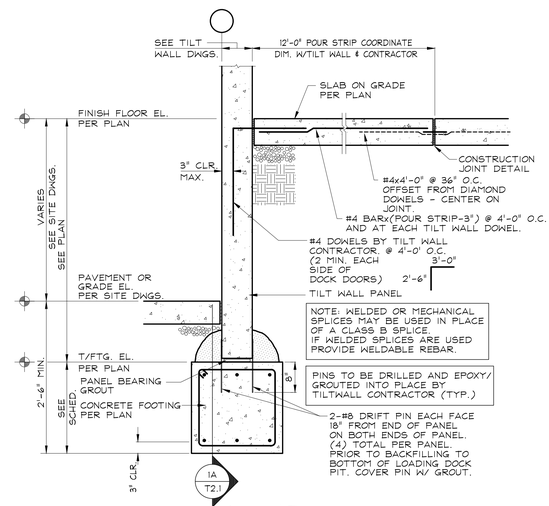

SECTION 5 T2.1
SCALE: 3/4" = 1'-0"

(ARCO DETAIL S1.15 - WALL SECTION AT DOCK WALL POURBACK 11/12/18)

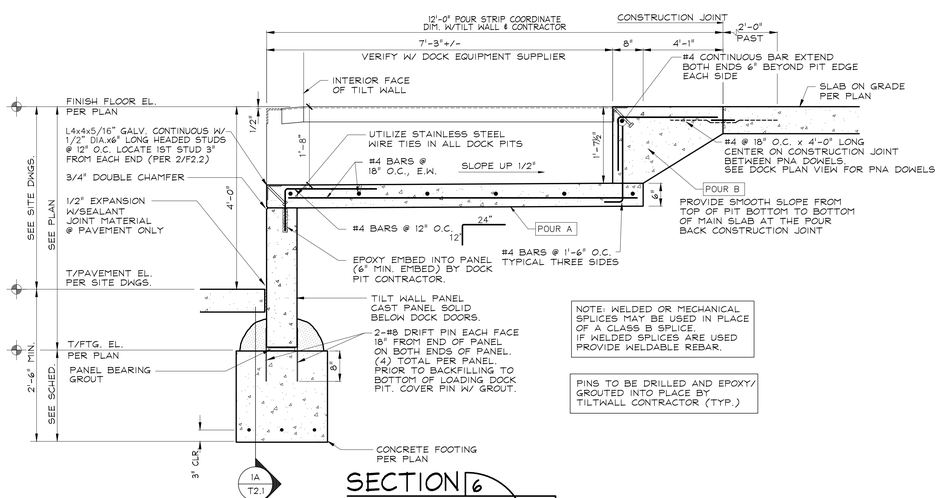

SECTION 6 T2.1
SCALE: 3/4" = 1'-0"

(ARCO DETAIL S1.3- DOCKPIT CROSS SECTION 11/12/18)

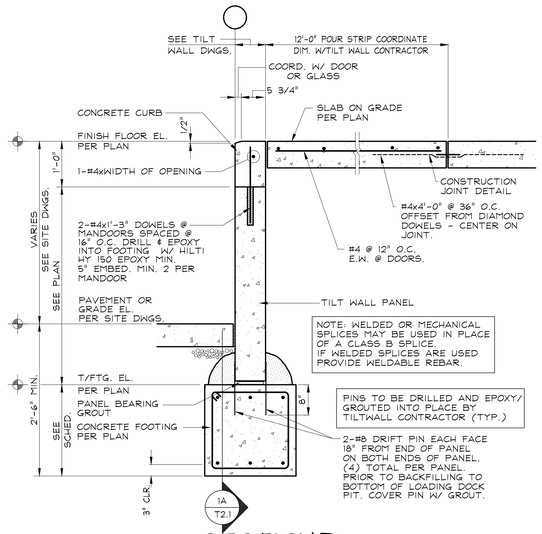

SECTION 7 T2.1
SCALE: 3/4" = 1'-0"

(ARCO DETAIL S1.14 - WALL SECTION WITH MANDOOR AT DOCK WALL 11/12/18)

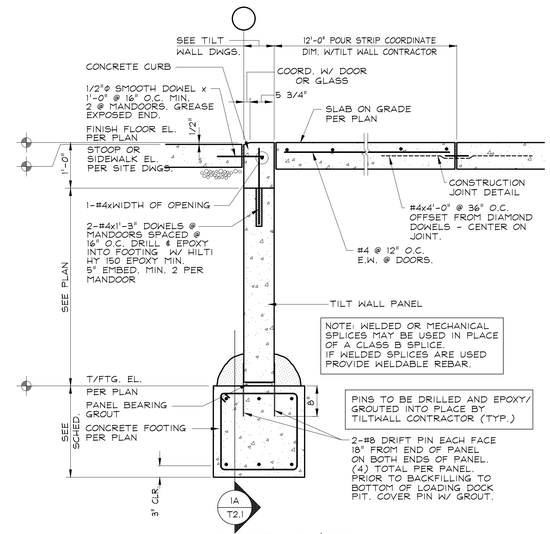

SECTION 8 T2.1
SCALE: 3/4" = 1'-0"

PRINTED ARCH-E1 30" X 42"

DESIGNER / BUILDER

ARCO
DESIGN/BUILD INDUSTRIAL
44 SOUTH BROADWAY, SUITE 1003
WHITE PLAINS, NY 10601
P: 914.821.5535 F: 914.306.6010

ADBI / DESIGN SERVICES

Lincoln Equities Group, LLC

PROJECT TITLE

LINCOLN EQUITIES - NY-312 - BLDG B

NY-312 & PUGSLEY RD, SOUTHEAST, NY 10509

ARCHITECT
ADBI / DESIGN SERVICES LLC
44 SOUTH BROADWAY, SUITE 1003
WHITE PLAINS, NY 10601

CIVIL ENGINEER
LANGAN ENGINEERING
300 KIMBALL DRIVE
PARSIPPANY, NJ 07054

STRUCTURAL ENGINEER
SMITH/ ROBERTS AND ASSOCIATES, INC.
6501 BLUFF RD.
INDIANAPOLIS, INDIANA 46217

MECHANICAL ENGINEER
NATIONAL DESIGN/ BUILD SERVICES
11840 BORMAN DRIVE
ST. LOUIS, MO 63146

ELECTRICAL ENGINEER
FXB ENGINEERING
5 CHRISTY DRIVE, SUITE 307
CHADDS FORD, PA 19317

PLUMBING ENGINEER
MCCARTHY ENGINEERING ASSOCIATES, INC.
315 EAST SECOND STREET
BOYERTOWN, PA 19512

FIRE PROTECTION ENGINEER
S A COMUNALE CO. INC.
2900 NEWPARK DRIVE
BARBERTON, OH 44203

SEAL

KEY PLAN

N TRUE NORTH
N PROJECT NORTH

SUBMITTALS

NO.	DATE	DESCRIPTION
	6.9.2022	PERMIT
1	7.8.2022	FTG. STEPS
2	9.30.2022	100% TILTWALL SET
3	10.14.2022	REV 3 AS NOTED

PROJECT NO. AS286-21 | NY131 | 21-155
DRAWN BY CEO

SHEET TITLE
TILTWALL DETAILS

SHEET NO.
T2.1