GENERAL NOTES

1. CODE PERMITS AND INSPECTIONS

1.1. ALL WORK SHALL BE DONE IN ACCORDANCE WITH LATEST APPLICABLE CODES, REGULATIONS AND STANDARDS. CONTRACTOR SHALL OBTAIN AND PAY FOR ALL NECESSARY PERMITS AND SHALL ARRANGE FOR ALL INSPECTIONS BY AUTHORITIES HAVING JURISDICTION.

1.2. PERFORM ALL WORK IN ACCORDANCE WITH THE FOLLOWING CODES AND STANDARDS:

1.2.A.	NEW YORK STATE MECHANICAL CODE:	2020
1.2.B.	NEW YORK STATE FUEL GAS CODE:	2020
1.2.C.	NEW YORK STATE FIRE CODE:	2020
1.2.D.	NEW YORK STATE BUILDING CODE:	2020
1.2.E.	NEW YORK STATE ENERGY CONSERVATION CODE:	2020
1.2.F.	NEW YORK STATE PLUMBING CODE:	2020
1.2.G.	NEW YORK STATE EXISTING BUILDING CODE	2020
1.2.H.	ASHRAE STANDARD	90.1.2016
1.2.I.	SMACNA DUCT CONSTRUCTION STANDARDS:	LATEST EDITIONS

1.3. CONTRACTOR SHALL COMPLY WITH ALL OCCUPATIONAL SAFETY AND HEALTH ADMINISTRATION (OSHA) AND ENVIRONMENTAL PROTECTION AGENCY (EPA) REQUIREMENTS

2. HVAC DESIGN PARAMETERS

1. INDOOR CONDITION:

SUMMER	75°F DB/50%RH
WINTER:	70°F DB

2. OUTDOOR CONDITION:

SUMMER:	89°F DB/ 77° FWB
WINTER:	9° F DB

3. MINIMUM OUTDOOR AIR SUPPLY BASED ON CHAPTER 4 "VENTILATION" IN 2020 NEW YORK STATE MECHANICAL CODE.

SYMBOLS

- (E)12x10 — EXISTING DUCTWORK OR EQUIPMENT TO REMAIN
- (D)12x10 — DUCTWORK TO BE REMOVED OR EQUIPMENT TO BE REMOVED
- 12x10 — NEW DUCT (1ST DIMENSION INDICATES TOP SHOWN, INSIDE CLEAR DIMENSIONS)
- 12x10 — DUCTWORK WITH SOUND LINING (DIMENSION INDICATES INSIDE CLEAR DIMENSIONS)
- DUCT WORK WITH TRANSITION
- RECTANGULAR/SQUARE DUCT TO ROUND DUCT SIZE TRANSITION
- VD — MANUAL VOLUME DAMPER
- FD — FIRE DAMPER
- SUPPLY AIR DUCT TO RISE UP
- SUPPLY AIR DUCT TO DROP DOWN
- RETURN AIR DUCT TO RISE UP
- RETURN AIR DUCT TO DROP DOWN
- EXHAUST DUCT TO RISE UP
- EXHAUST DUCT TO DROP DOWN
- ELBOW WITH TURNING VANES
- SUPPLY AIR DEVICE
- RETURN OR EXHAUST AIR DEVICE
- EXHAUST AIR DEVICE
- VD — DUCTWORK WITH DUCT BRANCH
- DUCTWORK WITH ROUND DUCT TAKE-OFF
- OPEN END DUCT WITH CAP
- ROUND DUCT TO RISE UP
- ROUND DUCT TO DROP DOWN
- FLEXIBLE ROUND DUCT
- SIDE WALL GRILLE
- CEILING SUPPLY AIR DIFFUSER
- LINEAR SLOT DIFFUSER
- RETURN AIR GRILLE OPEN TO CEILING
- EXHAUST AIR GRILLE
- T — EXISTING THERMOSTAT
- T — NEW THERMOSTAT
- SD — DUCT MOUNTED SMOKE DETECTOR
- UNDER CUT DOOR, 3/4" CLEAR
- L — LOUVER DOOR
- $T — TIMER SWITCH WITH HOLD-ON OPTION.
- RS — REFRIGERANT SUCTION
- RL — REFRIGERANT LIQUID
- HWS — HOT WATER SUPPLY
- HWR — HOT WATER RETURN
- 1 / 1 — KEYED DRAWING NOTE
- EQPM-01 / 100 — EQUIPMENT DESIGNATION TAG / AIR VOLUME IN CFM
- AIR DEVICE TAG
- EQPM-## / 100 — DIFFUSER TYPE / AIR VOLUME IN CFM
- POINT OF DEMOLITION
- POINT OF CONNECTION
- 1 / M-100 — SECTION NUMBER / SHEET NUMBER

NOTE: ALL SYMBOLS MAY NOT APPEAR ON THE DRAWINGS.

ABBREVIATIONS

AC	AIR CONDITIONING UNIT
ACCU	AIR COOLED CONDENSING UNIT
AFF	ABOVE FINISHED FLOOR
AHU	AIR HANDLING UNIT
AP	ACCESS PANEL
APD	AIR PRESSURE DROP
ARC	AIR CURTAIN
ARCH	ARCHITECTURAL
BAS	BUILDING AUTOMATION SYSTEM
BDD	BACKDRAFT DAMPER
BHP	BRAKE HORSE POWER
BLDG	BUILDING
BLW	BELOW
BOD	BASIS OF DESIGN
BTUH	BRITISH THERMAL UNIT PER HOUR
CC	COOLING COIL
CD	CONDENSATE DRAIN
CD	CEILING DIFFUSER
CFM	CUBIC FEET PER MINUTE
CH	CHILLER
CLG	CEILING
CS	CURRENT SWITCH
CU	CONDENSING UNIT
CWR	CHILLED WATER RETURN
CHS	CHILLED WATER SUPPLY
D	DEMOLITION
DB	DRY BULB
DDC	DIRECT DIGITAL CONTROL
DI	DIGITAL INPUT
DIA	DIAMETER
DN	DOWN
DO	DIGITAL OUTPUT
DOAS	DEDICATED OUTSIDE AIR SYSTEM
DPS	DIFFERENTIAL PRESSURE SWITCH
DWG	DRAWING
(E)	EXISTING TO REMAIN
(ER)	EXISTING TO RELOCATE
EA	EXHAUST AIR
EAT	ENTERING AIR TEMPERATURE
EF	EXHAUST FAN
EG	EXHAUST GRILLE
ESP	EXTERNAL STATIC PRESSURE
EUH	ELECTRIC UNIT HEATER
EER	ENERGY EFFICIENCY RATING
F	FAHRENHEIT
FCU	FAN COIL UNIT
FD	FIRE DAMPER
FL	FLOOR
FPM	FEET PER MINUTE
FT	FEET
FZ	FREEZE STAT
GPM	GALLONS PER MINUTE
HC	HEATING COIL
HGRC	HOT GAS REHEAT COIL
HP	HORSE POWER
HR	HOUR
HS	HUMIDITY SENSOR
HWR	HOT WATER RETURN
HWS	HOT WATER SUPPLY
IN	INCH
KW	KILOWATT
LAN	LOCAL AREA NETWORK
LAT	LEAVING AIR TEMPERATURE
LBS	POUNDS
LF	LINEAR FEET
LRD	LINEAR RETURN DIFFUSER
LSD	LINEAR SUPPLY DIFFUSER
LWT	LEAVING WATER TEMPERATURE
MAX	MAXIMUM
MECH	MECHANICAL
MIN	MINIMUM
MOCP	MAXIMUM OVER CURRENT PROTECTION
MTD	MOUNTED
MCU	MODE CONTROL UNIT
NC	NOISE CRITERIA
NOM	NOMINAL
No.	NUMBER
OA	OUTDOOR AIR
P	PUMP
PD	PRESSURE DROP
PS	PRESSURE SENSOR
R	RELOCATE
RA	RETURN AIR
RAD	RADIATOR
RD	RETURN DIFFUSER
RF	RETURN FAN
RG	RETURN GRILLE
RLA	RELIEF AIR
RLF	RELIEF FAN
RPM	REVOLUTION PER MINUTE
RTU	ROOF TOP UNIT
RWS	REHEAT WATER SUP.
RWR	REHEAT WATER RET.
SA	SUPPLY AIR
SAT	SUPPLY AIR TEMPERATURE
SD	SMOKE DETECTOR
SF	SUPPLY FAN
SG	SUPPLY GRILLE
SP	STATIC PRESSURE
T	THERMOSTAT
TS	TEMPERATURE SENSOR
TYP	TYPICAL
VAV	VARIABLE AIR VOLUME
VD	VOLUME DAMPER
VFD	VARIABLE FREQUENCY DRIVE
VRF	VARIABLE REFRIGERANT FLOW
W	WATT
WB	WET BULB
WC	WATER COLUMN
W/	WITH
W/O	WITHOUT
WMS	WIRE MESH SCREEN

NOTE: ALL ABBREVIATIONS MAY NOT APPEAR ON THE DRAWINGS.

MECHANICAL DRAWING LIST

SHEET	DRAWING	TITLE
1	M-001.00	GENERAL NOTES, SYMBOLS & ABBREVIATIONS
2	M-101.00	PHYSICAL EDUCATION - MECHANICAL PLANS
3	M-102.00	CAMPUS CENTER NORTH - MECHANICAL PLANS
4	M-103.00	CAMPUS CENTER SOUTH - MECHANICAL PLANS
5	M-104.00	MAIN DINING HALL - MECHANICAL PLANS
6	M-601.00	MECHANICAL SCHEDULES AND DETAILS

RESTROOM RENOVATION PURCHASE COLLEGE

STATE UNIVERSITY OF NEW YORK

735 Anderson Hill Rd.
Purchase, NY 10577

PHASE 3:

CAMPUS CENTER NORTH BUILDING
CAMPUS CENTER SOUTH BUILDING
PHYSICAL EDUCATION BUILDING
MAIN DINING HALL

Conditions

ALL IDEAS, DESIGNS, ARRANGEMENTS AND PLANS INDICATED OR REPRESENTED BY THIS DRAWING ARE OWNED BY, AND THE PROPERTY OF RONNETTE RILEY ARCHITECT AND WERE CREATED, EVOLVED AND DEVELOPED FOR THE USE ON, AND IN CONNECTION WITH THE SPECIFIED PROJECT.
NONE OF SUCH IDEAS, DESIGNS, ARRANGEMENTS OR PLANS SHALL BE USED BY OR DISCLOSED TO ANY PERSON, FIRM OR CORPORATION FOR ANY PURPOSE WHATSOEVER WITHOUT THE WRITTEN PERMISSION OF RONNETTE RILEY ARCHITECT.

© Copyright Ronnette Riley *Architect* 2020

Ronnette Riley *Architect*

494 Eighth Avenue, 15th Floor
New York, NY 10001
T 212 594 4015
F 212 594 2868
www.ronnetteriley.com

MEP Engineer

SETTY & Associates, Ltd
149 W 36th Street, 8th floor
New York, NY 10018
T 646 253 9000
F 646 224 8497

Rev	Date	Issue
	27 Feb 2023	Issue for Bid

Title

GENERAL NOTES, SYMBOLS & ABBREVIATIONS

Date	02-17-2023
Project No.	1944
Drawing By	AKV
CHK By	BS
Scale	AS NOTED

DOB Rev

M-001.00

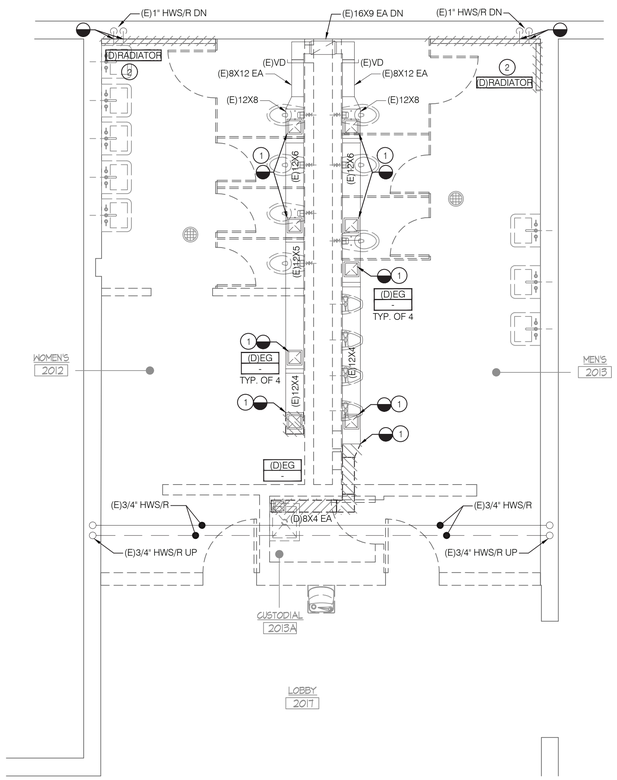

1 M-101.00 SECOND FLOOR PLAN - MECHANICAL REMOVALS

SCALE: 1/4" = 1'-0"

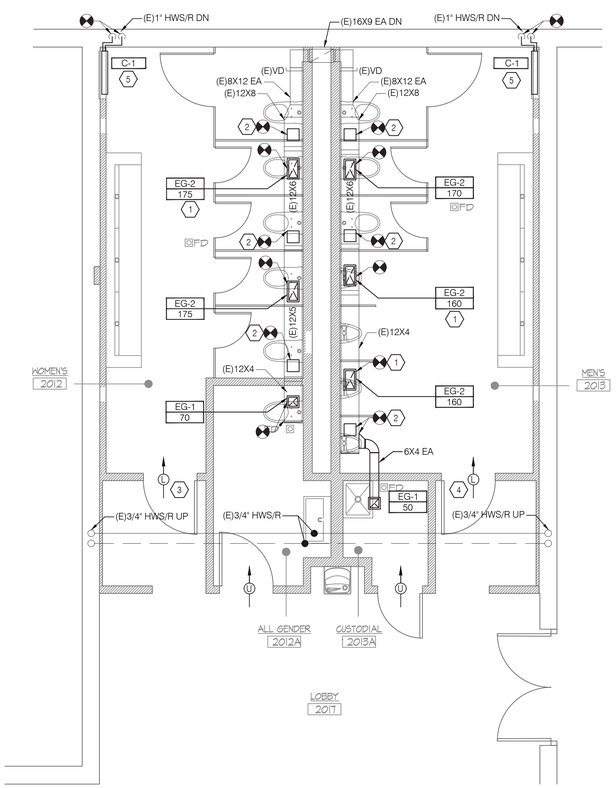

2 M-101.00 SECOND FLOOR PLAN - MECHANICAL NEW WORK

SCALE: 1/4" = 1'-0"

GENERAL NOTES

A. EXISTING WORK SHOWN IS BASED ON AVAILABLE DOCUMENTATION AND SPOT CHECKS ON SURVEY. CONTRACTOR TO FIELD VERIFY EXISTING CONDITIONS AND COORDINATE WITH ENGINEER PRIOR TO PROCEEDING WITH WORK.

B. THE DEMOLITION PLAN IS INTENDED TO PROVIDE THE CONTRACTOR WITH A GENERAL KNOWLEDGE OF THE EXISTING CONDITIONS WITHIN THE PROJECT AREA.

C. CONTRACTOR SHALL SCHEDULE ALL WORK IN ACCORDANCE WITH OWNER'S REQUIREMENTS.

D. CONTRACTOR TO FIELD COORDINATE ALL REMOVAL/ STORAGE/DISPOSAL OF EXISTING EQUIPMENT WITH THE OWNER.

E. CONTRACTOR TO COORDINATE WITH ARCHITECT AND STRUCTURAL ENGINEER TO PATCH AND REPAIR AREAS AFFECTED BY DEMOLITION WORK.

F. CONTRACTOR TO REINSTALL ALL THERMOSTATS OR SENSORS AFFECTED BY DEMOLITION.

DEMOLITION KEY NOTES

1. REMOVE EXISTING EXHAUST GRILLE AND ASSOCIATED DUCTWORK, ACCESSORIES, FITTINGS, HANGERS AND SUPPORTS FROM POINT OF DISCONNECTION SHOWN.
2. REMOVE EXISTING RADIATOR AND ASSOCIATED PIPING, VALVES, SUPPORTS, CONTROLS ETC. PIPING SHALL BE REMOVED UP TO THE POINT OF DISCONNECTION SHOWN IN PLANS.

SHEET KEY NOTES

1. PROVIDE EXHAUST GRILLE AT THE LOCATION SHOWN AND COORDINATE WITH ARCH. RCP. (TYP.)
2. ALL UNUSED DUCT OPENINGS SHALL BE CAP AND SEALED AIR TIGHT.
3. PROVIDE DOOR LOUVER OF 0.7 SQ FT WITH 100% FREE AREA.
4. PROVIDE DOOR LOUVER OF 0.9 SQ FT WITH 100% FREE AREA.
5. PROVIDE NEW WALL RECESSED CONVECTOR FOR CAPACITIES REFER TO DWG M-601.00. INSTALLATION AND CONTROLS TO MATCH BASE BUILDING STANDARDS. COORDINATE WITH BUILDING ENGINEER.

RESTROOM RENOVATION PURCHASE COLLEGE

STATE UNIVERSITY OF NEW YORK

735 Anderson Hill Rd.
Purchase, NY 10577

PHASE 3:

CAMPUS CENTER NORTH BUILDING
CAMPUS CENTER SOUTH BUILDING
PHYSICAL EDUCATION BUILDING
MAIN DINING HALL

Conditions

ALL IDEAS, DESIGNS, ARRANGEMENTS AND PLANS INDICATED OR REPRESENTED BY THIS DRAWING ARE OWNED BY, AND THE PROPERTY OF RONNETTE RILEY ARCHITECT AND WERE CREATED, EVOLVED AND DEVELOPED FOR THE USE ON, AND IN CONNECTION WITH THE SPECIFIED PROJECT.
NONE OF SUCH IDEAS, DESIGNS, ARRANGEMENTS OR PLANS SHALL BE USED BY OR DISCLOSED TO ANY PERSON, FIRM OR CORPORATION FOR ANY PURPOSE WHATSOEVER WITHOUT THE WRITTEN PERMISSION OF RONNETTE RILEY ARCHITECT.

© Copyright Ronnette Riley *Architect* 2020

Ronnette Riley *Architect*

494 Eighth Avenue, 15th Floor
New York, NY 10001
T 212 594 4015
F 212 594 2868
www.ronnetteriley.com

MEP Engineer

SETTY & Associates, Ltd
149 W 36th Street, 8th floor
New York, NY 10018
T 646 253 9000
F 646 224 8497

Rev	Date	Issue
	27 Feb 2023	Issue for Bid

KEY PLAN

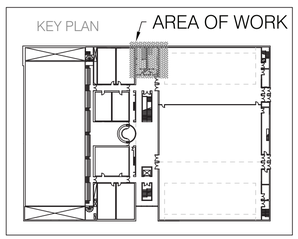

Title

PHYSICAL EDUCATION - MECHANICAL PLANS

Date	02-17-2023
Project No.	1944
Drawing By	AKV
CHK By	BS
Scale	AS NOTED

DOB Rev

M-101.00

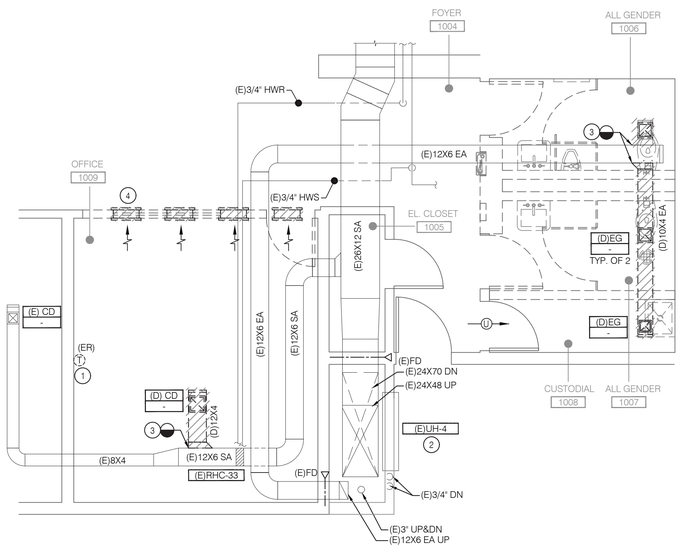

1 M-102.00 FIRST FLOOR PLAN - MECHANICAL REMOVALS

SCALE: 1/4" = 1'-0"

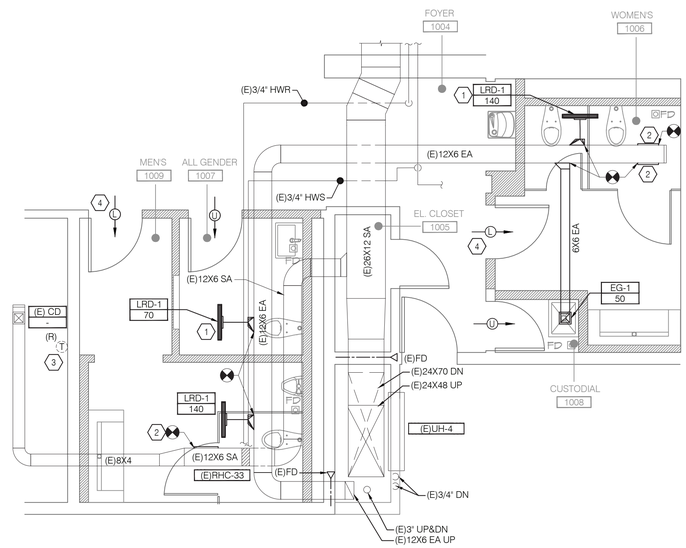

2 M-102.00 FIRST FLOOR PLAN - MECHANICAL NEW WORK

SCALE: 1/4" = 1'-0"

GENERAL NOTES

A. EXISTING WORK SHOWN IS BASED ON AVAILABLE DOCUMENTATION AND SPOT CHECKS ON SURVEY. CONTRACTOR TO FIELD VERIFY EXISTING CONDITIONS AND COORDINATE WITH ENGINEER PRIOR TO PROCEEDING WITH WORK.

B. THE DEMOLITION PLAN IS INTENDED TO PROVIDE THE CONTRACTOR WITH A GENERAL KNOWLEDGE OF THE EXISTING CONDITIONS WITHIN THE PROJECT AREA.

C. CONTRACTOR SHALL SCHEDULE ALL WORK IN ACCORDANCE WITH OWNER'S REQUIREMENTS.

D. CONTRACTOR TO FIELD COORDINATE ALL REMOVAL/ STORAGE/DISPOSAL OF EXISTING EQUIPMENT WITH THE OWNER.

E. CONTRACTOR TO COORDINATE WITH ARCHITECT AND STRUCTURAL ENGINEER TO PATCH AND REPAIR AREAS AFFECTED BY DEMOLITION WORK.

DEMOLITION KEY NOTES

1. RELOCATE EXISTING THERMOSTAT, SEE NEW WORK PLAN ON DWG. 2/M-101.00 FOR EXACT LOCATION.
2. EXISTING UNIT HEATER AND ASSOCIATED PIPING, VALVES, ENCLOSURE, SUPPORTS, CONTROLS ETC. TO REMAIN UNLESS OTHERWISE NOTED.
3. REMOVE EXISTING SUPPLY/EXHAUST GRILLE AND ASSOCIATED DUCTWORK, ACCESSORIES, FITTINGS, HANGERS AND SUPPORTS FROM POINT OF DISCONNECTION SHOWN.
4. REMOVE EXISTING TRANSFER GRILLE AND ASSOCIATED DUCTWORK, ACCESSORIES, FITTINGS, HANGERS AND SUPPORTS.

SHEET KEY NOTES

1. PROVIDE EXHAUST LINEAR DIFFUSER AT THE LOCATION SHOWN AND COORDINATE WITH ARCH. RCP. (TYP.)
2. ALL UNUSED DUCT OPENINGS SHALL BE CAP AND SEALED AIR TIGHT.
3. PROVIDE A NEW CONTROL WIRING FROM THE RELOCATED THERMOSTAT TO EXISTING RHC-33.
4. PROVIDE DOOR LOUVER OF 0.3 SQ FT WITH 100% FREE AREA.

RESTROOM RENOVATION PURCHASE COLLEGE

STATE UNIVERSITY OF NEW YORK

735 Anderson Hill Rd.
Purchase, NY 10577

PHASE 3:

CAMPUS CENTER NORTH BUILDING
CAMPUS CENTER SOUTH BUILDING
PHYSICAL EDUCATION BUILDING
MAIN DINING HALL

Conditions

ALL IDEAS, DESIGNS, ARRANGEMENTS AND PLANS INDICATED OR REPRESENTED BY THIS DRAWING ARE OWNED BY, AND THE PROPERTY OF RONNETTE RILEY ARCHITECT AND WERE CREATED, EVOLVED AND DEVELOPED FOR THE USE ON, AND IN CONNECTION WITH THE SPECIFIED PROJECT.
NONE OF SUCH IDEAS, DESIGNS, ARRANGEMENTS OR PLANS SHALL BE USED BY OR DISCLOSED TO ANY PERSON, FIRM OR CORPORATION FOR ANY PURPOSE WHATSOEVER WITHOUT THE WRITTEN PERMISSION OF RONNETTE RILEY ARCHITECT.

© Copyright Ronnette Riley *Architect* 2020

Ronnette Riley *Architect*

494 Eighth Avenue, 15th Floor
New York, NY 10001
T 212 594 4015
F 212 594 2868
www.ronnetteriley.com

MEP Engineer

SETTY & Associates, Ltd
149 W 36th Street, 8th floor
New York, NY 10018
T 646 253 9000
F 646 224 8497

Rev	Date	Issue
	27 Feb 2023	Issue for Bid

KEY PLAN

AREA OF WORK

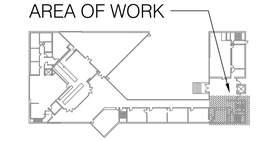

Title

CAMPUS CENTER NORTH - MECHANICAL PLANS

Date	02-17-2023
Project No.	1944
Drawing By	AKV
CHK By	BS
Scale	AS NOTED

DOB Rev

M-102.00

N

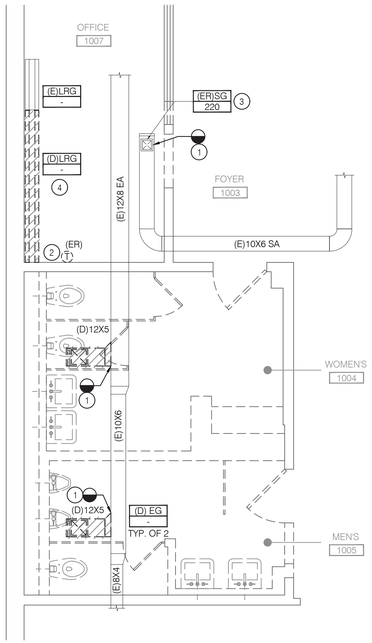

1
M-103.00

FIRST FLOOR PLAN - MECHANICAL REMOVALS

SCALE: 1/4" = 1'-0"

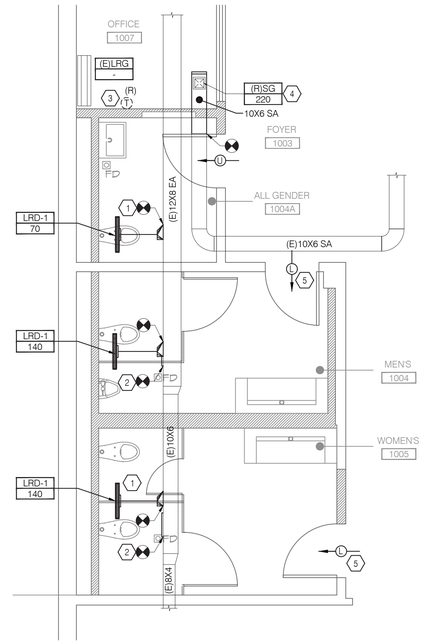

2
M-103.00

FIRST FLOOR PLAN - MECHANICAL NEW WORK

SCALE: 1/4" = 1'-0"

GENERAL NOTES

A. EXISTING WORK SHOWN IS BASED ON AVAILABLE DOCUMENTATION AND SPOT CHECKS ON SURVEY. CONTRACTOR TO FIELD VERIFY EXISTING CONDITIONS AND COORDINATE WITH ENGINEER PRIOR TO PROCEEDING WITH WORK.

B. THE DEMOLITION PLAN IS INTENDED TO PROVIDE THE CONTRACTOR WITH A GENERAL KNOWLEDGE OF THE EXISTING CONDITIONS WITHIN THE PROJECT AREA.

C. CONTRACTOR SHALL SCHEDULE ALL WORK IN ACCORDANCE WITH OWNER'S REQUIREMENTS.

D. CONTRACTOR TO FIELD COORDINATE ALL REMOVAL/ STORAGE/DISPOSAL OF EXISTING EQUIPMENT WITH THE OWNER.

E. CONTRACTOR TO COORDINATE WITH ARCHITECT AND STRUCTURAL ENGINEER TO PATCH AND REPAIR AREAS AFFECTED BY DEMOLITION WORK.

DEMOLITION KEY NOTES

1. REMOVE EXISTING EXHAUST GRILLE AND ASSOCIATED DUCTWORK, ACCESSORIES, FITTINGS, HANGERS AND SUPPORTS FROM POINT OF DISCONNECTION SHOWN.
2. RELOCATE EXISTING THERMOSTAT, SEE NEW WORK PLAN ON DWG. 2/M-106.00 FOR EXACT LOCATION.
3. DISCONNECT AND RELOCATE EXISTING SUPPLY AIR GRILLE. CAP AND SEAL DUCT OPENING AIR TIGHT. SEE NEW WORK PLAN ON DWG. 2/M-106.00 FOR EXACT LOCATION.
4. REMOVE 8'-0" OF EXISTING LINEAR RETURN GRILLE.

SHEET KEY NOTES

1. PROVIDE EXHAUST LINEAR DIFFUSER AT THE LOCATION SHOWN AND COORDINATE WITH ARCH. RCP. (TYP.)
2. ALL UNUSED DUCT OPENINGS SHALL BE CAP AND SEALED AIR TIGHT.
3. PROVIDE A NEW CONTROL WIRING FROM THE RELOCATED THERMOSTAT TO EXISTING RHC-24.
4. TAB CONTRACTOR TO BALANCE RELOCATED SUPPLY AIR GRILLE TO AIRFLOW SHOWN ON PLANS.
5. PROVIDE DOOR LOUVER OF 0.3 SQ FT WITH 100% FREE AREA.

RESTROOM RENOVATION PURCHASE COLLEGE

STATE UNIVERSITY OF NEW YORK

735 Anderson Hill Rd.
Purchase, NY 10577

PHASE 3:

CAMPUS CENTER NORTH BUILDING
CAMPUS CENTER SOUTH BUILDING
PHYSICAL EDUCATION BUILDING
MAIN DINING HALL

Conditions

ALL IDEAS, DESIGNS, ARRANGEMENTS AND PLANS INDICATED OR REPRESENTED BY THIS DRAWING ARE OWNED BY, AND THE PROPERTY OF RONNETTE RILEY ARCHITECT AND WERE CREATED, EVOLVED AND DEVELOPED FOR THE USE ON, AND IN CONNECTION WITH THE SPECIFIED PROJECT.
NONE OF SUCH IDEAS, DESIGNS, ARRANGEMENTS OR PLANS SHALL BE USED BY OR DISCLOSED TO ANY PERSON, FIRM OR CORPORATION FOR ANY PURPOSE WHATSOEVER WITHOUT THE WRITTEN PERMISSION OF RONNETTE RILEY ARCHITECT.

© Copyright Ronnette Riley *Architect* 2020

Ronnette Riley *Architect*

494 Eighth Avenue, 15th Floor
New York, NY 10001
T 212 594 4015
F 212 594 2868
www.ronnetteriley.com

MEP Engineer

SETTY & Associates, Ltd
149 W 36th Street, 8th floor
New York, NY 10018
T 646 253 9000
F 646 224 8497

Rev	Date	Issue
	27 Feb 2023	Issue for Bid

KEY PLAN

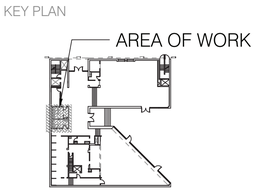

Title

CAMPUS CENTER SOUTH - MECHANICAL PLANS

Date	02-17-2023
Project No.	1944
Drawing By	AKV
CHK By	BS
Scale	AS NOTED

DOB Rev

M-103.00

N

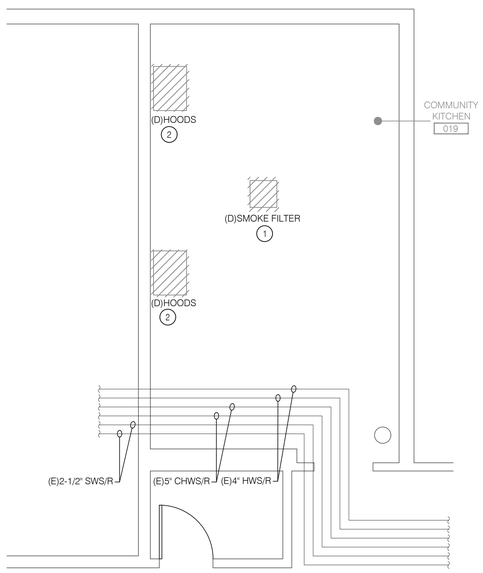

1 M-104.00 FIRST FLOOR PLAN - MECHANICAL REMOVALS

SCALE: 1/4" = 1'-0"

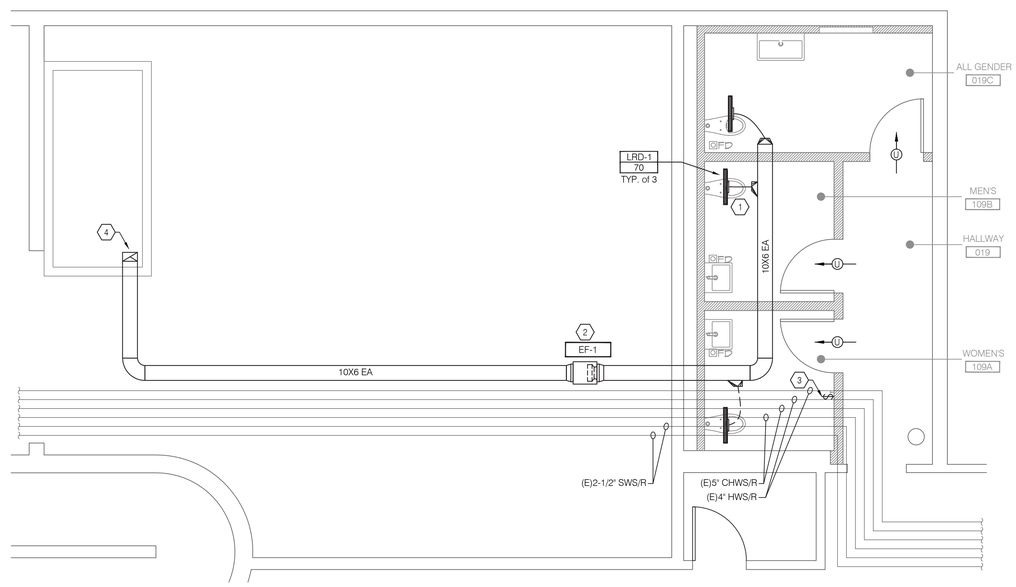

2 M-104.00 FIRST FLOOR PLAN - MECHANICAL NEW WORK

SCALE: 1/4" = 1'-0"

GENERAL NOTES

A. EXISTING WORK SHOWN IS BASED ON AVAILABLE DOCUMENTATION AND SPOT CHECKS ON SURVEY. CONTRACTOR TO FIELD VERIFY EXISTING CONDITIONS AND COORDINATE WITH ENGINEER PRIOR TO PROCEEDING WITH WORK.

B. THE DEMOLITION PLAN IS INTENDED TO PROVIDE THE CONTRACTOR WITH A GENERAL KNOWLEDGE OF THE EXISTING CONDITIONS WITHIN THE PROJECT AREA.

C. CONTRACTOR SHALL SCHEDULE ALL WORK IN ACCORDANCE WITH OWNER'S REQUIREMENTS.

D. CONTRACTOR TO FIELD COORDINATE ALL REMOVAL/ STORAGE/DISPOSAL OF EXISTING EQUIPMENT WITH THE OWNER.

E. CONTRACTOR TO COORDINATE WITH ARCHITECT AND STRUCTURAL ENGINEER TO PATCH AND REPAIR AREAS AFFECTED BY DEMOLITION WORK.

DEMOLITION KEY NOTES

1. EXISTING SMOKE FILTER AND ITS ASSOCIATED SUPPORT AND ACCESSORIES TO BE REMOVED.
2. EXISTING HOODS AND ITS ASSOCIATED SUPPORT, WIRING AND CONTROLS TO BE REMOVED.

SHEET KEY NOTES

1. PROVIDE EXHAUST LINEAR DIFFUSER AT THE LOCATION SHOWN AND COORDINATE WITH ARCH. RCP. (TYP.)
2. PROVIDE NEW INLINE EXHAUST FAN SUPPORTED FROM SLAB/CEILING AT 8'-0" AFF. REFER M-601.00 FOR EXHAUST FAN SCHEDULE AND DETAIL.
3. PROVIDE CONTROLLER SWITCH INTERLOCK WITH EF-1.
4. PROVIDE 10X6 EA DUCT UP TO PLATFORM(GRATE) AND DISCHARGE THE AIR WITH GOOSENECK.

RESTROOM RENOVATION PURCHASE COLLEGE

STATE UNIVERSITY OF NEW YORK

735 Anderson Hill Rd.
Purchase, NY 10577

PHASE 3:

CAMPUS CENTER NORTH BUILDING
CAMPUS CENTER SOUTH BUILDING
PHYSICAL EDUCATION BUILDING
MAIN DINING HALL

Conditions

ALL IDEAS, DESIGNS, ARRANGEMENTS AND PLANS INDICATED OR REPRESENTED BY THIS DRAWING ARE OWNED BY, AND THE PROPERTY OF RONNETTE RILEY ARCHITECT AND WERE CREATED, EVOLVED AND DEVELOPED FOR THE USE ON, AND IN CONNECTION WITH THE SPECIFIED PROJECT.
NONE OF SUCH IDEAS, DESIGNS, ARRANGEMENTS OR PLANS SHALL BE USED BY OR DISCLOSED TO ANY PERSON, FIRM OR CORPORATION FOR ANY PURPOSE WHATSOEVER WITHOUT THE WRITTEN PERMISSION OF RONNETTE RILEY ARCHITECT.

© Copyright Ronnette Riley *Architect* 2020

Ronnette Riley *Architect*

494 Eighth Avenue, 15th Floor
New York, NY 10001
T 212 594 4015
F 212 594 2868
www.ronnetteriley.com

MEP Engineer

SETTY & Associates, Ltd
149 W 36th Street, 8th floor
New York, NY 10018
T 646 253 9000
F 646 224 8497

Rev	Date	Issue
	27 Feb 2023	Issue for Bid

KEY PLAN

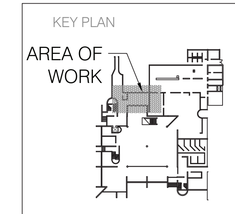

Title

MAIN DINING HALL - MECHANICAL PLANS

Date	02-17-2023
Project No.	1944
Drawing By	AKV
CHK By	BS
Scale	AS NOTED

DOB Rev

M-104.00

N

AIR DEVICE SCHEDULE

UNIT MARK	AIR FLOW RANGE (CFM)	MAX. SP (IN WG)	MAX. NC	DEVICE TYPE	SIZE			BASIS OF DESIGN		NOTES
					NECK (IN)	MODULE (IN)	NO. OF SLOTS	MANUFACTURER	MODEL	
LRD-1	70/LF	0.1	22	LINEAR SLOT DIFFUSER	6	24X2.5	2	TITUS	MLR39	1, 2, 3
EG-1	0-70	0.1	10	EXHAUST GRILLE	6X6	8X8	-	TITUS	350RL	1, 2
EG-2	70-210	0.1	11	EXHAUST GRILLE	12X6	14X8	-	TITUS	350RL	1, 2

NOTES:
1. PROVIDE OPPOSED BLADE DAMPERS IN ALL DIFFUSERS & GRILLES WITH SCREWDRIVER ADJUSTMENT ACCESSIBLE THROUGH FACE OF THE GRILLE.
2. DIFFUSER/GRILLES SHALL BE TESTED IN ACCORDANCE WITH ANSI/ASHRAE STANDARD 70-2006.
3. ALL ML TYPE LINEAR SUPPLY/RETURN DIFFUSERS SHALL BE PROVIDED WITH MP TYPE PLENUM BOX.

CONVECTOR SCHEDULE

UNIT MARK	TYPE	SIZE			MBH	GPM	EWT (°F)	TEMP DROP (°F)	BASIS OF DESIGN		NOTES
		LENGTH	DEPTH	HEIGHT					MANUFACTURER	MODEL	
C-1	RECESSED	29"	4"	17"	1.5	0.40	190	20	TRANE	RG	1, 2, 3

NOTES:
1. UNIT SHALL BE INSTALLED AS PER MANUFACTURER'S RECOMMENDATION.
2. COLOR AS SPECIFIED BY ARCHITECT.
3. PROVIDE SHUT-OFF VALVES, CIRCUIT SETTER, TEST PORTS AND INLET STRAINERS.

FAN SCHEDULE

UNIT MARK	SERVICE	BUILDING	LOCATION	FAN				MOTOR			DAMPER		EMERGENCY POWER (Y/N)	CONTROL	SONES	UNIT WEIGHT (LBS)	BASIS OF DESIGN		NOTES
				TYPE	AIRFLOW(CFM)	E.S..P(IN WC)	DRIVE TYPE	HP	RPM	VOLTS/PH/HZ	BACK DRAFT	MOTORIZED					MANUFACTURER	MODEL	
EF-1	TOILETS	MAIN DINING HALL	FIRST FLOOR	INLINE	210	0.5	DIRECT	0.06	1565	115/1/60	Y	N	N	SWITCH OPERATED	6.6	50	GREENHECK	SQ-80-VG	1,2,3,4

NOTES:
1. UNIT SHALL BE INSTALLED AS PER MANUFACTURER'S RECOMMENDATION.
2. FAN SHALL BE LISTED BY UNDERWRITERS LABORATORIES (UL 705) AND SHALL BEAR THE AMCA CERTIFIED RATINGS.
3. UNIT CLEARANCE SHALL BE PROVIDED AS PER MANUFACTURER'S RECOMMENDATION.
4. PROVIDE EXHAUST FANS WITH BACKDRAFT DAMPER.

RESTROOM RENOVATION PURCHASE COLLEGE

STATE UNIVERSITY OF NEW YORK

735 Anderson Hill Rd.
Purchase, NY 10577

PHASE 3:

CAMPUS CENTER NORTH BUILDING
CAMPUS CENTER SOUTH BUILDING
PHYSICAL EDUCATION BUILDING
MAIN DINING HALL

Conditions

ALL IDEAS, DESIGNS, ARRANGEMENTS AND PLANS INDICATED OR REPRESENTED BY THIS DRAWING ARE OWNED BY, AND THE PROPERTY OF RONNETTE RILEY ARCHITECT AND WERE CREATED, EVOLVED AND DEVELOPED FOR THE USE ON, AND IN CONNECTION WITH THE SPECIFIED PROJECT.
NONE OF SUCH IDEAS, DESIGNS, ARRANGEMENTS OR PLANS SHALL BE USED BY OR DISCLOSED TO ANY PERSON, FIRM OR CORPORATION FOR ANY PURPOSE WHATSOEVER WITHOUT THE WRITTEN PERMISSION OF RONNETTE RILEY ARCHITECT.

© Copyright Ronnette Riley *Architect* 2020

Ronnette Riley *Architect*

494 Eighth Avenue, 15th Floor
New York, NY 10001
T 212 594 4015
F 212 594 2868
www.ronnetteriley.com

MEP Engineer

SETTY & Associates, Ltd
149 W 36th Street, 8th floor
New York, NY 10018
T 646 253 9000
F 646 224 8497

Rev	Date	Issue
	27 Feb 2023	Issue for Bid

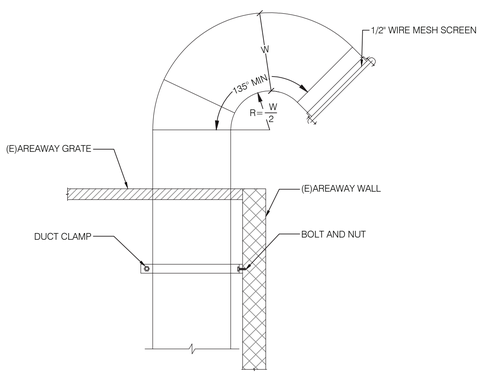

7 M-601.00 GOOSENECK
SCALE: NOT TO SCALE

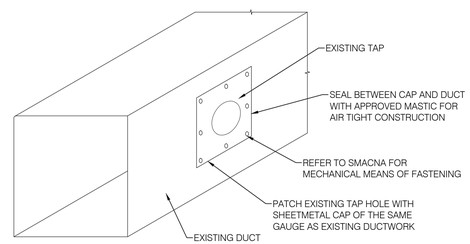

5 M-601.00 PATCHING AND SEALING EXISTING DUCT TAP
SCALE: NOT TO SCALE

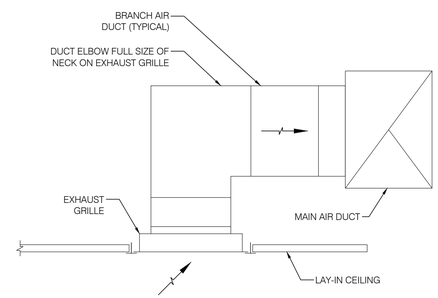

3 M-601.00 GRILLE CONNECTION DETAIL
SCALE: NOT TO SCALE

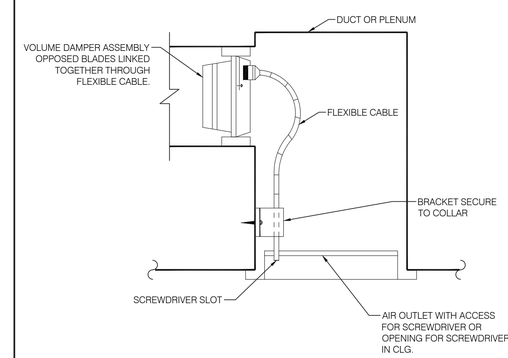

1 M-601.00 REMOTE DAMPER OPERATOR FOR INACCESSIBLE DAMPER
SCALE: NOT TO SCALE

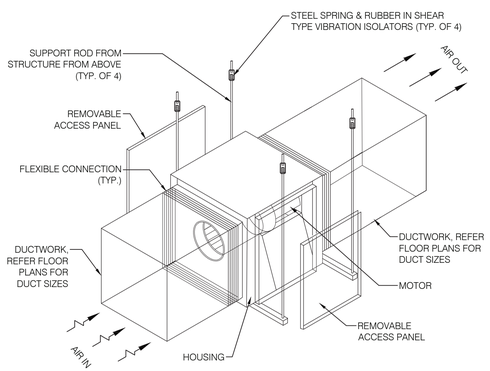

NOTES:
1. FAN SHALL BEAR THE AMCA SEAL FOR AIR AND SOUND PERFORMANCE.
2. LOCATE FAN WHERE FAN/MOTOR IS SERVICEABLE.
3. PROVIDE DUCT WORK TRANSITIONS AS REQUIRED BETWEEN PLAN DUCT WORK AND HOUSING.

8 M-601.00 INLINE FAN INSTALLATION (DIRECT DRIVE)
SCALE: NOT TO SCALE

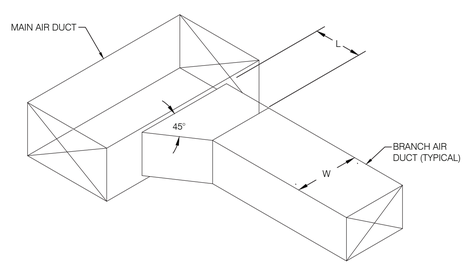

NOTES:
1. L=1/4 W, 6" MINIMUM

6 M-601.00 EXHAUST AIR DUCT CONNECTION DETAIL
SCALE: NOT TO SCALE

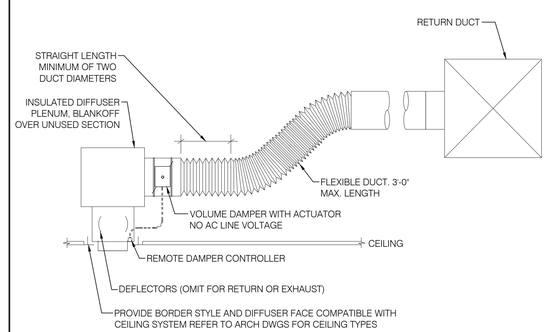

NOTES:
1. SUPPORT FLEXIBLE DUCT AT 2'-0" OC MAX, CLAMPS AND HANGERS NOT SHOWN.
2. PROVIDE SHEET METAL TRANSITION AS REQUIRED BETWEEN FLEXIBLE DUCT AND DIFFUSER COLLAR IF DIFFUSER DOES NOT HAVE ROUND DUCT CONNECTION.
3. PROVIDE REMOTE DAMPER CONTROL FOR ALL DIFFUSERS.
4. DIFFUSER SHOWN, REGISTER OR GRILLE SIMILAR.
5. ROUND BRANCH DUCT SHOWN, RECTANGULAR BRACH DUCT SIMILAR WITH APPROPRIATE CONNECTIONS/TRANSITIONS.

4 M-601.00 LINEAR CEILING DIFFUSER (SLOT-TYPE) INSTALLATION (WITH FLEX)
SCALE: NOT TO SCALE

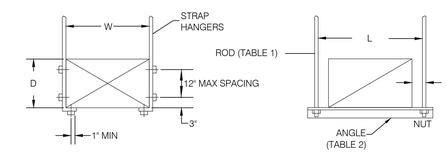

TABLE 1
ALLOWABLE HANGER LOAD (MAX)

STRAPS	LBS	RODS	LBS
2-1"x22 GA	520	2-1/4" Ø	540
2-1"x20 GA	640	2-3/8" Ø	1360
2-1"x18 GA	840	2-1/2" Ø	2500
2-1"x16 GA	1400	2-5/8" Ø	4000
		2-3/4" Ø	6000

TABLE 2
TRAPEZE ANGLE LOAD (MAX)

L	2" x 2" x 1/4"	2 1/2" x 2 1/2 " x1/4"
36"	1200 LBS	1940 LBS
48"	1160 LBS	1900 LBS
60"	1060 LBS	1800 LBS
72"	900 LBS	1640 LBS
84"	660 LBS	1400 LBS
96"	320 LBS	1060 LBS

NOTES:
1. TABULATED DATA FROM SMACNA ALLOWS FOR DUCT REINFORCING AND INSULATION, BUT NO EXTERNAL LOADS.
2. PROVIDE HIGH DENSITY INSERT AT TRAPEZE FOR INSULATED DUCTS.
3. SEE STRUCTURAL DRAWINGS FOR DETAILS FOR SECURING RODS TO STRUCTURE.

2 M-601.00 RECTANGULAR DUCT HANGERS
SCALE: NOT TO SCALE

Title
MECHANICAL SCHEDULES AND DETAILS

Date	02-17-2023
Project No.	1944
Drawing By	AKV
CHK By	BS
Scale	AS NOTED
DOB Rev	M-601.00