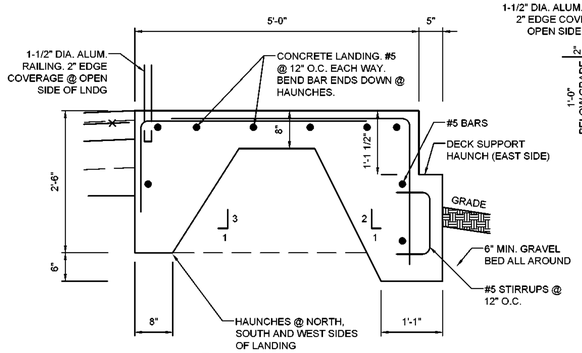

1 A8 CONCRETE LANDING DETAIL

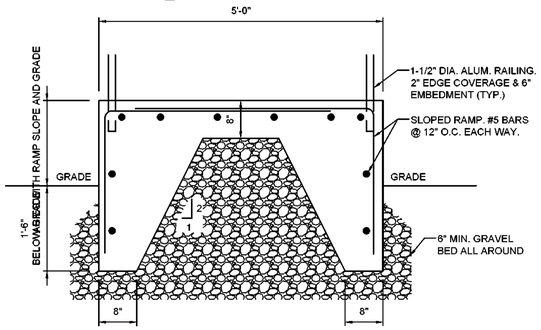

2 A8 CONCRETE RAMP DETAIL

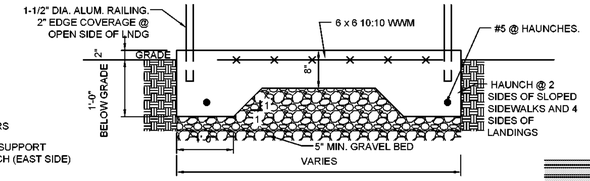

10 A8 SLOPED WALKWAY & LANDINGS DETAIL

NOTE: ALL LANDINGS TO BE PITCHED TO DRAIN

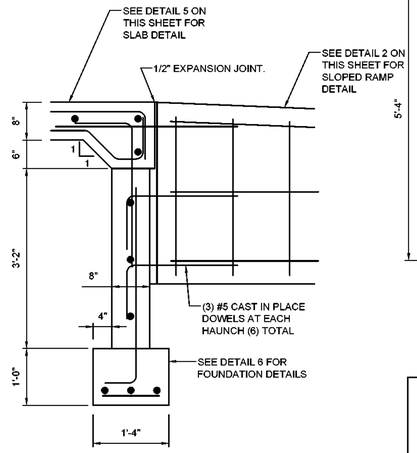

3 A8 CONCRETE RAMP DETAIL

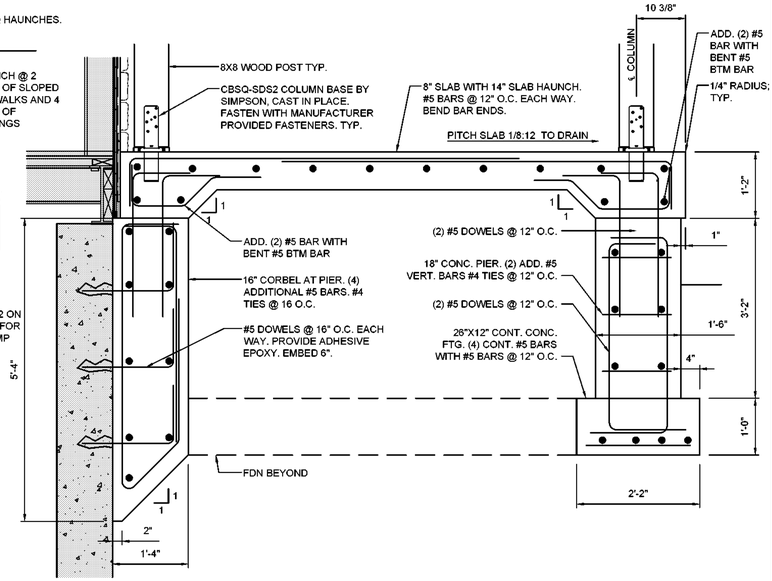

4 A8 SECTION DETAIL THROUGH PIERS

SEE SECTION 5/A6 FOR PORCH FOUNDATION CORBEL AND PIER WATERPROOFING AND INSULATION SCOPE

GENERAL NOTES:

1. ALL DIMENSIONS ARE NOMINAL AND TO BE VERIFIED IN FIELD.
2. SEE SHEET A7 FOR ALL WATERPROOFING DETAILS

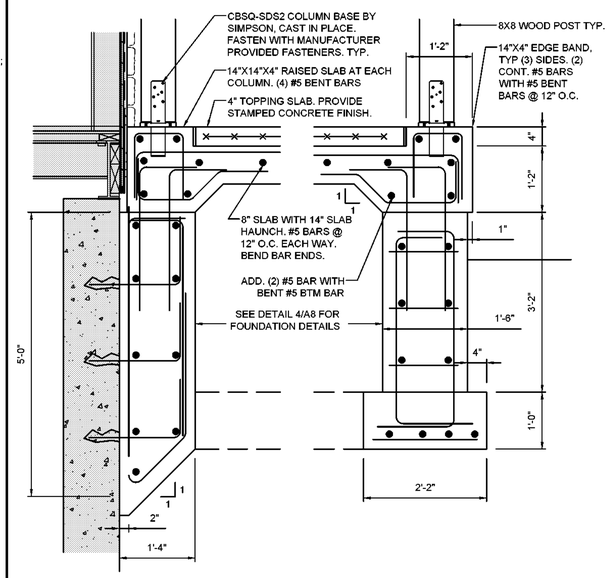

4A A8 ALTERNATE SECTION DETAIL THROUGH PIERS WITH STAMPED CONCRETE

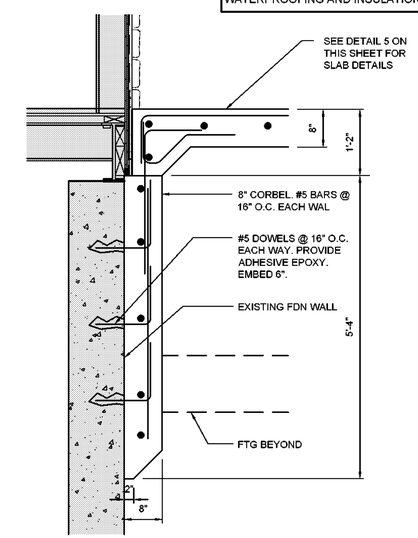

8 A8 TYP. CORBEL DETAIL

SCALE: 3/4" = 1'-0"

SEE SECTION 5/A6 FOR PORCH FOUNDATION CORBEL AND PIER WATERPROOFING AND INSULATION SCOPE

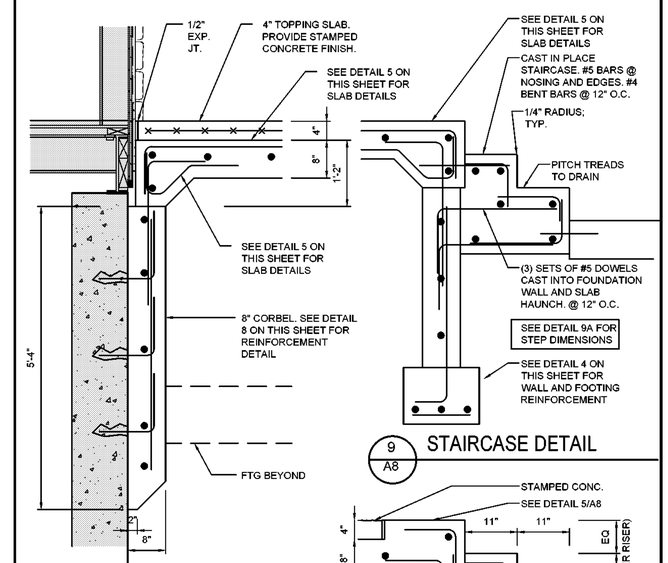

9 A8 STAIRCASE DETAIL

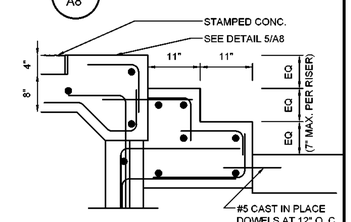

9A A8 ALTERNATE DETAIL WITH STAMPED CONCRETE

9A A8 ALTERNATE DETAIL WITH STAMPED CONCRETE

NOTE:
IF EXISTING FILL NEEDS TO BE REMOVED AND REPLACED, IT SHOULD BE REPLACED WITH A SUPERVISED CONTROLLED FILL CONSISTING OF A CLEAN INORGANIC MATERIAL, PLACED IN LIFTS NOT TO EXCEED 12 INCHES IN DEPTH, AND BE COMPACTED, UNDER INDEPENDENT SUPERVISION, TO A MINIMUM OF 95% OF THE MODIFIED PROCTOR MAXIMUM DRY DENSITY AT OPTIMUM MOISTURE CONTENT PER ASTM D 1557. SOILS TO BE USED FOR CONTROLLED FILL SHALL HAVE LESS THAN 10% PASSING A #200 SIEVE WITH NO PARTICLE SIZE LARGER THAN 2 INCHES. DESIGN BEARING CAPACITY OF CONTROLLED FILL PLACED AS DESCRIBED ABOVE CAN BE TAKEN AS 2 TONS PER SQUARE FOOT.

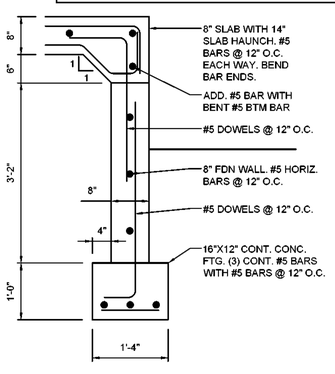

5 A8 TYPICAL WALL DETAIL

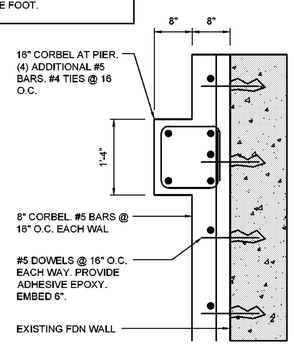

6 A8 CORBEL PIER - PLAN VIEW

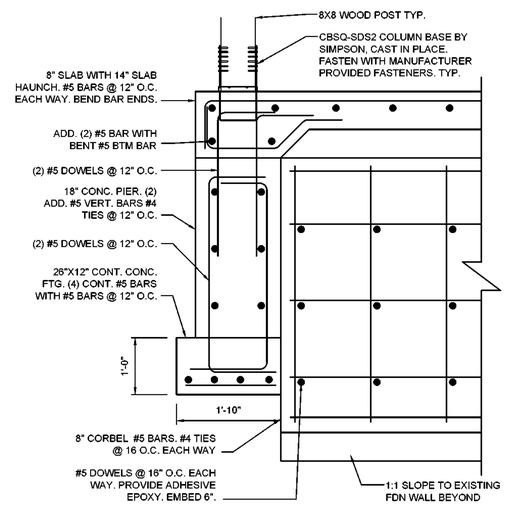

7 A8 FOUNDATION DETAIL AT CORNER

NO.	DATE	REVISION	INT.

UNAUTHORIZED ALTERATION OR ADDITION TO THIS DOCUMENT IS A VIOLATION OF SECTION 7209 OF THE NEW YORK STATE EDUCATION LAW.

PROJECT ENGINEER: AE	DRAWN BY: DB
DESIGNED BY: BA	CHECKED BY: BA/WDM

D&B ENGINEERS AND ARCHITECTS

TOWN OF BLOOMING GROVE

ORANGE COUNTY NEW YORK

LASSER PARK SENIOR CENTER

CONTRACT 2

FOUNDATION DETAILS

STRUCTURAL

PROJECT NO. 5708

DATE: AUGUST 2023

SCALE: AS NOTED

DRAWING NO. A8

F:\5708-BG-Senior Center\Contract 2\dwg\arch\5708-A8-DETAILS.dwg, A8, 8/28/2023 5:09:01 PM, jskaplan