CITY OF MIDDLETOWN

NEW COURTHOUSE FACILITY

CONTRACT 1A - GENERAL CONSTRUCTION
CONTRACT 1B - MECHANICAL CONSTRUCTION
CONTRACT 1C - PLUMBING/FIRE PROTECTION CONSTRUCTION
CONTRACT 1D - ELECTRICAL CONSTRUCTION

25 SOUTH STREET MIDDLETOWN, NEW YORK, 10940
ORANGE COUNTY, NEW YORK

Barton & Loguidice

NYS CERTIFICATE # 0021642, 0020588, 0019903, 0019905, 0020336

CITY COUNCIL

JOSEPH M. DESTEFANO	MAYOR
J. MIGUEL RODRIGUES	COMMON COUNCIL PRESIDENT
JOSEPH G. MASI	COUNCIL MEMBER
KEVIN WITT	COUNCIL MEMBER
ANDREW GREEN	COUNCIL MEMBER
GERALD P. KLEINER	COUNCIL MEMBER
KATE WRAY	COUNCIL MEMBER
PAUL JOHNSON	COUNCIL MEMBER
JUDE A. JEAN-FRANCOIS	COUNCIL MEMBER
SPARROW TOBIN	COUNCIL MEMBER
JACOB TAWIL, P.E.	COMMISSIONER OF PUBLIC WORKS

IT IS A VIOLATION OF THE NEW YORK STATE EDUCATION LAW, ARTICLE 145 §7209 SPECIAL PROVISIONS, FOR ANY PERSON, UNLESS THEY ARE ACTING UNDER THE DIRECTION OF A LICENSED PROFESSIONAL ENGINEER, ARCHITECT, LANDSCAPE ARCHITECT, OR LAND SURVEYOR, TO ALTER AN ITEM IN ANY WAY. IF AN ITEM BEARING THE STAMP OF A LICENSED PROFESSIONAL IS ALTERED, THE ALTERING PROFESSIONAL SHALL STAMP THE DOCUMENT AND INCLUDE THE NOTATION "ALTERED BY" FOLLOWED BY THEIR SIGNATURE, THE DATE OF SUCH ALTERATION, AND A SPECIFIC DESCRIPTION OF THE ALTERATION.

PROJECT LOCATION PLAN

NOT TO SCALE

AUGUST, 2024

CONTRACT DOCUMENTS

PREPARED AND APPROVED BY

STATE OF NEW YORK
MATTHEW C. FULLER
070743
LICENSED PROFESSIONAL ENGINEER

DATE SIGNED 08/16/24
PROFESSIONAL ENGINEERS LICENSE NO. 070743
NYS EXPIRATION DATE: May 31, 2026

Sheet Number
G001

Project Number
1753.008.001

Plotted: 8/21/2024 4:26:52 PM By: 8/21/2024 4:26:52 PM
C:\Users\cgardner\Documents\Middletown Courthouse 6.22.21 Central File – ARCHITECTURAL STRUCTURAL MODEL_cgardner05.rvt

INDEX

SHEET NO.	SHEET TITLE
G001	COVER
G002	DRAWING INDEX
C101	EXISTING/DEMO SITE PLAN
C102	SITE GRADING, UTILITY, LAYOUT, MATERIALS & LANDSCPAE PLAN
C103	SITE DETAILS & NOTES
C104	SITE DETAIL & NOTES
C105	SITE DETAILS & NOTES
A001	LEGENDS, NOTES & TYPICAL DETAILS
A002	BASEMENT & FIRST FLOOR EXITING PLANS
A003	SECOND FLOOR EXITING PLAN
A004	CODE REVIEW
A005	CODE REVIEW
A006	CODE REVIEW
AD101	EXISTING/DEMOLITION FIRST FLOOR PLANS
AD102	EXISTING/DEMOLITION SECOND FLOOR PLAN
AD103	EXISTING/DEMOLITION ROOF PLAN (ADDITIVE BID ITEM NO. 1)
A201	FIRST FLOOR NEW WORK PLAN
A202	SECOND FLOOR NEW WORK PLAN
A203	ROOF PLAN (ADDITIVE BID ITEM NO. 1)
A204	ROOF DETAILS
A205	ROOF DETAILS
A206	BUILDING SOUTH AND WEST ELEVATIONS
A207	BUILDING NORTH AND EAST ELEVATIONS
A301	FIRST FLOOR REFLECTED CEILING PLAN
A302	SECOND FLOOR REFLECTED CEILING PLAN
A401	ENTRY CANOPY ENLARGEMENT PLAN, SECTIONS & DETAILS (ADDITIVE BID ITEM NO. 2)
A402	REAR COVERED WALKWAY ENLARGEMENT PLAN, SECTION & DETAILS (ADDITIVE BID ITEM NO. 3)
A403	FIRST FLOOR COURTROOM ENLARGEMENT PLAN
A404	FIRST FLOOR COURTROOM INTERIOR ELEVATIONS
A405	FIRST FLOOR COURTROOM INTERIOR ELEVATIONS
A406	FIRST FLOOR ENLARGED BATHROOM PLANS AND INTERIOR ELEVATIONS
A407	FIRST FLOOR ENLARGED BATHROOM PLANS AND INTERIOR ELEVATIONS
A408	SECOND FLOOR COURTOOM ENLARGEMENT PLAN

INDEX

SHEET NO.	SHEET TITLE
A409	SECOND FLOOR COURTROOM INTERIOR ELEVATIONS
A410	INTERIOR ELEVATIONS
A411	STAIR PLAN, SECTION AND DETAILS
A501	DOOR DETAILS
A502	BUILDING & WINDOW DETAILS
A503	COURTROOM A MILLWORK LAYOUT PLANS & DETAILS
A504	COURTROOM B MILLWORK LAYOUT PLANS & DETAILS
A505	COURTROOM MILLWORK DETAILS
A506	COURTROOM MILLWORK DETAILS
A507	COURTROOM MILLWORK DETAILS
A508	COURTROOM MILLWORK DETAILS
A601	ROOM FINISH AND WINDOW SCHEDULES AND NOTES REVISION
A602	DOOR SCHEDULE AND NOTES
S001	GENERAL STRUCTURAL NOTES
S101	2ND FLOOR ADDITION AND STAIR FRAMING PLAN AND DETAILS
S102	PARTIAL FOUNDATION AND FRAMING PLANS
S501	TYPICAL DETAILS
S502	FRONT ENTRANCE CANOPY AND REAR COVERED WALKWAY FOUNDATION DETAILS
S503	FRONT ENTRANCE AND REAR COVERED WALKWAY FRAMING DETAILS
M001	SYMBOLS AND ABBREVIATIONS
M100	BASEMENT HVAC DEMOLITION PLAN
M101	FIRST FLOOR HVAC DEMOLITION PLAN
M102	SECOND FLOOR HVAC DEMOLITION PLAN
M103	ROOF HVAC DEMOLITION PLAN
M104	BASEMENT HVAC PIPING PLAN
M105	FIRST FLOOR HVAC PLAN
M106	FIRST FLOOR HVAC PIPING PLAN
M107	SECOND FLOOR HVAC PLAN
M108	SECOND FLOOR HVAC PIPING PLAN
M109	ROOF HVAC PLAN
M501	SCHEDULES
P001	SYMBOLS AND ABBREVIATIONS
P101	BASEMENT PLUMBING PLAN
P102	FIRST FLOOR PLUMBING DEMOLITION PLAN

INDEX

SHEET NO.	SHEET TITLE
P103	FIRST FLOOR SANITARY DEMOLITION PLAN
P104	SECOND FLOOR PLUMBING DEMOLITION PLAN
P105	SECOND FLOOR SANITARY DEMOLIITON PLAN
P106	FIRST FLOOR PLUMBING PLAN
P107	SECOND FLOOR SANITARY PLAN
P108	SECOND FLOOR PLUMBING PLAN
P109	SECOND FLOOR SANITARY PLAN
FP101	FIRE PROTECTION GENERAL NOTES AND BASEMENT FIRE PROTECTION PLAN
FP102	FIRST FLOOR FIRE PROTECTION PLAN
FP103	SECOND FLOOR FIRE PROTECTION PLAN
E001	ELECTRICAL GENERAL NOTES & LEGEND
E101	BASEMENT POWER & SYSTEMS PLAN DEMO
E102	FIRST FLOOR POWER & SYSTEMS PLAN DEMO
E103	SECOND FLOOR POWER & SYSTEMS PLAN DEMO
E104	ROOF POWER PLAN DEMO
E105	FIRST FLOOR LIGHTING PLAN DEMO
E106	SECOND FLOOR LIGHTING PLAN DEMO
E107	FIRST FLOOR FIRE ALARM PANEL DEMO
E108	SECOND FLOOR FIRE ALARM PANEL DEMO
E109	SECOND FLOOR FIRE ALARM PANEL DEMO
E110	FIRST FLOOR POWER & SYSTEMS PLAN INSTALL
E111	SECOND FLOOR POWER & SYSTEMS PLAN INSTALL
E112	ROOF POWER PLAN INSTALL
E113	FIRST FLOOR LIGHTING/SYSTEMS PLAN INSTALL
E114	SECOND FLOOR LIGHTING/SYSTEMS PLAN INSTALL
E115	SALLY PORT POWER, LIGHTING & SECURITY PLAN INSTALL
E116	FIRST FLOOR FIRE ALARM PLAN INSTALL
E117	SECOND FLOOR FIRE ALARM PLAN INSTALL
E118	ELECTRICAL SCHEDULES AND DETAILS
E119	ELECTRICAL DETAILS
E120	ELECTRICAL DETAILS
E601	ONE-LINE DIAGRAM DEMO
E602	ONE LINE DIAGRAM NORMAL POWER INSTALL
E603	ONE LINE DIAGRAM EMERGENCY POWER INSTALL
E604	FIRE ALARM RISER DIAGRAM DEMO
E605	FIRE ALARM RISER DIAGRAM INSTALL

IT IS A VIOLATION OF THE NEW YORK STATE EDUCATION LAW, ARTICLE 145 §7209 SPECIAL PROVISIONS, FOR ANY PERSON, UNLESS THEY ARE ACTING UNDER THE DIRECTION OF A LICENSED PROFESSIONAL ENGINEER, ARCHITECT, LANDSCAPE ARCHITECT, OR LAND SURVEYOR, TO ALTER AN ITEM IN ANY WAY. IF AN ITEM BEARING THE STAMP OF A LICENSED PROFESSIONAL IS ALTERED, THE ALTERING PROFESSIONAL SHALL STAMP THE DOCUMENT AND INCLUDE THE NOTATION "ALTERED BY" FOLLOWED BY THEIR SIGNATURE, THE DATE OF SUCH ALTERATION, AND A SPECIFIC DESCRIPTION OF THE ALTERATION.

REVISIONS

CITY OF MIDDLETOWN
NEW COURTHOUSE FACILITY

DRAWING INDEX

ORANGE COUNTY, NEW YORK

CITY OF MIDDLETOWN

Barton & Loguidice
443 Electronics Parkway
Liverpool, NY 13088
NYS CERTIFICATE # 0021642, 0020588, 0019903, 0019905, 0020336

STATE OF NEW YORK · MATTHEW C. FULLER · 070743 · LICENSED PROFESSIONAL ENGINEER

NYS EXP.:

Date
AUGUST, 2024

Scale
AS SHOWN

Sheet Number
G002

Project Number
1753.008.001

Plotted: 8/21/2024 4:26:52 PM
C:\Users\cgardner\Documents\Middletown Courthouse 6.22.21 Central File – ARCHITECTURAL STRUCTURAL MODEL_cgardnerB3.rvt
Checked by Checker Drawn by ZDC Designed by ZDC In Charge of MCF

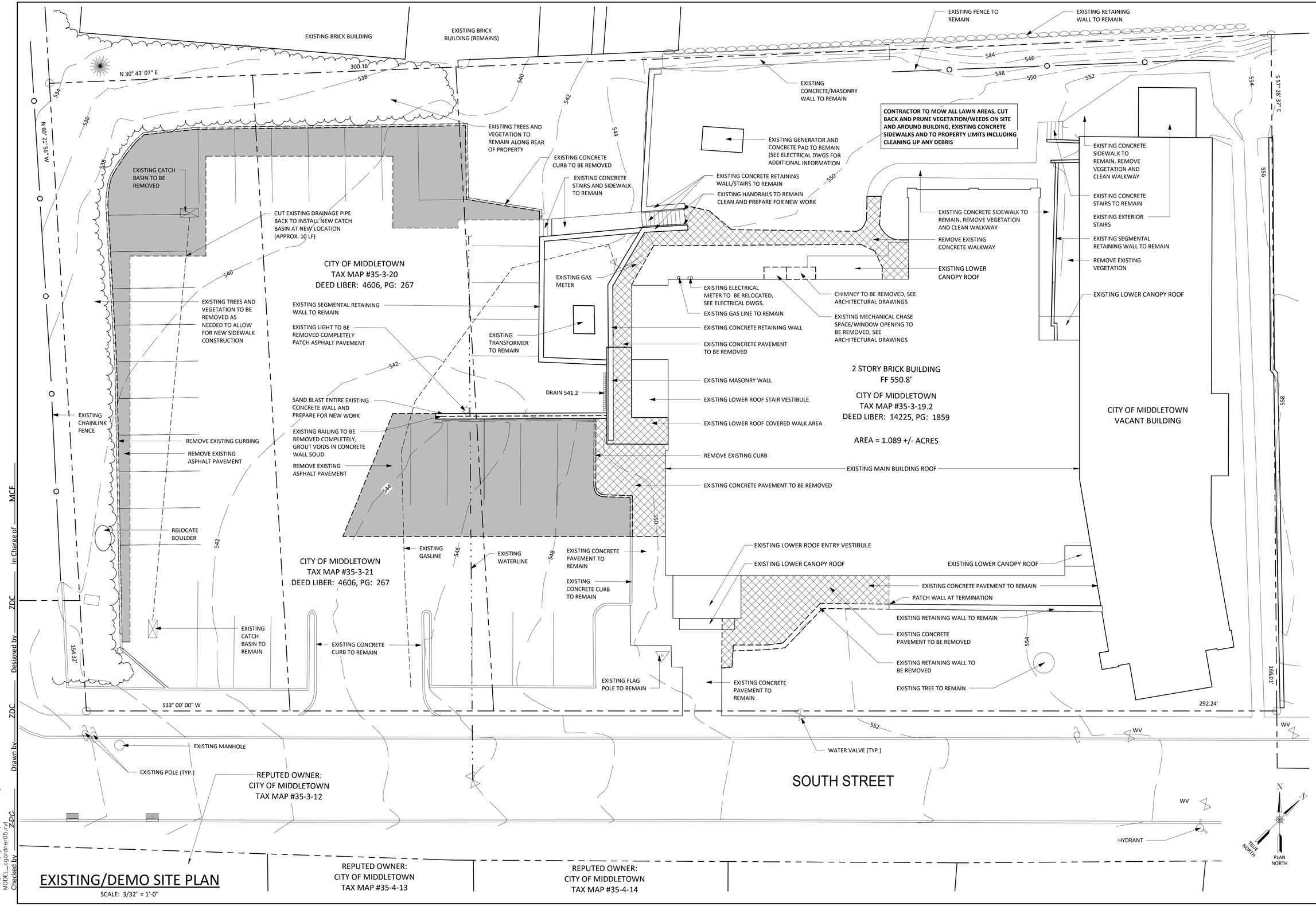

EXISTING/DEMO SITE PLAN

SCALE: 3/32" = 1'-0"

Plotted: 8/21/2024 4:26:42 PM
C:\Users\vgardner\Documents\Middletown Courthouse 6.22.21 Central File – ARCHITECTURAL STRUCTURAL MODEL_vgardner05.rvt

Checked by ZDC	Drawn by ZDC	Designed by ZDC	In Charge of MCF

IT IS A VIOLATION OF THE NEW YORK STATE EDUCATION LAW, ARTICLE 145 §7209 SPECIAL PROVISIONS, FOR ANY PERSON, UNLESS THEY ARE ACTING UNDER THE DIRECTION OF A LICENSED PROFESSIONAL ENGINEER, ARCHITECT, LANDSCAPE ARCHITECT, OR LAND SURVEYOR, TO ALTER AN ITEM IN ANY WAY. IF AN ITEM BEARING THE STAMP OF A LICENSED PROFESSIONAL IS ALTERED, THE ALTERING PROFESSIONAL SHALL STAMP THE DOCUMENT AND INCLUDE THE NOTATION "ALTERED BY" FOLLOWED BY THEIR SIGNATURE, THE DATE OF SUCH ALTERATION, AND A SPECIFIC DESCRIPTION OF THE ALTERATION.

REVISIONS

1	Revision 1

CITY OF MIDDLETOWN
NEW COURTHOUSE FACILITY

EXISTING/DEMO SITE PLAN

ORANGE COUNTY, NEW YORK

CITY OF MIDDLETOWN

Barton & Loguidice
443 Electronics Parkway
Liverpool, NY 13088
NYS CERTIFICATE # 0021642, 0020588, 0019903, 0019905, 0020336

STATE OF NEW YORK · MATTHEW C. FULLER · 070743 · LICENSED PROFESSIONAL ENGINEER

NYS EXP.: 05/31/2026

Date	AUGUST, 2024
Scale	AS SHOWN
Sheet Number	C101
Project Number	1753.008.001

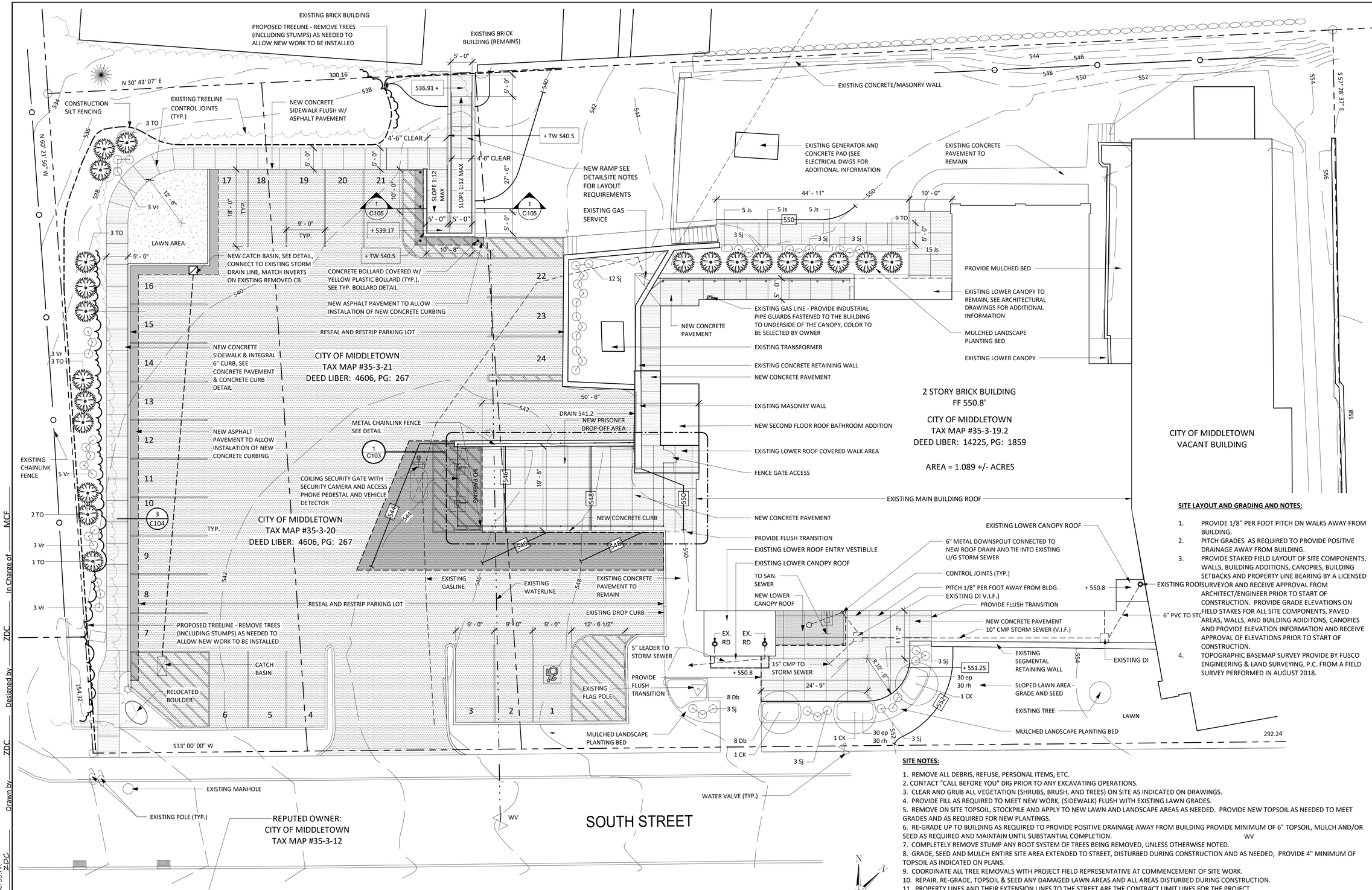

SITE GRADING, UTILITY, LAYOUT AND MATERIALS

SCALE: 3/32" = 1'-0"

SITE LAYOUT AND GRADING AND NOTES:

1. PROVIDE 1/8" PER FOOT PITCH ON WALKS AWAY FROM BUILDING.
2. PITCH GRADES AS REQUIRED TO PROVIDE POSITIVE DRAINAGE AWAY FROM BUILDING.
3. PROVIDE STAKED FIELD LAYOUT OF SITE COMPONENTS, WALLS, BUILDING ADDITIONS, CANOPIES, BUILDING SETBACKS AND PROPERTY LINE BEARING BY A LICENSED SURVEYOR AND RECEIVE APPROVAL FROM ARCHITECT/ENGINEER PRIOR TO START OF CONSTRUCTION. PROVIDE GRADE ELEVATIONS ON FIELD STAKES FOR ALL SITE COMPONENTS, PAVED AREAS, WALLS, AND BUILDING ADDITIONS, CANOPIES AND PROVIDE ELEVATION INFORMATION AND RECEIVE APPROVAL OF ELEVATIONS PRIOR TO START OF CONSTRUCTION.
4. TOPOGRAPHIC BASEMAP SURVEY PROVIDE BY FUSCO ENGINEERING & LAND SURVEYING, P.C. FROM A FIELD SURVEY PERFORMED IN AUGUST 2018.

SITE NOTES:

1. REMOVE ALL DEBRIS, REFUSE, PERSONAL ITEMS, ETC.
2. CONTACT "CALL BEFORE YOU" DIG PRIOR TO ANY EXCAVATING OPERATIONS.
3. CLEAR AND GRUB ALL VEGETATION (SHRUBS, BRUSH, AND TREES) ON SITE AS INDICATED ON DRAWINGS.
4. PROVIDE FILL AS REQUIRED TO MEET NEW WORK, (SIDEWALK) FLUSH WITH EXISTING LAWN GRADES.
5. REMOVE ON SITE TOPSOIL, STOCKPILE AND APPLY TO NEW LAWN AND LANDSCAPE AREAS AS NEEDED. PROVIDE NEW TOPSOIL AS NEEDED TO MEET GRADES AND AS REQUIRED FOR NEW PLANTINGS.
6. RE-GRADE UP TO BUILDING AS REQUIRED TO PROVIDE POSITIVE DRAINAGE AWAY FROM BUILDING PROVIDE MINIMUM OF 6" TOPSOIL, MULCH AND/OR SEED AS REQUIRED AND MAINTAIN UNTIL SUBSTANTIAL COMPLETION.
7. COMPLETELY REMOVE STUMP ANY ROOT SYSTEM OF TREES BEING REMOVED, UNLESS OTHERWISE NOTED.
8. GRADE, SEED AND MULCH ENTIRE SITE AREA EXTENDED TO STREET, DISTURBED DURING CONSTRUCTION AND AS NEEDED, PROVIDE 4" MINIMUM OF TOPSOIL AS INDICATED ON PLANS.
9. COORDINATE ALL TREE REMOVALS WITH PROJECT FIELD REPRESENTATIVE AT COMMENCEMENT OF SITE WORK.
10. REPAIR, RE-GRADE, TOPSOIL & SEED ANY DAMAGED LAWN AREAS AND ALL AREAS DISTURBED DURING CONSTRUCTION.
11. PROPERTY LINES AND THEIR EXTENSION LINES TO THE STREET ARE THE CONTRACT LIMIT LINES FOR THE PROJECT.
12. ANY LAWN AREAS, SIDEWALKS, CURBING PAVING, ETC. DISTURBED OR DAMAGED DURING CONSTRUCTION MUST BE REPLACED BY CONTRACTOR.
13. TOPSOIL AND SEED ALL UNPAVED AREAS ON SITE AND ALL AREAS OFFSITE DISTURBED BY CONSTRUCTION 4" TOPSOIL MINIMUM.
14. RECEIVE APPROVAL FROM ENGINEER/ARCHITECT FOR ALL LAYOUTS, LANDSCAPE BED LINES & SIDEWALKS.
15. PROVIDE SMOOTH GRADE TRANSITIONS BETWEEN EXISTING AND NEW WORK. UTILIZE ANY EXCESS FILL LEFT OVER AFTER GRADING OPERATIONS ON SITE.
16. CONTRACTOR TO MOW ALL LAWN AREAS, CUT BACK AND PRUNE VEGETATION/WEEDS ON SITE AND AROUND BUILDING AND TO PROPERTY LIMITS INCLUDING CLEANING UP ANY DEBRIS

IT IS A VIOLATION OF THE NEW YORK STATE EDUCATION LAW, ARTICLE 145 §7209 SPECIAL PROVISIONS, FOR ANY PERSON, UNLESS THEY ARE ACTING UNDER THE DIRECTION OF A LICENSED PROFESSIONAL ENGINEER, ARCHITECT, LANDSCAPE ARCHITECT, OR LAND SURVEYOR, TO ALTER AN ITEM IN ANY WAY. IF AN ITEM BEARING THE STAMP OF A LICENSED PROFESSIONAL IS ALTERED, THE ALTERING PROFESSIONAL SHALL STAMP THE DOCUMENT AND INCLUDE THE NOTATION "ALTERED BY" FOLLOWED BY THEIR SIGNATURE, THE DATE OF SUCH ALTERATION, AND A SPECIFIC DESCRIPTION OF THE ALTERATION.

REVISIONS

1	Revision 1

CITY OF MIDDLETOWN
NEW COURTHOUSE FACILITY

SITE GRADING, UTILITY, LAYOUT, MATERIALS & LANDSCPAE PLAN

CITY OF MIDDLETOWN
ORANGE COUNTY, NEW YORK

Barton & Loguidice
443 Electronics Parkway
Liverpool, NY 13088
NYS CERTIFICATE # 0021642, 0020588, 0019903, 0019905, 0020336

NYS EXP.: 05/31/2026

Date: AUGUST, 2024

Scale: AS SHOWN

Sheet Number: C102

Project Number: 1753.008.001

Plotted: 8/21/2024 4:26:45 PM
C:\Users\cgardner\Documents\Middletown Courthouse 6.22.21 Central File – ARCHITECTURAL STRUCTURAL
MODEL_cgardner05.rvt

Drawn by ZDC Designed by ZDC In Charge of MCF
Checked by ZDC

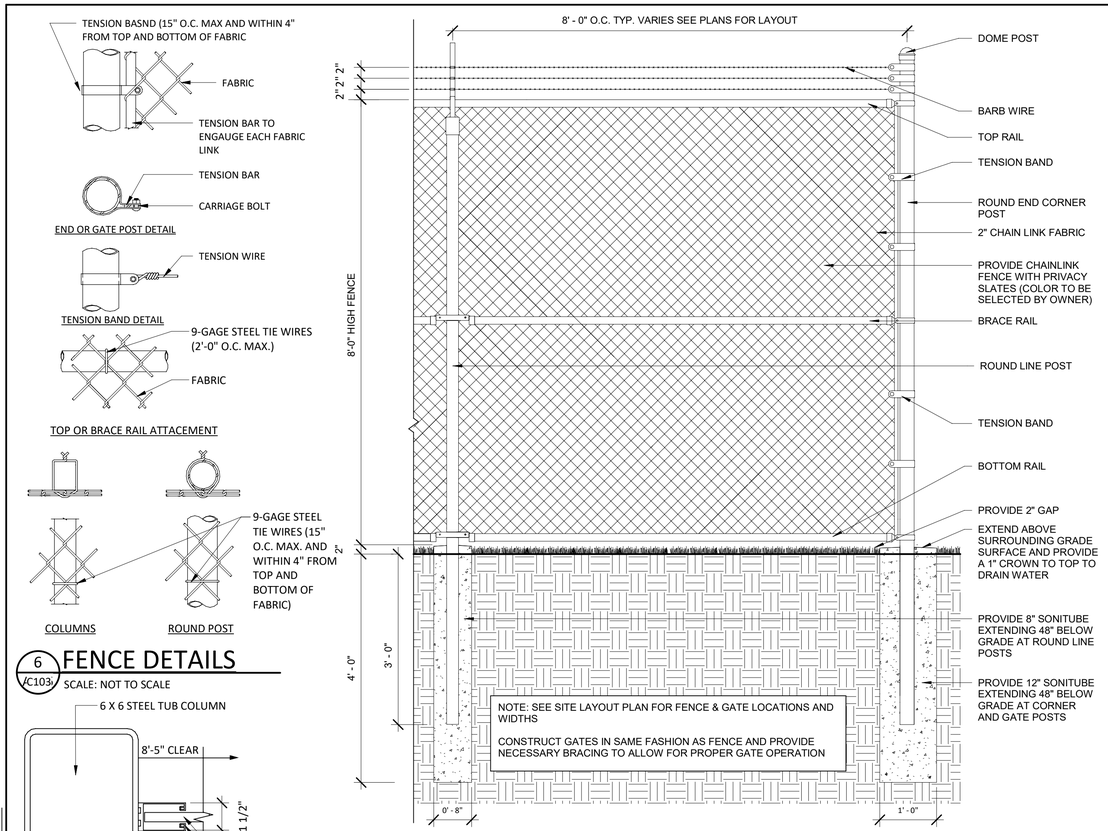

6 / C103 FENCE DETAILS

SCALE: NOT TO SCALE

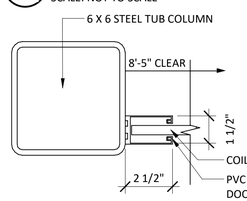

4 / C103 OH GATE JAMB DETAIL

SCALE: 3" = 1'-0"

5 / C103 CHAINLINK FENCE DETAIL

SCALE: 3/4" = 1'-0"

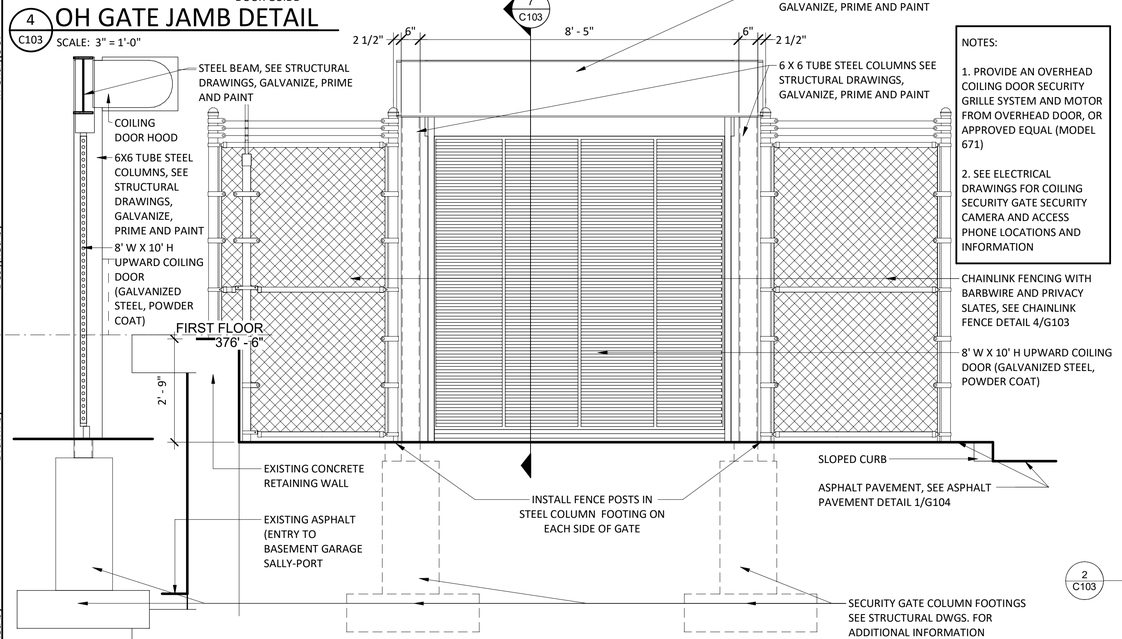

NOTES:

1. PROVIDE AN OVERHEAD COILING DOOR SECURITY GRILLE SYSTEM AND MOTOR FROM OVERHEAD DOOR, OR APPROVED EQUAL (MODEL 671)

2. SEE ELECTRICAL DRAWINGS FOR COILING SECURITY GATE SECURITY CAMERA AND ACCESS PHONE LOCATIONS AND INFORMATION

3 / C103 ROLLING SECURITY GATE DETAIL

SCALE: 1/2" = 1'-0"

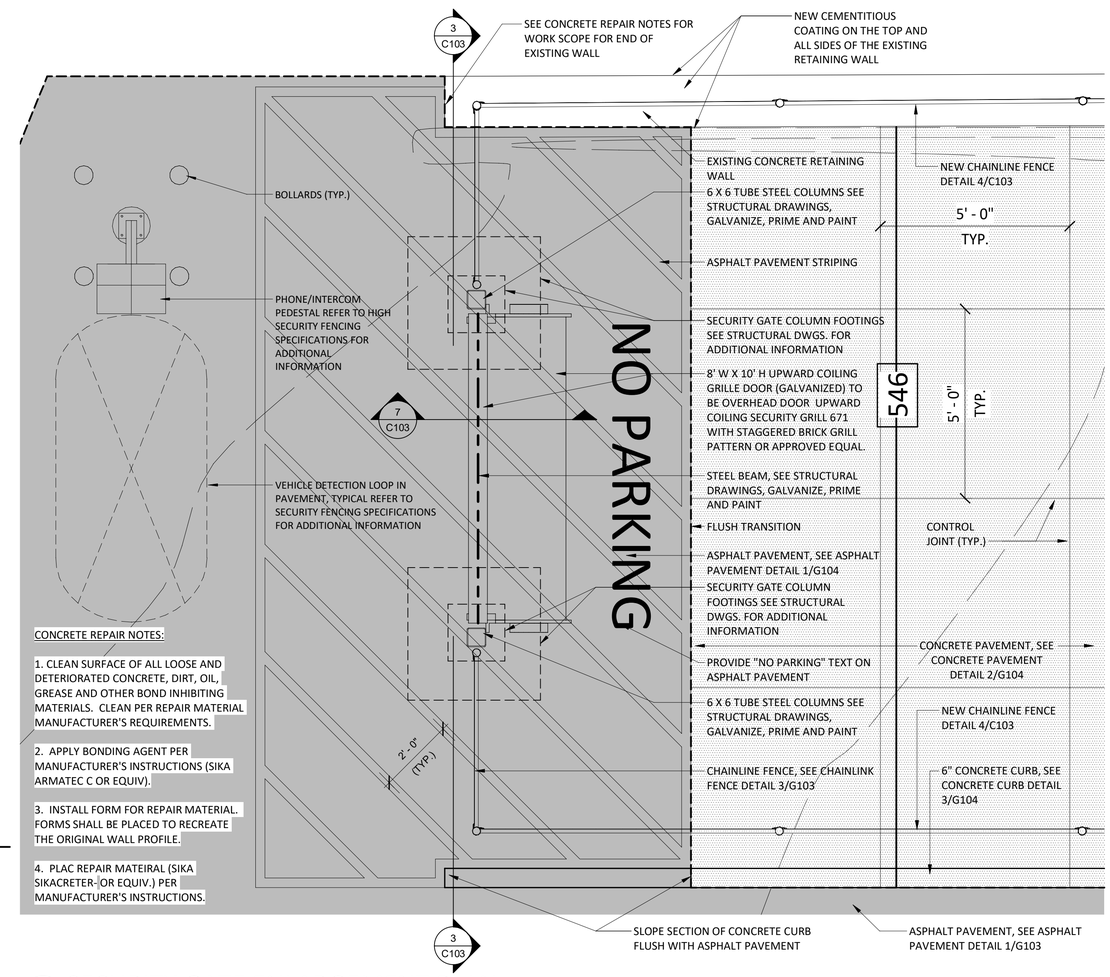

CONCRETE REPAIR NOTES:

1. CLEAN SURFACE OF ALL LOOSE AND DETERIORATED CONCRETE, DIRT, OIL, GREASE AND OTHER BOND INHIBITING MATERIALS. CLEAN PER REPAIR MATERIAL MANUFACTURER'S REQUIREMENTS.

2. APPLY BONDING AGENT PER MANUFACTURER'S INSTRUCTIONS (SIKA ARMATEC C OR EQUIV).

3. INSTALL FORM FOR REPAIR MATERIAL. FORMS SHALL BE PLACED TO RECREATE THE ORIGINAL WALL PROFILE.

4. PLAC REPAIR MATEIRAL (SIKA SIKACRETER OR EQUIV.) PER MANUFACTURER'S INSTRUCTIONS.

2 / C103 SECURITY GATE ENLARGEMENT PLAN

SCALE: 1/2" = 1'-0"

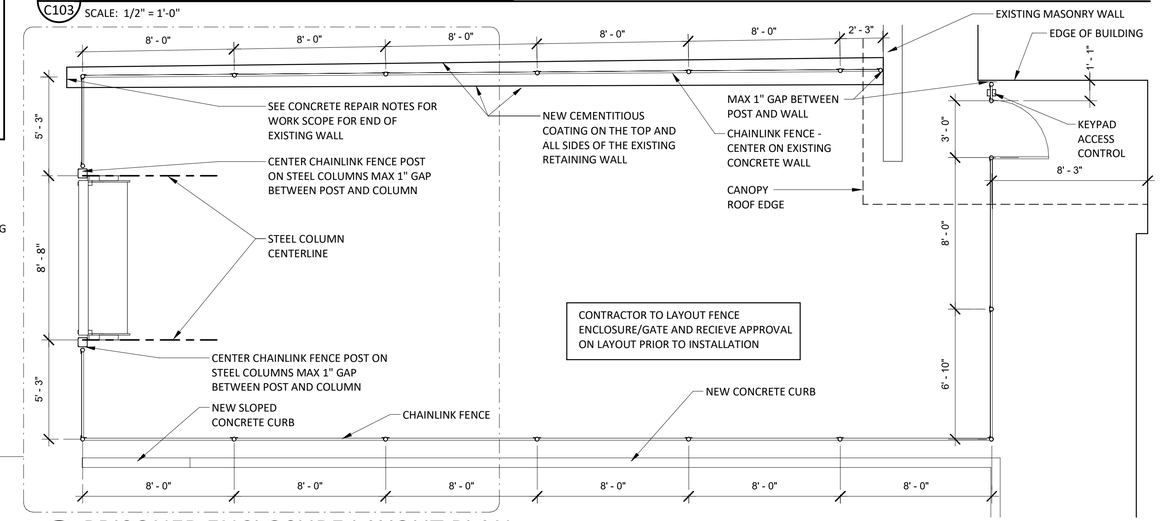

1 / C102 PRISONER ENCLOSURE LAYOUT PLAN

SCALE: 1/4" = 1'-0"

IT IS A VIOLATION OF THE NEW YORK STATE EDUCATION LAW, ARTICLE 145 §7209 SPECIAL PROVISIONS, FOR ANY PERSON, UNLESS THEY ARE ACTING UNDER THE DIRECTION OF A LICENSED PROFESSIONAL ENGINEER, ARCHITECT, LANDSCAPE ARCHITECT, OR LAND SURVEYOR, TO ALTER AN ITEM IN ANY WAY. IF AN ITEM BEARING THE STAMP OF A LICENSED PROFESSIONAL IS ALTERED, THE ALTERING PROFESSIONAL SHALL STAMP THE DOCUMENT AND INCLUDE THE NOTATION "ALTERED BY" FOLLOWED BY THEIR SIGNATURE, THE DATE OF SUCH ALTERATION, AND A SPECIFIC DESCRIPTION OF THE ALTERATION.

REVISIONS

CITY OF MIDDLETOWN
NEW COURTHOUSE FACILITY

ORANGE COUNTY, NEW YORK

SITE DETAILS & NOTES

CITY OF MIDDLETOWN

Barton & Loguidice
443 Electronics Parkway
Liverpool, NY 13088
NYS CERTIFICATE # 0021642, 0020588, 0019903, 0019905, 0020336

STATE OF NEW YORK · MATTHEW C. FULLER · 070743 · LICENSED PROFESSIONAL ENGINEER

NYS EXP.: 05/31/2026

Date: AUGUST, 2024

Scale: AS SHOWN

Sheet Number: C103

Project Number: 1753.008.001

Plotted: 8/21/2024 4:26:50 PM
C:\Users\cgardner\Documents\Middletown Courthouse 6.22.21 Central File – ARCHITECTURAL STRUCTURAL MODEL_cgardner05.rvt

Checked by ZDC | Drawn by ZDC | Designed by ZDC | In Charge of MCE

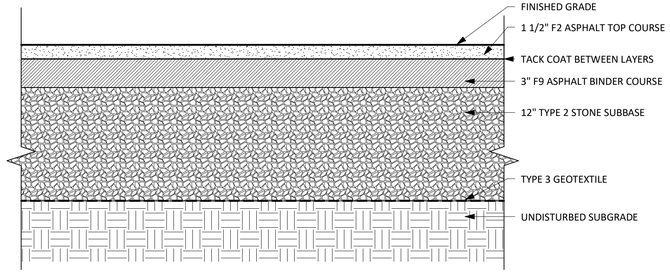

1 ASPHALT PAVEMENT

SCALE: NOT TO SCALE

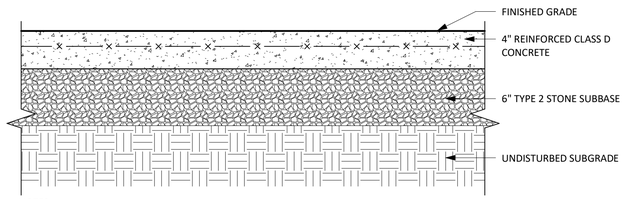

NOTES:

1. MAXIMUM CROSS SLOPE OF CONCRETE SIDEWALK IS 1.5%.
2. PROVIDE 1/2 INCH WIDE ISOLATION JOINT EVERY 20' IN LENGTH IN SIDEWALKS, BETWEEN NEW CONCRETE CONSTRUCTION AND BACK EDGE CURB, CONCRETE GUTTER, OTHER PAVED AREAS, BUILDINGS, WALLS, POLE BASES AND OTHER STRUCTURES/APPURTENANCES. SIDEWALKS WITH AREAS GREATER THAN 36 SQUARE FEET ARE TO BE SCORED WITH JOINTS.
3. PROVIDE A FINE BROOMED SURFACE FREE OF HOLES, TEARS, POCK MARKS, BROKEN CORNERS, AND OTHER DEFECTS. JOINTS ARE TO BE CLEAR OF EXCESS CONCRETE AND MORTAR MATERIAL RESULTING FROM BROOMING OR FINISHING OF ADJACENT CONCRETE.
4. AT ISOLATION JOINTS BETWEEN CONCRETE SLABS, PROVIDE DOWEL (SEE DETAIL TYP. SLAB-ON-GRADE ISOLATION JOINT DETAIL).
5. SEE STRUCTURAL DRAWINGS FOR CONSTRUCTION AND CONTROL JOINT DETAILING

2 CONCRETE PAVEMENT

SCALE: NOT TO SCALE

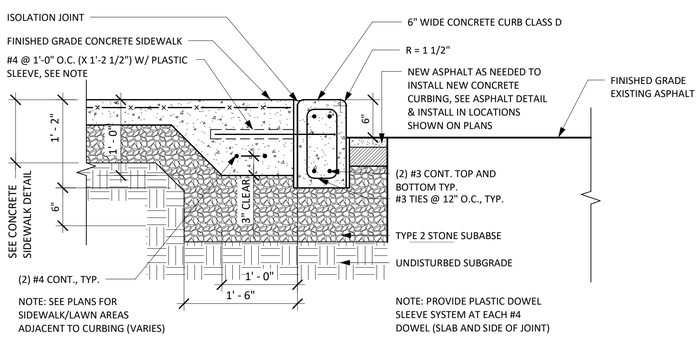

3 CONCRETE CURB DETAIL

SCALE: 1" = 1'-0"

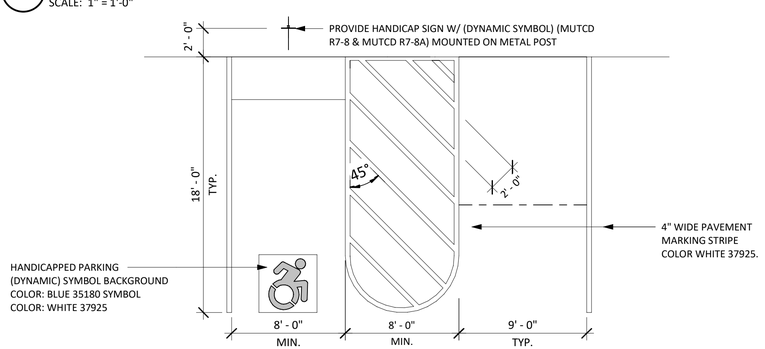

TYPICAL ADA PARKING AND STRIPING LAYOUT PLAN

SCALE: NOT TO SCALE

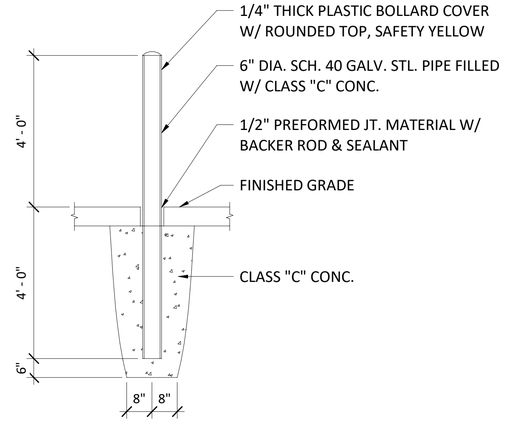

TYP. BOLLARD DETAIL

SCALE: NOT TO SCALE

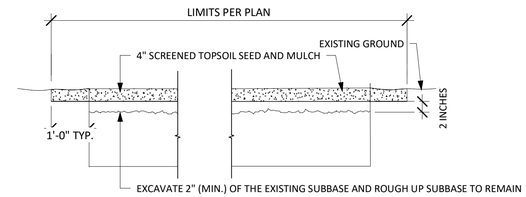

LAWN RESTORATION DETAIL

SCALE: NOT TO SCALE

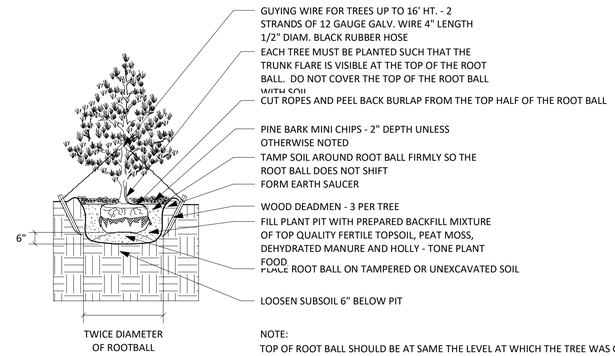

NOTE:
TOP OF ROOT BALL SHOULD BE AT SAME THE LEVEL AT WHICH THE TREE WAS GROWN
NOTE: MULCH NOT REQUIRED FOR MITIGATION PLANTINGS

EVERGREEN PLANTING

SCALE: NOT TO SCALE

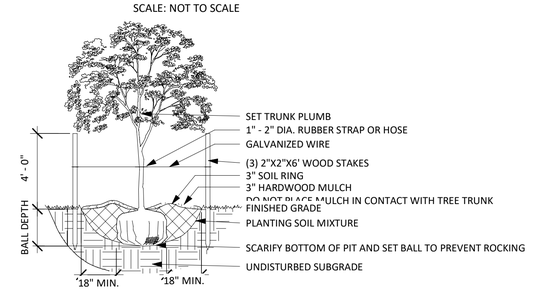

NOTES:

1. REMOVE BURLAP, ROPE, OR WIRE BASKET FROM TOP 1/3 OF BALL MINIMUM, CUT REMAINING PORTIONS OF ROPE OR WIRE BASKET ONE PLANT IS IN THE FINAL POSITION IN PIT.

2. TOP OF ROOT BALL SHALL BE SET FLUSH WITH SURROUNDING FINISHED GRADE. EACH TREE MUST BE PLANTED SUCH THAT THE TRUNK FLRE IS VISIBLE AT THE TOP OF THE ROOT BALL. DO NOT COVER TOP OF ROOT BALL WITH SOIL.

3. MARK THE NORTH SIDE OF THE TREE IN NURSERY AND ROTATE TREE TO FACE NORTH AT THE SITE WHERE POSSIBLE.

DECIDUOUS TREE PLANTING

SCALE: 1/4" = 1'-0"

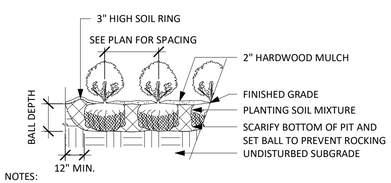

NOTES:

1. REMOVE BURLAP, ROPE, OR WIRE BASKET FROM TOP 1/3 OF BALL MINIMUM, CUT REMAINING PORTIONS OF ROPE OR WIRE BASKET ONCE PLANT IS IN THE FINAL POSITION IN PIT OR REMOVE FROM GROWING CONTAINER.

SHRUB PLANTING

SCALE: NOT TO SCALE

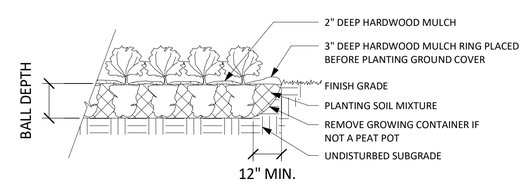

PERENNIAL PLANTING

SCALE: NOT TO SCALE

PLANTING SCHEDULE

SYMBOL	QTY.	LATIN NAME	COMMON NAME	SIZE	REMARKS	BLOOM TIME/COLOR
EVERGREEN TREE						
PP	12	PICEA PUNGENS GLAUCA	COLORADO BLUE SPRUCE	6 - 8 FT.	B & B	EVERGREEN/BLUE/GREEN
TO	9	THUJA OCCIDENTALIS	COMMON ARBORVITAE	6 - 8 FT.	B & B	EVERGREEN/BLUE/GREEN
DECIDUOUS TREE						
CK	3	CORNUS KOUSA	KOUSA DOGWOOD	8-10 FT.	B & B	WHITE FLOWERS
EVERGREEN SHRUB						
Vr	17	VIBURNUM RHYTIDOPHYLLUM	LEATHERLEAF VIBURNUM	3 GALLON	CONTAINER, FULL	YELLOWISH-WHITE FLOWERS
SHRUB/PERENNIAL						
Db	16	DAPHNE BURKWOODI	CAROLE MACKIE DAPHNE	3 GALLON	CONTAINER, FULL	PINK FLOWERS
ep	60	ECHINACEA PURPUREA	PURPLE CONEFLOWER	1 GALLON	12" O.C.	PURPLE FLOWERS
Js	30	JUNIPERUS SQUAMATA	'BLUE STAR' JUNIPER	3 GALLON	CONTAINER, FULL	EVERGREEN/BLUE/GREEN
rh	60	RUDBECKIA HIRTA	BLACK-EYED SUSAN	1 GALLON	12" O.C.	YELLOW FLOWERS
Sj	30	SPIREA JAPONICA	JAPANESE SPIREA	3 GALLON	CONTAINER, FULL	PINK FLOWERS

IT IS A VIOLATION OF THE NEW YORK STATE EDUCATION LAW, ARTICLE 145 §7209 SPECIAL PROVISIONS, FOR ANY PERSON, UNLESS THEY ARE ACTING UNDER THE DIRECTION OF A LICENSED PROFESSIONAL ENGINEER, ARCHITECT, LANDSCAPE ARCHITECT, OR LAND SURVEYOR, TO ALTER AN ITEM IN ANY WAY. IF AN ITEM BEARING THE STAMP OF A LICENSED PROFESSIONAL IS ALTERED, THE ALTERING PROFESSIONAL SHALL STAMP THE DOCUMENT AND INCLUDE THE NOTATION "ALTERED BY" FOLLOWED BY THEIR SIGNATURE, THE DATE OF SUCH ALTERATION, AND A SPECIFIC DESCRIPTION OF THE ALTERATION.

REVISIONS

CITY OF MIDDLETOWN
NEW COURTHOUSE FACILITY

ORANGE COUNTY, NEW YORK

SITE DETAIL & NOTES

CITY OF MIDDLETOWN

Barton & Loguidice
443 Electronics Parkway
Liverpool, NY 13088
NYS CERTIFICATE # 0021642, 0020588, 0019903, 0019905, 0020336

STATE OF NEW YORK · MATTHEW C. FULLER · 070743 · LICENSED PROFESSIONAL ENGINEER

NYS EXP.: 05/31/2026

Date
AUGUST, 2024

Scale
AS SHOWN

Sheet Number
C104

Project Number
1753.008.001

Plotted: 8/21/2024 4:26:51 PM
C:\Users\cgardner\Documents\Middletown Courthouse 6.22.21 Central File – ARCHITECTURAL STRUCTURAL
MODEL_cgardner05.rvt
Checked by ZDC Drawn by ZDC Designed by ZDC In Charge of MCF

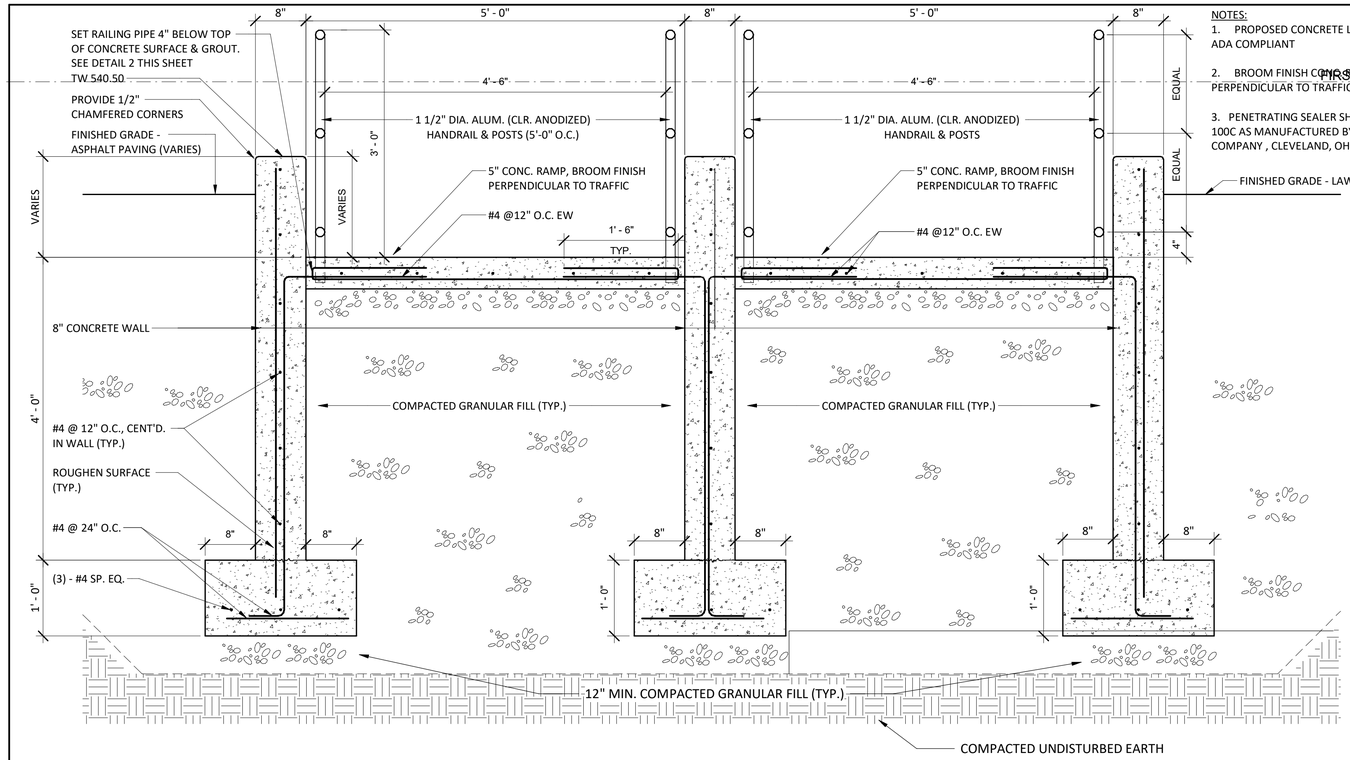

NOTES:

1. PROPOSED CONCRETE LANDINGS AND RAMPS TO BE ADA COMPLIANT
2. BROOM FINISH CONC. SAME AS LANDING PERPENDICULAR TO TRAFFIC.
3. PENETRATING SEALER SHALL BE BARACADE SILANE 100C AS MANUFACTURED BY THE EUCLID CHEMICAL COMPANY , CLEVELAND, OH. OR APPROVED EQUAL

1 / C102 CONCRETE RAMP CROSS SECTION

SCALE: 1" = 1'-0"

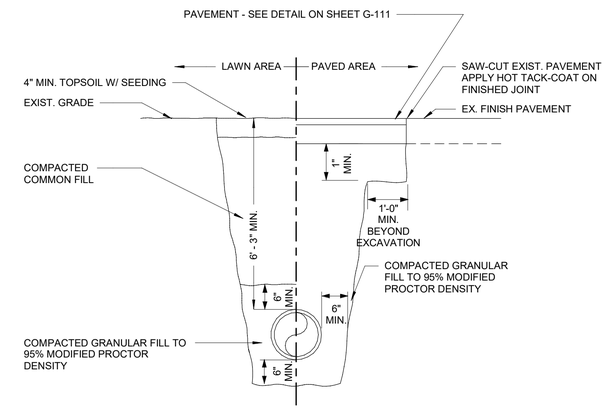

TYPICAL TRENCH DETAIL

SCALE: 1/2" = 1'-0"

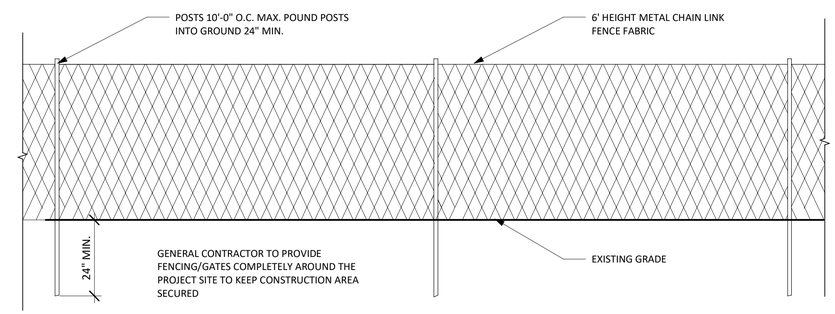

TEMPORARY CONSTRUCTION FENCE

SCALE: 1/2" = 1'-0"

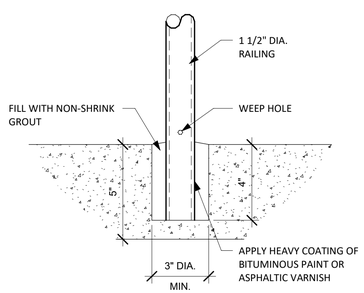

2 / A201 CORE DRILL DETAIL

SCALE: 3" = 1'-0"

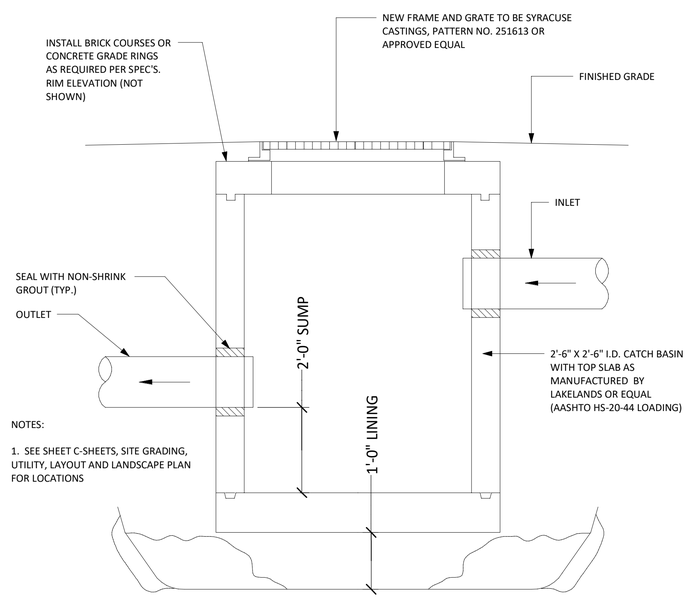

NOTES:

1. SEE SHEET C-SHEETS, SITE GRADING, UTILITY, LAYOUT AND LANDSCAPE PLAN FOR LOCATIONS

TYPICAL CATCH BASIN DETAIL

SCALE: 1 1/2" = 1'-0"

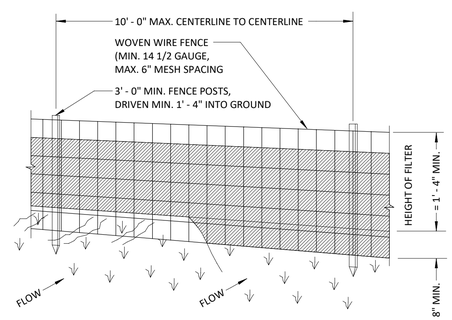

PERSPECTIVE VIEW

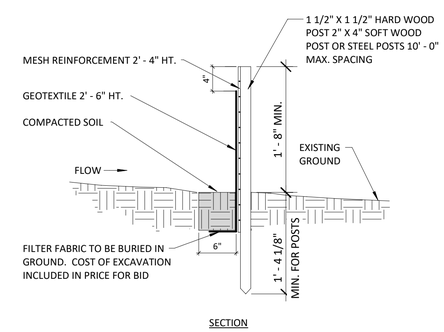

SECTION

CONSTRUCTION NOTES FOR FABRICATED SILT FENCE

1. WOVEN WIRE FENCE TO BE FASTENED SECURELY TO FENCE POSTS WITH WIRE TIES OR STAPLES.
2. FILTER CLOTH TO BE FASTENED SECURELY TO WOVEN WIRE FENCE WITH TIES SPACED EVERY 2' - 0" AT TOP AND MID SECTION.
3. WHEN TWO SECTIONS OF FILTER CLOTH ADJOIN EACH OTHER THEY SHALL BE OVERLAPPED BY SIX INCHES AND FOLDED.
4. MAINTENANCE SHALL BE PERFORMED AS NEEDED AND MATERIAL REMOVED WHEN "BULGES" DEVELOP IN THE SILT FENCE.

POSTS: STEEL EITHER "T" OR "U" TYPE OR 2" HARDWARE

FENCE: WOVEN WIRE, 14 1/2 GA. 6" MAX. MESH OPENING

FILTER CLOTH: FILTER X, MIRAFI 100X, STABILINKA T140N OR APPROVED EQUAL.

PREFABRICATED UNIT: GEOFAB, EVIROFENCE, OR APPROVED EQUAL.

CONSTRUCTION SILT FENCING

SCALE: NOT TO SCALE

IT IS A VIOLATION OF THE NEW YORK STATE EDUCATION LAW, ARTICLE 145 §7209 SPECIAL PROVISIONS, FOR ANY PERSON, UNLESS THEY ARE ACTING UNDER THE DIRECTION OF A LICENSED PROFESSIONAL ENGINEER, ARCHITECT, LANDSCAPE ARCHITECT, OR LAND SURVEYOR, TO ALTER AN ITEM IN ANY WAY. IF AN ITEM BEARING THE STAMP OF A LICENSED PROFESSIONAL IS ALTERED, THE ALTERING PROFESSIONAL SHALL STAMP THE DOCUMENT AND INCLUDE THE NOTATION "ALTERED BY" FOLLOWED BY THEIR SIGNATURE, THE DATE OF SUCH ALTERATION, AND A SPECIFIC DESCRIPTION OF THE ALTERATION.

REVISIONS

CITY OF MIDDLETOWN
NEW COURTHOUSE FACILITY

ORANGE COUNTY, NEW YORK

SITE DETAILS & NOTES

CITY OF MIDDLETOWN

Barton & Loguidice
443 Electronics Parkway
Liverpool, NY 13088
NYS CERTIFICATE # 0021642, 0020588, 0019903, 0019905, 0020336

STATE OF NEW YORK · MATTHEW C. FOLEY · 070743 · LICENSED PROFESSIONAL ENGINEER

NYS EXP.: 05/31/2026

Date: AUGUST, 2024

Scale: AS SHOWN

Sheet Number: C105

Project Number: 1753.008.001

Plotted: 8/21/2024 4:26:52 PM
C:\Users\cgardner\Documents\Middletown Courthouse 6.22.21 Central File – ARCHITECTURAL STRUCTURAL MODEL_cgardner05.rvt
Checked by ZDC Drawn by ZDC Designed by ZDC In Charge of MCF

ABBREVIATIONS:

∠ - ANGLE
ACT - ACOUSTICAL CEILING TILE
AFF - ABOVE FINISHED FLOOR
ALUM - ALUMINUM
BATH - BATHROOM
BLDG - BUILDING
BSMT - BASEMENT
BOT - BOTTOM
CB - CATCH BASIN
C/C - CENTER TO CENTER
CCTV - CLOSED CIRCUIT TELEVISION
CJ - CONTROL JOINT
CL - CENTER LINE
CLG - CEILING
CLR - CLEAR
CMU - CONCRETE MASONRY UNITS
COL - COLUMN
CONC - CONCRETE
CONST - CONSTRUCTION
CONT - CONTINUOUS
CPP - CORRUGATED POLYETHYLENE PIPE
CPT - CARPET
CT - CERAMIC TILE
DEMO - DEMOLISH, DEMOLITION
DN - DOWN
DS - DOWNSPOUT
DTL - DETAIL
DWG - DRAWING
E.F. - EACH FACE
E.W. - EACH WAY
EA - EACH
ELEC - ELECTRICAL
ELEV - ELEVATION
EMBED - EMBEDMENT
EPS - EXPANDED POLYSTYRENE
EQUIP - EQUIPMENT
EW - EACH WAY
EXP - EXPOSED
EXP ANCHOR - EXPANSION ANCHOR
EXT - EXTERIOR
EX, EXIST - EXISTING
FIN FLR - FINISHED FLOOR
FND - FOUNDATION
FRP - FIBER REINFORCED PLASTIC
FT - FIRE TREATED
FTG - FOOTING
FV - FIELD VERIFY
GA - GAUGE
GALV - GALVANIZED
GC - GENERAL CONTRACTOR
GL BLK - GLASS BLOCK
GWB - GYPSUM WALL BOARD
GWT - GLAZED WALL TILE
HBD - HARDBOARD
HC - HANDICAP

ABBREVIATIONS (CONT.):

HM - HOLLOW METAL
INSUL - INSULATION
IGU - INSULATED GLASS UNIT
INV - INVERT
JT - JOINT
LAM - LAMINATE
MANUF - MANUFACTURER
MAS - MASONRY
MAX - MAXIMUM
MIN - MINIMUM
MR - MOISTURE RESISTANT
MTL - METAL
MO - MASONRY OPENING
NIC - NOT IN CONTRACT
NTS - NOT TO SCALE
O/C - ON CENTER
OD - OUTSIDE DIAMETER
PL - PLATE
PERF - PERFORATED
PLAS - PLASTIC
PLYWD - PLYWOOD
PNT - PAINT
PT - PRESSURE TREATED
PPT - PRESSURE PRESERVATIVE TREATED
PVMT - PAVEMENT
QT - QUARRY TILE
R - RISER
RD - ROOF DRAIN
RAD - RADIUS
REQ'D - REQUIRED
RO - ROUGH OPENING
SC - SOLID CORE
SAN - SANITARY
SHT - SHEET
SIM - SIMILAR
SQ - SQUARE
SS - STAINLESS STEEL
STL - STEEL
SUS - SUSPENDED
SV - SHEET VINYL
T - TREAD
T/ - TOP OF
T&B - TOP AND BOTTOM
TEMP - TEMPERED
TYP - TYPICAL
VCT - VINYL COMPOSITION TILE
UG - UNDERGROUND
UNO - UNLESS NOTED OTHERWISE
VB - VAPOR BARRIER
W/ - WITH
WD - WOOD
WDO - WINDOW
WWF - WELDED WIRE FABRIC
XPS - EXTRUDED POLYSTYRENE

GENERAL NOTES:

1. ALL DIMENSIONS TO, OF, AND IN EXISTING BUILDING SHALL BE VERIFIED IN FIELD BY CONTRACTOR.
2. CONTRACTOR SHALL COORDINATE ALL WORK WITH ALL OTHER CONTRACTORS ON SITE.
3. CONTRACTOR SHALL PROVIDE ALL MATERIALS AND LABOR FOR A COMPLETE INSTALLATION.
4. ALL WORK SHALL COMPLY WITH NYS FIRE PREVENTION AND BUILDING CODE, LOCAL BUILDING CODES, AS WELL AS NATIONAL PLUMBING AND ELECTRICAL CODES.
5. ALL WORK SHALL BE IN STRICT ACCORDANCE WITH MANUFACTURER'S WRITTEN INSTRUCTIONS FOR PREPARATIONS AND INSTALLATION OF MATERIALS.
6. DO NOT CHANGE SIZE NOR SPACING OF STRUCTURAL ELEMENTS.
7. DETAILS SHOWN ARE TYPICAL; SIMILAR DETAILS APPLY TO SIMILAR CONDITIONS UNLESS OTHERWISE INDICATED.
8. THE CONTRACTOR AND/OR SUBCONTRACTORS ARE SOLELY RESPONSIBLE FOR EXECUTING THE WORK AND MAINTAINING THE WORK SITE IN ACCORDANCE WITH ALL APPLICABLE SAFETY CODES AND STANDARDS.
9. CONTRACTOR SHALL PROVIDE PROTECTIVE BARRICADES, SIGNS AND LIGHTING TO PREVENT ANY UNAUTHORIZED PASSAGE INTO WORK AREA.
10. PROTECT ALL EXISTING AND NEW BUILDING ELEMENTS INSTALLED BY OTHER CONTRACTS FROM DAMAGE. CONTRACTOR SHALL RESTORE ALL DAMAGED ELEMENTS TO ORIGINAL OR BETTER CONDITION.
11. BRACE BUILDING UNTIL ALL STRUCTURAL ELEMENTS NEED FOR STABILITY ARE INSTALLED. THESE ELEMENTS ARE AS FOLLOWS: FLOOR DECK, ROOF DECK, BRACING MEMBERS, SHEAR WALLS.
12. CONTRACTOR SHALL DETERMINE EXACT LOCATION OF EXISTING UTILITIES BEFORE COMMENCING WORK, HE AGREES TO BE FULLY RESPONSIBLE FOR ANY AND ALL DAMAGES WHICH MIGHT BE OCCASIONED BY HIS FAILURE TO EXACTLY LOCATE AND PRESERVE UNDERGROUND UTILITIES.
13. CONTRACTOR SHALL NOTIFY THE ARCHITECT/ENGINEER IN WRITING OF ALL PROPOSED DEVIATIONS OR SUBSTITUTIONS FROM DIMENSIONS, MATERIALS, OR EQUIPMENT SHOWN ON THE DRAWINGS AND MAKE ONLY THOSE DEVIATIONS OR SUBSTITUTIONS ACCEPTABLE TO THE ARCHITECT/ENGINEER. NO CHANGES SHALL BE MADE WITH APPROVAL BY THE ARCHITECT/ENGINEER.
14. CONTRACTOR SHALL VERIFY ALL DIMENSIONS PRIOR TO ORDER AND/OR INSTALLATION OF MATERIAL.
15. DO NOT SCALE DRAWINGS. CONTRACTOR SHALL NOTIFY ARCHITECT/ENGINEER OF ANY DISCREPANCIES IN DIMENSIONS BETWEEN EXISTING CONDITIONS AND/OR ARCHITECTURAL DRAWINGS AND THE STRUCTURAL DRAWINGS.
16. PROVIDE ALL DEMO REQUIRED FOR NEW INSTALLATIONS SHOWN, AND PATCH EXISTING MATERIALS BACK TO ORIGINAL CONDITION, OR TO A CONDITION TO RECEIVE NEW WORK AS APPLICABLE.
17. EXAMINE ALL MECHANICAL, ELECTRICAL, PLUMBING & OTHER TRADE DRAWINGS FOR ADDITIONAL AND INCIDENTAL WORK RELATED TO OPENINGS, PENETRATIONS, EQUIPMENT PADS, EQUIPMENT ITEM OR TAG NUMBERS, AND OTHER ADDITIONAL WORK. COORDINATE WITH ALL OTHER TRADES & PROVIDE ALL LABOR & MATERIALS FOR A COMPLETE INSTALLATION.
18. SUBMISSION AND COSTS ASSOCIATED WITH OBTAINING A BUILDING PERMIT ARE THE GENERAL CONTRACTORS RESPONSIBILITY.

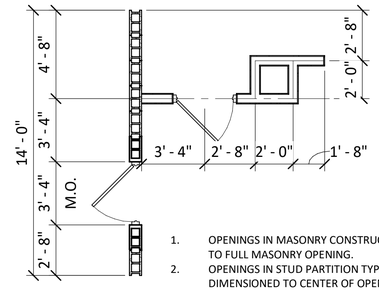

1. OPENINGS IN MASONRY CONSTRUCTION ARE DIMENSIONED TO FULL MASONRY OPENING.
2. OPENINGS IN STUD PARTITION TYPE CONSTRUCTION ARE DIMENSIONED TO CENTER OF OPENING.
3. STUD PARTITION TYPE WALLS ARE DIMENSIONED TO CENTERLINE OF WALL. SEE WALL TYPE FOR WALL THICKNESS.
4. AT INTERSECTIONS OF DIFFERENT PARTITION TYPES THE PARTITION WITH THE GREATEST FIRE RATING SHALL BE CONTINUED THROUGH THE INTERSECTION (UNO)

DIMENSIONING CONVENTIONS

NOT TO SCALE

TAG LEGEND

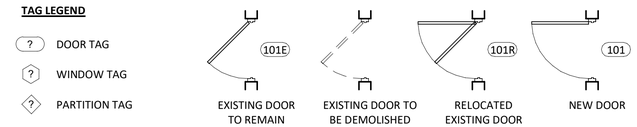

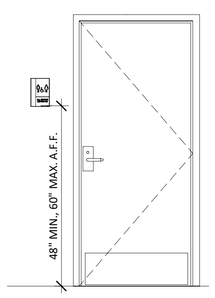

DOOR SIGN DETAIL

NOT TO SCALE

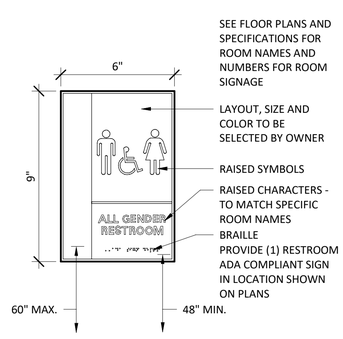

ADA SIGNAGE DETAIL

NOT TO SCALE

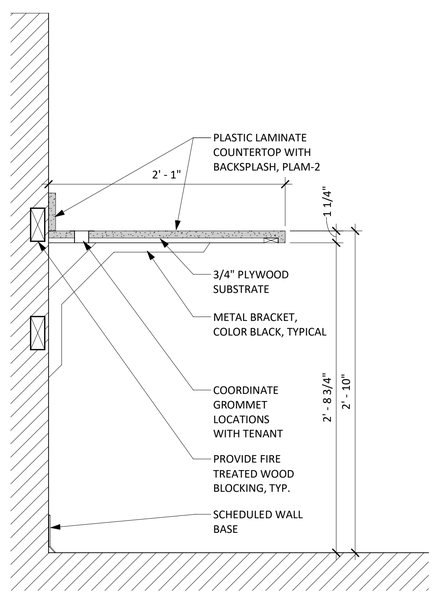

TYPICAL DESK DETAIL

SCALE: 1 1/2" = 1'-0"

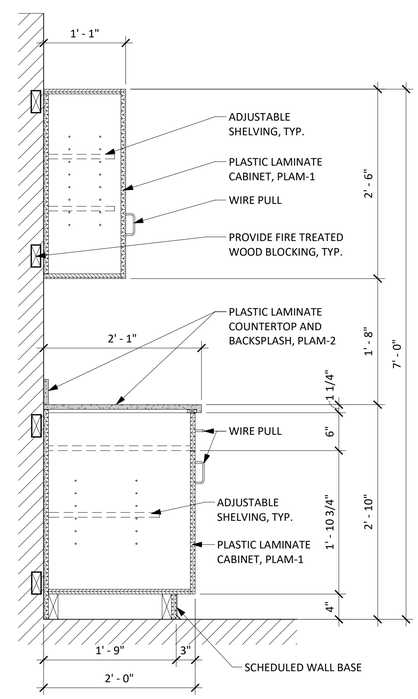

TYPICAL CABINETRY DETAIL

SCALE: 1" = 1'-0"

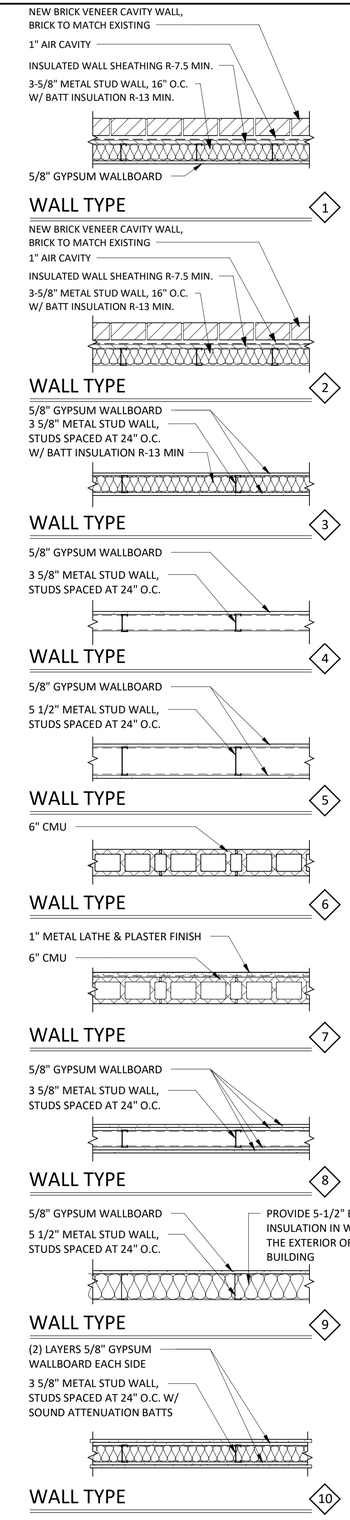

WALL TYPES

NOT TO SCALE

IT IS A VIOLATION OF THE NEW YORK STATE EDUCATION LAW, ARTICLE 145 §7209 SPECIAL PROVISIONS, FOR ANY PERSON, UNLESS THEY ARE ACTING UNDER THE DIRECTION OF A LICENSED PROFESSIONAL ENGINEER, ARCHITECT, LANDSCAPE ARCHITECT, OR LAND SURVEYOR, TO ALTER AN ITEM IN ANY WAY. IF AN ITEM BEARING THE STAMP OF A LICENSED PROFESSIONAL IS ALTERED, THE ALTERING PROFESSIONAL SHALL STAMP THE DOCUMENT AND INCLUDE THE NOTATION "ALTERED BY" FOLLOWED BY THEIR SIGNATURE, THE DATE OF SUCH ALTERATION, AND A SPECIFIC DESCRIPTION OF THE ALTERATION.

REVISIONS

CITY OF MIDDLETOWN
NEW COURTHOUSE FACILITY

LEGENDS, NOTES & TYPICAL DETAILS

CITY OF MIDDLETOWN
ORANGE COUNTY, NEW YORK

Barton & Loguidice
443 Electronics Parkway
Liverpool, NY 13088
NYS CERTIFICATE # 0021642, 0020588, 0019903, 0019905, 0020336

STATE OF NEW YORK · MATTHEW C. TOLAN · 070143 · LICENSED PROFESSIONAL ENGINEER

NYS EXP.:

Date
AUGUST, 2024

Scale
AS SHOWN

Sheet Number
A001

Project Number
1753.008.001

Plotted: 8/21/2024 4:25:46 PM
C:\Users\cgardner\Documents\Middletown Courthouse 6.22.21 Central File – ARCHITECTURAL STRUCTURAL MODEL_cgardner05.rvt
Checked by ZDC Drawn by ZDC Designed by ZDC In Charge of TRB

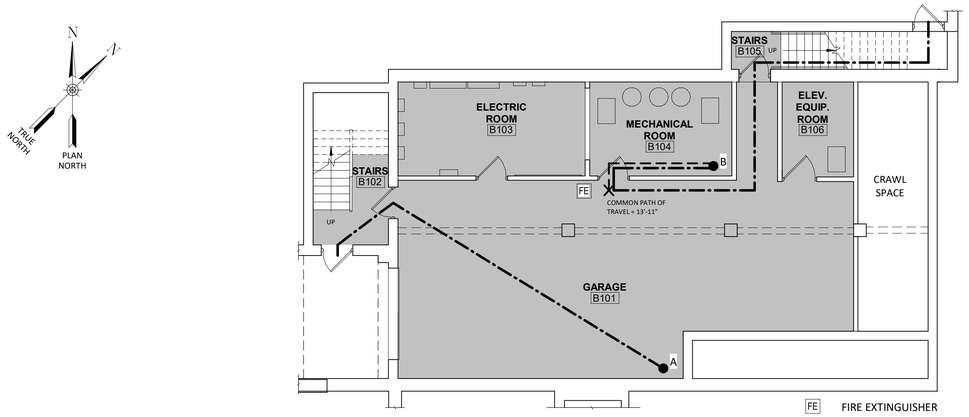

BASEMENT FLOOR PLAN

SCALE: 1/8" = 1'-0"

BASEMENT
MAXIMUM EXIT TRAVEL DISTANCE (WITH SPRINKLER SYSTEM)
S-1 - WITH SPRINKLER SYSTEM - 250 FEET

EXIT & TRAVEL DISTANCE DATA	
EXIT ROUTE	DISTANCE
A	33' - 0"
A	7' - 6"
A	1' - 0"
A:3	41' - 6"

EXIT & TRAVEL DISTANCE DATA	
EXIT ROUTE	DISTANCE
B	10' - 6"
B	2' - 6"
B	15' - 0"
B	13' - 6"
B	18' - 6"
B	4' - 6"
B:6	64' - 6"

FIRST FLOOR
MAXIMUM EXIT TRAVEL DISTANCE (WITH SPRINKLER SYSTEM)
A-3 - WITH SPRINKLER SYSTEM - 250 FEET
B - WITH SPRINKLER SYSTEM - 300 FEET
I-3 - WITH SPRINKLER SYSTEM - 200 FEET

EXIT & TRAVEL DISTANCE DATA	
EXIT ROUTE	DISTANCE
A	12' - 6"
A	37' - 6"
A	31' - 6"
A:3	81' - 6"

EXIT & TRAVEL DISTANCE DATA	
EXIT ROUTE	DISTANCE
B	23' - 6"
B	5' - 0"
B	21' - 6"
B:3	50' - 0"

EXIT & TRAVEL DISTANCE DATA	
EXIT ROUTE	DISTANCE
C	14' - 3"
C	9' - 4"
C	18' - 6"
C	1' - 8"
C	19' - 4"
C	13' - 1"
C	3' - 4"
C:7	79' - 6"

EXIT & TRAVEL DISTANCE DATA	
EXIT ROUTE	DISTANCE
D	10' - 4"
D	16' - 10"
D	19' - 9"
D	3' - 1"
D:4	50' - 0"

EXIT & TRAVEL DISTANCE DATA	
EXIT ROUTE	DISTANCE
E	2' - 6"
E	9' - 8"
E	19' - 0"
E	15' - 4"
E	43' - 10"
E	41' - 0"
E	39' - 6"
E:7	170' - 10"

EXIT & TRAVEL DISTANCE DATA	
EXIT ROUTE	DISTANCE
F	13' - 4"
F	27' - 0"
F	6' - 0"
F	50' - 2"
F:4	96' - 6"

EXIT & TRAVEL DISTANCE DATA	
EXIT ROUTE	DISTANCE
G	4' - 0"
G	11' - 0"
G	12' - 0"
G	50' - 2"
G:4	77' - 2"

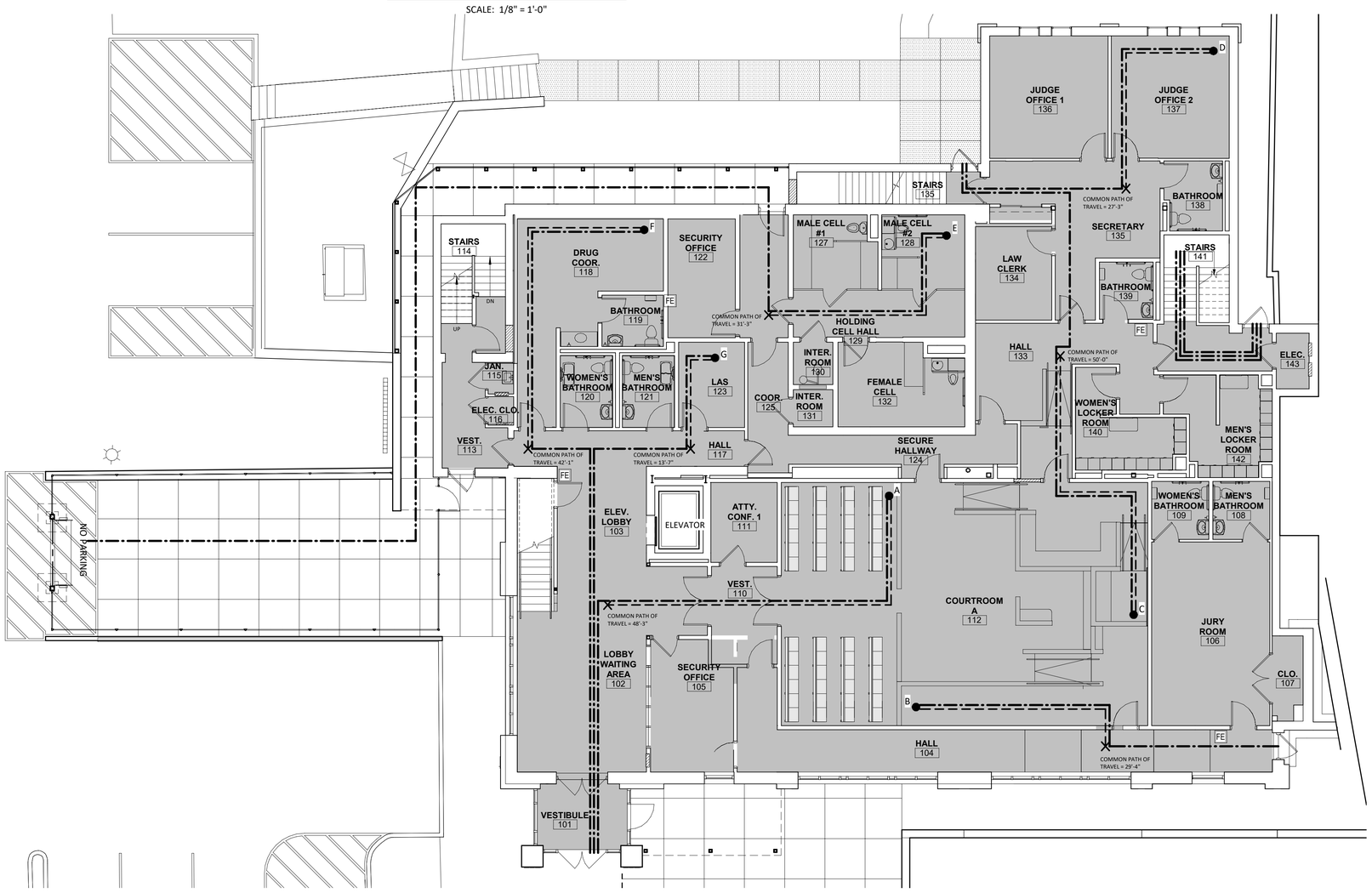

FIRST FLOOR PLAN

SCALE: 1/8" = 1'-0"

FE FIRE EXTINGUISHER

PROVIDE RECESSED FIRE CABINETS IN LOCATIONS SHOWN ON LIFE SAFETY DRAWINGS SEE SPECIFICATIONS FOR INFORMATION ON CABINET SELECTION AND FINISHES

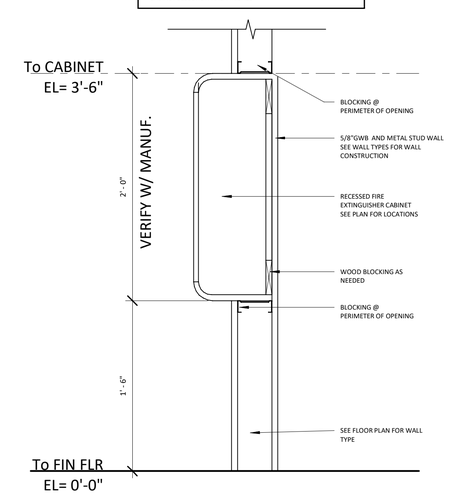

FIRE EXTINGUISHER CABINET DETAIL

SCALE: 1 1/2" = 1'-0"

IT IS A VIOLATION OF THE NEW YORK STATE EDUCATION LAW, ARTICLE 145 §7209 SPECIAL PROVISIONS, FOR ANY PERSON, UNLESS THEY ARE ACTING UNDER THE DIRECTION OF A LICENSED PROFESSIONAL ENGINEER, ARCHITECT, LANDSCAPE ARCHITECT, OR LAND SURVEYOR, TO ALTER AN ITEM IN ANY WAY. IF AN ITEM BEARING THE STAMP OF A LICENSED PROFESSIONAL IS ALTERED, THE ALTERING PROFESSIONAL SHALL STAMP THE DOCUMENT AND INCLUDE THE NOTATION "ALTERED BY" FOLLOWED BY THEIR SIGNATURE, THE DATE OF SUCH ALTERATION, AND A SPECIFIC DESCRIPTION OF THE ALTERATION.

REVISIONS

CITY OF MIDDLETOWN
NEW COURTHOUSE FACILITY

BASEMENT & FIRST FLOOR EXITING PLANS

ORANGE COUNTY, NEW YORK

CITY OF MIDDLETOWN

Barton & Loguidice
443 Electronics Parkway
Liverpool, NY 13088
NYS CERTIFICATE # 0021642, 0020588, 0019903, 0019905, 0020336

STATE OF NEW YORK · MATTHEW C. FUDA · 070743 · LICENSED PROFESSIONAL ENGINEER

NYS EXP.:

Date
AUGUST, 2024

Scale
AS SHOWN

Sheet Number
A002

Project Number
1753.008.001

Plotted: 8/21/2024 4:25:50 PM
C:\Users\cgardner\Documents\Middletown Courthouse 6.22.21 Central File – ARCHITECTURAL STRUCTURAL
MODEL_cgardner0.rvt
Checked by Checker Drawn by ZDC Designed by ZDC In Charge of TRB

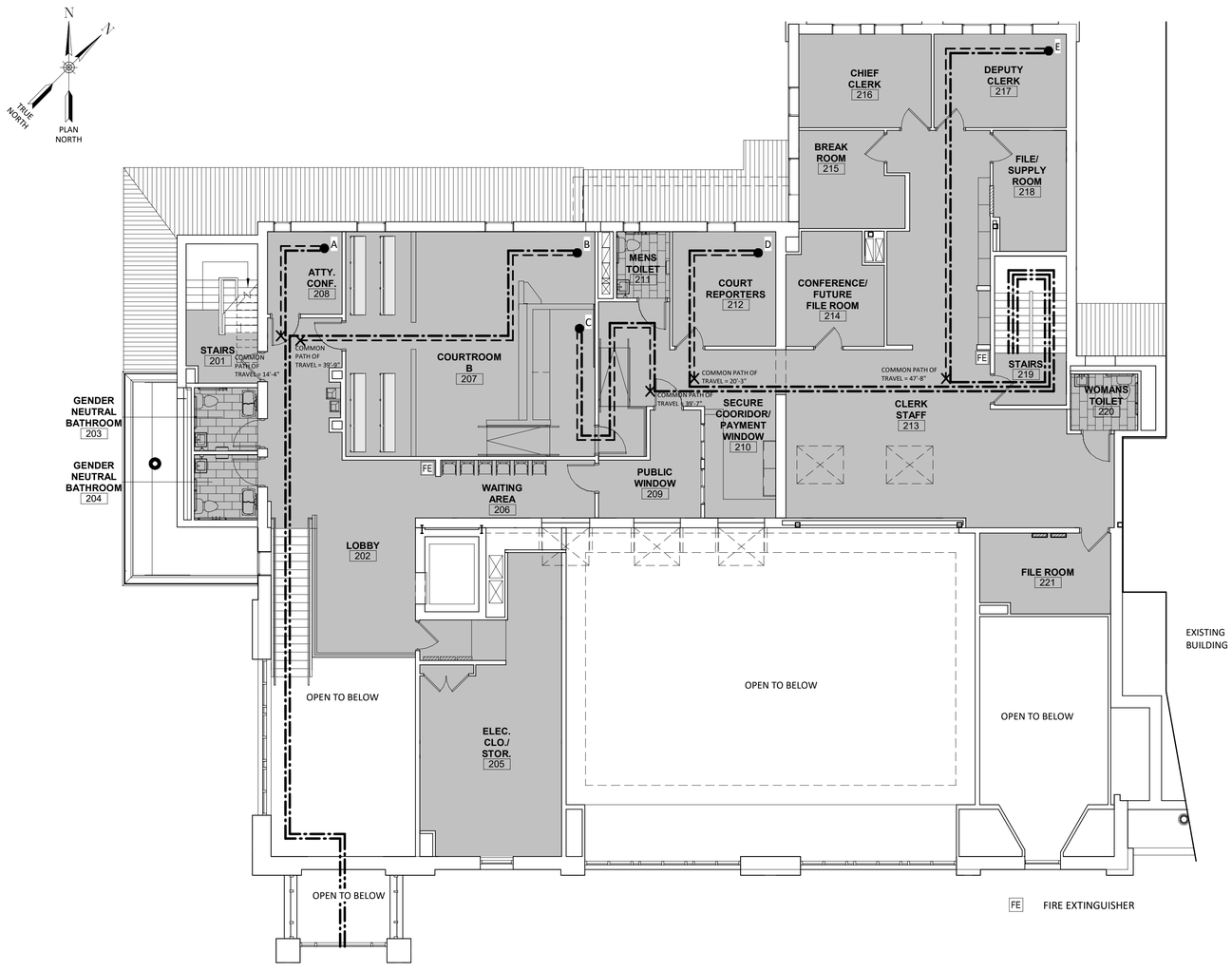

SECOND FLOOR PLAN

SCALE: 1/8" = 1'-0"

SECOND FLOOR
MAXIMUM EXIT TRAVEL DISTANCE (WITH SPRINKLER SYSTEM)
A-3 - WITH SPRINKLER SYSTEM - 250 FEET
B - WITH SPRINKLER SYSTEM - 300 FEET

EXIT & TRAVEL DISTANCE DATA

EXIT ROUTE	DISTANCE
A	3' - 9"
A	65' - 1"
A	6' - 4"
A	12' - 4"
A:4	87' - 6"

EXIT & TRAVEL DISTANCE DATA

EXIT ROUTE	DISTANCE
B	7' - 2"
B	9' - 6"
B	24' - 6"
B	55' - 4"
B	6' - 4"
B	12' - 4"
B:6	115' - 2"

EXIT & TRAVEL DISTANCE DATA

EXIT ROUTE	DISTANCE
C	11' - 10"
C	4' - 1"
C	12' - 6"
C	4' - 0"
C	6' - 9"
C	44' - 8"
C	13' - 0"
C	4' - 6"
C	13' - 0"
C	9' - 6"
C	4' - 0"
C:11	127' - 10"

EXIT & TRAVEL DISTANCE DATA

EXIT ROUTE	DISTANCE
D	7' - 2"
D	15' - 2"
D	40' - 0"
D	13' - 0"
D	4' - 6"
D	13' - 0"
D	9' - 6"
D	4' - 0"
D:8	106' - 4"

EXIT & TRAVEL DISTANCE DATA

EXIT ROUTE	DISTANCE
E	10' - 4"
E	36' - 10"
E	10' - 10"
E	13' - 0"
E	4' - 6"
E	13' - 0"
E	9' - 6"
E	4' - 0"
E:8	102' - 0"

IT IS A VIOLATION OF THE NEW YORK STATE EDUCATION LAW, ARTICLE 145 §7209 SPECIAL PROVISIONS, FOR ANY PERSON, UNLESS THEY ARE ACTING UNDER THE DIRECTION OF A LICENSED PROFESSIONAL ENGINEER, ARCHITECT, LANDSCAPE ARCHITECT, OR LAND SURVEYOR, TO ALTER AN ITEM IN ANY WAY. IF AN ITEM BEARING THE STAMP OF A LICENSED PROFESSIONAL IS ALTERED, THE ALTERING PROFESSIONAL SHALL STAMP THE DOCUMENT AND INCLUDE THE NOTATION "ALTERED BY" FOLLOWED BY THEIR SIGNATURE, THE DATE OF SUCH ALTERATION, AND A SPECIFIC DESCRIPTION OF THE ALTERATION.

REVISIONS

CITY OF MIDDLETOWN
NEW COURTHOUSE FACILITY

SECOND FLOOR EXITING PLAN

ORANGE COUNTY, NEW YORK

CITY OF MIDDLETOWN

Barton & Loguidice
443 Electronics Parkway
Liverpool, NY 13088
NYS CERTIFICATE # 0021642, 0020588, 0019903, 0019905, 0020336

STATE OF NEW YORK · MATTHEW C. FULLER · 070743 · LICENSED PROFESSIONAL ENGINEER

NYS EXP.:

Date
AUGUST, 2024

Scale
AS SHOWN

Sheet Number
A003

Project Number
1753.008.001

Plotted: 8/21/2024 4:25:51 PM
C:\Users\cgardner\Documents\Middletown Courthouse 6.22.21 Central File – ARCHITECTURAL STRUCTURAL MODEL_cgardner05.rvt
Checked by ZDC Drawn by ZDC Designed by ZDC In Charge of TRB

2020 EXISTING BUILDING CODE OF NEW YORK STATE (EBC NYS) REVIEW:

EBC NYS CHAPTER 6 - CLASSIFICATION OF WORK

601.1 SCOPE. THE PROVISIONS OF THIS CHAPTER SHALL BE USED IN CONJUNCTION WITH CHAPTERS 7 THROUGH 12 AND SHALL APPLY TO THE ALTERATION, ADDITION AND CHANGE OF OCCUPANCY OF EXISTING STRUCTURES, INCLUDING HISTORIC AND MOVED STRUCTURES, AS REFERENCED IN SECTION 301.3.2. THE WORK PERFORMED ON AN EXISTING BUILDING SHALL BE CLASSIFIED IN ACCORDANCE WITH THIS CHAPTER.

602.1 SCOPE. LEVEL 1 ALTERATIONS INCLUDE THE REMOVAL AND REPLACEMENT OR THE COVERING OF EXISTING MATERIALS, ELEMENTS, EQUIPMENT, OR FIXTURES USING NEW MATERIALS, ELEMENTS, EQUIPMENT, OR FIXTURES THAT SERVE THE SAME PURPOSE.

602.2 APPLICATION. LEVEL 1 ALTERATIONS SHALL COMPLY WITH THE PROVISIONS OF CHAPTER 7.

603.1 SCOPE. LEVEL 2 ALTERATIONS INCLUDE THE RECONFIGURATION OF SPACE, THE ADDITION OR ELIMINATION OF ANY DOOR OR WINDOW, THE RECONFIGURATION OR EXTENSION OF ANY SYSTEM, OR THE INSTALLATION OF ANY ADDITIONAL EQUIPMENT.

603.2 APPLICATION. LEVEL 2 ALTERATIONS SHALL COMPLY WITH THE PROVISIONS OF CHAPTER 7 FOR LEVEL 1 ALTERATIONS AS WELL AS THE PROVISIONS OF CHAPTER 8.

604.1 SCOPE. LEVEL 3 ALTERATIONS APPLY WHERE THE WORK AREA EXCEEDS 50 PERCENT OF THE BUILDING AREA.

604.2 APPLICATION. LEVEL 3 ALTERATIONS SHALL COMPLY WITH THE PROVISIONS OF CHAPTER 7 AND 8 FOR LEVEL 1 AND 2 ALTERATIONS, RESPECTIVELY, AS WELL AS THE PROVISIONS OF CHAPTER 9.

605.1 SCOPE. CHANGE OF OCCUPANCY PROVISIONS APPLY WHERE THE ACTIVITY IS CLASSIFIED AS A CHANGE OF OCCUPANCY AS DEFINED IN CHAPTER 2.

605.2 APPLICATION. CHANGES OF OCCUPANCY SHALL COMPLY WITH THE PROVISION OF CHAPTER 10.

606.1 SCOPE. PROVISIONS FOR ADDITIONS SHALL APPLY WHERE WORK IS CLASSIFIED AS AN ADDITION AS DEFINED IN CHAPTER 2.

606.2 APPLICATION. ADDITIONS TO EXISTING BUILDINGS SHALL COMPLY WITH THE PROVISIONS OF CHAPTER 11.

EBC NYS CHAPTER 7 - ALTERATIONS LEVEL 1

701.1 SCOPE. LEVEL 1 ALTERATIONS AS DESCRIBED IN SECTION 602 SHALL COMPLY WITH THE REQUIREMENTS OF THIS CHAPTER. LEVEL 1 ALTERATIONS TO HISTORIC BUILDINGS SHALL COMPLY WITH THIS CHAPTER, EXCEPT AS MODIFIED IN CHAPTER 12.

701.2 CONFORMANCE. AN EXISTING BUILDING OR PORTION THEREOF SHALL NOT BE ALTERED SUCH THAT THE BUILDING BECOMES LESS SAFE THAN ITS EXISTING CONDITION.

702.1 INTERIOR FINISHES. NEWLY INSTALLED INTERIOR WALL AND CEILING FINISHES SHALL COMPLY WITH CHAPTER 8 OF THE BUILDING CODE OF NEW YORK STATE.

702.2 INTERIOR FLOOR FINISH. NEW INTERIOR FLOOR FINISH, INCLUDING NEW CARPETING USED AS AN INTERIOR FLOOR FINISH MATERIAL, SHALL COMPLY WITH SECTION 804 OF THE BUILDING CODE OF NEW YORK STATE.

702.3 INTERIOR TRIM. NEWLY INSTALLED INTERIOR TRIM MATERIALS SHALL COMPLY WITH SECTION 806 OF THE BUILDING CODE OF NEW YORK STATE.

702.6 MATERIALS AND METHODS. NEW WORK SHALL COMPLY WITH THE MATERIALS AND METHODS REQUIREMENTS IN THE BUILDING CODE OF NEW YORK STATE, ENERGY CONSERVATION CONSTRUCTION CODE OF NEW YORK STATE, MECHANICAL CODE OF NEW YORK STATE, AND PLUMBING CODE OF NEW YORK STATE, AS APPLICABLE, THAT SPECIFY MATERIAL STANDARDS, DETAIL OF INSTALLATION AND CONNECTION, JOINTS, PENETRATIONS, AND CONTINUITY OF ANY ELEMENT, COMPONENT, OR SYSTEM IN THE BUILDING.

703.1 GENERAL. ALTERATIONS SHALL BE DONE IN A MANNER THAT MAINTAINS THE LEVEL OF FIRE PROTECTION PROVIDED.

704.1 GENERAL. ALTERATIONS SHALL BE DONE IN A MANNER THAT MAINTAINS THE LEVEL OF PROTECTION PROVIDED FOR THE MEANS OF EGRESS.

705.1 GENERAL. MATERIALS AND METHODS OF APPLICATION USED FOR RECOVERING OR REPLACING AN EXISTING ROOF COVERING SHALL COMPLY WITH THE REQUIREMENTS OF CHAPTER 15 OF THE BUILDING CODE OF NEW YORK STATE.

705.2 STRUCTURAL AND CONSTRUCTION LOADS. STRUCTURAL ROOF COMPONENTS SHALL BE CAPABLE OF SUPPORTING THE ROOF-COVERING SYSTEM AND THE MATERIAL AND EQUIPMENT LOADS THAT WILL BE ENCOUNTERED DURING INSTALLATION OF THE SYSTEM.

705.3 ROOF REPLACEMENT. ROOF REPLACEMENT SHALL INCLUDE THE REMOVAL OF ALL EXISTING LAYERS OF ROOF COVERINGS DOWN TO THE ROOF DECK.

705.6 FLASHINGS. FLASHINGS SHALL BE RECONSTRUCTED IN ACCORDANCE WITH APPROVED MANUFACTURER'S INSTALLATION INSTRUCTIONS. METAL FLASHING TO WHICH BITUMINOUS MATERIALS ARE TO BE ADHERED SHALL BE PRIMED PRIOR TO INSTALLATION.

706.2 ADDITION OR REPLACEMENT OF ROOFING OR REPLACEMENT OF EQUIPMENT. ANY EXISTING GRAVITY LOAD-CARRYING STRUCTURAL ELEMENT FOR WHICH AN ALTERATION CAUSES AN INCREASE IN DESIGN DEAD, LIVE OR SNOW LOAD, INCLUDING SNOW DRIFT EFFECTS, OF MORE THAN 5PERCENT SHALL BE REPLACED OR ALTERED AS NEEDED TO CARRY THE GRAVITY LOADS REQUIRED BY THE BUILDING CODE OF NEW YORK STATE FOR NEW STRUCTURES.

707.1 MINIMUM REQUIREMENTS. LEVEL 1 ALTERATIONS TO EXISTING BUILDINGS OR STRUCTURES DO NOT REQUIRE THE ENTIRE BUILDING OR STRUCTURE TO COMPLY WITH THE ENERGY REQUIREMENTS OF THE ENERGY CONSERVATION CONSTRUCTION CODE OF NEW YORK STATE OR RESIDENTIAL CODE OF NEW YORK STATE. THE ALTERATIONS SHALL CONFORM TO THE ENERGY REQUIREMENTS OF THE ENERGY CONSERVATION CONSTRUCTION CODE OF NEW YORK STATE OR RESIDENTIAL CODE OF NEW YORK STATE AS THEY RELATE TO NEW CONSTRUCTION ONLY.

708.1 WATER CLOSET REPLACEMENT. WHEN ANY WATER CLOSET IS REPLACED, THE REPLACEMENT WATER CLOSET SHALL COMPLY WITH SECTION 604.4 OF THE PLUMBING CODE OF NEW YORK STATE.

EBC NYS CHAPTER 8 - ALTERATIONS LEVEL 2

801.1 SCOPE. LEVEL 2 ALTERATIONS AS DESCRIBED IN SECTION 603 SHALL COMPLY WITH THE REQUIREMENTS OF THIS CHAPTER.

801.2 ALTERATION LEVEL 1 COMPLIANCE. IN ADDITION TO THE REQUIREMENTS OF THIS CHAPTER, ALL WORK SHALL COMPLY WITH THE REQUIREMENTS OF CHAPTER 7.

801.3 COMPLIANCE. NEW CONSTRUCTION ELEMENTS, COMPONENTS, SYSTEMS, AND SPACES SHALL COMPLY WITH THE REQUIREMENTS OF THE BUILDING CODE OF NEW YORK STATE.

802.2.1 EXISTING VERTICAL OPENINGS. EXISTING INTERIOR VERTICAL OPENINGS CONNECTING TWO OR MORE FLOORS SHALL BE ENCLOSED WITH APPROVED ASSEMBLIES HAVING A FIRE-RESISTANCE RATING OF NOT LESS THAN 1 HOUR WITH APPROVED OPENING PROTECTIVES.

802.5.1 MINIMUM REQUIREMENT. EVERY PORTION OF A FLOOR, SUCH AS A BALCONY OR A LOADING DOCK, THAT IS MORE THAN 30 INCHES ABOVE THE FLOOR OR GRADE BELOW AND IS NOT PROVIDED WITH GUARDS, OR THOSE IN WHICH THE EXISTING GUARDS ARE JUDGED TO BE IN DANGER OF COLLAPSING, SHALL BE PROVIDED WITH GUARDS.

802.5.2 DESIGN. WHERE THERE ARE NO GUARDS OR WHERE EXISTING GUARDS MUST BE REPLACED, THE GUARDS SHALL BE DESIGNED AND INSTALLED IN ACCORDANCE WITH THE BUILDING CODE OF NEW YORK STATE.

803.1.1 CORRIDOR RATINGS. WHERE AN APPROVED AUTOMATIC SPRINKLER SYSTEM IS INSTALLED THROUGHOUT THE STORY, THE REQUIRED FIRE-RESISTANCE RATING FOR ANY CORRIDOR LOCATED ON THE STORY SHALL BE PERMITTED TO BE REDUCED IN ACCORDANCE WITH THE BUILDING CODE OF NEW YORK STATE. IN ORDER TO BE CONSIDERED FOR A CORRIDOR RATING REDUCTION, SUCH SYSTEM SHALL PROVIDE COVERAGE FOR THE STAIRWAY LANDINGS SERVING THE FLOOR AND THE INTERMEDIATE LANDINGS IMMEDIATELY BELOW.

803.2.2.1 MIXED USES. IN WORK AREAS CONTAINING MIXED USES, ONE OR MORE OF WHICH REQUIRES AUTOMATIC SPRINKLER PROTECTION IN ACCORDANCE WITH SECTION 803.2.2, SUCH PROTECTION SHALL NOT BE REQUIRED THROUGHOUT THE WORK AREA PROVIDED THAT THE USES REQUIRING SUCH PROTECTION ARE SEPARATED FROM THOSE NOT REQUIRING PROTECTION BY FIRE-RESISTANCE-RATED CONSTRUCTION HAVING A MINIMUM 2-HOUR RATING FOR GROUP H AND A MINIMUM 1-HOUR RATING FOR ALL OTHER OCCUPANCY GROUPS.

803.2.4 SUPERVISION. FIRE SPRINKLER SYSTEMS REQUIRED BY THIS SECTION SHALL BE SUPERVISED BY ONE OF THE FOLLOWING METHODS:
1. APPROVED CENTRAL STATION SYSTEM IN ACCORDANCE WITH NFPA 72.
2. APPROVED PROPRIETARY SYSTEM IN ACCORDANCE WITH NFPA 72.
3. APPROVED REMOTE STATION SYSTEM OF THE JURISDICTION IN ACCORDANCE WITH NFPA 72.
4. WHERE APPROVED BY THE BUILDING OFFICIAL, APPROVED LOCAL ALARM SERVICE THAT WILL CAUSE THE SOUNDING OF AN ALARM IN ACCORDANCE WITH NFPA 72.

804.1 CARBON MONOXIDE DETECTION AND NOTIFICATION. CARBON MONOXIDE DETECTION AND NOTIFICATION SHALL BE PROVIDED IN ACCORDANCE WITH SECTIONS 503.15 THROUGH 503.15.1 FOR BUILDINGS THAT UNDERGO AN ALTERATION.

805.3.1 MINIMUM NUMBER. EVERY STORY UTILIZED FOR HUMAN OCCUPANCY ON WHICH THERE IS A WORK AREA THAT INCLUDES EXITS OR CORRIDORS SHARED BY MORE THAN ONE TENANT WITHIN THE WORK AREA SHALL BE PROVIDED WITH THE MINIMUM NUMBER OF EXITS BASED ON THE OCCUPANCY AND THE OCCUPANT LOAD IN ACCORDANCE WITH THE BUILDING CODE OF NEW YORK STATE. IN ADDITION, THE EXITS SHALL COMPLY WITH SECTIONS 805.3.1.1 AND 805.3.1.2.

805.4.1.1 OCCUPANT LOAD AND TRAVEL DISTANCE. IN ANY WORK AREA, ALL ROOMS AND SPACES HAVING AN OCCUPANT LOAD GREATER THAN 50 OR IN WHICH THE TRAVEL DISTANCE TO AN EXIT EXCEEDS 75 FEET SHALL HAVE NOT FEWER THAN TWO EGRESS DOORWAYS.

805.4.2 DOOR SWING. IN THE WORK AREA AND IN THE EGRESS PATH FROM ANY WORK AREA TO THE EXIT DISCHARGE, ALL EGRESS DOORS SERVING AN OCCUPANT LOAD GREATER THAN 50 SHALL SWING IN THE DIRECTION OF EXIT TRAVEL.

805.4.3 DOOR CLOSING. IN ANY WORK AREA, ALL DOORS OPENING ONTO AN EXIT PASSAGEWAY AT GRADE OR AN EXIT STAIRWAY SHALL BE SELF-CLOSING OR AUTOMATIC-CLOSING BY LISTED CLOSING DEVICES.

805.4.4 PANIC HARDWARE. IN ANY WORK AREA, AND IN THE EGRESS PATH FROM ANY WORK AREA TO THE EXIT DISCHARGE, IN BUILDINGS OR PORTIONS THEREOF OF GROUP A ASSEMBLY OCCUPANCIES WITH AN OCCUPANT LOAD GREATER THAN 100, ALL REQUIRED EXIT DOORS EQUIPPED WITH LATCHING DEVICES SHALL BE EQUIPPED WITH APPROVED PANIC HARDWARE.

805.5.1 CORRIDOR DOORS. CORRIDOR DOORS IN THE WORK AREA SHALL NOT BE CONSTRUCTED OF HOLLOW CORE WOOD AND SHALL NOT CONTAIN LOUVERS. DWELLING UNIT OR SLEEPING UNIT CORRIDOR DOORS IN WORK AREAS IN BUILDINGS OF GROUPS R-1, R-2, AND I-1 SHALL BE NOT LESS THAN 1 3/8 INCH SOLID CORE WOOD OR APPROVED EQUIVALENT AND SHALL NOT HAVE ANY GLASS PANELS, OTHER THAN APPROVED WIRED GLASS OR OTHER APPROVED GLAZING MATERIAL IN METAL FRAMES. DWELLING UNIT OR SLEEPING UNIT CORRIDOR DOORS IN WORK AREAS IN BUILDINGS OF GROUPS R-1, R-2, AND I-1 SHALL BE EQUIPPED WITH APPROVED DOOR CLOSERS. REPLACEMENT DOORS SHALL BE 1 3/4 INCH SOLID BONDED WOOD CORE OR APPROVED EQUIVALENT, UNLESS THE EXISTING FRAME WILL ACCOMMODATE ONLY A 1 3/8 INCH DOOR.

805.6 DEAD-END CORRIDORS. DEAD-END CORRIDORS IN ANY WORK AREA SHALL NOT EXCEED 35 FEET.

805.7.1 ARTIFICIAL LIGHTING REQUIRED. MEANS OF EGRESS IN ALL WORK AREAS SHALL BE PROVIDED WITH ARTIFICIAL LIGHTING IN ACCORDANCE WITH THE REQUIREMENTS OF THE BUILDING CODE OF NEW YORK STATE.

805.8.1 WORK AREAS. MEANS OF EGRESS IN ALL WORK AREAS SHALL BE PROVIDED WITH EXIT SIGNS IN ACCORDANCE WITH THE REQUIREMENTS OF THE BUILDING CODE OF NEW YORK STATE.

805.9.1 MINIMUM REQUIREMENT. EVERY REQUIRED EXIT STAIRWAY THAT IS PART OF THE MEANS OF EGRESS FOR ANY WORK AREA AND THAT HAS THREE OR MORE RISERS AND IS NOT PROVIDED WITH NOT FEWER THAN ONE HANDRAIL, OR IN WHICH THE EXISTING HANDRAILS ARE JUDGED TO BE IN DANGER OF COLLAPSING, SHALL BE PROVIDED WITH HANDRAILS FOR THE FULL LENGTH OF THE STAIRWAY ON NOT FEWER THAN ONE SIDE. EXIT STAIRWAYS WITH A REQUIRED EGRESS WIDTH OF MORE THAN 66 INCHES SHALL HAVE HANDRAILS ON BOTH SIDES.

805.9.2 DESIGN. HANDRAILS REQUIRED IN ACCORDANCE WITH SECTION 805.9.1 SHALL BE DESIGNED AND INSTALLED IN ACCORDANCE WITH THE PROVISIONS OF THE BUILDING CODE OF NEW YORK STATE.

806.2 EXISTING STRUCTURAL ELEMENTS CARRYING GRAVITY LOADS. ANY EXISTING GRAVITY LOAD-CARRYING STRUCTURAL ELEMENT FOR WHICH AN ALTERATION CAUSES AN INCREASE IN DESIGN DEAD, LIVE OR SNOW LOAD, INCLUDING SNOW DRIFT EFFECTS, OF MORE THAN 5 PERCENT SHALL BE REPLACED OR ALTERED AS NEEDED TO CARRY THE GRAVITY LOADS REQUIRED BY THE BUILDING CODE OF NEW YORK STATE FOR NEW STRUCTURES. ANY EXISTING GRAVITY LOAD-CARRYING STRUCTURAL ELEMENT WHOSE GRAVITY LOAD-CARRYING CAPACITY IS DECREASED AS PART OF THE ALTERATION SHALL BE SHOWN TO HAVE THE CAPACITY TO RESIST THE APPLICABLE DESIGN DEAD, LIVE AND SNOW LOADS, INCLUDING SNOW DRIFT EFFECTS, REQUIRED BY THE BUILDING CODE OF NEW YORK STATE FOR NEW STRUCTURES.

806.3 EXISTING STRUCTURAL ELEMENTS RESISTING LATERAL LOADS. EXCEPT AS PERMITTED BY SECTION 806.4, WHERE THE ALTERATION INCREASES DESIGN LATERAL LOADS, OR WHERE THE ALTERATION RESULTS IN PROHIBITED STRUCTURAL IRREGULARITY AS DEFINED IN ASCE 7, OR WHERE THE ALTERATION DECREASES THE CAPACITY OF ANY EXISTING LATERAL LOAD-CARRYING STRUCTURAL ELEMENT, THE STRUCTURE OF THE ALTERED BUILDING OR STRUCTURE SHALL MEET THE REQUIREMENTS OF SECTIONS 1609 AND 1613 OF THE BUILDING CODE OF NEW YORK STATE. REDUCED SEISMIC FORCES SHALL BE PERMITTED.

807.1 NEW INSTALLATIONS. NEWLY INSTALLED ELECTRICAL EQUIPMENT AND WIRING RELATING TO WORK DONE IN ANY WORK AREA SHALL COMPLY WITH ALL APPLICABLE REQUIREMENTS OF NFPA 70 EXCEPT AS PROVIDED FOR IN SECTION 807.3.

808.1 RECONFIGURED OR CONVERTED SPACES. RECONFIGURED SPACES INTENDED FOR OCCUPANCY AND SPACES CONVERTED TO HABITABLE OR OCCUPIABLE SPACE IN ANY WORK AREA SHALL BE PROVIDED WITH NATURAL OR MECHANICAL VENTILATION IN ACCORDANCE WITH THE MECHANICAL CODE OF NEW YORK STATE.

808.2 ALTERED EXISTING SYSTEMS. IN MECHANICALLY VENTILATED SPACES, EXISTING MECHANICAL VENTILATION SYSTEMS THAT ARE ALTERED, RECONFIGURED, OR EXTENDED SHALL PROVIDE NOT LESS THAN 5 CUBIC FEET PER MINUTE PER PERSON OF OUTDOOR AIR AND NOT LESS THAN 15 CFM OF VENTILATION AIR PER PERSON; OR NOT LESS THAN THE AMOUNT OF VENTILATION AIR DETERMINED BY THE INDOOR AIR QUALITY PROCEDURE OF ASHRAE 62.1.

809.1 MINIMUM FIXTURES. WHERE THE OCCUPANT LOAD OF THE STORY IS INCREASED BY MORE THAN 20 PERCENT, PLUMBING FIXTURES FOR THE STORY SHALL BE PROVIDED IN QUANTITIES SPECIFIED IN THE PLUMBING CODE OF NEW YORK STATE BASED ON THE INCREASED OCCUPANT LOAD.

EBC NYS CHAPTER 9 - ALTERATIONS LEVEL 3

901.1 SCOPE. LEVEL 3 ALTERATIONS AS DESCRIBED IN SECTION 604 SHALL COMPLY WITH THE REQUIREMENTS OF THIS CHAPTER.

901.2 COMPLIANCE. IN ADDITION TO THE PROVISIONS OF THIS CHAPTER, WORK SHALL COMPLY WITH ALL OF THE REQUIREMENTS OF CHAPTER 7 AND 8. THE REQUIREMENTS OF SECTION 802, 803, 804, AND 805 SHALL APPLY WITHIN ALL WORK AREAS WHETHER OR NOT THEY INCLUDE EXITS AND CORRIDORS SHARED BY MORE THAN ONE TENANT AND REGARDLESS OF THE OCCUPANT LOAD.

904.2.1 MANUAL FIRE ALARM SYSTEMS. WHERE REQUIRED BY THE BUILDING CODE OF NEW YORK STATE, A MANUAL FIRE ALARM SYSTEM SHALL BE PROVIDED THROUGH THE WORK AREA. ALARM NOTIFICATION APPLIANCES SHALL BE PROVIDED ON SUCH FLOORS AND SHALL BE AUTOMATICALLY ACTIVATED AS REQUIRED BY THE BUILDING CODE OF NEW YORK STATE.

904.2.2 AUTOMATIC FIRE DETECTION. WHERE REQUIRED BY THE BUILDING CODE OF NEW YORK STATE FOR NEW BUILDINGS, AUTOMATIC FIRE DETECTION SYSTEMS SHALL BE PROVIDED THROUGHOUT THE WORK AREA.

905.2 MEANS-OF-EGRESS LIGHTING. MEANS OF EGRESS FROM THE HIGHEST WORK AREA FLOOR TO THE FLOOR OF EXIT DISCHARGE SHALL BE PROVIDED WITH ARTIFICIAL LIGHTING WITHIN THE EXIT ENCLOSURE IN ACCORDANCE WITH THE REQUIREMENTS OF THE BUILDING CODE OF NEW YORK STATE.

905.3 EXIT SIGNS. MEANS OF EGRESS FROM THE HIGHEST WORK AREA FLOOR TO THE FLOOR OF EXIT DISCHARGE SHALL BE PROVIDED WITH EXIT SIGNS IN ACCORDANCE WITH THE REQUIREMENTS OF THE BUILDING CODE OF NEW YORK STATE.

EBC NYS CHAPTER 10 - CHANGE OF OCCUPANCY

1001.2.2 CHANGE OF OCCUPANCY CLASSIFICATION OR GROUP. WHERE THE OCCUPANCY CLASSIFICATION OF A BUILDING CHANGES, THE PROVISIONS OF SECTION 1002 THROUGH 1011 SHALL APPLY. THIS INCLUDES A CHANGE OF OCCUPANCY CLASSIFICATION AND A CHANGE TO ANOTHER GROUP WITHIN AN OCCUPANCY CLASSIFICATION.

1001.2.2.1 PARTIAL CHANGE OF OCCUPANCY. WHERE THE OCCUPANCY CLASSIFICATION OR GROUP OF A PORTION OF AN EXISTING BUILDING IS CHANGED, SECTION 1011 SHALL APPLY.

1007.1 SPECIAL OCCUPANCIES. WHERE THE OCCUPANCY OF AN EXISTING BUILDING OR PART OF AN EXISTING BUILDING IS CHANGED TO ONE OF THE FOLLOWING SPECIAL OCCUPANCIES AS DESCRIBED IN NFPA 70, THE ELECTRICAL WIRING AND EQUIPMENT OF THE BUILDING OR PORTION THEREOF THAT CONTAINS THE PROPOSED OCCUPANCY SHALL COMPLY WITH THE APPLICABLE REQUIREMENTS OF NFPA 70 WHETHER OR NOT A CHANGE OF OCCUPANCY GROUP IS INVOLVED:
8. PLACES OF ASSEMBLY.

1007.2 UNSAFE CONDITIONS. WHERE THE OCCUPANCY OF AN EXISTING BUILDING OR PART OF AN EXISTING BUILDING IS CHANGED, ALL UNSAFE CONDITIONS SHALL BE CORRECTED WITHOUT REQUIRING THAT ALL PARTS OF THE ELECTRICAL SYSTEM COMPLY WITH NFPA 70.

1007.3 SERVICE UPGRADE. WHERE THE OCCUPANCY OF AN EXISTING BUILDING OR PART OF AN EXISTING BUILDING IS CHANGED, ELECTRICAL SERVICE SHALL BE UPGRADED TO MEET THE REQUIREMENTS OF NFPA 70 FOR THE NEW OCCUPANCY.

1007.4 NUMBER OF ELECTRICAL OUTLETS. WHERE THE OCCUPANCY OF AN EXISTING BUILDING OR PART OF AN EXISTING BUILDING IS CHANGED, THE NUMBER OF ELECTRICAL OUTLETS SHALL COMPLY WITH NFPA 70 FOR THE NEW OCCUPANCY.

1008.1 MECHANICAL REQUIREMENTS. WHERE THE OCCUPANCY OF AN EXISTING BUILDING OR PART OF AN EXISTING BUILDING IS CHANGED SUCH THAT THE NEW OCCUPANCY IS SUBJECT TO DIFFERENT KITCHEN EXHAUST REQUIREMENTS OR TO INCREASED MECHANICAL VENTILATION REQUIREMENTS IN ACCORDANCE WITH THE MECHANICAL CODE OF NEW YORK STATE, THE NEW OCCUPANCY SHALL COMPLY WITH THE RESPECTIVE MECHANICAL CODE OF NEW YORK STATE PROVISIONS.

1009.1 INCREASED DEMAND. WHERE THE OCCUPANCY OF AN EXISTING BUILDING OR PART OF AN EXISTING BUILDING IS CHANGED SUCH THAT THE NEW OCCUPANCY IS SUBJECT TO INCREASED OR DIFFERENT PLUMBING FIXTURE REQUIREMENTS OR TO INCREASED WATER SUPPLY REQUIREMENTS IN ACCORDANCE WITH THE PLUMBING CODE OF NEW YORK STATE, THE NEW OCCUPANCY SHALL COMPLY WITH THE INTENT OF THE RESPECTIVE PLUMBING CODE OF NEW YORK STATE PROVISIONS.

1010.1 LIGHT AND VENTILATION. LIGHT AND VENTILATION SHALL COMPLY WITH THE REQUIREMENTS OF THE BUILDING CODE OF NEW YORK STATE FOR THE NEW OCCUPANCY.

1011.1 GENERAL. THE PROVISIONS OF THIS SECTION SHALL APPLY TO BUILDINGS OR PORTIONS THEREOF UNDERGOING A CHANGE OF OCCUPANCY CLASSIFICATION. THIS INCLUDES A CHANGE OF OCCUPANCY CLASSIFICATION WITHIN A GROUP AS WELL AS A CHANGE OF OCCUPANCY CLASSIFICATION FROM ONE GROUP TO A DIFFERENT GROUP OR WHERE THERE IS A CHANGE OF OCCUPANCY WITHIN A SPACE WHERE THERE IS A DIFFERENT FIRE PROTECTION SYSTEM THRESHOLD REQUIREMENT IN CHAPTER 9 OF THE BUILDING CODE OF NEW YORK STATE. SUCH BUILDINGS SHALL ALSO COMPLY WITH SECTIONS 1002 THROUGH 1010 OF THIS CODE. THE APPLICATION OF REQUIREMENTS FOR THE CHANGE OF OCCUPANCY SHALL BE AS SET FORTH IN SECTIONS 1011.1.1 THROUGH 1011.1.3. A CHANGE OF OCCUPANCY, AS DEFINED IN SECTION 202, WITHOUT A CORRESPONDING CHANGE OF OCCUPANCY CLASSIFICATION SHALL COMPLY WITH SECTION 1001.2.

1011.1.1.2 CHANGE OF OCCUPANCY CLASSIFICATION WITH SEPARATION. WHERE A PORTION OF AN EXISTING BUILDING IS CHANGED TO A NEW OCCUPANCY CLASSIFICATION OR WHERE THERE IS A CHANGE OF OCCUPANCY WITHIN A SPACE WHERE THERE IS A DIFFERENT FIRE PROTECTION SYSTEM THRESHOLD REQUIREMENT IN CHAPTER 9 OF THE BUILDING CODE OF NEW YORK STATE, AND THAT PORTION IS SEPARATED FROM THE REMAINDER OF THE BUILDING WITH FIRE BARRIERS HAVING A FIRE-RESISTANCE RATING AS REQUIRED IN THE BUILDING CODE OF NEW YORK STATE FOR THE SEPARATE OCCUPANCY, THAT PORTION SHALL COMPLY WITH ALL OF THE REQUIREMENTS OF CHAPTER 9 OF THIS CODE FOR THE NEW OCCUPANCY CLASSIFICATION AND WITH THE REQUIREMENTS OF THIS CHAPTER.

1011.3 INTERIOR FINISH. IN AREAS OF THE BUILDING UNDERGOING THE CHANGE OF OCCUPANCY CLASSIFICATION, THE INTERIOR FINISH OF WALLS AND CEILINGS SHALL COMPLY WITH THE REQUIREMENTS OF THE BUILDING CODE OF NEW YORK STATE FOR THE NEW OCCUPANCY CLASSIFICATION.

1011.4.1 MEANS OF EGRESS FOR CHANGE TO A HIGHER-HAZARD CATEGORY. WHERE A CHANGE OF OCCUPANCY CLASSIFICATION IS MADE TO A HIGHER-HAZARD CATEGORY AS SHOWN IN TABLE 1011.4, THE MEANS OF EGRESS SHALL COMPLY WITH THE REQUIREMENTS OF CHAPTER 10 OF THE BUILDING CODE OF NEW YORK STATE.

1011.5.1 HEIGHT AND AREA FOR CHANGE TO A HIGHER-HAZARD CATEGORY. WHERE A CHANGE OF OCCUPANCY CLASSIFICATION IS MADE TO A HIGHER-HAZARD CATEGORY AS SHOWN IN TABLE 1011.5, HEIGHTS AND AREAS OF BUILDINGS AND STRUCTURES SHALL COMPLY WITH THE REQUIREMENTS OF CHAPTER 5 OF THE BUILDING CODE OF NEW YORK STATE FOR THE NEW OCCUPANCY CLASSIFICATION.

1011.5.3 FIRE BARRIERS. WHERE A CHANGE OF OCCUPANCY CLASSIFICATION IS MADE TO A HIGHER-HAZARD CATEGORY AS SHOWN IN TABLE 1011.5, FIRE BARRIERS IN SEPARATED MIXED USE BUILDINGS SHALL COMPLY WITH THE FIRE-RESISTANCE REQUIREMENTS OF THE BUILDING CODE OF NEW YORK STATE.

1011.6.2 EXTERIOR WALL RATING FOR CHANGE OF OCCUPANCY CLASSIFICATION TO AN EQUAL OR LESSER-HAZARD CATEGORY. WHERE A CHANGE OF OCCUPANCY CLASSIFICATION IS MADE TO AN EQUAL OR LESSER-HAZARD CATEGORY AS SHOWN IN TABLE 1011.6, EXISTING EXTERIOR WALLS, INCLUDING OPENINGS, SHALL BE ACCEPTED.

1011.7.1 MINIMUM REQUIREMENTS. VERTICAL SHAFTS SHALL BE DESIGNED TO MEET THE BUILDING CODE OF NEW YORK STATE REQUIREMENTS FOR ATRIUMS OR THE REQUIREMENTS OF THIS SECTION.

1011.7.2 STAIRWAYS. WHERE A CHANGE OF OCCUPANCY CLASSIFICATION IS MADE TO A HIGHER-HAZARD CATEGORY AS SHOWN IN TABLE 1011.4, INTERIOR STAIRWAYS SHALL BE ENCLOSED AS REQUIRED BY THE BUILDING CODE OF NEW YORK STATE.
EXCEPTIONS: 1. IN OTHER THAN GROUP I OCCUPANCIES, AN ENCLOSURE SHALL NOT BE REQUIRED FOR OPENINGS SERVING ONLY ONE ADJACENT FLOOR AND THAT ARE NOT CONNECTED WITH CORRIDORS OR STAIRWAYS SERVING OTHER FLOORS.

EBC NYS CHAPTER 11 - ADDITIONS

1101.1 SCOPE. AN ADDITION TO A BUILDING OR STRUCTURE SHALL COMPLY WITH THE UNIFORM CODE AS ADOPTED FOR NEW CONSTRUCTION WITHOUT REQUIRING THE EXISTING BUILDING OR STRUCTURE TO COMPLY WITH ANY REQUIREMENTS OF THOSE CODES OR OF THESE PROVISIONS, EXCEPT AS REQUIRED BY THIS CHAPTER. WHERE AN ADDITION IMPACTS THE EXISTING BUILDING OR STRUCTURE, THAT PORTION SHALL COMPLY WITH THIS CODE.

1102.1 HEIGHT LIMITATIONS. AN ADDITION SHALL NOT INCREASE THE HEIGHT OF AN EXISTING BUILDING BEYOND THAT PERMITTED UNDER THE APPLICABLE PROVISIONS OF CHAPTER 5 OF THE BUILDING CODE OF NEW YORK STATE FOR NEW BUILDINGS.

1102.2 AREA LIMITATIONS. AN ADDITION SHALL NOT INCREASE THE AREA OF AN EXISTING BUILDING BEYOND THAT PERMITTED UNDER THE APPLICABLE PROVISIONS OF CHAPTER 5 OF THE BUILDING CODE OF NEW YORK STATE FOR NEW BUILDINGS UNLESS FIRE SEPARATION AS REQUIRED BY THE BUILDING CODE OF NEW YORK STATE IS PROVIDED.

1102.3 FIRE PROTECTION SYSTEMS. EXISTING FIRE AREAS INCREASED BY THE ADDITION SHALL COMPLY WITH CHAPTER 9 OF THE BUILDING CODE OF NEW YORK STATE.

1107.1 MINIMUM REQUIREMENTS. ADDITIONS TO EXISTING BUILDINGS SHALL CONFORM TO THE ENERGY REQUIREMENTS OF THE ENERGY CONSERVATION CONSTRUCTION CODE OF NEW YORK STATE OR RESIDENTIAL CODE OF NEW YORK STATE AS THEY RELATE TO NEW CONSTRUCTION.

2020 BUILDING CODE OF NEW YORK STATE (BC NYS) REVIEW:

BC NYS CHAPTER 3 - OCCUPANCY CLASSIFICATION AND USE

303.4 ASSEMBLY GROUP A-3. GROUP A-3 OCCUPANCY INCLUDES ASSEMBLY USES INTENDED FOR WORSHIP, RECREATION OR AMUSEMENT AND OTHER ASSEMBLY USES NOT CLASSIFIED ELSEWHERE IN GROUP A INCLUDING, BUT NOT LIMITED TO: COURTROOMS.

304.1 BUSINESS GROUP B. BUSINESS GROUP B OCCUPANCY INCLUDES, AMONG OTHERS, THE USE OF A BUILDING OR STRUCTURE, OR A PORTION THEREOF, FOR OFFICE, PROFESSIONAL OR SERVICE-TYPE TRANSACTIONS, INCLUDING STORAGE OF RECORDS AND ACCOUNTS. BUSINESS OCCUPANCIES SHALL INCLUDE, BUT NOT BE LIMITED TO, THE FOLLOWING: CIVIC ADMINISTRATION.

308.4 INSTITUTIONAL GROUP I-3. INSTITUTIONAL GROUP I-3 OCCUPANCY SHALL INCLUDE BUILDINGS AND STRUCTURES THAT ARE INHABITED BY MORE THAN FIVE PERSONS WHO ARE UNDER RESTRAINT OR SECURITY. A GROUP I-3 FACILITY IS OCCUPIED BY PERSONS WHO ARE GENERALLY INCAPABLE OF SELF-PRESERVATION DUE TO SECURITY MEASURES NOT UNDER THE OCCUPANTS' CONTROL. THIS GROUP SHALL INCLUDE, BUT NOT BE LIMITED TO, THE FOLLOWING: JAILS. BUILDINGS OF GROUP I-3 SHALL BE CLASSIFIED AS ONE OF THE OCCUPANCY CONDITIONS SPECIFIED IN SECTIONS 308.4.1 THROUGH 308.4.5 (SEE SECTION 408.1).

308.4.5 CONDITION 5. THIS OCCUPANCY CONDITION SHALL INCLUDE BUILDINGS IN WHICH FREE MOVEMENT IS RESTRICTED FROM AN OCCUPIED SPACE. STAFF-CONTROLLED MANUAL RELEASE IS PROVIDED TO PERMIT MOVEMENT FROM SLEEPING UNITS, ACTIVITY SPACES AND OTHER OCCUPIED AREAS WITHIN THE SMOKE COMPARTMENT TO OTHER SMOKE COMPARTMENTS.

BC NYS CHAPTER 4 - SPECIAL DETAILED REQUIREMENTS BASED ON OCCUPANCY AND USE

404.1 GENERAL. IN OTHER THAN GROUP H OCCUPANCIES, AND WHERE PERMITTED BY SECTION 712.1.7, THE PROVISIONS OF SECTIONS 404.1 THROUGH 404.10 SHALL APPLY TO BUILDINGS OR STRUCTURES CONTAINING VERTICAL OPENINGS DEFINED AS "ATRIUMS".

404.2 USE. THE FLOOR OF THE ATRIUM SHALL NOT BE USED FOR OTHER THAN LOW FIRE HAZARD USES AND ONLY APPROVED MATERIALS AND DECORATIONS IN ACCORDANCE WITH THE FIRE CODE OF NEW YORK STATE SHALL BE USED IN THE ATRIUM SPACE.
EXCEPTION: THE ATRIUM FLOOR AREA IS PERMITTED TO BE USED FOR ANY APPROVED USE WHERE THE INDIVIDUAL SPACE IS PROVIDED WITH AN AUTOMATIC SPRINKLER SYSTEM IN ACCORDANCE WITH SECTION 903.3.1.1.

404.3 AUTOMATIC SPRINKLER PROTECTION. AN APPROVED AUTOMATIC SPRINKLER SYSTEM SHALL BE INSTALLED THROUGHOUT THE ENTIRE BUILDING.

404.4 FIRE ALARM SYSTEM. A FIRE ALARM SYSTEM SHALL BE PROVIDED IN ACCORDANCE WITH SECTION 907.2.13.

404.5 SMOKE CONTROL. A SMOKE CONTROL SYSTEM SHALL BE INSTALLED IN ACCORDANCE WITH SECTION 909.
EXCEPTION: IN OTHER THAN GROUP I-2, AND GROUP I-1, CONDITION 2, SMOKE CONTROL IS NOT REQUIRED FOR ATRIUMS THAT CONNECT ONLY TWO STORIES.

404.6 ENCLOSURE OF ATRIUMS. ATRIUM SPACES SHALL BE SEPARATED FROM ADJACENT SPACES BY A 1-HOUR FIRE BARRIER CONSTRUCTED IN ACCORDANCE WITH SECTION 707 OR A HORIZONTAL ASSEMBLY CONSTRUCTED IN ACCORDANCE WITH SECTION 711, OR BOTH.

404.8 INTERIOR FINISH. THE INTERIOR FINISH OF WALLS AND CEILINGS OF THE ATRIUM SHALL BE NOT LESS THAN CLASS B. SPRINKLER PROTECTION SHALL NOT RESULT IN A REDUCTION IN CLASS.

404.9.1 EGRESS NOT THROUGH THE ATRIUM. WHERE REQUIRED ACCESS TO THE EXITS IS NOT THROUGH THE ATRIUM, EXIT ACCESS TRAVEL DISTANCE SHALL COMPLY WITH SECTION 1017.

404.9.2 EXIT ACCESS TRAVEL DISTANCE AT THE LEVEL OF EXIT DISCHARGE. WHERE THE PATH OF EGRESS TRAVEL IS THROUGH AN ATRIUM SPACE, EXIT ACCESS TRAVEL DISTANCE AT THE LEVEL OF EXIT DISCHARGE SHALL BE DETERMINED IN ACCORDANCE WITH SECTION 1017.

404.9.3 EXIT ACCESS TRAVEL DISTANCE AT OTHER THAN THE LEVEL OF EXIT DISCHARGE. WHERE THE PATH OF EGRESS TRAVEL IS NOT AT THE LEVEL OF EXIT DISCHARGE FROM THE ATRIUM, THAT PORTION OF THE TOTAL PERMITTED EXIT ACCESS TRAVEL DISTANCE THAT OCCURS WITHIN THE ATRIUM SHALL BE NOT GREATER THAN 200 FEET.

404.10 INTERIOR EXIT STAIRWAYS. NOT GREATER THAN 50 PERCENT OF INTERIOR EXIT STAIRWAYS ARE PERMITTED TO EGRESS THROUGH AN ATRIUM ON THE LEVEL OF EXIT DISCHARGE IN ACCORDANCE WITH SECTION 1028.

408.1 GENERAL. OCCUPANCIES IN GROUP I-3 SHALL COMPLY WITH THE PROVISIONS OF SECTIONS 408.1 THROUGH 408.11 AND OTHER APPLICABLE PROVISIONS OF THIS CODE.

408.2 OTHER OCCUPANCIES. BUILDINGS OR PORTIONS OF BUILDINGS IN GROUP I-3 OCCUPANCIES WHERE SECURITY OPERATIONS NECESSITATE THE LOCKING OF REQUIRED MEANS OF EGRESS SHALL BE PERMITTED TO BE CLASSIFIED AS A DIFFERENT OCCUPANCY. OCCUPANCIES CLASSIFIED AS OTHER THAN GROUP I-3 SHALL MEET THE APPLICABLE REQUIREMENTS OF THIS CODE FOR THAT OCCUPANCY WHERE PROVISIONS ARE MADE FOR THE RELEASE OF OCCUPANTS AT ALL TIMES.

MEANS OF EGRESS FROM DETENTION AND CORRECTIONAL OCCUPANCIES THAT TRAVERSE OTHER USE ARES SHALL, AS A MINIMUM, CONFORM TO REQUIREMENTS FOR DETENTION AND CORRECTIONAL OCCUPANCIES.

408.3.1 DOOR WIDTH. DOORS TO RESIDENT SLEEPING UNITS SHALL HAVE A CLEAR WIDTH OF NOT LESS THAN 28 INCHES.

408.3.6 EXIT DISCHARGE. EXITS ARE PERMITTED TO DISCHARGE INTO A FENCED OR WALLED COURTYARD. ENCLOSED YARDS OR COURTS SHALL BE OF A SIZE TO ACCOMMODATE ALL OCCUPANTS, BE LOCATED NOT LESS THAN 50 FEET FROM THE BUILDING AND HAVE AN AREA OF NOT LESS THAN 15 SQUARE FEET PER PERSON.

408.4 LOCKS. EGRESS DOORS ARE PERMITTED TO BE LOCKED IN ACCORDANCE WITH THE APPLICABLE USE CONDITION. DOORS FROM A REFUGE AREA TO THE OUTSIDE ARE PERMITTED TO BE LOCKED WITH A KEY IN LIEU OF LOCKING METHODS DESCRIBED IN SECTION 408.4.1. THE KEYS TO UNLOCK THE EXTERIOR DOORS SHALL BE AVAILABLE AT ALL TIMES AND THE LOCKS SHALL BE OPERABLE FROM BOTH SIDES OF THE DOOR.

408.4.2 POWER-OPERATED DOORS AND LOCKS. POWER-OPERATED SLIDING DOORS OR POWER-OPERATED LOCKS FOR SWINGING DOORS SHALL BE OPERABLE BY A MANUAL RELEASE MECHANISM AT THE DOOR. EMERGENCY POWER SHALL BE PROVIDED FOR THE DOORS AND LOCKS IN ACCORDANCE WITH SECTION 2702.

IT IS A VIOLATION OF THE NEW YORK STATE EDUCATION LAW, ARTICLE 145 §7209 SPECIAL PROVISIONS, FOR ANY PERSON, UNLESS THEY ARE ACTING UNDER THE DIRECTION OF A LICENSED PROFESSIONAL ENGINEER, ARCHITECT, LANDSCAPE ARCHITECT, OR LAND SURVEYOR, TO ALTER AN ITEM IN ANY WAY. IF AN ITEM BEARING THE STAMP OF A LICENSED PROFESSIONAL IS ALTERED, THE ALTERING PROFESSIONAL SHALL STAMP THE DOCUMENT AND INCLUDE THE NOTATION "ALTERED BY" FOLLOWED BY THEIR SIGNATURE, THE DATE OF SUCH ALTERATION, AND A SPECIFIC DESCRIPTION OF THE ALTERATION.

REVISIONS

CITY OF MIDDLETOWN
NEW COURTHOUSE FACILITY

CODE REVIEW

ORANGE COUNTY, NEW YORK

CITY OF MIDDLETOWN

Barton & Loguidice
443 Electronics Parkway
Liverpool, NY 13088

NYS CERTIFICATE #
0021642, 0020588, 0019903, 0019905, 0020336

STATE OF NEW YORK · MATTHEW C. FULLER · 070743 · LICENSED PROFESSIONAL ENGINEER

NYS EXP.:

Date: AUGUST, 2024

Scale: AS SHOWN

Sheet Number: A004

Project Number: 1753.008.001

Plotted: 8/21/2024 4:25:52 PM
C:\Users\cgardner\Documents\Middletown Courthouse 6.22.21 Central File - ARCHITECTURAL STRUCTURAL MODEL_cgardner05.rvt

Checked by ZDC Drawn by JDC Designed by JDC In Charge of TRB

408.4.4 RELOCK CAPABILITY. DOORS REMOTELY UNLOCKED UNDER EMERGENCY CONDITIONS SHALL NOT AUTOMATICALLY RELOCK WHEN CLOSED UNLESS SPECIFIC ACTION IS TAKEN AT THE REMOTE LOCATION TO ENABLE DOORS TO RELOCK.

408.6 SMOKE BARRIER. OCCUPANCIES IN GROUP I-3 SHALL HAVE SMOKE BARRIERS COMPLYING WITH SECTIONS 408.6 AND 709 TO DIVIDE EVERY STORY OCCUPIED BY RESIDENTS FOR SLEEPING, OR ANY OTHER STORY HAVING AN OCCUPANT LOAD OF 50 OR MORE PERSONS, INTO NOT FEWER THAN TWO SMOKE COMPARTMENTS.

408.6.1 SMOKE COMPARTMENTS. THE NUMBER OF RESIDENTS IN ANY SMOKE COMPARTMENT SHALL BE NOT MORE THAN 200. THE DISTANCE OF TRAVEL TO A DOOR IN A SMOKE BARRIER FROM ANY ROOM DOOR REQUIRED AS EXIT ACCESS SHALL BE NOT GREATER THAN 150 FEET. THE DISTANCE OF TRAVEL TO A DOOR IN A SMOKE BARRIER FROM ANY POINT IN A ROOM SHALL BE NOT GREATER THAN 200 FEET.

408.6.2 REFUGE AREA. NOT LESS THAN 6 NET SQUARE FEET PER OCCUPANT SHALL BE PROVIDED ON EACH SIDE OF EACH SMOKE BARRIER FOR THE TOTAL NUMBER OF OCCUPANTS IN ADJOINING SMOKE COMPARTMENTS. THIS SPACE SHALL BE READILY AVAILABLE WHEREVER THE OCCUPANTS ARE MOVED ACROSS THE SMOKE BARRIER IN A FIRE EMERGENCY.

408.7 SECURITY GLAZING. IN OCCUPANCIES IN GROUP I-3, WINDOWS AND DOORS IN 1-HOUR FIRE BARRIERS CONSTRUCTED IN ACCORDANCE WITH SECTION 707, FIRE PARTITIONS CONSTRUCTED IN ACCORDANCE WITH SECTION 708 AND SMOKE BARRIERS CONSTRUCTED IN ACCORDANCE WITH SECTION 709 SHALL BE PERMITTED TO HAVE SECURITY GLAZING INSTALLED PROVIDED THAT THE FOLLOWING CONDITIONS ARE MET.
1. INDIVIDUAL PANELS OF GLAZING SHALL NOT EXCEED 1,296 SQUARE INCHES.
2. THE GLAZING SHALL BE PROTECTED ON BOTH SIDES BY AN AUTOMATIC SPRINKLER SYSTEM. THE SPRINKLER SYSTEM SHALL BE DESIGNED TO, WHEN ACTUATED, WET COMPLETELY THE ENTIRE SURFACE OF ANY GLAZING AFFECTED BY FIRE.
3. THE GLAZING SHALL BE IN A GASKETED FRAME AND INSTALLED IN SUCH A MANNER THAT THE FRAMING SYSTEM WILL DEFLECT WITHOUT BREAKING (LOADING) THE GLASS BEFORE THE SPRINKLER SYSTEM OPERATES.
4. OBSTRUCTIONS, SUCH AS CURTAIN RODS, DRAPERY TRAVERSE RODS, CURTAINS, DRAPES OR SIMILAR MATERIALS SHALL NOT BE INSTALLED BETWEEN THE AUTOMATIC SPRINKLERS AND THE GLAZING.

408.8.2 OCCUPANCY CONDITION 5. EACH SLEEPING AREA IN OCCUPANCY CONDITION 5 SHALL BE SEPARATED FROM ADJACENT SLEEPING AREAS, CORRIDORS AND COMMON SPACES BY A SMOKE-TIGHT PARTITION. ADDITIONALLY, COMMON SPACES SHALL BE SEPARATED FROM THE CORRIDOR BY A SMOKE-TIGHT PARTITION.

408.8.4 SMOKE-TIGHT DOORS. DOORS IN OPENINGS IN PARTITIONS REQUIRED TO BE SMOKE TIGHT BY SECTION 408.8 SHALL BE SUBSTANTIAL DOORS, OF CONSTRUCTION THAT WILL RESIST THE PASSAGE OF SMOKE. LATCHES AND DOOR CLOSURES ARE NOT REQUIRED ON CELL DOORS.

408.10 FIRE ALARM SYSTEM. A FIRE ALARM SYSTEM SHALL BE PROVIDED IN ACCORDANCE WITH SECTION 907.2.6.3.

408.11 AUTOMATIC SPRINKLER SYSTEM. GROUP I-3 OCCUPANCIES SHALL BE EQUIPPED THROUGHOUT WITH AN AUTOMATIC SPRINKLER SYSTEM IN ACCORDANCE WITH SECTION 903.2.6.

BC NYS CHAPTER 5 - GENERAL BUILDING HEIGHTS AND AREAS

504.2 MIXED OCCUPANCY. IN A BUILDING CONTAINING MIXED OCCUPANCIES IN ACCORDANCE WITH SECTION 508, NO INDIVIDUAL OCCUPANCY SHALL EXCEED THE HEIGHT AND NUMBER OF STORY LIMITS SPECIFIED IN THIS SECTION FOR THE APPLICABLE OCCUPANCIES.

504.3 HEIGHT IN FEET. THE MAXIMUM HEIGHT, IN FEET, OF A BUILDING SHALL NOT EXCEED THE LIMITS SPECIFIED IN TABLE 504.3.

TABLE 504.3 ALLOWABLE BUILDING HEIGHT IN FEET ABOVE GRADE PLANE
A & B - S - TYPE II B - 75 FEET
I-3 - S - TYPE II B - 75 FEET

504.4 NUMBER OF STORIES. THE MAXIMUM NUMBER OF STORIES OF A BUILDING SHALL NOT EXCEED THE LIMITS SPECIFIED IN TABLE 504.4.

TABLE 504.4 ALLOWABLE NUMBER OF STORIES ABOVE GRADE PLANE
A-3 - S - TYPE II B - 3 STORIES
B - S - TYPE II B - 4 STORIES
I-3 - S - TYPE II B - 2 STORIES

506.2 ALLOWABLE AREA DETERMINATION. THE ALLOWABLE AREA OF A BUILDING SHALL BE DETERMINED IN ACCORDANCE WITH THE APPLICABLE PROVISIONS OF SECTION 506.2.1 THROUGH 506.2.4 AND SECTION 506.3.

TABLE 506.2 ALLOWABLE AREA FACTOR IN SQUARE FEET
A-3 - SM - TYPE II B - 28,500 SQUARE FEET
B - SM - TYPE II B - 69,000 SQUARE FEET
I-3 - SM - TYPE II B - 30,000 SQUARE FEET

506.2.4 MIXED-OCCUPANCY, MULTISTORY BUILDINGS. EACH STORY OF A MIXED-OCCUPANCY BUILDING WITH MORE THAN ONE STORY ABOVE GRADE PLANE SHALL INDIVIDUALLY COMPLY WITH THE APPLICABLE REQUIREMENTS OF SECTION 508.1. FOR BUILDINGS WITH MORE THAN THREE STORIES ABOVE GRADE PLANE, THE TOTAL BUILDING AREA SHALL BE SUCH THAT THE AGGREGATE SUM OF THE RATIOS OF THE ACTUAL AREA OF EACH STORY DIVIDED BY THE ALLOWABLE AREA OF SUCH STORIES, DETERMINED IN ACCORDANCE WITH EQUATION 5-3 BASED ON THE APPLICABLE PROVISIONS OF SECTION 508.1, SHALL NOT EXCEED THREE.

508.1 GENERAL. EACH PORTION OF A BUILDING SHALL BE INDIVIDUALLY CLASSIFIED IN ACCORDANCE WITH SECTION 302.1. WHERE A BUILDING CONTAINS MORE THAN ONE OCCUPANCY GROUP, THE BUILDING OR PORTION THEREOF SHALL COMPLY WITH THE APPLICABLE PROVISIONS OF SECTION 508.2, 508.3 OR 508.4, OR A COMBINATION OF THESE SECTIONS.

508.2 ACCESSORY OCCUPANCIES. ACCESSORY OCCUPANCIES ARE THOSE OCCUPANCIES THAT ARE ANCILLARY TO THE MAIN OCCUPANCY OF THE BUILDING OR PORTION THEREOF. ACCESSORY OCCUPANCIES SHALL COMPLY WITH THE PROVISIONS OF SECTION 508.2.1 THROUGH 508.2.4.

508.2.1 OCCUPANCY CLASSIFICATION. ACCESSORY OCCUPANCIES SHALL BE INDIVIDUALLY CLASSIFIED IN ACCORDANCE WITH SECTION 302.1. THE REQUIREMENTS OF THIS CODE SHALL APPLY TO EACH PORTION OF THE BUILDING BASED ON THE OCCUPANCY CLASSIFICATION OF THAT SPACE.

508.2.3 ALLOWABLE BUILDING AREA. THE ALLOWABLE AREA OF THE BUILDING SHALL BE BASED ON THE APPLICABLE PROVISIONS OF SECTION 506 FOR THE MAIN OCCUPANCY OF THE BUILDING. AGGREGATE ACCESSORY OCCUPANCIES SHALL NOT OCCUPY MORE THAN 10 PERCENT OF THE FLOOR AREA OF THE STORY IN WHICH THEY ARE LOCATED AND SHALL NOT EXCEED THE TABULAR VALUES FOR NONSPRINKLERED BUILDINGS IN TABLE 506.2 FOR EACH SUCH ACCESSORY OCCUPANCY.

508.2.4 SEPARATION OF OCCUPANCIES. NO SEPARATION IS REQUIRED BETWEEN ACCESSORY OCCUPANCIES AND THE MAIN OCCUPANCY.

508.4 SEPARATED OCCUPANCIES. BUILDINGS OR PORTIONS OF BUILDINGS THAT COMPLY WITH THE PROVISIONS OF THIS SECTION SHALL BE CONSIDERED AS SEPARATED OCCUPANCIES.

TABLE 508.4 REQUIRED SEPARATION OF OCCUPANCIES
A, B & I-3 - S - 1 HOUR REQUIRED SEPARATION

508.4.2 ALLOWABLE BUILDING AREA. IN EACH STORY, THE BUILDING AREA SHALL BE SUCH THAT THE SUM OF THE RATIOS OF THE ACTUAL BUILDING AREA OF EACH SEPARATE OCCUPANCY DIVIDED BY THE ALLOWABLE BUILDING AREA OF EACH SEPARATED OCCUPANCY SHALL NOT EXCEED 1.

FIRST FLOOR AREA= ((XXX/28,500)+(XXX/69,000)+(XXX/30,000)) =
SECOND FLOOR AREA= ((XXX/28,500)+(XXX/69,000)) =

508.4.4.1 CONSTRUCTION. REQUIRED SEPARATIONS SHALL BE FIRE BARRIERS CONSTRUCTED IN ACCORDANCE WITH SECTION 707 OR HORIZONTAL ASSEMBLIES CONSTRUCTED IN ACCORDANCE WITH SECTION 711, OR BOTH, SO AS TO COMPLETELY SEPARATE ADJACENT OCCUPANCIES.

BC NYS CHAPTER 6 - TYPES OF CONSTRUCTION

601.1 SCOPE. THE PROVISIONS OF THIS CHAPTER SHALL CONTROL THE CLASSIFICATION OF BUILDINGS AS TO TYPE OF CONSTRUCTION.

TABLE 601 FIRE-RESISTANCE RATING REQUIREMENTS FOR BUILDING ELEMENTS
PRIMARY STRUCTURAL FRAME - TYPE II B - 0 HOURS
BEARING WALLS - TYPE II B - O HOURS
NONBEARING WALLS AND PARTITIONS - TYPE II B - 0 HOURS
FLOOR CONSTRUCTION AND ASSOCIATED SECONDARY MEMBERS - TYPE II B - 0 HOURS
ROOF CONSTRUCTION AND ASSOCIATED SECONDARY MEMBERS - TYPE II B - 0 HOURS

602.1 GENERAL. BUILDINGS AND STRUCTURES ERECTED OR TO BE ERECTED, ALTERED OR EXTENDED IN HEIGHT OR AREA SHALL BE CLASSIFIED IN ONE OF THE FIVE CONSTRUCTION TYPES DEFINED IN SECTIONS 602.2 THROUGH 602.5. THE BUILDING ELEMENTS SHALL HAVE A FIRE-RESISTANCE RATING NOT LESS THAN THAT SPECIFIED IN TABLE 601 AND EXTERIOR WALLS SHALL HAVE A FIRE-RESISTANCE RATING NOT LESS THAN THAT SPECIFIED IN TABLE 602. WHERE REQUIRED TO HAVE A FIRE-RESISTANCE RATING BY TABLE 601, BUILDING ELEMENTS SHALL COMPLY WITH THE APPLICABLE PROVISIONS OF SECTION 703.2. THE PROTECTION OF OPENINGS, DUCTS AND AIR TRANSFER OPENINGS IN BUILDING ELEMENTS SHALL NOT BE REQUIRED UNLESS REQUIRED BY OTHER PROVISIONS OF THIS CODE.

TABLE 602 FIRE-RESISTANCE RATING REQUIREMENTS FOR EXTERIOR WALLS BASED ON FIRE SEPARATION DISTANCE
DISTANCE GREATER THAN 10 FEET - TYPE II B - A, B & I OCCUPANCIES - 0 HOURS

BC NYS CHAPTER 7 - FIRE AND SMOKE PROTECTION FEATURES

703.2 FIRE-RESISTANCE RATING. THE FIRE-RESISTANCE RATING OF BUILDING ELEMENTS, COMPONENTS OR ASSEMBLIES SHALL BE DETERMINED IN ACCORDANCE WITH THE TEST PROCEDURES SET FORTH IN ASTM E119 OR UL 263 OR IN ACCORDANCE WITH SECTION 703.3. THE FIRE-RESISTANCE RATING OF PENETRATIONS AND FIRE-RESISTANT JOINT SYSTEMS SHALL BE DETERMINED IN ACCORDANCE WITH SECTIONS 714 AND 715, RESPECTIVELY.

707.3.1 SHAFT ENCLOSURES. THE FIRE-RESISTANCE RATING OF THE FIRE BARRIER SEPARATING BUILDING AREAS FROM A SHAFT SHALL COMPLY WITH SECTION 713.4.

707.3.2 INTERIOR EXIT STAIRWAY AND RAMP CONSTRUCTION. THE FIRE-RESISTANCE RATING OF THE FIRE BARRIER SEPARATING BUILDING AREAS FROM AN INTERIOR EXIT STAIRWAY OR RAMP SHALL COMPLY WITH SECTION 1023.1.

707.3.3 ENCLOSURES FOR EXIT ACCESS STAIRWAYS. THE FIRE-RESISTANCE RATING OF THE FIRE BARRIER SEPARATING BUILDING AREAS FROM AN EXIT ACCESS STAIRWAY OR RAMP SHALL COMPLY WITH SECTION 713.4.

707.3.4 EXIT PASSAGEWAY. THE FIRE-RESISTANCE RATING OF THE FIRE BARRIER SEPARATING BUILDING AREAS FROM AN EXIT PASSAGEWAY SHALL COMPLY WITH SECTION 1024.3.

707.3.5 HORIZONTAL EXIT. THE FIRE-RESISTANCE RATING OF THE SEPARATION BETWEEN BUILDING AREAS CONNECTED BY A HORIZONTAL EXIT SHALL COMPLY WITH SECTION 1026.1.

707.3.6 ATRIUMS. THE FIRE-RESISTANCE RATING OF THE FIRE BARRIER SEPARATING ATRIUMS SHALL COMPLY WITH SECTION 404.6.

707.3.9 SEPARATED OCCUPANCIES. WHERE THE PROVISIONS OF SECTION 508.4 ARE APPLICABLE, THE FIRE BARRIER SEPARATING MIXED OCCUPANCIES SHALL HAVE A FIRE-RESISTANCE RATING OF NOT LESS THAN THAT INDICATED IN TABLE 508.4 BASED ON THE OCCUPANCIES BEING SEPARATED.

707.5 CONTINUITY. FIRE BARRIERS SHALL EXTEND FROM THE TOP OF THE FOUNDATION OR FLOOR/CEILING ASSEMBLY BELOW TO THE UNDERSIDE OF THE FLOOR OR ROOF SHEATHING, SLAB OR DECK ABOVE AND SHALL BE SECURELY ATTACHED THERETO. SUCH FIRE BARRIERS SHALL BE CONTINUOUS THROUGH CONCEALED SPACE, SUCH AS THE SPACE ABOVE A SUSPENDED CEILING. JOINTS AND VOIDS AT INTERSECTIONS SHALL COMPLY WITH SECTIONS 707.8 AND 707.9.

707.5.1 SUPPORTING CONSTRUCTION. THE SUPPORTING CONSTRUCTION FOR A FIRE BARRIER SHALL BE PROTECTED TO AFFORD THE REQUIRED FIRE-RESISTANCE RATING OF THE FIRE BARRIER SUPPORTED. HOLLOW VERTICAL SPACES WITHIN A FIRE BARRIER SHALL BE FIREBLOCKED IN ACCORDANCE WITH SECTION 718.2 AT EVERY FLOOR LEVEL.

707.6 OPENINGS. OPENINGS IN A FIRE BARRIER SHALL BE PROTECTED IN ACCORDANCE WITH SECTION 716. OPENINGS SHALL BE LIMITED TO A MAXIMUM AGGREGATE WIDTH OF 25 PERCENT OF THE LENGTH OF THE WALL, AND THE MAXIMUM AREA OF ANY SINGLE OPENING SHALL NOT EXCEED 156 SQUARE FEET. OPENINGS IN ENCLOSURES FOR EXIT ACCESS STAIRWAYS AND RAMPS, INTERIOR EXIT STAIRWAYS AND RAMPS AND EXIT PASSAGEWAYS SHALL ALSO COMPLY WITH SECTIONS 1019, 1023.4 AND 1024.5, RESPECTIVELY.
EXCEPTIONS: 1. OPENINGS SHALL NOT BE LIMITED TO 156 SQUARE FEET WHERE ADJOINING FLOOR AREAS ARE EQUIPPED THROUGHOUT WITH AN AUTOMATIC SPRINKLER SYSTEM IN ACCORDANCE WITH SECTION 903.3.1.1.

707.7 PENETRATIONS. PENETRATIONS OF FIRE BARRIERS SHALL COMPLY WITH SECTION 714.

707.8 JOINTS. JOINTS MADE IN OR BETWEEN FIRE BARRIERS, AND JOINTS MADE AT THE INTERSECTION OF FIRE BARRIERS WITH UNDERSIDE OF A FIRE-RESISTANCE-RATED FLOOR OR ROOF SHEATHING, SLAB OR DECK ABOVE, AND THE EXTERIOR VERTICAL WALL INTERSECTION SHALL COMPLY WITH SECTION 715.

707.9 VOIDS AT INTERSECTIONS. THE VOIDS CREATED AT THE INTERSECTION OF A FIRE BARRIER AND A NONFIRE-RESISTANCE-RATED ROOF ASSEMBLY OR A NONFIRE-RESISTANCE-RATED EXTERIOR WALL ASSEMBLY SHALL BE FILLED. AN APPROVED MATERIAL OR SYSTEM SHALL BE USED TO FILL THE VOID, AND SHALL BE SECURELY INSTALLED IN OR ON THE INTERSECTION FOR ITS ENTIRE LENGTH SO AS NOT TO DISLODGE, LOOSEN OR OTHERWISE IMPAIR ITS ABILITY TO ACCOMMODATE EXPECTED BUILDING MOVEMENTS AND TO RETARD THE PASSAGE OF FIRE AND HOT GASES.

707.10 DUCTS AND AIR TRANSFER OPENINGS. PENETRATIONS IN A FIRE BARRIER BY DUCTS AND AIR TRANSFER OPENINGS SHALL COMPLY WITH SECTION 717.

708.3 FIRE-RESISTANCE RATING. FIRE PARTITIONS SHALL HAVE A FIRE-RESISTANCE RATING OF NOT LESS THAN 1 HOUR.

708.4 CONTINUITY. FIRE PARTITIONS SHALL EXTEND FROM THE TOP OF THE FOUNDATION OR FLOOR/CEILING ASSEMBLY BELOW AND BE SECURELY ATTACHED TO ONE OF THE FOLLOWING:
1. THE UNDERSIDE OF THE FLOOR OR ROOF SHEATHING, DECK OR SLAB ABOVE.
2. THE UNDERSIDE OF A FLOOR/CEILING OR ROOF/CEILING ASSEMBLY HAVING A FIRE-RESISTANCE RATING THAT IS NOT LESS THAN THE FIRE-RESISTANCE RATING OF THE FIRE PARTITION.

711.2.4.1 SEPARATING MIXED OCCUPANCIES. WHERE THE HORIZONTAL ASSEMBLY SEPARATES MIXED OCCUPANCIES, THE ASSEMBLY SHALL HAVE A FIRE-RESISTANCE RATING OF NOT LESS THAN THAT REQUIRED BY SECTION 508.4 BASED ON THE OCCUPANCIES BEING SEPARATED.

713.4 FIRE-RESISTANCE RATING. SHAFT ENCLOSURES SHALL HAVE A FIRE-RESISTANCE RATING OF NOT LESS THAN 2 HOURS WHERE CONNECTING FOUR STORIES OR MORE, AND NOT LESS THAN 1 HOUR WHERE CONNECTING LESS THAN FOUR STORIES. THE NUMBER OF STORIES CONNECTED BY THE SHAFT ENCLOSURE SHALL INCLUDE ANY BASEMENTS BUT NOT ANY MEZZANINES. SHAFT ENCLOSURES SHALL HAVE A FIRE-RESISTANCE RATING NOT LESS THAN THE FLOOR ASSEMBLY PENETRATED, BUT NEED NOT EXCEED 2 HOURS. SHAFT ENCLOSURES SHALL MEET THE REQUIREMENTS OF SECTION 703.2.1.

713.5 CONTINUITY. SHAFT ENCLOSURES SHALL BE CONSTRUCTED AS FIRE BARRIERS IN ACCORDANCE WITH SECTION 707 OR HORIZONTAL ASSEMBLIES CONSTRUCTED IN ACCORDANCE WITH SECTION 711, OR BOTH, AND SHALL HAVE CONTINUITY IN ACCORDANCE WITH SECTION 707.5 FOR FIRE BARRIERS OR SECTION 711.2.2 FOR HORIZONTAL ASSEMBLIES, AS APPLICABLE.

714.2 INSTALLATION. A LISTED PENETRATION FIRESTOP SYSTEM SHALL BE INSTALLED IN ACCORDANCE WITH THE MANUFACTURER'S INSTALLATION INSTRUCTIONS AND THE LISTING CRITERIA.

714.3 INSTALLATION DETAILS. WHERE SLEEVES ARE USED, THEY SHALL BE SECURELY FASTENED TO THE ASSEMBLY PENETRATED. THE SPACE BETWEEN THE ITEM CONTAINED IN THE SLEEVE AND THE SLEEVE ITSELF AND ANY SPACE BETWEEN THE SLEEVE AND THE ASSEMBLY PENETRATED SHALL BE PROTECTED IN ACCORDANCE WITH THIS SECTION. INSULATION AND COVERINGS ON OR IN THE PENETRATING ITEM SHALL NOT PENETRATE THE ASSEMBLY UNLESS THE SPECIFIC MATERIAL USED HAS BEEN TESTED AS PART OF THE ASSEMBLY IN ACCORDANCE WITH THIS SECTION.

714.4.1.1 FIRE-RESISTANCE-RATED ASSEMBLIES. THROUGH PENETRATIONS SHALL BE PROTECTED USING SYSTEMS INSTALLED AS TESTED IN THE APPROVED FIRE-RESISTANCE-RATED ASSEMBLY.

714.4.1.2 THROUGH-PENETRATION FIRESTOP SYSTEM. THROUGH PENETRATIONS SHALL BE PROTECTED BY AN APPROVED PENETRATION FIRESTOP SYSTEM INSTALLED AS TESTED IN ACCORDANCE WITH ASTM E814 OR UL 1479, WITH A MINIMUM POSITIVE PRESSURE DIFFERENTIAL OF 0.01 INCH OF WATER AND SHALL HAVE AN F RATING OF NOT LESS THAN THE REQUIRED FIRE-RESISTANCE RATING OF THE WALL PENETRATED.

714.4.3 DISSIMILAR MATERIALS. NONCOMBUSTIBLE PENETRATING ITEMS SHALL NOT CONNECT TO COMBUSTIBLE ITEMS BEYOND THE POINT OF FIRESTOPPING UNLESS IT CAN BE DEMONSTRATED THAT THE FIRE-RESISTANCE INTEGRITY OF THE WALL IS MAINTAINED.

714.5.1.1 FIRE-RESISTANCE-RATED ASSEMBLIES. THROUGH PENETRATIONS SHALL BE PROTECTED USING SYSTEMS INSTALLED AS TESTED IN THE APPROVED FIRE-RESISTANCE-RATED ASSEMBLY.

714.5.1.2 THROUGH-PENETRATION FIRESTOP SYSTEM. THROUGH PENETRATIONS SHALL BE PROTECTED BY AN APPROVED THROUGH-PENETRATION FIRESTOP SYSTEM INSTALLED AND TESTED IN ACCORDANCE WITH ASTM E814 OR UL 1479, WITH A MINIMUM POSITIVE PRESSURE DIFFERENTIAL OF 0.01 INCH OF WATER. THE SYSTEM SHALL HAVE AN F RATING/T RATING OF NOT LESS THAN 1 HOUR BUT NOT LESS THAN THE REQUIRED RATING OF THE FLOOR PENETRATED.

714.5.3 DISSIMILAR MATERIALS. NONCOMBUSTIBLE PENETRATING ITEMS SHALL NOT CONNECT TO COMBUSTIBLE MATERIALS BEYOND THE POINT OF FIRESTOPPING UNLESS IT CAN BE DEMONSTRATED THAT THE FIRE-RESISTANCE INTEGRITY OF THE HORIZONTAL ASSEMBLY IS MAINTAINED.

714.6.1 NONCOMBUSTIBLE PENETRATING ITEMS. NONCOMBUSTIBLE PENETRATING ITEMS THAT CONNECT NOT MORE THAN FIVE STORIES ARE PERMITTED, PROVIDED THAT THE ANNULAR SPACE IS FILLED TO RESIST THE FREE PASSAGE OF FLAME AND THE PRODUCTS OF COMBUSTION WITH AN APPROVED NONCOMBUSTIBLE MATERIAL OR WITH A FILL, VOID OR CAVITY MATERIAL THAT IS TESTED AND CLASSIFIED FOR USE IN THROUGH-PENETRATION FIRESTOP SYSTEMS.

714.6.2 PENETRATING ITEMS. PENETRATING ITEMS THAT CONNECT NOT MORE THAN TWO STORIES ARE PERMITTED, PROVIDED THAT THE ANNULAR SPACE IS FILLED WITH AN APPROVED MATERIAL TO RESIST THE FREE PASSAGE OF FLAME AND THE PRODUCTS OF COMBUSTION.

715.1 GENERAL. JOINTS INSTALLED IN OR BETWEEN FIRE-RESISTANCE-RATED WALLS, FLOOR OR FLOOR/CEILING ASSEMBLIES AND ROOFS OR ROOF/CEILING ASSEMBLIES SHALL BE PROTECTED BY AN APPROVED FIRE-RESISTANT JOINT SYSTEM DESIGNED TO RESIST THE PASSAGE OF FIRE FOR A TIME PERIOD NOT LESS THAN THE REQUIRED FIRE-RESISTANCE RATING OF THE WALL, FLOOR OR ROOF IN OR BETWEEN WHICH THE SYSTEM IS INSTALLED. FIRE-RESISTANT JOINT SYSTEMS SHALL BE TESTED IN ACCORDANCE WITH SECTION 715.3.

715.3 FIRE TEST CRITERIA. FIRE-RESISTANT JOINT SYSTEMS SHALL BE TESTED IN ACCORDANCE WITH THE REQUIREMENTS OF EITHER ASTM E1996 OR UL 2079. NONSYMMETRICAL WALL JOINT SYSTEMS SHALL BE TESTED WITH BOTH FACES EXPOSED TO THE FURNACE, AND THE ASSIGNED FIRE-RESISTANCE RATING SHALL BE THE SHORTEST DURATION OBTAINED FROM THE TWO TESTS. WHERE EVIDENCE IS FURNISHED TO SHOW THAT THE WALL WAS TESTED WITH THE LEAST FIRE-RESISTANT SIDE EXPOSED TO THE FURNACE, SUBJECT TO ACCEPTANCE OF THE BUILDING OFFICIAL, THE WALL NEED NOT BE SUBJECTED TO TESTS FROM THE OPPOSITE SIDE.

TABLE 716.1(2) OPENING FIRE PROTECTION ASSEMBLIES, RATINGS AND MARKINGS
FIRE BARRIERS - 1 HOUR WALL ASSEMBLY - 1 HOUR FIRE DOOR W/ 100 SQ. IN. MAX VISION PANEL (D-H-60)

TABLE 716.1(3) FIRE WINDOW ASSEMBLY FIRE PROTECTION RATINGS
ATRIUM SEPARATIONS - 1 HOUR WALL ASSEMBLY - 3/4 HOUR WINDOW ASSEMBLY W/ OH-45 OR W-60

716.2.6.1 DOOR CLOSING. FIRE DOORS SHALL BE LATCHING AND SELF OR AUTOMATIC CLOSING IN ACCORDANCE WITH THIS SECTION.

716.2.6.2 LATCH REQUIRED. UNLESS OTHERWISE SPECIFICALLY PERMITTED, SINGLE SIDE-HINGED SWINGING FIRE DOORS AND BOTH LEAVES OF PAIRS OF SIDE-HINGED SWINGING FIRE DOORS SHALL BE PROVIDED WITH AN ACTIVE LATCH BOLT THAT WILL SECURE THE DOOR WHEN IT IS CLOSED.

716.2.6.4 AUTOMATIC-CLOSING FIRE DOOR ASSEMBLIES. AUTOMATIC-CLOSING FIRE DOOR ASSEMBLIES SHALL BE SELF-CLOSING IN ACCORDANCE WITH NFPA 80.

716.2.6.5 DELAYED-ACTION CLOSERS. DOORS REQUIRED TO BE SELF-CLOSING AND NOT REQUIRED TO BE AUTOMATIC CLOSING SHALL BE PERMITTED TO BE EQUIPPED WITH DELAYED-ACTION CLOSERS.

716.2.9 LABELED PROTECTIVE ASSEMBLIES. FIRE DOOR ASSEMBLIES SHALL BE LABELED BY AN APPROVED AGENCY. THE LABEL SHALL COMPLY WITH NFPA 80, AND SHALL BE PERMANENTLY AFFIXED TO THE DOOR OR FRAME.

716.3.1 TESTING REQUIREMENTS. FIRE WINDOW ASSEMBLIES SHALL BE CONSTRUCTED OF ANY MATERIAL OR ASSEMBLY OF COMPONENT MATERIALS THAT CONFORMS TO THE TEST REQUIREMENTS OF SECTIONS 716.3.1.1 AND 716.1.2 AND THE FIRE PROTECTION RATING INDICATED IN TABLE 716.1(3).

716.3.2 PERFORMANCE REQUIREMENTS. FIRE WINDOW ASSEMBLIES SHALL BE INSTALLED IN THE ASSEMBLIES AND COMPLY WITH THE FIRE PROTECTION RATING SPECIFIED IN TABLE 716.1(3).

716.3.5 LABELED PROTECTIVE ASSEMBLIES. GLAZING IN FIRE WINDOW ASSEMBLIES SHALL BE LABELED BY AN APPROVED AGENCY. THE LABELS SHALL COMPLY WITH NFPA 80 AND SECTION 716.3.5.2.

716.3.5.2 LABELING REQUIREMENTS. FIRE-PROTECTION-RATED GLAZING SHALL BEAR A LABEL OR OTHER IDENTIFICATION SHOWING THE NAME OF THE MANUFACTURER, THE TEST STANDARD AND INFORMATION REQUIRED IN SECTION 716.1.2.2.2 AND TABLE 716.1(3) THAT SHALL BE ISSUED BY AN APPROVED AGENCY AND PERMANENTLY IDENTIFIED ON THE GLAZING.

717.5.2 FIRE BARRIERS. DUCTS AND AIR TRANSFER OPENINGS OF FIRE BARRIERS SHALL BE PROTECTED WITH LISTED FIRE DAMPERS INSTALLED IN ACCORDANCE WITH THEIR LISTING. DUCTS AND AIR TRANSFER OPENINGS SHALL NOT PENETRATE ENCLOSURES FOR INTERIOR EXIT STAIRWAYS AND RAMPS AND EXIT PASSAGEWAYS, EXCEPT AS PERMITTED BY SECTIONS 1023.5 AND 1024.6, RESPECTIVELY.

717.5.3 SHAFT ENCLOSURES. SHAFT ENCLOSURES THAT ARE PERMITTED TO BE PENETRATED BY DUCTS AND AIR TRANSFER OPENINGS SHALL BE PROTECTED WITH LISTED FIRE AND SMOKE DAMPERS INSTALLED IN ACCORDANCE WITH THEIR LISTING.

BC NYS CHAPTER 8 - INTERIOR FINISHES

TABLE 803.13 INTERIOR WALL AND CEILING FINISH REQUIREMENTS BY OCCUPANCY

A-3 - SPRINKLERED	- INTERIOR EXIT STAIRWAYS - B
	- CORRIDORS AND ENCLOSURE FOR EXIT ACCESS STAIRWAYS - B
	- ROOMS AND ENCLOSED SPACES - C
B - SPRINKLERED	- INTERIOR EXIT STAIRWAYS - B
	- CORRIDORS AND ENCLOSURE FOR EXIT ACCESS STAIRWAYS - C
	- ROOMS AND ENCLOSED SPACES - C
I-3 - SPRINKLERED	- INTERIOR EXIT STAIRWAYS - A
	- CORRIDORS AND ENCLOSURE FOR EXIT ACCESS STAIRWAYS - A
	- ROOMS AND ENCLOSED SPACES - C

804.4.2 MINIMUM CRITICAL RADIANT FLUX. IN ALL OCCUPANCIES, INTERIOR FLOOR FINISH AND FLOOR COVERING MATERIALS IN ENCLOSURES FOR STAIRWAYS AND RAMPS, EXIT PASSAGEWAYS, CORRIDORS AND ROOMS OR SPACES NOT SEPARATED FROM CORRIDORS BY PARTITIONS EXTENDING FROM THE FLOOR TO THE UNDERSIDE OF THE CEILING SHALL WITHSTAND A MINIMUM CRITICAL RADIANT FLUX. THE MINIMUM CRITICAL RADIANT FLUX SHALL BE NOT LESS THAN CLASS I IN GROUPS I-1, I-2 AND I-3 AND NOT LESS THAN CLASS II IN GROUPS A, B, E, H, I-4, M, R-1, R-2 AND S.
EXCEPTION: WHERE A BUILDING IS EQUIPPED THROUGHOUT WITH AN AUTOMATIC SPRINKLER SYSTEM IN ACCORDANCE WITH SECTION 903.3.1.1 OR 903.3.1.2, CLASS II MATERIALS ARE PERMITTED IN ANY AREA WHERE CLASS I MATERIALS ARE REQUIRED, AND MATERIALS COMPLYING WITH DOC FF-1 "PILL TEST" OR WITH ASTM D2859 ARE PERMITTED IN ANY AREA WHERE CLASS II MATERIALS ARE REQUIRED.

808.1.1 MATERIALS AND INSTALLATION. ACOUSTICAL MATERIALS COMPLYING WITH THE INTERIOR FINISH REQUIREMENTS OF SECTION 803 SHALL BE INSTALLED IN ACCORDANCE WITH THE MANUFACTURER'S RECOMMENDATIONS AND APPLICABLE PROVISIONS FOR APPLYING INTERIOR FINISH.

808.1.1.1 SUSPENDED ACOUSTICAL CEILINGS. SUSPENDED ACOUSTICAL CEILING SYSTEMS SHALL BE INSTALLED IN ACCORDANCE WITH THE PROVISIONS OF ASTM C635 AND ASTM C636.

808.1.1.2 FIRE-RESISTANCE-RATED CONSTRUCTION. ACOUSTICAL CEILING SYSTEMS THAT ARE PART OF FIRE-RESISTANCE-RATED CONSTRUCTION SHALL BE INSTALLED IN THE SAME MANNER USED IN THE ASSEMBLY TESTED AND SHALL COMPLY WITH THE PROVISIONS OF CHAPTER 7.

BC NYS CHAPTER 9 - FIRE PROTECTION AND LIFE SAFETY SYSTEMS

903.2.1.3 GROUP A-3. AN AUTOMATIC SPRINKLER SYSTEM SHALL BE PROVIDED THROUGHOUT STORIES CONTAINING GROUP A-3 OCCUPANCIES AND THROUGHOUT ALL STORIES FROM THE GROUP A-3 OCCUPANCY TO AND INCLUDING THE LEVELS OF EXIT DISCHARGE SERVING THAT OCCUPANCY WHERE ONE OF THE FOLLOWING CONDITIONS EXISTS:
1. THE FIRE AREA EXCEEDS 12,000 SQUARE FEET.
2. THE FIRE AREA HAS AN OCCUPANT LOAD OF 300 OR MORE.
3. THE FIRE AREA IS LOCATED ON A FLOOR OTHER THAN A LEVEL OF EXIT DISCHARGE SERVING SUCH OCCUPANCIES.

903.2.6 GROUP I. AN AUTOMATIC SPRINKLER SYSTEM SHALL BE PROVIDED THROUGHOUT BUILDINGS WITH A GROUP I FIRE AREA.

903.3.1.1 NFPA 13 SPRINKLER SYSTEMS. WHERE THE PROVISIONS OF THIS CODE REQUIRE THAT A BUILDING OR PORTION THEREOF BE EQUIPPED THROUGHOUT WITH AN AUTOMATIC SPRINKLER SYSTEM IN ACCORDANCE WITH THIS SECTION, SPRINKLERS SHALL BE INSTALLED THROUGHOUT IN ACCORDANCE WITH NFPA 13 EXCEPT AS PROVIDED IN SECTIONS 903.3.1.1.1 AND 903.3.1.1.2.

906.1 WHERE REQUIRED. PORTABLE FIRE EXTINGUISHERS SHALL BE INSTALLED IN ALL OF THE FOLLOWING LOCATIONS:
1. IN GROUP A, B, E, F, H, I, M, R-1, R-2, R-4 AND S OCCUPANCIES.
4. ON EACH FLOOR OF STRUCTURES UNDER CONSTRUCTION, EXCEPT GROUP R-3 OCCUPANCIES, IN ACCORDANCE WITH SECTION 3315.1 OF THE FIRE CODE OF NEW YORK STATE.
5. WHERE REQUIRED BY THE FIRE CODE OF NEW YORK STATE SECTIONS INDICATED IN TABLE 906.1.

906.2 GENERAL REQUIREMENTS. PORTABLE FIRE EXTINGUISHERS SHALL BE SELECTED AND INSTALLED IN ACCORDANCE WITH THIS SECTION AND NFPA 10.

906.3 SIZE AND DISTRIBUTION. THE SIZE AND DISTRIBUTION OF PORTABLE FIRE EXTINGUISHERS SHALL BE IN ACCORDANCE WITH SECTIONS 906.3.1 THROUGH 906.3.4.

TABLE 906.3(1) FIRE EXTINGUISHERS FOR CLASS A FIRE HAZARDS (ORDINARY HAZARD OCCUPANCY)

MINIMUM-RATED SINGLE EXTINGUISHER	- 2-A
MAXIMUM FLOOR AREA PER UNIT OF A	- 1,500 SQUARE FEET
MAXIMUM FLOOR AREA FOR EXTINGUISHER	- 11,250 SQUARE FEET
MAXIMUM DISTANCE OF TRAVEL TO EXTINGUISHER	- 75 FEET

907.2 WHERE REQUIRED - NEW BUILDINGS AND STRUCTURES. AN APPROVED FIRE ALARM SYSTEM INSTALLED IN ACCORDANCE WITH THE PROVISIONS OF THIS CODE AND NFPA 72 SHALL BE PROVIDED IN NEW BUILDINGS AND STRUCTURES IN ACCORDANCE WITH SECTIONS 907.2.1 THROUGH 907.2.23 AND PROVIDE OCCUPANT NOTIFICATION IN ACCORDANCE WITH SECTION 907.5, UNLESS OTHER REQUIREMENTS ARE PROVIDED BY ANOTHER SECTION OF THIS CODE.

NOT FEWER THAN ONE MANUAL FIRE ALARM BOX SHALL BE PROVIDED IN AN APPROVED LOCATION TO INITIATE A FIRE ALARM SIGNAL FOR FIRE ALARM SYSTEMS EMPLOYING AUTOMATIC FIRE DETECTORS OR WATERFLOW DETECTION DEVICES. WHERE OTHER SECTIONS OF THIS CODE ALLOW ELIMINATION OF FIRE ALARM BOXES DUE TO SPRINKLERS, A SINGLE FIRE ALARM BOX SHALL BE INSTALLED.

907.2.1 GROUP A. A MANUAL FIRE ALARM SYSTEM THAT ACTIVATES THE OCCUPANT NOTIFICATION SYSTEM IN ACCORDANCE WITH SECTION 907.5 SHALL BE INSTALLED IN GROUP A OCCUPANCIES WHERE THE OCCUPANT LOAD DUE TO THE ASSEMBLY OCCUPANCY IS 300 OR MORE, OR WHERE THE GROUP A OCCUPANT LOAD IS MORE THAN 100 PERSONS ABOVE OR BELOW THE LOWEST LEVEL OF EXIT DISCHARGE. GROUP A OCCUPANCIES NOT SEPARATED FROM ONE ANOTHER IN ACCORDANCE WITH SECTION 707.3.10 SHALL BE CONSIDERED AS A SINGLE OCCUPANCY FOR THE PURPOSES OF APPLYING THIS SECTION. PORTIONS OF GROUP E OCCUPANCIES OCCUPIED FOR ASSEMBLY PURPOSES SHALL BE PROVIDED WITH A FIRE ALARM SYSTEM AS REQUIRED FOR THE GROUP E OCCUPANCY.

907.2.1.3 AUTOMATIC SMOKE DETECTION SYSTEM. A SMOKE DETECTION SYSTEM THAT ACTIVATES THE OCCUPANT NOTIFICATION SYSTEM IN ACCORDANCE WITH SECTION 907.5 SHALL BE INSTALLED IN GROUP A OCCUPANCIES UNLESS THE FIRE AREA IS PROTECTED WITH AN AUTOMATIC FIRE SPRINKLER SYSTEM, THAT ACTIVATES THE OCCUPANT NOTIFICATION SYSTEM, INSTALLED IN ACCORDANCE WITH SECTION 903.3.1.1.

907.2.6.3 GROUP I-3 OCCUPANCIES. GROUP I-3 OCCUPANCIES SHALL BE EQUIPPED WITH A MANUAL FIRE ALARM SYSTEM AND AUTOMATIC SMOKE DETECTION SYSTEM INSTALLED FOR ALERTING STAFF.

907.2.6.3.1 SYSTEM INITIATION. ACTUATION OF AN AUTOMATIC FIRE-EXTINGUISHING SYSTEM, AUTOMATIC SPRINKLER SYSTEM, A MANUAL FIRE ALARM BOX OR A FIRE DETECTOR SHALL INITIATE AN APPROVED FIRE ALARM SIGNAL THAT AUTOMATICALLY NOTIFIES STAFF.

907.2.6.3.2 MANUAL FIRE ALARM BOXES. MANUAL FIRE ALARM BOXES ARE NOT REQUIRED TO BE LOCATED IN ACCORDANCE WITH SECTION 907.4.2 WHERE THE FIRE ALARM BOXES ARE PROVIDED AT STAFF-ATTENDED LOCATIONS HAVING DIRECT SUPERVISION OVER AREAS WHERE MANUAL FIRE ALARM BOXES HAVE BEEN OMITTED.

907.2.6.3.2.1 MANUAL FIRE ALARM BOXES IN DETAINEE AREAS. MANUAL FIRE ALARM BOXES ARE ALLOWED TO BE LOCKED IN AREAS OCCUPIED BY DETAINEES, PROVIDED THAT STAFF MEMBERS ARE PRESENT WITHIN THE SUBJECT AREA AND HAVE KEYS READILY AVAILABLE TO OPERATE THE MANUAL FIRE ALARM BOXES.

IT IS A VIOLATION OF THE NEW YORK STATE EDUCATION LAW, ARTICLE 145 §7209 SPECIAL PROVISIONS, FOR ANY PERSON, UNLESS THEY ARE ACTING UNDER THE DIRECTION OF A LICENSED PROFESSIONAL ENGINEER, ARCHITECT, LANDSCAPE ARCHITECT, OR LAND SURVEYOR, TO ALTER AN ITEM IN ANY WAY. IF AN ITEM BEARING THE STAMP OF A LICENSED PROFESSIONAL IS ALTERED, THE ALTERING PROFESSIONAL SHALL STAMP THE DOCUMENT AND INCLUDE THE NOTATION "ALTERED BY" FOLLOWED BY THEIR SIGNATURE, THE DATE OF SUCH ALTERATION, AND A SPECIFIC DESCRIPTION OF THE ALTERATION.

REVISIONS

CITY OF MIDDLETOWN
NEW COURTHOUSE FACILITY
ORANGE COUNTY, NEW YORK

CODE REVIEW

CITY OF MIDDLETOWN

Barton & Loguidice
443 Electronics Parkway
Liverpool, NY 13088
NYS CERTIFICATE #
0021642, 0020588, 0019903, 0019905, 0020336

STATE OF NEW YORK · MATTHEW C. FULLER · LICENSED PROFESSIONAL ENGINEER · 070743

NYS EXP.:

Date: AUGUST, 2024
Scale: AS SHOWN
Sheet Number: A005
Project Number: 1753.008.001

Plotted: 8/21/2024 4:25:53 PM
C:\Users\cgardner\Documents\Middletown Courthouse 6.22.21 Central File - ARCHITECTURAL STRUCTURAL MODEL_cgardner05.rvt
Checked by ZDC
Drawn by JDC
Designed by JDC
In Charge of TRB

907.3 FIRE SAFETY FUNCTIONS. AUTOMATIC FIRE DETECTORS UTILIZED FOR THE PURPOSE OF PERFORMING FIRE SAFETY FUNCTIONS SHALL BE CONNECTED TO THE BUILDING'S FIRE ALARM CONTROL UNIT WHERE A FIRE ALARM SYSTEM IS REQUIRED BY SECTION 907.2. DETECTORS SHALL, UPON ACTUATION, PERFORM THE INTENDED FUNCTION AND ACTIVATE THE ALARM NOTIFICATION APPLIANCES OR ACTIVATE A VISIBLE AND AUDIBLE SUPERVISORY SIGNAL AT A CONSTANTLY ATTENDED LOCATION. IN BUILDINGS NOT EQUIPPED WITH A FIRE ALARM SYSTEM, THE AUTOMATIC FIRE DETECTOR SHALL BE POWERED BY NORMAL ELECTRICAL SERVICE AND, UPON ACTUATION, PERFORM THE INTENDED FUNCTION. THE DETECTORS SHALL BE LOCATED IN ACCORDANCE WITH NFPA 72.

907.3.1 DUCT SMOKE DETECTORS. SMOKE DETECTORS INSTALLED IN DUCTS SHALL BE LISTED FOR THE AIR VELOCITY, TEMPERATURE AND HUMIDITY PRESENT IN THE DUCT. DUCT SMOKE DETECTORS SHALL BE CONNECTED TO THE BUILDING'S FIRE ALARM CONTROL UNIT WHERE A FIRE ALARM SYSTEM IS REQUIRED BY SECTION 907.2. ACTIVATION OF A DUCT SMOKE DETECTOR SHALL INITIATE A VISIBLE AND AUDIBLE SUPERVISORY SIGNAL AT A CONSTANTLY ATTENDED LOCATION AND SHALL PERFORM THE INTENDED FIRE SAFETY FUNCTION IN ACCORDANCE WITH THIS CODE AND THE MECHANICAL CODE OF NEW YORK STATE. IN FACILITIES THAT ARE REQUIRED TO BE MONITORED BY A SUPERVISING STATION, DUCT SMOKE DETECTORS SHALL REPORT ONLY AS A SUPERVISORY SIGNAL AND NOT AS A FIRE ALARM. THEY SHALL NOT BE USED AS A SUBSTITUTE FOR REQUIRED OPEN AREA DETECTION.

907.3.2 SPECIAL LOCKING SYSTEMS. WHERE SPECIAL LOCKING SYSTEMS ARE INSTALLED ON MEANS OF EGRESS DOORS IN ACCORDANCE WITH SECTIONS 1010.1.9.7 OR 1010.1.9.8, AN AUTOMATIC DETECTION SYSTEM SHALL BE INSTALLED AS REQUIRED BY THAT SECTION.

907.3.3 ELEVATOR EMERGENCY OPERATION. AUTOMATIC FIRE DETECTORS INSTALLED FOR ELEVATOR EMERGENCY OPERATION SHALL BE INSTALLED IN ACCORDANCE WITH THE PROVISIONS OF ASME A17.1/CSA B44 AND NFPA 72.

907.3.4 WIRING. THE WIRING TO THE AUXILIARY DEVICES AND EQUIPMENT USED TO ACCOMPLISH THE FIRE SAFETY FUNCTIONS SHALL BE MONITORED FOR INTEGRITY IN ACCORDANCE WITH NFPA 72.

907.4.1 PROTECTION OF FIRE ALARM CONTROL UNIT. IN AREAS THAT ARE NOT CONTINUOUSLY OCCUPIED, A SINGLE SMOKE DETECTOR SHALL BE PROVIDED AT THE LOCATION OF EACH FIRE ALARM CONTROL UNIT, NOTIFICATION APPLIANCE CIRCUIT POWER EXTENDERS, AND SUPERVISING STATION TRANSMITTING EQUIPMENT.

907.4.2.1 LOCATION. MANUAL FIRE ALARM BOXES SHALL BE LOCATED NOT MORE THAN 5 FEET FROM THE ENTRANCE TO EACH EXIT. IN BUILDINGS NOT PROTECTED BY AN AUTOMATIC SPRINKLER SYSTEM IN ACCORDANCE WITH SECTION 903.3.1.1 OR 903.3.1.2, ADDITIONAL MANUAL FIRE ALARM BOXES SHALL BE LOCATED SO THAT THE DISTANCE OF TRAVEL TO THE NEAREST BOX DOES NOT EXCEED 200 FEET.

907.4.2.2 HEIGHT. THE HEIGHT OF THE MANUAL FIRE ALARM BOXES SHALL BE NOT LESS THAN 42 INCHES AND NOT MORE THAN 48 INCHES MEASURED VERTICALLY, FROM THE FLOOR LEVEL TO THE ACTIVATING HANDLE OR LEVER OF THE BOX.

907.4.3 AUTOMATIC SMOKE DETECTION. WHERE AN AUTOMATIC SMOKE DETECTION SYSTEM IS REQUIRED IT SHALL UTILIZE SMOKE DETECTORS UNLESS AMBIENT CONDITIONS PROHIBIT SUCH AN INSTALLATION. IN SPACES WHERE SMOKE DETECTORS CANNOT BE UTILIZED DUE TO AMBIENT CONDITIONS, APPROVED AUTOMATIC HEAT DETECTORS SHALL BE PERMITTED.

907.5 OCCUPANT NOTIFICATION SYSTEMS. A FIRE ALARM SYSTEM SHALL ANNUNCIATE AT THE FIRE ALARM CONTROL UNIT AND SHALL INITIATE OCCUPANT NOTIFICATION UPON ACTIVATION, IN ACCORDANCE WITH SECTIONS 907.5.1 THROUGH 907.5.2.3.3. WHERE A FIRE ALARM SYSTEM IS REQUIRED BY ANOTHER SECTION OF THIS CODE, IT SHALL BE ACTIVATED BY:
1. AUTOMATIC FIRE DETECTORS.
2. AUTOMATIC SPRINKLER SYSTEM WATERFLOW DEVICES.
3. MANUAL FIRE ALARM BOXES.

907.5.2.1 AUDIBLE ALARMS. AUDIBLE ALARM NOTIFICATION APPLIANCES SHALL BE PROVIDED AND EMIT A DISTINCTIVE SOUND THAT IS NOT TO BE USED FOR ANY PURPOSE OTHER THAN THAT OF A FIRE ALARM.

907.5.2.2 EMERGENCY VOICE/ALARM COMMUNICATION SYSTEMS. EMERGENCY VOICE/ALARM COMMUNICATION SYSTEMS REQUIRED BY THIS CODE SHALL BE DESIGNED AND INSTALLED IN ACCORDANCE WITH NFPA 72. THE OPERATION OF ANY AUTOMATIC FIRE DETECTOR, SPRINKLER WATERFLOW DEVICE OR MANUAL FIRE ALARM BOX SHALL AUTOMATICALLY SOUND AN ALERT TONE FOLLOWED BY VOICE INSTRUCTIONS GIVING APPROVED INFORMATION AND DIRECTIONS FOR A GENERAL OR STAGED EVACUATION IN ACCORDANCE WITH THE BUILDING'S FIRE SAFETY AND EVACUATION PLANS REQUIRED BY SECTION 404 OF THE FIRE CODE OF NEW YORK STATE. IN HIGH-RISE BUILDINGS, THE SYSTEM SHALL OPERATE ON AT LEAST THE ALARMING FLOOR, THE FLOOR ABOVE AND THE FLOOR BELOW. SPEAKERS SHALL BE PROVIDED THROUGHOUT THE BUILDING BY PAGING ZONES. AT A MINIMUM, PAGING ZONES SHALL BE PROVIDED AS FOLLOWS:
1. ELEVATOR GROUPS.
2. INTERIOR EXIT STAIRWAYS.
3. EACH FLOOR.
4. AREAS OF REFUGE AS DEFINED IN CHAPTER 2.

907.5.2.2.5 EMERGENCY POWER. EMERGENCY VOICE/ALARM COMMUNICATIONS SYSTEMS SHALL BE PROVIDED WITH EMERGENCY POWER IN ACCORDANCE WITH SECTION 2702. THE SYSTEM SHALL BE CAPABLE OF POWERING THE REQUIRED LOAD FOR A DURATION OF NOT LESS THAN 24 HOURS, AS REQUIRED IN NFPA 72.

907.5.2.3.1 PUBLIC USE AREAS AND COMMON USE AREAS. VISIBLE ALARM NOTIFICATION APPLIANCES SHALL BE PROVIDED IN PUBLIC USE AREAS AND COMMON USE AREAS.

907.6.1 WIRING. WIRING SHALL COMPLY WITH THE REQUIREMENTS OF NFPA 70 AND NFPA 72. WIRELESS PROTECTION SYSTEMS UTILIZING RADIO-FREQUENCY TRANSMITTING DEVICES SHALL COMPLY WITH THE SPECIAL REQUIREMENTS FOR SUPERVISION OF LOW-POWER WIRELESS SYSTEMS IN NFPA 72.

907.6.2 POWER SUPPLY. THE PRIMARY AND SECONDARY POWER SUPPLY FOR THE FIRE ALARM SYSTEM SHALL BE PROVIDED IN ACCORDANCE WITH NFPA 72.

907.6.3 INITIATING DEVICE IDENTIFICATION. THE FIRE ALARM SYSTEM SHALL IDENTIFY THE SPECIFIC INITIATING DEVICE ADDRESS, LOCATION, DEVICE TYPE, FLOOR LEVEL WHERE APPLICABLE AND STATUS INCLUDING INDICATION OF NORMAL, ALARM, TROUBLE AND SUPERVISORY STATUS, AS APPROPRIATE.

907.6.3.1 ANNUNCIATION. THE INITIATING DEVICE STATUS SHALL BE ANNUNCIATED AT AN APPROVED ON-SITE LOCATION.

907.6.4 ZONES. EACH FLOOR SHALL BE ZONED SEPARATELY AND A ZONE SHALL NOT EXCEED 22,500 SQUARE FEET. THE LENGTH OF ANY ZONE SHALL NOT EXCEED 300 FEET IN ANY DIRECTION.

907.6.4.1 ZONING INDICATOR PANEL. A ZONING INDICATOR PANEL AND THE ASSOCIATED CONTROLS SHALL BE PROVIDED IN AN APPROVED LOCATION. THE VISUAL ZONE INDICATION SHALL LOCK IN UNTIL THE SYSTEM IS RESET AND SHALL NOT BE CANCELED BY THE OPERATION OF AN AUDIBLE-ALARM SILENCING SWITCH.

907.6.5 ACCESS. ACCESS SHALL BE PROVIDED TO EACH FIRE ALARM DEVICE AND NOTIFICATION APPLIANCE FOR PERIODIC INSPECTION, MAINTENANCE AND TESTING.

907.6.6 MONITORING. FIRE ALARM SYSTEMS REQUIRED BY THIS CHAPTER OR BY THE FIRE CODE OF NEW YORK STATE SHALL BE MONITORED BY AN APPROVED SUPERVISING STATION IN ACCORDANCE WITH NFPA 72.

907.6.6.1 AUTOMATIC TELEPHONE-DIALING DEVICES. AUTOMATIC TELEPHONE-DIALING DEVICES USED TO TRANSMIT AN EMERGENCY ALARM SHALL NOT BE CONNECTED TO ANY FIRE DEPARTMENT TELEPHONE NUMBER UNLESS APPROVED BY THE FIRE CHIEF.

907.6.6.2 TERMINATION OF MONITORING SERVICE. TERMINATION OF FIRE ALARM MONITORING SERVICES SHALL BE IN ACCORDANCE WITH SECTION 901.9 OF THE FIRE CODE OF NEW YORK STATE.

907.7 ACCEPTANCE TESTS AND COMPLETION. UPON COMPLETION OF THE INSTALLATION, THE FIRE ALARM SYSTEM AND ALL FIRE ALARM COMPONENTS SHALL BE TESTED IN ACCORDANCE WITH NFPA 72.

907.8 INSPECTION, TESTING AND MAINTENANCE. THE MAINTENANCE AND TESTING SCHEDULES AND PROCEDURES FOR FIRE ALARM AND FIRE DETECTION SYSTEMS SHALL BE IN ACCORDANCE WITH SECTION 907.8 OF THE FIRE CODE OF NEW YORK STATE AND NFPA 72.

912.2 LOCATION. WITH RESPECT TO HYDRANTS, DRIVEWAYS, BUILDINGS AND LANDSCAPING, FIRE DEPARTMENT CONNECTIONS SHALL BE SO LOCATED THAT FIRE APPARATUS AND HOSE CONNECTED TO SUPPLY THE SYSTEM WILL NOT OBSTRUCT ACCESS TO THE BUILDINGS FOR OTHER FIRE APPARATUS. THE LOCATION OF FIRE DEPARTMENT CONNECTIONS SHALL BE APPROVED BY THE FIRE CODE OFFICIAL.

912.2.2 EXISTING BUILDINGS. ON EXISTING BUILDINGS, WHEREVER THE FIRE DEPARTMENT CONNECTION IS NOT VISIBLE TO APPROACHING FIRE APPARATUS, THE FIRE DEPARTMENT CONNECTION SHALL BE INDICATED BY AN APPROVED SIGN MOUNTED ON THE STREET FRONT OR ON THE SIDE OF THE BUILDING. SUCH SIGN SHALL HAVE THE LETTERS "FDC" NOT LESS THAN 6 INCHES HIGH AND WORDS IN LETTERS NOT LESS THAN 2 INCHES HIGH OR AN ARROW TO INDICATE THE LOCATION. SUCH SIGNS SHALL BE SUBJECT TO THE APPROVAL OF THE FIRE CODE OFFICIAL.

912.3 FIRE HOSE THREADS. FIRE HOSE THREADS USED IN CONNECTION WITH STANDPIPE SYSTEMS SHALL BE APPROVED AND SHALL BE COMPATIBLE WITH FIRE DEPARTMENT HOSE THREADS.

912.4 ACCESS. IMMEDIATE ACCESS TO FIRE DEPARTMENT CONNECTIONS SHALL BE MAINTAINED AT ALL TIMES AND WITHOUT OBSTRUCTION BY FENCES, BUSHES, TREES, WALLS OR ANY OTHER FIXED OR MOVEABLE OBJECT. ACCESS TO FIRE DEPARTMENT CONNECTIONS SHALL BE APPROVED BY THE FIRE CODE OFFICIAL.

912.5 SIGNS. A METAL SIGN WITH RAISED LETTERS NOT LESS THAN 1 INCH IN SIZE SHALL BE MOUNTED ON ALL FIRE DEPARTMENT CONNECTIONS SERVING AUTOMATIC SPRINKLERS, STANDPIPES OR FIRE PUMP CONNECTIONS. SUCH SIGNS SHALL READ: AUTOMATIC SPRINKLERS OR STANDPIPES OR TEST CONNECTION OR A COMBINATION THEREOF AS APPLICABLE. WHERE THE FIRE DEPARTMENT CONNECTION DOES NOT SERVE THE ENTIRE BUILDING, A SIGN SHALL BE PROVIDED INDICATING THE PORTIONS OF THE BUILDING SERVED.

912.6 BACKFLOW PROTECTION. THE POTABLE WATER SUPPLY TO AUTOMATIC SPRINKLER AND STANDPIPE SYSTEMS SHALL BE PROTECTED AGAINST BACKFLOW AS REQUIRED BY THE PLUMBING CODE OF NEW YORK STATE.

914.2 EQUIPMENT ROOM IDENTIFICATION. FIRE PROTECTION EQUIPMENT SHALL BE IDENTIFIED IN AN APPROVED MANNER. ROOMS CONTAINING CONTROLS FOR AIR-CONDITIONING SYSTEMS, SPRINKLER RISERS AND VALVES OR OTHER FIRE DETECTION, SUPPRESSION OR CONTROL ELEMENTS SHALL BE IDENTIFIED FOR THE USE OF THE FIRE DEPARTMENT. APPROVED SIGNS REQUIRED TO IDENTIFY FIRE PROTECTION EQUIPMENT AND EQUIPMENT LOCATION SHALL BE CONSTRUCTED OF DURABLE MATERIALS, PERMANENTLY INSTALLED AND READILY VISIBLE.

915.1 GENERAL. CARBON MONOXIDE ALARMS AND CARBON MONOXIDE DETECTION SHALL BE INSTALLED IN NEW AND EXISTING BUILDINGS IN ACCORDANCE WITH SECTION 915 OF THE FIRE CODE OF NEW YORK STATE.

BC NYS CHAPTER 10 - MEANS OF EGRESS

1003.2 CEILING HEIGHT. THE MEANS OF EGRESS SHALL HAVE A CEILING HEIGHT OF NOT LESS THAN 7 FEET 6 INCHES ABOVE THE FINISHED FLOOR.

1004.1 DESIGN OCCUPANT LOAD. IN DETERMINING MEANS OF EGRESS REQUIREMENTS, THE NUMBER OF OCCUPANTS FOR WHOM MEANS OF EGRESS FACILITIES ARE PROVIDED SHALL BE DETERMINED IN ACCORDANCE WITH THIS SECTION.

OCCUPANT LOAD CALCULATIONS

FIRST FLOOR		
A-3 OCCUPANCY	= (800 NET SF/40 SF/OCCUPANT) + 56 OCCUPANTS (FIXED SEATING)	= 76 OCCUPANTS
B OCCUPANCY	= 5,390 GROSS SF/150 SF/OCCUPANT	= 36 OCCUPANTS
I-3 OCCUPANCY	= 20 SF/OCCUPANT IN HOLDING FACILITIES (MCKINNEY)	= 17 OCCUPANTS
SECOND FLOOR		
A-3 OCCUPANCY	= (372 NET SF/40 SF/OCCUPANT) + 27 OCCUPANTS (FIXED SEATING)	= 37 OCCUPANTS
B OCCUPANCY	= 4,116 GROSS SF/150 SF/OCCUPANT	= 28 OCCUPANTS
TOTAL BUILDING OCCUPANCY		**=194 OCCUPANTS**

1005.3.1 STAIRWAYS. THE CAPACITY, IN INCHES, OF MEANS OF EGRESS STAIRWAYS SHALL BE CALCULATED BY MULTIPLYING THE OCCUPANT LOAD SERVED BY SUCH STAIRWAYS BY A MEANS OF EGRESS CAPACITY FACTOR OF 0.3 INCH PER OCCUPANT. WHERE STAIRWAYS SERVE MORE THAN ONE STORY, ONLY THE OCCUPANT LOAD OF EACH STORY CONSIDERED INDIVIDUALLY SHALL BE USED IN CALCULATING THE REQUIRED CAPACITY OF THE STAIRWAYS SERVING THAT STORY.

EXCEPTIONS:
FOR OTHER THAN GROUP H AND I-2 OCCUPANCIES, THE CAPACITY, IN INCHES, OF MEANS OF EGRESS STAIRWAYS SHALL BE CALCULATED BY MULTIPLYING THE OCCUPANT LOAD SERVED BY SUCH STAIRWAYS BY A MEANS OF EGRESS CAPACITY FACTOR OF 0.2 INCH PER OCCUPANT IN BUILDINGS EQUIPPED THROUGHOUT WITH AN AUTOMATIC SPRINKLER SYSTEM INSTALLED IN ACCORDANCE WITH SECTION 903.3.1.1 OR 903.3.1.2 AND AN EMERGENCY VOICE/ALARM COMMUNICATION SYSTEM IN ACCORDANCE WITH SECTION 907.5.2.2.

1005.3.2 OTHER EGRESS COMPONENTS. THE CAPACITY, IN INCHES, OF MEANS OF EGRESS COMPONENTS OTHER THAN STAIRWAYS SHALL BE CALCULATED BY MULTIPLYING THE OCCUPANT LOAD SERVED BY SUCH COMPONENT BY A MEANS OF EGRESS CAPACITY FACTOR OF 0.2 INCH PER OCCUPANT.

EXCEPTIONS:
FOR OTHER THAN GROUP H AND I-2 OCCUPANCIES, THE CAPACITY, IN INCHES, OF MEANS OF EGRESS COMPONENTS OTHER THAN STAIRWAYS SHALL BE CALCULATED BY MULTIPLYING THE OCCUPANT LOAD SERVED BY SUCH COMPONENT BY A MEANS OF EGRESS CAPACITY FACTOR OF 0.15 INCH PER OCCUPANT IN BUILDINGS EQUIPPED THROUGHOUT WITH AN AUTOMATIC SPRINKLER SYSTEM INSTALLED IN ACCORDANCE WITH SECTION 903.3.1.1 OR 903.3.1.2 AND AN EMERGENCY VOICE/ALARM COMMUNICATION SYSTEM IN ACCORDANCE WITH SECTION 907.5.2.2.

TABLE 1006.2.1 SPACES WITH ONE EXIT OR EXIT ACCESS DOORWAY
A - MAX. OCCUPANT LOAD OF 49 - MAX. COMMON PATH OF EGRESS TRAVEL DISTANCE - 75 FEET
B - MAX OCCUPANT LOAD OF 49 - MAX. COMMON PATH OF EGRESS TRAVEL DISTANCE - 100 FEET
I-3 - MAX OCCUPANT LOAD OF 10 - MAX. COMMON PATH OF EGRESS TRAVEL DISTANCE - 100 FEET

TABLE 1006.3.2 MINIMUM NUMBER OF EXITS OR ACCESS TO EXITS PER STORY
1-500 OCCUPANTS - 2 EXITS OR ACCESS TO EXITS FROM STORY

1008.2 ILLUMINATION REQUIRED: THE MEANS OF EGRESS SERVING A ROOM OR SPACE SHALL BE ILLUMINATED AT ALL TIMES THAT THE ROOM OR SPACE IS OCCUPIED.

1008.3.1 GENERAL. IN THE EVENT OF POWER SUPPLY FAILURE IN ROOMS AND SPACES THAT REQUIRE TWO OR MORE MEANS OF EGRESS, AN EMERGENCY ELECTRICAL SYSTEM SHALL AUTOMATICALLY ILLUMINATE ALL OF THE FOLLOWING AREAS:
1. AISLES.
2. CORRIDORS.
3. EXIT ACCESS STAIRWAYS AND RAMPS.

1008.3.2 BUILDINGS. IN THE EVENT OF POWER SUPPLY FAILURE IN BUILDINGS THAT REQUIRE TWO OR MORE MEANS OF EGRESS, AN EMERGENCY ELECTRICAL SYSTEM SHALL AUTOMATICALLY ILLUMINATE ALL OF THE FOLLOWING AREAS:
1. INTERIOR EXIT ACCESS STAIRWAYS AND RAMPS.
2. INTERIOR AND EXTERIOR EXIT STAIRWAYS AND RAMPS.
3. EXIT PASSAGEWAYS.
4. VESTIBULES AND AREAS ON THE LEVEL OF DISCHARGE USED FOR EXIT DISCHARGE IN ACCORDANCE WITH SECTION 1028.1.
5. EXTERIOR LANDINGS AS REQUIRED BY SECTION 1010.1.6 FOR EXIT DOORWAYS THAT LEAD DIRECTLY TO THE EXIT DISCHARGE.

1008.3.3 ROOMS AND SPACES. IN THE EVENT OF POWER SUPPLY FAILURE, AN EMERGENCY ELECTRICAL SYSTEM SHALL AUTOMATICALLY ILLUMINATE ALL OF THE FOLLOWING AREAS:
1. ELECTRICAL EQUIPMENT ROOMS.
2. FIRE COMMAND CENTERS.
3. FIRE PUMP ROOMS.
4. GENERATOR ROOMS.
5. PUBLIC RESTROOMS WITH AN AREA GREATER THAN 300 SQUARE FEET.

1008.3.5 ILLUMINATION LEVEL UNDER EMERGENCY POWER: EMERGENCY LIGHTING FACILITIES SHALL BE ARRANGED TO PROVIDE INITIAL ILLUMINATION THAT IS NOT LESS THAN AN AVERAGE OF 1 FOOTCANDLE AND A MINIMUM AT ANY POINT OF 0.1 FOOTCANDLE MEASURED ALONG THE PATH OF EGRESS AT FLOOR LEVEL. ILLUMINATION LEVELS SHALL BE PERMITTED TO DECLINE TO 0.6 FOOTCANDLE AVERAGE AND A MINIMUM AT ANY POINT OF 0.06 FOOTCANDLE AT THE END OF THE EMERGENCY LIGHTING TIME DURATION. A MAXIMUM-TO-MINIMUM ILLUMINATION UNIFORMITY RATIO OF 40 TO 1 SHALL NOT BE EXCEEDED. IN GROUP I-2 OCCUPANCIES, FAILURE OF A SINGLE LAMP IN A LUMINAIRE SHALL NOT REDUCE THE ILLUMINATION LEVEL TO LESS THAN 0.2 FOOTCANDLE.

1012.2 SLOPE. RAMPS USED AS PART OF A MEANS OF EGRESS SHALL HAVE A RUNNING SLOPE NOT STEEPER THAN ONE UNIT VERTICAL IN 12 UNITS HORIZONTAL (8-PERCENT SLOPE). THE SLOPE OF OTHER PEDESTRIAN RAMPS SHALL NOT BE STEEPER THAN ONE UNIT VERTICAL IN EIGHT UNITS HORIZONTAL (12.5-PERCENT SLOPE).

1012.5.1 WIDTH AND CAPACITY. THE MINIMUM WIDTH AND REQUIRED CAPACITY OF A MEANS OF EGRESS RAMP SHALL BE NOT LESS THAN THAT REQUIRED FOR CORRIDORS BY SECTION 1020.2. THE CLEAR WIDTH OF A RAMP BETWEEN HANDRAILS, IF PROVIDED, OR OTHER PERMISSIBLE PROJECTIONS SHALL BE 36 INCHES MINIMUM.

1012.6.2 WIDTH. THE LANDING WIDTH SHALL BE NOT LESS THAN THE WIDTH OF THE WIDEST RAMP RUN ADJOINING THE LANDING.

1012.6.3 LENGTH. THE LANDING LENGTH SHALL BE 60 INCHES MINIMUM.

1012.6.4 CHANGE IN DIRECTION. WHERE CHANGES IN DIRECTION OF TRAVEL OCCUR AT LANDINGS PROVIDED BETWEEN RAMP RUNS, THE LANDING SHALL BE 60 INCHES BY 60 INCHES MINIMUM.

1012.6.5 DOORWAYS. WHERE DOORWAYS ARE LOCATED ADJACENT TO A RAMP LANDING, MANEUVERING CLEARANCES REQUIRED BY ICC A117.1 ARE PERMITTED TO OVERLAP THE REQUIRED LANDING AREA.

1012.8 HANDRAILS. RAMPS WITH A RISE GREATER THAN 6 INCHES (152 MM) SHALL HAVE HANDRAILS ON BOTH SIDES. HANDRAILS SHALL COMPLY WITH SECTION 1014.

1013.1 WHERE REQUIRED: EXITS AND EXIT ACCESS DOORS SHALL BE MARKED BY AN APPROVED EXIT SIGN READILY VISIBLE FROM ANY DIRECTION OF EGRESS TRAVEL. THE PATH OF EGRESS TRAVEL TO EXITS AND WITHIN EXITS SHALL BE MARKED BY READILY VISIBLE EXIT SIGNS TO CLEARLY INDICATE THE DIRECTION OF EGRESS TRAVEL IN CASES WHERE THE EXIT OR THE PATH OF EGRESS TRAVEL IS NOT IMMEDIATELY VISIBLE TO THE OCCUPANTS. INTERVENING MEANS OF EGRESS DOORS WITHIN EXITS SHALL BE MARKED BY EXIT SIGNS. EXIT SIGN PLACEMENT SHALL BE SUCH THAT ANY POINT IN AN EXIT ACCESS CORRIDOR OR EXIT PASSAGEWAY IS WITHIN 100 FEET OR THE LISTED VIEWING DISTANCE OF THE SIGN, WHICHEVER IS LESS, FROM THE NEAREST VISIBLE EXIT SIGN.

1013.6.3 POWER SOURCE: EXIT SIGNS SHALL BE ILLUMINATED AT ALL TIMES. TO ENSURE CONTINUED ILLUMINATION FOR A DURATION OF NOT LESS THAN 90 MINUTES IN CASE OF PRIMARY POWER LOSS, THE SIGN ILLUMINATION MEANS SHALL BE CONNECTED TO TO AN EMERGENCY POWER SYSTEM PROVIDED FROM STORAGE BATTERIES, UNIT EQUIPMENT OR AN ON-SITE GENERATOR. THE INSTALLATION OF THE EMERGENCY POWER SYSTEM SHALL BE IN ACCORDANCE WITH CHAPTER 27. GROUP I-2, CONDITION 2 EXIT SIGN ILLUMINATION SHALL NOT BE PROVIDED BY UNIT EQUIPMENT BATTERIES ONLY.

1014.2 HEIGHT. HANDRAIL HEIGHT, MEASURED ABOVE STAIR TREAD NOSINGS, OR FINISH SURFACE OF RAMP SLOPE, SHALL BE UNIFORM, NOT LESS THAN 34 INCHES AND NOT MORE THAN 38 INCHES. HANDRAIL HEIGHT OF ALTERNATING TREAD DEVICES AND SHIP'S LADDERS, MEASURED ABOVE TREAD NOSINGS, SHALL BE UNIFORM, NOT LESS THAN 30 INCHES AND NOT MORE THAN 34 INCHES.

1014.6 HANDRAIL EXTENSIONS. HANDRAILS SHALL RETURN TO A WALL, GUARD OR THE WALKING SURFACE OR SHALL BE CONTINUOUS TO THE HANDRAIL OF AN ADJACENT FLIGHT OF STAIRS OR RAMP RUN. WHERE HANDRAILS ARE NOT CONTINUOUS BETWEEN FLIGHTS, THE HANDRAILS SHALL EXTEND HORIZONTALLY NOT LESS THAN 12 INCHES BEYOND THE TOP RISER AND CONTINUE TO SLOPE FOR THE DEPTH OF ONE TREAD BEYOND THE BOTTOM RISER. AT RAMPS WHERE HANDRAILS ARE NOT CONTINUOUS BETWEEN RUNS, THE HANDRAILS SHALL EXTEND HORIZONTALLY ABOVE THE LANDING 12 INCHES MINIMUM BEYOND THE TOP AND BOTTOM OF RAMP RUNS. THE EXTENSIONS OF HANDRAILS SHALL BE IN THE SAME DIRECTION OF THE FLIGHTS OF STAIRS AT STAIRWAYS AND THE RAMP RUNS AT RAMPS.

TABLE 1017.2 EXIT ACCESS TRAVEL DISTANCE
A - WITH SPRINKLER SYSTEM - 250 FEET
B - WITH SPRINKLER SYSTEM - 300 FEET
I-3 - WITH SPRINKLER SYSTEM - 200 FEET

BC NYS CHAPTER 11 - ACCESSIBILITY

1108.2.2 WHEELCHAIR SPACES. IN ROOMS AND SPACES USED FOR ASSEMBLY PURPOSES WITH FIXED SEATING, ACCESSIBLE WHEELCHAIR SPACES SHALL BE PROVIDED IN ACCORDANCE WITH SECTIONS 1108.2.2.1 THROUGH 1108.2.2.3.

TABLE 1108.2.2.1 ACCESSIBLE WHEELCHAIR SPACES
4 TO 25 CAPACITY OF SEATING - 1 WHEELCHAIR SPACE REQUIRED
26 TO 50 CAPACITY OF SEATING - 2 WHEELCHAIR SPACES REQUIRED

1108.2.3 COMPANION SEATS. AT LEAST ONE COMPANION SEAT SHALL BE PROVIDED FOR EACH WHEELCHAIR SPACE REQUIRED BY SECTIONS 1108.2.2.1 THROUGH 1108.2.2.3.

1108.2.7.1 RECEIVERS. THE NUMBER AND TYPE OF RECEIVERS SHALL BE PROVIDED FOR ASSISTIVE LISTENING SYSTEMS IN ACCORDANCE WITH TABLE 1108.2.7.1.

TABLE 1108.2.7.1 RECEIVERS FOR ASSISTIVE LISTENING SYSTEMS
50 OR LESS CAPACITY OF SEATING - 2 RECEIVERS MIN - 2 RECEIVERS TO BE HEARING-AID COMPATIBLE MIN
51 TO 200 CAPACITY OF SEATING - 3 RECEIVERS MIN - 2 RECEIVERS TO BE HEARING-AID COMPATIBLE MIN

1108.4.1.1 JURY BOX. A WHEELCHAIR SPACE SHALL BE PROVIDED WITHIN THE JURY BOX.

1108.4.1.2 GALLERY SEATING. WHEELCHAIR SPACES SHALL BE PROVIDED IN ACCORDANCE WITH TABLE 1108.2.2.1. DESIGNATED AISLE SEATS SHALL BE PROVIDED IN ACCORDANCE WITH SECTION 1108.2.5.

1108.4.1.3 ASSISTIVE LISTENING SYSTEMS. AN ASSISTIVE LISTENING SYSTEM MUST BE PROVIDED. RECEIVERS SHALL BE PROVIDED FOR THE ASSISTIVE LISTENING SYSTEM IN ACCORDANCE WITH SECTION 1108.2.7.1.

1108.4.1.4 EMPLOYEE WORK STATIONS. THE JUDGE'S BENCH, CLERK'S STATION, BAILIFF'S STATION, DEPUTY CLERK'S STATION AND COURT REPORTER'S STATION SHALL BE LOCATED ON AN ACCESSIBLE ROUTE. THE VERTICAL ACCESS TO ELEVATED EMPLOYEE WORK STATIONS WITHIN A COURTROOM IS NOT REQUIRED AT THE TIME OF INITIAL CONSTRUCTION, PROVIDED A RAMP, LIFT OR ELEVATOR CAN BE INSTALLED WITHOUT REQUIRING RECONFIGURATION OR EXTENSION OF THE COURTROOM OR EXTENSION OF THE ELECTRICAL SYSTEM.

1108.4.1.5 OTHER WORK STATIONS. THE LITIGANT'S AND COUNSEL STATIONS, INCLUDING THE LECTERN, SHALL BE ACCESSIBLE.

1108.4.2.1 CENTRAL HOLDING CELLS. WHERE SEPARATE CENTRAL HOLDING CELLS ARE PROVIDED FOR ADULT MALES, JUVENILE MALES, ADULT FEMALES OR JUVENILE FEMALES, ONE OF EACH TYPE SHALL BE ACCESSIBLE. WHERE CENTRAL HOLDING CELLS ARE PROVIDED AND ARE NOT SEPARATED BY AGE OR SEX, AT LEAST ONE ACCESSIBLE CELL SHALL BE PROVIDED.

1109.2 TOILET AND BATHING FACILITIES. EACH TOILET ROOM AND BATHING ROOM SHALL BE ACCESSIBLE. WHERE A FLOOR LEVEL IS NOT REQUIRED TO BE CONNECTED BY AN ACCESSIBLE ROUTE, THE ONLY TOILET ROOMS OR BATHING ROOMS PROVIDED WITHIN THE FACILITY SHALL NOT BE LOCATED ON THE INACCESSIBLE FLOOR. EXCEPT AS PROVIDED FOR IN SECTIONS 1109.2.2 AND 1109.2.3, AT LEAST ONE OF EACH TYPE OF FIXTURE, ELEMENT, CONTROL OR DISPENSER IN EACH ACCESSIBLE TOILET ROOM AND BATHING ROOM SHALL BE ACCESSIBLE.

1109.5.1 MINIMUM NUMBER. NOT FEWER THAN TWO DRINKING FOUNTAINS SHALL BE PROVIDED. ONE DRINKING FOUNTAIN SHALL COMPLY WITH THE REQUIREMENTS FOR PEOPLE WHO USE A WHEELCHAIR AND ONE DRINKING FOUNTAIN SHALL COMPLY WITH THE REQUIREMENTS FOR STANDING PERSONS.

1111.1 SIGNS. REQUIRED ACCESSIBLE ELEMENTS SHALL BE IDENTIFIED BY THE INTERNATIONAL SYMBOL OF ACCESSIBILITY AT THE FOLLOWING LOCATIONS.
1. ACCESSIBLE PARKING SPACES REQUIRED BY SECTION 1106.1.
3. ACCESSIBLE PASSENGER LOADING ZONES.
5. ACCESSIBLE ENTRANCES WHERE NOT ALL ENTRANCES ARE ACCESSIBLE.

BC NYS CHAPTER 12 - INTERIOR ENVIRONMENT

1202.1 GENERAL: BUILDINGS SHALL BE PROVIDED WITH NATURAL VENTILATION IN ACCORDANCE WITH SECTION 1202.5 OR MECHANICAL VENTILATION IN ACCORDANCE WITH THE MECHANICAL CODE OF NEW YORK STATE.

1203.1 EQUIPMENT AND SYSTEMS. INTERIOR SPACES INTENDED FOR HUMAN OCCUPANCY SHALL BE PROVIDED WITH ACTIVE OR PASSIVE SPACE HEATING SYSTEMS CAPABLE OF MAINTAINING AN INDOOR TEMPERATURE OF NOT LESS THAN 68°F AT A POINT 3 FEET ABOVE THE FLOOR ON THE DESIGN HEATING DAY.

1204.1 GENERAL. EVERY SPACE INTENDED FOR HUMAN OCCUPANCY SHALL BE PROVIDED WITH NATURAL LIGHT BY MEANS OF EXTERIOR GLAZED OPENINGS IN ACCORDANCE WITH SECTION 1204.2 OR SHALL BE PROVIDED WITH ARTIFICIAL LIGHT IN ACCORDANCE WITH SECTION 1204.3. EXTERIOR GLAZED OPENINGS SHALL OPEN DIRECTLY ONTO A PUBLIC WAY OR ONTO A YARD OR COURT IN ACCORDANCE WITH SECTION 1205.

1204.3 ARTIFICIAL LIGHT. ARTIFICIAL LIGHT SHALL BE PROVIDED THAT IS ADEQUATE TO PROVIDE AN AVERAGE ILLUMINATION OF 10 FOOTCANDLES OVER THE AREA OF THE ROOM AT A HEIGHT OF 30 INCHES ABOVE THE FLOOR LEVEL.

1204.4 STAIRWAY ILLUMINATION. STAIRWAYS WITHIN DWELLING UNITS AND EXTERIOR STAIRWAYS SERVING A DWELLING UNIT SHALL HAVE AN ILLUMINATION LEVEL ON TREAD RUNS OF NOT LESS THAN 1 FOOTCANDLE. STAIRWAYS IN OTHER OCCUPANCIES SHALL BE GOVERNED BY CHAPTER 10.

1204.4.1 CONTROLS. THE CONTROL FOR ACTIVATION OF THE REQUIRED STAIRWAY LIGHTING SHALL BE IN ACCORDANCE WITH NFPA 70.

1207.1 MINIMUM ROOM WIDTHS: HABITABLE SPACES, OTHER THAN A KITCHEN, SHALL BE NOT LESS THAN 7 FEET IN ANY PLAN DIMENSION. KITCHENS SHALL HAVE A CLEAR PASSAGEWAY OF NOT LESS THAN 3 FEET BETWEEN COUNTER FRONTS AND APPLIANCES OR COUNTER FRONTS AND WALLS.

1207.2 MINIMUM CEILING HEIGHTS: OCCUPIED SPACES, HABITABLE SPACES AND CORRIDORS SHALL HAVE A CEILING HEIGHT OF NOT LESS THAN 7 FEET 6 INCHES ABOVE THE FINISHED FLOOR. BATHROOMS, TOILET ROOMS, KITCHENS, STORAGE ROOMS AND LAUNDRY ROOMS SHALL HAVE A CEILING HEIGHT OF NOT LESS THAN 7 FEET ABOVE THE FINISHED FLOOR.

1207.3 ROOM AREA: EVERY DWELLING UNIT SHALL HAVE NOT LESS THAN ONE ROOM THAT SHALL HAVE NOT LESS THAN 120 SQUARE FEET OF NET FLOOR AREA. OTHER HABITABLE ROOMS SHALL HAVE A NET FLOOR AREA OF NOT LESS THAN 70 SQUARE FEET.

1209.2.1 FLOORS AND WALL BASES. IN OTHER THAN DWELLING UNITS, TOILET, BATHING AND SHOWER ROOM FLOOR FINISH MATERIALS SHALL HAVE A SMOOTH, HARD, NONABSORBENT SURFACE. THE INTERSECTIONS OF SUCH FLOORS WITH WALLS SHALL HAVE A SMOOTH, HARD, NONABSORBENT VERTICAL BASE THAT EXTENDS UPWARD ONTO THE WALLS NOT LESS THAN 4 INCHES.

1209.2.2 WALLS AND PARTITIONS. WALLS AND PARTITIONS WITHIN 2 FEET OF SERVICE SINKS, URINALS AND WATER CLOSETS SHALL HAVE A SMOOTH, HARD, NONABSORBENT SURFACE, TO A HEIGHT OF NOT LESS THAN 4 FEET ABOVE THE FLOOR, AND EXCEPT FOR STRUCTURAL ELEMENTS, THE MATERIALS USED IN SUCH WALLS SHALL BE OF A TYPE THAT IS NOT ADVERSELY AFFECTED BY MOISTURE.

NYS ENERGY CONSERVATION CONSTRUCTION CODE (ECCC) REVIEW SUMMARY

1. GENERAL REQUIREMENTS

TABLE C301.1 NEW YORK STATE CLIMATE ZONES BY COUNTY
ZONE 5A - ORANGE COUNTY

TABLE C303.1.3(1) DEFAULT GLAZED WINDOW, GLASS DOOR AND SKYLIGHT U-FACTORS
METAL FRAME TYPE WITH THERMAL BREAK - DOUBLE - 0.65
NONMETAL OR METAL CLAD FRAME - DOUBLE - 0.55

TABLE C303.1.3(2) DEFAULT OPAQUE DOOR U-FACTORS
INSULATED METAL (OTHER) DOOR - 0.60
INSULATED, NONMETAL EDGE, MAX 45% GLAZING - 0.35

TABLE C303.1.3(3) DEFAULT GLAZED FENESTRATION SHGC AND VT
SHGC - DOUBLE GLAZED - 0.7
VT - DOUBLE GLAZED - 0.6

2. COMMERCIAL ENERGY EFFICIENCY

TABLE C402.1.3 OPAQUE THERMAL ENVELOPE INSULATION COMPONENT MINIMUM REQUIREMENTS, R-VALUE METHOD
ROOFS - INSULATION ENTIRELY ABOVE ROOF DECK - R-30.0 CI
WALLS ABOVE GRADE - MASS - 11.4 CI
WALLS ABOVE GRADE - METAL FRAMED - R-13 + R-7.5 CI
FLOORS - MASS - R-10 CI
SLAB ON GRADE FLOORS - UNHEATED SLABS - R-10.0 FOR 24" BELOW
OPAQUE DOORS - NONSWINGING - R-4.75

TABLE C402.1.4 OPAQUE THERMAL ENVELOPE ASSEMBLY MAXIMUM REQUIREMENTS, U-FACTOR METHOD
OPAQUE DOORS - SWINGING DOOR - U-0.37

IT IS A VIOLATION OF THE NEW YORK STATE EDUCATION LAW, ARTICLE 145 §7209 SPECIAL PROVISIONS, FOR ANY PERSON, UNLESS THEY ARE ACTING UNDER THE DIRECTION OF A LICENSED PROFESSIONAL ENGINEER, ARCHITECT, LANDSCAPE ARCHITECT, OR LAND SURVEYOR, TO ALTER AN ITEM IN ANY WAY. IF AN ITEM BEARING THE STAMP OF A LICENSED PROFESSIONAL IS ALTERED, THE ALTERING PROFESSIONAL SHALL STAMP THE DOCUMENT AND INCLUDE THE NOTATION "ALTERED BY" FOLLOWED BY THEIR SIGNATURE, THE DATE OF SUCH ALTERATION, AND A SPECIFIC DESCRIPTION OF THE ALTERATION.

REVISIONS

CITY OF MIDDLETOWN
NEW COURTHOUSE FACILITY
CODE REVIEW
ORANGE COUNTY, NEW YORK
CITY OF MIDDLETOWN

Barton & Loguidice
443 Electronics Parkway
Liverpool, NY 13088
NYS CERTIFICATE # 0021642, 0020588, 0019903, 0019905, 0020336

STATE OF NEW YORK · MATTHEW C. FULLER · 070743 · LICENSED PROFESSIONAL ENGINEER
NYS EXP.:

Date: AUGUST, 2024
Scale: AS SHOWN
Sheet Number: A006
Project Number: 1753.008.001

Plotted: 8/21/2024 4:25:53 PM
C:\Users\cgardner\Documents\Middletown Courthouse 6.22.21 Central File – ARCHITECTURAL STRUCTURAL MODEL_cgardner05.rvt
Checked by Checker Drawn by JDC Designed by JDC In Charge of TRB

DEMOLITION LEGEND

	INDICATES EXISTING WALL	
	INDICATES TYPICAL WALL DEMOLITION	INFILL WITH NEW 3/8" EPOXY TERRAZZO FLOORING TO MATCH EXISTING.
	TYPICAL DEMOLITION ITEM	EXISTING 3/8" EPOXY TERRAZZO FLOORING TO REMAIN
201E	EXISTING DOOR TO REMAIN	REMOVE EXISTING FLOORING INCLUDING 3/8" EPOXY TERRAZZO FLOOR AND UNDERLAYMENT AND INFILL AS NEEDED WITH SELF LEVELYING UNDERLAYMENT AND PREPARE FOR NEW FLOOR INSTALLATION.
201R	EXISTING DOOR TO BE RELOCATED	

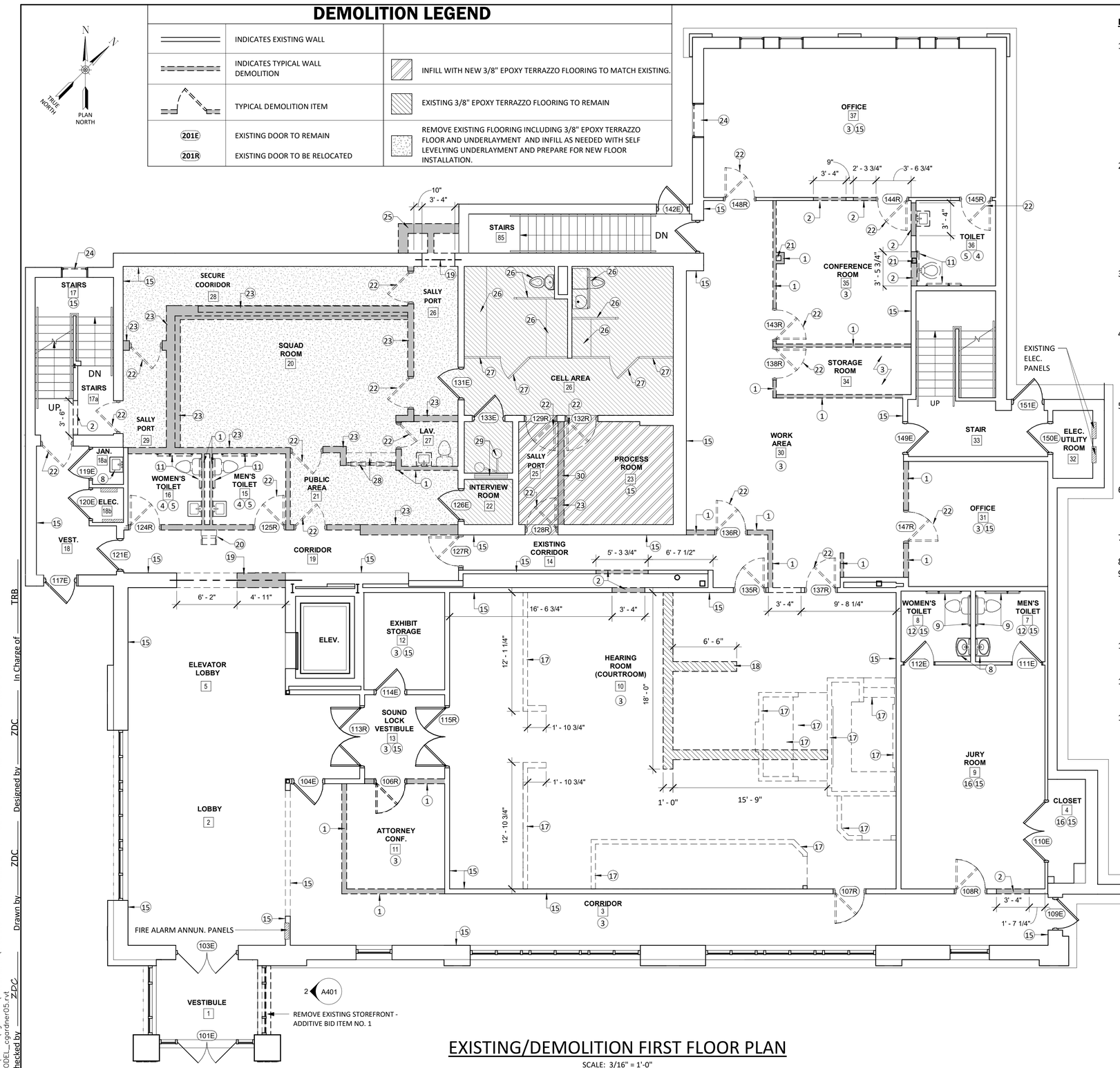

EXISTING/DEMOLITION FIRST FLOOR PLAN

SCALE: 3/16" = 1'-0"

DEMOLITION NOTES:

1. PATCHING: WHERE REMOVALS LEAVE HOLES AND DAMAGED SURFACES EXPOSED IN THE FINISHED WORK, PATCH AND REPAIR THESE HOLES AND DAMAGED SURFACES TO MATCH ADJACENT FINISHED SURFACES. WHERE NEW WORK IS TO BE APPLIED TO EXISTING SURFACES, PERFORM REMOVALS AND PATCHING IN A MANNER TO PRODUCE SURFACES SUITABLE FOR RECEIVING NEW WORK.
2. DUST AND DEBRIS CONTROL: PROVIDE TEMPORARY INTERIOR ENCLOSURES, AS REQUIRED, TO PROTECT ALL OCCUPANTS AND TO PREVENT THE SPREAD OF DUST AND DEBRIS TO OCCUPIED PORTIONS OF THE BUILDING AND AVOID THE CREATION OF A NUISANCE OR HAZARD IN THE SURROUNDING AREA. CLEAN AND SWEEP THE WORK AREA DAILY.
3. ALL MATERIALS AND EQUIPMENT REMOVED, AND NOT REUSED, SHALL BECOME THE PROPERTY OF THE CONTRACTOR AND SHALL BE REMOVED FROM THE OWNER'S PROPERTY.
4. PROTECT ANY EXISTING UTILITIES, EQUIPMENT, WALLS, FLOOR FINISHES AND CEILINGS TO REMAIN FROM DAMAGE DUE TO DEMOLITION WORK. REPAIR ANY DAMAGE INCURRED WITH NEW OR LIKE MATERIALS BACK TO ORIGINAL CONDITION.
5. THE CONTRACTOR IS RESPONSIBLE FOR ALL MEANS AND METHODS OF EXISTING AND NEW CONSTRUCTION TO PROVIDE A COMPLETED PROJECT IN ACCORDANCE WITH ALL APPLICABLE OSHA, FEDERAL, STATE AND LOCAL RULES AND REGULATIONS.
6. THE CONTRACTOR IS RESPONSIBLE FOR SECURING THE ENTIRE STRUCTURE FROM WEATHER RELATED DAMAGE DURING CONSTRUCTION.
7. ALL REMOVAL WORK SHOWN AND REQUIRED SHALL BE BY THIS CONTRACT.
8. MAINTAIN ALL LEGAL EXITWAYS.
9. PROVIDE ALL DEMO REQUIRED FOR NEW INSTALLATIONS SHOWN, AND PATCH EXISTING MATERIALS BACK TO ORIGINAL CONDITION, OR TO A CONDITION TO RECEIVE NEW WORK AS APPLICABLE AND THAT IS ACCEPTABLE TO THE ENGINEER.
10. CONTRACTOR IS RESPONSIBLE FOR DISPOSAL OF ALL UNSUITABLE MATERIAL OFFSITE.
11. CONTRACTOR IS RESPONSIBLE FOR COORDINATING STOCKPILE LOCATIONS FOR CONSTRUCTION MATERIALS.
12. HAZARDOUS MATERIAL REMOVALS BY OWNER.

DEMO KEY NOTES

1. REMOVE EXISTING WALL PARTITION.
2. REMOVE EXISTING WALL PARTITION TO CREATE NEW OPENINGS.
3. REMOVE EXISTING FLOORING (CARPETING). PREPARE SURFACE AS REQD TO RECEIVE NEW FLOORING PER SCHEDULE.
4. REMOVE EXISTING FLOORING (TILE). PREPARE SURFACE AS REQD TO RECEIVE NEW FLOORING PER SCHEDULE.
5. REMOVE EXISTING TILE WAINSCOT & GWB THROUGHOUT BATHROOM DOWN TO STUDS.
6. NOT USED
7. REMOVE EXISTING BATHROOM FIXTURES IN THEIR ENTIRETY.
8. EXISTING BATHROOM FIXTURES TO REMAIN PROTECT DURING CONSTRUCTION.
9. EXISTING BATHROOM ACCESSORIES TO REMAIN PROTECT DURING CONSTRUCTION.
10. EXISTING BATHROOM MIRROR TO BE REMOVED.
11. REMOVE EXISTING BATHROOM FIXTURES.
12. EXISTING FLOOR TILE TO REMAIN PROTECT DURING CONSTRUCTION.
13. EXISTING WAINSCOT TILE TO REMAIN ON ALL FOUR WALLS PROTECT DURING CONSTRUCTION.
14. EXISTING CABINETRY TO BE REMOVED
15. PATCH AND REPAIR EXISTING WALLS TO A LEVEL 4 FINISH AND PREPARE WALLS TO BE PAINTED.
16. EXISTING FLOORING TO REMAIN PROTECT DURING CONSTRUCTION.
17. REMOVE EXISTING MILLWORK, CABINETRY, COUNTERTOPS & EQUIPMENT, WALL PANELS & PLATFORMS IN THEIR ENTIRETY
18. CONCRETE SLAB DEMOLITION BY ELECTRICAL CONTRACTOR TO COMPLETE MODIFICATIONS AS SHOWN ON ELECTRICAL DRAWINGS. GENERAL CONTRACTOR IS RESPONSIBLE FOR SLAB INFILL.
19. REMOVE EXISTING MASONRY WALL TO CREATE NEW OPENING. REFER TO LINTEL SCHEDULE ON STRUCTURAL DRAWINGS FOR REQUIREMENTS.
20. REMOVE EXISTING DRINKING FOUNTAIN. CAP PLUMBING LINES & PATCH OPENINGS IN WALL.
21. EXISTING COLUMN TO REMAIN.
22. REMOVE EXISTING DOOR & FRAME.
23. REMOVE EXISTING CMU BLOCK WALL PARTITIONS (INCL. GYPSUM AND STUDS) IN ITS ENTIRETY.
24. REMOVE EXISTING WINDOW AND SILL IN ITS ENTIRETY.
25. REMOVE EXISTING MASONRY CHIMNEY ENTIRELY INCLUDING FOUNDATIONS FULL HEIGHT. EXTERIOR BRICK SHOULD BE TOOTHED IN TO MATCH EXISTING COURSING TO BLEND IN WITH EXISTING CONDITIONS.
26. EXISTING SINK/TOILET COMBINATIONS, BENCHES, ACCESSORIES AND DIVIDERS TO REMAIN
27. EXISTING CELL BARS AND DOORS TO REMAIN.
28. REMOVE EXISTING RECEPTION WINDOWS AND COUNTERTOPS.
29. EXISTING INTERVIEW WINDOW SWIVEL STOOL TO REMAIN
30. REMOVE EXISTING CMU BLOCK WALL PARTITIONS IN ITS ENTIRETY SALAVAGE CMY BLOCK FOR REUSE.
31. NOT USED
32. NOT USED
33. NOT USED
34. REMOVE EXISTING EYE WASH STATION AND INFILL MASONRY TO MATCH EXISTING.
35. REMOVE EXISTING FLOOR DRAINS. CAP LINES AND PATCH FLOOR.

IT IS A VIOLATION OF THE NEW YORK STATE EDUCATION LAW, ARTICLE 145 §7209 SPECIAL PROVISIONS, FOR ANY PERSON, UNLESS THEY ARE ACTING UNDER THE DIRECTION OF A LICENSED PROFESSIONAL ENGINEER, ARCHITECT, LANDSCAPE ARCHITECT, OR LAND SURVEYOR, TO ALTER AN ITEM IN ANY WAY. IF AN ITEM BEARING THE STAMP OF A LICENSED PROFESSIONAL IS ALTERED, THE ALTERING PROFESSIONAL SHALL STAMP THE DOCUMENT AND INCLUDE THE NOTATION "ALTERED BY" FOLLOWED BY THEIR SIGNATURE, THE DATE OF SUCH ALTERATION, AND A SPECIFIC DESCRIPTION OF THE ALTERATION.

REVISIONS

CITY OF MIDDLETOWN
NEW COURTHOUSE FACILITY
CONTRACT 1A - GENERAL CONSTRUCTION

EXISTING/DEMOLITION FIRST FLOOR PLANS

CITY OF MIDDLETOWN ORANGE COUNTY, NEW YORK

Barton & Loguidice
443 Electronics Parkway
Liverpool, NY 13088
NYS CERTIFICATE # 0021642, 0020588, 0019903, 0019905, 0020336

STATE OF NEW YORK · MATTHEW C. FOLEY · 070743 · LICENSED PROFESSIONAL ENGINEER

NYS EXP.:

Date	AUGUST, 2024
Scale	AS SHOWN
Sheet Number	AD101
Project Number	1753.008.001

Plotted: 8/21/2024 4:26:39 PM
C:\Users\cgardner\Documents\Middletown Courthouse 6.22.21 Central File – ARCHITECTURAL STRUCTURAL
MODEL_cgardner05.rvt

Checked by ZJC Drawn by ZDC Designed by ZDC In Charge of TRB

DEMOLITION NOTES:

1. PATCHING: WHERE REMOVALS LEAVE HOLES AND DAMAGED SURFACES EXPOSED IN THE FINISHED WORK, PATCH AND REPAIR THESE HOLES AND DAMAGED SURFACES TO MATCH ADJACENT FINISHED SURFACES. WHERE NEW WORK IS TO BE APPLIED TO EXISTING SURFACES, PERFORM REMOVALS AND PATCHING IN A MANNER TO PRODUCE SURFACES SUITABLE FOR RECEIVING NEW WORK.
2. DUST AND DEBRIS CONTROL: PROVIDE TEMPORARY INTERIOR ENCLOSURES, AS REQUIRED, TO PROTECT ALL OCCUPANTS AND TO PREVENT THE SPREAD OF DUST AND DEBRIS TO OCCUPIED PORTIONS OF THE BUILDING AND AVOID THE CREATION OF A NUISANCE OR HAZARD IN THE SURROUNDING AREA. CLEAN AND SWEEP THE WORK AREA DAILY.
3. ALL MATERIALS AND EQUIPMENT REMOVED, AND NOT REUSED, SHALL BECOME THE PROPERTY OF THE CONTRACTOR AND SHALL BE REMOVED FROM THE OWNER'S PROPERTY.
4. PROTECT ANY EXISTING UTILITIES, EQUIPMENT, WALLS, FLOOR FINISHES AND CEILINGS TO REMAIN FROM DAMAGE DUE TO DEMOLITION WORK. REPAIR ANY DAMAGE INCURRED WITH NEW OR LIKE MATERIALS BACK TO ORIGINAL CONDITION.
5. THE CONTRACTOR IS RESPONSIBLE FOR ALL MEANS AND METHODS OF EXISTING AND NEW CONSTRUCTION TO PROVIDE A COMPLETED PROJECT IN ACCORDANCE WITH ALL APPLICABLE OSHA, FEDERAL, STATE AND LOCAL RULES AND REGULATIONS.
6. THE CONTRACTOR IS RESPONSIBLE FOR SECURING THE ENTIRE STRUCTURE FROM WEATHER RELATED DAMAGE DURING CONSTRUCTION.
7. ALL REMOVAL WORK SHOWN AND REQUIRED SHALL BE BY THIS CONTRACT.
8. MAINTAIN ALL LEGAL EXITWAYS.
9. PROVIDE ALL DEMO REQUIRED FOR NEW INSTALLATIONS SHOWN, AND PATCH EXISTING MATERIALS BACK TO ORIGINAL CONDITION, OR TO A CONDITION TO RECEIVE NEW WORK AS APPLICABLE AND THAT IS ACCEPTABLE TO THE ENGINEER.
10. CONTRACTOR IS RESPONSIBLE FOR DISPOSAL OF ALL UNSUITABLE MATERIAL OFFSITE.
11. CONTRACTOR IS RESPONSIBLE FOR COORDINATING STOCKPILE LOCATIONS FOR CONSTRUCTION MATERIALS.
12. HAZARDOUS MATERIAL REMOVALS BY OWNER.

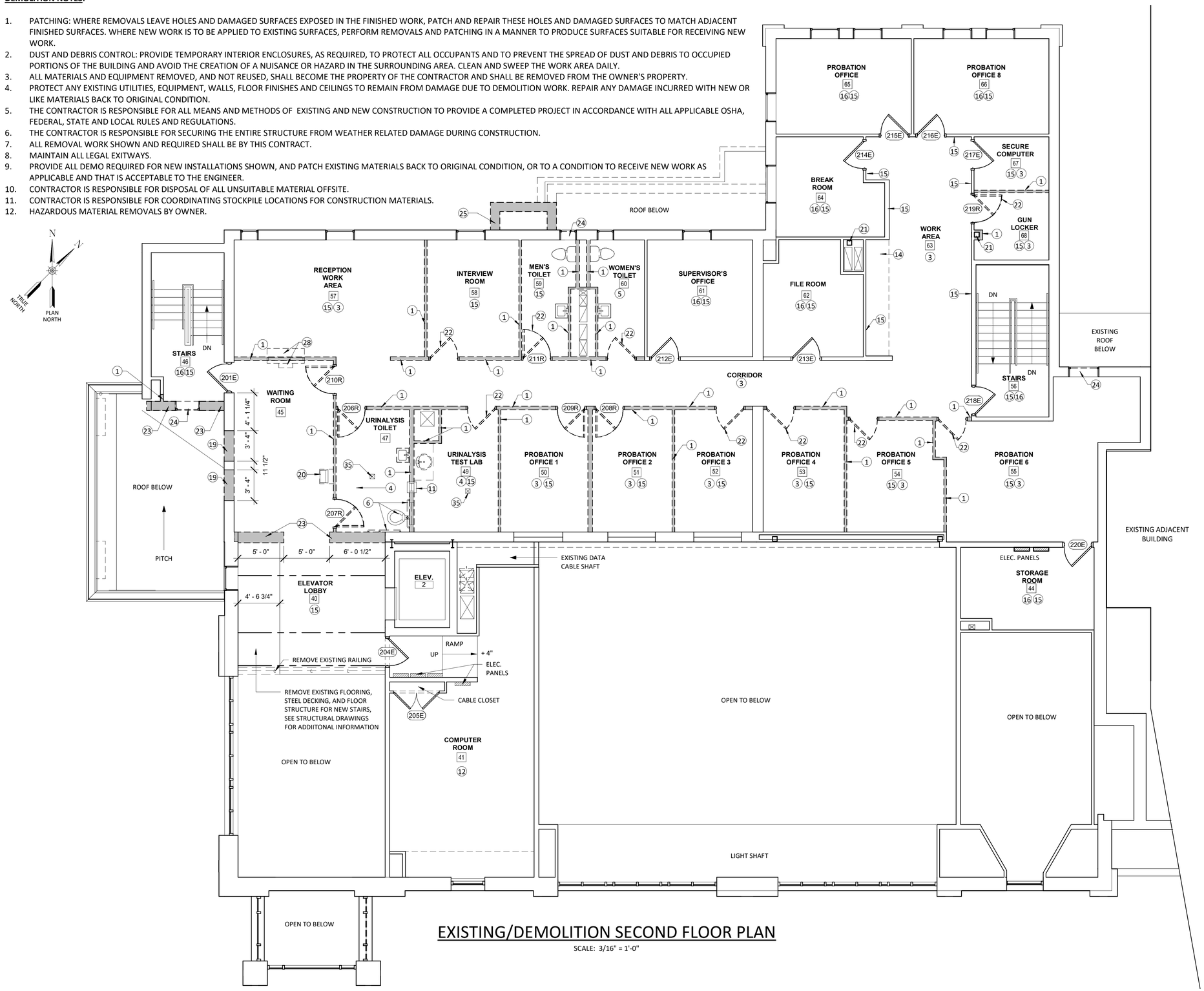

EXISTING/DEMOLITION SECOND FLOOR PLAN

SCALE: 3/16" = 1'-0"

DEMO KEY NOTES

1. REMOVE EXISTING WALL PARTITION.
2. REMOVE EXISTING WALL PARTITION TO CREATE NEW OPENINGS.
3. REMOVE EXISTING FLOORING (CARPETING). PREPARE SURFACE AS REQD TO RECEIVE NEW FLOORING PER SCHEDULE.
4. REMOVE EXISTING FLOORING (TILE). PREPARE SURFACE AS REQD TO RECEIVE NEW FLOORING PER SCHEDULE.
5. REMOVE EXISTING TILE WAINSCOT & GWB THROUGHOUT BATHROOM DOWN TO STUDS.
6. NOT USED
7. REMOVE EXISTING BATHROOM FIXTURES IN THEIR ENTIRETY.
8. EXISTING BATHROOM FIXTURES TO REMAIN PROTECT DURING CONSTRUCTION.
9. EXISTING BATHROOM ACCESSORIES TO REMAIN PROTECT DURING CONSTRUCTION.
10. EXISTING BATHROOM MIRROR TO BE REMOVED.
11. REMOVE EXISTING BATHROOM FIXTURES.
12. EXISTING FLOOR TILE TO REMAIN PROTECT DURING CONSTRUCTION.
13. EXISTING WAINSCOT TILE TO REMAIN ON ALL FOUR WALLS PROTECT DURING CONSTRUCTION.
14. EXISTING CABINETRY TO BE REMOVED
15. PATCH AND REPAIR EXISTING WALLS TO A LEVEL 4 FINISH AND PREPARE WALLS TO BE PAINTED.
16. EXISTING FLOORING TO REMAIN PROTECT DURING CONSTRUCTION.
17. REMOVE EXISTING MILLWORK, CABINETRY, COUNTERTOPS & EQUIPMENT, WALL PANELS & PLATFORMS IN THEIR ENTIRETY
18. CONCRETE SLAB DEMOLITION BY ELECTRICAL CONTRACTOR TO COMPLETE MODIFICATIONS AS SHOWN ON ELECTRICAL DRAWINGS. GENERAL CONTRACTOR IS RESPONSIBLE FOR SLAB INFILL.
19. REMOVE EXISTING MASONRY WALL TO CREATE NEW OPENING. REFER TO LINTEL SCHEDULE ON STRUCTURAL DRAWINGS FOR REQUIREMENTS.
20. REMOVE EXISTING DRINKING FOUNTAIN. CAP PLUMBING LINES & PATCH OPENINGS IN WALL.
21. EXISTING COLUMN TO REMAIN.
22. REMOVE EXISTING DOOR & FRAME.
23. REMOVE EXISTING CMU BLOCK WALL PARTITIONS (INCL. GYPSUM AND STUDS) IN ITS ENTIRETY.
24. REMOVE EXISTING WINDOW AND SILL IN ITS ENTIRETY.
25. REMOVE EXISTING MASONRY CHIMNEY ENTIRELY INCLUDING FOUNDATIONS FULL HEIGHT. EXTERIOR BRICK SHOULD BE TOOTHED IN TO MATCH EXISTING COURSING TO BLEND IN WITH EXISTING CONDITIONS.
26. EXISTING SINK/TOILET COMBINATIONS, BENCHES, ACCESSORIES AND DIVIDERS TO REMAIN
27. EXISTING CELL BARS AND DOORS TO REMAIN.
28. REMOVE EXISTING RECEPTION WINDOWS AND COUNTERTOPS.
29. EXISTING INTERVIEW WINDOW SWIVEL STOOL TO REMAIN
30. REMOVE EXISTING CMU BLOCK WALL PARTITIONS IN ITS ENTIRETY SALAVAGE CMY BLOCK FOR REUSE.
31. NOT USED
32. NOT USED
33. NOT USED
34. REMOVE EXISTING EYE WASH STATION AND INFILL MASONRY TO MATCH EXISTING.
35. REMOVE EXISTING FLOOR DRAINS. CAP LINES AND PATCH FLOOR.

DEMOLITION LEGEND

	INDICATES EXISTING WALL
	INDICATES TYPICAL WALL DEMOLITION
	TYPICAL DEMOLITION ITEM
201E	EXISTING DOOR TO REMAIN
201R	EXISTING DOOR TO BE RELOCATED

IT IS A VIOLATION OF THE NEW YORK STATE EDUCATION LAW, ARTICLE 145 §7209 SPECIAL PROVISIONS, FOR ANY PERSON, UNLESS THEY ARE ACTING UNDER THE DIRECTION OF A LICENSED PROFESSIONAL ENGINEER, ARCHITECT, LANDSCAPE ARCHITECT, OR LAND SURVEYOR, TO ALTER AN ITEM IN ANY WAY. IF AN ITEM BEARING THE STAMP OF A LICENSED PROFESSIONAL IS ALTERED, THE ALTERING PROFESSIONAL SHALL STAMP THE DOCUMENT AND INCLUDE THE NOTATION "ALTERED BY" FOLLOWED BY THEIR SIGNATURE, THE DATE OF SUCH ALTERATION, AND A SPECIFIC DESCRIPTION OF THE ALTERATION.

REVISIONS

CITY OF MIDDLETOWN
NEW COURTHOUSE FACILITY

EXISTING/DEMOLITION SECOND FLOOR PLAN

ORANGE COUNTY, NEW YORK

CITY OF MIDDLETOWN

Barton & Loguidice
443 Electronics Parkway
Liverpool, NY 13088
NYS CERTIFICATE # 0021642, 0020588, 0019903, 0019905, 0020336

STATE OF NEW YORK · MATTHEW C. FOLEY · 070743 · LICENSED PROFESSIONAL ENGINEER

NYS EXP.:

Date: AUGUST, 2024

Scale: AS SHOWN

Sheet Number: AD102

Project Number: 1753.008.001

Plotted: 8/21/2024 4:26:40 PM
C:\Users\cgardner\Documents\Middletown Courthouse 6.22.21 Central File - ARCHITECTURAL STRUCTURAL
MODEL_cgardner05.rvt
Checked by ZZC Drawn by ZDC Designed by ZDC In Charge of TRB

ROOF DEMOLITION KEYED PLAN NOTES

1A REMOVE EXISTING EPDM MEMBRANE ROOFING, RIGID INSULATION, VAPOR BARRIER AND FULLY EXPOSE SLOPED ROOF METAL DECK AND PREPARE FOR REPLACEMENT

1B REMOVE EXISTING EPDM MEMBRANE ROOFING, TAPERED RIGID INSULATION SYSTEM, AND FULLY EXPOSE ROOF CONCRETE PLANK DECK AND PREPARE FOR REPLACEMENT

1C REMOVE EXISTING EPDM MEMBRANE ROOFING, RIGID INSULATION, VAPOR BARRIER AND FULLY EXPOSE POURED CONCRETE DECK OVER METAL DECK AND PREPARE FOR REPLACEMENT

2 REMOVE EXISTING METAL ROOF COPING SYSTEM AND PREPARE FOR REPLACEMENT

3 EXISTING HVAC EQUIPMENT TO BE REMOVED, CURBING TO REMAIN, REMOVE EXISTING MEMBRANE FLASHINGS AND PREPARE FOR REPLACEMENT

4 EXISTING ROOF VENT TO REMAIN, REMOVE EXISTING MEMBRANE FLASHINGS AND PREPARE FOR REPLACEMENT

5 EXISTING ELEVATOR PENTHOUSE HATCH TO REMAIN, REMOVE EXISTING MEMBRANE FLASHINGS AND PREPARE FOR REPLACEMENT

6 REMOVE EXISTING ROOF DRAIN STRAINER AND BOWL, PREPARE FOR NEW ROOFING, BOWL & STRAINER COVER.

7 EXISTING ROOF ACCESS HATCH TO REMAIN, REMOVE EXISTING MEMBRANE FLASHING AND PREPARE FOR REPLACEMENT

8 EXISTING SKYLIGHTS TO REMAIN, REMOVE EXISTING MEMBRANE FLASHING AND PREPARE FOR REPLACEMENT

9 EXISTING ROOF SCUPPERS TO REMAIN, REMOVE EXISTING MEMBRANE FLASHING AND PREPARE FOR REPLACEMENT

10 EXISTING CHIMNEY TO BE REMOVED FULL HEIGHT INCLUDING COPING, BRICK AND CMU BLOCK WALLS, FOUNDATIONS, CHIMNEY FLUE AND PREPARE FOR NEW WORK (BRICK TO BE SALVAGED FOR NEW MASONRY WORK INCLUDING BRICK INFILL AT CHIMNEY REMOVAL LOCATION)

11 EXISTING LIGHTS TO REMAIN

12 EXISTING PARAPET WALL REMOVE EXISTING EPDM WRAPPED OVER PARAPET AND PREPARED FOR PLACEMENT

13 EXISTING STANDING SEAM METAL ROOF TO BE MODIFIED (PANELS TO BE REMOVED AND RE-INSTALLED) TO ALLOW NEW CHIMNEY REMOVAL AND ROOF WORK FOR COVERED CANOPY

14 EXISTING ROOF VENT TO BE REMOVED, PROVIDE NEW ROOF INFILL AS NEEDED

15 EXISTING ROOF MECHANICAL EQUIPMENT & CURB TO BE REMOVED BY MECHANICAL CONTRACTOR AND EXISTING OPENING TO BE INFILLED BY GENERAL CONTRACTOR

PLAN LEGEND

EXISTING CONCRETE PLANK ROOF DECK

EXISTING SLOPED METAL ROOF DECK

EXISTING POURED CONCRETE ON METAL ROOF DECK

EXISTING METAL ROOF DECK

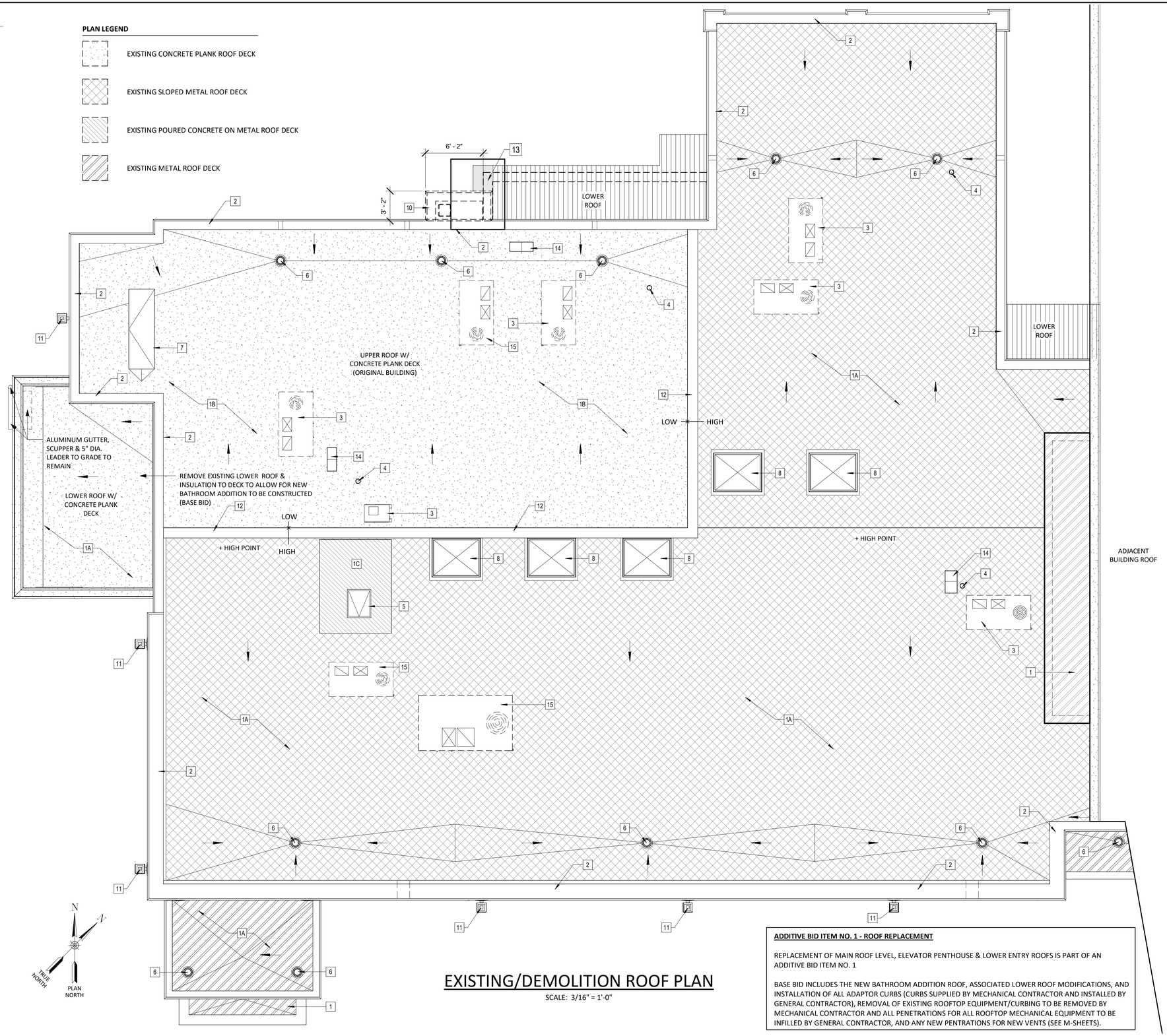

EXISTING/DEMOLITION ROOF PLAN

SCALE: 3/16" = 1'-0"

ADDITIVE BID ITEM NO. 1 - ROOF REPLACEMENT

REPLACEMENT OF MAIN ROOF LEVEL, ELEVATOR PENTHOUSE & LOWER ENTRY ROOFS IS PART OF AN ADDITIVE BID ITEM NO. 1

BASE BID INCLUDES THE NEW BATHROOM ADDITION ROOF, ASSOCIATED LOWER ROOF MODIFICATIONS, AND INSTALLATION OF ALL ADAPTOR CURBS (CURBS SUPPLIED BY MECHANICAL CONTRACTOR AND INSTALLED BY GENERAL CONTRACTOR), REMOVAL OF EXISTING ROOFTOP EQUIPMENT/CURBING TO BE REMOVED BY MECHANICAL CONTRACTOR AND ALL PENETRATIONS FOR ALL ROOFTOP MECHANICAL EQUIPMENT TO BE INFILLED BY GENERAL CONTRACTOR, AND ANY NEW PENTRATIONS FOR NEW VENTS (SEE M-SHEETS).

IT IS A VIOLATION OF THE NEW YORK STATE EDUCATION LAW, ARTICLE 145 §7209 SPECIAL PROVISIONS, FOR ANY PERSON, UNLESS THEY ARE ACTING UNDER THE DIRECTION OF A LICENSED PROFESSIONAL ENGINEER, ARCHITECT, LANDSCAPE ARCHITECT, OR LAND SURVEYOR, TO ALTER AN ITEM IN ANY WAY. IF AN ITEM BEARING THE STAMP OF A LICENSED PROFESSIONAL IS ALTERED, THE ALTERING PROFESSIONAL SHALL STAMP THE DOCUMENT AND INCLUDE THE NOTATION "ALTERED BY" FOLLOWED BY THEIR SIGNATURE, THE DATE OF SUCH ALTERATION, AND A SPECIFIC DESCRIPTION OF THE ALTERATION.

REVISIONS

CITY OF MIDDLETOWN
NEW COURTHOUSE FACILITY

EXISTING/DEMOLITION ROOF PLAN (ADDITIVE BID ITEM NO. 1)

CITY OF MIDDLETOWN ORANGE COUNTY, NEW YORK

Barton & Loguidice
443 Electronics Parkway
Liverpool, NY 13088
NYS CERTIFICATE # 0021642, 0020588, 0019903, 0019905, 0020336

STATE OF NEW YORK · MATTHEW C. FULLER · 070743 · LICENSED PROFESSIONAL ENGINEER

NYS EXP.:

Date: AUGUST, 2024

Scale: AS SHOWN

Sheet Number: AD103

Project Number: 1753.008.001

Plotted: 8/21/2024 4:26:42 PM
C:\Users\cgardner\Documents\Middletown Courthouse 6.22.21 Central File – ARCHITECTURAL STRUCTURAL
MODEL_cgardner05.rvt

Checked by ZDC Drawn by ZDC Designed by ZDC In Charge of TRB

GENERAL NOTES:

1. ALL DIMENSIONS TO, OF, AND IN EXISTING BUILDING SHALL BE VERIFIED IN FIELD BY CONTRACTOR.
2. CONTRACTOR SHALL COORDINATE ALL WORK WITH ALL OTHER CONTRACTORS ON SITE.
3. CONTRACTOR SHALL PROVIDE ALL MATERIALS AND LABOR FOR A COMPLETE INSTALLATION.
4. ALL WORK SHALL COMPLY WITH NYS FIRE PREVENTION AND BUILDING CODE, LOCAL BUILDING CODES, AS WELL AS NATIONAL PLUMBING AND ELECTRICAL CODES.
5. ALL WORK SHALL BE IN STRICT ACCORDANCE WITH MANUFACTURER'S WRITTEN INSTRUCTIONS FOR PREPARATIONS AND INSTALLATION OF MATERIALS.
6. DO NOT CHANGE SIZE NOR SPACING OF STRUCTURAL ELEMENTS.
7. DETAILS SHOWN ARE TYPICAL; SIMILAR DETAILS APPLY TO SIMILAR CONDITIONS UNLESS OTHERWISE INDICATED.
8. THE CONTRACTOR AND/OR SUBCONTRACTORS ARE SOLELY RESPONSIBLE FOR EXECUTING THE WORK AND MAINTAINING THE WORK SITE IN ACCORDANCE WITH ALL APPLICABLE SAFETY CODES AND STANDARDS.
9. CONTRACTOR SHALL PROVIDE PROTECTIVE BARRICADES, SIGNS AND LIGHTING TO PREVENT ANY UNAUTHORIZED PASSAGE INTO WORK AREA.
10. PROTECT ALL EXISTING AND NEW BUILDING ELEMENTS INSTALLED BY OTHER CONTRACTS FROM DAMAGE. CONTRACTOR SHALL RESTORE ALL DAMAGED ELEMENTS TO ORIGINAL OR BETTER CONDITION.
11. BRACE BUILDING UNTIL ALL STRUCTURAL ELEMENTS NEED FOR STABILITY ARE INSTALLED. THESE ELEMENTS ARE AS FOLLOWS: FLOOR DECK, ROOF DECK, BRACING MEMBERS, SHEAR WALLS.
12. CONTRACTOR SHALL DETERMINE EXACT LOCATION OF EXISTING UTILITIES BEFORE COMMENCING WORK, HE AGREES TO BE FULLY RESPONSIBLE FOR ANY AND ALL DAMAGES WHICH MIGHT BE OCCASIONED BY HIS FAILURE TO EXACTLY LOCATE AND PRESERVE UNDERGROUND UTILITIES.
13. CONTRACTOR SHALL NOTIFY THE ARCHITECT/ENGINEER IN WRITING OF ALL PROPOSED DEVIATIONS OR SUBSTITUTIONS FROM DIMENSIONS, MATERIALS, OR EQUIPMENT SHOWN ON THE DRAWINGS AND MAKE ONLY THOSE DEVIATIONS OR SUBSTITUTIONS ACCEPTABLE TO THE ARCHITECT/ENGINEER. NO CHANGES SHALL BE MADE WITH APPROVAL BY THE ARCHITECT/ENGINEER.
14. CONTRACTOR SHALL VERIFY ALL DIMENSIONS PRIOR TO ORDER AND/OR INSTALLATION OF MATERIAL.
15. DO NOT SCALE DRAWINGS. CONTRACTOR SHALL NOTIFY ARCHITECT/ENGINEER OF ANY DISCREPANCIES IN DIMENSIONS BETWEEN EXISTING CONDITIONS AND/OR ARCHITECTURAL DRAWINGS AND THE STRUCTURAL DRAWINGS.
16. PROVIDE ALL DEMO REQUIRED FOR NEW INSTALLATIONS SHOWN, AND PATCH EXISTING MATERIALS BACK TO ORIGINAL CONDITION, OR TO A CONDITION TO RECEIVE NEW WORK AS APPLICABLE.
17. EXAMINE ALL MECHANICAL, ELECTRICAL, PLUMBING & OTHER TRADE DRAWINGS FOR ADDITIONAL AND INCIDENTAL WORK RELATED TO OPENINGS, PENETRATIONS, EQUIPMENT PADS, EQUIPMENT ITEM OR TAG NUMBERS, AND OTHER ADDITIONAL WORK. COORDINATE WITH ALL OTHER TRADES & PROVIDE ALL LABOR & MATERIALS FOR A COMPLETE INSTALLATION.
18. SUBMISSION AND COSTS ASSOCIATED WITH OBTAINING A BUILDING PERMIT ARE THE GENERAL CONTRACTORS RESPONSIBILITY.

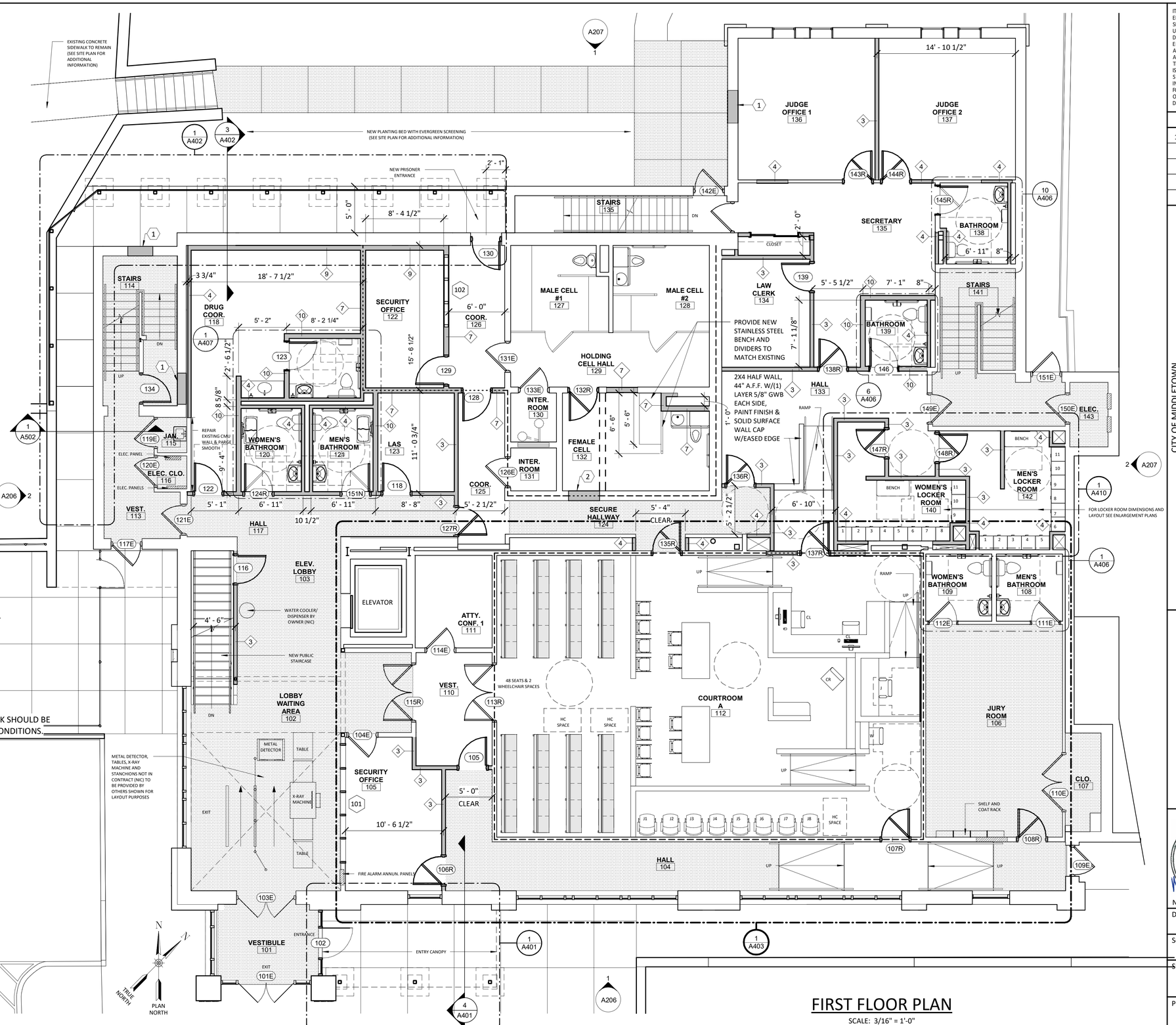

1 INFILL OPENING TO MATCH EXISTING WALL CONSTRUCTION. EXTERIOR BRICK SHOULD BE TOOTHED IN TO MATCH EXISTING COURSING TO BLEND IN WITH EXISTING CONDITIONS.

2 INFILL CMU WALL OPENING TO MATCH EXISTING WALL CONSTRUCTION.

NEW WORK LEGEND

	EXISTING 1 HOUR RATED WALL
	NEW 1 HOUR RATED WALL
	REFER TO BATHROOM ADDITION PLAN SHEET S101
	EXISTING FLOORING
	INDICATES EXISTING WALL
	INDICATES NEW WALL
201E	EXISTING DOOR TO REMAIN
201R	EXISTING DOOR TO BE RELOCATED

FIRST FLOOR PLAN

SCALE: 3/16" = 1'-0"

IT IS A VIOLATION OF THE NEW YORK STATE EDUCATION LAW, ARTICLE 145 §7209 SPECIAL PROVISIONS, FOR ANY PERSON, UNLESS THEY ARE ACTING UNDER THE DIRECTION OF A LICENSED PROFESSIONAL ENGINEER, ARCHITECT, LANDSCAPE ARCHITECT, OR LAND SURVEYOR, TO ALTER AN ITEM IN ANY WAY. IF AN ITEM BEARING THE STAMP OF A LICENSED PROFESSIONAL IS ALTERED, THE ALTERING PROFESSIONAL SHALL STAMP THE DOCUMENT AND INCLUDE THE NOTATION "ALTERED BY" FOLLOWED BY THEIR SIGNATURE, THE DATE OF SUCH ALTERATION, AND A SPECIFIC DESCRIPTION OF THE ALTERATION.

REVISIONS	
1	01/31/23

CITY OF MIDDLETOWN
NEW COURTHOUSE FACILITY

FIRST FLOOR NEW WORK PLAN

ORANGE COUNTY, NEW YORK

CITY OF MIDDLETOWN

Barton & Loguidice
443 Electronics Parkway
Liverpool, NY 13088
NYS CERTIFICATE # 0021642, 0020588, 0019903, 0019905, 0020336

NYS EXP.:

Date: AUGUST, 2024

Scale: AS SHOWN

Sheet Number: A201

Project Number: 1753.008.001

Plotted: 8/21/2024 4:25:56 PM
C:\Users\cgardner\Documents\Middletown Courthouse 6.22.21 Central File – ARCHITECTURAL STRUCTURAL MODEL_cgardner05.rvt

Checked by ZDC | Drawn by ZDC | Designed by ZDC | In Charge of TRB

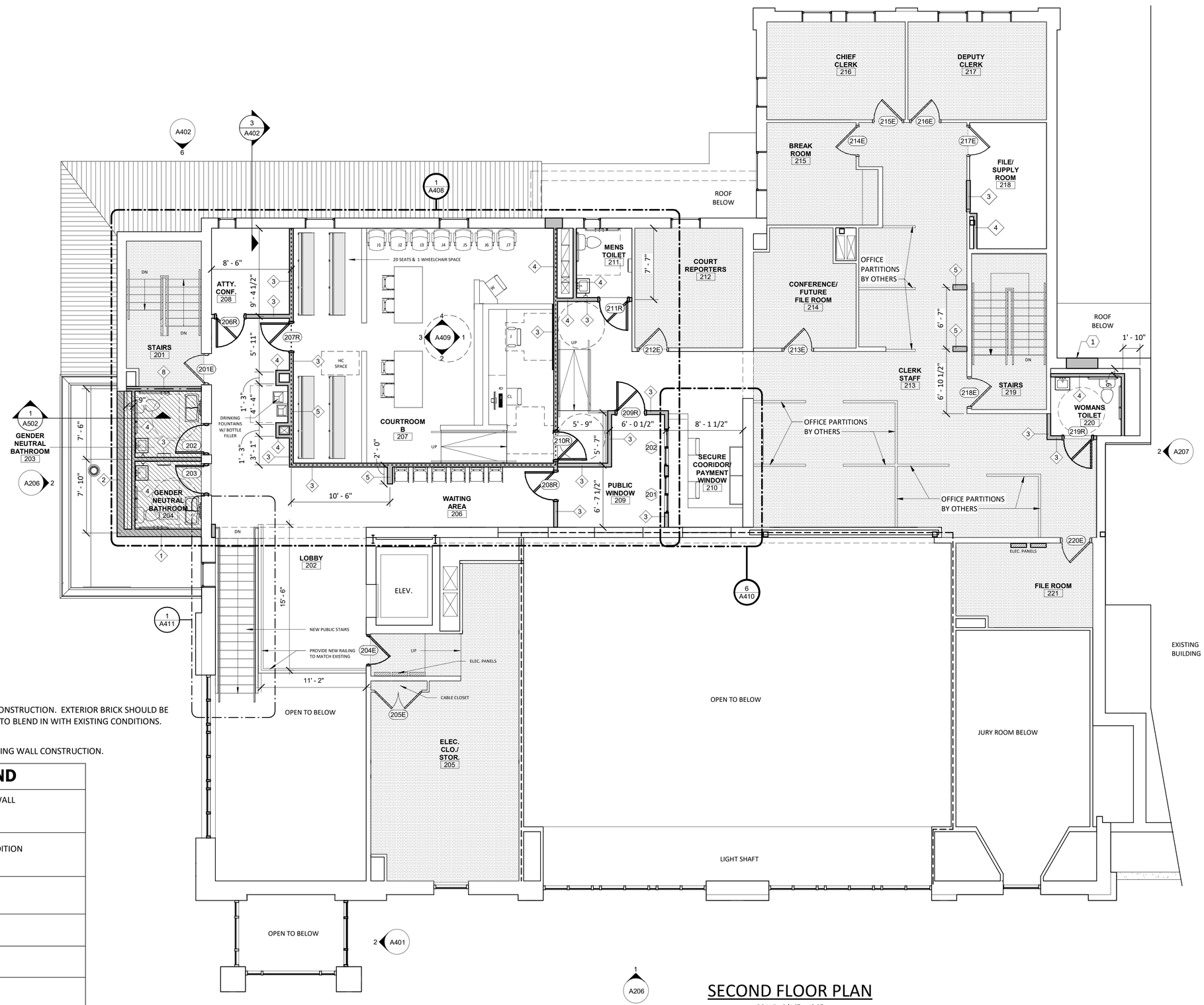

1 INFILL OPENING TO MATCH EXISTING WALL CONSTRUCTION. EXTERIOR BRICK SHOULD BE TOOTHED IN TO MATCH EXISTING COURSING TO BLEND IN WITH EXISTING CONDITIONS.

2 INFILL CMU WALL OPENING TO MATCH EXISTING WALL CONSTRUCTION.

NEW WORK LEGEND

- - - - - -	EXISTING 1 HOUR RATED WALL
- - - - - - - - - - - -	NEW 1 HOUR RATED WALL
	REFER TO BATHROOM ADDITION PLAN SHEET S101
	EXISTING FLOORING
	INDICATES EXISTING WALL
	INDICATES NEW WALL
201E	EXISTING DOOR TO REMAIN
201R	EXISTING DOOR TO BE RELOCATED

SECOND FLOOR PLAN

SCALE: 3/16" = 1'-0"

IT IS A VIOLATION OF THE NEW YORK STATE EDUCATION LAW, ARTICLE 145 §7209 SPECIAL PROVISIONS, FOR ANY PERSON, UNLESS THEY ARE ACTING UNDER THE DIRECTION OF A LICENSED PROFESSIONAL ENGINEER, ARCHITECT, LANDSCAPE ARCHITECT, OR LAND SURVEYOR, TO ALTER AN ITEM IN ANY WAY. IF AN ITEM BEARING THE STAMP OF A LICENSED PROFESSIONAL IS ALTERED, THE ALTERING PROFESSIONAL SHALL STAMP THE DOCUMENT AND INCLUDE THE NOTATION "ALTERED BY" FOLLOWED BY THEIR SIGNATURE, THE DATE OF SUCH ALTERATION, AND A SPECIFIC DESCRIPTION OF THE ALTERATION.

REVISIONS

CITY OF MIDDLETOWN
NEW COURTHOUSE FACILITY

SECOND FLOOR NEW WORK PLAN

ORANGE COUNTY, NEW YORK

CITY OF MIDDLETOWN

Barton & Loguidice
443 Electronics Parkway
Liverpool, NY 13088
NYS CERTIFICATE # 0021642, 0020588, 0019903, 0019905, 0020336

STATE OF NEW YORK · MATTHEW C. FULLER · 070743 · LICENSED PROFESSIONAL ENGINEER

NYS EXP.:

Date
AUGUST, 2024

Scale
AS SHOWN

Sheet Number
A202

Project Number
1753.008.001

Plotted: 8/21/2024 4:25:58 PM
C:\Users\cgardner\Documents\Middletown Courthouse 6.22.21 Central File – ARCHITECTURAL STRUCTURAL MODEL_cgardner05.rvt

Drawn by ZDC Designed by ZDC In Charge of TRB
Checked by ZDC

ROOF PLAN NOTES:

1. PRIMARY SCUPPER DRAIN (7" x 12") @ 5" ABOVE ROOF DECK, LEVEL WITH ROOF MINIMUM INSULATION.
2. SECONDARY SCUPPER DRAIN (7" x 12") @ 9" ABOVE ROOF DECK, ABOVE TAPERED INSULATION AT LOCATION.
3A. EXISTING ROOF DRAIN WITH NEW BOWL AND COVER, PROVIDE INSULATION SUMP AROUND DRAINS.
3B. NEW ROOF DRAIN WITH BOWL AND COVER, PROVIDE INSULATION SUMP AROUND DRAINS.
4. PROVIDE NEW INSULATION CANTS ON THE HIGH SIDE ALL EXISTING ROOF VENT HOODS AND EQUIPMENT TO PROVIDE POSITIVE DRAINAGE.
5. PROVIDE POLYISOCYANURATE (ISO) INSULATION (MIN. R-30CI) OVER ENTIRE BUILDING ROOF (PROVIDE THICKNESS NEEDED TO MEET R-30CI). PROVIDE VAPOR RETARDER & AIR BARRIER AS SPECIFIED AS PART OF INSULATION ENVELOPE INSTALLATION.
6. PROVIDE NEW TAPERED INSULATION PITCH 1/4" PER FOOT MIN. AS NEEDED TO PROVIDE POSITIVE DRAINAGE TO EXISTING AND NEW ROOF SCUPPER/DRAINS.
7. NEW 60 MIL. FULLY ADHERED (EPDM) ROOFING MEMBRANE SYSTEM AS AVAILABLE FROM FIRESTONE BUILDING PRODUCTS, OR APPROVED EQUAL.
8. PROVIDE NEW FLASHING MEMBRANE AT EXISTING VENT STACKS, EQUIPMENT HOODS
9. PROVIDE NEW EQUIPMENT CURBING (SUPPLIED BY MECHANICAL CONTRACTOR & INSTALLED BY GENERAL CONTRACTOR) AND FLASHING MEMBRANES AT EQUIPMENT CURBING.
10. EXISTING LIGHT FIXTURE TO REMAIN.
11. WRAP NEW EPDM UP EXISTING PARAPET WALL AND PROVIDE NEW METAL COPING SYSTEM.
12. EXISTING SMOKE HATCH PROVIDE NEW FLASHING MEMBRANE
13. NEW WATERDAM METAL COPING SYSTEM. PROVIDE ANCHORGARD EXTENDED CANTED FASCIA -12" (GALVANIZED WATERDAM VERSION) AS AVAILABLE FROM FIRESTONE BUILDING PRODUCTS, OR APPROVED EQUAL, COLOR TO BE SELECTED BY OWNER FROM MANUFACTURERS FULL RANGE OF COLOR OPTIONS.
14. WRAP EPDM UP ADJACENT BUILDING (MINIMUM 18" HIGH) AND PROVIDE TERMINATION BAR IN EXISTING BRICK WALL.
15. EXISTING ROOF SCUPPERS TO BE REMOVED, PROVIDE FLASHING MEMBRANE AND REINSTALL ROOF SCUPPER TO BE WEATHERTIGHT.
16. EXISTING ROOF SKYLIGHT PROVIDE NEW MEMBRANE FLASHINGS.
17. WRAP NEW EPDM OVER EXISTING PARAPET WALL/CURBING AND SPLICE INTO EPDM ROOF SYSTEMS ON EITHER SIDE.
18. WRAP NEW EPDM UP NEW PARAPET AND PROVIDE NEW METAL COPING SYSTEM. (ADDITIVE BID ITEM)
19. NEW ROOFTOP EQUIPMENT, SEE MECHANICAL PLANS FOR ADDITIONAL INFORMATION.
20. EXISTING ROOF ACCESS HATCH REMOVE, RAISE OPENING WITH P.T. WOOD BLOCKING, REINSTALL AND PROVIDE MEMBRANE FLASHING AT CURBING. (ADDITIVE BID ITEM)
21. EXISTING ROOFTOP EQUIPMENT TO REMAIN.
22. NEW ROOFTOP VENTS, SEE MECHANICAL SHEETS. INSTALL NEW CURBING PROVIDED BY MECHANICAL CONTRACTOR, PROVIDE FLASHING & PATCH/REPAIR ROOF AS REQUIRED.
23. INFILL EXISTING OPENING LEFT BY REMOVED ROOFTOP EQUIPMENT

GENERAL NOTES:

1. ALL DIMENSIONS TO, OF, AND IN EXISTING BUILDING SHALL BE VERIFIED IN FIELD BY CONTRACTOR.
2. CONTRACTOR SHALL COORDINATE ALL WORK WITH ALL OTHER CONTRACTORS ON SITE.
3. CONTRACTOR SHALL PROVIDE ALL MATERIALS AND LABOR FOR A COMPLETE INSTALLATION.
4. ALL WORK SHALL COMPLY WITH NYS FIRE PREVENTION AND BUILDING CODE, LOCAL BUILDING CODES, AS WELL AS NATIONAL PLUMBING AND ELECTRICAL CODES.
5. ALL WORK SHALL BE IN STRICT ACCORDANCE WITH MANUFACTURER'S WRITTEN INSTRUCTIONS FOR PREPARATIONS AND INSTALLATION OF MATERIALS.
6. DO NOT CHANGE SIZE NOR SPACING OF STRUCTURAL ELEMENTS.
7. DETAILS SHOWN ARE TYPICAL; SIMILAR DETAILS APPLY TO SIMILAR CONDITIONS UNLESS OTHERWISE INDICATED.
8. THE CONTRACTOR AND/OR SUBCONTRACTORS ARE SOLELY RESPONSIBLE FOR EXECUTING THE WORK AND MAINTAINING THE WORK SITE IN ACCORDANCE WITH ALL APPLICABLE SAFETY CODES AND STANDARDS.
9. CONTRACTOR SHALL PROVIDE PROTECTIVE BARRICADES, SIGNS AND LIGHTING TO PREVENT ANY UNAUTHORIZED PASSAGE INTO WORK AREA.
10. PROTECT ALL EXISTING AND NEW BUILDING ELEMENTS INSTALLED BY OTHER CONTRACTS FROM DAMAGE. CONTRACTOR SHALL RESTORE ALL DAMAGED ELEMENTS TO ORIGINAL OR BETTER CONDITION.
11. BRACE BUILDING UNTIL ALL STRUCTURAL ELEMENTS NEED FOR STABILITY ARE INSTALLED. THESE ELEMENTS ARE AS FOLLOWS: FLOOR DECK, ROOF DECK, BRACING MEMBERS, SHEAR WALLS.
12. CONTRACTOR SHALL DETERMINE EXACT LOCATION OF EXISTING UTILITIES BEFORE COMMENCING WORK, HE AGREES TO BE FULLY RESPONSIBLE FOR ANY AND ALL DAMAGES WHICH MIGHT BE OCCASIONED BY HIS FAILURE TO EXACTLY LOCATE AND PRESERVE UNDERGROUND UTILITIES.
13. CONTRACTOR SHALL NOTIFY THE ARCHITECT/ENGINEER IN WRITING OF ALL PROPOSED DEVIATIONS OR SUBSTITUTIONS FROM DIMENSIONS, MATERIALS, OR EQUIPMENT SHOWN ON THE DRAWINGS AND MAKE ONLY THOSE DEVIATIONS OR SUBSTITUTIONS ACCEPTABLE TO THE ARCHITECT/ENGINEER. NO CHANGES SHALL BE MADE WITH APPROVAL BY THE ARCHITECT/ENGINEER.
14. CONTRACTOR SHALL VERIFY ALL DIMENSIONS PRIOR TO ORDER AND/OR INSTALLATION OF MATERIAL.
15. DO NOT SCALE DRAWINGS. CONTRACTOR SHALL NOTIFY ARCHITECT/ENGINEER OF ANY DISCREPANCIES IN DIMENSIONS BETWEEN EXISTING CONDITIONS AND/OR ARCHITECTURAL DRAWINGS AND THE STRUCTURAL DRAWINGS.
16. PROVIDE ALL DEMO REQUIRED FOR NEW INSTALLATIONS SHOWN, AND PATCH EXISTING MATERIALS BACK TO ORIGINAL CONDITION, OR TO A CONDITION TO RECEIVE NEW WORK AS APPLICABLE.
17. EXAMINE ALL MECHANICAL, ELECTRICAL, PLUMBING & OTHER TRADE DRAWINGS FOR ADDITIONAL AND INCIDENTAL WORK RELATED TO OPENINGS, PENETRATIONS, EQUIPMENT PADS, EQUIPMENT ITEM OR TAG NUMBERS, AND OTHER ADDITIONAL WORK. COORDINATE WITH ALL OTHER TRADES & PROVIDE ALL LABOR & MATERIALS FOR A COMPLETE INSTALLATION.
18. SUBMISSION AND COSTS ASSOCIATED WITH OBTAINING A BUILDING PERMIT ARE THE GENERAL CONTRACTORS RESPONSIBILITY.

PLAN LEGEND

- NEW 60 MIL. FULLY ADHERED ETHYLENE PROPYLENE DIENE MONOMER (EPDM) MEMBRANE SYSTEM
- INDICATES ROOF SLOPE DIRECTION (PROVIDE 1/4" PER FOOT MINIMUM POSITIVE PITCH WITH TAPERED INSULATION TO DRAIN LOCATIONS ON PLANK DECK ROOF AND AT ROOF EDGES ON SLOPED METAL DECK TO PROVIDE POSITIVE PITCH TO ROOF DRAINS)
- WALL LINE

2020 ENERGY CONSERVATION CONSTRUCTION CODE OF NEW YORK STATE REQUIREMENTS:

CLIMATE ZONE: 5A (ORANGE COUNTY)

INSULATION ENTIRELY ABOVE ROOF DECK - R=30 CI (MIN.)
INSULATION ENTIRELY ABOVE ROOF DECK - U-0.032 (LESS THAN)

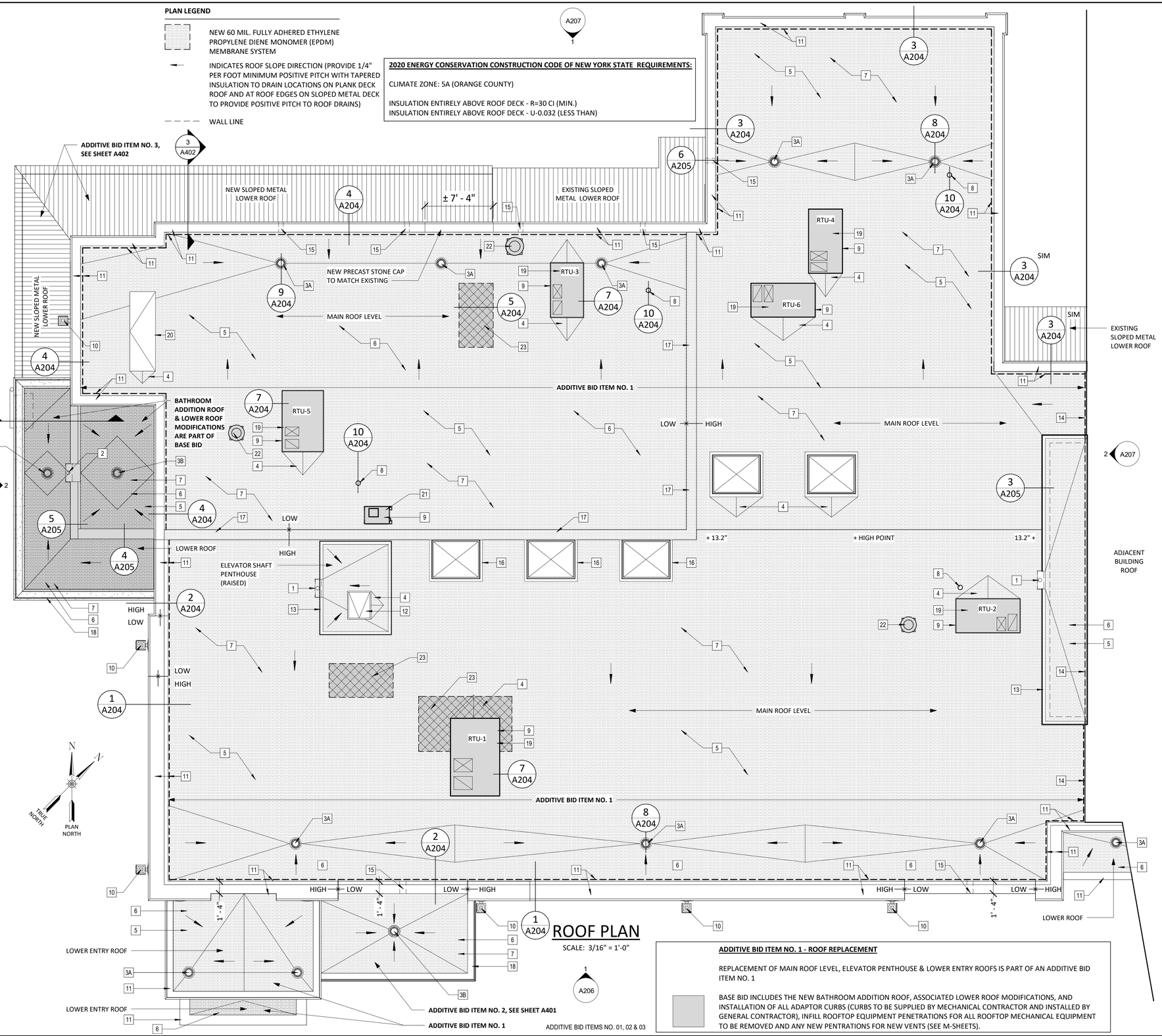

ROOF PLAN

SCALE: 3/16" = 1'-0"

ADDITIVE BID ITEM NO. 1 - ROOF REPLACEMENT

REPLACEMENT OF MAIN ROOF LEVEL, ELEVATOR PENTHOUSE & LOWER ENTRY ROOFS IS PART OF AN ADDITIVE BID ITEM NO. 1

BASE BID INCLUDES THE NEW BATHROOM ADDITION ROOF, ASSOCIATED LOWER ROOF MODIFICATIONS, AND INSTALLATION OF ALL ADAPTOR CURBS (CURBS TO BE SUPPLIED BY MECHANICAL CONTRACTOR AND INSTALLED BY GENERAL CONTRACTOR), INFILL ROOFTOP EQUIPMENT PENETRATIONS FOR ALL ROOFTOP MECHANICAL EQUIPMENT TO BE REMOVED AND ANY NEW PENTRATIONS FOR NEW VENTS (SEE M-SHEETS).

IT IS A VIOLATION OF THE NEW YORK STATE EDUCATION LAW, ARTICLE 145 §7209 SPECIAL PROVISIONS, FOR ANY PERSON, UNLESS THEY ARE ACTING UNDER THE DIRECTION OF A LICENSED PROFESSIONAL ENGINEER, ARCHITECT, LANDSCAPE ARCHITECT, OR LAND SURVEYOR, TO ALTER AN ITEM IN ANY WAY. IF AN ITEM BEARING THE STAMP OF A LICENSED PROFESSIONAL IS ALTERED, THE ALTERING PROFESSIONAL SHALL STAMP THE DOCUMENT AND INCLUDE THE NOTATION "ALTERED BY" FOLLOWED BY THEIR SIGNATURE, THE DATE OF SUCH ALTERATION, AND A SPECIFIC DESCRIPTION OF THE ALTERATION.

REVISIONS

CITY OF MIDDLETOWN
NEW COURTHOUSE FACILITY

ROOF PLAN (ADDITIVE BID ITEM NO. 1)

CITY OF MIDDLETOWN
ORANGE COUNTY, NEW YORK

Barton & Loguidice
443 Electronics Parkway
Liverpool, NY 13088
NYS CERTIFICATE # 0021642, 0020588, 0019903, 0019905, 0020336

STATE OF NEW YORK · MATTHEW C. FULLER · 070743 · LICENSED PROFESSIONAL ENGINEER

NYS EXP.:

Date: AUGUST, 2024

Scale: AS SHOWN

Sheet Number: A203

Project Number: 1753.008.001

Plotted: 8/21/2024 4:26:05 PM
C:\Users\cgardner\Documents\Middletown Courthouse 6.22.21 Central File – ARCHITECTURAL STRUCTURAL
MODEL_cgardner05_cr

Checked by ZDC | Drawn by ZDC | Designed by ZDC | In Charge of TRB

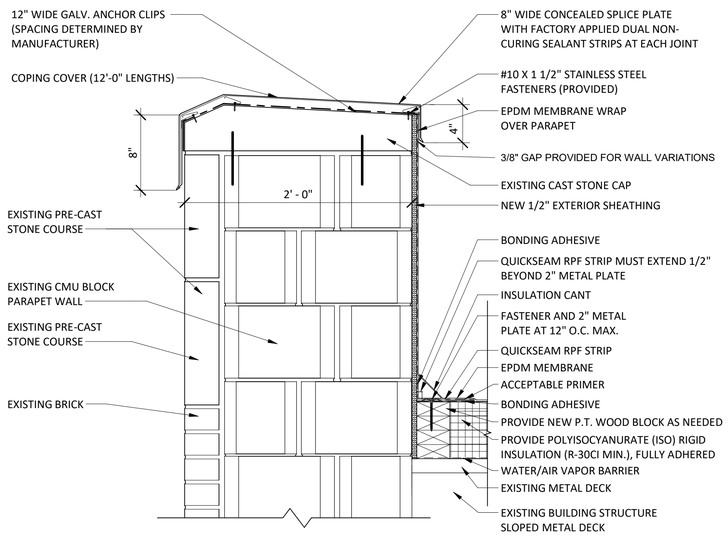

1 SOUTH PARAPET DETAIL @ SLOPED METAL DECK

1 1/2" = 1'-0"

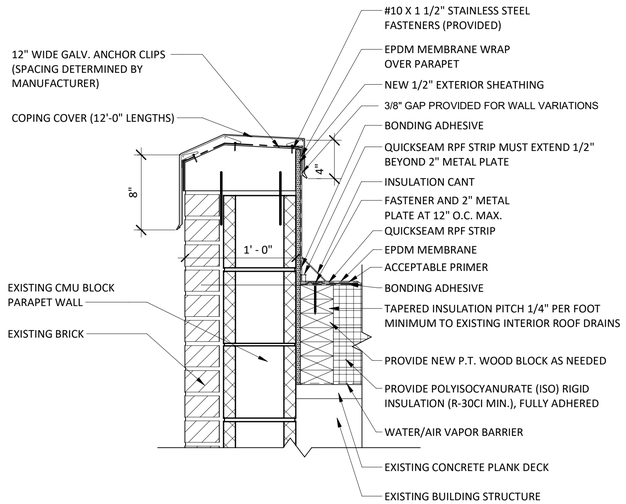

4 NORTH/WEST PARAPET DETAIL @ CONCRETE PLANK DECK

1 1/2" = 1'-0"

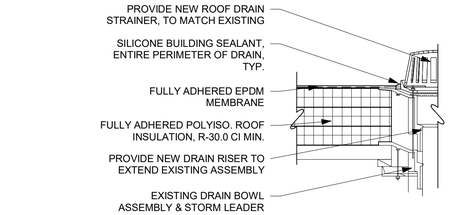

8 ROOF DRAIN DETAIL

1 1/2" = 1'-0"

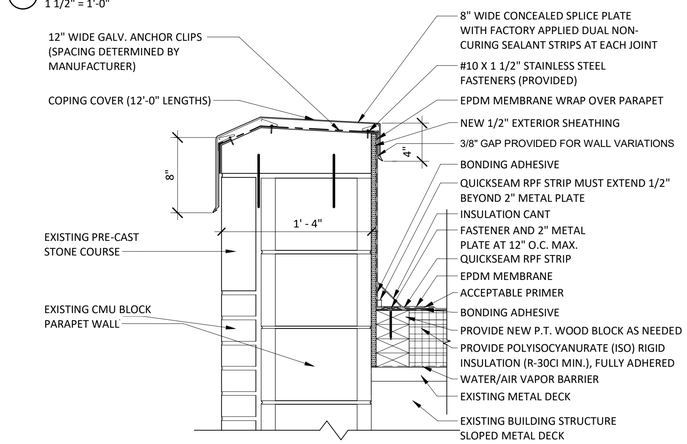

2 SOUTH/WEST PARAPET DETAIL @ SLOPED METAL DECK

1 1/2" = 1'-0"

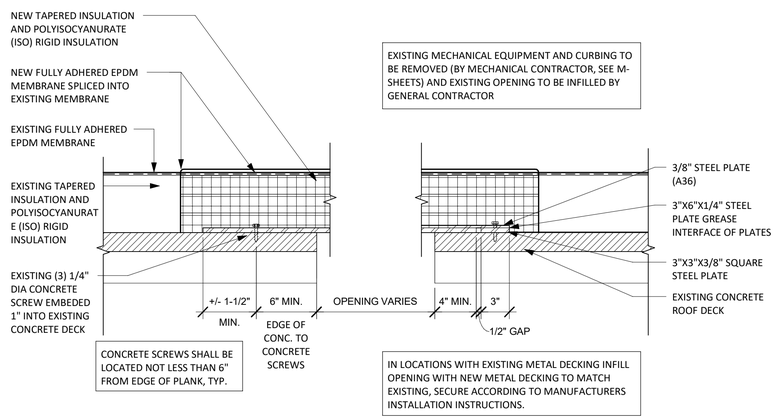

5 TYPICAL ROOF INFILL DETAIL

1 1/2" = 1'-0"

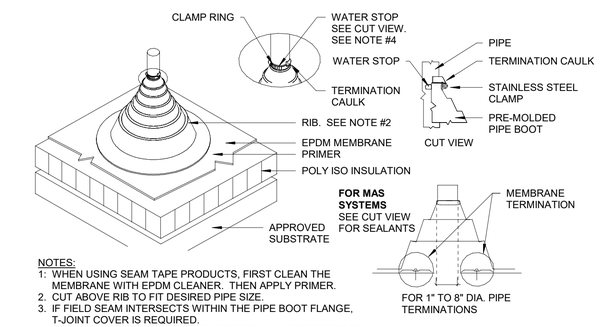

9 ROOF DRAIN DETAIL W/ TAPERED INSULATION

1 1/2" = 1'-0"

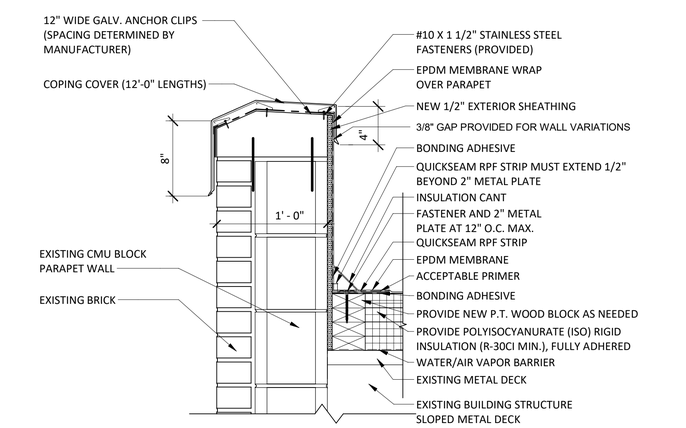

3 NORTH/EAST PARAPET DETAIL @ SLOPED METAL DECK

1 1/2" = 1'-0"

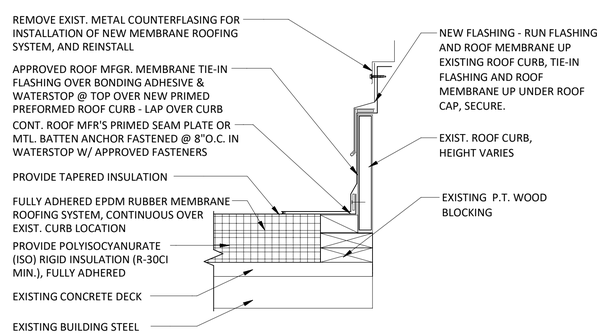

7 TYP. ROOF EQUIP./ CURB DETAIL

1 1/2" = 1'-0"

NOTES:
1: WHEN USING SEAM TAPE PRODUCTS, FIRST CLEAN THE MEMBRANE WITH EPDM CLEANER. THEN APPLY PRIMER.
2. CUT ABOVE RIB TO FIT DESIRED PIPE SIZE.
3. IF FIELD SEAM INTERSECTS WITHIN THE PIPE BOOT FLANGE, T-JOINT COVER IS REQUIRED.
4. APPLY WATER STOP TO THE PENETRATION WHERE THE BOOT WILL BE COMPRESSED WITH THE CLAMPING RING
5. INSTALL MEMBRANE SECUREMENT, CONSISTING OF 4 FASTENERS AND SEAM PLATES PER PIPE FLASHING. WHEN POSSIBLE, INSTALL CLOSE ENOUGH TO BE COVERED BY BOOT FLANGE WITHOUT INTERFERING WITH THE BOOT TO DECK MEMBRANE SEAM AREA.
6. APPLY TERMINATION CAULK TO THE TOP OF THE PIPE BOOT AS SHOWN ABOVE.

10 PREFAB BOOT DETAIL

12" = 1'-0"

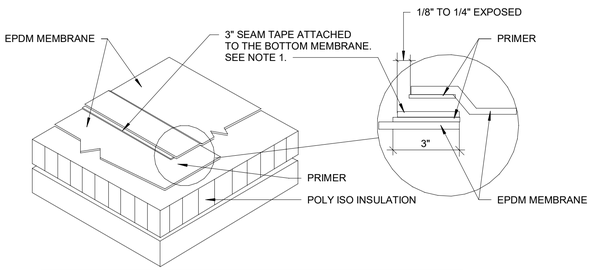

NOTES:
1. WHEN USING SEAM TAPE AND BAR COVER TAPE, FIRST CLEAN THE MEMBRANE WITH THE MFR CLEANER. THEN APPLY THE MFR PRIMER

6 SEAM TAPE APPLICATION DETAIL

12" = 1'-0"

IT IS A VIOLATION OF THE NEW YORK STATE EDUCATION LAW, ARTICLE 145 §7209 SPECIAL PROVISIONS, FOR ANY PERSON, UNLESS THEY ARE ACTING UNDER THE DIRECTION OF A LICENSED PROFESSIONAL ENGINEER, ARCHITECT, LANDSCAPE ARCHITECT, OR LAND SURVEYOR, TO ALTER AN ITEM IN ANY WAY. IF AN ITEM BEARING THE STAMP OF A LICENSED PROFESSIONAL IS ALTERED, THE ALTERING PROFESSIONAL SHALL STAMP THE DOCUMENT AND INCLUDE THE NOTATION "ALTERED BY" FOLLOWED BY THEIR SIGNATURE, THE DATE OF SUCH ALTERATION, AND A SPECIFIC DESCRIPTION OF THE ALTERATION.

REVISIONS

CITY OF MIDDLETOWN
NEW COURTHOUSE FACILITY

ORANGE COUNTY, NEW YORK

CITY OF MIDDLETOWN

ROOF DETAILS

Barton & Loguidice
443 Electronics Parkway
Liverpool, NY 13088
NYS CERTIFICATE # 0021642, 0020588, 0019903, 0019905, 0020336

NYS EXP.:

Date: AUGUST, 2024

Scale: AS SHOWN

Sheet Number: A204

Project Number: 1753.008.001

Plotted: 8/21/2024 4:26:06 PM
C:\Users\cgardner\Documents\Middletown Courthouse 6.22.21 Central File – ARCHITECTURAL STRUCTURAL
MODEL_cgardner05.rvt
Checked by ZDC Drawn by JEA Designed by JEA In Charge of TRB

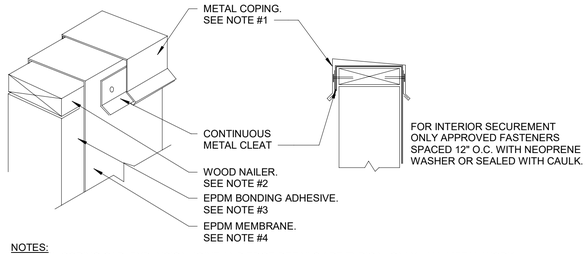

NOTES:
1. METAL COPING CAP, EXPANSION JOINT AND EDGE DETAILS ARE TYPICAL ONLY. ALL METAL WORK SHOULD BE INSTALLED TO SHEET METAL CODES (SMACNA). CLEAN ALL METAL PRIOR TO INSTALLATION OF ROOF MATERIALS.
2. ALL WOOD NAILERS TO BE APPROVED MATERIAL. ATTACHMENT OF WOOD NAILER TO BE ACCOMPLISHED BY USING FASTENERS PROVIDED NO LESS THAT 125 LB OF PULLOUT RESISTANCE PER LINEAR FOOT, WITH FASTENER SPACING NO GREATER THAN 24" BETWEEN FASTENERS.
3. ALL PARAPET WALLS AND ROOF CURBS MUST BE SUITABLE FOR FLASHING, I.E. CLEAN, TIGHT SMOOTH, NO CRACKS, ETC.
4. WHEN FIELD MEMBRANE IN USED AS WALL OR CURB FLASHING, VERTICAL SEAMS MUST BE STRIPPED IN AT BASE OF ANGLE CHANGE WITH A 7" WIDE STRIP OF PEEL AND STICK FLASHING. SEE DETAIL 9/A504.

1 EPDM MEMBRANE COPING TERMINATION DETAIL
12" = 1'-0"

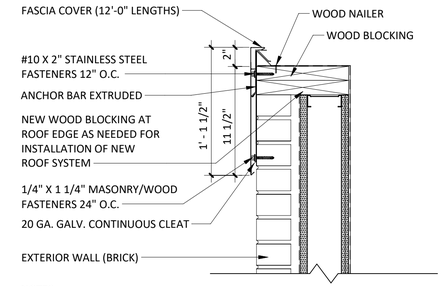

NOTES:
1. PROVIDE ANCHORGARD EXTENDED CANTED FASCIA - 12" (GALVANIZED WATERDAM VERSION) AS AVAILABLE FROM FIRESTONE BUILDING PRODUCTS, OR APPROVED EQUAL, COLOR TO BE SELECTED BY OWNER FROM MANUFACTURERS FULL RANGE OF COLOR OPTIONS.
2. PROVIDE DOWNSPOUT SCUPPER IN LOCATION SHOWN ON ROOF PLAN.
3. INSTALL WATERDAM FASCIA COPINGS AND SCUPPERS PER MANUFACTURERS REQUIREMENTS.

4 NEW PARAPET METAL COPING DETAIL AT NEW ADDITION
1 1/2" = 1'-0"

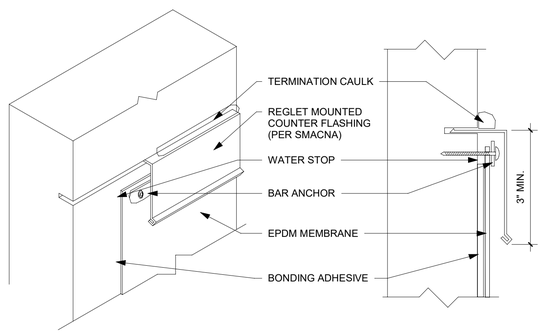

2 REGLET MOUNTED COUNTER FLASHING TERMINATION DETAIL
6" = 1'-0"

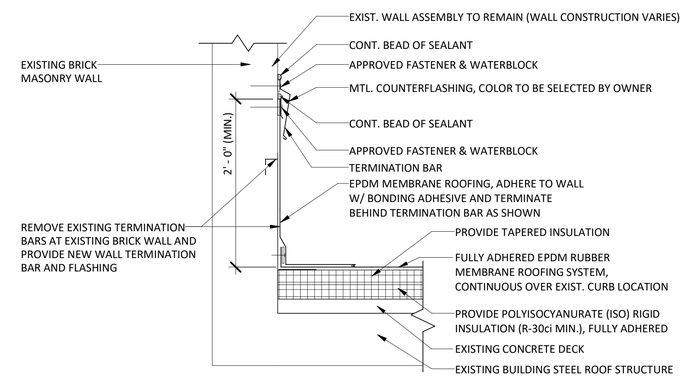

5 TYPICAL WALL TERMINATION DETAIL AT NEW ADDITION
1 1/2" = 1'-0"

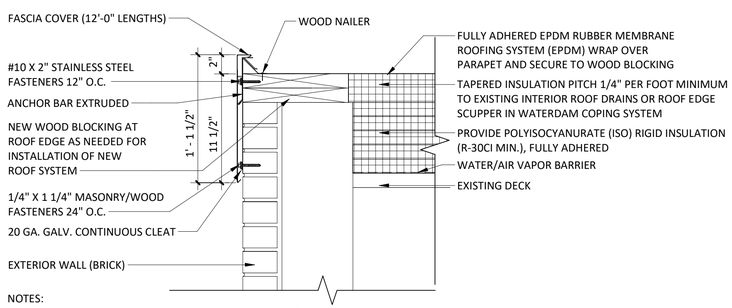

NOTES:
1. PROVIDE ANCHORGARD EXTENDED CANTED FASCIA - 12" (GALVANIZED WATERDAM VERSION) AS AVAILABLE FROM FIRESTONE BUILDING PRODUCTS, OR APPROVED EQUAL, COLOR TO BE SELECTED BY OWNER FROM MANUFACTURERS FULL RANGE OF COLOR OPTIONS.
2. PROVIDE DOWNSPOUT SCUPPER IN LOCATION SHOWN ON ROOF PLAN.
3. INSTALL WATERDAM FASCIA COPINGS AND SCUPPERS PER MANUFACTURERS REQUIREMENTS.

3 ROOF METAL COPING DETAIL AT EXISTING ROOF
1 1/2" = 1'-0"

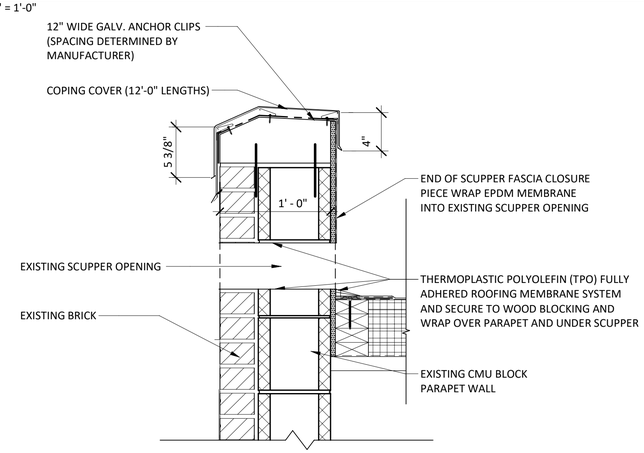

NOTES:

1. PROVIDE ANCHORGARD EXTENDED CANTED FASCIA - 12" (GALVANIZED WATERDAM VERSION) AS AVAILABLE FROM FIRESTONE BUILDING PRODUCTS, OR APPROVED EQUAL, COLOR TO BE SELECTED BY OWNER FROM MANUFACTURERS FULL RANGE OF COLOR OPTIONS.

2. INSTALL WATERDAM FASCIA COPINGS AND SCUPPERS PER MANUFACTURERS REQUIREMENTS.

6 ROOF METAL SCUPPER DETAIL
1 1/2" = 1'-0"

IT IS A VIOLATION OF THE NEW YORK STATE EDUCATION LAW, ARTICLE 145 §7209 SPECIAL PROVISIONS, FOR ANY PERSON, UNLESS THEY ARE ACTING UNDER THE DIRECTION OF A LICENSED PROFESSIONAL ENGINEER, ARCHITECT, LANDSCAPE ARCHITECT, OR LAND SURVEYOR, TO ALTER AN ITEM IN ANY WAY. IF AN ITEM BEARING THE STAMP OF A LICENSED PROFESSIONAL IS ALTERED, THE ALTERING PROFESSIONAL SHALL STAMP THE DOCUMENT AND INCLUDE THE NOTATION "ALTERED BY" FOLLOWED BY THEIR SIGNATURE, THE DATE OF SUCH ALTERATION, AND A SPECIFIC DESCRIPTION OF THE ALTERATION.

REVISIONS

CITY OF MIDDLETOWN
NEW COURTHOUSE FACILITY

ORANGE COUNTY, NEW YORK

ROOF DETAILS

CITY OF MIDDLETOWN

Barton & Loguidice
443 Electronics Parkway
Liverpool, NY 13088
NYS CERTIFICATE # 0021642, 0020588, 0019903, 0019905, 0020336

STATE OF NEW YORK · MATTHEW C. TUCKER · 070743 · LICENSED PROFESSIONAL ENGINEER

NYS EXP.:

Date
AUGUST, 2024

Scale
AS SHOWN

Sheet Number
A205

Project Number
1753.008.001

Plotted: 8/21/2024 4:26:06 PM
C:\Users\cgardner\Documents\Middletown Courthouse 6.22.21 Central File – ARCHITECTURAL STRUCTURAL MODEL_cgardnerOS.rvt
Checked by ZDC Drawn by ZDC Designed by ZDC In Charge of TRB

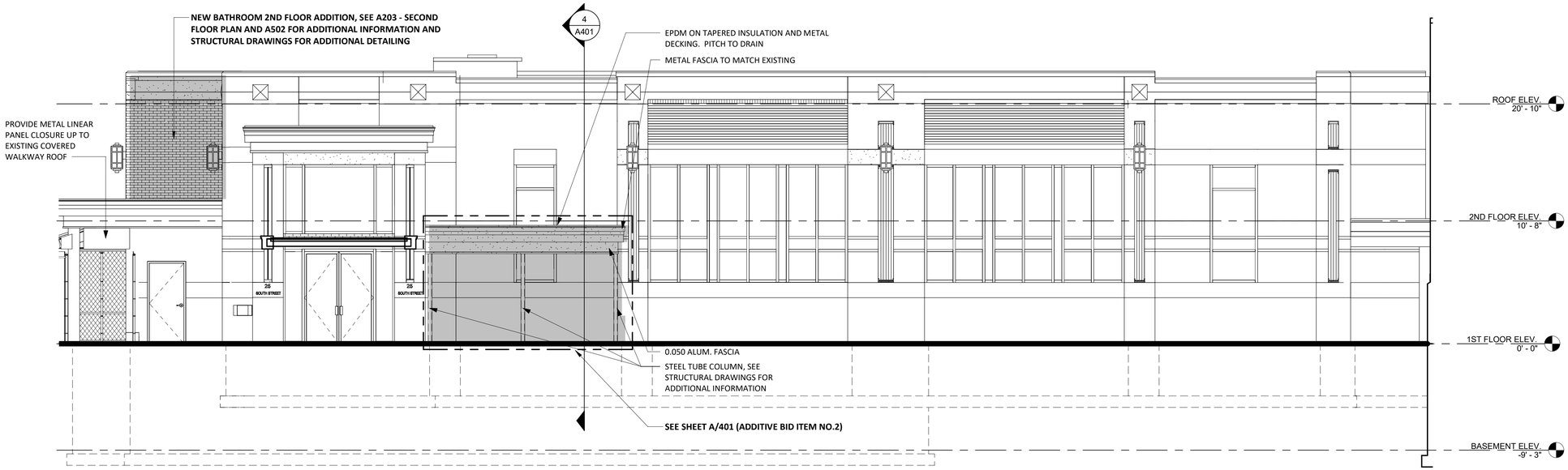

SOUTH ELEVATION

SCALE: 3/16" = 1'-0"

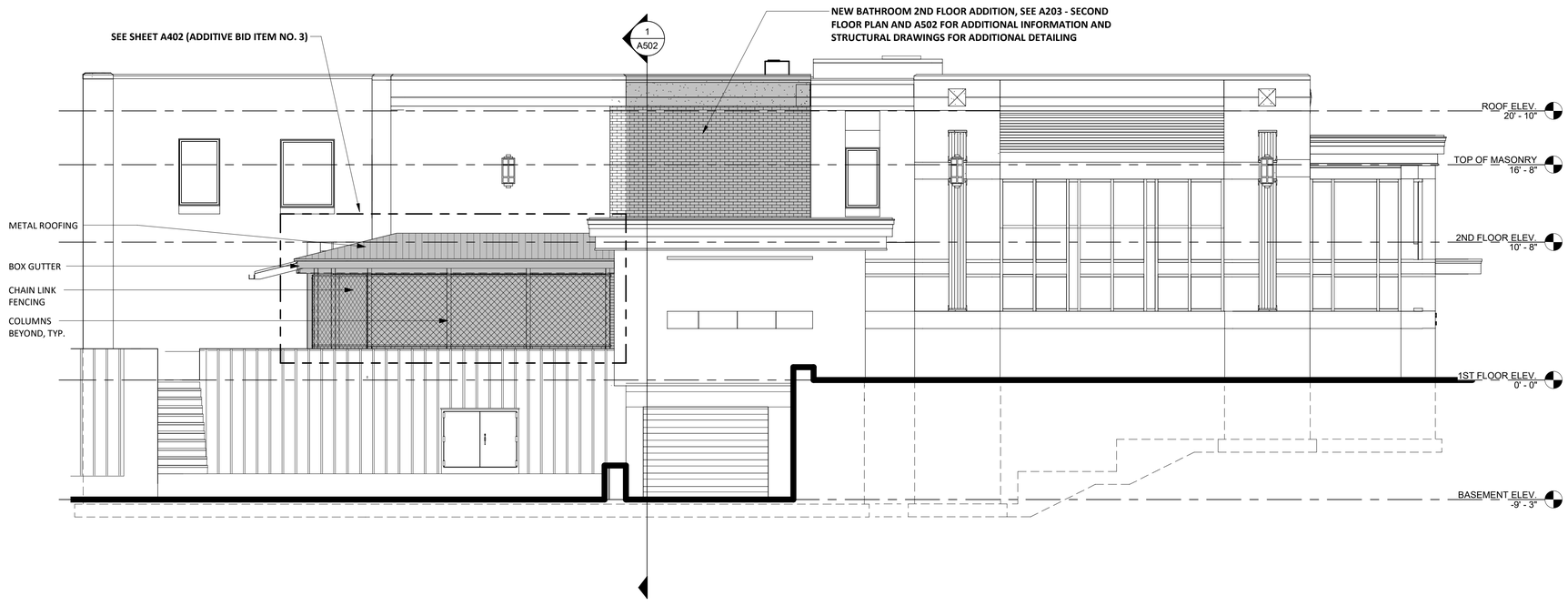

WEST ELEVATION

SCALE: 3/16" = 1'-0"

Plotted: 8/21/2024 4:26:09 PM
C:\Users\cgardner\Documents\Middletown Courthouse 6.22.21 Central File – ARCHITECTURAL STRUCTURAL MODEL_cgardner05.rvt

Checked by ZDC Drawn by ZDC Designed by ZDC In Charge of TRB

IT IS A VIOLATION OF THE NEW YORK STATE EDUCATION LAW, ARTICLE 145 §7209 SPECIAL PROVISIONS, FOR ANY PERSON, UNLESS THEY ARE ACTING UNDER THE DIRECTION OF A LICENSED PROFESSIONAL ENGINEER, ARCHITECT, LANDSCAPE ARCHITECT, OR LAND SURVEYOR, TO ALTER AN ITEM IN ANY WAY. IF AN ITEM BEARING THE STAMP OF A LICENSED PROFESSIONAL IS ALTERED, THE ALTERING PROFESSIONAL SHALL STAMP THE DOCUMENT AND INCLUDE THE NOTATION "ALTERED BY" FOLLOWED BY THEIR SIGNATURE, THE DATE OF SUCH ALTERATION, AND A SPECIFIC DESCRIPTION OF THE ALTERATION.

REVISIONS

CITY OF MIDDLETOWN
NEW COURTHOUSE FACILITY

BUILDING SOUTH AND WEST ELEVATIONS

ORANGE COUNTY, NEW YORK

CITY OF MIDDLETOWN

Barton & Loguidice
443 Electronics Parkway
Liverpool, NY 13088
NYS CERTIFICATE # 0021642, 0020588, 0019903, 0019905, 0020336

STATE OF NEW YORK · MATTHEW C. FULLER · 070743 · LICENSED PROFESSIONAL ENGINEER

NYS EXP.:

Date
AUGUST, 2024

Scale
AS SHOWN

Sheet Number
A206

Project Number
1753.008.001

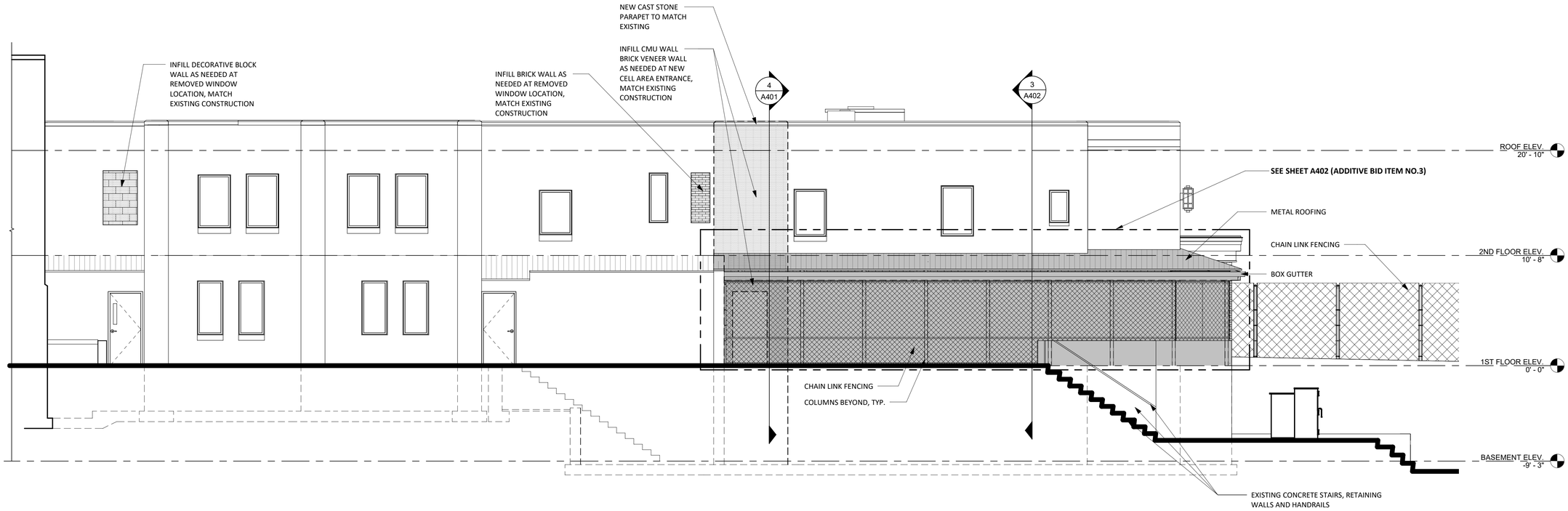

NORTH ELEVATION

SCALE: 3/16" = 1'-0"

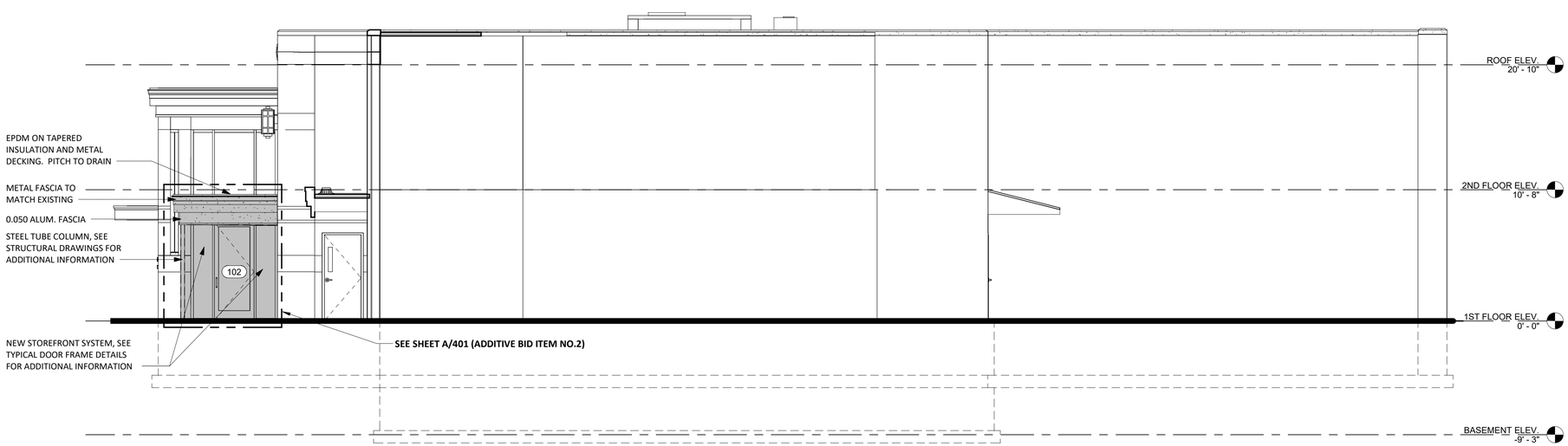

EAST ELEVATION

SCALE: 3/16" = 1'-0"

IT IS A VIOLATION OF THE NEW YORK STATE EDUCATION LAW, ARTICLE 145 §7209 SPECIAL PROVISIONS, FOR ANY PERSON, UNLESS THEY ARE ACTING UNDER THE DIRECTION OF A LICENSED PROFESSIONAL ENGINEER, ARCHITECT, LANDSCAPE ARCHITECT, OR LAND SURVEYOR, TO ALTER AN ITEM IN ANY WAY. IF AN ITEM BEARING THE STAMP OF A LICENSED PROFESSIONAL IS ALTERED, THE ALTERING PROFESSIONAL SHALL STAMP THE DOCUMENT AND INCLUDE THE NOTATION "ALTERED BY" FOLLOWED BY THEIR SIGNATURE, THE DATE OF SUCH ALTERATION, AND A SPECIFIC DESCRIPTION OF THE ALTERATION.

REVISIONS

CITY OF MIDDLETOWN
NEW COURTHOUSE FACILITY

BUILDING NORTH AND EAST ELEVATIONS

CITY OF MIDDLETOWN ORANGE COUNTY, NEW YORK

Barton & Loguidice
443 Electronics Parkway
Liverpool, NY 13088
NYS CERTIFICATE # 0021642, 0020588, 0019903, 0019905, 0020336

STATE OF NEW YORK · MATTHEW C. FULLER · 070743 · LICENSED PROFESSIONAL ENGINEER

NYS EXP.:

Date
AUGUST, 2024

Scale
AS SHOWN

Sheet Number
A207

Project Number
1753.008.001

Plotted: 8/21/2024 4:26:11 PM
C:\Users\cgardner\Documents\Middletown Courthouse 6.22.21 Central File – ARCHITECTURAL STRUCTURAL
MODEL_cgardner05.rvt

Checked by ZDC Drawn by ZDC Designed by ZDC In Charge of TRB

KEYED REFLECTED CEILING NOTES

1. EXISTING CEILING GRID, TILE & LIGHTS TO REMAIN
2. NEW 2 X 2 ACOUSTICAL CEILING TILE & GRID SYSTEM.
3. EXISTING SHEETROCKED SOFFIT TO REMAIN.
4. NEW SHEETROCKED DROPPED VALANCE.
5. NEW SHEETROCKED SOFFIT.
6. *NEW 2X2 RECESSED LIGHT FIXTURE (TYP.)
7. *NEW EXTERIOR 6" ROUND RECESSED CEILING POT LIGHT FIXTURE TO MATCH EXISTING
8. NEW HANGING GWB CEILING SYSTEM
9. EXISTING GWB CEILING & LIGHTS TO REMAIN
10. NEW HANGING 12" WIDE, 12 GA METALWORKS SECURE LOCK PLUS CEILING SYSTEM OR APPROVED EQUAL. COORDINATE LOCATIONS OF SUPPLY AND RETURN DIFFUSERS/REGISTERS AND PROVIDE PERFORATED PANELS AT THESE LOCATIONS (SEE MECHANICAL DWGS). MECHANICAL SUPPLY AND RETURNS WILL BE INSTALLED ABOVE THE CEILING SYSTEM.
11. *NEW 12" X 48" RECESSED LIGHT FIXTURE
12. * NEW 9" WALL PACK LIGHT FIXTURES
13. EXTERIOR WALKWAY CANOPY ROOF (STEEL DECK AND CANOPY STEEL STRUCTURE TO BE EXPOSED)
14. EXISTING LINEAR METAL CEILING SYSTEM TO REMAIN
15. NEW EXTERIOR LINEAR METAL CEILING SYSTEM TO MATCH EXISTING EXTERIOR 6" ROUND RECESSED POT LIGHT TO REMAIN
16. EXISTING INTERIOR 6" ROUND RECESSED POT LIGHTS TO REMAIN
17. *NEW INTERIOR 6" ROUND RECESSED CEILING PIT LIGHT FIXTURE
18. **NEW SUPPLY DIFFUSER (TYP.)
19. ** NEW RETURN GRILLE (TYP.)
20. NEW LIGHTS TO BE INSTALLED IN NEW ACOUSTICAL CEILING GRID SYSTEM. SEE ELECTRICAL DRAWINGS.

* SEE ELECTRICAL PLANS FOR LIGHT FIXTURE SELECTION

**SEE MECHANICAL PLANS FOR DIFFUSER AND GRILLE INFORMATION.

EXISTING CEILINGS TO REMAIN REMOVE AND REPLACE ACOSTICAL TILE AS NEEDED FOR MECHANICAL DUCT MODIFICATIONS

EXISTING GWB CEILINGS TO REMAIN

EXISTING METAL CEILING TO REMAIN

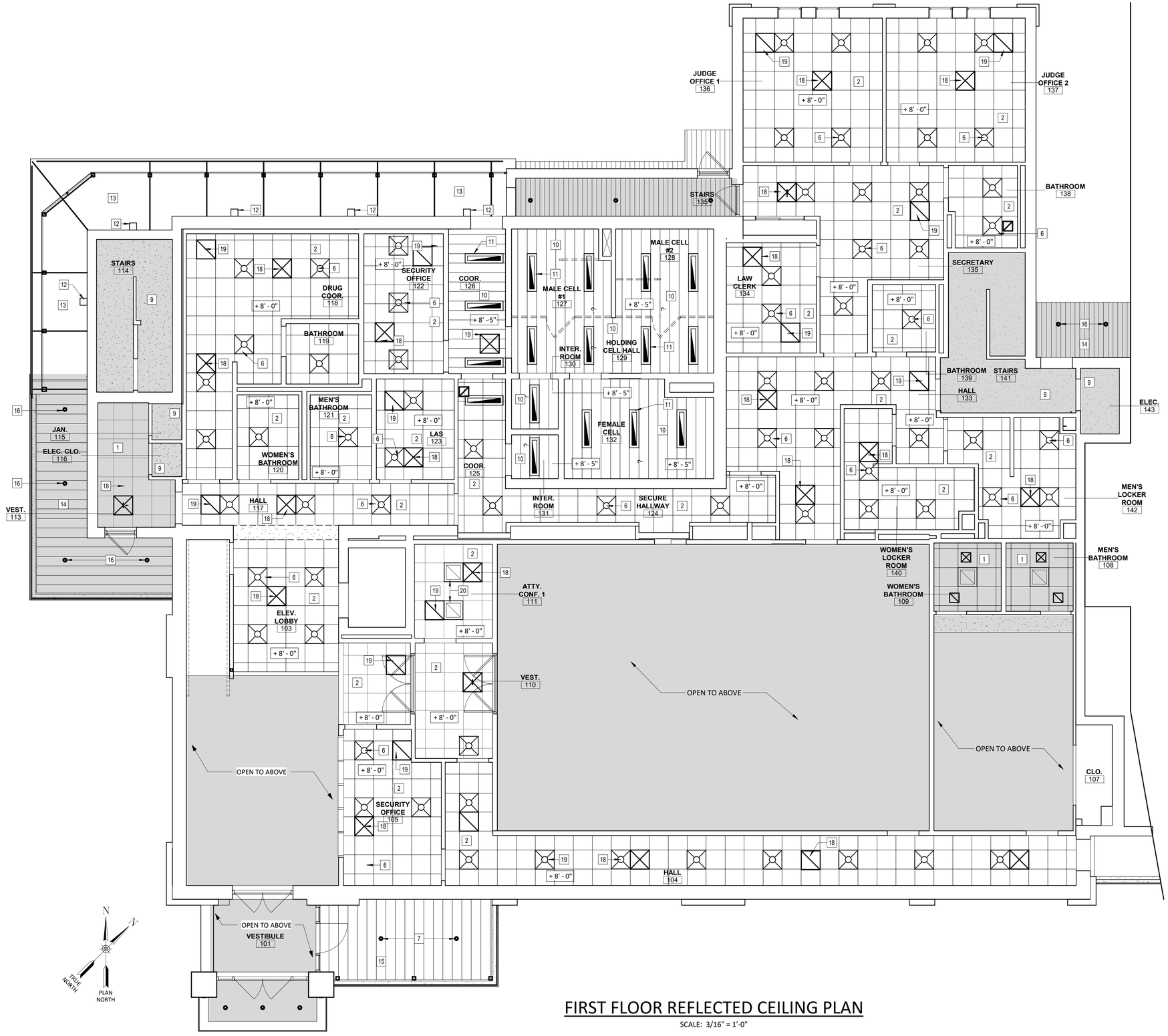

FIRST FLOOR REFLECTED CEILING PLAN

SCALE: 3/16" = 1'-0"

IT IS A VIOLATION OF THE NEW YORK STATE EDUCATION LAW, ARTICLE 145 §7209 SPECIAL PROVISIONS, FOR ANY PERSON, UNLESS THEY ARE ACTING UNDER THE DIRECTION OF A LICENSED PROFESSIONAL ENGINEER, ARCHITECT, LANDSCAPE ARCHITECT, OR LAND SURVEYOR, TO ALTER AN ITEM IN ANY WAY. IF AN ITEM BEARING THE STAMP OF A LICENSED PROFESSIONAL IS ALTERED, THE ALTERING PROFESSIONAL SHALL STAMP THE DOCUMENT AND INCLUDE THE NOTATION "ALTERED BY" FOLLOWED BY THEIR SIGNATURE, THE DATE OF SUCH ALTERATION, AND A SPECIFIC DESCRIPTION OF THE ALTERATION.

REVISIONS

CITY OF MIDDLETOWN
NEW COURTHOUSE FACILITY

ORANGE COUNTY, NEW YORK

FIRST FLOOR REFLECTED CEILING PLAN

CITY OF MIDDLETOWN

Barton & Loguidice
443 Electronics Parkway
Liverpool, NY 13088
NYS CERTIFICATE # 0021642, 0020588, 0019903, 0019905, 0020336

STATE OF NEW YORK · MATTHEW C. FULLER · 070743 · LICENSED PROFESSIONAL ENGINEER

NYS EXP.:

Date: AUGUST, 2024

Scale: AS SHOWN

Sheet Number: A301

Project Number: 1753.008.001

Plotted: 8/21/2024 4:26:11 PM
C:\Users\cgardner\Documents\Middletown Courthouse 6.22.21 Central File – ARCHITECTURAL STRUCTURAL MODEL_cgardner05.rvt

Checked by ZDC Drawn by JDC Designed by JDC In Charge of TRB

KEYED REFLECTED CEILING NOTES

1. EXISTING CEILING GRID, TILE & LIGHTS TO REMAIN
2. NEW 2 X 2 ACOUSTICAL CEILING TILE & GRID SYSTEM.
3. EXISTING SHEETROCKED SOFFIT TO REMAIN.
4. NEW SHEETROCKED DROPPED VALANCE.
5. NEW SHEETROCKED SOFFIT.
6. *NEW 2X2 RECESSED LIGHT FIXTURE (TYP.)
7. *NEW EXTERIOR 6" ROUND RECESSED CEILING POT LIGHT FIXTURE TO MATCH EXISTING
8. NEW HANGING GWB CEILING SYSTEM
9. EXISTING GWB CEILING & LIGHTS TO REMAIN
10. NEW HANGING 12" WIDE, 12 GA METALWORKS SECURE LOCK PLUS CEILING SYSTEM OR APPROVED EQUAL. COORDINATE LOCATIONS OF SUPPLY AND RETURN DIFFUSERS/REGISTERS AND PROVIDE PERFORATED PANELS AT THESE LOCATIONS (SEE MECHANICAL DWGS). MECHANICAL SUPPLY AND RETURNS WILL BE INSTALLED ABOVE THE CEILING SYSTEM.
11. *NEW 12" X 48" RECESSED LIGHT FIXTURE
12. * NEW 9" WALL PACK LIGHT FIXTURES
13. EXTERIOR WALKWAY CANOPY ROOF (STEEL DECK AND CANOPY STEEL STRUCTURE TO BE EXPOSED)
14. EXISTING LINEAR METAL CEILING SYSTEM TO REMAIN
15. NEW EXTERIOR LINEAR METAL CEILING SYSTEM TO MATCH EXISTING EXTERIOR 6" ROUND RECESSED POT LIGHT TO REMAIN
16. EXISTING INTERIOR 6" ROUND RECESSED POT LIGHTS TO REMAIN
17. *NEW INTERIOR 6" ROUND RECESSED CEILING PIT LIGHT FIXTURE
18. **NEW SUPPLY DIFFUSER (TYP.)
19. ** NEW RETURN GRILLE (TYP.)
20. NEW LIGHTS TO BE INSTALLED IN NEW ACOUSTICAL CEILING GRID SYSTEM. SEE ELECTRICAL DRAWINGS.

* SEE ELECTRICAL PLANS FOR LIGHT FIXTURE SELECTION

**SEE MECHANICAL PLANS FOR DIFFUSER AND GRILLE INFORMATION.

EXISTING CEILINGS TO REMAIN REMOVE AND REPLACE ACOSTICAL TILE AS NEEDED FOR MECHANICAL DUCT MODIFICATIONS

EXISTING GWB CEILINGS TO REMAIN

EXISTING METAL CEILING TO REMAIN

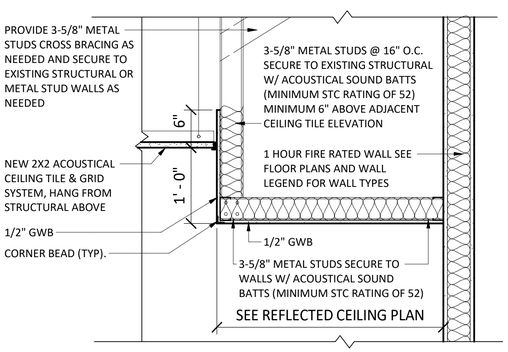

2 A302 COURTROOM SOFFIT DETAIL
SCALE: 1" = 1'-0"

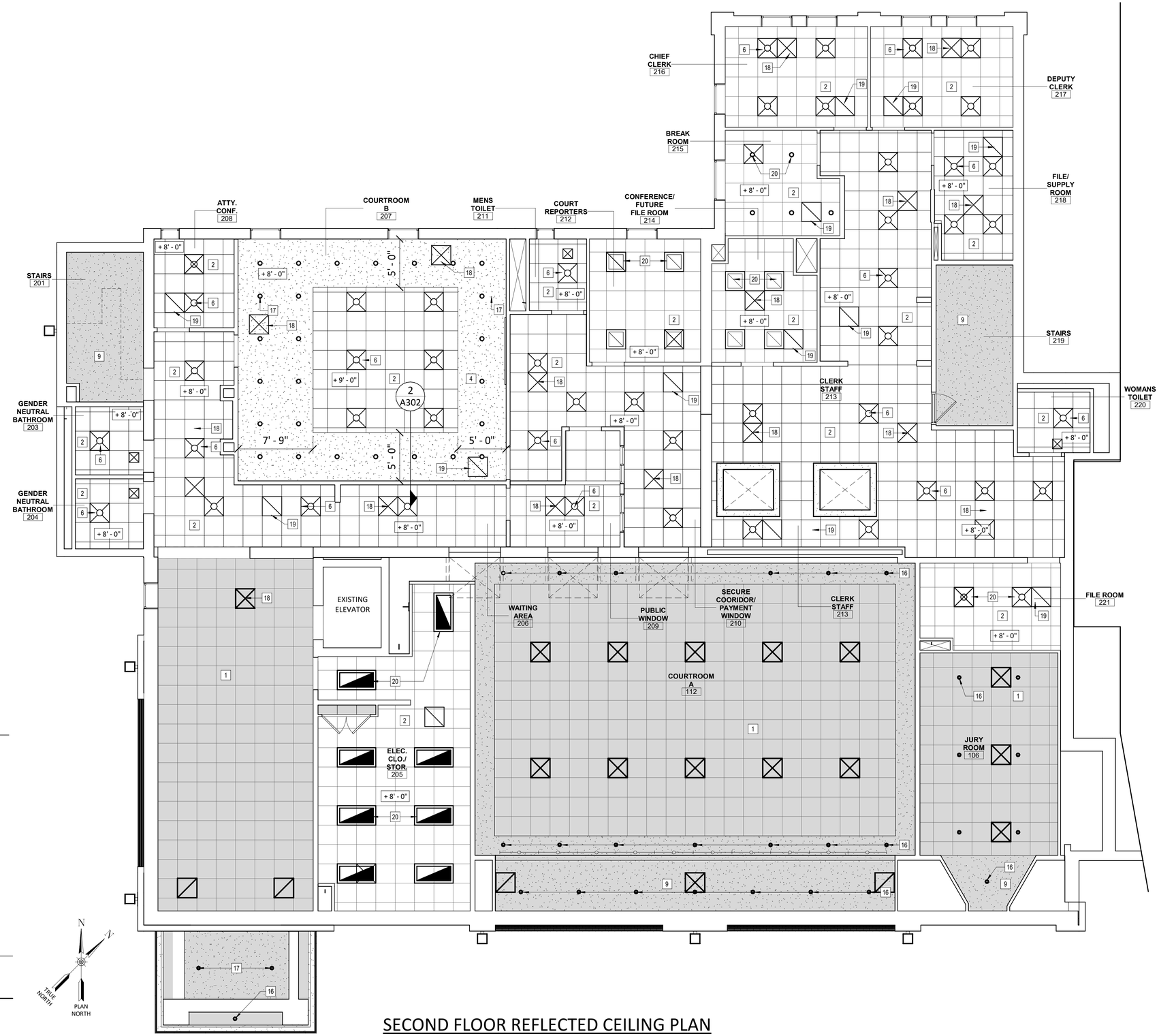

SECOND FLOOR REFLECTED CEILING PLAN
SCALE: 3/16" = 1'-0"

IT IS A VIOLATION OF THE NEW YORK STATE EDUCATION LAW, ARTICLE 145 §7209 SPECIAL PROVISIONS, FOR ANY PERSON, UNLESS THEY ARE ACTING UNDER THE DIRECTION OF A LICENSED PROFESSIONAL ENGINEER, ARCHITECT, LANDSCAPE ARCHITECT, OR LAND SURVEYOR, TO ALTER AN ITEM IN ANY WAY. IF AN ITEM BEARING THE STAMP OF A LICENSED PROFESSIONAL IS ALTERED, THE ALTERING PROFESSIONAL SHALL STAMP THE DOCUMENT AND INCLUDE THE NOTATION "ALTERED BY" FOLLOWED BY THEIR SIGNATURE, THE DATE OF SUCH ALTERATION, AND A SPECIFIC DESCRIPTION OF THE ALTERATION.

REVISIONS

CITY OF MIDDLETOWN
NEW COURTHOUSE FACILITY

SECOND FLOOR REFLECTED CEILING PLAN

CITY OF MIDDLETOWN ORANGE COUNTY, NEW YORK

Barton & Loguidice
443 Electronics Parkway
Liverpool, NY 13088
NYS CERTIFICATE # 0021642, 0020588, 0019903, 0019905, 0020336

NYS EXP.:

Date: AUGUST, 2024

Scale: AS SHOWN

Sheet Number: A302

Project Number: 1753.008.001

Plotted: 8/21/2024 4:26:12 PM
C:\Users\cgardner\Documents\Middletown Courthouse 6.22.21 Central File – ARCHITECTURAL STRUCTURAL
MODEL_cgardner05.rvt

Checked by ZDC Drawn by JDC Designed by JDC In Charge of TRB

ADDITIVE BID ITEM NO. 2 - ENTRY CANOPY

NEW ENTRY CANOPY, NEW SIDE ENTRY DOOR AND STOREFRONT AND ASSOCIATED CONNECTIONS TO BUILDING ARE PART OF ADDITIVE BID ITEM NO. 2

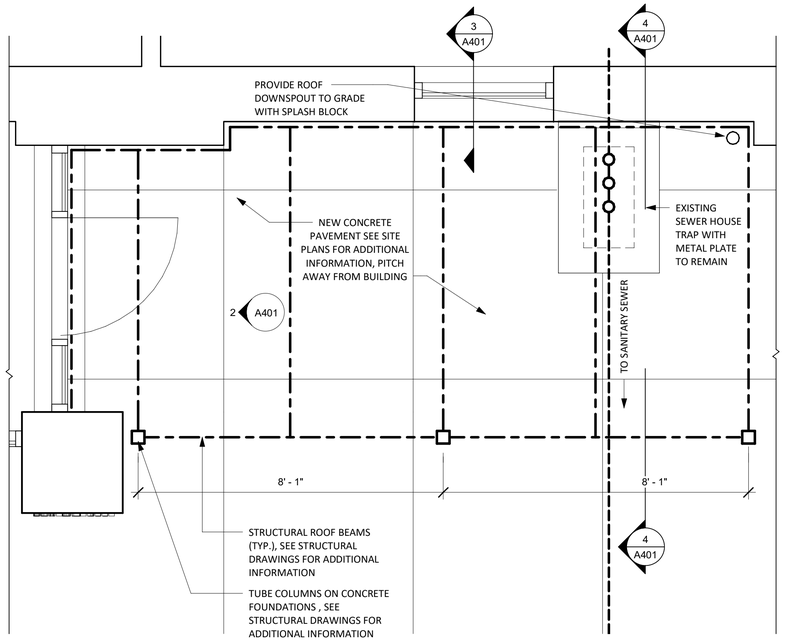

1 A201 FRONT ENTRY CANOPY ENLARGEMENT PLAN

SCALE: 1/2" = 1'-0"

ADDITIVE BID ITEM NO. 02

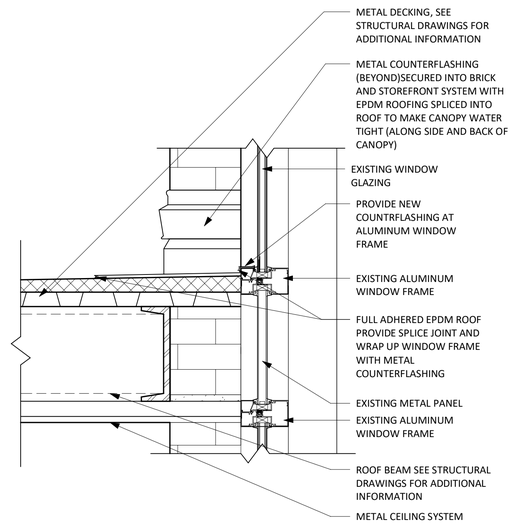

3 A401 WINDOW FLASHING DETAIL

SCALE: 1 1/2" = 1'-0"

ADDITIVE BID ITEM NO. 02

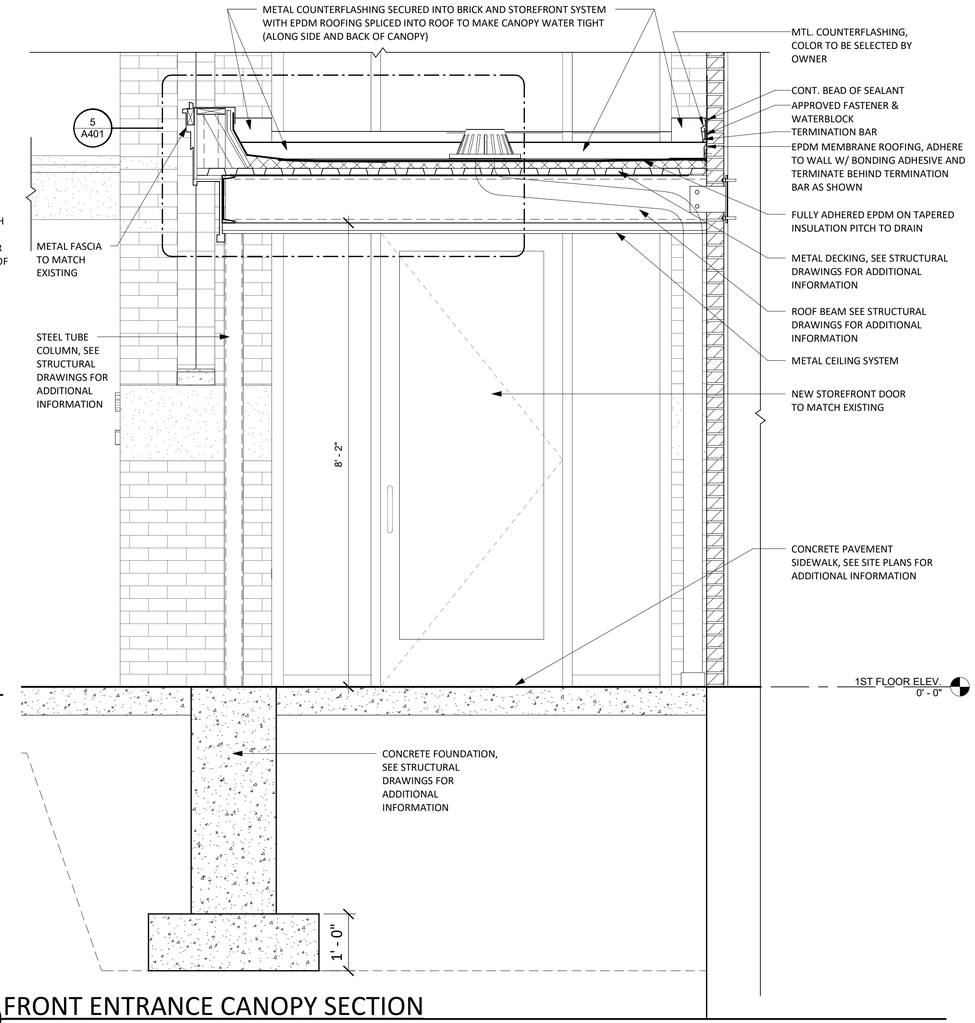

4 A201 FRONT ENTRANCE CANOPY SECTION

SCALE: 3/4" = 1'-0"

ADDITIVE BID ITEM NO. 02

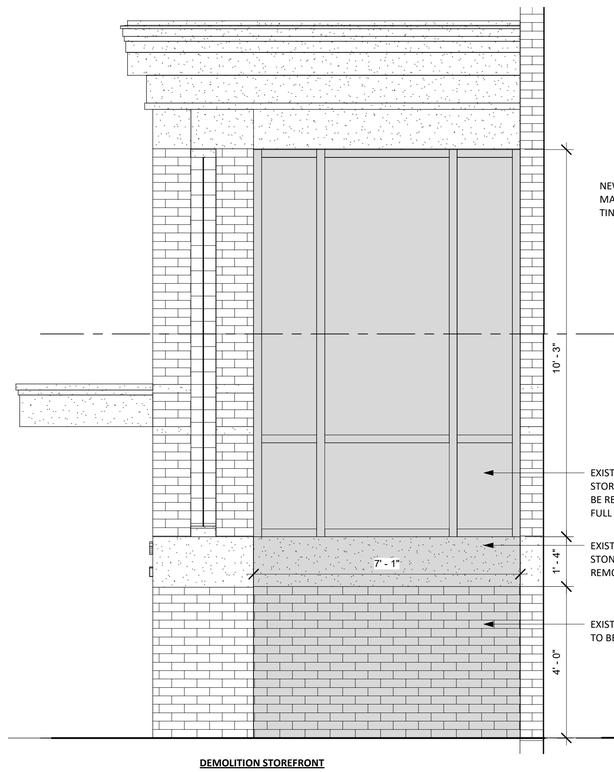

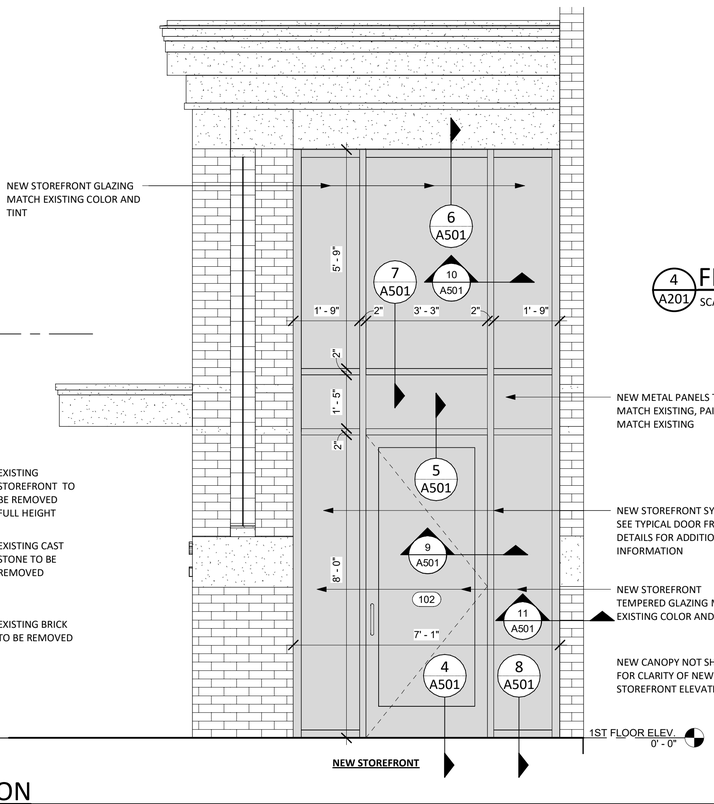

2 A202 DEMOLITION AND NEW STOREFRONT ELEVATION

SCALE: 1/2" = 1'-0"

ADDITIVE BID ITEM NO. 02

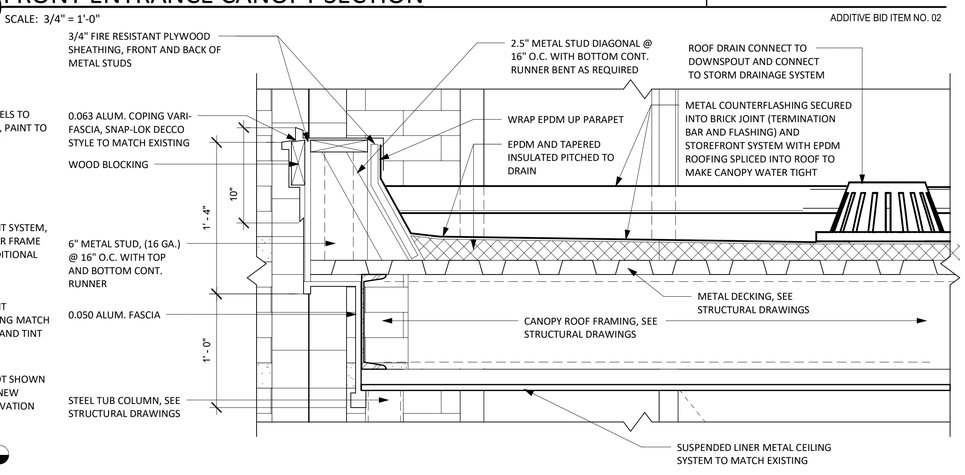

5 A401 CANOPY ROOF FASCIA DETAIL

SCALE: 1 1/2" = 1'-0"

ADDITIVE BID ITEM NO. 02

IT IS A VIOLATION OF THE NEW YORK STATE EDUCATION LAW, ARTICLE 145 §7209 SPECIAL PROVISIONS, FOR ANY PERSON, UNLESS THEY ARE ACTING UNDER THE DIRECTION OF A LICENSED PROFESSIONAL ENGINEER, ARCHITECT, LANDSCAPE ARCHITECT, OR LAND SURVEYOR, TO ALTER AN ITEM IN ANY WAY. IF AN ITEM BEARING THE STAMP OF A LICENSED PROFESSIONAL IS ALTERED, THE ALTERING PROFESSIONAL SHALL STAMP THE DOCUMENT AND INCLUDE THE NOTATION "ALTERED BY" FOLLOWED BY THEIR SIGNATURE, THE DATE OF SUCH ALTERATION, AND A SPECIFIC DESCRIPTION OF THE ALTERATION.

REVISIONS

CITY OF MIDDLETOWN
NEW COURTHOUSE FACILITY

ENTRY CANOPY ENLARGEMENT PLAN, SECTIONS & DETAILS (ADDITIVE BID ITEM NO. 2)

ORANGE COUNTY, NEW YORK

CITY OF MIDDLETOWN

Barton & Loguidice
443 Electronics Parkway
Liverpool, NY 13088
NYS CERTIFICATE # 0021642, 0020588, 0019903, 0019905, 0020336

STATE OF NEW YORK · MATTHEW C. TOLAN · 070143 · LICENSED PROFESSIONAL ENGINEER

NYS EXP.:

Date
AUGUST, 2024

Scale
AS SHOWN

Sheet Number
A401

Project Number
1753.008.001

Plotted: 8/21/2024 4:26:13 PM
C:\Users\cgardner\Documents\Middletown Courthouse 6.22.21 Central File - ARCHITECTURAL STRUCTURAL MODEL_cgardner03.rvt
Checked by ZDC Drawn by ZDC Designed by ZDC In Charge of TRB

ADDITIVE BID ITEM NO. 3 - REAR COVERED WALKWAY

NEW REAR COVERED WALKWAY CANOPY, CHAINLINK FENCING AND ASSOCIATED CONNECTIONS TO BUILDING ARE PART OF ADDITIVE BID ITEM NO. 3

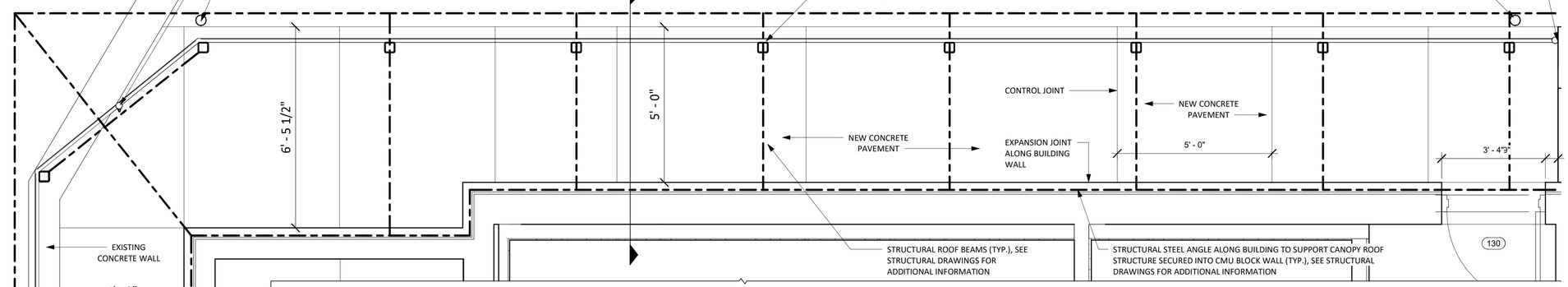

1 A201 REAR COVERED WALKWAY ENLARGEMENT PLAN

SCALE: 1/2" = 1'-0"

ADDITIVE BID ITEM NO. 03

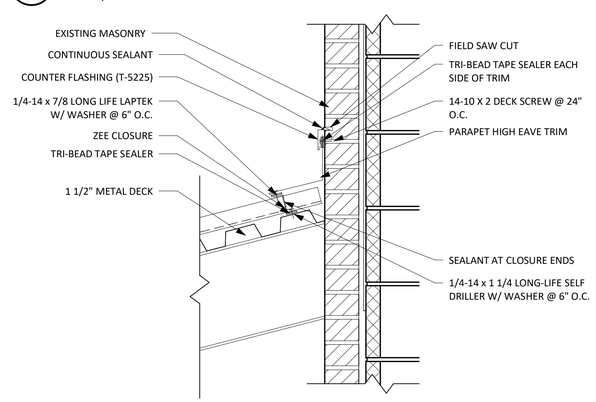

5 A402 FIXED PARAPET HIGH EAVE DETAIL

SCALE: 1 1/2" = 1'-0"

ADDITIVE BID ITEM NO. 03

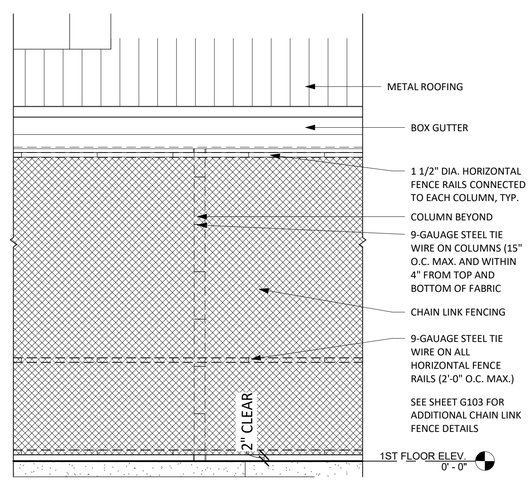

6 A202 REAR WALKWAY METAL SCREEN ELEVATION

SCALE: 1/2" = 1'-0"

ADDITIVE BID ITEM NO. 03

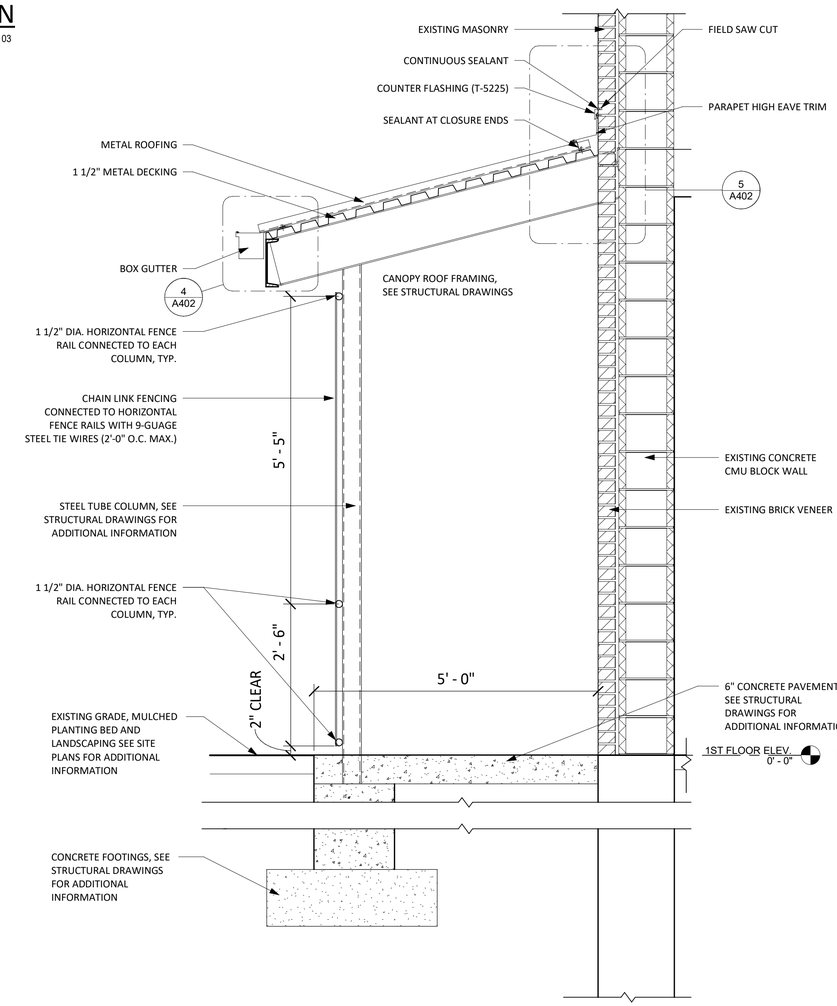

3 A201 REAR COVERED CANOPY SECTION 1

SCALE: 3/4" = 1'-0"

ADDITIVE BID ITEM NO. 03

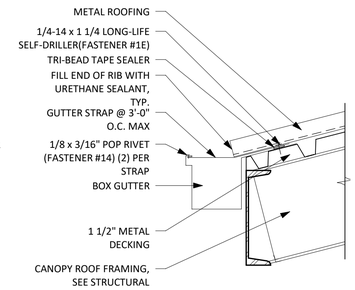

4 A402 FIXED EAVE - BOX GUTTER DETAIL

SCALE: 1 1/2" = 1'-0"

ADDITIVE BID ITEM NO. 03

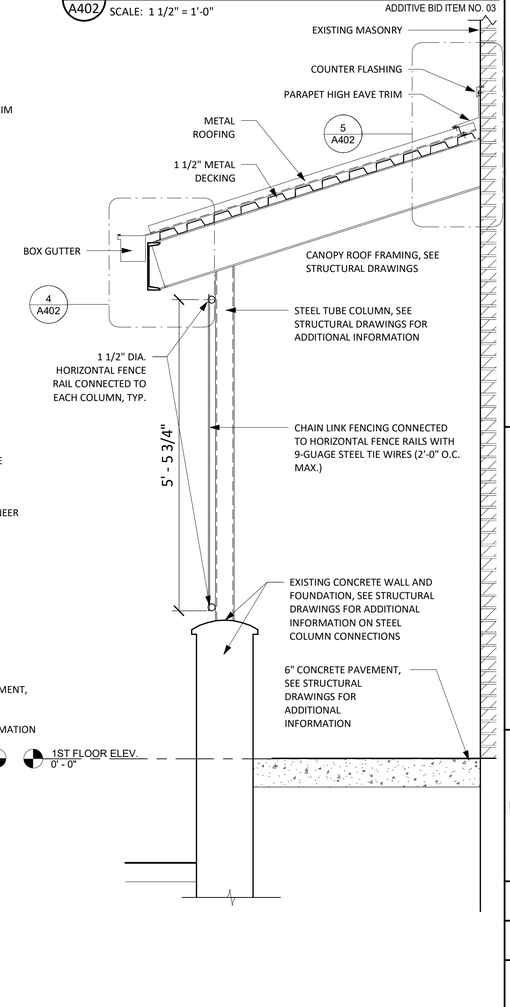

2 A402 REAR COVERED ENRY CANOPY 2

SCALE: 3/4" = 1'-0"

ADDITIVE BID ITEM NO. 03

IT IS A VIOLATION OF THE NEW YORK STATE EDUCATION LAW, ARTICLE 145 §7209 SPECIAL PROVISIONS, FOR ANY PERSON, UNLESS THEY ARE ACTING UNDER THE DIRECTION OF A LICENSED PROFESSIONAL ENGINEER, ARCHITECT, LANDSCAPE ARCHITECT, OR LAND SURVEYOR, TO ALTER AN ITEM IN ANY WAY. IF AN ITEM BEARING THE STAMP OF A LICENSED PROFESSIONAL IS ALTERED, THE ALTERING PROFESSIONAL SHALL STAMP THE DOCUMENT AND INCLUDE THE NOTATION "ALTERED BY" FOLLOWED BY THEIR SIGNATURE, THE DATE OF SUCH ALTERATION, AND A SPECIFIC DESCRIPTION OF THE ALTERATION.

REVISIONS

CITY OF MIDDLETOWN
NEW COURTHOUSE FACILITY

REAR COVERED WALKWAY ENLARGEMENT PLAN, SECTION & DETAILS (ADDITIVE BID ITEM NO. 3)

CITY OF MIDDLETOWN ORANGE COUNTY, NEW YORK

Barton & Loguidice
443 Electronics Parkway
Liverpool, NY 13088
NYS CERTIFICATE # 0021642, 0020588, 0019903, 0019905, 0020336

STATE OF NEW YORK · MATTHEW C. FULLER · 070743 · LICENSED PROFESSIONAL ENGINEER

NYS EXP.:

Date: AUGUST, 2024

Scale: AS SHOWN

Sheet Number: A402

Project Number: 1753.008.001

Plotted: 8/21/2024 4:26:14 PM
C:\Users\cgardner\Documents\Middletown Courthouse 6.22.21 Central File – ARCHITECTURAL STRUCTURAL MODEL_cgardner05.rvt
Checked by ZDC Drawn by ZDC Designed by ZDC In Charge of TRB

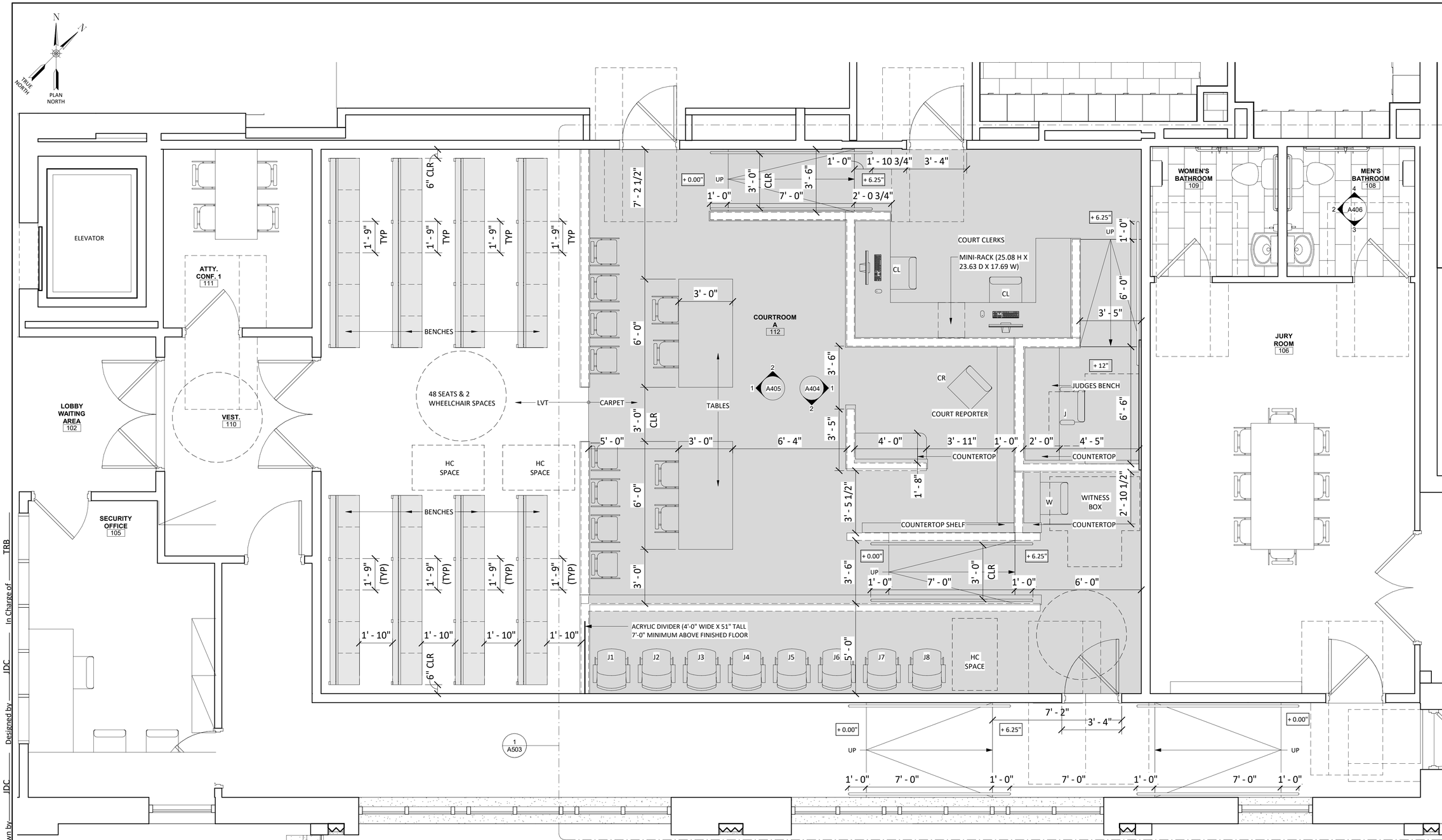

1ST FLOOR ENLARGEMENT PLAN

SCALE: 3/8" = 1'-0"

LEGEND

101 DOOR TAG

1i PARTITION TAG

1 HOUR RATED WALL CONSTRUCTION - FIRE BARRIER (SEE WALL LEGENDS FOR WALL CONSTRUCTION AND UL ASSEMBLY INFORMATION)

DIMENSIONS TO EXISTING WALLS IS TO FACE OF WALL, DIMENSIONS TO NEW WORK IS TO FACE OF STUD

DIMENSIONS TO MILLWORK IF NOT NOTED IS TO FACE OF WALL, SEE MILLWORK ENLARGEMENT PLANS AND DETAILS FOR ADDITIONAL DETAILING AND TO LAYOUT MILLWORK AND MILLWORK SUPPORTS

DIMENSIONS TO FURNITURE IS TO EDGE OF TABLE, CHAIR, ETC.

FURNITURE UNLESS NOTED IS NOT IN CONTRACT.

Plotted: 8/21/2024 4:26:15 PM
C:\Users\cgardner\Documents\Middletown Courthouse 6.22.21 Central File - ARCHITECTURAL STRUCTURAL
MODEL_cgardner03.rvt

Drawn by	JDC	Designed by	JDC	In Charge of	TRB
Checked by	ZDC			

IT IS A VIOLATION OF THE NEW YORK STATE EDUCATION LAW, ARTICLE 145 §7209 SPECIAL PROVISIONS, FOR ANY PERSON, UNLESS THEY ARE ACTING UNDER THE DIRECTION OF A LICENSED PROFESSIONAL ENGINEER, ARCHITECT, LANDSCAPE ARCHITECT, OR LAND SURVEYOR, TO ALTER AN ITEM IN ANY WAY. IF AN ITEM BEARING THE STAMP OF A LICENSED PROFESSIONAL IS ALTERED, THE ALTERING PROFESSIONAL SHALL STAMP THE DOCUMENT AND INCLUDE THE NOTATION "ALTERED BY" FOLLOWED BY THEIR SIGNATURE, THE DATE OF SUCH ALTERATION, AND A SPECIFIC DESCRIPTION OF THE ALTERATION.

REVISIONS

CITY OF MIDDLETOWN
NEW COURTHOUSE FACILITY

FIRST FLOOR COURTROOM ENLARGEMENT PLAN

ORANGE COUNTY, NEW YORK

CITY OF MIDDLETOWN

Barton & Loguidice
443 Electronics Parkway
Liverpool, NY 13088
NYS CERTIFICATE # 0021642, 0020588, 0019903, 0019905, 0020336

STATE OF NEW YORK
MATTHEW C. FULLER
070743
LICENSED PROFESSIONAL ENGINEER

NYS EXP.:

Date
AUGUST, 2024

Scale
AS SHOWN

Sheet Number
A403

Project Number
1753.008.001

COURTROOM ELEVATION KEYED NOTES

1. WOOD OR METAL DOOR WITH HOLLOW METAL FRAME, W/ OR W/O LITE (HALF) AND ADA COMPLIANT HARDWARE - 60 MINUTE RATED DOOR & FRAME, SEE DOOR SCHEDULE.
2. WALL MOUNTED FLAG POLES, BRACKETS AND FLAGS TO BE PROVIDED BY OWNER AND INSTALLED BY CONTRACTOR.
3. SOLID SURFACE CAPS/COUNTERTOPS.
4. 4A. JUDGES BENCH, 4B. CLERKS AREA 4C. WITNESS BOX, 4D. JURY BOX, AND 4E. GALLERY SEPARATION WALLS WOOD VENEER.
5. SHEETROCKED SOFFIT OR HANGING SHEETROCKED CEILING.
6. ACOUSTICAL CEILING GRID SYSTEM.
7. WOOD PANELING BEHIND JUDGE AND WITNESS BOXES.
8. 6" TALL - 3/4" WOOD TRIM BASE
9. NEW YORK STATE COURT SYSTEM SEAL (LIGHT WEIGHT) TO BE PROVIDED BY OWNER AND MOUNTED/INSTALLED WITH VELCRO OR PICTURE HOOKS ON WOOD PANELING BY CONTRACTOR, CENTER ON JUDGE'S BENCH.
10. TYPICAL 4" HIGH CAST BRONZE LETTERING (FINISH TO BE SELECTED BY OWNER) MOUNTED ON THE WOOD PANELING AT THE BACK OF THE JUDGE'S BENCH, CENTER ON JUDGES BENCH.
11. PAINTED GYPSUM WALL BOARD WALLS.
12. CARPET TILE/CARPETING FLOORING IN COURTROOM AREA, STEPS AND RAMPS. LUXURY VINYL TILE IN GALLERY AREA, ATTORNEY CONFERENCE ROOMS AND VESTIBULE.
13. ADA COMPLIANT ALUMINUM HANDRAIL.
14. JURY SWINGING GATE DOOR.
15. GALLERY WOOD BENCHES.
16. TABLES AND CHAIRS. (SOME ELEVATIONS CHAIRS AND TABLES HAVE BEEN REMOVED FOR DETAILING CLARITY).
17. ACOUSTICAL FABRIC WALL PANELS, PANELS BUTTED TOGETHER, PANEL SIZES AS SHOWN ON ELEVATIONS.
18. WOOD CHAIR RAIL.
19. WALL SCONCE LIGHT FIXTURE.
20. WOOD PANEL JOINTS/TRIM. PROVIDE EQUAL DISTANCE BETWEEN JOINTS ALONG LENGTHS OF WALLS. (SEE MILLWORK DETAILS FOR TYPICAL DETAILING AT CORNERS/ENDS OF MILLWORK).
21. 6" VINYL WALL BASE

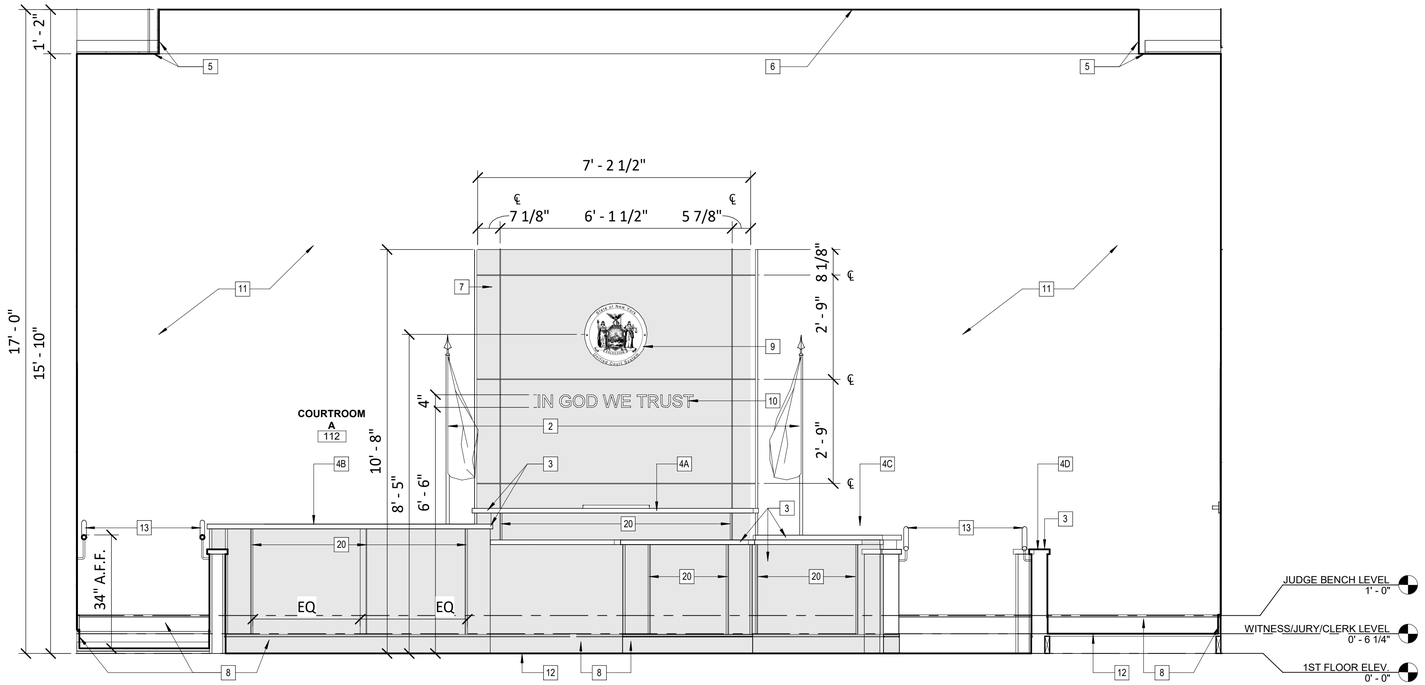

1 A403 COURTROOM A ELEVATION 1

SCALE: 1/2" = 1'-0"

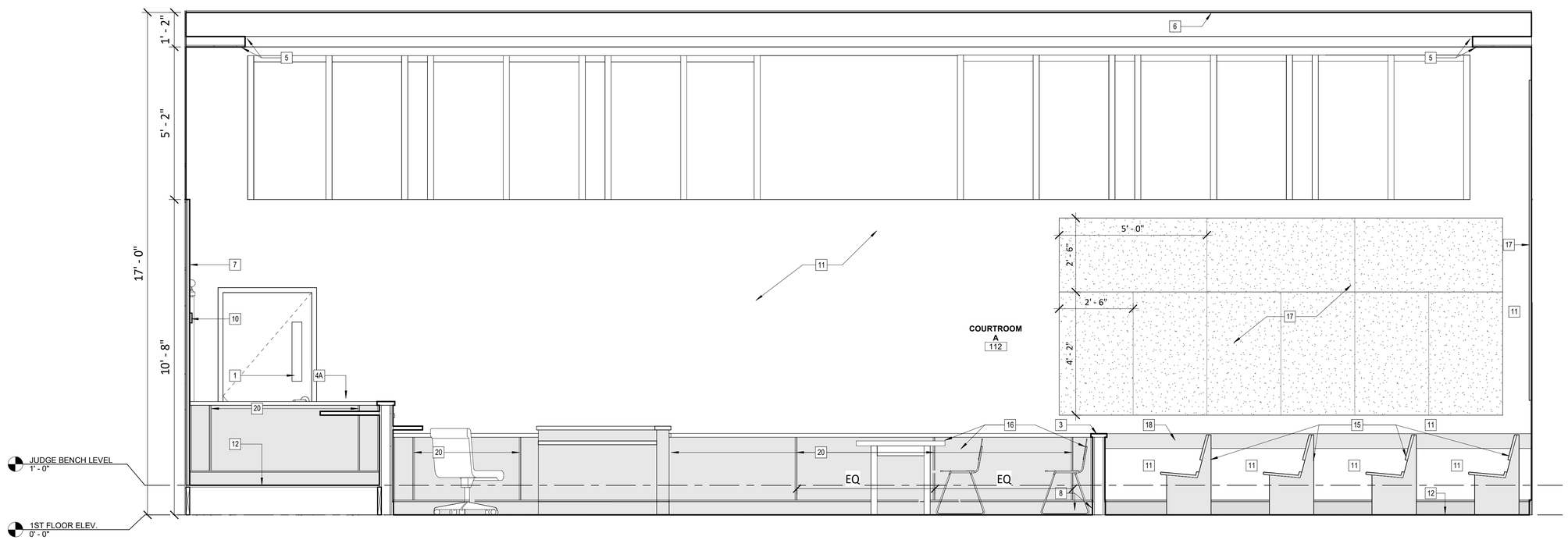

2 A403 COURTROOM A ELEVATION 2

SCALE: 1/2" = 1'-0"

IT IS A VIOLATION OF THE NEW YORK STATE EDUCATION LAW, ARTICLE 145 §7209 SPECIAL PROVISIONS, FOR ANY PERSON, UNLESS THEY ARE ACTING UNDER THE DIRECTION OF A LICENSED PROFESSIONAL ENGINEER, ARCHITECT, LANDSCAPE ARCHITECT, OR LAND SURVEYOR, TO ALTER AN ITEM IN ANY WAY. IF AN ITEM BEARING THE STAMP OF A LICENSED PROFESSIONAL IS ALTERED, THE ALTERING PROFESSIONAL SHALL STAMP THE DOCUMENT AND INCLUDE THE NOTATION "ALTERED BY" FOLLOWED BY THEIR SIGNATURE, THE DATE OF SUCH ALTERATION, AND A SPECIFIC DESCRIPTION OF THE ALTERATION.

REVISIONS

CITY OF MIDDLETOWN
NEW COURTHOUSE FACILITY

ORANGE COUNTY, NEW YORK

FIRST FLOOR COURTROOM INTERIOR ELEVATIONS

CITY OF MIDDLETOWN

Barton & Loguidice
443 Electronics Parkway
Liverpool, NY 13088
NYS CERTIFICATE # 0021642, 0020588, 0019903, 0019905, 0020336

NYS EXP.:

Date: AUGUST, 2024

Scale: AS SHOWN

Sheet Number: A404

Project Number: 1753.008.001

Plotted: 8/21/2024 4:26:17 PM
C:\Users\cgardner\Documents\Middletown Courthouse 6.22.21 Central File – ARCHITECTURAL STRUCTURAL
MODEL_cgardnerSTS_x4
Checked by: Checker Drawn by: JDC Designed by: JDC In Charge of: TRB

COURTROOM ELEVATION KEYED NOTES

1. WOOD OR METAL DOOR WITH HOLLOW METAL FRAME, W/ OR W/O LITE (HALF) AND ADA COMPLIANT HARDWARE - 60 MINUTE RATED DOOR & FRAME, SEE DOOR SCHEDULE.
2. WALL MOUNTED FLAG POLES, BRACKETS AND FLAGS TO BE PROVIDED BY OWNER AND INSTALLED BY CONTRACTOR.
3. SOLID SURFACE CAPS/COUNTERTOPS.
4. 4A. JUDGES BENCH, 4B. CLERKS AREA 4C. WITNESS BOX, 4D. JURY BOX, AND 4E. GALLERY SEPARATION WALLS WOOD VENEER.
5. SHEETROCKED SOFFIT OR HANGING SHEETROCKED CEILING.
6. ACOUSTICAL CEILING GRID SYSTEM.
7. WOOD PANELING BEHIND JUDGE AND WITNESS BOXES.
8. 6" TALL - 3/4" WOOD TRIM BASE
9. NEW YORK STATE COURT SYSTEM SEAL (LIGHT WEIGHT) TO BE PROVIDED BY OWNER AND MOUNTED/INSTALLED WITH VELCRO OR PICTURE HOOKS ON WOOD PANELING BY CONTRACTOR, CENTER ON JUDGE'S BENCH.
10. TYPICAL 4" HIGH CAST BRONZE LETTERING (FINISH TO BE SELECTED BY OWNER) MOUNTED ON THE WOOD PANELING AT THE BACK OF THE JUDGE'S BENCH, CENTER ON JUDGES BENCH.
11. PAINTED GYPSUM WALL BOARD WALLS.
12. CARPET TILE/CARPETING FLOORING IN COURTROOM AREA, STEPS AND RAMPS. LUXURY VINYL TILE IN GALLERY AREA, ATTORNEY CONFERENCE ROOMS AND VESTIBULE.
13. ADA COMPLIANT ALUMINUM HANDRAIL.
14. JURY SWINGING GATE DOOR.
15. GALLERY WOOD BENCHES.
16. TABLES AND CHAIRS. (SOME ELEVATIONS CHAIRS AND TABLES HAVE BEEN REMOVED FOR DETAILING CLARITY).
17. ACOUSTICAL FABRIC WALL PANELS, PANELS BUTTED TOGETHER, PANEL SIZES AS SHOWN ON ELEVATIONS.
18. WOOD CHAIR RAIL.
19. WALL SCONCE LIGHT FIXTURE.
20. WOOD PANEL JOINTS/TRIM. PROVIDE EQUAL DISTANCE BETWEEN JOINTS ALONG LENGTHS OF WALLS. (SEE MILLWORK DETAILS FOR TYPICAL DETAILING AT CORNERS/ENDS OF MILLWORK).
21. 6" VINYL WALL BASE

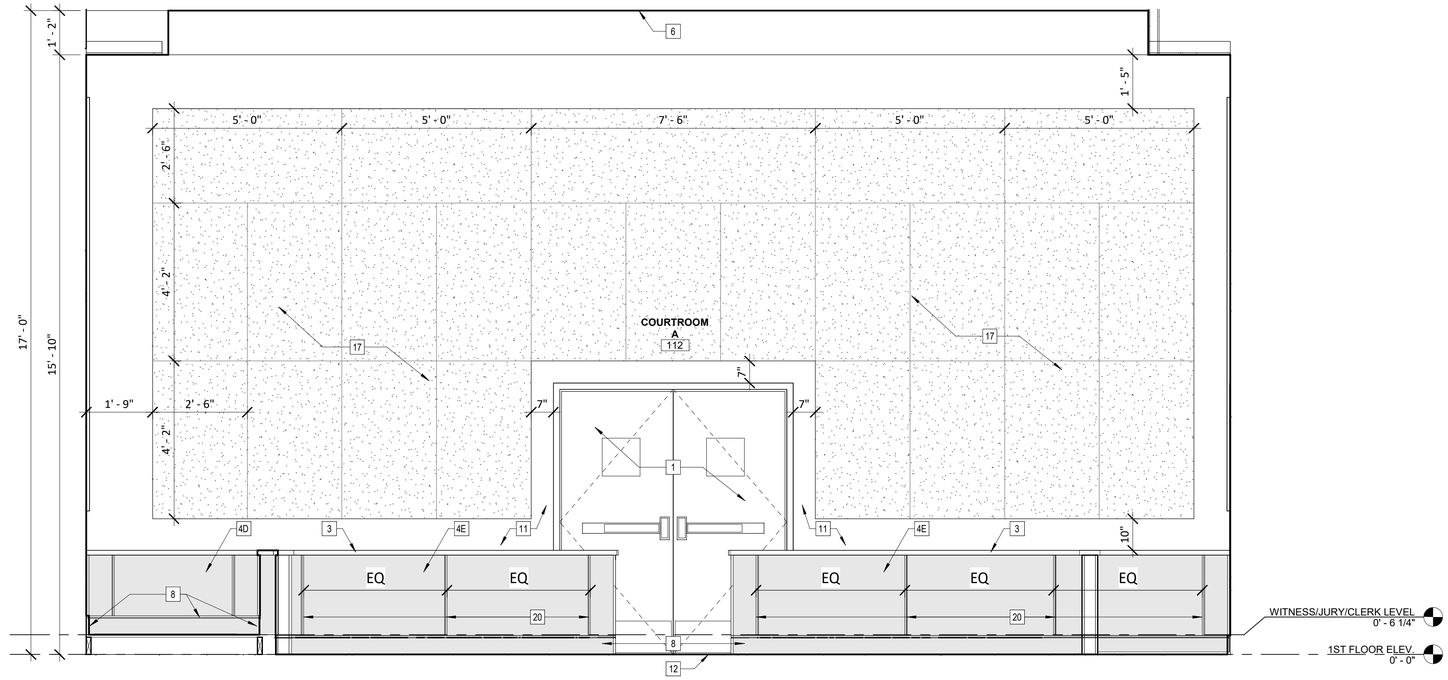

1 A403 COURTROOM A ELEVATION 3

SCALE: 1/2" = 1'-0"

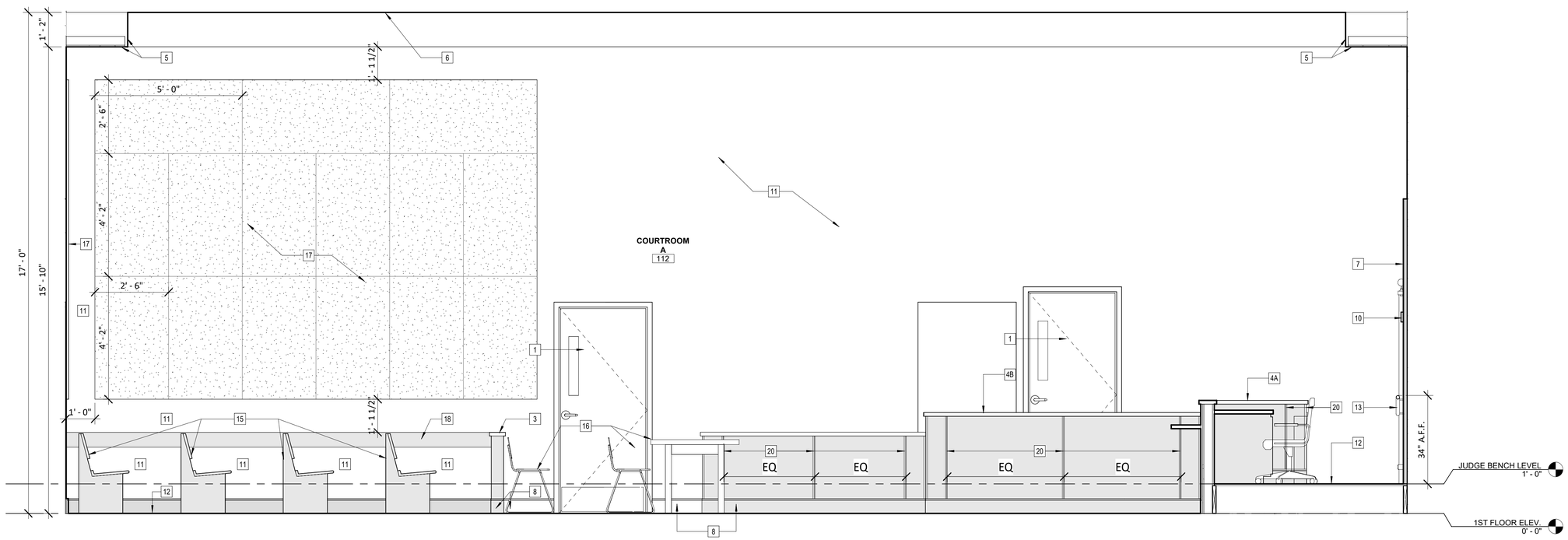

2 A403 COURTROOM A ELEVATION 4

SCALE: 1/2" = 1'-0"

IT IS A VIOLATION OF THE NEW YORK STATE EDUCATION LAW, ARTICLE 145 §7209 SPECIAL PROVISIONS, FOR ANY PERSON, UNLESS THEY ARE ACTING UNDER THE DIRECTION OF A LICENSED PROFESSIONAL ENGINEER, ARCHITECT, LANDSCAPE ARCHITECT, OR LAND SURVEYOR, TO ALTER AN ITEM IN ANY WAY. IF AN ITEM BEARING THE STAMP OF A LICENSED PROFESSIONAL IS ALTERED, THE ALTERING PROFESSIONAL SHALL STAMP THE DOCUMENT AND INCLUDE THE NOTATION "ALTERED BY" FOLLOWED BY THEIR SIGNATURE, THE DATE OF SUCH ALTERATION, AND A SPECIFIC DESCRIPTION OF THE ALTERATION.

REVISIONS

CITY OF MIDDLETOWN
NEW COURTHOUSE FACILITY

ORANGE COUNTY, NEW YORK

FIRST FLOOR COURTROOM INTERIOR ELEVATIONS

CITY OF MIDDLETOWN

Barton & Loguidice
443 Electronics Parkway
Liverpool, NY 13088
NYS CERTIFICATE # 0021642, 0020588, 0019903, 0019905, 0020336

STATE OF NEW YORK · MATTHEW C. FULLER · 070743 · LICENSED PROFESSIONAL ENGINEER

NYS EXP.:

Date: AUGUST, 2024

Scale: AS SHOWN

Sheet Number: A405

Project Number: 1753.008.001

Plotted: 8/21/2024 4:26:18 PM
C:\Users\cgardner\Documents\Middletown Courthouse 6.22.21 Central File – ARCHITECTURAL STRUCTURAL
MODEL_cgardner05_24.rvt
Checked by ZDC Drawn by JDC Designed by JDC In Charge of TRB

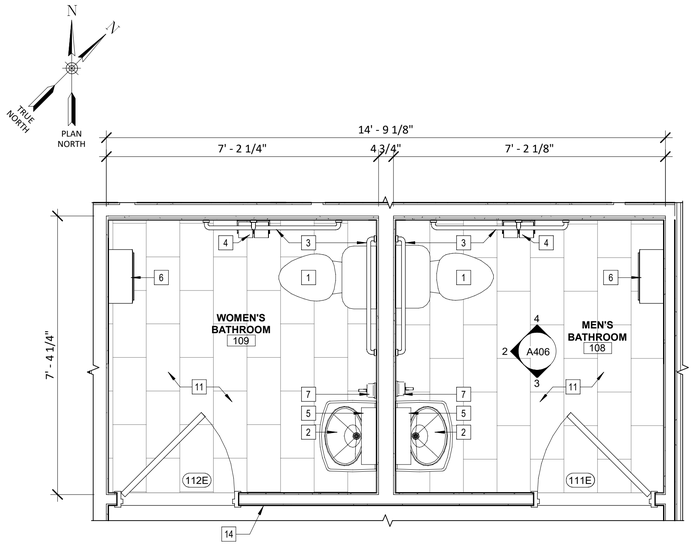

1 A201 ENLARGED BATHROOM 108 & 109 PLAN
SCALE: 1/2" = 1'-0"

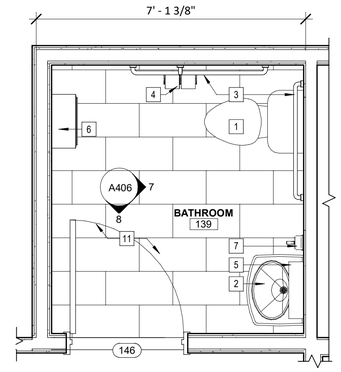

6 A201 ENLARGED BATHROOM 139 PLAN
SCALE: 1/2" = 1'-0"

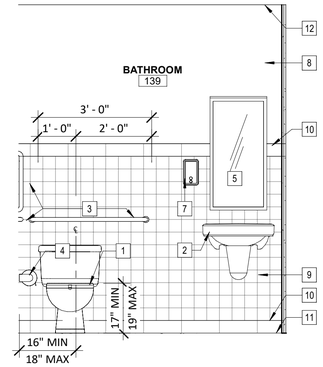

7 A406 BATH. 139 ELEVATION 1
SCALE: 1/2" = 1'-0"

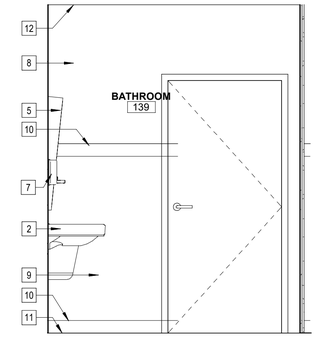

8 A406 BATH. 139 ELEVATION 2
SCALE: 1/2" = 1'-0"

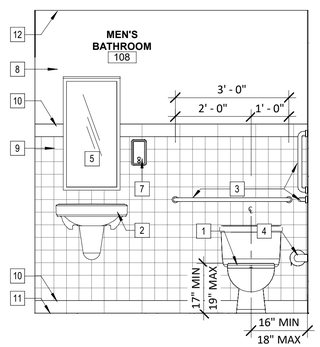

2 A403 BATH. 108 ELEVATION 1
SCALE: 1/2" = 1'-0"

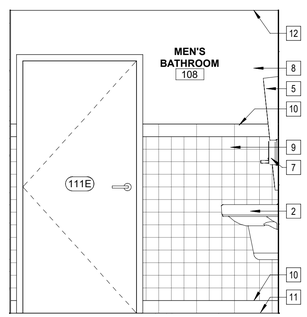

3 A403 BATH. 108 ELEVATION 2
SCALE: 1/2" = 1'-0"

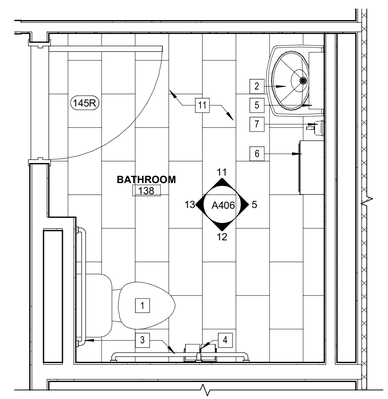

10 A201 ENLARGED BATHROOM 138 PLAN
SCALE: 1/2" = 1'-0"

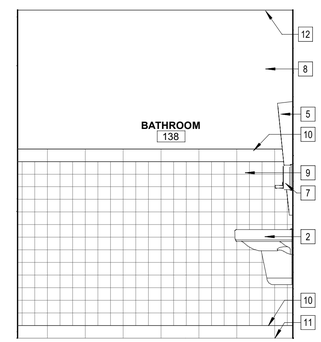

11 A406 BATHROOM 138 ELEVATION 1
SCALE: 1/2" = 1'-0"

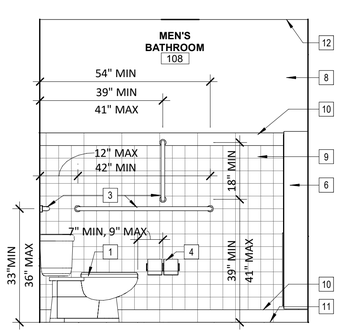

4 A403 BATH. 108 ELEVATION 3
SCALE: 1/2" = 1'-0"

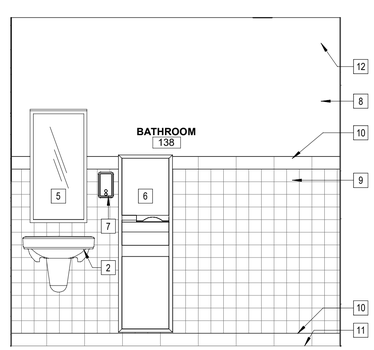

5 A406 BATHROOM 138 ELEVATION 2
SCALE: 1/2" = 1'-0"

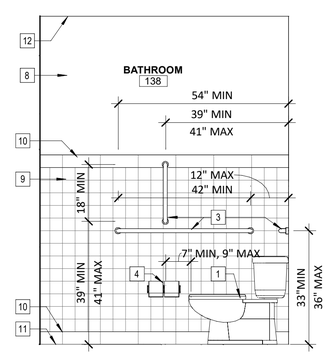

12 A406 BATHROOM 138 ELEVATION 3
SCALE: 1/2" = 1'-0"

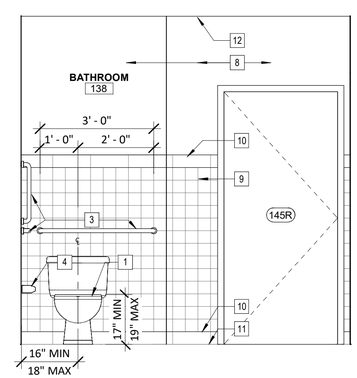

13 A406 BATHROOM 138 ELEVATION 4
SCALE: 1/2" = 1'-0"

BATHROOM KEY NOTES

1. SEE PLUMBING SHEETS FOR ADA COMPLIANT WATER CLOSET TOILET (SEAT 17 MIN. AND 19" MAX. OFF OF THE FLOOR) IN LOCATIONS SHOWN, SEE PLUMBING DRAWINGS FOR FIXTURE SELECTION, COLOR TO BE SELECTED BY OWNER.
2. SEE PLUMPING SHEETS FOR ADA COMPLIANT WALL MOUNTED SINKS AND FAUCETS (THE FRONT OF THE SINK SHALL BE A MAXIMUM OF 34" ABOVE THE FLOOR) IN LOCATIONS SHOWN, SEE PLUMBING DRAWINGS FOR FIXTURE SELECTION, COLOR TO BE SELECTED BY OWNER. PROVIDE PIPE PROTECTION FOR WATER SUPPLY LINES AND DRAINPIPES UNDER THE SINKS. MAINTAIN PROPER ADA KNEE AND TOE CLEARANCE AT ALL FIXTURES.
3. PROVIDE GRAB BARS IN LOCATIONS SHOWN AND AS FOLLOWS. FIXED SIDEWALL GRAB BAR 42" MINIMUM IN LENGTH, LOCATED 12" MAXIMUM FROM REAR WALL AND EXTENDING 54" MINIMUM FROM THE REAR WALL (33" MINIMUM AND 36" MAXIMUM TO TOP OF GRAB BAR OFF OF THE FLOOR). PROVIDE VERTICAL GRAB BAR 18" MINIMUM LENGTH AND SHALL BE MOUNTED WITH THE BOTTOM OF THE BAR LOCATED 39" MINIMUM AND 41" MAXIMUM OFF OF THE FLOOR AND 39" TO 41" TO THE CENTER OF THE BAR FROM THE BACK WALL. THE REAR GRAB BAR SHALL BE 36" MINIMUM IN LENGTH, AND EXTEND FROM THE CENTERLINE OF THE WATER CLOSET (TOILET) 12" MINIMUM ON THE SIDE CLOSEST TO THE WALL, AND 24" MINIMUM ON THE TRANSFER SIDE. PROVIDE ALL WOOD BLOCKING IN WALL AS NEEDED FOR THE INSTALLATION OF GRAB BARS.
4. PROVIDE ADA COMPLIANT WALL MOUNTED JUMBO BATH TISSUE DOUBLE ROLL DISPENSER TO BE INSTALLED BY CONTRACTOR, 18" MINIMUM FROM THE FLOOR TO THE BOTTOM OF THE UNIT OR 48" MAXIMUM TO THE TOP OF THE UNIT FROM THE FLOOR AND 24" FROM THE BACK WALL TO THE BACK EDGE OF THE UNIT IN LOCATIONS SHOWN ON PLANS. COORDINATE LOCATION WITH GRAB BAR INSTALLATION.
5. PROVIDE ADA COMPLIANT 24" W x 36" H MIRROR, WHICH SHALL BE MOUNTED WITH THE BOTTOM EDGE OF THE REFLECTING SURFACE NO HIGHER THAN 40" ABOVE THE FLOOR.
6. PROVIDE ADA COMPLIANT WALL MOUNTED PAPER TOWEL DISPENSER AND WASTE DISPOSAL COMBINATION UNIT TO BE INSTALLED BY CONTRACTOR (MOUNT WITH THEIR 'OPERABLE PART" DISPENSING MECHANISM NO MORE THAN 48" ABOVE THE FLOOR) IN LOCATIONS SHOWN.
7. PROVIDE ADA COMPLIANT WALL MOUNTED LIQUID SOAP DISPENSER TO BE INSTALLED BY CONTRACTOR (MOUNT WITH THEIR 'OPERABLE PART" DISPENSING MECHANISM NO MORE THAN 48" ABOVE THE FLOOR) IN LOCATIONS SHOWN.
8. PRIME AND PAINTED GWB WALLS, COLOR TO BE SELECTED BY OWNER.
9. 4" X 4" CERAMIC WALL TILE MAIN FIELD, COLOR TO BE SELECTED BY OWNER
10. 4" X 12" CERAMIC WALL BULL NOSE & COVE BASE, SUBWAY TILE LAYOUT, COLOR TO BE SELECTED BY OWNER.
11. 12" X 24" PORCELAIN TILE FLOOR, COLOR TO BE SELECTED BY OWNER.
12. ACOUSTICAL CEILING TILES AND GRID SYSTEM.
13. PROVIDE FIRE EXTINGUISHER CABINET, REFER TO DETAIL FOR MORE INFORMATION.
14. PROVIDE ADA COMPLIANT TACTILE SIGNAGE (SYMBOL AT THE TOP, RAISED CHARACTERS AND BRAILLE AT THE BOTTOM) IN LOCATIONS SHOWN. BRAILLE SHALL BE 48 INCHES MINIMUM, AND 60 INCHES MAXIMUM ABOVE THE FLOOR, MEASURED TO THE BASELINE OF THE BRAILLE CELLS. SEE ADA COMPLIANT SIGNAGE DETAIL.
15. PROVIDE BABY/DIAPER CHANGING STATION, WHICH SHALL BE MOUNTED TO THE HIGHEST PART OF THE WORK SURFACE AT 34" ABOVE THE FLOOR
16. PROVIDE ADA COMPLIANT FULLY RECESSED PAPER TOWEL DISPENSER AND WASTE DISPOSAL COMBINATION UNIT TO BE INSTALLED BY CONTRACTOR (MOUNT WITH THEIR 'OPERABLE PART" DISPENSING MECHANISM NO MORE THAN 48" ABOVE THE FLOOR) IN LOCATIONS SHOWN.
17. PROVIDE ADA COMPLIANT WALL MOUNTED SOLID SURFACE SEAMLESS ONE (1) - BASIN SINK, BACKSPLASHES AND FAUCETS (THE FRONT OF THE SINK SHALL BE A MAXIMUM OF 34" ABOVE THE FLOOR) IN LOCATIONS SHOWN, SEE PLUMBING DRAWINGS FOR FIXTURE SELECTION, COLOR/STYLE TO BE SELECTED BY OWNER. PROVIDE PIPE PROTECTION FOR WATER SUPPLY LINES AND DRAINPIPES UNDER THE SINKS. MAINTAIN PROPER ADA KNEE AND TOE CLEARANCE AT ALL FIXTURES. TYPE: "OMNIDECK 3010 SERIES BY AS MFGR.'D BY BRADLEY (OR APPROVED EQUAL)".

IT IS A VIOLATION OF THE NEW YORK STATE EDUCATION LAW, ARTICLE 145 §7209 SPECIAL PROVISIONS, FOR ANY PERSON, UNLESS THEY ARE ACTING UNDER THE DIRECTION OF A LICENSED PROFESSIONAL ENGINEER, ARCHITECT, LANDSCAPE ARCHITECT, OR LAND SURVEYOR, TO ALTER AN ITEM IN ANY WAY. IF AN ITEM BEARING THE STAMP OF A LICENSED PROFESSIONAL IS ALTERED, THE ALTERING PROFESSIONAL SHALL STAMP THE DOCUMENT AND INCLUDE THE NOTATION "ALTERED BY" FOLLOWED BY THEIR SIGNATURE, THE DATE OF SUCH ALTERATION, AND A SPECIFIC DESCRIPTION OF THE ALTERATION.

REVISIONS

CITY OF MIDDLETOWN
NEW COURTHOUSE FACILITY

FIRST FLOOR ENLARGED BATHROOM PLANS AND INTERIOR ELEVATIONS

CITY OF MIDDLETOWN
ORANGE COUNTY, NEW YORK

Barton & Loguidice
443 Electronics Parkway
Liverpool, NY 13088
NYS CERTIFICATE # 0021642, 0020588, 0019903, 0019905, 0020336

STATE OF NEW YORK · MATTHEW C. FULLER · 070743 · LICENSED PROFESSIONAL ENGINEER

NYS EXP.:

Date: AUGUST, 2024

Scale: AS SHOWN

Sheet Number: A406

Project Number: 1753.008.001

Plotted: 8/21/2024 4:26:22 PM
C:\Users\cgardner\Documents\Middletown Courthouse 6.22.21 Central File – ARCHITECTURAL STRUCTURAL
MODEL_cgardner05.rvt
Checked by Checker Drawn by TJM Designed by TJM In Charge of TRB

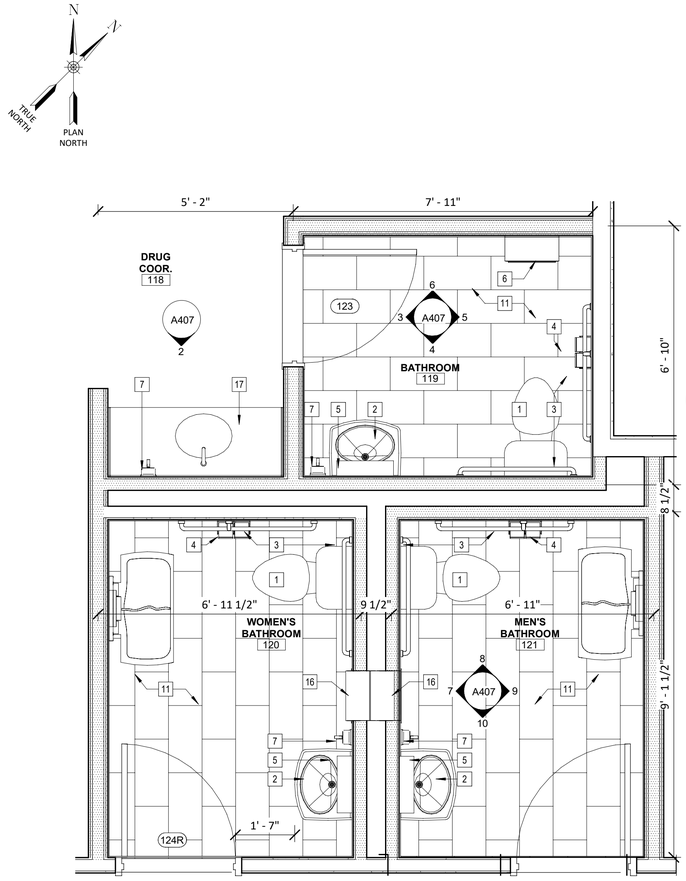

1 A201 ENLARGED DRUG COOR. BATHROOM PLANS
SCALE: 1/2" = 1'-0"

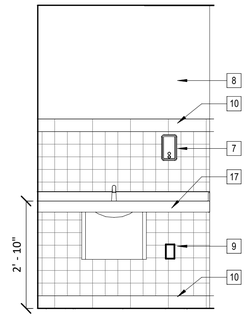

2 A407 DRUG COOR. ELEVATION
SCALE: 1/2" = 1'-0"

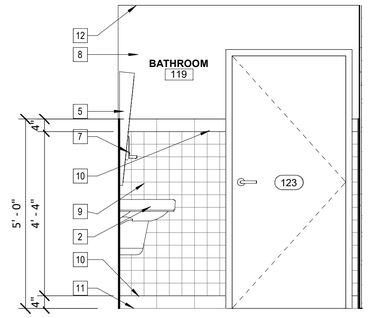

3 A407 BATH. 119 ELEVATION 1
SCALE: 1/2" = 1'-0"

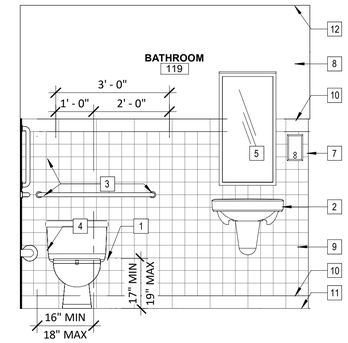

4 A407 BATH. 119 ELEVATION 2
SCALE: 1/2" = 1'-0"

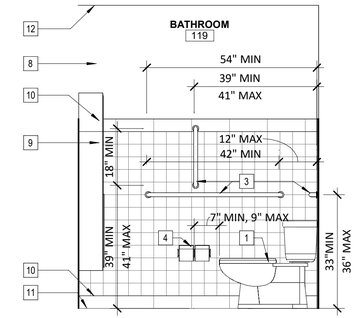

5 A407 BATH. 119 ELEVATION 3
SCALE: 1/2" = 1'-0"

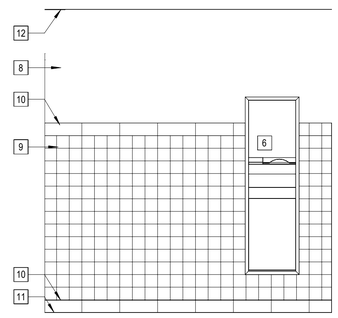

6 A407 BATH. 119 ELEVATION 4
SCALE: 1/2" = 1'-0"

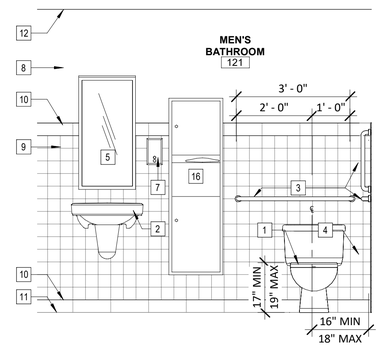

7 A407 BATH. 121 ELEVATION 1
SCALE: 1/2" = 1'-0"

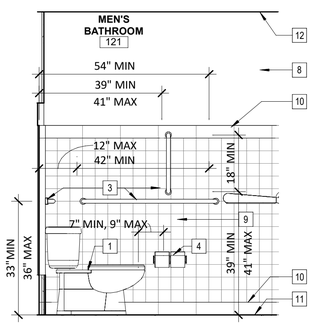

8 A407 BATH. 121 ELEVATION 2
SCALE: 1/2" = 1'-0"

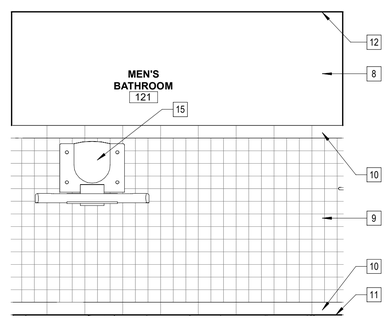

9 A407 BATH. 121 ELEVATION 3
SCALE: 1/2" = 1'-0"

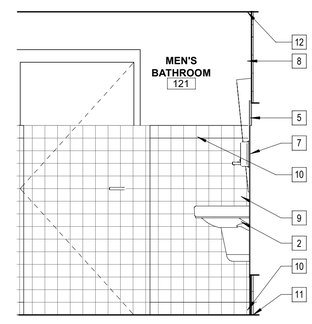

10 A407 BATH. 121 ELEVATION 4
SCALE: 1/2" = 1'-0"

BATHROOM KEY NOTES

1. SEE PLUMBING SHEETS FOR ADA COMPLIANT WATER CLOSET TOILET (SEAT 17 MIN. AND 19" MAX. OFF OF THE FLOOR) IN LOCATIONS SHOWN, SEE PLUMBING DRAWINGS FOR FIXTURE SELECTION, COLOR TO BE SELECTED BY OWNER.
2. SEE PLUMPING SHEETS FOR ADA COMPLIANT WALL MOUNTED SINKS AND FAUCETS (THE FRONT OF THE SINK SHALL BE A MAXIMUM OF 34" ABOVE THE FLOOR) IN LOCATIONS SHOWN, SEE PLUMBING DRAWINGS FOR FIXTURE SELECTION, COLOR TO BE SELECTED BY OWNER. PROVIDE PIPE PROTECTION FOR WATER SUPPLY LINES AND DRAINPIPES UNDER THE SINKS. MAINTAIN PROPER ADA KNEE AND TOE CLEARANCE AT ALL FIXTURES.
3. PROVIDE GRAB BARS IN LOCATIONS SHOWN AND AS FOLLOWS. FIXED SIDEWALL GRAB BAR 42" MINIMUM IN LENGTH, LOCATED 12" MAXIMUM FROM REAR WALL AND EXTENDING 54" MINIMUM FROM THE REAR WALL (33" MINIMUM AND 36" MAXIMUM TO TOP OF GRAB BAR OFF OF THE FLOOR). PROVIDE VERTICAL GRAB BAR 18" MINIMUM LENGTH AND SHALL BE MOUNTED WITH THE BOTTOM OF THE BAR LOCATED 39" MINIMUM AND 41" MAXIMUM OFF OF THE FLOOR AND 39" TO 41" TO THE CENTER OF THE BAR FROM THE BACK WALL. THE REAR GRAB BAR SHALL BE 36" MINIMUM IN LENGTH, AND EXTEND FROM THE CENTERLINE OF THE WATER CLOSET (TOILET) 12" MINIMUM ON THE SIDE CLOSEST TO THE WALL, AND 24" MINIMUM ON THE TRANSFER SIDE. PROVIDE ALL WOOD BLOCKING IN WALL AS NEEDED FOR THE INSTALLATION OF GRAB BARS.
4. PROVIDE ADA COMPLIANT WALL MOUNTED JUMBO BATH TISSUE DOUBLE ROLL DISPENSER TO BE INSTALLED BY CONTRACTOR, 18" MINIMUM FROM THE FLOOR TO THE BOTTOM OF THE UNIT OR 48" MAXIMUM TO THE TOP OF THE UNIT FROM THE FLOOR AND 24" FROM THE BACK WALL TO THE BACK EDGE OF THE UNIT IN LOCATIONS SHOWN ON PLANS. COORDINATE LOCATION WITH GRAB BAR INSTALLATION.
5. PROVIDE ADA COMPLIANT 24" W x 36" H MIRROR, WHICH SHALL BE MOUNTED WITH THE BOTTOM EDGE OF THE REFLECTING SURFACE NO HIGHER THAN 40" ABOVE THE FLOOR.
6. PROVIDE ADA COMPLIANT WALL MOUNTED PAPER TOWEL DISPENSER AND WASTE DISPOSAL COMBINATION UNIT TO BE INSTALLED BY CONTRACTOR (MOUNT WITH THEIR 'OPERABLE PART" DISPENSING MECHANISM NO MORE THAN 48" ABOVE THE FLOOR) IN LOCATIONS SHOWN.
7. PROVIDE ADA COMPLIANT WALL MOUNTED LIQUID SOAP DISPENSER TO BE INSTALLED BY CONTRACTOR (MOUNT WITH THEIR 'OPERABLE PART" DISPENSING MECHANISM NO MORE THAN 48" ABOVE THE FLOOR) IN LOCATIONS SHOWN.
8. PRIME AND PAINTED GWB WALLS, COLOR TO BE SELECTED BY OWNER.
9. 4" X 4" CERAMIC WALL TILE MAIN FIELD, COLOR TO BE SELECTED BY OWNER
10. 4" X 12" CERAMIC WALL BULL NOSE & COVE BASE, SUBWAY TILE LAYOUT, COLOR TO BE SELECTED BY OWNER.
11. 12" X 24" PORCELAIN TILE FLOOR, COLOR TO BE SELECTED BY OWNER.
12. ACOUSTICAL CEILING TILES AND GRID SYSTEM.
13. PROVIDE FIRE EXTINGUISHER CABINET, REFER TO DETAIL FOR MORE INFORMATION.
14. PROVIDE ADA COMPLIANT TACTILE SIGNAGE (SYMBOL AT THE TOP, RAISED CHARACTERS AND BRAILLE AT THE BOTTOM) IN LOCATIONS SHOWN. BRAILLE SHALL BE 48 INCHES MINIMUM, AND 60 INCHES MAXIMUM ABOVE THE FLOOR, MEASURED TO THE BASELINE OF THE BRAILLE CELLS. SEE ADA COMPLIANT SIGNAGE DETAIL.
15. PROVIDE BABY/DIAPER CHANGING STATION, WHICH SHALL BE MOUNTED TO THE HIGHEST PART OF THE WORK SURFACE AT 34" ABOVE THE FLOOR
16. PROVIDE ADA COMPLIANT FULLY RECESSED PAPER TOWEL DISPENSER AND WASTE DISPOSAL COMBINATION UNIT TO BE INSTALLED BY CONTRACTOR (MOUNT WITH THEIR 'OPERABLE PART" DISPENSING MECHANISM NO MORE THAN 48" ABOVE THE FLOOR) IN LOCATIONS SHOWN.
17. PROVIDE ADA COMPLIANT WALL MOUNTED SOLID SURFACE SEAMLESS ONE (1) - BASIN SINK, BACKSPLASHES AND FAUCETS (THE FRONT OF THE SINK SHALL BE A MAXIMUM OF 34" ABOVE THE FLOOR) IN LOCATIONS SHOWN, SEE PLUMBING DRAWINGS FOR FIXTURE SELECTION, COLOR/STYLE TO BE SELECTED BY OWNER. PROVIDE PIPE PROTECTION FOR WATER SUPPLY LINES AND DRAINPIPES UNDER THE SINKS. MAINTAIN PROPER ADA KNEE AND TOE CLEARANCE AT ALL FIXTURES. TYPE: "OMNIDECK 3010 SERIES BY AS MFGR.'D BY BRADLEY (OR APPROVED EQUAL)".

IT IS A VIOLATION OF THE NEW YORK STATE EDUCATION LAW, ARTICLE 145 §7209 SPECIAL PROVISIONS, FOR ANY PERSON, UNLESS THEY ARE ACTING UNDER THE DIRECTION OF A LICENSED PROFESSIONAL ENGINEER, ARCHITECT, LANDSCAPE ARCHITECT, OR LAND SURVEYOR, TO ALTER AN ITEM IN ANY WAY. IF AN ITEM BEARING THE STAMP OF A LICENSED PROFESSIONAL IS ALTERED, THE ALTERING PROFESSIONAL SHALL STAMP THE DOCUMENT AND INCLUDE THE NOTATION "ALTERED BY" FOLLOWED BY THEIR SIGNATURE, THE DATE OF SUCH ALTERATION, AND A SPECIFIC DESCRIPTION OF THE ALTERATION.

REVISIONS

CITY OF MIDDLETOWN
NEW COURTHOUSE FACILITY

FIRST FLOOR ENLARGED BATHROOM PLANS AND INTERIOR ELEVATIONS

CITY OF MIDDLETOWN ORANGE COUNTY, NEW YORK

Barton & Loguidice
443 Electronics Parkway
Liverpool, NY 13088
NYS CERTIFICATE # 0021642, 0020588, 0019903, 0019905, 0020336

NYS EXP.:

Date	AUGUST, 2024
Scale	AS SHOWN
Sheet Number	A407
Project Number	1753.008.001

Plotted: 8/21/2024 4:26:23 PM
C:\Users\cgardner\Documents\Middletown Courthouse 6.22.21 Central File – ARCHITECTURAL STRUCTURAL MODEL_cgardner05.rvt
Checked by ZPC Drawn by TJM Designed by TJM In Charge of TRB

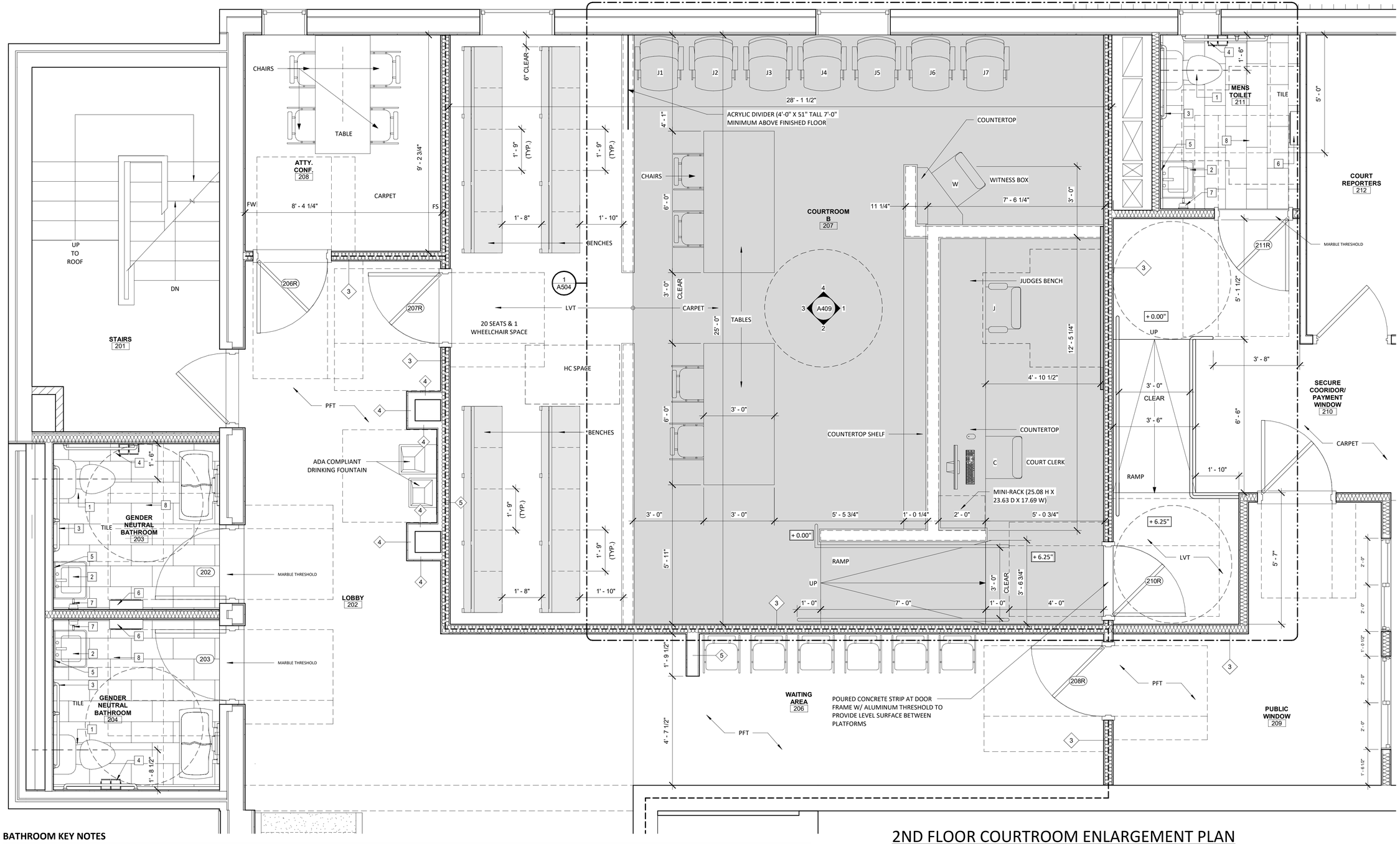

BATHROOM KEY NOTES

1. SEE PLUMBING SHEETS FOR ADA COMPLIANT WATER CLOSET TOILET (SEAT 17 MIN. AND 19" MAX. OFF OF THE FLOOR) IN LOCATIONS SHOWN, SEE PLUMBING DRAWINGS FOR FIXTURE SELECTION, COLOR TO BE SELECTED BY OWNER.
2. SEE PLUMBING SHEETS FOR ADA COMPLIANT WALL MOUNTED SINKS AND FAUCETS (THE FRONT OF THE SINK SHALL BE A MAXIMUM OF 34" ABOVE THE FLOOR) IN LOCATIONS SHOWN, SEE PLUMBING DRAWINGS FOR FIXTURE SELECTION, COLOR TO BE SELECTED BY OWNER. PROVIDE PIPE PROTECTION FOR WATER SUPPLY LINES AND DRAINPIPES UNDER THE SINKS. MAINTAIN PROPER ADA KNEE AND TOE CLEARANCE AT ALL FIXTURES.
3. PROVIDE GRAB BARS IN LOCATIONS SHOWN AND AS FOLLOWS. FIXED SIDEWALL GRAB BAR 42" MINIMUM IN LENGTH, LOCATED 12" MAXIMUM FROM REAR WALL AND EXTENDING 54" MINIMUM FROM THE REAR WALL (33" MINIMUM AND 36" MAXIMUM TO TOP OF GRAB BAR OFF OF THE FLOOR). PROVIDE VERTICAL GRAB BAR 18" MINIMUM LENGTH AND SHALL BE MOUNTED WITH THE BOTTOM OF THE BAR LOCATED 39" MINIMUM AND 41" MAXIMUM OFF OF THE FLOOR AND 39" TO 41" TO THE CENTER OF THE BAR FROM THE BACK WALL. THE REAR GRAB BAR SHALL BE 36" MINIMUM IN LENGTH, AND EXTEND FROM THE CENTERLINE OF THE WATER CLOSET (TOILET) 12" MINIMUM ON THE SIDE CLOSEST TO THE WALL, AND 24" MINIMUM ON THE TRANSFER SIDE. PROVIDE ALL WOOD BLOCKING IN WALL AS NEEDED FOR THE INSTALLATION OF GRAB BARS.
4. PROVIDE ADA COMPLIANT WALL MOUNTED JUMBO BATH TISSUE DOUBLE ROLL DISPENSER TO BE INSTALLED BY CONTRACTOR, 18" MINIMUM FROM THE FLOOR TO THE BOTTOM OF THE UNIT OR 48" MAXIMUM TO THE TOP OF THE UNIT FROM THE FLOOR AND 24" FROM THE BACK WALL TO THE BACK EDGE OF THE UNIT IN LOCATIONS SHOWN ON PLANS. COORDINATE LOCATION WITH GRAB BAR INSTALLATION.
5. PROVIDE ADA COMPLIANT 24" W x 36" H MIRROR, WHICH SHALL BE MOUNTED WITH THE BOTTOM EDGE OF THE REFLECTING SURFACE NO HIGHER THAN 40" ABOVE THE FLOOR.
6. PROVIDE ADA COMPLIANT WALL MOUNTED PAPER TOWEL DISPENSER AND WASTE DISPOSAL COMBINATION UNIT TO BE INSTALLED BY CONTRACTOR (MOUNT WITH THEIR 'OPERABLE PART" DISPENSING MECHANISM NO MORE THAN 48" ABOVE THE FLOOR) IN LOCATIONS SHOWN.
7. PROVIDE ADA COMPLIANT WALL MOUNTED LIQUID SOAP DISPENSER TO BE INSTALLED BY CONTRACTOR (MOUNT WITH THEIR 'OPERABLE PART" DISPENSING MECHANISM NO MORE THAN 48" ABOVE THE FLOOR) IN LOCATIONS SHOWN.
8. 12" X 24" PORCELAIN TILE FLOOR, COLOR TO BE SELECTED BY OWNER.

2ND FLOOR COURTROOM ENLARGEMENT PLAN

SCALE: 1/2" = 1'-0"

LEGEND

101 DOOR TAG

1i PARTITION TAG

1 HOUR RATED WALL CONSTRUCTION - FIRE BARRIER (SEE WALL LEGENDS FOR WALL CONSTRUCTION AND UL ASSEMBLY INFORMATION)

DIMENSIONS TO EXISTING WALLS IS TO FACE OF WALL, DIMENSIONS TO NEW WORK IS TO FACE OF STUD

DIMENSIONS TO MILLWORK IF NOT NOTED IS TO FACE OF WALL, SEE MILLWORK ENLARGEMENT PLANS AND DETAILS FOR ADDITIONAL DETAILING AND TO LAYOUT MILLWORK AND MILLWORK SUPPORTS

DIMENSIONS TO FURNITURE IS TO EDGE OF TABLE, CHAIR, ETC.

FURNITURE UNLESS NOTED IS NOT IN CONTRACT.

IT IS A VIOLATION OF THE NEW YORK STATE EDUCATION LAW, ARTICLE 145 §7209 SPECIAL PROVISIONS, FOR ANY PERSON, UNLESS THEY ARE ACTING UNDER THE DIRECTION OF A LICENSED PROFESSIONAL ENGINEER, ARCHITECT, LANDSCAPE ARCHITECT, OR LAND SURVEYOR, TO ALTER AN ITEM IN ANY WAY. IF AN ITEM BEARING THE STAMP OF A LICENSED PROFESSIONAL IS ALTERED, THE ALTERING PROFESSIONAL SHALL STAMP THE DOCUMENT AND INCLUDE THE NOTATION "ALTERED BY" FOLLOWED BY THEIR SIGNATURE, THE DATE OF SUCH ALTERATION, AND A SPECIFIC DESCRIPTION OF THE ALTERATION.

REVISIONS

CITY OF MIDDLETOWN
NEW COURTHOUSE FACILITY

SECOND FLOOR COURTOOM ENLARGEMENT PLAN

ORANGE COUNTY, NEW YORK

CITY OF MIDDLETOWN

Barton & Loguidice
443 Electronics Parkway
Liverpool, NY 13088
NYS CERTIFICATE # 0021642, 0020588, 0019903, 0019905, 0020336

STATE OF NEW YORK · MATTHEW C. FULLER · 070743 · LICENSED PROFESSIONAL ENGINEER

NYS EXP.:

Date: AUGUST, 2024

Scale: AS SHOWN

Sheet Number: A408

Project Number: 1753.008.001

Plotted: 8/21/2024 4:26:24 PM
C:\Users\cgardner\Documents\Middletown Courthouse 6.22.21 Central File – ARCHITECTURAL STRUCTURAL
MODEL_cgardner05.rvt

Checked by ZDC Drawn by ZDC Designed by ZDC In Charge of TRB

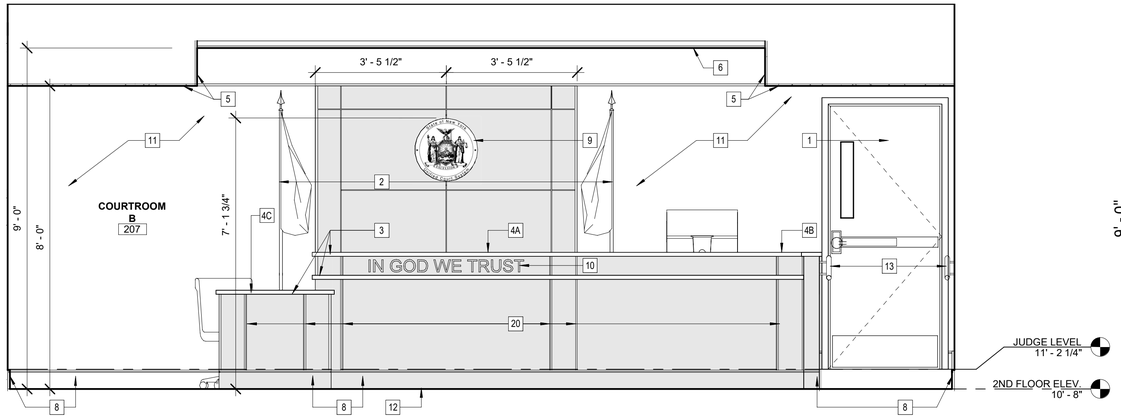

1 A202 COURTROOM B ELEVATION 1

SCALE: 1/2" = 1'-0"

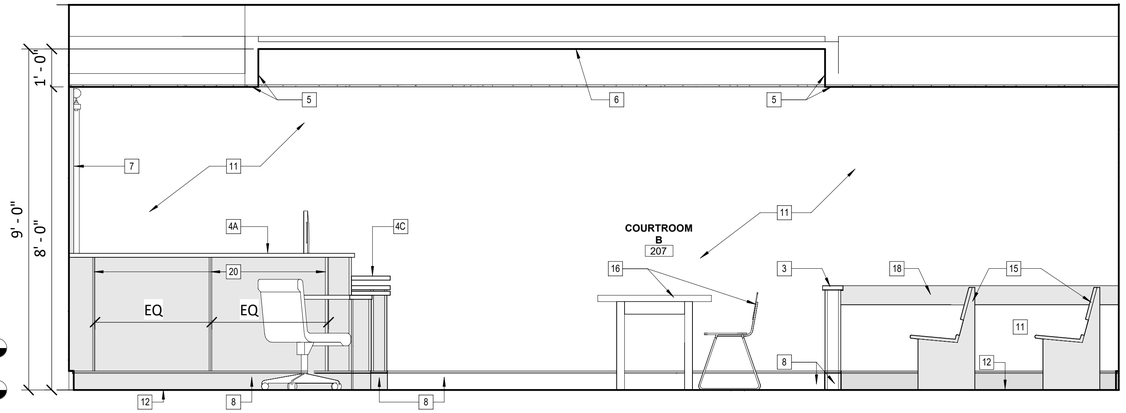

2 A202 COURTROOM B ELEVATION 2

SCALE: 1/2" = 1'-0"

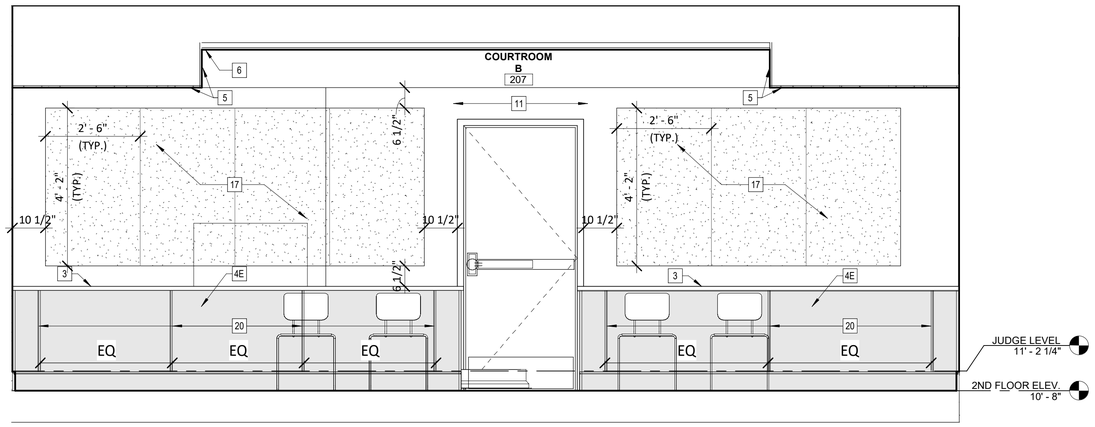

3 A202 COURTROOM B ELEVATION 3

SCALE: 1/2" = 1'-0"

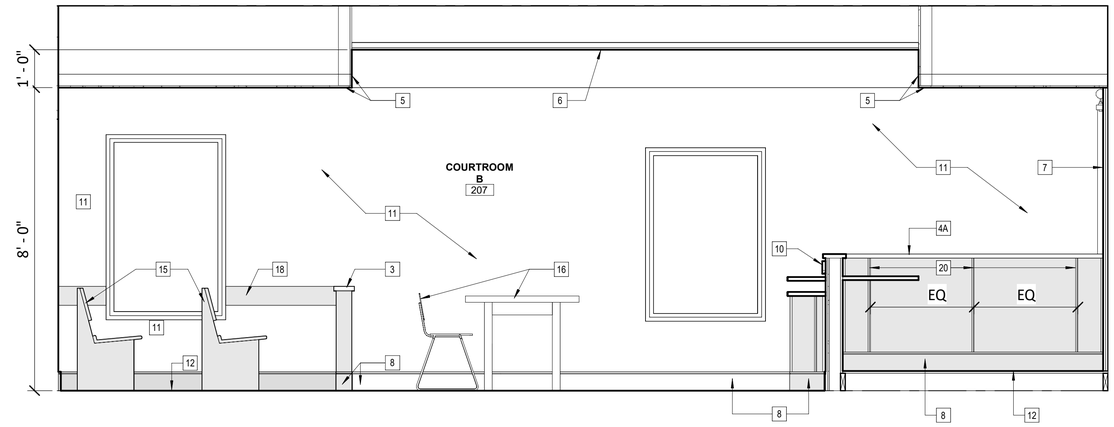

4 A202 COURTROOM B ELEVATION 4

SCALE: 1/2" = 1'-0"

COURTROOM ELEVATION KEYED NOTES

1. WOOD OR METAL DOOR WITH HOLLOW METAL FRAME, W/ OR W/O LITE (HALF) AND ADA COMPLIANT HARDWARE - 60 MINUTE RATED DOOR & FRAME, SEE DOOR SCHEDULE.
2. WALL MOUNTED FLAG POLES, BRACKETS AND FLAGS TO BE PROVIDED BY OWNER AND INSTALLED BY CONTRACTOR.
3. SOLID SURFACE CAPS/COUNTERTOPS.
4. 4A. JUDGES BENCH, 4B. CLERKS AREA 4C. WITNESS BOX, 4D. JURY BOX, AND 4E. GALLERY SEPARATION WALLS WOOD VENEER.
5. SHEETROCKED SOFFIT OR HANGING SHEETROCKED CEILING.
6. ACOUSTICAL CEILING GRID SYSTEM.
7. WOOD PANELING BEHIND JUDGE AND WITNESS BOXES.
8. 6" TALL - 3/4" WOOD TRIM BASE
9. NEW YORK STATE COURT SYSTEM SEAL (LIGHT WEIGHT) TO BE PROVIDED BY OWNER AND MOUNTED/INSTALLED WITH VELCRO OR PICTURE HOOKS ON WOOD PANELING BY CONTRACTOR, CENTER ON JUDGE'S BENCH.
10. TYPICAL 4" HIGH CAST BRONZE LETTERING (FINISH TO BE SELECTED BY OWNER) MOUNTED ON THE WOOD PANELING AT THE BACK OF THE JUDGE'S BENCH, CENTER ON JUDGES BENCH.
11. PAINTED GYPSUM WALL BOARD WALLS.
12. CARPET TILE/CARPETING FLOORING IN COURTROOM AREA, STEPS AND RAMPS. LUXURY VINYL TILE IN GALLERY AREA, ATTORNEY CONFERENCE ROOMS AND VESTIBULE.
13. ADA COMPLIANT ALUMINUM HANDRAIL.
14. JURY SWINGING GATE DOOR.
15. GALLERY WOOD BENCHES.
16. TABLES AND CHAIRS. (SOME ELEVATIONS CHAIRS AND TABLES HAVE BEEN REMOVED FOR DETAILING CLARITY).
17. ACOUSTICAL FABRIC WALL PANELS, PANELS BUTTED TOGETHER, PANEL SIZES AS SHOWN ON ELEVATIONS.
18. WOOD CHAIR RAIL.
19. WALL SCONCE LIGHT FIXTURE.
20. WOOD PANEL JOINTS/TRIM. PROVIDE EQUAL DISTANCE BETWEEN JOINTS ALONG LENGTHS OF WALLS. (SEE MILLWORK DETAILS FOR TYPICAL DETAILING AT CORNERS/ENDS OF MILLWORK).
21. 6" VINYL WALL BASE

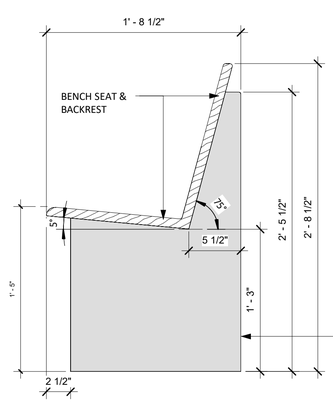

SEE COURTROOM ENLARGEMENT PLANS FOR GALLERY BENCH LENGTHS LAYOUT AND SPACING IN COURTROOMS

PROVIDE WOOD GALLERY BENCHES AS AVAILABLE FROM AGATI, COMMUNITY FURNITURE FROM THE JASPER GROUP, GUNLOCKE OR APPROVED EQUAL MANUFACTURER

WOOD GALLERY BENCHES FINISH TO BE SELECTED BY OWNER FROM MANUFACTURERS FULL RANGE OF FINISH/STAIN OPTIONS

OFFICE OF THE COURT ADMINISTRATION (OCA) TO REVIEW AND APPROVE SHOP DRAWINGS PRIOR TO GALLERY BENCH PRODUCTION

GALLERY BENCH ELEVATION DETAIL

SCALE: 1 1/2" = 1'-0"

CONTRACTOR TO PROVIDE AND INSTALL 2 FLAG POLES, FLAGS, FLAG ACCESSORIES AND WALL MOUNTING BRACKETS PER COURTROOM IN LOCATIONS SHOWN. CONTRACTOR TO PROVIDE FLAG POLE, FLAGS, FLAG ACCESSORIES AND WALL MOUNTING BRACKETS AND INSTALL

CONTRACTOR TO PROVIDE (2) UNITED STATES FLAGS AND (2) NEW YORK STATE FLAGS, CONTRACTOR TO INSTALL UNITED STATES FLAGS TO THE LEFT OF THE JUDGE'S BENCH AND INSTALL THE NEW YORK STATE FLAGS TO THE RIGHT OF THE JUDGE'S BENCH.

PROVIDE FLAG POLE COMPONENTS AS AVAILABLE FROM EDER FLAG, OR APPROVED EQUAL, CONTRACTOR TO RECEIVE FINAL APPROVAL OF FLAG POLE COMPONENTS WITH OWNER

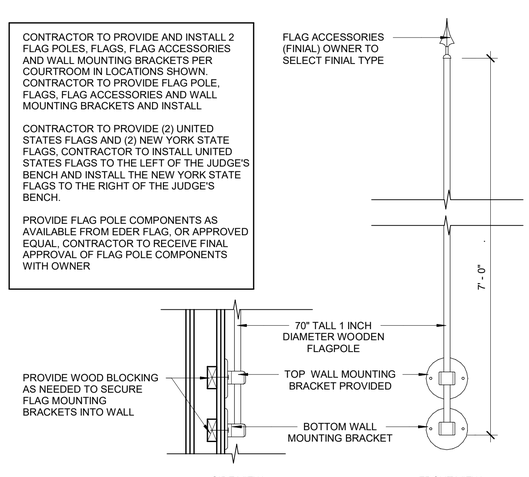

FLAG POLE DETAIL

SCALE: 1" = 1'-0"

IT IS A VIOLATION OF THE NEW YORK STATE EDUCATION LAW, ARTICLE 145 §7209 SPECIAL PROVISIONS, FOR ANY PERSON, UNLESS THEY ARE ACTING UNDER THE DIRECTION OF A LICENSED PROFESSIONAL ENGINEER, ARCHITECT, LANDSCAPE ARCHITECT, OR LAND SURVEYOR, TO ALTER AN ITEM IN ANY WAY. IF AN ITEM BEARING THE STAMP OF A LICENSED PROFESSIONAL IS ALTERED, THE ALTERING PROFESSIONAL SHALL STAMP THE DOCUMENT AND INCLUDE THE NOTATION "ALTERED BY" FOLLOWED BY THEIR SIGNATURE, THE DATE OF SUCH ALTERATION, AND A SPECIFIC DESCRIPTION OF THE ALTERATION.

REVISIONS

CITY OF MIDDLETOWN
NEW COURTHOUSE FACILITY

SECOND FLOOR COURTROOM INTERIOR ELEVATIONS

CITY OF MIDDLETOWN
ORANGE COUNTY, NEW YORK

Barton & Loguidice
443 Electronics Parkway
Liverpool, NY 13088
NYS CERTIFICATE # 0021642, 0020588, 0019903, 0019905, 0020336

NYS EXP.:

Date: AUGUST, 2024

Scale: AS SHOWN

Sheet Number: A409

Project Number: 1753.008.001

Plotted: 8/21/2024 4:26:25 PM
C:\Users\cgardner\Documents\Middletown Courthouse 6.22.21 Central File – ARCHITECTURAL STRUCTURAL
MODEL_cgardner05.rvt

Checked by ZDC Drawn by ZDC Designed by ZDC In Charge of TRB

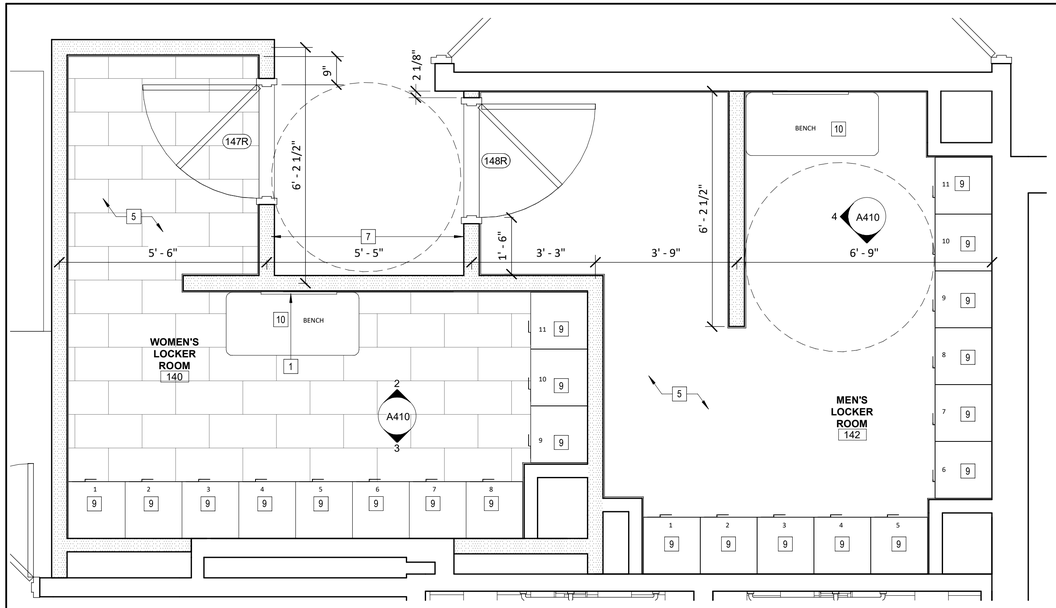

LOCKER ROOM PLAN

SCALE: 1/2" = 1'-0"

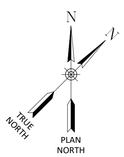

LOCKER ROOMS & PAYMENT WINDOW KEY NOTES

1. PROVIDE ADA COMPLIANT 24" W x 36" H MIRROR, WHICH SHALL BE MOUNTED WITH THE BOTTOM EDGE OF THE REFLECTING SURFACE NO HIGHER THAN 40" ABOVE THE FLOOR.
2. PRIME AND PAINTED GWB WALLS, COLOR TO BE SELECTED BY OWNER.
3. 4" X 4" CERAMIC WALL TILE, COLOR TO BE SELECTED BY OWNER
4. 4" X 12" CERAMIC WALL BULLNOSE & COVE BASE ON 2X4 P.T. WOOD PLATFORM W/ 1/2" PLYWOOD, COLOR TO BE SELECTED BY OWNER.
5. 12" X 24" PORCELAIN TILE FLOOR, COLOR TO BE SELECTED BY OWNER.
6. 24"X24" ACOUSTICAL CEILING TILES AND GRID SYSTEM.
7. PROVIDE ADA COMPLIANT TACTILE SIGNAGE (SYMBOL AT THE TOP, RAISED CHARACTERS AND BRAILLE AT THE BOTTOM) IN LOCATIONS SHOWN. BRAILLE SHALL BE 48 INCHES MINIMUM, AND 60 INCHES MAXIMUM ABOVE THE FLOOR, MEASURED TO THE BASELINE OF THE BRAILLE CELLS. SEE ADA COMPLIANT SIGNAGE DETAIL.
8. PROVIDE PLASTIC LAMINATE COUNTERTOP.
9. PROVIDE PERSONAL STORAGE LOCKER SYSTEM, SINGLE-DOOR LOCKERS 18"W X 21"D X 78" H W/ RECESSED HANDLES BY CORCRAFT PRODUCTS, OR APPROVED EQUAL. SEE SPECIFICATIONS FOR LOCKER SELECTION, COLOR TO BE SELECTED BY OWNER.
10. PROVIDE ADA COMPLIANT LOCKER BENCH. SEE PLAN FOR SIZES, COLOR TO BE SELECTED BY OWNER.
11. PROVIDE 36"W X 16"D X 28-1/2"H 2 DOOR & 2 DRAWER BASE CABINET (PLASTIC LAMINATE CASEWORK).
12. PROVIDE 24"W X 24"D X 28-1/2"H 2 DRAWER & 1 FILE DRAWER BASE CABINETS (PLASTIC LAMINATE CASEWORK).
13. PROVIDE 36"W X 12"D X 29"H MAILBOX (PLASTIC LAMINATE CASEWORK).
14. 4" VINYL WALL BASE, COLOR TO BE SELECTED BY OWNER.
15. 24" X 24" CARPET TILE FLOOR, COLOR TO BE SELECTED BY OWNER.

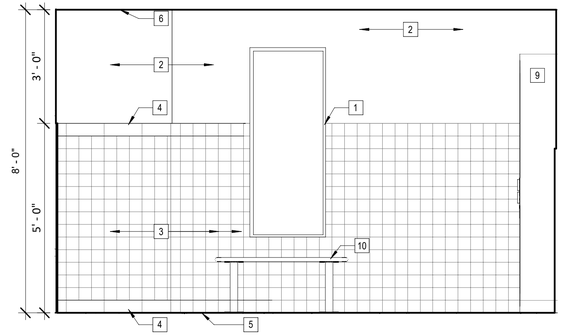

2 A410 MEN'S LOCKER ROOM ELEVATION 1

SCALE: 1/2" = 1'-0"

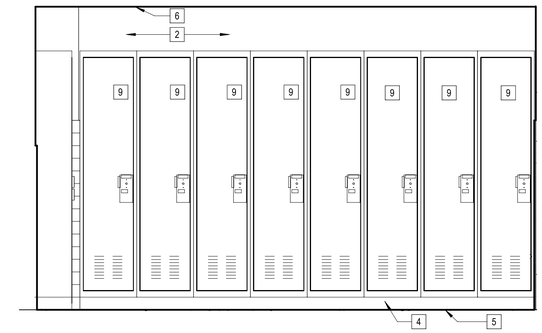

3 A410 MEN'S LOCKER ROOM ELEVATION 2

SCALE: 1/2" = 1'-0"

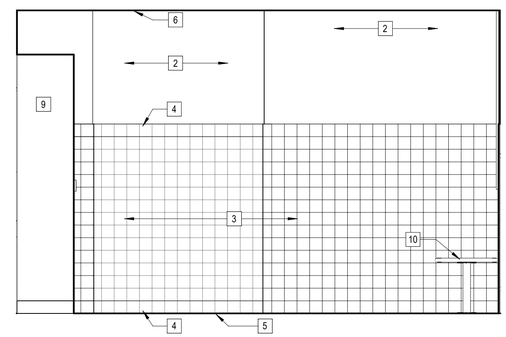

4 A403 WOMEN'S LOCKER ROOM ELEVATION 1

SCALE: 1/2" = 1'-0"

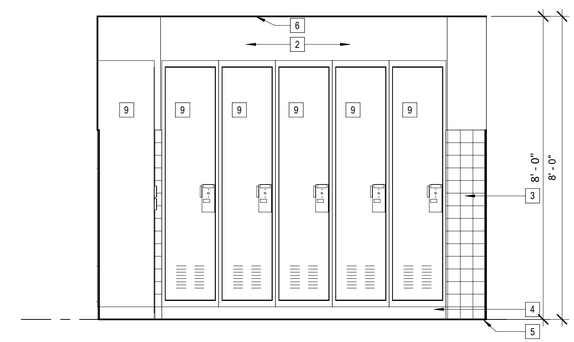

5 A410 WOMEN'S LOCKER ROOM ELEVATION 2

SCALE: 1/2" = 1'-0"

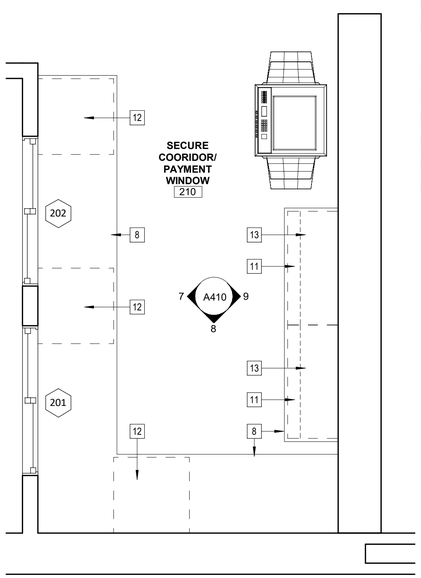

6 A202 PAYMENT WINDOW ENLARGEMENT PLAN

SCALE: 1/2" = 1'-0"

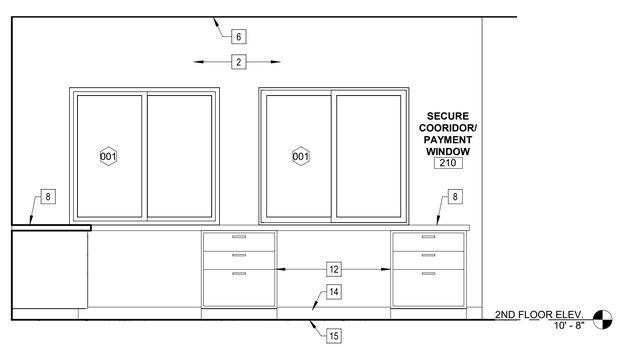

7 A403 PAYMENT WINDOW ELEVATION 1

SCALE: 1/2" = 1'-0"

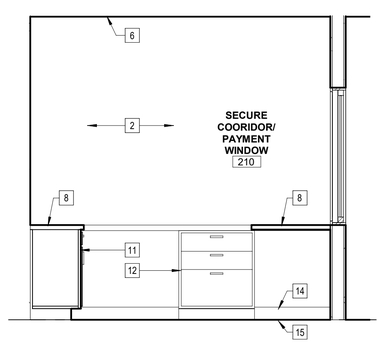

8 A408 PAYMENT WINDOW ELEVATION 2

SCALE: 1/2" = 1'-0"

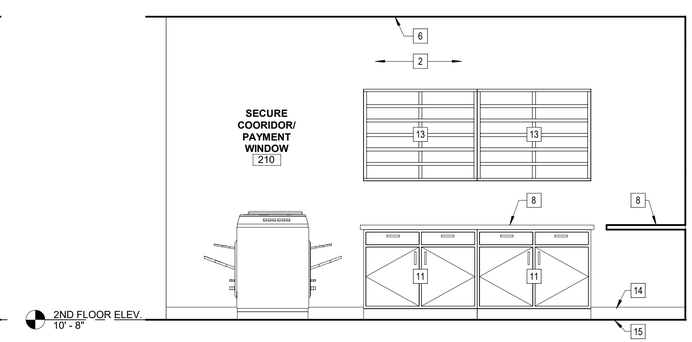

9 A403 PAYMENT WINDOW ELEVATION 3

SCALE: 1/2" = 1'-0"

IT IS A VIOLATION OF THE NEW YORK STATE EDUCATION LAW, ARTICLE 145 §7209 SPECIAL PROVISIONS, FOR ANY PERSON, UNLESS THEY ARE ACTING UNDER THE DIRECTION OF A LICENSED PROFESSIONAL ENGINEER, ARCHITECT, LANDSCAPE ARCHITECT, OR LAND SURVEYOR, TO ALTER AN ITEM IN ANY WAY. IF AN ITEM BEARING THE STAMP OF A LICENSED PROFESSIONAL IS ALTERED, THE ALTERING PROFESSIONAL SHALL STAMP THE DOCUMENT AND INCLUDE THE NOTATION "ALTERED BY" FOLLOWED BY THEIR SIGNATURE, THE DATE OF SUCH ALTERATION, AND A SPECIFIC DESCRIPTION OF THE ALTERATION.

REVISIONS

CITY OF MIDDLETOWN
NEW COURTHOUSE FACILITY

INTERIOR ELEVATIONS

ORANGE COUNTY, NEW YORK

CITY OF MIDDLETOWN

Barton & Loguidice
443 Electronics Parkway
Liverpool, NY 13088
NYS CERTIFICATE # 0021642, 0020588, 0019903, 0019905, 0020336

STATE OF NEW YORK · MATTHEW C. TOLAN · 070743 · LICENSED PROFESSIONAL ENGINEER

NYS EXP.:

Date: AUGUST, 2024

Scale: AS SHOWN

Sheet Number: A410

Project Number: 1753.008.001

Plotted: 8/21/2024 4:26:26 PM
C:\Users\cgardner\Documents\Middletown Courthouse 6.22.21 Central File – ARCHITECTURAL STRUCTURAL MODEL_cgardner05.rvt
Checked by ZDC Drawn by ZDC Designed by ZDC In Charge of TRB

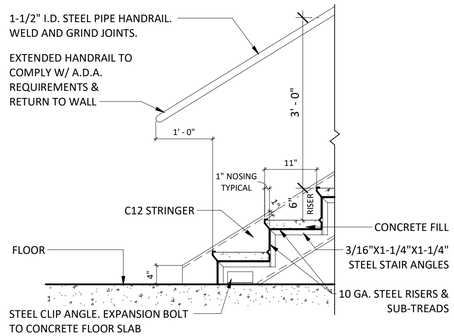

2 A411 CONCRETE PAN DETAIL AT FLOOR
SCALE: 3/4" = 1'-0"

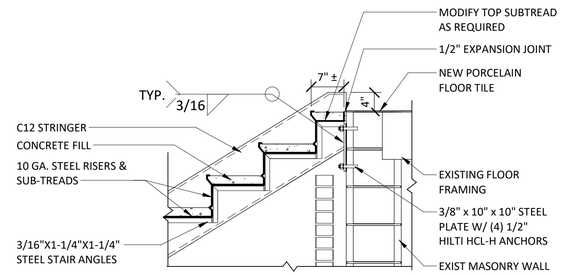

3 A411 SECTION AT LANDING
SCALE: 3/4" = 1'-0"

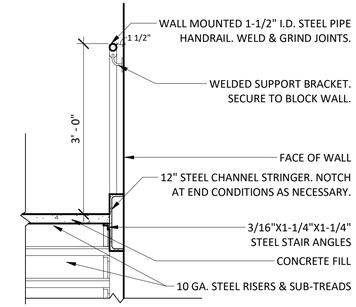

4 A411 STAIR CROSS SECTION
SCALE: 3/4" = 1'-0"

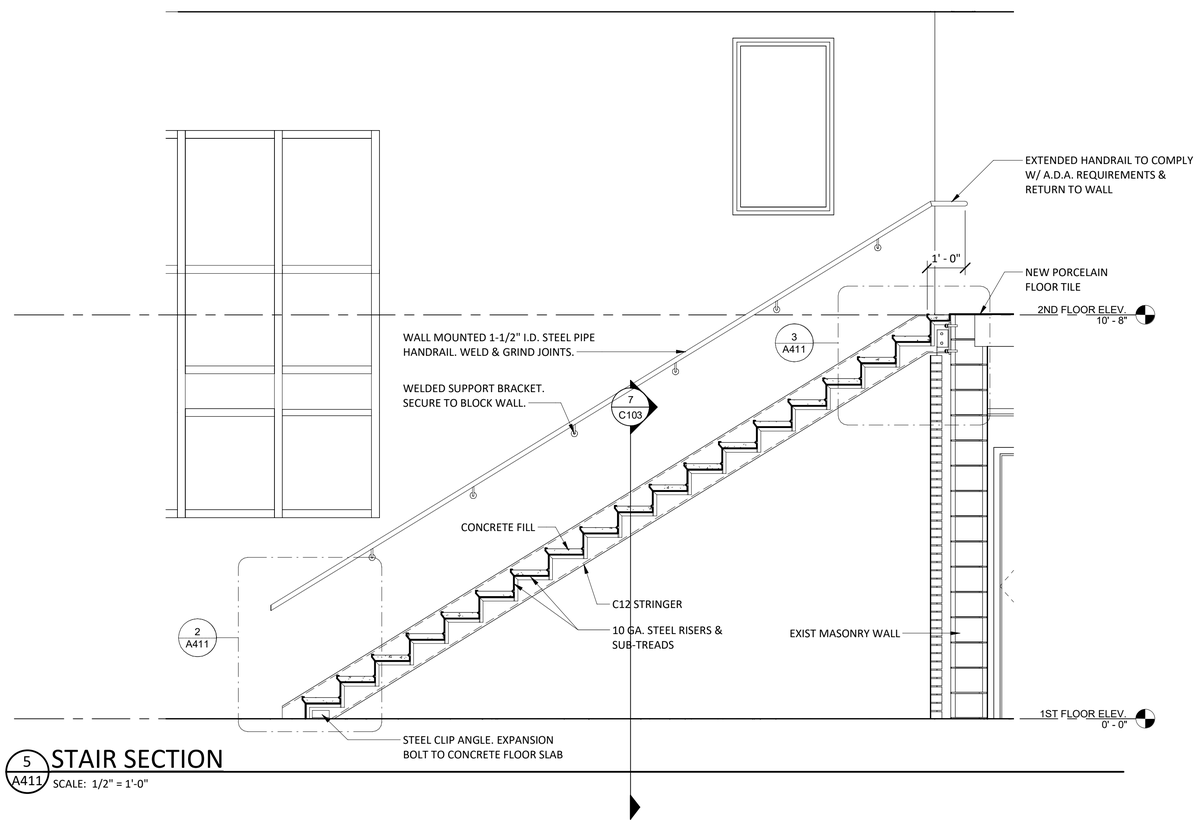

5 A411 STAIR SECTION
SCALE: 1/2" = 1'-0"

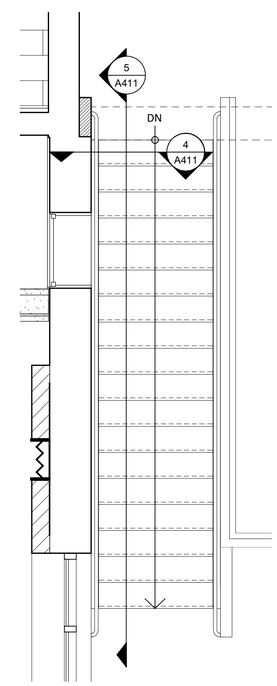

1 A202 STAIR PLAN
SCALE: 3/8" = 1'-0"

IT IS A VIOLATION OF THE NEW YORK STATE EDUCATION LAW, ARTICLE 145 §7209 SPECIAL PROVISIONS, FOR ANY PERSON, UNLESS THEY ARE ACTING UNDER THE DIRECTION OF A LICENSED PROFESSIONAL ENGINEER, ARCHITECT, LANDSCAPE ARCHITECT, OR LAND SURVEYOR, TO ALTER AN ITEM IN ANY WAY. IF AN ITEM BEARING THE STAMP OF A LICENSED PROFESSIONAL IS ALTERED, THE ALTERING PROFESSIONAL SHALL STAMP THE DOCUMENT AND INCLUDE THE NOTATION "ALTERED BY" FOLLOWED BY THEIR SIGNATURE, THE DATE OF SUCH ALTERATION, AND A SPECIFIC DESCRIPTION OF THE ALTERATION.

REVISIONS

CITY OF MIDDLETOWN
NEW COURTHOUSE FACILITY

STAIR PLAN, SECTION AND DETAILS

ORANGE COUNTY, NEW YORK

CITY OF MIDDLETOWN

Barton & Loguidice
443 Electronics Parkway
Liverpool, NY 13088
NYS CERTIFICATE # 0021642, 0020588, 0019903, 0019905, 0020336

STATE OF NEW YORK · MATTHEW C. FUCA · 070743 · LICENSED PROFESSIONAL ENGINEER

NYS EXP.:

Date
AUGUST, 2024

Scale
AS SHOWN

Sheet Number
A411

Project Number
1753.008.001

Plotted: 8/21/2024 4:26:27 PM
C:\Users\cgardner\Documents\Middletown Courthouse 6.22.21 Central File – ARCHITECTURAL STRUCTURAL
MODEL_cgardner05.rvt

Checked by ZDC Drawn by JDC Designed by JDC In Charge of TRB

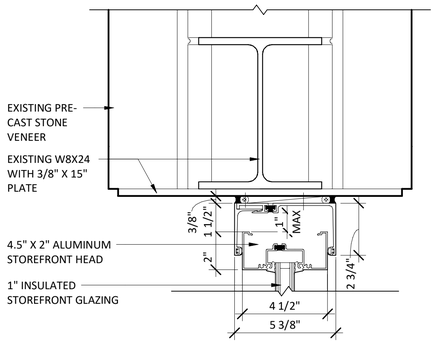

6 A401 EXTERIOR STOREFRONT HEAD DETAIL

SCALE: 3" = 1'-0"

ADDITIVE BID ITEM NO. 02

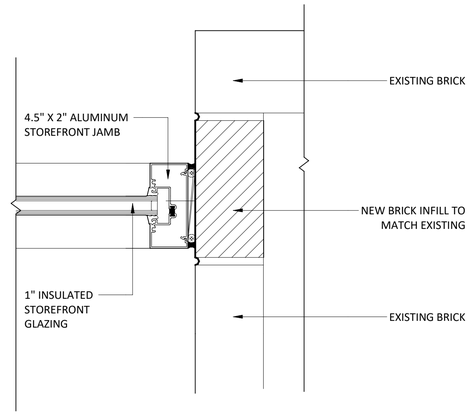

11 A401 EXTERIOR STOREFRONT JAMB DETAIL

SCALE: 3" = 1'-0"

ADDITIVE BID ITEM NO. 02

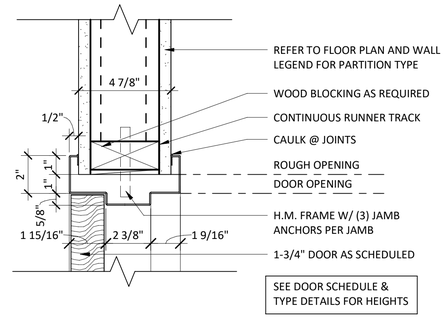

1 DOOR HEAD DETAIL 1

SCALE: 3" = 1'-0"

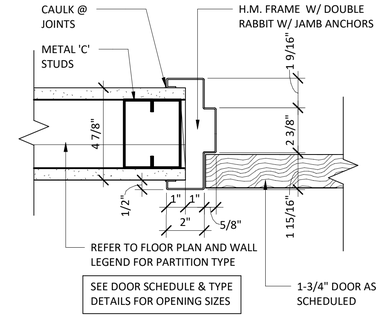

2 DOOR JAMB DETAIL 1

SCALE: 3" = 1'-0"

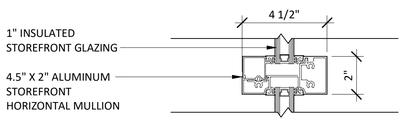

7 A401 EXTERIOR STOREFRONT HORIZONTAL MULLION

SCALE: 3" = 1'-0"

ADDITIVE BID ITEM NO. 02

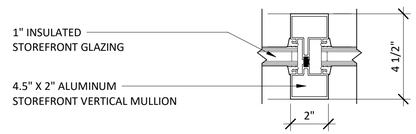

10 A401 EXTERIOR STOREFRONT VERTICAL MULLION

SCALE: 3" = 1'-0"

ADDITIVE BID ITEM NO. 02

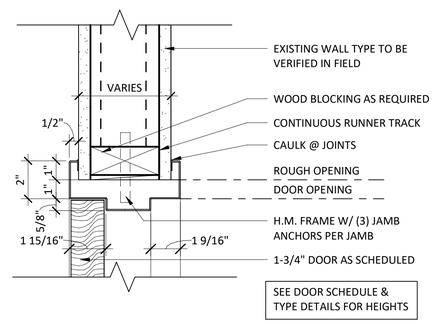

12 DOOR HEAD DETAIL 2

SCALE: 3" = 1'-0"

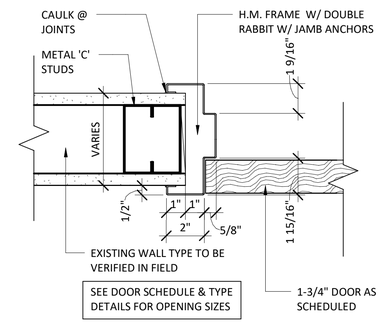

13 DOOR JAMB DETAIL 2

SCALE: 3" = 1'-0"

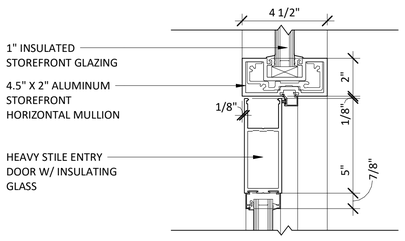

5 A401 EXTERIOR STOREFRONT DOOR HEAD DETAIL

SCALE: 3" = 1'-0"

ADDITIVE BID ITEM NO. 02

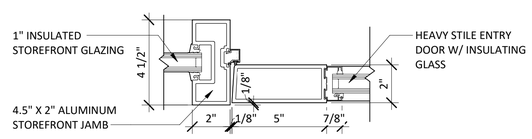

9 A401 EXTERIOR STOREFRONT DOOR JAMB DETAIL

SCALE: 3" = 1'-0"

ADDITIVE BID ITEM NO. 02

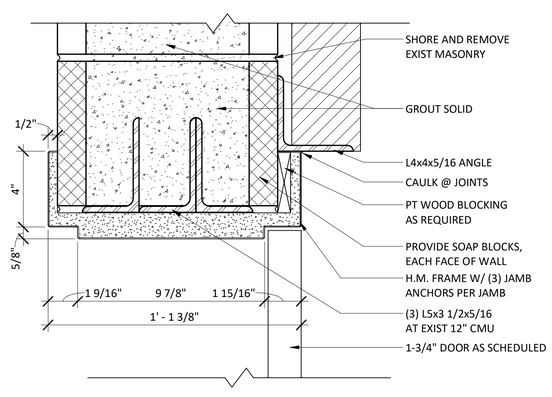

14 DOOR HEAD DETAIL 3

SCALE: 3" = 1'-0"

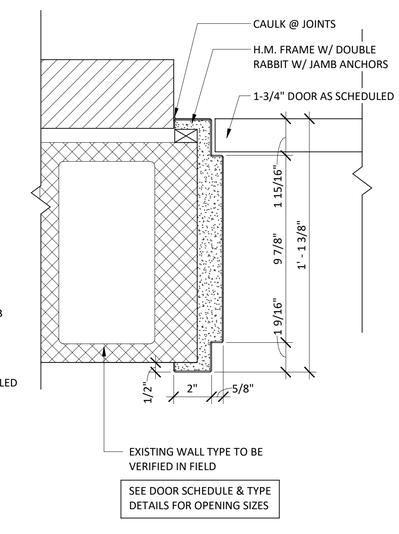

15 DOOR JAMB DETAIL 3

SCALE: 3" = 1'-0"

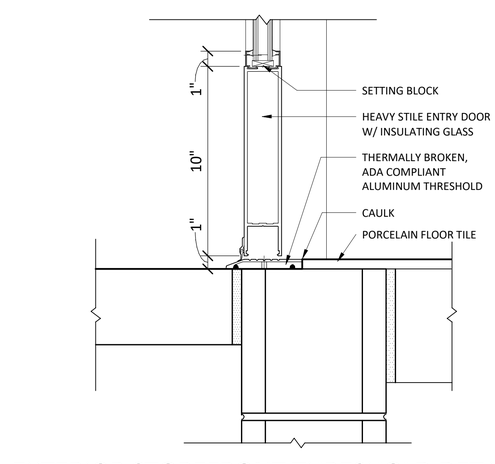

4 A401 EXTERIOR STOREFRONT THRESHOLD DETAIL

SCALE: 3" = 1'-0"

ADDITIVE BID ITEM NO. 02

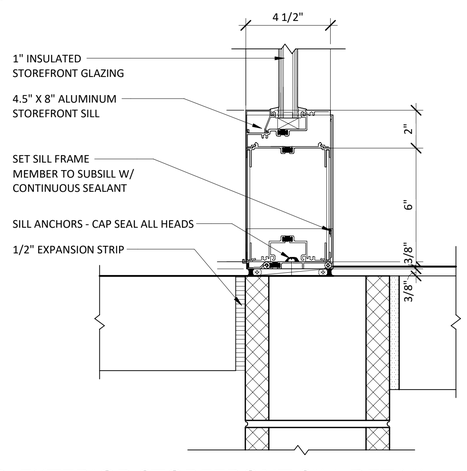

8 A401 EXTERIOR STOREFRONT SILL DETAIL

SCALE: 3" = 1'-0"

ADDITIVE BID ITEM NO. 02

IT IS A VIOLATION OF THE NEW YORK STATE EDUCATION LAW, ARTICLE 145 §7209 SPECIAL PROVISIONS, FOR ANY PERSON, UNLESS THEY ARE ACTING UNDER THE DIRECTION OF A LICENSED PROFESSIONAL ENGINEER, ARCHITECT, LANDSCAPE ARCHITECT, OR LAND SURVEYOR, TO ALTER AN ITEM IN ANY WAY. IF AN ITEM BEARING THE STAMP OF A LICENSED PROFESSIONAL IS ALTERED, THE ALTERING PROFESSIONAL SHALL STAMP THE DOCUMENT AND INCLUDE THE NOTATION "ALTERED BY" FOLLOWED BY THEIR SIGNATURE, THE DATE OF SUCH ALTERATION, AND A SPECIFIC DESCRIPTION OF THE ALTERATION.

REVISIONS

CITY OF MIDDLETOWN
NEW COURTHOUSE FACILITY

ORANGE COUNTY, NEW YORK

CITY OF MIDDLETOWN

DOOR DETAILS

Barton & Loguidice
443 Electronics Parkway
Liverpool, NY 13088
NYS CERTIFICATE # 0021642, 0020588, 0019903, 0019905, 0020336

STATE OF NEW YORK · MATTHEW C. FULLER · 070743 · LICENSED PROFESSIONAL ENGINEER

NYS EXP.:

Date: AUGUST, 2024

Scale: AS SHOWN

Sheet Number: A501

Project Number: 1753.008.001

Plotted: 8/21/2024 4:26:28 PM
C:\Users\cgardner\Documents\Middletown Courthouse 6.22.21 Central File – ARCHITECTURAL STRUCTURAL
MODEL_cgardner05.rvt

Checked by ZDC Drawn by JDC Designed by JDC In Charge of TRB

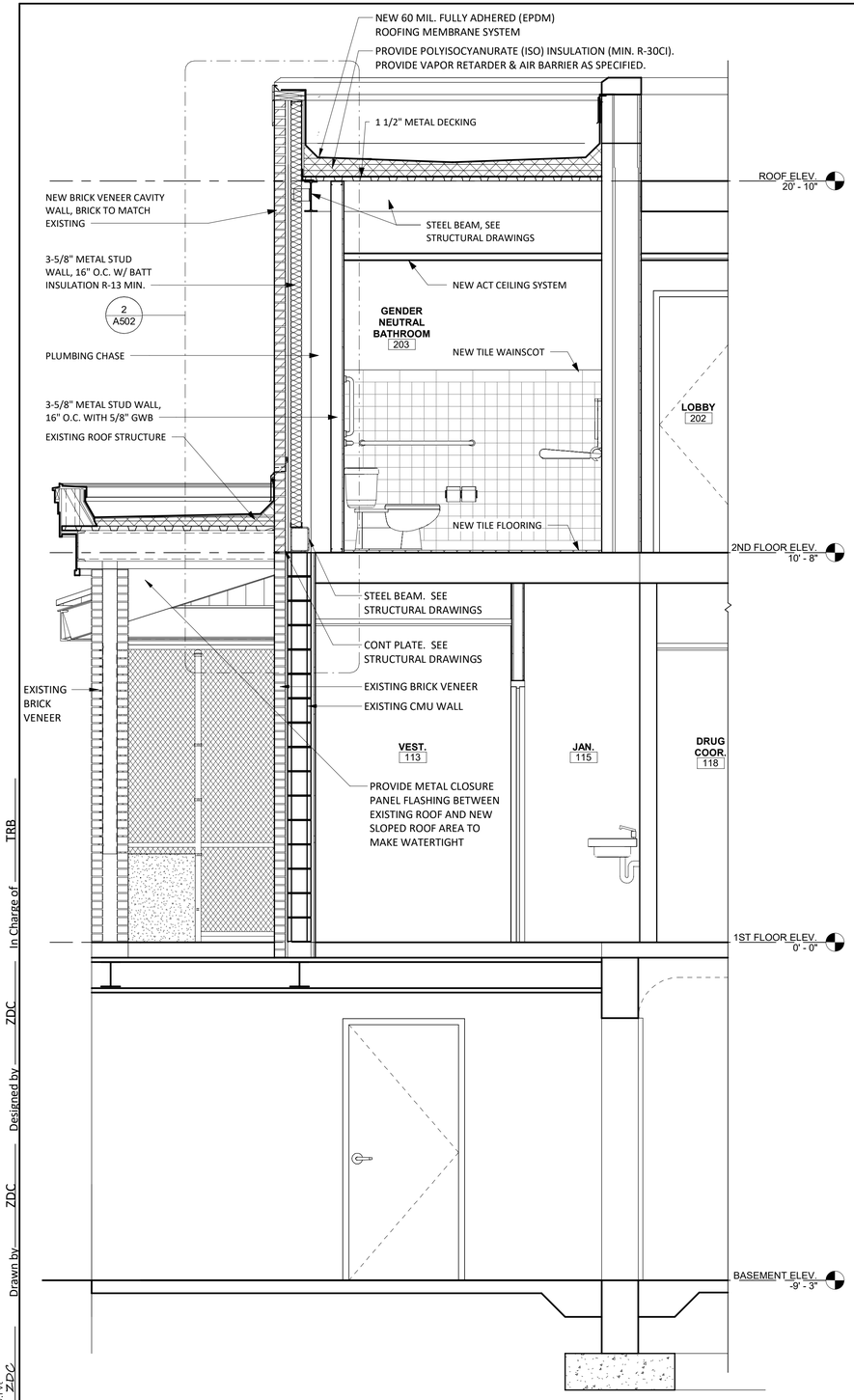

1 A201 BUILDING SECTION - SECOND FLOOR BATHROOM

SCALE: 1/2" = 1'-0"

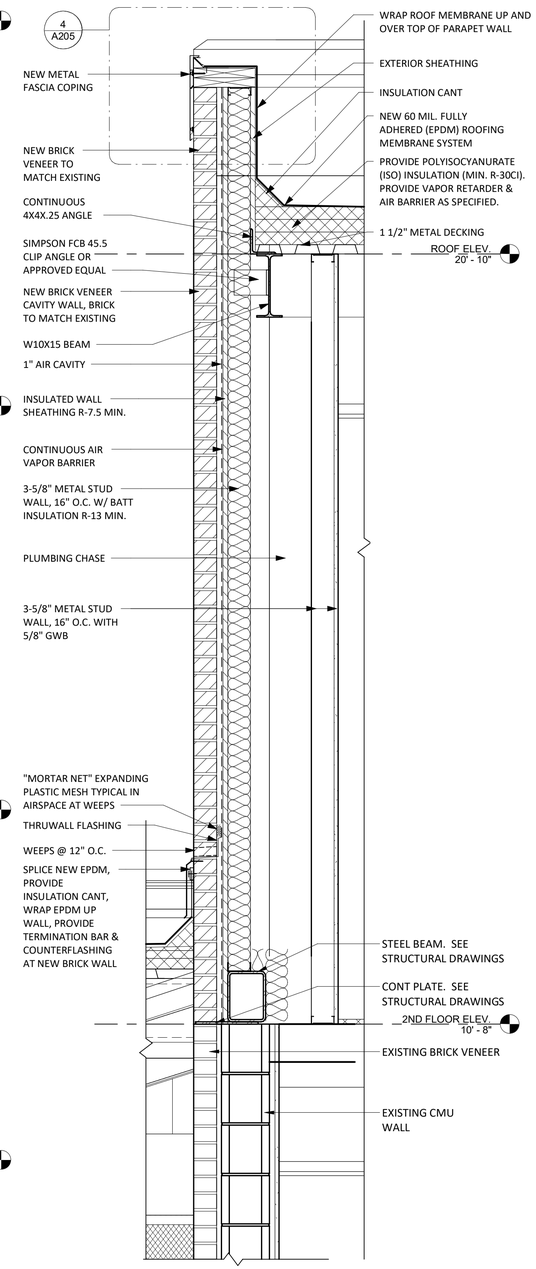

2 A502 SECOND FLOOR BATHROOM WALL SECTION

SCALE: 1" = 1'-0"

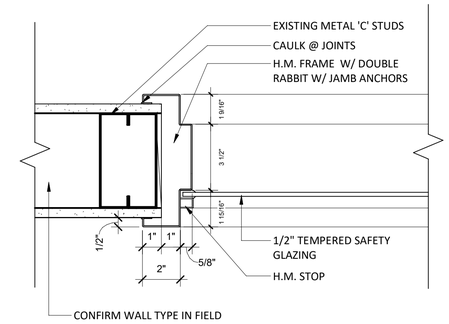

3 A601 INTERIOR WINDOW JAMB DETAIL 1

SCALE: 3" = 1'-0"

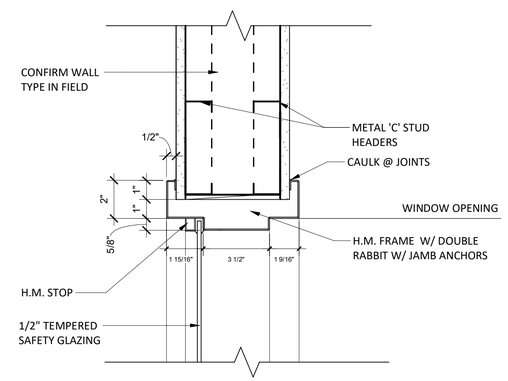

4 A601 INTERIOR WINDOW HEAD DETAIL 1

SCALE: 3" = 1'-0"

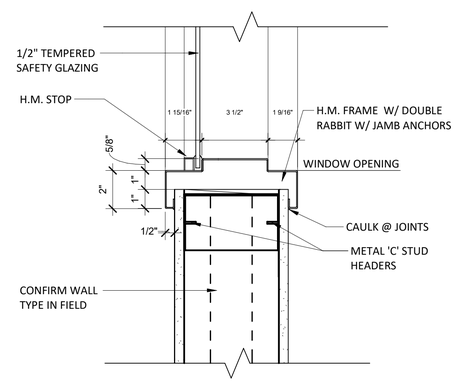

5 A601 INTERIOR WINDOW SILL DETAIL

SCALE: 3" = 1'-0"

NOTE: PROVIDE STAINLESS STEEL FRAMING AND BULLET RESISTANT GLAZING MATERIAL SECURITY WINDOWS AS AVAILABLE FROM TOTAL SECURITY SOLUTIONS (TSS), OR APPROVED EQUAL

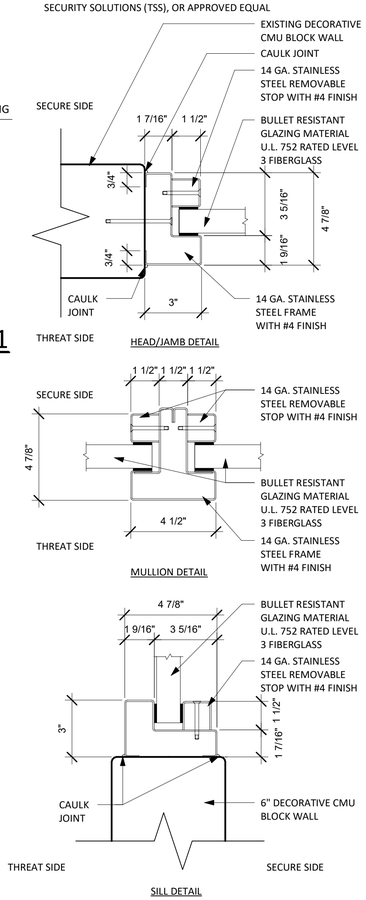

6 A601 SECURITY WINDOW DETAILS

SCALE: 3" = 1'-0"

IT IS A VIOLATION OF THE NEW YORK STATE EDUCATION LAW, ARTICLE 145 §7209 SPECIAL PROVISIONS, FOR ANY PERSON, UNLESS THEY ARE ACTING UNDER THE DIRECTION OF A LICENSED PROFESSIONAL ENGINEER, ARCHITECT, LANDSCAPE ARCHITECT, OR LAND SURVEYOR, TO ALTER AN ITEM IN ANY WAY. IF AN ITEM BEARING THE STAMP OF A LICENSED PROFESSIONAL IS ALTERED, THE ALTERING PROFESSIONAL SHALL STAMP THE DOCUMENT AND INCLUDE THE NOTATION "ALTERED BY" FOLLOWED BY THEIR SIGNATURE, THE DATE OF SUCH ALTERATION, AND A SPECIFIC DESCRIPTION OF THE ALTERATION.

REVISIONS

CITY OF MIDDLETOWN
NEW COURTHOUSE FACILITY

BUILDING & WINDOW DETAILS

ORANGE COUNTY, NEW YORK

CITY OF MIDDLETOWN

Barton & Loguidice
443 Electronics Parkway
Liverpool, NY 13088
NYS CERTIFICATE # 0021642, 0020588, 0019903, 0019905, 0020336

NYS EXP.:

Date
AUGUST, 2024

Scale
AS SHOWN

Sheet Number
A502

Project Number
1753.008.001

Plotted: 8/21/2024 4:26:29 PM
C:\Users\cgardner\Documents\Middletown Courthouse 6.22.21 Central File - ARCHITECTURAL STRUCTURAL MODEL_cgardner05.rvt

Checked by ZDC Drawn by ZDC Designed by ZDC In Charge of TRB

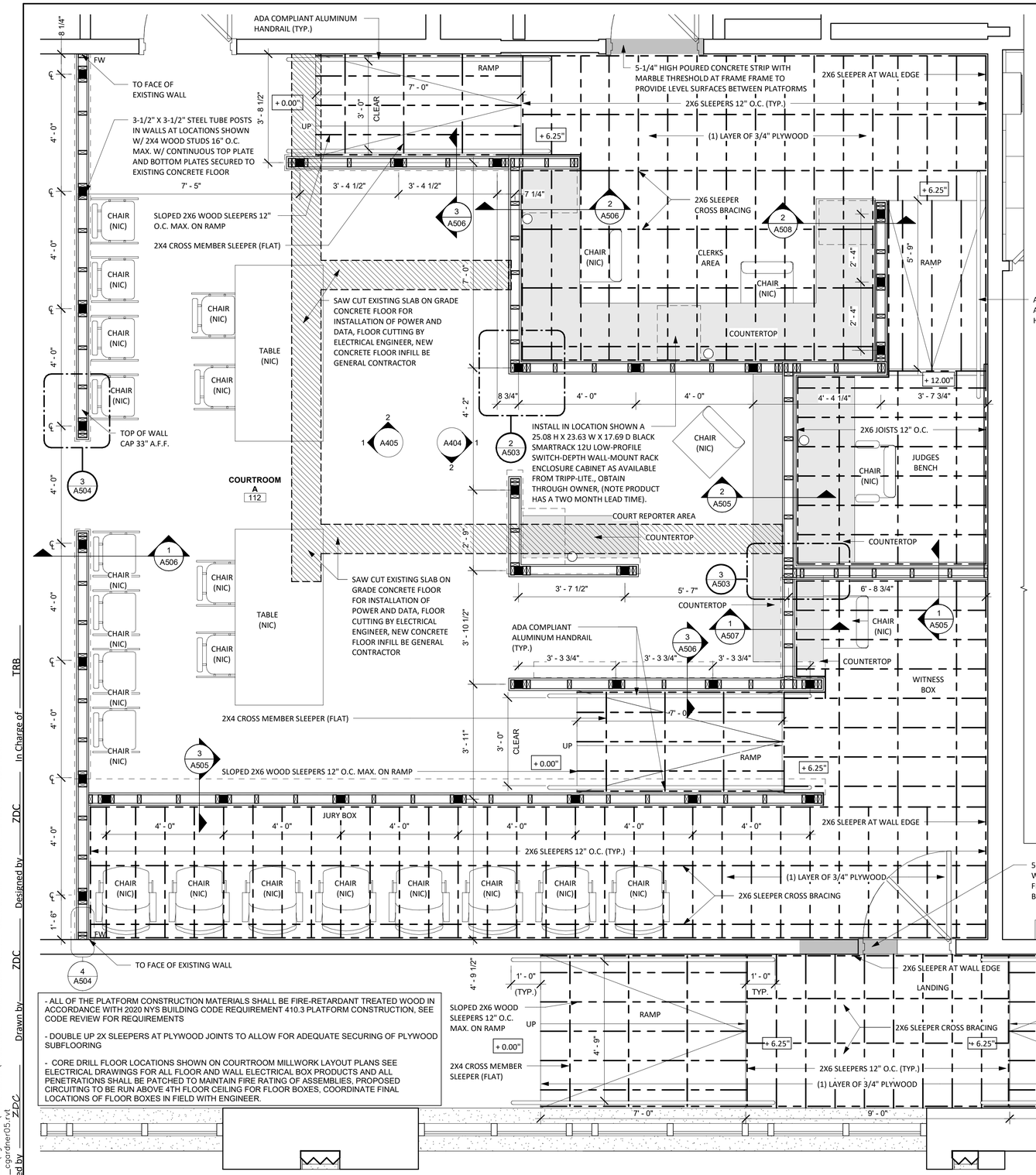

- ALL OF THE PLATFORM CONSTRUCTION MATERIALS SHALL BE FIRE-RETARDANT TREATED WOOD IN ACCORDANCE WITH 2020 NYS BUILDING CODE REQUIREMENT 410.3 PLATFORM CONSTRUCTION, SEE CODE REVIEW FOR REQUIREMENTS

- DOUBLE UP 2X SLEEPERS AT PLYWOOD JOINTS TO ALLOW FOR ADEQUATE SECURING OF PLYWOOD SUBFLOORING

- CORE DRILL FLOOR LOCATIONS SHOWN ON COURTROOM MILLWORK LAYOUT PLANS SEE ELECTRICAL DRAWINGS FOR ALL FLOOR AND WALL ELECTRICAL BOX PRODUCTS AND ALL PENETRATIONS SHALL BE PATCHED TO MAINTAIN FIRE RATING OF ASSEMBLIES, PROPOSED CIRCUITING TO BE RUN ABOVE 4TH FLOOR CEILING FOR FLOOR BOXES, COORDINATE FINAL LOCATIONS OF FLOOR BOXES IN FIELD WITH ENGINEER.

1 A403 COURTROOM A MILLWORK LAYOUT PLAN

SCALE: 1/2" = 1'-0"

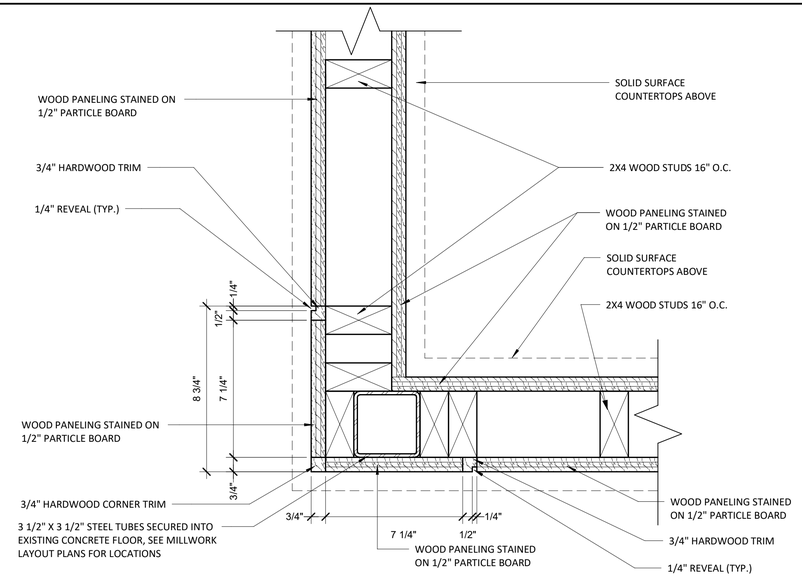

2 A503 CLERK MILLWORK CORNER PLAN DETAIL

SCALE: 3" = 1'-0"

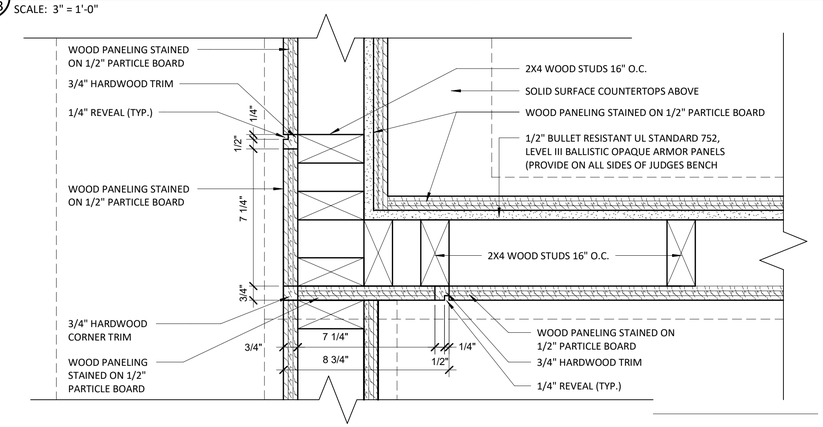

3 A503 JUDGE MILLWORK CORNER PLAN DETAIL

SCALE: 3" = 1'-0"

IT IS A VIOLATION OF THE NEW YORK STATE EDUCATION LAW, ARTICLE 145 §7209 SPECIAL PROVISIONS, FOR ANY PERSON, UNLESS THEY ARE ACTING UNDER THE DIRECTION OF A LICENSED PROFESSIONAL ENGINEER, ARCHITECT, LANDSCAPE ARCHITECT, OR LAND SURVEYOR, TO ALTER AN ITEM IN ANY WAY. IF AN ITEM BEARING THE STAMP OF A LICENSED PROFESSIONAL IS ALTERED, THE ALTERING PROFESSIONAL SHALL STAMP THE DOCUMENT AND INCLUDE THE NOTATION "ALTERED BY" FOLLOWED BY THEIR SIGNATURE, THE DATE OF SUCH ALTERATION, AND A SPECIFIC DESCRIPTION OF THE ALTERATION.

REVISIONS

CITY OF MIDDLETOWN
NEW COURTHOUSE FACILITY

COURTROOM A MILLWORK LAYOUT PLANS & DETAILS

CITY OF MIDDLETOWN ORANGE COUNTY, NEW YORK

Barton & Loguidice
443 Electronics Parkway
Liverpool, NY 13088
NYS CERTIFICATE # 0021642, 0020588, 0019903, 0019905, 0020336

NYS EXP.:

Date: AUGUST, 2024

Scale: AS SHOWN

Sheet Number: A503

Project Number: 1753.008.001

Plotted: 8/21/2024 4:26:31 PM
C:\Users\cgardner\Documents\Middletown Courthouse 6.22.21 Central File – ARCHITECTURAL STRUCTURAL
MODEL_cgardner05.rvt

Drawn by ZDC Designed by ZDC In Charge of TRB
Checked by ZDC

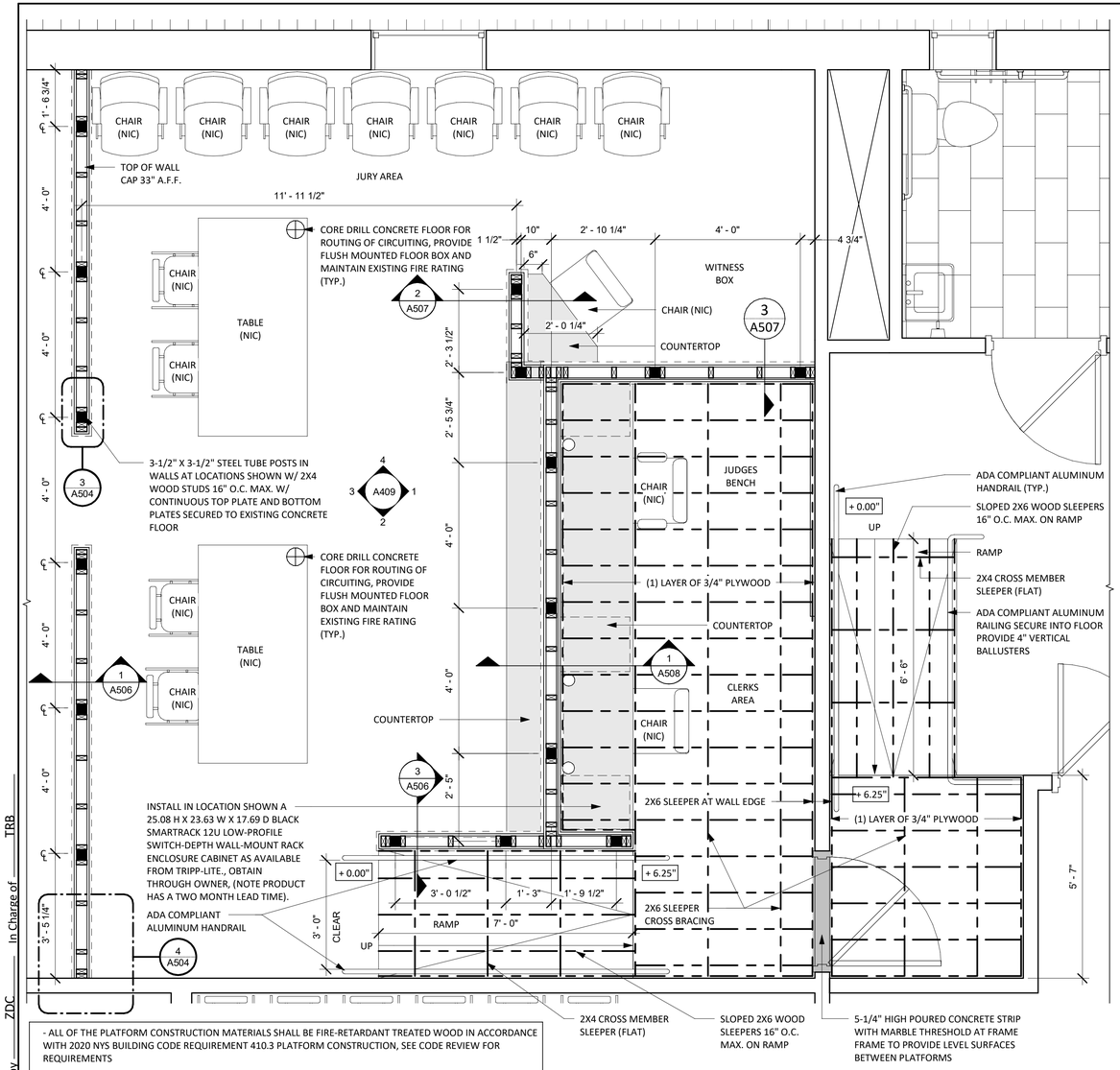

- ALL OF THE PLATFORM CONSTRUCTION MATERIALS SHALL BE FIRE-RETARDANT TREATED WOOD IN ACCORDANCE WITH 2020 NYS BUILDING CODE REQUIREMENT 410.3 PLATFORM CONSTRUCTION, SEE CODE REVIEW FOR REQUIREMENTS

- DOUBLE UP 2X SLEEPERS AT PLYWOOD JOINTS TO ALLOW FOR ADEQUATE SECURING OF PLYWOOD SUBFLOORING

- CORE DRILL FLOOR LOCATIONS SHOWN ON COURTROOM MILLWORK LAYOUT PLANS SEE ELECTRICAL DRAWINGS FOR ALL FLOOR AND WALL ELECTRICAL BOX PRODUCTS AND ALL PENETRATIONS SHALL BE PATCHED TO MAINTAIN FIRE RATING OF ASSEMBLIES, PROPOSED CIRCUITING TO BE RUN ABOVE 4TH FLOOR CEILING FOR FLOOR BOXES, COORDINATE FINAL LOCATIONS OF FLOOR BOXES IN FIELD WITH ENGINEER.

1/A408 COURTROOM B MILLWORK LAYOUT PLAN

SCALE: 1/2" = 1'-0"

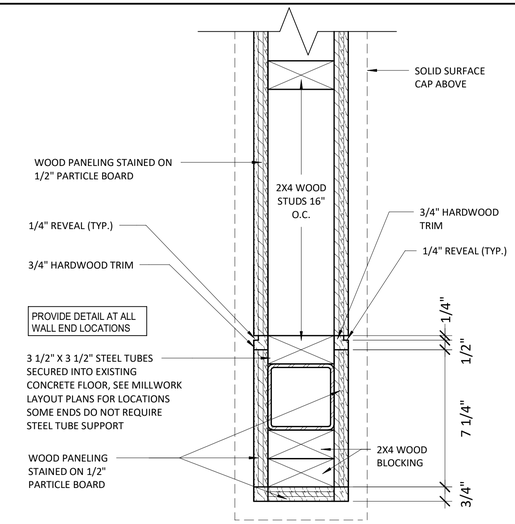

3/A503 TYPICAL MILLWORK END WALL PLAN DETAIL

SCALE: 3" = 1'-0"

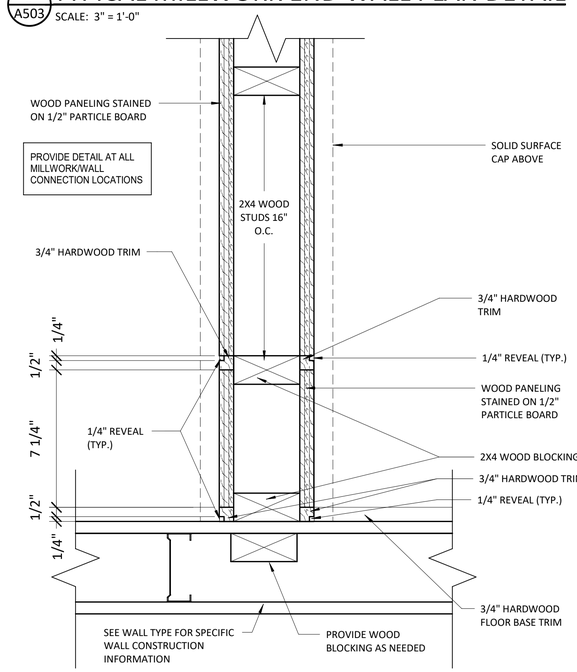

4/A503 TYPICAL MILLWORK AT WALL PLAN DETAIL

SCALE: 3" = 1'-0"

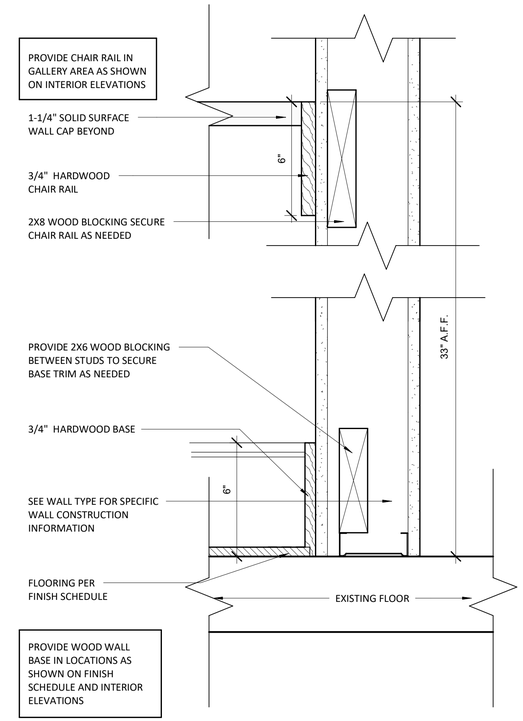

WALL BASE & CHAIR RAIL DETAILS

SCALE: 3" = 1'-0"

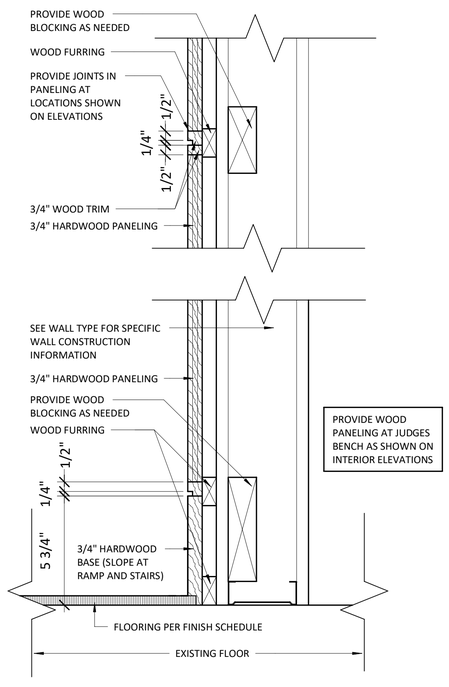

WALL BASE & PANELING DETAIL

SCALE: 3" = 1'-0"

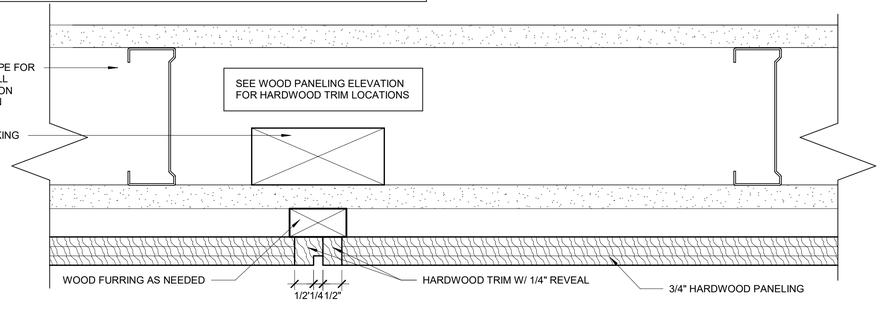

TYPICAL WOOD PANELING REVEAL PLAN DETAIL

SCALE: 6" = 1'-0"

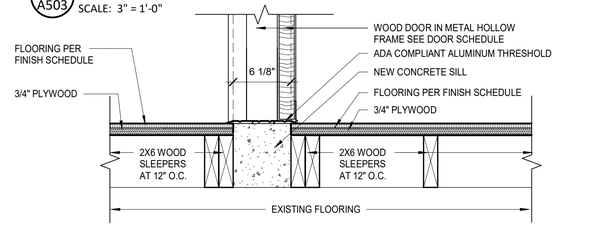

THRESHOLD ENTRANCE DETAIL

SCALE: 1 1/2" = 1'-0"

IT IS A VIOLATION OF THE NEW YORK STATE EDUCATION LAW, ARTICLE 145 §7209 SPECIAL PROVISIONS, FOR ANY PERSON, UNLESS THEY ARE ACTING UNDER THE DIRECTION OF A LICENSED PROFESSIONAL ENGINEER, ARCHITECT, LANDSCAPE ARCHITECT, OR LAND SURVEYOR, TO ALTER AN ITEM IN ANY WAY. IF AN ITEM BEARING THE STAMP OF A LICENSED PROFESSIONAL IS ALTERED, THE ALTERING PROFESSIONAL SHALL STAMP THE DOCUMENT AND INCLUDE THE NOTATION "ALTERED BY" FOLLOWED BY THEIR SIGNATURE, THE DATE OF SUCH ALTERATION, AND A SPECIFIC DESCRIPTION OF THE ALTERATION.

REVISIONS

CITY OF MIDDLETOWN
NEW COURTHOUSE FACILITY

COURTROOM B MILLWORK LAYOUT PLANS & DETAILS

ORANGE COUNTY, NEW YORK

CITY OF MIDDLETOWN

Barton & Loguidice
443 Electronics Parkway
Liverpool, NY 13088
NYS CERTIFICATE # 0021642, 0020588, 0019903, 0019905, 0020336

NYS EXP.:

Date: AUGUST, 2024

Scale: AS SHOWN

Sheet Number: A504

Project Number: 1753.008.001

Plotted: 8/21/2024 4:26:33 PM
C:\Users\cgardner\Documents\Middletown Courthouse 6.22.21 Central File – ARCHITECTURAL STRUCTURAL MODEL_cgardner05.rvt

Checked by ZDC Drawn by ZDC Designed by ZDC In Charge of TRB

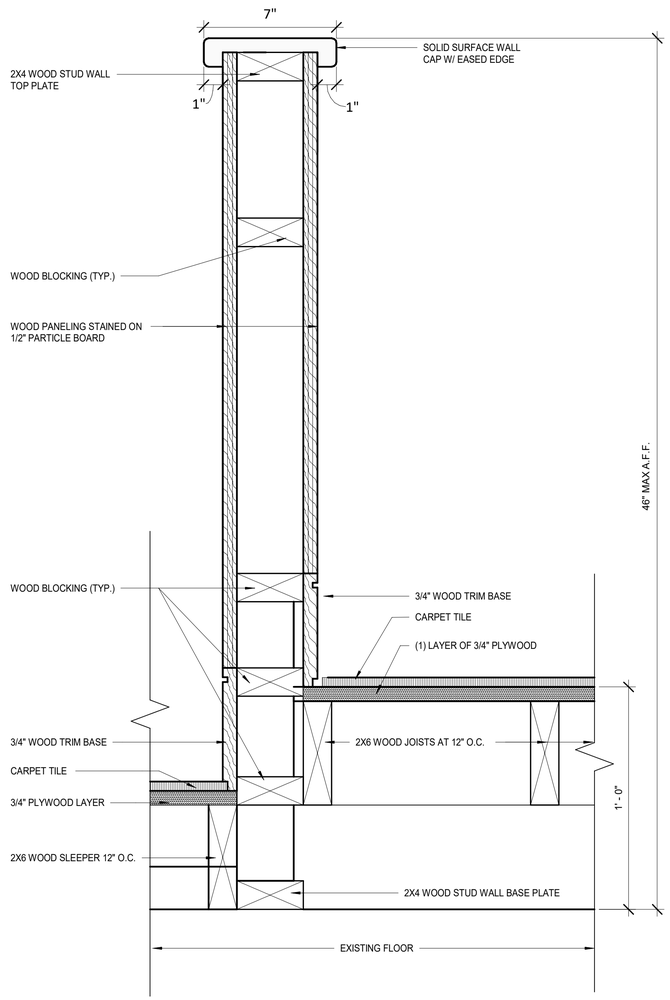

1 A503 JUDGE BENCH WALL DETAIL 1

SCALE: 3" = 1'-0"

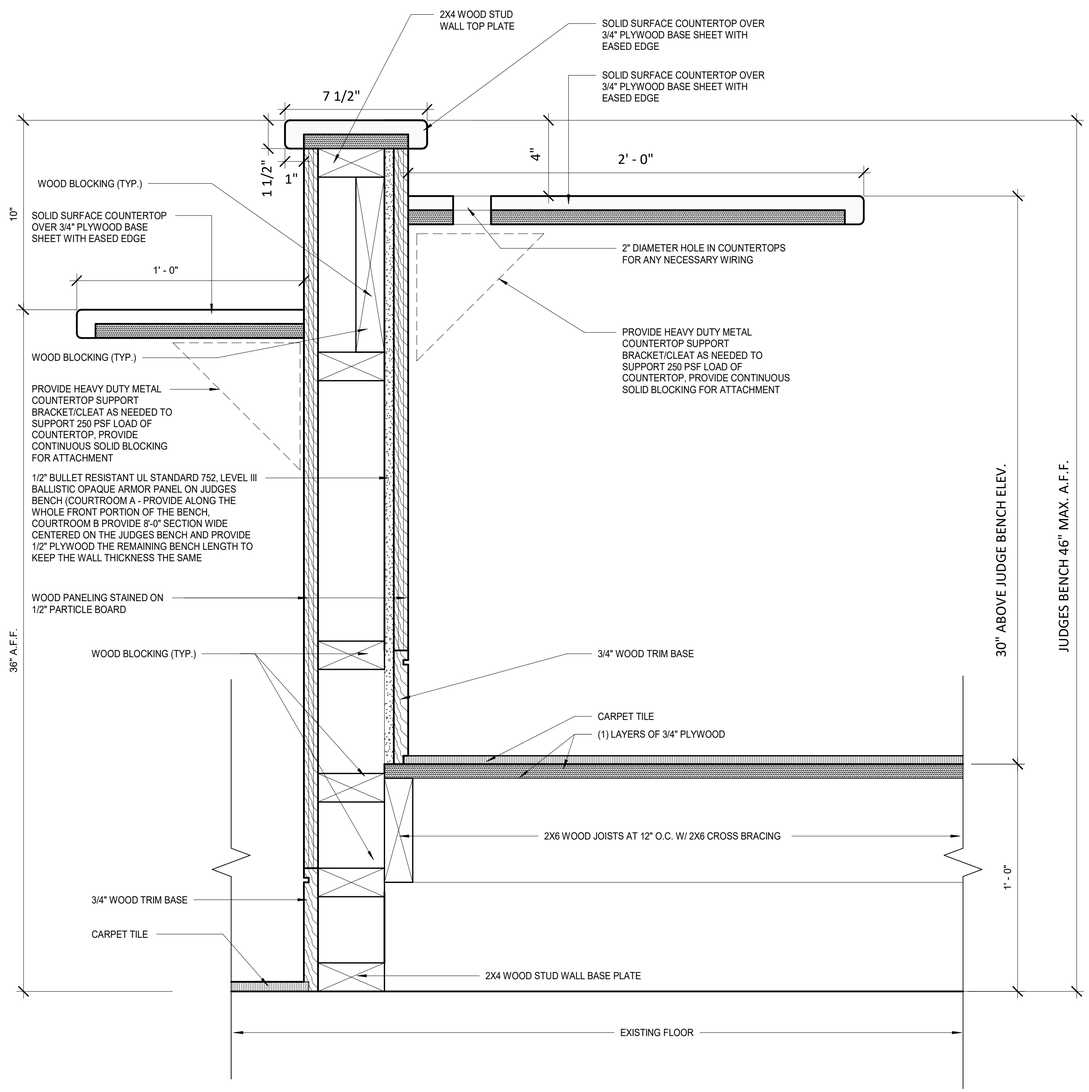

2 A503 JUDGE BENCH WALL DETAIL 2

SCALE: 3" = 1'-0"

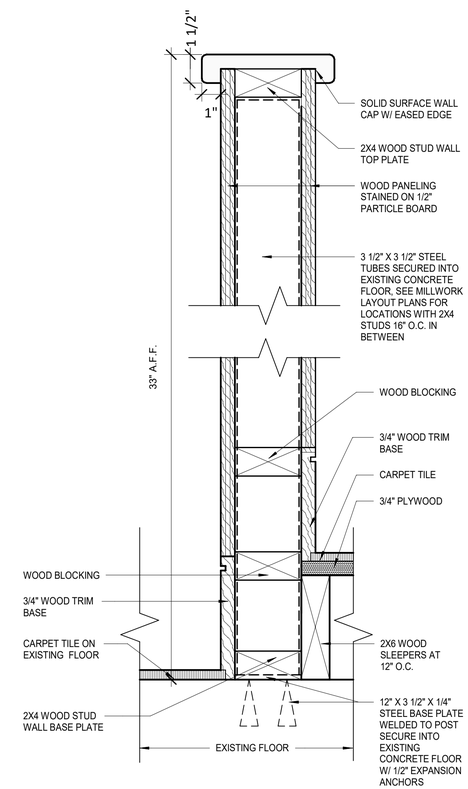

3 A503 JURY BOX DETAIL

SCALE: 3" = 1'-0"

IT IS A VIOLATION OF THE NEW YORK STATE EDUCATION LAW, ARTICLE 145 §7209 SPECIAL PROVISIONS, FOR ANY PERSON, UNLESS THEY ARE ACTING UNDER THE DIRECTION OF A LICENSED PROFESSIONAL ENGINEER, ARCHITECT, LANDSCAPE ARCHITECT, OR LAND SURVEYOR, TO ALTER AN ITEM IN ANY WAY. IF AN ITEM BEARING THE STAMP OF A LICENSED PROFESSIONAL IS ALTERED, THE ALTERING PROFESSIONAL SHALL STAMP THE DOCUMENT AND INCLUDE THE NOTATION "ALTERED BY" FOLLOWED BY THEIR SIGNATURE, THE DATE OF SUCH ALTERATION, AND A SPECIFIC DESCRIPTION OF THE ALTERATION.

REVISIONS

CITY OF MIDDLETOWN
NEW COURTHOUSE FACILITY

COURTROOM MILLWORK DETAILS

CITY OF MIDDLETOWN ORANGE COUNTY, NEW YORK

Barton & Loguidice
443 Electronics Parkway
Liverpool, NY 13088
NYS CERTIFICATE # 0021642, 0020588, 0019903, 0019905, 0020336

STATE OF NEW YORK MATTHEW C. FULLER 070743 LICENSED PROFESSIONAL ENGINEER

NYS EXP.:

Date: AUGUST, 2024

Scale: AS SHOWN

Sheet Number: A505

Project Number: 1753.008.001

Plotted: 8/21/2024 4:26:34 PM
C:\Users\cgardner\Documents\Middletown Courthouse 6.22.21 Central File – ARCHITECTURAL STRUCTURAL
MODEL_cgardner05.rvt

Checked by ZDC Drawn by ZDC Designed by ZDC In Charge of TRB

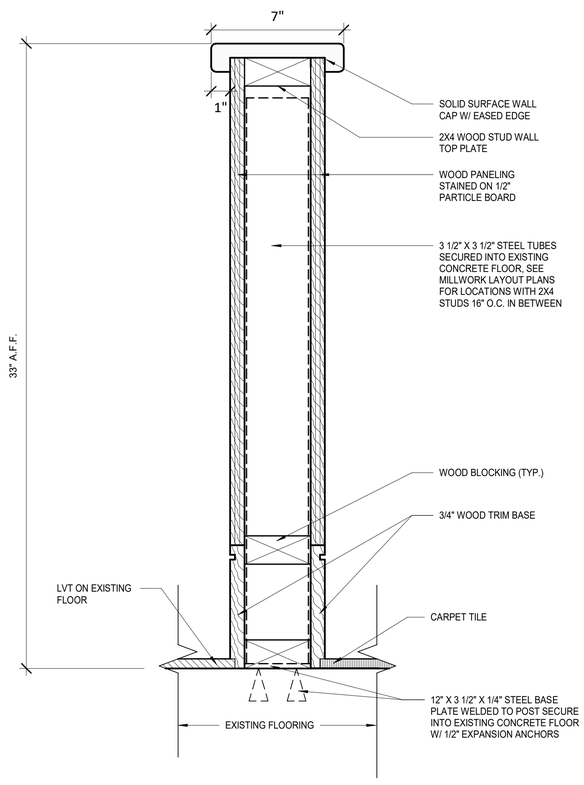

1 A503 GALLERY WALL DETAIL

SCALE: 3" = 1'-0"

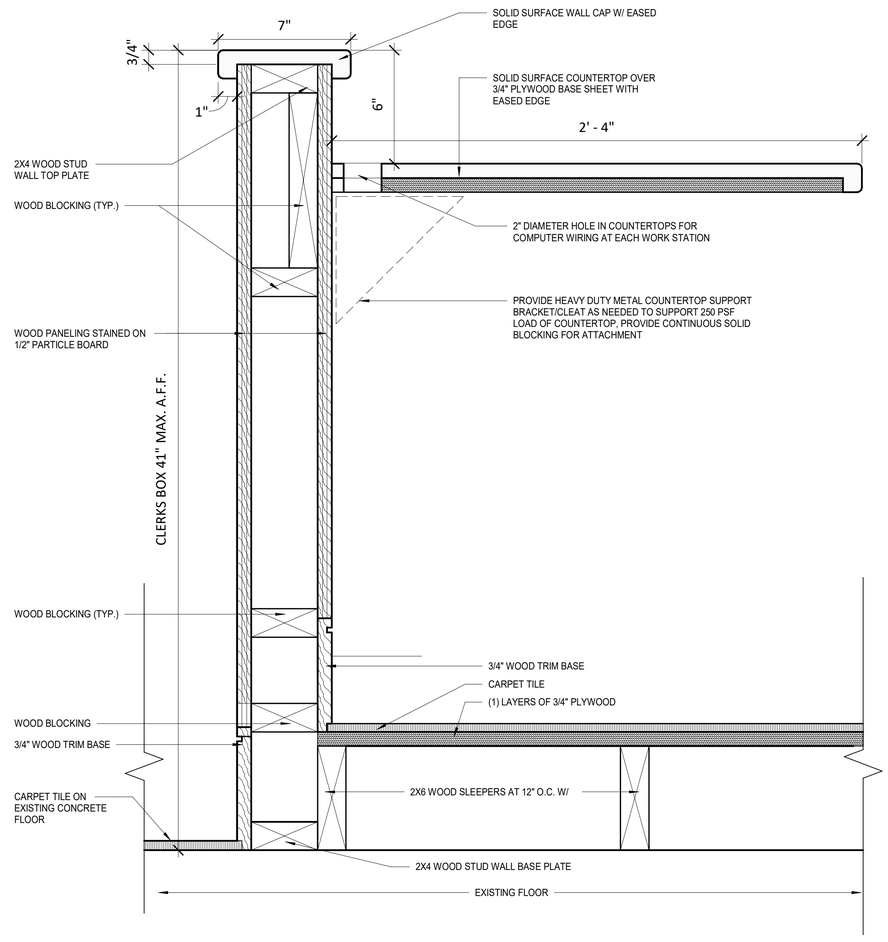

2 A503 CLERKS AREA WALL DETAIL

SCALE: 3" = 1'-0"

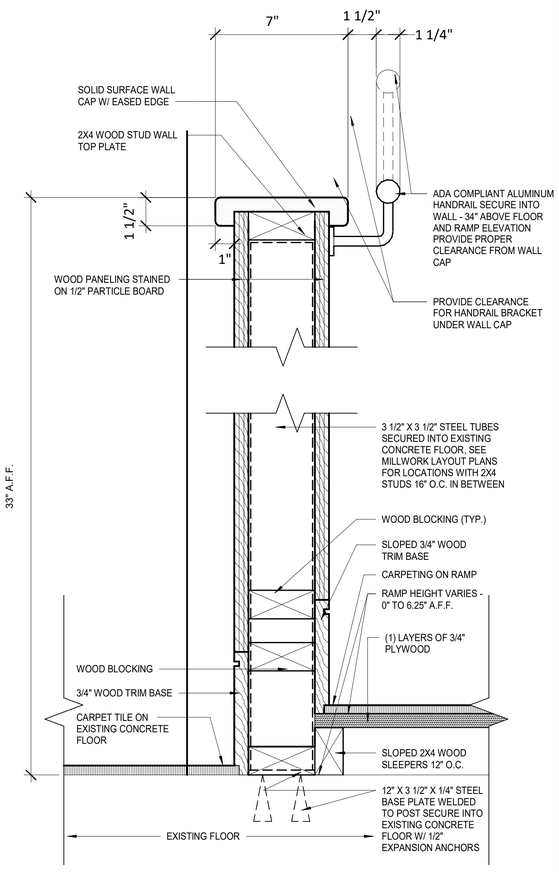

3 A503 RAMP DETAIL 1

SCALE: 3" = 1'-0"

Plotted: 8/21/2024 4:26:35 PM
C:\Users\cgardner\Documents\Middletown Courthouse 6.22.21 Central File – ARCHITECTURAL STRUCTURAL MODEL_cgardner05.rvt

Checked by ZDC Drawn by ZDC Designed by ZDC In Charge of TRB

IT IS A VIOLATION OF THE NEW YORK STATE EDUCATION LAW, ARTICLE 145 §7209 SPECIAL PROVISIONS, FOR ANY PERSON, UNLESS THEY ARE ACTING UNDER THE DIRECTION OF A LICENSED PROFESSIONAL ENGINEER, ARCHITECT, LANDSCAPE ARCHITECT, OR LAND SURVEYOR, TO ALTER AN ITEM IN ANY WAY. IF AN ITEM BEARING THE STAMP OF A LICENSED PROFESSIONAL IS ALTERED, THE ALTERING PROFESSIONAL SHALL STAMP THE DOCUMENT AND INCLUDE THE NOTATION "ALTERED BY" FOLLOWED BY THEIR SIGNATURE, THE DATE OF SUCH ALTERATION, AND A SPECIFIC DESCRIPTION OF THE ALTERATION.

REVISIONS

CITY OF MIDDLETOWN
NEW COURTHOUSE FACILITY

COURTROOM MILLWORK DETAILS

ORANGE COUNTY, NEW YORK

CITY OF MIDDLETOWN

Barton & Loguidice
443 Electronics Parkway
Liverpool, NY 13088
NYS CERTIFICATE # 0021642, 0020588, 0019903, 0019905, 0020336

STATE OF NEW YORK · MATTHEW C. TOLAN · 070743 · LICENSED PROFESSIONAL ENGINEER

NYS EXP.:

Date
AUGUST, 2024

Scale
AS SHOWN

Sheet Number
A506

Project Number
1753.008.001

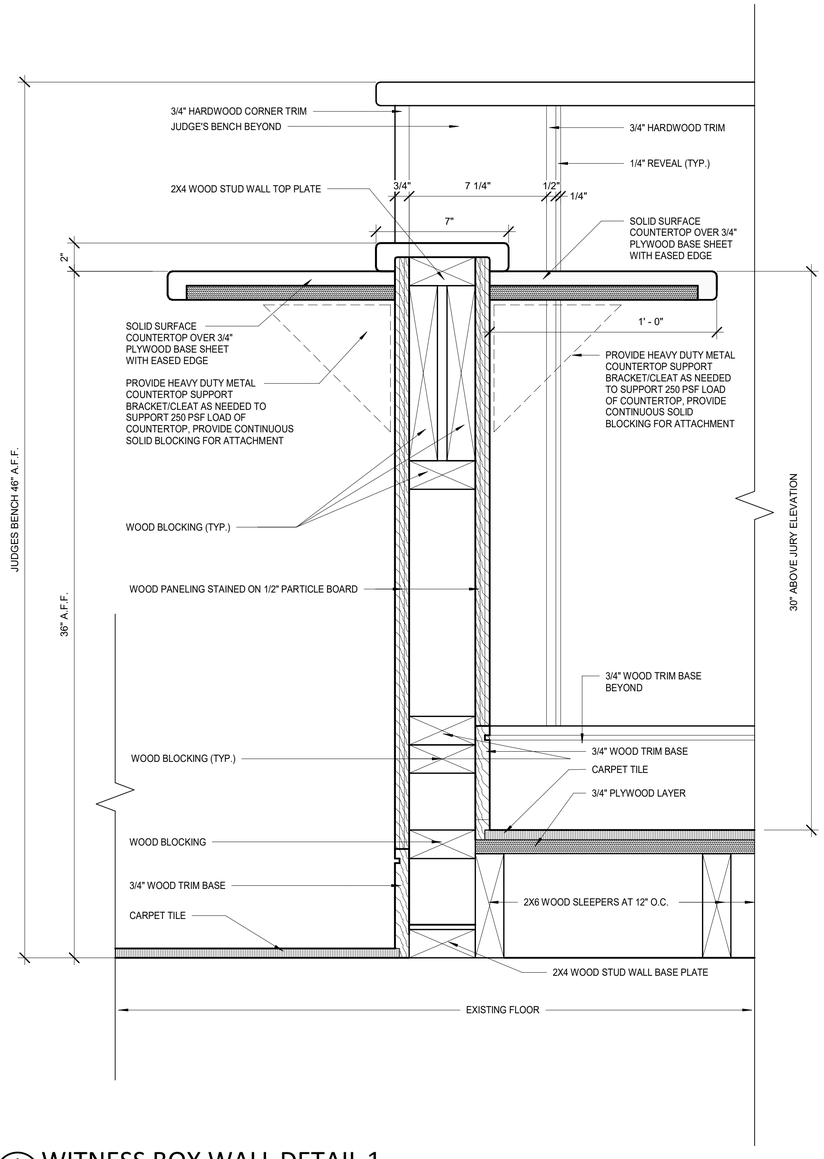

1 A503 WITNESS BOX WALL DETAIL 1
SCALE: 3" = 1'-0"

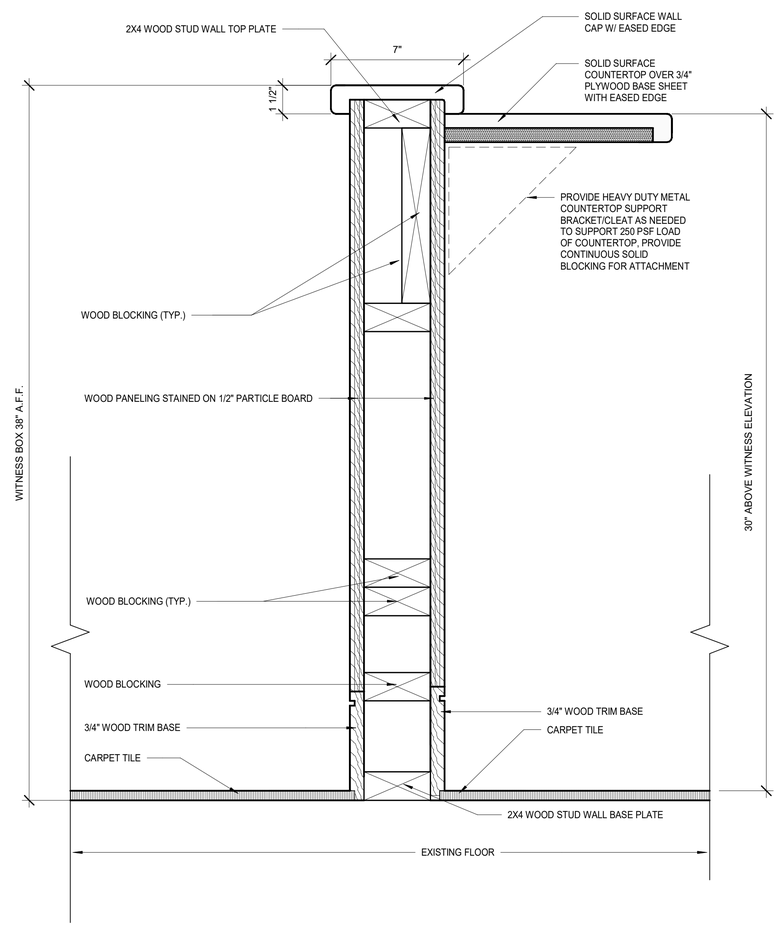

2 A504 WITNESS BOX WALL DETAIL 2
SCALE: 3" = 1'-0"

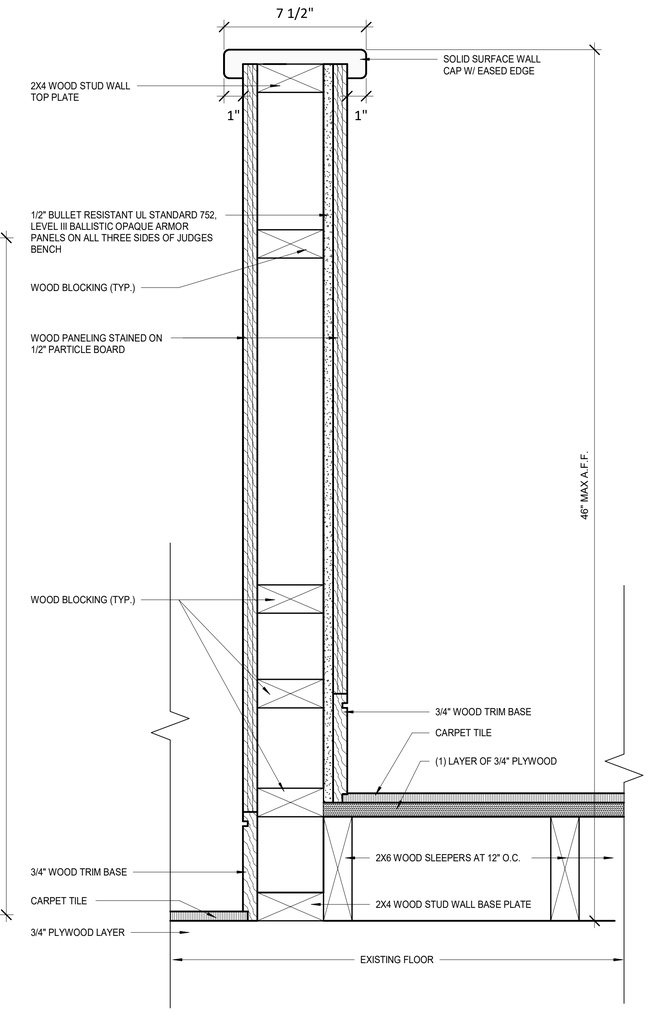

3 A504 JUDGE BENCH WALL DETAIL 3
SCALE: 3" = 1'-0"

IT IS A VIOLATION OF THE NEW YORK STATE EDUCATION LAW, ARTICLE 145 §7209 SPECIAL PROVISIONS, FOR ANY PERSON, UNLESS THEY ARE ACTING UNDER THE DIRECTION OF A LICENSED PROFESSIONAL ENGINEER, ARCHITECT, LANDSCAPE ARCHITECT, OR LAND SURVEYOR, TO ALTER AN ITEM IN ANY WAY. IF AN ITEM BEARING THE STAMP OF A LICENSED PROFESSIONAL IS ALTERED, THE ALTERING PROFESSIONAL SHALL STAMP THE DOCUMENT AND INCLUDE THE NOTATION "ALTERED BY" FOLLOWED BY THEIR SIGNATURE, THE DATE OF SUCH ALTERATION, AND A SPECIFIC DESCRIPTION OF THE ALTERATION.

REVISIONS

CITY OF MIDDLETOWN
NEW COURTHOUSE FACILITY

COURTROOM MILLWORK DETAILS

ORANGE COUNTY, NEW YORK

CITY OF MIDDLETOWN

Barton & Loguidice
443 Electronics Parkway
Liverpool, NY 13088
NYS CERTIFICATE # 0021642, 0020588, 0019903, 0019905, 0020336

STATE OF NEW YORK · MATTHEW C. FUCA · 070743 · LICENSED PROFESSIONAL ENGINEER

NYS EXP.:

Date
AUGUST, 2024

Scale
AS SHOWN

Sheet Number
A507

Project Number
1753.008.001

Plotted: 8/21/2024 4:26:35 PM
C:\Users\cgardner\Documents\Middletown Courthouse 6.22.21 Central File – ARCHITECTURAL STRUCTURAL MODEL_cgardner05.rvt

Drawn by ZDC Designed by ZDC In Charge of TRB
Checked by ZDC

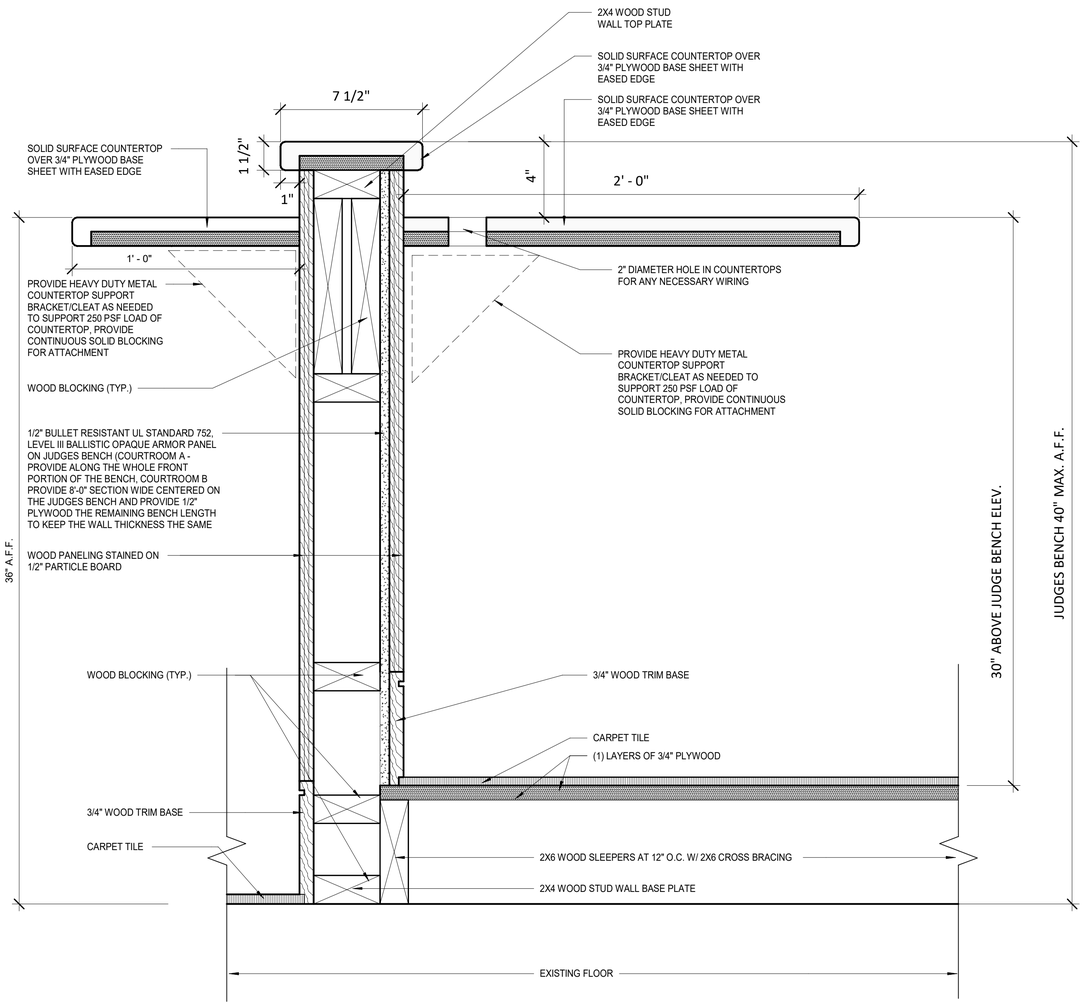

1 A504 CLERK/JUDGE BENCH WALL DETAIL

SCALE: 3" = 1'-0"

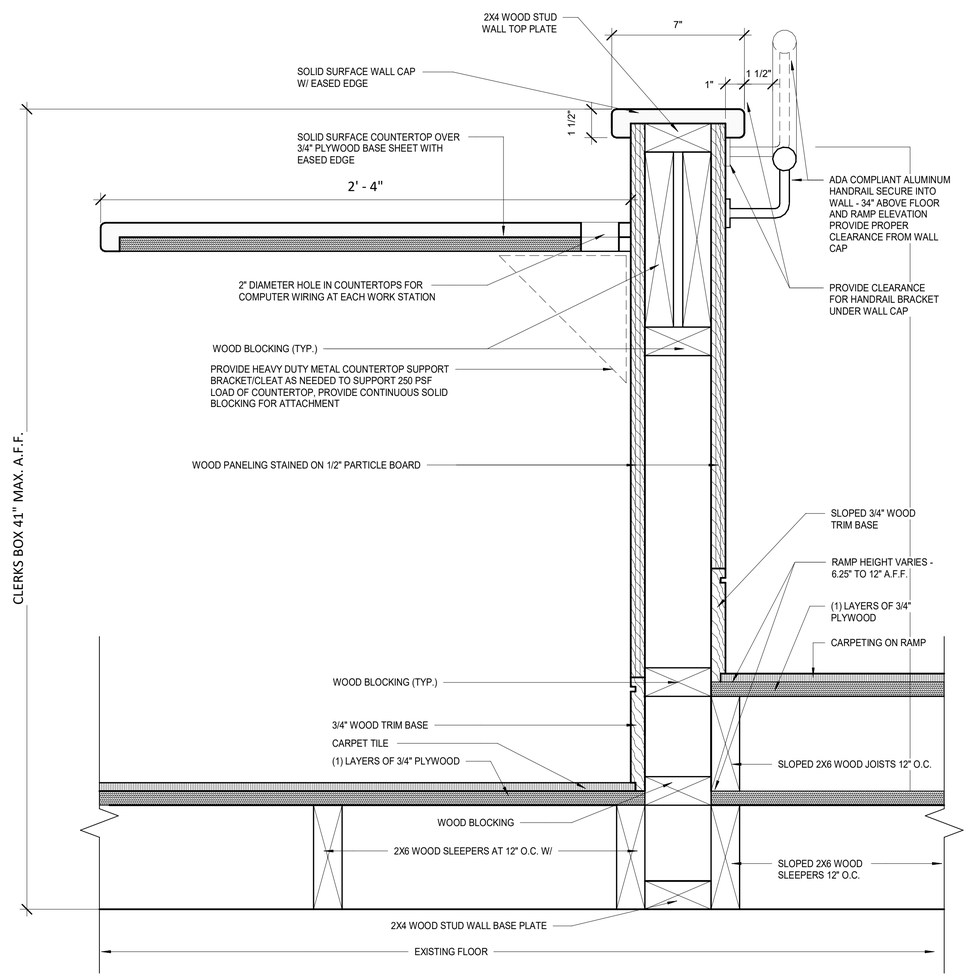

2 A503 CLERKS AREA AND RAMP DETAIL

SCALE: 3" = 1'-0"

Plotted: 8/21/2024 4:26:36 PM
C:\Users\cgardner\Documents\Middletown Courthouse 6.22.21 Central File – ARCHITECTURAL STRUCTURAL MODEL_cgardner05.rvt
Checked by ZDC Drawn by ZDC Designed by ZDC In Charge of TRB

IT IS A VIOLATION OF THE NEW YORK STATE EDUCATION LAW, ARTICLE 145 §7209 SPECIAL PROVISIONS, FOR ANY PERSON, UNLESS THEY ARE ACTING UNDER THE DIRECTION OF A LICENSED PROFESSIONAL ENGINEER, ARCHITECT, LANDSCAPE ARCHITECT, OR LAND SURVEYOR, TO ALTER AN ITEM IN ANY WAY. IF AN ITEM BEARING THE STAMP OF A LICENSED PROFESSIONAL IS ALTERED, THE ALTERING PROFESSIONAL SHALL STAMP THE DOCUMENT AND INCLUDE THE NOTATION "ALTERED BY" FOLLOWED BY THEIR SIGNATURE, THE DATE OF SUCH ALTERATION, AND A SPECIFIC DESCRIPTION OF THE ALTERATION.

REVISIONS

CITY OF MIDDLETOWN
NEW COURTHOUSE FACILITY

COURTROOM MILLWORK DETAILS

ORANGE COUNTY, NEW YORK

CITY OF MIDDLETOWN

Barton & Loguidice
443 Electronics Parkway
Liverpool, NY 13088
NYS CERTIFICATE # 0021642, 0020588, 0019903, 0019905, 0020336

STATE OF NEW YORK · MATTHEW C. TOLAN · 070743 · LICENSED PROFESSIONAL ENGINEER

NYS EXP.:

Date
AUGUST, 2024

Scale
AS SHOWN

Sheet Number
A508

Project Number
1753.008.001

ROOM FINISH SCHEDULE

ROOM NUMBER	ROOM NAME	FLOOR FINISH	BASE FINISH	WALL FINISH - NORTH	WALL FINISH - EAST	WALL FINISH - SOUTH	WALL FINISH - WEST	CEILING FINISH	CEILING HEIGHT	COMMENTS
101	VESTIBULE	EXIST	EXIST	EXIST	EXIST	EXIST	EXIST	EXIST		
102	LOBBY WAITING AREA	EXIST	EXIST	PNT	PNT	PNT	PNT	EXIST		
103	ELEV. LOBBY	EXIST	EXIST	PNT	PNT	PNT	PNT	ACT-1	8' - 0"	
104	HALL	EXIST/C/PFT	VB	PNT	PNT	PNT	PNT	ACT-1	8' - 0"	
105	SECURITY OFFICE	LVT	VB	PNT	PNT	PNT	PNT	ACT-1	8' - 0"	
106	JURY ROOM	EXIST	EXIST	PNT	PNT	PNT	PNT	EXIST		
107	CLO.	EXIST	EXIST	PNT	PNT	PNT	PNT	EXIST		
108	MEN'S BATHROOM	EXIST	EXIST	EXIST GWT/PNT	EXIST GWT/PNT	EXIST GWT/PNT	EXIST GWT/PNT	EXIST		
109	WOMEN'S BATHROOM	EXIST	EXIST	EXIST GWT/PNT	EXIST GWT/PNT	EXIST GWT/PNT	EXIST GWT/PNT	EXIST		
110	VEST.	LVT	VB	PNT	PNT	PNT	PNT	EXIST		
111	ATTY. CONF. 1	LVT	VB	PNT	PNT	PNT	PNT	EXIST		
112	COURTROOM A	C/LVT	WD	PNT/AWT	PNT	PNT/AWT	PNT/AWT	EXIST		
113	VEST.	EXIST	EXIST	PNT	PNT	PNT	PNT	EXIST		
114	STAIRS	EXIST	EXIST	PNT	PNT	PNT	PNT	EXIST		
115	JAN.	EXIST	EXIST	EXIST	EXIST	EXIST	EXIST	EXIST		
116	ELEC. CLO.	EXIST	EXIST	EXIST	EXIST	EXIST	EXIST	EXIST		
117	HALL	EXIST	VB	PNT	PNT	PNT	PNT	ACT-1	8' - 0"	
118	DRUG COOR.	C	VB	PNT	PNT	PNT	PNT	ACT-1	8' - 0"	PARGE EXIST CMU WALL SMOOTH
119	BATHROOM	PFT	GWT	GWT/PNT	GWT/PNT	GWT/PNT	GWT/PNT	ACT-1	8' - 0"	
120	WOMEN'S BATHROOM	PFT	GWT	GWT/PNT	GWT/PNT	GWT/PNT	GWT/PNT	ACT-1	8' - 0"	
121	MEN'S BATHROOM	PFT	GWT	GWT/PNT	GWT/PNT	GWT/PNT	GWT/PNT	ACT-1	8' - 0"	
122	SECURITY OFFICE	EXIST/T	-	D/CMU	D/CMU	D/CMU	D/CMU	ACT-1	8' - 0"	
123	LAS	C	VB	PNT	PNT	PNT	PNT	ACT-1	8' - 0"	
124	SECURE HALLWAY	EXIST	EXIST	PNT	PNT	PNT	PNT	ACT-1	8' - 0"	
125	COOR.	LVT	VB	PNT	PNT	PNT	PNT	ACT-1	8' - 0"	
126	COOR.	EXIST/T	-	D/CMU	D/CMU	PNT	PNT	LINEAR METAL	8' - 5"	
127	MALE CELL #1	EXIST/T	-	D/CMU	D/CMU	D/CMU	D.CMU	LINEAR METAL	8' - 5"	
128	MALE CELL #2	EXIST/T	-	D/CMU	D/CMU	D/CMU	D/CMU	LINEAR METAL	8' - 5"	
129	HOLDING CELL HALL	EXIST/T	-	D/CMU	D/CMU	D/CMU	D/CMU	LINEAR METAL	8' - 5"	
130	INTER. ROOM	EXIST/T	-	PNT	PNT	PNT	PNT	EXIST		
131	INTER. ROOM	EXIST/T	-	PNT	PNT	PNT	PNT	EXIST		
132	FEMALE CELL	EXIST/T	-	D/CMU	D/CMU	D/CMU	D/CMU	LINEAR METAL	8' - 5"	
133	HALL	LVT	VB	PNT	PNT	PNT	PNT	ACT-1	8' - 0"	
134	LAW CLERK	C	VB	PNT	PNT	PNT	PNT	ACT-1	8' - 0"	
135	SECRETARY	C	VB	PNT	PNT	PNT	PNT	ACT-1	8' - 0"	
135	STAIRS	EXIST	EXIST	PNT	PNT	PNT	PNT	EXIST		
136	JUDGE OFFICE 1	C	WB	PNT	PNT	PNT	PNT	ACT-1	8' - 0"	
137	JUDGE OFFICE 2	C	WB	PNT	PNT	PNT	PNT	ACT-1	8' - 0"	
138	BATHROOM	PFT	GWT	GWT/PNT	GWT/PNT	GWT/PNT	GWT/PNT	ACT-1	8' - 0"	
139	BATHROOM	PFT	GWT	GWT/PNT	GWT/PNT	GWT/PNT	GWT/PNT	ACT-1	8' - 0"	
140	WOMEN'S LOCKER ROOM	LVT	VB	PNT	PNT	PNT	PNT	ACT-1	8' - 0"	
141	STAIRS	EXIST	EXIST	PNT	PNT	PNT	PNT	EXIST		
142	MEN'S LOCKER ROOM	LVT	VB	PNT	PNT	PNT	PNT	ACT-1	8' - 0"	
143	ELEC.	EXIST	EXIST	EXIST	EXIST	EXIST	EXIST	EXIST		
201	STAIRS	EXIST	EXIST	PNT	PNT	PNT	PNT	EXIST		
202	LOBBY	PFT	VB	PNT	PNT	PNT	PNT	EXIST		
203	GENDER NEUTRAL BATHROOM	PFT	GWT	GWT/PNT	GWT/PNT	GWT/PNT	GWT/PNT	ACT-1	8' - 0"	
204	GENDER NEUTRAL BATHROOM	PFT	GWT	GWT/PNT	GWT/PNT	GWT/PNT	GWT/PNT	ACT-1	8' - 0"	
205	ELEC. CLO./ STOR.	EXIST	EXIST	EXIST	EXIST	EXIST	EXIST	EXIST		
206	WAITING AREA	PFT	VB	PNT	PNT	PNT	PNT	ACT-1	8' - 0"	
207	COURTROOM B	C/LVT	WB	PNT/AWT	PNT	PNT/AWT	PNT/AWT	ACT-2, GWB PT		
208	ATTY. CONF.	C	VB	PNT	PNT	PNT	PNT	ACT-1	8' - 0"	
209	PUBLIC WINDOW	PFT	VB	PNT	PNT	PNT	PNT	ACT-1	8' - 0"	
210	SECURE COORIDOR/ PAYMENT WINDOW	C	VB	PNT	PNT	PNT	PNT	ACT-1	8' - 0"	
211	MENS TOILET	PFT	GWT	GWT/PNT	GWT/PNT	GWT/PNT	GWT/PNT	ACT-1	8' - 0"	
212	COURT REPORTERS	EXIST	EXIST	PNT	PNT	PNT	PNT	EXIST		
213	CLERK STAFF	C	VB	PNT	PNT	PNT	PNT	ACT-1	8' - 0"	
214	CONFERENCE/ FUTURE FILE ROOM	EXIST	EXIST	PNT	PNT	PNT	PNT	EXIST		
215	BREAK ROOM	EXIST	EXIST	PNT	PNT	PNT	PNT	EXIST		
216	CHIEF CLERK	EXIST	EXIST	PNT	PNT	PNT	PNT	EXIST		
217	DEPUTY CLERK	EXIST	EXIST	PNT	PNT	PNT	PNT	EXIST		
218	FILE/ SUPPLY ROOM	C	VB	PNT	PNT	PNT	PNT	ACT-1	8' - 0"	
219	STAIRS	EXIST	EXIST	PNT	PNT	PNT	PNT	EXIST		
220	WOMANS TOILET	PFT	GWT	GWT/PNT	GWT/PNT	GWT/PNT	GWT/PNT	ACT-1	8' - 0"	
221	FILE ROOM	EXIST	EXIST	PNT	PNT	PNT	PNT	EXIST		

WINDOW SCHEDULE

WINDOW NUMBER	TYPE	WIDTH	HEIGHT	MATERIAL	COMMENTS
101	A	12' - 9 3/4"	4' - 0"	HOLLOW METAL	TWO-WAY MIRROR GLASS
102	B	7' - 8 3/4"	4' - 2"	STAINLESS STEEL	SECURITY WINDOW AS AVAILABLE FROM TOTAL SECURITY SOLUTIONS OR APPROVED EQUAL
201	C	3' - 11 1/2"	3' - 7 1/2"	HOLLOW METAL	NON-POWERED 275 SINGLE PANEL SLIDER WINDOW BY READY ACCESS OR APPROVED EQUAL
202	C	3' - 11 1/2"	3' - 7 1/2"	HOLLOW METAL	NON-POWERED 275 SINGLE PANEL SLIDER WINDOW BY READY ACCESS OR APPROVED EQUAL

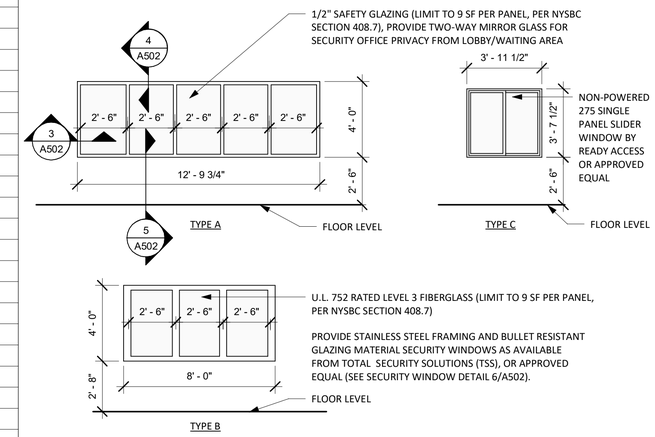

INTERIOR WINDOW TYPES

SCALE: 1/4" = 1'-0"

*ROOM FINISH LEGEND

FLOOR FINISHES

C - PROVIDE CARPET TILE/CARPET AS AVAILABLE FROM SHAW INDUSTRIES OR APPROVED EQUAL, SIZE TO BE 24 X 24, COLOR TO BE SELECTED BY OWNER FROM MANUFACTURERS FULL RANGE OF COLORS.

LVT - PROVIDE LUXURY VINYL TILE AS AVAILABLE FROM ARMSTRONG FLOORING COMMERCIAL OR APPROVED EQUAL,SIZE TO BE 18X36 AND 18X18, COLOR TO BE SELECTED BY OWNER FROM MANUFACTURERS FULL RANGE OF COLORS.

PFT - PROVIDE PORCELAIN FLOOR TILE AS AVAILABLE FROM MARAZZI, OR APPROVED EQUAL, SIZE TO BE 12 x 24, COLOR TO BE SELECTED BY OWNER FROM MANUFACTURERS FULL RANGE OF COLORS.

EXIST/T - EXISTING TERRAZZO FLOORING, PROVIDE INFILL OF TERRAZZO FLOORING TO MATCH EXISTING

WALL BASE FINISH

VB - PROVIDE VINYL WALL BASE AS AVAILABLE FROM JOHNSONITE OR APPROVED EQUAL, SIZE TO BE 6", COLOR TO BE SELECTED BY OWNER FROM MANUFACTURERS FULL RANGE OF COLORS.

WB - WOOD WALL BASE, SEE DRAWINGS FOR SIZE, STAIN FINISH TO BE SELECTED BY OWNER FROM AVAILABLE OPTIONS.

WALL FINISHES

PNT - PROVIDE PAINT AS AVAILABLE FROM SHERWIN WILLIAMS OR APPROVED EQUAL, COLOR TO BE SELECTED BY OWNER FROM MANUFACTURERS FULL RANGE OF COLORS.

GWT - PROVIDE WAINSCOT GLAZED CERAMIC WALL TILE AS AVAILABLE FROM CROSSVILLE OR APPROVED EQUAL, SIZE TO BE 4X12, TILE COLOR TO BE SELECTED BY OWNER FROM MANUFACTURERS FULL RANGE OF COLORS.

AWT - PROVIDE ACOUSTICAL WALL TILE AS AVAILABLE FROM XOREL ARTFORM (SHAPE - PLANK - FABRIC WRAPPED ACOUSTICAL SUBSTRATE) OR APPROVED EQUAL, SIZE TO BE 10" H X 20" W X 1" D INSTALLED WITH MANUFACTURER'S RECOMMENDED ADHESIVE. WALL TILE COLOR AND FABRIC TO BE SELECTED BY OWNER FROM MANUFACTURERS FULL RANGE OF COLORS.

D/CMU - EXISTING DECORATIVE CONCRETE MASONRY UNIT BLOCK, PROVIDE INFILL OF CMU BLOCK TO MATCH EXISTING.

CEILING FINISHES

ACT-1 - PROVIDE 5/8" 2 X 2 ACOUSTICAL CEILING GRID SYSTEM AS AVAILABLE FROM ARMSTRONG OR APPROVED EQUAL. SEE REFLECTED CEILING PLAN FOR LAYOUT.

ACT-2 - PROVIDE 7/8" HIGH-NRC (.85/35) (MIN. STC RATING OF 52) 2 X 2 ACOUSTICAL CEILING GRID SYSTEM AS AVAILABLE FROM ARMSTRONG OR APPROVED EQUAL. SEE REFLECTED CEILING PLAN FOR LAYOUT.

GWB PT - PROVIDE PAINT (SOFFITS) AS AVAILABLE FROM SHERWIN WILLIAMS OR APPROVED EQUAL, COLOR TO BE SELECTED BY OWNER FROM MANUFACTURERS FULL RANGE OF COLORS.

LINEAR METAL - PROVIDE NEW HANGING 12" WIDE LINEAR METAL CEILING SYSTEM, METALWORKS SECURELOCK PLUS, AS AVAILABLE FROM ARMSTRONG OR APPROVED EQUAL. SEE REFLECTED CEILING PLAN FOR LAYOUT, COLOR TO BE SELECTED BY OWNER FROM MANUFACTURERS FULL RANGE OF COLORS.

* RECEIVE LAYOUT PATTERN APPROVAL PRIOR TO THE INSTALLATION OF ROOM FINISH MATERIALS FROM OWNER.

IT IS A VIOLATION OF THE NEW YORK STATE EDUCATION LAW, ARTICLE 145 §7209 SPECIAL PROVISIONS, FOR ANY PERSON, UNLESS THEY ARE ACTING UNDER THE DIRECTION OF A LICENSED PROFESSIONAL ENGINEER, ARCHITECT, LANDSCAPE ARCHITECT, OR LAND SURVEYOR, TO ALTER AN ITEM IN ANY WAY. IF AN ITEM BEARING THE STAMP OF A LICENSED PROFESSIONAL IS ALTERED, THE ALTERING PROFESSIONAL SHALL STAMP THE DOCUMENT AND INCLUDE THE NOTATION "ALTERED BY" FOLLOWED BY THEIR SIGNATURE, THE DATE OF SUCH ALTERATION, AND A SPECIFIC DESCRIPTION OF THE ALTERATION.

REVISIONS

CITY OF MIDDLETOWN
NEW COURTHOUSE FACILITY

ROOM FINISH AND WINDOW SCHEDULES AND NOTES REVISION

CITY OF MIDDLETOWN ORANGE COUNTY, NEW YORK

Barton & Loguidice
443 Electronics Parkway
Liverpool, NY 13088
NYS CERTIFICATE # 0021642, 0020588, 0019903, 0019905, 0020336

STATE OF NEW YORK · MATTHEW C. FULLER · 070743 · LICENSED PROFESSIONAL ENGINEER

NYS EXP.:

Date: AUGUST, 2024

Scale: AS SHOWN

Sheet Number: A601

Project Number: 1753.008.001

Plotted: 8/21/2024 4:26:37 PM
C:\Users\cgardner\Documents\Middletown Courthouse 6.22.21 Central File – ARCHITECTURAL STRUCTURAL
MODEL_cgardner05.rvt

Checked by ZDC Drawn by JDC Designed by JDC In Charge of TRB

DOOR SCHEDULE

DOOR NUMBER	DOOR TYPE	DOOR WIDTH	DOOR HEIGHT	DOOR THICKNESS	DOOR MATERIAL	DOOR FINISH	FIRE RATING	FRAME TYPE	FRAME MATERIAL	FRAME FINISH	HEAD DETAIL	JAMB DETAIL	HARDWARE	ELECTRIC STRIKE	COMMENTS
101E	EXIST	6' - 0"	8' - 0"	2"	EXIST	EXIST	-	EXIST	EXIST	EXIST	-	-	1	YES	
102	A	3' - 2 1/2"	8' - 0"	2"	ALUM	FACT	-	1	ALUM	FACT	5/A501	9/A501	2	YES	
103E	EXIST	6' - 0"	8' - 0"	2"	EXIST	EXIST	-	EXIST	EXIST	EXIST	-	-	-	-	
104E	EXIST	3' - 0"	7' - 0"	1 3/4"	EXIST	EXIST	45 MINUTE	EXIST	EXIST	EXIST	-	-	5	YES	
105	B	3' - 0"	7' - 0"	1 3/4"	WD	STAIN	-	2	HM	PNT	1/A501	2/A501	7	YES	
106R	RELOCATE	3' - 0"	7' - 0"	1 3/4"	EXIST	EXIST	-	2	HM	PNT	11/A501	2/A501	7	YES	
107R	RELOCATE	3' - 0"	7' - 0"	1 3/4"	EXIST	EXIST	45 MINUTE	2	HM	PNT	12/A501	13/A501	5	YES	INSTALL VISION PANEL
108R	RELOCATE	3' - 0"	7' - 0"	1 3/4"	EXIST	EXIST	45 MINUTE	2	HM	PNT	12/A501	13/A501	5	-	
109E	EXIST	3' - 0"	7' - 0"	1 3/4"	EXIST	PNT	90 MINUTE	EXIST	EXIST	PNT	-	-	3	YES	
110E	EXIST	6' - 0"	7' - 0"	1 3/4"	EXIST	EXIST	-	EXIST	EXIST	EXIST	-	-	9	-	
111E	EXIST	3' - 0"	7' - 0"	1 3/4"	EXIST	EXIST	-	EXIST	EXIST	EXIST	-	-	15	-	
112E	EXIST	3' - 0"	7' - 0"	1 3/4"	EXIST	EXIST	-	EXIST	EXIST	EXIST	-	-	15	-	
113R	RELOCATE	6' - 0"	7' - 0"	1 3/4"	EXIST	EXIST	45 MINUTE	4	HM	PNT	12/A501	13/A501	10	-	
114E	EXIST	3' - 0"	7' - 0"	1 3/4"	EXIST	EXIST	-	EXIST	EXIST	EXIST	-	-	5	-	
115R	RELOCATE	6' - 0"	7' - 0"	1 3/4"	EXIST	EXIST	-	4	HM	PNT	12/A501	13/A501	10	-	
116	C	3' - 0"	6' - 8"	1 3/4"	WD	STAIN	-	2	HM	PNT	1/A501	2/A501	6	-	
117E	EXIST	3' - 0"	6' - 8"	1 3/4"	EXIST	PNT	45 MINUTE	EXIST	EXIST	PNT	-	-	3	-	
118	B	3' - 0"	6' - 8"	1 3/4"	WD	STAIN	-	2	HM	PNT	12/A501	13/A501	6		
119E	EXIST	3' - 0"	6' - 8"	1 3/4"	EXIST	EXIST	45 MINUTE	EXIST	EXIST	EXIST	-	-	5	-	
120E	EXIST	3' - 0"	6' - 8"	1 3/4"	EXIST	EXIST	45 MINUTE	EXIST	EXIST	EXIST	-	-	5	-	
121E	EXIST	3' - 0"	7' - 0"	1 3/4"	EXIST	EXIST	90 MINUTE	EXIST	EXIST	EXIST	-	-	14	YES	
122	B	3' - 0"	6' - 8"	1 3/4"	WD	STAIN	-	2	HM	PNT	12/A501	13/A501	6		
123	C	3' - 0"	6' - 8"	1 3/4"	WD	STAIN	-	2	HM	PNT	1/A501	2/A501	11	-	
124R	RELOCATE	3' - 0"	6' - 8"	1 3/4"	EXIST	EXIST	45 MINUTE	2	HM	PNT	12/A501	13/A501	15	-	PROVIDE MARBLE THRESHOLD
126E	EXIST	3' - 0"	6' - 8"	1 3/4"	EXIST	EXIST	45 MINUTE	EXIST	EXIST	EXIST	-	-	5	YES	
127R	RELOCATE	3' - 0"	6' - 8"	1 3/4"	EXIST	EXIST	-	2	HM	PNT	1/A501	2/A501	5	YES	
128	F	3' - 0"	6' - 8"	1 3/4"	HM	PNT	45 MINUTE	5	HM	PNT	1/A501	2/A501	12	YES	
129	F	3' - 0"	6' - 8"	1 3/4"	HM	PNT	60 MINUTE	5	HM	PNT	12/A501	13/A501	12	YES	
130	D	3' - 0"	7' - 0"	1 3/4"	HM	PNT	60 MINUTE	3	HM	PNT	14/A501	15/A501	4	YES	INSULATED EXTERIOR DOOR
131E	EXIST	3' - 0"	6' - 8"	1 3/4"	EXIST	PNT	-	EXIST	EXIST	PNT	-	-	13	YES	
132R	RELOCATE	3' - 0"	6' - 8"	1 3/4"	EXIST	PNT	-	5	HM	PNT	12/A501	13/A501	16	YES	
133E	EXIST	3' - 0"	6' - 8"	1 3/4"	EXIST	PNT	-	EXIST	EXIST	PNT	-	-	16	YES	
134	D	3' - 0"	7' - 0"	1 3/4"	HM	PNT	-	3	HM	PNT	12/A501	13/A501	5	-	STAIRS 114 TO BE SECURE TO BASEMENT STAIRS
135R	RELOCATE	3' - 0"	7' - 0"	1 3/4"	EXIST	EXIST	60 MINUTE	2	HM	PNT	12/A501	13/A501	5	YES	INSTALL VISION PANEL
136R	RELOCATE	3' - 0"	7' - 0"	1 3/4"	EXIST	EXIST	45 MINUTE	2	HM	PNT	1/A501	2/A501	5	YES	
137R	RELOCATE	3' - 0"	7' - 0"	1 3/4"	EXIST	EXIST	45 MINUTE	2	HM	PNT	12/A501	13/A501	5	YES	INSTALL VISION PANEL
138R	RELOCATE	3' - 0"	7' - 0"	1 3/4"	EXIST	EXIST	45 MINUTE	2	HM	PNT	12/A501	13/A501	5	YES	INSTALL VISION PANEL
139	B	3' - 0"	7' - 0"	1 3/4"	WD	STAIN	-	2	HM	PNT	1/A501	2/A501	6	-	
140	E	5' - 0"	7' - 0"	1 3/8"	WD	STAIN		6	HM	PNT	-	-	8	-	
141E	EXIST	3' - 0"	7' - 0"	1 3/4"	EXIST	EXIST	-	EXIST	EXIST	PNT	-	-	14	YES	
142E	EXIST	3' - 0"	7' - 0"	1 3/4"	EXIST	PNT	45 MINUTE	EXIST	EXIST	PNT	-	-	3	-	
143R	RELOCATE	3' - 0"	7' - 0"	1 3/4"	EXIST	EXIST	45 MINUTE	2	HM	PNT	12/A501	13/A501	5	-	
144R	RELOCATE	3' - 0"	7' - 0"	1 3/4"	EXIST	EXIST	-	2	HM	PNT	12/A501	13/A501	5	-	
145R	RELOCATE	3' - 0"	7' - 0"	1 3/4"	EXIST	EXIST	-	2	HM	PNT	12/A501	13/A501	15	-	PROVIDE MARBLE THRESHOLD
146	C	3' - 0"	6' - 8"	1 3/4"	WD	PNT	-	2	HM	PNT	1/A501	2/A501	11	-	
147R	RELOCATE	3' - 0"	7' - 0"	1 3/4"	EXIST	EXIST	-	2	HM	PNT	1/A501	2/A501	5	-	
148R	RELOCATE	3' - 0"	7' - 0"	1 3/4"	EXIST	EXIST	-	2	HM	PNT	1/A501	2/A501	5	-	
149E	EXIST	3' - 0"	7' - 0"	1 3/4"	EXIST	EXIST	-	EXIST	EXIST	PNT	-	-	14	YES	
150E	EXIST	3' - 0"	7' - 0"	1 3/4"	EXIST	EXIST	60 MINUTE	EXIST	EXIST	PNT	-	-	5	-	
151E	EXIST	3' - 0"	7' - 0"	1 3/4"	EXIST	PNT	90 MINUTE	EXIST	EXIST	PNT	-	-	3	YES	
151N	RELOCATE	3' - 0"	6' - 8"	1 3/4"	EXIST	EXIST	90 MINUTE	2	HM	PNT	12/A501	13/A501	15	-	PROVIDE MARBLE THRESHOLD
201E	EXIST	3' - 0"	6' - 8"	1 3/4"	EXIST	EXIST	90 MINUTE	EXIST	EXIST	PNT	-	-	14	YES	
202	C	3' - 0"	7' - 0"	1 3/4"	WD	STAIN	-	3	HM	PNT	12/A501	13/A501	11	-	
203	C	3' - 0"	7' - 0"	1 3/4"	WD	STAIN	-	3	HM	PNT	12/A501	13/A501	11	-	
204E	EXIST	3' - 0"	6' - 8"	1 3/4"	EXIST	EXIST	45 MINUTE	EXIST	EXIST	PNT	-	-	5	-	
205E	EXIST	5' - 0"	6' - 8"	1 3/4"	EXIST	EXIST	45 MINUTE	EXIST	EXIST	PNT	-	-	9	-	
206R	RELOCATE	3' - 0"	6' - 8"	1 3/4"	EXIST	EXIST	45 MINUTE	2	HM	PNT	1/A501	2/A501	5	-	
207R	RELOCATE	3' - 0"	6' - 8"	1 3/4"	EXIST	EXIST	45 MINUTE	2	HM	PNT	1/A501	2/A501	14	-	
208R	RELOCATE	3' - 0"	6' - 8"	1 3/4"	EXIST	EXIST	-	2	HM	PNT	1/A501	2/A501	5	-	
209R	RELOCATE	3' - 0"	6' - 8"	1 3/4"	EXIST	EXIST	-	2	HM	PNT	1/A501	2/A501	7	YES	
210R	RELOCATE	3' - 0"	6' - 8"	1 3/4"	EXIST	EXIST	45 MINUTE	2	HM	PNT	1/A501	2/A501	5	YES	
211R	RELOCATE	3' - 0"	6' - 8"	1 3/4"	EXIST	EXIST	-	2	HM	PNT	1/A501	2/A501	15	-	
212E	EXIST	3' - 0"	6' - 8"	1 3/4"	EXIST	EXIST	-	EXIST	EXIST	PNT	-	-	5	-	
213E	EXIST	3' - 0"	6' - 8"	1 3/4"	EXIST	EXIST	-	EXIST	EXIST	PNT	-	-	5	-	
214E	EXIST	3' - 0"	6' - 8"	1 3/4"	EXIST	EXIST	-	EXIST	EXIST	PNT	-	-	5	-	
215E	EXIST	3' - 0"	6' - 8"	1 3/4"	EXIST	EXIST	-	EXIST	EXIST	PNT	-	-	5	-	REPLACE VISION PANEL GLASS
216E	EXIST	3' - 0"	6' - 8"	1 3/4"	EXIST	EXIST	-	EXIST	EXIST	PNT	-	-	5	-	
217E	EXIST	3' - 0"	6' - 8"	1 3/4"	EXIST	EXIST	-	EXIST	EXIST	PNT	-	-	5	-	
218E	EXIST	3' - 0"	6' - 8"	1 3/4"	EXIST	EXIST	60 MINUTE	EXIST	EXIST	PNT	-	-	14	YES	
219R	RELOCATE	3' - 0"	6' - 8"	1 3/4"	EXIST	EXIST	90 MINUTE	2	HM	PNT	1/A501	2/A501	15	-	PROVIDE MARBLE THRESHOLD
220E	EXIST	3' - 0"	6' - 8"	1 3/4"	EXIST	EXIST	45 MINUTE	EXIST	EXIST	PNT	-	-	5	-	

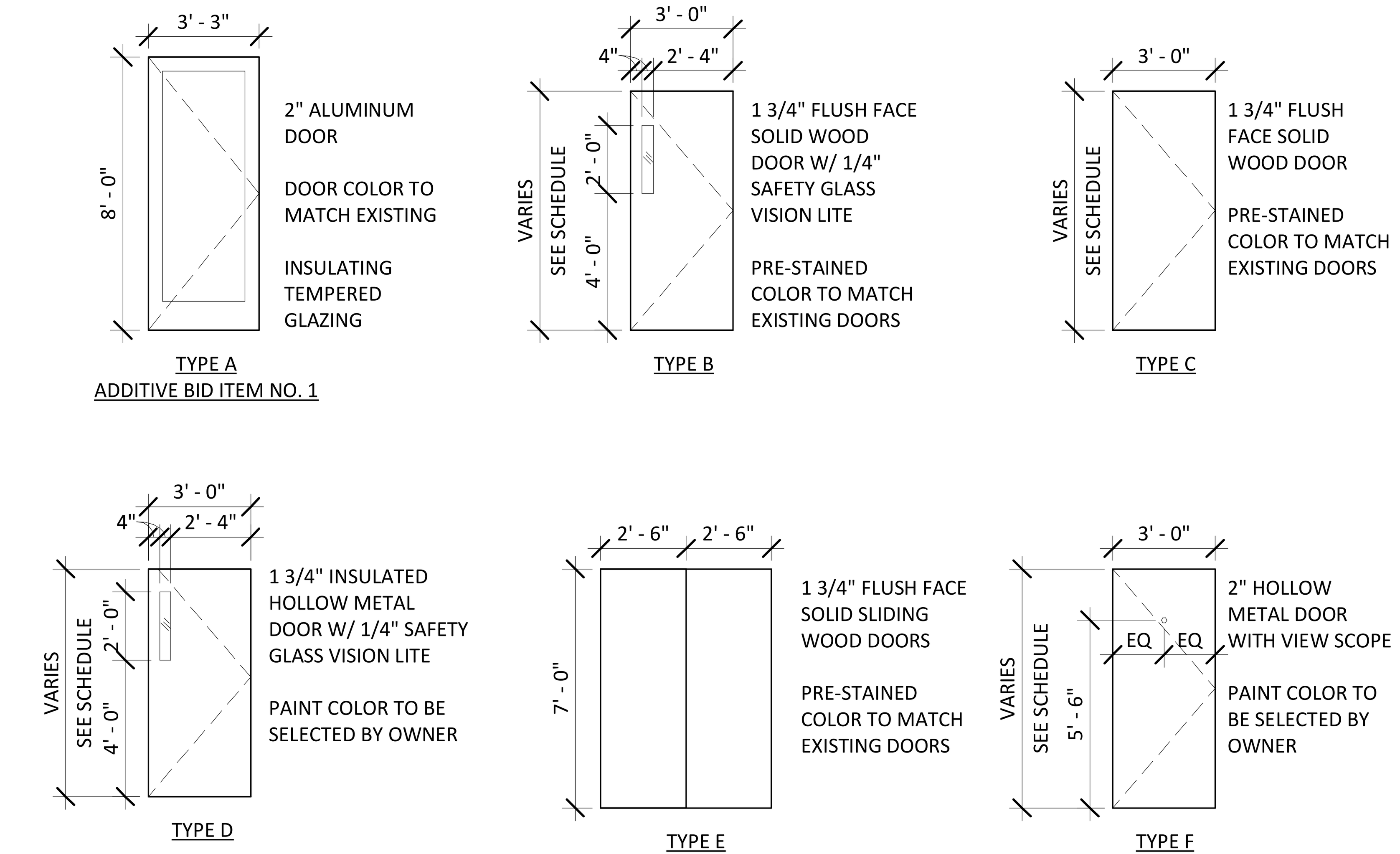

DOOR TYPES

SCALE: 1/4" = 1'-0"

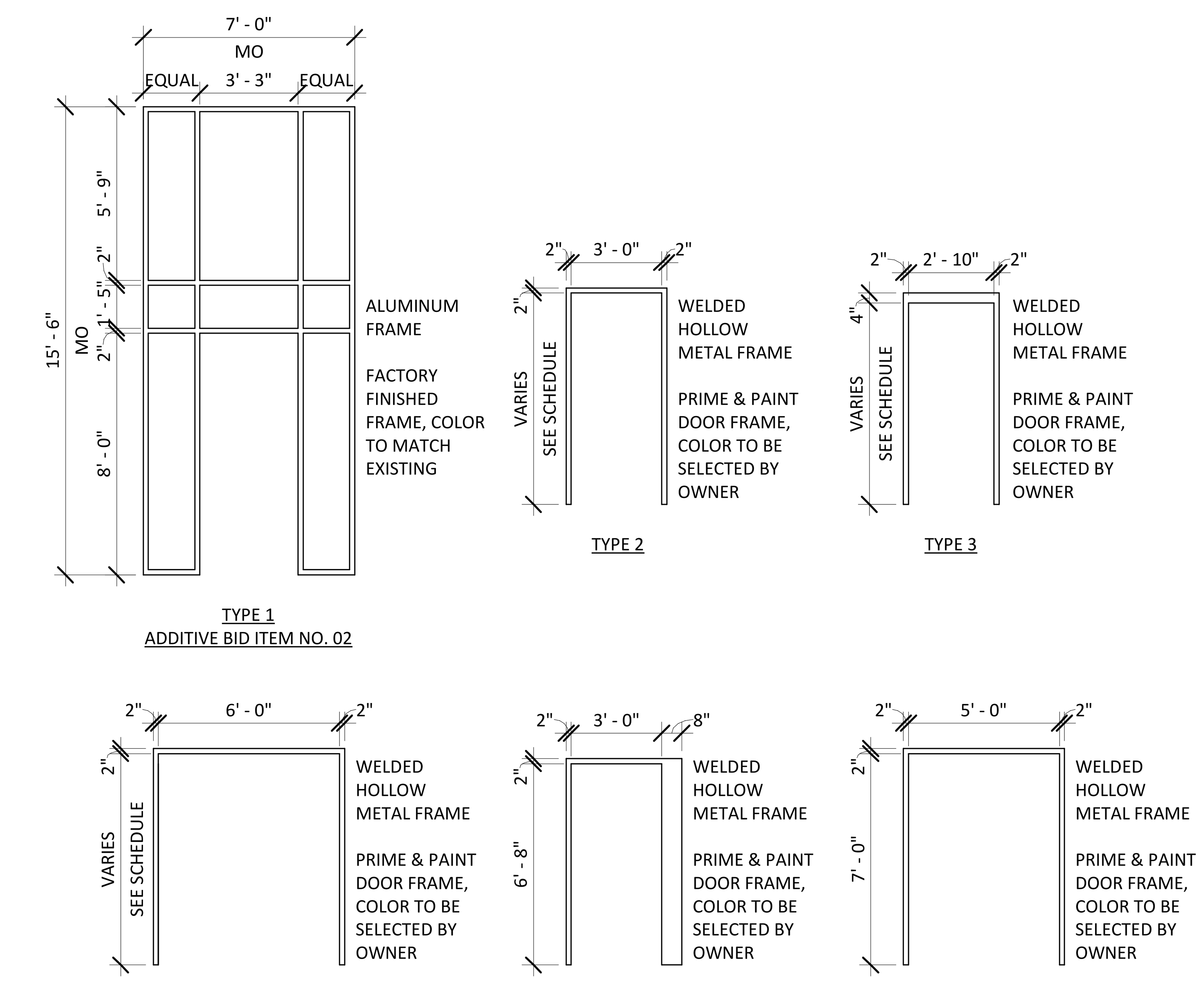

DOOR FRAMES TYPES

SCALE: 1/4" = 1'-0"

DOOR NUMBERS WITH "E" REFER TO EXISTING DOORS AND FRAMES REMAINING IN PLACE.

DOOR NUMBERS WITH "R" REFER TO EXISTING DOORS WHICH ARE RELOCATED. SEE EXISTING/DEMOLITION DRAWINGS FOR LOCATIONS OF RELOCATED DOORS. CERTAIN RELOCATED DOORS HAVE ELECTRIC STRIKES (SEE DOOR SCHEDULE) WHICH ARE TO BE RELOCATED. COORDINATE WITH ELECTRICAL CONTRACTORS.

IT IS A VIOLATION OF THE NEW YORK STATE EDUCATION LAW, ARTICLE 145 §7209 SPECIAL PROVISIONS, FOR ANY PERSON, UNLESS THEY ARE ACTING UNDER THE DIRECTION OF A LICENSED PROFESSIONAL ENGINEER, ARCHITECT, LANDSCAPE ARCHITECT, OR LAND SURVEYOR, TO ALTER AN ITEM IN ANY WAY. IF AN ITEM BEARING THE STAMP OF A LICENSED PROFESSIONAL IS ALTERED, THE ALTERING PROFESSIONAL SHALL STAMP THE DOCUMENT AND INCLUDE THE NOTATION "ALTERED BY" FOLLOWED BY THEIR SIGNATURE, THE DATE OF SUCH ALTERATION, AND A SPECIFIC DESCRIPTION OF THE ALTERATION.

REVISIONS

CITY OF MIDDLETOWN
NEW COURTHOUSE FACILITY

DOOR SCHEDULE AND NOTES

CITY OF MIDDLETOWN
ORANGE COUNTY, NEW YORK

Barton & Loguidice
443 Electronics Parkway
Liverpool, NY 13088
NYS CERTIFICATE # 0021642, 0020588, 0019903, 0019905, 0020336

STATE OF NEW YORK · MATTHEW C. FULLER · 070743 · LICENSED PROFESSIONAL ENGINEER

NYS EXP.:

Date: AUGUST, 2024
Scale: AS SHOWN
Sheet Number: A602
Project Number: 1753.008.001

Plotted: 8/21/2024 4:26:37 PM
C:\Users\cgardner\Documents\Middletown Courthouse 6.22.21 Central File – ARCHITECTURAL STRUCTURAL MODEL_cgardner05.rvt

In Charge of: TRB
Designed by: JDC
Drawn by: JDC
Checked by: ZDC

STRUCTURAL NOTES:

GENERAL:

1. ALL STRUCTURES ARE DESIGNED IN ACCORDANCE WITH THE 2020 BUILDING CODE OF NEW YORK STATE.

2. ALLOWABLE SOIL BEARING PRESSURE 2,500 PSF

3. DESIGN LOADS:
DEAD LOADS:
ROOF DEAD LOAD 18 PSF
FLOOR DEAD LOAD 50 PSF

LIVE LOADS:
ROOF LIVE LOAD 20 PSF
FLOOR LIVE LOAD 100 PSF

SNOW LOAD:
GROUND SNOW LOAD, Pg = 40 PSF
SNOW EXPOSURE FACTOR, Ce = 1.0
THERMAL FACTOR, Ct = 1.0 (AT ADDITION)
Ct = 1.2 (AT CANOPY)
SNOW LOAD IMPORTANCE FACTOR, Is = 1.1

WIND LOAD:
BASIC WIND SPEED (3-SECOND GUST) = 120 MPH
WIND EXPOSURE B
VELOCITY PRESSURE, Kz = 0.57
TOPOGRAPHIC FACTOR, Kzt = 1.0
WIND DIRECTIONALITY FACTOR, Kd = 0.85
GROUND ELEVATION FACTOR, Ke = 1.0
COMPONENTS AND CLADDING (CANOPY, NEGATIVE VALUE IS AWAY FROM SURFACE)
ZONE 2: 12.2 PSF / -27.4 PSF
ZONE 3: 12.2 PSF / -27.4 PSF

SEISMIC CRITERIA:
SEISMIC USE OCCUPANCY III
SEISMIC IMPORTANCE FACTOR, Ie = 1.25
SITE CLASS D
BASIC SEISMIC-FORCE-RESISTING SYSTEM: N.A.
DESIGN SPECTRAL RESPONSE ACCELERATION
FOR SHORT PERIODS, Sds = 0.222
AT 1-SECOND PERIOD, Sd1 = 0.087
SEISMIC DESIGN CATEGORY B

4. THE CONTRACTOR SHALL CHECK THE ARCHITECTURAL, PLUMBING, HVAC, AND ELECTRICAL DRAWINGS AND SPECIFICATIONS FOR ADDITIONAL INFORMATION NOT INDICATED ON THE STRUCTURAL DRAWINGS, SUCH INFORMATION INCLUDES, AS A MINIMUM, EMBEDDED SLEEVES AND INSERTS, MISCELLANEOUS DETAILS, SPECIAL FLOOR FINISHES, DOOR THRESHOLDS, SLOPES TO DRAINS, NAILERS, OPENINGS IN STRUCTURAL ELEMENTS, ETC.

EXCAVATION AND FILL:

1. THE BOTTOM OF ALL CONCRETE FOUNDATIONS AND SLABS SHALL REST ON UNDISTURBED SOIL AND/OR APPROVED COMPACTED MATERIAL, AS DEFINED IN THE CONTRACT SPECIFICATIONS. ALL GRANULAR FILL MATERIALS BELOW SLABS SHALL BE OF THE THICKNESS SHOWN AND SHALL BE COMPACTED TO MINIMUM 95% MODIFIED PROCTOR DENSITY. SEE SPECIFICATIONS FOR COMPACTION AND FIELD TESTS.

2. THE CONTRACTOR SHALL NOT COMMENCE FOUNDATION CONSTRUCTION WORK PRIOR TO INSPECTION AND APPROVAL OF THE BEARING SOIL BY AN INDEPENDENT TESTING LAB. SOILS TO BE TESTED BY SOIL PENTROMETER OR EQUAL TO VERIFY A MINIMUM BEARING PRESSURE OF 2,000 PSF.

3. ALL EXCAVATIONS INTO UNDISTURBED SOILS SHALL BE COMPACTED TO MINIMUM 95% MODIFIED PROCTOR DENSITY.

4. ALL EXCAVATIONS SHALL BE DEWATERED AS NECESSARY TO MAINTAIN GROUNDWATER AT LEAST 24" BELOW FOOTING BEFORE PLACING OF CONCRETE.

CONCRETE:

1. DESIGN STRENGTH -
STRUCTURAL CONCRETE AND SLAB ON GRADE - 4,000 PSI @ 28 DAYS

2. STANDARDS -
DESIGN ACI 318 - LATEST EDITION
DETAILS ACI 315 - LATEST EDITION

3. REINFORCING -
MESH - ASTM A-185 (FLAT SHEETS)
BARS - ASTM A-615 GRADE 60

4. AIR CONTENT - ALL SLAB ON GRADE AND EXTERIOR CONCRETE SHALL BE AIR ENTRAINED IN ACCORDANCE WITH SPECIFICATION SECTION 03300.

5. CONCRETE COVER OVER BARS:
CONCRETE DEPOSITED ON GROUND - 3"
FORMED CONCRETE EXPOSED TO GROUND, WEATHER OR WATER - 2"
WALLS & SLABS NOT DIRECTLY EXPOSED TO GROUND, WATER OR WEATHER - 1"

6. SPLICES IN REINFORCEMENT:
UNLESS OTHERWISE NOTED, ALL SPLICES AND ANCHORAGES SHALL BE IN ACCORDANCE WITH ACI 318 CHAPTER 12. STAGGER SPLICES WHEREVER POSSIBLE AND LOCATE SO AS NOT TO IMPAIR STRENGTH OF MEMBERS.

7. ALL EXPOSED EDGES OF CONCRETE SHALL HAVE A CHAMFER AS SHOWN ON DRAWINGS.

8. THE CONTRACTOR SHALL NOT POUR ANY CONCRETE PRIOR TO INSPECTION OF THE REINFORCING STEEL AND AUTHORIZATION BY THE ENGINEER.

STRUCTURAL STEEL:

1. STRUCTURAL STEEL:

W: ASTM A992 (FY = 50 KSI)
M, S, HP, C, MC, L, & PLATES: ASTM A36 (FY = 36 KSI)
HSS: ASTM A500 GR. B (FY = 46 KSI)
STEEL PIPE: ASTM A53 GR. B (FY = 35 KSI)
HIGH STRENGTH BOLTS: ASTM A325-N, 3/4" Ø MIN.
NUTS: ASTM A563
WASHERS: ASTM F436
DIRECT TENSION INDICATORS: ASTM F959
THREADED ROD: ASTM A36
ANCHOR RODS: ASTM F1554 GR. 36
SHEAR STUD CONNECTORS: ASTM A108

2. WELDING ELECTRODES SHALL BE AWS E-70XX. ALL SHOP CONNECTIONS SHALL BE WELDED UNLESS OTHERWISE SHOWN, ALL FIELD CONNECTIONS SHALL BE BOLTED.

3. PROVIDE FRAMED OR SEATED BEAM CONNECTIONS IN ACCORDANCE WITH THE AISC MANUAL OF STEEL CONSTRUCTION. UNLESS OTHERWISE NOTED, BEAM CONNECTIONS SHALL BE DETAILED TO HAVE A CAPACITY OF NOT LESS THAN ONE-HALF THE TOTAL ALLOWABLE UNIFORM LOAD DETERMINED IN ACCORDANCE WITH AISC MANUAL OF STEEL CONSTRUCTION TABLE FOR "ALLOWABLE UNIFORM LOADS IN KIPS FOR BEAMS LATERALLY SUPPORTED", FOR BEAMS AND SPANS IN QUESTION. HOLES FOR SHOP AND FIELD CONNECTIONS SHALL BE DRILLED OR PUNCHED. NO BURNT HOLES WILL BE ALLOWED.

4. CONTRACTOR SHALL SUPPLY AND USE ALL NECESSARY BRACING AND OTHER MEANS TO MAINTAIN STABILITY AND LOCATION OF STEEL FRAMING DURING CONSTRUCTION.

MASONRY NOTES:

1. STANDARDS:

- BUILDING CODE REQUIREMENTS FOR MASONRY STRUCTURES (ACI 530.1-02/ASCE 5-02/TMS 402-02)
- SPECIFICATION FOR MASONRY STRUCTURES (ACI 530.1-02/ASCE 6-02/TMS 602-02)

2. MINIMUM NET AREA COMPRESSIVE STRENGTH OF MASONRY (f'm) = 1,500 PSI.

3. HOLLOW LOAD BEARING UNITS: ASTM C90, GRADE N-I OR N-II.

4. HOLLOW NON-LOAD BEARING UNITS: ASTM C129, TYPE 1 OR II.

5. SOLID LOAD BEARING UNITS: ASTM C145, GRADE S-I OR S-II.

6. REINFORCEMENT: DEFORMED REINFORCING BARS THAT CONFORM TO ASTM A615 (FY= 60,000 PSI).

7. JOINT REINFORCEMENT: HOT-DIP GALVANIZED MASONRY JOINT REINF. THAT CONFORMS TO ASTM A153, AND ASTM A951.

8. PROVIDE MORTAR OF TYPE AND COLOR SPECIFIED THAT CONFORMS TO ASTM C270.

9. GROUT SHALL BE PROPORTIONED AND MIXED IN ACCORDANCE WITH ASTM C476 AND SHALL ATTAIN A MINIMUM ULTIMATE COMPRESSIVE STRENGTH OF 3,000 PSI AT 28 DAYS IN ACCORDANCE WITH ASTM C1019. PROVIDE COARSE OR FINE GROUT IN ACCORDANCE WITH THE SPECIFICATIONS.

10. GROUT SHALL BE PLACED IN A CONTINUOUS LIFT, WITH A MAXIMUM LIFT HEIGHT NOT EXCEED 5 FT. BETWEEN LIFTS, A HORIZONTAL CONSTRUCTION JOINT SHALL BE FORMED BY STOPPING GROUT 1 1/2" BELOW A HORIZONTAL MORTAR JOINT EXCEPT AT TOP OF WALLS.

11. MAXIMUM GROUT PLACEMENT HEIGHT SHALL BE IN ACCORDANCE WITH ACI 530.1-02 SPECIFICATION FOR MASONRY STRUCTURES TABLE 7.

12. CONSOLIDATE GROUT AT TIME OF PLACEMENT, CONSOLIDATE GROUT LIFTS 12" OR LESS IN HEIGHT BY MECHANICAL VIBRATION OR BY PUDDLING. CONSOLIDATE GROUT LIFTS MORE THAN 12" IN HEIGHT BY MECHANICAL VIBRATION AND RECONSOLIDATE BY MECHANICAL VIBRATION AFTER INITIAL WATER LOSS AND SETTLEMENT HAS OCCURRED.

13. DO NOT USE GROUT OR MORTAR ADMIXTURES CONTAINING CALCIUM CHLORIDES, AIR-ENTRAINMENT OR ANTIFREEZE COMPOUNDS.

14. REINFORCEMENT SHALL BE SECURELY PLACED USING APPROVED PREFABRICATED CORROSION RESISTANT METAL BAR POSITIONERS AND INSPECTED BY THE ENGINEER PRIOR TO GROUT PLACEMENT.

15. VERTICAL REINFORCEMENT SHALL BE PROVIDED WITHIN 16" OF EACH SIDE OF OPENINGS, WITHIN 8" OF EACH SIDE OF MOVEMENT JOINTS, AND WITHIN 8" OF THE END OF WALLS.

16. HORIZONTAL REINFORCEMENT SHALL BE PROVIDED AT THE BOTTOM AND TOP OF WALL OPENINGS AND SHALL EXTEND NOT LESS THAN 24" PAST OPENINGS, CONTINUOUSLY AT STRUCTURALLY CONNECTED ROOF AND FLOOR LEVELS, AND WITHIN 16" OF THE TOP OF WALLS.

IT IS A VIOLATION OF THE NEW YORK STATE EDUCATION LAW, ARTICLE 145 §7209 SPECIAL PROVISIONS, FOR ANY PERSON, UNLESS THEY ARE ACTING UNDER THE DIRECTION OF A LICENSED PROFESSIONAL ENGINEER, ARCHITECT, LANDSCAPE ARCHITECT, OR LAND SURVEYOR, TO ALTER AN ITEM IN ANY WAY. IF AN ITEM BEARING THE STAMP OF A LICENSED PROFESSIONAL IS ALTERED, THE ALTERING PROFESSIONAL SHALL STAMP THE DOCUMENT AND INCLUDE THE NOTATION "ALTERED BY" FOLLOWED BY THEIR SIGNATURE, THE DATE OF SUCH ALTERATION, AND A SPECIFIC DESCRIPTION OF THE ALTERATION.

REVISIONS

CITY OF MIDDLETOWN
NEW COURTHOUSE FACILITY

GENERAL STRUCTURAL NOTES

CITY OF MIDDLETOWN ORANGE COUNTY, NEW YORK

Barton & Loguidice
443 Electronics Parkway
Liverpool, NY 13088
NYS CERTIFICATE # 0021642, 0020588, 0019903, 0019905, 0020336

STATE OF NEW YORK · MATTHEW C. FULLER · 070743 · LICENSED PROFESSIONAL ENGINEER

NYS EXP.: May 31, 2026

Date AUGUST, 2024

Scale AS SHOWN

Sheet Number S001

Project Number 1753.008.001

Plotted: 8/20/2024 1:40:07 PM
D:\1a - Local Revit Files\Middletown Courthouse 6.22.21 Central File - ARCHITECTURAL STRUCTURAL
MODEL_pstevens4.rvt
Checked by: Checker Drawn by: Author Designed by: Designer In Charge of:

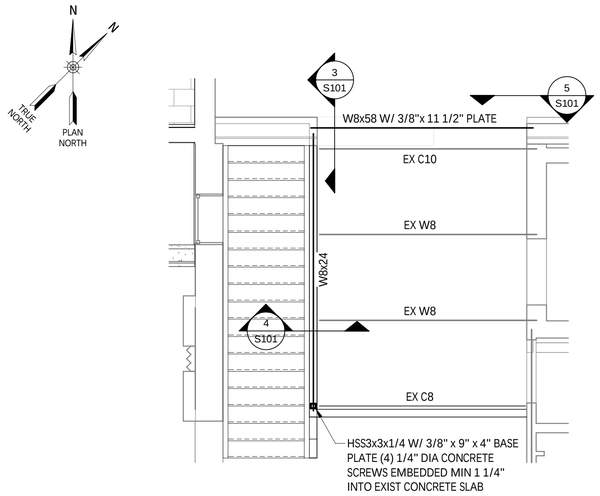

STAIR FRAMING PLAN

SCALE: 1/4" = 1'-0"

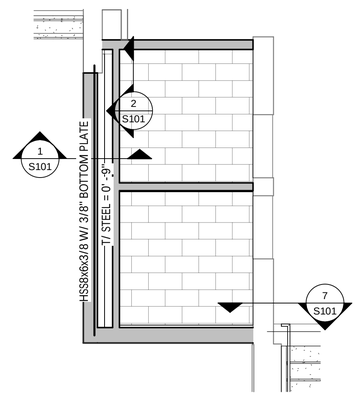

BATHROOM ADDITION FLOOR PLAN

SCALE: 1/4" = 1'-0"

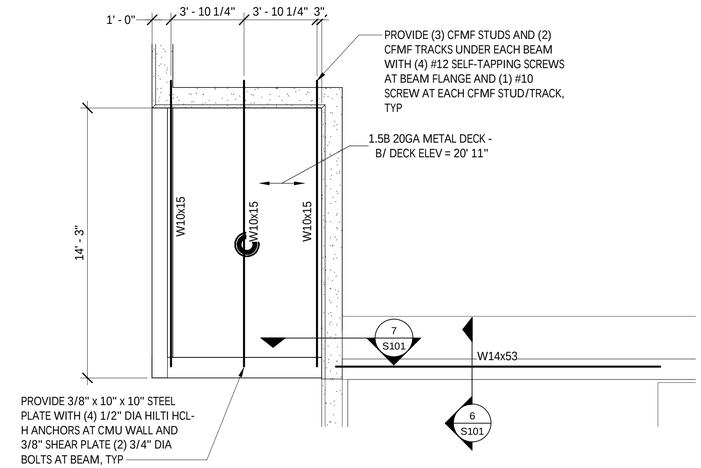

PARTIAL ROOF FRAMING PLAN

SCALE: 1/4" = 1'-0"

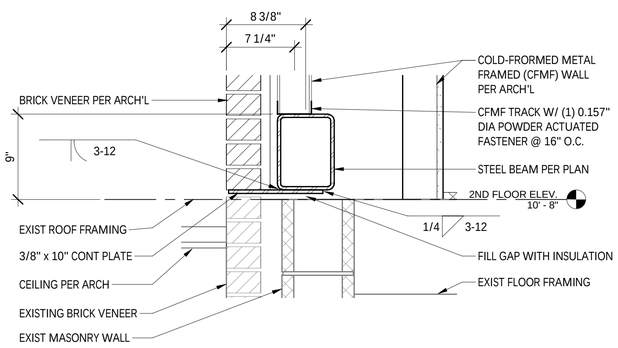

1 S101 WALL SUPPORT BEAM

SCALE: 1 1/2" = 1'-0"

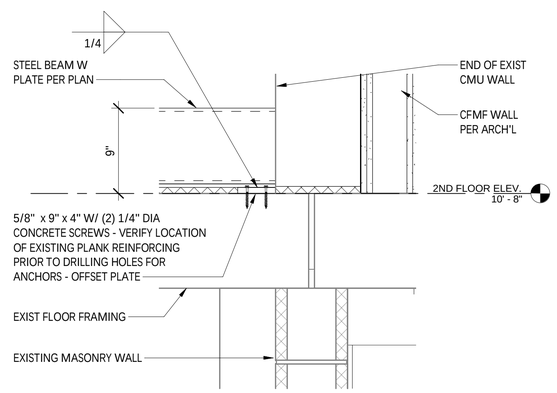

2 S101 WALL SUPPORT BEAM CONNECTION

SCALE: 1 1/2" = 1'-0"

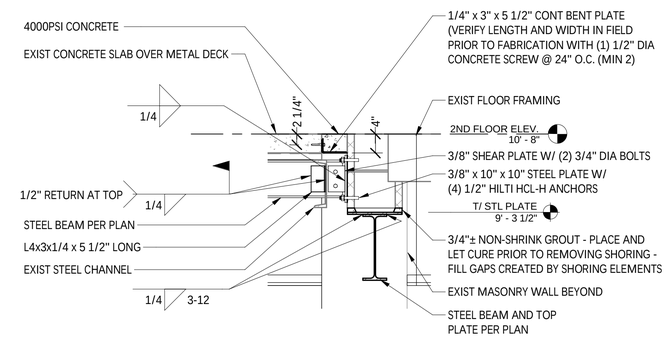

3 S101 INTERIOR BEAM AT EXIST MASONRY WALL

SCALE: 3/4" = 1'-0"

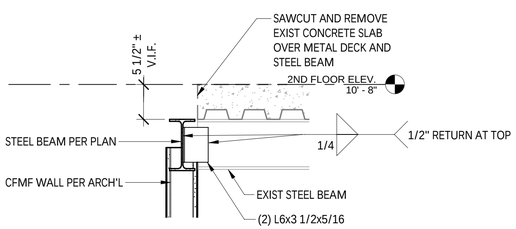

4 S101 EXIST STEEL BEAM AT STEEL BEAM

SCALE: 1" = 1'-0"

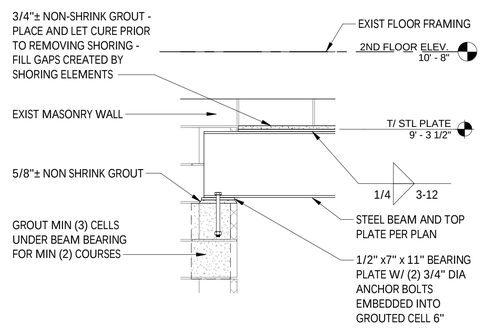

5 S101 STEEL BEAM AT EXIST CMU WALL

SCALE: 3/4" = 1'-0"

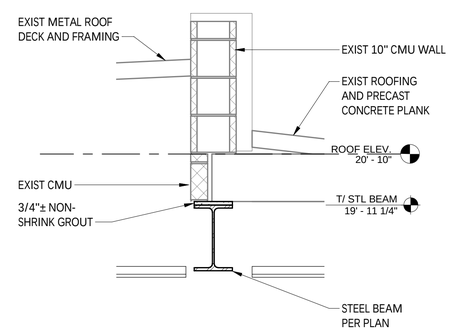

6 S101 STEEL BEAM AT EXIST ROOF

SCALE: 3/4" = 1'-0"

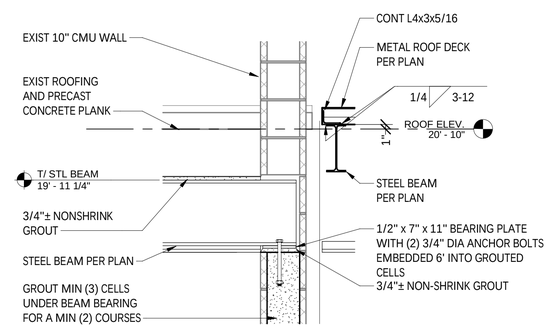

7 S101 STEEL BEAM AT EXIST CMU WALL

SCALE: 3/4" = 1'-0"

IT IS A VIOLATION OF THE NEW YORK STATE EDUCATION LAW, ARTICLE 145 §7209 SPECIAL PROVISIONS, FOR ANY PERSON, UNLESS THEY ARE ACTING UNDER THE DIRECTION OF A LICENSED PROFESSIONAL ENGINEER, ARCHITECT, LANDSCAPE ARCHITECT, OR LAND SURVEYOR, TO ALTER AN ITEM IN ANY WAY. IF AN ITEM BEARING THE STAMP OF A LICENSED PROFESSIONAL IS ALTERED, THE ALTERING PROFESSIONAL SHALL STAMP THE DOCUMENT AND INCLUDE THE NOTATION "ALTERED BY" FOLLOWED BY THEIR SIGNATURE, THE DATE OF SUCH ALTERATION, AND A SPECIFIC DESCRIPTION OF THE ALTERATION.

REVISIONS

CITY OF MIDDLETOWN
NEW COURTHOUSE FACILITY

2ND FLOOR ADDITION AND STAIR FRAMING PLAN AND DETAILS

CITY OF MIDDLETOWN ORANGE COUNTY, NEW YORK

Barton & Loguidice
443 Electronics Parkway
Liverpool, NY 13088
NYS CERTIFICATE # 0021642, 0020588, 0019903, 0019905, 0020336

NYS EXP.: May 31, 2026

Date	AUGUST, 2024
Scale	AS SHOWN
Sheet Number	S101
Project Number	1753.008.001

Plotted: 8/20/2024 1:40:08 PM
D:\1ta - Local Revit Files\Middletown Courthouse 6.22.21 Central File - ARCHITECTURAL STRUCTURAL
MODEL_psteven4-MEP.rvt
Checked by: Checker Drawn by: PS Designed by: PS In Charge of: MCF

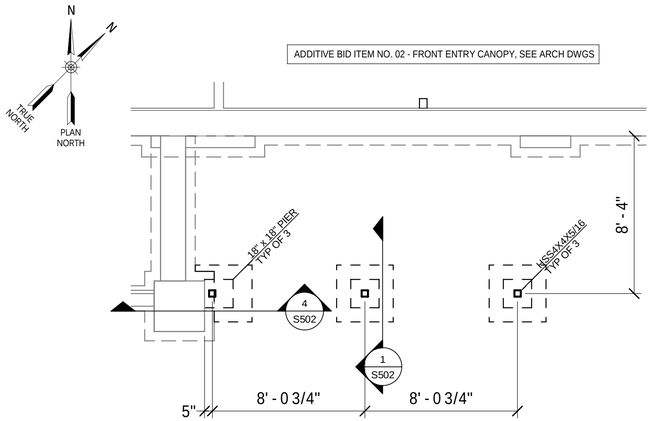

FRONT CANOPY FOUNDATION PLAN

SCALE: 1/4" = 1'-0"

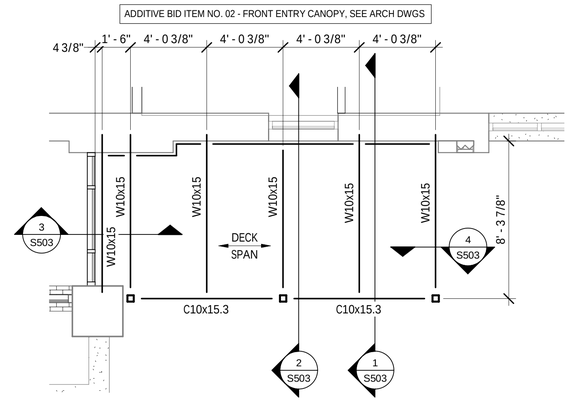

ENTRANCE CANOPY FRAMING PLAN NOTES:

1. TOP OF STEEL ELEV = 9' - 0" ABOVE FINISH FLOOR ELEVATION = 0' - 0".
2. TYPICAL ROOF CONSTRUCTION IS 1.5 B 18GA METAL ROOF DECK ATTACHED TO SUPPORTS WITH 5/8" PUDDLE WELDS ON A 36/4 PATTERN WITH #12 TEK SCREWS @ 12" O.C. SIDELAP.

FRONT CANOPY FRAMING PLAN

SCALE: 1/4" = 1'-0"

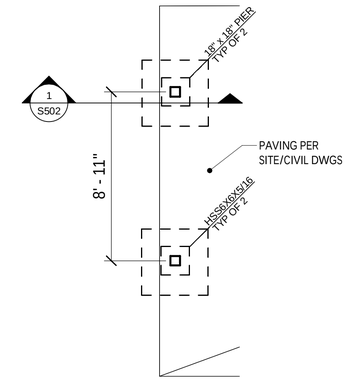

NOTE:
TOP OF PAVING ELEVATION = -2' - 8"
BELOW FIRST FLOOR ELEVATION = 0' - 0".

DROPOFF GATE FOUNDATION PLAN

SCALE: 1/4" = 1'-0"

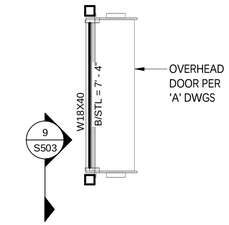

NOTE:
TOP OF PAVING ELEVATION = -2' - 8"
BELOW FIRST FLOOR ELEVATION = 0' - 0".

DROPOFF GATE FRAMING PLAN

SCALE: 1/4" = 1'-0"

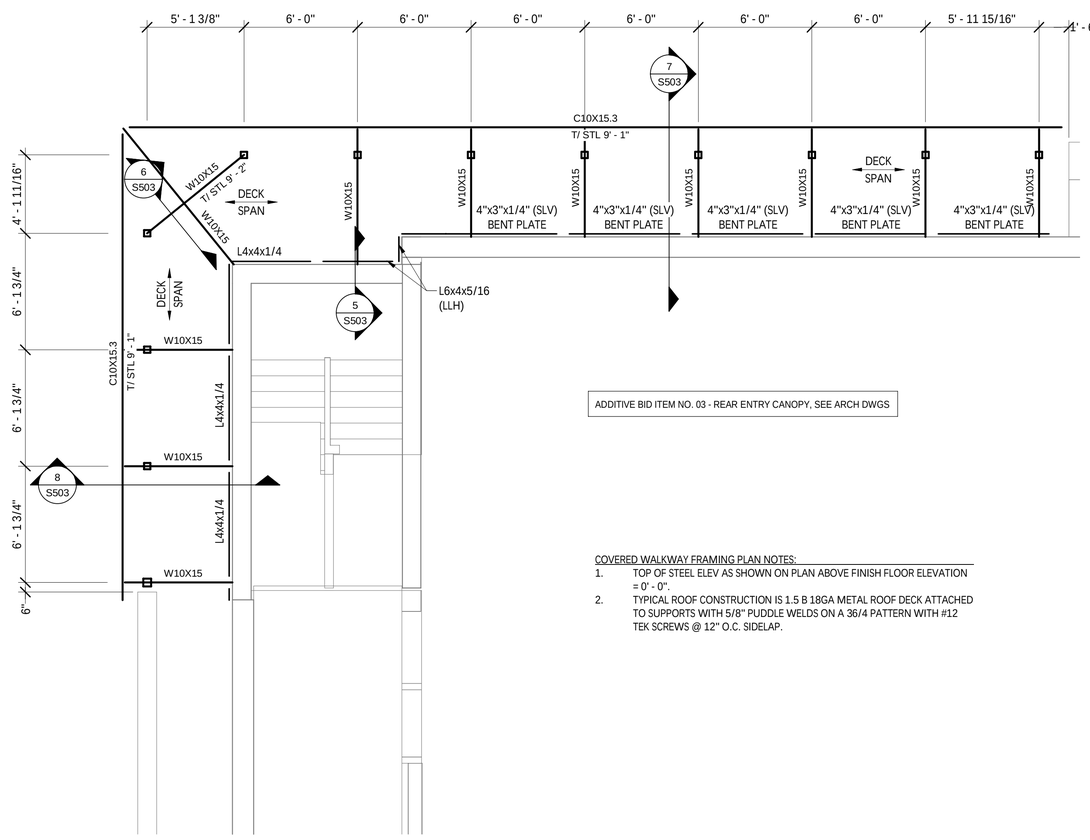

COVERED WALKWAY FRAMING PLAN NOTES:

1. TOP OF STEEL ELEV AS SHOWN ON PLAN ABOVE FINISH FLOOR ELEVATION = 0' - 0".
2. TYPICAL ROOF CONSTRUCTION IS 1.5 B 18GA METAL ROOF DECK ATTACHED TO SUPPORTS WITH 5/8" PUDDLE WELDS ON A 36/4 PATTERN WITH #12 TEK SCREWS @ 12" O.C. SIDELAP.

REAR COVERED WALKWAY FRAMING PLAN

SCALE: 1/4" = 1'-0"

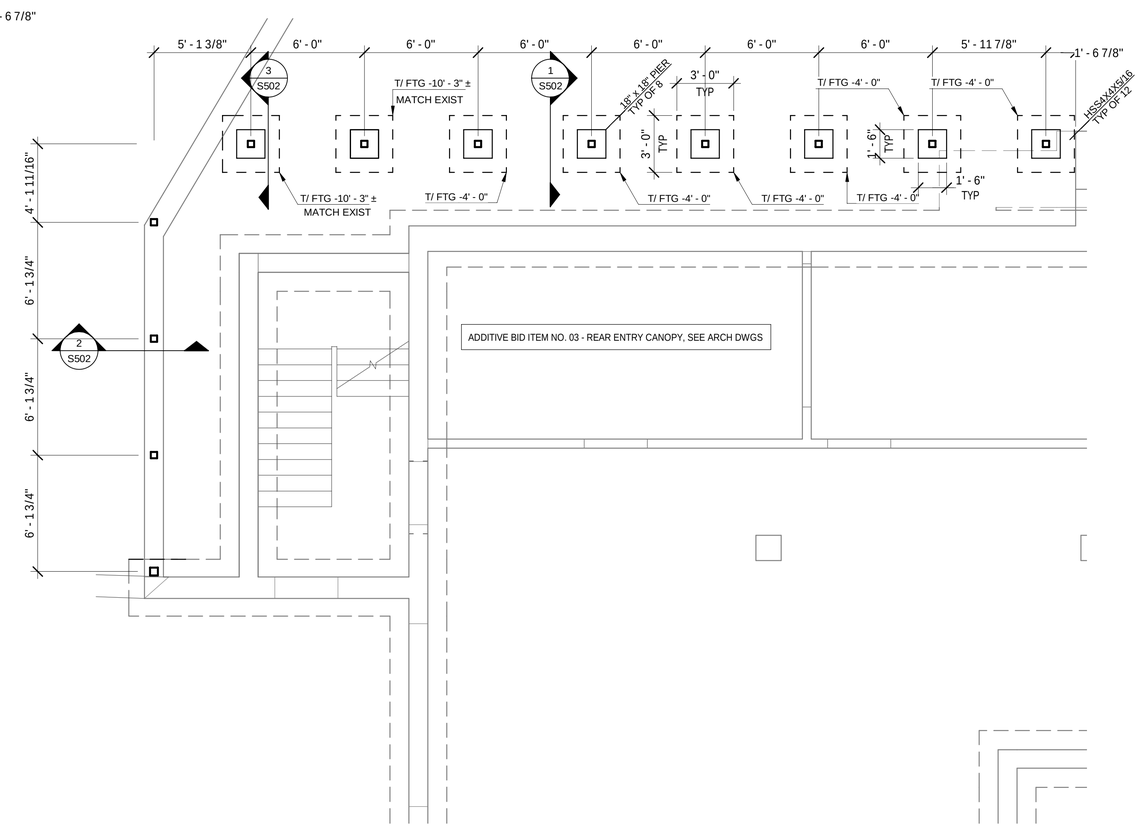

REAR COVERED WALKWAY FOUNDATION PLAN

SCALE: 1/4" = 1'-0"

IT IS A VIOLATION OF THE NEW YORK STATE EDUCATION LAW, ARTICLE 145 §7209 SPECIAL PROVISIONS, FOR ANY PERSON, UNLESS THEY ARE ACTING UNDER THE DIRECTION OF A LICENSED PROFESSIONAL ENGINEER, ARCHITECT, LANDSCAPE ARCHITECT, OR LAND SURVEYOR, TO ALTER AN ITEM IN ANY WAY. IF AN ITEM BEARING THE STAMP OF A LICENSED PROFESSIONAL IS ALTERED, THE ALTERING PROFESSIONAL SHALL STAMP THE DOCUMENT AND INCLUDE THE NOTATION "ALTERED BY" FOLLOWED BY THEIR SIGNATURE, THE DATE OF SUCH ALTERATION, AND A SPECIFIC DESCRIPTION OF THE ALTERATION.

REVISIONS

CITY OF MIDDLETOWN
NEW COURTHOUSE FACILITY

PARTIAL FOUNDATION AND FRAMING PLANS

CITY OF MIDDLETOWN
ORANGE COUNTY, NEW YORK

Barton & Loguidice
443 Electronics Parkway
Liverpool, NY 13088
NYS CERTIFICATE # 0021642, 0020588, 0019803, 0019905, 0020336

STATE OF NEW YORK · MATTHEW C. FOLLETT · 070743 · LICENSED PROFESSIONAL ENGINEER

NYS EXP.: May 31, 2026

Date: AUGUST, 2024

Scale: AS SHOWN

Sheet Number: S102

Project Number: 1753.008.001

Plotted: 8/20/2024 1:40:08 PM
D:\1a - Local Revit Files\Middletown Courthouse 6.22.21 Central File - ARCHITECTURAL STRUCTURAL MODEL_pstevens-STRUCT.rvt
Checked by: Checker Drawn by: PS Designed by: PS In Charge of: MCF

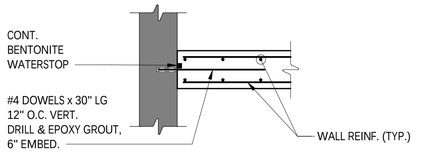

PLAN VIEW

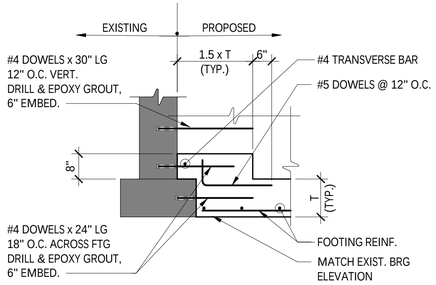

SECTION VIEW

NOTES:
1. SEE PLANS FOR EXISTING AND PROPOSED WALL THICKNESS AND REINFORCING.
2. DETAIL SHALL BE USED UNLESS NOTED OTHERWISE ON DRAWINGS.

NEW TO EXIST. FNDN WALL CONNECTION

NOT TO SCALE

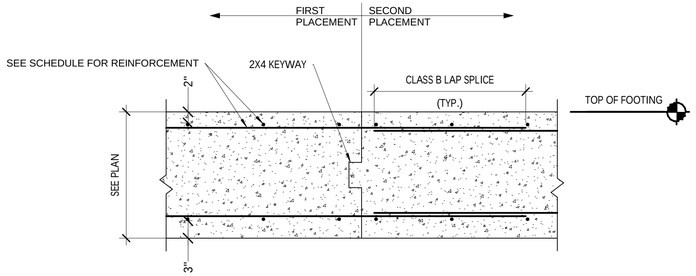

NOTES:
1. LOCATE CONSTRUCTION JOINT AT A CONTROL JOINT (CJ) LOCATION AND STOP EVERY OTHER TOP AND BOTTOM LONGITUDINAL BAR 2" CLR. FROM FACE OF JOINT.
2. LOCATIONS TO BE DETERMINED IN FIELD AT APPROXIMATELY 30' - 0" O.C. (MAX) SPACING.
3. PREPARE JOINT FACE PRIOR TO CONTINUING CONCRETE PLACEMENT IN ACCORDANCE WITH THE SPECIFICATIONS.
4. CONTRACTOR SHALL WAIT 48 HOURS BETWEEN PLACEMENT OF ADJACENT SECTIONS OF CONCRETE.

TYP. FOOTING CONSTRUCTION JOINT

NOT TO SCALE

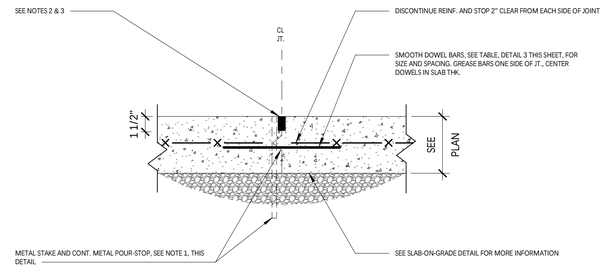

NOTES:
1. METAL CONSTRUCTION JOINT MUST BE CONTINUOUS FOR THE FULL WIDTH OF THE POUR. INDIVIDUAL SHORT SECTIONS ARE NOT PERMITTED. IN ORDER TO OBTAIN A CONTINUOUS STRIP, LAP AND FIELD WELD THE SECTIONS. METAL JOINT MATERIAL SHALL BE REMOVED PRIOR TO PLACING CONCRETE AT ADJACENT SLAB. TOP OF METAL STAKE SHALL BE LOCATED 1-INCH (MIN.) BELOW TOP OF FINAL CONC. SLAB ELEVATION.
2. PROVIDE JOINT SIZE AT TOP OF SLAB TO ACCOMMODATE INSTALLED SEALANT DIMENSIONS OF 2(W):1(D) AND AN APPROPRIATELY SIZED (DIA.) CLOSED CELL POLYETHYLENE FOAM BACKER ROD, OR BOND BREAKER TAPE.
3. FILL JOINTS W/ JOINT SEALANT AND BACKER ROD, OR BOND BREAKER TAPE.
4. PROVIDE APPR'D. MFGR'D. DOWEL/BASKET ASSEMBLIES W/ DOWELS WELDED AT ALTERNATING ENDS (GREASE OPPOSITE ENDS).
5. JOINTS TO BE LOCATED AT CONTROL JT. LOC'S. UNLESS NOTED OTHERWISE, OR DIRECTED BY THE ENGINEER. IF NOT LOCATED AT A SPECIFIED CONTROL JOINT LOCATION NOTIFY ENGINEER FOR FURTHER DIRECTION.
6. SEE "TYP. SLAB-ON-GRADE CONTROL JOINT (CJ)" FOR DOWEL SIZE REQ'S.

TYP. SLAB ON GRADE CONSTRUCTION JOINT

NOT TO SCALE

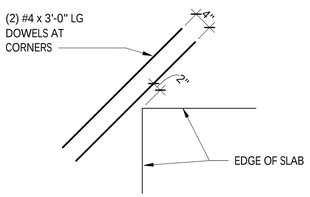

DETAIL NOTES:
1. THIS DETAIL SHALL OCCUR AT DOOR OPENINGS.
2. DOWELS SHALL BE LOCATED IN THE TOP OF THE SLAB, WHILE MAINTAINING PROPER COVER.

S.O.G. REINF. AT RE-ENTRANT CORNERS

NOT TO SCALE

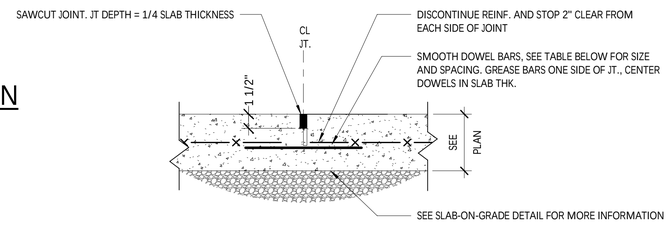

SLAB DEPTH	DOWEL DIMENSIONS			DOWEL SPACING CENTER TO CENTER		
	ROUND	SQUARE	RECTANGULAR	ROUND	SQUARE	RECTANGULAR
5" - 6"	3/4" x 14"	3/4" x 14"	3/8" x 2" x 12"	12"	14"	19"
7" - 8"	1" x 16"	1" x 16"	1/2" x 2-1/2" x 12"	12"	14"	18"
9" -12"	1-1/4" x 18"	1-1/4" x 18"	3/4" x 2-1/2" x 12"	12"	12"	18"

NOTES:
1. TOLERANCE, +0" -1/16" WITH CONCRETE SURFACE. ANY PROJECTION OF METAL ABOVE SURFACE MUST BE REMOVED BY GRINDING.
2. PROVIDE CONTROL JOINTS AT LOCATIONS AS SHOWN ON PLANS.
3. FILL JOINTS W/ JOINT SEALANT AND BACKER ROD, OR BOND BREAKER TAPE.
4. PROVIDE JOINT SIZE TO ACCOMMODATE INSTALLED SEALANT DIMENSIONS OF 2(W):1(D) AND AN APPROPRIATELY SIZED (DIA.)CLOSED CELL POLYETHYLENE FOAM BACKER ROD, OR BOND BREAKER TAPE.
5. JOINTS SHALL BE 1/4" WIDE (MIN.).
6. PROVIDE APPR'D. MFGR'D. DOWEL/BASKET ASSEMBLIES W/ DOWELS WELDED AT ALTERNATING ENDS (GREASE OPPOSITE ENDS).
7. SAWCUTTING SHALL BE COMPLETED WITHIN 18 HOURS OF CONCRETE POUR.

TYP. SLAB ON GRADE CONTROL JOINT

NOT TO SCALE

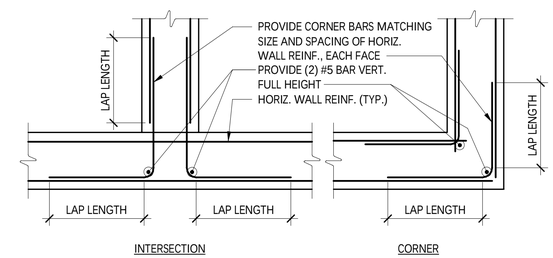

DETAIL NOTES:
1. VERTICAL WALL REINFORCING NOT SHOWN FOR CLARITY.
2. SEE "CONCRETE REINFORCING SPLICE AND EMBEDMENT" SCHEDULE FOR REQUIRED LAP LENGTHS.

CONCRETE WALL INTERSECTION AND CORNER

NOT TO SCALE

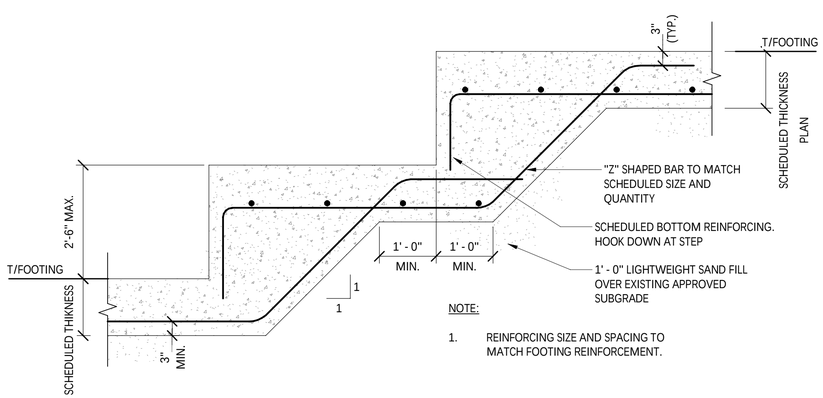

NOTE:
1. REINFORCING SIZE AND SPACING TO MATCH FOOTING REINFORCEMENT.

STEP FOOTING DETAIL

NOT TO SCALE

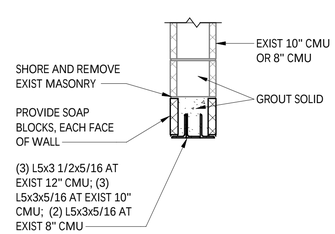

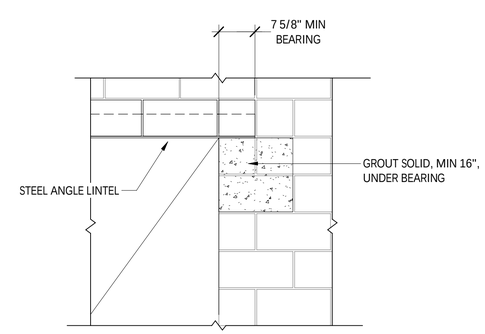

LINTEL AT EXIST CMU WALL

NOT TO SCALE

IT IS A VIOLATION OF THE NEW YORK STATE EDUCATION LAW, ARTICLE 145 §7209 SPECIAL PROVISIONS, FOR ANY PERSON, UNLESS THEY ARE ACTING UNDER THE DIRECTION OF A LICENSED PROFESSIONAL ENGINEER, ARCHITECT, LANDSCAPE ARCHITECT, OR LAND SURVEYOR, TO ALTER AN ITEM IN ANY WAY. IF AN ITEM BEARING THE STAMP OF A LICENSED PROFESSIONAL IS ALTERED, THE ALTERING PROFESSIONAL SHALL STAMP THE DOCUMENT AND INCLUDE THE NOTATION "ALTERED BY" FOLLOWED BY THEIR SIGNATURE, THE DATE OF SUCH ALTERATION, AND A SPECIFIC DESCRIPTION OF THE ALTERATION.

REVISIONS

CITY OF MIDDLETOWN
NEW COURTHOUSE FACILITY

TYPICAL DETAILS

ORANGE COUNTY, NEW YORK

CITY OF MIDDLETOWN

Barton & Loguidice
443 Electronics Parkway
Liverpool, NY 13088
NYS CERTIFICATE # 0021642, 0020588, 0019903, 0019905, 0020336

STATE OF NEW YORK · MATTHEW C. FULLER · 070743 · LICENSED PROFESSIONAL ENGINEER

NYS EXP.: May 31, 2026

Date
AUGUST, 2024

Scale
AS SHOWN

Sheet Number
S501

Project Number
1753.008.001

Plotted: 8/20/2024 1:40:08 PM
D:\1a - Local Revit Files\Middletown Courthouse 6.22.21 Central File - ARCHITECTURAL STRUCTURAL MODEL_pstevens.rvt
Checked by: Checker Drawn by: PS Designed by: PS In Charge of: MCF

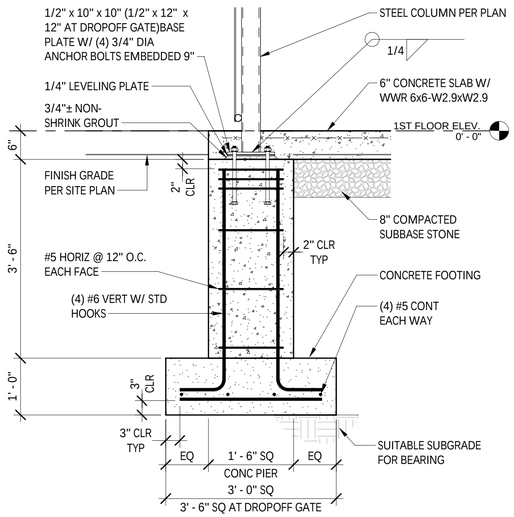

1 S102 COVERED WALKWAY COLUMN FOOTING

SCALE: 3/4" = 1'-0"

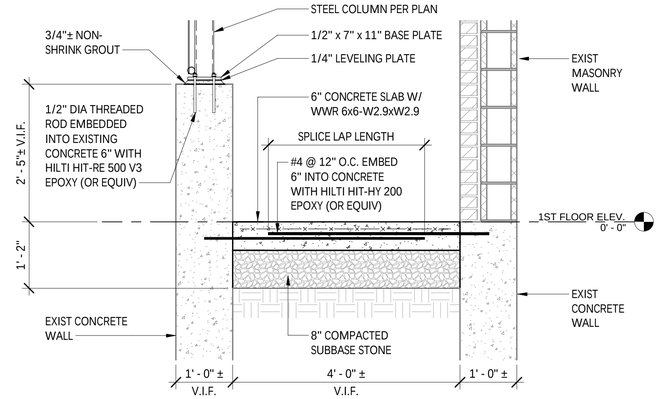

2 S102 REAR COVERED WALKWAY COLUMN AT EXIST RETAINING WALL

SCALE: 3/4" = 1'-0"

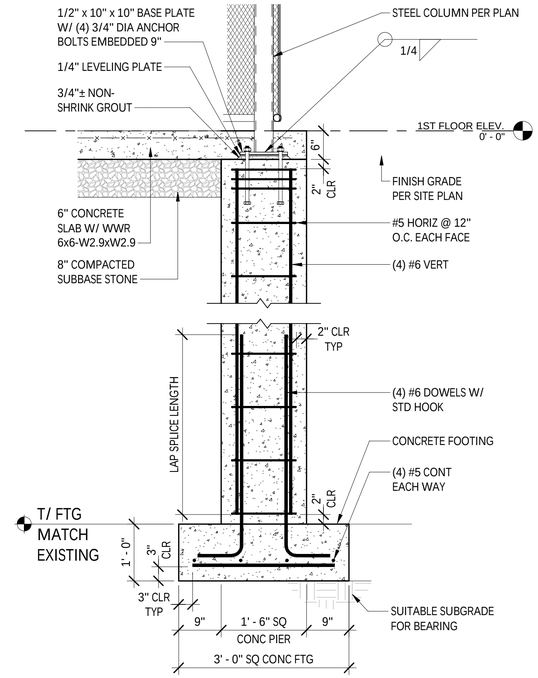

3 S102 REAR COVERED WALKWAY COLUMN FOOTING

SCALE: 3/4" = 1'-0"

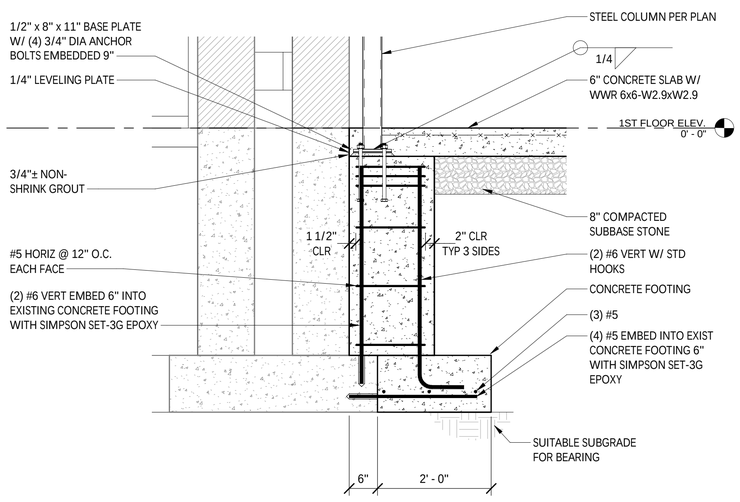

4 S102 CANOPY FOOTING AT EXIST WALL

SCALE: 3/4" = 1'-0"

ADDITIVE BID ITEM NO. 02 - FRONT ENTRY CANOPY, SEE ARCH DWGS
ADDITIVE BID ITEM NO. 03 - REAR ENTRY CANOPY, SEE ARCH DWGS

IT IS A VIOLATION OF THE NEW YORK STATE EDUCATION LAW, ARTICLE 145 §7209 SPECIAL PROVISIONS, FOR ANY PERSON, UNLESS THEY ARE ACTING UNDER THE DIRECTION OF A LICENSED PROFESSIONAL ENGINEER, ARCHITECT, LANDSCAPE ARCHITECT, OR LAND SURVEYOR, TO ALTER AN ITEM IN ANY WAY. IF AN ITEM BEARING THE STAMP OF A LICENSED PROFESSIONAL IS ALTERED, THE ALTERING PROFESSIONAL SHALL STAMP THE DOCUMENT AND INCLUDE THE NOTATION "ALTERED BY" FOLLOWED BY THEIR SIGNATURE, THE DATE OF SUCH ALTERATION, AND A SPECIFIC DESCRIPTION OF THE ALTERATION.

REVISIONS

CITY OF MIDDLETOWN
NEW COURTHOUSE FACILITY

FRONT ENTRANCE CANOPY AND REAR COVERED WALKWAY FOUNDATION DETAILS

CITY OF MIDDLETOWN ORANGE COUNTY, NEW YORK

Barton & Loguidice
443 Electronics Parkway
Liverpool, NY 13088
NYS CERTIFICATE # 0021642, 0020588, 0019903, 0019905, 0020336

STATE OF NEW YORK · MATTHEW C. FULLER · 070743 · LICENSED PROFESSIONAL ENGINEER

NYS EXP.: May 31, 2026

Date	AUGUST, 2024
Scale	AS SHOWN
Sheet Number	S502
Project Number	1753.008.001

Plotted: 8/20/2024 1:40:09 PM
D:\1a - Local Revit Files\Middletown Courthouse 6.22.21 Central File - ARCHITECTURAL STRUCTURAL
MODEL_jstevens4SVF.rvt
Checked by ____ Checker ____ Drawn by PS ____ Designed by PS ____ In Charge of ____ MCF

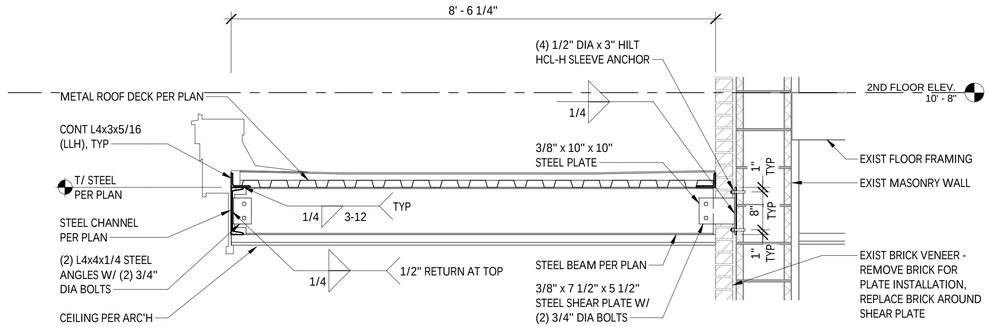

1 S102 ENTRANCE CANOPY SECTION

SCALE: 3/4" = 1'-0"

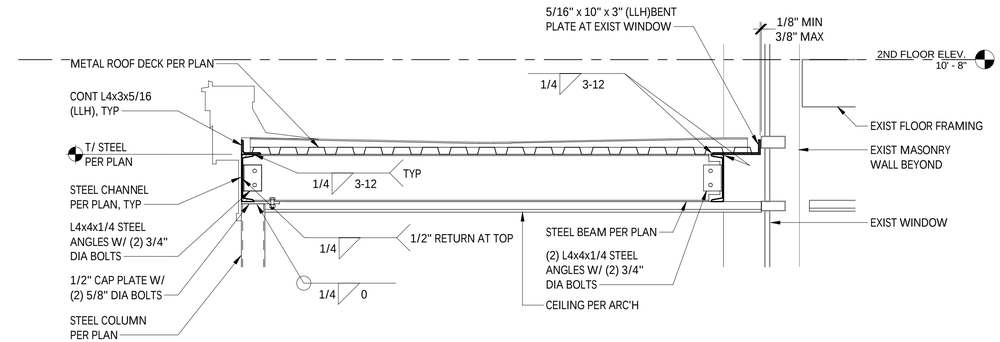

2 S102 ENTRANCE CANOPY SECTION AT COLUMN

SCALE: 3/4" = 1'-0"

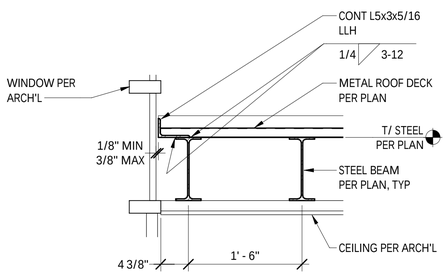

3 S102 ENTRANCE CANOPY AT VESTIBULE

SCALE: 1" = 1'-0"

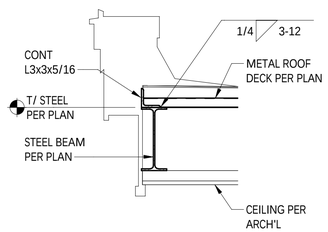

4 S102 METAL ROOF DECK AT STEEL BEAM

SCALE: 1" = 1'-0"

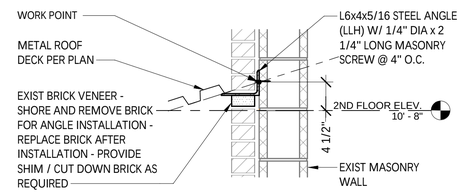

5 S102 METAL ROOF DECK AT EXIST WALL

SCALE: 1" = 1'-0"

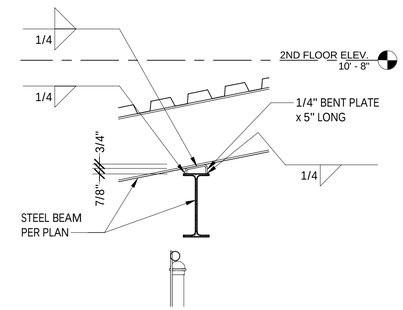

6 S102 STEEL BEAM AT STEEL BEAM CONNECTION

SCALE: 1" = 1'-0"

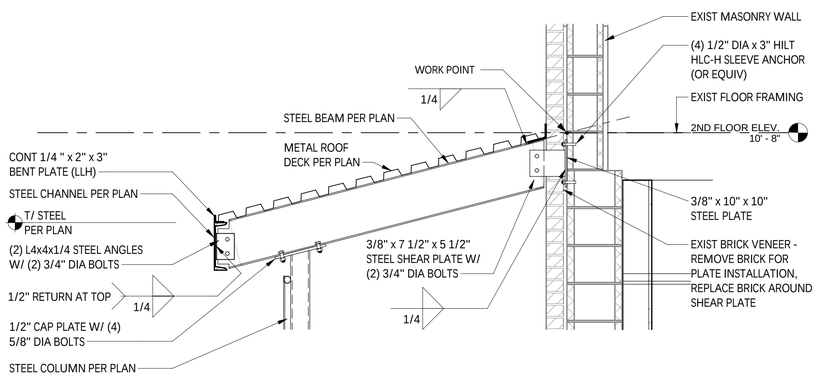

7 S102 COVERED WALKWAY FRAMING SECTION

SCALE: 3/4" = 1'-0"

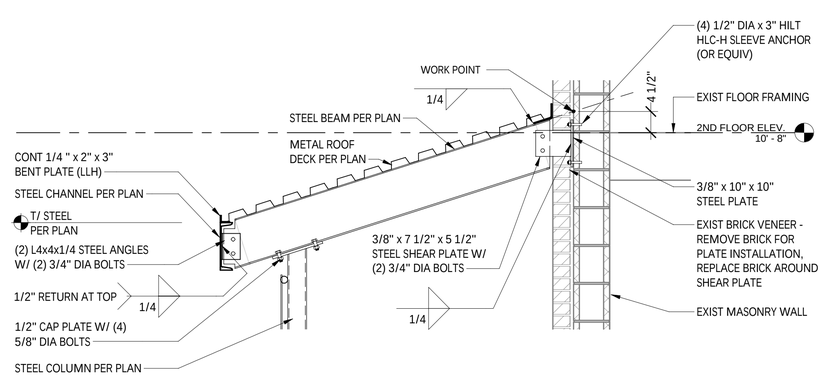

8 S102 COVERED WALKWAY FRAMING SECTION

SCALE: 3/4" = 1'-0"

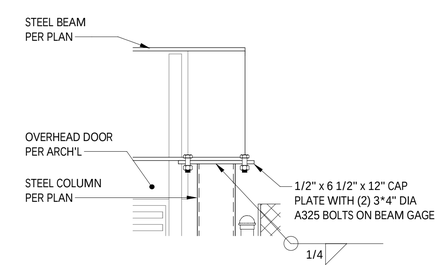

9 S102 DROPOFF GATE BEAM AT COLUMN

SCALE: 1" = 1'-0"

ADDITIVE BID ITEM NO. 02 - FRONT ENTRY CANOPY, SEE ARCH DWGS
ADDITIVE BID ITEM NO. 03 - REAR ENTRY CANOPY, SEE ARCH DWGS

IT IS A VIOLATION OF THE NEW YORK STATE EDUCATION LAW, ARTICLE 145 §7209 SPECIAL PROVISIONS, FOR ANY PERSON, UNLESS THEY ARE ACTING UNDER THE DIRECTION OF A LICENSED PROFESSIONAL ENGINEER, ARCHITECT, LANDSCAPE ARCHITECT, OR LAND SURVEYOR, TO ALTER AN ITEM IN ANY WAY. IF AN ITEM BEARING THE STAMP OF A LICENSED PROFESSIONAL IS ALTERED, THE ALTERING PROFESSIONAL SHALL STAMP THE DOCUMENT AND INCLUDE THE NOTATION "ALTERED BY" FOLLOWED BY THEIR SIGNATURE, THE DATE OF SUCH ALTERATION, AND A SPECIFIC DESCRIPTION OF THE ALTERATION.

REVISIONS

CITY OF MIDDLETOWN
NEW COURTHOUSE FACILITY

FRONT ENTRANCE AND REAR COVERED WALKWAY FRAMING DETAILS

CITY OF MIDDLETOWN ORANGE COUNTY, NEW YORK

Barton & Loguidice
443 Electronics Parkway
Liverpool, NY 13088
NYS CERTIFICATE # 0021642, 0020588, 0019903, 0019905, 0020336

STATE OF NEW YORK · MATTHEW C. FULLER · 070743 · LICENSED PROFESSIONAL ENGINEER

NYS EXP.: May 31, 2026

Date: AUGUST, 2024

Scale: AS SHOWN

Sheet Number: S503

Project Number: 1753.008.001

Plotted: 8/20/2024 1:40:09 PM
D:\1a - Local Revit Files\Middletown Courthouse 6.22.21 Central File - ARCHITECTURAL STRUCTURAL
MODEL_jstevens4ESV.rvt
Checked by: Checker Drawn by: PS Designed by: PS In Charge of: MCF

GENERAL NOTES:

1. DRAWINGS ARE DIAGRAMMATIC AND INDICATE GENERAL ARRANGEMENT OF SYSTEMS AND WORK INCLUDED IN THE CONTRACT. IT IS INTENDED THAT ALL COMPONENTS AND MATERIALS REQUIRED TO MAKE THE SYSTEMS COMPLETE, TESTED AND OPERATIONAL BE INSTALLED.
2. CONTRACTOR SHALL FIELD VERIFY ALL LOCATIONS, DIMENSIONS AND ELEVATIONS BEFORE DEMOLITION AND CONSTRUCTION.
3. ALL MATERIALS, EQUIPMENT, METHODS OF INSTALLATION, REMOVALS AND DISPOSAL SHALL BE IN ACCORDANCE WITH THE STANDARDS, REGULATIONS, CODES, ORDINANCES, AND LAWS OF AUTHORITIES THAT HAVE LAWFUL JURISDICTION.
4. COMPLETELY COORDINATE WORK OF THIS CONTRACT WITH WORK OF OTHER CONTRACTORS AND OWNERS WORK.
5. PROTECT ALL EXISTING BUILDING ELEMENTS AND SITE ELEMENTS TO REMAIN FROM ANY DAMAGE. CONTRACTOR SHALL RESTORE ALL EXISTING CONDITIONS AFFECTED BY DEMOLITION AND CONSTRUCTION TO ORIGINAL OR BETTER CONDITION.
6. WORK SHALL BE EXECUTED IN A WORKMANLIKE MANNER AND SHALL PRESENT NEAT, RECTILINEAR APPEARANCE WHEN COMPLETED. MAINTAIN MAXIMUM HEAD ROOM AT ALL TIMES.
7. MATERIALS AND EQUIPMENT SHALL BE NEW AND INSTALLED ACCORDING TO MANUFACTURER'S INSTRUCTIONS AND RECOMMENDATIONS. MAINTAIN MANUFACTURER'S EQUIPMENT CLEARANCES.
8. ALL EQUIPMENT PIPING, WIRING, INSULATION AND ANCILLARY MATERIALS INSTALLED IN HVAC AIR PLENUM SPACES SHALL MEET CODE REQUIREMENTS FOR SMOKE AND COMBUSTIBILITY.
9. DO NOT SUPPORT EQUIPMENT FROM SUSPENDED CEILINGS. ALL SUPPORT SHALL COME FROM BUILDING STRUCTURE. SUPPORTS SHALL BE SELECTED AND INSTALLED TO PROVIDE A VIBRATION FREE INSTALLATION.
10. DUCTWORK SHALL BE CONSTRUCTED AND INSTALLED IN ACCORDANCE WITH THE LATEST ISSUES OF SMACNA STANDARDS.
11. PROVIDE PROPER ACCESS TO MATERIALS AND EQUIPMENT THAT REQUIRE INSPECTION, REPLACEMENT, REPAIR OR SERVICE SUCH AS COILS, DAMPERS, HEATERS, VALVES, ETC. IF PROPER ACCESS CANNOT BE PROVIDED, CONFER WITH THE ENGINEER AS TO THE BEST METHOD OF APPROACH TO MINIMIZE THE EFFECT OF THE REDUCED ACCESS WHICH MAY RESULT.
12. RELOCATE EXISTING DUCTING, PIPING, CONDUIT AND OTHER INTERFERENCES TO INSTALL NEW EQUIPMENT AND MATERIALS. OFFSETS IN PIPING AND DUCTS, DIVIDED DUCTS AND TRANSITIONS AROUND OBSTRUCTIONS SHALL BE PROVIDED AT NO ADDITIONAL COST TO OWNER.
13. THOROUGHLY CLEAN ALL NEW DUCTWORK AFTER INSTALLATION.
14. NOTES, SYMBOLS LIST AND DETAILS ARE APPLICABLE TO ALL DRAWINGS IN THE CONTRACT.
15. ALL WORK SHOWN IS TO BE COMPLETED BY THIS CONTRACT UNLESS SPECIFICALLY INDICATED OTHERWISE.
16. FIRE STOP ALL NEW AND EXISTING SLEEVES THROUGH CONCRETE FLOORS AND FIRE RATED WALLS OR PARTITIONS WITH UL RATED ASSEMBLIES WITH EQUAL FIRE RATING. SEE ARCHITECTURAL PLANS FOR LOCATIONS OF FIRE RATED FLOOR AND WALL ASEMBLIES.
17. CONTRACTOR IS RESPONSIBLE FOR ALL OWNER COORDINATION AND PROCEDURES RELATED TO ISOLATING, SHUTTING DOWN, DRAINING, FILLING AND RESTARTING SYSTEMS, INCLUDING THOSE REQUIRED FOR RELOCATIONS, TO ALLOW FOR COMPLETION OF ALL DEMOLITION AND NEW WORK. INTERRUPTIONS TO EXISTING SERVICES AND SYSTEMS SHALL BE AS SHORT AS POSSIBLE AND AT A TIME AND DURATION APPROVED BY THE OWNER. INCLUDE ALL PREMIUM TIME ASSOCIATED WITH INTERRUPTIONS. ALL SYSTEM INTERRUPTIONS SHALL BE SCHEDULED WITH OWNER AND COORDINATED WITH OTHER CONTRACTORS. CONTRACTOR SHALL FURNISH ALL FLUIDS REQUIRED, INCLUDING GLYCOL FOR FILLING NEW SYSTEMS AND REFILLING EXISTING SYSTEMS.

ABBREVIATIONS:

∠ - ANGLE
AAD - AUTOMATIC AIR DAMPER
ALUM - ALUMINUM
BLDG - BUILDING
BSMT - BASEMENT
BOT - BOTTOM
CFM - CUBIC FEET PER MINUTE
CJ - CONTROL JOINT
CL - CENTER LINE
CLG - CEILING
CLR - CLEAR
CMU - CONCRETE MASONRY UNITS
CONC - CONCRETE
CONST - CONSTRUCTION
DEMO - DEMOLISH, DEMOLITION
DN - DOWN
EA - EACH
EC - ELECTRICAL CONTRACTOR
ELEC - ELECTRICAL
ELEV - ELEVATION
EQUIP - EQUIPMENT
E.S.P - EXTERNAL STATIC PRESSURE
EX, EXIST - EXISTING
FIN FLR - FINISHED FLOOR
FLA - FULL LOAD AMPS
FPM - FEET PER MINUTE
FTG - FOOTING
GA - GAUGE
GALV - GALVANIZED
GC - GENERAL CONTRACTOR

ABBREVIATIONS (CONT.):

HP - HORSE POWER
HZ - HERTZ
INSUL - INSULATION
INV - INVERT
MANUF - MANUFACTURER
MAX - MAXIMUM
MC - MECHANICAL CONTRACTOR
MIN - MINIMUM
MTL - METAL
NAT - NATURAL
NTS - NOT TO SCALE
OD - OUTSIDE DIAMETER
PLAS - PLASTIC
RD - ROOF DRAIN
SAN - SANITARY
SHT - SHEET
SIM - SIMILAR
SS - STAINLESS STEEL
STL - STEEL
T/ - TOP OF
T&B - TOP AND BOTTOM
TEMP - TEMPERED
TYP - TYPICAL
VIF - VERIFY IN FIELD
W.G - WATER GAUGE

LEGEND

- SLOPE DN IN DIRECTION OF ARROW
- BREAK
- PIPING/EQUIPMENT TO BE REMOVED
- LIMIT OF REMOVAL
- CONNECTION POINT TO EXISTING
- TEE RISE
- TEE DROP
- PIPE RISE
- PIPE DROP
- DIRECTION OF FLOW
- CAP
- UNION
- CONCENTRIC REDUCER
- FLANGED CONNECTION
- FLEXIBLE CONNECTION
- BUTTERFLY VALVE
- PRESSURE GAUGE
- THERMOMETER
- MANUAL AIR VENT
- AUTOMATIC AIR VENT
- STRAINER
- SWING CHECK VALVE
- BALL VALVE
- GATE VALVE

LEGEND

- GLOBE VALVE
- TRIPLE DUTY VALVE
- BALANCE VALVE
- BALL VALVE W/ HOSE CONNECTION, CAP AND CHAIN
- PRESSURE REDUCING VALVE
- SAFETY RELIEF VALVE
- TEMPERATURE SENSOR
- PUMP
- CONTROL VALVE, 3-WAY, MODULATING
- VOLUME DAMPER
- FIRE DAMPER
- SUPPLY DUCT SECTION UP
- SUPPLY DUCT SECTION DOWN
- RET/EXH DUT SECTION UP
- RET/EXH DUT SECTION DOWN
- 45º BRANCH DUCT CONNECTION
- NEW SUPPLY DIFFUSER, REGISTER OR GRILLE (WITH CFM)
- NEW RETURN/EXHAUST REGISTER OR GRILLE (WITH CFM)
- THERMOSTAT (ARROW INDICATES DEVICE)
- HWS — HOT WATER SUPPLY PIPING
- HWR — HOT WATER RETURN PIPING

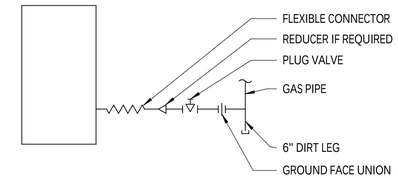

1 TYPICAL GAS FIRED APPLIANCE CONNECTION DETAIL
SCALE: NOT TO SCALE

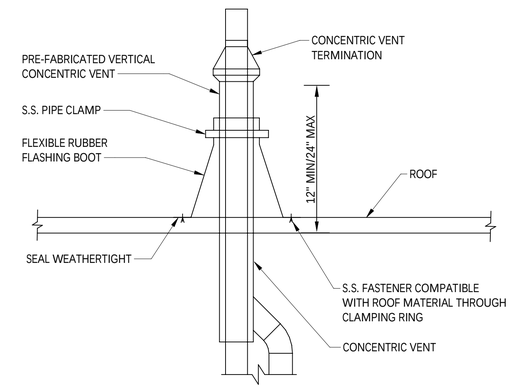

2 TYPICAL CONCENTRIC VENT DETAIL
SCALE: NOT TO SCALE

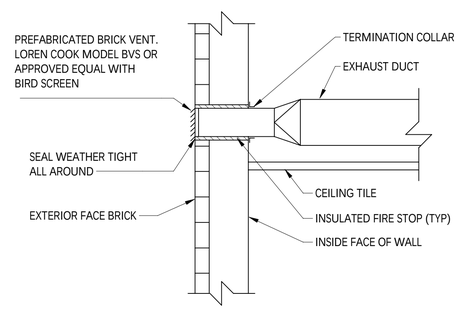

3 BRICK VENT DETAIL
SCALE: NOT TO SCALE

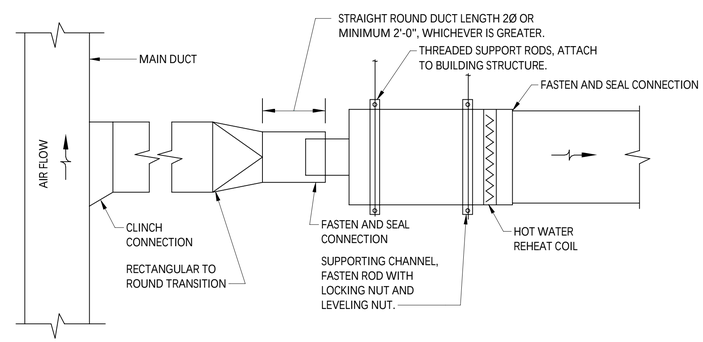

NOTES:

1. THE OPERATION OF VARIABLE AIR VOLUME TERMINAL BOX ARE AFFECTED BY EXCESSIVE TURBULENCE ON THE ENTERING SIDE OF EACH TERMINAL BOX. THEREFORE, TERMINAL BOX MUST NOT BE INSTALLED TOO CLOSE TO MAIN DUCTS, ELBOWS AND FITTINGS.
2. WHEN MINIMUM UPSTREAM STRAIGHT DUCT CONNECTION TO TERMINALS AS INDICATED ABOVE CANNOTBE MAINTAINED, PROVIDE ORIFICE PLATE, STRAIGHTENING VANES OR OTHER DEVICE AS RECOMMENDEDBY TERMINAL BOX MANUFACTURER AND SUBMIT TO ENGINEER FOR REVIEW PRIOR TO INSTALLATION.
3. DDC PANELS & MOTORS FOR NEW VAV TERMINAL BOXES SHALL BE PROVIDED BY CONTROLS MANUFACTURER AND SHALL BE DELIVERED TO VAV BOX MANUFACTURER. DDC PANEL SHALL CONTAIN STEP DOWN TRANSFORMER (120V AC TO 24V AC) TO POWER CONTROL & MOTOR. BOX MANUFACTURER SHALL FACTORY MOUNT DDC CONTROLLER & MOTOR ON LEFT OR RIGHT HAND SIDE OF VAV BOXES TO SUIT FIELD CONDITIONS VAV BOX MANUFACTURER WILL PROVIDE ALL SENSORS & DAMPER WITH LINKAGES.
4. ARRANGE ACCESS TO PERMIT EASY FIELD BALANCE AND MAINTENANCE OF TERMINAL UNIT.

6 VAV BOX INSTALLATION DETAIL
SCALE: NOT TO SCALE

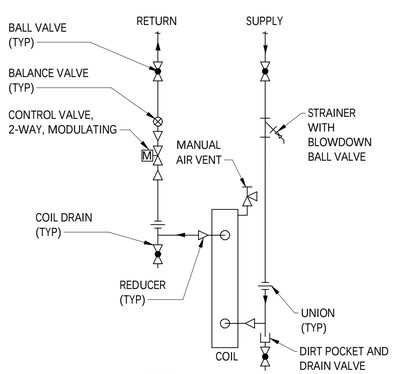

NOTES:

1. REFER TO DRAWINGS FOR LINE SIZES.
2. ALL ISOLATION VALVES AND ACCESSORIES SHALL BE LINE SIZE UNLESS OTHERWISE SHOWN.

4 HOT WATER REHEAT COIL DETAIL
SCALE: NOT TO SCALE

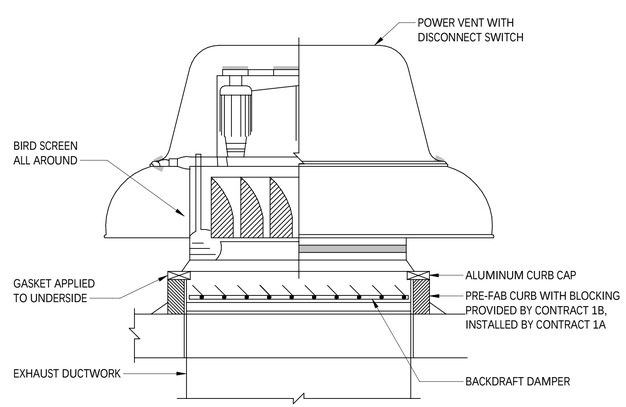

5 EXHAUST FAN DETAIL
SCALE: NOT TO SCALE

IT IS A VIOLATION OF THE NEW YORK STATE EDUCATION LAW, ARTICLE 145 §7209 SPECIAL PROVISIONS, FOR ANY PERSON, UNLESS THEY ARE ACTING UNDER THE DIRECTION OF A LICENSED PROFESSIONAL ENGINEER, ARCHITECT, LANDSCAPE ARCHITECT, OR LAND SURVEYOR, TO ALTER AN ITEM IN ANY WAY. IF AN ITEM BEARING THE STAMP OF A LICENSED PROFESSIONAL IS ALTERED, THE ALTERING PROFESSIONAL SHALL STAMP THE DOCUMENT AND INCLUDE THE NOTATION "ALTERED BY" FOLLOWED BY THEIR SIGNATURE, THE DATE OF SUCH ALTERATION, AND A SPECIFIC DESCRIPTION OF THE ALTERATION.

REVISIONS

CITY OF MIDDLETOWN
NEW COURTHOUSE FACILITY
CONTRACT 1B - MECHANICAL CONSTRUCTION

SYMBOLS AND ABBREVIATIONS

CITY OF MIDDLETOWN ORANGE COUNTY, NEW YORK

B&L
Barton & Loguidice, D.P.C.
443 Electronics Parkway
Liverpool, NY
13088

STATE OF NEW YORK ERIC J. HORVAT LICENSED PROFESSIONAL ENGINEER No. 089099

NYS EXP.: 11/30/2025

Date: AUGUST, 2024
Scale: AS SHOWN
Sheet Number: M001
Project Number: 1753.008.001

Checked by ____ Drawn by RAD Designed by RAD In Charge of EJH

Plotted: 8/21/2024 4:01:08 PM
C:\Users\rad\Documents\Middletown Courthouse Drawings - MECHANICAL MODEL_rdarin.rvt

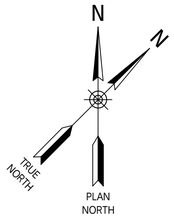

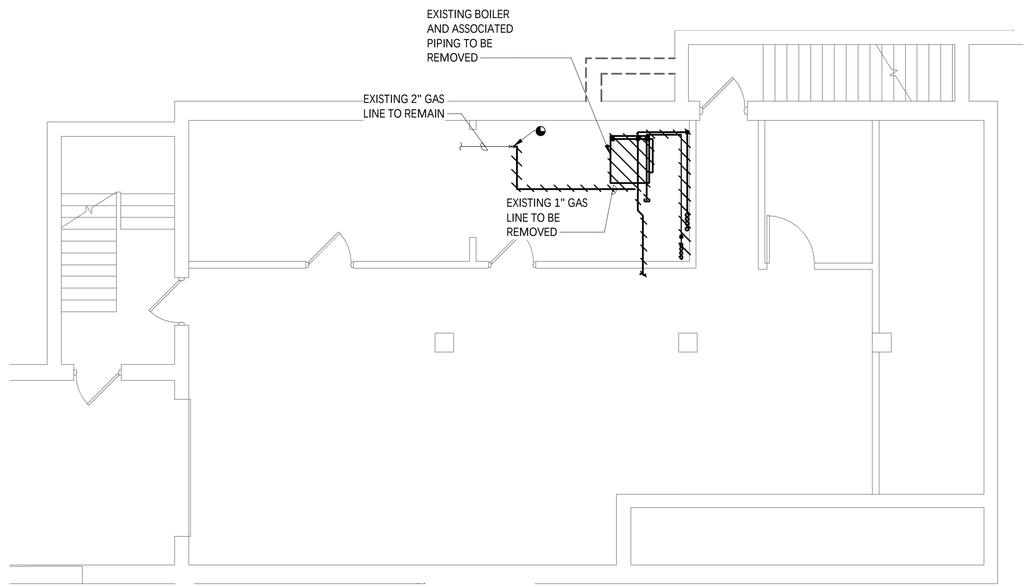

BASEMENT HVAC PIPING DEMOLITION PLAN

SCALE: 3/16" = 1'-0"

GENERAL NOTES:

1. REMOVE ALL EXISTING HOT WATER SUPPLY AND RETURN PIPING, VALVES AND INSULATION IN THE BASEMENT COMPLETE.
2. REMOVE EXISTING BOILER VENTING COMPLETE. EXISTING CHIMNEY BEING REMOVED IN CONTRACT 1A.

3/16" = 1'-0" 4' 0 6' 12'

IT IS A VIOLATION OF THE NEW YORK STATE EDUCATION LAW, ARTICLE 145 §7209 SPECIAL PROVISIONS, FOR ANY PERSON, UNLESS THEY ARE ACTING UNDER THE DIRECTION OF A LICENSED PROFESSIONAL ENGINEER, ARCHITECT, LANDSCAPE ARCHITECT, OR LAND SURVEYOR, TO ALTER AN ITEM IN ANY WAY. IF AN ITEM BEARING THE STAMP OF A LICENSED PROFESSIONAL IS ALTERED, THE ALTERING PROFESSIONAL SHALL STAMP THE DOCUMENT AND INCLUDE THE NOTATION "ALTERED BY" FOLLOWED BY THEIR SIGNATURE, THE DATE OF SUCH ALTERATION, AND A SPECIFIC DESCRIPTION OF THE ALTERATION.

REVISIONS

CITY OF MIDDLETOWN
NEW COURTHOUSE FACILITY
CONTRACT 1B - MECHANICAL CONSTRUCTION

BASEMENT HVAC DEMOLITION PLAN

CITY OF MIDDLETOWN ORANGE COUNTY, NEW YORK

B&L
Barton & Loguidice, D.P.C.
443 Electronics Parkway
Liverpool, NY
13088

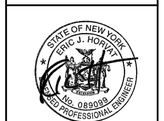

NYS EXP.: 11/30/2025

Date: AUGUST, 2024

Scale: AS SHOWN

Sheet Number: M100

Project Number: 1753.008.001

Checked by ____ Drawn by RAD Designed by RAD In Charge of EJH

Plotted: 8/21/2024 4:01:10 PM
C:\Users\rad\Documents\Middletown Courthouse Drawings - MECHANICAL MODEL_rdarin.rvt

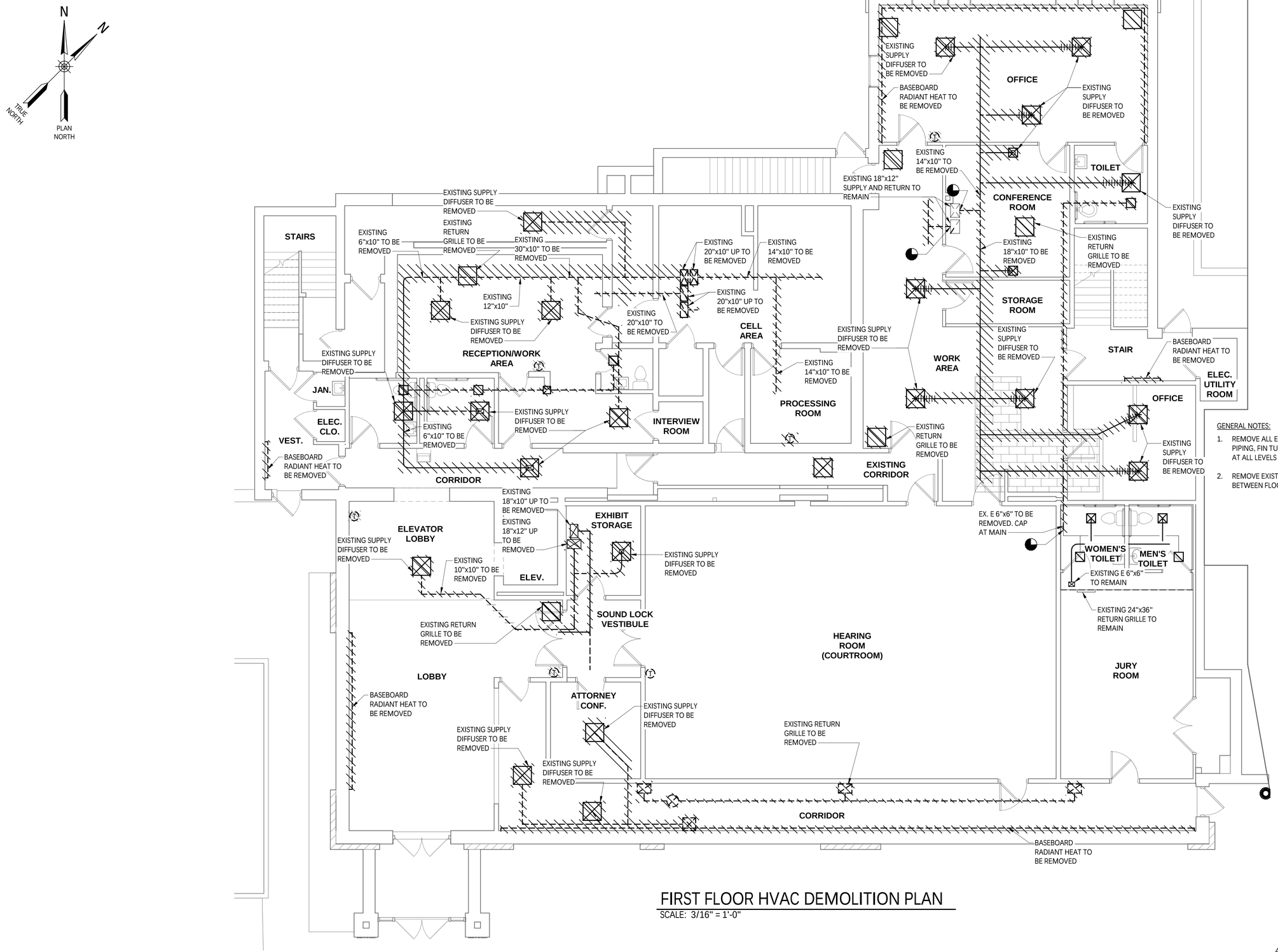

FIRST FLOOR HVAC DEMOLITION PLAN

SCALE: 3/16" = 1'-0"

GENERAL NOTES:

1. REMOVE ALL EXISTING HOT WATER SUPPLY AND RETURN PIPING, FIN TUBE, THERMOSTATS, VALVES AND INSULATION AT ALL LEVELS COMPLETE.
2. REMOVE EXISTING DUCTWORK AND DUCTWORK INSULATION BETWEEN FLOORS UNLESS SPECIFICALLY SHOWN TO REMAIN.

3/16" = 1'-0" 4' 0 6' 12'

IT IS A VIOLATION OF THE NEW YORK STATE EDUCATION LAW, ARTICLE 145 §7209 SPECIAL PROVISIONS, FOR ANY PERSON, UNLESS THEY ARE ACTING UNDER THE DIRECTION OF A LICENSED PROFESSIONAL ENGINEER, ARCHITECT, LANDSCAPE ARCHITECT, OR LAND SURVEYOR, TO ALTER AN ITEM IN ANY WAY. IF AN ITEM BEARING THE STAMP OF A LICENSED PROFESSIONAL IS ALTERED, THE ALTERING PROFESSIONAL SHALL STAMP THE DOCUMENT AND INCLUDE THE NOTATION "ALTERED BY" FOLLOWED BY THEIR SIGNATURE, THE DATE OF SUCH ALTERATION, AND A SPECIFIC DESCRIPTION OF THE ALTERATION.

REVISIONS

CITY OF MIDDLETOWN
NEW COURTHOUSE FACILITY
CONTRACT 1B - MECHANICAL CONSTRUCTION

FIRST FLOOR HVAC DEMOLITION PLAN

CITY OF MIDDLETOWN ORANGE COUNTY, NEW YORK

B&L
443 Electronics Parkway
Liverpool, NY
13088
Barton & Loguidice, D.P.C.

STATE OF NEW YORK ERIC J. HORVAT No. 089098 LICENSED PROFESSIONAL ENGINEER

NYS EXP.: 11/30/2025

Date: AUGUST, 2024

Scale: AS SHOWN

Sheet Number: M101

Project Number: 1753.008.001

Plotted: 8/21/2024 4:01:11 PM
C:\Users\rad\Documents\Middletown Courthouse Drawings - MECHANICAL MODEL_rdarin.rvt

Checked by ____ Drawn by RAD Designed by RAD In Charge of EJH

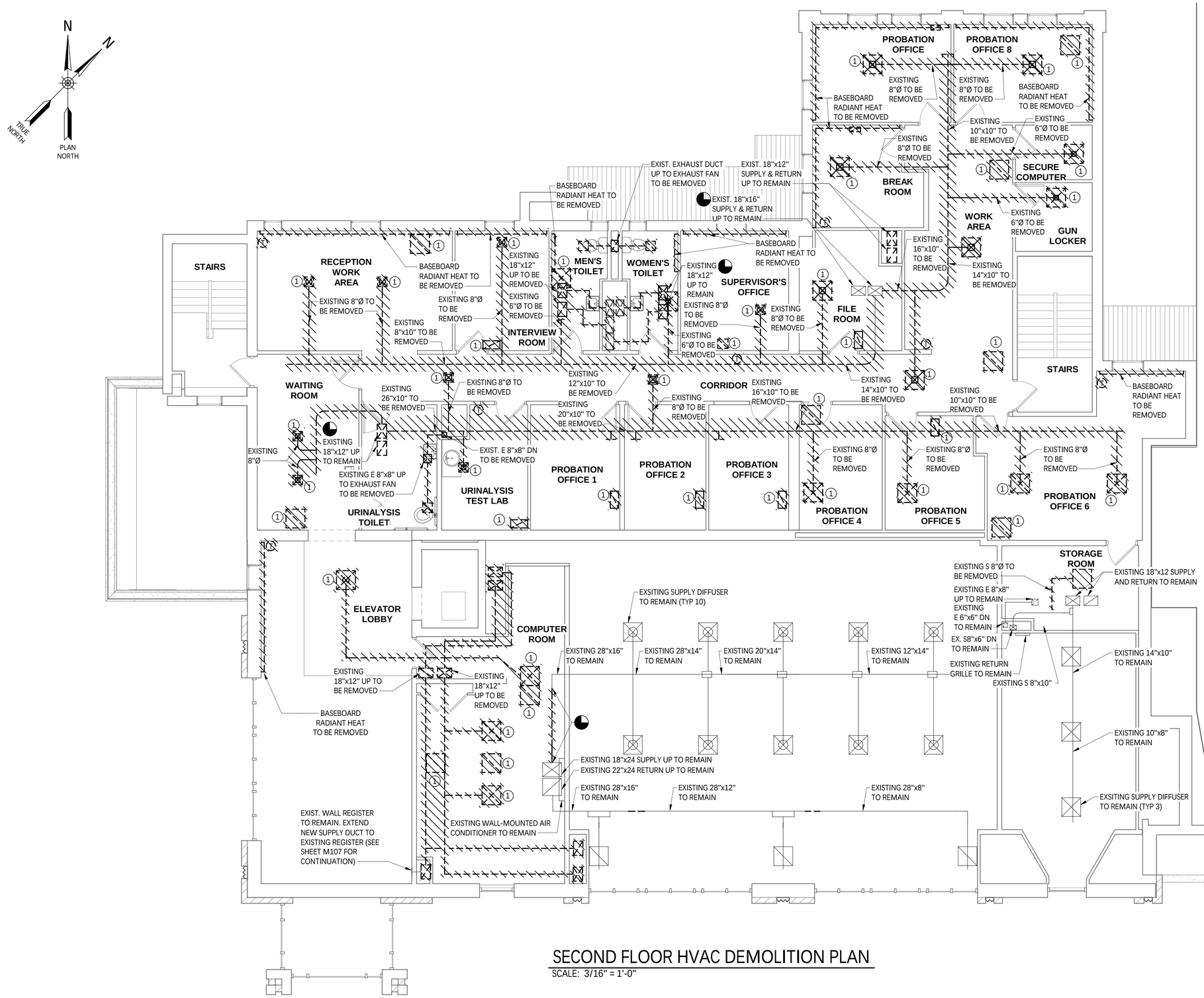

SECOND FLOOR HVAC DEMOLITION PLAN

SCALE: 3/16" = 1'-0"

GENERAL NOTES:

1. REMOVE ALL EXISTING HOT WATER SUPPLY AND RETURN PIPING, FIN TUBE, THERMOSTATS, VALVES AND INSULATION AT ALL LEVELS COMPLETE.
2. REMOVE EXISTING DUCTWORK AND DUCTWORK INSULATION BETWEEN FLOORS UNLESS SPECIFICALLY SHOWN TO REMAIN.

KEYED NOTES:

1. REMOVE SUPPLY DIFFUSER OR RETURN DIFFUSER IN ITS ENTIRETY.

3/16" = 1'-0" 4' 0 6' 12'

IT IS A VIOLATION OF THE NEW YORK STATE EDUCATION LAW, ARTICLE 145 §7209 SPECIAL PROVISIONS, FOR ANY PERSON, UNLESS THEY ARE ACTING UNDER THE DIRECTION OF A LICENSED PROFESSIONAL ENGINEER, ARCHITECT, LANDSCAPE ARCHITECT, OR LAND SURVEYOR, TO ALTER AN ITEM IN ANY WAY. IF AN ITEM BEARING THE STAMP OF A LICENSED PROFESSIONAL IS ALTERED, THE ALTERING PROFESSIONAL SHALL STAMP THE DOCUMENT AND INCLUDE THE NOTATION "ALTERED BY" FOLLOWED BY THEIR SIGNATURE, THE DATE OF SUCH ALTERATION, AND A SPECIFIC DESCRIPTION OF THE ALTERATION.

REVISIONS	
2	1/31/23 ADD. 2

CITY OF MIDDLETOWN
NEW COURTHOUSE FACILITY
CONTRACT 1B - MECHANICAL CONSTRUCTION

SECOND FLOOR HVAC DEMOLITION PLAN

CITY OF MIDDLETOWN ORANGE COUNTY, NEW YORK

B&L
443 Electronics Parkway
Liverpool, NY
13088
Barton & Loguidice, D.P.C.

STATE OF NEW YORK ERIC J. HORVAT NO. 089098 LICENSED PROFESSIONAL ENGINEER

NYS EXP.: 11/30/2025

Date: AUGUST, 2024

Scale: AS SHOWN

Sheet Number: M102

Project Number: 1753.008.001

Plotted: 8/21/2024 4:01:11 PM
C:\Users\rad\Documents\Middletown Courthouse Drawings - MECHANICAL MODEL_rdarin.rvt

Checked by ____ Drawn by RAD Designed by RAD In Charge of EJH

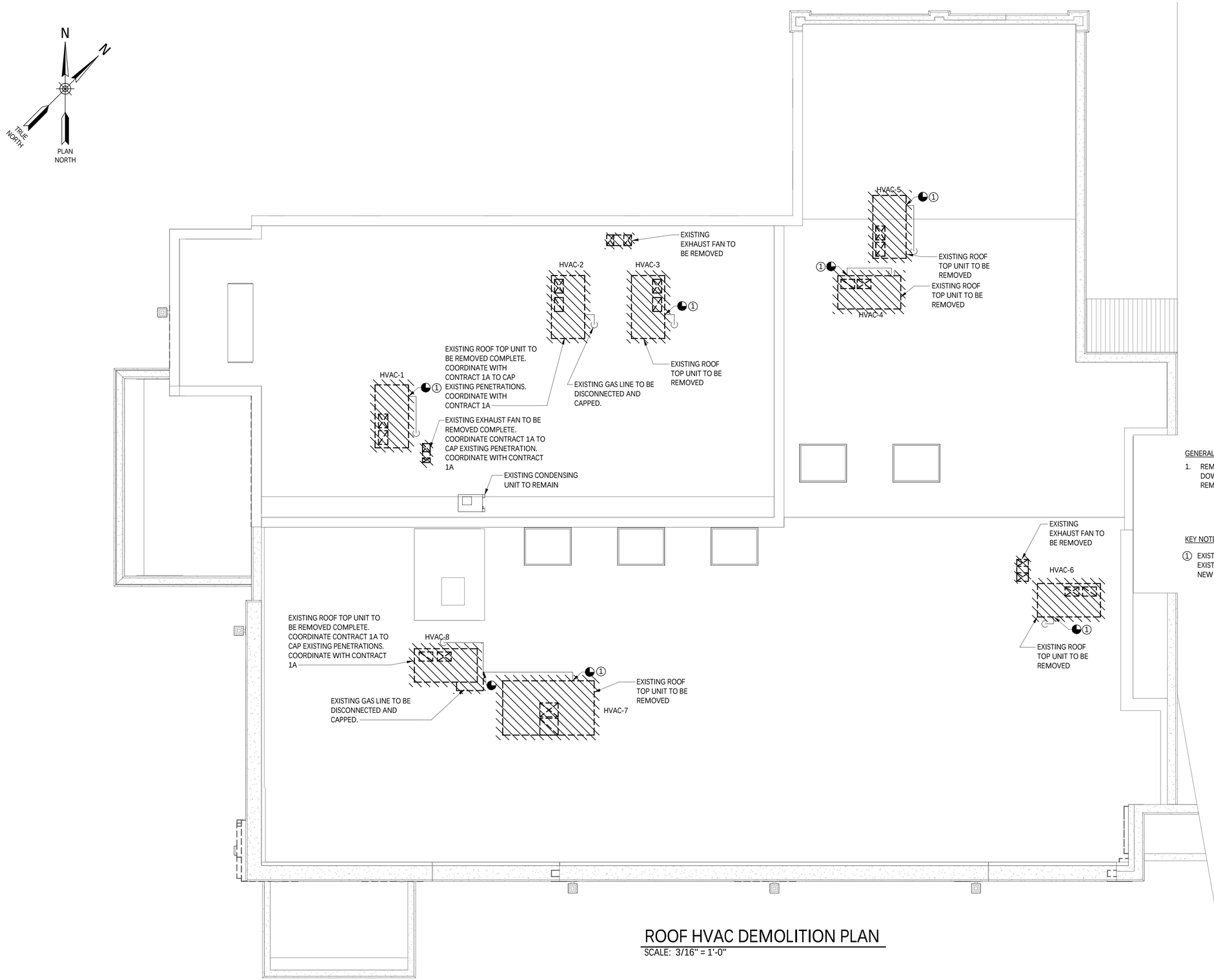

ROOF HVAC DEMOLITION PLAN

SCALE: 3/16" = 1'-0"

GENERAL NOTES:

1. REMOVE EXISTING DUCTWORK AND DUCTWORK INSULATION DOWN THROUGH ROOF UNLESS SPECIFICALLY SHOWN TO REMAIN.

KEY NOTES:

1. EXISTING GAS LINE TO BE DISCONNECTED FROM EXISTING ROOFTOP UNITS AND RECONNECTED TO NEW ROOFTOP UNITS.

IT IS A VIOLATION OF THE NEW YORK STATE EDUCATION LAW, ARTICLE 145 §7209 SPECIAL PROVISIONS, FOR ANY PERSON, UNLESS THEY ARE ACTING UNDER THE DIRECTION OF A LICENSED PROFESSIONAL ENGINEER, ARCHITECT, LANDSCAPE ARCHITECT, OR LAND SURVEYOR, TO ALTER AN ITEM IN ANY WAY. IF AN ITEM BEARING THE STAMP OF A LICENSED PROFESSIONAL IS ALTERED, THE ALTERING PROFESSIONAL SHALL STAMP THE DOCUMENT AND INCLUDE THE NOTATION "ALTERED BY" FOLLOWED BY THEIR SIGNATURE, THE DATE OF SUCH ALTERATION, AND A SPECIFIC DESCRIPTION OF THE ALTERATION.

REVISIONS

CITY OF MIDDLETOWN
NEW COURTHOUSE FACILITY
CONTRACT 1B - MECHANICAL CONSTRUCTION

ROOF HVAC DEMOLITION PLAN

CITY OF MIDDLETOWN ORANGE COUNTY, NEW YORK

B&L
443 Electronics Parkway
Liverpool, NY
13088
Barton & Loguidice, D.P.C.

STATE OF NEW YORK
ERIC J. HORVAT
LICENSE NO. 089099
PROFESSIONAL ENGINEER

NYS EXP.: 11/30/2025

Date: AUGUST, 2024

Scale: AS SHOWN

Sheet Number: M103

Project Number: 1753.008.001

Plotted: 8/21/2024 4:01:12 PM
C:\Users\rad\Documents\Middletown Courthouse Drawings - MECHANICAL MODEL_rdarin.rvt

Checked by ____ Drawn by RAD Designed by RAD In Charge of EJH

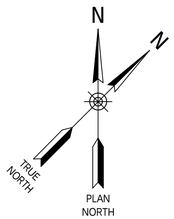

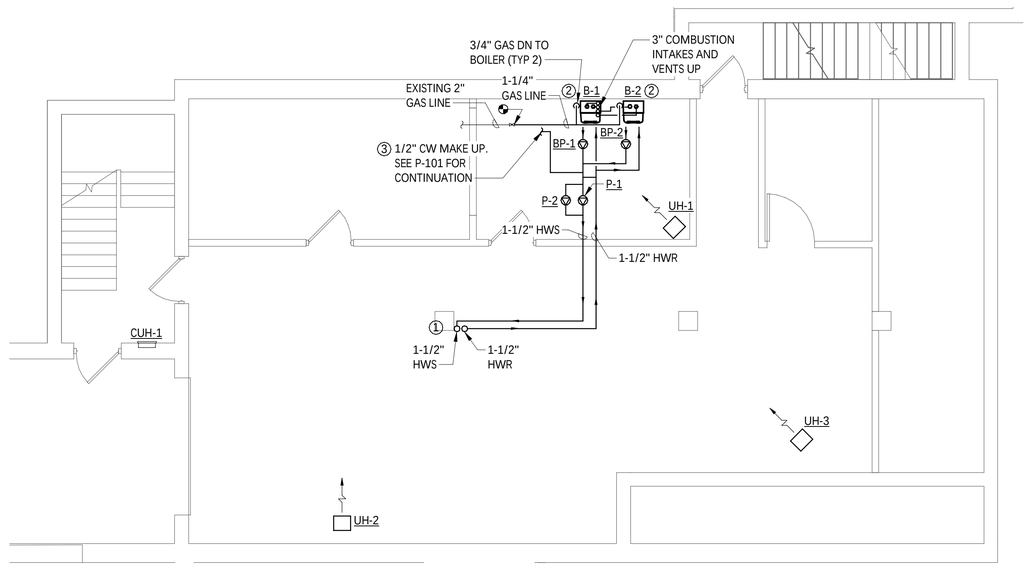

BASEMENT HVAC PIPING PLAN

SCALE: 3/16" = 1'-0"

KEY NOTES:

① CORE DRILL THROUGH CEILING TO FLOOR ABOVE TO ACCOMODATE NEW PIPING. FIRE CAULK PENETRATIONS.

② NEW BOILERS ARE FLOOR MOUTNED. PROVIDE 6" CONCRETE EQUIPMENT PAD BELOW BOILERS.

③ COORDINATE NEW COLD WATER MAKE-UP CONNECTION FOR BOILER SYSTEM WITH CONTRACT 1C.

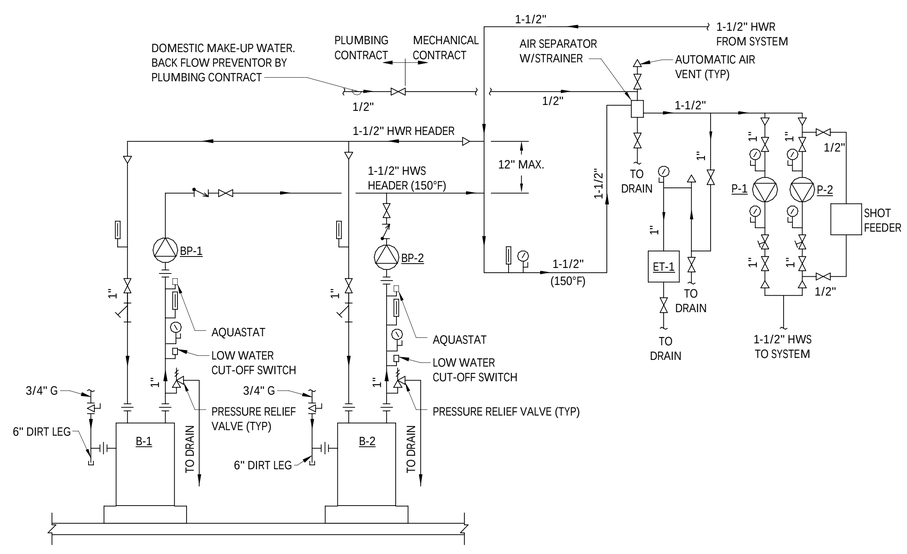

BOILER SYSTEM SCHEMATIC

NOT TO SCALE

3/16" = 1'-0" 4' 0 6' 12'

IT IS A VIOLATION OF THE NEW YORK STATE EDUCATION LAW, ARTICLE 145 §7209 SPECIAL PROVISIONS, FOR ANY PERSON, UNLESS THEY ARE ACTING UNDER THE DIRECTION OF A LICENSED PROFESSIONAL ENGINEER, ARCHITECT, LANDSCAPE ARCHITECT, OR LAND SURVEYOR, TO ALTER AN ITEM IN ANY WAY. IF AN ITEM BEARING THE STAMP OF A LICENSED PROFESSIONAL IS ALTERED, THE ALTERING PROFESSIONAL SHALL STAMP THE DOCUMENT AND INCLUDE THE NOTATION "ALTERED BY" FOLLOWED BY THEIR SIGNATURE, THE DATE OF SUCH ALTERATION, AND A SPECIFIC DESCRIPTION OF THE ALTERATION.

REVISIONS

CITY OF MIDDLETOWN
NEW COURTHOUSE FACILITY
CONTRACT 1B - MECHANICAL CONSTRUCTION

BASEMENT HVAC PIPING PLAN

ORANGE COUNTY, NEW YORK

CITY OF MIDDLETOWN

B&L
443 Electronics Parkway
Liverpool, NY
13088
Barton & Loguidice, D.P.C.

STATE OF NEW YORK · ERIC J. HORNEY · LICENSED PROFESSIONAL ENGINEER · No. 089009

NYS EXP.: 11/30/2025

Date	AUGUST, 2024
Scale	AS SHOWN
Sheet Number	M104
Project Number	1753.008.001

Plotted: 8/21/2024 4:01:12 PM
C:\Users\rad\Documents\Middletown Courthouse Drawings - MECHANICAL MODEL_rdarin.rvt

Checked by _____ Drawn by RAD Designed by RAD In Charge of EJH

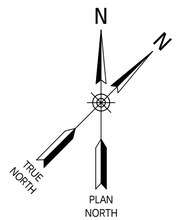

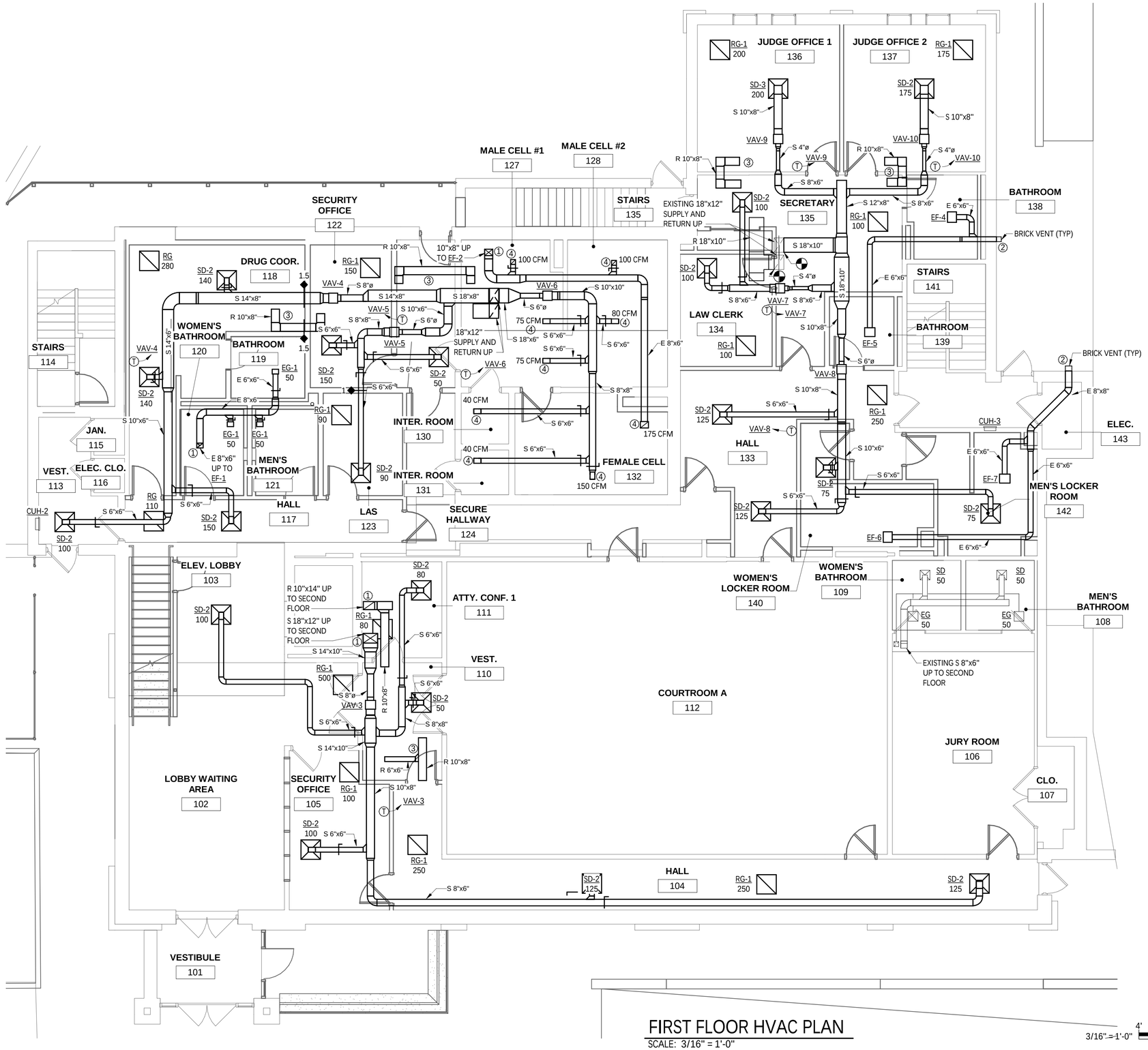

FIRST FLOOR HVAC PLAN

SCALE: 3/16" = 1'-0"

3/16"=1'-0" 4' 0 6' 12'

KEY NOTES:

1. SAW CUT THROUGH CEILING TO FLOOR ABOVE TO ACCOMODATE NEW DUCT
2. COORDINATE NEW EXHAUST/BRICK VENT PENETRATIONS WITH CONTRACT 1A. SEE DETAIL ON SHEET M001.
3. RETURN TRANSFER DUCT TO BE ACCOUSTICALLY LINED AND TERMINATED OPEN ENDED.
4. TERMINATE DUCT WITH 45 DEGREE ELBOW DOWN OPEN ENDED ABOVE CEILING PANEL PERFORATION AREAS. COORDINATE EXACT LOCATIONS WITH CONTRACT 1A.

IT IS A VIOLATION OF THE NEW YORK STATE EDUCATION LAW, ARTICLE 145 §7209 SPECIAL PROVISIONS, FOR ANY PERSON, UNLESS THEY ARE ACTING UNDER THE DIRECTION OF A LICENSED PROFESSIONAL ENGINEER, ARCHITECT, LANDSCAPE ARCHITECT, OR LAND SURVEYOR, TO ALTER AN ITEM IN ANY WAY. IF AN ITEM BEARING THE STAMP OF A LICENSED PROFESSIONAL IS ALTERED, THE ALTERING PROFESSIONAL SHALL STAMP THE DOCUMENT AND INCLUDE THE NOTATION "ALTERED BY" FOLLOWED BY THEIR SIGNATURE, THE DATE OF SUCH ALTERATION, AND A SPECIFIC DESCRIPTION OF THE ALTERATION.

REVISIONS

2	1/31/23 ADD. 2

CITY OF MIDDLETOWN
NEW COURTHOUSE FACILITY
CONTRACT 1B - MECHANICAL CONSTRUCTION

FIRST FLOOR HVAC PLAN

ORANGE COUNTY, NEW YORK

CITY OF MIDDLETOWN

B&L
Barton & Loguidice, D.P.C.
443 Electronics Parkway
Liverpool, NY
13088

STATE OF NEW YORK · ERIC J. HORVATH · LIC. NO. 089093 · LICENSED PROFESSIONAL ENGINEER

NYS EXP.: 11/30/2025

Date: AUGUST, 2024

Scale: AS SHOWN

Sheet Number: M105

Project Number: 1753.008.001

Plotted: 8/21/2024 4:01:13 PM
C:\Users\rad\Documents\Middletown Courthouse Drawings - MECHANICAL MODEL_rdarin.rvt

Drawn by RAD Designed by RAD In Charge of EJH
Checked by

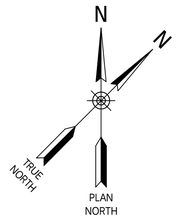

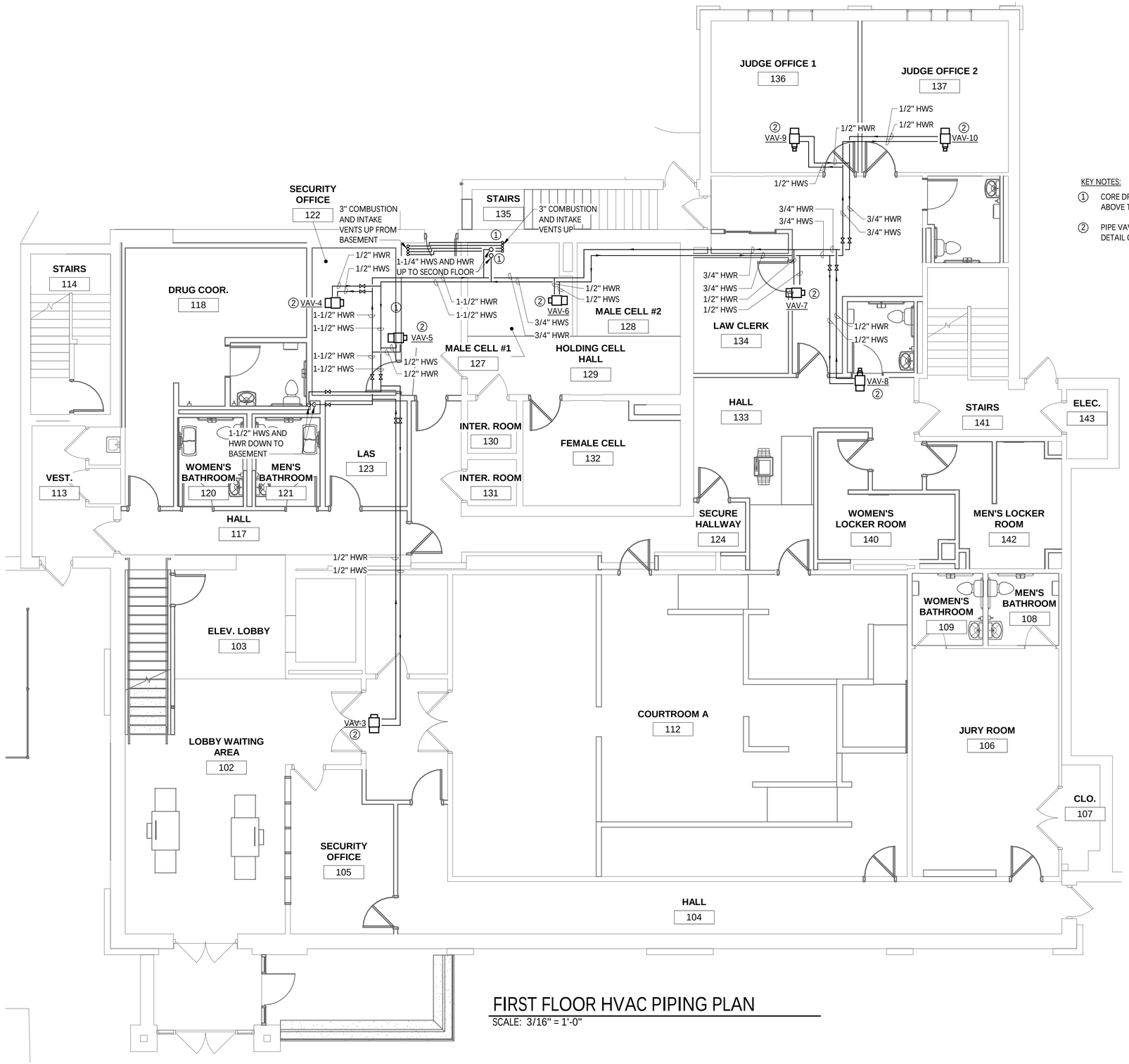

KEY NOTES:

1. CORE DRILL THROUGH CEILING TO FLOOR ABOVE TO ACCOMODATE NEW PIPING.
2. PIPE VAV'S PER HOT WATER REHEAT COIL DETAIL ON SHEET M001.

FIRST FLOOR HVAC PIPING PLAN

SCALE: 3/16" = 1'-0"

IT IS A VIOLATION OF THE NEW YORK STATE EDUCATION LAW, ARTICLE 145 §7209 SPECIAL PROVISIONS, FOR ANY PERSON, UNLESS THEY ARE ACTING UNDER THE DIRECTION OF A LICENSED PROFESSIONAL ENGINEER, ARCHITECT, LANDSCAPE ARCHITECT, OR LAND SURVEYOR, TO ALTER AN ITEM IN ANY WAY. IF AN ITEM BEARING THE STAMP OF A LICENSED PROFESSIONAL IS ALTERED, THE ALTERING PROFESSIONAL SHALL STAMP THE DOCUMENT AND INCLUDE THE NOTATION "ALTERED BY" FOLLOWED BY THEIR SIGNATURE, THE DATE OF SUCH ALTERATION, AND A SPECIFIC DESCRIPTION OF THE ALTERATION.

REVISIONS

CITY OF MIDDLETOWN
NEW COURTHOUSE FACILITY
CONTRACT 1B - MECHANICAL CONSTRUCTION

FIRST FLOOR HVAC PIPING PLAN

ORANGE COUNTY, NEW YORK

CITY OF MIDDLETOWN

B&L
443 Electronics Parkway
Liverpool, NY
13088
Barton & Loguidice, D.P.C.

STATE OF NEW YORK · ERIC J. HORVATT · No. 089099 · LICENSED PROFESSIONAL ENGINEER

NYS EXP.: 11/30/2025

Date: AUGUST, 2024

Scale: AS SHOWN

Sheet Number: M106

Project Number: 1753.008.001

Plotted: 8/21/2024 4:01:13 PM
C:\Users\rad\Documents\Middletown Courthouse Drawings - MECHANICAL MODEL_rdarin.rvt

Checked by ____ Drawn by RAD ____ Designed by RAD ____ In Charge of EJH

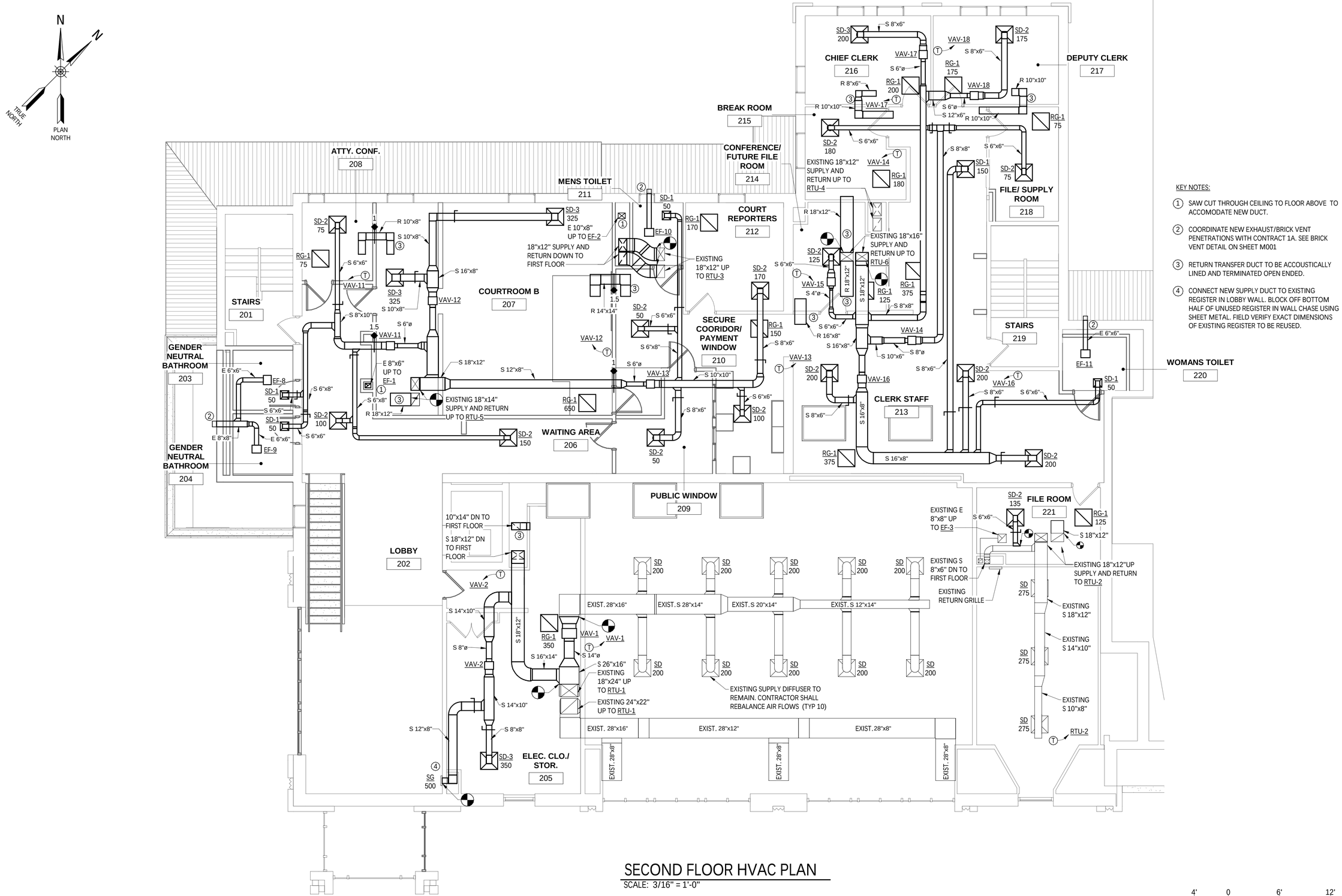

SECOND FLOOR HVAC PLAN

SCALE: 3/16" = 1'-0"

KEY NOTES:

1. SAW CUT THROUGH CEILING TO FLOOR ABOVE TO ACCOMODATE NEW DUCT.
2. COORDINATE NEW EXHAUST/BRICK VENT PENETRATIONS WITH CONTRACT 1A. SEE BRICK VENT DETAIL ON SHEET M001
3. RETURN TRANSFER DUCT TO BE ACCOUSTICALLY LINED AND TERMINATED OPEN ENDED.
4. CONNECT NEW SUPPLY DUCT TO EXISTING REGISTER IN LOBBY WALL. BLOCK OFF BOTTOM HALF OF UNUSED REGISTER IN WALL CHASE USING SHEET METAL. FIELD VERIFY EXACT DIMENSIONS OF EXISTING REGISTER TO BE REUSED.

IT IS A VIOLATION OF THE NEW YORK STATE EDUCATION LAW, ARTICLE 145 §7209 SPECIAL PROVISIONS, FOR ANY PERSON, UNLESS THEY ARE ACTING UNDER THE DIRECTION OF A LICENSED PROFESSIONAL ENGINEER, ARCHITECT, LANDSCAPE ARCHITECT, OR LAND SURVEYOR, TO ALTER AN ITEM IN ANY WAY. IF AN ITEM BEARING THE STAMP OF A LICENSED PROFESSIONAL IS ALTERED, THE ALTERING PROFESSIONAL SHALL STAMP THE DOCUMENT AND INCLUDE THE NOTATION "ALTERED BY" FOLLOWED BY THEIR SIGNATURE, THE DATE OF SUCH ALTERATION, AND A SPECIFIC DESCRIPTION OF THE ALTERATION.

REVISIONS

2	1/31/23 ADD. 2

CITY OF MIDDLETOWN
NEW COURTHOUSE FACILITY
CONTRACT 1B - MECHANICAL CONSTRUCTION

SECOND FLOOR HVAC PLAN

CITY OF MIDDLETOWN ORANGE COUNTY, NEW YORK

B&L
Barton & Loguidice, D.P.C.
443 Electronics Parkway
Liverpool, NY
13088

STATE OF NEW YORK ERIC J. HORTA LICENSE NO. 089039 PROFESSIONAL ENGINEER

NYS EXP.: 11/30/2025

Date: AUGUST, 2024

Scale: AS SHOWN

Sheet Number: M107

Project Number: 1753.008.001

Plotted: 8/21/2024 4:01:14 PM
C:\Users\rad\Documents\Middletown Courthouse Drawings - MECHANICAL MODEL_rdarin.rvt

Drawn by: RAD Designed by: RAD In Charge of: EJH Checked by:

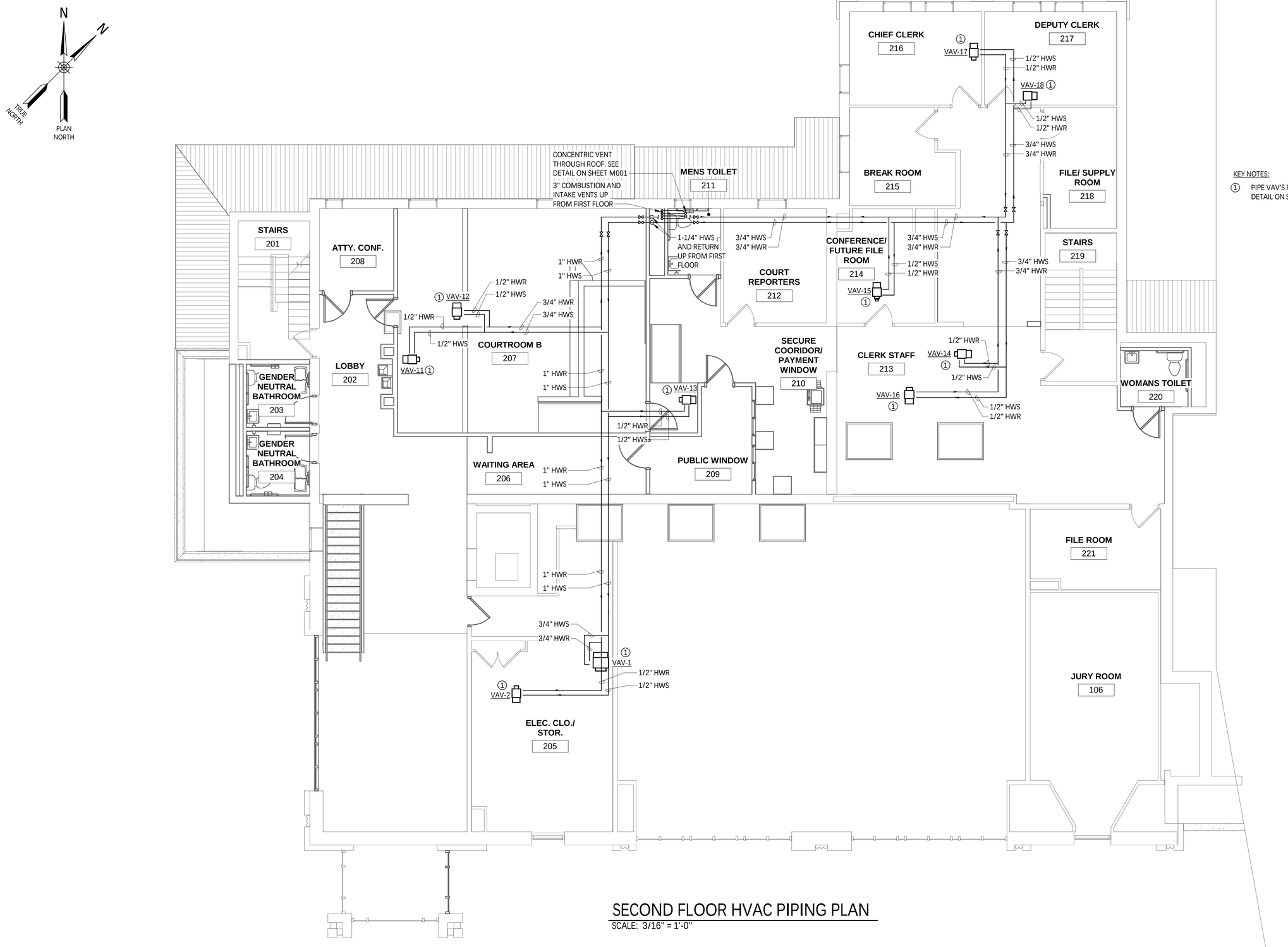

KEY NOTES:

1. PIPE VAV'S PER HOT WATER REHEAT COIL DETAIL ON SHEET M001.

SECOND FLOOR HVAC PIPING PLAN

SCALE: 3/16" = 1'-0"

IT IS A VIOLATION OF THE NEW YORK STATE EDUCATION LAW, ARTICLE 145 §7209 SPECIAL PROVISIONS, FOR ANY PERSON, UNLESS THEY ARE ACTING UNDER THE DIRECTION OF A LICENSED PROFESSIONAL ENGINEER, ARCHITECT, LANDSCAPE ARCHITECT, OR LAND SURVEYOR, TO ALTER AN ITEM IN ANY WAY. IF AN ITEM BEARING THE STAMP OF A LICENSED PROFESSIONAL IS ALTERED, THE ALTERING PROFESSIONAL SHALL STAMP THE DOCUMENT AND INCLUDE THE NOTATION "ALTERED BY" FOLLOWED BY THEIR SIGNATURE, THE DATE OF SUCH ALTERATION, AND A SPECIFIC DESCRIPTION OF THE ALTERATION.

REVISIONS

CITY OF MIDDLETOWN
NEW COURTHOUSE FACILITY
CONTRACT 1B - MECHANICAL CONSTRUCTION

SECOND FLOOR HVAC PIPING PLAN

CITY OF MIDDLETOWN
ORANGE COUNTY, NEW YORK

B&L
Barton & Loguidice, D.P.C.
443 Electronics Parkway
Liverpool, NY
13088

STATE OF NEW YORK · ERIC J. HORVATH · NO. 089099 · PROFESSIONAL ENGINEER

NYS EXP.: 11/30/2025

Date: AUGUST, 2024

Scale: AS SHOWN

Sheet Number: M108

Project Number: 1753.008.001

Plotted: 8/21/2024 4:01:15 PM
C:\Users\rad\Documents\Middletown Courthouse Drawings - MECHANICAL MODEL_rdarin.rvt

Checked by ____ Drawn by RAD ____ Designed by RAD ____ In Charge of EJH

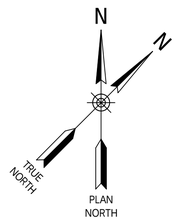

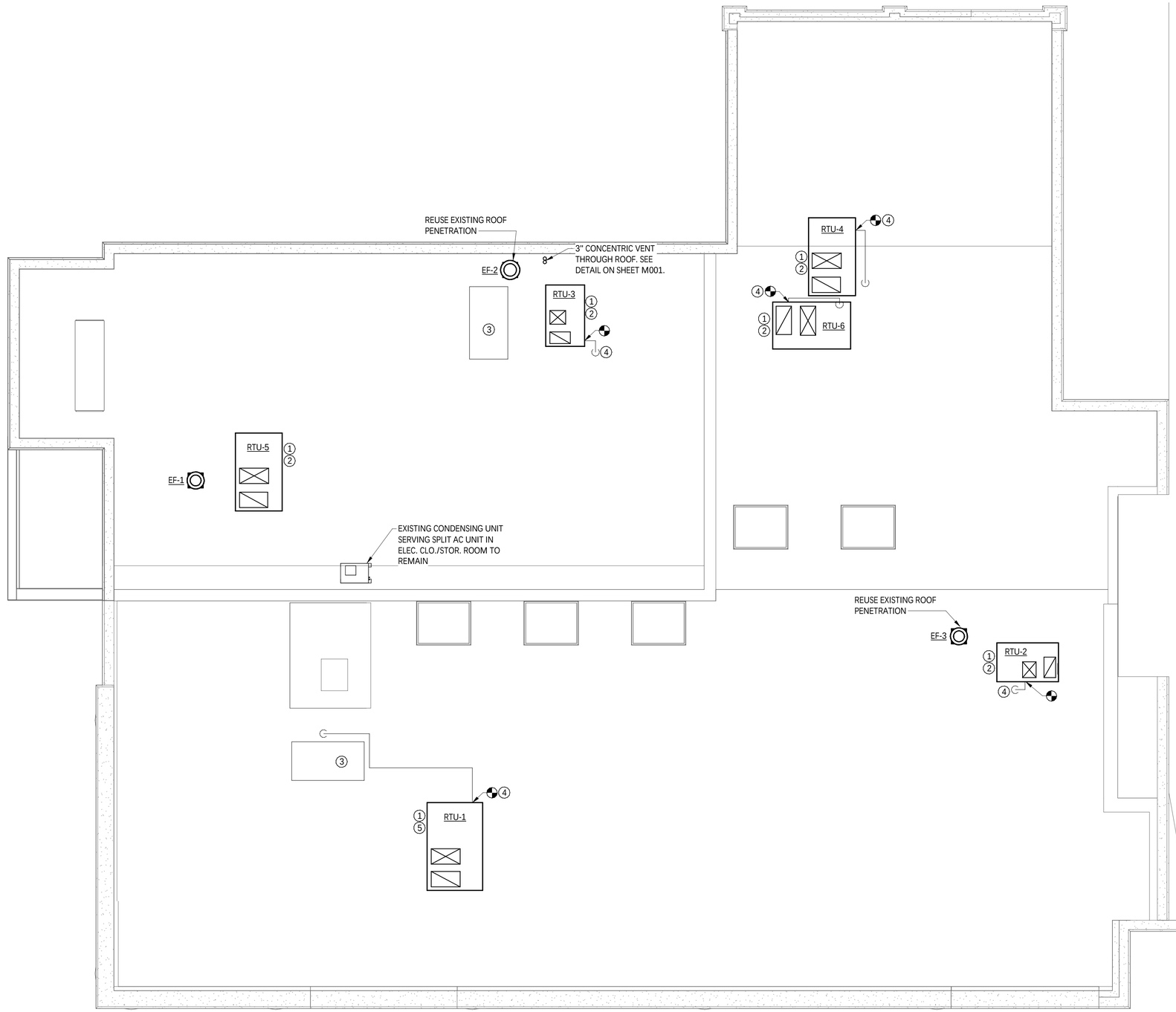

ROOF HVAC PLAN

SCALE: 3/16" = 1'-0"

KEY NOTES:

1. EXTEND NEW DUCT CONNECTIONS BETWEEN NEW ROOFTOP UNIT AND EXISTING DUCT RISERS. FIELD VERIFY EXACT DIMENSIONS BEFORE DUCT FABRICATION AND INSTALLATION. FURNISH AND INSTALL ADAPTER CURBS FOR ALL NEW UNITS. SEE TYPICAL ROOF EQUIPMENT/CURB DETAIL ON SHEET A204. COORDINATE ROOFTOP INSTALLATION WITH CONTRACT 1A.
2. ADDITIVE BID ITEM NO. 1 – REMOVE THE EXISTING ROOFTOP UNITS WITH ASSOCIATED ROOFCURBS, AND FURNISH AND INSTALL NEW ROOFTOP UNITS. NEW ROOF CURBS SHALL BE PROVIDED BY CONTRACT 1B AND INSTALLED BY CONTRACT 1A.
3. OPENINGS FOR EXISTING ROOFTOP UNITS REMOVED AND NOT REPLACED TO BE INFILLED AND REPAIRED BY CONTRACT 1A. CONTRACT 1B TO COORDINATE ASSOCIATED WORK WITH CONTRACT 1A.
4. CONNECT EXISTING GAS LINE TO NEW ROOFTOP UNIT.
5. REMOVE THE EXISTING ROOFTOP UNIT WITH ASSOCIATED ROOFCURB, AND FURNISH AND INSTALL NEW ROOFTOP UNITS. CONTRACT 1B SHALL PROVIDE NEW ROOF CURB WITH INSTALLATION BY CONTRACT 1A.

IT IS A VIOLATION OF THE NEW YORK STATE EDUCATION LAW, ARTICLE 145 §7209 SPECIAL PROVISIONS, FOR ANY PERSON, UNLESS THEY ARE ACTING UNDER THE DIRECTION OF A LICENSED PROFESSIONAL ENGINEER, ARCHITECT, LANDSCAPE ARCHITECT, OR LAND SURVEYOR, TO ALTER AN ITEM IN ANY WAY. IF AN ITEM BEARING THE STAMP OF A LICENSED PROFESSIONAL IS ALTERED, THE ALTERING PROFESSIONAL SHALL STAMP THE DOCUMENT AND INCLUDE THE NOTATION "ALTERED BY" FOLLOWED BY THEIR SIGNATURE, THE DATE OF SUCH ALTERATION, AND A SPECIFIC DESCRIPTION OF THE ALTERATION.

REVISIONS

CITY OF MIDDLETOWN
NEW COURTHOUSE FACILITY
CONTRACT 1B - MECHANICAL CONSTRUCTION

ROOF HVAC PLAN

CITY OF MIDDLETOWN, ORANGE COUNTY, NEW YORK

B&L
Barton & Loguidice, D.P.C.
443 Electronics Parkway
Liverpool, NY
13088

STATE OF NEW YORK · ERIC J. HORVAT · No. 089099 · LICENSED PROFESSIONAL ENGINEER

NYS EXP.: 11/30/2025

Date: AUGUST, 2024

Scale: AS SHOWN

Sheet Number: M109

Project Number: 1753.008.001

Checked by ____ Drawn by RAD Designed by RAD In Charge of EJH

Plotted: 8/21/2024 4:01:15 PM
C:\Users\rad\Documents\Middletown Courthouse Drawings - MECHANICAL MODEL_rdarin.rvt

ROOFTOP UNIT SCHEDULE

ITEM	SUPPLY AIR (CFM)	MIN. OUTSIDE AIR (CFM)	EXTERNAL STATIC (IN W.C.)	FAN DRIVE	FAN MOTOR HP	TOTAL COOLING CAP. (MBH)	SENSIBLE COOLING CAP. (MBH)	COOLING EAT (°F db/wb)	COOLING LAT (°F db/wb)	HEATING INPUT (MBH)	HEATING OUTPUT (MBH)	AIR TEMP RISE (°F db)	VOLTS	PHASE	MCA (AMPS)	DESIGN EQUIPMENT
RTU-1	3430	750	1.614	DIRECT	3.00	120	97.1	81.9/67.3	55.98/57.85	150	121.5	31.37	208	3	60.0	TRANE MODEL YHC120F
RTU-2	960	200	.75	DIRECT	0.75	36.58	27.30	82.5/67.6	56.16/55.14	60	48	46.5	208	3	24	TRANE MODEL YHC037E
RTU-3	1280	570	1.00	DIRECT	1.0	50.81	34.22	80.5/68.1	55.74/55.22	60	49	35.7	208	3	30	TRANE MODEL YHC047E
RTU-4	975	400	1.00	DIRECT	0.75	36.00	27.27	81.2/66.5	55.03/54.17	60	48	45.8	208	3	24	TRANE MODEL YHC037E
RTU-5	1495	450	1.00	DIRECT	1.0	54.06	39.37	83.4/68.8	59.02/57.39	80	64	43.5	208	3	30	TRANE MODEL YHC047E
RTU-6	1555	250	1.00	DIRECT	1.0	51.89	41.10	81.0/65.5	56.53/54.24	80	64	38.4	208	3	30	TRANE MODEL YHC047E

NOTES:
1. PROVIDE SMOKE DETECTOR AND CO_2 SENSOR IN RETURN DUCT MAIN, WITH ASSOCIATED WIRING AND CONTROLS.
2. PROVIDE ECONOMIZER FOR 100% OUTSIDE AIR MODE WITH DIFFERENTIAL ENTHALPY CONTROL AND TRANSMITTER, AND POWER EXHAUST.
3. PROVIDE WITH R410A TYPE REFRIGERANT, CRANKCASE HEATER AND LOW AMBIENT CONTROL.
4. PROVIDE MANUFACTURER SUPPLIED 24" ADAPTER CURB.

VARIABLE AIR VOLUME (VAV) SCHEDULE

TAG	ASSOC. UNIT	AREA SERVED	ZONE	VAV BOX				HOT WATER REHEAT COIL								DESIGN BASIS
				MAX CFM	MIN. CFM	NECK SIZE (IN)	MAX AIR PD (IN WC)	LOAD (MBH)	EWT (°F)	LWT (°F)	EAT (°F)	LAT (°F)	FLOW RATE (GPM)	MAX WATER PD (FT H2O)	COIL ROWS	
VAV-1	RTU-1	112	1	2000	570	12	0.69	31.71	150	130	55	106.3	3.18	0.56	2	TRANE VCWF12
VAV-2	RTU-1	102, 202, 205	2	850	150	8	0.66	8.86	150	130	55	108.38	0.87	0.07	2	TRANE VCWF08
VAV-3	RTU-1	103, 104, 105, 110, 111	3	580	105	8	0.36	6.43	150	130	55	111.44	0.64	0.04	2	TRANE VCWF08
VAV-4	RTU-3	113, 117, 118	4	530	105	8	0.31	6.43	150	130	55	111.44	0.64	0.04	2	TRANE VCWF08
VAV-5	RTU-3	122, 123, 124, 126	5	290	75	5	0.19	5.38	150	130	55	121.14	0.54	0.20	2	TRANE VCWF05
VAV-6	RTU-3	127, 128, 129, 130, 131, 132	6	460	150	6	0.53	9.22	150	130	55	111.69	0.92	0.52	2	TRANE VCWF06
VAV-7	RTU-4	134, 135	7	200	50	4	0.10	3.98	150	134.06	55	128.39	0.50	0.18	2	TRANE VCWF04
VAV-8	RTU-4	133, 140, 142	8	400	225	6	0.43	12.2	150	130	55	104.99	1.22	0.86	2	TRANE VCWF06
VAV-9	RTU-4	136	9	200	50	4	0.10	3.98	150	134.06	55	128.39	0.50	0.18	2	TRANE VCWF04
VAV-10	RTU-4	137	10	175	50	4	0.09	3.98	150	134.06	55	128.39	0.50	0.18	2	TRANE VCWF04
VAV-11	RTU-5	203, 204, 206, 208	11	425	150	6	0.47	9.22	150	130	55	111.69	0.92	0.52	2	TRANE VCWF06
VAV-12	RTU-5	207	12	650	275	8	0.43	13.67	150	130	55	100.85	1.37	0.16	2	TRANE VCWF08
VAV-13	RTU-5	209, 210, 211, 212	13	420	75	6	0.46	5.38	150	130	55	121.14	0.54	0.20	2	TRANE VCWF08
VAV-14	RTU-6	215, 218	14	255	50	5	0.16	3.98	150	134.06	55	128.39	0.50	0.18	2	TRANE VCWF05
VAV-15	RTU-6	214	15	125	50	4	0.06	3.98	150	134.06	55	128.39	0.50	0.18	2	TRANE VCWF04
VAV-16	RTU-6	213, 220	16	800	125	8	0.60	7.47	150	130	55	110.10	0.75	0.05	2	TRANE VCWF08
VAV-17	RTU-6	216	17	200	50	4	0.10	3.98	150	134.06	55	128.39	0.50	0.18	2	TRANE VCWF04
VAV-18	RTU-6	217	18	175	50	4	0.09	3.98	150	134.06	55	128.39	0.50	0.18	2	TRANE VCWF04

NOTES:
1. PROVIDE INSULATED ACCESS DOOR WITHIN UNIT FOR INSPECTION AND SERVICE OF DAMPER
2.FURNISH AND INSTALL VAV UNIT, REHEAT COIL, PIPING, VALVES, ALL CONTROL EQUIPMENT (INCLUDING ACTUATOR, SENSORS & LOW VOLTAGE WIRING), AND SUPPORTS.
3. PROVIDED UNIT MOUNTED DISCONNECT

DIFFUSER AND GRILLE SCHEDULE

TYPE	DESCRIPTION	MAX SONES	BLOW PATTERN	FACE SIZE (IN)	NECK SIZE (IN)	AIR FLOW (CFM)	BASIS OF DESIGN
SD-1	SUPPLY DIFFUSER	-	4-WAY	12 x 12	4Ø	0-70	TITUS TMS
SD-2	SUPPLY DIFFUSER	19	4-WAY	24 x 24	6Ø	0-180	TITUS TMS
SG-1	SUPPLY GRILLE	22	4-WAY	14 x 14	12 x 12	0-500	TITUS 300RL
RG-1	EGGCRATE RETURN GRILLE	20	-	24 x 24	-	0-650	TITUS 50F
EG-1	EXHAUST GRILLE	19	-	10 x 8	8 x 6	0-175	TITUS 350R

REMARKS:
1. BALANCE ALL DUCT BRANCHES TO CFM VALUE SHOWN.
2. REFER TO PLANS FOR QUANTITIES, AIR FLOW. ALL BRANCH DUCT CONNECTING DIFFUSER TO MAIN SHALL BE THE SAME SIZE AS THE DIFFUSER NECK.
3. VERIFY MOUNTING FRAME. REFER TO REFLECTED CEILING PLAN FOR LOCATIONS AND CEILING TYPE. COORDINATE WITH OTHER CEILING MOUNTED EQUIPMENT.
4. PROVIDE WITH OPPOSED BLADE DAMPER, ADJUSTABLE WITHOUT DISASSEMBLY.
5. PROVIDE FACTORY SUPPLIED PLENUM FOR LINEAR DIFFUSER.

BOILER (B) SCHEDULE

TAG	LOCATION	FUEL	MAXIMUM INPUT (MBH)	OUTPUT AT MAX. CAPACITY (MBH)	WATER			COMBUSTION EFFICIENCY	RELIEF VALVE SETTING (PSI)	VOLTS/ PHASE/ HZ	FULL LOAD AMPS	DESIGN EQUIPMENT
					FLOW RATE (GPM)	ENT./LVG. TEMP. (°F)	WATER CONTENT (GAL)					
B-1	BASEMENT	NG	110	101	7.5	120/150	2.5	95.1%	30	120/1	15	WEIL MCLAIN EVG-110
B-2	BASEMENT	NG	110	101	7.5	120/150	2.5	95.1%	30	120/1	15	WEIL MCLAIN EVG-110

NOTES:
1. PROVIDE COMPLETE WITH LOW-WATER CUTOFF, MANUAL RESET HIGH LIMIT AQUASTAT, PRESSURE/TEMPERATURE GAUGE AND DRAIN VALVE.
2. PROVIDE COMPLETE WITH ASME COMPLIANT PRESSURE RELIEF VALVE DESIGNED FOR THE BOILER OUTPUT CAPACITY.
3. PROVIDE DISCONNECT WITH THERMAL OVERLOAD PROTECTION.
4. HVAC CONTRACT SHALL FURNISH AND INSTALL UNIT AND ALL CONTROL EQUIPMENT, INCLUDING SENSORS, LOW VOLTAGE WIRING AND CONDUIT. LINE VOLTAGE WIRING (120V AND ABOVE) BY ELECTRICAL CONTRACT.

PUMP SCHEDULE

TAG	SERVICE	MOTOR			PUMP RPM	FLUID	FLOW (GPM)	HEAD (FT WC)	TYPE	BASIS OF DESIGN
		HP	VOLTS	PHASE						
BP-1	BOILER B-1	1/8	115	1	3250	WATER	7.2	10	INLINE	TACO ECM OO15e
BP-2	BOILER B-2	1/8	115	1	3250	WATER	7.2	10	INLINE	TACO ECM OO15e
P-1	HOT WATER LOOP	1/2	115	1	1725	WATER	18	20	INLINE (CLOSE COUPLED)	BELL & GOSSETT e-90 1.25AAB
P-2	HOT WATER LOOP	1/2	115	1	1725	WATER	18	20	INLINE (CLOSE COUPLED)	BELL & GOSSETT e-90 1.25AAB

NOTES:
1. PROVIDE WITH COMBINATION MOTOR STARTER/DISCONNECT AND INTERLOCK OPERATION WITH ASSOCIATED BOILER.
2. RATED FOR 125PSI MAXIMUM WORKING PRESSURE AND 225°F MAXIMUM OPERATING TEMPERATURE.
3. FURNISH AND INSTALL UNIT AND ALL CONTROL EQUIPMENT, INCLUDING SENSORS , LOW VOLTAGE WIRING AND CONDUIT.

EXPANSION TANK (ET) SCHEDULE

TAG	CONN. SIZE (IN)	SYSTEM	TANK TYPE	TANK VOLUME (GAL)	TANK ACCEPTANCE (GAL)	CHARGE PRESSURE (PSIG)	ORIENTATION	BASIS OF DESIGN
ET-1	3/4	HOT WATER	BLADDER	10	10	12	VERTICAL, FLOOR MOUNTED	BELL & GOSSETT B-35

NOTES:
1. TANK SHALL BE STEEL CONSTRUCTION WITH HEAVY DUTY BUTYL RUBBER DIAPHRAGM & FORGED STEEL CONNECTION FITTINGS.
2. EXPANSION TANK TO BE DESIGNED, CONSTRUCTED AND STAMPED PER ASME SECTION VIII, DIVISION 1.
3. TANK SHALL BE RATED FOR MAXIMUM WORKING PRESSURE OF 125 PSIG AND MAXIMUM WORKING TEMPERATURE OF 240°F.

EXHAUST FAN SCHEDULE

TAG	AREA SERVED	LOCATION	CFM	E.S.P. (IN W.G.)	DRIVE	RPM	MOTOR			DESIGN EQUIPMENT	NOTES
							WATTS	VOLTS	PHASE		
EF-1	119, 120, 121	ROOF	150	.35	DIRECT	850	13	115	1	GREENHECK G-070-D	1,3,4
EF-2	127, 128, 129	ROOF	375	.35	DIRECT	850	13	115	1	GREENHECK G-095-VG	1,3,4
EF-3	108, 109	ROOF	100	.25	DIRECT	1,550	13	115	1	GREENHECK G-060-D	1,3,4
EF-4	138	CEILING	50	.25	DIRECT	850	13	115	1	GREENHECK SP-A70	1,2,4
EF-5	139	CEILING	90	.25	DIRECT	950	17	115	1	GREENHECK SP-A70	1,2,4
EF-6	140	CEILING	50	.25	DIRECT	850	13	115	1	GREENHECK SP-A70	1,2,4
EF-7	142	CEILING	50	.25	DIRECT	850	13	115	1	GREENHECK SP-A70	1,2,4
EF-8	203	CEILING	110	.25	DIRECT	1,100	21	115	1	GREENHECK SP-A70	1,2,4
EF-9	204	CEILING	170	.25	DIRECT	1,400	48	115	1	GREENHECK SP-A70	1,2,4
EF-10	211	CEILING	50	.25	DIRECT	850	13	115	1	GREENHECK SP-A70	1,2,4
EF-11	220	CEILING	50	.25	DIRECT	850	13	115	1	GREENHECK SP-A70	1,2,4

NOTES:
1. PROVIDE COMBINATION STARTER/DISCONNECT SWITCH WITH THERMAL OVERLOAD PROTECTION.
2. PROVIDE BACKDRAFT DAMPER, ALUMINUM BIRD SCREEN, WALL COLLAR, MOTORIZED SHUTTER AND SHUTTER GAURD.
3. PROVIDE BACKDRAFT DAMPER, ALUMINUM BIRD SCREEN AND MANUFACTURERS ROOF CURB.
4. FAN SHALL RUN CONTINUOUSLY WHILE BUILDING IS OCCUPIED.

ELECTRIC UNIT HEATER (UH) SCHEDULE

TAG	LOCATION	MOUNTING TYPE	CAPACITY (KW)	VOLTS	PHASE	FULL LOAD AMPS	AIR FLOW (CFM)	DESIGN EQUIPMENT
UH-1	BASEMENT	CEILING	3	208	1	14.4	380	MODINE HER 30
UH-2	BASEMENT	CEILING	5	208	1	24.5	380	MODINE HER 50
UH-2	BASEMENT	CEILING	5	208	1	24.5	380	MODINE HER 50

NOTES:
1. FURNISH WITH FUSED DISCONNECT SWITCH.
2. PROVIDE MOUNTING BRACKETS AND SUPPORTS AS NECESSARY, FINISH TO MATCH UNIT HOUSING.
3. PROVIDE UNIT MOUNTED THERMOSTAT.

CABINET UNIT HEATER (CUH) SCHEDULE

TAG	AIR FLOW (CFM)	CAP. (BTUH)	kW	TEMP. RISE (°F)	NO. OF FANS	ELEC.		BASIS OF DESIGN
						VOLTS	PHASE	
CUH-1	100	6,820	4.8	50	1	208	1	QMARK LFK488F
CUH-2	100	5,115	4.8	50	1	208	1	QMARK LFK488F
CUH-2	100	5,115	4.8	50	1	208	1	QMARK LFK488F

NOTES:
1. PROVIDE UNIT MOUNTED TAMPERPROOF THERMOSTAT AND DISCONNECT SWITCH.
2. PROVIDE WITH UNIT MOUNTED DAY/NIGHT RELAY AND SURFACE MOUNTING ADAPTER.

IT IS A VIOLATION OF THE NEW YORK STATE EDUCATION LAW, ARTICLE 145 §7209 SPECIAL PROVISIONS, FOR ANY PERSON, UNLESS THEY ARE ACTING UNDER THE DIRECTION OF A LICENSED PROFESSIONAL ENGINEER, ARCHITECT, LANDSCAPE ARCHITECT, OR LAND SURVEYOR, TO ALTER AN ITEM IN ANY WAY. IF AN ITEM BEARING THE STAMP OF A LICENSED PROFESSIONAL IS ALTERED, THE ALTERING PROFESSIONAL SHALL STAMP THE DOCUMENT AND INCLUDE THE NOTATION "ALTERED BY" FOLLOWED BY THEIR SIGNATURE, THE DATE OF SUCH ALTERATION, AND A SPECIFIC DESCRIPTION OF THE ALTERATION.

REVISIONS

CITY OF MIDDLETOWN
NEW COURTHOUSE FACILITY
CONTRACT 1B - MECHANICAL CONSTRUCTION

SCHEDULES

CITY OF MIDDLETOWN ORANGE COUNTY, NEW YORK

B&L
443 Electronics Parkway
Liverpool, NY
13088
Barton & Loguidice, D.P.C.

STATE OF NEW YORK · ERIC J. HORVAT · No. 089089 · LICENSED PROFESSIONAL ENGINEER

NYS EXP.: 11/30/2025

Date: AUGUST, 2024

Scale: AS SHOWN

Sheet Number: M501

Project Number: 1753.008.001

Plotted: 8/21/2024 4:01:17 PM
C:\Users\rad\Documents\Middletown Courthouse Drawings - MECHANICAL MODEL_rdarin.rvt

Checked by _____ Drawn by RAD Designed by RAD In Charge of EJH

GENERAL NOTES:

1. NOTES, SYMBOLS LIST AND DETAILS ARE APPLICABLE TO ALL DRAWINGS IN THIS CONTRACT.
2. ADDRESS QUESTIONS REGARDING DRAWINGS TO ENGINEER IN WRITING BEFORE COMMENCING WITH WORK. OTHERWISE, ENGINEER'S INTERPRETATION OF MEANING AND INTENT OF DRAWINGS SHALL BE FINAL.
3. DRAWINGS ARE DIAGRAMMATIC AND INDICATE GENERAL ARRANGEMENT OF SYSTEMS AND WORK INCLUDED IN THIS CONTRACT. IT IS INTENDED THAT ALL COMPONENTS AND MATERIALS REQUIRED TO MAKE THE SYSTEMS COMPLETE, TESTED AND OPERATIONAL BE INSTALLED.
4. CONTRACTOR SHALL FIELD VERIFY ALL LOCATIONS, DIMENSIONS AND ELEVATIONS BEFORE FABRICATION AND CONSTRUCTION.
5. ALL MATERIALS, EQUIPMENT AND METHODS OF INSTALLATION SHALL BE IN ACCORDANCE WITH THE STANDARDS, REGULATIONS, CODES, ORDINANCES, AND LAWS OF LOCAL, STATE, AND FEDERAL GOVERNMENTS, AND OTHER AUTHORITIES THAT HAVE LAWFUL JURISDICTION.
6. COMPLETELY COORDINATE WORK OF THIS CONTRACT WITH THE OPERATIONS AND THE WORK OF OTHER CONTRACTS.
7. WORK SHALL BE EXECUTED IN A WORKMANLIKE MANNER AND SHALL PRESENT NEAT, RECTILINEAR APPEARANCE WHEN COMPLETED. MAINTAIN MAXIMUM HEAD ROOM AT ALL TIMES.
8. MATERIALS AND EQUIPMENT SHALL BE NEW AND INSTALLED ACCORDING TO MANUFACTURER'S INSTRUCTIONS AND RECOMMENDATIONS. MAINTAIN MANUFACTURER'S EQUIPMENT CLEARANCES.
9. FIRE STOP ALL NEW AND EXISTING SLEEVES THROUGH CONCRETE FLOORS AND FIRE RATED WALLS OR PARTITIONS WITH UL RATED ASSEMBLIES WITH EQUAL FIRE RATING.
10. PROVIDE PROPER ACCESS TO EQUIPMENT THAT REQUIRES INSPECTION, REPLACEMENT OR REPAIR. ACCESS PANELS SHALL BE SIZED TO ALLOW THE REQUIRED ACCESS, BUT IN NO CASE LESS THAN 12"x12".
11. CONTRACTOR IS RESPONSIBLE FOR ALL OWNER COORDINATION AND PROCEDURES RELATED TO ISOLATING, SHUTTING DOWN, DRAINING, FILLING AND RESTARTING SYSTEMS. ALL SYSTEM INTERRUPTIONS SHALL BE SCHEDULED WITH OWNER AND COORDINATED WITH OTHER CONTRACTS.

LEGEND

- SLOPE DN IN DIRECTION OF ARROW
- BREAK
- TEE RISE
- TEE DROP
- PIPE RISE
- PIPE DROP
- PIPE ABOVE SLAB OR GRADE
- PIPE BELOW SLAB OR GRADE
- DIRECTION OF FLOW
- CAP
- UNION
- CONCENTRIC REDUCER
- PRESSURE GAUGE
- THERMOMETER
- STRAINER W/ BLOWDOWN VALVE
- SWING CHECK VALVE
- BALL VALVE
- GATE VALVE
- TRIPLE DUTY VALVE
- BALANCE VALVE
- BALL VALVE W/ HOSE CONNECTION, CAP AND CHAIN
- PRESSURE REDUCING VALVE
- SAFETY RELIEF VALVE
- TEMPERATURE SENSOR
- PUMP
- LPG REGULATOR
- PLUG VALVE
- FLOOR DRAIN
- NON-FREEZE WALL HYDRANT
- CLEANOUT
- DECK PLATE CLEANOUT
- PIPING/EQUIPMENT TO BE REMOVED
- LIMIT OF REMOVAL
- CONNECTION POINT TO EXISTING

LEGEND - PIPING

- CW — DOMESTIC COLD WATER
- HW — DOMESTIC HOT WATER
- HWR — DOMESTIC HOT WATER RECIRCULATED
- D — DRAIN
- LPG — PROPANE
- SAN — SANITARY
- V — SANITARY VENT

ABBREVIATIONS

ADA	AMERICAN DISABILITIES ACT
AFF	ABOVE FINISHED FLOOR
AHU	AIR HANDLING UNIT
BTU	BRITISH THERMAL UNIT
CI	CAST IRON
CO	CLEANOUT
CONC	CONCRETE
CW	COLD WATER
D	DRAIN
DCW	DOMESTIC COLD WATER
DHW	DOMESTIC HOT WATER
DIA	DIAMETER
DN	DOWN
DPCO	DECK PLATE CLEANOUT
DWV	DRAIN, WASTE AND VENT
EC	ELECTRICAL CONTRACTOR
ESP	EXTERNAL STATIC PRESSURE
ET	EXPANSION TANK
EX	EXISTING
FD	FLOOR DRAIN
FLR	FLOOR
FT WC	FEET OF WATER COLUMN
GA	GAUGE
GAL	GALLON
GALV	GALVANIZED
GC	GENERAL CONTRACTOR
GPF	GALLONS PER FLUSH
GPH	GALLONS PER HOUR
GPM	GALLONS PER MINUTE
HW	HOT WATER
HWR	HOT WATER RECIRCULATED
IN WC	INCHES OF WATER COLUMN
INV	INVERT
LAV	LAVATORY
MAX	MAXIMUM
MBH	1,000 BTU/HR
MC	MECHANICAL CONTRACTOR
MIN	MINIMUM
SAN	SANITARY
SCH	SCHEDULE
SS	STAINLESS STEEL
T&B	TOP & BOTTOM
TYP	TYPICAL
V	VENT
VTR	VENT THRU ROOF
WC	WATER CLOSET
WH	WALL HYDRANT
WPCO	WALL PLATE CLEANOUT

PLUMBING FIXTURE CONNECTION SCHEDULE

FIXTURE NO.	FIXTURE TYPE	HW	CW	SAN	VENT
P-1	WATER CLOSET (FLOOR, ADA)	-	1/2"	3"	1-1/2"
P-2	LAVATORY (WALL, ADA)	1/2"	1/2"	1-1/4"	1-1/4"
P-3	COUNTERTOP SINK (MOLDED SINK TOP PROVIDED BY CONTRACT 1A)	1/2"	1/2"	1-1/4"	1-1/4"
P-4	DRINKING FOUNTAIN	-	1/2"	1-1/2"	1-1/4"
P-5	SECURITY COMBINATION WC/LAV.	1/2"	1"	3"	1-1/2"

1. ADA - HANDICAP ACCESSABLE (ADA) FIXTURE
2. FLOOR - FLOOR MOUNT
3. WALL - WALL MOUNT (PROVIDE CARRIER BY JOSAM, OR EQUAL)

HOT WATER HEATER (HWH) SCHEDULE

TAG	AREA SERVED	STORAGE (GAL)	FUEL	TEMP RISE (°F)	RECOVERY (GPH)	SUPPLY TEMP (°F)	ELECTRIC (VOLT/PH/HZ)	BASIS OF DESIGN
HWH-1	DHW SYSTEM	50	ELECTRIC	90	56	140	208/3/60	AO SMITH DVE-52-12.3

NOTES:
1. PROVIDE COMPLETE WITH ASME SAFTEY RELIEF VALVE AND DRAIN VALVE.
2. INSTALL HOT WATER HEATER IN ACCORDANCE WITH THE MANUFACTURERS INSTRUCTIONS AND RECOMMENDATIONS.
3. FURNISH AND INSTALL UNIT AND ALL CONTROL EQUIPMENT, INCLUDING SENSORS, CONTROL WIRING AND CONDUIT.

PUMP SCHEDULE

TAG	EQUIPMENT SERVED	MOTOR			PUMP RPM	FLOW (GPM)	HEAD (FT WC)	TYPE	BASIS OF DESIGN
		WATTS	VOLTS	PHASE					
DWCP-1	HWH-1	4-60	115	1	2253	2	12	INLINE	BELL AND GOSSET ECOCIRC 19-16

NOTES:
1. FURNISH AND INSTALL DISCONNECT SWITCH WITH THERMAL OVERLOAD PROTECTION, TIMER AND AQUASTAT. UNIT SHALL BE FURNISHED WITH A PLUG-IN TYPE CORD AND BUILT-IN IMPEDIANCE PROTECTION.
2. UNIT SHALL BE BRONZE CONSTRUCTION SUTIABLE FOR POTABLE WATER.
3. FURNISH AND INSTALL UNIT AND ALL CONTROL EQUIPMENT, INCLUDING SENSORS, LOW VOLTAGE WIRING AND CONDUIT. LINE VOLTAGE POWER WIRING (120V AND ABOVE) SHALL BE BY THE ELECTRICAL CONTRACTOR.

EXPANSION TANK (ET) SCHEDULE

TAG	CONN. SIZE (IN)	SYSTEM	TANK TYPE	TANK VOLUME (GAL)	TANK ACCEPTANCE (GAL)	ORIENTATION	BASIS OF DESIGN
ET-1	3/4	HW	BLADDER	5.0	3.3	VERTICAL, FLOOR MOUNTED	BELL &GOSSET PTA-12

NOTES:
1. TANK SHALL BE STEEL CONSTRUCTION WITH HEAVY DUTY BUTYL RUBBER DIAPHRAGM & FORGED STEEL CONNECTION FITTINGS.
2. EXPANSION TANK TO BE DESIGNED, CONSTRUCTED AND STAMPED PER ASME SECTION VII,DIVISION 1.
3. TANK SHALL BE RATED FOR MAXIMUM WORKING PRESSURE OF 125 PSIG AND MAXIMUM WORKING TEMPERATURE OF 240°F.

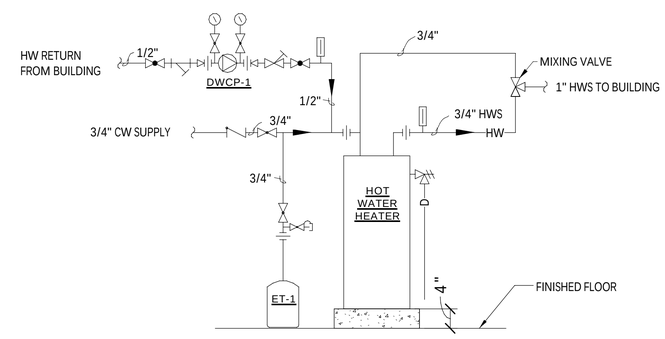

6 HOT WATER SYSTEM AND PIPING DIAGRAM
SCALE: NTS

IT IS A VIOLATION OF THE NEW YORK STATE EDUCATION LAW, ARTICLE 145 §7209 SPECIAL PROVISIONS, FOR ANY PERSON, UNLESS THEY ARE ACTING UNDER THE DIRECTION OF A LICENSED PROFESSIONAL ENGINEER, ARCHITECT, LANDSCAPE ARCHITECT, OR LAND SURVEYOR, TO ALTER AN ITEM IN ANY WAY. IF AN ITEM BEARING THE STAMP OF A LICENSED PROFESSIONAL IS ALTERED, THE ALTERING PROFESSIONAL SHALL STAMP THE DOCUMENT AND INCLUDE THE NOTATION "ALTERED BY" FOLLOWED BY THEIR SIGNATURE, THE DATE OF SUCH ALTERATION, AND A SPECIFIC DESCRIPTION OF THE ALTERATION.

REVISIONS

CITY OF MIDDLETOWN
NEW COURTHOUSE FACILITY
CONTRACT NO. 1C - PLUMBING CONSTRUCTION

SYMBOLS AND ABBREVIATIONS

ORANGE COUNTY, NEW YORK

CITY OF MIDDLETOWN

B&L
443 Electronics Parkway
Liverpool, NY
13088
Barton & Loguidice, D.P.C.

STATE OF NEW YORK · ERIC J. HORVATH · NO. 089099 · LICENSED PROFESSIONAL ENGINEER

NYS EXP.: 11/30/2025

Date: AUGUST, 2024

Scale: AS SHOWN

Sheet Number: P001

Project Number: 1753.008.001

Plotted: 8/21/2024 1:35:38 PM
I:\Shared\1700\1753008\Middletown Courthouse Drawings - 01.07.22 PLUMBING.rvt
Checked by EJH Drawn by RAD Designed by RAD In Charge of EJH

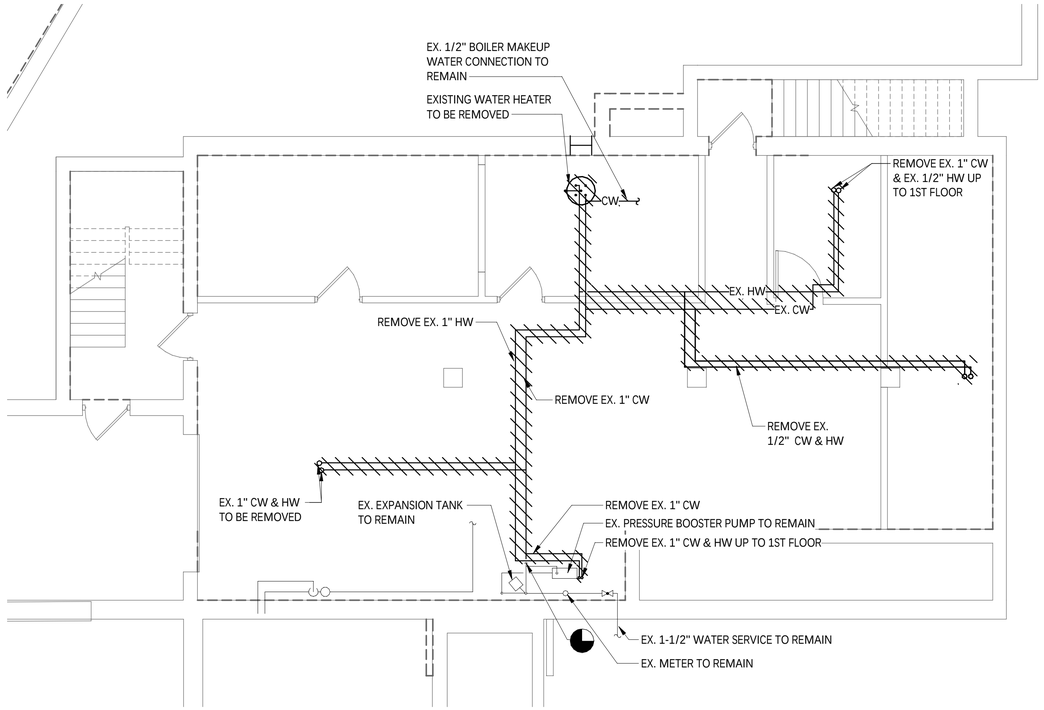

BASEMENT PLUMBING PIPING DEMO PLAN

SCALE: 3/16" = 1'-0"

GENERAL NOTES:

1. FIELD VERIFY LOCATIONS AND SIZES OF EX. WATER LINES.

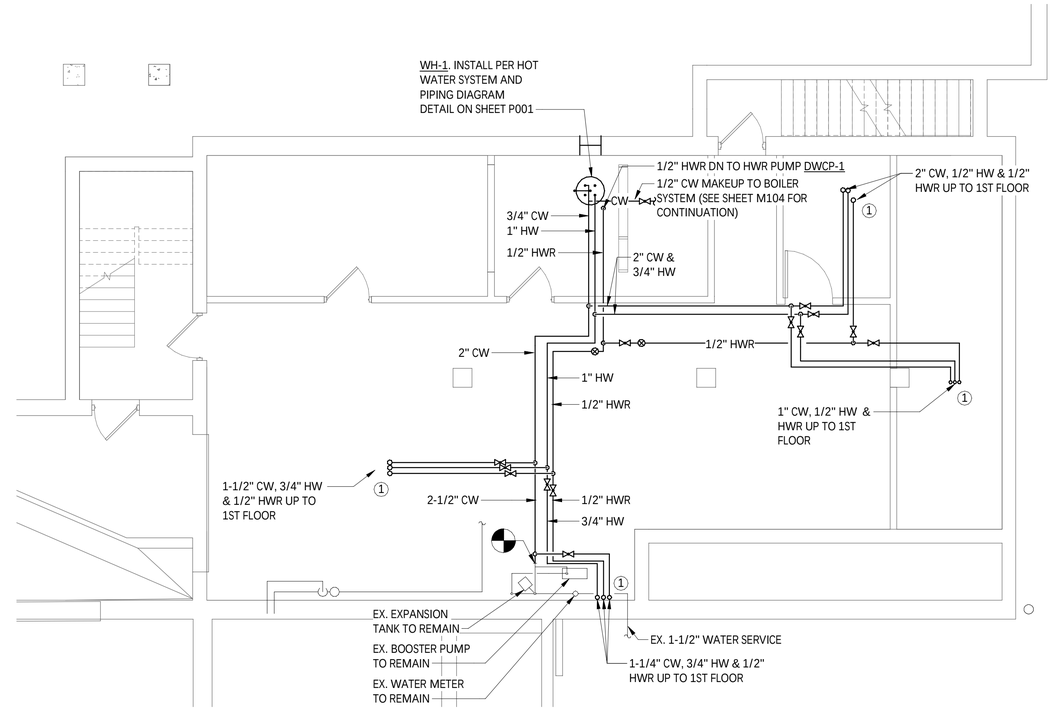

BASEMENT PLUMBING PIPING PLAN

SCALE: 3/16" = 1'-0"

KEY NOTES:

1. CORE DRILL FLOOR SLAB ABOVE AS REQUIRED TO ACCOMODATE NEW PIPE RISERS AND FIRE CAULK PENETRATIONS.

IT IS A VIOLATION OF THE NEW YORK STATE EDUCATION LAW, ARTICLE 145 §7209 SPECIAL PROVISIONS, FOR ANY PERSON, UNLESS THEY ARE ACTING UNDER THE DIRECTION OF A LICENSED PROFESSIONAL ENGINEER, ARCHITECT, LANDSCAPE ARCHITECT, OR LAND SURVEYOR, TO ALTER AN ITEM IN ANY WAY. IF AN ITEM BEARING THE STAMP OF A LICENSED PROFESSIONAL IS ALTERED, THE ALTERING PROFESSIONAL SHALL STAMP THE DOCUMENT AND INCLUDE THE NOTATION "ALTERED BY" FOLLOWED BY THEIR SIGNATURE, THE DATE OF SUCH ALTERATION, AND A SPECIFIC DESCRIPTION OF THE ALTERATION.

REVISIONS

CITY OF MIDDLETOWN
NEW COURTHOUSE FACILITY
CONTRACT NO. 1C - PLUMBING CONSTRUCTION

BASEMENT PLUMBING PLAN

CITY OF MIDDLETOWN
ORANGE COUNTY, NEW YORK

B&L
Barton & Loguidice, D.P.C.
443 Electronics Parkway
Liverpool, NY
13088

STATE OF NEW YORK · ERIC J. HORVAT · No. 089099 · LICENSED PROFESSIONAL ENGINEER

NYS EXP.: 11/30/2025

Date	AUGUST, 2024
Scale	AS SHOWN
Sheet Number	P101
Project Number	1753.008.001

Plotted: 8/21/2024 1:35:38 PM
I:\Shared\1700\1753008\Middletown Courthouse Drawings - 01.07.22 PLUMBING.rvt
Checked by EJH Drawn by RAD Designed by RAD In Charge of EJH

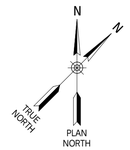

KEY NOTE:

1. REMOVE EXISTING PLUMBING FIXTURES WITH ASSOCIATED COLD AND HOT WATER SUPPLY PIPING, INSULATION, VALVES AND APPURTENANCES COMPLETE.
2. DISCONNECT COLD AND HOT WATER PIPING FROM EXISTING FIXTURES TO REMAIN AT PONTS SHOWN.

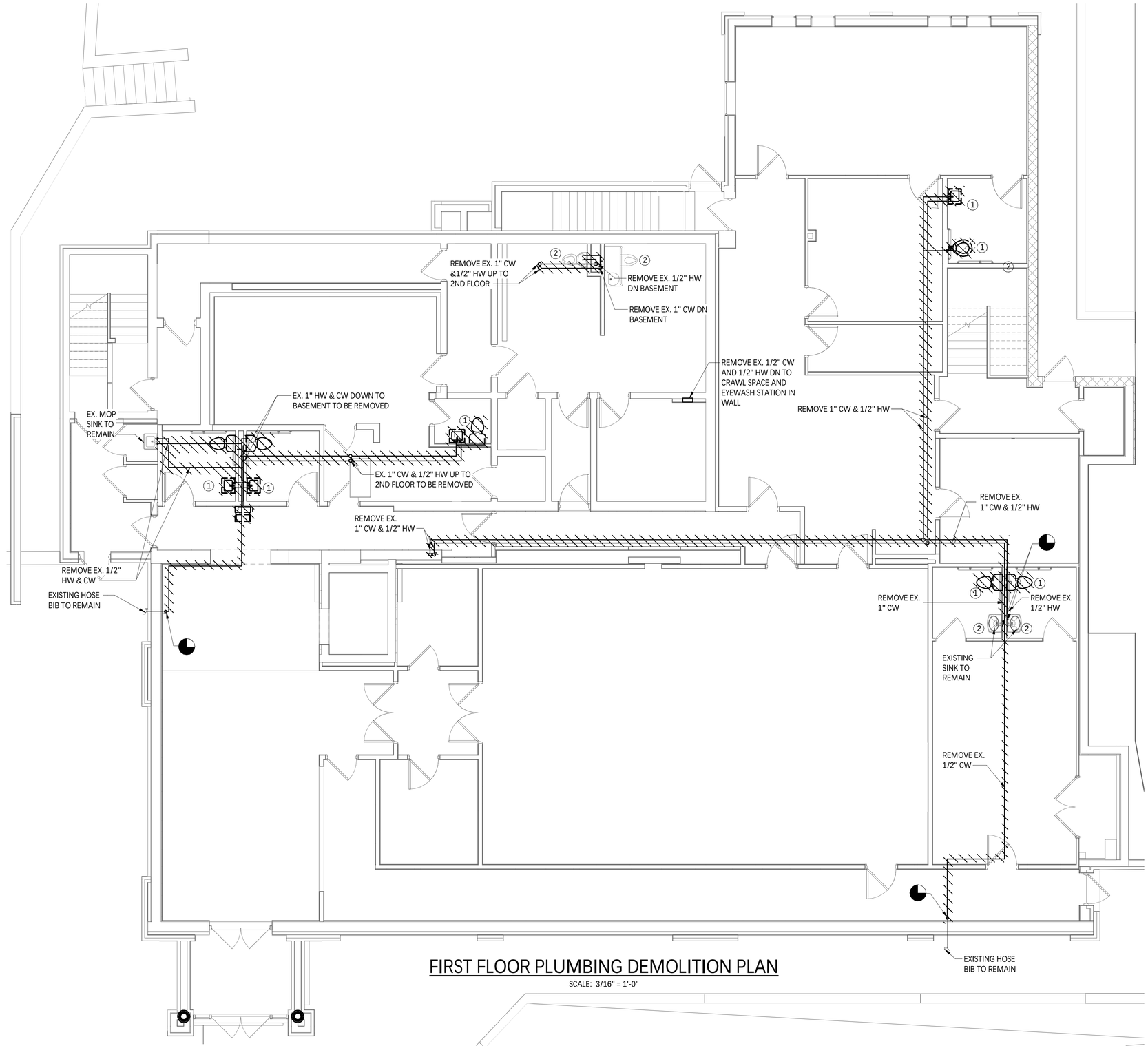

FIRST FLOOR PLUMBING DEMOLITION PLAN

SCALE: 3/16" = 1'-0"

IT IS A VIOLATION OF THE NEW YORK STATE EDUCATION LAW, ARTICLE 145 §7209 SPECIAL PROVISIONS, FOR ANY PERSON, UNLESS THEY ARE ACTING UNDER THE DIRECTION OF A LICENSED PROFESSIONAL ENGINEER, ARCHITECT, LANDSCAPE ARCHITECT, OR LAND SURVEYOR, TO ALTER AN ITEM IN ANY WAY. IF AN ITEM BEARING THE STAMP OF A LICENSED PROFESSIONAL IS ALTERED, THE ALTERING PROFESSIONAL SHALL STAMP THE DOCUMENT AND INCLUDE THE NOTATION "ALTERED BY" FOLLOWED BY THEIR SIGNATURE, THE DATE OF SUCH ALTERATION, AND A SPECIFIC DESCRIPTION OF THE ALTERATION.

REVISIONS

CITY OF MIDDLETOWN
NEW COURTHOUSE FACILITY
CONTRACT NO. 1C - PLUMBING CONSTRUCTION

FIRST FLOOR PLUMBING DEMOLITION PLAN

CITY OF MIDDLETOWN
ORANGE COUNTY, NEW YORK

B&L
Barton & Loguidice, D.P.C.
443 Electronics Parkway
Liverpool, NY
13088

STATE OF NEW YORK · ERIC J. HORNEY · No. 089098 · LICENSED PROFESSIONAL ENGINEER

NYS EXP.: 11/30/2025

Date	AUGUST, 2024
Scale	AS SHOWN
Sheet Number	P102
Project Number	1753.008.001

Plotted: 8/21/2024 1:35:39 PM
I:\Shared\1700\1753008\Middletown Courthouse Drawings - 01.07.22 PLUMBING.rvt

Checked by EJH Drawn by RAD Designed by RAD In Charge of EJH

KEY NOTES:

1. REMOVE EXISTING PLUMBING FIXTURES WITH ASSOCIATED SANITARY AND VENT CONNECTIONS. CAP BRANCH LINES AT MAINS.
2. DISCONNECT AND REMOVE EXISTING PLUMBING FIXTURES ONLY AS SHOWN.
3. REMOVE EXISTING PLUMBING FIXTURES WITH ASSOCIATED SANITARY AND VENT CONNECTIONS TO POINTS AS SHOWN.

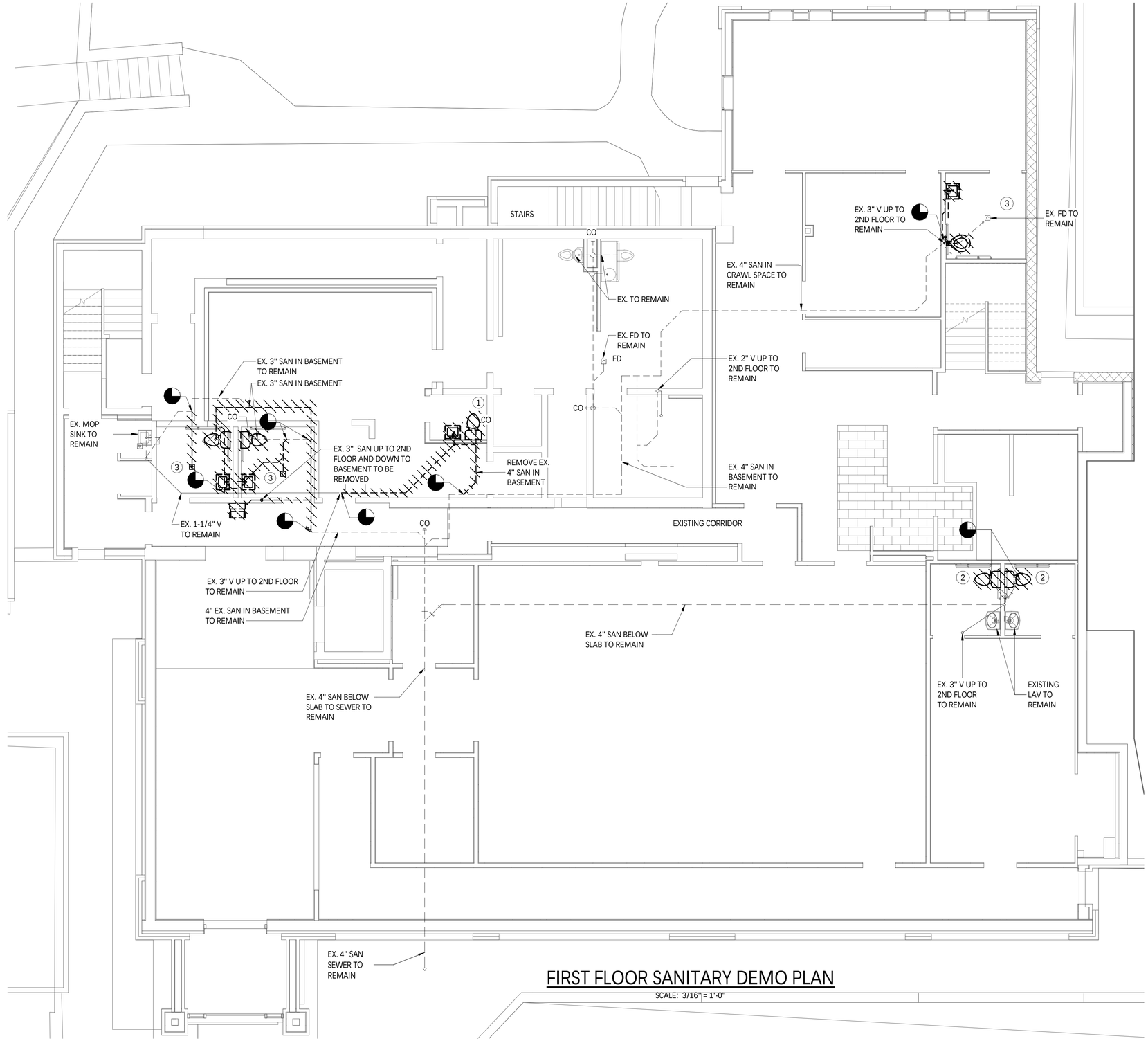

FIRST FLOOR SANITARY DEMO PLAN

SCALE: 3/16" = 1'-0"

IT IS A VIOLATION OF THE NEW YORK STATE EDUCATION LAW, ARTICLE 145 §7209 SPECIAL PROVISIONS, FOR ANY PERSON, UNLESS THEY ARE ACTING UNDER THE DIRECTION OF A LICENSED PROFESSIONAL ENGINEER, ARCHITECT, LANDSCAPE ARCHITECT, OR LAND SURVEYOR, TO ALTER AN ITEM IN ANY WAY. IF AN ITEM BEARING THE STAMP OF A LICENSED PROFESSIONAL IS ALTERED, THE ALTERING PROFESSIONAL SHALL STAMP THE DOCUMENT AND INCLUDE THE NOTATION "ALTERED BY" FOLLOWED BY THEIR SIGNATURE, THE DATE OF SUCH ALTERATION, AND A SPECIFIC DESCRIPTION OF THE ALTERATION.

REVISIONS

CITY OF MIDDLETOWN
NEW COURTHOUSE FACILITY
CONTRACT NO. 1C - PLUMBING CONSTRUCTION

FIRST FLOOR SANITARY DEMOLITION PLAN

CITY OF MIDDLETOWN ORANGE COUNTY, NEW YORK

B&L
Barton & Loguidice, D.P.C.
443 Electronics Parkway
Liverpool, NY
13088

STATE OF NEW YORK · ERIC J. HORTON · LICENSED · No. 089009 · PROFESSIONAL ENGINEER

NYS EXP.: 11/30/2025

Date	AUGUST, 2024
Scale	AS SHOWN
Sheet Number	P103
Project Number	1753.008.001

Plotted: 8/21/2024 1:35:40 PM
I:\Shared\1700\1753008\Middletown Courthouse Drawings - 01.07.22 PLUMBING.rvt

Checked by EJH Drawn by RAD Designed by RAD In Charge of EJH

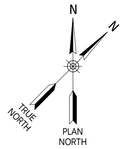

KEY NOTES:

1. REMOVE EXISTING PLUMBING FIXTURE AND ASSOCIATED HOT AND COLD WATER PIPING, INSULATION, VALVES AND APPURTENANCES.

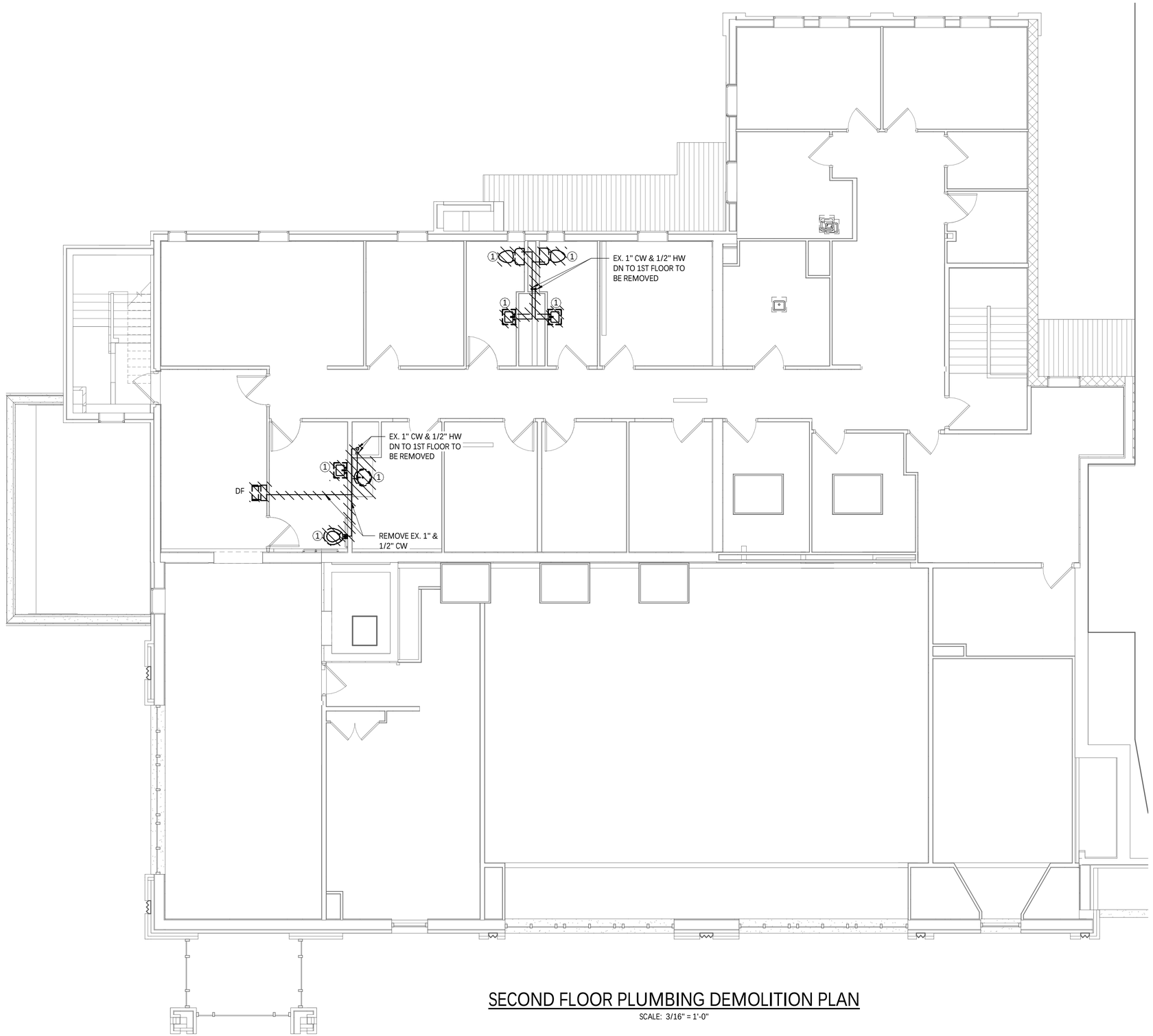

SECOND FLOOR PLUMBING DEMOLITION PLAN

SCALE: 3/16" = 1'-0"

Plotted: 8/21/2024 1:35:41 PM
I:\Shared\1700\1753008\Middletown Courthouse Drawings - 01.07.22 PLUMBING.rvt

Checked by EJH Drawn by RAD Designed by RAD In Charge of EJH

IT IS A VIOLATION OF THE NEW YORK STATE EDUCATION LAW, ARTICLE 145 §7209 SPECIAL PROVISIONS, FOR ANY PERSON, UNLESS THEY ARE ACTING UNDER THE DIRECTION OF A LICENSED PROFESSIONAL ENGINEER, ARCHITECT, LANDSCAPE ARCHITECT, OR LAND SURVEYOR, TO ALTER AN ITEM IN ANY WAY. IF AN ITEM BEARING THE STAMP OF A LICENSED PROFESSIONAL IS ALTERED, THE ALTERING PROFESSIONAL SHALL STAMP THE DOCUMENT AND INCLUDE THE NOTATION "ALTERED BY" FOLLOWED BY THEIR SIGNATURE, THE DATE OF SUCH ALTERATION, AND A SPECIFIC DESCRIPTION OF THE ALTERATION.

REVISIONS

CITY OF MIDDLETOWN
NEW COURTHOUSE FACILITY
CONTRACT NO. 1C - PLUMBING CONSTRUCTION

SECOND FLOOR PLUMBING DEMOLITION PLAN

CITY OF MIDDLETOWN ORANGE COUNTY, NEW YORK

B&L
443 Electronics Parkway
Liverpool, NY
13088
Barton & Loguidice, D.P.C.

STATE OF NEW YORK
ERIC J. HORVATH
NO. 089093
LICENSED PROFESSIONAL ENGINEER

NYS EXP.: 11/30/2025

Date
AUGUST, 2024

Scale
AS SHOWN

Sheet Number
P104

Project Number
1753.008.001

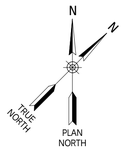

KEY NOTE:

1. REMOVE EXISTING PLUMBING FIXTURES WITH ASSOCIATED SANITARY AND VENT CONNECTIONS. CAP BRANCH LINES TO POINTS SHOWN.

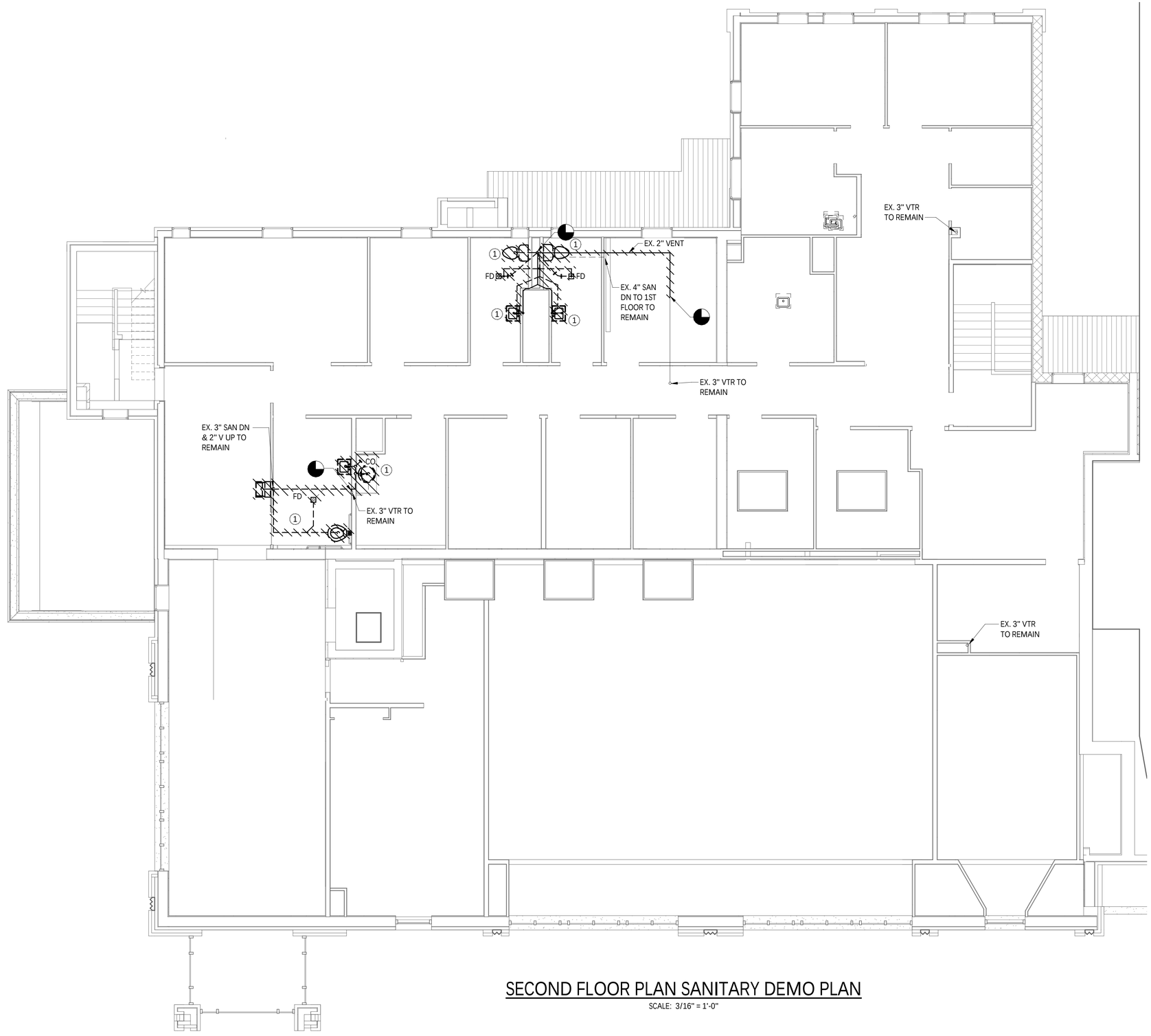

SECOND FLOOR PLAN SANITARY DEMO PLAN

SCALE: 3/16" = 1'-0"

IT IS A VIOLATION OF THE NEW YORK STATE EDUCATION LAW, ARTICLE 145 §7209 SPECIAL PROVISIONS, FOR ANY PERSON, UNLESS THEY ARE ACTING UNDER THE DIRECTION OF A LICENSED PROFESSIONAL ENGINEER, ARCHITECT, LANDSCAPE ARCHITECT, OR LAND SURVEYOR, TO ALTER AN ITEM IN ANY WAY. IF AN ITEM BEARING THE STAMP OF A LICENSED PROFESSIONAL IS ALTERED, THE ALTERING PROFESSIONAL SHALL STAMP THE DOCUMENT AND INCLUDE THE NOTATION "ALTERED BY" FOLLOWED BY THEIR SIGNATURE, THE DATE OF SUCH ALTERATION, AND A SPECIFIC DESCRIPTION OF THE ALTERATION.

REVISIONS

CITY OF MIDDLETOWN
NEW COURTHOUSE FACILITY
CONTRACT NO. 1C - PLUMBING CONSTRUCTION

SECOND FLOOR SANITARY DEMOLITION PLAN

CITY OF MIDDLETOWN ORANGE COUNTY, NEW YORK

B&L
443 Electronics Parkway
Liverpool, NY
13088
Barton & Loguidice, D.P.C.

NYS EXP.: 11/30/2025

Date: AUGUST, 2024

Scale: AS SHOWN

Sheet Number: P105

Project Number: 1753.008.001

Plotted: 8/21/2024 1:35:41 PM
I:\Shared\1700\1753008\Middletown Courthouse Drawings - 01.07.22 PLUMBING.rvt

Checked by EJH Drawn by RAD Designed by RAD In Charge of EJH

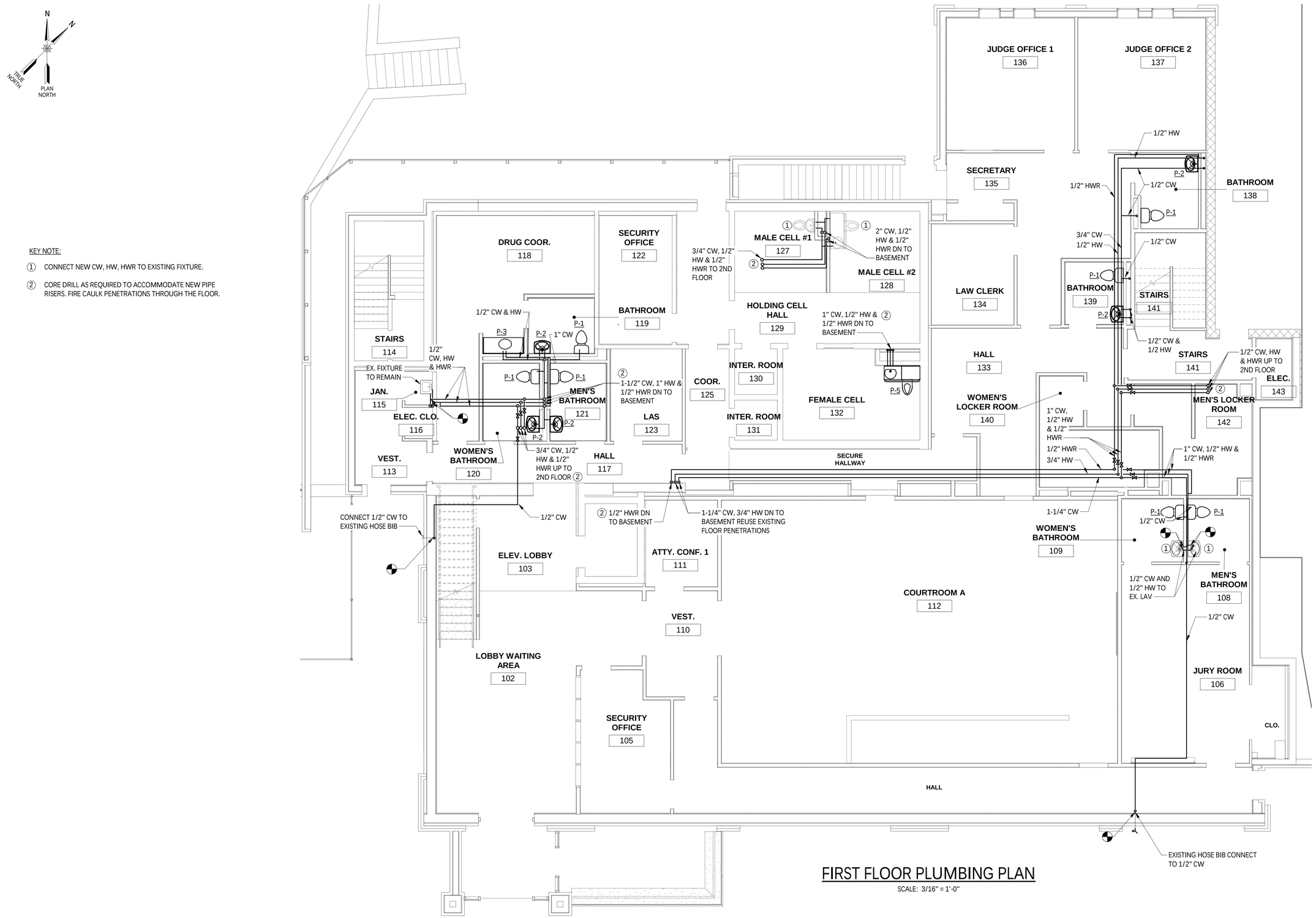

KEY NOTE:

1. CONNECT NEW CW, HW, HWR TO EXISTING FIXTURE.
2. CORE DRILL AS REQUIRED TO ACCOMMODATE NEW PIPE RISERS. FIRE CAULK PENETRATIONS THROUGH THE FLOOR.

FIRST FLOOR PLUMBING PLAN

SCALE: 3/16" = 1'-0"

IT IS A VIOLATION OF THE NEW YORK STATE EDUCATION LAW, ARTICLE 145 §7209 SPECIAL PROVISIONS, FOR ANY PERSON, UNLESS THEY ARE ACTING UNDER THE DIRECTION OF A LICENSED PROFESSIONAL ENGINEER, ARCHITECT, LANDSCAPE ARCHITECT, OR LAND SURVEYOR, TO ALTER AN ITEM IN ANY WAY. IF AN ITEM BEARING THE STAMP OF A LICENSED PROFESSIONAL IS ALTERED, THE ALTERING PROFESSIONAL SHALL STAMP THE DOCUMENT AND INCLUDE THE NOTATION "ALTERED BY" FOLLOWED BY THEIR SIGNATURE, THE DATE OF SUCH ALTERATION, AND A SPECIFIC DESCRIPTION OF THE ALTERATION.

REVISIONS

CITY OF MIDDLETOWN
NEW COURTHOUSE FACILITY
CONTRACT NO. 1C - PLUMBING CONSTRUCTION

FIRST FLOOR PLUMBING PLAN

ORANGE COUNTY, NEW YORK

CITY OF MIDDLETOWN

443 Electronics Parkway
Liverpool, NY
13088

B&L
Barton & Loguidice, D.P.C.

STATE OF NEW YORK · ERIC J. HORVAT · No. 089098 · LICENSED PROFESSIONAL ENGINEER

NYS EXP.: 11/30/2025

Date: AUGUST, 2024

Scale: AS SHOWN

Sheet Number: P106

Project Number: 1753.008.001

Plotted: 8/21/2024 1:35:43 PM
I:\Shared\1700\1753008\Middletown Courthouse Drawings - 01.07.22 PLUMBING.rvt

Checked by: EJH | Drawn by: RAD | Designed by: RAD | In Charge of: EJH

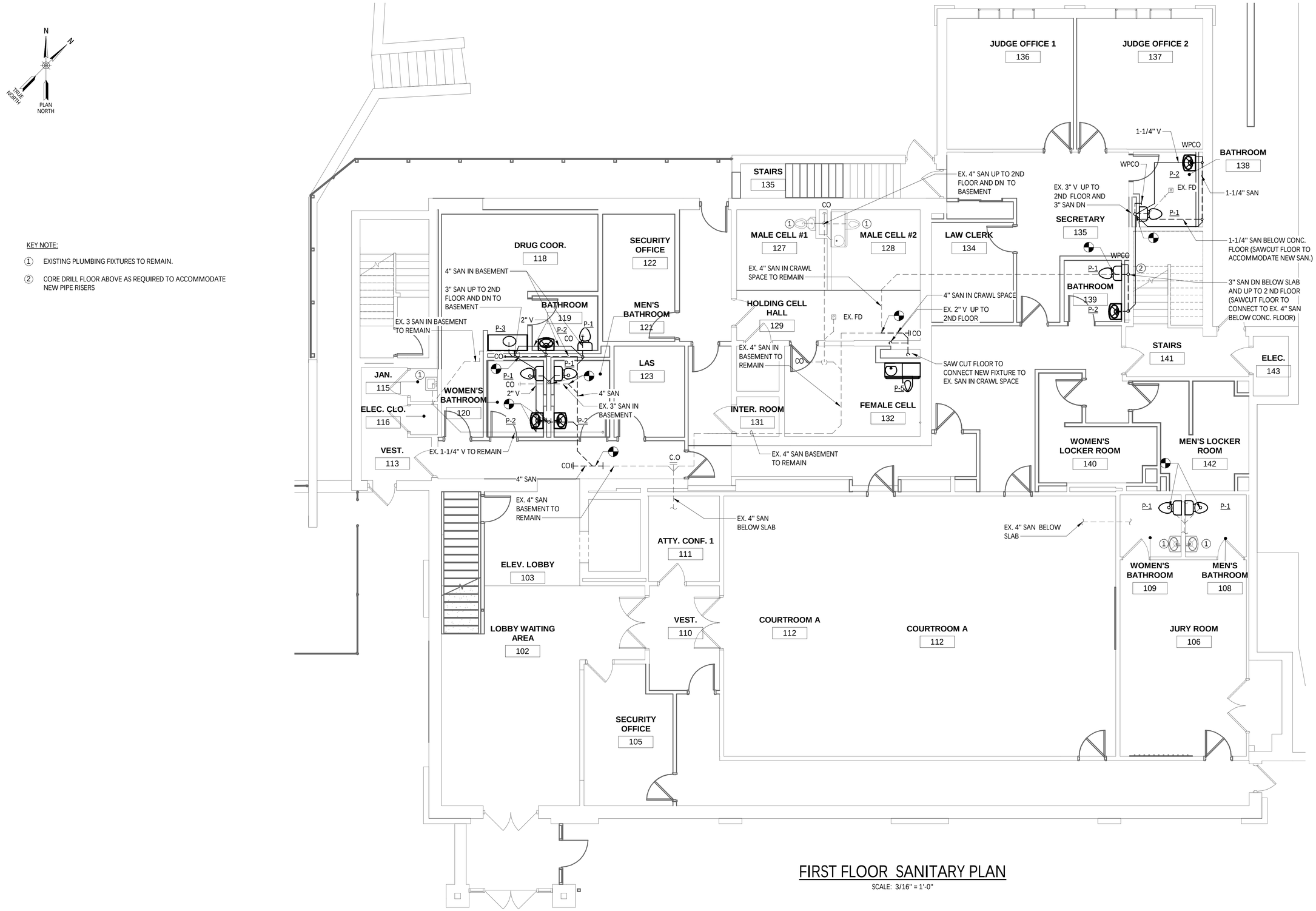

KEY NOTE:

1. EXISTING PLUMBING FIXTURES TO REMAIN.
2. CORE DRILL FLOOR ABOVE AS REQUIRED TO ACCOMMODATE NEW PIPE RISERS

FIRST FLOOR SANITARY PLAN

SCALE: 3/16" = 1'-0"

IT IS A VIOLATION OF THE NEW YORK STATE EDUCATION LAW, ARTICLE 145 §7209 SPECIAL PROVISIONS, FOR ANY PERSON, UNLESS THEY ARE ACTING UNDER THE DIRECTION OF A LICENSED PROFESSIONAL ENGINEER, ARCHITECT, LANDSCAPE ARCHITECT, OR LAND SURVEYOR, TO ALTER AN ITEM IN ANY WAY. IF AN ITEM BEARING THE STAMP OF A LICENSED PROFESSIONAL IS ALTERED, THE ALTERING PROFESSIONAL SHALL STAMP THE DOCUMENT AND INCLUDE THE NOTATION "ALTERED BY" FOLLOWED BY THEIR SIGNATURE, THE DATE OF SUCH ALTERATION, AND A SPECIFIC DESCRIPTION OF THE ALTERATION.

REVISIONS

CITY OF MIDDLETOWN
NEW COURTHOUSE FACILITY
CONTRACT NO. 1C - PLUMBING CONSTRUCTION

FIRST FLOOR SANITARY PLAN

ORANGE COUNTY, NEW YORK

CITY OF MIDDLETOWN

B&L
443 Electronics Parkway
Liverpool, NY
13088
Barton & Loguidice, D.P.C.

STATE OF NEW YORK · ERIC J. HORTA · LICENSE NO. 089098 · PROFESSIONAL ENGINEER

NYS EXP.: 11/30/2025

Date	AUGUST, 2024
Scale	AS SHOWN
Sheet Number	P107
Project Number	1753.008.001

Plotted: 8/21/2024 1:35:43 PM
I:\Shared\1700\1753008\Middletown Courthouse Drawings - 01.07.22 PLUMBING.rvt

Checked by EJH Drawn by RAD Designed by RAD In Charge of EJH

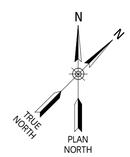

KEY NOTES:

1. COORDINATE PIPING IN CHASE WITH CONTRACT 1B TO ACCOMMODATE NEW DUCTWORK AND VENTING IN CHASE.

SECOND FLOOR PLUMBING PLAN

SCALE: 3/16" = 1'-0"

IT IS A VIOLATION OF THE NEW YORK STATE EDUCATION LAW, ARTICLE 145 §7209 SPECIAL PROVISIONS, FOR ANY PERSON, UNLESS THEY ARE ACTING UNDER THE DIRECTION OF A LICENSED PROFESSIONAL ENGINEER, ARCHITECT, LANDSCAPE ARCHITECT, OR LAND SURVEYOR, TO ALTER AN ITEM IN ANY WAY. IF AN ITEM BEARING THE STAMP OF A LICENSED PROFESSIONAL IS ALTERED, THE ALTERING PROFESSIONAL SHALL STAMP THE DOCUMENT AND INCLUDE THE NOTATION "ALTERED BY" FOLLOWED BY THEIR SIGNATURE, THE DATE OF SUCH ALTERATION, AND A SPECIFIC DESCRIPTION OF THE ALTERATION.

REVISIONS

CITY OF MIDDLETOWN
NEW COURTHOUSE FACILITY
CONTRACT NO. 1C - PLUMBING CONSTRUCTION

SECOND FLOOR PLUMBING PLAN

CITY OF MIDDLETOWN ORANGE COUNTY, NEW YORK

B&L
443 Electronics Parkway
Liverpool, NY
13088
Barton & Loguidice, D.P.C.

STATE OF NEW YORK · ERIC J. HORVAT · NO. 089009 · LICENSED PROFESSIONAL ENGINEER

NYS EXP.: 11/30/2025

Date: AUGUST, 2024

Scale: AS SHOWN

Sheet Number: P108

Project Number: 1753.008.001

Plotted: 8/21/2024 1:35:44 PM
I:\Shared\1700\1753008\Middletown Courthouse Drawings - 01.07.22 PLUMBING.rvt

Checked by: EJH Drawn by: RAD Designed by: RAD In Charge of: EJH

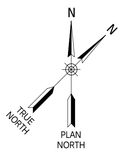

KEY NOTES:

1. COORDINATE PIPING IN CHASE WITH CONTRACT 1B TO ACCOMMODATE NEW DUCTWORK AND VENTING IN CHASE.

SECOND FLOOR SANITARY PLAN

SCALE: 3/16" = 1'-0"

IT IS A VIOLATION OF THE NEW YORK STATE EDUCATION LAW, ARTICLE 145 §7209 SPECIAL PROVISIONS, FOR ANY PERSON, UNLESS THEY ARE ACTING UNDER THE DIRECTION OF A LICENSED PROFESSIONAL ENGINEER, ARCHITECT, LANDSCAPE ARCHITECT, OR LAND SURVEYOR, TO ALTER AN ITEM IN ANY WAY. IF AN ITEM BEARING THE STAMP OF A LICENSED PROFESSIONAL IS ALTERED, THE ALTERING PROFESSIONAL SHALL STAMP THE DOCUMENT AND INCLUDE THE NOTATION "ALTERED BY" FOLLOWED BY THEIR SIGNATURE, THE DATE OF SUCH ALTERATION, AND A SPECIFIC DESCRIPTION OF THE ALTERATION.

REVISIONS

CITY OF MIDDLETOWN
NEW COURTHOUSE FACILITY
CONTRACT NO. 1C - PLUMBING CONSTRUCTION

SECOND FLOOR SANITARY PLAN

CITY OF MIDDLETOWN ORANGE COUNTY, NEW YORK

B&L
443 Electronics Parkway
Liverpool, NY
13088
Barton & Loguidice, D.P.C.

STATE OF NEW YORK · ERIC J. HORTAT · 090909 · LICENSED PROFESSIONAL ENGINEER

NYS EXP.: 11/30/2025

Date	AUGUST, 2024
Scale	AS SHOWN
Sheet Number	P109
Project Number	1753.008.001

Plotted: 8/21/2024 1:35:45 PM
I:\Shared\1700\1753008\Middletown Courthouse Drawings - 01.07.22 PLUMBING.rvt

Checked by EJH Drawn by RAD Designed by RAD In Charge of EJH

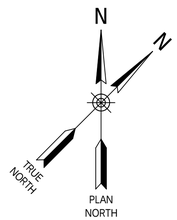

PROVIDE ADDITIONAL HEAD(S) AND PIPING TO PROVIDE COVERAGE IN AREA AND EXTEND EXISTING SYSTEM.

FIRE PROTECTION LEGEND

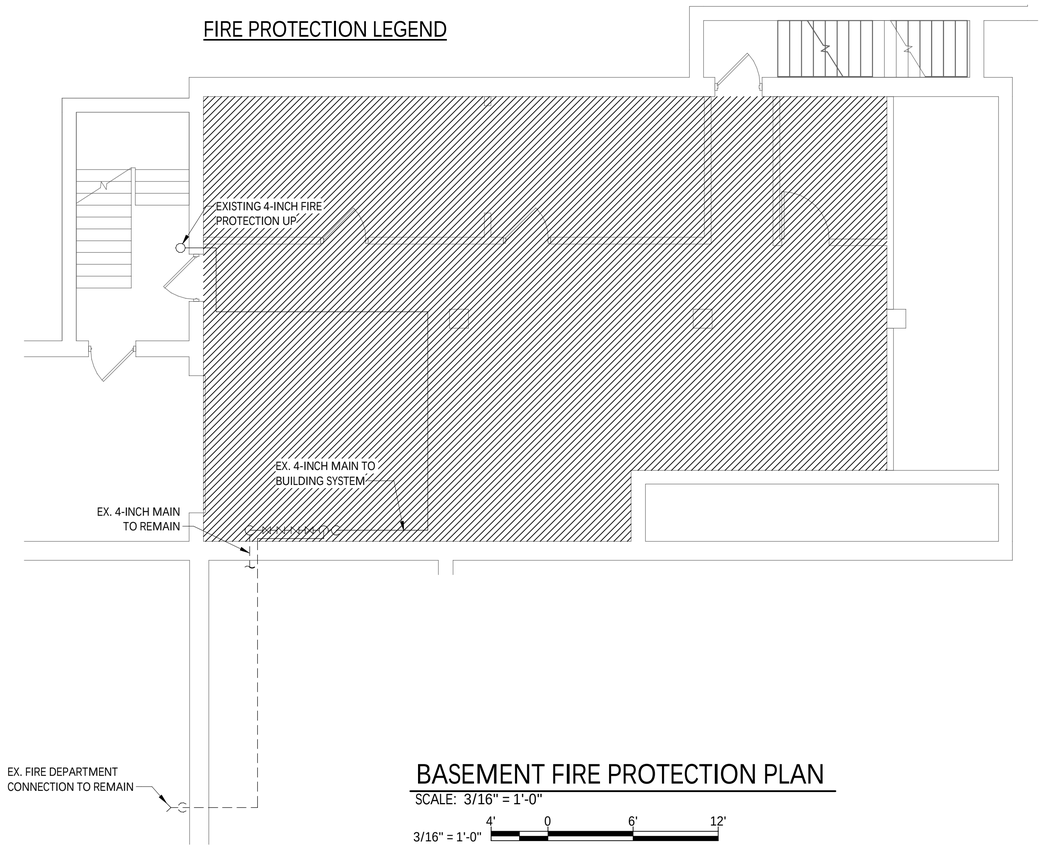

BASEMENT FIRE PROTECTION PLAN

SCALE: 3/16" = 1'-0"

3/16" = 1'-0" 4' 0 6' 12'

GENERAL NOTES:

1. EXISTING FIRE PROTECTION SYSTEM TO REMAIN. CONTRACTOR SHALL COORDINATE WITH THE LOCAL UTILITY AND CONDUCT A FIRE FLOW TEST IN ACCORDANCE WITH NFPA 13 PRIOR TO PERFORMING ANY WORK. CONTRACTOR SHALL PAY FOR ANY/ALL FEES ASSOCIATED WITH THE TEST.
2. MODIFY EXISTING SPRINKLER HEAD LOCATIONS AND BRANCH PIPING AS REQUIRED TO PROVIDE SPRINKLER COVERAGE OF NEW OFFICE CONFIGURATIONS ON THE FIRST AND SECOND FLOORS IN ACCORDANCE WITH NFPA 13.
3. THESE DRAWINGS ARE DIAGRAMMATIC AND APPROXIMATE; IT IS THE RESPONSIBILITY OF THE INSTALLING CONTRACTOR FOR VERIFICATION OF ALL DIMENSIONS, MEASUREMENTS, AND LOCATIONS OF EXISTING FACILITIES, UTILITIES, EQUIPMENT, AND OTHER EXISTING CONDITIONS WHICH MAY AFFECT CONSTRUCTION PRIOR TO SHOP DRAWINGS AND INSTALLATION. HOWEVER, IN THE EVENT OF DISCREPANCIES BETWEEN THE DRAWINGS AND ACTUAL FIELD CONDITIONS, CONTACT THE CONTRACTING OFFICER IMMEDIATELY.
4. THE DESIGN AND INSTALLATION/MODIFICATION OF THE FIRE PROTECTION SYSTEMS SHALL BE IN STRICT ACCORDANCE WITH NFPA 13, 2016 EDITION; AND ANY APPLICABLE LOCAL, STATE, OR NATIONAL CODES AND STANDARDS.
5. THE ENTIRE FACILITY IS BEING PROTECTED BY AN AUTOMATIC WET PIPE SPRINKLER SYSTEM. COORDINATE SHUTDOWNS AND INTERRUPTIONS IN SPRINKLER PROTECTION WITH THE BUILDING OWNER AND THE AUTHORITY HAVING JURISDICTION.
6. THE SPRINKLER SYSTEM SHALL CONTINUE TO BE MONITORED BY THE FIRE ALARM SYSTEM.
7. THE INTENT OF THE FIRE PROTECTION WORK IS TO MODIFY THE EXISTING SYTEMS TO ACCOMODATE THE NEW FLOOR PLAN.
8. ALL HANGERS SHALL BE PROVIDED AND INSTALLED IN ACCORDANCE WITH NFPA 13.
9. PROVIDE SLEEVES AND FIRESTOP SEALANTS WHERE PIPES PENETRATE FIRE RATED FLOORS AND WALLS. COMPLY WITH ASTM E-814 AND UL 1479. PROVIDE PIPE SLEEVES WITH FIRE STOP SEALANTS FOR ALL PIPING PENETRATING DRYWALL PARTITIONS, MASONRY PARTITIONS, AND FLOORS.
10. A MAXIMUM OF ONE SPRINKLER MAY BE SUPPLIED BY A SINGLE 1" OUTLET WITHOUT PROVIDING HYDRAULIC CALCULATIONS TO VALIDATE ADEQUACY. NEW MECHANICAL OUTLETS FOR NEW PENDENT HEADS SHOULD BE INSTALLED ON NEARBY BRANCHLINES.
11. FIRE PROTECTION PIPING IS TO BE LOCATED ABOVE THE CEILING UNLESS OTHERWISE NOTED.
12. COORDINATE WITH OTHERS THE FINAL LOCATIONS OF SPRINKLER HEADS, PIPING, AND ALL NEW WORK WITH EXISTING AND NEW LIGHT FIXTURES, DIFFUSERS, GRILLES, REGISTERS, SMOKE DETECTORS, SPEAKERS, AND OTHER CEILING MOUNTED DEVICES.
13. CENTER HEADS IN ALL CEILING TILES UNLESS ARCHITECT APPROVES ALTERNATE LOCATION. PROVIDE ADDITIONAL HEADS WHERE REQUIRED TO MEET COVERAGE REQUIREMENTS.
14. RELOCATE EXISTING SPRINKLER HEADS OR ADD NEW SPRINKLER HEADS AS SHOWN TO PROVIDE A CODE COMPLIANT SYSTEM WHILE ADHERING TO ALL OBSTUCTION RULES WITHIN NFPA 13.
15. LIGHT HAZARD OCCUPANCY, MAXIMUM OF 225FT² PER HEAD, MAXIMUM SPACING IS 15', MINIMUM SPACING IS 6', MINIMUM DISTANCE FROM WALL IS 4".
16. SEE ARCHITECTURAL PLANS FOR CEILING MATERIAL AND COORDINATE HEAD TYPE IN EACH LOCATION.
17. SEAL ALL PENETRATIONS IN ACCORDANCE WITH THE FIRE RATING OF WALLS, CEILINGS OR FLOORS. SEE ARCHITECTURAL PLANS FOR ADDITIONAL INFORMATION.
18. EACH CONTRACTOR SHALL BE RESPONSIBLE FOR ALL CUTTING AND PATCHING ASSOCIATED WITH THEIR WORK. WHERE EQUIPMENT IS COMPLETELY DEMOLISHED OR REMOVED AND REPLACED WITH NEW EQUIPMENT, ALL FINISHES, FLOORING, BASE AND WALL SHALL BE PATCHED TO MATCH SURROUNDING AREAS. FEATHER INTO EXISTING FINISHED CONDITIONS TO TRANSITION NEW PATCH WORK WITH EXISTING FINISHED CONDITIONS. ALL PATCHING AND PAINTING SHALL BE DONE IN A MANNER TO MATCH THE EXISTING SURFACE IN APPEARANCE AND FUNCTION. ALL PATCHING SHALL BE PERFORMED BY A CONTRACTOR SKILLED IN THE APPROPRIATE CRAFT AND FINAL PATCHING IS SUBJECT TO REVIEW AND APPROVAL BY THE ARCHITECT.
19. PIPING SHALL BE AS FOLLOWS:
    A. ALLIED SCHEDULE 40 WITH CAST IRON THREADED FITTINGS FOR BRANCH PIPING 1"-2" DIAMETER, OR APPROVED EQUAL.
    B. ALLIED SCHEDULE 10 WITH GROOVED FITTINGS FOR SUPPLY AND MAIN PIPING 2-1/2" DIAMETER AND LARGER, U.O.N.
    C. ALL HEADS SHALL BE FED USING 1-INCH DIAMETER PIPING MINIMUM SIZE.

DESIGN CRITERIA FOR WET PIPE SYSTEM:

- LIGHT HAZARD PER NFPA 13, MAXIMUM OF 225 FT² PER HEAD.
- QUICK RESPONSE CONCEALED, PENDANT OR UPRIGHT HEADS.
- DESIGN AREA = 1,500 SF
- DENSITY = 0.10 GPM/SF
- FLOW RATE (SPRINKLERS) 1,500 SF X .10 GPM/SF = 150 GPM
- FLOW RATE (HOSE STREAM) = 100 GPM
- FLOW RATE (MAX.) = 250 GPM
- DURATION OF SUPPLY = 30 MINUTES

IT IS A VIOLATION OF THE NEW YORK STATE EDUCATION LAW, ARTICLE 145 §7209 SPECIAL PROVISIONS, FOR ANY PERSON, UNLESS THEY ARE ACTING UNDER THE DIRECTION OF A LICENSED PROFESSIONAL ENGINEER, ARCHITECT, LANDSCAPE ARCHITECT, OR LAND SURVEYOR, TO ALTER AN ITEM IN ANY WAY. IF AN ITEM BEARING THE STAMP OF A LICENSED PROFESSIONAL IS ALTERED, THE ALTERING PROFESSIONAL SHALL STAMP THE DOCUMENT AND INCLUDE THE NOTATION "ALTERED BY" FOLLOWED BY THEIR SIGNATURE, THE DATE OF SUCH ALTERATION, AND A SPECIFIC DESCRIPTION OF THE ALTERATION.

REVISIONS

CITY OF MIDDLETOWN
NEW COURTHOUSE FACILITY
CONTRACT 1B - MECHANICAL CONSTRUCTION

FIRE PROTECTION GENERAL NOTES AND BASEMENT FIRE PROTECTION PLAN

CITY OF MIDDLETOWN ORANGE COUNTY, NEW YORK

B&L
443 Electronics Parkway
Liverpool, NY
13088
Barton & Loguidice, D.P.C.

STATE OF NEW YORK ERIC J. HORVAT Lic. No. 089009 PROFESSIONAL ENGINEER

NYS EXP.: 11/30/2025

Date: AUGUST, 2024

Scale: AS SHOWN

Sheet Number: FP101

Project Number: 1753.008.001

Plotted: 8/21/2024 1:49:57 PM
C:\Users\rad\Documents\Middletown Courthouse Drawings - MECHANICAL MODEL_rdarin.rvt
Checked by EJH Drawn by KRK Designed by RAD In Charge of EJH

N

TRUE NORTH

PLAN NORTH

EXISTING SYSTEM TO REMAIN

MODIFY EXISTING SYSTEM TO ACCOMMODATE NEW CEILING, CENTER HEADS IN NEW CEILING TILES

PROVIDE ADDITIONAL HEAD(S) AND PIPING TO PROVIDE COVERAGE IN AREA AND EXTEND EXISTING SYSTEM.

SECURITY AREA – PROVIDE TAMPERPROOF, INSTITUTIONAL STYLE, RECESSED SECURITY, SPRINKLER HEADS WITHIN SECURITY CEILING. COORDINATE WITH GC AND CEILING MANUFACTURER REQUIREMENTS

FIRE PROTECTION LEGEND

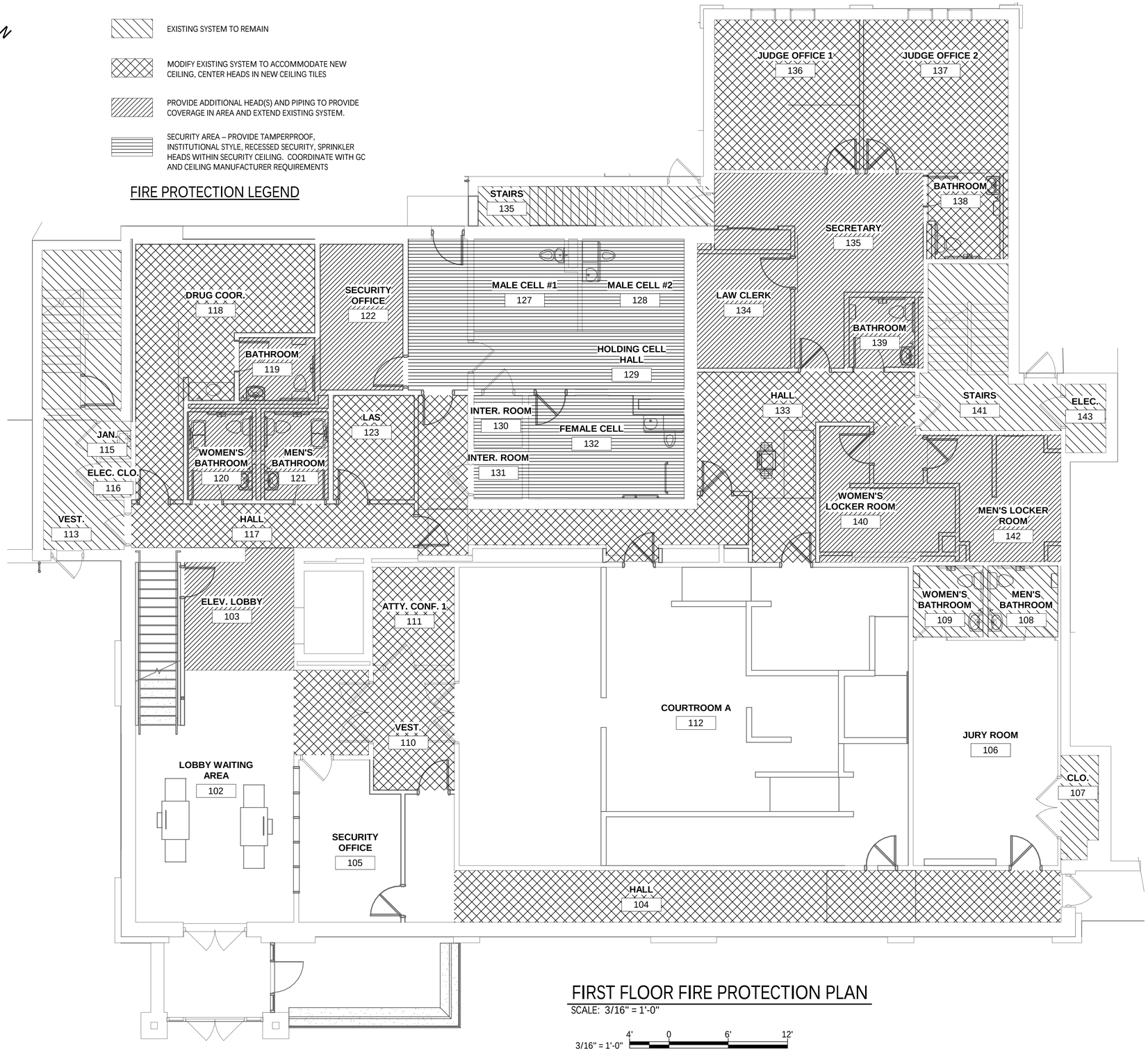

FIRST FLOOR FIRE PROTECTION PLAN

SCALE: 3/16" = 1'-0"

3/16" = 1'-0" 4' 0 6' 12'

GENERAL NOTES:

1. EXISTING FIRE PROTECTION SYSTEM TO REMAIN. CONTRACTOR SHALL COORDINATE WITH THE LOCAL UTILITY AND CONDUCT A FIRE FLOW TEST IN ACCORDANCE WITH NFPA 13 PRIOR TO PERFORMING ANY WORK. CONTRACTOR SHALL PAY FOR ANY/ALL FEES ASSOCIATED WITH THE TEST.
2. MODIFY EXISTING SPRINKLER HEAD LOCATIONS AND BRANCH PIPING AS REQUIRED TO PROVIDE SPRINKLER COVERAGE OF NEW OFFICE CONFIGURATIONS ON THE FIRST AND SECOND FLOORS IN ACCORDANCE WITH NFPA 13.
3. THESE DRAWINGS ARE DIAGRAMMATIC AND APPROXIMATE; IT IS THE RESPONSIBILITY OF THE INSTALLING CONTRACTOR FOR VERIFICATION OF ALL DIMENSIONS, MEASUREMENTS, AND LOCATIONS OF EXISTING FACILITIES, UTILITIES, EQUIPMENT, AND OTHER EXISTING CONDITIONS WHICH MAY AFFECT CONSTRUCTION PRIOR TO SHOP DRAWINGS AND INSTALLATION. HOWEVER, IN THE EVENT OF DISCREPANCIES BETWEEN THE DRAWINGS AND ACTUAL FIELD CONDITIONS, CONTACT THE CONTRACTING OFFICER IMMEDIATELY.
4. THE DESIGN AND INSTALLATION/MODIFICATION OF THE FIRE PROTECTION SYSTEMS SHALL BE IN STRICT ACCORDANCE WITH NFPA 13, 2016 EDITION; AND ANY APPLICABLE LOCAL, STATE, OR NATIONAL CODES AND STANDARDS.
5. THE ENTIRE FACILITY IS BEING PROTECTED BY AN AUTOMATIC WET PIPE SPRINKLER SYSTEM. COORDINATE SHUTDOWNS AND INTERRUPTIONS IN SPRINKLER PROTECTION WITH THE BUILDING OWNER AND THE AUTHORITY HAVING JURISDICTION.
6. THE SPRINKLER SYSTEM SHALL CONTINUE TO BE MONITORED BY THE FIRE ALARM SYSTEM.
7. THE INTENT OF THE FIRE PROTECTION WORK IS TO MODIFY THE EXISTING SYTEMS TO ACCOMODATE THE NEW FLOOR PLAN.
8. ALL HANGERS SHALL BE PROVIDED AND INSTALLED IN ACCORDANCE WITH NFPA 13.
9. PROVIDE SLEEVES AND FIRESTOP SEALANTS WHERE PIPES PENETRATE FIRE RATED FLOORS AND WALLS. COMPLY WITH ASTM E-814 AND UL 1479. PROVIDE PIPE SLEEVES WITH FIRE STOP SEALANTS FOR ALL PIPING PENETRATING DRYWALL PARTITIONS, MASONRY PARTITIONS, AND FLOORS.
10. A MAXIMUM OF ONE SPRINKLER MAY BE SUPPLIED BY A SINGLE 1" OUTLET WITHOUT PROVIDING HYDRAULIC CALCULATIONS TO VALIDATE ADEQUACY. NEW MECHANICAL OUTLETS FOR NEW PENDENT HEADS SHOULD BE INSTALLED ON NEARBY BRANCHLINES.
11. FIRE PROTECTION PIPING IS TO BE LOCATED ABOVE THE CEILING UNLESS OTHERWISE NOTED.
12. COORDINATE WITH OTHERS THE FINAL LOCATIONS OF SPRINKLER HEADS, PIPING, AND ALL NEW WORK WITH EXISTING AND NEW LIGHT FIXTURES, DIFFUSERS, GRILLES, REGISTERS, SMOKE DETECTORS, SPEAKERS, AND OTHER CEILING MOUNTED DEVICES.
13. CENTER HEADS IN ALL CEILING TILES UNLESS ARCHITECT APPROVES ALTERNATE LOCATION. PROVIDE ADDITIONAL HEADS WHERE REQUIRED TO MEET COVERAGE REQUIREMENTS.
14. RELOCATE EXISTING SPRINKLER HEADS OR ADD NEW SPRINKLER HEADS AS SHOWN TO PROVIDE A CODE COMPLIANT SYSTEM WHILE ADHERING TO ALL OBSTUCTION RULES WITHIN NFPA 13.
15. LIGHT HAZARD OCCUPANCY, MAXIMUM OF 225FT² PER HEAD, MAXIMUM SPACING IS 15', MINIMUM SPACING IS 6', MINIMUM DISTANCE FROM WALL IS 4".
16. SEE ARCHITECTURAL PLANS FOR CEILING MATERIAL AND COORDINATE HEAD TYPE IN EACH LOCATION.
17. SEAL ALL PENETRATIONS IN ACCORDANCE WITH THE FIRE RATING OF WALLS, CEILINGS OR FLOORS. SEE ARCHITECTURAL PLANS FOR ADDITIONAL INFORMATION.
18. EACH CONTRACTOR SHALL BE RESPONSIBLE FOR ALL CUTTING AND PATCHING ASSOCIATED WITH THEIR WORK. WHERE EQUIPMENT IS COMPLETELY DEMOLISHED OR REMOVED AND REPLACED WITH NEW EQUIPMENT, ALL FINISHES, FLOORING, BASE AND WALL SHALL BE PATCHED TO MATCH SURROUNDING AREAS. FEATHER INTO EXISTING FINISHED CONDITIONS TO TRANSITION NEW PATCH WORK WITH EXISTING FINISHED CONDITIONS. ALL PATCHING AND PAINTING SHALL BE DONE IN A MANNER TO MATCH THE EXISTING SURFACE IN APPEARANCE AND FUNCTION. ALL PATCHING SHALL BE PERFORMED BY A CONTRACTOR SKILLED IN THE APPROPRIATE CRAFT AND FINAL PATCHING IS SUBJECT TO REVIEW AND APPROVAL BY THE ARCHITECT.
19. PIPING SHALL BE AS FOLLOWS:
    - A. ALLIED SCHEDULE 40 WITH CAST IRON THREADED FITTINGS FOR BRANCH PIPING 1"-2" DIAMETER, OR APPROVED EQUAL.
    - B. ALLIED SCHEDULE 10 WITH GROOVED FITTINGS FOR SUPPLY AND MAIN PIPING 2-1/2" DIAMETER AND LARGER, U.O.N.
    - C. ALL HEADS SHALL BE FED USING 1-INCH DIAMETER PIPING MINIMUM SIZE.

DESIGN CRITERIA FOR WET PIPE SYSTEM:

- LIGHT HAZARD PER NFPA 13, MAXIMUM OF 225 FT² PER HEAD.
- QUICK RESPONSE CONCEALED, PENDANT OR UPRIGHT HEADS.
- DESIGN AREA = 1,500 SF
- DENSITY = 0.10 GPM/SF
- FLOW RATE (SPRINKLERS) 1,500 SF X .10 GPM/SF = 150 GPM
- FLOW RATE (HOSE STREAM) = 100 GPM
- FLOW RATE (MAX.) = 250 GPM
- DURATION OF SUPPLY = 30 MINUTES

IT IS A VIOLATION OF THE NEW YORK STATE EDUCATION LAW, ARTICLE 145 §7209 SPECIAL PROVISIONS, FOR ANY PERSON, UNLESS THEY ARE ACTING UNDER THE DIRECTION OF A LICENSED PROFESSIONAL ENGINEER, ARCHITECT, LANDSCAPE ARCHITECT, OR LAND SURVEYOR, TO ALTER AN ITEM IN ANY WAY. IF AN ITEM BEARING THE STAMP OF A LICENSED PROFESSIONAL IS ALTERED, THE ALTERING PROFESSIONAL SHALL STAMP THE DOCUMENT AND INCLUDE THE NOTATION "ALTERED BY" FOLLOWED BY THEIR SIGNATURE, THE DATE OF SUCH ALTERATION, AND A SPECIFIC DESCRIPTION OF THE ALTERATION.

REVISIONS

CITY OF MIDDLETOWN
NEW COURTHOUSE FACILITY
CONTRACT 1B - MECHANICAL CONSTRUCTION

FIRST FLOOR FIRE PROTECTION PLAN

CITY OF MIDDLETOWN ORANGE COUNTY, NEW YORK

B&L
Barton & Loguidice, D.P.C.
443 Electronics Parkway
Liverpool, NY
13088

STATE OF NEW YORK · ERIC J. HORVAT · No. 089099 · LICENSED PROFESSIONAL ENGINEER

NYS EXP.: 11/30/2025

Date: AUGUST, 2024

Scale: AS SHOWN

Sheet Number: FP102

Project Number: 1753.008.001

Plotted: 8/21/2024 1:49:58 PM
C:\Users\rad\Documents\Middletown Courthouse Drawings - MECHANICAL MODEL_rdarin.rvt

Checked by EJH Drawn by KRK Designed by RAD In Charge of EJH

EXISTING SYSTEM TO REMAIN

MODIFY EXISTING SYSTEM TO ACCOMMODATE NEW CEILING, CENTER HEADS IN NEW CEILING TILES

PROVIDE ADDITIONAL HEAD(S) AND PIPING TO PROVIDE COVERAGE IN AREA AND EXTEND EXISTING SYSTEM.

FIRE PROTECTION LEGEND

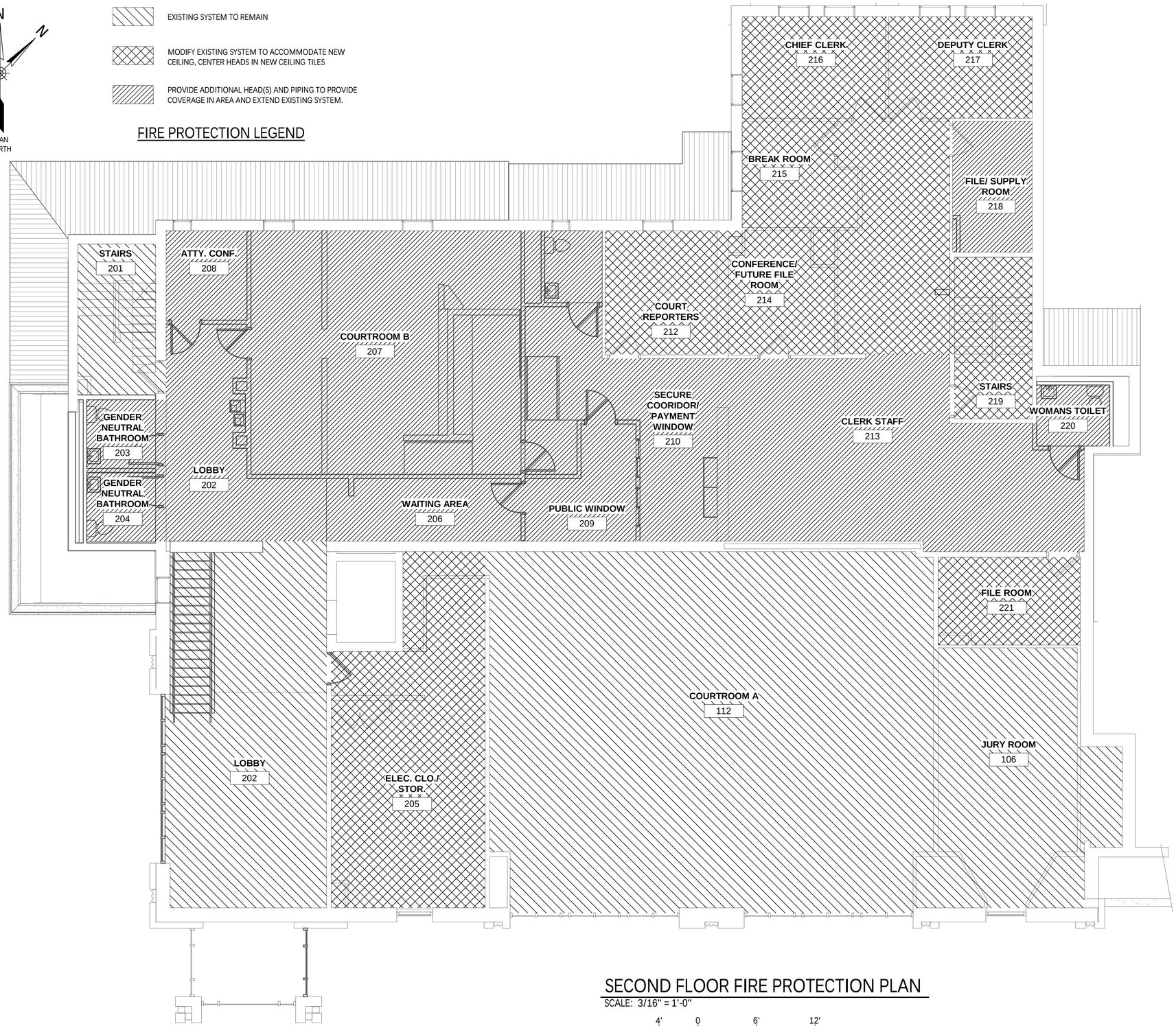

SECOND FLOOR FIRE PROTECTION PLAN

SCALE: 3/16" = 1'-0"

3/16" = 1'-0" 4' 0 6' 12'

GENERAL NOTES:

1. EXISTING FIRE PROTECTION SYSTEM TO REMAIN. CONTRACTOR SHALL COORDINATE WITH THE LOCAL UTILITY AND CONDUCT A FIRE FLOW TEST IN ACCORDANCE WITH NFPA 13 PRIOR TO PERFORMING ANY WORK. CONTRACTOR SHALL PAY FOR ANY/ALL FEES ASSOCIATED WITH THE TEST.
2. MODIFY EXISTING SPRINKLER HEAD LOCATIONS AND BRANCH PIPING AS REQUIRED TO PROVIDE SPRINKLER COVERAGE OF NEW OFFICE CONFIGURATIONS ON THE FIRST AND SECOND FLOORS IN ACCORDANCE WITH NFPA 13.
3. THESE DRAWINGS ARE DIAGRAMMATIC AND APPROXIMATE; IT IS THE RESPONSIBILITY OF THE INSTALLING CONTRACTOR FOR VERIFICATION OF ALL DIMENSIONS, MEASUREMENTS, AND LOCATIONS OF EXISTING FACILITIES, UTILITIES, EQUIPMENT, AND OTHER EXISTING CONDITIONS WHICH MAY AFFECT CONSTRUCTION PRIOR TO SHOP DRAWINGS AND INSTALLATION. HOWEVER, IN THE EVENT OF DISCREPANCIES BETWEEN THE DRAWINGS AND ACTUAL FIELD CONDITIONS, CONTACT THE CONTRACTING OFFICER IMMEDIATELY.
4. THE DESIGN AND INSTALLATION/MODIFICATION OF THE FIRE PROTECTION SYSTEMS SHALL BE IN STRICT ACCORDANCE WITH NFPA 13, 2016 EDITION; AND ANY APPLICABLE LOCAL, STATE, OR NATIONAL CODES AND STANDARDS.
5. THE ENTIRE FACILITY IS BEING PROTECTED BY AN AUTOMATIC WET PIPE SPRINKLER SYSTEM. COORDINATE SHUTDOWNS AND INTERRUPTIONS IN SPRINKLER PROTECTION WITH THE BUILDING OWNER AND THE AUTHORITY HAVING JURISDICTION.
6. THE SPRINKLER SYSTEM SHALL CONTINUE TO BE MONITORED BY THE FIRE ALARM SYSTEM.
7. THE INTENT OF THE FIRE PROTECTION WORK IS TO MODIFY THE EXISTING SYTEMS TO ACCOMODATE THE NEW FLOOR PLAN.
8. ALL HANGERS SHALL BE PROVIDED AND INSTALLED IN ACCORDANCE WITH NFPA 13.
9. PROVIDE SLEEVES AND FIRESTOP SEALANTS WHERE PIPES PENETRATE FIRE RATED FLOORS AND WALLS. COMPLY WITH ASTM E-814 AND UL 1479. PROVIDE PIPE SLEEVES WITH FIRE STOP SEALANTS FOR ALL PIPING PENETRATING DRYWALL PARTITIONS, MASONRY PARTITIONS, AND FLOORS.
10. A MAXIMUM OF ONE SPRINKLER MAY BE SUPPLIED BY A SINGLE 1" OUTLET WITHOUT PROVIDING HYDRAULIC CALCULATIONS TO VALIDATE ADEQUACY. NEW MECHANICAL OUTLETS FOR NEW PENDENT HEADS SHOULD BE INSTALLED ON NEARBY BRANCHLINES.
11. FIRE PROTECTION PIPING IS TO BE LOCATED ABOVE THE CEILING UNLESS OTHERWISE NOTED.
12. COORDINATE WITH OTHERS THE FINAL LOCATIONS OF SPRINKLER HEADS, PIPING, AND ALL NEW WORK WITH EXISTING AND NEW LIGHT FIXTURES, DIFFUSERS, GRILLES, REGISTERS, SMOKE DETECTORS, SPEAKERS, AND OTHER CEILING MOUNTED DEVICES.
13. CENTER HEADS IN ALL CEILING TILES UNLESS ARCHITECT APPROVES ALTERNATE LOCATION. PROVIDE ADDITIONAL HEADS WHERE REQUIRED TO MEET COVERAGE REQUIREMENTS.
14. RELOCATE EXISTING SPRINKLER HEADS OR ADD NEW SPRINKLER HEADS AS SHOWN TO PROVIDE A CODE COMPLIANT SYSTEM WHILE ADHERING TO ALL OBSTUCTION RULES WITHIN NFPA 13.
15. LIGHT HAZARD OCCUPANCY, MAXIMUM OF 225FT² PER HEAD, MAXIMUM SPACING IS 15', MINIMUM SPACING IS 6', MINIMUM DISTANCE FROM WALL IS 4".
16. SEE ARCHITECTURAL PLANS FOR CEILING MATERIAL AND COORDINATE HEAD TYPE IN EACH LOCATION.
17. SEAL ALL PENETRATIONS IN ACCORDANCE WITH THE FIRE RATING OF WALLS, CEILINGS OR FLOORS. SEE ARCHITECTURAL PLANS FOR ADDITIONAL INFORMATION.
18. EACH CONTRACTOR SHALL BE RESPONSIBLE FOR ALL CUTTING AND PATCHING ASSOCIATED WITH THEIR WORK. WHERE EQUIPMENT IS COMPLETELY DEMOLISHED OR REMOVED AND REPLACED WITH NEW EQUIPMENT, ALL FINISHES, FLOORING, BASE AND WALL SHALL BE PATCHED TO MATCH SURROUNDING AREAS. FEATHER INTO EXISTING FINISHED CONDITIONS TO TRANSITION NEW PATCH WORK WITH EXISTING FINISHED CONDITIONS. ALL PATCHING AND PAINTING SHALL BE DONE IN A MANNER TO MATCH THE EXISTING SURFACE IN APPEARANCE AND FUNCTION. ALL PATCHING SHALL BE PERFORMED BY A CONTRACTOR SKILLED IN THE APPROPRIATE CRAFT AND FINAL PATCHING IS SUBJECT TO REVIEW AND APPROVAL BY THE ARCHITECT.
19. PIPING SHALL BE AS FOLLOWS:
    A. ALLIED SCHEDULE 40 WITH CAST IRON THREADED FITTINGS FOR BRANCH PIPING 1"-2" DIAMETER, OR APPROVED EQUAL.
    B. ALLIED SCHEDULE 10 WITH GROOVED FITTINGS FOR SUPPLY AND MAIN PIPING 2-1/2" DIAMETER AND LARGER, U.O.N.
    C. ALL HEADS SHALL BE FED USING 1-INCH DIAMETER PIPING MINIMUM SIZE.

DESIGN CRITERIA FOR WET PIPE SYSTEM:

- LIGHT HAZARD PER NFPA 13, MAXIMUM OF 225 FT² PER HEAD.
- QUICK RESPONSE CONCEALED, PENDANT OR UPRIGHT HEADS.
- DESIGN AREA = 1,500 SF
- DENSITY = 0.10 GPM/SF
- FLOW RATE (SPRINKLERS) 1,500 SF X .10 GPM/SF = 150 GPM
- FLOW RATE (HOSE STREAM) = 100 GPM
- FLOW RATE (MAX.) = 250 GPM
- DURATION OF SUPPLY = 30 MINUTES

IT IS A VIOLATION OF THE NEW YORK STATE EDUCATION LAW, ARTICLE 145 §7209 SPECIAL PROVISIONS, FOR ANY PERSON, UNLESS THEY ARE ACTING UNDER THE DIRECTION OF A LICENSED PROFESSIONAL ENGINEER, ARCHITECT, LANDSCAPE ARCHITECT, OR LAND SURVEYOR, TO ALTER AN ITEM IN ANY WAY. IF AN ITEM BEARING THE STAMP OF A LICENSED PROFESSIONAL IS ALTERED, THE ALTERING PROFESSIONAL SHALL STAMP THE DOCUMENT AND INCLUDE THE NOTATION "ALTERED BY" FOLLOWED BY THEIR SIGNATURE, THE DATE OF SUCH ALTERATION, AND A SPECIFIC DESCRIPTION OF THE ALTERATION.

REVISIONS

CITY OF MIDDLETOWN
NEW COURTHOUSE FACILITY
CONTRACT 1B - MECHANICAL CONSTRUCTION

SECOND FLOOR FIRE PROTECTION PLAN

CITY OF MIDDLETOWN ORANGE COUNTY, NEW YORK

B&L
Barton & Loguidice, D.P.C.
443 Electronics Parkway
Liverpool, NY
13088

STATE OF NEW YORK ERIC J. HORVAT LICENSED PROFESSIONAL ENGINEER No. 089099

NYS EXP.: 11/30/2025

Date: AUGUST, 2024

Scale: AS SHOWN

Sheet Number: FP103

Project Number: 1753.008.001

Plotted: 8/21/2024 1:49:59 PM
C:\Users\rad\Documents\Middletown Courthouse Drawings - MECHANICAL MODEL_rdarin.rvt

Checked by EJH Drawn by KRK Designed by RAD In Charge of EJH

GENERAL NOTES

CONTRACT DELINEATION

1. ALL ELECTRICAL WORK IS PERFORMED UNDER CONTRACT 1D - ELECTRICAL CONSTRUCTION.

SYMBOLS AND ABBREVIATIONS

1. THIS SHEET CONTAINS SYMBOLS AND ABBREVIATIONS TYPICALLY SHOWN ON ELECTRICAL DRAWINGS AND SCHEMATICS. THIS CONTRACT DRAWING SET MAY NOT CONTAIN ALL SYMBOLS AND ABBREVIATIONS SHOWN ON THIS SHEET.

PERMITS AND INSPECTIONS

1. THE CONTRACTOR SHALL OBTAIN ALL REQUIRED PERMITS AND ARRANGE FOR ALL REQUIRED INSPECTIONS IN ACCORDANCE WITH STATE AND LOCAL GOVERNING AUTHORITIES.
2. ALL WORK SHALL BE DONE IN ACCORDANCE WITH NEC, AND STATE AND LOCAL GOVERNING REGULATIONS.

SCOPE

1. UNLESS OTHERWISE INDICATED, PROVIDE A COMPLETE AND OPERATIONAL ELECTRICAL SYSTEM INCLUDING ALL NECESSARY MATERIAL, LABOR, AND EQUIPMENT.
2. ALL DISCONNECTS REQUIRED BY CODE MAY NOT BE SHOWN. CONTRACTOR SHALL PROVIDE ALL NECESSARY DISCONNECTS AND OVERCURRENT PROTECTIVE DEVICES.
3. ALL EQUIPMENT AND MATERIAL SHALL BE LABELED AND LISTED, AND INSTALLED IN ACCORDANCE WITH THEIR LISTING.
4. PROVIDE ELECTRICAL POWER WIRING TO ALL MECHANICAL EQUIPMENT.

COORDINATION OF WORK

1. THE CONTRACTOR SHALL COORDINATE AND VERIFY THAT WORKING AND DEDICATED EQUIPMENT SPACE REQUIREMENTS ARE MET PER NEC AND AHJ.
2. FIELD LOCATE ALL CORE DRILL LOCATIONS.
3. BEFORE CUTTING OR DRILLING INTO BUILDING ELEMENTS INSPECT AND LAYOUT WORK TO AVOID DAMAGING STRUCTURAL ELEMENTS AND BUILDING UTILITIES.
4. BEFORE SELECTING MATERIAL AND EQUIPMENT, AND PROCEEDING WITH WORK, INSPECT AREAS WHERE MATERIAL AND EQUIPMENT ARE TO BE INSTALLED TO INSURE SUITABILITY, AND CHECK NEEDED SPACE FOR PLACEMENT, CLEARANCES AND INTERCONNECTIONS.
5. COORDINATION OF POSSIBLE SYSTEM SHUT-DOWNS AND WORK AREAS NEED TO BE COORDINATED WITH THE OWNER.
6. VERIFY RECEPTACLE, SWITCH, & COVER PLATE COLORS WITH OWNER.
7. TURN OVER TO THE OWNER ALL MANUFACTURER'S WARRANTIES FOR EQUIPMENT AND MATERIALS PROVIDED.

DEFINITIONS

1. THE DEFINITION OF ELECTRICAL TERMS USED SHALL BE AS DEFINED IN THE EDITION OF THE NATIONAL ELECTRIC CODE (NEC) AS REFERENCED IN THE BUILDING CODE OF NEW YORK STATE.
2. THE TERM "INDICATED" SHALL MEAN "AS SHOWN ON CONTRACT DOCUMENTS (SPECIFICATIONS, DRAWINGS, AND RELATED ATTACHMENTS)".
3. THE TERM "PROVIDE" SHALL MEAN "TO FURNISH, INSTALL, AND CONNECT COMPLETELY".
4. THE TERM "SIZE" SHALL MEAN ONE OR MORE OF THE FOLLOWING: "LENGTH, CURRENT AND VOLTAGE RATING, NUMBER OF POLES, NEMA SIZE, AND OTHER SIMILAR ELECTRICAL CHARACTERISTICS".

PLANS

1. ELECTRICAL PLANS, DETAILS, AND ONE LINE DIAGRAMS SHOW THE GENERAL LOCATION AND ARRANGEMENT OF THE ELECTRICAL SYSTEM. THEY ARE DIAGRAMMATIC AND DO NOT SHOW ALL CONDUIT BODIES, CONNECTORS, BENDS, FITTINGS, HANGERS, AND ADDITIONAL PULL BOXES WHICH THE CONTRACTOR MUST PROVIDE TO COMPLETE THE ELECTRICAL SYSTEM.
2. ELECTRICAL PLANS AND DETAILS DO NOT SHOW ALL INTERFERENCES AND CONDITIONS, VISIBLE AND/OR HIDDEN, THAT MAY EXIST; THUS REQUIRING THE CONTRACTOR TO INSPECT AND SURVEY THE SPACE BEFORE PERFORMING THE WORK.

METHODS

1. ALL EXTERIOR CONDUITS TO HAVE DUCT SEAL INSTALLED AT ALL ENDS, BOXES, WEATHERHEADS, PENETRATIONS TO INTERIOR SPACES, ETC.
2. DUCT BANKS SHALL NOT BE ROUTED DIRECTLY ABOVE OR BELOW EXISTING/PROPOSED UTILITIES EXCEPT WHEN CROSSING. WHERE CROSSING EXISTING OR PROPOSED UTILITIES DUCT BANKS SHALL CROSS AT 90 DEGREE ANGLES.
3. ALL CONDUIT SYSTEMS EXPOSED TO TEMPERATURE DIFFERENTIALS, IN POTENTIAL CONDENSING ATMOSPHERES, EXTERIOR INSTALLED, OR INSTALLED UNDERGROUND SHALL HAVE PROVISIONS FOR DRAINING WATER OUT OF CONDUIT SYSTEMS.

UNDERGROUND UTILITIES

1. UNDERGROUND UTILITY LOCATIONS ARE NOT GUARANTEED, NOR IS THERE ANY GUARANTEE THAT ALL EXISTING UTILITIES WHETHER FUNCTIONAL OR ABANDONED WITHIN THE PROJECT AREA ARE SHOWN ON THESE DRAWINGS.
2. THE CONTRACTOR SHALL DETERMINE THE EXACT LOCATION OF ALL UNDERGROUND UTILITIES BEFORE BEGINNING WORK & SHALL BE RESPONSIBLE FOR ALL DAMAGE RESULTING FROM HIS/HER WORK.
3. THE CONTRACTOR SHALL NOTIFY "DIG SAFELY NEW YORK" 1-800-962-7962 PRIOR TO ANY EXCAVATION.

SYMBOLS

LINEWEIGHT AND LINETYPE DESIGNATIONS

- EXISTING U.O.I.
- PROPOSED TO BE PROVIDED U.O.I.
- OHE — OVERHEAD ELECTRIC
- UGE — UNDERGROUND ELECTRIC

BASIC DRAWING SYMBOLS

- DB-01 — UNDERGROUND DUCT BANK DESIGNATION
- 1 — DRAWING SPECIFIC NOTE
- 1 — FEEDER DESIGNATION
- REMOVALS
- XXX-X — BRANCH CONTINUATION CIRCUIT (2#12, 1#12G IN 3/4"C TO INDICATED PANEL, PROVIDE 20A, 1P BREAKER)

DISTRIBUTION

- UTILITY POLE
- CIRCUIT BREAKER PANELBOARD, SURFACE MTD., 72"AFF (TO TOP)
- CIRCUIT BREAKER PANELBOARD, FLUSH MTD., 72"AFF (TO TOP)
- GENERATOR
- SELF CONTAINED METER
- M — METER CONNECTION WITH CURRENT TRANSFORMERS
- T1 — TRANSFORMER
- TRANSFORMER
- AUTOMATIC TRANSFER SWITCH

SWITCHES AND OVER CURRENT PROTECTION

- FUSIBLE/SAFETY DISCONNECT
- CIRCUIT BREAKER
- FUSE
- DISCONNECT SWITCH
- FUSED DISCONNECT SWITCH
- SWITCH (OPEN)
- SWITCH (CLOSED)
- FUSE CUTOUT
- DRAW-OUT FRAME

GROUNDING

- GROUND
- GROUND ROD

WIRING METHODS

- GAS/WATER TIGHT PENETRATION
- INSULATED BUSHING OR CONDUIT STUB
- SEAL OFF
- PB-1 — PULL BOX, ITEM NUMBER
- JB — JUNCTION BOX
- HH-1 — HAND HOLE, ITEM NUMBER

MOTORS AND MOTOR STARTERS

- FAN/BLOWER
- X — MOTOR WITH HORSEPOWER
- VARIABLE FREQUENCY DRIVE (VFD)
- MS — MANUAL MOTOR STARTER
- COMBINATION MAG. MOTOR STARTER W/FUSIBLE SWITCH,

FIRE PROTECTION

- S — FIRE ALARM SYSTEM, SMOKE DETECTOR
- F — FIRE ALARM SYSTEM, PULLSTATION
- FACP — FIRE ALARM SYSTEM, FIRE ALARM CONTROL PANEL
- H — FIRE ALARM SYSTEM, HEAT DETECTOR
- CO — FIRE ALARM SYSTEM, CARBON MONOXIDE DETECTOR
- F — FIRE ALARM SYSTEM, HORN/STROBE
- F — FIRE ALARM SYSTEM, HORN
- F — FIRE ALARM SYSTEM, STROBE
- X — SMOKE DETECTOR UNDER RAISED FLOOR

RECEPTACLES & DATA DEVICES

- SINGLE RECEPTACLE
- XXX-X — DUPLEX RECEPTACLE, XXX-X INDICATES PANEL AND CIRCUIT NUMBER (2#12, 1#12G IN 3/4"C TO INDICATED PANEL, PROVIDE 20A, 1P BREAKER)
- DOUBLE DUPLEX RECEPTACLE
- QUADPLEX RECEPTACLE
- XX-XXR — SPECIAL RECEPTACLE, 4'AFF, NEMA CONFIGURATION AS NOTED.
- SWITCHED DUPLEX RECEPTACLE OUTLET, SWITCH TOP HALF
- DUPLEX DATA RECEPTACLE (2 CAT6A CABLES PER SYMBOL)
- X4 — QUAD DATA RECEPTACLE (4 CAT6A CABLES PER SYMBOL)
- 2 PORT TELEPHONE AND RJ-45 DATA OUTLET
- FLUSH MOUNT FLOOR BOX
- FLOORBOX WITH DATA RECEPTACLE, DUPLEX RECEPTACLE AND MIC RECEPTACLE
- FLOORBOX WITH DATA RECEPTACLE AND DUPLEX RECEPTACLE
- FLOORBOX WITH (2) DATA RECEPTACLE, DUPLEX RECEPTACLE AND MIC RECEPTACLE
- FLOORBOX WITH (2) DATA RECEPTACLE, DUPLEX RECEPTACLE, MIC RECEPTACLE AND MINI SPEAKER
- FLOORBOX WITH (4) DATA RECEPTACLE, QUAD RECEPTACLE AND MIC RECEPTACLE
- FLOORBOX WITH (4) DATA RECEPTACLE, QUAD RECEPTACLE, MIC RECEPTACLE AND MINI SPEAKER

LIGHTING (REFER TO LIGHTING FIXTURE SCHEDULE FOR FIXTURE TYPES)

- $ — WALL SWITCH
- $D — DIMMER WALL SWITCH
- $3 — 3-WAY WALL SWITCH
- OS — CEILING MOUNTED OCCUPANCY/MOTION SENSOR
- X — 2'X2' LED LIGHT FIXTURE, X INDICATES FIXTURE TYPE
- X — 2'x4' LED LIGHT FIXTURE, X INDICATES FIXTURE TYPE
- X — WALL PACK, OUTDOOR LIGHTING FIXTURE, X INDICATES FIXTURE TYPE
- EXIT LIGHT FIXTURE, CEILING MOUNTED SHADING INDICATES FACE
- EXIT LIGHT FIXTURE, WALL MOUNTED, ARROWS AS INDICATED
- X — EMERGENCY LIGHTING UNIT, INTEGRAL BATTERY, X INDICATES FIXTURE TYPE
- SITE LIGHTING FIXTURE, TWIN POLE MOUNTED

CONTROL DEVICES

- CONTACTOR (NO)
- CONTACTOR (NC)
- TEMPERATURE ACTUATED SWITCH (OPEN)
- TEMPERATURE ACTUATED SWITCH (CLOSED)
- PUSH BUTTON (OPEN)
- T — THERMOSTAT

SECURITY DEVICES

- SP — MASTER INTERCOM W/DOOR RELEASE
- M — MASTER INTERCOM W/DOOR RELEASE
- REMOTE INTERCOM
- D — INTERCOM WITH DURESS ALARM
- D — DURESS ALARM ACTIVATION DEVICE
- R — HEAT RISE DETECTOR
- M — MOTION DETECTOR
- K — DIGITAL KEYPAD
- CR — CARD READER
- A — ALARM ANNUNCIATOR PANEL
- SECURITY CAMERA (CAMERAS PROVIDED BY OCA AND INSTALLED BY PROJECT COORDINATOR)
- J1 — TEL/DATA FLUSH MOUNTED FLOOR BOX
- WIFI — WIRELESS ACCESS POINT
- AP — AIPHONE
- KRONOS DEVICE — KRONOS (2 CAT6A CABLES PER SYMBOL)
- K H — OVERHEAD DOOR KEYPAD OPERATOR
- B M — BALANCED MAGNETIC DOOR CONTACT
- M — MAGNETIC DOOR CONTACT
- SP — IN CEILING SPEAKER
- CDPS — DOOR CLOSER WITH DOOR POSITION SWITCH

ABBREVIATIONS

Φ	PHASE
A	AMPERE
AF	AMP FRAME
AFF	ABOVE FINISHED FLOOR
ANSI	AMERICAN NATIONAL STANDARDS INSTITUTE
AT	AMP TRIP
ATS	AUTOMATIC TRANSFER SWITCH
C	CONDUIT
CB	CIRCUIT BREAKER
CKT	CIRCUIT
COMB	COMBINATION STARTER
COMM	COMMUNICATIONS
CONC	CONCRETE
CONST	CONSTRUCTION
CP	CONTROL PANEL
CT	CURRENT TRANSFORMER
CU	COPPER
DISC	DISCONNECT
DP-1	DISTRIBUTION PANEL WITH ITEM NUMBER
DWG	DRAWING
EC	ELECTRICAL CONTRACTOR
EM	EMERGENCY
EMI	ELECTROMAGNETIC INTERFERENCE
EPSS	EMERGENCY POWER SUPPLY SYSTEM
EQUIP	EQUIPMENT
EXT	EXTERIOR
FA	FIRE ALARM
FAAP	FIRE ALARM ANNUNCIATION PANEL
FACP	FIRE ALARM CONTROL PANEL
FB	FURNISHED BY
FLA	FULL LOAD AMPACITY
FS/S	BOX COVER FUSTAT W/ SWITCH
FSR	FAN SHUT-DOWN RELAY
FT	FEET
FURN	FURNISHED
GC	GENERAL CONTRACTOR
GFCI	GROUND FAULT CIRCUIT INTERRUPTER
GND	GROUND
HH-1	HAND HOLE WITH ITEM NUMBER
HID	HIGH INTENSITY DISCHARGE
HOA	HAND-OFF-AUTO SELECTOR SWITCH
HP	HORSEPOWER
IN	INCITES
JB	JUNCTION BOX
kAIC	1000 AMPERE INTERRUPTING CAPACITY
kCMIL	1000 CIRCULAR MILS
kW	KILOWATT
LED	LIGHT EMITTING DIODE
LOC	LOCATION
LP	LIGHTING PANEL WITH ITEM NUMBER
LS	LEVEL SENSOR
LTS	LIGHTS
MAN	MANUAL STARTER
MDP-1	MAIN DISTRIBUTION PANEL WITH ITEM NUMBER
MDS-1	MAIN DISCONNECT WITH ITEM NUMBER
MCB	MAIN CIRCUIT BREAKER
MCC	MOTOR CONTROL CENTER
MCP	MAIN CONTROL PANEL
MFR	MANUFACTURER
MIN	MINIMUM
MS	MOTOR STARTER
MTS	MANUAL TRANSFER SWITCH
N	NEUTRAL
NC	NORMALLY CLOSED
NEC	NATIONAL ELECTRIC CODE
NFD	NON-FUSED DISCONNECT
NO	NORMALLY OPEN
P	POLE
PB-1	PULL BOX WITH ITEM NUMBER
PROV	PROVIDED (FURNISHED AND INSTALLED)
PC	PHOTO CELL
PH	PHASE
PNL	PANEL
PRI	PRIMARY
PSI	POUNDS PER SQUARE INCH
PT	PRESSURE TRANSDUCER
PWR	POWER
QTY	QUANTITY
RCPT	RECEPTACLE
REQD	REQUIRED
RGS	RIGID GALVANIZED STEEL
SEC	SECONDARY
SPEC	SPECIFICATION
SQ	SQUARE
SW	SWITCH
SWBD	SWITCHBOARD
SYM	SYMMETRICAL
TYP	TYPICAL
UG/E	UNDERGROUND ELECTRIC
UPS	UNINTERRUPTIBLE POWER SUPPLY
V	VOLTAGE
VFD	VARIABLE FREQUENCY DRIVE
W/	WITH
WP	WEATHERPROOF
XFMR	TRANSFORMER

UNIT ABBREVIATIONS

ACCU	AIR COOLED CONDENSING UNIT
AHU	AIR HANDLING UNIT
B	BOILER
EF	EXHAUST FAN
EUH	UNIT HEATER
EWC	ELECTRIC WATER COOLER
FP	FEED PUMP
GF	GREENSAND FILTER
HWH	HOT WATER HEATER
P	PUMP
PTAC	PACKAGED TERMINAL AIR CONDITIONING
RTU	REMOTE THERMAL UNIT
WP	WELL PUMP
VFD	VARIABLE FREQUENCY DRIVE

IT IS A VIOLATION OF THE NEW YORK STATE EDUCATION LAW, ARTICLE 145 §7209 SPECIAL PROVISIONS, FOR ANY PERSON, UNLESS THEY ARE ACTING UNDER THE DIRECTION OF A LICENSED PROFESSIONAL ENGINEER, ARCHITECT, LANDSCAPE ARCHITECT, OR LAND SURVEYOR, TO ALTER AN ITEM IN ANY WAY. IF AN ITEM BEARING THE STAMP OF A LICENSED PROFESSIONAL IS ALTERED, THE ALTERING PROFESSIONAL SHALL STAMP THE DOCUMENT AND INCLUDE THE NOTATION "ALTERED BY" FOLLOWED BY THEIR SIGNATURE, THE DATE OF SUCH ALTERATION, AND A SPECIFIC DESCRIPTION OF THE ALTERATION.

REVISIONS

CITY OF MIDDLETOWN
NEW COURTHOUSE FACILITY
CONTRACT 1D - ELECTRICAL CONSTRUCTION

ELECTRICAL GENERAL NOTES & LEGEND

CITY OF MIDDLETOWN
ORANGE COUNTY, NEW YORK

B&L
Barton & Loguidice, D.P.C.
443 Electronics Parkway
Liverpool, NY
13088

STATE OF NEW YORK · ERIC J. HORVAT · LICENSED PROFESSIONAL ENGINEER · No. 089099

NYS EXP.: 11/30/2025

Date: AUGUST, 2024

Scale: AS SHOWN

Sheet Number: E001

Project Number: 1753.008.001

Plotted: 8/21/2024 4:13:45 PM
C:\Users\rad\Documents\Middletown Courthouse Drawings - ELECTRICAL MODEL_rdarin.rvt
Checked by TWB Drawn by CJ Designed by CJ In Charge of TWB

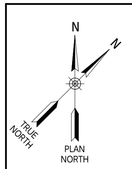

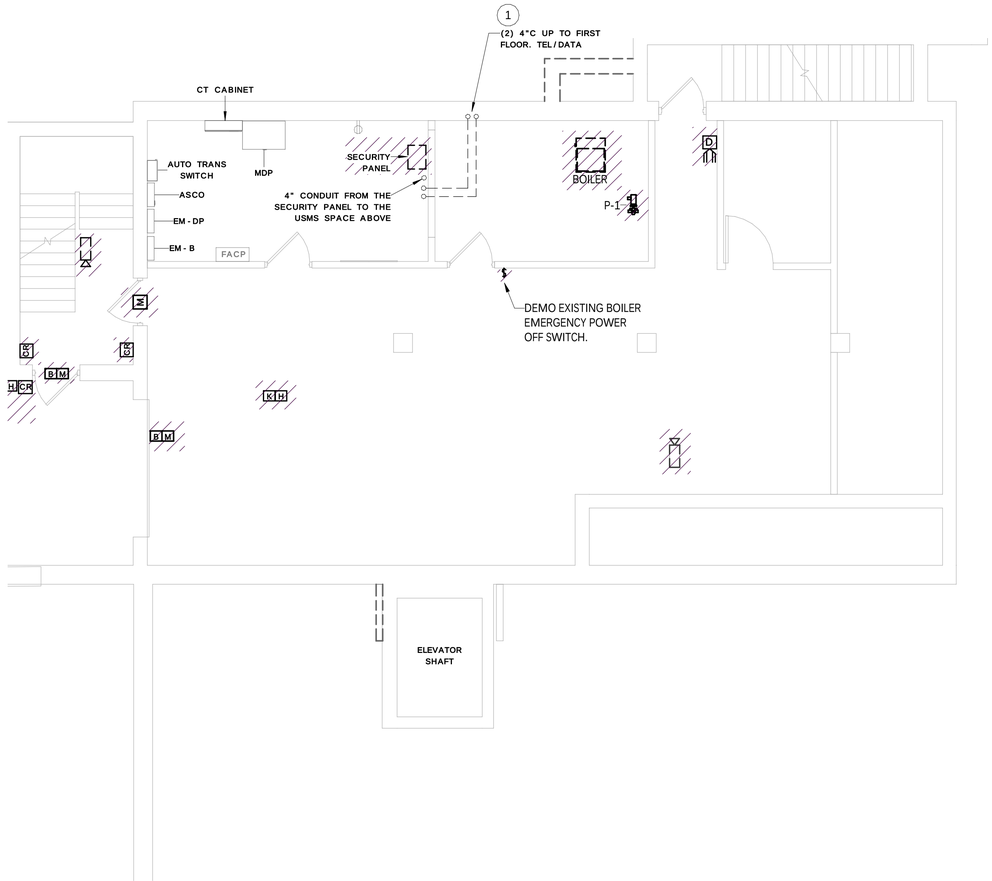

BASEMENT POWER & SYSTEMS PLAN DEMO

SCALE: 3/16" = 1'-0"

GENERAL NOTES - BASEMENT POWER & SYSTEMS PLAN DEMO

1 - DEMO ALL EQUIPMENT SHOWN IN A HATCH PATTERN. DEMO ALL ASSOCIATED CONDUCTORS, RACEWAY, AND HARDWARE BACK TO ITS SOURCE.

2 - BASEMENT POWER & SYSTEMS PLAN DEMO DRAWING CREATED FROM DRAWINGS E-1 TITLED BASEMENT PLAN AND SE1 TITLED BASEMENT FLOOR SECURITY PLAN DIAGRAM DATED FEBRUARY 1, 2005, AND CURSORY FIELD OBSERVATIONS. CONTRACTOR TO FIELD VERIFY ALL EXISTING INFORMATION REQUIRED.

3 - MAINTAIN EXISTING CIRCUITS OTHER THAN THE ONES SHOWN TO BE DEMOED. UPDATE PANEL DIRECTORIES AS REQUIRED.

4 - CONTRACTOR SHALL VERIFY NO EQUIPMENT TO REMAIN IS CONNECTED TO CIRCUITS THAT ARE BEING REMOVED. MAINTAIN CIRCUIT CONTINUITY TO ALL EQUIPMENT TO REMAIN. PROVIDE ALL REQUIRED CIRCUIT MODIFICATIONS INCLUDING, BUT NOT LIMITED TO, CONDUIT, WIRE, JUNCTION BOXES, AND SPLICES.

KEYED NOTES - BASEMENT POWER & SYSTEMS PLAN DEMO

1 EXISTING CONDUITS AND PULLBOXES SHALL REMAIN AND BE REUSED.

LEGEND

	EQUIPMENT TO BE DEMOED
	PANELBOARD
	SECURITY CAMERA
	DATA RECEPTACLE
	DUPLEX RECEPTACLE
CR	CARD READER
	BOILER
K H	OVERHEAD DOOR KEYPAD OPERATOR
B M	BALANCED MAGNETIC DOOR CONTACT
CR	CARD READER
M	MAGNETIC DOOR CONTACT

3/16" = 1'-0" 4' 0 6' 12'

Plotted: 8/21/2024 4:13:45 PM
C:\Users\rad\Documents\Middletown Courthouse Drawings - ELECTRICAL MODEL_rdarin.rvt

Checked by TWB Drawn by CJ Designed by CJ In Charge of TWB

IT IS A VIOLATION OF THE NEW YORK STATE EDUCATION LAW, ARTICLE 145 §7209 SPECIAL PROVISIONS, FOR ANY PERSON, UNLESS THEY ARE ACTING UNDER THE DIRECTION OF A LICENSED PROFESSIONAL ENGINEER, ARCHITECT, LANDSCAPE ARCHITECT, OR LAND SURVEYOR, TO ALTER AN ITEM IN ANY WAY. IF AN ITEM BEARING THE STAMP OF A LICENSED PROFESSIONAL IS ALTERED, THE ALTERING PROFESSIONAL SHALL STAMP THE DOCUMENT AND INCLUDE THE NOTATION "ALTERED BY" FOLLOWED BY THEIR SIGNATURE, THE DATE OF SUCH ALTERATION, AND A SPECIFIC DESCRIPTION OF THE ALTERATION.

REVISIONS

CITY OF MIDDLETOWN
NEW COURTHOUSE FACILITY
CONTRACT 1D - ELECTRICAL CONSTRUCTION

BASEMENT POWER & SYSTEMS PLAN DEMO

ORANGE COUNTY, NEW YORK

CITY OF MIDDLETOWN

B&L
443 Electronics Parkway
Liverpool, NY
13088
Barton & Loguidice, D.P.C.

STATE OF NEW YORK · ERIC J. HORVAT · No. 089099 · LICENSED PROFESSIONAL ENGINEER

Date
AUGUST, 2024

Scale
AS SHOWN

Sheet Number
E101

Project Number
1753.008.001

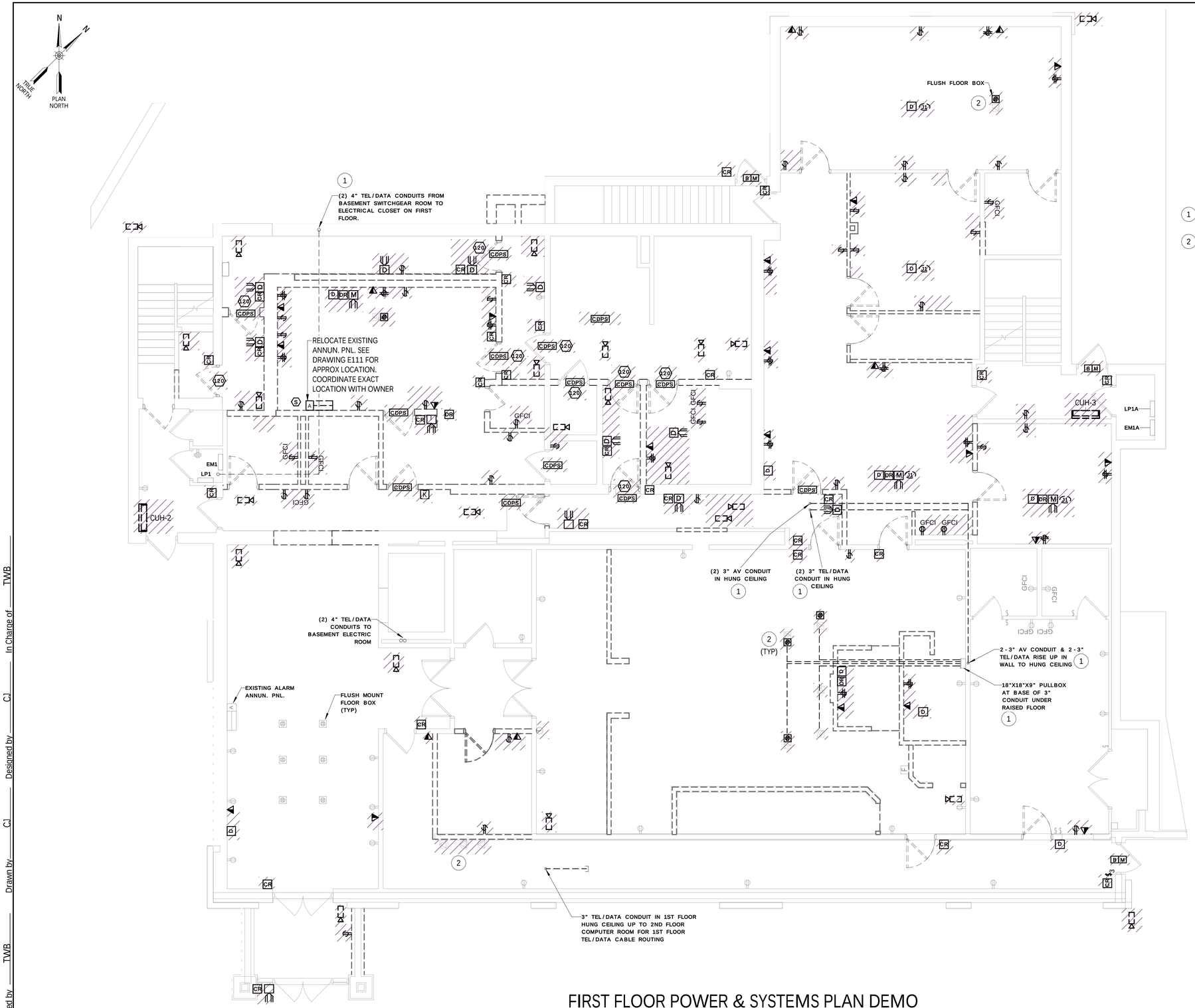

FIRST FLOOR POWER & SYSTEMS PLAN DEMO

SCALE: 3/16" = 1'-0"

3/16" = 1'-0" 4' 0 6' 12'

GENERAL NOTES - FIRST FLOOR POWER & SYSTEMS PLAN DEMO

1 - DEMO ALL EQUIPMENT SHOWN IN HATCH PATTERN. DEMO ALL ASSOCIATED CONDUCTORS, RACEWAY AND HARDWARE BACK TO ITS SOURCE.

2 - FIRST FLOOR POWER & SYSTEMS PLAN DEMO DRAWING CREATED FROM DRAWINGS E-2P TITLED FIRST FLOOR PLAN POWER AND SE2 TITLED FIRST FLOOR SECURITY PLAN DIAGRAM DATED FEBRUARY 1, 2005 AND CURSORY FIELD OBSERVATIONS. CONTRACTOR TO FIELD VERIFY ALL EXISTING INFORMATION REQUIRED.

3 - MAINTAIN EXISTING CIRCUITS OTHER THAN THE ONES SHOWN TO BE DEMO'D. UPDATE PANEL DIRECTORIES AS REQUIRED.

4 - CONTRACTOR SHALL VERIFY NO EQUIPMENT TO REMAIN IS CONNECTED TO CIRCUITS THAT ARE BEING REMOVED. MAINTAIN CIRCUIT CONTINUITY TO ALL EQUIPMENT TO REMAIN. PROVIDE ALL REQUIRED CIRCUIT MODIFICATIONS INCLUDING, BUT NOT LIMITED TO, CONDUIT, WIRE, JUNCTION BOXES, AND SPLICES.

KEYED NOTES - FIRST FLOOR POWER & SYSTEMS PLAN DEMO

1. EXISTING CONDUITS AND PULLBOXES SHALL REMAIN AND BE REUSED.
2. AFTER REMOVING FLOOR BOXES PATCH AND REPAIR FLOOR TO ITS ORIGINAL STATE. WHEN REPAIRED ALL PATCHED FLOOR PENETRATIONS MUST BE 2 HOUR FIRE RATED.

LEGEND

	EQUIPMENT TO BE DEMOED
	PANELBOARD
	SECURITY CAMERA
	DATA RECEPTACLE
	DUPLEX RECEPTACLE
CR	CARD READER
K H	OVERHEAD DOOR KEYPAD OPERATOR
B M	BALANCED MAGNETIC DOOR CONTACT
M	MAGNETIC DOOR CONTACT
	WALL MOUNTED HEATER
D	INTERCOM WITH DURESS ALARM
D	DURESS ALARM ACTIVATION DEVICE
CDPS	DOOR CLOSER WITH DOOR POSITION SWITCH
M	MASTER INTERCOM W/DOOR RELEASE
J1	TEL/DATA FLUSH MOUNTED FLOOR BOX

IT IS A VIOLATION OF THE NEW YORK STATE EDUCATION LAW, ARTICLE 145 §7209 SPECIAL PROVISIONS, FOR ANY PERSON, UNLESS THEY ARE ACTING UNDER THE DIRECTION OF A LICENSED PROFESSIONAL ENGINEER, ARCHITECT, LANDSCAPE ARCHITECT, OR LAND SURVEYOR, TO ALTER AN ITEM IN ANY WAY. IF AN ITEM BEARING THE STAMP OF A LICENSED PROFESSIONAL IS ALTERED, THE ALTERING PROFESSIONAL SHALL STAMP THE DOCUMENT AND INCLUDE THE NOTATION "ALTERED BY" FOLLOWED BY THEIR SIGNATURE, THE DATE OF SUCH ALTERATION, AND A SPECIFIC DESCRIPTION OF THE ALTERATION.

REVISIONS

CITY OF MIDDLETOWN
NEW COURTHOUSE FACILITY
CONTRACT 1D - ELECTRICAL CONSTRUCTION

FIRST FLOOR POWER & SYSTEMS PLAN DEMO

CITY OF MIDDLETOWN ORANGE COUNTY, NEW YORK

B&L
443 Electronics Parkway
Liverpool, NY
13088
Barton & Loguidice, D.P.C.

STATE OF NEW YORK ERIC J. HORVAT LICENSE NO. 089093 PROFESSIONAL ENGINEER

Date: AUGUST, 2024

Scale: AS SHOWN

Sheet Number: E102

Project Number: 1753.008.001

Plotted: 8/21/2024 4:13:46 PM
C:\Users\rad\Documents\Middletown Courthouse Drawings - ELECTRICAL MODEL_rdarin.rvt

Checked by TWB Drawn by CJ Designed by CJ In Charge of TWB

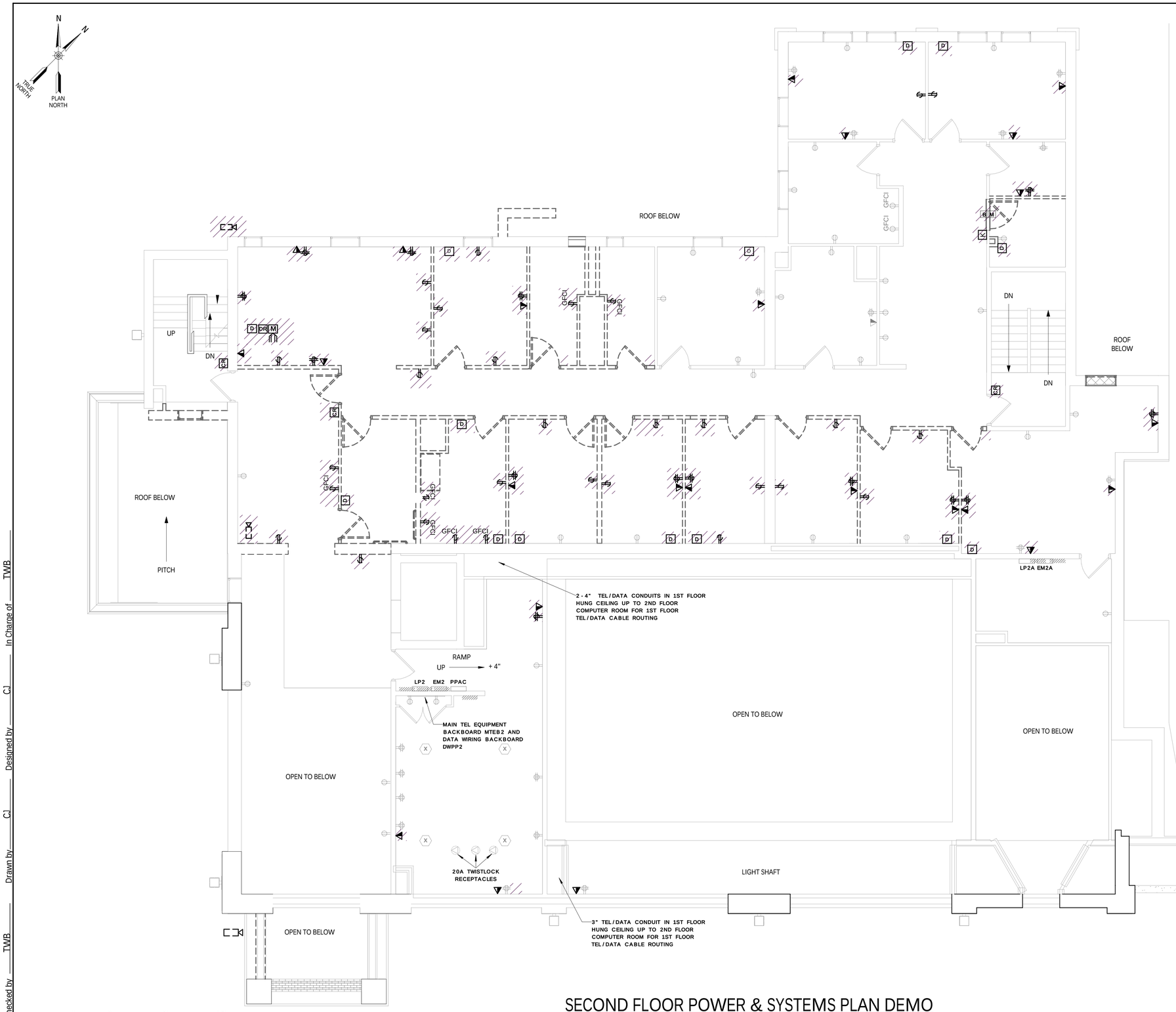

SECOND FLOOR POWER & SYSTEMS PLAN DEMO

SCALE: 3/16" = 1'-0"

GENERAL NOTES - SECOND FLOOR POWER & SYSTEMS PLAN DEMO

1 - DEMO ALL EQUIPMENT SHOWN IN A HATCH PATTERN. DEMO ALL ASSOCIATED CONDUCTORS, RACEWAY, AND HARDWARE BACK TO ITS SOURCE.

2 - SECOND FLOOR POWER & SYSTEMS PLAN DEMO DRAWING CREATED FROM DRAWINGS E-3P TITLED SECOND FLOOR PLAN POWER AND SE3 TITLED SECOND FLOOR SECURITY PLAN DIAGRAM DATED FEBRUARY 1, 2005 AND CURSORY FIELD OBSERVATIONS. CONTRACTOR TO FIELD VERIFY ALL EXISTING INFORMATION REQUIRED.

3 - MAINTAIN EXISTING CIRCUITS OTHER THAN THE ONES SHOWN TO BE DEMOED. UPDATE PANEL DIRECTORIES AS REQUIRED.

4 - DEMO ALL EQUIPMENT SHOWN HATCHED OUT. DEMO ALL CABLES, RACEWAY, AND HARDWARE ASSOCIATED. RETURN EQUIPMENT TO OWNER.

5 - CONTRACTOR SHALL VERIFY NO EQUIPMENT TO REMAIN IS CONNECTED TO CIRCUITS THAT ARE BEING REMOVED. MAINTAIN CIRCUIT CONTINUITY TO ALL EQUIPMENT TO REMAIN. PROVIDE ALL REQUIRED CIRCUIT MODIFICATIONS INCLUDING, BUT NOT LIMITED TO, CONDUIT, WIRE, JUNCTION BOXES, AND SPLICES.

LEGEND

	EQUIPMENT TO BE DEMOED
	PANELBOARD
	SECURITY CAMERA
	DATA RECEPTACLE
	DUPLEX RECEPTACLE
CR	CARD READER
M	MASTER INTERCOM W/DOOR RELEASE
D	DURESS ALARM ACTIVATION DEVICE
B M	BALANCED MAGNETIC DOOR CONTACT
K	DIGITAL KEYPAD

IT IS A VIOLATION OF THE NEW YORK STATE EDUCATION LAW, ARTICLE 145 §7209 SPECIAL PROVISIONS, FOR ANY PERSON, UNLESS THEY ARE ACTING UNDER THE DIRECTION OF A LICENSED PROFESSIONAL ENGINEER, ARCHITECT, LANDSCAPE ARCHITECT, OR LAND SURVEYOR, TO ALTER AN ITEM IN ANY WAY. IF AN ITEM BEARING THE STAMP OF A LICENSED PROFESSIONAL IS ALTERED, THE ALTERING PROFESSIONAL SHALL STAMP THE DOCUMENT AND INCLUDE THE NOTATION "ALTERED BY" FOLLOWED BY THEIR SIGNATURE, THE DATE OF SUCH ALTERATION, AND A SPECIFIC DESCRIPTION OF THE ALTERATION.

REVISIONS

CITY OF MIDDLETOWN
NEW COURTHOUSE FACILITY
CONTRACT 1D - ELECTRICAL CONSTRUCTION

SECOND FLOOR POWER & SYSTEMS PLAN DEMO

CITY OF MIDDLETOWN
ORANGE COUNTY, NEW YORK

B&L
Barton & Loguidice, D.P.C.
443 Electronics Parkway
Liverpool, NY
13088

STATE OF NEW YORK
ERIC J. HORNEY
No. 089009
LICENSED PROFESSIONAL ENGINEER

Date	AUGUST, 2024
Scale	AS SHOWN
Sheet Number	E103
Project Number	1753.008.001

Plotted: 8/21/2024 4:13:47 PM
C:\Users\rad\Documents\Middletown Courthouse Drawings - ELECTRICAL MODEL_rdarin.rvt

Checked by TWB Drawn by CJ Designed by CJ In Charge of TWB

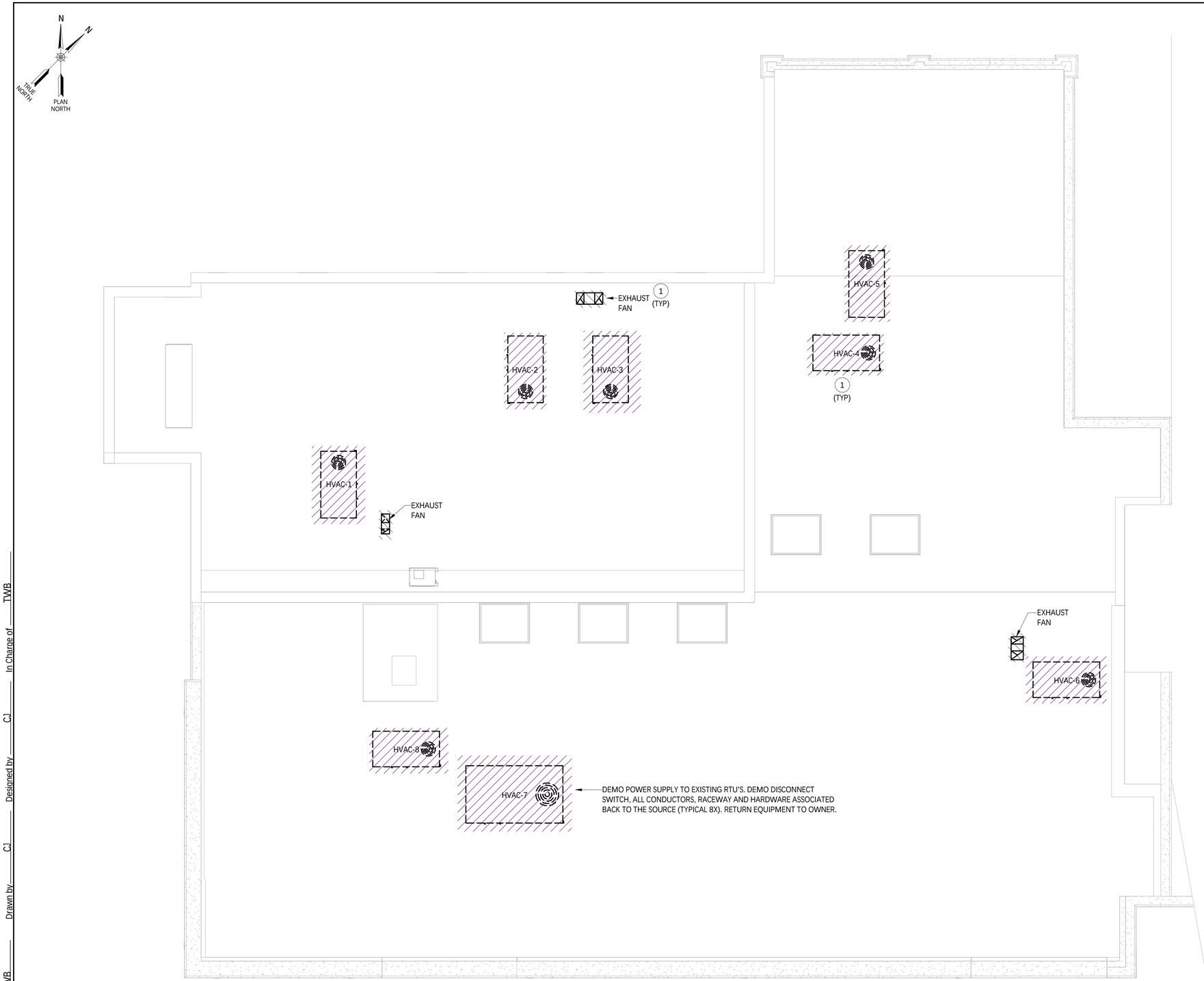

ROOF POWER PLAN DEMO

SCALE: 3/16" = 1'-0"

3/16" = 1'-0" 4' 0 6' 12'

GENERAL NOTES - ROOF POWER PLAN DEMO

1 - DEMO ALL EQUIPMENT SHOWN IN A HATCH PATTERN. DEMO ALL ASSOCIATED CONDUCTORS, RACEWAY, AND HARDWARE BACK TO ITS SOURCE.

2 - ROOF POWER PLAN DEMO DRAWING CREATED FROM DRAWINGS E-4 TITLED ROOF PLAN POWER DATED JULY 30, 2004, AND CURSORY FIELD OBSERVATIONS. CONTRACTOR TO FIELD VERIFY ALL EXISTING INFORMATION REQUIRED.

3 - MAINTAIN EXISTING CIRCUITS OTHER THAN THE ONES SHOWN TO BE DEMOED. UPDATE PANEL DIRECTORIES AS REQUIRED.

4 - CONTRACTOR SHALL VERIFY NO EQUIPMENT TO REMAIN IS CONNECTED TO CIRCUITS THAT ARE BEING REMOVED. MAINTAIN CIRCUIT CONTINUITY TO ALL EQUIPMENT TO REMAIN. PROVIDE ALL REQUIRED CIRCUIT MODIFICATIONS INCLUDING, BUT NOT LIMITED TO, CONDUIT, WIRE, JUNCTION BOXES, AND SPLICES.

KEYED NOTES - ROOF POWER PLAN DEMO

1 DEMO THE CONDUIT AND CONDUCTORS FROM THE EXISTING HVAC UNITS AND EXHAUST FANS BACK TO SOURCE PANEL. IN LOCATIONS WHERE THE CONDUIT PENETRATED THE ROOF, PATCH AND REPAIR ROOF TO ITS ORIGINAL CONDITION.

LEGEND	
	EQUIPMENT TO BE DEMOED

IT IS A VIOLATION OF THE NEW YORK STATE EDUCATION LAW, ARTICLE 145 §7209 SPECIAL PROVISIONS, FOR ANY PERSON, UNLESS THEY ARE ACTING UNDER THE DIRECTION OF A LICENSED PROFESSIONAL ENGINEER, ARCHITECT, LANDSCAPE ARCHITECT, OR LAND SURVEYOR, TO ALTER AN ITEM IN ANY WAY. IF AN ITEM BEARING THE STAMP OF A LICENSED PROFESSIONAL IS ALTERED, THE ALTERING PROFESSIONAL SHALL STAMP THE DOCUMENT AND INCLUDE THE NOTATION "ALTERED BY" FOLLOWED BY THEIR SIGNATURE, THE DATE OF SUCH ALTERATION, AND A SPECIFIC DESCRIPTION OF THE ALTERATION.

REVISIONS

CITY OF MIDDLETOWN
NEW COURTHOUSE FACILITY
CONTRACT 1D - ELECTRICAL CONSTRUCTION

ROOF POWER PLAN DEMO

ORANGE COUNTY, NEW YORK

CITY OF MIDDLETOWN

B&L
443 Electronics Parkway
Liverpool, NY
13088
Barton & Loguidice, D.P.C.

STATE OF NEW YORK
ERIC J. HORVATH
LICENSE NO. 089099
PROFESSIONAL ENGINEER

Date
AUGUST, 2024

Scale
AS SHOWN

Sheet Number
E104

Project Number
1753.008.001

Plotted: 8/21/2024 4:13:47 PM
C:\Users\rad\Documents\Middletown Courthouse Drawings - ELECTRICAL MODEL_rdarin.rvt

Checked by TWB Drawn by CJ Designed by CJ In Charge of TWB

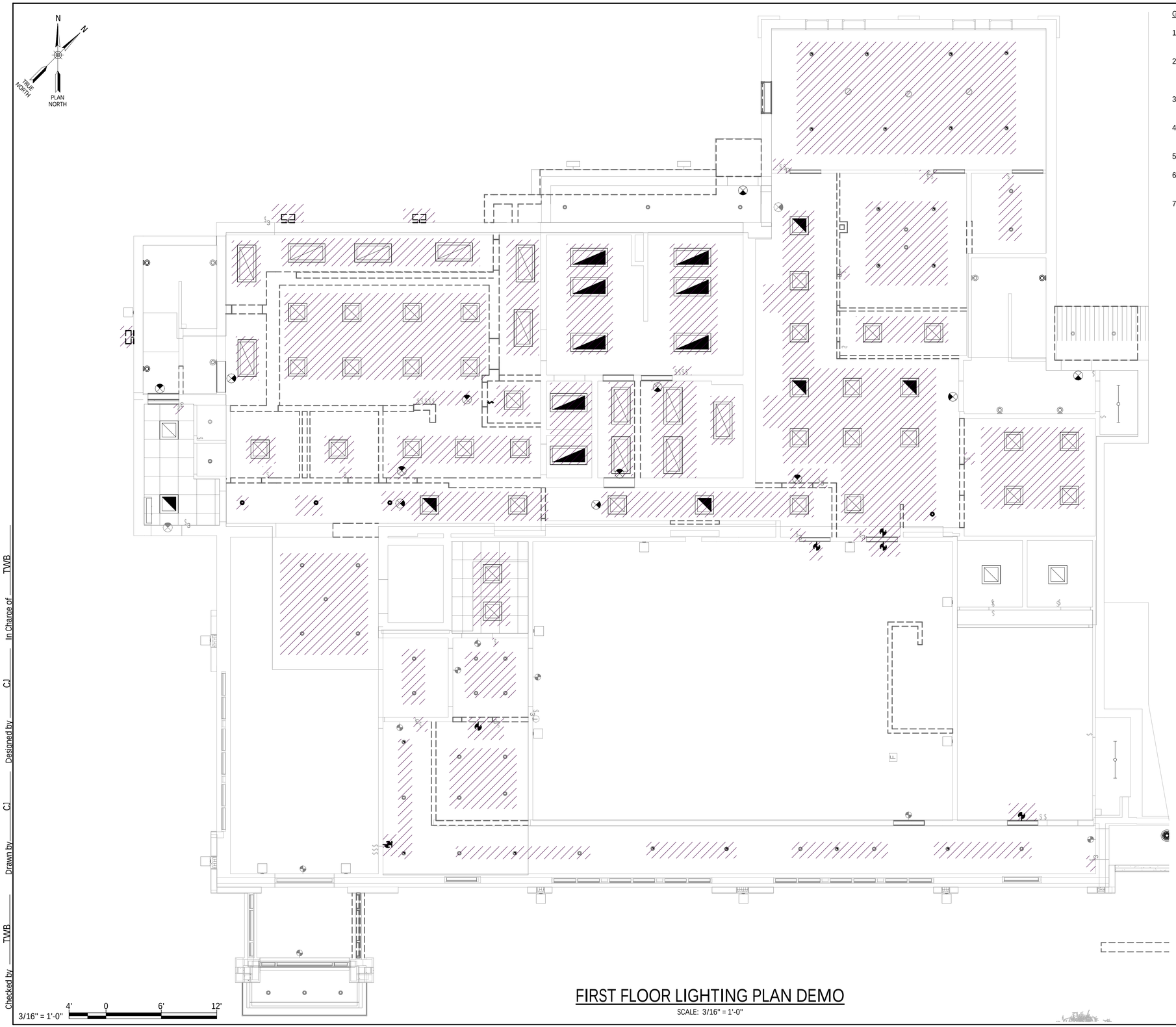

FIRST FLOOR LIGHTING PLAN DEMO

SCALE: 3/16" = 1'-0"

GENERAL NOTES - FIRST FLOOR LIGHTING PLAN DEMO

1 - DEMO ALL EQUIPMENT SHOWN IN A HATCH PATTERN. DEMO ALL ASSOCIATED CONDUCTORS, RACEWAY, AND HARDWARE BACK TO ITS SOURCE.

2 - FIRST FLOOR LIGHTING PLAN DEMO DRAWING CREATED FROM DRAWINGS E-2L TITLED FIRST FLOOR PLAN LIGHTING DATED JULY 30, 2004, AND CURSORY FIELD OBSERVATIONS. CONTRACTOR TO FIELD VERIFY ALL EXISTING INFORMATION REQUIRED.

3 - MAINTAIN EXISTING CIRCUITS OTHER THAN THE ONES SHOWN TO BE DEMOED. UPDATE PANEL DIRECTORIES AS REQUIRED.

4 - VERIFY REMOVALS DO NOT IMPACT EQUIPMENT AND DEVICES OTHER THAN THOSE THAT ARE TO BE REMOVED.

5 - EXTEND ALL CIRCUITING TO DEVICES AND EQUIPMENT TO REMAIN.

6 - ROOM NAMES NOT CALLED OUT FOR DRAWING CLARITY. FOR ROOM NAMES SEE DRAWING E102.

7 - CONTRACTOR SHALL VERIFY EQUIPMENT TO REMAIN IS CONNECTED TO CIRCUITS THAT ARE BEING REMOVED. MAINTAIN CIRCUIT CONTINUITY TO ALL EQUIPMENT TO REMAIN. PROVIDE ALL REQUIRED CIRCUIT MODIFICATIONS INCLUDING, BUT NOT LIMITED TO, CONDUIT, WIRE, JUNCTION BOXES, AND SPLICES.

LEGEND

	EQUIPMENT TO BE DEMOED
$	WALL SWITCH
$D	DIMMER WALL SWITCH
$3	3-WAY WALL SWITCH
OS	CEILING MOUNTED OCCUPANCY/MOTION SENSOR
	2'X2' LED LIGHT FIXTURE, X INDICATES FIXTURE TYPE
	2'x4' LED LIGHT FIXTURE, X INDICATES FIXTURE TYPE
	WALL PACK
	EXIT LIGHT FIXTURE, CEILING MOUNTED
	RECESSED LIGHT FIXTURE, CEILING MOUNTED

IT IS A VIOLATION OF THE NEW YORK STATE EDUCATION LAW, ARTICLE 145 §7209 SPECIAL PROVISIONS, FOR ANY PERSON, UNLESS THEY ARE ACTING UNDER THE DIRECTION OF A LICENSED PROFESSIONAL ENGINEER, ARCHITECT, LANDSCAPE ARCHITECT, OR LAND SURVEYOR, TO ALTER AN ITEM IN ANY WAY. IF AN ITEM BEARING THE STAMP OF A LICENSED PROFESSIONAL IS ALTERED, THE ALTERING PROFESSIONAL SHALL STAMP THE DOCUMENT AND INCLUDE THE NOTATION "ALTERED BY" FOLLOWED BY THEIR SIGNATURE, THE DATE OF SUCH ALTERATION, AND A SPECIFIC DESCRIPTION OF THE ALTERATION.

REVISIONS

CITY OF MIDDLETOWN
NEW COURTHOUSE FACILITY
CONTRACT 1D - ELECTRICAL CONSTRUCTION

FIRST FLOOR LIGHTING PLAN DEMO

CITY OF MIDDLETOWN ORANGE COUNTY, NEW YORK

443 Electronics Parkway
Liverpool, NY
13088

B&L
Barton & Loguidice, D.P.C.

STATE OF NEW YORK
ERIC J. HORVAT
NO. 089009
LICENSED PROFESSIONAL ENGINEER

Date	AUGUST, 2024
Scale	AS SHOWN
Sheet Number	E105
Project Number	1753.008.001

Plotted: 8/21/2024 4:13:48 PM
C:\Users\rad\Documents\Middletown Courthouse Drawings - ELECTRICAL MODEL_rdarin.rvt

Checked by TWB Drawn by CJ Designed by CJ In Charge of TWB

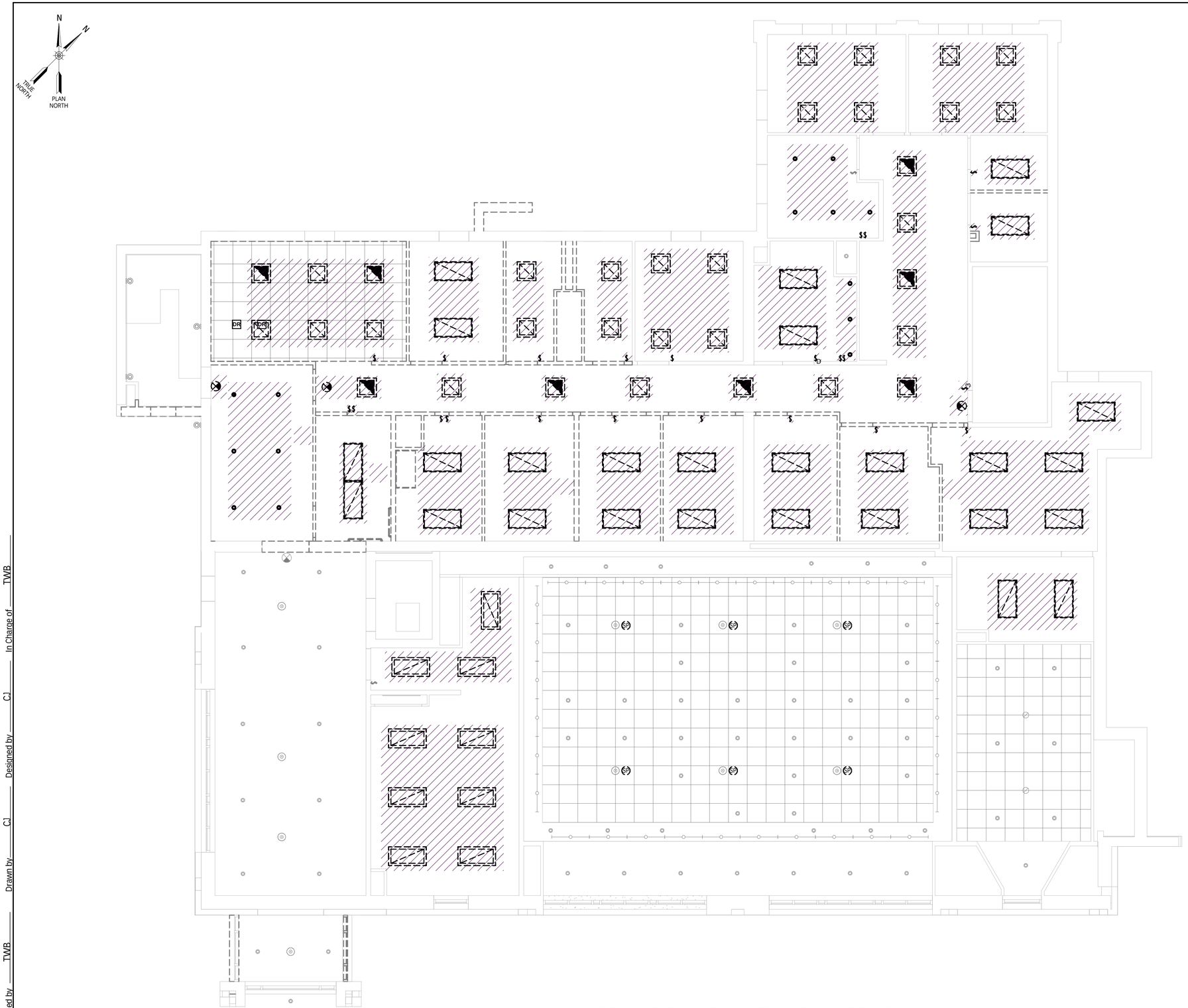

SECOND FLOOR LIGHTING PLAN DEMO

SCALE: 3/16" = 1'-0"

GENERAL NOTES - SECOND FLOOR LIGHTING PLAN DEMO

1 - DEMO ALL EQUIPMENT SHOWN IN A HATCH PATTERN. DEMO ALL ASSOCIATED CONDUCTORS, RACEWAY, AND HARDWARE BACK TO ITS SOURCE.

2 - SECOND FLOOR LIGHTING PLAN DEMO DRAWING CREATED FROM DRAWINGS E-3L TITLED SECOND FLOOR PLAN LIGHTING DATED JULY 30, 2004, AND CURSORY FIELD OBSERVATIONS. CONTRACTOR TO FIELD VERIFY ALL EXISTING INFORMATION REQUIRED.

3 - MAINTAIN EXISTING CIRCUITS OTHER THAN THE ONES SHOWN TO BE DEMOED. UPDATE PANEL DIRECTORIES AS REQUIRED.

4 - VERIFY REMOVALS DO NOT IMPACT EQUIPMENT AND DEVICES OTHER THAN THOSE THAT ARE TO BE REMOVED.

5 - EXTEND ALL CIRCUITING TO DEVICES AND EQUIPMENT TO REMAIN.

6 - FOR ALL EXISTING FIRE ALARM DEVICES NOT DEMO'D VERIFY THEY ARE PRESENT AND OPERATIONAL. (TYP OF ALL EXISTING POWER AND DATA OUTLETS AND FIRE ALARM DEVICES AS SHOWN).

7 -ROOM NAMES NOT CALLED OUT FOR DRAWING CLARITY. FOR ROOM NAMES SEE DRAWING E103.

8 - CONTRACTOR SHALL VERIFY NO EQUIPMENT TO REMAIN IS CONNECTED TO CIRCUITS THAT ARE BEING REMOVED. MAINTAIN CIRCUIT CONTINUITY TO ALL EQUIPMENT TO REMAIN. PROVIDE ALL REQUIRED CIRCUIT MODIFICATIONS INCLUDING, BUT NOT LIMITED TO, CONDUIT, WIRE, JUNCTION BOXES, AND SPLICES.

LEGEND

	EQUIPMENT TO BE DEMOED
$	WALL SWITCH
$D	DIMMER WALL SWITCH
OS	CEILING MOUNTED OCCUPANCY/MOTION SENSOR
	2'X2' LED LIGHT FIXTURE, X INDICATES FIXTURE TYPE
	2'x4' LED LIGHT FIXTURE, X INDICATES FIXTURE TYPE
	WALL PACK
	EXIT LIGHT FIXTURE, CEILING MOUNTED
	RECESSED LIGHT FIXTURE, CEILING MOUNTED
SP	SPEAKER

IT IS A VIOLATION OF THE NEW YORK STATE EDUCATION LAW, ARTICLE 145 §7209 SPECIAL PROVISIONS, FOR ANY PERSON, UNLESS THEY ARE ACTING UNDER THE DIRECTION OF A LICENSED PROFESSIONAL ENGINEER, ARCHITECT, LANDSCAPE ARCHITECT, OR LAND SURVEYOR, TO ALTER AN ITEM IN ANY WAY. IF AN ITEM BEARING THE STAMP OF A LICENSED PROFESSIONAL IS ALTERED, THE ALTERING PROFESSIONAL SHALL STAMP THE DOCUMENT AND INCLUDE THE NOTATION "ALTERED BY" FOLLOWED BY THEIR SIGNATURE, THE DATE OF SUCH ALTERATION, AND A SPECIFIC DESCRIPTION OF THE ALTERATION.

REVISIONS

CITY OF MIDDLETOWN
NEW COURTHOUSE FACILITY
CONTRACT 1D - ELECTRICAL CONSTRUCTION

SECOND FLOOR LIGHTING PLAN DEMO

CITY OF MIDDLETOWN
ORANGE COUNTY, NEW YORK

B&L
Barton & Loguidice, D.P.C.
443 Electronics Parkway
Liverpool, NY
13088

STATE OF NEW YORK · ERIC J. HORITY · No. 089098 · LICENSED PROFESSIONAL ENGINEER

Date
AUGUST, 2024

Scale
AS SHOWN

Sheet Number
E106

Project Number
1753.008.001

Plotted: 8/21/2024 4:13:49 PM
C:\Users\rad\Documents\Middletown Courthouse Drawings - ELECTRICAL MODEL_rdarin.rvt

Checked by TWB Drawn by CJ Designed by CJ In Charge of TWB

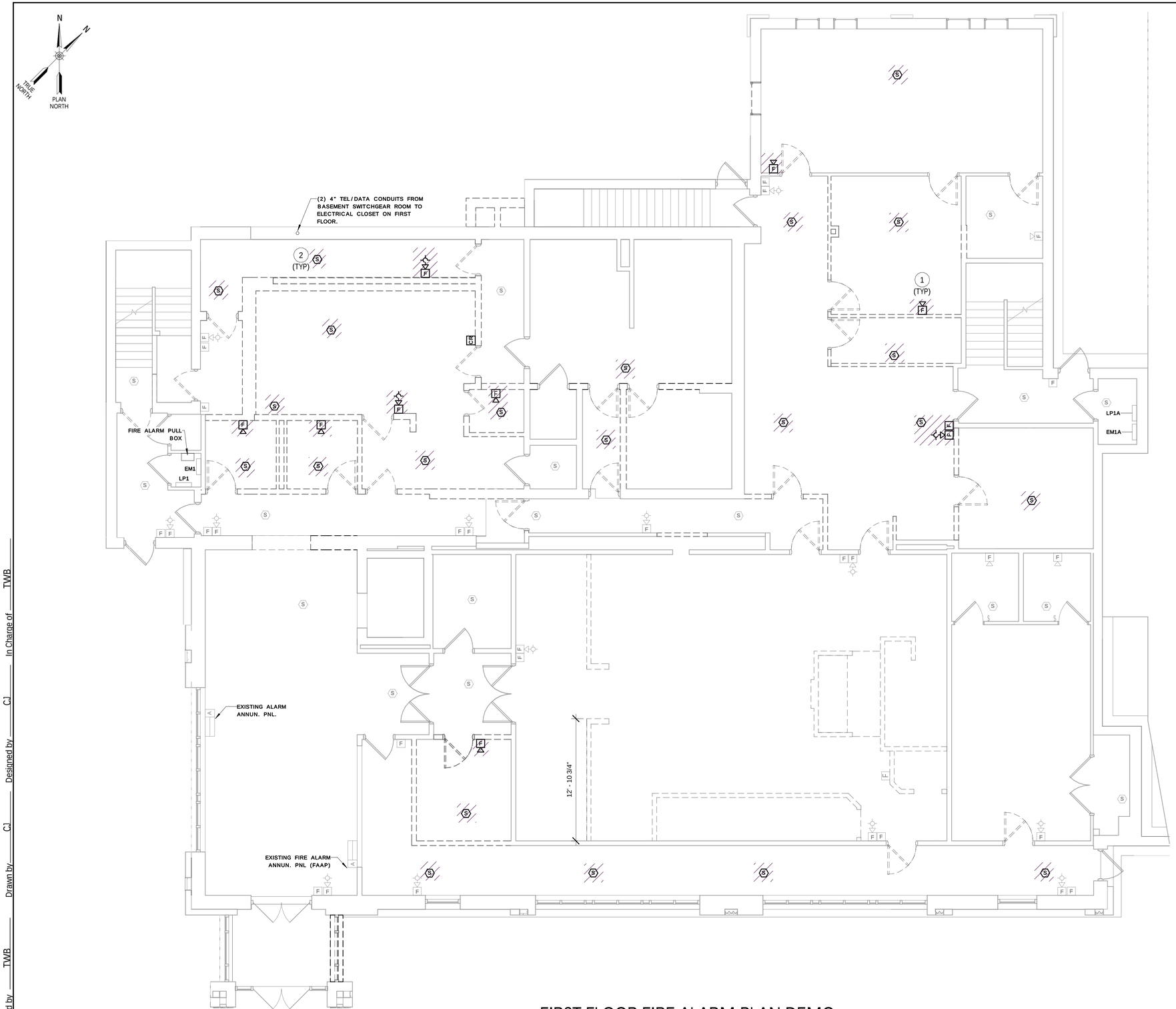

FIRST FLOOR FIRE ALARM PLAN DEMO

SCALE: 3/16" = 1'-0"

3/16" = 1'-0" 4' 0 6' 12'

GENERAL NOTES - FIRST FLOOR FIRE ALARM PLAN DEMO

1 - DEMO ALL EQUIPMENT SHOWN IN HATCH PATTERN. DEMO ALL ASSOCIATED CONDUCTORS, RACEWAY AND HARDWARE BACK TO ITS SOURCE.

2 - FIRST FLOOR FIRE ALARM PLAN DEMO DRAWING CREATED FROM DRAWING FA-2 TITLED FIRST FLOOR PLAN FIRE ALARM DATED FEBRUARY 1, 2005 AND CURSORY FIELD OBSERVATIONS. CONTRACTOR TO FIELD VERIFY ALL EXISTING INFORMATION REQUIRED.

3 - MAINTAIN EXISTING CIRCUITS OTHER THAN THE ONES SHOWN TO BE DEMO'D. UPDATE PANEL DIRECTORIES AS REQUIRED.

4 - CONTRACTOR SHALL VERIFY NO EQUIPMENT TO REMAIN IS CONNECTED TO CIRCUITS THAT ARE BEING REMOVED. MAINTAIN CIRCUIT CONTINUITY TO ALL EQUIPMENT TO REMAIN. PROVIDE ALL REQUIRED CIRCUIT MODIFICATIONS INCLUDING, BUT NOT LIMITED TO, CONDUIT, WIRE, JUNCTION BOXES, AND SPLICES.

5 - FOR ALL EXISTING FIRE ALARM DEVICES NOT DEMO'D VERIFY THEY ARE PRESENT AND OPERATIONAL.

KEYED NOTES - FIRST FLOOR FIRE ALARM PLAN DEMO

1 SEE DRAWING E605 FIRE ALARM RISER DIAGRAM DEMO FOR HORN/STROBE WIRING DETAILS.

2 SEE DRAWING E605 FIRE ALARM RISER DIAGRAM DEMO FOR SMOKE DETECTOR WIRING DETAILS.

LEGEND

- EQUIPMENT TO BE DEMOED
- SMOKE DETECTOR
- HORN AND STROBE
- PULL STATION
- HORN
- PANELBOARD

IT IS A VIOLATION OF THE NEW YORK STATE EDUCATION LAW, ARTICLE 145 §7209 SPECIAL PROVISIONS, FOR ANY PERSON, UNLESS THEY ARE ACTING UNDER THE DIRECTION OF A LICENSED PROFESSIONAL ENGINEER, ARCHITECT, LANDSCAPE ARCHITECT, OR LAND SURVEYOR, TO ALTER AN ITEM IN ANY WAY. IF AN ITEM BEARING THE STAMP OF A LICENSED PROFESSIONAL IS ALTERED, THE ALTERING PROFESSIONAL SHALL STAMP THE DOCUMENT AND INCLUDE THE NOTATION "ALTERED BY" FOLLOWED BY THEIR SIGNATURE, THE DATE OF SUCH ALTERATION, AND A SPECIFIC DESCRIPTION OF THE ALTERATION.

REVISIONS

CITY OF MIDDLETOWN
NEW COURTHOUSE FACILITY
CONTRACT 1D - ELECTRICAL CONSTRUCTION

FIRST FLOOR FIRE ALARM PLAN DEMO

CITY OF MIDDLETOWN ORANGE COUNTY, NEW YORK

B&L
Barton & Loguidice, D.P.C.
443 Electronics Parkway
Liverpool, NY
13088

STATE OF NEW YORK · ERIC J. HORTT · No. 089009 · LICENSED PROFESSIONAL ENGINEER

Date	AUGUST, 2024
Scale	AS SHOWN
Sheet Number	E107
Project Number	1753.008.001

Plotted: 8/21/2024 4:13:49 PM
C:\Users\rad\Documents\Middletown Courthouse Drawings - ELECTRICAL MODEL_rdarin.rvt

Checked by TWB Drawn by CJ Designed by CJ In Charge of TWB

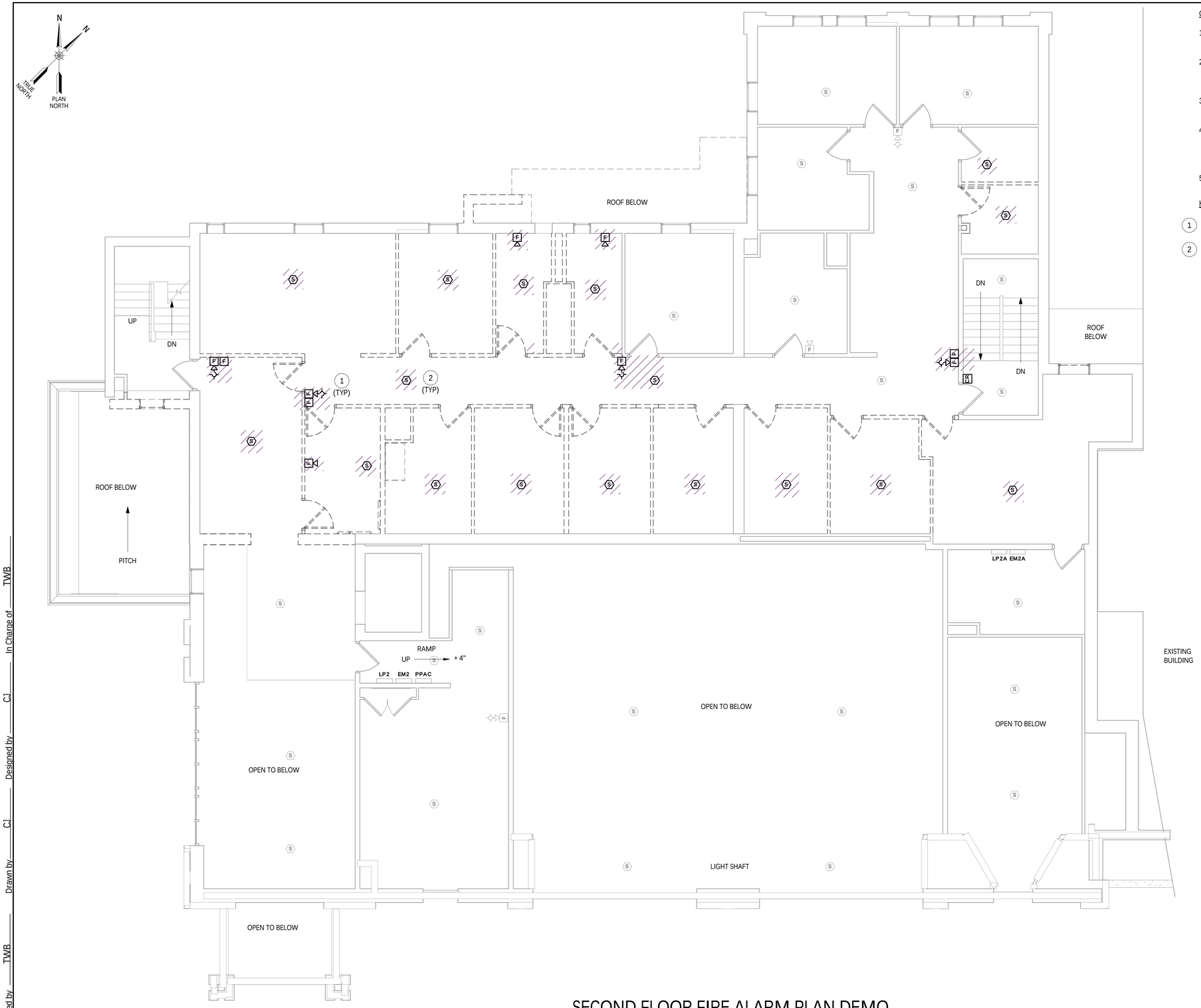

SECOND FLOOR FIRE ALARM PLAN DEMO

SCALE: 3/16" = 1'-0"

3/16" = 1'-0" 4' 0 6' 12'

GENERAL NOTES - SECOND FLOOR FIRE ALARM PLAN DEMO

1 - DEMO ALL EQUIPMENT SHOWN IN HATCH PATTERN. DEMO ALL ASSOCIATED CONDUCTORS, RACEWAY AND HARDWARE BACK TO ITS SOURCE.

2 - SECOND FLOOR FIRE ALARM PLAN DEMO DRAWING CREATED FROM DRAWING FA-3 TITLED SECOND FLOOR PLAN FIRE ALARM DATED FEBRUARY 1, 2005 AND CURSORY FIELD OBSERVATIONS. CONTRACTOR TO FIELD VERIFY ALL EXISTING INFORMATION REQUIRED.

3 - MAINTAIN EXISTING CIRCUITS OTHER THAN THE ONES SHOWN TO BE DEMO'D. UPDATE PANEL DIRECTORIES AS REQUIRED.

4 - CONTRACTOR SHALL VERIFY NO EQUIPMENT TO REMAIN IS CONNECTED TO CIRCUITS THAT ARE BEING REMOVED. MAINTAIN CIRCUIT CONTINUITY TO ALL EQUIPMENT TO REMAIN. PROVIDE ALL REQUIRED CIRCUIT MODIFICATIONS INCLUDING, BUT NOT LIMITED TO, CONDUIT, WIRE, JUNCTION BOXES, AND SPLICES.

5 - FOR ALL EXISTING FIRE ALARM DEVICES NOT DEMO'D VERIFY THEY ARE PRESENT AND OPERATIONAL.

KEYED NOTES - SECOND FLOOR FIRE ALARM PLAN DEMO

1 SEE DRAWING E605 FIRE ALARM RISER DIAGRAM DEMO FOR HORN/STROBE WIRING DETAILS.

2 SEE DRAWING E605 FIRE ALARM RISER DIAGRAM DEMO FOR SMOKE DETECTOR WIRING DETAILS.

LEGEND

- EQUIPMENT TO BE DEMOED
- SMOKE DETECTOR
- HORN AND STROBE
- PULL STATION
- HORN
- PANELBOARD

IT IS A VIOLATION OF THE NEW YORK STATE EDUCATION LAW, ARTICLE 145 §7209 SPECIAL PROVISIONS, FOR ANY PERSON, UNLESS THEY ARE ACTING UNDER THE DIRECTION OF A LICENSED PROFESSIONAL ENGINEER, ARCHITECT, LANDSCAPE ARCHITECT, OR LAND SURVEYOR, TO ALTER AN ITEM IN ANY WAY. IF AN ITEM BEARING THE STAMP OF A LICENSED PROFESSIONAL IS ALTERED, THE ALTERING PROFESSIONAL SHALL STAMP THE DOCUMENT AND INCLUDE THE NOTATION "ALTERED BY" FOLLOWED BY THEIR SIGNATURE, THE DATE OF SUCH ALTERATION, AND A SPECIFIC DESCRIPTION OF THE ALTERATION.

REVISIONS

CITY OF MIDDLETOWN
NEW COURTHOUSE FACILITY
CONTRACT 1D - ELECTRICAL CONSTRUCTION

SECOND FLOOR FIRE ALARM PLAN DEMO

CITY OF MIDDLETOWN
ORANGE COUNTY, NEW YORK

B&L
Barton & Loguidice, D.P.C.
443 Electronics Parkway
Liverpool, NY
13088

STATE OF NEW YORK
ERIC J. HORVAT
No. 089089
LICENSED PROFESSIONAL ENGINEER

Date	AUGUST, 2024
Scale	AS SHOWN
Sheet Number	E108
Project Number	1753.008.001

Plotted: 8/21/2024 4:13:50 PM
C:\Users\rad\Documents\Middletown Courthouse Drawings - ELECTRICAL MODEL_rdarin.rvt

Checked by TWB Drawn by CJ Designed by CJ In Charge of TWB

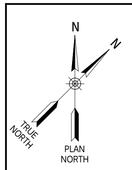

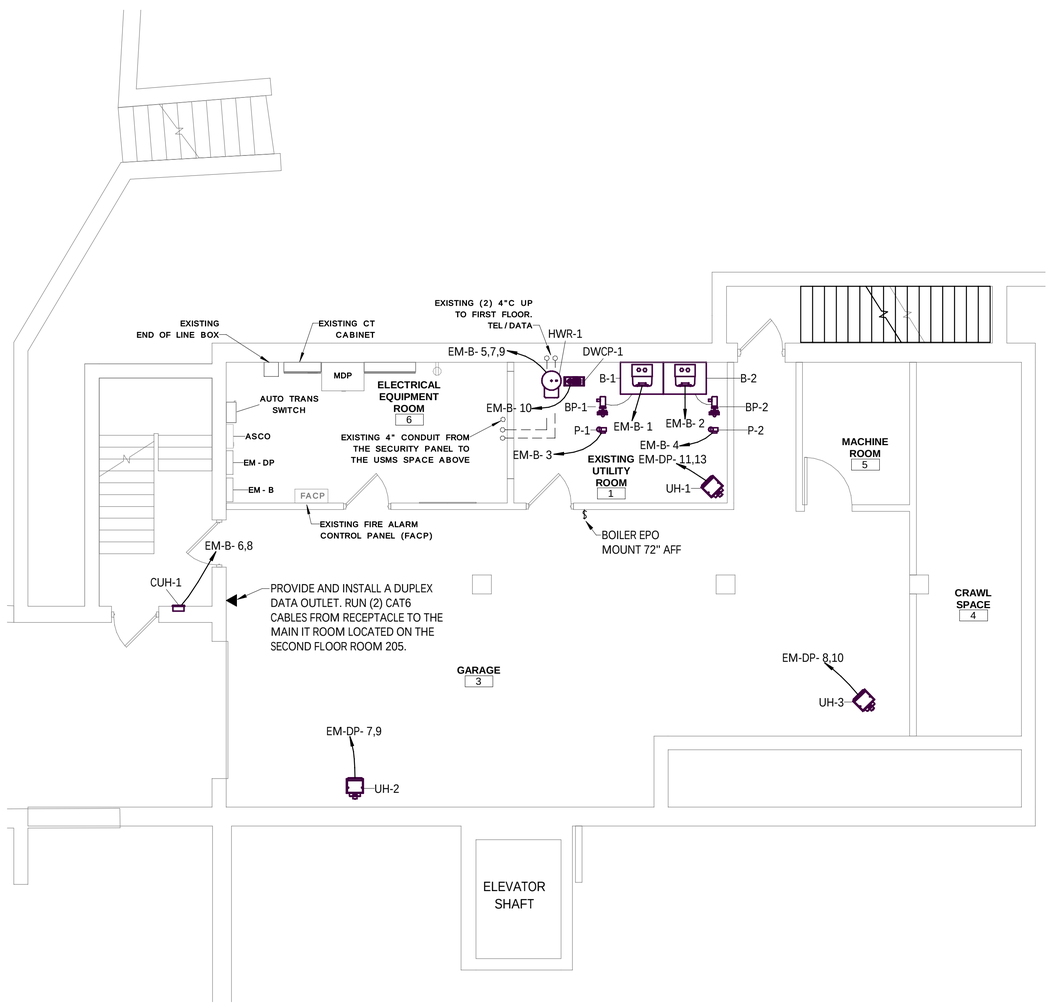

BASEMENT POWER & SYSTEMS PLAN INSTALL

SCALE: 3/16" = 1'-0"

GENERAL NOTES - BASEMENT POWER & SYSTEMS PLAN INSTALL

1 - ALL 120V RECEPTACLES SHALL BE TAMPER RESISTANT (TR).

2 - ALL CIRCUITING IS NOT SHOWN FOR CLARITY.

3 - HVAC AND MECHANICAL EQUIPMENT INSTALLED BY OTHERS. ELECTRICAL CONTRACTOR SHALL FURNISH AND INSTALL THE CONDUCTORS AND CONDUITS TO THE EQUIPMENT.

4 - ELECTRICAL SWITCH AND OUTLET BOXES SHALL BE SEALED USING A MOLDABLE PUTTY PAD AND A SEALANT (SUCH AS FD-150+ CAULK OR FB 1000 NS SEALANT, AS AVAILABLE FROM 3M, OR APPROVED EQUAL) AROUND THE PERIMETER OF THE BOX AT THE GYPSUM/BOX INTERFACE TO MINIMIZE THE TRANSMISSION OF SMOKE (AND SOUND).

LEGEND

- BOILER
- UNIT HEATER
- AUTO TRANSFER SWITCH
- PANELBOARD
- MAIN DISTRIBUTION PANEL
- HOT WATER HEATER

3/16" = 1'-0" 4' 0 6' 12'

IT IS A VIOLATION OF THE NEW YORK STATE EDUCATION LAW, ARTICLE 145 §7209 SPECIAL PROVISIONS, FOR ANY PERSON, UNLESS THEY ARE ACTING UNDER THE DIRECTION OF A LICENSED PROFESSIONAL ENGINEER, ARCHITECT, LANDSCAPE ARCHITECT, OR LAND SURVEYOR, TO ALTER AN ITEM IN ANY WAY. IF AN ITEM BEARING THE STAMP OF A LICENSED PROFESSIONAL IS ALTERED, THE ALTERING PROFESSIONAL SHALL STAMP THE DOCUMENT AND INCLUDE THE NOTATION "ALTERED BY" FOLLOWED BY THEIR SIGNATURE, THE DATE OF SUCH ALTERATION, AND A SPECIFIC DESCRIPTION OF THE ALTERATION.

REVISIONS

CITY OF MIDDLETOWN
NEW COURTHOUSE FACILITY
CONTRACT 1D - ELECTRICAL CONSTRUCTION

BASEMENT POWER & SYSTEMS PLAN INSTALL

ORANGE COUNTY, NEW YORK

CITY OF MIDDLETOWN

443 Electronics Parkway
Liverpool, NY
13088

Barton & Loguidice, D.P.C.

STATE OF NEW YORK · ERIC J. HORVAT · 090209 · LICENSED PROFESSIONAL ENGINEER

Date	AUGUST, 2024
Scale	AS SHOWN
Sheet Number	E109
Project Number	1753.008.001

Plotted: 8/21/2024 4:13:50 PM
C:\Users\rad\Documents\Middletown Courthouse Drawings - ELECTRICAL MODEL_rdarin.rvt

Checked by TWB Drawn by CJ Designed by CJ In Charge of TWB

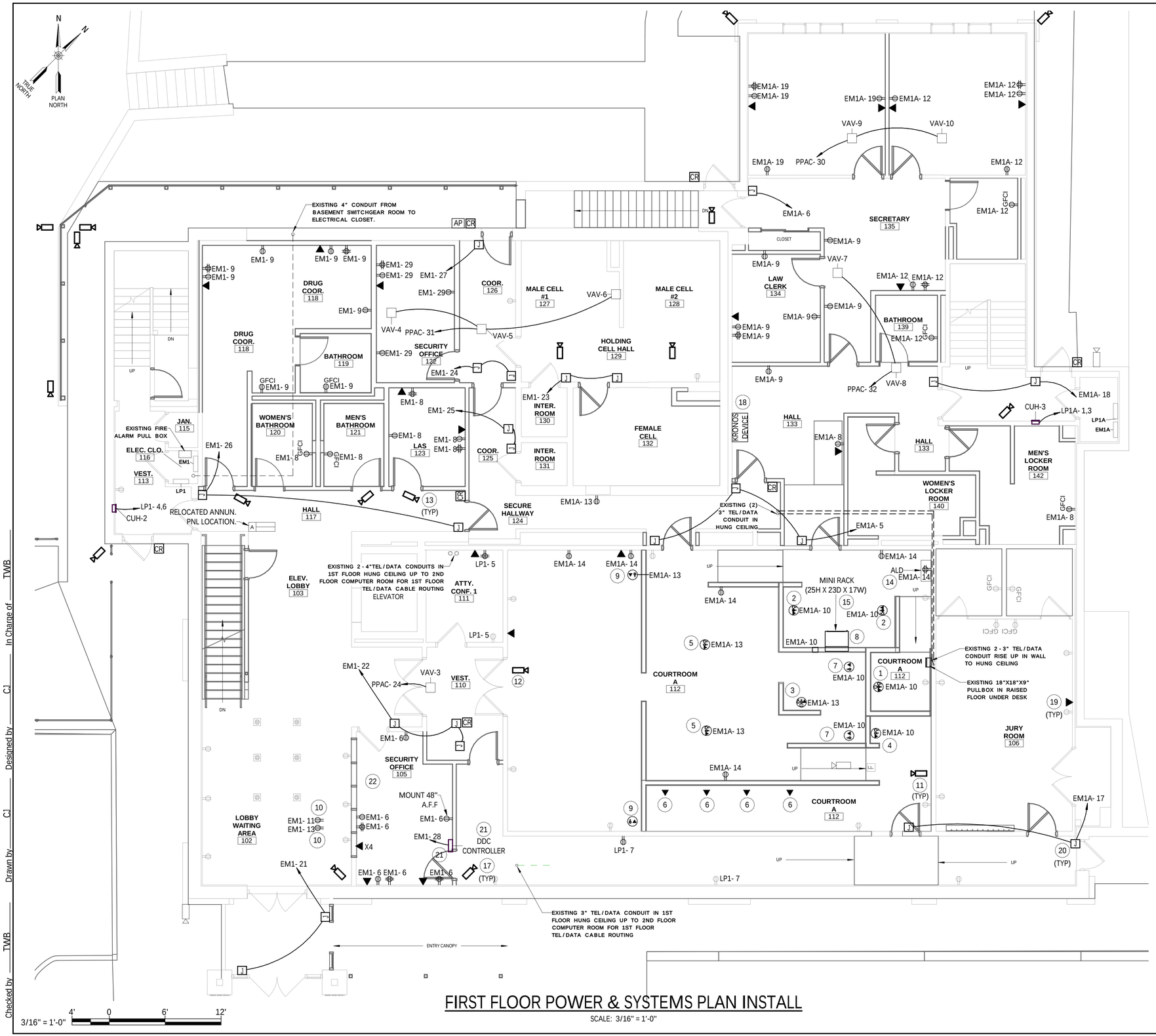

FIRST FLOOR POWER & SYSTEMS PLAN INSTALL

SCALE: 3/16" = 1'-0"

GENERAL NOTES - FIRST FLOOR POWER & SYSTEMS PLAN INSTALL

1 - ALL DATA LINES ARE TO BE RUN TO THE MAIN IT ROOM ON THE SECOND FLOOR UNLESS OTHERWISE NOTED.
2 - ALL 120V RECEPTACLES SHALL BE TAMPER RESISTANT (TR).
3 - ALL CIRCUITING IS NOT SHOWN FOR CLARITY.
4 - HVAC AND MECHANICAL EQUIPMENT INSTALLED BY OTHERS. ELECTRICAL CONTRACTOR SHALL FURNISH AND INSTALL THE CONDUCTORS AND CONDUITS TO THE EQUIPMENT.
5 - ELECTRICAL SWITCH AND OUTLET BOXES SHALL BE SEALED USING A MOLDABLE PUTTY PAD AND A SEALANT (SUCH AS FD-150+ CAULK OR FB 1000 NS SEALANT, AS AVAILABLE FROM 3M, OR APPROVED EQUAL) AROUND THE PERIMETER OF THE BOX AT THE GYPSUM/BOX INTERFACE TO MINIMIZE THE TRANSMISSION OF SMOKE (AND SOUND).
6 - ADJUST FLOOR BOX LOCATIONS AS NECESSARY TO COORDINATE WITH PROPOSED TABLES.
7- PROVIDE COLOR-MATCHED, LOW-PROFILE, SURFACE WIREMOLD FOR ALL DEVICES LOCATED ON EXISTING BRICK WALLS. OWNER PERMISSION REQUIRED WHEN RUNNING ANY EXPOSED RACEWAY.
8 - ALL PENETRATIONS THROUGH FIRE-RATED WALLS ARE TO BE 2-HOUR FIRE-RATED. SEE ARCHITECTURAL DRAWINGS A201 FOR WALL RATINGS.
9 - ALL PENETRATIONS THROUGH THE FLOOR TO BE 2-HOUR FIRE RATED. SEE ARCHITECTURAL DRAWINGS A201 FOR FLOOR RATINGS.
10 - ALL RECEPTACLES AND DATA BOXES TO BE FLUSH INSTALLED IN NEW WALLS. BOXES SHALL NOT BE INSTALLED IN NEW MILLWORK WITHOUT PERMISSION FROM THE OWNER.

KEYED NOTES - FIRST FLOOR POWER & SYSTEMS PLAN INSTALL

1. FOR JUDGE - PROVIDE AND INSTALL (4) DATA RECEPTACLES, (1) MICROPHONE RECEPTACLE, (1) QUAD RECEPTACLE AND (1) MALE MICROPHONE CONNECTION IN FACEPLATE IN FLOOR LEGRAND WIREMOLD EVOLTION SERIES 6" POKE THRU MODEL# 6ATC2PAVBX (CUSTOM CONFIG NEEDED PRIOR TO ORDERING).
2. FOR CLERK - PROVIDE AND INSTALL (4) DATA RECEPTACLES, (1) MICROPHONE RECEPTACLE AND (1) QUAD RECEPTACLE IN FLUSH FLOOR LEGRAND WIREMOLD EVOLTION SERIES 6" POKE THRU MODEL# 6ATC2PAVBX (CUSTOM CONFIG NEEDED PRIOR TO ORDERING).
3. FOR REPORTER - PROVIDE AND INSTALL (2) DATA RECEPTACLE, (1) MICROPHONE RECEPTACLE AND (1) QUAD RECEPTACLE IN FLUSH FLOOR LEGRAND WIREMOLD EVOLTION SERIES 6" POKE THRU MODEL# 6ATC2PAVBX (CUSTOM CONFIG NEEDED PRIOR TO ORDERING).
4. FOR WITNESS - PROVIDE AND INSTALL (2) DATA RECEPTACLE, (1) MICROPHONE RECEPTACLE AND (1) DUPLEX RECEPTACLE IN FLUSH FLOOR LEGRAND WIREMOLD EVOLTION SERIES 6" POKE THRU MODEL# 6ATC2PAVBX (CUSTOM CONFIG NEEDED PRIOR TO ORDERING).
5. FOR COUNCIL - PROVIDE AND INSTALL (2) DATA RECEPTACLES, (2) MICROPHONE RECEPTACLES AND (1) DUPLEX RECEPTACLE IN FLUSH FLOOR LEGRAND WIREMOLD EVOLTION SERIES 6" POKE THRU MODEL# 6ATC2PAVBX (CUSTOM CONFIG NEEDED PRIOR TO ORDERING).
6. FOR JURY BOX - PROVIDE AND INSTALL (2) DATA RECEPTACLES IN EACH FLUSH FLOOR LEGRAND WIREMOLD EVOLTION SERIES 6" POKE THRU MODEL# 6ATC2PAVBX (CUSTOM CONFIG NEEDED PRIOR TO ORDERING). MOUNT FLOOR BOX AT THE CENTERLINE OF ALT SEATS (OCA PROVIDED MONITORS WILL BE P.O.E). (CUSTOM CONFIG NEEDED PRIOR TO ORDERING).
7. FOR FRONT OF BENCH - PROVIDE AND INSTALL (2) DATA RECEPTACLES AND (1) DUPLEX RECEPTACLE IN FLUSH FLOOR LEGRAND WIREMOLD EVOLTION SERIES 6" POKE THRU MODEL# 6ATC2PAVBX (CUSTOM CONFIG NEEDED PRIOR TO ORDERING).
8. FOR MINI RACK - PROVIDE AND INSTALL (6) DATA RECEPTACLES AND (1) QUAD RECEPTACLE IN FLUSH FLOOR LEGRAND WIREMOLD EVOLTION SERIES 6" POKE THRU MODEL# 6ATC2PAVBX (CUSTOM CONFIG NEEDED PRIOR TO ORDERING).
9. FOR FLAT SCREEN - PROVIDE AND INSTALL (2) DATA RECEPTACLES AND (1) DUPLEX RECEPTACLE MOUNTED AT 6'-6" TO BOTTOM OF FLAT SCREEN.
10. FLOOR BOX RECEPTACLES SHALL BE ON THEIR OWN DEDICATED CIRTCUIT.
11. COURT ROOM CAMERAS INSTALLED BY OCA. PROVIDE AND INSTALL (3) DATA LINES BELDEN PART#5500FE (UPC#612825423867) IN A 4" X 4" JUNCTION BOX 7'-0" A.F.F. ALL CAMERA CABLES SHALL BE RAN TO THE ELEC CLO./STORAGE ROOM 205 ON THE SECOND FLOOR.
12. COURT ROOM CAMERAS INSTALLED BY OCA. PROVIDE AND INSTALL (4) DATA LINES BELDEN PART#5500FE (UPC#612825423867) IN A 4" X 4" JUNCTION BOX 7'-0" A.F.F. ALL CAMERA CABLES SHALL BE RAN TO THE ELEC CLO./STORAGE ROOM 205 ON THE SECOND FLOOR.
13. APPROXIMATE CAMERA LOCATION. COORDINATE EXACT LOCATION WITH OWNER. INSTALL OCS PROVIDED SECURITY CAMERA'S. PROVIDE CABLE GROMETS FOR PENETRATIONS. SEE DRAWING E123 FOR CAMERA BOX INSTALLATION DETAIL. ALL CAMERA CABLES SHALL BE RAN TO THE ELEC CLO./STORAGE ROOM 205 ON THE SECOND FLOOR.
14. PROVIDE AND INSTALL (2) MIC CABLES AND (1) #18 AWG DC POWER CABLE RUN BETWEEN THE EMITTER AND MINI RACK. DUPLEX RECEPTACLE FOR UNIT TO BE PROVIDED AND INSTALLED AT 7'-0" A.F.F
15. LEAVE 10' OF EXTRA CABLE CORE FOR ALL SPEAKERS AND MICROPHONE CABLES AT THE MINI RACK FOR TERMINATION AND CABLE MANAGEMENT BY OCA.
16. DIRECT DIGITAL CONTROLLER (DDC) WILL BE PROVIDED BY THE CLIENT. ELECTRICAL CONTRACTOR SHALL PROVIDE 120V POWER. SEE ONE-LINE DIAGRAM EMERGENCY POWER INSTALL DRAWING E603.
17. PROVIDE AND INSTALL (2) CAT6A CABLES FROM EACH CAMERA TO THE ELEC CLO./STORAGE ROOM 205 ON THE SECOND FLOOR.
18. PROVIDE AND INSTALL (2) CAT6A CABLES FROM KRONOS DEVICE TO THE ELEC CLO./STORAGE ROOM 205 ON THE SECOND FLOOR.
19. PROVIDE AND INSTALL (2) CAT6A CABLE FROM EACH DATA RECEPTACLE TO THE ELEC CLO./STORAGE ROOM 205 ON THE SECOND FLOOR.
20. JUNCTION BOX FOR DOOR STRIKE POWER. SEE ELECTRICAL DETAIL DRAWING E119 FOR INSTALLATION DETAILS.

LEGEND

	PANELBOARD		QUADPLEX RECEPTACLE
	SECURITY CAMERA	J	JUNCTION BOX
	DATA RECEPTACLE		FLOORBOX W/ELECTRICAL DEVICE
	DUPLEX RECEPTACLE	AP	AIPHONE
A	ALARM ANNUNCIATOR PANEL		
CR	CARD READER		

IT IS A VIOLATION OF THE NEW YORK STATE EDUCATION LAW, ARTICLE 145 §7209 SPECIAL PROVISIONS, FOR ANY PERSON, UNLESS THEY ARE ACTING UNDER THE DIRECTION OF A LICENSED PROFESSIONAL ENGINEER, ARCHITECT, LANDSCAPE ARCHITECT, OR LAND SURVEYOR, TO ALTER AN ITEM IN ANY WAY. IF AN ITEM BEARING THE STAMP OF A LICENSED PROFESSIONAL IS ALTERED, THE ALTERING PROFESSIONAL SHALL STAMP THE DOCUMENT AND INCLUDE THE NOTATION "ALTERED BY" FOLLOWED BY THEIR SIGNATURE, THE DATE OF SUCH ALTERATION, AND A SPECIFIC DESCRIPTION OF THE ALTERATION.

REVISIONS

CITY OF MIDDLETOWN
NEW COURTHOUSE FACILITY
CONTRACT 1D - ELECTRICAL CONSTRUCTION

FIRST FLOOR POWER & SYSTEMS PLAN INSTALL

CITY OF MIDDLETOWN ORANGE COUNTY, NEW YORK

B&L
Barton & Loguidice, D.P.C.
443 Electronics Parkway
Liverpool, NY
13088

STATE OF NEW YORK ERIC J. HORVAT No. 089099 LICENSED PROFESSIONAL ENGINEER

Date	AUGUST, 2024
Scale	AS SHOWN
Sheet Number	E110
Project Number	1753.008.001

Plotted: 8/21/2024 4:13:52 PM
C:\Users\rad\Documents\Middletown Courthouse Drawings - ELECTRICAL MODEL_rdarin.rvt

Checked by TWB Drawn by CJ Designed by CJ In Charge of TWB

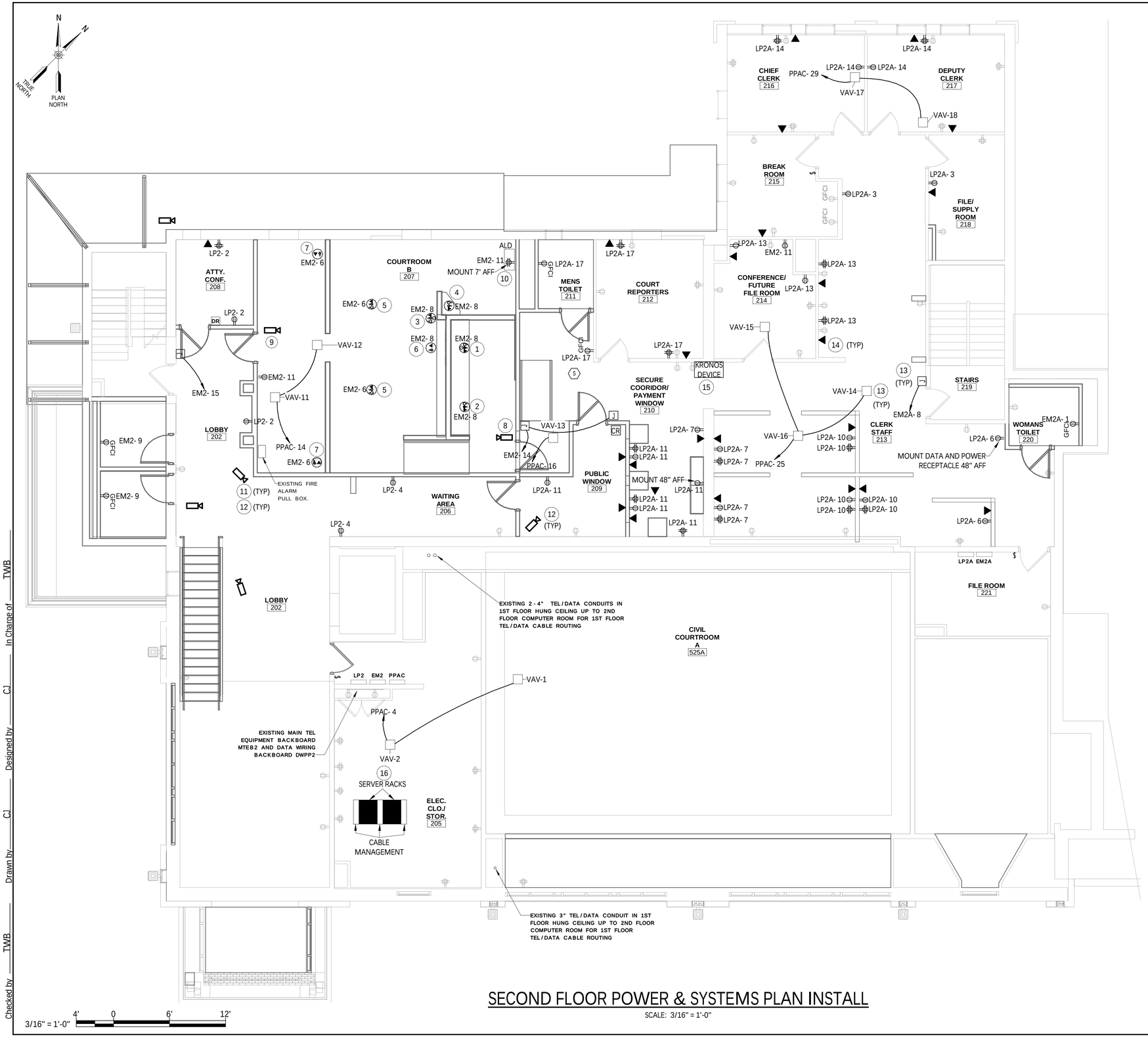

SECOND FLOOR POWER & SYSTEMS PLAN INSTALL

SCALE: 3/16" = 1'-0"

GENERAL NOTES - SECOND FLOOR POWER & SYSTEMS PLAN INSTALL

1 - ALL DATA LINES ARE TO BE RUN TO THE MAIN IT ROOM ON THE SECOND FLOOR UNLESS OTHERWISE NOTED.
2 - ALL 120V RECEPTACLES SHALL BE TAMPER RESISTANT (TR).
3 - ALL CIRCUITING IS NOT SHOWN FOR CLARITY.
4 - HVAC AND MECHANICAL EQUIPMENT INSTALLED BY OTHERS. ELECTRICAL CONTRACTOR SHALL FURNISH AND INSTALL THE CONDUCTORS AND CONDUITS TO THE EQUIPMENT.
5 - ELECTRICAL SWITCH AND OUTLET BOXES SHALL BE SEALED USING A MOLDABLE PUTTY PAD AND A SEALANT (SUCH AS FD-150+ CAULK OR FB 1000 NS SEALANT, AS AVAILABLE FROM 3M, OR APPROVED EQUAL) AROUND THE PERIMETER OF THE BOX AT THE GYPSUM/BOX INTERFACE TO MINIMIZE THE TRANSMISSION OF SMOKE (AND SOUND).
6 - ADJUST FLOOR BOX LOCATIONS AS NECESSARY TO COORDINATE WITH PROPOSED TABLES.
7- PROVIDE COLOR-MATCHED, LOW-PROFILE, SURFACE WIREMOLD FOR ALL DEVICES LOCATED ON EXISTING BRICK WALLS. OWNER PERMISSION REQUIRED WHEN RUNNING ANY EXPOSED RACEWAY.
8 - ALL PENETRATIONS THROUGH FIRE-RATED WALLS ARE TO BE 2-HOUR FIRE-RATED. SEE ARCHITECTURAL DRAWING A202 FOR WALL RATINGS.
9 - ALL PENETRATIONS THROUGH THE FLOOR TO BE 2-HOUR FIRE RATED. SEE ARCHITECTURAL DRAWING A202 FOR FLOOR RATINGS.
10 - ALL RECEPTACLES AND DATA BOXES TO BE FLUSH INSTALLED IN NEW WALLS. BOXES SHALL NOT BE INSTALLED IN NEW MILLWORK WITHOUT WRITTEN PERMISSION FROM THE OWNER.

KEYED NOTES - SECOND FLOOR POWER & SYSTEMS PLAN INSTALL

1. FOR JUDGE - PROVIDE AND INSTALL (4) DATA RECEPTACLES, (1) MICROPHONE RECEPTACLE, (1) QUAD RECEPTACLE AND (1) MALE MICROPHONE CONNEC TION IN FACEPLATE IN FLOOR LEGRAND WIREMOLD EVOLTION SERIES 6" POKE THRU MODEL# 6ATC2PAVBX (CUSTOM CONFIG NEEDED PRIOR TO ORDERING).
2. FOR CLERK - PROVIDE AND INSTALL (4) DATA RECEPTACLES, (1) MICROPHONE RECEPTACLE AND (1) QUAD RECEPTACLE IN FLUSH FLOOR LEGRAND WIREMOLD EVOLUTION SERIES 6" POKE THRU MODEL# 6ATC2PAVBX (CUSTOM CONFIG NEEDED PRIOR TO ORDERING).
3. FOR REPORTER - PROVIDE AND INSTALL (2) DATA RECEPTACLE, (1) MICROPHONE RECEPTACLE AND (1) QUAD RECEPTACLE IN FLUSH FLOOR LEGRAND WIREMOLD EVOLUTION SERIES 6" POKE THRU MODEL# 6ATC2PAVBX (CUSTOM CONFIG NEEDED PRIOR TO ORDERING).
4. FOR WITNESS - PROVIDE AND INSTALL (2) DATA RECEPTACLE, (1) MICROPHONE RECEPTACLE AND (1) DUPLEX RECEPTACLE IN FLUSH FLOOR LEGRAND WIREMOLD EVOLTION SERIES 6" POKE THRU MODEL# 6ATC2PAVBX (CUSTOM CONFIG NEEDED PRIOR TO ORDERING).
5. FOR COUNCIL - PROVIDE AND INSTALL (2) DATA RECEPTACLES, (2) MICROPHONE RECEPTACLES AND (1) DUPLEX RECEPTACLE IN FLUSH FLOOR LEGRAND WIREMOLD EVOLUTION SERIES 6" POKE THRU MODEL# 6ATC2PAVBX (CUSTOM CONFIG NEEDED PRIOR TO ORDERING).
6. FOR FRONT OF BENCH - PROVIDE AND INSTALL (2) DATA RECEPTACLES AND (1) DUPLEX RECEPTACLE IN FLUSH FLOOR LEGRAND WIREMOLD EVOLTION SERIES 6" POKE THRU MODEL# 6ATC2PAVBX (CUSTOM CONFIG NEEDED PRIOR TO ORDERING).
7. FOR FLAT SCREEN - PROVIDE AND INSTALL (2) DATA RECEPTACLES AND (1) DUPLEX RECEPTACLE MOUNTED AT 6'-6" TO BOTTOM OF FLAT SCREEN.
8. COURT ROOM CAMERAS INSTALLED BY OCA. PROVIDE AND INSTALL (3) DATA LINES BELDEN PART#5500FE (UPC#612825423867) IN A 4" X 4" JUNCTION BOX 7'-0" A.F.F. ALL CAMERA CABLES SHALL BE RAN TO SECURITY OFFICE 105 LOCATED ON THE FIRST FLOOR.
9. COURT ROOM CAMERAS INSTALLED BY OCA. PROVIDE AND INSTALL (4) DATA LINES BELDEN PART#5500FE (UPC#612825423867) IN A 4" X 4" JUNCTION BOX 7'-0" A.F.F. ALL CAMERA CABLES SHALL BE RAN TO SECURITY OFFICE 105 LOCATED ON THE FIRST FLOOR.
10. PROVIDE AND INSTALL (2) MIC CABLES AND (1) #18 AWG DC POWER CABLE RUN BETWEEN THE EMITTER AND MINI RACK. MOUNT UNIT AT 7'-0" A.F.F.
11. APPROXIMATE CAMERA LOCATION. COORDINATE EXACT LOCATION WITH OWNER. INSTALL PROVIDED SECURITY CAMERA'S. RUN (2) CAT6A CABLES FROM EACH CAMERA TO SERVER RACKS IN SECURITY OFFICE 105. PROVIDE CABLE GROMETS FOR PENETRATIONS. ALL CAMERA CABLES SHALL BE RAN TO THE ELEC CLO./STORAGE ROOM 205.
12. PROVIDE AND INSTALL (2) CAT6A CABLES FROM EACH CAMERA TO THE ELEC CLO./STORAGE ROOM 205.
13. JUNCTION BOX FOR DOOR STRIKE POWER. SEE ELECTRICAL DETAIL DRAWING E119 FOR INSTALLATION DETAILS.
14. PROVIDE AND INSTALL (2) CAT6A CABLE FROM EACH DATA RECEPTACLE TO THE ELEC CLO./STORAGE ROOM 205.
15. PROVIDE AND INSTALL (2) CAT6A CABLES FROM EACH KRONOS DEVICE TO THE ELEC CLO./STORAGE ROOM 205.
16. ELECTRICAL CONTRACTOR SHALL PROVIDE (2) 19" 48U OPEN FRAME SERVER CABINETS AND PATCH PANELS FOR THE OCA PROVIDED SERVERS AND SWITCHES.

LEGEND

	PANELBOARD	J	JUNCTION BOX
	SECURITY CAMERA		FLOORBOX W/ELECTRICAL DEVICE
	DATA RECEPTACLE		
	DUPLEX RECEPTACLE		
	QUADPLEX RECEPTACLE		
CR	CARD READER		

IT IS A VIOLATION OF THE NEW YORK STATE EDUCATION LAW, ARTICLE 145 §7209 SPECIAL PROVISIONS, FOR ANY PERSON, UNLESS THEY ARE ACTING UNDER THE DIRECTION OF A LICENSED PROFESSIONAL ENGINEER, ARCHITECT, LANDSCAPE ARCHITECT, OR LAND SURVEYOR, TO ALTER AN ITEM IN ANY WAY. IF AN ITEM BEARING THE STAMP OF A LICENSED PROFESSIONAL IS ALTERED, THE ALTERING PROFESSIONAL SHALL STAMP THE DOCUMENT AND INCLUDE THE NOTATION "ALTERED BY" FOLLOWED BY THEIR SIGNATURE, THE DATE OF SUCH ALTERATION, AND A SPECIFIC DESCRIPTION OF THE ALTERATION.

REVISIONS

CITY OF MIDDLETOWN
NEW COURTHOUSE FACILITY
CONTRACT 1D - ELECTRICAL CONSTRUCTION

SECOND FLOOR POWER & SYSTEMS PLAN INSTALL

CITY OF MIDDLETOWN ORANGE COUNTY, NEW YORK

B&L
Barton & Loguidice, D.P.C.
443 Electronics Parkway
Liverpool, NY
13088

STATE OF NEW YORK ERIC J. HORVAT LICENSE NO. 089099 PROFESSIONAL ENGINEER

Date: AUGUST, 2024
Scale: AS SHOWN
Sheet Number: E111
Project Number: 1753.008.001

Plotted: 8/21/2024 4:13:53 PM
C:\Users\rad\Documents\Middletown Courthouse Drawings - ELECTRICAL MODEL_rdarin.rvt
Checked by TWB Drawn by CJ Designed by CJ In Charge of TWB

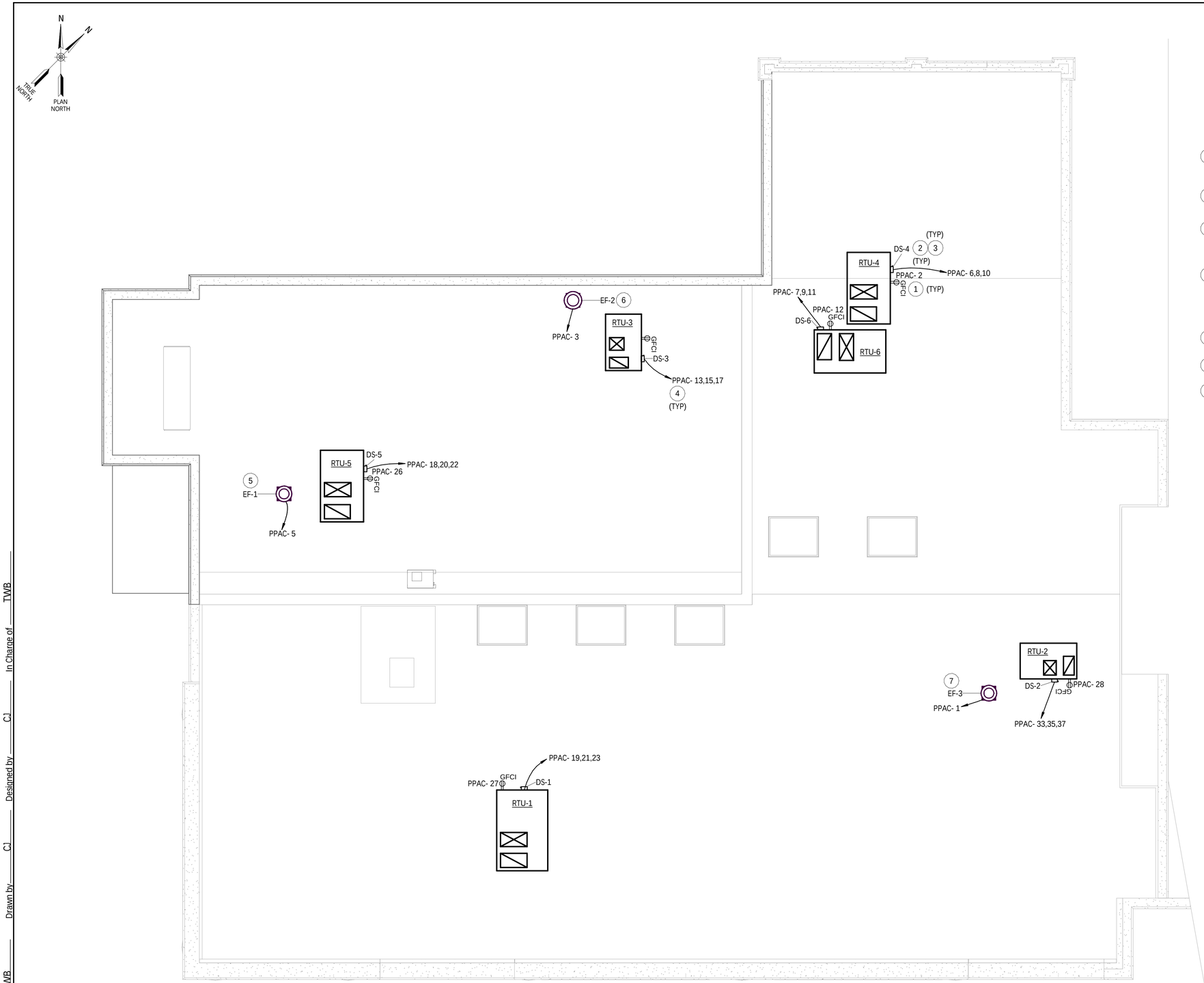

ROOF POWER PLAN INSTALL

SCALE: 3/16" = 1'-0"

3/16" = 1'-0" 4' 0 6' 12'

GENERAL NOTES - ROOF POWER PLAN INSTALL

1 - CONTRACTOR SHALL FIELD VERIFY ALL EXISTING CONDITIONS REQUIRED FOR INSTALLATION OF NEW ELECTRICAL SERVICE AND ELECTRICAL EQUIPMENT.

2 - ALL ELECTRICAL WORK SHALL CONFORM TO ALL STATE, LOCAL AND NATIONAL CODES.

3 - ELECTRICAL CONTRACTOR SHALL COORDINATE WITH OTHER CONTRACTORS DURING THE INSTALLATION OF ALL EQUIPMENT.

4 - PROVIDE GROUNDING PER NEC FOR ALL ELECTRICAL EQUIPMENT AND ASSOCIATED EQUIPMENT.

KEYED NOTES - ROOF POWER PLAN INSTALL

1. PROVIDE AND INSTALL LOCAL GFCI RECEPTACLE FOR RTU MAINTENANCE PURPOSES. SEE DRAWING E602 FOR CIRCUIT DETAILS. ROUTE CONDUCTOR AND CONDUITS TO PANEL PPAC LOCATED ON THE SECOND FLOOR SEE DRAWING E111 FOR LOCATION.
2. PROVIDE A DISCONNECT SWITCH FOR ALL RTU LOCATIONS . MOUNT DISCONNECT SWITCH TO UNIT AND RUN CONDUCTORS THRU THE ROOF TO PANEL PPAC ON THE SECOND FLOOR SEE DRAWING E111 FOR PANEL LOCATION. TYPICAL ALL RTU LOCATIONS.
3. CONTRACTOR SHALL MAKE ANY NECESSARY BUILDING PENETRATIONS TO ROUTE CABLE AND CONDUIT FROM THE EXTERIOR TO INTERIOR OF BUILDING. WHEN INSTALLATION IS COMPLETE MAKE PENETRATION WEATHER TIGHT IN ACCORDANCE WITH MANUFACTURER RECOMMENDATIONS.
4. CONTRACTOR TO PROVIDE 3/4"C WITH ROOF PENETRATION NEAR PENETRATION FOR POWER CIRCUIT. STUB AND AND CAP CONDUIT 10" BELOW AND 10" ABOVE ROOF FOR USE BY MECHANICAL CONTRACTOR FOR CONTROL CABLE. COORDINATE ALL WORK WITH MECHANICAL CONTRACT. ALL PENETRATIONS THROUGH ROOF TO BE MADE AS REQUIRED BY ROOF TYPE AND MANUFACTURER. ALL PENETRATIONS TO BE SEALED WATERTIGHT.
5. EXHAUST FAN #1 (EF-1) SHALL BE WIRED TO THE OCCUPANCY SENSORS IN ROOMS 119,120 AND 121. SEE FIRST FLOOR LIGHTING PLAN INSTALL E113 FOR SENSOR LOCATION.
6. EXHAUST FAN #2 (EF-2) SHALL BE WIRED TO THE BUILDING DDC SYSTEM AND CONTROLED BY A SET SCHEDULE.
7. EXHAUST FAN #3 (EF-3) SHALL BE WIRED TO THE OCCUPANCY SENSORS IN ROOMS 108 AND 109. SEE FIRST FLOOR LIGHTING PLAN INSTALL E113 FOR SENSOR LOCATION.

LEGEND

- DUPLEX RECEPTACLE
- EXHAUST FAN
- DISCONNECT SWITCH

IT IS A VIOLATION OF THE NEW YORK STATE EDUCATION LAW, ARTICLE 145 §7209 SPECIAL PROVISIONS, FOR ANY PERSON, UNLESS THEY ARE ACTING UNDER THE DIRECTION OF A LICENSED PROFESSIONAL ENGINEER, ARCHITECT, LANDSCAPE ARCHITECT, OR LAND SURVEYOR, TO ALTER AN ITEM IN ANY WAY. IF AN ITEM BEARING THE STAMP OF A LICENSED PROFESSIONAL IS ALTERED, THE ALTERING PROFESSIONAL SHALL STAMP THE DOCUMENT AND INCLUDE THE NOTATION "ALTERED BY" FOLLOWED BY THEIR SIGNATURE, THE DATE OF SUCH ALTERATION, AND A SPECIFIC DESCRIPTION OF THE ALTERATION.

REVISIONS

CITY OF MIDDLETOWN
NEW COURTHOUSE FACILITY
CONTRACT 1D - ELECTRICAL CONSTRUCTION

ROOF POWER PLAN INSTALL

ORANGE COUNTY, NEW YORK

CITY OF MIDDLETOWN

B&L
443 Electronics Parkway
Liverpool, NY
13088
Barton & Loguidice, D.P.C.

STATE OF NEW YORK
ERIC J. HORTA
LICENSE NO. 089099
PROFESSIONAL ENGINEER

Date
AUGUST, 2024

Scale
AS SHOWN

Sheet Number
E112

Project Number
1753.008.001

Plotted: 8/21/2024 4:13:54 PM
C:\Users\rad\Documents\Middletown Courthouse Drawings - ELECTRICAL MODEL_rdarin.rvt

Checked by TWB Drawn by CJ Designed by CJ In Charge of TWB

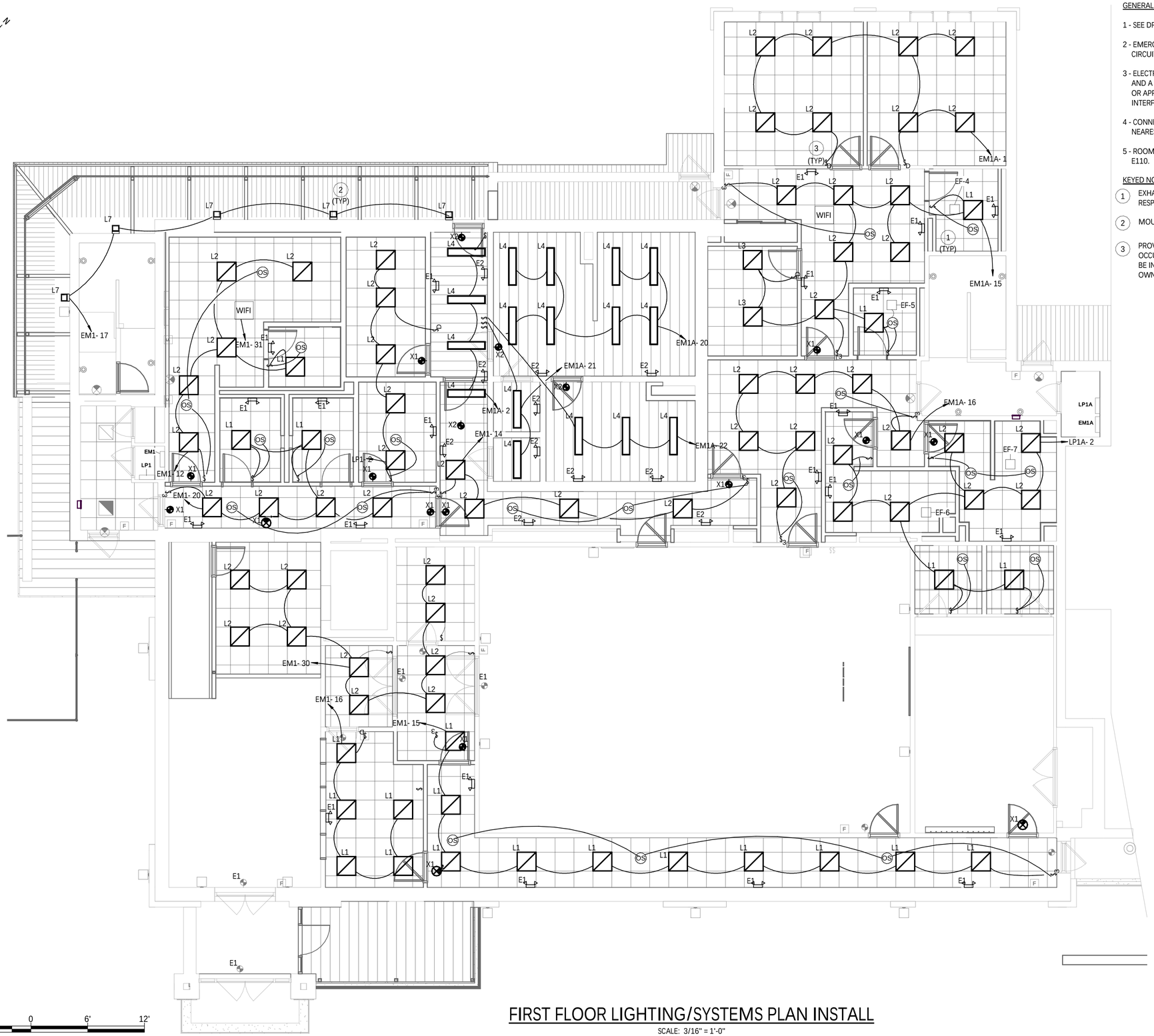

FIRST FLOOR LIGHTING/SYSTEMS PLAN INSTALL

SCALE: 3/16" = 1'-0"

GENERAL NOTES - FIRST FLOOR LIGHTING/SYSTEMS PLAN INSTALL

1 - SEE DRAWING E118 ELECTRICAL SCHEDULES FOR LIGHT FIXTURE DETAILS.

2 - EMERGENCY LIGHT FIXTURES SHALL BE INSTALLED ON THE UNSWITCHED PORTION OF THE CIRCUIT.

3 - ELECTRICAL SWITCH AND OUTLET BOXES SHALL BE SEALED USING A MOLDABLE PUTTY PAD AND A SEALANT (SUCH AS FD-150+ CAULK OR FB 1000 NS SEALANT, AS AVAILABLE FROM 3M, OR APPROVED EQUAL) AROUND THE PERIMETER OF THE BOX AT THE GYPSUM/BOX INTERFACE TO MINIMIZE THE TRANSMISSION OF SMOKE (AND SOUND).

4 - CONNECT EMERGENCY EXIT LIGHTS SIGNS AND EMERGENCY EGRESS LIGHTING TO THE NEAREST UNSWITCHED LIGHTING CIRCUIT IN THE SAME ROOM OR AREA.

5 - ROOM NAMES NOT CALLED OUT FOR DRAWING CLARITY. FOR ROOM NAMES SEE DRAWING E110.

KEYED NOTES - FIRST FLOOR LIGHTING/SYSTEMS PLAN INSTALL

1. EXHAUST FANS SHALL BE CONTROLED BY THE OCCUPANCY SENSOR INSTALLED IN EACH RESPECTIVE BATHROOM. PROVIDE AND INSTALL 2#12 - 1#12GND IN 3/4" CONDUIT.
2. MOUNT E7 LIGHT FIXTURES 8'-0" ABOVE FINISH GRADE.
3. PROVIDE AND INSTALL LUTRON MAESTRO OR SIMULAR 0-10V DIMMER SINGLE POLE OCCUPANCY SENSOR SWITCHES OR EQUAL WHERE SHOWN. ALL NEW SWITCHES SHALL NOT BE INSTALLED ON THE FINISHED WOOD SURFACES. COORDINATE FINAL LOCATIONS WITH OWNER PRIOR TO INSTALLATION.

LEGEND

$	WALL SWITCH
$D	DIMMER WALL SWITCH
$3	3-WAY WALL SWITCH
OS	CEILING MOUNTED OCCUPANCY/MOTION SENSOR
	2'X2' LED LIGHT FIXTURE, X INDICATES FIXTURE TYPE
	2'x4' LED LIGHT FIXTURE, X INDICATES FIXTURE TYPE
	EXIT LIGHT FIXTURE, CEILING MOUNTED
	RECESSED LIGHT FIXTURE, CEILING MOUNTED
X	EMERGENCY LIGHTING UNIT
	WALL PACK, OUTDOOR LIGHTING FIXTURE
	CEILING RECESSED LIGHTING FIXTURE

IT IS A VIOLATION OF THE NEW YORK STATE EDUCATION LAW, ARTICLE 145 §7209 SPECIAL PROVISIONS, FOR ANY PERSON, UNLESS THEY ARE ACTING UNDER THE DIRECTION OF A LICENSED PROFESSIONAL ENGINEER, ARCHITECT, LANDSCAPE ARCHITECT, OR LAND SURVEYOR, TO ALTER AN ITEM IN ANY WAY. IF AN ITEM BEARING THE STAMP OF A LICENSED PROFESSIONAL IS ALTERED, THE ALTERING PROFESSIONAL SHALL STAMP THE DOCUMENT AND INCLUDE THE NOTATION "ALTERED BY" FOLLOWED BY THEIR SIGNATURE, THE DATE OF SUCH ALTERATION, AND A SPECIFIC DESCRIPTION OF THE ALTERATION.

REVISIONS

CITY OF MIDDLETOWN
NEW COURTHOUSE FACILITY
CONTRACT 1D - ELECTRICAL CONSTRUCTION

FIRST FLOOR LIGHTING/SYSTEMS PLAN INSTALL

CITY OF MIDDLETOWN ORANGE COUNTY, NEW YORK

B&L
443 Electronics Parkway
Liverpool, NY
13088
Barton & Loguidice, D.P.C.

STATE OF NEW YORK · ERIC J. HORVAT · No. 089093 · LICENSED PROFESSIONAL ENGINEER

Date	AUGUST, 2024
Scale	AS SHOWN
Sheet Number	E113
Project Number	1753.008.001

Plotted: 8/21/2024 4:13:54 PM
C:\Users\rad\Documents\Middletown Courthouse Drawings - ELECTRICAL MODEL_rdarin.rvt

Checked by TWB Drawn by CJ Designed by CJ In Charge of TWB

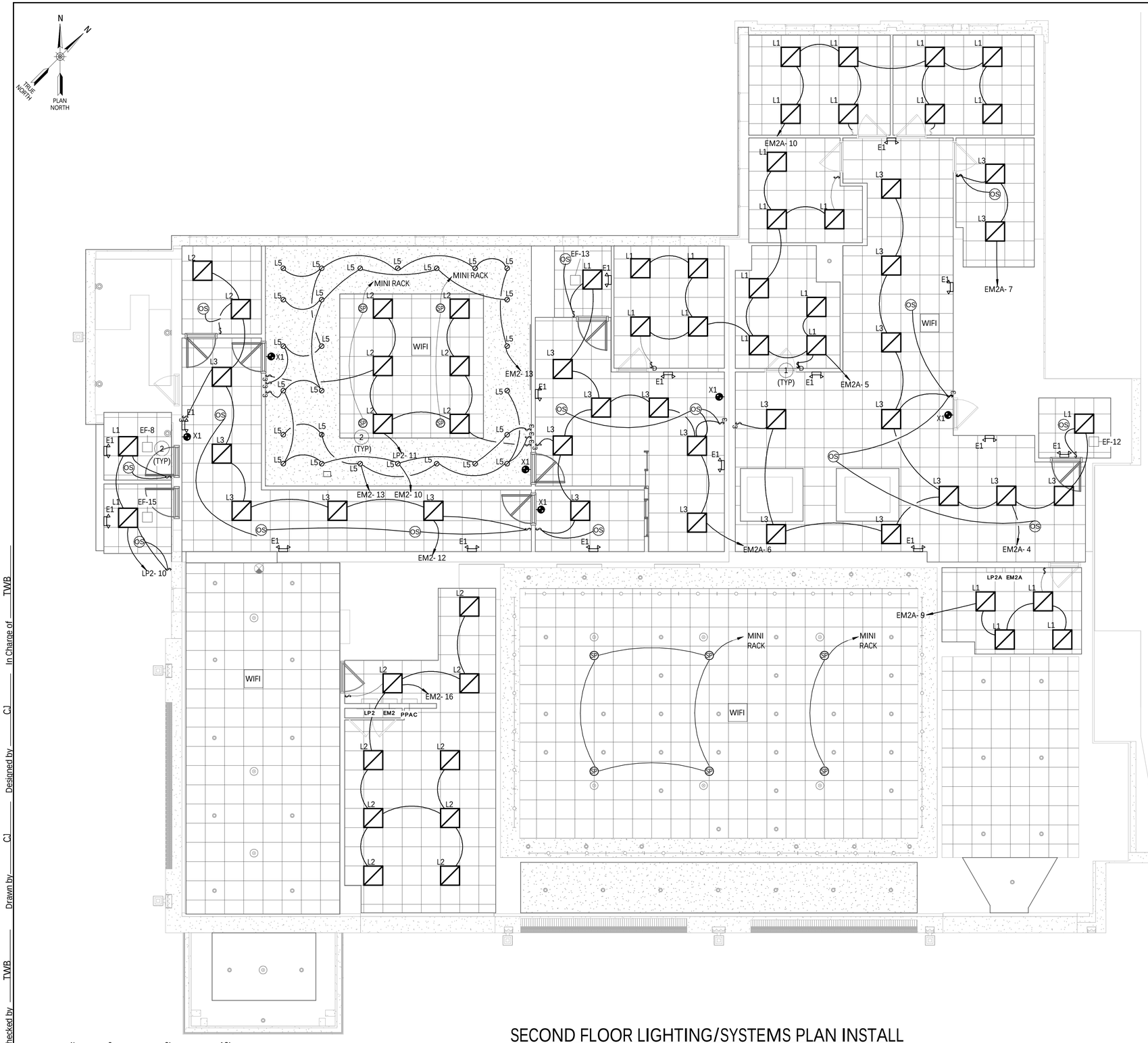

SECOND FLOOR LIGHTING/SYSTEMS PLAN INSTALL

SCALE: 3/16" = 1'-0"

3/16" = 1'-0" 4' 0 6' 12'

GENERAL NOTES - SECOND FLOOR LIGHTING/SYSTEMS PLAN INSTALL

1 - SEE DRAWING E118 ELECTRICAL SCHEDULES FOR LIGHT FIXTURE DETAILS.

2 - EMERGENCY LIGHT FIXTURES SHOULD BE INSTALLED ON THE UNSWITCHED PORTION OF THE CIRCUIT.

3 - ELECTRICAL SWITCH AND OUTLET BOXES SHOULD BE SEALED USING A MOLDABLE PUTTY PAD AND A SEALANT (SUCH AS FD-150+ CAULK OR FB 1000 NS SEALANT, AS AVAILABLE FROM 3M, OR APPROVED EQUAL) AROUND THE PERIMETER OF THE BOX AT THE GYPSUM/BOX INTERFACE TO MINIMIZE THE TRANSMISSION OF SMOKE (AND SOUND).

4 - CONNECT EMERGENCY EXIT LIGHTS SIGNS AND EMERGENCY EGRESS LIGHTING TO THE NEAREST UNSWITCHED LIGHTING CIRCUIT IN THE SAME ROOM OR AREA.

5 - ROOM NAMES NOT CALLED OUT FOR DRAWING CLARITY. FOR ROOM NAMES SEE DRAWING E111.

SPEAKER NOTES - SECOND FLOOR LIGHTING/SYSTEMS PLAN INSTALL

1 - ALL SPEAKERS SHOULD BE SET TO 70 VOLTS, 15 WATTS.

2 - THE TWO SPEAKERS OVER THE JUDGES BENCH AREA SHOULD BE DAISY CHAINED (CONNECTED IN PARALLEL) WITH A SINGLE HOME RUN TO THE MIDI RACK. LEAVE 10' OF EXTRA CABLE CORE FOR ALL SPEAKER & MICROPHONE CABLES AT THE MIDI RACK FOR TERMINATION & CABLE MANAGEMENT BY OCA.

3 - THE REMAINING SPEAKERS IN THE ROOM CAN ALL BE DAISY CHAINED WITH ANOTHER HOME RUN TO THE MIDI RACK.

KEYED NOTES - SECOND FLOOR LIGHTING/SYSTEMS PLAN INSTALL

1. PROVIDE AND INSTALL LUTRON MAESTRO OR SIMULAR 0-10V DIMMER SINGLE POLE OCCUPANCY SENSOR SWITCHES OR EQUAL WHERE SHOWN. ALL NEW SWITCHES SHALL NOT BE INSTALLED ON THE FINISHED WOOD SURFACES. COORDINATE FINAL LOCATIONS WITH OWNER PRIOR TO INSTALLATION.

2. EXHAUST FANS SHALL BE CONTROLED BY THE OCCUPANCY SENSOR INSTALLED IN EACH REPECTIVE BATHROOM. PROVIDE AND INSTALL 2#12 - 1#12GND IN 3/4" CONDUIT.

LEGEND

$	WALL SWITCH
$D	DIMMER WALL SWITCH
$3	3-WAY WALL SWITCH
OS	CEILING MOUNTED OCCUPANCY/MOTION SENSOR
	2'X2' LED LIGHT FIXTURE, X INDICATES FIXTURE TYPE
SP	SPEAKER
	EXIT LIGHT FIXTURE, CEILING MOUNTED
	RECESSED LIGHT FIXTURE, CEILING MOUNTED
X	EMERGENCY LIGHTING UNIT
WIFI	WIRELESS ACCESS POINT

IT IS A VIOLATION OF THE NEW YORK STATE EDUCATION LAW, ARTICLE 145 §7209 SPECIAL PROVISIONS, FOR ANY PERSON, UNLESS THEY ARE ACTING UNDER THE DIRECTION OF A LICENSED PROFESSIONAL ENGINEER, ARCHITECT, LANDSCAPE ARCHITECT, OR LAND SURVEYOR, TO ALTER AN ITEM IN ANY WAY. IF AN ITEM BEARING THE STAMP OF A LICENSED PROFESSIONAL IS ALTERED, THE ALTERING PROFESSIONAL SHALL STAMP THE DOCUMENT AND INCLUDE THE NOTATION "ALTERED BY" FOLLOWED BY THEIR SIGNATURE, THE DATE OF SUCH ALTERATION, AND A SPECIFIC DESCRIPTION OF THE ALTERATION.

REVISIONS

CITY OF MIDDLETOWN
NEW COURTHOUSE FACILITY
CONTRACT 1D - ELECTRICAL CONSTRUCTION

SECOND FLOOR LIGHTING/SYSTEMS PLAN INSTALL

CITY OF MIDDLETOWN ORANGE COUNTY, NEW YORK

B&L
443 Electronics Parkway
Liverpool, NY
13088
Barton & Loguidice, D.P.C.

STATE OF NEW YORK · ERIC J. HORVAT · No. 089098 · LICENSED PROFESSIONAL ENGINEER

Date: AUGUST, 2024
Scale: AS SHOWN
Sheet Number: E114
Project Number: 1753.008.001

Plotted: 8/21/2024 4:13:55 PM
C:\Users\rad\Documents\Middletown Courthouse Drawings - ELECTRICAL MODEL_rdarin.rvt
Checked by TWB Drawn by CJ Designed by CJ In Charge of TWB

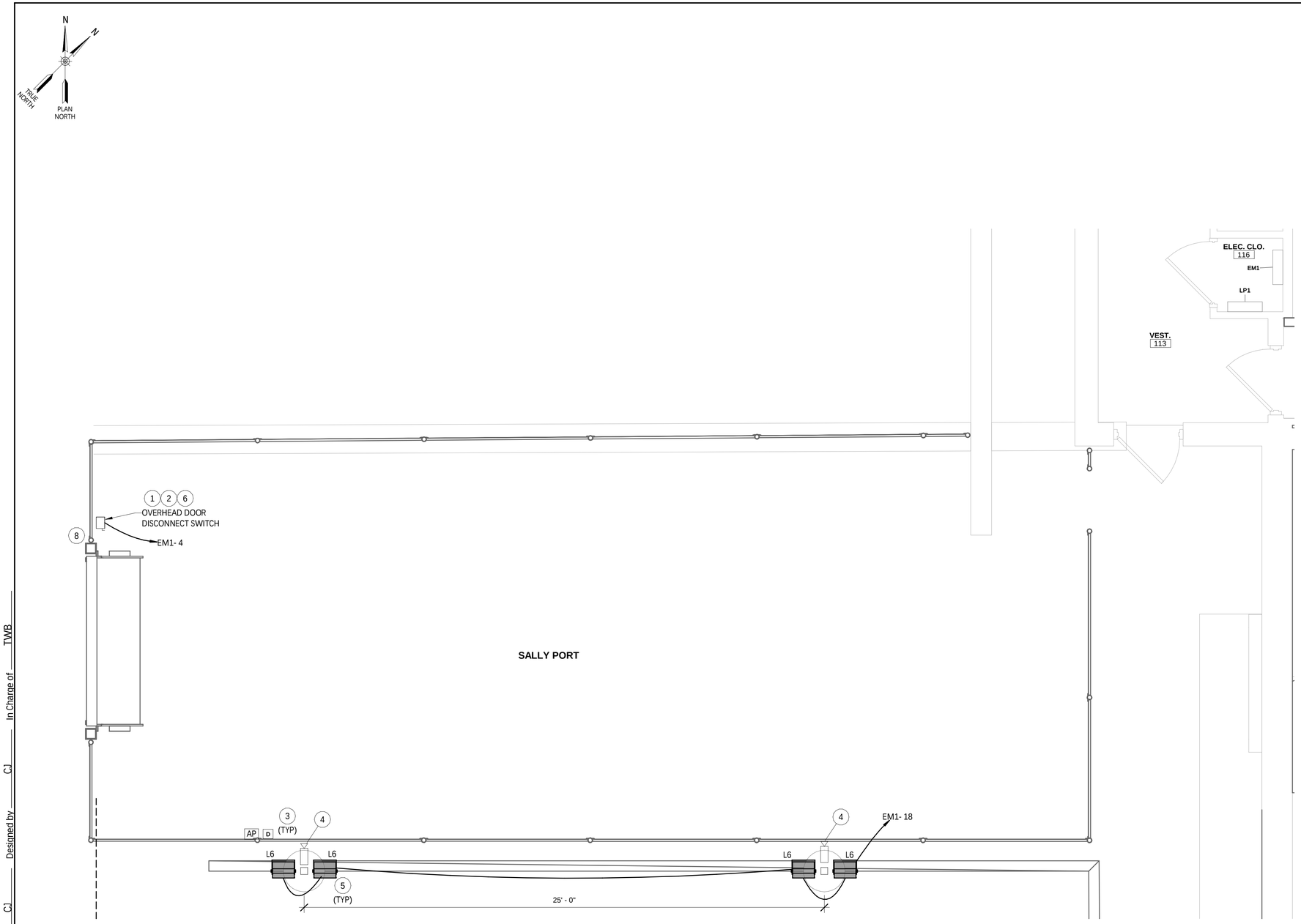

SALLY PORT POWER, LIGHTING & SECURITY PLAN INSTALL

SCALE: 3/8" = 1'-0"

KEYED NOTES - SALLY PORT & SECURITY PLAN INSTALL

1. PROVIDE AND INSTALL 30A DISCONNECT SWITCH SQUARE-D H361 OR EQUAL. RUN 3# 10 - 1#10G IN 1" CONDUIT FROM NEW AUTO GARAGE DOOR OPENER TO PANEL EM1.
2. SEE DETAIL ON SHEET E118 FOR OVERHEAD DOOR WIRING DETAIL.
3. MOUNT PROVIDED WIRELESS AIPHONE AND DURESS BUTTON TO FENCE POLE. COORDINATE EXACT LOCATION WITH OWNER.
4. MOUNT PROVIDED SECURITY CAMERAS TO LIGHT POLES AT A HEIGHT OF 10' ABOVE FINISH GRADE. PROVIDE AND INSTALL (2) CAT6A CABLES FROM CAMERA TO THE ELEC CLO./STORAGE ROOM 205 ON THE SECOND FLOOR.
5. PROVIDE AND INSTALL 4" DIAMETER 15' ROUND STEEL POLES ACUITY PART NUMBER RSS-4B WITH BAND MOUNT BULLHORNS ACUITY PART NUMBER SMACBT-14/8T-RND-DBLXD OR EQUAL TO MOUNT SALLY PORT AREA LIGHT FIXTURES. TYPICAL 2X
6. CONTROLS FOR THE OVERHEAD DOOR WILL BE LOCATED IN THE SECURITY SUPERVISIORS OFFICE 122 AND THE MAIN SECURITY OFFICE 105 LOCATED ON THE FIRST FLOOR . SEE DRAWING E110 FOR LOCATIONS.
7. INSTALL 12 #14AWG AND 2 #18 STP IN 1" CONDUIT TO THE MAIN SECURITY ROOM 105 ON THE FIRST FLOOR.
8. MOUNT PROVIDED SECURITY CAMERAS TO FENCE POLE AT A HEIGHT OF 6' ABOVE FINISH GRADE. PROVIDE AND INSTALL (2) CAT6A CABLES FROM CAMERA TO THE ELEC CLO./STORAGE ROOM 205 ON THE SECOND FLOOR.

LEGEND

- PANELBOARD
- SECURITY CAMERA
- JUNCTION BOX
- AIPHONE
- DURESS ALARM ACTIVATION DEVICE
- DISCONNECT SWITCH
- POLE MOUNTED FLOOD LIGHT

3/8" = 1'-0" (2' 0 3' 6')

IT IS A VIOLATION OF THE NEW YORK STATE EDUCATION LAW, ARTICLE 145 §7209 SPECIAL PROVISIONS, FOR ANY PERSON, UNLESS THEY ARE ACTING UNDER THE DIRECTION OF A LICENSED PROFESSIONAL ENGINEER, ARCHITECT, LANDSCAPE ARCHITECT, OR LAND SURVEYOR, TO ALTER AN ITEM IN ANY WAY. IF AN ITEM BEARING THE STAMP OF A LICENSED PROFESSIONAL IS ALTERED, THE ALTERING PROFESSIONAL SHALL STAMP THE DOCUMENT AND INCLUDE THE NOTATION "ALTERED BY" FOLLOWED BY THEIR SIGNATURE, THE DATE OF SUCH ALTERATION, AND A SPECIFIC DESCRIPTION OF THE ALTERATION.

REVISIONS

CITY OF MIDDLETOWN
NEW COURTHOUSE FACILITY
CONTRACT 1D - ELECTRICAL CONSTRUCTION

SALLY PORT POWER, LIGHTING & SECURITY PLAN INSTALL

CITY OF MIDDLETOWN ORANGE COUNTY, NEW YORK

B&L
443 Electronics Parkway
Liverpool, NY
13088
Barton & Loguidice, D.P.C.

STATE OF NEW YORK · ERIC J. HORVAT · LICENSE NO. 089099 · PROFESSIONAL ENGINEER

Date	AUGUST, 2024
Scale	AS SHOWN
Sheet Number	E115
Project Number	1753.008.001

Plotted: 8/21/2024 4:13:56 PM
C:\Users\rad\Documents\Middletown Courthouse Drawings - ELECTRICAL MODEL_rdarin.rvt

Checked by TWB Drawn by CJ Designed by CJ In Charge of TWB

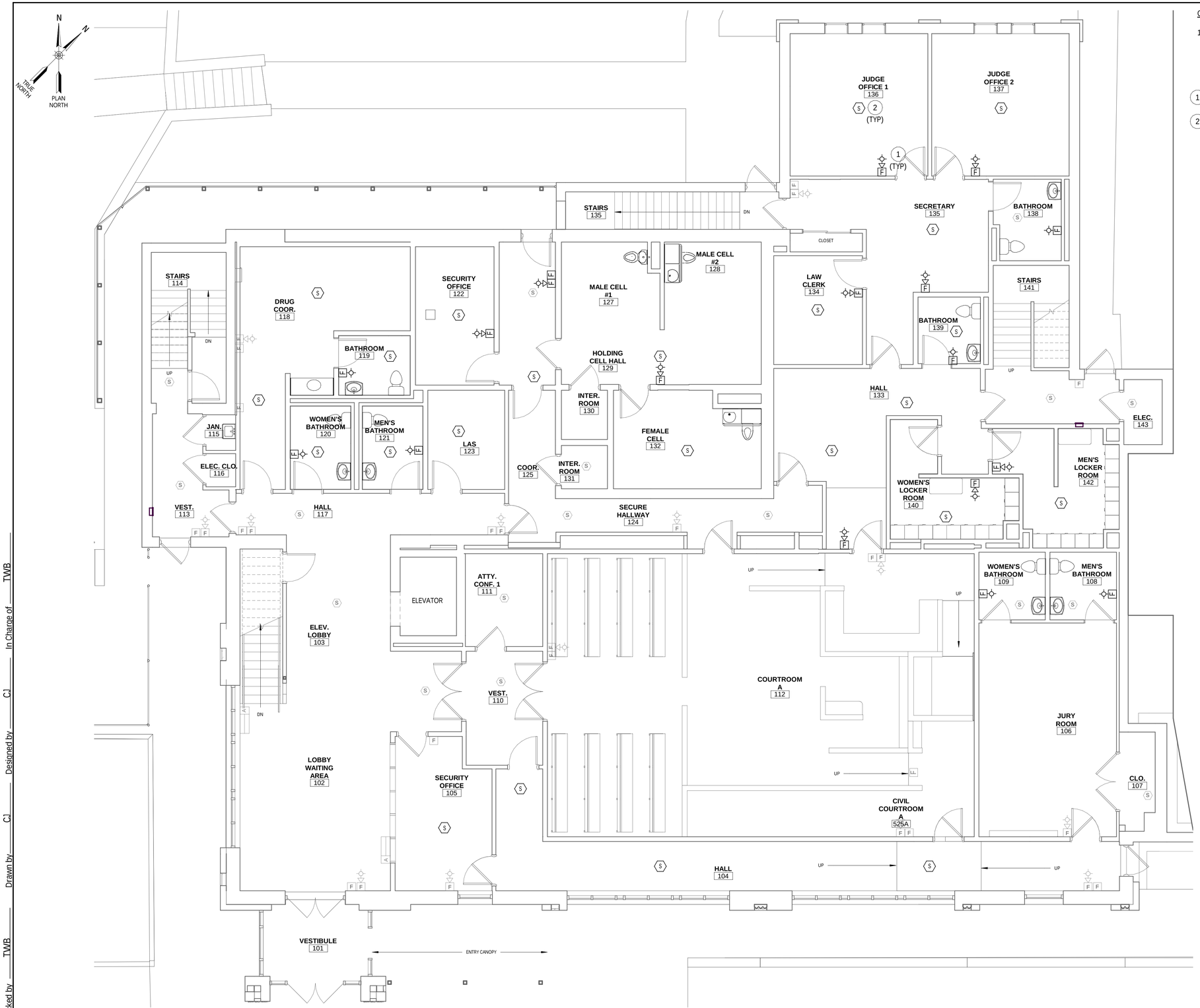

GENERAL NOTES - FIRST FLOOR FIRE ALARM PLAN INSTALL

1 - ALL FIRE ALARM DEVICES IN HALLS #124 & 126, MALE CELL #127,128,129, FEMALE CELL #132, INTERVIEW ROOM #130 & 131 SHALL HAVE TAMPER RESISTANT COVERS. ALL WIRING AND CONDUIT SHALL BE CONCEALED.

KEYED NOTES - FIRST FLOOR FIRE ALARM PLAN INSTALL

1. SEE DRAWING E605 FIRE ALARM RISER DIAGRAM INSTALL FOR HORN/STROBE WIRING DETAILS.
2. SEE DRAWING E605 FIRE ALARM RISER DIAGRAM INSTALL FOR SMOKE DETECTOR WIRING DETAILS.

LEGEND	
S	SMOKE DETECTOR
F	HORN AND STROBE
F	PULL STATION
F	HORN
	PANELBOARD

FIRST FLOOR FIRE ALARM PLAN INSTALL

SCALE: 3/16" = 1'-0"

3/16" = 1'-0" 4' 0 6' 12'

IT IS A VIOLATION OF THE NEW YORK STATE EDUCATION LAW, ARTICLE 145 §7209 SPECIAL PROVISIONS, FOR ANY PERSON, UNLESS THEY ARE ACTING UNDER THE DIRECTION OF A LICENSED PROFESSIONAL ENGINEER, ARCHITECT, LANDSCAPE ARCHITECT, OR LAND SURVEYOR, TO ALTER AN ITEM IN ANY WAY. IF AN ITEM BEARING THE STAMP OF A LICENSED PROFESSIONAL IS ALTERED, THE ALTERING PROFESSIONAL SHALL STAMP THE DOCUMENT AND INCLUDE THE NOTATION "ALTERED BY" FOLLOWED BY THEIR SIGNATURE, THE DATE OF SUCH ALTERATION, AND A SPECIFIC DESCRIPTION OF THE ALTERATION.

REVISIONS

CITY OF MIDDLETOWN
NEW COURTHOUSE FACILITY
CONTRACT 1D - ELECTRICAL CONSTRUCTION

FIRST FLOOR FIRE ALARM PLAN INSTALL

ORANGE COUNTY, NEW YORK

CITY OF MIDDLETOWN

B&L
443 Electronics Parkway
Liverpool, NY
13088
Barton & Loguidice, D.P.C.

STATE OF NEW YORK · ERIC J. HORVAT · No. 089093 · LICENSED PROFESSIONAL ENGINEER

Date	AUGUST, 2024
Scale	AS SHOWN
Sheet Number	E116
Project Number	1753.008.001

Plotted: 8/21/2024 4:13:57 PM
C:\Users\rad\Documents\Middletown Courthouse Drawings - ELECTRICAL MODEL_rdarin.rvt

Checked by TWB Drawn by CJ Designed by CJ In Charge of TWB

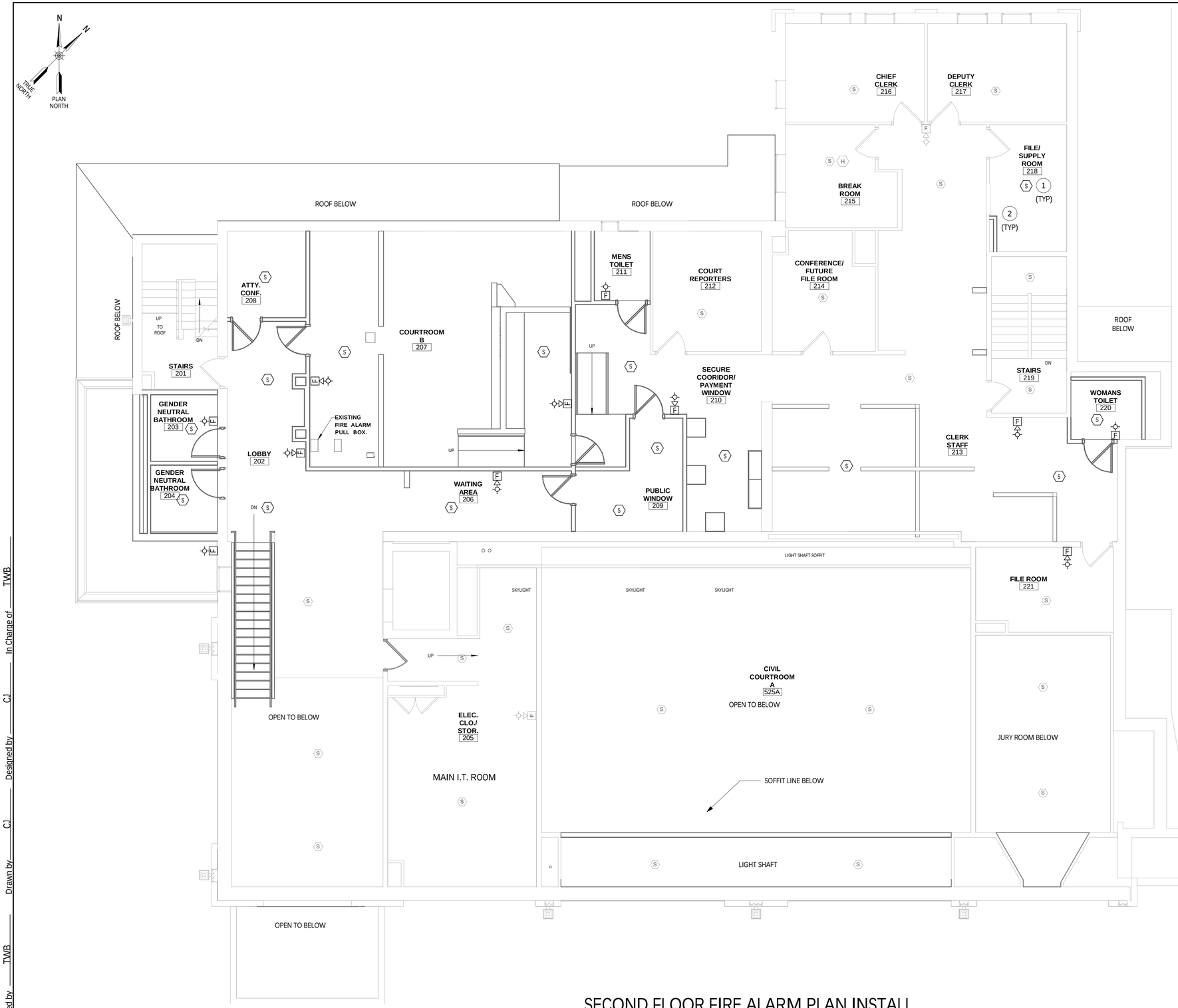

SECOND FLOOR FIRE ALARM PLAN INSTALL

SCALE: 3/16" = 1'-0"

3/16" = 1'-0" 4' 0 6' 12'

KEYED NOTES - SECOND FLOOR FIRE ALARM PLAN INSTALL

1. SEE DRAWING E605 FIRE ALARM RISER DIAGRAM INSTALL FOR HORN/STROBE WIRING DETAILS.
2. SEE DRAWING E605 FIRE ALARM RISER DIAGRAM INSTALL FOR SMOKE DETECTOR WIRING DETAILS.

LEGEND

S	SMOKE DETECTOR
	HORN AND STROBE
F	PULL STATION
F	HORN
	PANELBOARD

IT IS A VIOLATION OF THE NEW YORK STATE EDUCATION LAW, ARTICLE 145 §7209 SPECIAL PROVISIONS, FOR ANY PERSON, UNLESS THEY ARE ACTING UNDER THE DIRECTION OF A LICENSED PROFESSIONAL ENGINEER, ARCHITECT, LANDSCAPE ARCHITECT, OR LAND SURVEYOR, TO ALTER AN ITEM IN ANY WAY. IF AN ITEM BEARING THE STAMP OF A LICENSED PROFESSIONAL IS ALTERED, THE ALTERING PROFESSIONAL SHALL STAMP THE DOCUMENT AND INCLUDE THE NOTATION "ALTERED BY" FOLLOWED BY THEIR SIGNATURE, THE DATE OF SUCH ALTERATION, AND A SPECIFIC DESCRIPTION OF THE ALTERATION.

REVISIONS

CITY OF MIDDLETOWN
NEW COURTHOUSE FACILITY
CONTRACT 1D - ELECTRICAL CONSTRUCTION

SECOND FLOOR FIRE ALARM PLAN INSTALL

ORANGE COUNTY, NEW YORK

CITY OF MIDDLETOWN

B&L
443 Electronics Parkway
Liverpool, NY
13088
Barton & Loguidice, D.P.C.

STATE OF NEW YORK · ERIC J. HORVAT · No. 089099 · PROFESSIONAL ENGINEER

Date	AUGUST, 2024
Scale	AS SHOWN
Sheet Number	E117
Project Number	1753.008.001

Plotted: 8/21/2024 4:13:58 PM
C:\Users\rad\Documents\Middletown Courthouse Drawings - ELECTRICAL MODEL_rdarin.rvt

Checked by TWB Drawn by CJ Designed by CJ In Charge of TWB

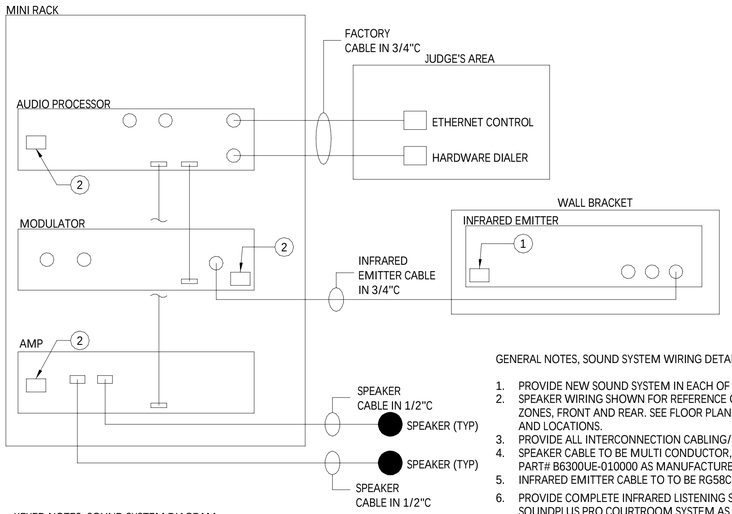

KEYED NOTES, SOUND SYSTEM DIAGRAM

1. PROVIDE DEDICATED 120V, 20A OUTLET FOR EMITTER AT EMITTER LOCATION. OUTLET TO BE PROVIDED IN RECESSED WALL BOX. CIRCUIT TO NEW PANELBOARD WITH 2#12, 1#12G IN 3/4"C. PROVIDE 20A, 1P CIRCUIT BREAKER.
2. UTILIZE 120V OUTLETS SHOWN ON FLOOR PLAN.

GENERAL NOTES, SOUND SYSTEM WIRING DETAIL

1. PROVIDE NEW SOUND SYSTEM IN EACH OF TWO (2) COURT ROOMS.
2. SPEAKER WIRING SHOWN FOR REFERENCE ONLY. WIRE SPEAKERS IN TWO ZONES, FRONT AND REAR. SEE FLOOR PLANS FOR SPEAKER QUANTITIES AND LOCATIONS.
3. PROVIDE ALL INTERCONNECTION CABLING/WIRING REQUIRED.
4. SPEAKER CABLE TO BE MULTI CONDUCTOR, 2 CONDUCTOR, 18AWG AS PART# B6300UE-010000 AS MANUFACTURED BY BELDEN.
5. INFRARED EMITTER CABLE TO TO BE RG58C, 50 OHM.
6. PROVIDE COMPLETE INFRARED LISTENING SYSTEM AS WIR SYS 1 SOUNDPLUS PRO COURTROOM SYSTEM AS MANUFACTURED BY WILLIAMS SOUND. SYSTEM TO INCLUDE:
   - (1) MOD 232 modulator
   - (1) WIR TX9 infrared emitter
   - (1) BKT 024 bracket
   - (4) RX22-4N infrared receivers
   - (4) HED 021 headphones
   - (2) NKL 001 neckloops
   - (1) RPK 005 rack panel kit
   - (1) IDP 008 ADA wall plaque
   - (8) BAT 001 AA alkaline batteries.

SOUND SYSTEM WIRING DETAIL

SCALE: NOT TO SCALE

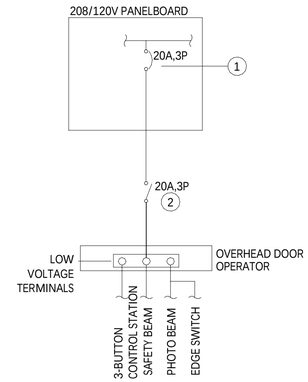

GENERAL NOTES, OVERHEAD DOOR - DIAGRAM

1. CIRCUITING, CIRCUIT BREAKER, DISCONNECT, AND LOW VOLTAGE WIRING SHOWN AS THE BASIS OF DESIGN. COORDINATE REQUIREMENTS WITH GENERAL CONTRACT PRIOR TO INSTALLATION.
2. ALL CIRCUITING SHALL BE IN CONDUIT.

KEYED NOTES, OVERHEAD DOOR - DIAGRAM

1. PROVIDE NEW CIRCUIT BREAKER IN EXISTING PANELBOARD. MATCH EXISTING KAIC RATINGS. (TYP)
2. SEE ONE-LINE DIAGRAM FOR CIRCUITING.

GARAGE DOOR WIRING DETAIL

SCALE: NOT TO SCALE

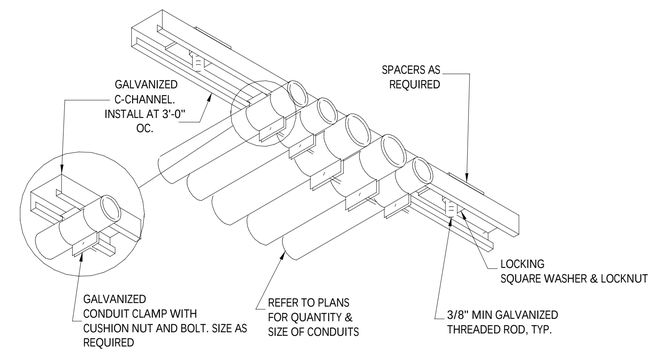

CONDUIT SUPPORT DETAIL

SCALE: NOT TO SCALE

PD610ED10-PDM6A840-61VBB

LIGHT FIXTURE SCHDULE

DESIGNATION	TYPE	MANUFACTURER	CATALOG NUMBER	LUMENS	LIGHT COLOR	VOLTS	LIGHT DISTRIBUTION	INSTALLATION	FINISH / COLOR	REMARKS
L1	TROFFER	ACUITY	2BLT2 20L SDSM LP840	2000	4000K	120	N/A	CEILING/RECESSED	WHITE	
L2	TROFFER	ACUITY	2BLT2 33L SDSM LP840	3000	4000K	120	N/A	CEILING/RECESSED	WHITE	
L3	TROFFER	ACUITY	2BLT2 40L SDSM LP840	4000	4000K	120	N/A	CEILING/RECESSED	WHITE	
L4	TROFFER	KENALL	RMCA-4-TG-0-2-67L40K-IS-2-DV-0	5836	4000K	MULTI VOLT	N/A	CEILING RECESSED	WHITE	6
L5	RECESSED MOUNT	ACUITY	LDN6 40 15 L06 WR LSS MVOLT GZ10	1500	4000K	MULTI VOLT	N/A	CEILING	WHITE	
L6	FLOODLIGHT	ACUITY	RSXF1-P5-50K-AWFD-MVOLT-AAWSC-PE-DBLXD	N/A	5000K	MULTI VOLT	N/A	POLE MOUNT	BLACK	1
L7	WALL PACK	KENALL	FN9-2-7-MB-49L-40K8-120	N/A	5000K	MULTI VOLT	N/A	WALL MOUNT	BLACK	1,4
X1	EXIT LIGHT	ACUITY	LQM S W 3 R 120/277 M6	N/A	RED	120	N/A	SURFACE, WALL	WHITE	2,3
X2	TAMPER RESISTANT EXIT LIGHT	KENALL	MMEX-1-0-R-DT-1-EL	N/A	RED	120	N/A	SURFACE, WALL	WHITE	2,3,4
E1	EMERGENCY LIGHT	ACUITY	ELM4L	N/A	STANDARD	120	N/A	WALL	WHITE	2,3
E1	TAMPER REISITANT EMERGENCY LIGHT	KENALL	METELHC-24W-MW-2-6.5L-120	N/A	STANDARD	120	N/A	WALL	WHITE	2,3,4

GENERAL NOTES, LIGHT FIXTURE SCHEDULE

1. MODEL IS GIVEN FOR QUALITY ONLY. SUBSTITUTE LIGHT FIXTURES SHALL BE OF EQUAL OR GREATER QUALITY.
2. ALL FIXTURES TO BE PROVIDED WITH REQUIRED MOUNTING HARDWVARE FOR INSTALLATION TYPE SHOWN.

REMARK, LIGHT FIXTURE SCHEDULE

1. PROVIDE FIXTURE WITH INTEGRATED PHOTOCELL.
2. FIXTURE SHALL BE SELF DIAGNOSTIC.
3. PROVIDE WITH BATTERY PACK.
4. FIXTURE SHALL BE HIGH IMPACT AND VANDAL PROOF SUITABLE FOR HIGH SECURITY AREAS.

IT IS A VIOLATION OF THE NEW YORK STATE EDUCATION LAW, ARTICLE 145 §7209 SPECIAL PROVISIONS, FOR ANY PERSON, UNLESS THEY ARE ACTING UNDER THE DIRECTION OF A LICENSED PROFESSIONAL ENGINEER, ARCHITECT, LANDSCAPE ARCHITECT, OR LAND SURVEYOR, TO ALTER AN ITEM IN ANY WAY. IF AN ITEM BEARING THE STAMP OF A LICENSED PROFESSIONAL IS ALTERED, THE ALTERING PROFESSIONAL SHALL STAMP THE DOCUMENT AND INCLUDE THE NOTATION "ALTERED BY" FOLLOWED BY THEIR SIGNATURE, THE DATE OF SUCH ALTERATION, AND A SPECIFIC DESCRIPTION OF THE ALTERATION.

REVISIONS

CITY OF MIDDLETOWN
NEW COURTHOUSE FACILITY
CONTRACT 1D - ELECTRICAL CONSTRUCTION

ELECTRICAL SCHEDULES AND DETAILS

CITY OF MIDDLETOWN ORANGE COUNTY, NEW YORK

B&L
443 Electronics Parkway
Liverpool, NY
13088
Barton & Loguidice, D.P.C.

STATE OF NEW YORK ERIC J. HORVAT Lic. No. 089009 LICENSED PROFESSIONAL ENGINEER

Date AUGUST, 2024
Scale AS SHOWN
Sheet Number E118
Project Number 1753.008.001

Plotted: 8/21/2024 4:13:58 PM
C:\Users\rad\Documents\Middletown Courthouse Drawings - ELECTRICAL MODEL_rdarin.rvt
Checked by TWB Drawn by CJ Designed by CJ In Charge of TWB

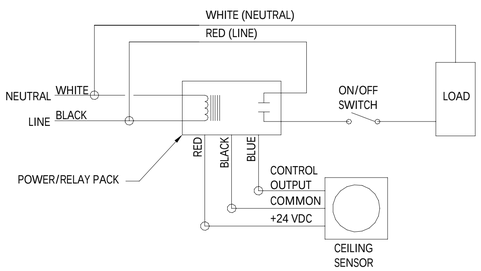

GENERAL NOTES, TYPICAL CEILING MOUNT OCCUPANCY SENSOR DETAIL - DIAGRAM

1 - CONTRACTOR TO PROVIDE A COMPLETE AND OPERATIONAL SYSTEM.
2 - PROVIDE ALL REQUIRED POWER/RELAY PACKS AND CIRCUITING.

TYPICAL CEILING MOUNT OCCUPANCY SENSOR DETAIL

SCALE: NOT TO SCALE

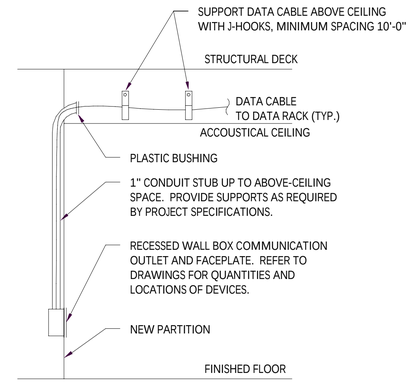

TYPICAL DATA CABLE ROUTING DETAIL

SCALE: NOT TO SCALE

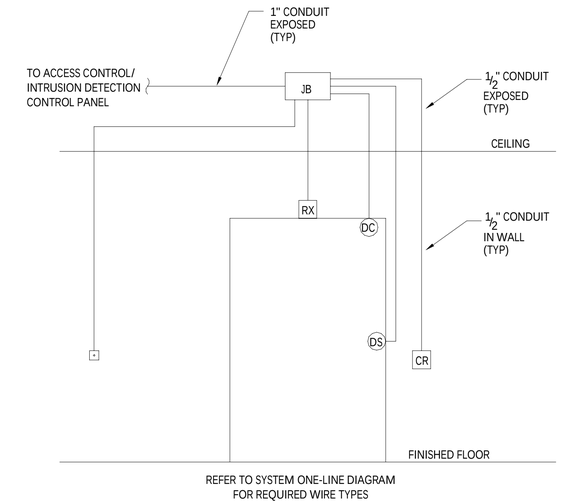

GENERAL NOTES, DOOR ACCESS CONTROL REQUIREMENTS - DIAGRAM

1 - REFER TO ONE-LINE DIAGRAM FOR POWER CIRCUITING TO DOOR STRIKES.
DOOR STRIKES PROVIDED BY ARCHITECURAL CONTRACT.
2 - COORDINATE INSTALLATION WITH ARCHITECTURAL CONTRACT AND OWNER.
3 - OWNER TO PROVIDE CONTROL CIRCUITING, CARD READER, DOOR CONTROLLERS, REQUEST TO EXIT, AND DOOR CONTACTS. EQUIPMENT SHOWN FOR REFERANCE. ELECTRICAL CONTRACT TO PROVIDE ALL REQUIRED JUNCTIONS BOXES AND RACEWAY FOR OWNER PROVIDED EQUIPMENT.

TYPICAL DOORWAY ACCESS CONTROL REQUIREMENTS

SCALE: NOT TO SCALE

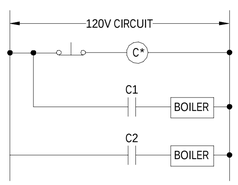

GENERAL NOTES, BOILER EMERGENCY SHUT OFF - DIAGRAM

1 - PROVIDE MUSHROOM HEAD EMERGENCY STOP PUSH BUTTON SWITCH AT LOCATION OF EACH BOILER ROOM EXIT DOOR.
2 - EMERGENCY STOP TO BE PUSH TO TRIP, PULL TO RESET.
PROVIDE ALL REQUIRED CONTACTORS.
3 - PUSHING THE MUSHROOM HEAD EMERGENCY PUSH BUTTON SHALL BREAK POWER TO THE COIL AND THE CONTACTS SHALL OPEN.

BOILER EMERGENCY SHUT-OFF DETAIL

SCALE: NOT TO SCALE

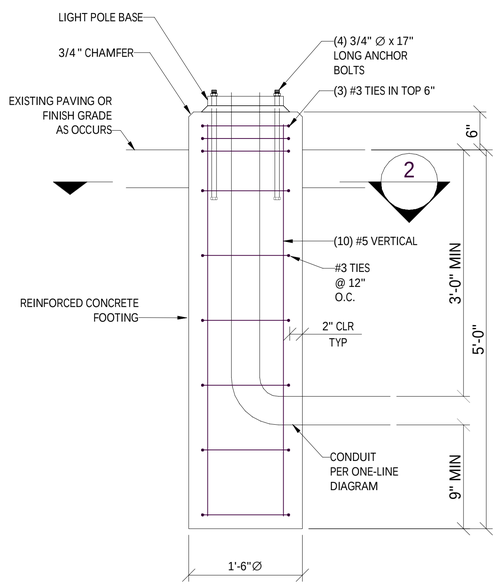

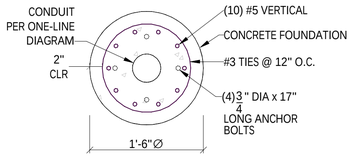

2 E117 LIGHT POLE FOUNDATION SECTION

SCALE: NTS

LIGHT POLE FOUNDATION DETAIL

SCALE: NOT TO SCALE

IT IS A VIOLATION OF THE NEW YORK STATE EDUCATION LAW, ARTICLE 145 §7209 SPECIAL PROVISIONS, FOR ANY PERSON, UNLESS THEY ARE ACTING UNDER THE DIRECTION OF A LICENSED PROFESSIONAL ENGINEER, ARCHITECT, LANDSCAPE ARCHITECT, OR LAND SURVEYOR, TO ALTER AN ITEM IN ANY WAY. IF AN ITEM BEARING THE STAMP OF A LICENSED PROFESSIONAL IS ALTERED, THE ALTERING PROFESSIONAL SHALL STAMP THE DOCUMENT AND INCLUDE THE NOTATION "ALTERED BY" FOLLOWED BY THEIR SIGNATURE, THE DATE OF SUCH ALTERATION, AND A SPECIFIC DESCRIPTION OF THE ALTERATION.

REVISIONS

CITY OF MIDDLETOWN
NEW COURTHOUSE FACILITY
CONTRACT 1D - ELECTRICAL CONSTRUCTION

ELECTRICAL DETAILS

ORANGE COUNTY, NEW YORK

CITY OF MIDDLETOWN

B&L
443 Electronics Parkway
Liverpool, NY
13088
Barton & Loguidice, D.P.C.

STATE OF NEW YORK
ERIC J. HORVATH
No. 089099
LICENSED PROFESSIONAL ENGINEER

Date
AUGUST, 2024

Scale
AS SHOWN

Sheet Number
E119

Project Number
1753.008.001

Plotted: 8/21/2024 4:13:59 PM
C:\Users\rad\Documents\Middletown Courthouse Drawings - ELECTRICAL MODEL_rdarin.rvt

Checked by TWB Drawn by CJ Designed by CJ In Charge of TWB

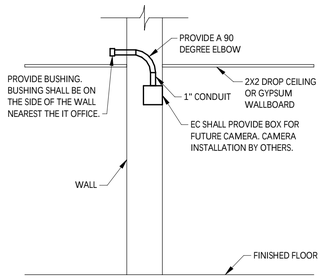

GENERAL NOTES, CAMERA BOX INSTALLATION DETAILS
1 - THE EC SHALL PROVIDE BOXES IN THE WALLS. PROVIDE CONDUIT FROM THE BOX TO ABOVE THE DROP CEILING OR GYPSUM WALLBOARD.
2 - CAMERAS, AND WIRING TO AND FROM BOXES BY OTHERS.

CAMERA BOX INSTALLATION DETAIL

SCALE: NOT TO SCALE

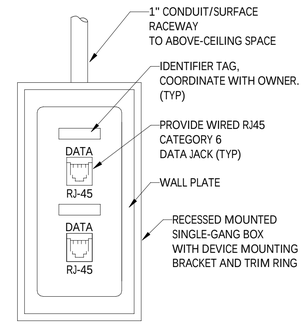

TYPICAL DATA PORT

SCALE: NOT TO SCALE

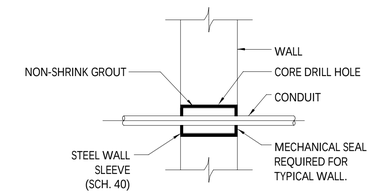

TYPICAL WALL/FLOOR CONDUIT PENETRATION DETAIL

SCALE: NOT TO SCALE

CONDUIT SCHEDULE			
BUILDING OR AREA	AREA DESCRIPTION	CONDUIT TYPE	REMARKS
GENERAL (ALL AREAS)	INTERIOR - CONCEALED	EMT	1, 2
	INTERIOR - EXPOSED	WIREMOLD	1, 3
ELECTRICAL ROOMS	ALL	EMT	

GENERAL NOTES, CONDUIT SCHEDULE
1 - CONDUIT TYPES ARE UNLESS OTHERWISE INDICATED OR REQUIRED BY EQUIPMENT OR CABLE MANUFACTURER. PROVIDE AS REQUIRED.

REMARKS, CONDUIT SCHEDULE
1 - EXPOSED SYSTEMS ONLY ACCEPTABLE WHERE DEVICES ARE INSTALLED ON EXISTING BLOCK WALL CONSTRUCTION.
2- METAL CLAD, MC CABLE, ALLOWED FOR RECEPTACLE AND LIGHTING CIRCUITS.
3 - WIREMOLD TO BE COLOR MATCHED TO ADJACENT SURFACES.

CONDUIT SCHEDULE

SCALE: NOT TO SCALE

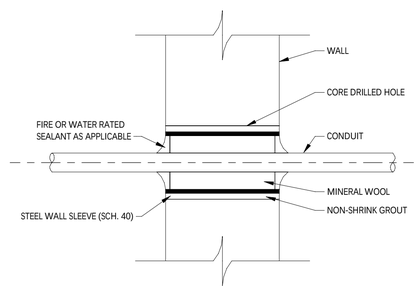

TYPICAL WALL/FLOOR CONDUIT PENETRATION DETAIL - FIRE RATED

SCALE: NOT TO SCALE

IT IS A VIOLATION OF THE NEW YORK STATE EDUCATION LAW, ARTICLE 145 §7209 SPECIAL PROVISIONS, FOR ANY PERSON, UNLESS THEY ARE ACTING UNDER THE DIRECTION OF A LICENSED PROFESSIONAL ENGINEER, ARCHITECT, LANDSCAPE ARCHITECT, OR LAND SURVEYOR, TO ALTER AN ITEM IN ANY WAY. IF AN ITEM BEARING THE STAMP OF A LICENSED PROFESSIONAL IS ALTERED, THE ALTERING PROFESSIONAL SHALL STAMP THE DOCUMENT AND INCLUDE THE NOTATION "ALTERED BY" FOLLOWED BY THEIR SIGNATURE, THE DATE OF SUCH ALTERATION, AND A SPECIFIC DESCRIPTION OF THE ALTERATION.

REVISIONS

CITY OF MIDDLETOWN
NEW COURTHOUSE FACILITY
CONTRACT 1D - ELECTRICAL CONSTRUCTION

ELECTRICAL DETAILS

ORANGE COUNTY, NEW YORK

CITY OF MIDDLETOWN

443 Electronics Parkway
Liverpool, NY
13088

B&L
Barton & Loguidice, D.P.C.

STATE OF NEW YORK · ERIC C. HORN · LICENSED PROFESSIONAL ENGINEER · LIC. NO. 089008

Date
AUGUST, 2024

Scale
AS SHOWN

Sheet Number
E120

Project Number
1753.008.001

Plotted: 8/21/2024 4:13:59 PM
C:\Users\rad\Documents\Middletown Courthouse Drawings - ELECTRICAL MODEL_rdarin.rvt

Checked by TWB Drawn by CJ Designed by CJ In Charge of TWB

GENERAL NOTES – ONE-LINE DIAGRAM DEMO

1 - ONE LINE DIAGRAM DEMO DRAWING CREATED FROM DRAWINGS E-5 TITLED ONE LINE RISER DIAGRAM DATED JULY 30, 2004 AND CURSORY FIELD OBSERVATIONS. CONTRACTOR TO FIELD VERIFY ALL EXISTING INFORMATION REQUIRED.

2 - MAINTAIN EXISTING CIRCUITS OTHER THAN THE ONES SHOWN TO BE DEMOED. UPDATE PANEL DIRECTORIES AS REQUIRED.

KEYED NOTES - ONE-LINE DIAGRAM DEMO

1 DEMO CIRCUIT BREAKERS FOR ALL CIRCUITS BEING REMOVED.

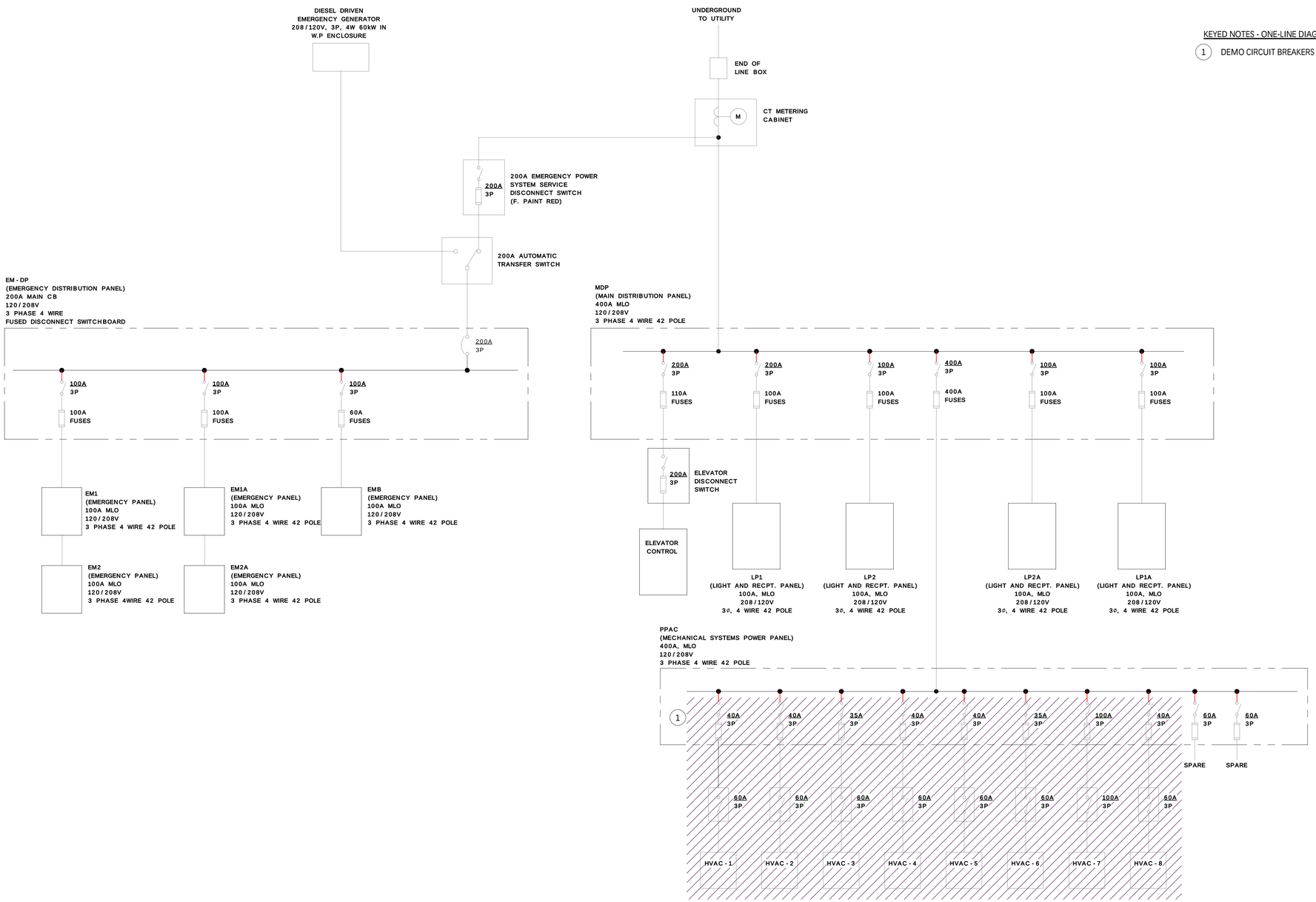

ONE LINE DIAGRAM DEMO

SCALE: NOT TO SCALE

LEGEND	
	EQUIPMENT TO BE DEMOED

IT IS A VIOLATION OF THE NEW YORK STATE EDUCATION LAW, ARTICLE 145 §7209 SPECIAL PROVISIONS, FOR ANY PERSON, UNLESS THEY ARE ACTING UNDER THE DIRECTION OF A LICENSED PROFESSIONAL ENGINEER, ARCHITECT, LANDSCAPE ARCHITECT, OR LAND SURVEYOR, TO ALTER AN ITEM IN ANY WAY. IF AN ITEM BEARING THE STAMP OF A LICENSED PROFESSIONAL IS ALTERED, THE ALTERING PROFESSIONAL SHALL STAMP THE DOCUMENT AND INCLUDE THE NOTATION "ALTERED BY" FOLLOWED BY THEIR SIGNATURE, THE DATE OF SUCH ALTERATION, AND A SPECIFIC DESCRIPTION OF THE ALTERATION.

REVISIONS

CITY OF MIDDLETOWN
NEW COURTHOUSE FACILITY
CONTRACT 1D - ELECTRICAL CONSTRUCTION

ONE LINE DIAGRAM DEMO

ORANGE COUNTY, NEW YORK

CITY OF MIDDLETOWN

443 Electronics Parkway
Liverpool, NY
13088

Barton & Loguidice, D.P.C.

STATE OF NEW YORK · ERIC J. HORVATH · NO. 089099 · LICENSED PROFESSIONAL ENGINEER

Date	AUGUST, 2024
Scale	AS SHOWN
Sheet Number	E601
Project Number	1753.008.001

Checked by TWB Drawn by CJ Designed by CJ In Charge of TWB

Plotted: 8/21/2024 4:13:59 PM
C:\Users\rad\Documents\Middletown Courthouse Drawings - ELECTRICAL MODEL_rdarin.rvt

CIRCUIT SCHEDULE			
DESIGNATION	CONDUCTORS	CONDUIT	REMARKS
1	2#12 - 1#12G	3/4"	
2	3#8 - 1#10G	1"	
3	3#4 - 1#10G	1.5"	
4	2#10 - 1#10G	1"	

GENERAL NOTES, CIRCUIT SCHEDULE
1-VERIFY CIRCUIT REQUIREMENTS WITH APPLICABLE EQUIPMENT MANUFACTURERS PROVIDED WIRING AND CONDUIT REQUIRED.
2-CONDUIT SIZE LISTED IS MIN. PROVIDE LARGER DIAMETER AS REQUIRED.

MECHANICAL CONTROL EQUIPMENT CIRCUIT NOTES – ONE-LINE DIAGRAM NORMAL POWER INSTALL

1. NOTES APPLY TO ALL VAV AND DDC CONTROL CIRCUITING.
2. ELECTRICAL CONTRACTOR TO PROVIDE ALL 120V CIRCUITING AS REQUIRED FOR A COMPLETE AND OPERATIONAL SYSTEM.
3. DIAGRAM SHOWN PER BASIS OF DESIGN FOR BID PURPOSES.
4. CONTRACTOR SHALL VERIFY CIRCUIT REQUIREMENTS WITH APPROVED MECHANICAL EQUIPMENT PRIOR TO INSTALLATION.

KEYED NOTES - ONE-LINE DIAGRAM INSTALL

1. INSTALL NEW CIRCUIT BREAKERS FOR ALL NEW FEEDS. MATCH MANUFACTURER AND KAIC RATING OF CIRCUIT BREAKERS CURRENTLY INSTALLED.

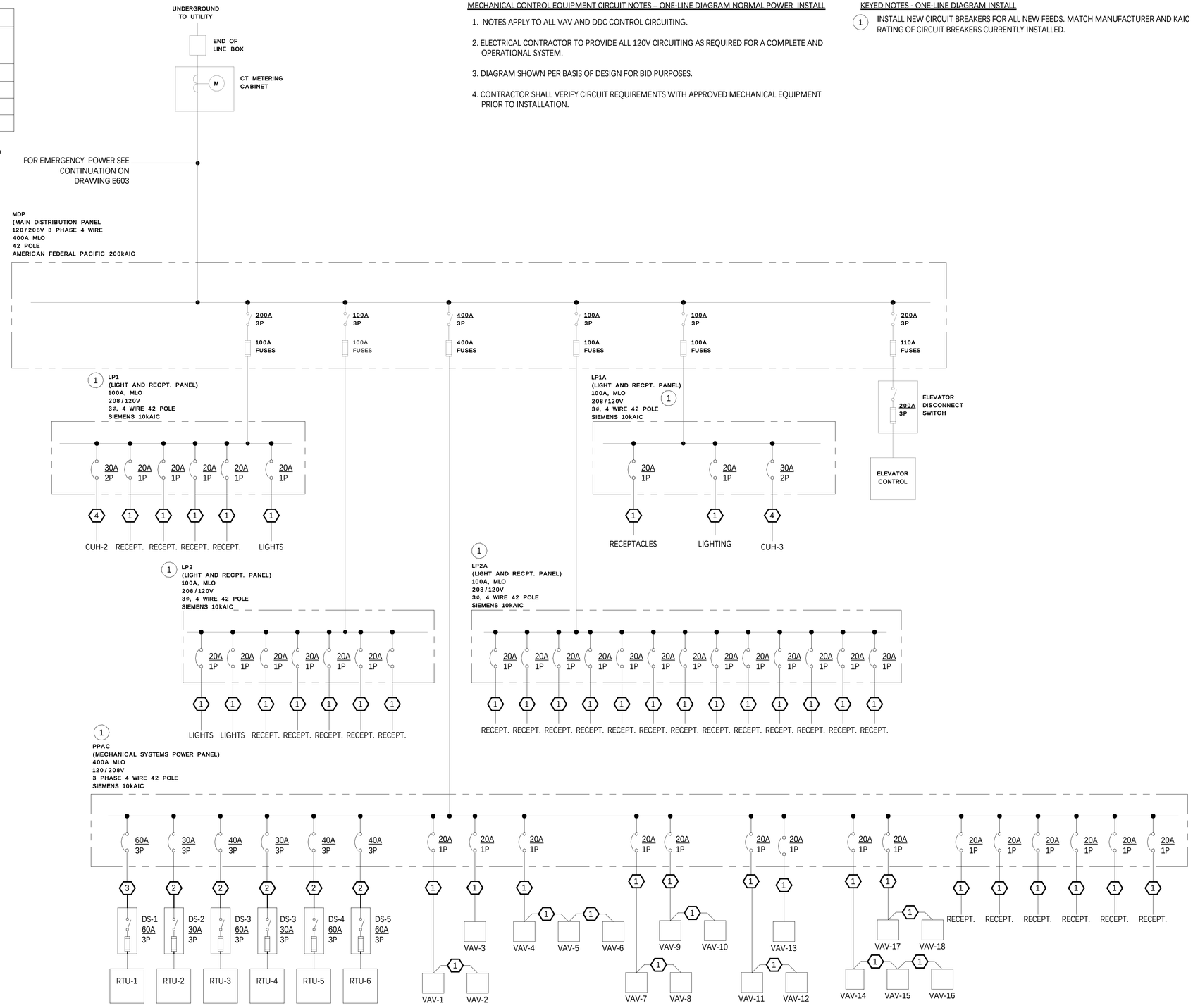

ONE LINE DIAGRAM NORMAL POWER INSTALL

SCALE: NOT TO SCALE

IT IS A VIOLATION OF THE NEW YORK STATE EDUCATION LAW, ARTICLE 145 §7209 SPECIAL PROVISIONS, FOR ANY PERSON, UNLESS THEY ARE ACTING UNDER THE DIRECTION OF A LICENSED PROFESSIONAL ENGINEER, ARCHITECT, LANDSCAPE ARCHITECT, OR LAND SURVEYOR, TO ALTER AN ITEM IN ANY WAY. IF AN ITEM BEARING THE STAMP OF A LICENSED PROFESSIONAL IS ALTERED, THE ALTERING PROFESSIONAL SHALL STAMP THE DOCUMENT AND INCLUDE THE NOTATION "ALTERED BY" FOLLOWED BY THEIR SIGNATURE, THE DATE OF SUCH ALTERATION, AND A SPECIFIC DESCRIPTION OF THE ALTERATION.

REVISIONS

CITY OF MIDDLETOWN
NEW COURTHOUSE FACILITY
CONTRACT 1D - ELECTRICAL CONSTRUCTION

ONE LINE DIAGRAM NORMAL POWER INSTALL

CITY OF MIDDLETOWN
ORANGE COUNTY, NEW YORK

B&L
Barton & Loguidice, D.P.C.
443 Electronics Parkway
Liverpool, NY
13088

STATE OF NEW YORK · ERIC J. HORVAT · No. 089009 · LICENSED PROFESSIONAL ENGINEER

Date: AUGUST, 2024
Scale: AS SHOWN
Sheet Number: E602
Project Number: 1753.008.001

Plotted: 8/21/2024 4:14:00 PM
C:\Users\rad\Documents\Middletown Courthouse Drawings - ELECTRICAL MODEL_rdarin.rvt
Checked by TWB Drawn by CJ Designed by CJ In Charge of TWB

CIRCUIT SCHEDULE			
DESIGNATION	CONDUCTORS	CONDUIT	REMARKS
1	2#12 - 1#12G	3/4"	
2	3#8 - 1#10G	1"	
3	3#4 - 1#10G	1.5"	
4	2#8 - 1#10G	1"	
5	3#8 - 1#10G	1"	
6	2#10 - 1#10G	1"	

GENERAL NOTES, CIRCUIT SCHEDULE
1-VERIFY CIRCUIT REQUIREMENTS WITH APPLICABLE EQUIPMENT MANUFACTURERS PROVIDED WIRING AND CONDUIT REQUIRED.
2-CONDUIT SIZE LISTED IS MIN. PROVIDE LARGER DIAMETER AS REQUIRED.

MECHANICAL CONTROL EQUIPMENT CIRCUIT NOTES – ONE-LINE DIAGRAM NORMAL POWER INSTALL

1. NOTES APPLY TO ALL VAV AND DDC CONTROL CIRCUITING.
2. EC TO PROVIDE ALL 120V CIRCUITING AS REQUIRED FOR A COMPLETE AND OPERATIONAL SYSTEM.
3. DIAGRAM SHOWN PER BASIS OF DESIGN FOR BID PURPOSES.
4. CONTRACTOR SHALL VERIFY CIRCUIT REQUIREMENTS WITH APPROVED MECHANICAL EQUIPMENT PRIOR TO INSTALLATION.

KEYED NOTES - ONE-LINE DIAGRAM EMERGENCY POWER INSTALL

1. INSTALL NEW CIRCUIT BREAKERS FOR ALL NEW FEEDS. MATCH MANUFACTURER AND KAIC RATING OF CIRCUIT BREAKERS CURRENTLY INSTALLED.

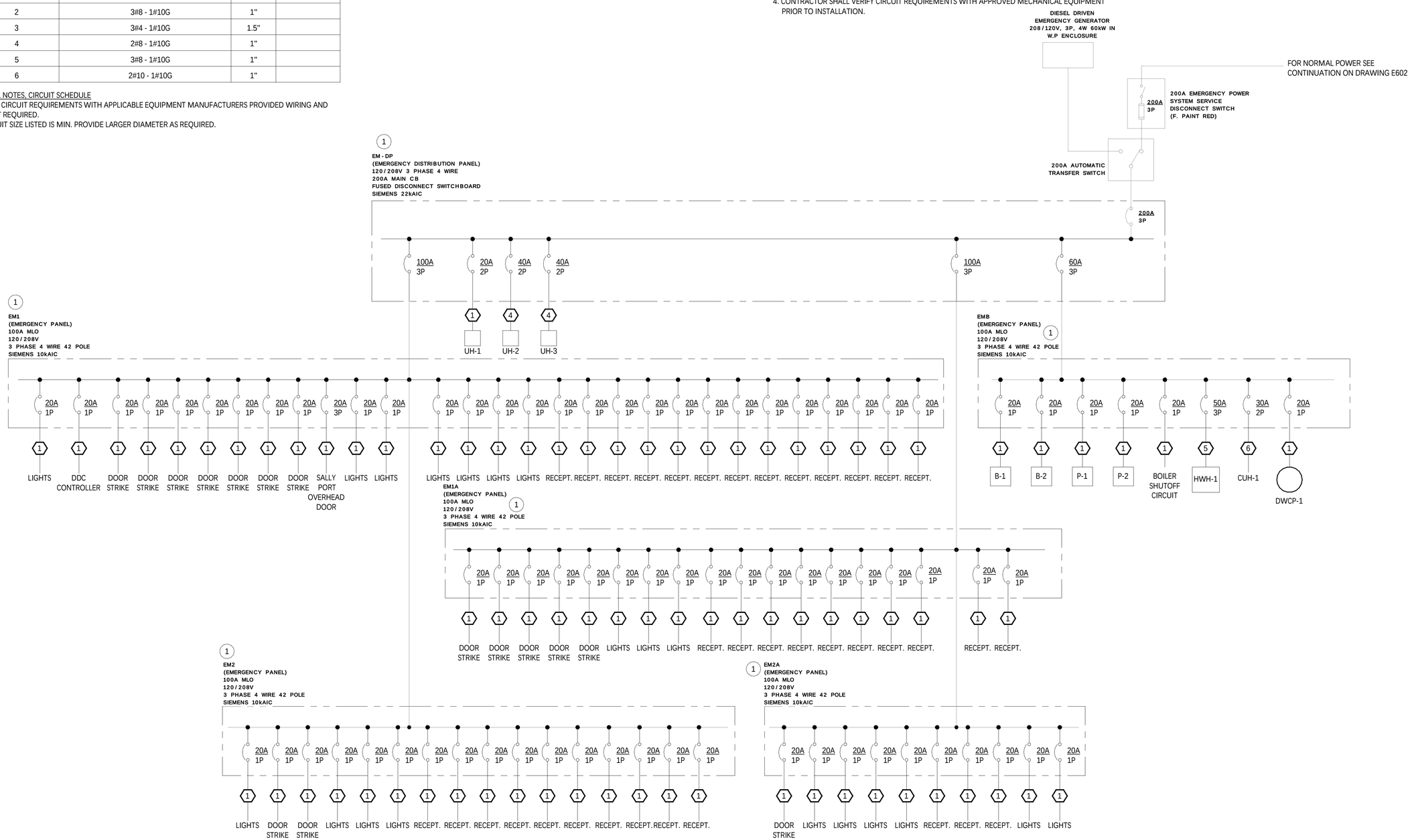

ONE LINE DIAGRAM EMERGENCY POWER INSTALL

SCALE: NOT TO SCALE

IT IS A VIOLATION OF THE NEW YORK STATE EDUCATION LAW, ARTICLE 145 §7209 SPECIAL PROVISIONS, FOR ANY PERSON, UNLESS THEY ARE ACTING UNDER THE DIRECTION OF A LICENSED PROFESSIONAL ENGINEER, ARCHITECT, LANDSCAPE ARCHITECT, OR LAND SURVEYOR, TO ALTER AN ITEM IN ANY WAY. IF AN ITEM BEARING THE STAMP OF A LICENSED PROFESSIONAL IS ALTERED, THE ALTERING PROFESSIONAL SHALL STAMP THE DOCUMENT AND INCLUDE THE NOTATION "ALTERED BY" FOLLOWED BY THEIR SIGNATURE, THE DATE OF SUCH ALTERATION, AND A SPECIFIC DESCRIPTION OF THE ALTERATION.

REVISIONS

CITY OF MIDDLETOWN
NEW COURTHOUSE FACILITY
CONTRACT 1D - ELECTRICAL CONSTRUCTION

ONE LINE DIAGRAM EMERGENCY POWER INSTALL

CITY OF MIDDLETOWN ORANGE COUNTY, NEW YORK

B&L
443 Electronics Parkway
Liverpool, NY
13088
Barton & Loguidice, D.P.C.

STATE OF NEW YORK ERIC J. HORVAT LICENSE NO. 089099 PROFESSIONAL ENGINEER

Date AUGUST, 2024
Scale AS SHOWN
Sheet Number E603
Project Number 1753.008.001

Checked by TWB Drawn by CJ Designed by CJ In Charge of TWB

Plotted: 8/21/2024 4:14:01 PM
C:\Users\rad\Documents\Middletown Courthouse Drawings - ELECTRICAL MODEL_rdarin.rvt

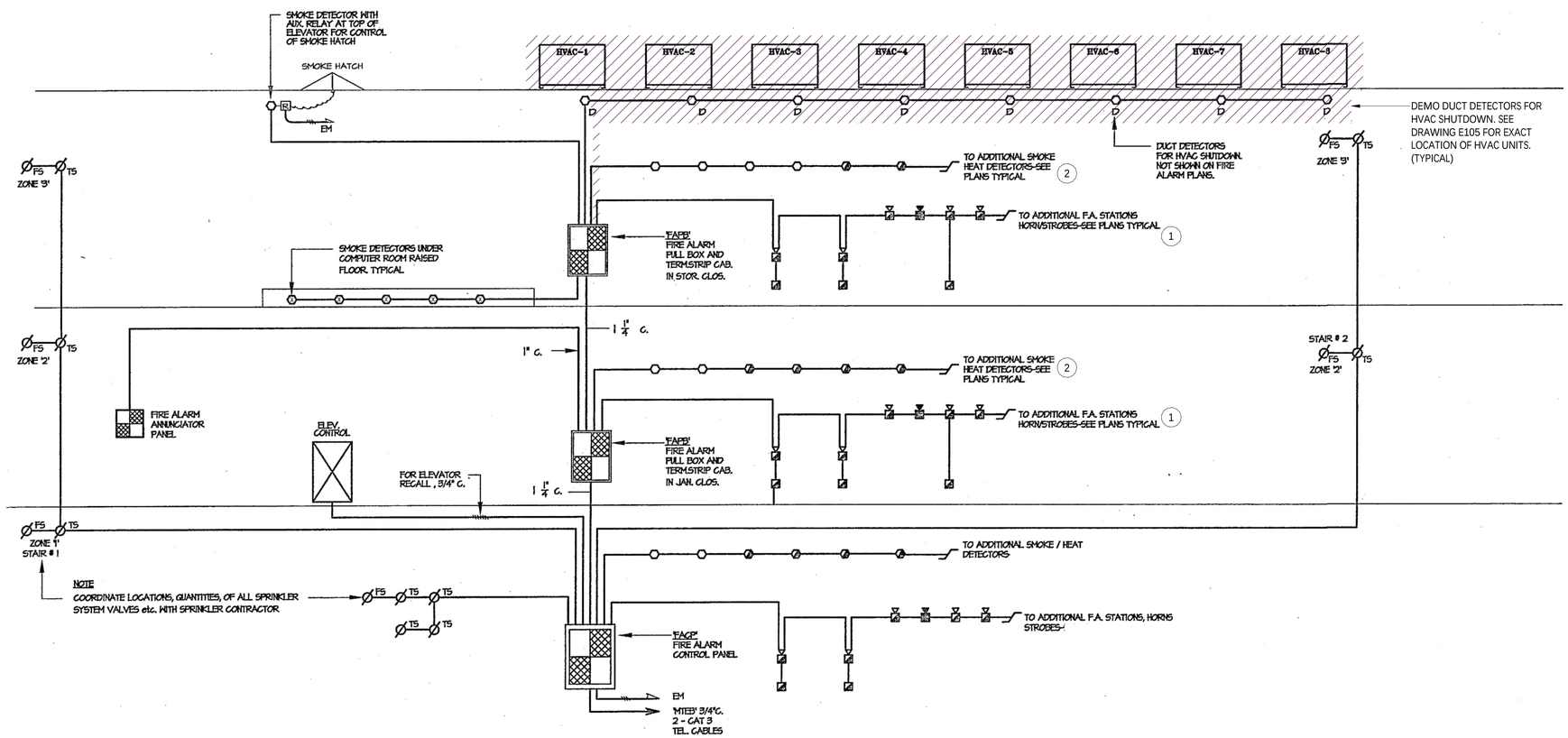

FIRE ALARM RISER DIAGRAM DEMO

SCALE: NOT TO SCALE

FIRE ALARM WIRING LEGEND

- 2 #16 THHN TW/SH PAIR PER MANUAL STATION ZONE
- 2 #16 THHN TW/SH PAIR PER SMOKE DETECTOR ZONE
- 2 #16 THHN TW/SH PAIR PER HEAT DETECTOR ZONE
- 4 #12 THHN PER HORN/STROBE ZONE
- 2 #12 THHN PER STROBE ZONE
- D — 4 #16 THHN PER DUCT DETECTOR ZONE (S=SUPPLY, R=RETURN).
- T5 — 2 #14 THHN PER SPRINKLER SYSTEM TAMPER ZONE COORDINATE LOCATIONS WITH SPRINKLER DRAWINGS
- PS — 2 #14 THHN PER SPRINKLER SYSTEM PRESSURE ZONE COORDINATE LOCATIONS WITH SPRINKLER DRAWINGS
- FS — 2 #14 THHN PER SPRINKLER SYSTEM PRESSURE ZONE COORDINATE LOCATIONS WITH SPRINKLER DRAWINGS
- 2 #12 THHN PER MAGNETIC DOOR HOLDER ZONE

ALL WIRING SHALL BE TEFLON COATED PLENUM RATED CABLE, APPROVED FOR FIRE ALARM WIRING. WIRING SIZES INDICATED ARE MINIMUM SIZES REQUIRED

RUN WIRING IN MIN. 3/4" E.M.T. WHERE REQUIRED TO BE RUN EXPOSED.

ALL WIRING SHALL BE IN ACCORDANCE WITH MANUFACTURER'S WIRING DIAGRAMS.

SEE FLOOR PLANS FOR LOCATIONS AND QUANTITIES OF ALL DEVICES

GENERAL NOTES - FIRE ALARM RISER DIAGRAM DEMO

1 - FIRE ALARM RISER DIAGRAM DEMO DRAWING CREATED FROM DRAWING FA-4 TITLED FIRE ALARM RISER DIAGRAM DATED JULY 30, 2004 AND CURSORY FIELD OBSERVATIONS. CONTRACTOR TO FIELD VERIFY ALL EXISTING INFORMATION REQUIRED.

KEYED NOTES - FIRE ALARM RISER DIAGRAM DEMO

1. DEMO FIRE ALARM HORN/STROBES PER DRAWINGS E107 AND E108. DEMO ALL CONDUCTORS, RACEAY AND HARDWARE ASSOCIATED BACK TO SOURCE PANEL SHOWN ON THIS DRAWING.
2. DEMO FIRE ALARM SMOKE DETECTORS PER DRAWINGS E107 AND E108. DEMO ALL CONDUCTORS, RACEAY AND HARDWARE ASSOCIATED BACK TO SOURCE PANEL SHOWN ON THIS DRAWING.

LEGEND

EQUIPMENT TO BE DEMOED

IT IS A VIOLATION OF THE NEW YORK STATE EDUCATION LAW, ARTICLE 145 §7209 SPECIAL PROVISIONS, FOR ANY PERSON, UNLESS THEY ARE ACTING UNDER THE DIRECTION OF A LICENSED PROFESSIONAL ENGINEER, ARCHITECT, LANDSCAPE ARCHITECT, OR LAND SURVEYOR, TO ALTER AN ITEM IN ANY WAY. IF AN ITEM BEARING THE STAMP OF A LICENSED PROFESSIONAL IS ALTERED, THE ALTERING PROFESSIONAL SHALL STAMP THE DOCUMENT AND INCLUDE THE NOTATION "ALTERED BY" FOLLOWED BY THEIR SIGNATURE, THE DATE OF SUCH ALTERATION, AND A SPECIFIC DESCRIPTION OF THE ALTERATION.

REVISIONS

CITY OF MIDDLETOWN
NEW COURTHOUSE FACILITY
CONTRACT 1D - ELECTRICAL CONSTRUCTION

FIRE ALARM RISER DIAGRAM DEMO

ORANGE COUNTY, NEW YORK

CITY OF MIDDLETOWN

B&L
Barton & Loguidice, D.P.C.
443 Electronics Parkway
Liverpool, NY
13088

STATE OF NEW YORK · ERIC J. HORVAT · Lic. No. 089009 · PROFESSIONAL ENGINEER

Date	AUGUST, 2024
Scale	AS SHOWN
Sheet Number	E604
Project Number	1753.008.001

Checked by TWB Drawn by CJ Designed by CJ In Charge of TWB

Plotted: 8/21/2024 4:14:01 PM
C:\Users\rad\Documents\Middletown Courthouse Drawings - ELECTRICAL MODEL_rdarin.rvt

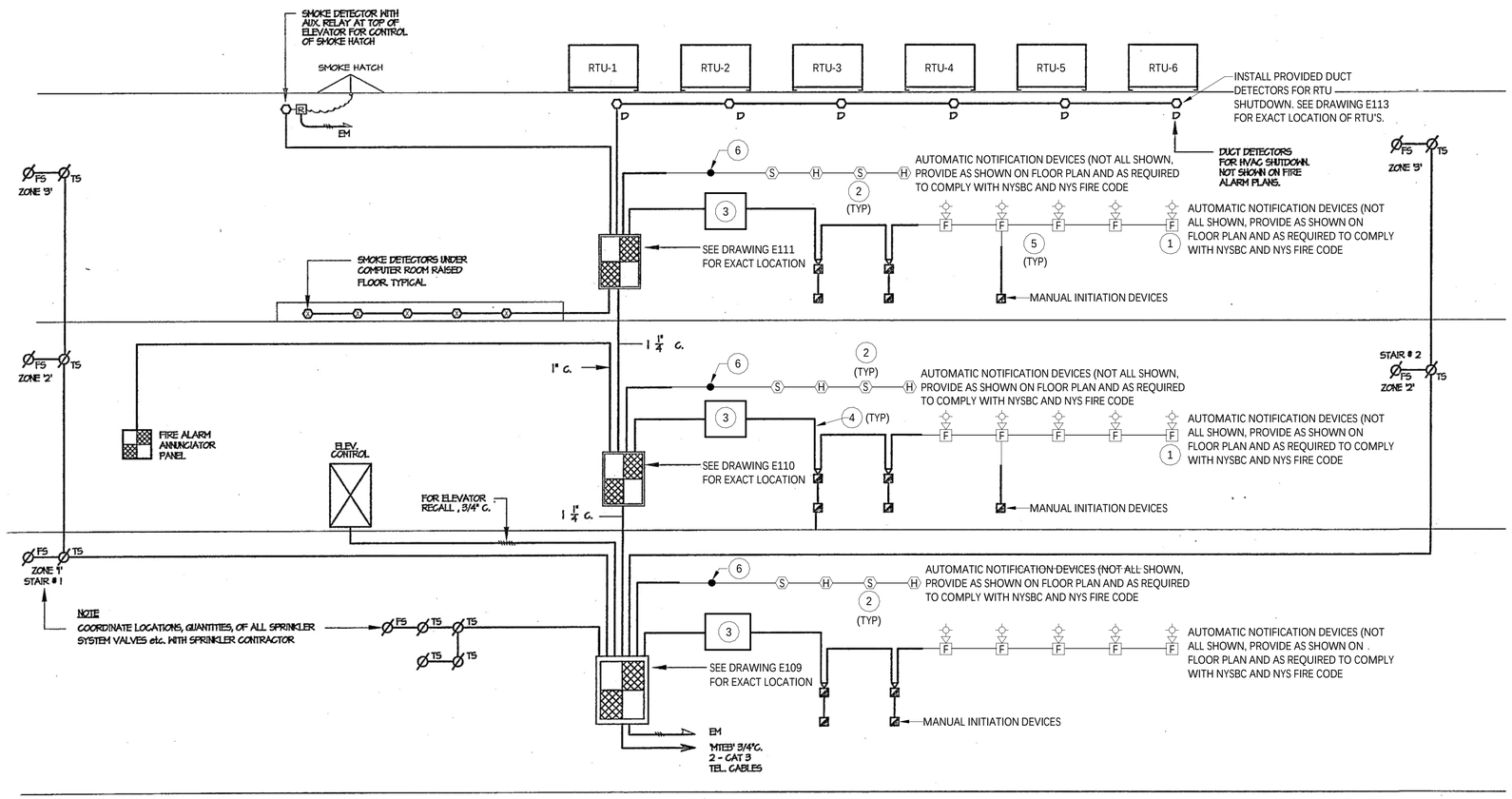

FIRE ALARM RISER DIAGRAM INSTALL

SCALE: NOT TO SCALE

GENERAL NOTES - FIRE ALARM RISER DIAGRAM INSTALL

1 - PROVIDE ALL FIRE ALARM DEVICES AND CIRCUITING TO COMPLY WITH REQUIREMENTS OF NFPA 72 FOR ALTERATION WORK.

2 - NO EXPOSED WIRE MOLD OR CONDUIT WILL BE ALLOWED EXCEPT WHERE INDICATED OR WITH PERMISSION OF THE OWNER.

3 - RISER DIAGRAM IS DIAGRAMMATIC ONLY AND INTENDED TO ILLUSTRATE SCOPE OF WORK.

4 - PROVIDE ALL ADDRESSABLE INTERFACE MODULES, RELAY EXPANSION MODULES, BOOSTER PANELS, AND HARDWARE TO ACCOMMODATE ALL DEVICES AS SHOWN.

5 - COORDINATE EXACT FIRE ALARM SYSTEM WIRING INCLUDING TYPES, QUANTITIES, AND ROUTING WITH FIRE ALARM MANUFACTURER AND SITE CONDITIONS.

6 - NOT ALL INTERCONNECTING WIRING IS INDICATED HERE. REFER TO SPECIFICATIONS FOR ADDITIONAL REQUIREMENTS.

7 - PROVIDE 2-HOUR FIRE-RATED CAULK AROUND CONDUITS WHERE THEY PENETRATE FLOORS AND RATED WALLS.

8- ALL FIRE ALARM CIRCUITING TO BE IN CONDUIT.

9 - PROVIDE NYLON BUSHINGS ON BOTH ENDS OF ALL CONDUITS.

10 - PROVIDE 1/8" NYLON PULLROPE IN EACH CONDUIT.

11 - PROVIDE ALL WORK IN ACCORDANCE TO TIA/EIA 569.

12 - MINIMUM CONDUIT SIZE SHALL BE 1/2" ALL CONDUIT SHALL BE SIZED PER NEC REQUIREMENTS.

13 - ALL CONDUITS SHALL BE AS INDICATED ON CONDUIT SCHEDULE, PAINT ALL CONDUITS RED.

14 - PROVIDE ALL WIRING PER MANUFACTURER REQUIREMENTS. ALL WIRE SIZES SHALL BE SIZED PER NEC AT A MINIMUM, AND ACCOMMODATE VOLTAGE

15 - DROP DUE TO CIRCUIT LENGTHS. PROVIDE VENDOR VOLTAGE-DROP CALCULATIONS AND ASSOCIATED WIRE SIZING.

16 - PROVIDE POWER BOOSTER/EXTENDER PANELS WHEREVER REQUIRED FOR A COMPLETE AND OPERATIONAL SYSTEM.

17 - PROVIDE ALL WIRING, PROGRAMMING, CONTROL MODULES, MONITOR MODULES, AND OTHER SUCH DEVICES AS REQUIRED FOR A COMPLETE AND OPERATIONAL SYSTEM.

KEYED NOTES - FIRE ALARM RISER DIAGRAM INSTALL

1. PROVIDE AND INSTALL FIRE ALARM HORN/STROBES PER DRAWINGS E116 AND E117.
2. PROVIDE AND INSTALL FIRE ALARM SMOKE DETECTORS PER DRAWINGS E116 AND E117.
3. PROVIDE BOOSTER PANEL WITH CODE REQUIRED BATTERY POWER, POWER CIRCUITING, CIRCUIT BREAKER, AND ALL REQUIRED INTEGRATION TO EXISTING FIRE ALARM CONTROL PANEL.
4. PROVIDE QUANTITY OF NOTIFICATION CIRCUITS AS REQUIRED TO COMPLY WITH POWER OUTPUT AND VOLTAGE DROP REQUIREMENTS.
5. PROVIDE DEVICES WITH ONE-WAY COMMUNICATION SPEAKERS AS COORDINATED WITH OWNER AND REQUIRED.
6. CONNECT TO EXISTING SNC CIRCUITING. CONTRACTOR TO FILED VERIFY LOCATION AND PROVIDE ALL REQUIRED WORK FOR A COMPLETE AND FUNCTIONAL FIRE ALARM SYSTEM.

IT IS A VIOLATION OF THE NEW YORK STATE EDUCATION LAW, ARTICLE 145 §7209 SPECIAL PROVISIONS, FOR ANY PERSON, UNLESS THEY ARE ACTING UNDER THE DIRECTION OF A LICENSED PROFESSIONAL ENGINEER, ARCHITECT, LANDSCAPE ARCHITECT, OR LAND SURVEYOR, TO ALTER AN ITEM IN ANY WAY. IF AN ITEM BEARING THE STAMP OF A LICENSED PROFESSIONAL IS ALTERED, THE ALTERING PROFESSIONAL SHALL STAMP THE DOCUMENT AND INCLUDE THE NOTATION "ALTERED BY" FOLLOWED BY THEIR SIGNATURE, THE DATE OF SUCH ALTERATION, AND A SPECIFIC DESCRIPTION OF THE ALTERATION.

REVISIONS

CITY OF MIDDLETOWN
NEW COURTHOUSE FACILITY
CONTRACT 1D - ELECTRICAL CONSTRUCTION

FIRE ALARM RISER DIAGRAM INSTALL

CITY OF MIDDLETOWN ORANGE COUNTY, NEW YORK

B&L
Barton & Loguidice, D.P.C.
443 Electronics Parkway
Liverpool, NY
13088

STATE OF NEW YORK · ERIC J. HORVAT · Lic. No. 089099 · PROFESSIONAL ENGINEER

Date: AUGUST, 2024
Scale: AS SHOWN
Sheet Number: E605
Project Number: 1753.008.001

Checked by TWB Drawn by CJ Designed by CJ In Charge of TWB

Plotted: 8/21/2024 4:14:02 PM
C:\Users\rad\Documents\Middletown Courthouse Drawings - ELECTRICAL MODEL_rdarin.rvt