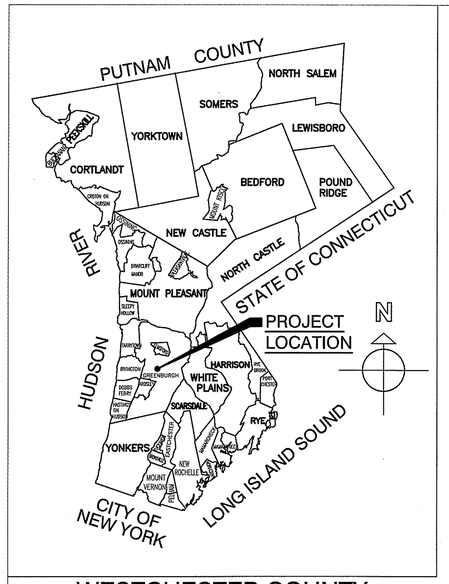

WESTCHESTER COUNTY

Westchester gov.com

WESTCHESTER COUNTY, NEW YORK
DEPARTMENT OF PUBLIC WORKS AND TRANSPORTATION
DIVISION OF ENGINEERING

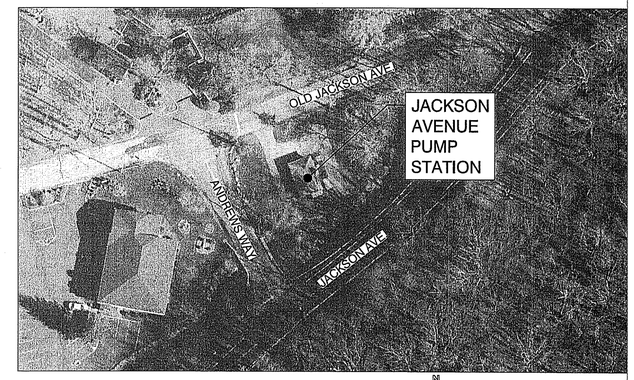

LOCATION MAP
SCALE: N.T.S.

CONTRACT No. 22-510

JACKSON AVENUE PUMPING STATION REHABILITATION
BRONX VALLEY SANITARY SEWER DISTRICT
TOWN OF GREENBURGH, NEW YORK

IN CHARGE OF MET
CHECKED BY RRS
MADE BY MJL

PROFESSIONAL SEAL
STATE OF NEW YORK · MICHAEL E. TARGIN · 073737 · LICENSED PROFESSIONAL ENGINEER

MODIFICATION IS A VIOLATION OF CHAPTER 16, TITLE VIII, ARTICLE 145 § 7209.2 NYS EDUCATION LAW, UNLESS ACTING UNDER THE DIRECTION OF A LICENSED PROFESSIONAL ENGINEER. IF A DOCUMENT BEARING THE SEAL OF AN ENGINEER IS ALTERED, THE ALTERING ENGINEER SHALL AFFIX TO THE DOCUMENT THEIR SEAL AND THE NOTATION "ALTERED BY" FOLLOWED BY THEIR SIGNATURE AND THE DATE OF SUCH ALTERATION, AND A SPECIFIC DESCRIPTION OF THE ALTERATION.

RECOMMENDED FOR DESIGN	RECOMMENDED FOR CONSTRUCTION	RECOMMENDED FOR CONSTRUCTION	APPROVED FOR CONSTRUCTION	APPROVED FOR CONSTRUCTION
2/1/24 DATE	2.2.24 DATE	2.2.2024 DATE	2/1/24 DATE	2/2/24 DATE
JOSEPH GIBNEY, P.E.	LEAH RADKO, P.E.	GAYLE M. KATZMAN, P.E.	VINCENT F. KOPICKI, P.E.	HUGH J. GREECHAN, JR., P.E.
DIRECTOR OF WASTEWATER TREATMENT	DIRECTOR OF DESIGN COORDINATION	FIRST DEPUTY COMMISSIONER	COMMISSIONER	COMMISSIONER
DEPARTMENT OF ENVIRONMENTAL FACILITIES	DEPARTMENT OF PUBLIC WORKS AND TRANSPORTATION	DEPARTMENT OF PUBLIC WORKS AND TRANSPORTATION	DEPARTMENT OF ENVIRONMENTAL FACILITIES	DEPARTMENT OF PUBLIC WORKS AND TRANSPORTATION

EDR
a better environment
Environmental Design & Research,
Landscape Architecture, Engineering & Environmental Services, D.P.C.
217 Montgomery Street, Suite 1100
Syracuse, New York 13202
P. 315.471.0688

REVISION NUMBER	DATE	MADE BY	APP'D BY	REVISION

RECORD DRAWING CERTIFICATION

☐ AS BUILT – CHANGES AS NOTED
☐ AS BUILT – NO CHANGES

CONTRACTOR	PROJECT COORDINATOR
NAME	NAME
SIGNATURE	SIGNATURE
TITLE DATE	TITLE DATE

WESTCHESTER COUNTY, NEW YORK
DEPARTMENT OF PUBLIC WORKS AND TRANSPORTATION
DIVISION OF ENGINEERING

JACKSON AVENUE PUMPING STATION REHABILITATION
BRONX VALLEY SANITARY SEWER DISTRICT
TOWN OF GREENBURGH, NEW YORK
TITLE SHEET

CONTRACT NUMBER	SHEET NUMBER
22–510	G–000
SHEET NO. 1 OF 55	
SCALE: AS SHOWN	
DATE: 06/01/2023	
DPW FILE NO. 202–02–T–26–0	REV. NO. 0

DRAWING LIST			
WCDPW & T DRAWING NO.	TITLE	SHEET NO.	NO.
GENERAL			
202-02-T-26-0	COVER	G-000	1
202-02-G-27-0	LIST OF DRAWINGS AND EQUIPMENT DATA TABLE	G-001	2
202-02-G-28-0	ABBREVIATIONS, SYMBOLS, LEGEND AND GENERAL NOTES	G-002	3
202-02-G-29-0	EXISTING SITE PLAN	G-003	4
202-02-G-30-0	EROSION AND SEDIMENTATION CONTROL DETAILS AND NOTES	G-004	5
202-02-G-31-0	MISCELLANEOUS DETAILS	G-005	6
202-02-G-32-0	MISCELLANEOUS DETAILS	G-006	7
202-02-G-33-0	SITE PLAN	G-007	8
202-02-G-34-0	BYPASS PUMPING PLAN	G-008	9
ARCHITECTURAL			
202-02-A-35-0	CODE SUMMARY PLANS / MISCELLANEOUS DETAILS	A-001	10
202-02-A-36-0	UPPER LEVEL AND INTERMEDIATE LEVEL PLANS	A-002	11
202-02-A-37-0	BUILDING ELEVATIONS	A-003	12
202-02-A-38-0	BUILDING SECTIONS	A-004	13
202-02-A-39-0	ROOF PLAN / ROOF FRAMING PLAN / DETAILS	A-005	14
202-02-A-40-0	WALL SECTIONS AND DETAILS	A-006	15
202-02-A-41-0	SCHEDULES AND DETAILS	A-007	16
STRUCTURAL			
202-02-S-42-0	GENERAL NOTES AND DETAILS	S-001	17
202-02-S-43-0	GENERAL NOTES AND DETAILS	S-002	18
202-02-S-44-0	DEMOLITION - PLANS	S-003	19
202-02-S-45-0	DEMOLITION - SECTIONS	S-004	20
202-02-S-46-0	PLANS	S-005	21
202-02-S-47-0	SECTIONS	S-006	22
202-02-S-48-0	SECTIONS	S-007	23
202-02-S-49-0	SECTIONS	S-008	24
202-02-S-50-0	GENERATOR PAD - PLANS AND SECTIONS	S-009	25
202-02-S-51-0	MISCELLANEOUS DETAILS	S-010	26
202-02-S-52-0	MISCELLANEOUS DETAILS	S-011	27
202-02-S-53-0	MISCELLANEOUS DETAILS	S-012	28

DRAWING LIST			
WCDPW & T DRAWING NO.	TITLE	SHEET NO.	NO.
MECHANICAL			
202-02-M-54-0	DEMOLITION PLAN AND SECTIONS	M-001	29
202-02-M-55-0	DEMOLITION PLANS AND SECTIONS	M-002	30
202-02-M-56-0	LOWER LEVEL, INTERMEDIATE LEVEL AND UPPER LEVEL PLANS	M-003	31
202-02-M-57-0	SECTIONS	M-004	32
ELECTRICAL			
202-02-E-58-0	SYMBOLS AND DETAILS	E-001	33
202-02-E-59-0	DEMOLITION SITE PLAN	E-002	34
202-02-E-60-0	SITE PLAN	E-003	35
202-02-E-61-0	DEMOLITION PLANS	E-004	36
202-02-E-62-0	LIGHTING PLANS	E-005	37
202-02-E-63-0	POWER AND SIGNAL PLANS	E-006	38
202-02-E-64-0	POWER SINGLE LINE DIAGRAM	E-007	39
202-02-E-65-0	PANELBOARD SCHEDULES	E-008	40
202-02-E-66-0	CONTROL ONE LINE DIAGRAM	E-009	41
202-02-E-67-0	ELEMENTARY DIAGRAMS I	E-010	42
202-02-E-68-0	ELEMENTARY DIAGRAMS II	E-011	43
202-02-E-69-0	GENERATOR DETAIL	E-012	44
202-02-E-70-0	MISCELLANEOUS DETAILS I	E-013	45
202-02-E-71-0	MISCELLANEOUS DETAILS II	E-014	46
HVAC			
202-02-H-72-0	GENERAL NOTES, SYMBOLS, LEGENDS, SCHEDULES, AIRFLOW DIAGRAM	H-001	47
202-02-H-73-0	DEMOLITION PLAN	H-002	48
202-02-H-74-0	LOWER LEVEL, INTERMEDIATE LEVEL, AND UPPER LEVEL PLANS	H-003	49
202-02-H-75-0	SECTIONS	H-004	50
202-02-H-76-0	SECTIONS	H-005	51
202-02-H-77-0	HVAC DETAILS	H-006	52
PLUMBING			
202-02-P-78-0	LEGENDS, ABBREVIATIONS, GENERAL NOTES, SCHEDULES, AND DETAILS	P-001	53
202-02-P-79-0	DEMOLITION PLANS	P-002	54
202-02-P-80-0	LOWER, INTERMEDIATE AND UPPER PLAN	P-003	55

EQUIPMENT DATA TABLE

EQUIPMENT	DESCRIPTION	MAKE	MODEL	MOTOR HORSEPOWER	DESIGN POINT	IMPELLER TRIM
JA-IP-1	INFLUENT PUMP	SULZER	XFP 100J-CH1.341-PE350-4	46.9 HP (35 KW)	1500 GPM AT 135 FT	13.4 INCH (341MM)
JA-IP-2	INFLUENT PUMP	SULZER	XFP 100J-CH1.341-PE350-4	46.9 HP (35 KW)	1500 GPM AT 135 FT	13.4 INCH (341MM)
JA-IP-3	INFLUENT PUMP	SULZER	XFP 100J-CH1.341-PE350-4	46.9 HP (35 KW)	1500 GPM AT 135 FT	13.4 INCH (341MM)
JA-IP-4	INFLUENT PUMP	SULZER	XFP 100J-CH1.341-PE350-4	46.9 HP (35 KW)	1500 GPM AT 135 FT	13.4 INCH (341MM)
JA-CBS-1	COARSE BAR SCREEN	FABRICATED SS	------	---------	--------	---------
JA-FBS-1	FINE BAR SCREEN	FABRICATED SS	------	---------	--------	---------
JA-FBS-2	FINE BAR SCREEN	FABRICATED SS	------	---------	--------	---------
JA-FM	MAGNETIC FLOW METER	EMERSON/ROSEMOUNT	8750W	---------	--------	---------

IN CHARGE OF MET
CHECKED BY RRS
MADE BY JAM

STATE OF NEW YORK · MICHAEL T. RUSSO · 073707 · LICENSED PROFESSIONAL ENGINEER
EDR
a better environment
Environmental Design & Research,
Landscape Architecture, Engineering & Environmental Services, D.P.C.
217 Montgomery Street, Suite 1100
Syracuse, New York 13202
P. 315.471.0688

REVISION NUMBER	DATE	MADE BY	APP'D BY	REVISION

RECORD DRAWING CERTIFICATION

☐ AS BUILT – CHANGES AS NOTED
☐ AS BUILT – NO CHANGES

CONTRACTOR
NAME
SIGNATURE
TITLE DATE

PROJECT COORDINATOR
NAME
SIGNATURE
TITLE DATE

WESTCHESTER COUNTY, NEW YORK
DEPARTMENT OF PUBLIC WORKS AND TRANSPORTATION
DIVISION OF ENGINEERING

JACKSON AVENUE PUMPING STATION REHABILITATION
BRONX VALLEY SANITARY SEWER DISTRICT
TOWN OF GREENBURGH, NEW YORK

LIST OF DRAWINGS AND EQUIPMENT DATA TABLE

CONTRACT NUMBER 22–510
SHEET NUMBER G–001
SHEET NO. 2 OF 55
SCALE: AS SHOWN
DATE: 06/01/23
DPW FILE NO. 202–02–G–27–0
REV. NO. 1

ABBREVIATIONS

ADJ	ADJUSTABLE	LV	LOUVER
AFF	ABOVE FINISH FLOOR	LWL	LOW WATER LEVEL
AFF	ABOVE FINISHED FLOOR	M	MOTOR
ALT	ALTERNATE	MAS	MASONRY
ALUM	ALUMINUM	MAX	MAXIMUM
ARCH	ARCHITECT OR ARCHITECTURAL	MCC	MOTOR CONTROL CENTER
ASB	ASBESTOS	MECH	MECHANICAL
ASPH	ASPHALT	MEZZ	MEZZANINE
ASSY	ASSEMBLY	MFR	MANUFACTURER
BOL	BOLLARD	MGD	MILLION GALLONS PER DAY
BOT	BOTTOM OF CURB	MH	MANHOLE
B/	BOTTOM OF	MIN	MINIMUM
B/F	BOTTOM OF FOOTING	MISC	MISCELLANEOUS
BTW	BETWEEN	MJ	MECHANICAL JOINT
BF	BLIND FLANGE	MTG	MOUNTING
BIT	BITUMINOUS	MTL	METAL
BLDG	BUILDING	MULT	MULTIPLE
BM	BENCH MARK/ BEAM	N	NORTH
BMK	BENCH MARK	NAT	NATURAL
BV	BUTTERFLY VALVE	NC	NORMALLY CLOSED
C_L	CENTER LINE	NF	NEAR FACE
CB	CATCH BASIN	NG	NATURAL GAS
CC	CENTER TO CENTER	NIC	NOT IN CONTRACT
CF OR CUFF	CUBIC FEET	NO OR #	NUMBER
CFM	CUBIC FEET PER MINUTE	NOM	NOMINAL
CFS	CUBIC FEET PER SECOND	NPT	NATIONAL PIPE THREAD
CI	CAST IRON	NPW	NON POTABLE WATER
CIP	CAST IRON PIPE	NTS	NOT TO SCALE
CIRC	CIRCLE/CIRCULAR	OC	ON CENTERS/ODOR CONTROL
CJ	CONSTRUCTION JOINT	OD	OUTSIDE DIAMETER
CL	CENTER LINE	OF	OUTSIDE FACE
CL JT	CONTROL JOINT	OPER	OPERABLE
CLR	CLEAR/COLOR	OPNG	OPENING
CL2	CHLORINE	OPP	OPPOSITE
CLF	CHAIN LINK FENCE	ORP	OXIDATION REDUCTION POTENTIAL
CLG	CEILING	P_L	PLATE/PROPERTY LINE
CMP	CORRUGATED METAL PIPE	P&ID	PROCESS INSTURMENTATION DIAGRAM
CMU	CONCRETE MASONRY UNIT	PAR	PARALLEL
CO	CLEANOUT	PAT	PATTERN
COL	COLUMN	PAVT	PAVEMENT
COMB	COMBINATION	PCF	POUNDS PER CUBIC FOOT
CONC	CONCRETE	PERF	PERFORATED
COND	CONDUIT	PERP	PERPENDICULAR
CONN	CONNECTION	PI	PRESSURE INDICATOR
CONST	CONSTRUCTION	PL	PROPERTY LINE
CONT	CONTINUOUS	PLAS	PLASTIC
COORD	COORDINATE	PLBG	PLUMBING
CORR	CORRIDOR	PNL	PANEL
CPLG	COUPLING	PO	PLANT OVERVIEW
CPVC	CHLORINATED POLYVINYL CHLORIDE	POLY OR PE	POLYETHYLENE
CRF	CHEMICAL RESISTANT FINISH	PRV	PRESSURE RELIEF / REDUCING VALVE
CS JT	CONSTRUCTION JOINT	PS	PUMP STATION
CTR	CONTRACT	PSF	POUNDS PER SQUARE FOOT
CU IN	CUBIC INCH	PSI	POUNDS PER SQUARE INCH
CU	COPPER	PST	PRIMARY SETTLING TANK
CV	CHECK VALVE	PT	POINT
CY OR CU YD	CUBIC YARD	PV	PLUG VALVE
D	DISCHARGE	PVC	POLYVINYL CHLORIDE
DET	DETAIL	PW	POTABLE WATER
DH	DECK HYDRANT	QTY	QUANTITY
DIA, OR Ø	DIAMETER	RAD	RADIUS
DIAG	DIAGONAL	RAS	RETURN ACTIVATED SLUDGE
DIM	DIMENSION	RCP	REINFORCED CONCRETE PIPE
DN	DOWN	RD	ROOF DRAIN / ROAD
DO	DISSOLVED OXYGEN	REC	RECORD
DWG	DRAWING	REDR	REDUCER
E	EAST/ELECTRICAL CONDUITS	REF	REFERENCE
EA	EACH	REIN	REINFORCE
ECC	ECCENTRIC	REQD	REQUIRED
EF	EACH FACE	REV	REVISE
EFF	EFFLUENT	RFG	ROOFING
EFW	EFFLUENT WATER	RL	ROOF LEADER
EJ	EXPANSION JOINT	RM	ROOM
EL	ELBOW	RO	ROUGH OPENING
ELEC	ELECTRIC	ROW	RIGHT OF WAY
EMO	ELECTRIC MANHOLE	RS	RETURN SLUDGE
EQ	EQUAL	RW	RAW WATER
F&C	FRAME AND COVER	RWI	RAW WATER INTAKE
F&G	FRAME AND GRATING	S	SOUTH / SUCTION / SANITARY SEWER
FC	FLUSHING CONNECTION	SAN	SANITARY
FD	FLOOR DRAIN	SCH	SCHEDULE
FF	FINISHED FLOOR	SECT	SECTION
FG	FIBERGLASS/FINIHSED GRADE	SEW	SEWER
FH	FIRE HYDRANT	SF	SQUARE FOOT OR SILT FENCE
FIN	FINISH	SG	SLIDE GATE
FIX	FIXTURE	SHT	SHEET
FL	FLANGE	SICPP	SMOOTH INTERIOR CORRUGATED POLYETHYLENE PIPE
FL	FLOOR	SIM	SIMILAR
FM	FORCE MAIN / FLOW METER	STA	STATION
FND	FOUNDATION	STL JST	STEEL JOIST
FPS	FEET PER SECOND	SG	SLUICE GATE
FRP	FIBERGLASS REINFORCED PLASTIC	SPEC	SPECIFICATION
FST	FINAL SETTLING TANK	SQ	SQUARE
FT	FEET	SS	STAINLESS STEELE
FTG	FOOTING	ST	STREET
G	GAS	STL	STEEL
GAL	GALLON	STRU	STRUCTURAL/STRUCTURE
GALV	GALVANIZED	SWD	SIDE WATER DEPTH
GC	GENERAL CONTRACTOR	T & B	TOP AND BOTTOM
GEN	GENERATOR	T	TILE, TREAD OR TOP
GI	GALVANIZED IRON	TC	TOP OF CURB
GL	GLASS	T/D	TOP OF DECK
GPM	GALLONS PER MINUTE	T/F	TOP OF FOOTING
GR	GRADE / GUARDRAIL	T/G	TOP OF GRATE / GRATING
GS	GALVANIZED STEEL	T/M	TOP OF MASONRY
GV	GATE VALVE	T/P	TOP OF PIPE
H&V	HEATING AND VENTILATING	T/S	TOP OF SLAB/STEEL
HB	HOSE BIB	T/W	TOP OF WALL
HD	HEAVY DUTY	TDH	TOTAL DYNAMIC HEAD
HDPE	HIGH DENSITY POLYETHYLENE	TEL	TELEPHONE
HH	HANDHOLD	TEMP	TEMPERATURE/TEMPORARY/TEMPERED
HOR OR H	HORIZONTAL	TERT	TERTIARY
HP	HORSEPOWER	TOB	TOP OF BANK
HPT	HIGH POINT	TYP	TYPICAL
HT	HEIGHT	UMH	UTILITY MANHOLE
HTR	HEATER	UNO	UNLESS NOTED OTHERWISE
HWL	HIGH WATER LEVEL	UV	ULTRAVIOLET
HYD	HYDRANT	V	VERTICAL / VENT
ID	INSIDE DIAMETER	VCT	VITRIFIED CLAY TILE
IF	INSIDE FENCE	W	WATER / WEST
INF	INFLUENT	W/	WITH
INSUL	INSULATION	WAS	WASTE ACTIVATED SLUDGE
INT	INTERIOR	WG	WEIR GATE
INF	INFLUENT	WH	WALL HYDRANT
IPS	INTERNAL PIPE SIZE	WL	WATER LEVEL
JCT	JUNCTION	WS	WATER SURFACE
JT	JOINT	WS	WATERSTOP
K	1000 POUNDS (1 KIP)	WST	WELDED STEEL PIPE
LPT	LOW POINT	WV	WATER VALVE
LF	LINEAR FEET	WWF	WELDED WIRE FABRIC
LAV	LAVATORY	YH	YARD HYDRANT
LG	LENGTH/LONG		
LP	LIGHT POLE		

IN CHARGE OF MET

CHECKED BY MRY

MADE BY JAD

LINETYPE LEGEND

- EXISTING GRAVITY SANITARY
- EXISTING FORCEMAIN
- EXISTING WATER
- EXISTING CONTOUR (127)
- EXISTING ELECTRIC
- NEW STRUCTURE
- NEW WATER (2"W)
- LIMIT OF CONSTRUCTION (LC)
- TEMPORARY SILT FENCE (SF)
- PROPERTY LINE

SYMBOLS LEGEND

- UNDERGROUND STRUCTURE
- UTILITY POLE
- TREE
- SANITARY MANHOLE

MATERIAL SYMBOLS

- EARTH
- COMPACTED GRAVEL BACKFILL
- CONCRETE
- GROUT
- PAVEMENT

MISCELLANOUS SYMBOLS

- DEMOLITION

FLANGE JOINT FITTING SYMBOLS

- FLANGE JOINT
- 11 1/4 DEGREE BEND
- 22 1/2 DEGREE BEND
- 45 DEGREE BEND
- 90 DEGREE BEND
- LONG RADIUS 90 DEGREE BEND
- TEE
- CROSS
- WYE LATERAL
- BALL VALVE
- GATE VALVE
- GATE VALVE
- GATE VALVE
- PLUG VALVE
- COUPLING (UNRESTRAINED)
- COUPLING (RESTRAINED WITH HARNESS, EAR AND LUG)
- ECCENTRIC REDUCER
- CONCENTRIC REDUCER
- CHECK VALVE
- FLANGE COUPLING ADAPTER OR DISMANTLING COUPLING (BOTH RESTRAINED
- 90 DEGREE BASE ELBOW
- 90" BODIED SURGE VALVE
- HANDWHEEL OPERATOR
- RESTRAINED COUPLING

PIPE SUPPORT SYMBOLS

- PIPE HANGER W/PLATE — TYPE 'A' PIPE SUPPORT (PLAN)
- PIPE HANGER W/PLATE — TYPE 'A' PIPE SUPPORT (SECTION)
- PIPE HANGER FLOOR PLATE — TYPE 'A' PIPE SUPPORT FLOOR PLATE
- PIPE SUPPORT W/ U-BOLT — TYPE 'B' PIPE SUPPORT (PLAN)
- PIPE STANCHION SADDLE W/C-CLAMP — TYPE 'B-C' PIPE SUPPORT (SECTION)
- CONCRETE BASE FITTING SUPPORT — TYPE 'C' PIPE SUPPORT (SECTION)

GENERAL NOTES:

1. CONTRACTOR SHALL HAVE ALL NEW EQUIPMENT, FASTENERS, COVERS AND ASSOCIATED ITEMS. TO COMPLETE THE PROJECT ON SITE PRIOR TO COMMENCEMENT OF DEMOLITION.
2. THE CONTRACTOR SHALL MAINTAIN EXISTING SANITARY SEWER AND WATER SERVICES AT ALL TIMES, EXCEPT DURING APPROVED AND SCHEDULED INTERRUPTIONS. THE CONTRACTOR SHALL SUBMIT A PROPOSED WORK SCHEDULE AND A DETAILED SEWER BY-PASS PROCEDURE TO THE OWNERS REPRESENTATIVE FOR APPROVAL. THE CONTRACTOR SHALL RESTORE GRAVITY SEWER SERVICE AT THE END OF EACH WORK DAY. SHOULD THIS NOT BE POSSIBLE, THE CONTRACTOR SHALL PROVIDE AND MAINTAIN TEMPORARY BY-PASS PUMPING OPERATIONS UNTIL NORMAL GRAVITY FLOWS CAN BE RE-ESTABLISHED AT NO ADDITIONAL COST TO THE OWNER.
3. THE CONTRACTOR SHALL OBTAIN ALL NECESSARY PERMITS AND FURNISH COPIES TO THE OWNER PRIOR TO COMMENCING WORK.
4. THE CONTRACTOR'S WORK AREA SHALL BE CONFINED TO THE LIMITS OF THE RIGHT-OF-WAYS AND EASEMENTS. THE CONTRACTOR SHALL OBTAIN ANY ADDITIONAL EASEMENTS OR WORK RELEASES SHOULD THE CONTRACTOR REQUIRE ADDITIONAL AREA TO ACCOMMODATE HIS OPERATIONS.
5. THE LOCATIONS AND DEPTHS OF EXISTING UTILITIES AS SHOWN ON THE PLANS AND PROFILES ARE APPROXIMATE. OTHER UNDERGROUND UTILITIES NOT SHOWN MAY BE ENCOUNTERED. PRIOR TO THE START OF WORK, THE CONTRACTOR SHALL PERFORM TEST PITS TO VERIFY THE LOCATION AND ELEVATION OF UTILITIES AT INTERCONNECTIONS AND CROSSINGS AS SHOWN, DIRECTED OR REQUIRED. THE CONTRACTOR SHALL EXCAVATE IN ADVANCE OF THE PIPE LAYING OPERATIONS AND EXPOSE ALL EXISTING UNDERGROUND UTILITIES TO PREVENT DAMAGE DURING DURING CONSTRUCTION AND TO DETERMINE REQUIRED CHANGES DURING GRADE NECESSARY TO INSTALL THE NEW UTILITY TO AVOID CONFLICT.
6. THE OWNER ONLY SHALL OPERATE EXISTING VALVES AND NEWLY INSTALLED VALVES. THE CONTRACTOR IS ADVISED THAT WATERTIGHT CONDITIONS MAY NOT EXIST WHEN EXISTING VALVES ARE CLOSED.
7. THE CONTRACTOR SHALL NOTIFY THE OWNER OF ANY UTILITY POLE IN ADVANCE OF ANY EXCAVATION WORK THAT WILL TAKE PLACE WITHIN 5' OF THE UTILITY POLE. THE CONTRACTOR SHALL INCLUDE THE COST OF TEMPORARY POLE SUPPORT IN THE APPROPRIATE BID ITEM. WHERE UTILITY POLES ARE REQUIRED TO BE SUPPORTED DURING CONSTRUCTION, THE CONTRACTOR SHALL MAKE ALL NECESSARY ARRANGEMENTS WITH THE UTILITY COMPANY.
8. EXISTING PIPING AND FACILITIES SHOWN DARK. SOME ITEMS TO BE DEMOLISHED ARE SPECIFICALLY LABELED ON THESE DRAWINGS. REFER TO SPECIFICATION SECTION 02300 FOR ADDITIONAL INFORMATION REGARDING DEMOLITION.
9. CONTRACTOR SHALL VERIFY ALL EXISTING STRUCTURE AND PIPING ELEVATION, LOCATION, SIZE AND TYPE OF MATERIAL WITH NEW PIPING PRIOR TO CONSTRUCTION. IF DISCREPANCIES ARISE BETWEEN THESE CONTRACT DRAWINGS AND ACTUAL FIELD CONDITIONS, THE CONTRACTOR SHALL NOTIFY THE ENGINEER IMMEDIATELY IN WRITING.
10. CONTRACTOR SHALL SUPPLY ALL BENDS REQUIRED TO MAINTAIN SMOOTH FLOW LINES, CHANGES IN ELEVATION AND TO MEET ALL TRANSITIONS. USE 45 DEGREE BENDS UNLESS OTHERWISE APPROVED BY THE ENGINEER.
11. CONTRACTOR SHALL PROVIDE POSITIVE SITE DRAINAGE DURING CONSTRUCTION OPERATIONS. ALL FINAL LINES AND GRADES SHALL BE CONSTRUCTED TO MAINTAIN POSITIVE SITE DRAINAGE TO EXISTING DRAINAGE STRUCTURES.
12. ALL PAVEMENT SHALL BE SAW CUT PRIOR TO RESTORATION.
13. LEGEND REPRESENTS STANDARD LINE TYPES AND HATCHING UNLESS INDICATED ON SPECIFIC DRAWINGS.
14. CONTRACTOR SHALL COORDINATE STAGING AREAS WITH OWNER.
15. WHILE EVERY EFFORT HAS BEEN MADE TO IDENTIFY THE ITEMS TO BE DEMOLISHED, IT IS CONTRACTOR'S RESPONSIBILITY TO REVIEW THE SCOPE OF WORK IN THE FIELD, REVIEW THESE CONTRACT DRAWINGS, ALL PREVIOUS CONSTRUCTION DRAWINGS & DOCUMENTS AND THE DEVELOPMENT SPECIFICATIONS, THE EXISTING FACILITY PLANS, AND DEMOLISH ALL ITEMS NECESSARY TO ACCOMMODATE THE PROPOSED WORK. ALSO THE CONTRACTOR SHALL REPAIR ALL SURFACES AND PLUG ABANDONED PENETRATIONS UPON REMOVAL OF THE DEMOLISHED ITEMS PER THE SPECIFICATIONS.
16. THE ABBREVIATIONS AND SYMBOLS HEREIN ARE STANDARD OF THIS OFFICE AND APPLY TO A VARIETY OF PROJECTS. ONLY A PORTION OF THEM WILL NECESSARILY APPLY TO ANY GIVEN PROJECT. SEE THE LISTINGS IN OTHER SECTIONS OF THIS PROJECT FOR ADDITIONAL SYMBOLS AND ABBREVIATIONS.
17. CONTRACTOR SHALL VISIT AND EXAMINE THE SITE TO FULLY UNDERSTAND ALL THE CONDITIONS PERTAINING TO THE SCOPE OF WORK, UNDERSTAND DIFFICULTIES TO BE ENCOUNTERED AND MATERIALS REQUIRED FOR THE COMPLETE INSTALLATION OF THE WORK SHOWN ON THE DRAWINGS AND OR SPECIFIED AT NO ADDITIONAL COST TO THE OWNER. THE EXACT LOCATION OF THE EXISTING PIPING, EQUIPMENT, SERVICES, CONDITIONS, ETC. SHALL BE FIELD VERIFIED. THE EXISTING SIZE OF PIPING, DUCTWORK, EQUIPMENT, ETC. SHALL BE FIELD VERIFIED. ALL PIPING, DUCTWORK, AND EQUIPMENT ELEVATIONS SHOWN SHALL BE FIELD VERIFIED. CONTRACTOR SHALL MODIFY LAYOUT WITH THE APPROVAL OF THE ENGINEER WHERE REQUIRED TO CLEAR OBSTRUCTIONS AT NO ADDITIONAL COST TO THE OWNER.
18. THE CONTRACTOR SHALL TAKE ALL NECESSARY PRECAUTIONS AND MAKE ALL NECESSARY PROVISIONS FOR PROTECTION OF THE PUBLIC, THE WORKMEN AND THE WORK, AND FOR MAINTENANCE AND PROTECTION OF PEDESTRIAN AND VEHICULAR TRAFFIC AS REQUIRED BY THE AGENCIES OF GOVERNMENT HAVING JURISDICTION.
19. THE CONTRACTOR SHALL ADHERE TO ALL OCCUPATIONAL SAFETY AND HEALTH ADMINISTRATION (OSHA), STATE AND LOCAL SAFETY REGULATIONS.
20. PROMPTLY REPORT TO THE OWNER'S REPRESENTATIVE ANY DISCREPANCIES FOUND ON THE SITE OR IN THE CONTRACT DOCUMENTS FOR REVIEW AND RESOLUTION BEFORE PROCEEDING WITH THE WORK IN THE AREA IN QUESTION. PROVIDE FIELD INFORMATION SPECIFIC TO THE DISCREPANCY TO EXPEDITE RESOLUTION.
21. LOCATE, PROTECT, AND MAINTAIN BENCHMARKS, MONUMENTS, CONTROL POINTS AND PROJECT ENGINEERING REFERENCE POINTS.
22. TAKE ALL PRECAUTIONS NECESSARY TO PREVENT EROSION AND CONTROL SEDIMENTATION AS REQUIRED BY THE AGENCIES OF GOVERNMENT HAVING JURISDICTION.
23. THE CONTRACTOR SHALL BE RESPONSIBLE FOR DEWATERING AND MAINTENANCE OF SURFACE WATER AND/OR GROUNDWATER ENCOUNTERED DURING THE COURSE OF WORK.
24. COMPLY WITH ALL LOCAL, STATE AND FEDERAL REQUIREMENTS REGARDING MATERIALS, METHODS OF WORK AND DISPOSAL OF EXCESS AND WASTE MATERIALS.
25. BURNING OF MATERIALS OF ANY DESCRIPTION ON THE SITE IS PROHIBITED.
26. PRIOR TO PERFORMING ANY EXCAVATION WITHIN THE CONSTRUCTION AREA, CONFIRM WITH DIG SAFELY NEW YORK, THAT ALL EXISTING UNDERGROUND UTILITY LOCATIONS ARE CURRENTLY VERIFIED, OR ARRANGE FOR VERIFICATION.
27. PRIOR TO START OF WORK , THE CONTRACTOR SHALL PROVIDE EXPLORATORY EXCAVATIONS AND COORDINATE ALL PIPING LAYOUTS WITH THE OWNER'S REPRESENTATIVE TO ELIMINATE ALL CONFLICTS WITH EXISTING UTILITIES.
28. THE USE OF EXPLOSIVES OF ANY DESCRIPTION ON THE SITE IS PROHIBITED.
29. CONSTRUCTION DEBRIS AND DEMOLISHED MATERIALS SHALL BE REMOVED FROM THE SITE AT REGULAR INTERVALS AND SHALL NOT BE ALLOWED TO ACCUMULATE. EMPLOY APPROPRIATE MEASURES TO PREVENT LOOSE DEBRIS FROM LEAVING THE CONSTRUCTION AREA.
30. THE CONTRACTOR IS RESPONSIBLE FOR ALL DAMAGE CAUSED BY CONSTRUCTION TO EXISTING UTILITIES AND FACILITIES WHICH ARE NOT INCLUDED AS PART OF THE INTENDED WORK. THE CONTRACTOR SHALL REPAIR, RESTORE AND/OR REPLACE ALL DAMAGE TO THE SATISFACTION OF UTILITY'S REPRESENTATIVE AT NO ADDITIONAL COST TO THE OWNER.
31. THE CONTRACTOR SHALL RESTORE ALL DISTURBED SURFACES TO ORIGINAL OR BETTER CONDITION INCLUDING 6 INCHES OF TOPSOIL, SEED, FERTILIZER, AND MULCH. OTHER SURFACES SHALL BE RESTORED AS SHOWN ON THE DETAILS.
32. PERFORM WORK AND PROVIDE ALL MATERIALS NECESSARY TO DISCONNECT OR RELOCATE EXISTING UTILITIES. COORDINATE WITH THE RESPECTIVE UTILITY COMPANIES FOR SHUTOFF AND RECONNECTION OF ACTIVE SERVICES. RECORD EXISTING UTILITY TERMINATION POINTS BEFORE DISCONNECTION.
33. ALL STRUCTURES SHALL MEET AASHTO H20 LOADING REQUIREMENTS.
34. THE CONTRACTOR IS RESPONSIBLE FOR HANDLING, CUTTING AND DISPOSAL OF ALL ASBESTOS CEMENT (AC) PIPE TO BE REMOVED OR CUT IN ACCORDANCE WITH ALL APPLICABLE REGULATIONS.
35. ALL SILT FENCE PROVIDED ON THIS PROJECT SHALL BE REINFORCED SILT FENCE PER DRAWING G-004.
36. EXISTING UTILITIES (PIPE/STRUCTURE LOCATIONS, SIZES AND INVERT ELEVATIONS) SHOWN ON THESE PLANS HAVE BEEN PLOTTED FROM FIELD SURVEYS AND RECORDED MAPS AND SHALL BE INTERPRETED AS APPROXIMATE ONLY. THE CONTRACTOR IS RESPONSIBLE FOR DETERMINING AND FIELD VERIFYING ALL EXISTING INFORMATION AT ALL LOCATIONS IN CLOSE PROXIMITY TO THE UTILITIES AND WORK UNDER CONSTRUCTION. THIS INFORMATION INCLUDES BUT IS NOT LIMITED TO EXISTING PIPE AND STRUCTURE SIZES, PIPE AND STRUCTURE LOCATIONS, PIPE SLOPES, STRUCTURE RIM AND INVERT ELEVATIONS, PIPE MATERIALS AND PIPE CONDITIONS. THIS SHALL INCLUDE PIPE INVERTS, MATERIALS AND SIZES FOR UTILITIES CONNECTING TO DOWNSTREAM STRUCTURES. THIS VERIFICATION SHALL BE COMPLETED PRIOR TO THE COMMENCEMENT OF SHOP DRAWING SUBMITTALS, ORDERING OF MATERIALS, AND THE START OF ANY REMOVALS FOR THIS PROJECT. ANY PROPOSED MODIFICATIONS TO THE DESIGN SHALL BE SUBMITTED AS SHOP DRAWINGS INCLUDING BUT NOT LIMITED TO DESIGN DRAWINGS AND UTILITY PROFILES INCLUDING PIPE AND STRUCTURE LAYOUT, STRUCTURE RIM AND INVERT ELEVATIONS, AND PIPE SIZES, MATERIALS AND SLOPES.
37. 48 HOUR NOTICE SHALL BE GIVEN TO WESTCHESTER COUNTY DEPARTMENT OF HEALTH SO ARRANGEMENTS CAN BE MADE FOR THE REPRESENTATIVE TO WITNESS TESTING.
38. UPON COMPLETION AND PRIOR TO USE, TWO (2) SETS OF AS-BUILT PLANS MUST BE SUBMITTED TO WESTCHESTER COUNTY DEPARTMENT OF HEALTH TOGETHER WITH P.E. CERTIFICATION OF CONSTRUCTION AND ACCEPTABLE LEAKAGE TESTS RESULTS.
39. UPON INSTALLATION AND PRIOR TO OPERATION OF BYPASS. WCDOH MUST OVERSEE TESTING OF BYPASS
40. ALL TESTS SHALL BE CONDUCTED UNDER THE SUPERVISION OF THE PROFESSIONAL ENGINEER.

STATE OF NEW YORK · JOSEPH E. TAYLOR · 073757 · LICENSED PROFESSIONAL ENGINEER

EDR Environmental Design & Research,
Landscape Architecture, Engineering & Environmental Services, D.P.C.
217 Montgomery Street, Suite 1100
Syracuse, New York 13202
a better environment P. 315.471.0688

REVISION NUMBER	DATE	MADE BY	APP'D BY	REVISION

RECORD DRAWING CERTIFICATION

☐ AS BUILT – CHANGES AS NOTED
☐ AS BUILT – NO CHANGES

CONTRACTOR	PROJECT COORDINATOR
NAME	NAME
SIGNATURE	SIGNATURE
TITLE DATE	TITLE DATE

WESTCHESTER COUNTY, NEW YORK
DEPARTMENT OF PUBLIC WORKS AND TRANSPORTATION
DIVISION OF ENGINEERING

JACKSON AVENUE PUMPING STATION REHABILITATION
BRONX VALLEY SANITARY SEWER DISTRICT
TOWN OF GREENBURGH, NEW YORK

ABBREVIATIONS, SYMBOLS, LEGEND, AND GENERAL NOTES

CONTRACT NUMBER	SHEET NUMBER
22–510	G–002

SHEET NO. 3 OF 55

SCALE: AS SHOWN
DATE: 06/01/23

DPW FILE NO. 202–02–G–28–0

REV. NO. 1

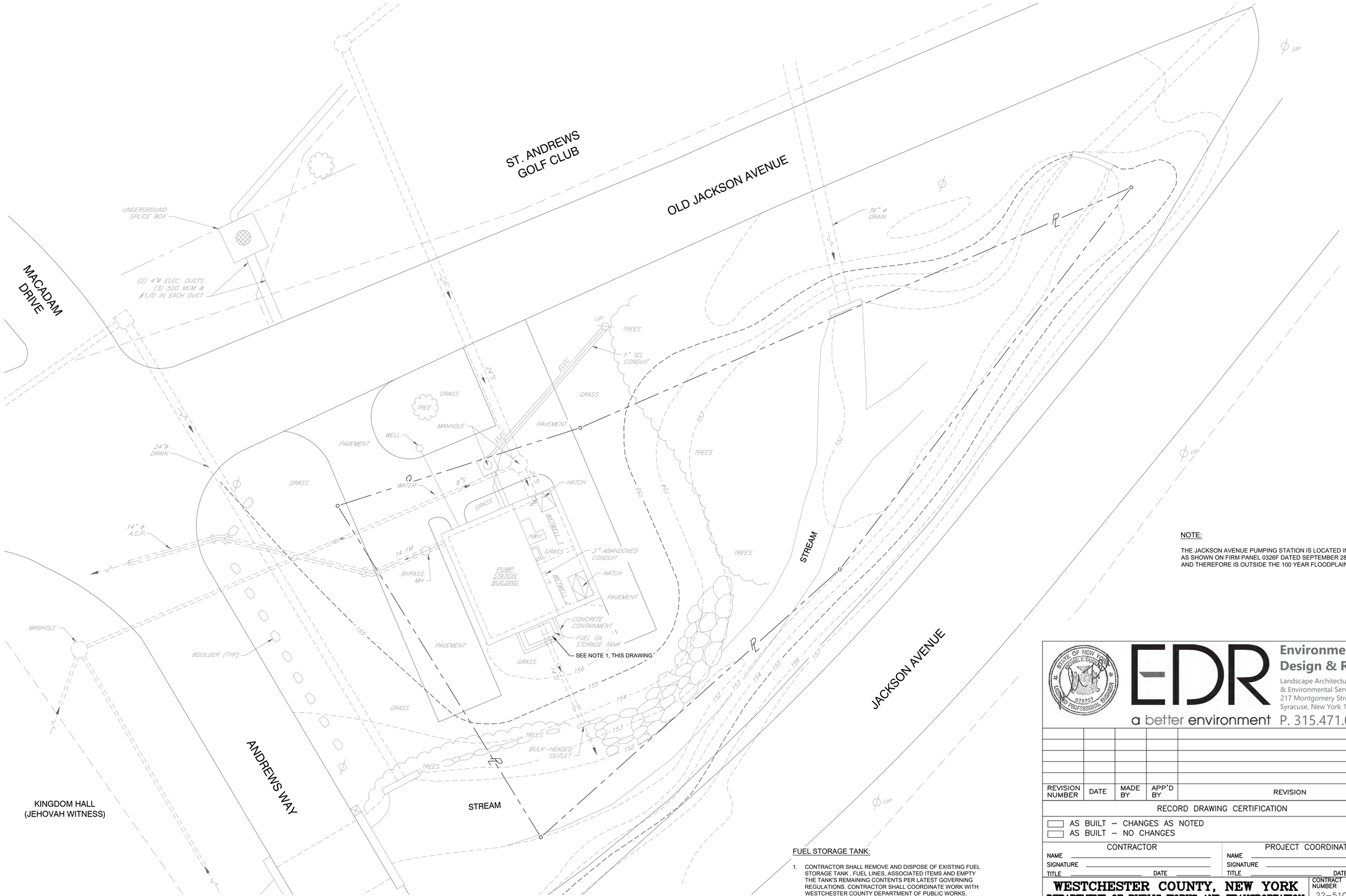

NOTE:

THE JACKSON AVENUE PUMPING STATION IS LOCATED IN ZONE X AS SHOWN ON FIRM PANEL 0326F DATED SEPTEMBER 28, 2007 AND THEREFORE IS OUTSIDE THE 100 YEAR FLOODPLAIN.

FUEL STORAGE TANK:

1. CONTRACTOR SHALL REMOVE AND DISPOSE OF EXISTING FUEL STORAGE TANK , FUEL LINES, ASSOCIATED ITEMS AND EMPTY THE TANK'S REMAINING CONTENTS PER LATEST GOVERNING REGULATIONS. CONTRACTOR SHALL COORDINATE WORK WITH WESTCHESTER COUNTY DEPARTMENT OF PUBLIC WORKS.

IN CHARGE OF MET
CHECKED BY MRY
MADE BY JAD

PLAN
SCALE: 1" = 10'

0 5 10 15 20'
SCALE 1"=10' AT ORIGINAL SIZE

MODIFICATION IS A VIOLATION OF CHAPTER 16, TITLE VIII, ARTICLE 145 § 7209.2 NYS EDUCATION LAW, UNLESS ACTING UNDER THE DIRECTION OF A LICENSED PROFESSIONAL ENGINEER. IF A DOCUMENT BEARING THE SEAL OF AN ENGINEER IS ALTERED, THE ALTERING ENGINEER SHALL AFFIX TO THE DOCUMENT THEIR SEAL AND THE NOTATION "ALTERED BY" FOLLOWED BY THEIR SIGNATURE AND THE DATE OF SUCH ALTERATION, AND A SPECIFIC DESCRIPTION OF THE ALTERATION.

EDR
Environmental Design & Research,
Landscape Architecture, Engineering & Environmental Services, D.P.C.
217 Montgomery Street, Suite 1100
Syracuse, New York 13202
a better environment P. 315.471.0688

REVISION NUMBER	DATE	MADE BY	APP'D BY	REVISION

RECORD DRAWING CERTIFICATION

☐ AS BUILT – CHANGES AS NOTED
☐ AS BUILT – NO CHANGES

CONTRACTOR
NAME
SIGNATURE
TITLE DATE

PROJECT COORDINATOR
NAME
SIGNATURE
TITLE DATE

WESTCHESTER COUNTY, NEW YORK
DEPARTMENT OF PUBLIC WORKS AND TRANSPORTATION
DIVISION OF ENGINEERING

JACKSON AVENUE PUMPING STATION REHABILITATION
BRONX VALLEY SANITARY SEWER DISTRICT
TOWN OF GREENBURGH, NEW YORK
EXISTING SITE PLAN

CONTRACT NUMBER 22-510
SHEET NUMBER G-003
SHEET NO. 4 OF 55
SCALE: AS SHOWN
DATE: 06/01/23
DPW FILE NO. 202-02-G-29-0
REV. NO. 1

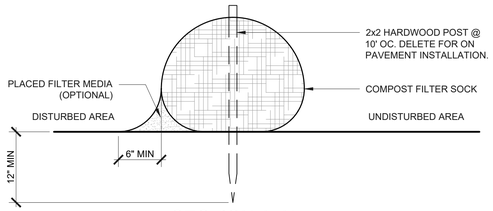

SECTION A-A'

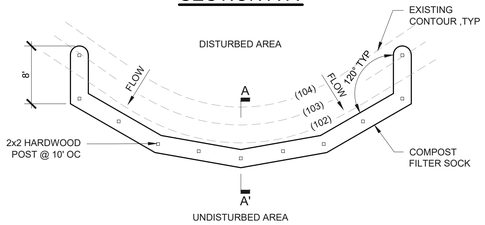

PLAN

NOTE:

1. COMPOST FILTER SOCKS SHALL BE PLACED ON THE CONTOUR WITH BOTH TERMINAL ENDS OF THE SOCK EXTENDED 8 FEET UPSLOPE AT A 45° ANGLE TO PREVENT BYPASS FLOW.
2. DIAMETERS DESIGNED FOR USE SHALL BE 12"-32".
3. THE FLAT DIMENSION OF THE SOCK SHALL BE AT LEAST 1.5 TIMES THE NOMINAL DIAMETER.
4. THE MAXIMUM SLOPE LENGTH (IN FEET) ABOVE A COMPOST FILTER SOCK SHALL NOT EXCEED THE FOLLOWING LIMITS:

TABLE 1 - MAXIMUM SLOPE LENGTH ABOVE COMPOST FILTER SOCK (FEET)

DIA (IN)	SLOPE %						
	2	5	10	20	25	33	50
8	225	200	100	5	20	-	-
12	250	225	125	65	50	40	25
18	275	250	150	70	55	45	30
24	350	275	200	130	100	60	35
32	450	325	275	150	120	75	50

TABLE 2 - COMPOST FILTER MEDIA STANDARDS

ORGANIC MATTER CONTENT	25% - 100% DRY WEIGHT
ORGANIC PORTION	FIBROUS AND ELONGATED
pH	6.0 - 8.0
MOISTURE CONTENT	30% - 60%
PARTICLE SIZE	100% PASSING A 1" SCREEN AND 10-50% PASSING A 3/8" SCREEN
SOLUBLE SALT CONCENTRATION	5.0 dS/m (mmhos/cm) MAXIMUM

TABLE 3 - COMPOST SOCK FABRIC MINIMUM SPECIFICATIONS

MATERIAL TYPE	3 MIL HDPE	5 MIL HDPE	5 MIL HDPE	MILTI-FILAMENT POLYPROPYLENE	HEAVY DUTY MILTI-FILAMENT POLYPROPYLENE
MATERIAL CHARACTERISTICS	PHOTODEGRAD-ABLE	PHOTODEGRAD-ABLE	BIODEGRAD-ABLE	PHOTODEGRAD-ABLE	PHOTODEGRAD-ABLE
SOCK DIAMETERS	12", 18"	12", 18", 24", 32"	12", 18", 24", 32"	12", 18", 24", 32"	12", 18", 24", 32"
MESH OPENING	3/8"	3/8"	3/8"	3/8"	1/8"
TENSILE STRENGTH		26 PSI	26 PSI	44 PSI	202 PSI
ULTRAVIOLET STABILITY % ORIGINAL STRENGTH (ASTM G-155)	23% AT 1000 HR.	23% AT 1000 HR.		100% AT 1000 HR.	100% AT 1000 HR.
MINIMUM FUNCTIONAL LONGEVITY	6 MONTHS	9 MONTHS	6 MONTHS	1 YEAR	2 YEARS

5. THE COMPOST INFILL SHALL BE WELL DECOMPOSED (MATURED AT LEAST 3 MONTHS), WEED-FREE, ORGANIC MATTER. IT SHALL BE AEROBICALLY COMPOSTED, POSSESS NO OBJECTIONABLE ODORS, AND CONTAIN LESS THAN 1%, BY DRY WEIGHT, OF MAN-MADE FOREIGN MATTER. THE PHYSICAL PARAMETERS OF THE COMPOST SHALL MEET THE STANDARDS LISTED IN TABLE 5.2-COMPOST FILTER MEDIA STANDARDS TABLE*. NOTE ALL BIOSOLIDS COMPOST PRODUCED IN NEW YORK STATE (OR APPROVED FOR IMPORTATION) MUST MEET NYS DEC'S 6 NYCRR PART 360 (SOLIDS WASTE MANAGEMENT FACILITIES) REQUIREMENTS. THE PART 360 REQUIREMENTS ARE EQUAL TO OR MORE STRINGENT THAN 40 CFR PART 503 WHICH ENSURE SAFE STANDARDS FOR PATHOGEN REDUCTION AND HEAVY METALS CONTENT. WHEN USING COMPOST FILTER SOCKS ADJACENT TO SURFACE WATER, THE COMPOST SHOULD HAVE A LOW NUTRIENT VALUE.
6. THE COMPOST FILTER SOCK FABRIC MATERIAL SHALL MEET THE MINIMUM SPECIFICATIONS GIVEN IN TABLE 5.3-COMPOST SOCK FABRIC MINIMUM SPECIFICATIONS TABLE*.
7. COMPOST FILTER SOCKS SHALL BE ANCHORED IN EARTH WITH 2x2 WOODEN STAKES DRIVEN 12" INTO THE SOIL ON 10 FOOT CENTER ON THE CENTERLINE OF THE SOCK. ON UNEVEN TERRAIN, EFFECTIVE GROUND CONTACT CAN BE ENHANCED BY THE PLACEMENT OF A FILLET OR FILTER MEDIA ON THE DISTURBED AREA SIDE OF THE COMPOST SOCK.
8. ALL SPECIFIC CONSTRUCTION DETAILS AND MATERIAL SPECIFICATIONS SHALL APPEAR ON THE EROSION AND SEDIMENT CONTROL CONSTRUCTIONS DRAWINGS WHEN COMPOST FILTER SOCKS ARE INCLUDED IN THE PLAN.

*TABLE FROM THE 2016 NYS STANDARDS AND SPECIFICATIONS FOR EROSION AND SEDIMENT CONTROL.

COMPOST FILTER SOCK

NOT TO SCALE

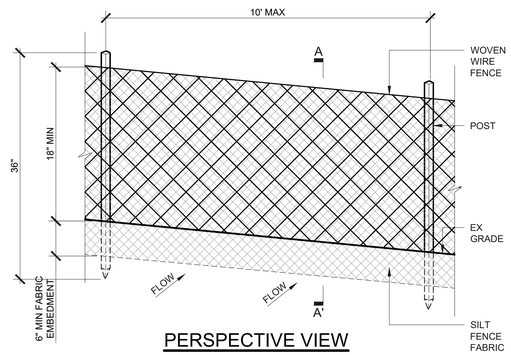

PERSPECTIVE VIEW

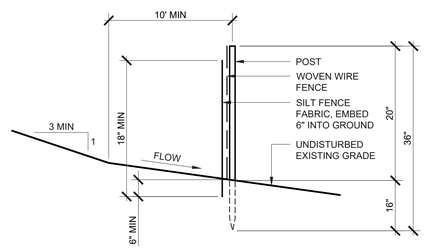

SECTION A-A'

NOTES:

1. WOVEN WIRE FENCE SHALL BE FASTENED SECURELY TO FENCE POSTS WITH WIRE TIES OR STAPLES. POSTS SHALL BE EITHER STEEL 'T' OR 'U' TYPE, OR HARDWOOD.
2. SILT FENCE FABRIC SHALL BE FASTENED SECURELY TO WOVEN WIRE FENCE WITH TIES SPACED EVERY 24" AT TOP AND MID SECTION.
3. WOVEN WIRE FENCE SHALL BE MINIMUM 14 GAUGE, WITH MAXIMUM 6" MESH SPACING.
4. WHEN TWO SECTIONS OF SILT FENCE FABRIC ADJOIN EACH OTHER THEY SHALL BE OVERLAPPED BY 6" AND FOLDED. FILTER CLOTH SHALL BE MIRAFI 100X OR APPROVED EQUAL.
5. PREFABRICATED UNITS SHALL MEET THE MINIMUM REQUIREMENTS SHOWN.
6. MAINTENANCE SHALL BE PERFORMED IMMEDIATELY AND MATERIAL REMOVED WHEN "BULGES" DEVELOP IN THE SILT FENCE.

REINFORCED SILT FENCE

NOT TO SCALE

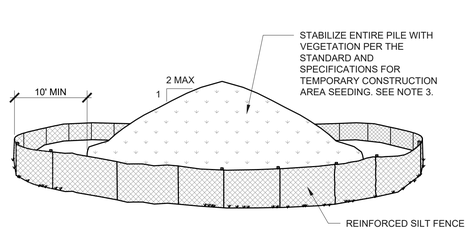

NOTES:

1. AREA CHOSEN FOR STOCKPILING OPERATIONS SHALL BE DRY, STABILIZED AND LOCATED AWAY FROM KNOWN WORK AREAS TO PREVENT RELOCATION.
2. MAXIMUM STOCKPILE HEIGHT SHALL BE 12 FEET.
3. EACH PILE SHALL BE SURROUNDED WITH REINFORCED SILT FENCING, INSTALLED PER REINFORCED SILT FENCE DETAIL, THEN STABILIZED IN ACCORDANCE WITH THE NYSDEC STANDARD AND SPECIFICATIONS FOR TEMPORARY CONSTRUCTION AREA SEEDING WITHIN 7 DAYS OF COMPLETION.
4. A PERIMETER DIKE/SWALE SHALL BE LOCATED UP-SLOPE OF THE TOPSOIL STOCKPILE TO DIVERT STORMWATER AROUND THE STOCKPILE.

STABILIZED SOIL STOCKPILE

NOT TO SCALE

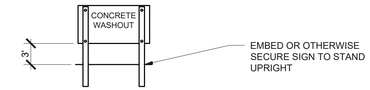

ELEVATION

CONCRETE WASHOUT SIGN

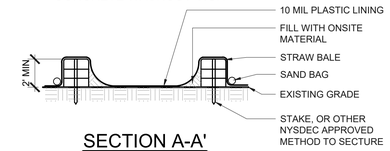

SECTION A-A'

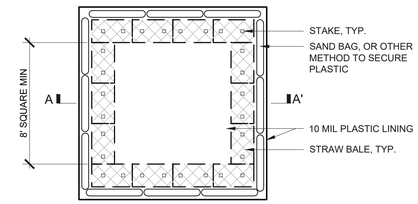

PLAN

NOTES:

1. THE CONTRACTOR SHALL BE RESPONSIBLE FOR SIZING, CONSTRUCTION, AND INTEGRITY OF THE WASHOUT. THE CAPACITY OF THE WASHOUT SHALL BE 60 GALLONS PER TRUCK TO BE CLEANED WITHIN THE EXPECTED MAINTENANCE FREQUENCY. ADDITIONAL CAPACITY SHALL BE PROVIDED TO ACCOMMODATE RAINFALL.
2. OTHER METHODS OF CONCRETE WASHOUT CONTAINMENT MAY BE UTILIZED IF APPROVED BY THE OWNER'S REPRESENTATIVE.
3. LOCATE WASHOUT AREA AT LEAST 100' FROM STORM DRAINS, OPEN DITCHES, OR WATER BODIES.
4. THE PLASTIC LINING SHALL BE MAINTAINED IN A WATER TIGHT CONDITION AND SHALL BE REPLACED AT EVERY CLEANING.
5. DO NOT ALLOW RUNOFF TO ENTER THIS AREA.
6. THE CONCRETE WASHOUT SIGN SHALL BE PLACED WITHIN 30 FEET OF THE TEMPORARY CONCRETE WASHOUT FACILITY.

CONCRETE WASHOUT

NOT TO SCALE

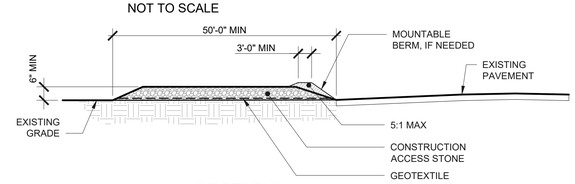

SECTION

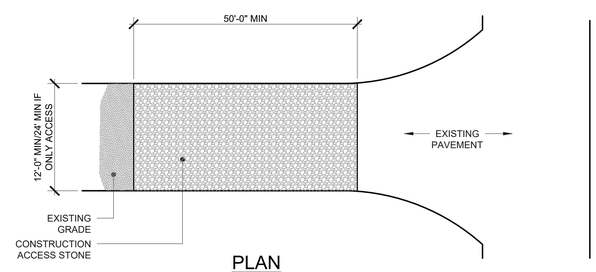

PLAN

NOTES:

1. CONSTRUCTION ACCESS STONE SIZE - USE A 50% TO 50% MIX OF NYSDOT #4 AND #5 STONE, OR RECLAIMED OR RECYCLED CONCRETE EQUIVALENT.
2. GEOTEXTILE:
   2.A. MIRAFI 500X OR APPROVED EQUAL.
   2.B. SHALL BE PLACED UNDER THE ENTIRE STABILIZED CONSTRUCTION ENTRANCE PRIOR TO PLACING OF STONE.
3. SURFACE WATER - ALL SURFACE WATER FLOWING OR DIVERTED TOWARD CONSTRUCTION ACCESS SHALL BE PIPED ACROSS THE STABILIZED CONSTRUCTION ACCESS. IF PIPING IS IMPRACTICAL, A MOUNTABLE BERM SHALL BE USED.
4. MAINTENANCE - THE CONSTRUCTION ACCESS SHALL BE MAINTAINED IN A CONDITION WHICH WILL PREVENT TRACKING OR FLOWING OF SEDIMENT ONTO THE PUBLIC RIGHTS-OF-WAY. THIS MAY REQUIRE PERIODIC TOP DRESSING OR REPLACEMENT WITH STONE AS CONDITIONS DEMAND AND REPAIR AND/OR CLEANOUT OF ANY MEASURES USED TO TRAP SEDIMENT. ALL SEDIMENT SPILLED, DROPPED, WASHED OR TRACKED ONTO PUBLIC RIGHTS-OF-WAY MUST BE REMOVED IMMEDIATELY.
5. WHEELS SHALL BE CLEANED TO REMOVE SEDIMENT PRIOR TO ACCESS ONTO PUBLIC RIGHT-OF-WAYS. WHEN WASHING IS REQUIRED, IT SHALL BE DONE ON AN AREA STABILIZED WITH STONE AND WHICH DRAINS INTO A NYSDEC APPROVED SEDIMENT TRAPPING DEVICE.
6. TRAINED CONTRACTOR SHALL PROVIDE DAILY INSPECTIONS.

STABILIZED CONSTRUCTION ACCESS

NOT TO SCALE

NOTES:

1. SITE ACCESS IS RESTRICTED TO THE LOCATIONS SPECIFICALLY DESIGNATED ON PLAN.
2. AVOID ANY DISTURBANCE OF EXISTING VEGETATION ON THE SITE EXCEPT THE VEGETATION SPECIFICALLY DESIGNATED TO BE REMOVED.
3. DISTURBED AREAS SHALL BE AS SMALL AS PRACTICAL, AND SHALL BE TEMPORARILY OR PERMANENTLY STABILIZED.
4. TAKE ALL PRECAUTIONS NECESSARY TO PREVENT EROSION AND CONTROL SEDIMENTATION AS REQUIRED BY THE AGENCIES OF GOVERNMENT HAVING JURISDICTION.
5. THE START OF ANY ON-SITE CONSTRUCTION INCLUDING STRIPPING TOPSOIL, REMOVING CUT OR PLACING FILL MATERIAL ESTABLISHES THAT THE CONTRACTOR ACCEPTS THE CONTRACT DOCUMENTS AS ACCURATELY REPRESENTING THE EXISTING SITE CONDITIONS.
6. ALL FACILITIES TO BE CONSTRUCTED OR INSTALLED SHALL COMPLY WITH ALL SECTIONS AND LATEST REVISIONS OF THE REQUIREMENTS OF ALL AGENCIES OF GOVERNMENT HAVING JURISDICTION.
7. TOP DRESS, SEED AND MULCH ALL LAWN AREAS DISTURBED BY THE CONSTRUCTION AS SOON AS THE FINISHED GRADING OPERATION IS COMPLETED.
8. ADJUST THE RIM ELEVATIONS OF EXISTING UTILITY STRUCTURES SCHEDULED TO REMAIN TO BE FLUSH WITH THE FINISHED GRADE ELEVATIONS.
9. MAINTAIN AN ADEQUATE SUPPLY OF EROSION AND SEDIMENT CONTROL MATERIALS AT THE CONSTRUCTION SITE AT ALL TIMES TO BE USED FOR URGENT SITUATIONS, SUCH AS UNEXPECTED HEAVY RAINFALL.
10. THE CONTRACTOR IS RESPONSIBLE FOR LOCATING SOIL AND EXCESS EXCAVATED EARTH STOCK PILES AT A STABLE LOCATION. STOCK PILES SHALL BE STABILIZED PER THE DETAIL.
11. CONSTRUCTION ROUTES SHALL BE STABILIZED PER THE NYS STANDARDS FOR EROSION AND SEDIMENT CONTROL, AS NECESSARY BASED ON SITE CONDITIONS.
12. THE EROSION AND SEDIMENT CONTROLS ARE SHOWN FOR A CONDITION WHEN ALL WORK IS OCCURRING SIMULTANEOUSLY. ACTUAL INSTALLATIONS SHALL BE ADJUSTED BASED ON CURRENT CONSTRUCTION ACTIVITY AND SITE CONDITIONS.
13. EROSION CONTROL MEASURES INCLUDING BUT NOT LIMITED TO A STABILIZED CONSTRUCTION ENTRANCE, STABILIZED CONSTRUCTION STAGING AREA AND REINFORCED SILT FENCE SHALL BE THE FIRST ITEMS CONSTRUCTED WHEN SITE WORK BEGINS, AND MUST BE COMPLETELY FUNCTIONAL BEFORE DOWN SLOPE LAND DISTURBANCE BEGINS.
14. ALL EROSION AND SEDIMENT CONTROL PRACTICES SHALL BE CONSTRUCTED AND OPERATED IN ACCORDANCE WITH THEIR DESIGN. ANY NEED FOR REPAIRS OR MAINTENANCE SHALL BE ADDRESSED IMMEDIATELY TO ASSURE THE CONTINUED PERFORMANCE OF THEIR INTENDED FUNCTION THROUGHOUT THE CONSTRUCTION PROCESS.
15. MAINTENANCE AND REPAIR OF ALL EQUIPMENT AND VEHICLES INVOLVING OIL CHANGES, HYDRAULIC SYSTEM AND FUEL TANK DRAIN DOWN, DEGREASING OPERATIONS AND OTHER ACTIVITIES THAT MAY RESULT IN THE ACCIDENTAL RELEASE OF CONTAMINANTS MUST BE CONDUCTED OFF-SITE. ACCIDENTAL SPILLS MUST BE CLEANED UP IMMEDIATELY AND CONTAMINANTS DISPOSED OF PROPERLY.
16. THE CONTRACTOR SHALL TAKE THE NECESSARY MEASURES, INCLUDING WATER SPRINKLING TO PROVIDE DUST CONTROL DURING CONSTRUCTION.
17. THE CONTRACTOR SHALL INSTALL ADDITIONAL EROSION AND SEDIMENT CONTROL PRACTICES, AS SHOWN ON THE DETAIL SHEETS, AS NECESSARY DURING THE COURSE OF CONSTRUCTION AT NO COST TO THE OWNER.
18. THE CONTRACTOR SHALL INSTALL AND MAINTAIN STABILIZED CONSTRUCTION ENTRANCE TO PREVENT THE TRANSPORT OF SEDIMENT ONTO PUBLIC ROADS AND AS DIRECTED BY THE OWNER'S REPRESENTATIVE.
19. IF SEDIMENT IS TRANSPORTED ONTO ROADS, IT MUST BE REMOVED FROM THE ROAD SURFACE ON A DAILY BASIS AND PRIOR TO RAIN EVENTS. SEDIMENT SHALL BE DISPOSED OF IN A MANNER THAT PREVENTS CONTAMINATION OF STORMWATER AND SURFACE WATER.
20. VEGETATION SHALL BE PROTECTED OUTSIDE OF THE LIMITS OF DISTURBANCE.
21. ALL EXISTING TOPSOIL SHALL BE STOCKPILED TO COMPLETE THE FINISH GRADING OF ALL EXPOSED AREAS FOR THE ESTABLISHMENT OF VEGETATION.
22. THE CONTRACTOR SHALL BE RESPONSIBLE FOR LOCATING SOIL AND EXCESS EXCAVATED EARTH STOCK PILES AT A STABLE LOCATION. STOCK PILES SHALL BE STABILIZED PER THE DETAIL.
23. ON SITE CONSTRUCTION ROUTES SHALL BE STABILIZED PER THE NYS STANDARDS FOR EROSION AND SEDIMENT CONTROL, AS NECESSARY BASED ON SITE CONDITIONS.
24. IF MEASURES ARE NEEDED, THE CONTRACTOR IS RESPONSIBLE FOR THE PLACEMENT, DESIGN, APPROVAL, AND OPERATION OF THE CONCRETE WASHOUTS. THE CONCRETE WASHOUTS SHALL BE INSTALLED A MINIMUM OF 50' FROM STORM DRAINAGE OR SURFACE WATER. CONCRETE WASTE MATERIAL SHALL NOT BE ALLOWED TO ESCAPE FROM THE CONCRETE WASHOUT.
25. FOR INSTALLED SEDIMENT CONTROL PRACTICES, REMOVE ALL ACCUMULATED SEDIMENT AND DEBRIS WHEN THE ACCUMULATION HAS REACHED A DEPTH OF 25% OF THE HEIGHT AND/OR VOLUME OF THE PRACTICE'S CAPACITY, OR MORE FREQUENTLY AS REQUIRED BY THE DETAILS.
26. SOLID WASTE SHALL BE STORED IN COVERED DUMPSTERS OR OTHER APPROPRIATE CONTAINERS. WASTE IS TO BE DISPOSED OF REGULARLY AND PROPERLY IN ACCORDANCE WITH LOCAL, STATE, AND/OR FEDERAL REGULATIONS.
27. DURING ROUGH GRADING, LEAVE SLOPE SURFACES SLIGHTLY ROUGHENED TO A DEPTH OF 1-2 INCHES - DO NOT BACK BLADE SLOPES.
28. REINFORCED SILT FENCE SHALL BE EXCLUSIVELY UTILIZED ON THIS PROJECT.

IN CHARGE OF MET
CHECKED BY MRY
MADE BY JAD

STATE OF NEW YORK · JAMES E. TAYLOR · 073757 · LICENSED PROFESSIONAL ENGINEER
EDR
Environmental Design & Research,
Landscape Architecture, Engineering & Environmental Services, D.P.C.
217 Montgomery Street, Suite 1100
Syracuse, New York 13202
a better environment P. 315.471.0688

REVISION NUMBER	DATE	MADE BY	APP'D BY	REVISION

RECORD DRAWING CERTIFICATION

☐ AS BUILT – CHANGES AS NOTED
☐ AS BUILT – NO CHANGES

CONTRACTOR	PROJECT COORDINATOR
NAME	NAME
SIGNATURE	SIGNATURE
TITLE DATE	TITLE DATE

WESTCHESTER COUNTY, NEW YORK
DEPARTMENT OF PUBLIC WORKS AND TRANSPORTATION
DIVISION OF ENGINEERING

JACKSON AVENUE PUMPING STATION REHABILITATION
BRONX VALLEY SANITARY SEWER DISTRICT
TOWN OF GREENBURGH, NEW YORK

EROSION AND SEDIMENTATION CONTROL DETAILS AND NOTES

CONTRACT NUMBER	SHEET NUMBER
22–510	G–004

SHEET NO. 5 OF 55
SCALE: AS SHOWN
DATE: 06/01/23
DPW FILE NO. 202–02–G–30–0
REV. NO. 1

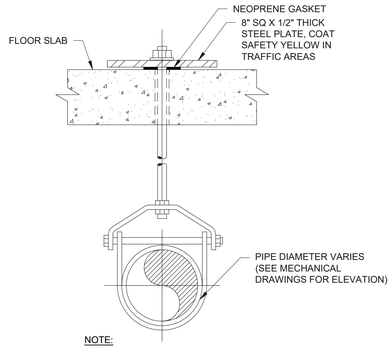

NOTE:

1. ALL MATERIALS INCLUDING FASTENERS AND HARDWARE SHALL BE TYPE 304 STAINLESS STEEL.

TYPE 'A' PIPE SUPPORT

NOT TO SCALE

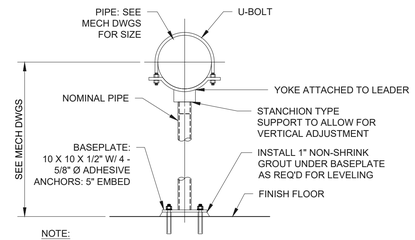

NOTE:

1. ALL MATERIALS INCLUDING FASTENERS AND HARDWARE SHALL BE TYPE 304 STAINLESS STEEL.

TYPE 'B' PIPE SUPPORT

NOT TO SCALE

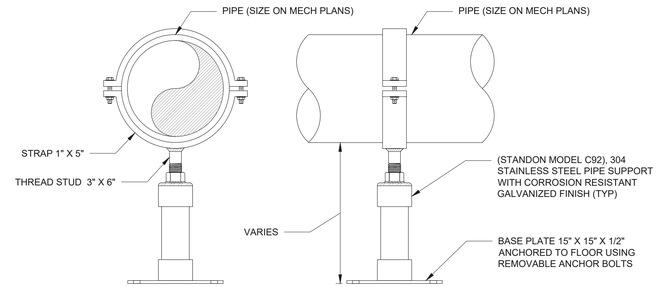

TYPE 'B-C' PIPE SUPPORT

NOT TO SCALE

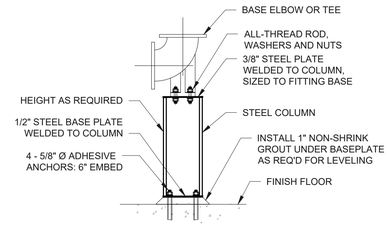

NOTE:

1. ALL FASTENERS AND HARDWARE SHALL BE TYPE 304 STAINLESS STEEL.
2. STEEL COLUMN SHALL BE COATED PER SPECIFICATION.

TYPE 'C' PIPE SUPPORT

NOT TO SCALE

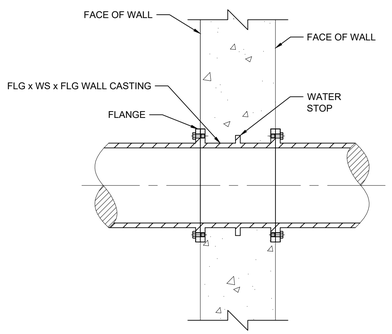

FLG x WS x FLG DIP WALL CASTING

NOT TO SCALE

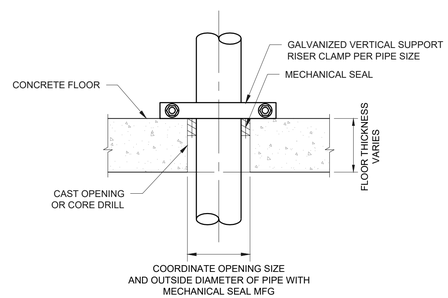

FLOOR PENETRATION - MECHANICAL SEAL

NOT TO SCALE

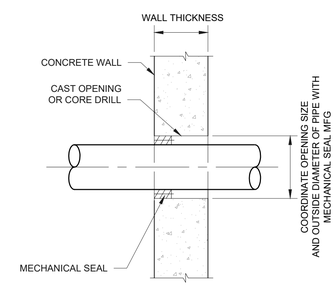

WALL PENETRATION - MECHANICAL SEAL

NOT TO SCALE

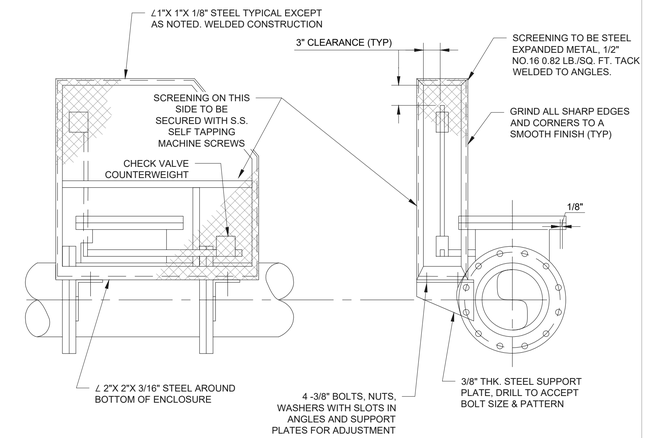

NOTES:

1. ENCLOSURES REQUIRED ON ALL COUNTERWEIGHTS IN THE DOWN POSITION THAT ARE 7'- 0" OR LESS IN HEIGHT ABOVE FIN. FLR.
2. SIZE OF ENCLOSURE TO BE VERIFIED WITH CHECK VALVES INSTALLED.
3. PAINT ALL SURFACES OF ENCLOSURE PER SPECIFICATION 09900.

COUNTERWEIGHT SAFETY ENCLOSURE

NOT TO SCALE

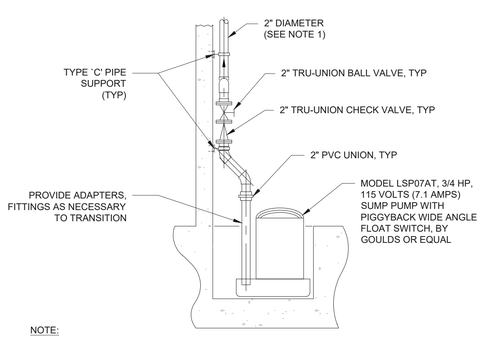

NOTE:

1. SUMP PUMP DISCHARGE PIPE, FITTINGS, AND VALVES SHALL BE SOLVENT WELDED PVC

SUMP PUMP - LIGHT DUTY SIMPLEX

NOT TO SCALE

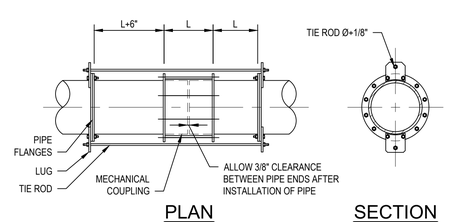

NOTES:

1. ONE TIE ROD PER LUG. LUGS EQUALLY SPACED AROUND PIPES.
2. PROVIDE TIE RODS FOR ALL MECHANICAL COUPLINGS AND FLANGE COUPLING ADAPTORS FOR PRESSURIZED PIPELINES IN ACCORDANCE WITH THE TIE ROD SCHEDULE INCLUDED IN THIS DETAIL.
3. MAXIMUM TEST PRESSURE: 150 PSIG

TIE ROD SCHEDULE

PIPE DIA (IN)	TIE RODS		LUG	
	No.	DIA (IN)	THICKNESS (IN)	No. OF FLG BOLTS PER LUG
4	2	5/8	1	2
6	2	3/4	1	2
8	2	3/4	1	2
10	3	7/8	1 1/4	2
12	3	7/8	1 1/4	2
14	3	1	1 1/4	2

DIP HARNESSED MECHANICAL COUPLING

NOT TO SCALE

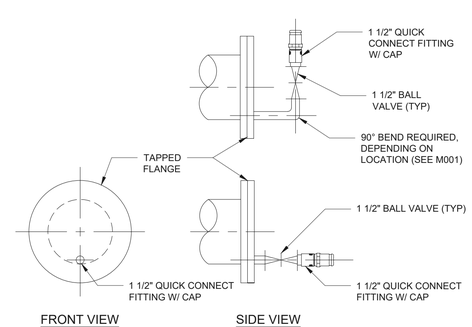

FLUSHING CONNECTION / PIPE DRAIN

NOT TO SCALE

EDR
Environmental Design & Research,
Landscape Architecture, Engineering & Environmental Services, D.P.C.
217 Montgomery Street, Suite 1100
Syracuse, New York 13202
a better environment P. 315.471.0688

REVISION NUMBER	DATE	MADE BY	APP'D BY	REVISION

RECORD DRAWING CERTIFICATION

☐ AS BUILT – CHANGES AS NOTED
☐ AS BUILT – NO CHANGES

CONTRACTOR	PROJECT COORDINATOR
NAME	NAME
SIGNATURE	SIGNATURE
TITLE DATE	TITLE DATE

WESTCHESTER COUNTY, NEW YORK
DEPARTMENT OF PUBLIC WORKS AND TRANSPORTATION
DIVISION OF ENGINEERING

JACKSON AVENUE PUMPING STATION REHABILITATION
BRONX VALLEY SANITARY SEWER DISTRICT
TOWN OF GREENBURGH, NEW YORK

MISCELLANEOUS DETAILS

CONTRACT NUMBER 22-510
SHEET NUMBER G-005
SHEET NO. 6 OF 55
SCALE: AS SHOWN
DATE: 06/01/23
DPW FILE NO. 202-02-G-31-0
REV. NO. 1

IN CHARGE OF MET
CHECKED BY MRY
MADE BY JAD

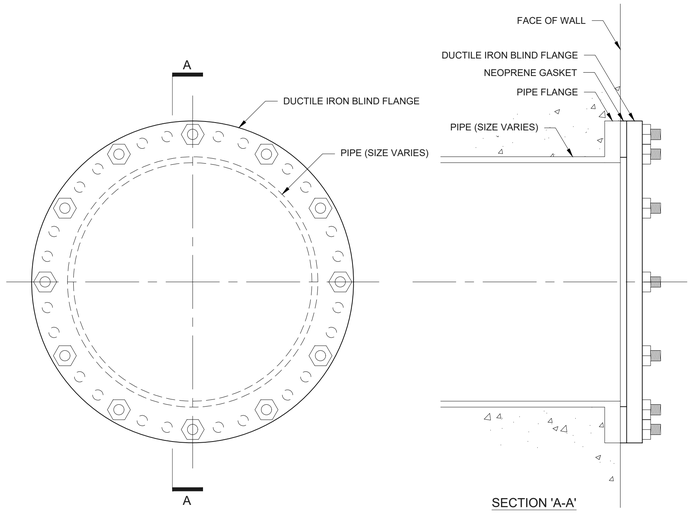

PIPE CLOSURE WALL PLATE

NOT TO SCALE

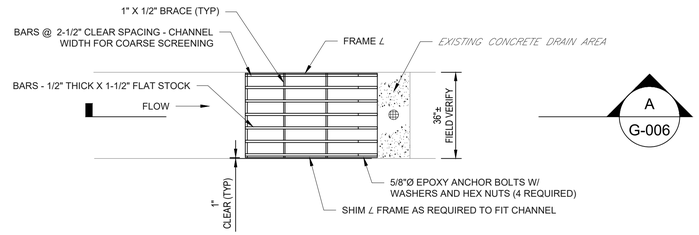

PLAN

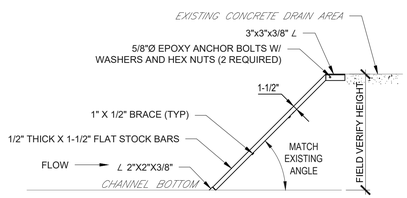

SECTION A

NOTES:

1. MATERIALS: BARS, PLATES, ANGLES SHALL BE 304 STAINLESS STEEL.
2. BAR SCREEN TO BE ALL WELDED CONSTRUCTION AND REMOVABLE FROM THE CHANNEL.
3. CONTRACTOR TO FURNISH TWO BAR SCREEN RAKES PER SPECIFICATIONS.
4. CONTRACTOR TO MATCH EXISTING BAR SCREEN ANGLE, CHANNEL DEPTH AND WIDTH FOR FABRICATION OF NEW SCREEN. FIELD VERIFICATION MEASUREMENTS NECESSARY PRIOR TO FABRICATION.

COARSE BAR SCREEN (JA-CBS)

NOT TO SCALE

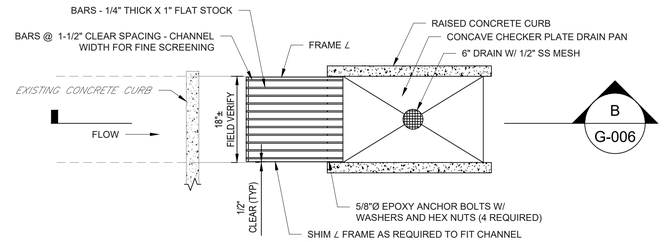

PLAN

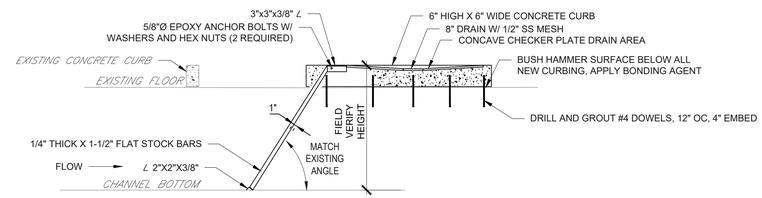

SECTION B

NOTES:

1. MATERIALS: BARS, PLATES, ANGLES SHALL BE 304 STAINLESS STEEL.
2. BAR SCREEN TO BE ALL WELDED CONSTRUCTION AND REMOVABLE FROM THE CHANNEL.
3. CONCAVE CHECKER PLATE DRAIN PAN FRAMING SHALL BE 2" X 2" WELDED ANGLE MATERIAL AND FASTENED TO CURB WITH 5/8" DIA. ANCHORS AND HARDWARE.
4. CONTRACTOR TO FURNISH TWO BAR SCREEN RAKES PER SPECIFICATIONS.
5. CONTRACTOR TO MATCH EXISTING BAR SCREENS ANGLE, CHANNEL DEPTH AND WIDTH FOR FABRICATION OF NEW SCREEN. FIELD VERIFICATION MEASUREMENTS NECESSARY PRIOR TO FABRICATION.
6. REFERENCE STRUCTURAL DRAWINGS FOR CONCRETE DETAILS.
7. THIS DETAIL SHOWS ONE FINE BAR SCREEN. FIELD VERIFY DIVIDING CURB BETWEEN CHANNEL.
8. FASTEN DRAIN PAN TO FRAMING WITH 1/2"-13 316 SS BUTTON HEAD HEX DRIVE SCREWS.

FINE BAR SCREENS (JA-FBS-1 & JA-FBS-2)

NOT TO SCALE

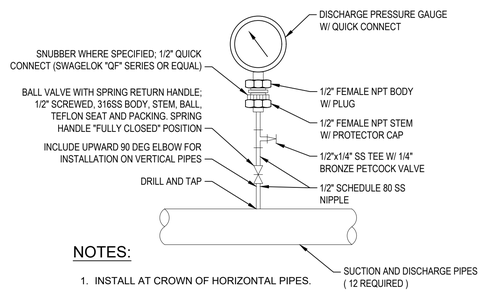

NOTES:

1. INSTALL AT CROWN OF HORIZONTAL PIPES.
2. INSTALLATION OF PRESSURE GAUGE SHOWN APPLIES TO HORIZONTAL OR VERTICAL PIPING ARRANGEMENTS.
3. USE LOW VOLUME FITTINGS.

PRESSURE GAUGE - LIQUID SERVICE

NOT TO SCALE

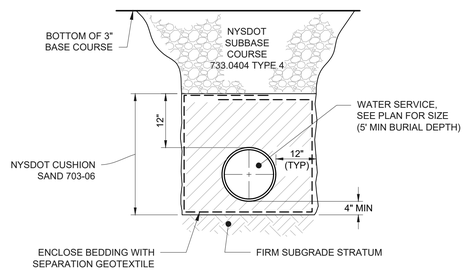

GENERAL TRENCHING NOTES:

- CONTRACTOR SHALL BE RESPONSIBLE FOR MEETING ALL APPLICABLE SAFETY CONDITIONS ALONG TRENCH.
- CONTRACTOR SHALL BE RESPONSIBLE FOR DETERMINING NECESSARY SIDE SLOPES, AND IF SHORING AND/OR A TRENCH SHIELD IS REQUIRED.
- ALL ROAD PAVEMENT RESTORATION SHALL BE COMPLETED AFTER WATER LINES AND SERVICES ARE INSTALLED AND TESTED.

COPPER WATER SERVICE TRENCH

NOT TO SCALE

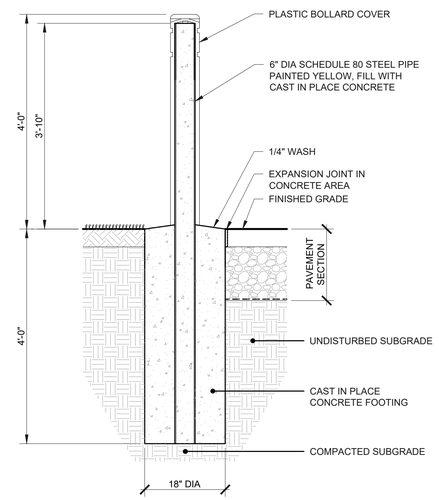

BOLLARD - STEEL PIPE

NOT TO SCALE

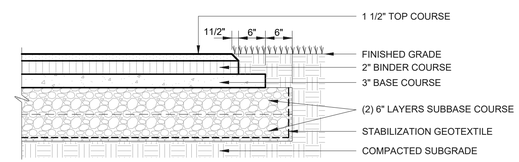

PAVED ACCESS AND PARKING AREA

Scale: NTS

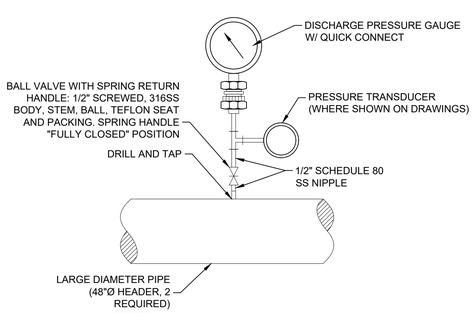

NOTES:

1. USE LOW VOLUME FITTINGS.
2. FOR USE ON LARGE DIAMETER PIPES

PRESSURE GAUGE - LIQUID SERVICE

NOT TO SCALE

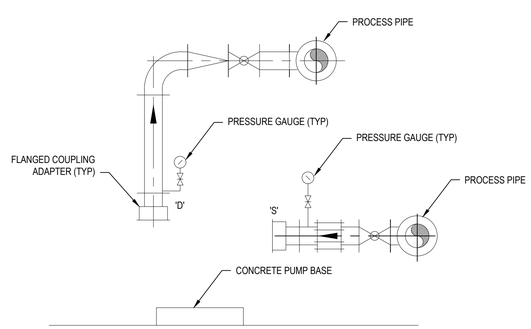

TYPICAL PRESSURE GAUGE LOCATION

NOT TO SCALE

IN CHARGE OF MET
CHECKED BY MRY
MADE BY JAD

MODIFICATION IS A VIOLATION OF CHAPTER 16, TITLE VIII, ARTICLE 145 § 7209.2 NYS EDUCATION LAW, UNLESS ACTING UNDER THE DIRECTION OF A LICENSED PROFESSIONAL ENGINEER. IF A DOCUMENT BEARING THE SEAL OF AN ENGINEER IS ALTERED, THE ALTERING ENGINEER SHALL AFFIX TO THE DOCUMENT THEIR SEAL AND THE NOTATION "ALTERED BY" FOLLOWED BY THEIR SIGNATURE AND THE DATE OF SUCH ALTERATION, AND A SPECIFIC DESCRIPTION OF THE ALTERATION.

STATE OF NEW YORK · MICHELE TAYLOR · 073737 · LICENSED PROFESSIONAL ENGINEER

EDR
a better environment

Environmental Design & Research,
Landscape Architecture, Engineering & Environmental Services, D.P.C.
217 Montgomery Street, Suite 1100
Syracuse, New York 13202
P. 315.471.0688

REVISION NUMBER	DATE	MADE BY	APP'D BY	REVISION

RECORD DRAWING CERTIFICATION

☐ AS BUILT – CHANGES AS NOTED
☐ AS BUILT – NO CHANGES

CONTRACTOR	PROJECT COORDINATOR
NAME	NAME
SIGNATURE	SIGNATURE
TITLE DATE	TITLE DATE

WESTCHESTER COUNTY, NEW YORK
DEPARTMENT OF PUBLIC WORKS AND TRANSPORTATION
DIVISION OF ENGINEERING

JACKSON AVENUE PUMPING STATION REHABILITATION
BRONX VALLEY SANITARY SEWER DISTRICT
TOWN OF GREENBURGH, NEW YORK

MISCELLANEOUS DETAILS

CONTRACT NUMBER	SHEET NUMBER
22–510	G–006

SHEET NO. 7 OF 55

SCALE: AS SHOWN
DATE: 06/01/23

DPW FILE NO. 202–02–G–32–0 REV. NO. 1

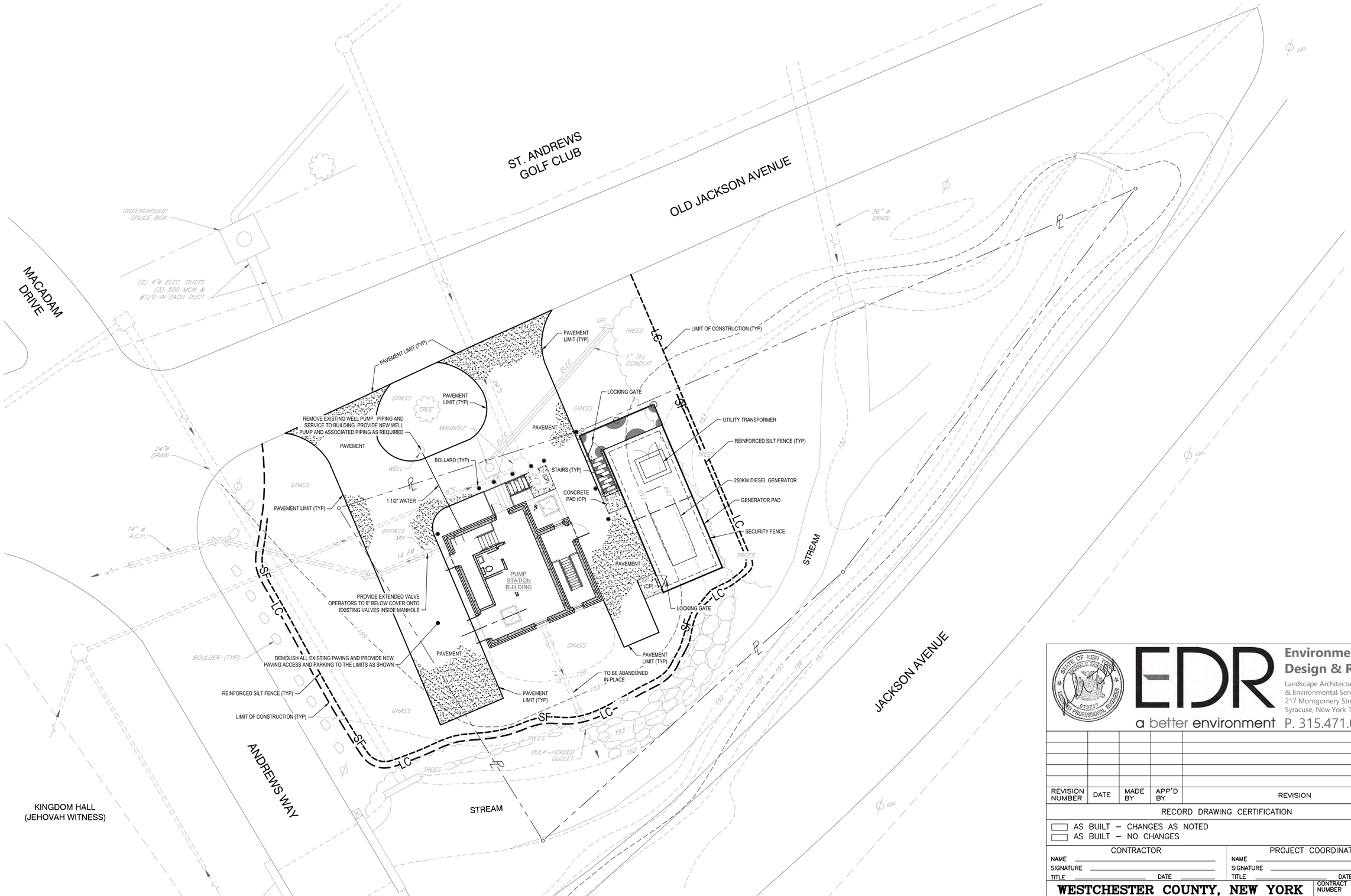

IN CHARGE OF MRY
CHECKED BY MRY
MADE BY JAD

PLAN

SCALE: 1" = 10'

0 5 10 15 20'
SCALE 1"=10' AT ORIGINAL SIZE

MODIFICATION IS A VIOLATION OF CHAPTER 16, TITLE VIII, ARTICLE 145 § 7209.2 NYS EDUCATION LAW, UNLESS ACTING UNDER THE DIRECTION OF A LICENSED PROFESSIONAL ENGINEER. IF A DOCUMENT BEARING THE SEAL OF AN ENGINEER IS ALTERED, THE ALTERING ENGINEER SHALL AFFIX TO THE DOCUMENT THEIR SEAL AND THE NOTATION "ALTERED BY" FOLLOWED BY THEIR SIGNATURE AND THE DATE OF SUCH ALTERATION, AND A SPECIFIC DESCRIPTION OF THE ALTERATION.

STATE OF NEW YORK · JOSEPH E. TAUBER · 073737 · LICENSED PROFESSIONAL ENGINEER

EDR
a better environment

Environmental Design & Research,
Landscape Architecture, Engineering & Environmental Services, D.P.C.
217 Montgomery Street, Suite 1100
Syracuse, New York 13202
P. 315.471.0688

REVISION NUMBER	DATE	MADE BY	APP'D BY	REVISION

RECORD DRAWING CERTIFICATION

☐ AS BUILT – CHANGES AS NOTED
☐ AS BUILT – NO CHANGES

CONTRACTOR	PROJECT COORDINATOR
NAME	NAME
SIGNATURE	SIGNATURE
TITLE DATE	TITLE DATE

WESTCHESTER COUNTY, NEW YORK
DEPARTMENT OF PUBLIC WORKS AND TRANSPORTATION
DIVISION OF ENGINEERING

JACKSON AVENUE PUMPING STATION REHABILITATION
BRONX VALLEY SANITARY SEWER DISTRICT
TOWN OF GREENBURGH, NEW YORK
SITE PLAN

CONTRACT NUMBER 22-510
SHEET NUMBER G-007
SHEET NO. 8 OF 55
SCALE: AS SHOWN
DATE: 06/01/23
DPW FILE NO. 202-02-G-33-0
REV. NO. 1

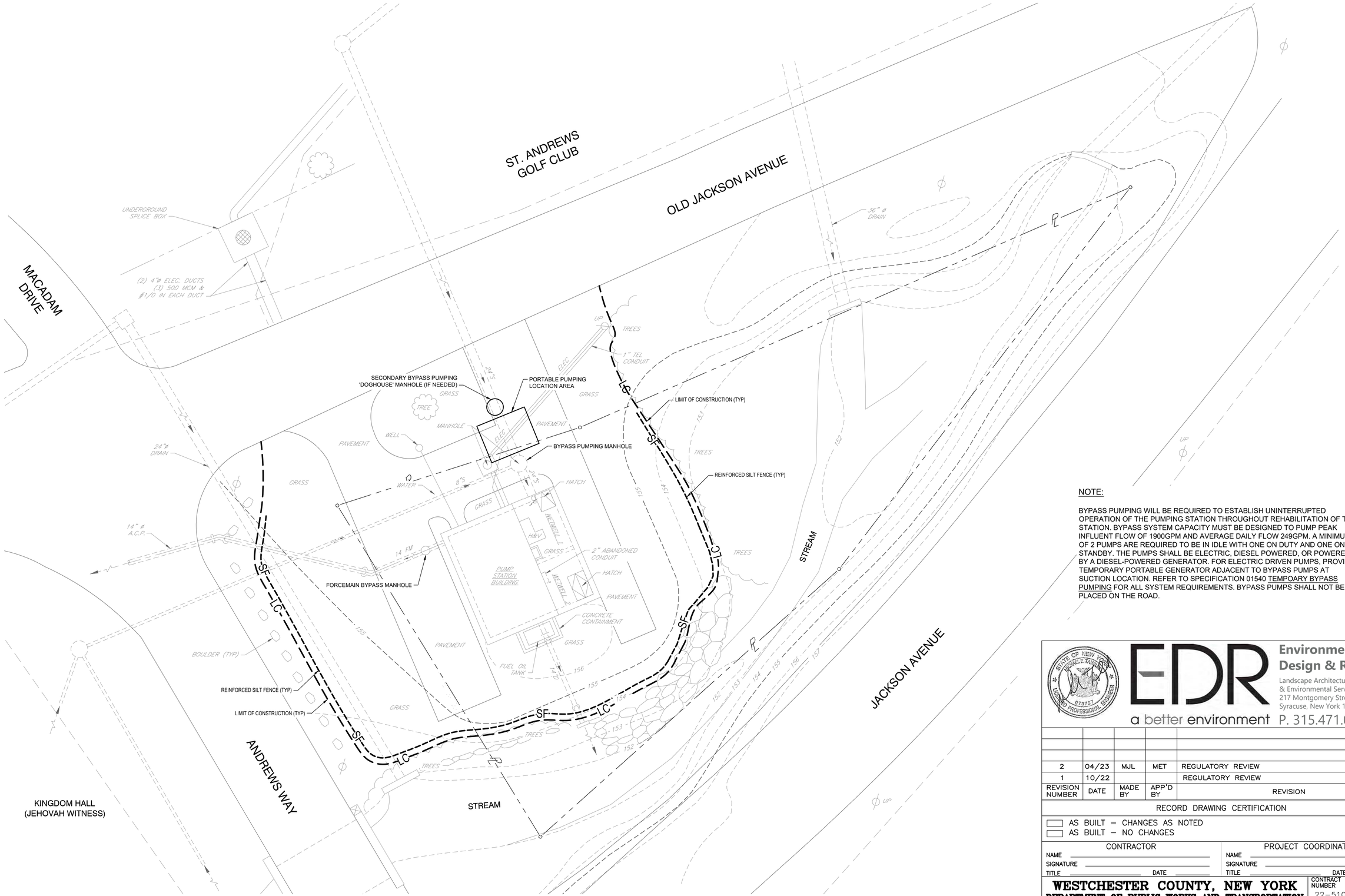

NOTE:

BYPASS PUMPING WILL BE REQUIRED TO ESTABLISH UNINTERRUPTED OPERATION OF THE PUMPING STATION THROUGHOUT REHABILITATION OF THE STATION. BYPASS SYSTEM CAPACITY MUST BE DESIGNED TO PUMP PEAK INFLUENT FLOW OF 1900GPM AND AVERAGE DAILY FLOW 249GPM. A MINIMUM OF 2 PUMPS ARE REQUIRED TO BE IN IDLE WITH ONE ON DUTY AND ONE ON STANDBY. THE PUMPS SHALL BE ELECTRIC, DIESEL POWERED, OR POWERED BY A DIESEL-POWERED GENERATOR. FOR ELECTRIC DRIVEN PUMPS, PROVIDE TEMPORARY PORTABLE GENERATOR ADJACENT TO BYPASS PUMPS AT SUCTION LOCATION. REFER TO SPECIFICATION 01540 TEMPOARY BYPASS PUMPING FOR ALL SYSTEM REQUIREMENTS. BYPASS PUMPS SHALL NOT BE PLACED ON THE ROAD.

EDR
Environmental Design & Research,
Landscape Architecture, Engineering & Environmental Services, D.P.C.
217 Montgomery Street, Suite 1100
Syracuse, New York 13202
a better environment P. 315.471.0688

REVISION NUMBER	DATE	MADE BY	APP'D BY	REVISION
2	04/23	MJL	MET	REGULATORY REVIEW
1	10/22			REGULATORY REVIEW

RECORD DRAWING CERTIFICATION

☐ AS BUILT – CHANGES AS NOTED
☐ AS BUILT – NO CHANGES

CONTRACTOR
NAME
SIGNATURE
TITLE DATE

PROJECT COORDINATOR
NAME
SIGNATURE
TITLE DATE

WESTCHESTER COUNTY, NEW YORK
DEPARTMENT OF PUBLIC WORKS AND TRANSPORTATION
DIVISION OF ENGINEERING

JACKSON AVENUE PUMPING STATION REHABILITATION
BRONX VALLEY SANITARY SEWER DISTRICT
TOWN OF GREENBURGH, NEW YORK
BYPASS PUMPING PLAN

CONTRACT NUMBER 22-510
SHEET NUMBER G-008
SHEET NO. 9 OF 55
SCALE: AS SHOWN
DATE: 10/12/2022
DPW FILE NO. 202-02-G-34-0
REV. NO. 1

IN CHARGE OF MET
CHECKED BY MRY
MADE BY JAD

PLAN
SCALE: 1" = 10'-0"

0 5 10 15 20'
SCALE 1"=10' AT ORIGINAL SIZE

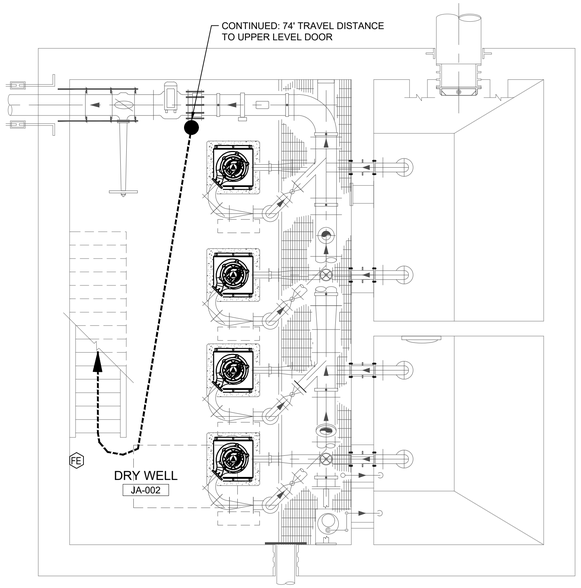

LOWER LEVEL MEANS OF EGRESS PLAN

SCALE: 1/4" = 1'-0"

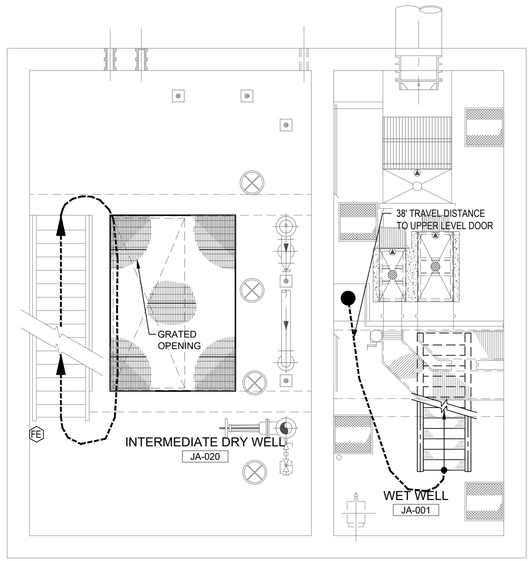

INTERMEDIATE LEVEL MEANS OF EGRESS PLAN

SCALE: 1/4" = 1'-0"

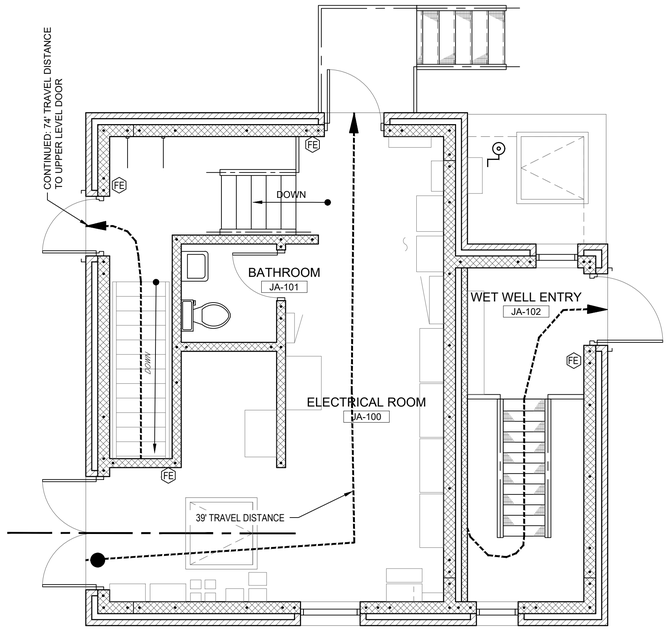

UPPER LEVEL MEANS OF EGRESS PLAN

SCALE: 1/4" = 1'-0"

LEGEND:

= TRAVEL DISTANCE

(FE) = FIRE EXTINGUISHER

MATERIALS LEGEND:

- CONCRETE MASONRY
- BLOCKING OR FRAMING, CONTINUOUS
- BLOCKING OR SHIM, NOT CONTINUOUS
- PLYWOOD OR LAMINATED VENEER LUMBER
- GYPSUM DRYWALL
- RIGID INSULATION
- FIBERGLASS BATT INSULATION
- EARTH
- COMPACTED BACKFILL
- CONCRETE
- GROUT
- FERROUS OR NON-FERROUS METAL IN SECTION

DRAWING SYMBOLS:

- DB100 — DOOR NUMBER
- BLOWER ROOM / DB-100 — ROOM NAME & NUMBER
- LV-1 — LOUVER NUMBER
- FE — FIRE EXTINGUISHER
- ? / - — SECTION
- PARTIAL PLAN OR DETAIL

BUILDING CODE SUMMARY
2020 NEW YORK STATE IBC
JACKSON AVE PUMP STATION

TOPIC	ALLOWED OR REQUIRED PER BUILDING CODE OF NEW YORK STATE 2020
OCCUPANCY CLASSIFICATION (CHAPTER 3)	LOW-HAZARD FACTORY INDUSTRIAL, GROUP F-2
CONSTRUCTION TYPE	CONSTRUCTION TYPE IIA PER TABLE 601
BUILDING HEIGHT AND AREA	ALLOWABLE BUILDING HEIGHT: TABLE 504.3 = 55' ALLOWABLE NUMBER OF STORIES: TABLE 504.4 = 3 ALLOWABLE AREA IN SQUARE FEET: TABLE 506.02 = 23,000
BUILDING AREA	752 SQ. FT.
OCCUPANT LOADS TABLE 1004.5: MECHANICAL EQUIPMENT ROOM = 1/300 SQ.FT.	ELECTRIC ROOM = 425 SQ. FT. = 2 OCCUPANTS WET WELL = 101 SQ. FT. = 1 OCCUPANTS INTERMEDIATE DRY WELL = 381 SQ. FT. = 2 OCCUPANTS DRY WELL = 275 SQ. FT. = 1 OCCUPANTS
PROTECTION OF CORRIDOR	N/A
NUMBER OF EXITS REQUIRED	OCCUPANT LOAD IS LESS THAN 49 ON EACH FLOOR OF THE BUILDING (TABLES 1006.3.3(2), A SINGLE EXIT WITH A TRAVEL DISTANCE LESS THAN 75 FEET.
ACCESSIBILITY	NOT APPLICABLE: ALL SPACES IN THIS BUILDING QUALIFY AS "MACHINERY ROOMS" AS DEFINED IN THE 2010 ADAAG
FIRE SEPARATION REQUIREMENTS	NONE REQUIRED
AUTOMATIC FIRE SUPPRESSION OR EXTINGUISHING SYSTEM REQUIREMENTS	NONE REQUIRED

0 2'-0" 4'-0" 6'-0" 8'-0"
SCALE 1/4"=1'-0" AT ORIGINAL SIZE

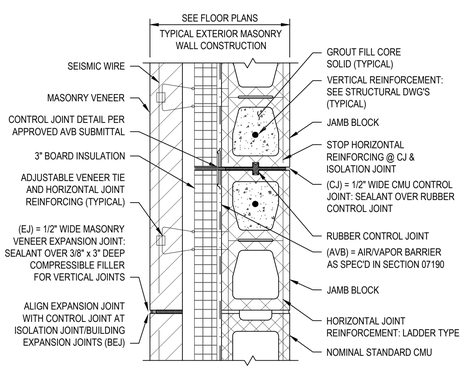

1 / A-001 CAVITY WALL: PLAN DETAIL OF EXPANSION AND CONTROL JOINTS

NOT TO SCALE

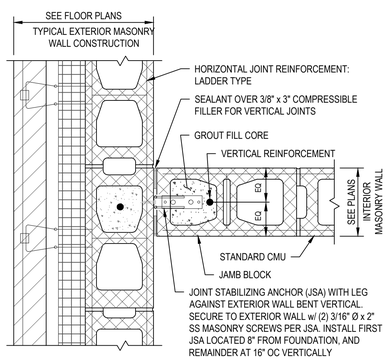

2 / A-001 CAVITY WALL: PLAN DETAIL OF TYPICAL INTERIOR WALL CONNECTION TO EXTERIOR WALL

NOT TO SCALE

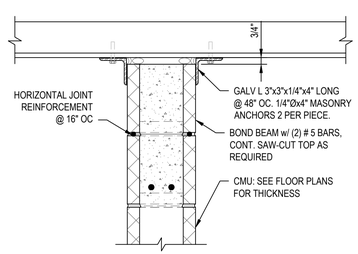

3 / A-001 TYPICAL TOP OF INTERIOR CMU WALL

NOT TO SCALE

ENERGY CODE SUMMARY
2020 ENERGY
CONSERVATION CODE OF
NEW YORK STATE

JACKSON AVE PUMP STATION

CLIMATE ZONE	ZONE 4	AS DESIGNED
ROOFS:		
INSULATION ENTIRELY ABOVE ROOF DECK	R-30ci	
METAL BUILDINGS	R-19+R-11 LS	
ATTICS AND OTHERS	R-38	R-38
WALLS ABOVE GRADE:		
MASSG	R-9.5ci	R-15ci
METAL BUILDINGS	R-13+R-13ci	
METAL FRAMED	R-13+R-7.5ci	
WOOD FRAMED	R-13+R-3.8ci R-20	
WALLS BELOW GRADE:		
BELOW GRADE WALLS	R-7.5ci	EXISTING
FLOORS OVER UNCONDITIONED SPACES :		
MASSE	R-10ci	
JOIST / FRAMING	R-30	
SLAB-ON-GRADE (UNHEATED SLABS)	R-10-24" BELOW	
SLAB-ON-GRADE (HEATED SLABS)	R-15-24" BELOW +R-5 FULL SLAB	
VERTICAL FENESTRATION		
FIXED	U-0.38	
OPERABLE	U-0.45	
ENTRANCE DOORS	U-0.77	U-0.017
SHGC		
PF < 0.2	U-0.36	
0.2 ≤ PF ≤ 0.5	U-0.43	
PF ≥ 0.5	U-0.58	
DOORS (NON-SWING)	U-0.211	
SKYLIGHTS	U-0.50	
SHGC	U-0.40	

ci = Continuous insulation, NR = No Requirement, LS = Liner System.
PF = Projection Factor.
Skylight area shall be not greater than 3 percent of the gross roof area.

EDR
Environmental Design & Research,
Landscape Architecture, Engineering & Environmental Services, D.P.C.
217 Montgomery Street, Suite 1100
Syracuse, New York 13202
a better environment P. 315.471.0688

REVISION NUMBER	DATE	MADE BY	APP'D BY	REVISION

RECORD DRAWING CERTIFICATION

☐ AS BUILT – CHANGES AS NOTED
☐ AS BUILT – NO CHANGES

CONTRACTOR	PROJECT COORDINATOR
NAME	NAME
SIGNATURE	SIGNATURE
TITLE DATE	TITLE DATE

IN CHARGE OF MET
CHECKED BY RRS
MADE BY MJS

MODIFICATION IS A VIOLATION OF CHAPTER 16, TITLE VIII, ARTICLE 145 § 7209.2 NYS EDUCATION LAW, UNLESS ACTING UNDER THE DIRECTION OF A LICENSED PROFESSIONAL ENGINEER. IF A DOCUMENT BEARING THE SEAL OF AN ENGINEER IS ALTERED, THE ALTERING ENGINEER SHALL AFFIX TO THE DOCUMENT THEIR SEAL AND THE NOTATION "ALTERED BY" FOLLOWED BY THEIR SIGNATURE AND THE DATE OF SUCH ALTERATION, AND A SPECIFIC DESCRIPTION OF THE ALTERATION.

WESTCHESTER COUNTY, NEW YORK
DEPARTMENT OF PUBLIC WORKS AND TRANSPORTATION
DIVISION OF ENGINEERING

JACKSON AVENUE PUMPING STATION REHABILITATION
BRONX VALLEY SANITARY SEWER DISTRICT
TOWN OF GREENBURGH, NEW YORK
CODE SUMMARY PLANS / MISCELLANEOUS DETAILS

CONTRACT NUMBER 22–510
SHEET NUMBER A–001
SHEET NO. 10 OF 55
SCALE: AS SHOWN
DATE: 06/01/23
DPW FILE NO. 202–02–A–35–0
REV. NO. 0

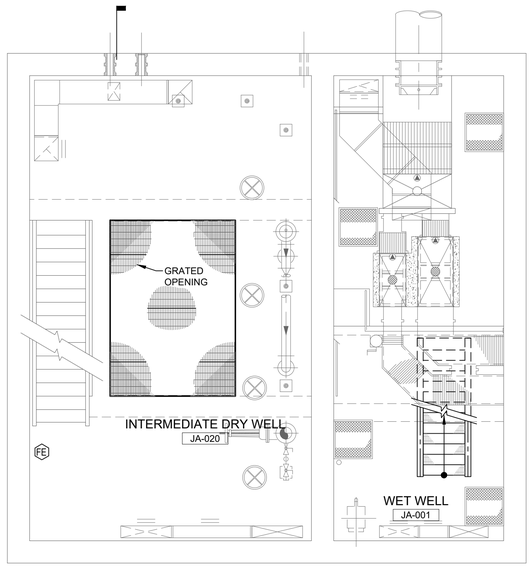

INTERMEDIATE LEVEL PLAN

SCALE: 1/4" = 1'-0"

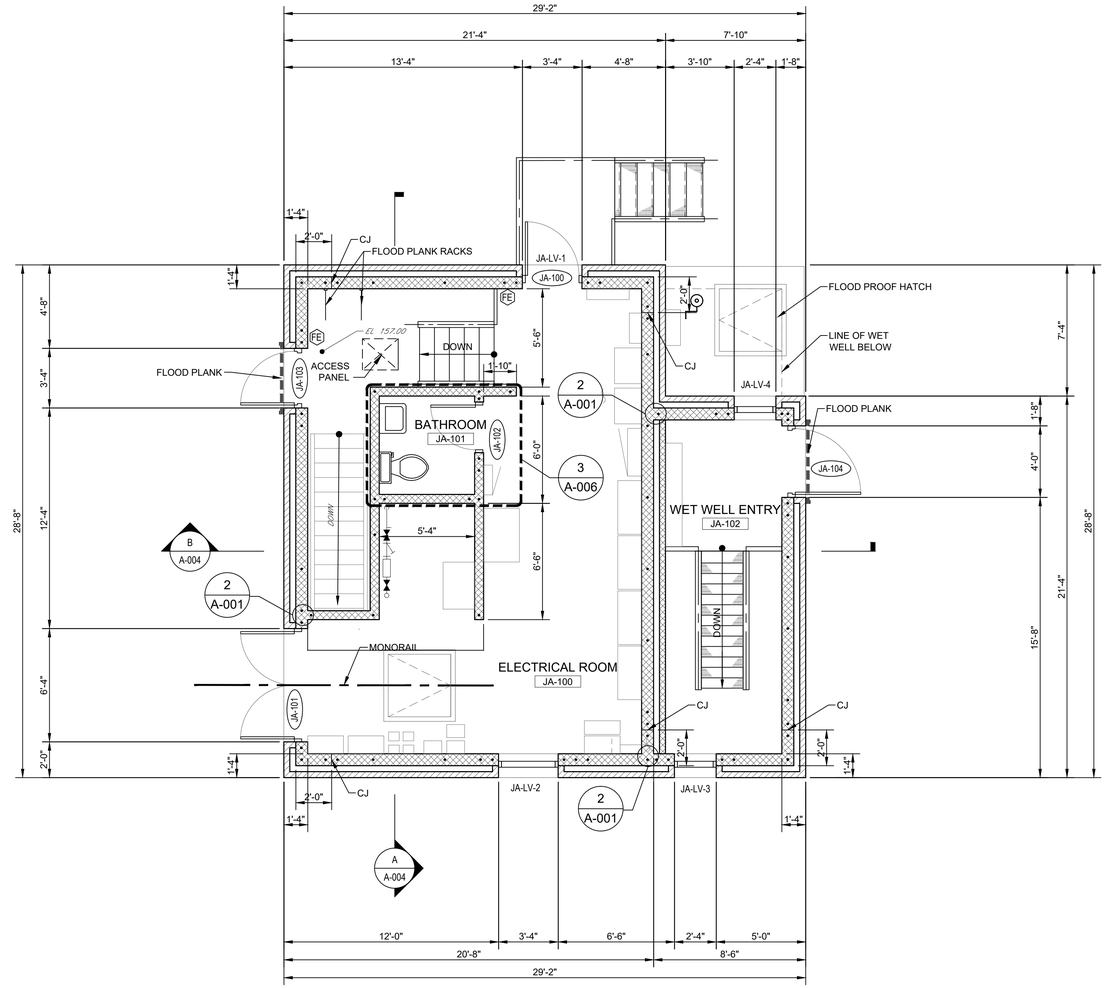

UPPER LEVEL PLAN

SCALE: 1/4" = 1'-0"

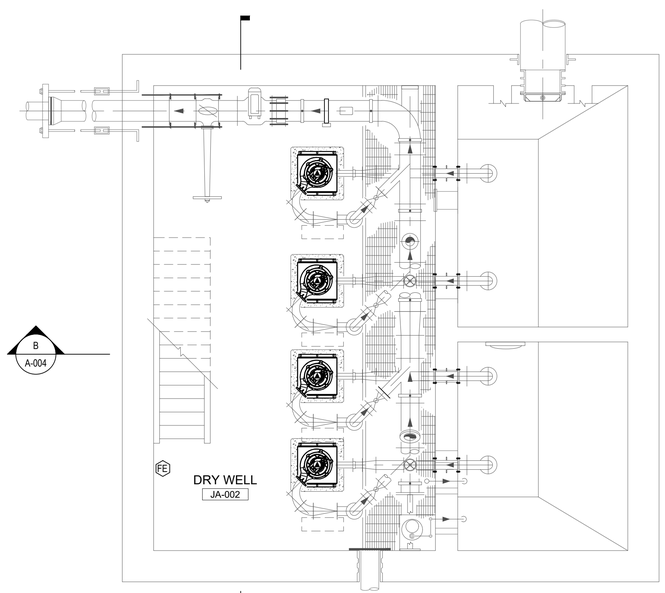

LOWER LEVEL PLAN

SCALE: 1/4" = 1'-0"

0 2'-0" 4'-0" 6'-0" 8'-0"

SCALE 1/4"=1'-0" AT ORIGINAL SIZE

IN CHARGE OF MET

CHECKED BY RRS

MADE BY MJS

MODIFICATION IS A VIOLATION OF CHAPTER 16, TITLE VIII, ARTICLE 145 § 7209.2 NYS EDUCATION LAW, UNLESS ACTING UNDER THE DIRECTION OF A LICENSED PROFESSIONAL ENGINEER. IF A DOCUMENT BEARING THE SEAL OF AN ENGINEER IS ALTERED, THE ALTERING ENGINEER SHALL AFFIX TO THE DOCUMENT THEIR SEAL AND THE NOTATION "ALTERED BY" FOLLOWED BY THEIR SIGNATURE AND THE DATE OF SUCH ALTERATION, AND A SPECIFIC DESCRIPTION OF THE ALTERATION.

STATE OF NEW YORK · MICHAEL E. TAYLOR · 073757 · LICENSED PROFESSIONAL ENGINEER

EDR a better environment

Environmental Design & Research,
Landscape Architecture, Engineering & Environmental Services, D.P.C.
217 Montgomery Street, Suite 1100
Syracuse, New York 13202
P. 315.471.0688

REVISION NUMBER	DATE	MADE BY	APP'D BY	REVISION

RECORD DRAWING CERTIFICATION

☐ AS BUILT – CHANGES AS NOTED
☐ AS BUILT – NO CHANGES

CONTRACTOR	PROJECT COORDINATOR
NAME	NAME
SIGNATURE	SIGNATURE
TITLE DATE	TITLE DATE

WESTCHESTER COUNTY, NEW YORK
DEPARTMENT OF PUBLIC WORKS AND TRANSPORTATION
DIVISION OF ENGINEERING

JACKSON AVENUE PUMPING STATION REHABILITATION
BRONX VALLEY SANITARY SEWER DISTRICT
TOWN OF GREENBURGH, NEW YORK
UPPER LEVEL & INTERMEDIATE LEVEL PLANS

CONTRACT NUMBER	SHEET NUMBER
22–510	A–002

SHEET NO. 11 OF 55

SCALE: AS SHOWN
DATE: 06/01/23

DPW FILE NO.	REV. NO.
202–02–A–36–0	0

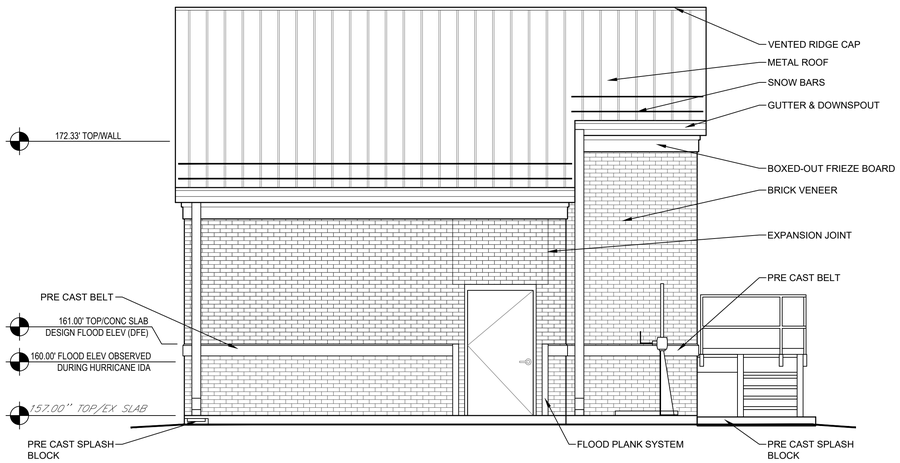

EAST SIDE ELEVATION

SCALE: 1/4" = 1'-0"

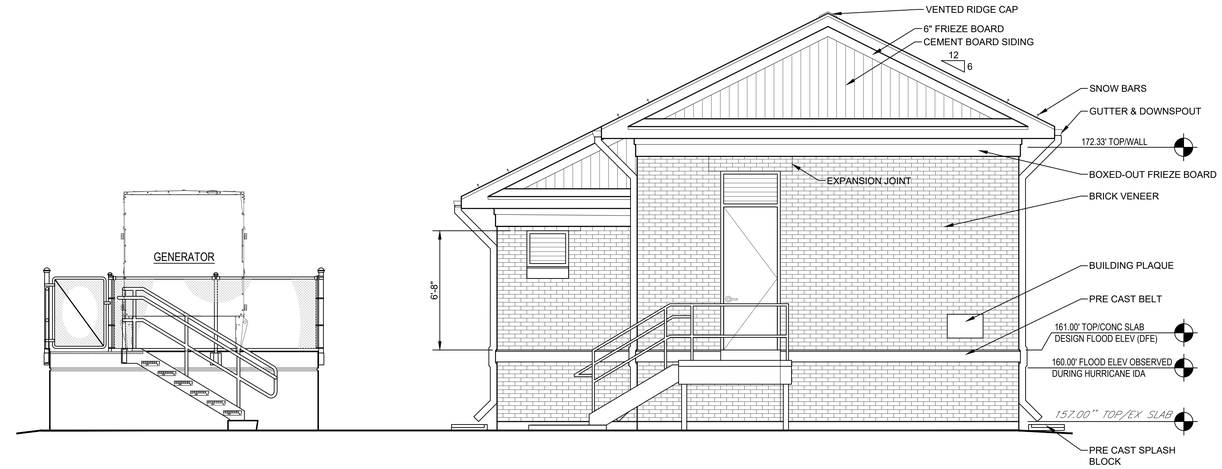

NORTH SIDE ELEVATION

SCALE: 1/4" = 1'-0"

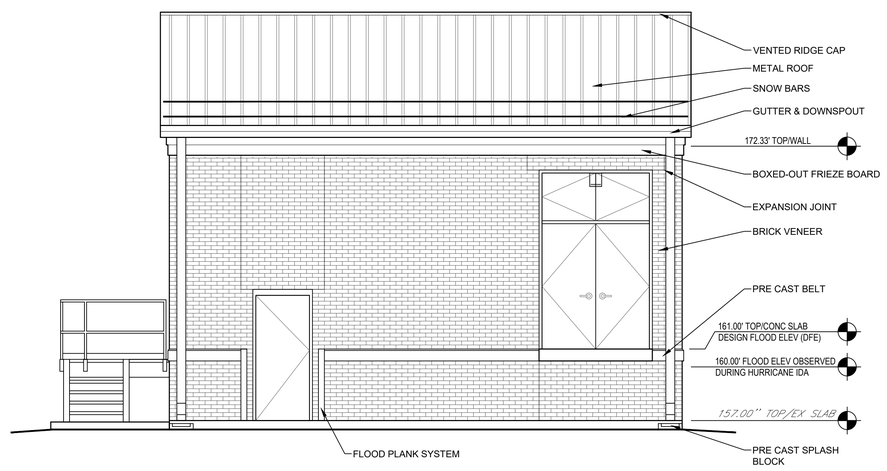

WEST SIDE ELEVATION

SCALE: 1/4" = 1'-0"

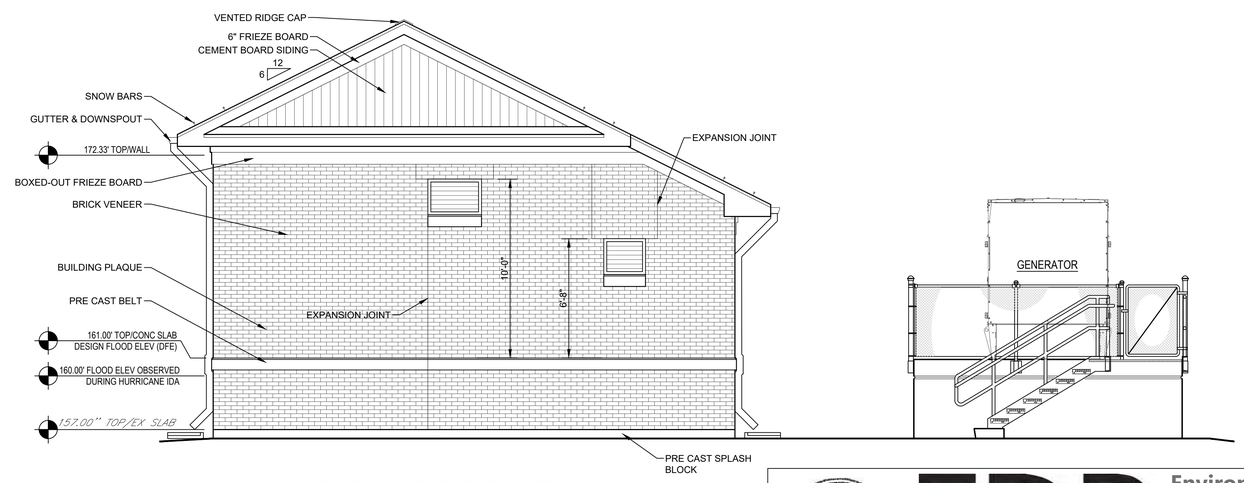

SOUTH SIDE ELEVATION

SCALE: 1/4" = 1'-0"

0 2'-0" 4'-0" 6'-0" 8'-0"

SCALE 1/4"=1'-0" AT ORIGINAL SIZE

MODIFICATION IS A VIOLATION OF CHAPTER 16, TITLE VIII, ARTICLE 145 § 7209.2 NYS EDUCATION LAW, UNLESS ACTING UNDER THE DIRECTION OF A LICENSED PROFESSIONAL ENGINEER. IF A DOCUMENT BEARING THE SEAL OF AN ENGINEER IS ALTERED, THE ALTERING ENGINEER SHALL AFFIX TO THE DOCUMENT THEIR SEAL AND THE NOTATION "ALTERED BY" FOLLOWED BY THEIR SIGNATURE AND THE DATE OF SUCH ALTERATION, AND A SPECIFIC DESCRIPTION OF THE ALTERATION.

EDR
Environmental Design & Research,
Landscape Architecture, Engineering & Environmental Services, D.P.C.
217 Montgomery Street, Suite 1100
Syracuse, New York 13202
a better environment P. 315.471.0688

STATE OF NEW YORK · MICHAEL E. TAYLOR · 073757 · LICENSED PROFESSIONAL ENGINEER

REVISION NUMBER	DATE	MADE BY	APP'D BY	REVISION

RECORD DRAWING CERTIFICATION

☐ AS BUILT – CHANGES AS NOTED
☐ AS BUILT – NO CHANGES

CONTRACTOR	PROJECT COORDINATOR
NAME	NAME
SIGNATURE	SIGNATURE
TITLE DATE	TITLE DATE

WESTCHESTER COUNTY, NEW YORK
DEPARTMENT OF PUBLIC WORKS AND TRANSPORTATION
DIVISION OF ENGINEERING

JACKSON AVENUE PUMPING STATION REHABILITATION
BRONX VALLEY SANITARY SEWER DISTRICT
TOWN OF GREENBURGH, NEW YORK
BUILDING ELEVATIONS

CONTRACT NUMBER	SHEET NUMBER
22–510	A–003

SHEET NO. 12 OF 55

SCALE: AS SHOWN
DATE: 06/01/23

DPW FILE NO. 202–02–A–37–0
REV. NO. 0

IN CHARGE OF MET
CHECKED BY RRS
MADE BY MJS

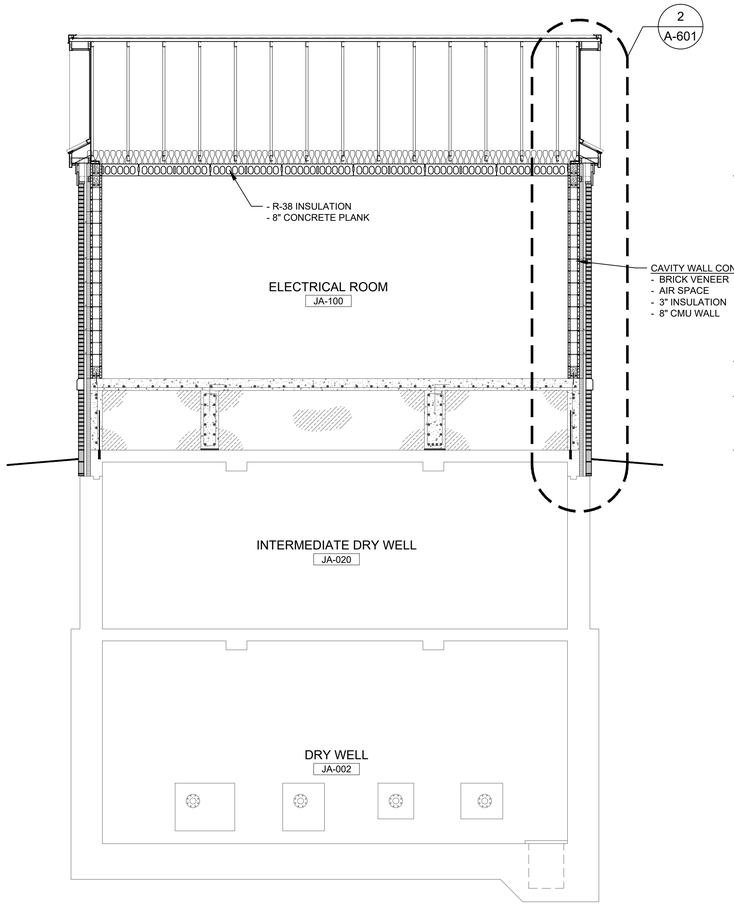

A A-601 BUILDING SECTION
SCALE: 1/4" = 1'-0"

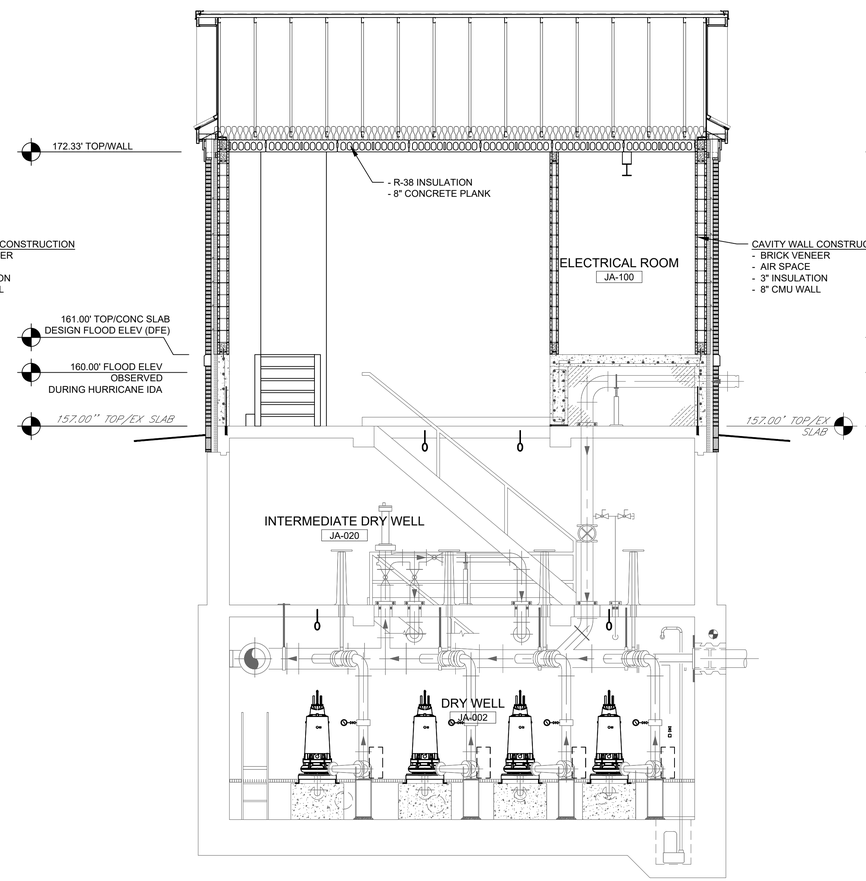

B A-601 BUILDING SECTION
SCALE: 1/4" = 1'-0"

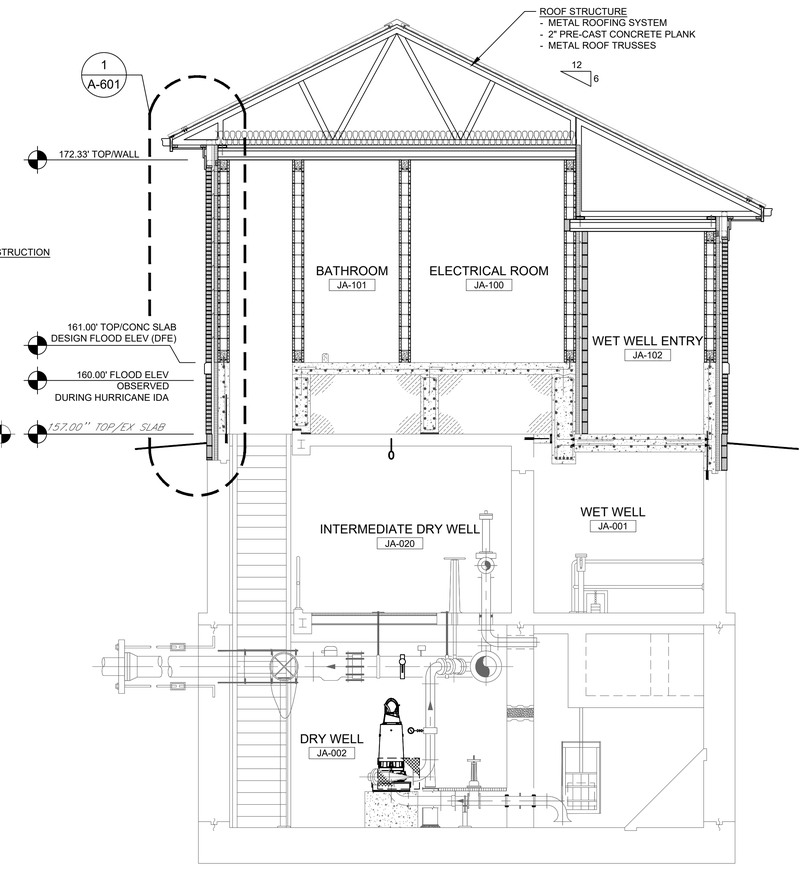

C A-601 BUILDING SECTION
SCALE: 1/4" = 1'-0"

0 2'-0" 4'-0" 6'-0" 8'-0"
SCALE 1/4"=1'-0" AT ORIGINAL SIZE

MODIFICATION IS A VIOLATION OF CHAPTER 16, TITLE VIII, ARTICLE 145 § 7209.2 NYS EDUCATION LAW, UNLESS ACTING UNDER THE DIRECTION OF A LICENSED PROFESSIONAL ENGINEER. IF A DOCUMENT BEARING THE SEAL OF AN ENGINEER IS ALTERED, THE ALTERING ENGINEER SHALL AFFIX TO THE DOCUMENT THEIR SEAL AND THE NOTATION "ALTERED BY" FOLLOWED BY THEIR SIGNATURE AND THE DATE OF SUCH ALTERATION, AND A SPECIFIC DESCRIPTION OF THE ALTERATION.

EDR
Environmental Design & Research,
Landscape Architecture, Engineering & Environmental Services, D.P.C.
217 Montgomery Street, Suite 1100
Syracuse, New York 13202
a better environment P. 315.471.0688

REVISION NUMBER	DATE	MADE BY	APP'D BY	REVISION

RECORD DRAWING CERTIFICATION

☐ AS BUILT – CHANGES AS NOTED
☐ AS BUILT – NO CHANGES

CONTRACTOR	PROJECT COORDINATOR
NAME	NAME
SIGNATURE	SIGNATURE
TITLE DATE	TITLE DATE

WESTCHESTER COUNTY, NEW YORK
DEPARTMENT OF PUBLIC WORKS AND TRANSPORTATION
DIVISION OF ENGINEERING

JACKSON AVENUE PUMPING STATION REHABILITATION
BRONX VALLEY SANITARY SEWER DISTRICT
TOWN OF GREENBURGH, NEW YORK
BUILDING SECTIONS

CONTRACT NUMBER 22–510
SHEET NUMBER A–004
SHEET NO. 13 OF 55
SCALE: AS SHOWN
DATE: 06/01/23
DPW FILE NO. 202–02–A–38–0
REV. NO. 0

IN CHARGE OF MET
CHECKED BY RRS
MADE BY MJS

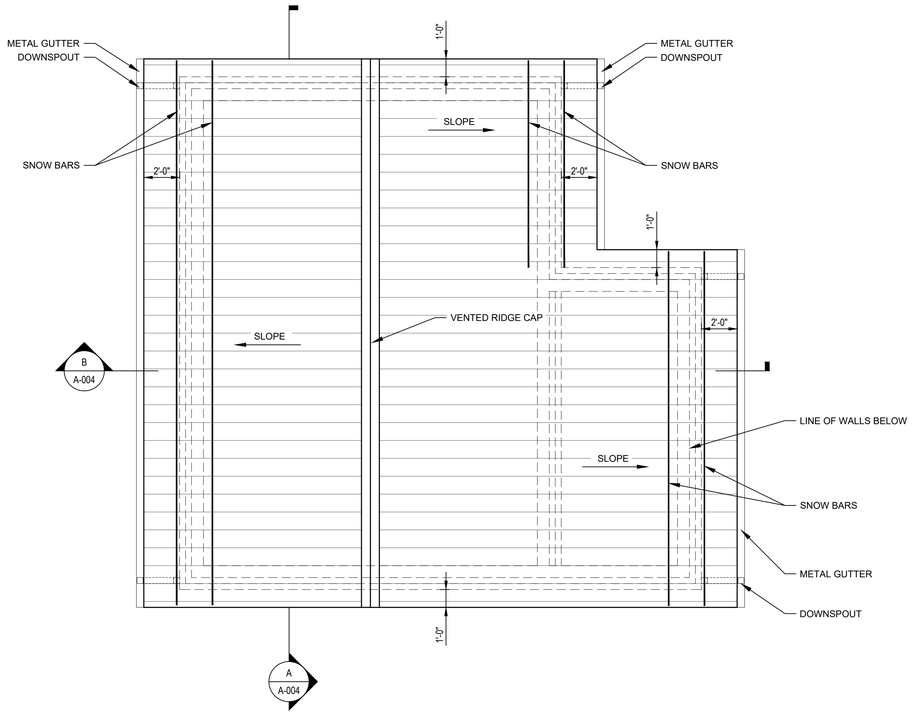

ROOF PLAN

SCALE: 1/4" = 1'-0"

ALL TRUSSES TO BE DESIGNED BY MANUFACTURER.

1. GRIDER TRUSS
2. GABLE END TRUSS
3. STANDARD TRUSS @ 24" OC
4. CRICKET: 2x6 FRAMING @ 16" OC
5. CENTER LINE OF 8" TUBE SUPPORT; TRUSS BEARING
6. ATTIC ACCESS PANEL AT CEILING

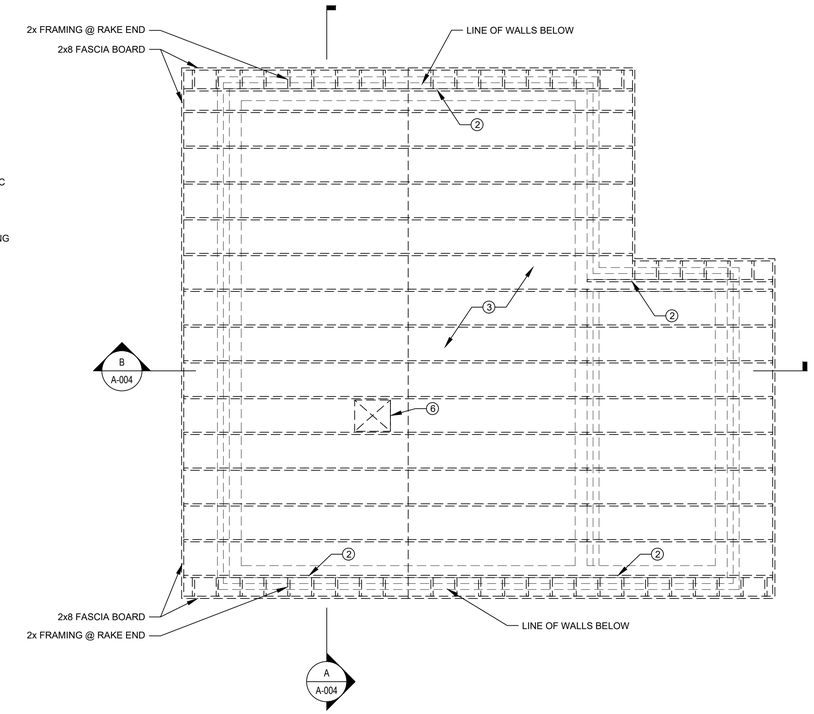

ROOF FRAMING PLAN

SCALE: 1/4" = 1'-0"

EDR
Environmental Design & Research,
Landscape Architecture, Engineering & Environmental Services, D.P.C.
217 Montgomery Street, Suite 1100
Syracuse, New York 13202
a better environment P. 315.471.0688

REVISION NUMBER	DATE	MADE BY	APP'D BY	REVISION

RECORD DRAWING CERTIFICATION

☐ AS BUILT – CHANGES AS NOTED
☐ AS BUILT – NO CHANGES

CONTRACTOR	PROJECT COORDINATOR
NAME	NAME
SIGNATURE	SIGNATURE
TITLE DATE	TITLE DATE

WESTCHESTER COUNTY, NEW YORK
DEPARTMENT OF PUBLIC WORKS AND TRANSPORTATION
DIVISION OF ENGINEERING

JACKSON AVENUE PUMPING STATION REHABILITATION
BRONX VALLEY SANITARY SEWER DISTRICT
TOWN OF GREENBURGH, NEW YORK
ROOF PLAN / ROOF FRAMING PLAN / DETAILS

CONTRACT NUMBER	SHEET NUMBER
22–510	A–005

SHEET NO. 14 OF 55
SCALE: AS SHOWN
DATE: 06/01/23
DPW FILE NO. 202–02–A–39–0
REV. NO. 0

IN CHARGE OF MET
CHECKED BY RRS
MADE BY MJS

0 2'-0" 4'-0" 6'-0" 8'-0"
SCALE 1/4"=1'-0" AT ORIGINAL SIZE

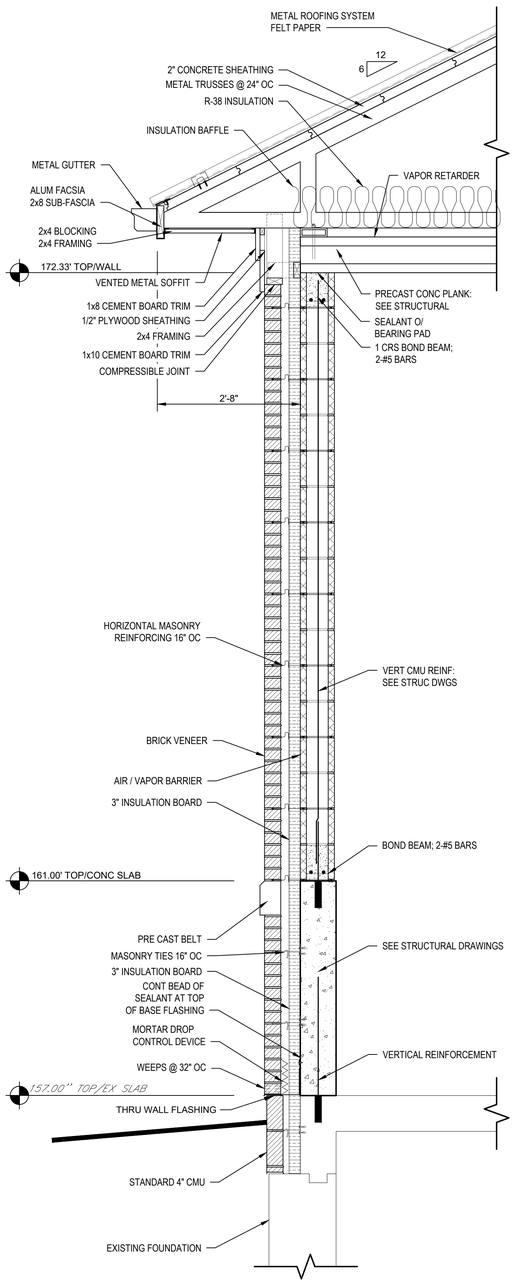

1 A-006 WALL SECTION
SCALE: 1/4" = 1'-0"

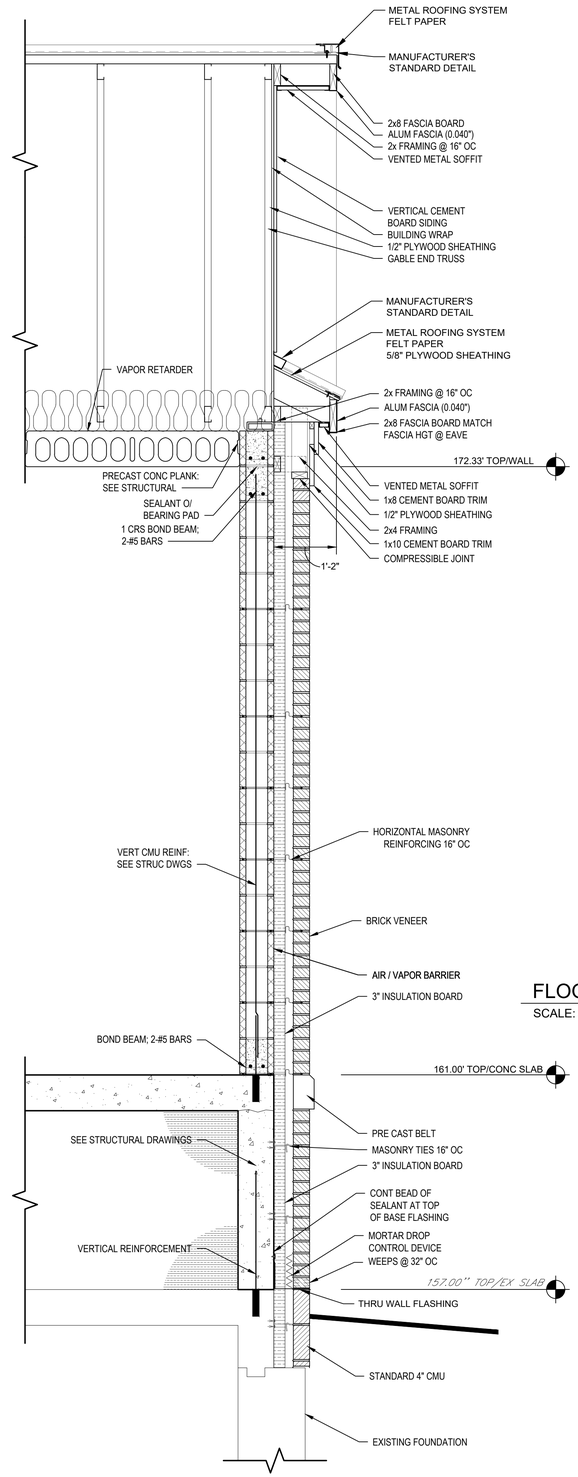

2 A-006 WALL SECTION
SCALE: 1/4" = 1'-0"

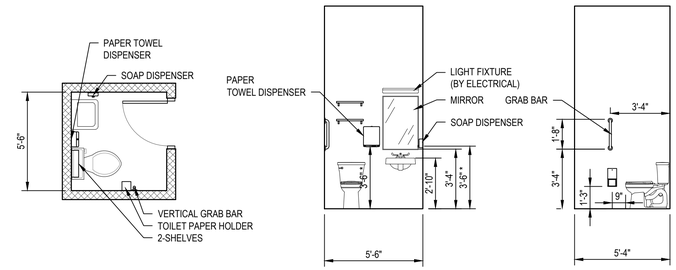

TOILET ROOM MOUNTING HEIGHTS AND LOCATIONS
NOT TO SCALE

3 A-006 ENLARGED PLAN
SCALE: 1/4" = 1'-0"

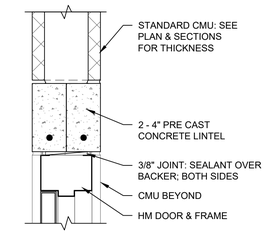

DH2 - DOOR HEAD
SCALE: 1-1/2" = 1'-0"

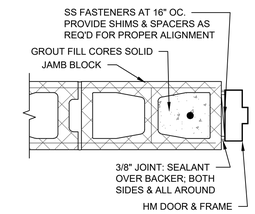

DJ2 - DOOR JAMB
SCALE: 1-1/2" = 1'-0"

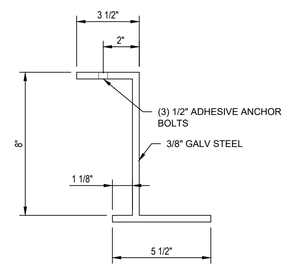

FLOOD PLANK MOUNTING BRACKET
SCALE: 3" = 1'-0"

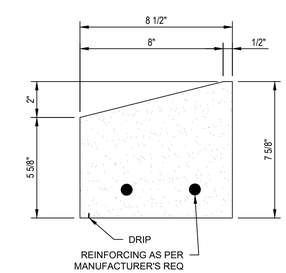

PRE-CAST SILL
SCALE: 3" = 1'-0"

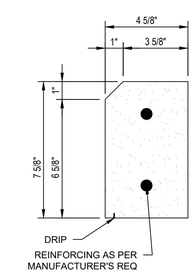

PRE-CAST BELT
SCALE: 3" = 1'-0"

IN CHARGE OF MET
CHECKED BY RRS
MADE BY MJL

0 2'-0" 4'-0" 6'-0" 8'-0"
SCALE 1/4"=1'-0" AT ORIGINAL SIZE

STATE OF NEW YORK
JOSEPH E. TAUBER
073737
LICENSED PROFESSIONAL ENGINEER
EDR
Environmental Design & Research,
Landscape Architecture, Engineering & Environmental Services, D.P.C.
217 Montgomery Street, Suite 1100
Syracuse, New York 13202
a better environment P. 315.471.0688

REVISION NUMBER	DATE	MADE BY	APP'D BY	REVISION

RECORD DRAWING CERTIFICATION

☐ AS BUILT – CHANGES AS NOTED
☐ AS BUILT – NO CHANGES

CONTRACTOR	PROJECT COORDINATOR
NAME	NAME
SIGNATURE	SIGNATURE
TITLE DATE	TITLE DATE

WESTCHESTER COUNTY, NEW YORK
DEPARTMENT OF PUBLIC WORKS AND TRANSPORTATION
DIVISION OF ENGINEERING

JACKSON AVENUE PUMPING STATION REHABILITATION
BRONX VALLEY SANITARY SEWER DISTRICT
TOWN OF GREENBURGH, NEW YORK
WALL SECTIONS AND DETAILS

CONTRACT NUMBER 22–510
SHEET NUMBER A–006
SHEET NO. 15 OF 55
SCALE: AS SHOWN
DATE: 06/01/23
DPW FILE NO. 202–02–A–40–0
REV. NO. 0

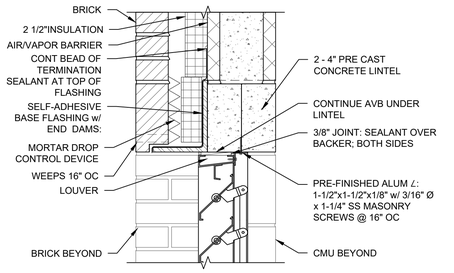

LH1 - LOUVER HEAD

SCALE: 1" = 1-1/2"

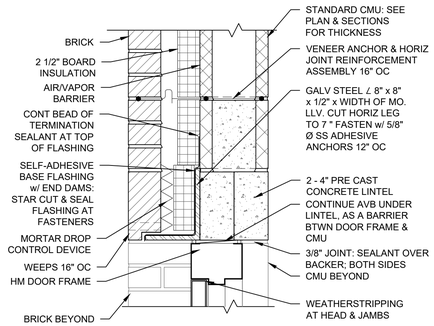

DH1 - DOOR HEAD

SCALE: 1" = 1-1/2"

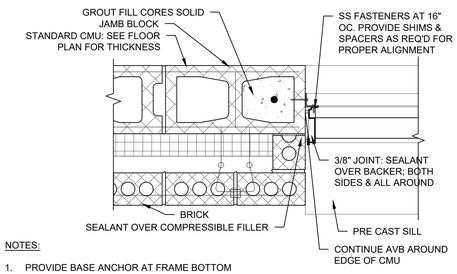

NOTES:

1. PROVIDE BASE ANCHOR AT FRAME BOTTOM

LJ1 - LOUVER JAMB

SCALE: 1" = 1-1/2"

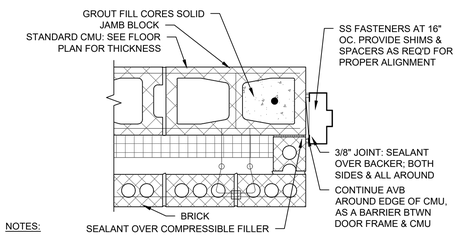

NOTES:

1. PROVIDE BASE ANCHOR AT FRAME BOTTOM

DJ1 - DOOR JAMB

SCALE: 1" = 1-1/2"

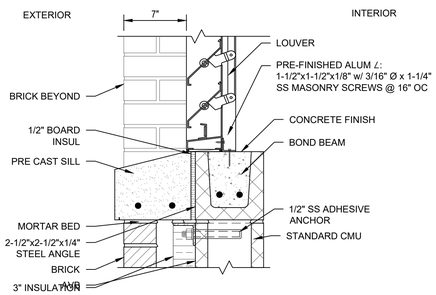

LS1 - LOUVER SILL

SCALE: 1" = 1-1/2"

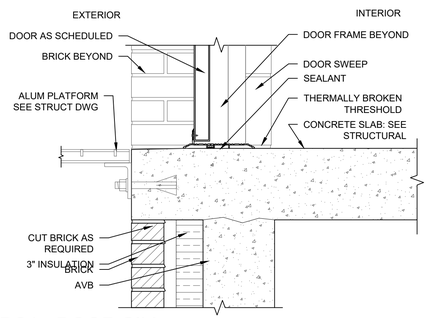

DS1 - DOOR SILL

SCALE: 1" = 1-1/2"

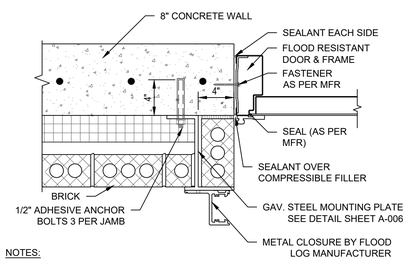

NOTES:

1. PROVIDE BASE ANCHOR AT FRAME BOTTOM

DJ3 - DOOR JAMB

SCALE: 1" = 1-1/2"

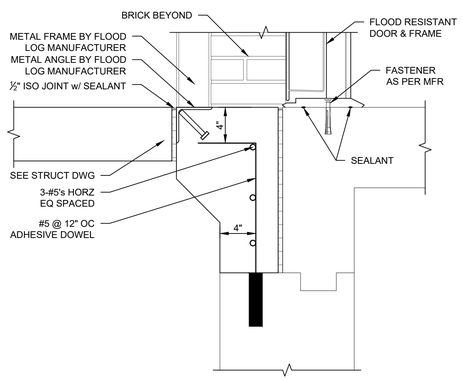

DS3 - DOOR SILL

SCALE: 1" = 1-1/2"

ROOM FINISH SCHEDULE

ROOM NUMBER	ROOM NAME	FLOOR				WALLS												CEILING				NOTE NO.	NOTES
		MATL	FIN	CLR	BASE	NORTH			SOUTH			EAST			WEST			MATL	FIN	CLR	HT		
						MATL	FIN	CLR	MATL	FIN	CLR	MATL	FIN	CLR	MATL	FIN	CLR						
JA-001	WET WELL	EX	SEAL	-	-	EX	SEAL	-	EX	SEAL	-	EX	SEAL	-	EX	SEAL	-	EX	SEAL	-	TBD		
JA-002	DRY WELL	EX	SEAL	-	-	EX	SEAL	-	EX	SEAL	-	EX	SEAL	-	EX	SEAL	-	EX	SEAL	-	11'-0"±		
JA-020	INTERMEDIATE DRY WELL	EX	SEAL	-	-	EX	SEAL	-	EX	SEAL	-	EX	SEAL	-	EX	SEAL	-	EX	SEAL	-	11'-0"±		
JA-100	ELECTRICAL ROOM	CONC	SEAL	-	-	CMU	PT	TBD	CMU	PT	TBD	CMU	PT	TBD	CMU	PT	TBD	CONC	PT	TBD	11'-4"±		
JA-101	BATH ROOM	CONC	SEAL	-	-	CMU	PT	TBD	CMU	PT	TBD	CMU	PT	TBD	CMU	PT	TBD	CONC	PT	TBD	11'-4"		
JA-102	WET WELL ENTRY	CONC	SEAL	-	-	CMU	PT	TBD	CMU	PT	TBD	CMU	PT	TBD	CMU	PT	TBD	CONC	PT	TBD	11'-4"		

DOOR SCHEDULE

DOOR NUMBER	DOOR								FRAME				DETAILS: SEE SHEET ____ UNLESS NOTED OTHERWISE			LABEL	LINTEL	HARD-WARE SET	NOTE NO.	NOTES
	SIZE			MATERIAL	INSUL	TYPE	GLASS	FINISH	MATERIAL	TYPE	PROFILE	FINISH	HEAD	JAMB	SILL					
	WIDTH	HEIGHT	THICK.																	
JA-100	3'-0"	7'-10"	1-3/4"	FRP	Y	D1	-	FCTY	FRP	F4	P1	FCTY	DH1	DJ1	DS1		1	1		1. FLOOD DOOR SEE SPEC SECTION 08390-WATERTIGHT DOORS & FRAMES. 2. SUPPLY HINGES AND BOLTS FOR UPPER PANELS. 3. HARDWARE SUPPLIED BY DOOR MANUFACTURE
JA-101	(2)3'-0"	10'-6"	1-3/4"	FRP	Y	D2	-	FCTY	FRP	F2	P1	FCTY	-	DJ1	DS1		-	2	2	
JA-102	3'-0"	7'-0"	1-3/4"	FRP	N	D3	-	PT	HM	F1	P1-P2	PT	DH2	DJ2	-		1	3		
JA-103	3'-0"	7'-0"	1-3/4"	SS	Y	D1	-	PT	SS	F3	P3	PT	DH1	DJ3	DS3		1	1	1 / 3	
JA-104	3'-8"	7'-0"	1-3/4"	SS	Y	D1	-	PT	SS	F3	P3	PT	DH1	DJ3	DS3		1	1	1 / 3	

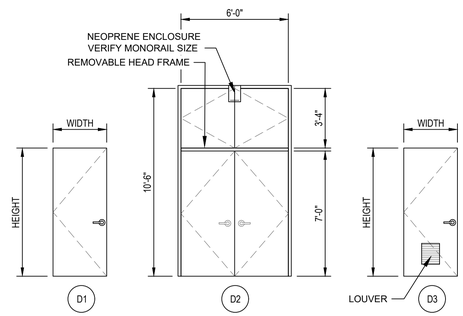

DOOR TYPES

NOT TO SCALE

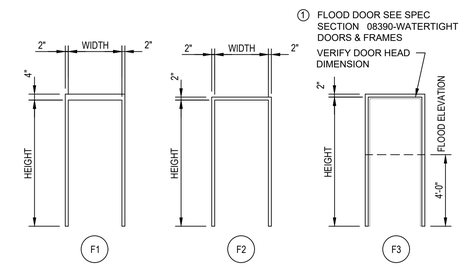

① FLOOD DOOR SEE SPEC SECTION 08390-WATERTIGHT DOORS & FRAMES

VERIFY DOOR HEAD DIMENSION

FLOOD ELEVATION

4'-0"

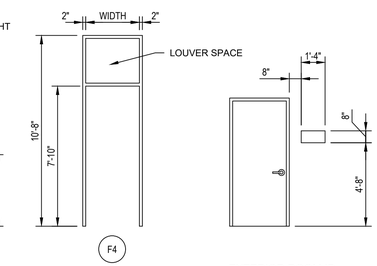

EXTERIOR ROOM ID SIGN LOCATION

NOT TO SCALE

FRAME TYPES

NOT TO SCALE

OPENING LINTEL SCHEDULE:

1 = 2-4x8 PRE CAST CONCRETE LINTEL - 8" BEARING AT EACH SIDE
2 = 2-3 $\frac{1}{2}$" x3 $\frac{1}{2}$"x$\frac{1}{8}$" STEEL ANGLES - 8" BEARING AT EACH SIDE
3 = 5"x5"x$\frac{1}{8}$" STEEL ANGLE - 4 - $\frac{1}{2}$" ADHEISIVE ANCHORS

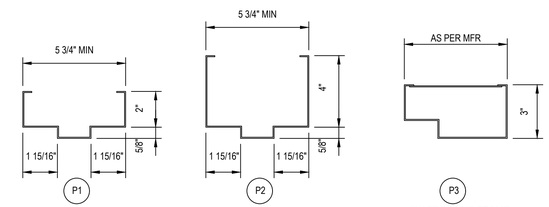

FRAME PROFILES

NOT TO SCALE

KEY TO FINISH ABBREVIATIONS:

ACT = ACOUSTICAL CEILING TILE
CLR = COLOR
FIN = FINISH
HT = HEIGHT
CRF = CHEMICAL RESISTANT FINISH
PT = COATING SYSTEM
EP = SLIP RESISTANT EPOXY COATING
F = LIQUID HARDENED FINISH ON CONCRETE
FCTY = FACTORY FINISH
GWB = GYPSUM WALLBOARD
I = SPRAYED URETHANE INSULATION WITH THERMAL BARRIER
MNFR = MANUFACTURER SUPPLIED
MATL = MATERIAL
NO = NUMBER
RB = RUBBER BASE
S = CONCRETE FLOOR SEALANT, SECTION 03350
VIF = VERIFY IN FIELD
TBD = TO BE DETERMINED
ALUM = ALUMINUM
CMU = CONCRETE MASONRY UNIT
CMUA = ACOUSTICAL CMU
CMUG = GLAZED CMU
CONC = CONCRETE (CAST-IN-PLACE)
CT = CERAMIC TILE
CCT = CERAMIC COVED TILE
EX or EXIST = EXISTING
EXP = EXPOSED UNDERSIDE OF ROOF ASSEMBLY (INCLUDES INSULATION & VAPOR RETARDER)
FRP = FIBERGLASS REINFORCED PLASTIC
FPWD = FIBERGLASS FACED PLYWOOD
GWB = GYPSUM WALL BOARD
EP = EPOXY FLOOR
PLANK = PRECAST CONCRETE PLANK
QT = QUARRY TILE
RSF = RESILIENT SHEET FLOORING
STL = STEEL
STL/C = STEEL W/ CONCRETE FILL
SS = STAINLESS STEEL
SEAL = CONCRETE SEALANT

DOOR HARDWARE SCHEDULE

HARDWARE SET No.	THRESHOLD	HINGES	LOCKSET / LATCHSET	EXIT DEVICE PANIC HARDWARE	CLOSER	OVERHEAD DOOR STOP & HOLDER	DOOR COORDINATOR	ASTRAGAL W/ WEATHERSTRIP	WEATHERSTRIPPING (HEAD,JAMB & SILL)	SMOKE TIGHT SEAL	SLIDE BOLTS UPPER PANELS
1	✓	✓	✓	✓	✓	✓			✓		
2	✓	✓	✓	✓	✓	✓	✓	✓	✓		✓
3		✓	✓							✓	

LOUVER NOTES:

LOUVER ACCESSORIES, INCLUDING MOUNTING ANGLES & SILL FLASHINGS FOR LOUVERS, ARE TO BE FURNISHED & INSTALLED BY THE HVAC CONTRACTOR. FASTENERS, SHIMS & OTHER ACCESSORIES FOR LOUVER INSTALLATION ARE ALSO TO BE FURNISHED & INSTALLED BY THE HVAC CONTRACTOR, EXCEPT THAT HEAD FLASHINGS & EXTERIOR CASING TYPE TRIMS ARE TO BE FURNISHED & INSTALLED BY THE GENERAL CONSTRUCTION CONTRACTOR. SEALANTS ARE INSTALLED BY THE DAMPPROOFING, WATERPROOFING AND SEALANT SUBCONTRACTOR.

LOUVER FLASHING & MOUNTING ANGLE DIMENSIONS & CONFIGURATIONS, AS WELL AS FINISHES AND FINISH COLORS, ARE TO BE AS SHOWN BY THE DETAILS REFERENCED BY THE LOUVER INSTALLATION SCHEDULE IN THE ARCHITECTURAL DRAWINGS, & AS INDICATED BY THE EXTERIOR FINISH SCHEDULE IN THE ARCHITECTURAL DRAWINGS.

LOUVERS ARE TO BE FURNISHED & INSTALLED BY THE HVAC CONTRACTOR IN COMPLIANCE WITH 15940, THE LOUVER & MOTOR OPERATED DAMPER SCHEDULE IN THE HVAC DRAWINGS, & OTHER INFORMATION SHOWN IN THE HVAC DRAWINGS. LOUVER FINISHES & FINISH COLORS ARE TO BE AS INDICATED BY THE EXTERIOR FINISH SCHEDULE IN THE ARCHITECTURAL DRAWINGS.

LOUVER INSTALLATION SCHEDULE

NOTE: COORDINATE WITH SHEET HVAC SHEETS AND SPECIFICATIONS FOR LOUVER REQUIREMENTS

LOUVER NO.	LOCATION (SEE PLAN & ELEVATIONS)	DETAILS: THIS SHEET		
		HEAD DETAIL	SILL DETAIL	JAMB DETAIL
JA-LV-1	ELECTRICAL ROOM @ NORTH WALL	LH-	LS-	LJ-
JA-LV-2	ELECTRICAL ROOM @ SOUTH WALL	LH1	LS1	LJ1
JA-LV-3	WET WELL ENTRY @ SOUTH WALL	LH1	LS1	LJ1
JA-LV-4	WET WELL ENTRY @ NORTH WALL	LH1	LS1	LJ1

NOTE: JA-LV-1 LOUVER IN FRP DOOR FRAME

0 2'-0" 4'-0" 6'-0" 8'-0"

SCALE 1/4"=1'-0" AT ORIGINAL SIZE

MODIFICATION IS A VIOLATION OF CHAPTER 16, TITLE VIII, ARTICLE 145 § 7209.2 NY'S EDUCATION LAW, UNLESS ACTING UNDER THE DIRECTION OF A LICENSED PROFESSIONAL ENGINEER. IF A DOCUMENT BEARING THE SEAL OF AN ENGINEER IS ALTERED, THE ALTERING ENGINEER SHALL AFFIX TO THE DOCUMENT THEIR SEAL AND THE NOTATION "ALTERED BY" FOLLOWED BY THEIR SIGNATURE AND THE DATE OF SUCH ALTERATION, AND A SPECIFIC DESCRIPTION OF THE ALTERATION.

STATE OF NEW YORK · MICHAEL E. TUCCI · 073737 · LICENSED PROFESSIONAL ENGINEER

EDR
a better environment

Environmental Design & Research,
Landscape Architecture, Engineering & Environmental Services, D.P.C.
217 Montgomery Street, Suite 1100
Syracuse, New York 13202
P. 315.471.0688

REVISION NUMBER	DATE	MADE BY	APP'D BY	REVISION

RECORD DRAWING CERTIFICATION

☐ AS BUILT – CHANGES AS NOTED
☐ AS BUILT – NO CHANGES

CONTRACTOR	PROJECT COORDINATOR
NAME	NAME
SIGNATURE	SIGNATURE
TITLE DATE	TITLE DATE

WESTCHESTER COUNTY, NEW YORK
DEPARTMENT OF PUBLIC WORKS AND TRANSPORTATION
DIVISION OF ENGINEERING

JACKSON AVENUE PUMPING STATION REHABILITATION
BRONX VALLEY SANITARY SEWER DISTRICT
TOWN OF GREEANBURGH, NEW YORK
SCHEDULES AND DETAILS

CONTRACT NUMBER	SHEET NUMBER
22–510	A–007

SHEET NO. 16 OF 55

SCALE: AS SHOWN
DATE: 06/01/23

DPW FILE NO.	REV. NO.
202–02–A–41–0	0

IN CHARGE OF MET
CHECKED BY RRS
MADE BY MJS

GENERAL CONCRETE CONSTRUCTION NOTES

A. Reinforced concrete design follows ACI 318-14 except for liquid containment structures which are designed in accordance with ACI 350-06, "Code Requirements for Environmental Engineering Concrete Structures and Commentary."

B. Unless noted otherwise, all concrete shown is structural concrete with a 4500 psi 28-day compressive strength and Type II Portland Cement. Refer to Section 03300 of specifications.

C. Reinforcement will be new Billet Steel, conforming to ASTM A-615 Grade 60, deformed.

D. Detail, fabricate and erect reinforcing bars in accordance with "Details and Detailing Concrete Reinforcement," (ACI 315R-18).

E. Unless otherwise shown, all reinforcing steel shall be provided with minimum concrete cover as follows:

Slabs on grade:	- top reinf. (interior)	1 ½"
	- top reinf. (exterior)	2"
	- bottom reinf.	3"
Foundation slab/footing	- top reinf.	2"
	- bottom reinf.	3"
Beams and columns	-	2"
Walls	-	2"

F. Lap splices and embedments for reinforcement shall follow the chart shown on this drawing unless otherwise indicated on the drawings.

G. Any revisions to joint placement, pour sequencing or reinforcing splices must be submitted to the engineer for review and approval prior to submittal of reinforcing steel shop drawings.

H. Cure concrete at a minimum temperature of 50° F for seven days, following the criteria of ACI 308.1-11.

I. Concrete surfaces shall be finished per Section 03300 of the specifications.

J. Chamfer exposed concrete edges ¾" x ¾" unless otherwise noted.

K. Equipment pad dimensions, housekeeping pad dimensions and openings for hatches, ducts and pipes must be coordinated with approved equipment shop drawings, and with the requirements shown on other drawings, this project set.

L. The contractor is responsible for maintaining stability and preventing floatation of structures during all phases of construction.

1 / - CONCRETE CONSTRUCTION NOTES
NO SCALE

GENERAL MASONRY CONSTRUCTION NOTES

A. Masonry design follows The Masonry Standards Joint Committe report on "Building Code Requirements for Masonry Structures," TMS 402-13 and the requirements of 2020 Building Code of New York Stae. Masonry is designed in accordance with the Working Stress Design Method.

B. All masonry will have a minimum net area compressive strength of concrete masonry units equal to 2650 psi. Masonry assembly will use Type N mortar to develop a net area compressive strength of masonry f'm = 2000 psi.

C. Masonry grout will confirm to the requirements of ASTM C476. Grout shall reach a minimum compressive strength of 2000psi at 28 days. Maximum grout pour height per pour shall be 5 feet.

D. Reinforcing steel will be new Billet Steel, and conform to ASTM A-615 Grade 60, deformed.

E. Reinforcement embedded grout shall have a tickness of grout between the reinforcement and masonry units not less then ½ inch.

F. Reinforcing bars will have a masonry cover not less then the following:
Masonry face exposed to earth or weather - 2 inches
Masonry not exposed to earth or weather - 1 ½ inches

G. Masonry reinforcement standard hooks, splices and embedments as follows:

	Standard 90° Hook	Min. Lap Splice	Min. Embed. Length
#5	7 ½ inches	30 inches	22 ½ inches

H. Unless shown otherwise, vertical reinforcement shall consist of a foundation dowel and a stem bar with a hook into the bond beam. Vertical reinforcement will be provided at the locations as indicated on the structural Top Plan, and on the Sections as shown on the A-series and S-series drawings.

I. Vertical reinforcement shall be provided at locations as shown on the Top Plan. Reinforcement shall be located at corners, within 16" of each side openings, within 8" of all joints and at a maximum spacing as indicated on the Top Plan.

J. Horizontal reinforcement shall be consist of 2 wires W1.7 spaced at 16". Horizontal reinforcement shall be located at the top and bottom of wall openings and extend 24" past the openings.

K. Masonry wall openings for windows, doors, louvers, HVAC equipment, ducts, mechanical process equipment and pipes must be coordinated with approved shop drawings and with the requirements shown on other drawings, this project.

L. The contractor is responsible for maintaining stability of structures during all phases of construction.

2 / - MASONRY CONSTRUCTION NOTES
NO SCALE

STRUCTURAL DESIGN DATA

Loads in accordance with 2020 Building Code of New York State and ASCE 7-16

Roof Live Load, Lr = 20 psf

Floor Live Load = 250 psf

Collateral Load = 10 psf

Roof Snow Load
Ground snow load P_g = 20 psf
Snow exposure factor C_e = 1.0
Roof thermal factor C_t = 1.1
Snow load importance factor I = 1.1
Flat roof snow load P_f = 27 psf

Wind Load
Basic wind speed V = 125 mph
Risk Category III
Wind exposure - Category C
Internal pressure coefficient GC_{pi} = ±0.18

Earthquake Design Data
Seismic importance factor, I = 1.25
Risk Category III
Mapped acceleration parameters:
S_s = 0.296
S_1 = 0.061
Site Class D
Spectral response coefficients:
S_{ds} = 0.309
S_{d1} = 0.098
Seismic Design Category B
Basic seismic-force-resisting system:
Ordinary reinforced masonry shear wall
Design base shear, V = 18K

Equivalent Lateral Force Procedure

Response Modification Coefficient R = 2.0

Seismic Response Coefficient C_S = 0.113

3 / - STRUCTURAL DESIGN DATA
Scale: NO SCALE

BAR SIZE	MIN LAP SPLICE LENGTH (INCHES)		MIN EMBEDMENT LENGTH (INCHES)	
	TOP BARS	OTHER BARS	TOP BARS	OTHER BARS
3	18	16	14	12
4	24	20	20	15
5	30	24	24	18
6	36	28	28	22
7	45	36	36	27
8	57	45	45	36
9	72	56	56	45
10	90	69	69	54
11	108	84	84	64

NOTES:

A. F'c = 5,000 PSI (NORMAL WEIGHT CONCRETE), F_y = 60,000 PSI.
B. TOP BARS ARE HORIZONTAL BARS WITH MORE THEN 12" DEPTH OF CONCRETE CAST BELOW THE REINFORCEMENT.
C. LAP SPLICES SHOWN ARE TENSION LAPS, CLASS B.
D. MINIMUM CLEAR COVER IS 1.5 INCHES. MINIMUM SPACING IS 4 INCHES.

4 / - SPLICE AND EMBEDMENT CHART
NO SCALE

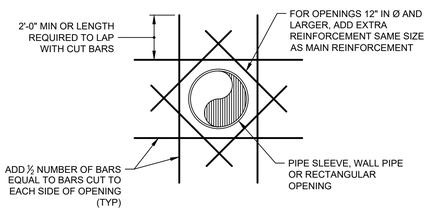

5 / - WALL / SLAB OPENING REINFORCEMENT
NO SCALE

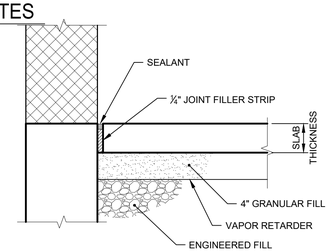

6 / - ISOLATION JOINT DETAIL
NO SCALE

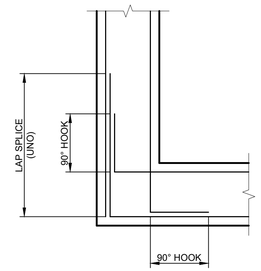

7 / - CORNER WALL REINFORCEMENT DETAIL
NO SCALE

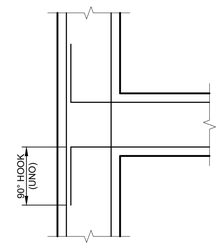

8 / - WALL INTERSECTION REINFORCEMENT DETAIL
NO SCALE

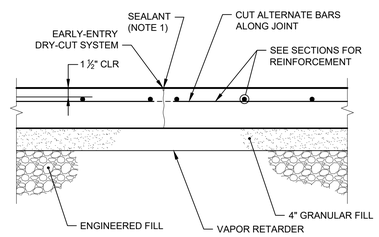

NOTES:

1. COORDINATE SEALANT WITH JOINT SYSTEM MANUFACTURER'S RECOMMENDATIONS.
2. COORDINATE TIMING AND DEPTH OF CUT WITH MANUFACTURER'S CRITERIA.

9 / - CONTROL JOINT DETAIL
NO SCALE

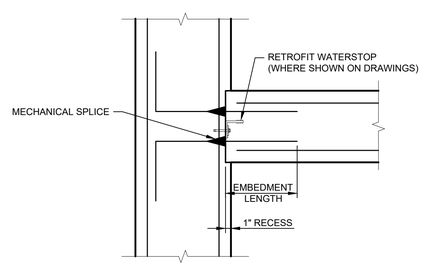

13 / - RECESSED CONSTRUCTION JOINT DETAIL
NO SCALE

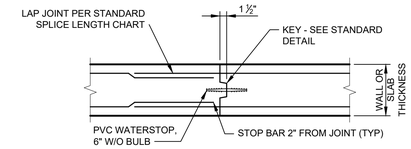

KEYED CONSTRUCTION JOINT

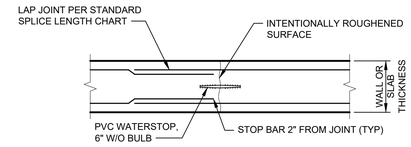

ROUGHENED CONSTRUCTION JOINT

NOTES:

1. USE PVC WATERSTOP, 6" W/O BULB, FOR ALL CONSTRUCTION JOINTS EXCEPT WHERE OTHERWISE INDICATED.
2. SEE PLAN FOR REQUIRED CONSTRUCTION JOINT LOCATIONS.
3. EACH SLAB SECTION SHALL BE CURED FOR 3 DAYS BEFORE ADJACENT SECTION IS PLACED. REFER TO SPEC SECTION 03250.

11 / - CONSTRUCTION JOINT DETAIL
NO SCALE

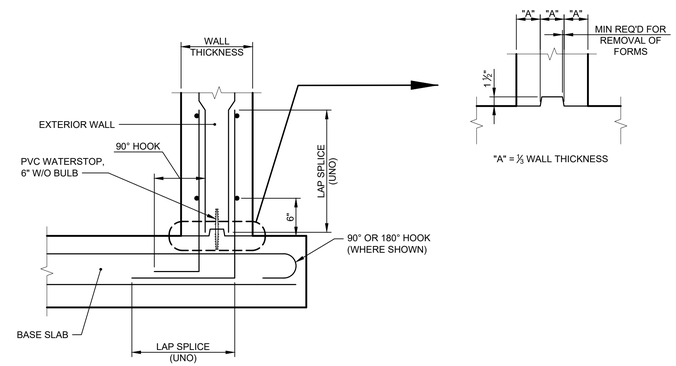

12 / - KEYED WALL / SLAB JOINT DETAIL
NO SCALE

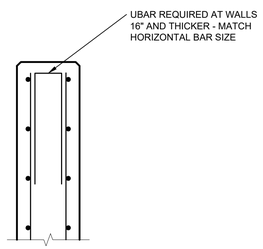

10 / - END OF WALL & OPENING REINFORCEMENT DETAIL
NO SCALE

MODIFICATION IS A VIOLATION OF CHAPTER 16, TITLE VIII, ARTICLE 145 § 7209.2 NYS EDUCATION LAW, UNLESS ACTING UNDER THE DIRECTION OF A LICENSED PROFESSIONAL ENGINEER. IF A DOCUMENT BEARING THE SEAL OF AN ENGINEER IS ALTERED, THE ALTERING ENGINEER SHALL AFFIX TO THE DOCUMENT THEIR SEAL AND THE NOTATION "ALTERED BY" FOLLOWED BY THEIR SIGNATURE AND THE DATE OF SUCH ALTERATION, AND A SPECIFIC DESCRIPTION OF THE ALTERATION.

EDR
Environmental Design & Research,
Landscape Architecture, Engineering & Environmental Services, D.P.C.
217 Montgomery Street, Suite 1100
Syracuse, New York 13202
a better environment P. 315.471.0688

REVISION NUMBER	DATE	MADE BY	APP'D BY	REVISION

RECORD DRAWING CERTIFICATION
☐ AS BUILT – CHANGES AS NOTED
☐ AS BUILT – NO CHANGES

CONTRACTOR
NAME
SIGNATURE
TITLE DATE

PROJECT COORDINATOR
NAME
SIGNATURE
TITLE DATE

WESTCHESTER COUNTY, NEW YORK
DEPARTMENT OF PUBLIC WORKS AND TRANSPORTATION
DIVISION OF ENGINEERING

JACKSON AVENUE PUMPING STATION REHABILITATION
BRONX VALLEY SANITARY SEWER DISTRICT
TOWN OF GREENBURGH, NEW YORK

GENERAL NOTES AND DETAILS

CONTRACT NUMBER 22-510
SHEET NUMBER S-001
SHEET NO. 17 OF 55
SCALE: AS SHOWN
DATE: 06/01/2023
DPW FILE NO. 202-02-S-42-0
REV. NO. 0

IN CHARGE OF MET
CHECKED BY BCS
MADE BY KAD

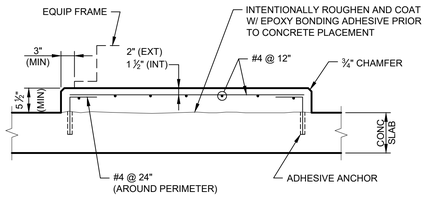

13 - EQUIPMENT PAD DETAIL
NO SCALE

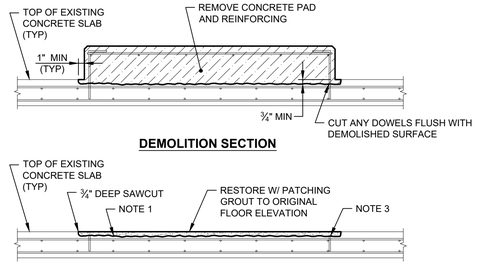

16 - CONCRETE PAD DEMO/RESTORATION DETAIL
NO SCALE

BEAM SCHEDULE

BEAM MARK	BEAM DIMENSIONS			BEAM TYPE	MAIN REINFORCEMENT				STIRRUPS & SPACING (SEE NOTE 3)			SKIN BARS (SEE NOTE 4)	REMARKS
	W	D	E	P or S	a	b	c	d	LEFT END	TYPICAL STIRRUPS	RIGHT END		
B-1	12	39	-	P	(3) #6	-	(2) #6	-	-	#5 @ 12	-	(4) #4	-
B-2	12	39	-	P	(3) #9	-	(2) #9	-	(5) #3 @ 10	#3 @ 12	(3) #5 @ 12	(4) #4	-
B-3	14	39	-	S	(4) #9	-	(2) #9	-	-	#3 @ 12	-	(4) #4	-
B-4	12	39	-	S	(2) #7	(5) #7	(2) #7	-	-	#3 @ 12	-	(4) #4	-
B-5	16	60	-	P	(5) #9	-	(2) #9	-	-	#3 @ 12	-	(6) #4	SKIN BARS AT TOP HALF OF BEAM

NOTES:

1. DETAIL ALL BARS AS SHOWN ON THE BEAM BAR PLACING DIAGRAM.
2. INSTALL "TYPICAL" STIRRUPS THROUGHOUT ENTIRE LENGTH OF BEAM IF STIRRUP SPACING IS NOT INDICATED FOR LEFT END AND/OR RIGHT END.
3. BEAM TYPE INDICATES (P) PRIMARY BEAM OR (S) SECONDARY BEAM. NOTE THAT TOP REINFORCEMENT IN SECONDARY BEAMS SHALL BE LOCATED BELOW TOP REINFORCING IN PRIMARY BEAMS.
4. ONE OF THE LISTED SKIN BARS SHALL BE PLACED AT THE CENTER OF THE BEAM, EACH SIDE. THE REMAINDER OF THE SKIN BARS SHALL BE EQUALLY DISTRIBUTED BETWEEN THE FIRST BAR AND THE BOTTOM LAYER OF BARS, EACH SIDE.

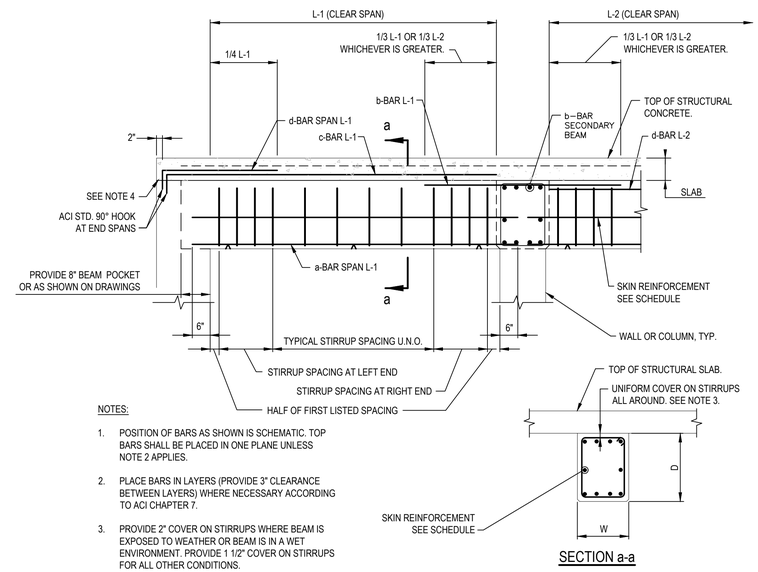

NOTES:

1. POSITION OF BARS AS SHOWN IS SCHEMATIC. TOP BARS SHALL BE PLACED IN ONE PLANE UNLESS NOTE 2 APPLIES.
2. PLACE BARS IN LAYERS (PROVIDE 3" CLEARANCE BETWEEN LAYERS) WHERE NECESSARY ACCORDING TO ACI CHAPTER 7.
3. PROVIDE 2" COVER ON STIRRUPS WHERE BEAM IS EXPOSED TO WEATHER OR BEAM IS IN A WET ENVIRONMENT. PROVIDE 1 1/2" COVER ON STIRRUPS FOR ALL OTHER CONDITIONS.
4. CONTRACTOR MAY PROVIDE DOWEL BAR SUBSTITUTES AT BEAM POCKETS.

BEAM BAR PLACING DIAGRAM
NOT TO SCALE

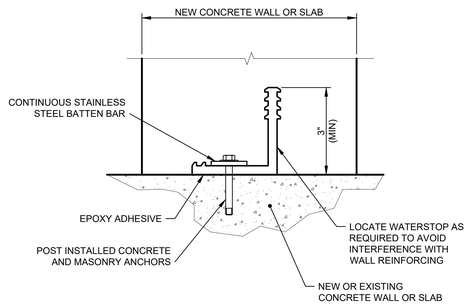

14 - RETROFIT WATERSTOP DETAIL
NO SCALE

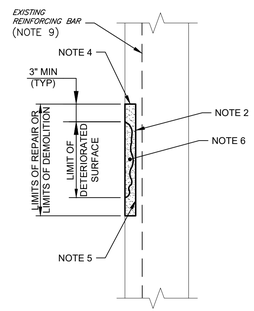

17 - CONCRETE RESTORATION DETAIL
NO SCALE

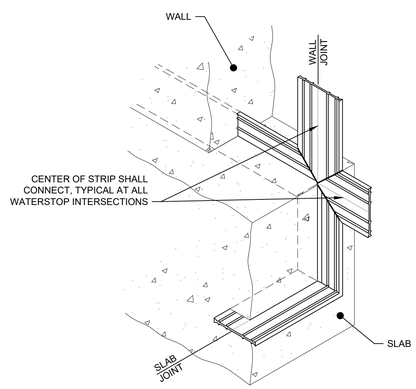

15 - WATERSTOP DETAIL
NO SCALE

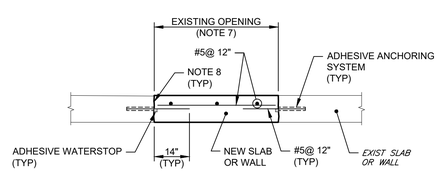

18 - OPENING RESTORATION DETAIL
NO SCALE

NOTES:

1. SANDBLAST OR MECHANICALLY REMOVE ALL LOOSE AND SPALLED MATERIALS. COAT EXPOSED CONCRETE WITH EPOXY BONDING ADHESIVE PRIOR TO PLACING PATCHING GROUT.
2. REMOVE EXISTING CONCRETE TO THE LIMITS OF SOUND CONCRETE. REMOVE ALL LOOSE AND SPALLED CONCRETE AND OTHER FOREIGN MATERIAL.
3. CUT REINFORCEMENT FLUSH AND COAT WITH ANTI-CORROSION PRIMER.
4. SAWCUT ½" DEEP MINIMUM, AROUND REPAIR OR DEMOLISHED AREA. REMOVE EXISTING CONCRETE TO THE LIMITS OF SOUND CONCRETE. REMOVE ALL LOOSE AND SPALLED CONCRETE AND OTHER FOREIGN MATERIAL.
5. APPLY EPOXY BONDING ADHESIVE PER MANUFACTURER'S INSTRUCTIONS.
6. FILL PREPARED AREA WITH PATCHING GROUT TO MATCH ORIGINAL FINISHED SURFACE.
7. FOR OPENING DIMENSION OR DIAMETER GREATER THAN OR EQUAL TO 18", PLACE DOWELS AS SHOWN. IF OPENING DIMENSION OR DIAMETER IS LESS THAN 18", OMIT DOWELS.
8. INTENTIONALLY ROUGHEN SURFACE TO A FULL AMPLITUDE OF ¼", CLEAN AND COAT SURFACE WITH EPOXY BONDING ADHESIVE PRIOR TP PLACING NEW CONCRETE.
9. IF EXISTING REBAR IS EXPOSED, REMOVE CONCRETE TO 1" BEHIND REBAR. WIRE BRUSH CLEAN REBAR TO REMOVE ALL RUST AND COAT EXPOSED REBAR WITH 2 COATS OF ANTICORROSION PRIMER.

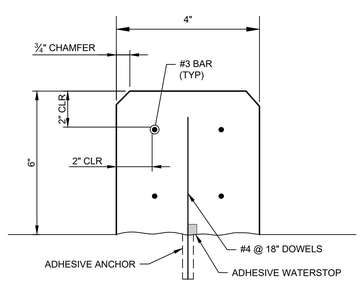

19 - CURB DETAIL
NO SCALE

IN CHARGE OF MJL
CHECKED BY BCS
MADE BY KAD

MODIFICATION IS A VIOLATION OF CHAPTER 16, TITLE VIII, ARTICLE 145 § 7209.2 NYS EDUCATION LAW, UNLESS ACTING UNDER THE DIRECTION OF A LICENSED PROFESSIONAL ENGINEER. IF A DOCUMENT BEARING THE SEAL OF AN ENGINEER IS ALTERED, THE ALTERING ENGINEER SHALL AFFIX TO THE DOCUMENT THEIR SEAL AND THE NOTATION "ALTERED BY" FOLLOWED BY THEIR SIGNATURE AND THE DATE OF SUCH ALTERATION, AND A SPECIFIC DESCRIPTION OF THE ALTERATION.

STATE OF NEW YORK · JAMES E. TANNER · 073757 · LICENSED PROFESSIONAL ENGINEER
EDR
Environmental Design & Research,
Landscape Architecture, Engineering & Environmental Services, D.P.C.
217 Montgomery Street, Suite 1100
Syracuse, New York 13202
a better environment P. 315.471.0688

REVISION NUMBER	DATE	MADE BY	APP'D BY	REVISION

RECORD DRAWING CERTIFICATION

☐ AS BUILT – CHANGES AS NOTED
☐ AS BUILT – NO CHANGES

CONTRACTOR	PROJECT COORDINATOR
NAME	NAME
SIGNATURE	SIGNATURE
TITLE DATE	TITLE DATE

WESTCHESTER COUNTY, NEW YORK
DEPARTMENT OF PUBLIC WORKS AND TRANSPORTATION
DIVISION OF ENGINEERING

JACKSON AVENUE PUMPING STATION REHABILITATION
BRONX VALLEY SANITARY SEWER DISTRICT
TOWN OF GREENBURGH, NEW YORK

GENERAL NOTES AND DETAILS

CONTRACT NUMBER 22-510
SHEET NUMBER S-002
SHEET NO. 18 OF 55
SCALE: AS SHOWN
DATE: 06/01/2023
DPW FILE NO. 202-02-S-43-0
REV. NO. 0

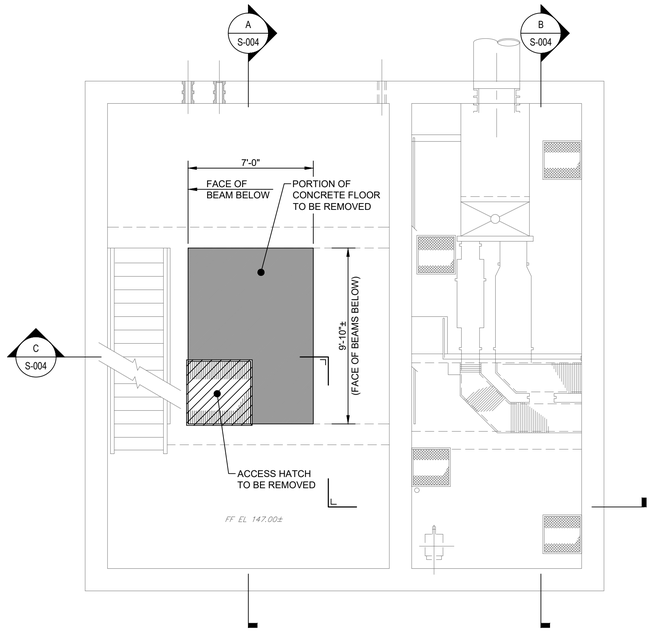

DEMOLITION - INTERMEDIATE LEVEL PLAN

SCALE: 1/4" = 1'-0"

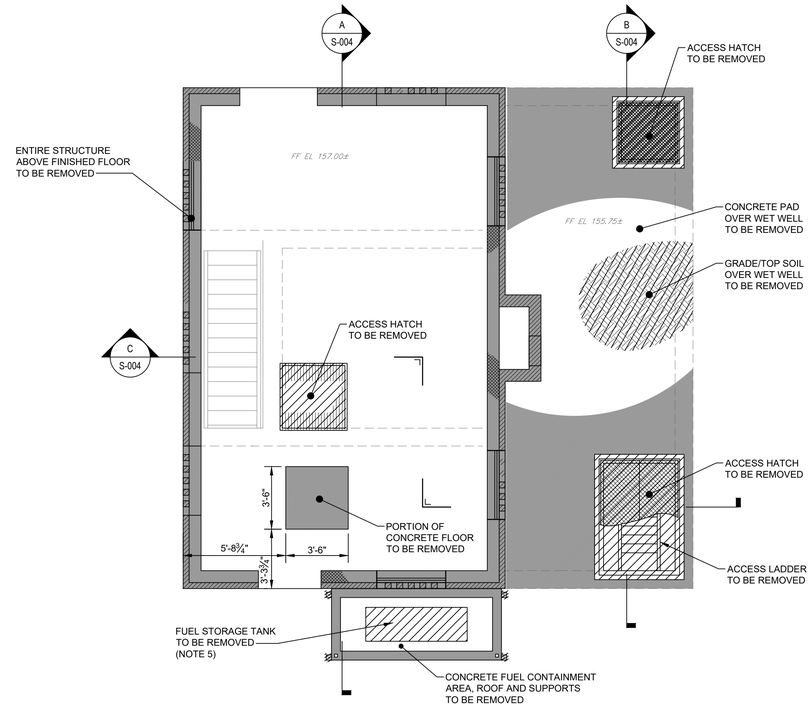

DEMOLITION - UPPER LEVEL PLAN

SCALE: 1/4" = 1'-0"

NOTES:

1. THIS DRAWING HAS BEEN PREPARED TO PROVIDE THE CONTRACTOR WITH A GENERAL SCOPE OF DEMOLITION WORK TO BE REQUIRED. IT SHALL BE THE CONTRACTOR'S RESPONSIBILITY TO FIELD VERIFY ALL ITEMS THAT MAY EFFECT DEMOLITION COSTS INCLUDING BUT NOT LIMITED TO EXACT EQUIPMENT AND PIPING LOCATIONS, ACTUAL EQUIPMENT AND PIPING SIZES, AND ALL INCIDENTAL EQUIPMENT OR PIPING NOT SHOWN BUT PART OF THE EQUIPMENT INDICATED TO BE REMOVED OR EFFECT REMOVAL PROCESS.
2. ALL ITEMS SHOWN TO BE DEMOLISHED. DISCONNECT AND / OR CAP PIPES, DRAINS, UTILITIES ETC. AS REQUIRED. CONTRACTOR SHALL COORDINATE WITH OWNER AS TO MATERIALS / ITEMS TO BE REMOVED, OR MATERIALS / ITEMS TO BE RETURNED TO OWNER.
3. THERE ARE OTHER ITEMS TO BE DEMOLISHED WHICH ARE NOT SHOWN FOR CLARITY. THESE ITEMS ARE AS LISTED. HOWEVER, CONTRACTOR SHALL DEMOLISH ALL ITEMS TO ACCOMMODATE NEW WORK.
4. ALL DEBRIS SHALL BE REMOVED FROM THE SITE AND DISPOSED OF IN ACCORDANCE WITH APPLICABLE REGULATIONS.
5. CONTRACTOR SHALL REMOVE AND DISPOSE OF EXISTING FUEL STORAGE TANK, FUEL LINES, ASSOCIATED ITEMS AND EMPTY THE TANKS REMAINING CONTENTS PER LATEST GOVERNING REGULATIONS. CONTRACTOR SHALL COORDINATE WORK WITH WESTCHESTER COUNTY DEPARTMENT OF PUBLIC WORKS.

LEGEND:

- MECHANICAL ITEMS AND PIPING TO BE REMOVED
- CONCRETE AND MASONRY TO BE REMOVED

0 2'-0" 4'-0" 6'-0" 8'-0"
SCALE 1/4"=1'-0" AT ORIGINAL SIZE

MODIFICATION IS A VIOLATION OF CHAPTER 16, TITLE VIII, ARTICLE 145 § 7209.2 NYS EDUCATION LAW, UNLESS ACTING UNDER THE DIRECTION OF A LICENSED PROFESSIONAL ENGINEER. IF A DOCUMENT BEARING THE SEAL OF AN ENGINEER IS ALTERED, THE ALTERING ENGINEER SHALL AFFIX TO THE DOCUMENT THEIR SEAL AND THE NOTATION "ALTERED BY" FOLLOWED BY THEIR SIGNATURE AND THE DATE OF SUCH ALTERATION, AND A SPECIFIC DESCRIPTION OF THE ALTERATION.

Environmental Design & Research,
Landscape Architecture, Engineering & Environmental Services, D.P.C.
217 Montgomery Street, Suite 1100
Syracuse, New York 13202
a better environment P. 315.471.0688

REVISION NUMBER	DATE	MADE BY	APP'D BY	REVISION

RECORD DRAWING CERTIFICATION

☐ AS BUILT – CHANGES AS NOTED
☐ AS BUILT – NO CHANGES

CONTRACTOR	PROJECT COORDINATOR
NAME	NAME
SIGNATURE	SIGNATURE
TITLE DATE	TITLE DATE

WESTCHESTER COUNTY, NEW YORK
DEPARTMENT OF PUBLIC WORKS AND TRANSPORTATION
DIVISION OF ENGINEERING

JACKSON AVENUE PUMPING STATION REHABILITATION
BRONX VALLEY SANITARY SEWER DISTRICT
TOWN OF GREENBURGH, NEW YORK

DEMOLITION – PLANS

CONTRACT NUMBER 22–510
SHEET NUMBER S–003
SHEET NO. 19 OF 55
SCALE: AS SHOWN
DATE: 06/01/2023
DPW FILE NO. 202–02–S–44–0
REV. NO. 0

IN CHARGE OF MET
CHECKED BY BCS
MADE BY KAD

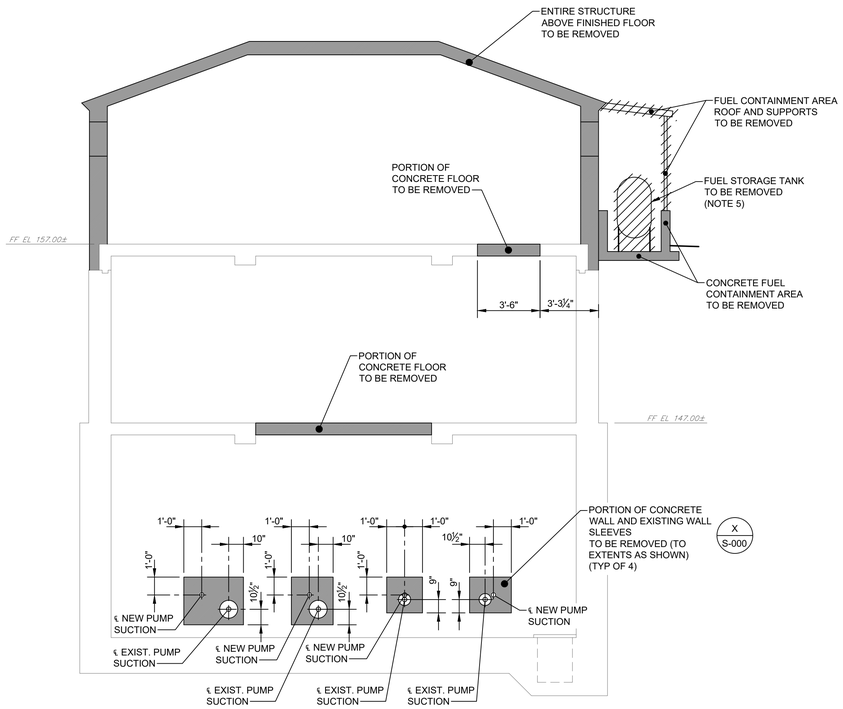

A S-003 SECTION
SCALE: 1/4" = 1'-0"

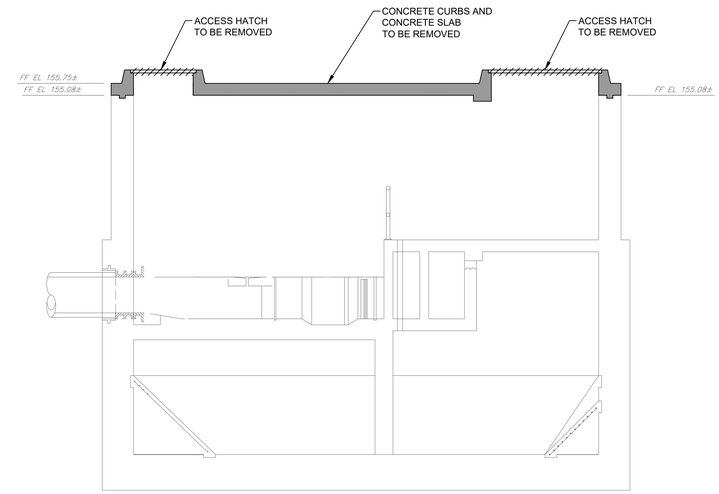

B S-003 SECTION
SCALE: 1/4" = 1'-0"

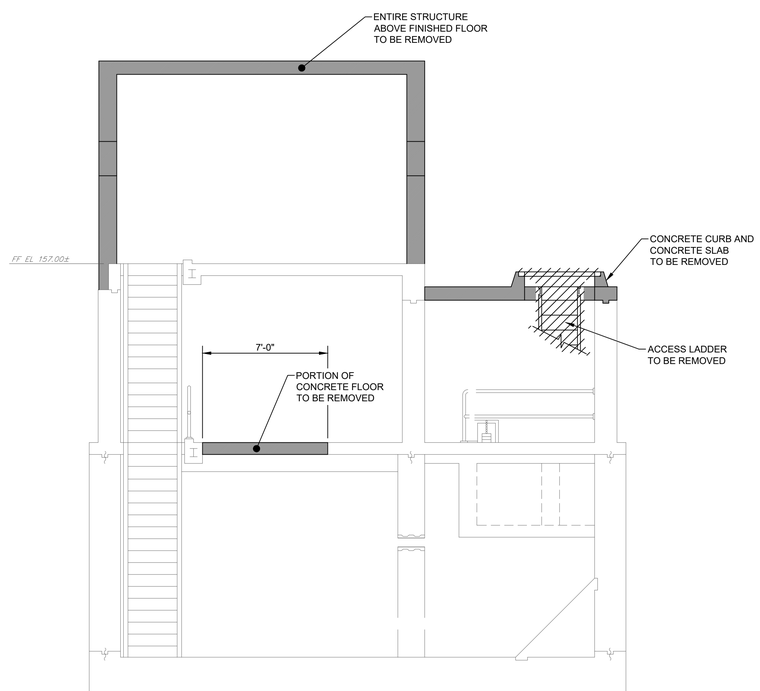

C S-003 SECTION
SCALE: 1/4" = 1'-0"

NOTES:

1. THIS DRAWING HAS BEEN PREPARED TO PROVIDE THE CONTRACTOR WITH A GENERAL SCOPE OF DEMOLITION WORK TO BE REQUIRED. IT SHALL BE THE CONTRACTOR'S RESPONSIBILITY TO FIELD VERIFY ALL ITEMS THAT MAY EFFECT DEMOLITION COSTS INCLUDING BUT NOT LIMITED TO EXACT EQUIPMENT AND PIPING LOCATIONS, ACTUAL EQUIPMENT AND PIPING SIZES, AND ALL INCIDENTAL EQUIPMENT OR PIPING NOT SHOWN BUT PART OF THE EQUIPMENT INDICATED TO BE REMOVED OR EFFECT REMOVAL PROCESS.
2. ALL ITEMS SHOWN TO BE DEMOLISHED. DISCONNECT AND / OR CAP PIPES, DRAINS, UTILITIES ETC. AS REQUIRED. CONTRACTOR SHALL COORDINATE WITH OWNER AS TO MATERIALS / ITEMS TO BE REMOVED, OR MATERIALS / ITEMS TO BE RETURNED TO OWNER.
3. THERE ARE OTHER ITEMS TO BE DEMOLISHED WHICH ARE NOT SHOWN FOR CLARITY. THESE ITEMS ARE AS LISTED. HOWEVER, CONTRACTOR SHALL DEMOLISH ALL ITEMS TO ACCOMMODATE NEW WORK.
4. ALL DEBRIS SHALL BE REMOVED FROM THE SITE AND DISPOSED OF IN ACCORDANCE WITH APPLICABLE REGULATIONS.
5. CONTRACTOR SHALL REMOVE AND DISPOSE OF EXISTING FUEL STORAGE TANK, FUEL LINES, ASSOCIATED ITEMS AND EMPTY THE TANKS REMAINING CONTENTS PER LATEST GOVERNING REGULATIONS. CONTRACTOR SHALL COORDINATE WORK WITH WESTCHESTER COUNTY DEPARTMENT OF PUBLIC WORKS.

0 2'-0" 4'-0" 6'-0" 8'-0"
SCALE 1/4"=1'-0" AT ORIGINAL SIZE

LEGEND:

- MECHANICAL ITEMS AND PIPING TO BE REMOVED
- CONCRETE AND MASONRY TO BE REMOVED

EDR
Environmental Design & Research,
Landscape Architecture, Engineering & Environmental Services, D.P.C.
217 Montgomery Street, Suite 1100
Syracuse, New York 13202
a better environment P. 315.471.0688

REVISION NUMBER	DATE	MADE BY	APP'D BY	REVISION

RECORD DRAWING CERTIFICATION

☐ AS BUILT – CHANGES AS NOTED
☐ AS BUILT – NO CHANGES

CONTRACTOR	PROJECT COORDINATOR
NAME	NAME
SIGNATURE	SIGNATURE
TITLE DATE	TITLE DATE

MODIFICATION IS A VIOLATION OF CHAPTER 16, TITLE VIII, ARTICLE 145 § 7209.2 NYS EDUCATION LAW, UNLESS ACTING UNDER THE DIRECTION OF A LICENSED PROFESSIONAL ENGINEER. IF A DOCUMENT BEARING THE SEAL OF AN ENGINEER IS ALTERED, THE ALTERING ENGINEER SHALL AFFIX TO THE DOCUMENT THEIR SEAL AND THE NOTATION "ALTERED BY" FOLLOWED BY THEIR SIGNATURE AND THE DATE OF SUCH ALTERATION, AND A SPECIFIC DESCRIPTION OF THE ALTERATION.

WESTCHESTER COUNTY, NEW YORK
DEPARTMENT OF PUBLIC WORKS AND TRANSPORTATION
DIVISION OF ENGINEERING

JACKSON AVENUE PUMPING STATION REHABILITATION
BRONX VALLEY SANITARY SEWER DISTRICT
TOWN OF GREENBURGH, NEW YORK

DEMOLITION – SECTIONS

CONTRACT NUMBER	SHEET NUMBER
22–510	S–004

SHEET NO. 20 OF 55
SCALE: AS SHOWN
DATE: 06/01/2023
DPW FILE NO. 202–02–S–45–0
REV. NO. 0

IN CHARGE OF MET
CHECKED BY BCS
MADE BY KAD

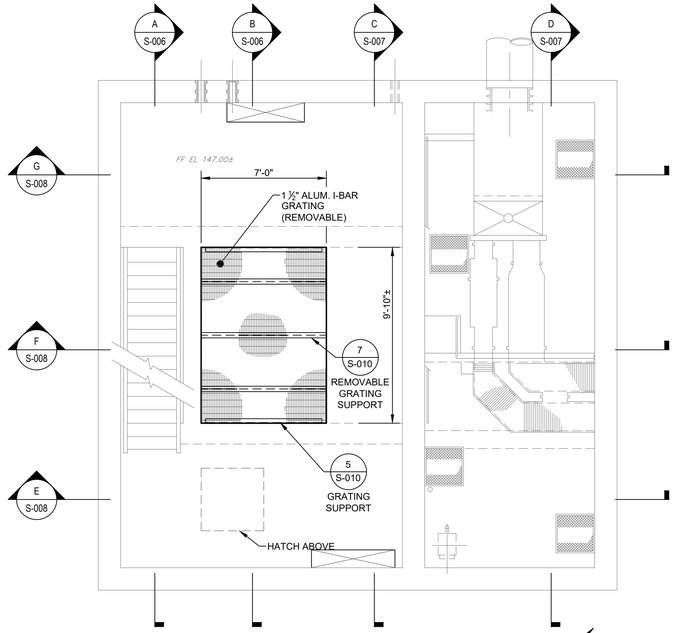

INTERMEDIATE LEVEL PLAN

SCALE: 1/4" = 1'-0"

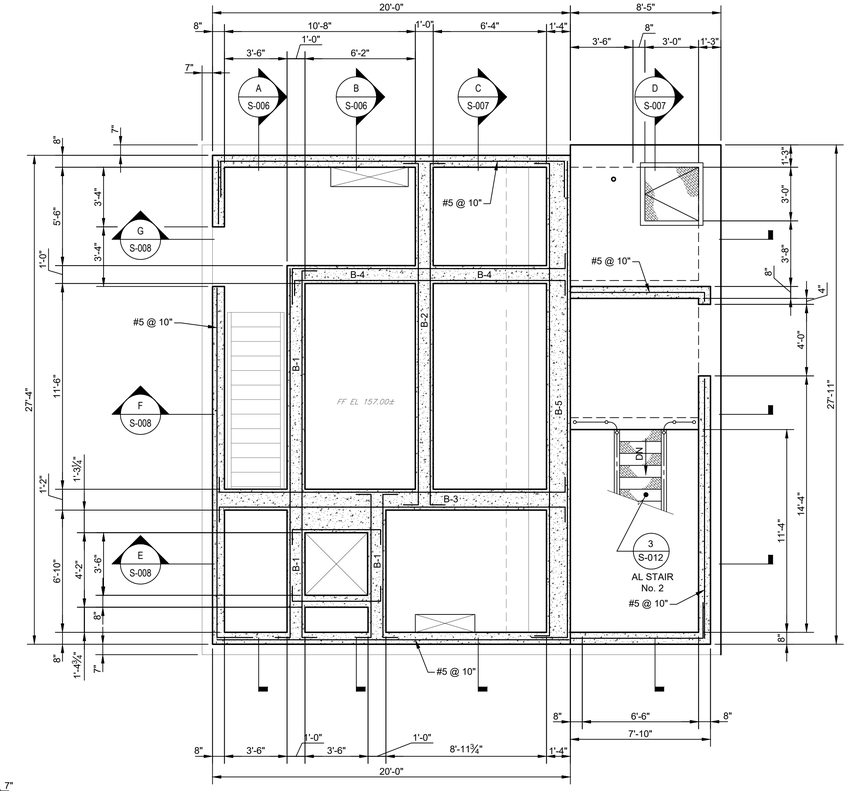

INTERMEDIATE LEVEL PLAN @ EL 159.00

SCALE: 1/4" = 1'-0"

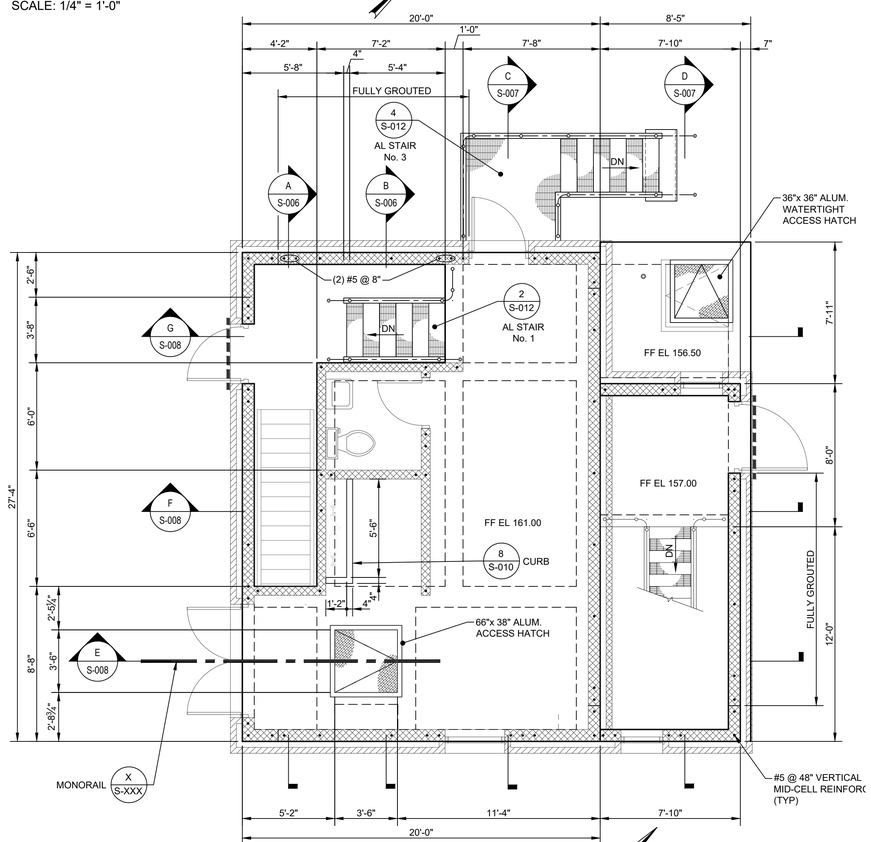

UPPER LEVEL PLAN

SCALE: 1/4" = 1'-0"

NOTES:

1. REFER TO DRAWING S-001 AND S-002 FOR CONCRETE NOTES AND DETAILS.
2. COORDINATE PIPE AND EQUIPMENT LOCATIONS WITH EQUIPMENT MANUFACTURER'S REQUIREMENTS AND DRAWINGS OF OTHER DISCIPLINES.
3. PROVIDE WALL/SLAB OPENINGS REINFORCEMENT IN ACCORDANCE WITH DETAIL ON DRAWING S-001.
4. PROVIDE SPLICE @ ONE-THIRD POINT. ALTERNATE SPLICES IN EACH ROW.

IN CHARGE OF MET
CHECKED BY BCS
MADE BY KAD

0 2'-0" 4'-0" 6'-0" 8'-0"
SCALE 1/4"=1'-0" AT ORIGINAL SIZE

MODIFICATION IS A VIOLATION OF CHAPTER 16, TITLE VIII, ARTICLE 145 § 7209.2 NYS EDUCATION LAW, UNLESS ACTING UNDER THE DIRECTION OF A LICENSED PROFESSIONAL ENGINEER. IF A DOCUMENT BEARING THE SEAL OF AN ENGINEER IS ALTERED, THE ALTERING ENGINEER SHALL AFFIX TO THE DOCUMENT THEIR SEAL AND THE NOTATION "ALTERED BY" FOLLOWED BY THEIR SIGNATURE AND THE DATE OF SUCH ALTERATION, AND A SPECIFIC DESCRIPTION OF THE ALTERATION.

STATE OF NEW YORK · MICHAEL E. TAUBE · 073757 · LICENSED PROFESSIONAL ENGINEER

EDR
a better environment

Environmental Design & Research,
Landscape Architecture, Engineering & Environmental Services, D.P.C.
217 Montgomery Street, Suite 1100
Syracuse, New York 13202
P. 315.471.0688

REVISION NUMBER	DATE	MADE BY	APP'D BY	REVISION

RECORD DRAWING CERTIFICATION

☐ AS BUILT – CHANGES AS NOTED
☐ AS BUILT – NO CHANGES

CONTRACTOR	PROJECT COORDINATOR
NAME	NAME
SIGNATURE	SIGNATURE
TITLE DATE	TITLE DATE

WESTCHESTER COUNTY, NEW YORK
DEPARTMENT OF PUBLIC WORKS AND TRANSPORTATION
DIVISION OF ENGINEERING

JACKSON AVENUE PUMPING STATION REHABILITATION
BRONX VALLEY SANITARY SEWER DISTRICT
TOWN OF GREENBURGH, NEW YORK

PLANS

CONTRACT NUMBER	SHEET NUMBER
22–510	S–005

SHEET NO. 21 OF 55
SCALE: AS SHOWN
DATE: 06/01/2023
DPW FILE NO. 202–02–S–46–0
REV. NO. 0

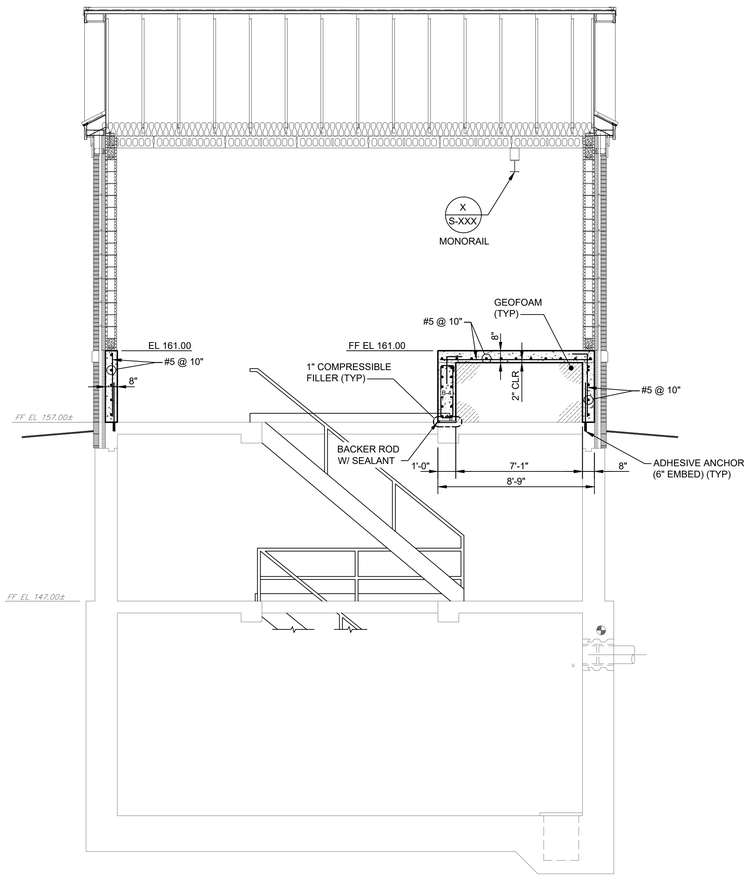

A S-005 SECTION
SCALE: 1/4" = 1'-0"

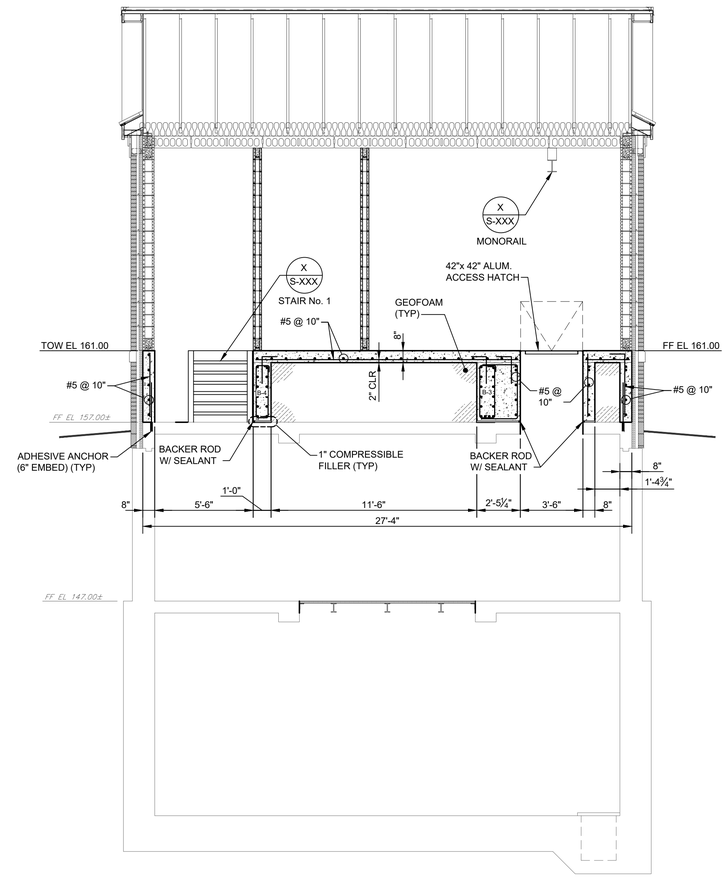

B S-005 SECTION
SCALE: 1/4" = 1'-0"

NOTES:

1. REFER TO DRAWING S-001 AND S-002 FOR CONCRETE NOTES AND DETAILS.
2. COORDINATE PIPE AND EQUIPMENT LOCATIONS WITH EQUIPMENT MANUFACTURER'S REQUIREMENTS AND DRAWINGS OF OTHER DISCIPLINES.
3. PROVIDE WALL/SLAB OPENINGS REINFORCEMENT IN ACCORDANCE WITH DETAIL ON DRAWING S-001.
4. PROVIDE SPLICE @ ONE-THIRD POINT. ALTERNATE SPLICES IN EACH ROW.

0 2'-0" 4'-0" 6'-0" 8'-0"
SCALE 1/4"=1'-0" AT ORIGINAL SIZE

IN CHARGE OF MET
CHECKED BY BCS
MADE BY KAD

MODIFICATION IS A VIOLATION OF CHAPTER 16, TITLE VIII, ARTICLE 145 § 7209.2 NYS EDUCATION LAW, UNLESS ACTING UNDER THE DIRECTION OF A LICENSED PROFESSIONAL ENGINEER. IF A DOCUMENT BEARING THE SEAL OF AN ENGINEER IS ALTERED, THE ALTERING ENGINEER SHALL AFFIX TO THE DOCUMENT THEIR SEAL AND THE NOTATION "ALTERED BY" FOLLOWED BY THEIR SIGNATURE AND THE DATE OF SUCH ALTERATION, AND A SPECIFIC DESCRIPTION OF THE ALTERATION.

STATE OF NEW YORK · MICHAEL E. TUCKER · 073737 · LICENSED PROFESSIONAL ENGINEER

EDR
a better environment

Environmental Design & Research,
Landscape Architecture, Engineering & Environmental Services, D.P.C.
217 Montgomery Street, Suite 1100
Syracuse, New York 13202
P. 315.471.0688

REVISION NUMBER	DATE	MADE BY	APP'D BY	REVISION

RECORD DRAWING CERTIFICATION

☐ AS BUILT – CHANGES AS NOTED
☐ AS BUILT – NO CHANGES

CONTRACTOR	PROJECT COORDINATOR
NAME	NAME
SIGNATURE	SIGNATURE
TITLE DATE	TITLE DATE

WESTCHESTER COUNTY, NEW YORK
DEPARTMENT OF PUBLIC WORKS AND TRANSPORTATION
DIVISION OF ENGINEERING

JACKSON AVENUE PUMPING STATION REHABILITATION
BRONX VALLEY SANITARY SEWER DISTRICT
TOWN OF GREENBURGH, NEW YORK

SECTIONS

CONTRACT NUMBER	SHEET NUMBER
22–510	S–006

SHEET NO. 22 OF 55
SCALE: AS SHOWN
DATE: 06/01/2023
DPW FILE NO. 202–02–S–47–0
REV. NO. 0

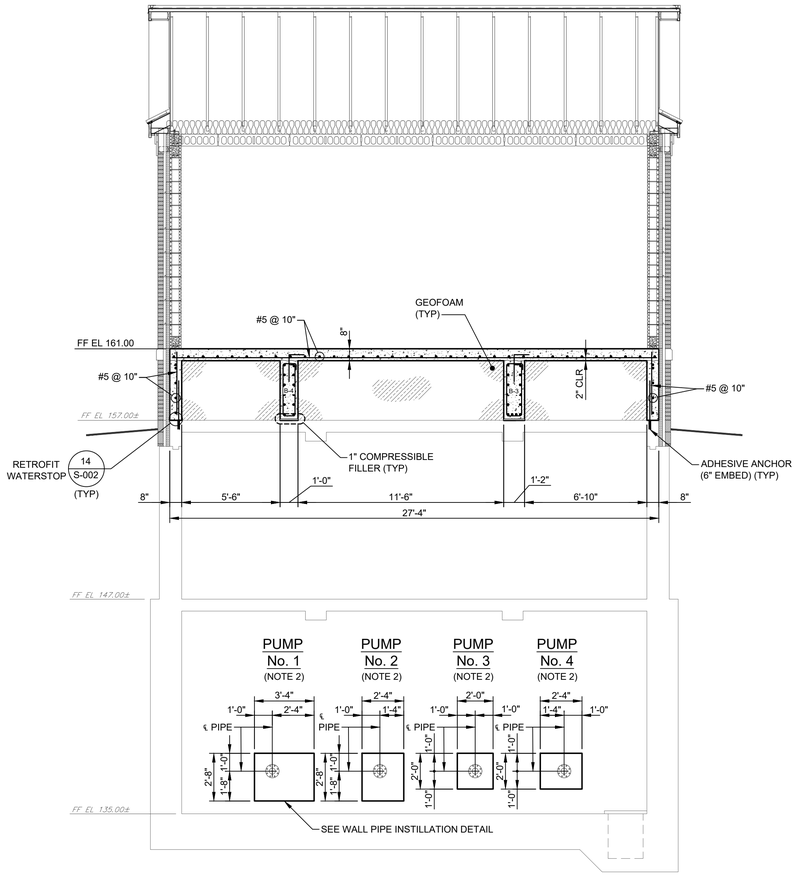

C S-005 SECTION
SCALE: 1/4" = 1'-0"

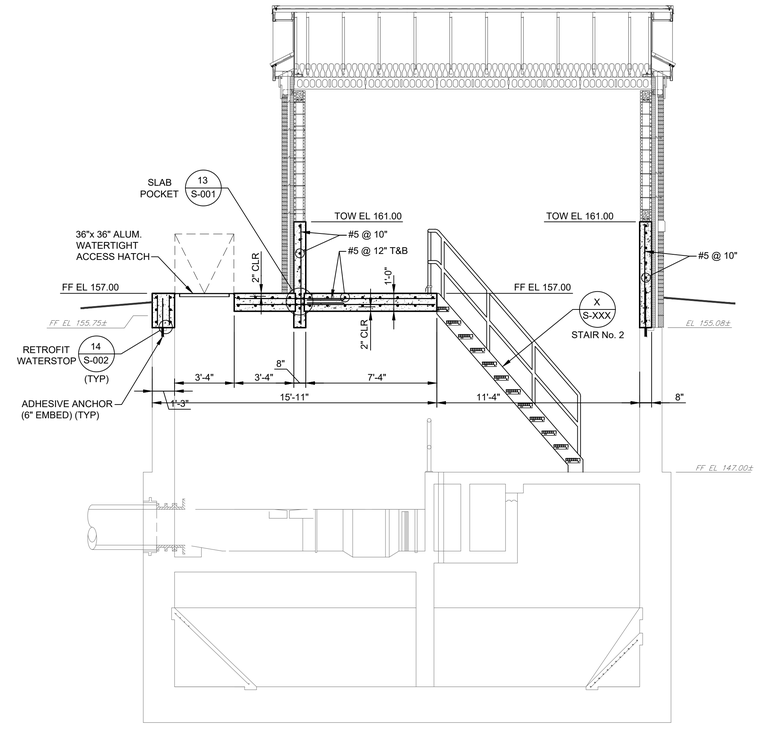

D S-005 SECTION
SCALE: 1/4" = 1'-0"

NOTES:

1. REFER TO DRAWING S-001 AND S-002 FOR CONCRETE NOTES AND DETAILS.
2. COORDINATE PIPE AND EQUIPMENT LOCATIONS WITH EQUIPMENT MANUFACTURER'S REQUIREMENTS AND DRAWINGS OF OTHER DISCIPLINES.
3. PROVIDE WALL/SLAB OPENINGS REINFORCEMENT IN ACCORDANCE WITH DETAIL ON DRAWING S-001.
4. PROVIDE SPLICE @ ONE-THIRD POINT. ALTERNATE SPLICES IN EACH ROW.

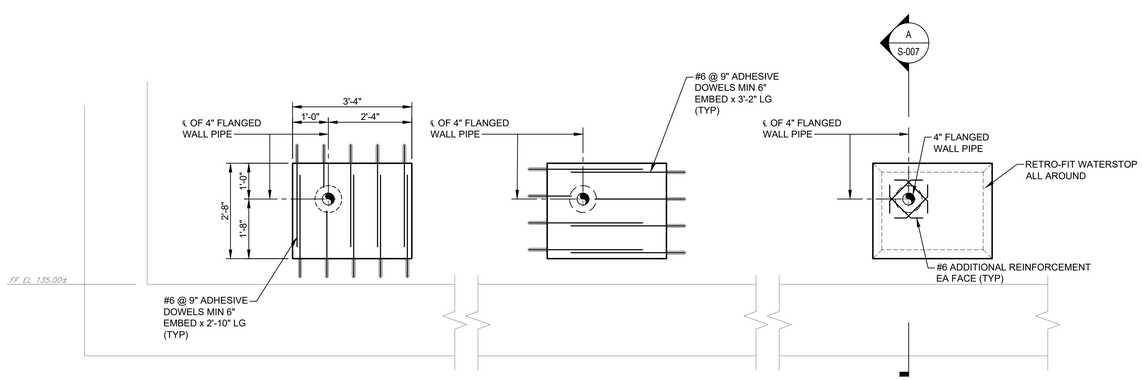

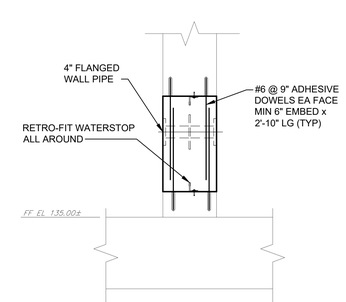

A S-007 SECTION
SCALE: 1/2" = 1'-0"

0 2'-0" 4'-0" 6'-0" 8'-0"
SCALE 1/4"=1'-0" AT ORIGINAL SIZE

WALL PIPE INSTALLATION DETAIL

SCALE: 1/2" = 1'-0"

(INSTALLATION FOR PUMP No. 1 SHOWN, INSTALLATION FOR PUMPS No. 2, No. 3 AND No. 4 SIMILAR)

IN CHARGE OF MJL
CHECKED BY BCS
MADE BY KAD

MODIFICATION IS A VIOLATION OF CHAPTER 16, TITLE VIII, ARTICLE 145 § 7209.2 NYS EDUCATION LAW, UNLESS ACTING UNDER THE DIRECTION OF A LICENSED PROFESSIONAL ENGINEER. IF A DOCUMENT BEARING THE SEAL OF AN ENGINEER IS ALTERED, THE ALTERING ENGINEER SHALL AFFIX TO THE DOCUMENT THEIR SEAL AND THE NOTATION "ALTERED BY" FOLLOWED BY THEIR SIGNATURE AND THE DATE OF SUCH ALTERATION, AND A SPECIFIC DESCRIPTION OF THE ALTERATION.

EDR
Environmental Design & Research,
Landscape Architecture, Engineering & Environmental Services, D.P.C.
217 Montgomery Street, Suite 1100
Syracuse, New York 13202
a better environment P. 315.471.0688

REVISION NUMBER	DATE	MADE BY	APP'D BY	REVISION

RECORD DRAWING CERTIFICATION

☐ AS BUILT – CHANGES AS NOTED
☐ AS BUILT – NO CHANGES

CONTRACTOR	PROJECT COORDINATOR
NAME	NAME
SIGNATURE	SIGNATURE
TITLE DATE	TITLE DATE

WESTCHESTER COUNTY, NEW YORK
DEPARTMENT OF PUBLIC WORKS AND TRANSPORTATION
DIVISION OF ENGINEERING

JACKSON AVENUE PUMPING STATION REHABILITATION
BRONX VALLEY SANITARY SEWER DISTRICT
TOWN OF GREENBURGH, NEW YORK

SECTIONS

CONTRACT NUMBER	SHEET NUMBER
22–510	S–007

SHEET NO. 23 OF 55
SCALE: AS SHOWN
DATE: 06/01/2023
DPW FILE NO. 202–02–S–48–0
REV. NO. 0

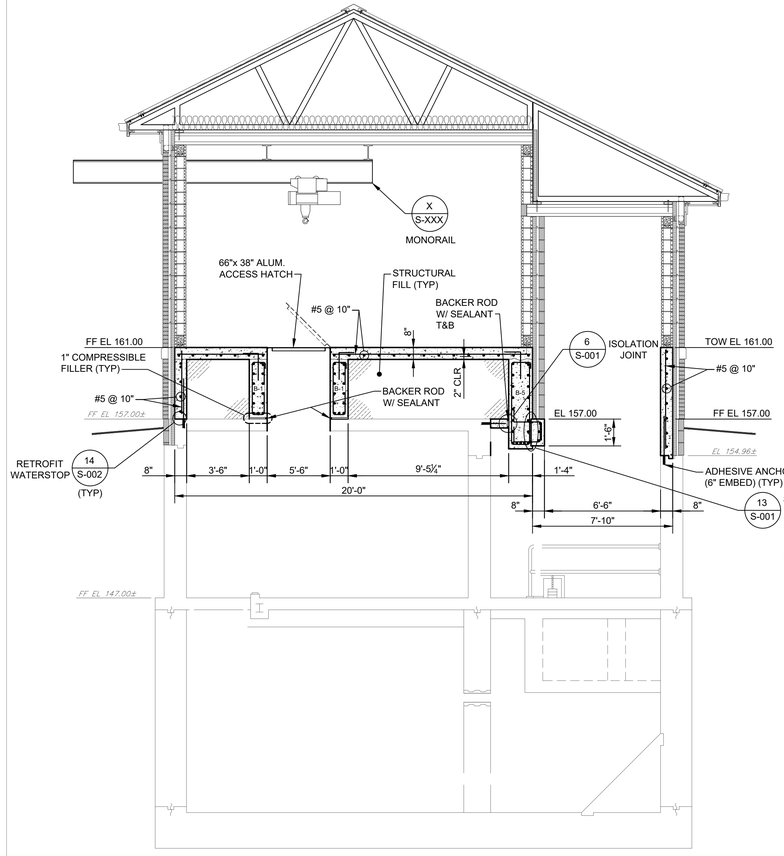

E
S-005
SECTION
SCALE: 1/4" = 1'-0"

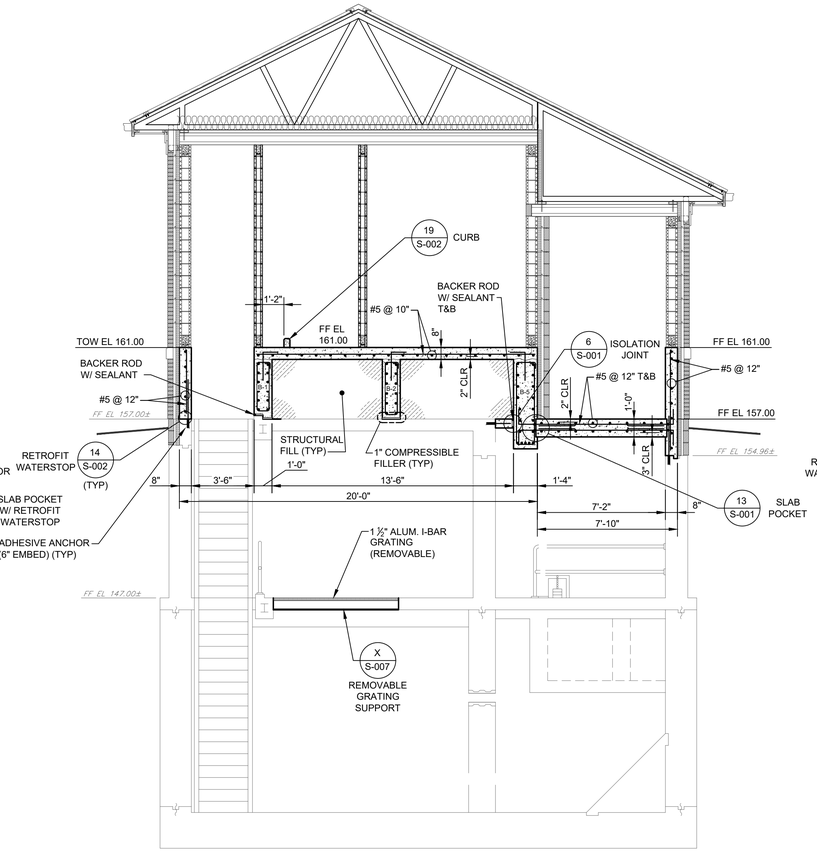

F
S-005
SECTION
SCALE: 1/4" = 1'-0"

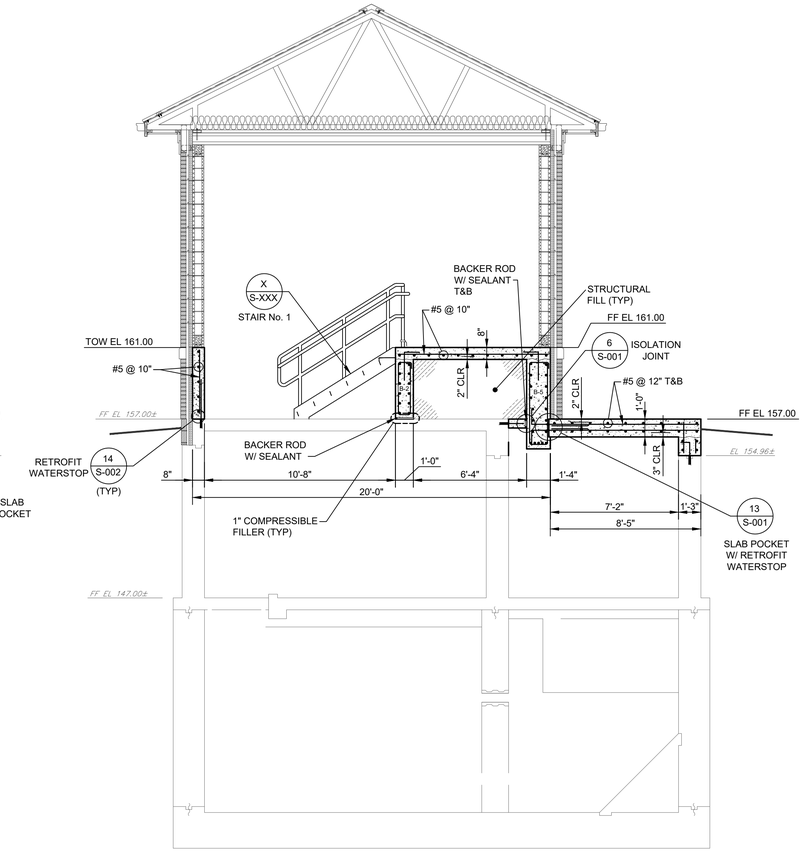

G
S-005
SECTION
SCALE: 1/4" = 1'-0"

NOTES:

1. REFER TO DRAWING S-001 AND S-002 FOR CONCRETE NOTES AND DETAILS.
2. COORDINATE PIPE AND EQUIPMENT LOCATIONS WITH EQUIPMENT MANUFACTURER'S REQUIREMENTS AND DRAWINGS OF OTHER DISCIPLINES.
3. PROVIDE WALL/SLAB OPENINGS REINFORCEMENT IN ACCORDANCE WITH DETAIL ON DRAWING S-001.
4. PROVIDE SPLICE @ ONE-THIRD POINT. ALTERNATE SPLICES IN EACH ROW.

0 2'-0" 4'-0" 6'-0" 8'-0"
SCALE 1/4"=1'-0" AT ORIGINAL SIZE

IN CHARGE OF MET
CHECKED BY BCS
MADE BY KAD

STATE OF NEW YORK
MICHAEL E. TAUBER
073757
LICENSED PROFESSIONAL ENGINEER
EDR
Environmental Design & Research,
Landscape Architecture, Engineering & Environmental Services, D.P.C.
217 Montgomery Street, Suite 1100
Syracuse, New York 13202
a better environment P. 315.471.0688

REVISION NUMBER	DATE	MADE BY	APP'D BY	REVISION

RECORD DRAWING CERTIFICATION

☐ AS BUILT – CHANGES AS NOTED
☐ AS BUILT – NO CHANGES

CONTRACTOR	PROJECT COORDINATOR
NAME	NAME
SIGNATURE	SIGNATURE
TITLE DATE	TITLE DATE

WESTCHESTER COUNTY, NEW YORK
DEPARTMENT OF PUBLIC WORKS AND TRANSPORTATION
DIVISION OF ENGINEERING

JACKSON AVENUE PUMPING STATION REHABILITATION
BRONX VALLEY SANITARY SEWER DISTRICT
TOWN OF GREENBURGH, NEW YORK

SECTIONS

CONTRACT NUMBER	SHEET NUMBER
22–510	S–008

SHEET NO. 24 OF 55
SCALE: AS SHOWN
DATE: 06/01/2023
DPW FILE NO. 202–02–S–49–0
REV. NO. 0

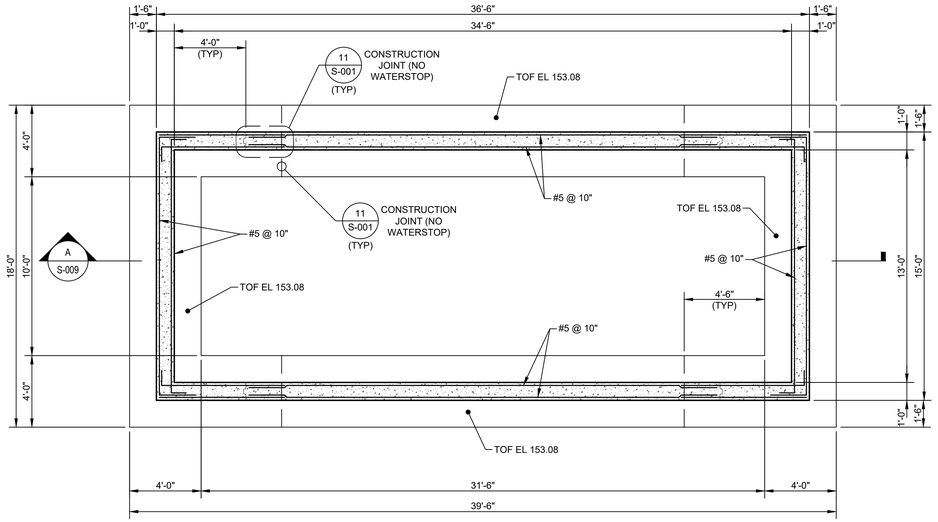

FOUNDATION PLAN

SCALE: 1/4" = 1'-0"

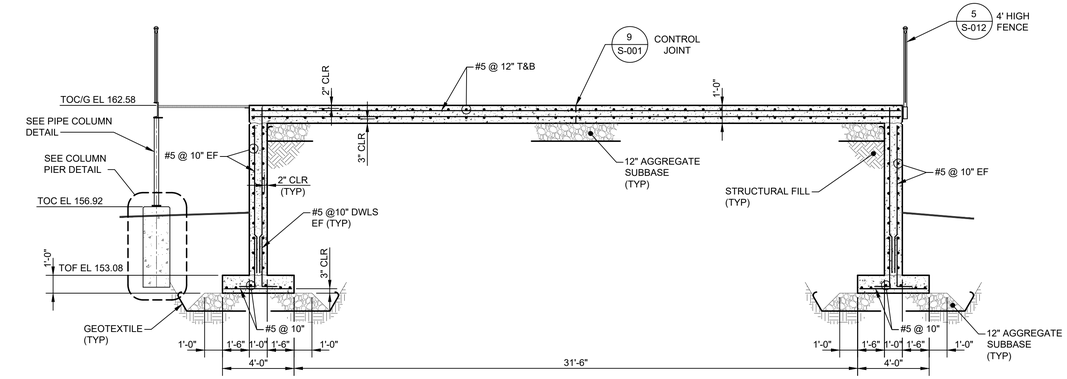

A S-009 SECTION

SCALE: 1/4" = 1'-0"

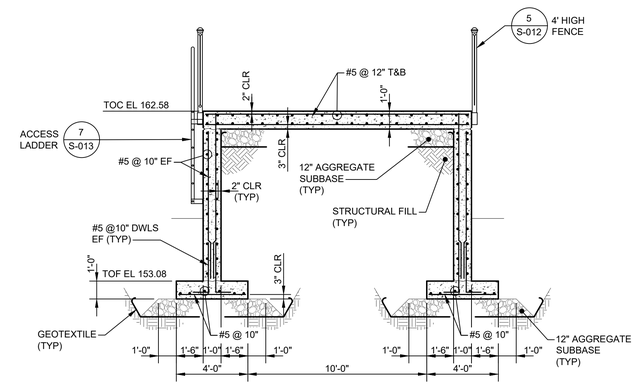

B S-009 SECTION

SCALE: 1/4" = 1'-0"

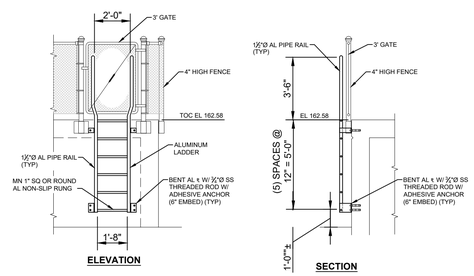

7 S-009 ACCESS LADDER DETAIL

Scale: 1/4" = 1'-0"

NOTES:

1. REFER TO DRAWING S-001 AND S-002 FOR CONCRETE NOTES AND DETAILS.
2. COORDINATE PIPE AND EQUIPMENT LOCATIONS WITH EQUIPMENT MANUFACTURER'S REQUIREMENTS AND DRAWINGS OF OTHER DISCIPLINES.
3. PROVIDE WALL/SLAB OPENINGS REINFORCEMENT IN ACCORDANCE WITH DETAIL ON DRAWING S-001.
4. PROVIDE SPLICE @ ONE-THIRD POINT. ALTERNATE SPLICES IN EACH ROW.

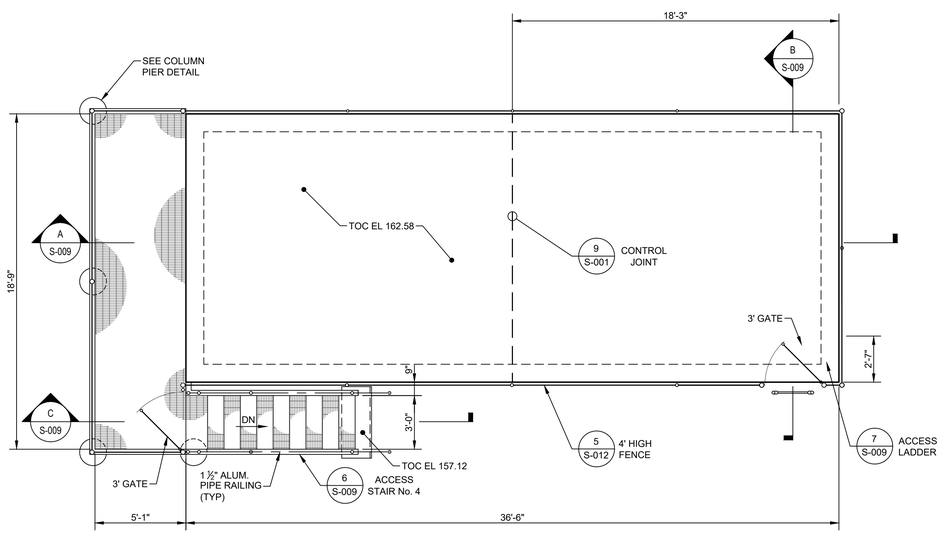

TOP PLAN

SCALE: 1/4" = 1'-0"

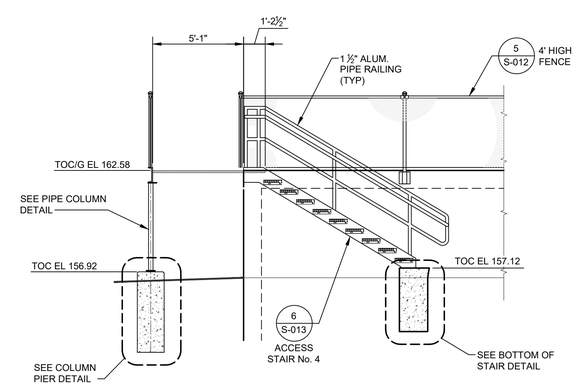

C S-009 SECTION

SCALE: 1/4" = 1'-0"

0 2'-0" 4'-0" 6'-0" 8'-0"

SCALE 1/4"=1'-0" AT ORIGINAL SIZE

MODIFICATION IS A VIOLATION OF CHAPTER 16, TITLE VIII, ARTICLE 145 § 7209.2 NYS EDUCATION LAW, UNLESS ACTING UNDER THE DIRECTION OF A LICENSED PROFESSIONAL ENGINEER. IF A DOCUMENT BEARING THE SEAL OF AN ENGINEER IS ALTERED, THE ALTERING ENGINEER SHALL AFFIX TO THE DOCUMENT THEIR SEAL AND THE NOTATION "ALTERED BY" FOLLOWED BY THEIR SIGNATURE AND THE DATE OF SUCH ALTERATION, AND A SPECIFIC DESCRIPTION OF THE ALTERATION.

STATE OF NEW YORK · DONALD E. TAUBE · 073757 · LICENSED PROFESSIONAL ENGINEER

EDR a better environment

Environmental Design & Research,
Landscape Architecture, Engineering & Environmental Services, D.P.C.
217 Montgomery Street, Suite 1100
Syracuse, New York 13202
P. 315.471.0688

REVISION NUMBER	DATE	MADE BY	APP'D BY	REVISION

RECORD DRAWING CERTIFICATION

☐ AS BUILT – CHANGES AS NOTED
☐ AS BUILT – NO CHANGES

CONTRACTOR	PROJECT COORDINATOR
NAME	NAME
SIGNATURE	SIGNATURE
TITLE DATE	TITLE DATE

WESTCHESTER COUNTY, NEW YORK
DEPARTMENT OF PUBLIC WORKS AND TRANSPORTATION
DIVISION OF ENGINEERING

JACKSON AVENUE PUMPING STATION REHABILITATION
BRONX VALLEY SANITARY SEWER DISTRICT
TOWN OF GREENBURGH, NEW YORK
GENERATOR PAD
PLANS AND SECTIONS

CONTRACT NUMBER	SHEET NUMBER
22–510	S–009

SHEET NO. 25 OF 55

SCALE: AS SHOWN
DATE: 06/01/2023

DPW FILE NO. 202–02–S–50–0 REV. NO. 0

IN CHARGE OF MET
CHECKED BY BCS
MADE BY KAD

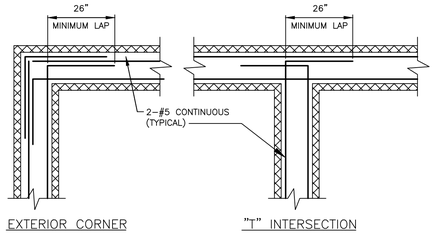

9 - BOND BEAM REINFORCING PLACEMENT
NO SCALE

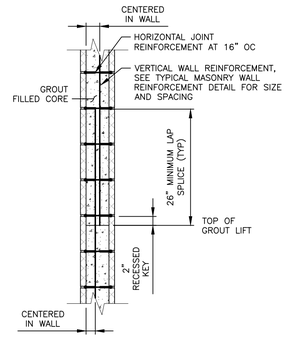

10 - TYPICAL MASONRY WALL SECTION
NO SCALE

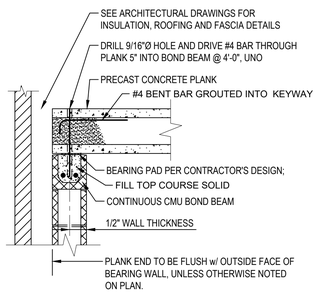

(BEARING AT CMU CAVITY WALL)

13 - ROOF PLANK EXTERIOR BEARING
NO SCALE

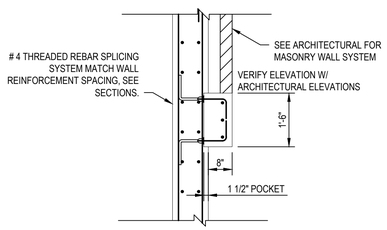

14 - TYPICAL MASONRY SHELF DETAIL
NO SCALE

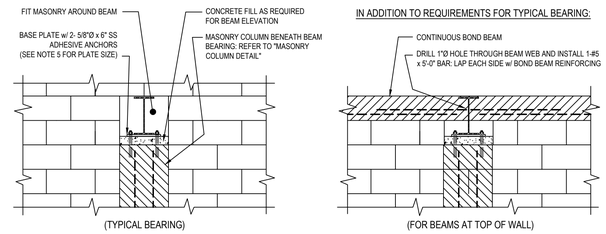

BEARING PERPENDICULAR TO WALL

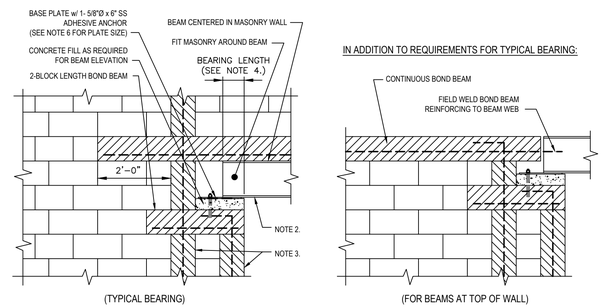

BEARING PARALLEL TO WALL

NOTES:

1. FILL BOND BEAMS AND REINFORCED MASONRY CORES w/ MASONRY GROUT. REFER TO "MASONRY WALL REINFORCING DETAIL" FOR BAR SIZES.
2. SEE ARCHITECTURAL DRAWINGS FOR LINTEL PLATE REQUIREMENTS AND MASONRY INFILL AROUND LINTEL BEAMS.
3. WHERE BEAM BEARS PARALLEL TO WALL, PROVIDE VERTICAL REINFORCING AT FIRST CORE FROM OPENING AND TERMINATE BELOW BOTTOM OF STEEL BEAM. ALSO PROVIDE VERTICAL REINFORCING AT FIRST CORE BEYOND END OF BEARING PLATE AND EXTEND TO TOP OF WALL.
4. BEAM BEARING LENGTH AS FOLLOWS: BEAMS UP TO 12" TALL, USE 8" BEARING
   BEAMS LARGER THAN 12", USE 16" BEARING.
5. FOR BEAM BEARING PERPENDICULAR TO WALL, BASE PLATE SIZE SHALL BE 3/8" x (WALL WIDTH - 1") x (FLANGE WIDTH + 6").
6. FOR BEAM BEARING PARALLEL TO WALL, BASE PLATE SIZE SHALL BE 3/8" x (WALL WIDTH - 1") x (BEARING LENGTH + 6").

11 - BEAM BEARING AT MASONRY WALL
NO SCALE

MASONRY LINTEL SCHEDULE
(SEE TYPICAL MASONRY LINTLE/BEAM CONSTRUCTION DETAIL)

STRUCTURE	DOOR, WINDOW, OR LOUVER NO.	CMU WIDTH	LINTEL DEPTH/ NO. COURSES	TOP & BOTTOM REINFORCING BARS	SHEAR REINFORCING TIES

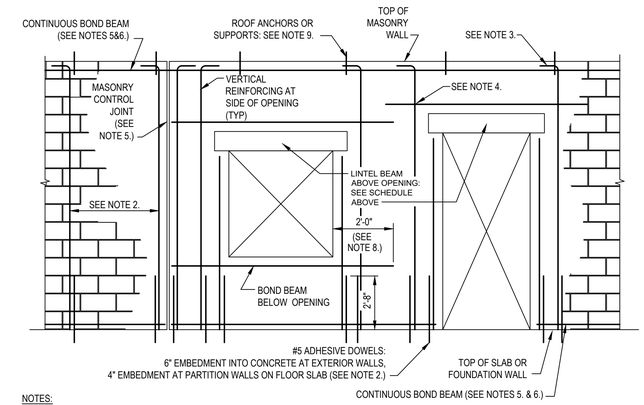

NOTES:

1. REINFORCING TYPICAL AT INTERIOR AND EXTERIOR WALLS AS NOTED.
2. MAXIMUM SPACING BETWEEN VERTICAL REINFORCING SHALL BE 4'-0" FOR EXTERIOR AND LOAD-BEARING WALLS, UNLESS NOTED OTHERWISE. FOR PARTITION WALLS, DOWEL SPACING SHALL BE 8'-0" MAX. ALSO FOR PARTITION WALLS, FULL-HEIGHT VERTICAL REINFORCING IS ONLY REQUIRED ADJACENT TO OPENINGS AND CONTROL JOINTS. SEE STRUCTURAL PLANS FOR REQUIRED REINFORCING LOCATIONS.
3. VERTICAL REINFORCING SHALL TERMINATE WITH STANDARD HOOK 2" CLEAR FROM TOP OF BOND BEAM.
4. VERTICAL REINFORCING SHALL BE CONTINUOUS THROUGH BOND BEAMS BY PROVIDING 3" DIAMETER OPENING IN BOTTOM OF BOND BEAM.
5. PROVIDE VERTICAL REINFORCING EACH SIDE OF MASONRY CONTROL JOINT. TERMINATE MID-WALL BOND BEAMS AT CONTROL JOINT. BOND BEAM REINFORCING AT TOP AND BOTTOM OF WALL SHALL BE CONTINUOUS THROUGH CONTROL JOINT.
6. VERTICAL REINFORCING SHALL BE 1-#5 CONTINUOUS, UNLESS NOTED OTHERWISE, AND SHALL BE CENTERED IN CELL.
7. BOND BEAM REINFORCING SHALL BE 2-#5 CONTINUOUS AND REINFORCING BAR CENTERLINE SHALL BE MAXIMUM 3" FROM BOTTOM FACE OF MASONRY BLOCK.
8. WHERE ADJACENT OPENING OCCURS WITHIN 2'-0", TERMINATE BOND BEAM AT EDGE OF ADJACENT OPENING. REINFORCING BAR SHALL BE TERMINATED IN A STANDARD HOOK, TURNED DOWN INTO GROUTED CELL.
9. ROOF ANCHORS SHALL BE LOCATED AND OF CONNECTION TYPES INDICATED ON STUCTURAL DRAWINGS.
10. SEE ARCHITECTURAL DRAWINGS FOR CMU TYPE AT EACH BUILDING. SEE ARCHITECTURAL DETAILS AND SPECIFICATION SECTION 04300 FOR ADDITIONAL REQUIREMENTS.

12 - MASONRY WALL REINFORCING
NO SCALE

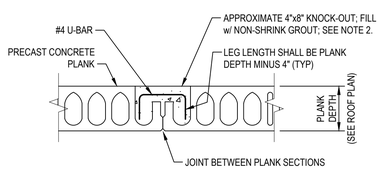

NOTES:

1. LOCATE PLANK TIES THUS (UNO):
   SPANS 20' TO 30' - USE ONE ROW OF TIES AT MID-SPAN
   SPANS GREATER THAN 30' - 2 ROWS OF TIES AT 1/3 POINTS
2. BLOCK OFF CORES AS REQUIRED TO PREVENT GROUT LEAKAGE BEYOND TIE AREA.

15 - ROOF PLANK TIE
NO SCALE

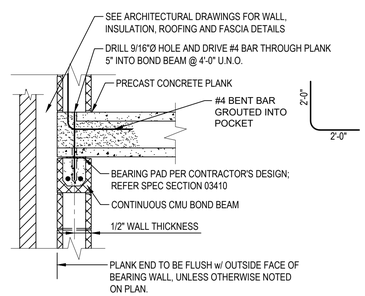

(BEARING AT CMU CAVITY WALL)

16 - ROOF PLANK EXTERIOR BEARING
NO SCALE

(SIDELAP AT CMU CAVITY WALL)

17 - ROOF PLANK SIDELAP
NO SCALE

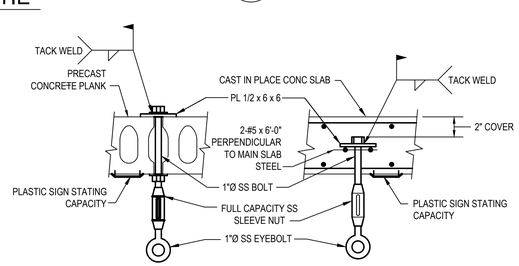

NOTE: LIFTING EYES TO BE LOCATED OVER ALL PUMPS, VALVES IN 1"2"Ø AND LARGER LINES, AND AS SHOWN ON PLANS.

18 - LIFTING EYE
NO SCALE

IN CHARGE OF MET
CHECKED BY BCS
MADE BY KAD

MODIFICATION IS A VIOLATION OF CHAPTER 16, TITLE VIII, ARTICLE 145 § 7209.2 NYS EDUCATION LAW, UNLESS ACTING UNDER THE DIRECTION OF A LICENSED PROFESSIONAL ENGINEER. IF A DOCUMENT BEARING THE SEAL OF AN ENGINEER IS ALTERED, THE ALTERING ENGINEER SHALL AFFIX TO THE DOCUMENT THEIR SEAL AND THE NOTATION "ALTERED BY" FOLLOWED BY THEIR SIGNATURE AND THE DATE OF SUCH ALTERATION, AND A SPECIFIC DESCRIPTION OF THE ALTERATION.

STATE OF NEW YORK · MICHAEL E. TALIERCIO · 073757 · LICENSED PROFESSIONAL ENGINEER
EDR
Environmental Design & Research,
Landscape Architecture, Engineering & Environmental Services, D.P.C.
217 Montgomery Street, Suite 1100
Syracuse, New York 13202
a better environment P. 315.471.0688

REVISION NUMBER	DATE	MADE BY	APP'D BY	REVISION

RECORD DRAWING CERTIFICATION

☐ AS BUILT – CHANGES AS NOTED
☐ AS BUILT – NO CHANGES

CONTRACTOR	PROJECT COORDINATOR
NAME	NAME
SIGNATURE	SIGNATURE
TITLE DATE	TITLE DATE

WESTCHESTER COUNTY, NEW YORK
DEPARTMENT OF PUBLIC WORKS AND TRANSPORTATION
DIVISION OF ENGINEERING

JACKSON AVENUE PUMPING STATION REHABILITATION
BRONX VALLEY SANITARY SEWER DISTRICT
TOWN OF GREENBURGH, NEW YORK

MISCELLANEOUS DETAILS

CONTRACT NUMBER	SHEET NUMBER
22–510	S–010

SHEET NO. 26 OF 55
SCALE: AS SHOWN
DATE: 06/01/2023
DPW FILE NO. 202–02–S–51–0
REV. NO. 0

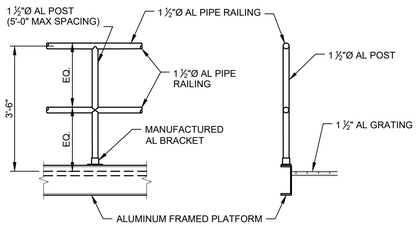

ELEVATION **SECTION**

ALUMINUM RAILING: TOP MOUNTED TO ALUMINUM

NO SCALE

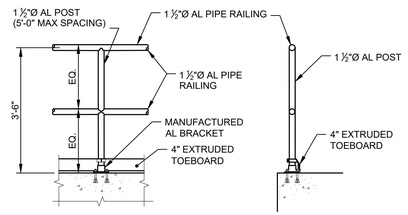

ELEVATION **SECTION**

ALUMINUM RAILING: TOP MOUNTED TO CONCRETE

NO SCALE

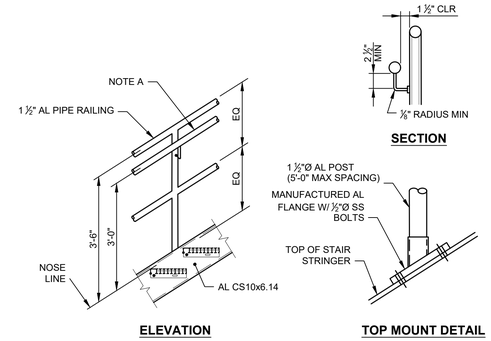

ELEVATION **SECTION** **TOP MOUNT DETAIL**

NOTE:

A. HANDRAIL TO TERMINATE INTO A POST OR ANOTHER RAIL AT THE TOP AND BOTTOM OF STAIRS.

3-RAIL ALUMINUM RAILING: TOP MOUNTED TO STAIR

NO SCALE

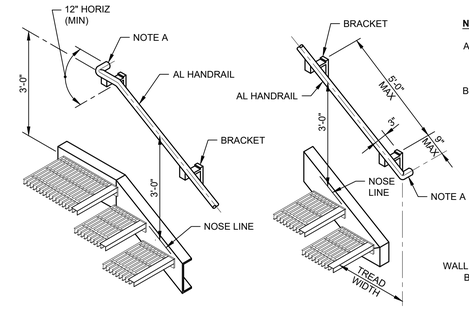

TOP OF STAIR **BOTTOM OF STAIR**

NOTES:

A. HANDRAIL TO TERMINATE INTO A POST, WALL OR ANOTHER RAIL AT THE TOP AND BOTTOM OF STAIRS.

B. MAXIMUM BRACKET SPACING IS 5'-0" ON CENTERS. (WALL MOUNTED BRACKET SHOWN, POST-MOUNT SIMILAR)

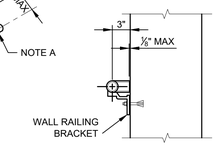

END ELEVATION

ALUMINUM HANDRAIL DETAIL

NO SCALE

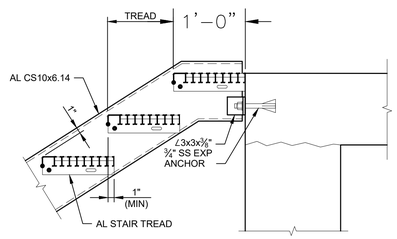

LANDING DETAIL

NO SCALE

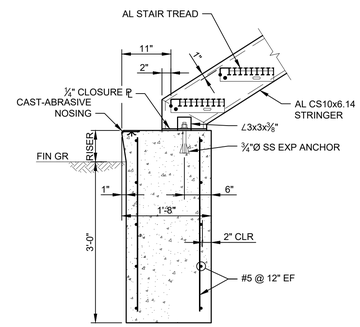

NOTE:

A. FOOTING WIDTH SHALL MATCH LANDING WIDTH, BUT IN NO CASE SHALL IT BE LESS THEN STAIR TREAD WIDTH PLUS 6" EACH SIDE.

BOTTOM OF STAIR DETAIL

NO SCALE

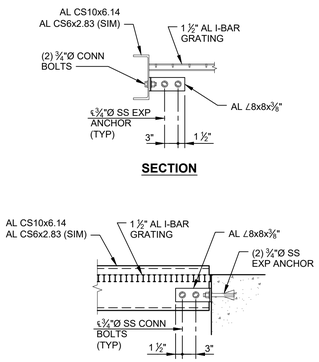

SECTION

ELEVATION

CONNECTION DETAIL

NO SCALE

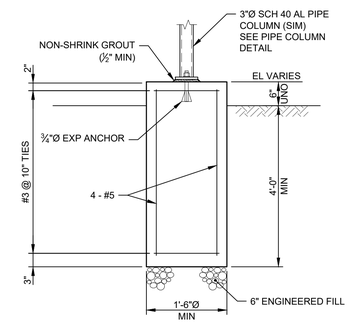

COLUMN PIER DETAIL

NO SCALE

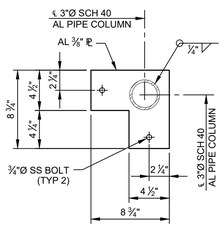

CAP PLATE PLAN

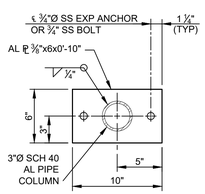

BASE / CAP PLATE PLAN

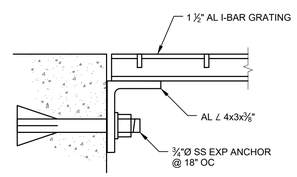

GRATING SUPPORT DETAIL

NO SCALE

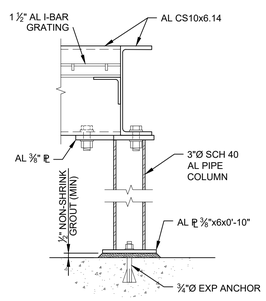

SECTION

PIPE COLUMN DETAIL

NO SCALE

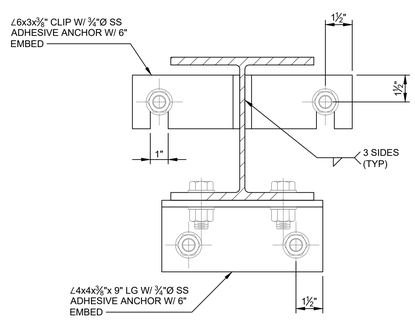

NOTES:

1. SEAT AND CLIP MATERIAL SHALL MATCH BEAM MATERIAL.
2. USE APPROPRIATE CHEMICAL ADHESIVE SYSTEM FOR ATTACHMENT TO CONCRETE OR GROUTED MASONRY.

REMOVABLE BEAM END CONNECTION

NO SCALE

IN CHARGE OF MET
CHECKED BY BCS
MADE BY KAD

MODIFICATION IS A VIOLATION OF CHAPTER 16, TITLE VIII, ARTICLE 145 § 7209.2 NYS EDUCATION LAW, UNLESS ACTING UNDER THE DIRECTION OF A LICENSED PROFESSIONAL ENGINEER. IF A DOCUMENT BEARING THE SEAL OF AN ENGINEER IS ALTERED, THE ALTERING ENGINEER SHALL AFFIX TO THE DOCUMENT THEIR SEAL AND THE NOTATION "ALTERED BY" FOLLOWED BY THEIR SIGNATURE AND THE DATE OF SUCH ALTERATION, AND A SPECIFIC DESCRIPTION OF THE ALTERATION.

EDR
Environmental Design & Research,
Landscape Architecture, Engineering & Environmental Services, D.P.C.
217 Montgomery Street, Suite 1100
Syracuse, New York 13202
a better environment P. 315.471.0688

REVISION NUMBER	DATE	MADE BY	APP'D BY	REVISION

RECORD DRAWING CERTIFICATION

☐ AS BUILT – CHANGES AS NOTED
☐ AS BUILT – NO CHANGES

CONTRACTOR	PROJECT COORDINATOR
NAME	NAME
SIGNATURE	SIGNATURE
TITLE DATE	TITLE DATE

WESTCHESTER COUNTY, NEW YORK
DEPARTMENT OF PUBLIC WORKS AND TRANSPORTATION
DIVISION OF ENGINEERING

JACKSON AVENUE PUMPING STATION REHABILITATION
BRONX VALLEY SANITARY SEWER DISTRICT
TOWN OF GREENBURGH, NEW YORK

MISCELLANEOUS DETAILS

CONTRACT NUMBER 22-510
SHEET NUMBER S-011
SHEET NO. 27 OF 55
SCALE: AS SHOWN
DATE: 06/01/2023
DPW FILE NO. 202-02-S-52-0
REV. NO. 0

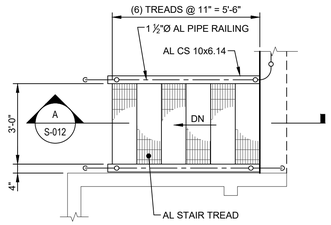

PLAN

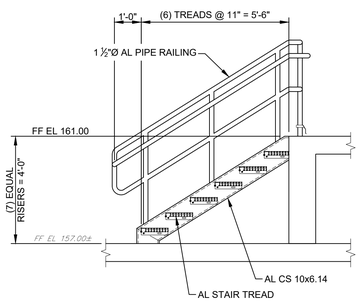

SECTION "A"

2 / - AL STAIR No. 1 DETAIL

Scale: 3/8" = 1'-0"

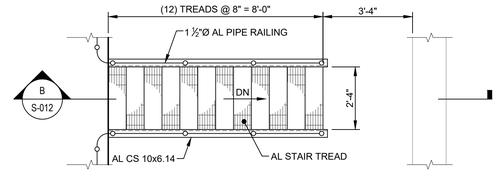

PLAN

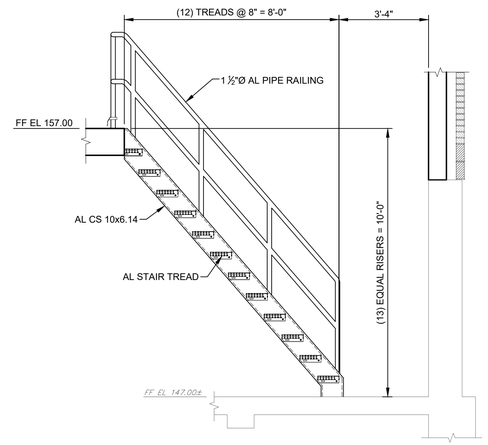

SECTION "B"

3 / - AL STAIR No. 2 DETAIL

Scale: 3/8" = 1'-0"

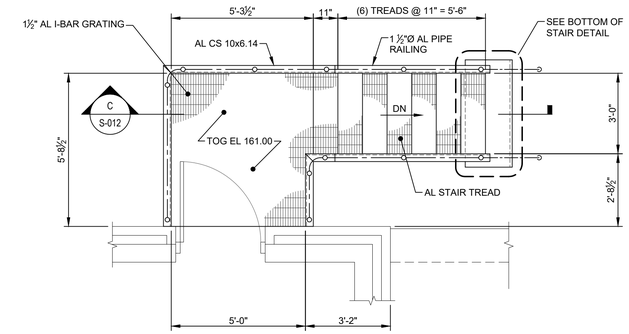

PLAN

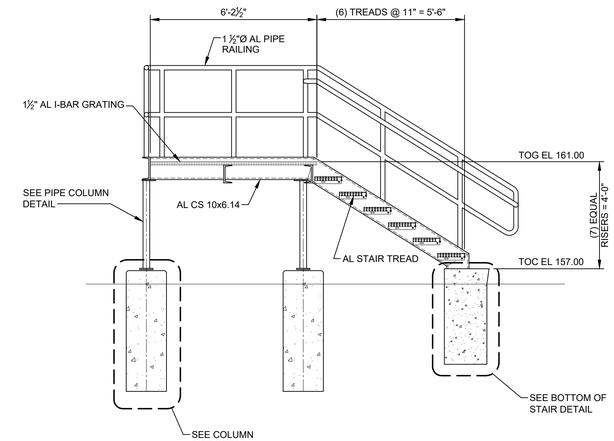

SECTION "C"

4 / - AL STAIR No. 3 DETAIL

Scale: 3/8" = 1'-0"

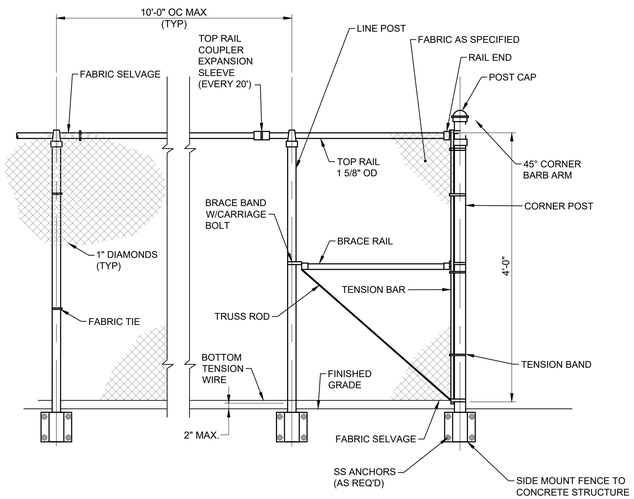

ELEVATION

NOTES:

1. BRACE GATES SIMILAR TO CORNER POSTS.
2. CONFORM BOTTOM OF FENCE TO FINISHED GRADE.
3. REFER TO SECTION 02810.

5 / - FENCE

NO SCALE

IN CHARGE OF MET
CHECKED BY BCS
MADE BY KAD

MODIFICATION IS A VIOLATION OF CHAPTER 16, TITLE VIII, ARTICLE 145 § 7209.2 NYS EDUCATION LAW, UNLESS ACTING UNDER THE DIRECTION OF A LICENSED PROFESSIONAL ENGINEER. IF A DOCUMENT BEARING THE SEAL OF AN ENGINEER IS ALTERED, THE ALTERING ENGINEER SHALL AFFIX TO THE DOCUMENT THEIR SEAL AND THE NOTATION "ALTERED BY" FOLLOWED BY THEIR SIGNATURE AND THE DATE OF SUCH ALTERATION, AND A SPECIFIC DESCRIPTION OF THE ALTERATION.

EDR
Environmental Design & Research,
Landscape Architecture, Engineering & Environmental Services, D.P.C.
217 Montgomery Street, Suite 1100
Syracuse, New York 13202
a better environment P. 315.471.0688

REVISION NUMBER	DATE	MADE BY	APP'D BY	REVISION

RECORD DRAWING CERTIFICATION

☐ AS BUILT – CHANGES AS NOTED
☐ AS BUILT – NO CHANGES

CONTRACTOR
NAME
SIGNATURE
TITLE DATE

PROJECT COORDINATOR
NAME
SIGNATURE
TITLE DATE

WESTCHESTER COUNTY, NEW YORK
DEPARTMENT OF PUBLIC WORKS AND TRANSPORTATION
DIVISION OF ENGINEERING

JACKSON AVENUE PUMPING STATION REHABILITATION
BRONX VALLEY SANITARY SEWER DISTRICT
TOWN OF GREENBURGH, NEW YORK

MISCELLANEOUS DETAILS

CONTRACT NUMBER 22–510
SHEET NUMBER S–012
SHEET NO. 28 OF 55
SCALE: AS SHOWN
DATE: 06/01/2023
DPW FILE NO. 202–02–S–53–0
REV. NO. 0

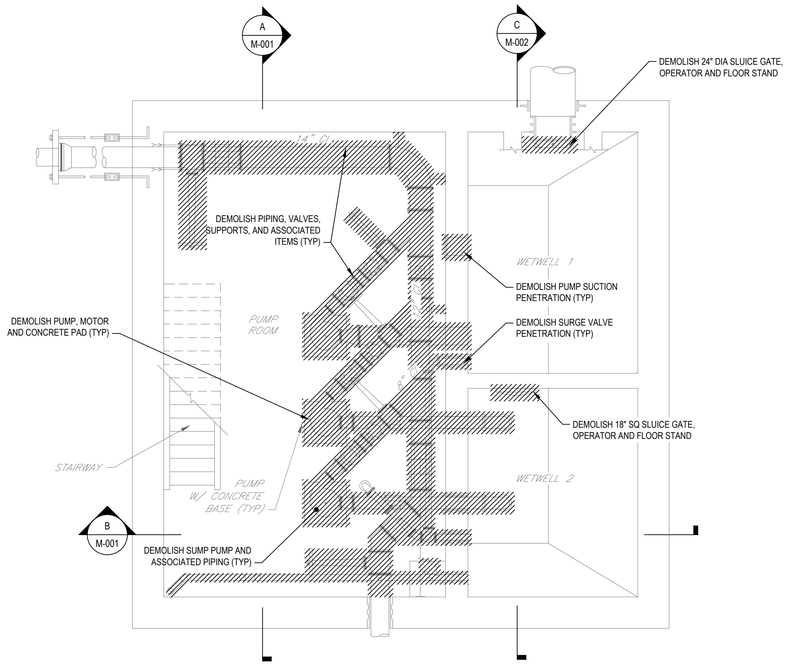

LOWER LEVEL PLAN

SCALE: 1/4" = 1'-0"

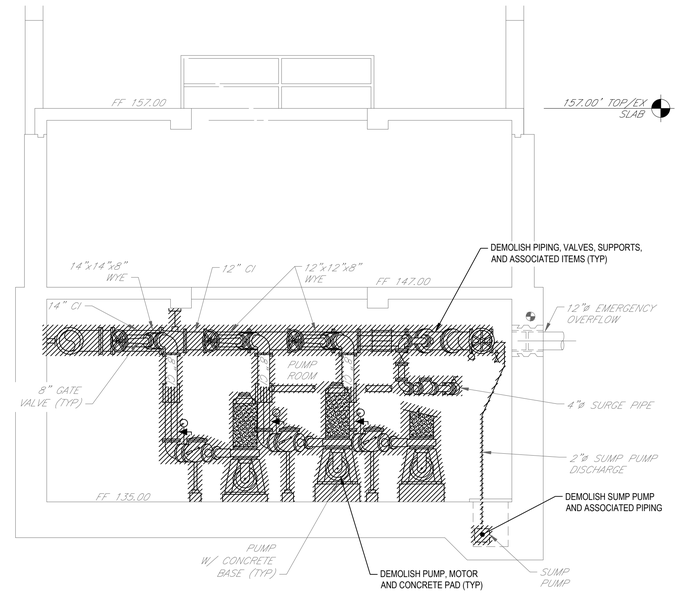

A M-001 SECTION

SCALE: 1/4" = 1'-0"

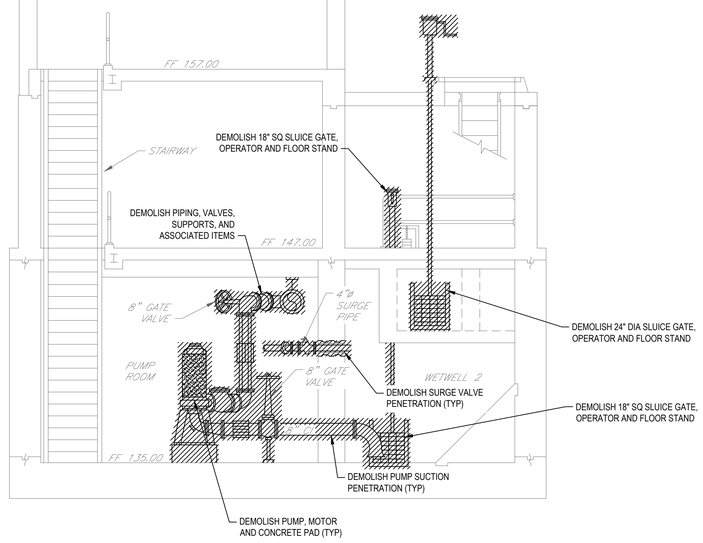

B M-001 SECTION

SCALE: 1/4" = 1'-0"

0 2'-0" 4'-0" 6'-0" 8'-0"

SCALE 1/4"=1'-0" AT ORIGINAL SIZE

IN CHARGE OF MET

CHECKED BY RSS

MADE BY MRY

MODIFICATION IS A VIOLATION OF CHAPTER 16, TITLE VIII, ARTICLE 145 § 7209.2 NYS EDUCATION LAW, UNLESS ACTING UNDER THE DIRECTION OF A LICENSED PROFESSIONAL ENGINEER. IF A DOCUMENT BEARING THE SEAL OF AN ENGINEER IS ALTERED, THE ALTERING ENGINEER SHALL AFFIX TO THE DOCUMENT THEIR SEAL AND THE NOTATION "ALTERED BY" FOLLOWED BY THEIR SIGNATURE AND THE DATE OF SUCH ALTERATION, AND A SPECIFIC DESCRIPTION OF THE ALTERATION.

EDR
Environmental Design & Research,
Landscape Architecture, Engineering & Environmental Services, D.P.C.
217 Montgomery Street, Suite 1100
Syracuse, New York 13202
a better environment P. 315.471.0688

REVISION NUMBER	DATE	MADE BY	APP'D BY	REVISION

RECORD DRAWING CERTIFICATION

☐ AS BUILT – CHANGES AS NOTED
☐ AS BUILT – NO CHANGES

CONTRACTOR	PROJECT COORDINATOR
NAME	NAME
SIGNATURE	SIGNATURE
TITLE DATE	TITLE DATE

WESTCHESTER COUNTY, NEW YORK
DEPARTMENT OF PUBLIC WORKS AND TRANSPORTATION
DIVISION OF ENGINEERING

JACKSON AVENUE PUMPING STATION REHABILITATION
BRONX VALLEY SANITARY SEWER DISTRICT
TOWN OF GREENBURGH, NEW YORK
DEMOLITION PLAN AND SECTIONS

CONTRACT NUMBER 22-510
SHEET NUMBER M-001
SHEET NO. 29 OF 55
SCALE: AS SHOWN
DATE: 06/01/23
DPW FILE NO. 202-02-M-54-0
REV. NO. 1

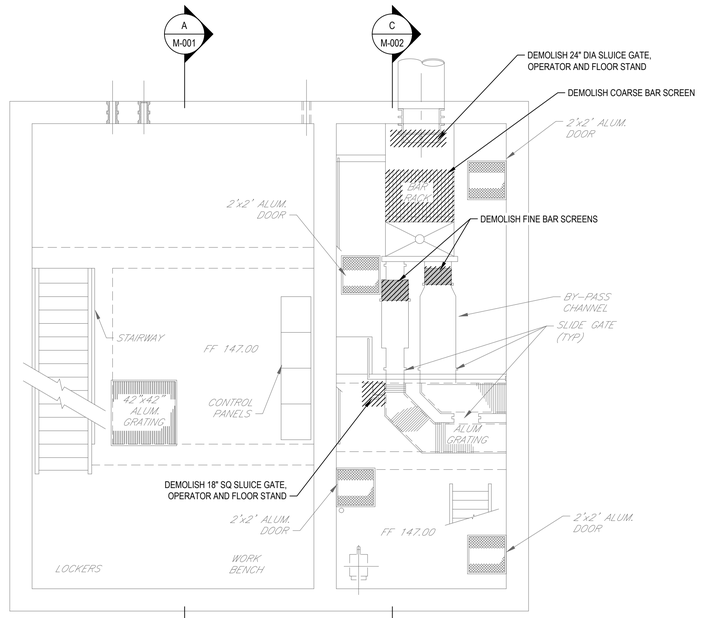

INTERMEDIATE LEVEL PLAN

SCALE: 1/4" = 1'-0"

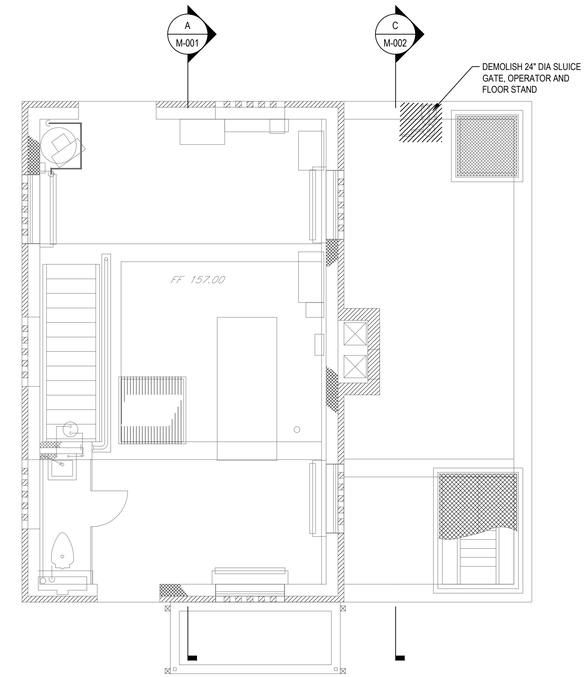

UPPER LEVEL PLAN

SCALE: 1/4" = 1'-0"

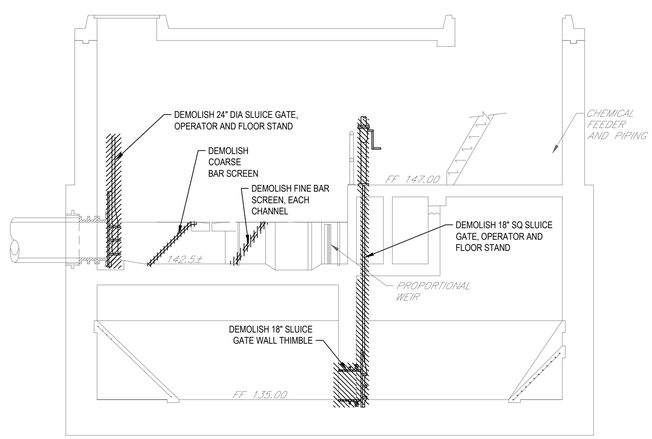

C
M-002

SECTION

SCALE: 1/4" = 1'-0"

0 2'-0" 4'-0" 6'-0" 8'-0"

SCALE 1/4"=1'-0" AT ORIGINAL SIZE

IN CHARGE OF MET

CHECKED BY RSS

MADE BY MRY

MODIFICATION IS A VIOLATION OF CHAPTER 16, TITLE VIII, ARTICLE 145 § 7209.2 NYS EDUCATION LAW, UNLESS ACTING UNDER THE DIRECTION OF A LICENSED PROFESSIONAL ENGINEER. IF A DOCUMENT BEARING THE SEAL OF AN ENGINEER IS ALTERED, THE ALTERING ENGINEER SHALL AFFIX TO THE DOCUMENT THEIR SEAL AND THE NOTATION "ALTERED BY" FOLLOWED BY THEIR SIGNATURE AND THE DATE OF SUCH ALTERATION, AND A SPECIFIC DESCRIPTION OF THE ALTERATION.

EDR
Environmental Design & Research,
Landscape Architecture, Engineering & Environmental Services, D.P.C.
217 Montgomery Street, Suite 1100
Syracuse, New York 13202
a better environment P. 315.471.0688

REVISION NUMBER	DATE	MADE BY	APP'D BY	REVISION

RECORD DRAWING CERTIFICATION

☐ AS BUILT – CHANGES AS NOTED
☐ AS BUILT – NO CHANGES

CONTRACTOR	PROJECT COORDINATOR
NAME	NAME
SIGNATURE	SIGNATURE
TITLE DATE	TITLE DATE

WESTCHESTER COUNTY, NEW YORK
DEPARTMENT OF PUBLIC WORKS AND TRANSPORTATION
DIVISION OF ENGINEERING

JACKSON AVENUE PUMPING STATION REHABILITATION
BRONX VALLEY SANITARY SEWER DISTRICT
TOWN OF GREENBURGH, NEW YORK
DEMOLITION PLANS AND SECTIONS

CONTRACT NUMBER	SHEET NUMBER
22-510	M-002

SHEET NO. 30 OF 55

SCALE: AS SHOWN
DATE: 06/01/23

DPW FILE NO.	REV. NO.
202-02-M-55-0	1

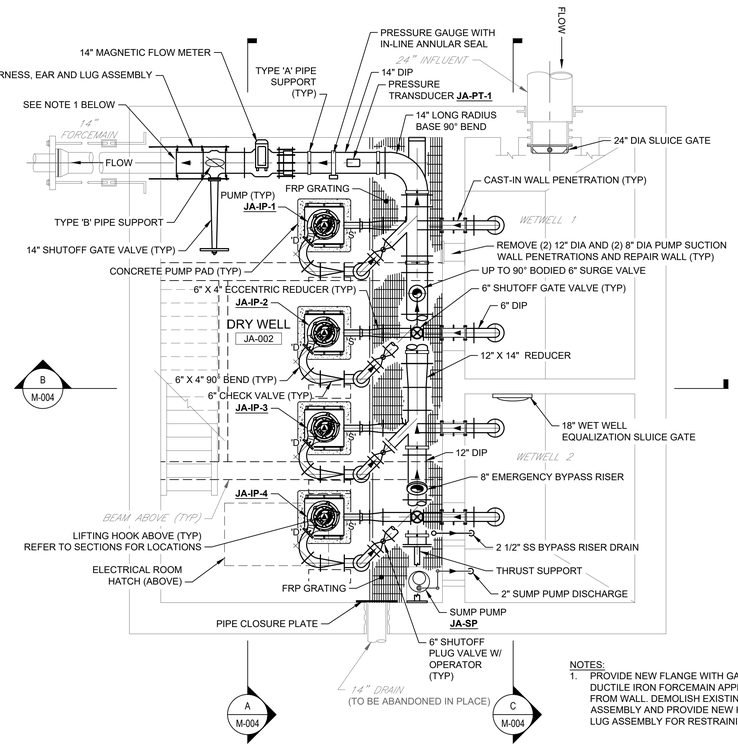

NOTES:
1. PROVIDE NEW FLANGE WITH GASKET ON EXISTING DUCTILE IRON FORCEMAIN APPROXIMATELY 12" FROM WALL. DEMOLISH EXISTING RESTRAINT ASSEMBLY AND PROVIDE NEW HARNESS, EAR AND LUG ASSEMBLY FOR RESTRAINING VALVE.

LOWER LEVEL PLAN

SCALE: 1/4" = 1'-0"

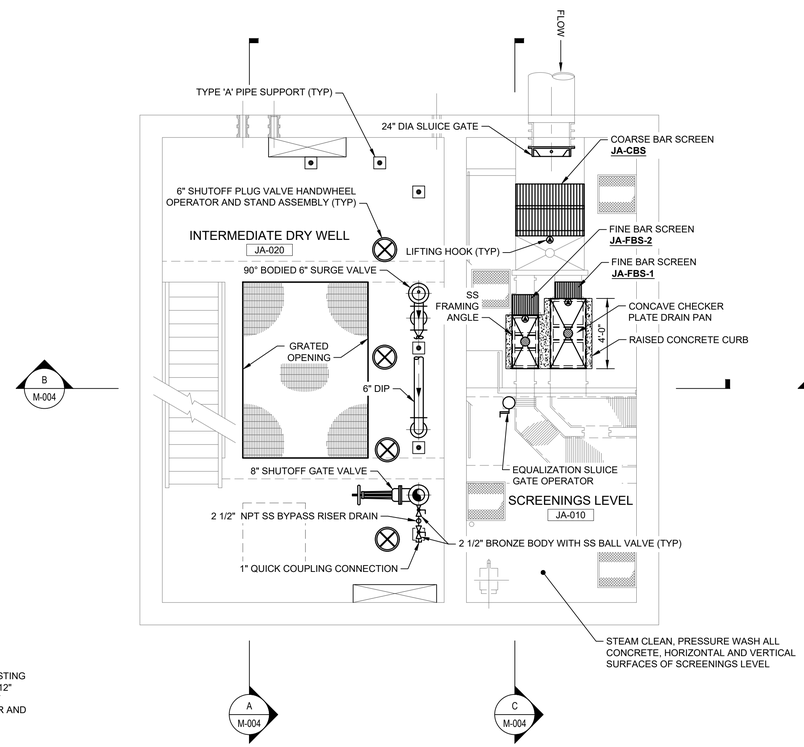

INTERMEDIATE LEVEL PLAN

SCALE: 1/4" = 1'-0"

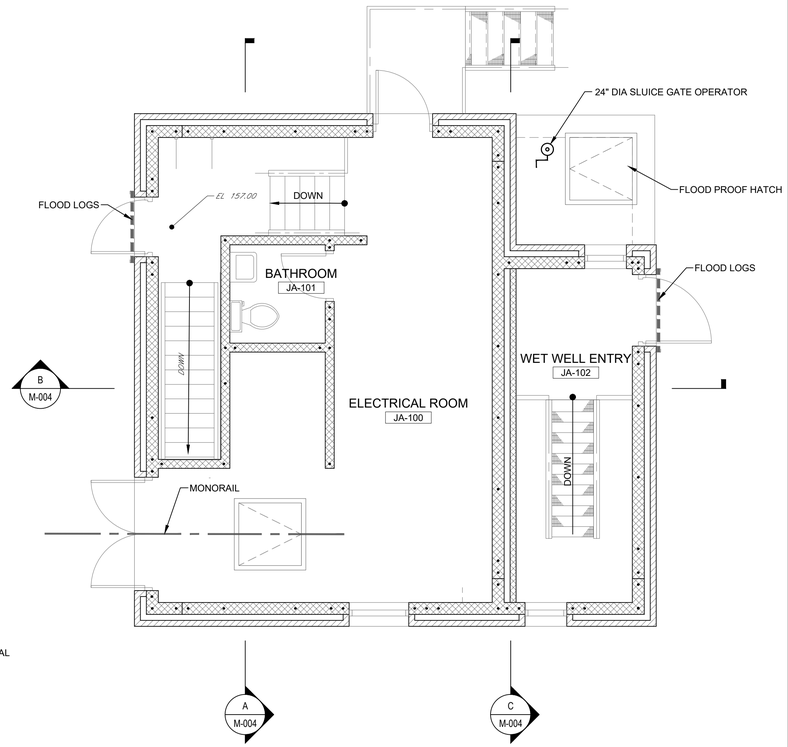

UPPER LEVEL PLAN

SCALE: 1/4" = 1'-0"

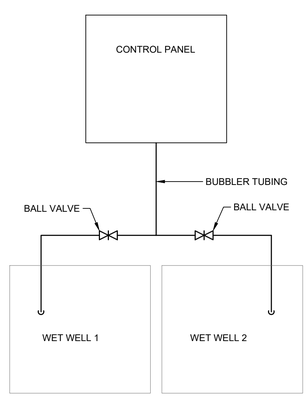

BUBBLER PIPING SCHEMATIC

0 2'-0" 4'-0" 6'-0" 8'-0"
SCALE 1/4"=1'-0" AT ORIGINAL SIZE

MODIFICATION IS A VIOLATION OF CHAPTER 16, TITLE VIII, ARTICLE 145 § 7209.2 NYS EDUCATION LAW, UNLESS ACTING UNDER THE DIRECTION OF A LICENSED PROFESSIONAL ENGINEER. IF A DOCUMENT BEARING THE SEAL OF AN ENGINEER IS ALTERED, THE ALTERING ENGINEER SHALL AFFIX TO THE DOCUMENT THEIR SEAL AND THE NOTATION "ALTERED BY" FOLLOWED BY THEIR SIGNATURE AND THE DATE OF SUCH ALTERATION, AND A SPECIFIC DESCRIPTION OF THE ALTERATION.

IN CHARGE OF MET
CHECKED BY RS
MADE BY MRY

EDR
Environmental Design & Research,
Landscape Architecture, Engineering & Environmental Services, D.P.C.
217 Montgomery Street, Suite 1100
Syracuse, New York 13202
a better environment P. 315.471.0688

REVISION NUMBER	DATE	MADE BY	APP'D BY	REVISION

RECORD DRAWING CERTIFICATION

☐ AS BUILT – CHANGES AS NOTED
☐ AS BUILT – NO CHANGES

CONTRACTOR	PROJECT COORDINATOR
NAME	NAME
SIGNATURE	SIGNATURE
TITLE DATE	TITLE DATE

WESTCHESTER COUNTY, NEW YORK
DEPARTMENT OF PUBLIC WORKS AND TRANSPORTATION
DIVISION OF ENGINEERING

JACKSON AVENUE PUMPING STATION REHABILITATION
BRONX VALLEY SANITARY SEWER DISTRICT
TOWN OF GREENBURGH, NEW YORK
LOWER LEVEL, INTERMEDIATE LEVEL AND UPPER LEVEL PLANS

CONTRACT NUMBER 22-510
SHEET NUMBER M-003
SHEET NO. 31 OF 55
SCALE: AS SHOWN
DATE: 06/01/23
DPW FILE NO. 202-02-M-56-0
REV. NO. 1

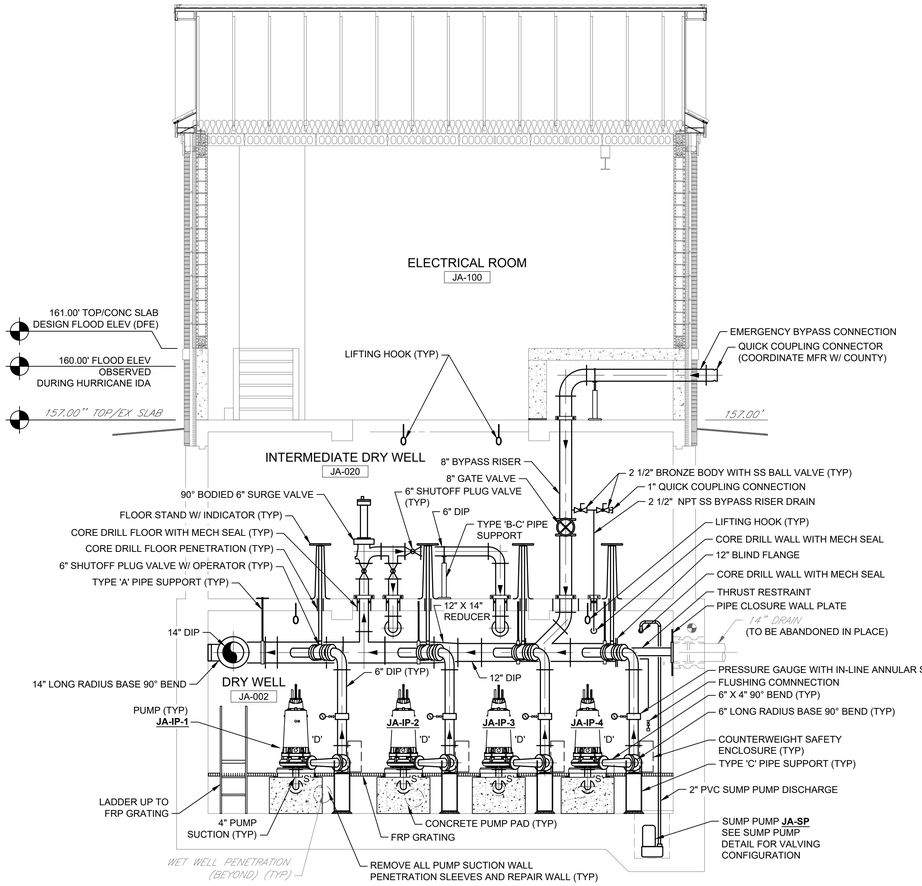

A M-003 SECTION
SCALE: 1/4" = 1'-0"

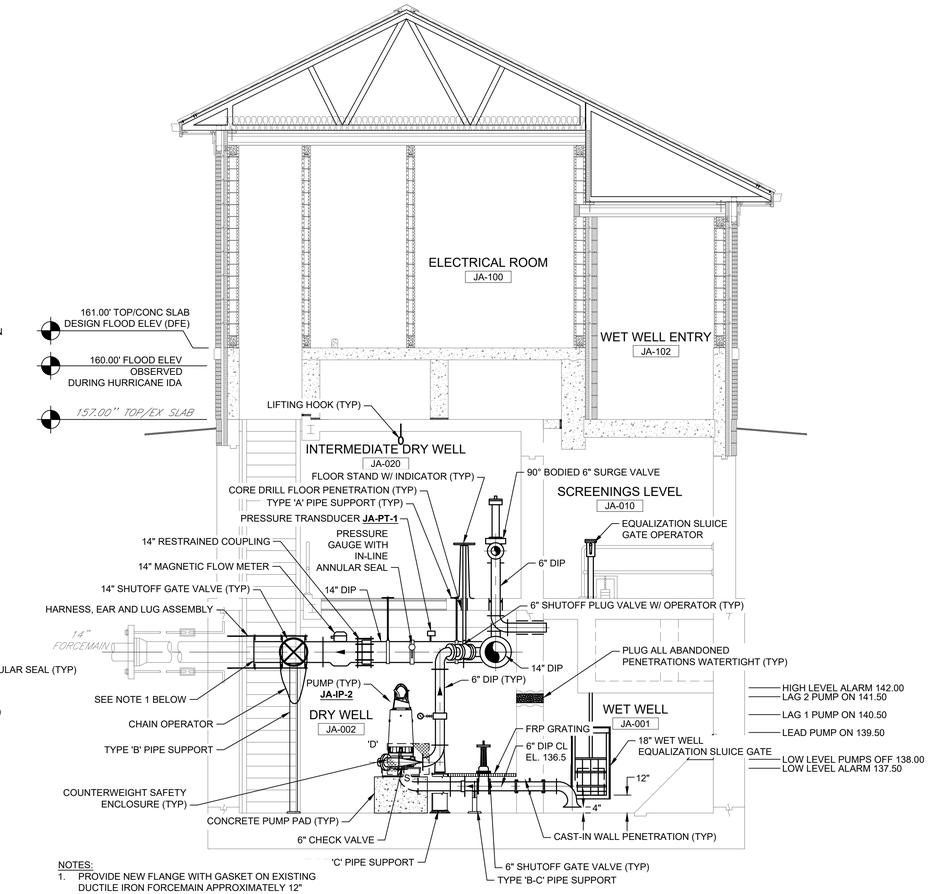

NOTES:
1. PROVIDE NEW FLANGE WITH GASKET ON EXISTING DUCTILE IRON FORCEMAIN APPROXIMATELY 12" FROM WALL. DEMOLISH EXISTING RESTRAINT ASSEMBLY AND PROVIDE NEW HARNESS, EAR AND LUG ASSEMBLY FOR RESTRAINING VALVE.

B M-003 SECTION
SCALE: 1/4" = 1'-0"

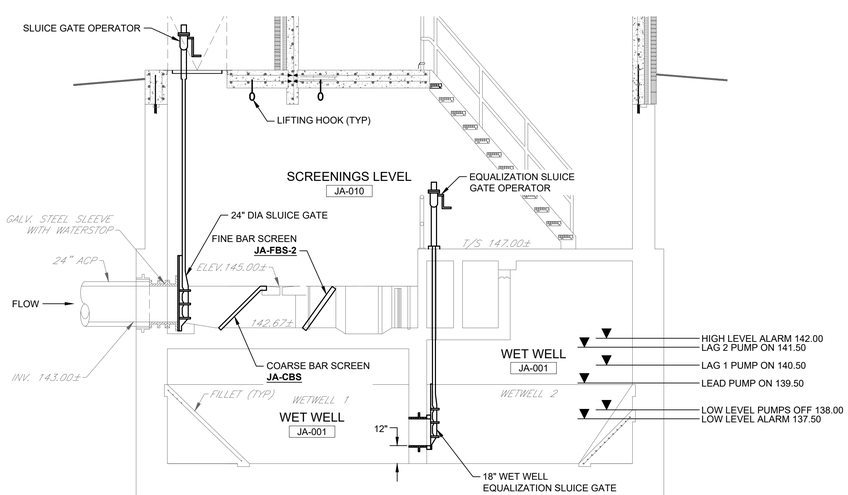

C M-003 SECTION
SCALE: 1/4" = 1'-0"

IN CHARGE OF MET
CHECKED BY RS
MADE BY MRY

0 2'-0" 4'-0" 6'-0" 8'-0"
SCALE 1/4"=1'-0" AT ORIGINAL SIZE

MODIFICATION IS A VIOLATION OF CHAPTER 16, TITLE VIII, ARTICLE 145 § 7209.2 NYS EDUCATION LAW, UNLESS ACTING UNDER THE DIRECTION OF A LICENSED PROFESSIONAL ENGINEER. IF A DOCUMENT BEARING THE SEAL OF AN ENGINEER IS ALTERED, THE ALTERING ENGINEER SHALL AFFIX TO THE DOCUMENT THEIR SEAL AND THE NOTATION "ALTERED BY" FOLLOWED BY THEIR SIGNATURE AND THE DATE OF SUCH ALTERATION, AND A SPECIFIC DESCRIPTION OF THE ALTERATION.

EDR
Environmental Design & Research,
Landscape Architecture, Engineering & Environmental Services, D.P.C.
217 Montgomery Street, Suite 1100
Syracuse, New York 13202
a better environment P. 315.471.0688

REVISION NUMBER	DATE	MADE BY	APP'D BY	REVISION

RECORD DRAWING CERTIFICATION

☐ AS BUILT – CHANGES AS NOTED
☐ AS BUILT – NO CHANGES

CONTRACTOR	PROJECT COORDINATOR
NAME	NAME
SIGNATURE	SIGNATURE
TITLE DATE	TITLE DATE

WESTCHESTER COUNTY, NEW YORK
DEPARTMENT OF PUBLIC WORKS AND TRANSPORTATION
DIVISION OF ENGINEERING

JACKSON AVENUE PUMPING STATION REHABILITATION
BRONX VALLEY SANITARY SEWER DISTRICT
TOWN OF GREENBURGH, NEW YORK
SECTIONS

CONTRACT NUMBER	SHEET NUMBER
22–510	M–004

SHEET NO. 32 OF 55
SCALE: AS SHOWN
DATE: 06/01/23
DPW FILE NO. 202–02–M–57–0
REV. NO. 1

ABBREVIATIONS

A or AMP	AMPERE, AMPS
AC	ALTERNATING CURRENT
ACPH	AIR CHANGES PER HOUR
AF	AMPERE FRAME SIZE
AFF	ABOVE FINISHED FLOOR
AFG	ABOVE FINISHED GRADE
AIC	AMPS INTERRUPTING CURRENT
AR	ANGLED REFLECTOR
AT	AMPERE TRIP RATING
ATS	AUTOMATIC TRANSFER SWITCH
AUX	AUXILIARY
AWG	AMERICAN WIRE GAUGE
BKR	BREAKER
C or COND	CONDUIT
C&W	CONDUIT & WIRE
CA	CABLE
CB	CIRCUIT BREAKER
CDRS	CONDUCTORS
CIRC	CIRCUIT
COR	CORROSION RESISTANT
CON ED	CON. EDISON CO.
CP	CONTROL PANEL
CPT	CONTROL POWER TRANSFORMER
CR	CONTROL RELAY
CT	CURRENT TRANSFORMER
DC	DIRECT CURRENT
DS	DISCONNECT SWITCH
DFE	DESIGN FLOOD ELEVATION
EA	EACH
EMH	ELECTRICAL MANHOLE
EMT	ELECTRICAL METALLIC TUBING
ESTOP	EMERGENCY STOP
ETM	ELAPSED TIME METER
FLEX	FLEXIBLE
FLOA	FLOAT SWITCH
FS	FLOW SWITCH
FSW	FUSED SWITCH
FVNR	FULL-VOLTAGE NON-REVERSING
GC	GENERAL CONTRACTOR
GEN	GENERATOR
GENSET	EMERGENCY POWER GENERATOR
GFCI	GROUND FAULT CIRCUIT INTERRUPTER
GFI	GROUND FAULT INTERRUPTER
GRD	GROUND
HOA	HAND-OFF-AUTO SELECTOR SWITCH
HP	HORSE POWER
IB/OB	INBOARD/OUTBOARD
IL	INDICATING LIGHT
IS	INTRUSION SWITCH
I/0	INPUT/OUTPUT
ISR	INTRINSICALLY SAFE RELAY
JB	JUNCTION BOX
JIC	JOINT INDUSTRIAL COUNCIL
KCMIL	THOUSAND CIRCULAR MILS
KVA	KILOVOLT AMPERES
KW	KILOWATT
LO	LOCK-OUT
LS	LIMIT SWITCH
mA	MILLIAMPS
MAG	MAGNETIC
MAX	MAXIMUM
MCP	MOTOR CIRCUIT PROTECTOR
MDP	MAIN DISTRIBUTION PANEL
MFR	MANUFACTURER
MIN	MINIMUM
MLO	MAIN LUGS ONLY
MMS	MANUAL MOTOR STARTER
MSS	MOTOR STARTING SWITCH
MSH	MOTOR WINDING MOISTURE PROTECTION
Mx	MOTOR CONTACTOR AUXILIARY CONTACT
NC	NORMALLY CLOSED
NEC	NATIONAL ELECTRIC CODE
NO	NORMALLY OPEN
NP	NAMEPLATE
OH/E	OVERHEAD ELECTRIC
OH/L	OVERHEAD TELEPHONE
OL	OVERLOAD RELAY
Ø	PHASE
P	POLE
PB	PUSHBUTTON
PBx	PULL BOX
PF	PULLING FITTING
PLC	PROGRAMMABLE LOGIC CONTROLLER
PNL	PANEL
PR	PAIR
PS	PRESSURE SWITCH
PT	POTENTIAL TRANSFORMER
R&R	REMOVE & REPLACE
RECP	RECEPTACLE
RGS	RIGID GALVANIZED STEEL CONDUIT
SA	SURGE ARRESTOR
SEL or SEL SW	SELECTOR SWITCH
SCP	STATION CONTROL PANEL
SHLD	SHIELDED
SN	SOLID NEUTRAL
SS	STAINLESS STEEL
SSW	SAFETY SWITCH
S/S	STOP/START PUSH BUTTON
STR	STRANDED
SV	SOLENOID VALVE
SW	SWITCH
TERM	TERMINAL
TR	TIMER
TR.SW.	TRANSFER SWITCH
TR24	24-HOUR TIMER
TSP	TWISTED SHIELDED PAIR
TSH	MOTOR WINDING THERMAL PROTECTION
TYP	TYPICAL
UG/E	UNDERGROUND ELECTRIC
UG/T	UNDERGROUND TELEPHONE
UNK.	UNKNOWN
UPS	UNINTERRUPTIBLE POWER SUPPLY
VA	VOLT-AMPERES
VFD	VARIABLE FREQUENCY DRIVE
VM	VOLTMETER
VSC	VARIABLE SPEED CONTROL
W/	WITH
WP	WEATHER PROOF, WATER PROOF
XP	EXPLOSION PROOF
XFMR	TRANSFORMER

GENERAL NOTES:

1. ALL WORK SHALL COMPLY WITH AND BE INSTALLED IN ACCORDANCE WITH THE SUPPLEMENTAL UNIFORM AND FIRE PREVENTION BUILDING CODE OF NEW YORK AND ALL CODES LOCAL OR OTHERWISE HAVING JURISDICTION OVER THE WORK. CONTRACTOR MUST BE LICENSED AND CERTIFIED TO WORK IN AREAS CONTAINING ASBESTOS.
2. THE WORDS PROVIDE OR INSTALL, SINGLY OR IN COMBINATION SHALL MEAN FURNISH AND INSTALL.
3. THE CONTRACTOR SHALL PROVIDE ALL CUTTING AND PATCHING AS REQUIRED FOR THE INSTALLATION OF HIS WORK.
4. THIS CONTRACTOR SHALL BE RESPONSIBLE FOR THE PROTECTION OF HIS WORK AND NEWLY INSTALLED OR EXISTING WORK, INCLUDING PROTECTION OF BUILDING OCCUPANTS, PUBLIC, AND PERSONNEL. PROVIDE APPROPRIATE BARRIERS, AND SAFETY GUARD RAILS AS REQUIRED.
5. LIMIT THE SPREAD OF DUST WHEN CUTTING BY INSTALLING POLYETHYLENE BARRIERS OR TARPAULINS TO CONTAIN AIRBORNE MATERIALS.
6. NO SYSTEM SHALL BE SHUT DOWN WITHOUT PERMISSION OF THE FACILITIES OPERATION MGR. A MINIMUM TWO WEEK NOTICE SHALL BE GIVEN TO THE FACILITIES OPERATION MGR. WHEN SYSTEM SHUTDOWN INVOLVES A TEMPORARY DISRUPTION TO BUILDING SERVICES.
7. ANY DISRUPTION IN BUILDING SERVICES SHALL BE KEPT TO A MINIMUM AND SHALL NOT BE IMPLEMENTED WITHOUT RECEIVING PRIOR WRITTEN APPROVAL OF THE FACILITIES OPERATION MGR.
8. ALL WORK SHALL BE COORDINATED WITH THE FACILITIES OPERATION MGR. AND ALL TRADES RELATED TO THE INSTALLATION OF THIS PROJECT.
9. THE CONTRACTOR SHALL TURN OVER TO THE OWNER AT THE COMPLETION OF ALL WORK, THREE (3) COPIES IN BOUND FORM OF OPERATING, MAINTENANCE, AND INSTRUCTION MANUALS WHICH SHALL INCLUDE ALL EQUIPMENT BROCHURES, PIPING AND WIRING DIAGRAMS, DRAWINGS, TEMPERATURE CONTROLS, AND STARTUP AND SHUTDOWN PROCEDURES OF ALL NEWLY INSTALLED EQUIPMENT.
10. THE CONTRACTOR SHALL FILE PLANS WITH GOVERNING AUTHORITIES HAVING JURISDICTION AND SHALL SECURE ALL PERMITS AND PAY ALL FEES REQUIRED FOR THE INSTALLATION OF HIS WORK.
11. THE CONTRACTOR SHALL GUARANTEE ALL MATERIAL AND WORK INSTALLED TO BE FREE FROM DEFECTS IN MATERIAL AND WORKMANSHIP FOR A PERIOD OF ONE (1) YEAR, AFTER ACCEPTANCE OF THE INSTALLATION BY THE ENGINEER AND OWNER. THE CONTRACTOR SHALL SUBMIT IN WRITING TO OWNER STATING SAME.
12. THE CONTRACTOR SHALL INDEMNIFY THE OWNER, HIS REPRESENTATIVES AND THE ENGINEER FROM ANY CLAIMS OR SUITS RESULTING IN NEGLIGENCE ON THE PART OF THE CONTRACTOR AND FOR FAILING TO EXECUTE HIS WORK IN ACCORDANCE WITH THE CONTRACT DOCUMENTS.
13. ALL WORK SHALL BE INSPECTED BY A THIRD PARTY. CONTRACTOR SHALL PAY ALL ASSOCIATED FEES.
14. THE CONTRACTOR SHALL PROVIDE ALL RIGGING, HOISTING AND SCAFFOLDING AS REQUIRED FOR THE INSTALLATION OF HIS WORK.
15. ALL WORK SHALL BE PERFORMED BY LICENSED CONTRACTORS AND WORKMAN EXPERIENCED IN THE TRADE HAVING JURISDICTION. ALL WORK SHALL BE SUPERVISED AT ALL TIMES AND WORKMANSHIP SHALL BE FIRST CLASS IN ALL RESPECTS.
16. ANY DEVIATION OR CHANGE IN DESIGN SHALL NOT BE MADE WITHOUT WRITTEN APPROVAL OF THE ENGINEER OR OWNER. ANY WORK INSTALLED WITHOUT PRIOR APPROVAL OF THE ENGINEER OR OWNER OR FOUND TO BE DEFECTIVE OR OF POOR QUALITY SHALL BE REPLACED BY THE CONTRACTOR AT HIS OWN EXPENSE.
17. ALL CONSTRUCTION WORK SHALL BE CONFINED TO THE AREA INDICATED ON PLANS AND SHALL NOT BLOCK MEANS OF EGRESS FOR OCCUPANTS OF THE BUILDING.
18. ALL WORK SHALL BE PERFORMED DURING NORMAL WORKING HOURS: 8 A.M. TO 5 P.M. MONDAY THROUGH FRIDAY EXCEPT LEGAL HOLIDAYS OR FOR EMERGENCY REPAIRS, UNLESS DIRECTED OTHERWISE BY THE OWNER. HOWEVER, THE CONTRACTOR MAY WORK EXTRA HOURS AS NEEDED TO COMPLETE THE CONTRACT SCOPE OF WORK AND MEET THE COMPLETION DATE AT NO ADDITIONAL COST TO OWNER, AS LONG AS OWNER HAS BEEN PROPERLY NOTIFIED AND HAS APPROVED SAME.
19. PATCHING OF WALLS, FLOORS, ETC. SHALL BE BY TRADE WHO PERFORMED WORK AND SHALL MATCH EXISTING SURROUNDING AREA IN ALL RESPECTS. WORK AREA SHALL BE LEFT BROOM CLEAN AT THE END OF EACH DAY. ALL DISCARDED AND DEMOLISHED MATERIAL AND RUBBISH SHALL BE REMOVED FROM PREMISES DAILY IN A LEGAL AND APPROVED MANNER.
20. THE CONTRACTOR SHALL MAINTAIN ON THE JOB SITE A SET OF SHOP DRAWINGS IN WHICH ANY DEVIATIONS FROM THE ORIGINAL DESIGN SHALL BE NOTED. UPON COMPLETION OF THE INSTALLATION OF NEW WORK THE CONTRACTOR SHALL TURN OVER TO THE OWNER AND ENGINEER (1) SET OF AS-BUILT REPRODUCIBLE DRAWINGS AND (1) SET OF PRINTS INCLUDING ALL APPROVED FIELD CHANGES AND DESIGN DEVIATIONS PRIOR TO RECEIPT OF FINAL PAYMENT BY OWNER.
21. PROVIDE TERMINAL STRIPS IN ALL JUNCTION BOXES WHERE SPLICES ARE MADE.
22. ALL WORK SHOWN ON ALL DRAWINGS IS NEW UNLESS OTHERWISE NOTED.
23. ALL PENETRATIONS THROUGH PARTITIONS, FLOORS, WALLS AND ROOF FOR ALL PIPING, CONDUIT AND DUCTWORK SHALL BE SEALED AND FIRE SAFED OFF TO MAINTAIN FIRE INTEGRITY OF EXISTING STRUCTURE.
24. ALL DOWNSTREAM DEVICES WHICH BECOME DISCONNECTED DURING THIS CONSTRUCTIONS SHALL BE RECONNECTED AT NO COST TO THE OWNER. PROVIDE ALL CONDUIT AND WIRE AS REQUIRED.
25. THE CONTRACTOR SHALL SUPERVISE AND DIRECT THE WORK, AS WELL AS BE SOLELY RESPONSIBLE FOR THE CONSTRUCTION MEANS METHODS, TECHNIQUES, SEQUENCES, AND PROCEDURES OF THE WORK.
26. THE CONTRACTOR SHALL BE RESPONSIBLE FOR TAKING REASONABLE PRECAUTIONS AND SHALL PROVIDE REASONABLE PROTECTION TO PREVENT INJURY OR DAMAGE TO PERSONS, THE WORK AND OTHER PROPERTY.
27. OWNER RESERVES THE RIGHT TO MOVE EQUIPMENT LOCATION 10'-0" FROM WHERE SHOWN ON CONTRACT DRAWINGS WITH NO ADDITIONAL COST.

NEW/EXISTING TEXT IDENTIFIER:

WORK, EQUIPMENT AND STRUCTURES TO BE PROVIDED ARE SHOWN IN THIS TEXT FORMAT

EXISTING EQUIPMENT, CONDITIONS AND STRUCTURES ARE SHOWN IN THIS TEXT FORMAT.

GENERAL DEMOLITION NOTES:

1. REMOVE ALL ELECTRICAL EQUIPMENT RELATED TO PROCESS MECHANICAL AND HVAC EQUIPMENT TO BE REMOVED. EX: CONTROL STATIONS, INSTRUMENTATION, LOCAL DISCONNECTS, ETC. UNLESS OTHERWISE NOTED ON DEMOLITION DRAWINGS.
2. REMOVE ALL CONDUIT AND WIRE FOR ALL ELECTRICAL EQUIPMENT RELATED TO PROCESS MECHANICAL EQUIPMENT TO BE REMOVED BACK TO SOURCE. UNLESS OTHERWISE NOTED ON DEMOLITION DRAWINGS.
3. IF POWER SOURCE (POWER PANEL, MCC, ETC) FOR EQUIPMENT REMOVED IS TO REMAIN, RE-LABEL AS "SPARE" OR NEW CIRCUIT DESIGNATION. UNLESS OTHERWISE NOTED ON DEMOLITION DRAWINGS.
4. SEE MECHANICAL PLANS FOR ADDITIONAL EQUIPMENT TO BE REMOVED ON DEMOLITION DRAWINGS.
5. REMOVE ALL EXISTING LIGHTING, CONDUIT, WIRING, CONTROLS, ETC. UNLESS OTHERWISE NOTED ON DEMOLITION DRAWINGS.

GENERAL GROUNDING NOTES:

1. THE GROUNDING SYSTEM IS SHOWN DIAGRAMMATICALLY. EXACT LOCATION OF CABLE GROUND RODS AND CONNECTIONS SHALL BE DETERMINED BY THE CONTRACTOR IN THE FIELD.
2. ALL BURIED GROUNDING CABLE CONNECTIONS SHALL BE CADWELD OR THERMOWELD. THE WELDED CONNECTIONS SHALL BE LEFT EXPOSED FOR INSPECTION BY ENGINEER PRIOR TO BACKFILLING.
3. WHERE EXPOSED TO MECHANICAL INJURY, THE GROUNDING CONDUCTOR SHALL BE SUITABLY PROTECTED BY PIPE OR OTHER MECHANICAL PROTECTION. EACH END OF PROTECTING CONDUIT (IF METALLIC) SHOULD BE GROUNDED TO THE BARE CABLE.
4. ALL EXPOSED CABLE LUGS AND CONNECTORS SHALL BE OF THE COMPRESSION TYPE UNLESS OTHERWISE NOTED.
5. STEEL MUST BE CLEANED THOROUGHLY, AND CABLE MUST BE COMPLETELY DRY BEFORE MAKING WELD CONNECTIONS.
6. THE GROUNDING SYSTEM SHALL BE CONNECTED TO A METALLIC WATERLINE (WHERE AVAILABLE) WITH A MINIMUM OF 10 FEET LENGTH UNDERGROUND AND SHALL BE CONNECTED TO THE GROUNDING ELECTRODES.
7. CADWELD ALL DUCTBANK GROUNDS TO SITE GROUND GRIDS.

GENERAL LIGHTING NOTES:

1. INSTALL LIGHTING LUMINAIRES IN LOCATIONS AS SHOWN OR AS NOTED, AS CLOSE AS POSSIBLE TO THESE LOCATIONS WHEN ADJUSTMENTS TO AVOID INTERFERENCES ARE REQUIRED. LUMINAIRES SHALL BE INSTALLED LEVEL AND PLUMB.
2. CONNECT LUMINAIRES ON CIRCUITS AS SHOWN ON DRAWINGS AND ON PANELBOARD SCHEDULES. LIGHTING CIRCUIT CONDUIT AND CONDUCTORS SHALL BE PER NEC OR AS NOTED ON THE DRAWINGS.
3. CLEAN EACH LUMINAIRE AT TIME OF SUBSTANTIAL COMPLETION.
4. OPERATE EACH LUMINAIRE AFTER INSTALLATION AND CONNECTION. INSPECT FOR PROPER CONNECTIONS AND OPERATION, AND REPAIR ALL IMPROPER CONNECTIONS.
5. LIGHT SWITCHES SHALL BE AS SPECIFIED IN SECTION 260500, AND SUITABLE FOR THE CLASSIFICATION OF THE AREA.
6. SUBMIT SHOP DRAWINGS FOR ALL LUMINAIRES UNDER THIS CONTRACT IN ACCORDANCE WITH SECTION 013300 OF THE CONTRACT DOCUMENTS. PROVIDE COMPLETE INFORMATION INCLUDING LUMINAIRE ACCESSORIES, INSTALLATION INSTRUCTIONS, OPERATIONS AND MAINTENANCE INFORMATION, AND LIST OF LUMINAIRE TYPES AND MANUFACTURER TO BE USED FOR EACH.
7. PROVIDE PROJECT RECORD DOCUMENTS IN ACCORDANCE WITH SECTION 260500 OF THE CONTRACT DOCUMENTS. RECORD DOCUMENTS SHALL ACCURATELY SHOW FIXTURE LOCATIONS OF EACH LUMINAIRE INCLUDING THE CONNECTIONS. AND FOR EACH TYPE OF LUMINAIRE, PROVIDE MANUFACTURERS NAME, CATALOG NUMBER, VOLTAGE, LAMP TYPE AND POWER REQUIREMENTS.

SYMBOLS:

- G - GREEN A - AMBER INDICATING LIGHT *-COLOR R - RED W - WHITE PUSH-TO-TEST INDICATING LIGHT
- NORMALLY OPEN CONTACT
- NORMALLY CLOSED CONTACT
- TERMINAL STRIP CONNECTION
- CURRENT LIMITING FUSE
- SWITCH WITH CURRENT-LIMITING FUSE
- MOLDED-CASE CIRCUIT BREAKER
- SA — CONTINUOUS RATING
- MCP — MOTOR CIRCUIT PROTECTOR TRIP RANGE SETTING BASED ON ACTUAL MOTOR FULL LOAD AMPS
- CONTACTOR TYPE AND NEMA SIZE AS REQUIRED FOR MOTOR FULL LOAD AND CHARACTERISTICS
- OVERLOAD HEATERS OR RELAY
- SCR: SILICON CONTROLLED RECTIFIERS
- START — MOMENTARY OPEN PUSHBUTTON (NORMALLY OPEN)
- STOP — MOMENTARY CLOSED PUSHBUTTON (NORMALLY CLOSED)
- H A XOO OOX — THREE POSITION MAINTAINED CONTACT SELECTOR SWITCH
- NORMALLY OPEN / NORMALLY CLOSED — TIME DELAY AFTER COIL ENERGIZED
- NORMALLY OPEN / NORMALLY CLOSED — TIME DELAY AFTER COIL DE-ENERGIZED
- TEMPERATURE SWITCH
- FLOAT SWITCH
- FLOW SWITCH
- CR — CONTROL RELAY
- M — MOTOR STARTER CONTACTOR COIL
- ETM — ELAPSED TIME METER
- NP — NAME PLATE
- J J JB — JUNCTION BOX
- DS — DISCONNECT SWITCH
- T — THERMOSTAT
- 10 — SQUIRREL CAGE INDUCTION MOTOR HP, VARIES
- MOTOR STARTER
- N E — AUTOMATIC/MANUAL TRANSFER SWITCH. RATED AS INDICATED.
- EXISTING EQUIPMENT, DEVICE, WIRING, ETC.
- TO BE PROVIDED UNDER THIS CONTRACT
- OR — ITEM TO BE DEMOLISHED
- CIRCUIT HOMERUN (120V) TO PANELBOARD
- CIRCUIT HOMERUN (208V, SINGLE PHASE) TO PANELBOARD
- CIRCUIT HOMERUN (208V, THREE PHASE) TO PANELBOARD
- CIRCUIT HOMERUN (480V, THREE PHASE) TO PANELBOARD
- EMH E EMH — ELECTRIC MANHOLE
- UTILITY POLE
- G — GENERATOR
- FE — FLOW ELEMENT
- LS — LEVEL FLOAT
- LE — LEVEL ELEMENT
- ISR — INTRINSICALLY SAFE RELAY
- MOUNTING STAND
- FLEXIBLE CONDUIT
- WIRES CONNECTED
- WIRES NOT CONNECTED
- 3 — SINGLE POLE SWITCH (P) PILOT LIGHT (3) THREE-WAY
- MSS OR — MOTOR STARTING SWITCH WITH OVERLOAD PROTECTION
- MMS OR S — MANUAL MOTOR STARTER
- SINGLE RECEPTACLE
- XX — DUPLEX RECEPTACLE, TYPE AS NOTED: CR= CORROSION RESISTANT WP= WEATHER PROOF
- OR — SEALOFF

LUMINAIRE SYMBOLS

- X — CEILING OR PENDANT MOUNTED LUMINAIRE
- X X — WALL MOUNTED LUMINAIRE
- WALL MOUNTED GREEN, RED OR YELLOW INDICATING LIGHT

SECURITY SYMBOLS

- IS — INTRUSION SWITCH

FIRE ALARM SYMBOLS

- SD — SMOKE DETECTOR
- HD — HEAT DETECTOR

1. NONMETALLIC LED FIXTURE, NOMINALLY 4-FEET LONG.
2. PENDANT MOUNTED: 3/8" THREADED STAINLESS STEEL ROD.
3. WHITE FIBERGLASS HOUSING WITH CLOSED CELL GASKET.
4. ACRYLIC LINEAL RIBBED, FROSTED LENSE. POLYCARBONATE LATCHES.
5. WHITE BAKED ENAMEL REFLECTOR.
6. SUITABLE FOR WET OR CORROSIVE LOCATIONS.
7. LED LIGHTS, 4000 LUMENS, 4100°K 7. GENERAL DISTRIBUTION. 120/277 VOLT.
8. MOUNTING HEIGHT: 8' AFF
9. ACCESSORIES: EMERGENCY BATTERY (ONLY ON LUMINAIRES WITH "EM" ON PLANS).
10. PROVIDE 2-FOOT FIXTURE FOR BATHROOM - 'A2'.

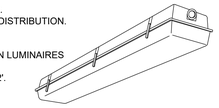

MANUFACTURERS:
LITHONIA - FEM LED SERIES OR APPROVED EQUAL

FIXTURE 'A' SPECIFICATION

NOT TO SCALE

1. LOW WATTAGE, LED.
2. WALL MOUNTED, CAST ALUMINUM BACK PLATE.
3. DARK BRONZE BAKED POLYESTER POWDER FINISH.
4. ONE PIECE, POLYCARBONATE FRONT HOUSING WITH CLEAR, U.V. STABILIZED, PRISMATIC REFRACTOR.
5. POLISHED ALUMINUM REFLECTOR.
6. SUITABLE FOR OUTDOOR APPLICATION.
7. 19 WATT LED, 2,124 LUMENS
8. INTEGRAL DRIVER, MULTI-VOLT, PHOTOCELL

MANUFACTURERS:
LITHONIA: TWS LED SERIES OR APPROVED EQUAL

LUMINAIRE 'B' SPECIFICATION

NOT TO SCALE

1. INCANDESCENT LUMINAIRE TESTED AND CERTIFIED FOR HAZARDOUS LOCATIONS.
2. MOUNTING: PENDANT, TOP, AND WALL MOUNT. WALL BRACKET: 90° ANGLE BRACKETS, STANCHION MOUNTED: 25° BRACKET.
3. COPPER FREE ALUMINUM ALLOY HOUSING WITH POWDERED EPOXY FINISH.
4. HEAT AND IMPACT RESISTANT GLASS GLOBE.
5. CLASSIFICATION, LISTED FOR CLASS I, DIVISION 1, GROUP D.
6. PROVIDE LED LAMPS.

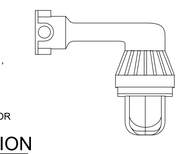

MANUFACTURERS:
EATON - EVI EXPLOSION PROOF EVI301 MEDIUM BASE OR APPROVED EQUAL

LUMINAIRE 'C' SPECIFICATION

NOT TO SCALE

1. LIGHT SOURCE: EXIT SIGN.
2. MOUNTING: WALL, TOP, OR END. BACKPLATE HAS UNIVERSAL KNOCKOUT PATTERN FOR MOUNTING DIRECTLY TO JUNCTION BOX.
3. VOLTAGE: N/A
4. HOUSING: ALUMINUM ANODIZED FRAME WITH ALUMINUM FACEPLATE, SUITABLE FOR USE IN A CLASS 1, DIV. 1, GROUP D HAZARDOUS AREA.
5. FACEPLATE: RED COLOR WITH 20 YEAR, SELF- LUMINOUS TRITIUM FILLED GLASS TUBES.

MANUFACTURER:
LITHONIA SELF-LUMINOUS EXITS D-TRITIUM SERIES OR APPROVED EQUAL

EXIT SIGN SPECIFICATION

NOT TO SCALE

AREA CLASSIFICATIONS	
AREA	CLASSIFICATION
WET WELL	CLASS 1, DIV. 1, GROUP D
WET WELL DUCTWORK/FAN	3' AROUND VENT/FANS ARE CLASS 1. DIV. 2 AREAS
DRY WELL	WET AREA SPACE HAS BEEN REDUCED TO A WET AREA DUE TO CONTINUOUS VENTILATION OF 6ACH
ELECTRIC ROOM	UNCLASSIFIED / DRY AND DUSTY LOCATION SPACE HAS BEEN REDUCED TO AN UNCLASSIFIED/DRY AND DUSTY LOCATION DUE TO CONTINUOUS VENTILATION OF 6ACH

GENERAL CLASSIFICATION NOTES:

1. PROVIDE SEAL OFFS FOR ANY CONDUIT RUN THAT PASSES OR ENTERS A CLASS 1, DIV. 1 GROUP D CLASSIFIED AREA OR CLASS 1, DIV. 2 GROUP D CLASSIFIED AREA.
2. PROVIDE EQUIPMENT ENCLOSURE RATINGS SUITABLE FOR THEIR CLASSIFICATION, UNLESS OTHERWISE NOTED.

THE ABBREVIATIONS AND SYMBOLS LISTED HEREIN ARE STANDARDS OF THIS OFFICE AND APPLY TO A VARIETY OF PROJECTS. ONLY A PORTION OF THEM WILL NECESSARILY APPLY TO ANY GIVEN PROJECT.

SEE THE LISTINGS IN OTHER SECTIONS OF THIS DOCUMENT FOR ADDITIONAL SYMBOLS AND ABBREVIATIONS.

EDR
a better environment
Environmental Design & Research,
Landscape Architecture, Engineering & Environmental Services, D.P.C.
217 Montgomery Street, Suite 1100
Syracuse, New York 13202
P. 315.471.0688

REVISION NUMBER	DATE	MADE BY	APP'D BY	REVISION

RECORD DRAWING CERTIFICATION

☐ AS BUILT – CHANGES AS NOTED
☐ AS BUILT – NO CHANGES

CONTRACTOR	PROJECT COORDINATOR
NAME	NAME
SIGNATURE	SIGNATURE
TITLE DATE	TITLE DATE

WESTCHESTER COUNTY, NEW YORK
DEPARTMENT OF PUBLIC WORKS AND TRANSPORTATION
DIVISION OF ENGINEERING

JACKSON AVENUE PUMPING STATION REHABILITATION
BRONX VALLEY SANITARY SEWER DISTRICT
TOWN OF GREENBURGH, NEW YORK
SYMBOLS AND DETAILS

CONTRACT NUMBER	SHEET NUMBER
22-510	E-001

SHEET NO. 33 OF 55
SCALE: AS SHOWN
DATE: 06/01/2023
DPW FILE NO. 202-02-E-58-0
REV. NO. 0

IN CHARGE OF RB
CHECKED BY GRL/JGD
MADE BY BWL/GD

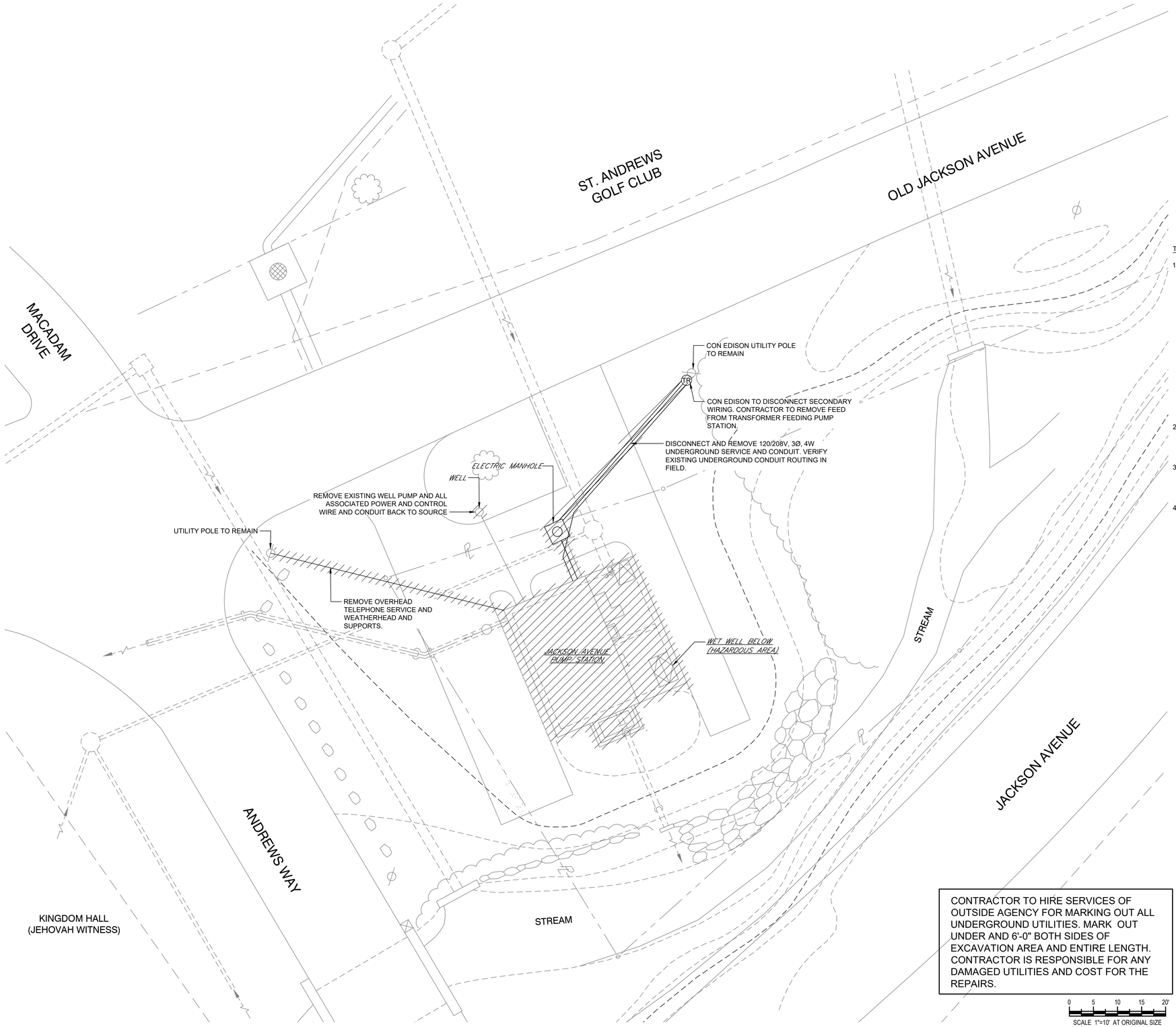

GENERAL NOTES:

1. REFER TO SHEET E-001 FOR AREA CLASSIFICATIONS.
2. ALL CONDUIT AND WIRE, RELATED TO ALL LIGHTING, ELECTRICAL EQUIPMENT, INSTRUMENTATION, BUILDING GROUNDING SYSTEM/LOOP, MECHANICAL, HVAC AND PLUMBING EQUIPMENT IS TO BE DEMOLISHED BACK TO SOURCE, UNLESS OTHERWISE NOTED.
3. ALL PANELBOARDS, VFDS, STARTERS, DISCONNECT SWITCHES, LIGHTING FIXTURES, RECEPTACLES, PULLBOXES, JUNCTION BOXES, AND ALL OTHER ELECTRICAL EQUIPMENT IS TO BE DEMOLISHED UNLESS OTHERWISE NOTED.
4. SEAL ALL EXISTING CONDUIT PENETRATIONS TO BE DEMOLISHED. PATCH TO MATCH EXISTING WALL AND FLOOR CONSTRUCTION. PATCHES SHALL BE WATER TIGHT AND FIRE PROTECTED.
5. NOT ALL EQUIPMENT, DEVICES AND CONDUIT ARE SHOWN ON FLOOR PLANS. VERIFY IN FIELD AND REMOVE.
6. REFER TO DEMOLITION DRAWINGS OF OTHER TRADES.
7. CONDUIT LOCATIONS ARE SHOWN DIAGRAMMATICALLY, FIELD LOCATE.

TEMPORARY SERVICE NOTES:

1. TEMPORARY POWER:

A. ALL WORK SHALL COMPLY WITH NEC ARTICLE 527, TEMPORARY INSTALLATION.

B. CONTRACTOR SHALL PROVIDE OVERCURRENT PROTECTION, DISCONNECTING MEANS, OVERHEAD LINE, POLES, GROUNDING, ALL CONDUIT, CABLE AND MISCELLANEOUS APPURTENANCES AS REQUIRED FOR TEMPORARY POWER AND COMMUNICATION PURPOSES.

C. CONTRACTOR SHALL EXTEND POWER FEED AND TELEPHONE LINE TO BYPASS PUMP CONTROL PANEL AND POWER SUB-PANEL.

2. PROVIDE INDEPENDENT SUPPORT FOR TEMPORARY POWER AND COMMUNICATIONS SYSTEM AS REQUIRED.

3. CONTRACTOR SHALL PROVIDE TEMPORARY POWER AND COMMUNICATION SYSTEM TO PUMP STATION.

4. PROVIDE TEMPORARY PRESSURE TREATED PLYWOOD BACKBOARD, POSTS, WEATHERHEADS, CONDUIT, WIRE, EQUIPMENT, ETC. AS REQUIRED.

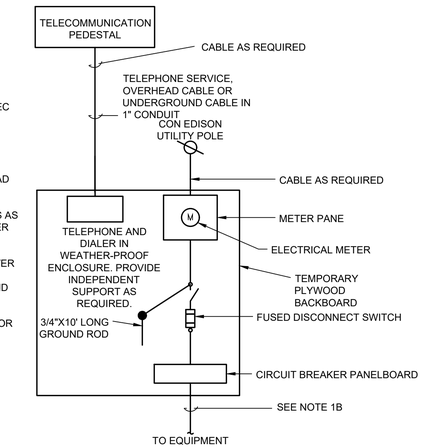

TEMPORARY POWER AND COMMUNICATIONS SYSTEM DETAIL

NO SCALE

CONTRACTOR TO HIRE SERVICES OF OUTSIDE AGENCY FOR MARKING OUT ALL UNDERGROUND UTILITIES. MARK OUT UNDER AND 6'-0" BOTH SIDES OF EXCAVATION AREA AND ENTIRE LENGTH. CONTRACTOR IS RESPONSIBLE FOR ANY DAMAGED UTILITIES AND COST FOR THE REPAIRS.

0 5 10 15 20'

SCALE 1"=10' AT ORIGINAL SIZE

PLAN

SCALE: 1" = 10'-0"

IN CHARGE OF RB
CHECKED BY GRL/JGD
MADE BY BWL/GD

MODIFICATION IS A VIOLATION OF CHAPTER 16, TITLE VIII, ARTICLE 145 § 7209.2 NYS EDUCATION LAW, UNLESS ACTING UNDER THE DIRECTION OF A LICENSED PROFESSIONAL ENGINEER. IF A DOCUMENT BEARING THE SEAL OF AN ENGINEER IS ALTERED, THE ALTERING ENGINEER SHALL AFFIX TO THE DOCUMENT THEIR SEAL AND THE NOTATION "ALTERED BY" FOLLOWED BY THEIR SIGNATURE AND THE DATE OF SUCH ALTERATION, AND A SPECIFIC DESCRIPTION OF THE ALTERATION.

EDR a better environment
Environmental Design & Research,
Landscape Architecture, Engineering & Environmental Services, D.P.C.
217 Montgomery Street, Suite 1100
Syracuse, New York 13202
P. 315.471.0688

REVISION NUMBER	DATE	MADE BY	APP'D BY	REVISION

RECORD DRAWING CERTIFICATION

☐ AS BUILT – CHANGES AS NOTED
☐ AS BUILT – NO CHANGES

CONTRACTOR
NAME
SIGNATURE
TITLE DATE

PROJECT COORDINATOR
NAME
SIGNATURE
TITLE DATE

WESTCHESTER COUNTY, NEW YORK
DEPARTMENT OF PUBLIC WORKS AND TRANSPORTATION
DIVISION OF ENGINEERING

JACKSON AVENUE PUMPING STATION REHABILITATION
BRONX VALLEY SANITARY SEWER DISTRICT
TOWN OF GREENBURGH, NEW YORK
DEMOLITION SITE PLAN

CONTRACT NUMBER 22-510
SHEET NUMBER E-002
SHEET NO. 34 OF 55
SCALE: AS SHOWN
DATE: 06/01/2023
DPW FILE NO. 202-02-E-59-0
REV. NO. 0

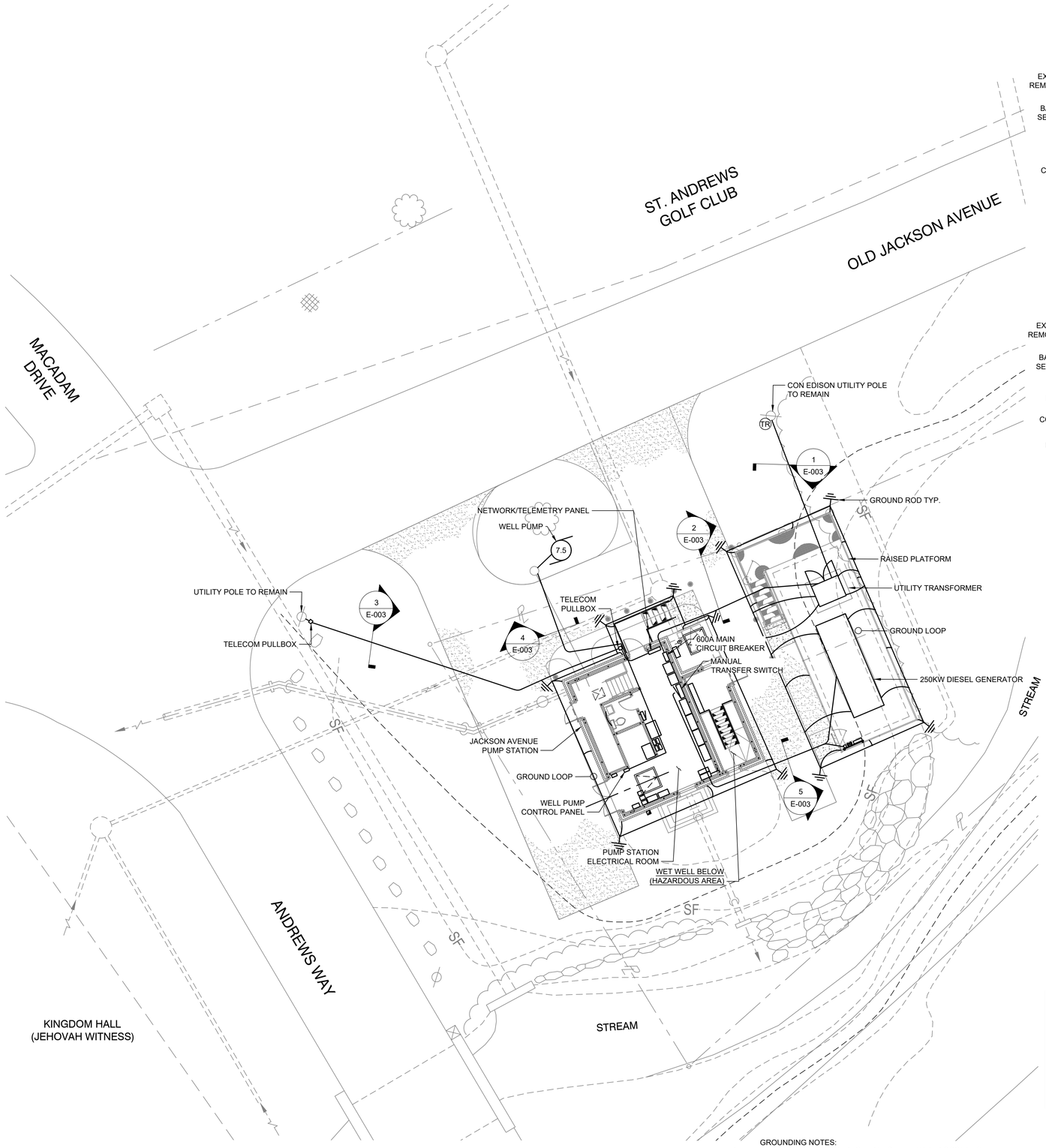

PLAN

SCALE: 1" = 10'-0"

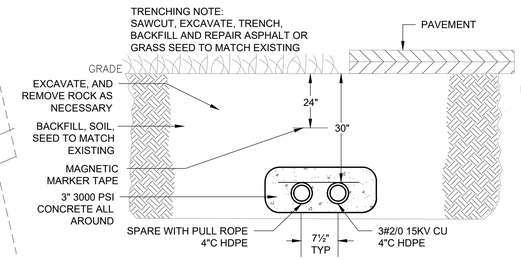

1 E-003 TRENCH DETAIL

SCALE: NONE

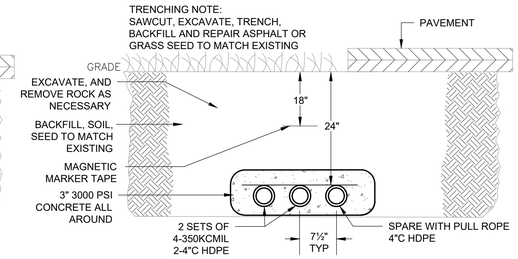

2 E-003 TRENCH DETAIL

SCALE: NONE

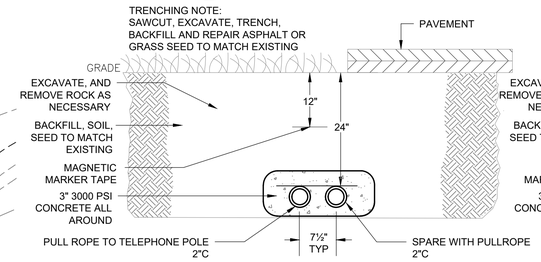

3 E-003 TRENCH DETAIL

SCALE: NONE

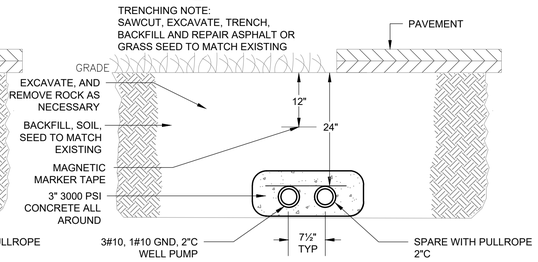

4 E-003 TRENCH DETAIL

SCALE: NONE

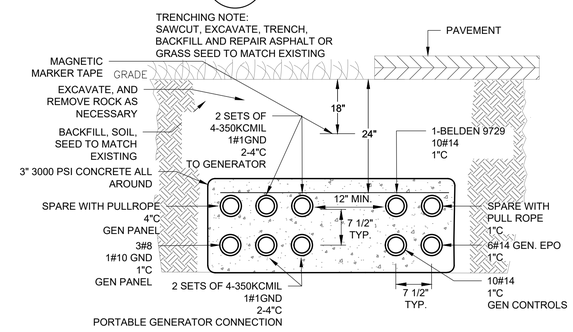

5 E-003 TRENCH DETAIL

SCALE: NONE

CONTRACTOR TO HIRE SERVICES OF OUTSIDE AGENCY FOR MARKING OUT ALL UNDERGROUND UTILITIES. MARK OUT UNDER AND 6'-0" BOTH SIDES OF EXCAVATION AREA AND ENTIRE LENGTH. CONTRACTOR IS RESPONSIBLE FOR ANY DAMAGED UTILITIES AND COST FOR THE REPAIRS.

0 5 10 15 20'

SCALE 1"=10' AT ORIGINAL SIZE

GROUNDING NOTES:

1. BOND REBAR, STRUCTURAL STEEL, MAIN DISCONNECT, UTILITY TRANSFORMER, 30KVA TRANSFORMER, GENERATOR, STAIRS, AND PLATFORMS TO GROUND LOOP.
2. GROUND RODS TO BE 5/8" X 10', COPPER CLAS STEEL.
3. ALL GROUND LOOP CONDUCTORS SHALL BE #4/0 BARE Cu. AND INSTALLED 24" BELOW GRADE.
4. ALL GROUND GRID LOOP CONNECTIONS SHALL BE CAD WELDED.

STATE OF NEW YORK · GARY R. LINCOLN · 050626 · LICENSED PROFESSIONAL ENGINEER

EDR a better environment

Environmental Design & Research,

Landscape Architecture, Engineering & Environmental Services, D.P.C.
217 Montgomery Street, Suite 1100
Syracuse, New York 13202
P. 315.471.0688

REVISION NUMBER	DATE	MADE BY	APP'D BY	REVISION

RECORD DRAWING CERTIFICATION

☐ AS BUILT – CHANGES AS NOTED
☐ AS BUILT – NO CHANGES

CONTRACTOR	PROJECT COORDINATOR
NAME	NAME
SIGNATURE	SIGNATURE
TITLE DATE	TITLE DATE

WESTCHESTER COUNTY, NEW YORK
DEPARTMENT OF PUBLIC WORKS AND TRANSPORTATION
DIVISION OF ENGINEERING

JACKSON AVENUE PUMPING STATION REHABILITATION
BRONX VALLEY SANITARY SEWER DISTRICT
TOWN OF GREENBURGH, NEW YORK
SITE PLAN

CONTRACT NUMBER	SHEET NUMBER
22-510	E-003

SHEET NO. 35 OF 55

SCALE: AS SHOWN
DATE: 06/01/2023

DPW FILE NO.	REV. NO.
202-02-E-60-0	0

IN CHARGE OF RB
CHECKED BY GRL/JGD
MADE BY BWL/GD

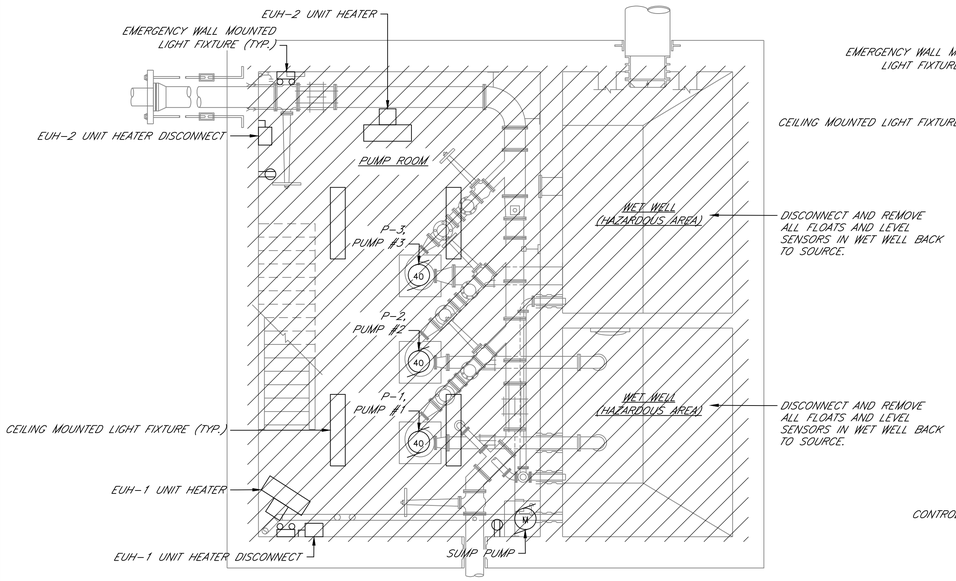

LOWER LEVEL PLAN

SCALE: 1/4" = 1'-0"

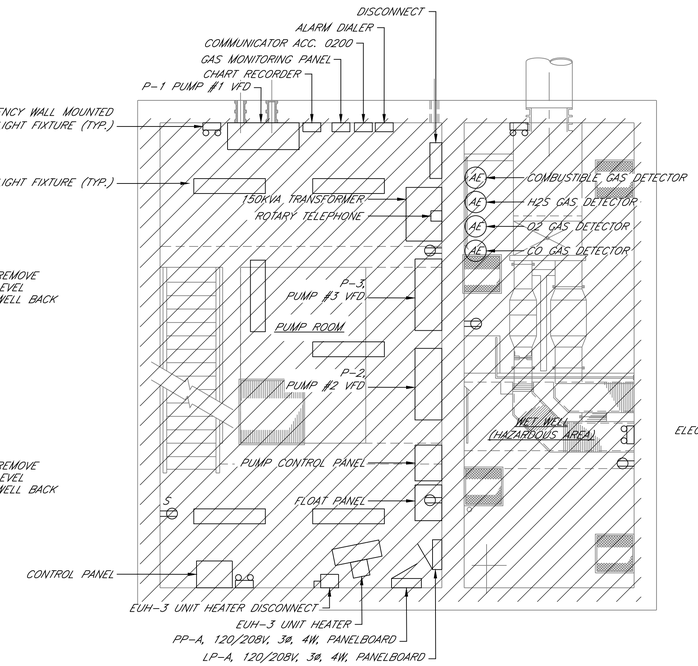

INTERMEDIATE LEVEL PLAN

SCALE: 1/4" = 1'-0"

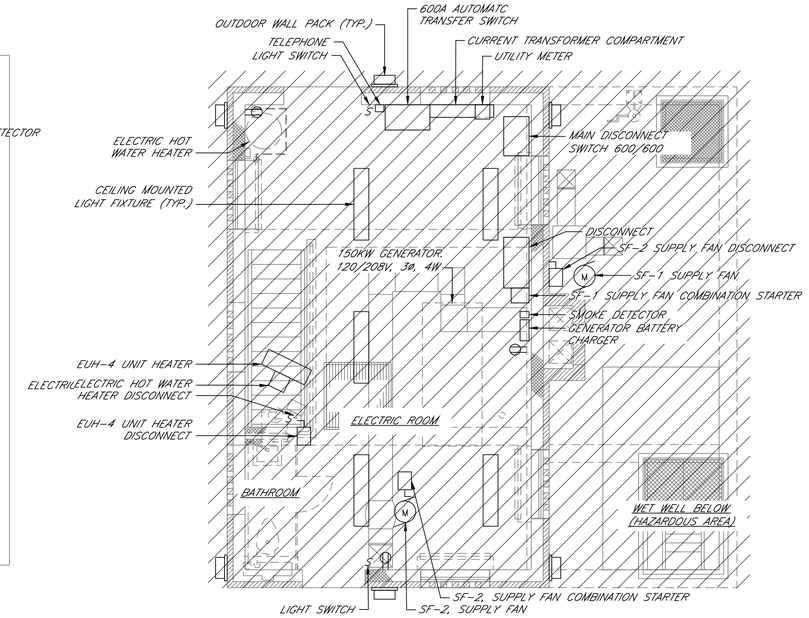

UPPER LEVEL PLAN

SCALE: 1/4" = 1'-0"

GENERAL NOTES:

1. REFER TO SHEET E-001 FOR AREA CLASSIFICATIONS.
2. ALL CONDUIT AND WIRE, RELATED TO ALL LIGHTING, ELECTRICAL EQUIPMENT, INSTRUMENTATION, BUILDING GROUNDING SYSTEM/LOOP, MECHANICAL, HVAC AND PLUMBING EQUIPMENT IS TO BE DEMOLISHED BACK TO SOURCE, UNLESS OTHERWISE NOTED.
3. ALL PANELBOARDS, VFDS, STARTERS, DISCONNECT SWITCHES, LIGHTING FIXTURES, RECEPTACLES, PULLBOXES, JUNCTION BOXES, AND ALL OTHER ELECTRICAL EQUIPMENT IS TO BE DEMOLISHED UNLESS OTHERWISE NOTED.
4. SEAL ALL EXISTING CONDUIT PENETRATIONS TO BE DEMOLISHED. PATCH TO MATCH EXISTING WALL AND FLOOR CONSTRUCTION. PATCHES SHALL BE WATER TIGHT AND FIRE PROTECTED.
5. NOT ALL EQUIPMENT, DEVICES AND CONDUIT ARE SHOWN ON FLOOR PLANS. VERIFY IN FIELD AND REMOVE.

0 2'-0" 4'-0" 6'-0" 8'-0"

SCALE 1/4"=1'-0" AT ORIGINAL SIZE

STATE OF NEW YORK · GARY R. LINDEN · 065906 · LICENSED PROFESSIONAL ENGINEER

EDR a better environment

Environmental Design & Research,
Landscape Architecture, Engineering & Environmental Services, D.P.C.
217 Montgomery Street, Suite 1100
Syracuse, New York 13202
P. 315.471.0688

REVISION NUMBER	DATE	MADE BY	APP'D BY	REVISION

RECORD DRAWING CERTIFICATION

☐ AS BUILT – CHANGES AS NOTED
☐ AS BUILT – NO CHANGES

CONTRACTOR	PROJECT COORDINATOR
NAME	NAME
SIGNATURE	SIGNATURE
TITLE DATE	TITLE DATE

WESTCHESTER COUNTY, NEW YORK
DEPARTMENT OF PUBLIC WORKS AND TRANSPORTATION
DIVISION OF ENGINEERING

JACKSON AVENUE PUMPING STATION REHABILITATION
BRONX VALLEY SANITARY SEWER DISTRICT
TOWN OF GREENBURGH, NEW YORK
DEMOLITION PLANS

CONTRACT NUMBER	SHEET NUMBER
22-510	E-004

SHEET NO. 36 OF 55

SCALE: AS SHOWN
DATE: 06/01/2023

DPW FILE NO.	REV. NO.
202-02-E-61-0	0

IN CHARGE OF RB
CHECKED BY GRL/JGD
MADE BY BWL/GD

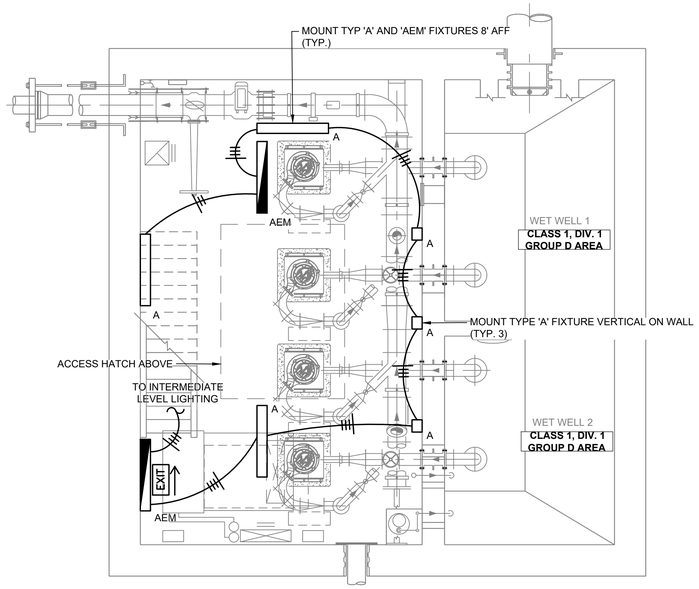

LOWER LEVEL PLAN

SCALE: 1/4" = 1'-0"

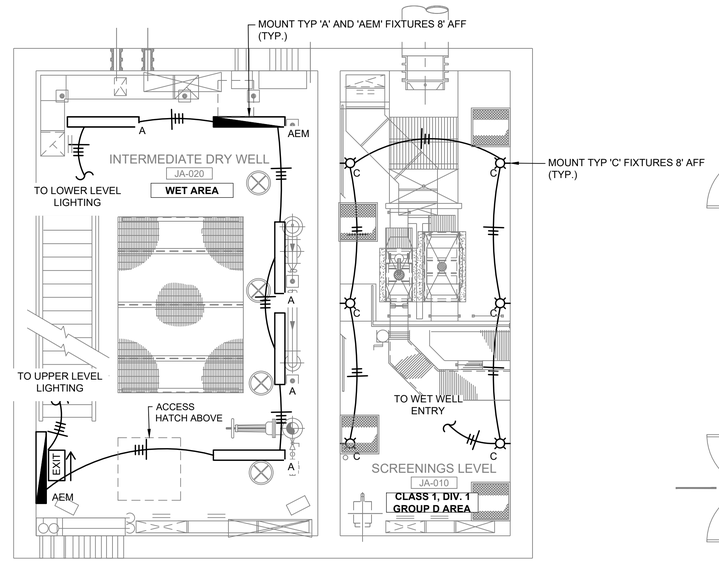

INTERMEDIATE LEVEL PLAN

SCALE: 1/4" = 1'-0"

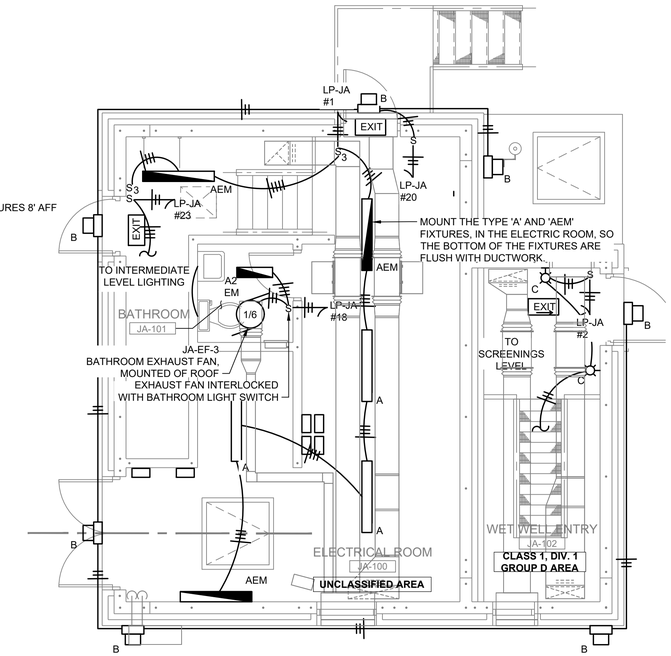

UPPER LEVEL PLAN

SCALE: 1/4" = 1'-0"

GENERAL NOTES:

1. REFER TO SHEET E-001 FOR AREA CLASSIFICATIONS.
2. PROVIDE SEAL OFFS FOR ANY CONDUIT RUN THAT PASSES OR ENTERS A CLASS 1, DIV. 1 AND DIV. 2 GROUP D CLASSIFIED AREA.
3. CONDUITS SHALL NOT BE ROUTED ON BUILDING EXTERIOR.
4. ALL CONDUIT, PIPING, ETC. PENETRATIONS THROUGH EXTERIOR WALLS SHALL BE WATER-TIGHT. UTILIZE DOUBLE-LINK SEALS, CSD SEALING SYSTEMS FOR PIPES, OR ENGINEER APPROVED EQUAL. PENETRATIONS SHALL BE SEALED WATER-TIGHT AGAINST SUBMERGENCE ABOVE THE DFE.
5. ALL CONDUIT, PIPING, ETC. PENETRATIONS THROUGH EXTERIOR WALLS SHALL BE MADE ABOVE THE DFE.
6. WHERE POSSIBLE, ALL INTERIOR EQUIPMENT TO BE INSTALLED ABOVE THE DFE.
7. ALL EXTERIOR EQUIPMENT SHALL BE INSTALLED ABOVE THE DFE.

0 2'-0" 4'-0" 6'-0" 8'-0"

SCALE 1/4"=1'-0" AT ORIGINAL SIZE

STATE OF NEW YORK · GARY R. LINDER · 085926 · LICENSED PROFESSIONAL ENGINEER

EDR a better environment

Environmental Design & Research,
Landscape Architecture, Engineering & Environmental Services, D.P.C.
217 Montgomery Street, Suite 1100
Syracuse, New York 13202
P. 315.471.0688

REVISION NUMBER	DATE	MADE BY	APP'D BY	REVISION

RECORD DRAWING CERTIFICATION

☐ AS BUILT – CHANGES AS NOTED
☐ AS BUILT – NO CHANGES

CONTRACTOR	PROJECT COORDINATOR
NAME	NAME
SIGNATURE	SIGNATURE
TITLE DATE	TITLE DATE

WESTCHESTER COUNTY, NEW YORK
DEPARTMENT OF PUBLIC WORKS AND TRANSPORTATION
DIVISION OF ENGINEERING

JACKSON AVENUE PUMPING STATION REHABILITATION
BRONX VALLEY SANITARY SEWER DISTRICT
TOWN OF GREENBURGH, NEW YORK
LIGHTING PLANS

CONTRACT NUMBER	SHEET NUMBER
22–510	E–005

SHEET NO. 37 OF 55

SCALE: AS SHOWN
DATE: 06/01/2023

DPW FILE NO.	REV. NO.
202–02–E–62–0	0

IN CHARGE OF RB
CHECKED BY GRL/JGD
MADE BY BWL/GD

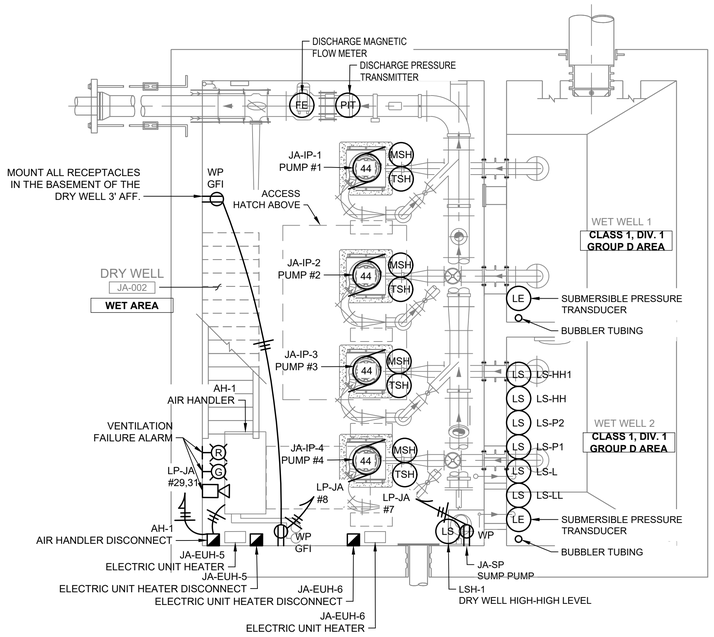

LOWER LEVEL PLAN

SCALE: 1/4" = 1'-0"

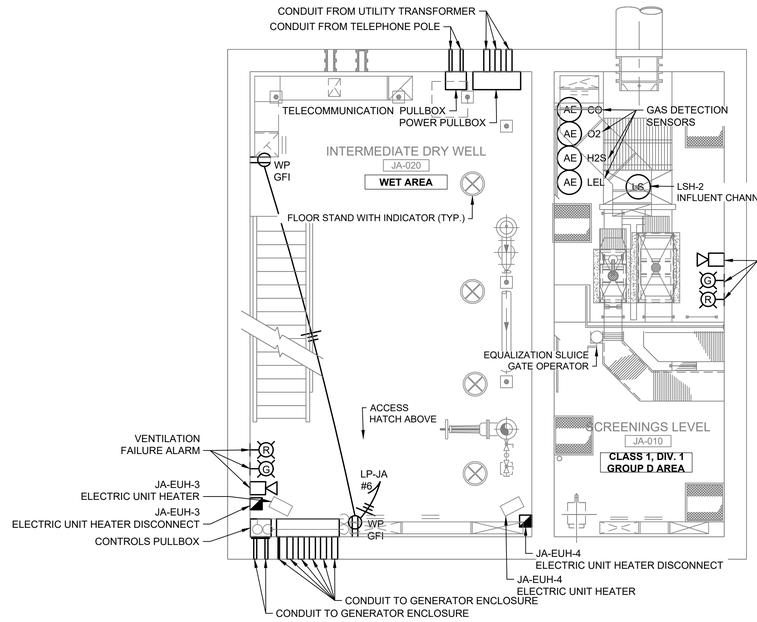

INTERMEDIATE LEVEL PLAN

SCALE: 1/4" = 1'-0"

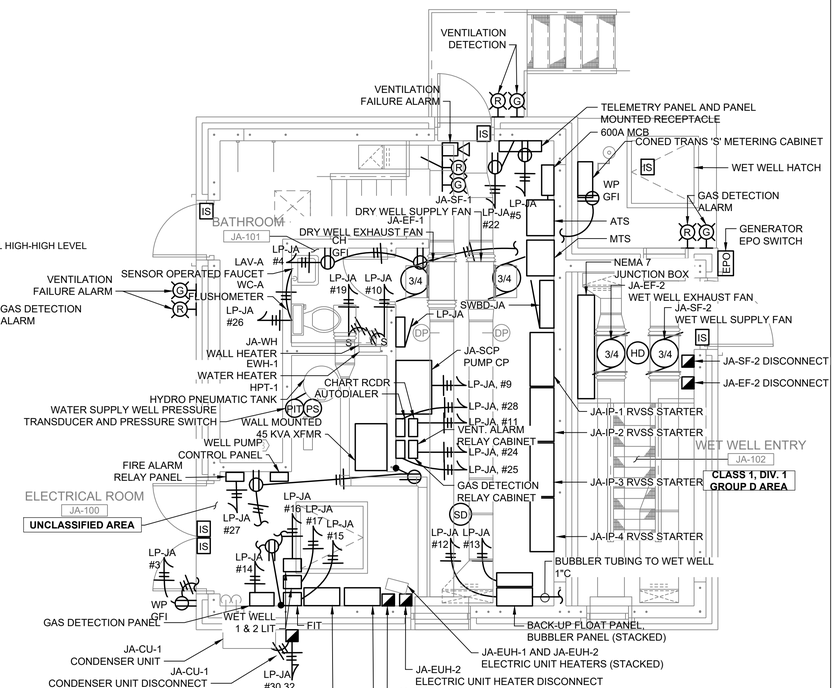

UPPER LEVEL PLAN

SCALE: 1/4" = 1'-0"

GENERAL NOTES:

1. REFER TO SHEET E-001 FOR AREA CLASSIFICATIONS.
2. PROVIDE SEAL OFFS FOR ANY CONDUIT RUN THAT PASSES OR ENTERS A CLASS 1, DIV. 1 AND DIV. 2 GROUP D CLASSIFIED AREA.
3. CONDUITS SHALL NOT BE ROUTED ON BUILDING EXTERIOR.
4. ALL CONDUIT, PIPING, ETC. PENETRATIONS THROUGH EXTERIOR WALLS SHALL BE WATER-TIGHT. UTILIZE DOUBLE-LINK SEALS, CSD SEALING SYSTEMS FOR PIPES, OR ENGINEER APPROVED EQUAL. PENETRATIONS SHALL BE SEALED WATER-TIGHT AGAINST SUBMERGENCE ABOVE THE DFE.
5. ALL CONDUIT, PIPING, ETC. PENETRATIONS THROUGH EXTERIOR WALLS SHALL BE MADE ABOVE THE DFE.
6. WHERE POSSIBLE, ALL INTERIOR EQUIPMENT TO BE INSTALLED ABOVE THE DFE.
7. ALL EXTERIOR EQUIPMENT SHALL BE INSTALLED ABOVE THE DFE.
8. PROVIDE EQUIPMENT ENCLOSURE RATINGS SUITABLE FOR THEIR CLASSIFICATION.
9. EQUIPMENT/PANELBOARDS SHOWN DIRECTLY IN FRONT OF OTHER EQUIPMENT WITHIN THE ELECTRICAL ROOM IS SHOWN DIAGRAMMATICALLY, AND IS INTENDED TO BE STACKED VERTICALLY ON THE FACE OF THE NEAREST WALL.

0 2'-0" 4'-0" 6'-0" 8'-0"

SCALE 1/4"=1'-0" AT ORIGINAL SIZE

MODIFICATION IS A VIOLATION OF CHAPTER 16, TITLE VIII, ARTICLE 145 § 7209.2 NYS EDUCATION LAW, UNLESS ACTING UNDER THE DIRECTION OF A LICENSED PROFESSIONAL ENGINEER. IF A DOCUMENT BEARING THE SEAL OF AN ENGINEER IS ALTERED, THE ALTERING ENGINEER SHALL AFFIX TO THE DOCUMENT THEIR SEAL AND THE NOTATION "ALTERED BY" FOLLOWED BY THEIR SIGNATURE AND THE DATE OF SUCH ALTERATION, AND A SPECIFIC DESCRIPTION OF THE ALTERATION.

EDR
a better environment
Environmental Design & Research,
Landscape Architecture, Engineering & Environmental Services, D.P.C.
217 Montgomery Street, Suite 1100
Syracuse, New York 13202
P. 315.471.0688

REVISION NUMBER	DATE	MADE BY	APP'D BY	REVISION

RECORD DRAWING CERTIFICATION

☐ AS BUILT – CHANGES AS NOTED
☐ AS BUILT – NO CHANGES

CONTRACTOR	PROJECT COORDINATOR
NAME	NAME
SIGNATURE	SIGNATURE
TITLE DATE	TITLE DATE

WESTCHESTER COUNTY, NEW YORK
DEPARTMENT OF PUBLIC WORKS AND TRANSPORTATION
DIVISION OF ENGINEERING

JACKSON AVENUE PUMPING STATION REHABILITATION
BRONX VALLEY SANITARY SEWER DISTRICT
TOWN OF GREENBURGH, NEW YORK
POWER AND SIGNAL PLANS

CONTRACT NUMBER	SHEET NUMBER
22-510	E-006

SHEET NO. 38 OF 55
SCALE: AS SHOWN
DATE: 06/01/2023
DPW FILE NO. 202-02-E-63-0
REV. NO. 0

IN CHARGE OF RB
CHECKED BY GRL/JGD
MADE BY BWL/GD

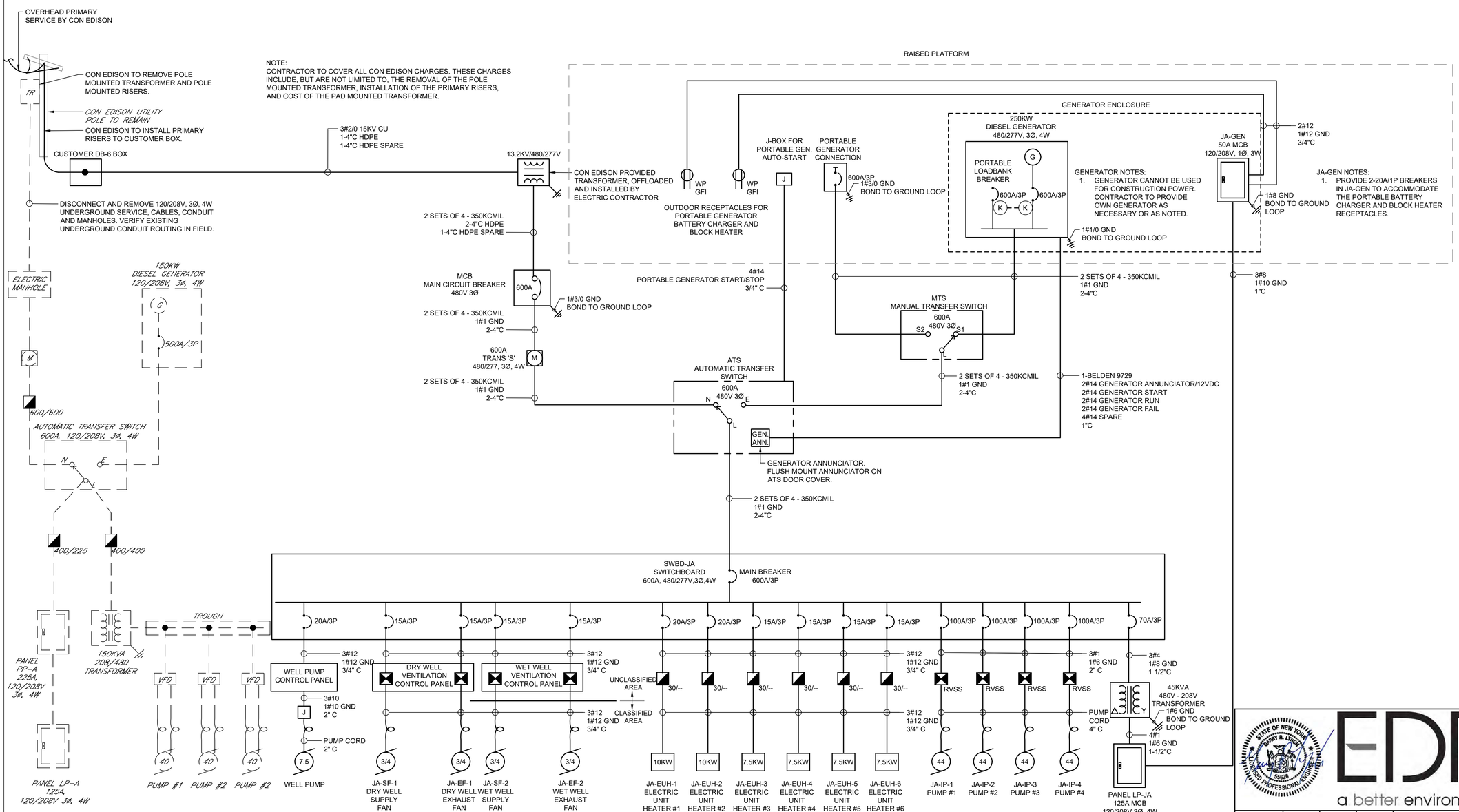

JACKSON AVENUE POWER SINGLE LINE DIAGRAM

NO SCALE

DEMOLITION NOTES:

1. ALL CONDUIT AND WIRE, RELATED TO ALL LIGHTING, ELECTRICAL EQUIPMENT, INSTRUMENTATION, MECHANICAL, HVAC, AND PLUMBING EQUIPMENT ASSOCIATED WITH EXISTING PUMP STATION SHALL BE DEMOLISHED BACK TO SOURCE UNLESS OTHERWISE NOTED.
2. ALL PANELBOARDS, STARTERS, VFDS, DISCONNECT SWITCHES, LIGHTING FIXTURES, RECEPTACLES, PULLBOXES, JUNCTION BOXES, AND ALL OTHER ELECTRICAL EQUIPMENT TO BE DEMOLISHED UNLESS OTHERWISE NOTED.
3. NOT ALL EQUIPMENT, DEVICES, CONDUIT AND PULLBOXES ARE SHOWN ON SINGLE LINE. VERIFY AND REMOVE.

GENERAL NOTES:

1. REFER TO SHEET E-001 FOR AREA CLASSIFICATIONS.
2. PROVIDE SEAL OFFS FOR ANY CONDUIT RUN THAT PASSES OR ENTERS A CLASS 1, DIV. 1 AND DIV. 2 GROUP D CLASSIFIED AREA.
3. PROVIDE EQUIPMENT ENCLOSURE RATINGS SUITABLE FOR THEIR CLASSIFICATION.
4. ALL FINAL CONNECTIONS TO MOTORS AND VIBRATING EQUIPMENT SHALL BE MADE WITH FLEXIBLE CONNECTIONS.
5. ALL FLEXIBLE CONNECTIONS TO EQUIPMENT IN CLASS 1 DIV. 1 AND DIV. 2 AREAS SHALL BE RATED FOR DIV. 1 LOCATIONS.

PORTABLE GENERATION JUNCTION BOX NOTES:

1. PORTABLE GENERATOR AUTO START/STOP TERMINAL BOX SHALL BE A 6" X 6" X 4" DEEP SURFACE MOUNTED, STAINLESS STEEL, NEMA 4 ENCLOSURE WITH A HINGED DOOR AND PAD LOCKING HASP. BOX SHALL INCLUDE A TERMINAL BLOCK SUITABLE FOR CONNECTION OF TWO INCOMING AND OUTGOING 14AWG THROUGH 10AWG CONDUCTORS. PROVIDE A 2" DIAMETER HOLE ON THE ENCLOSURE BOTTOM SEALED WITH A REMOVABLE AND REPLACEABLE KNOCKOUT FOR ENTRY OF THE PORTABLE GENERATOR CONTROL CABLE.

IN CHARGE OF RB
CHECKED BY GRL/JGD
MADE BY BWL/GD

EDR
a better environment
Environmental Design & Research,
Landscape Architecture, Engineering & Environmental Services, D.P.C.
217 Montgomery Street, Suite 1100
Syracuse, New York 13202
P. 315.471.0688

REVISION NUMBER	DATE	MADE BY	APP'D BY	REVISION

RECORD DRAWING CERTIFICATION

☐ AS BUILT – CHANGES AS NOTED
☐ AS BUILT – NO CHANGES

CONTRACTOR
NAME
SIGNATURE
TITLE DATE

PROJECT COORDINATOR
NAME
SIGNATURE
TITLE DATE

WESTCHESTER COUNTY, NEW YORK
DEPARTMENT OF PUBLIC WORKS AND TRANSPORTATION
DIVISION OF ENGINEERING

JACKSON AVENUE PUMPING STATION REHABILITATION
BRONX VALLEY SANITARY SEWER DISTRICT
TOWN OF GREENBURGH, NEW YORK
POWER SINGLE LINE DIAGRAM

CONTRACT NUMBER 22-510
SHEET NUMBER E-007
SHEET NO. 39 OF 55
SCALE: AS SHOWN
DATE: 06/01/2023
DPW FILE NO. 202-02-E-64-0
REV. NO. 0

SWITCHBOARD SWBD-JA SCHEDULE

MAIN BUS RATINGS: 600A, 480/277 VOLTS, 3 PHASE, 4 WIRE
MINIMUM SHORTCIRCUIT INTERRUPTION RATING: 65,000 AIC
MAIN BREAKER TRIP: 600A
ESTIMATED CONNECTED LOAD: 214.6KW

FED FROM: ATS
INCOMING FEED: 2 SETS OF 4-350KCMIL
ENCLOSURE: NEMA 12

DESCRIPTION	LOAD KW	CB TRIP/POLE	CIR. NO	A B C	CIR. NO	CB TRIP/POLE	LOAD KW	DESCRIPTION
JA-IP-1 PUMP #1	33.0	100A/3P	1		2	100A/3P	33.0	JA-IP-2 PUMP #2
			3		4			
			5		6			
JA-IP-3 PUMP #3	33.0	100A/3P	7		8	100A/3P	33.0	JA-IP-4 PUMP #4
			9		10			
			11		12			
75KVA TRANSORMER	24.8	70A/3P	13		14	20A/3P	10.0	JA-EUH-1 ELECTRIC UNIT HEATER #1
			15		16			
			17		18			
JA-EUH-2 ELECTRIC UNIT HEATER #2	10.0	20A/3P	19		20	20A/3P	7.5	JA-EUH-3 ELECTRIC UNIT HEATER #3
			21		22			
			23		24			
JA-EUH-4 ELECTRIC UNIT HEATER #4	7.5	20A/3P	25		26	20A/3P	7.5	JA-EUH-5 ELECTRIC UNIT HEATER #5
			27		28			
			29		30			
JA-EUH-6 ELECTRIC UNIT HEATER #6	7.5	20A/3P	31		32	15A/3P	1.0	JA-SF-1 DRY SUPPLY FAN
			33		34			
			35		36			
JA-SF-2 WET WELL SUPPLY FAN	1.0	15A/3P	37		38	15A/3P	1.0	JA-EF-1 DRY WELL EXHAUST FAN
			39		40			
			41		42			
JA-EF-2 WET WELL EXHAUST FAN	1.0	15A/3P	43		44	15A/3P	3.8	WET WELL PUMP
			45		46			
			47		48			
SPACE	--	--/--	49		50	--/--	--	SPACE
			51		52			
			53		54			
SPACE	--	--/--	55		56	--/--	--	SPACE
			57		58			
			59		60			

PANELBOARD LP-JA SCHEDULE

MAIN BUS RATINGS: 225A, 120/208 VOLTS, 3 PHASE, 4 WIRE
MINIMUM SHORTCIRCUIT INTERRUPTION RATING: 22,000 AIC
MAIN BREAKER TRIP: 125A
ESTIMATED CONNECTED LOAD: 24.8KW

FED FROM: LP-WVR
INCOMING FEED: 4#1,1#6GND 1-1/2"C
ENCLOSURE: NEMA 12

DESCRIPTION	LOAD KW	CB TRIP/POLE	CIR. NO	A B C	CIR. NO	CB TRIP/POLE	LOAD KW	DESCRIPTION
ELEC ROOM LIGHTING	0.9	20A/1P	1		2	20A/1P	0.2	WET WELL LIGHTING
ELEC ROOM RECEP	0.8	20A/1P	3		4	20A/1P	0.6	ELEC ROOM RECEP
TELEMETRY PANEL	0.2	20A/1P	5		6	20A/1P	0.4	INTERMEDIATE LVL RECEP
SUMP PUMP	1.2	20A/1P	7		8	20A/1P	0.4	LOWER LEVEL RECEP
JA-SCP	0.5	20A/1P	9		10	20A/1P	1.5	JA-WH-1, BTH RM WALL HTR
CHART RECORDER	0.1	20A/1P	11		12	20A/1P	0.1	BUBBLER
BACKUP FLOAT CONTROL	0.1	20A/1P	13		14	20A/1P	0.5	GAS DETECTION PANEL
FIT	0.1	20A/1P	15		16	20A/1P	0.1	LIT WET WELL 1
LIT WET WELL 2	0.1	20A/1P	17		18	20A/1P	0.5	EF-3 BATHRM EF/LIGHT
DRY WELL LIGHTING	1.5	20A/1P	19		20	20A/1P	0.1	OUTDOOR LIGHTING
SPARE	--	20A/1P	21		22	20A/1P	0.1	TELEMETRY PANEL
DRY WELL LIGHTING	0.5	20A/1P	23		24	20A/1P	0.1	VENT. ALARM RELAY CBNT
GAS DET. RELAY CBNT	0.1	20A/1P	25		26	20A/1P	0.1	FLUSHOMETER/FAUCET SENSOR
FIRE ALARM RELAY PANEL	0.1	20A/1P	27		28	20A/1P	0.1	AUTODIALER
AH-1 AIR HANDLER UNIT	0.8	15A/2P	29		30	35A/2P	6.0	CU-1 CONDENSER
			31		32			
SPARE	--	20A/1P	33		34	20A/1P	--	SPARE
SPARE	--	20A/1P	35		36	20A/1P	--	SPARE
SPARE	--	20A/1P	37		38	20A/1P	--	SPARE
SPARE	--	20A/1P	39		40	50A/2P	7.0	JA-GEN
SPARE	--	20A/1P	41		42			

PANELBOARD GENERAL NOTES:

1. FOR THREE PHASE CIRCUITS - PROVIDE 3/4" C W/ 3#12, 1#12 GND FOR 20 AMP CIRCUITS SERVING EQUIPMENT WITHIN 60' OF PANELBOARD. UNLESS OTHER WISE NOTED. INCREASE CONDUIT AND WIRE SIZES IN ACCORDANCE WITH THE N.E.C. FOR LONGER CIRCUITS OR CIRCUITS MORE THAN 20 AMPS.

2. FOR SINGLE PHASE CIRCUITS - PROVIDE 3/4" C W/ 2#12, 1#12 GND FOR 20 AMP CIRCUITS SERVING EQUIPMENT WITHIN 60' OF PANELBOARD. UNLESS OTHER WISE NOTED. INCREASE CONDUIT AND WIRE SIZE IN ACCORDANCE WITH THE N.E.C. FOR LONGER CIRCUITS OR CIRCUITS MORE THAN 20 AMPS.

3. CONTRACTOR SHALL BALANCE ALL PANELBOARD LOADS ACROSS PHASES.

IN CHARGE OF RB
CHECKED BY GRL/JGD
MADE BY BWL/GD

STATE OF NEW YORK · GARY R. LINCK · 100026 · LICENSED PROFESSIONAL ENGINEER
EDR a better environment
Environmental Design & Research,
Landscape Architecture, Engineering & Environmental Services, D.P.C.
217 Montgomery Street, Suite 1100
Syracuse, New York 13202
P. 315.471.0688

REVISION NUMBER	DATE	MADE BY	APP'D BY	REVISION

RECORD DRAWING CERTIFICATION

☐ AS BUILT – CHANGES AS NOTED
☐ AS BUILT – NO CHANGES

CONTRACTOR
NAME
SIGNATURE
TITLE DATE

PROJECT COORDINATOR
NAME
SIGNATURE
TITLE DATE

WESTCHESTER COUNTY, NEW YORK
DEPARTMENT OF PUBLIC WORKS AND TRANSPORTATION
DIVISION OF ENGINEERING

JACKSON AVENUE PUMPING STATION REHABILITATION
BRONX VALLEY SANITARY SEWER DISTRICT
TOWN OF GREENBURGH, NEW YORK
PANELBOARD SCHEDULES

CONTRACT NUMBER 22-510
SHEET NUMBER E-008
SHEET NO. 40 OF 55
SCALE: AS SHOWN
DATE: 06/01/2023
DPW FILE NO. 202-02-E-65-0
REV. NO. 0

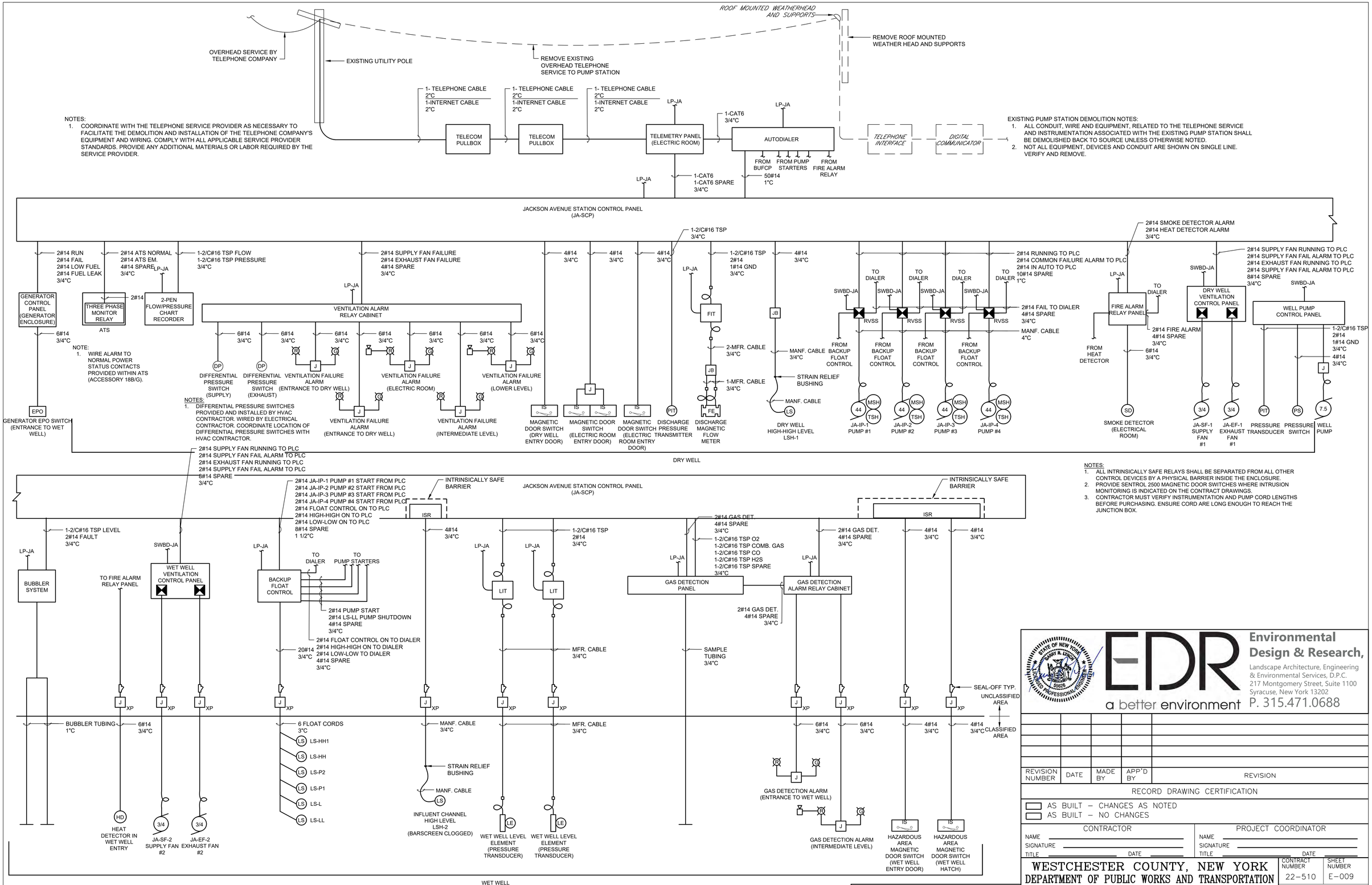

NOTES:
1. COORDINATE WITH THE TELEPHONE SERVICE PROVIDER AS NECESSARY TO FACILITATE THE DEMOLITION AND INSTALLATION OF THE TELEPHONE COMPANY'S EQUIPMENT AND WIRING. COMPLY WITH ALL APPLICABLE SERVICE PROVIDER STANDARDS. PROVIDE ANY ADDITIONAL MATERIALS OR LABOR REQUIRED BY THE SERVICE PROVIDER.

EXISTING PUMP STATION DEMOLITION NOTES:
1. ALL CONDUIT, WIRE AND EQUIPMENT, RELATED TO THE TELEPHONE SERVICE AND INSTRUMENTATION ASSOCIATED WITH THE EXISTING PUMP STATION SHALL BE DEMOLISHED BACK TO SOURCE UNLESS OTHERWISE NOTED.
2. NOT ALL EQUIPMENT, DEVICES AND CONDUIT ARE SHOWN ON SINGLE LINE. VERIFY AND REMOVE.

NOTE:
1. WIRE ALARM TO NORMAL POWER STATUS CONTACTS PROVIDED WITHIN ATS (ACCESSORY 18B/G).

NOTES:
1. DIFFERENTIAL PRESSURE SWITCHES PROVIDED AND INSTALLED BY HVAC CONTRACTOR. WIRED BY ELECTRICAL CONTRACTOR. COORDINATE LOCATION OF DIFFERENTIAL PRESSURE SWITCHES WITH HVAC CONTRACTOR.

NOTES:
1. ALL INTRINSICALLY SAFE RELAYS SHALL BE SEPARATED FROM ALL OTHER CONTROL DEVICES BY A PHYSICAL BARRIER INSIDE THE ENCLOSURE.
2. PROVIDE SENTROL 2500 MAGNETIC DOOR SWITCHES WHERE INTRUSION MONITORING IS INDICATED ON THE CONTRACT DRAWINGS.
3. CONTRACTOR MUST VERIFY INSTRUMENTATION AND PUMP CORD LENGTHS BEFORE PURCHASING. ENSURE CORD ARE LONG ENOUGH TO REACH THE JUNCTION BOX.

JACKSON AVENUE CONTROL PANEL SCHEMATIC WIRING DIAGRAM

NO SCALE

IN CHARGE OF RB
CHECKED BY GRL/JGD
MADE BY BWL/GD

MODIFICATION IS A VIOLATION OF CHAPTER 16, TITLE VIII, ARTICLE 145 § 7209.2 NYS EDUCATION LAW, UNLESS ACTING UNDER THE DIRECTION OF A LICENSED PROFESSIONAL ENGINEER. IF A DOCUMENT BEARING THE SEAL OF AN ENGINEER IS ALTERED, THE ALTERING ENGINEER SHALL AFFIX TO THE DOCUMENT THEIR SEAL AND THE NOTATION "ALTERED BY" FOLLOWED BY THEIR SIGNATURE AND THE DATE OF SUCH ALTERATION, AND A SPECIFIC DESCRIPTION OF THE ALTERATION.

EDR
Environmental Design & Research,
Landscape Architecture, Engineering & Environmental Services, D.P.C.
217 Montgomery Street, Suite 1100
Syracuse, New York 13202
P. 315.471.0688
a better environment

REVISION NUMBER	DATE	MADE BY	APP'D BY	REVISION

RECORD DRAWING CERTIFICATION

☐ AS BUILT – CHANGES AS NOTED
☐ AS BUILT – NO CHANGES

CONTRACTOR
NAME
SIGNATURE
TITLE DATE

PROJECT COORDINATOR
NAME
SIGNATURE
TITLE DATE

WESTCHESTER COUNTY, NEW YORK
DEPARTMENT OF PUBLIC WORKS AND TRANSPORTATION
DIVISION OF ENGINEERING

JACKSON AVENUE PUMPING STATION REHABILITATION
BRONX VALLEY SANITARY SEWER DISTRICT
TOWN OF GREENBURGH, NEW YORK
CONTROL ONE LINE DIAGRAM

CONTRACT NUMBER	SHEET NUMBER
22-510	E-009

SHEET NO. 41 OF 55
SCALE: AS SHOWN
DATE: 06/01/2023
DPW FILE NO. 202-02-E-66-0
REV. NO. 0

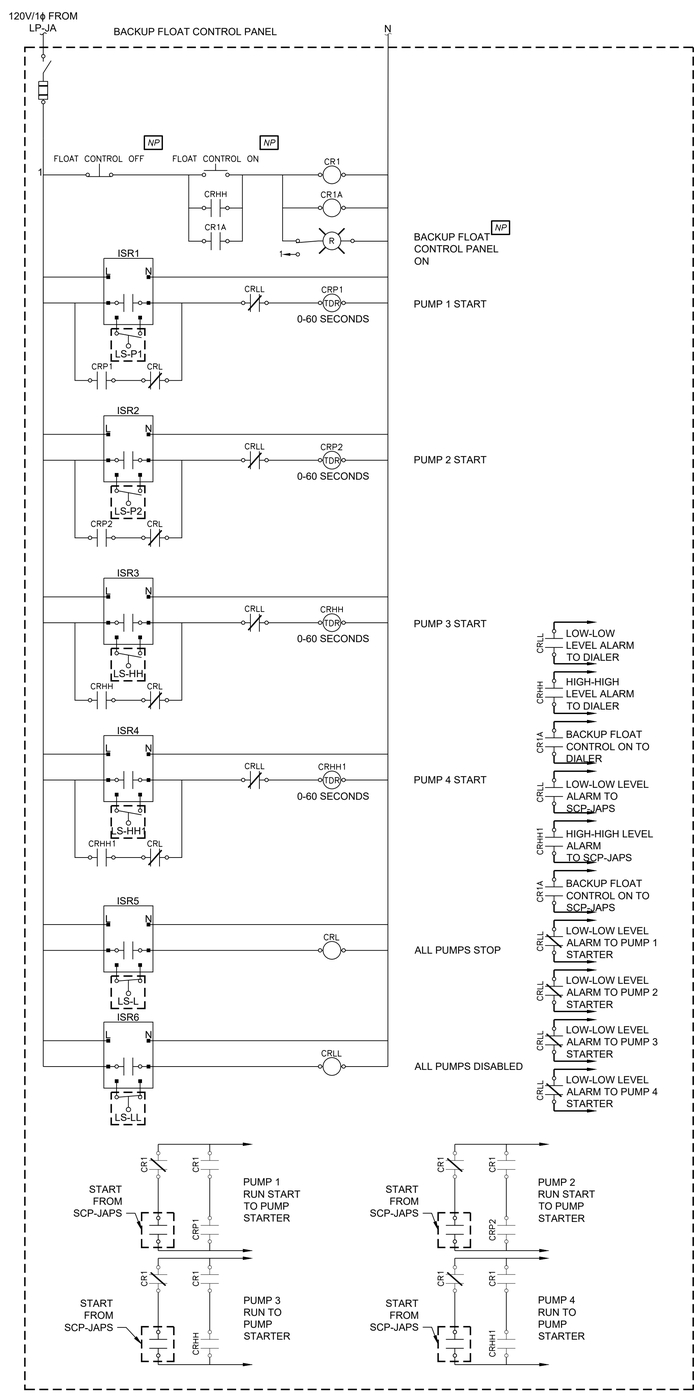

BACKUP FLOAT CONTROL ELEMENTARY

NO SCALE

NOTES:

1. ALL INTRINSICALLY SAFE RELAYS SHALL BE SEPARATED FROM ALL OTHER CONTROL DEVICES BY A PHYSICAL BARRIER INSIDE THE ENCLOSURE.
2. COORDINATE FLOAT MOUNTING HEIGHTS WITH ENGINEER DURING SHOP DRAWING SUBMITTAL PHASE.
3. SUBMIT SHOP DRAWING ENCLOSURE DETAILS AND WIRING DIAGRAMS IN ACCORDANCE WITH DIVISION 17.
4. PROVIDE SECOND SET OF BACKUP FLOATS TO OWNER.
5. PROVIDE INDIVIDUALLY FUSED 120VAC OUTPUTS TO EACH MOTOR STARTER. SOURCE POWER FROM THE BACKUP FLOAT CONTROL PANEL.

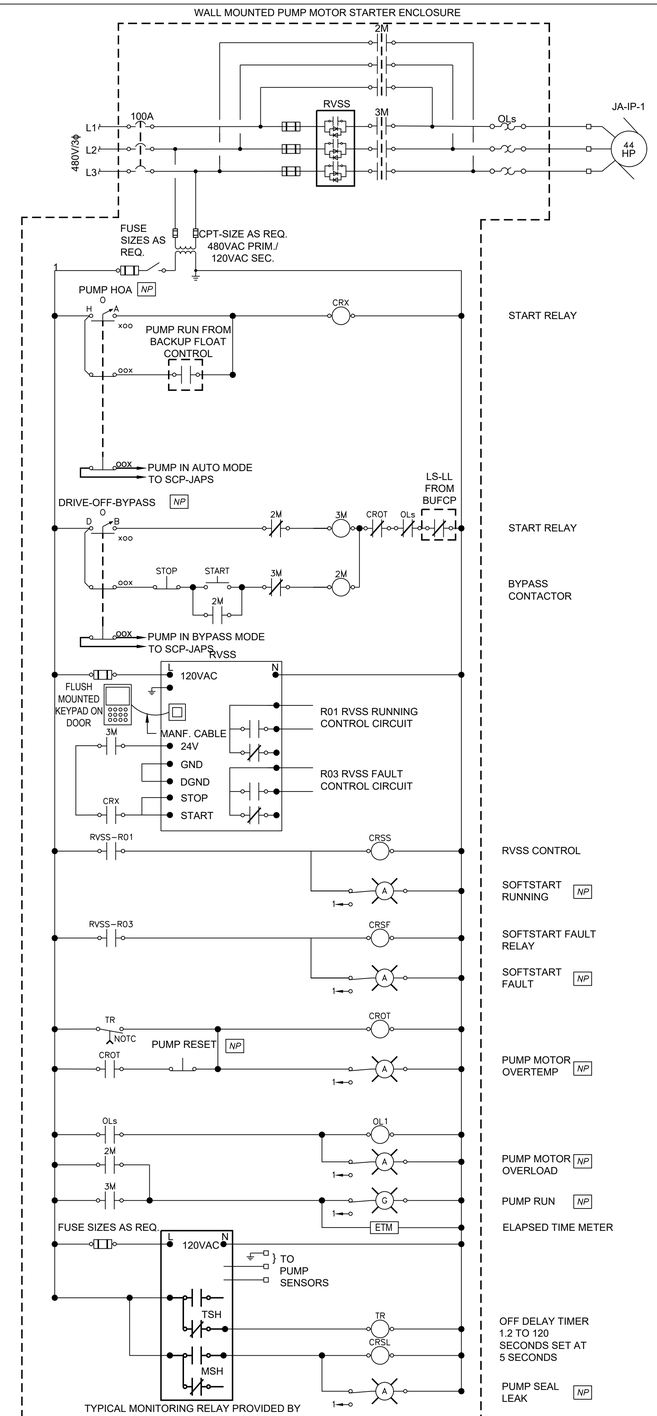

TYPICAL PUMP ELEMENTARY

NO SCALE

NOTES:

1. THIS ELEMENTARY DIAGRAM IS TYPICAL FOR THE FOLLOWING:
   - JA-IP-1, INFLUENT PUMP #1
   - JA-IP-2, INFLUENT PUMP #2
   - JA-IP-3, INFLUENT PUMP #3
   - JA-IP-4, INFLUENT PUMP #4
2. "NP" IDNICATES NAMEPLATE.

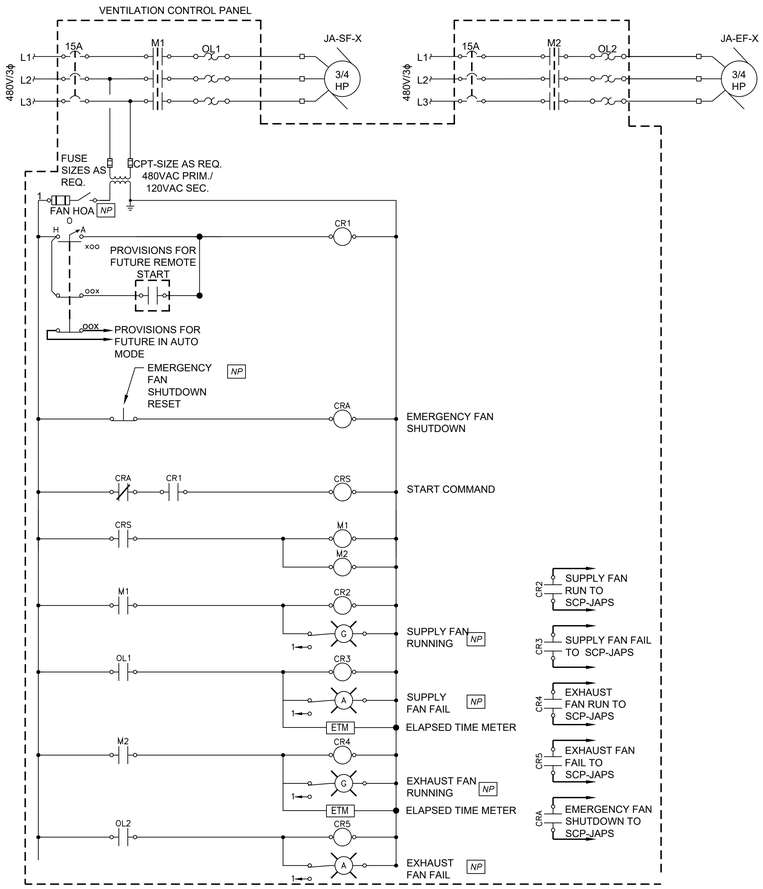

TYPICAL VENTILATION ELEMENTARY

NO SCALE

NOTES:

1. THIS ELEMENTARY DIAGRAM IS TYPICAL FOR THE FOLLOWING:
   - DRY WELL VENTILATION CONTROL PANEL
   - WET WELL VENTILATION CONTROL PANEL
2. SEE SPECIFICATIONS SECTION XXXXXXX HVAC CONTROLS AND SEQUENCE OF OPERATIONS FOR ADDITIONAL COORDINATION AND REQUIREMENTS. PROVIDE ALL DEVICES, MODULES, RELAYS, ETC. AS REQUIRED TO ACHIEVE THE SEQUENCE OF OPERATIONS.

Environmental Design & Research,
Landscape Architecture, Engineering & Environmental Services, D.P.C.
217 Montgomery Street, Suite 1100
Syracuse, New York 13202
P. 315.471.0688
a better environment

REVISION NUMBER	DATE	MADE BY	APP'D BY	REVISION

RECORD DRAWING CERTIFICATION

☐ AS BUILT – CHANGES AS NOTED
☐ AS BUILT – NO CHANGES

CONTRACTOR	PROJECT COORDINATOR
NAME	NAME
SIGNATURE	SIGNATURE
TITLE DATE	TITLE DATE

WESTCHESTER COUNTY, NEW YORK
DEPARTMENT OF PUBLIC WORKS AND TRANSPORTATION
DIVISION OF ENGINEERING

JACKSON AVENUE PUMPING STATION REHABILITATION
BRONX VALLEY SANITARY SEWER DISTRICT
TOWN OF GREENBURGH, NEW YORK
ELEMENTARY DIAGRAMS I

CONTRACT NUMBER	SHEET NUMBER
22-510	E-010

SHEET NO. 42 OF 55
SCALE: AS SHOWN
DATE: 06/01/2023
DPW FILE NO. 202-02-E-67-0
REV. NO. 0

IN CHARGE OF RB
CHECKED BY GRL/JGD
MADE BY BWL/GD

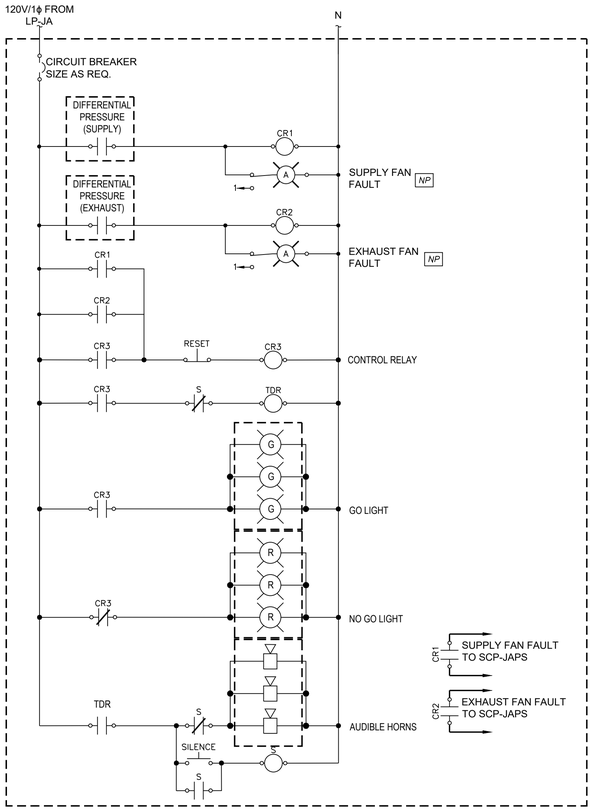

DRY WELL VENTILATION ALARM RELAY CABINET ELEMENTARY

NO SCALE

NOTES:

1. REFER TO FLOOR PLANS FOR ALARM RELAY CABINET LOCATION, GO/NO GO LIGHT AND AUDIBLE HORN QUANTITY, AND THE DIFFERENTIAL PRESSURE SWITCHES LOCATION AND QUANTITY.

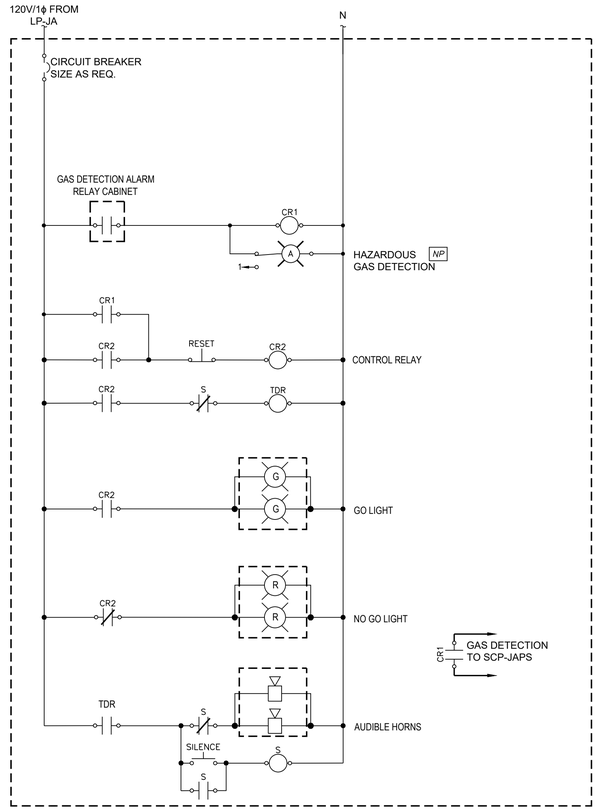

WET WELL GAS DETECTION ALARM RELAY CABINET ELEMENTARY

NO SCALE

NOTES:

1. REFER TO FLOOR PLANS FOR ALARM RELAY CABINET LOCATION, GO/NO GO LIGHT AND AUDIBLE HORN QUANTITY, AND THE AIT LOCATION AND QUANTITY.

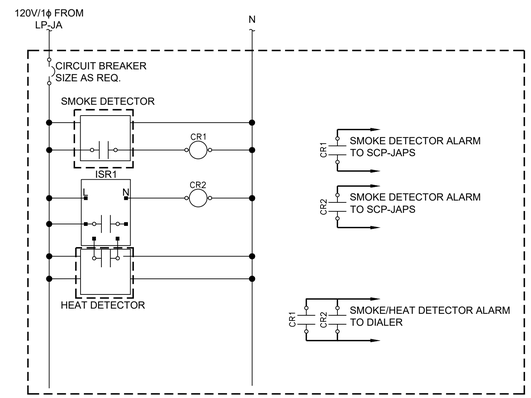

FIRE ALARM RELAY PANEL ELEMENTARY

NO SCALE

Environmental Design & Research,
Landscape Architecture, Engineering & Environmental Services, D.P.C.
217 Montgomery Street, Suite 1100
Syracuse, New York 13202
P. 315.471.0688
a better environment

REVISION NUMBER	DATE	MADE BY	APP'D BY	REVISION

RECORD DRAWING CERTIFICATION

☐ AS BUILT – CHANGES AS NOTED
☐ AS BUILT – NO CHANGES

CONTRACTOR	PROJECT COORDINATOR
NAME	NAME
SIGNATURE	SIGNATURE
TITLE DATE	TITLE DATE

WESTCHESTER COUNTY, NEW YORK
DEPARTMENT OF PUBLIC WORKS AND TRANSPORTATION
DIVISION OF ENGINEERING

JACKSON AVENUE PUMPING STATION REHABILITATION
BRONX VALLEY SANITARY SEWER DISTRICT
TOWN OF GREENBURGH, NEW YORK
ELEMENTARY DIAGRAMS II

CONTRACT NUMBER	SHEET NUMBER
22-510	E-011

SHEET NO. 43 OF 55

SCALE: AS SHOWN
DATE: 06/01/2023

DPW FILE NO.	REV. NO.
202-02-E-68-0	0

IN CHARGE OF RB
CHECKED BY GRL/JGD
MADE BY BWL/GD

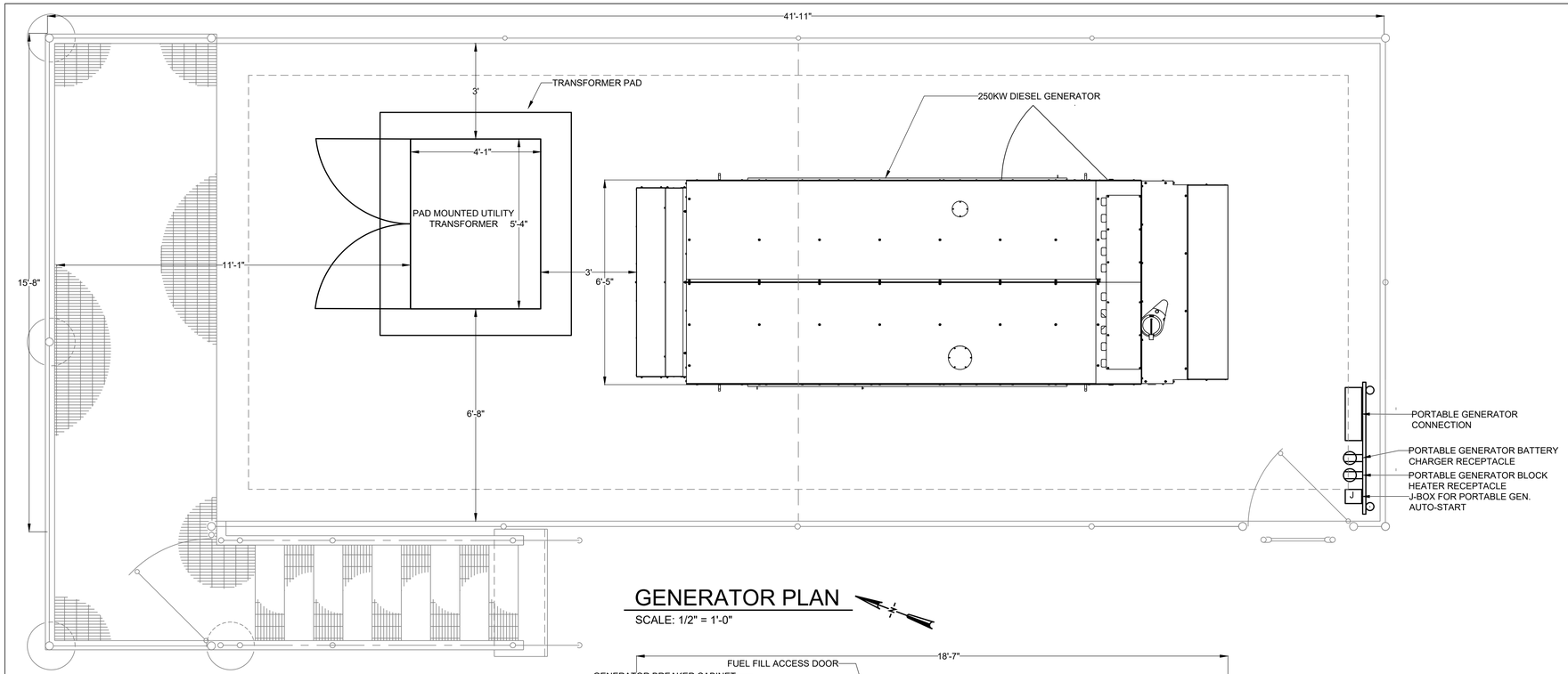

GENERATOR PLAN

SCALE: 1/2" = 1'-0"

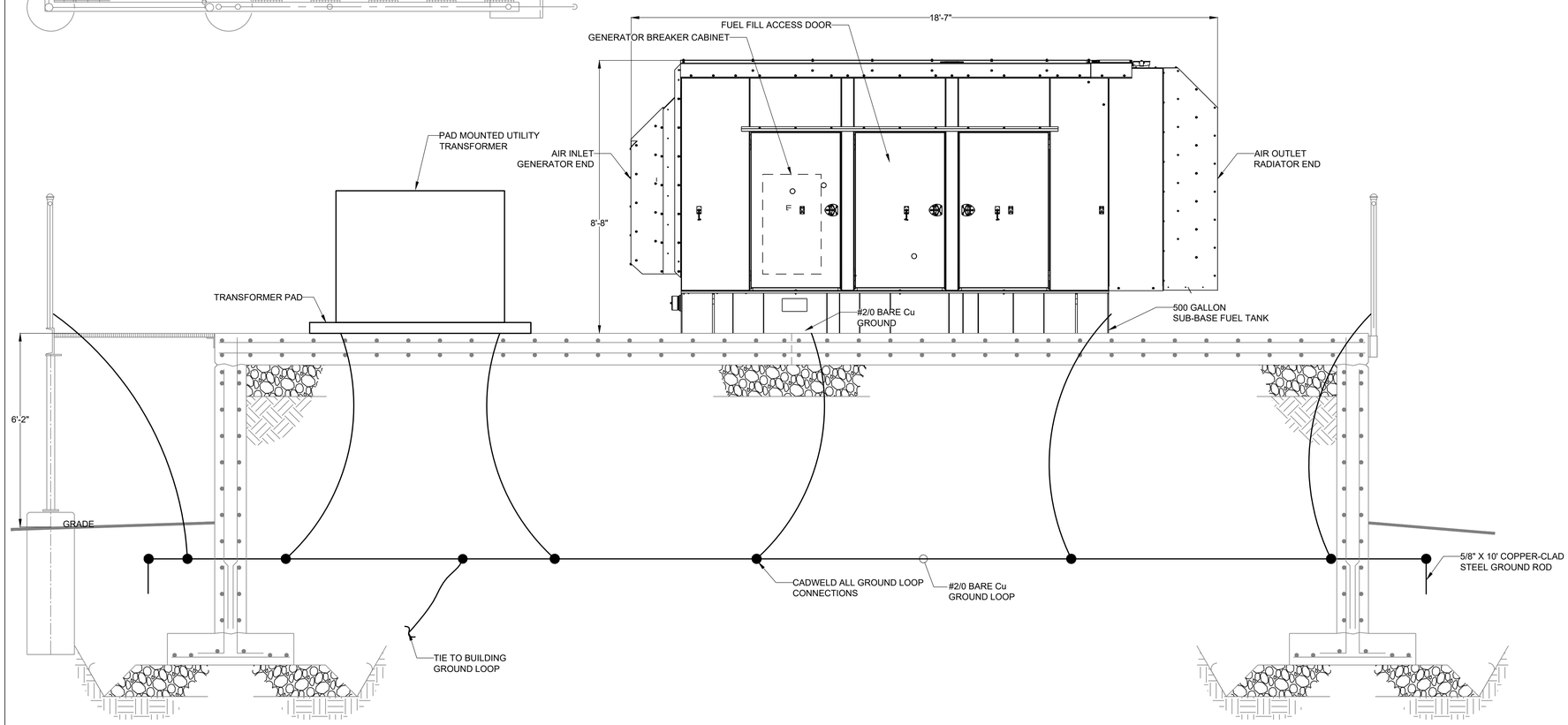

WEST GENERATOR ELEVATION

SCALE: 1/2" = 1'-0"

IN CHARGE OF RB
CHECKED BY GRL/JGD
MADE BY BWL/GD

MODIFICATION IS A VIOLATION OF CHAPTER 16, TITLE VIII, ARTICLE 145 § 7209.2 NYS EDUCATION LAW, UNLESS ACTING UNDER THE DIRECTION OF A LICENSED PROFESSIONAL ENGINEER. IF A DOCUMENT BEARING THE SEAL OF AN ENGINEER IS ALTERED, THE ALTERING ENGINEER SHALL AFFIX TO THE DOCUMENT THEIR SEAL AND THE NOTATION "ALTERED BY" FOLLOWED BY THEIR SIGNATURE AND THE DATE OF SUCH ALTERATION, AND A SPECIFIC DESCRIPTION OF THE ALTERATION.

STATE OF NEW YORK · GARY R. LUNDY · 055625 · LICENSED PROFESSIONAL ENGINEER

EDR
a better environment

Environmental Design & Research,
Landscape Architecture, Engineering & Environmental Services, D.P.C.
217 Montgomery Street, Suite 1100
Syracuse, New York 13202
P. 315.471.0688

REVISION NUMBER	DATE	MADE BY	APP'D BY	REVISION

RECORD DRAWING CERTIFICATION

☐ AS BUILT – CHANGES AS NOTED
☐ AS BUILT – NO CHANGES

CONTRACTOR	PROJECT COORDINATOR
NAME	NAME
SIGNATURE	SIGNATURE
TITLE DATE	TITLE DATE

WESTCHESTER COUNTY, NEW YORK
DEPARTMENT OF PUBLIC WORKS AND TRANSPORTATION
DIVISION OF ENGINEERING

JACKSON AVENUE PUMPING STATION REHABILITATION
BRONX VALLEY SANITARY SEWER DISTRICT
TOWN OF GREENBURGH, NEW YORK
GENERATOR DETAIL

CONTRACT NUMBER	SHEET NUMBER
22–510	E–012

SHEET NO. 44 OF 55

SCALE: AS SHOWN
DATE: 06/01/2023

DPW FILE NO.	REV. NO.
202–02–E–69–0	0

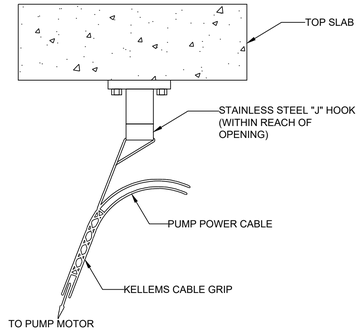

CABLE SUPPORT DETAIL

NO SCALE

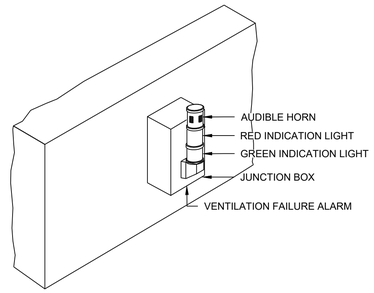

VENTILATION FAILURE ALARM NOTES:
1. AUDIBLE HORN TO PRODUCE 100dBa AT 10'.
2. RED INDICATION LIGHTS TO BE RED STROBING.
3. YELLOW INDICATION LIGHT TO YELLOW STROBING.
4. GREEN INDICATION LIGHTS TO BE STEADY.
5. PROVIDE A SIGN LABELED AS "VENTILATION SYSTEM INDICATION GREEN-OPERATIONAL, RED-FAILURE" BELOW THE LIGHTS.

DRY WELL STACKABLE WALL MOUNTED GO/NO GO ALARM TOWER LIGHT DETAIL

NO SCALE

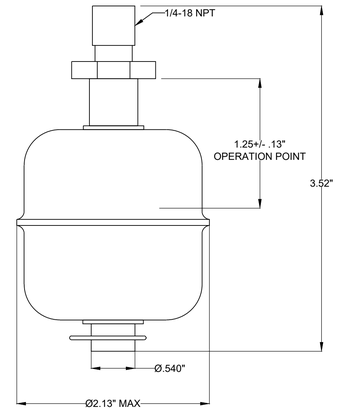

NOTES:
1. THIS DETAIL IS TYPICAL FOR:
   - LSH-1, DRY WELL HIGH LEVEL
   - LSH-2, WET WELL INFLUENT CHANNEL HIGH LEVEL
2. GRAINGER ITEM #: 2A551
3. MANUFACTURER: MADISON
3. MODEL: #M5600
4. SUITABLE FOR CLASS 1, DIV. 1, GROUP D AREAS.
5. STEM AND FLOAT MATERIAL: 316 STAINLESS STEEL
6. SWITCH RATING: SPST
7. PROVIDE ALL STAINLESS STEEL HARDWARE.
8. FLOAT ELEVATION TO BE DETERMINED IN FIELD.
9. FLOATS TO BE PROVIDED IN THIS CONTRACT.

DRY/WET WELL FLOAT DETAIL

NO SCALE

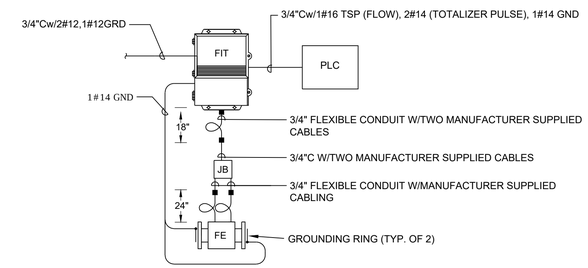

NOTE:

QUANTITIES OF CABLES AND CONDUITS VARY ACCORDING TO SUPPLIED MANUFACTURER. PROVIDE QUANTITY AS REQUIRED BY THE SUPPLIED EQUIPMENT.

TYPICAL FOR	
PUMP STATION DISCHARGE FLOW	FIT TO JACKSON AVENUE STATION CONTROL PANEL (JA-SCP)

MAGNETIC FLOW METERING SCHEMATICS

NO SCALE

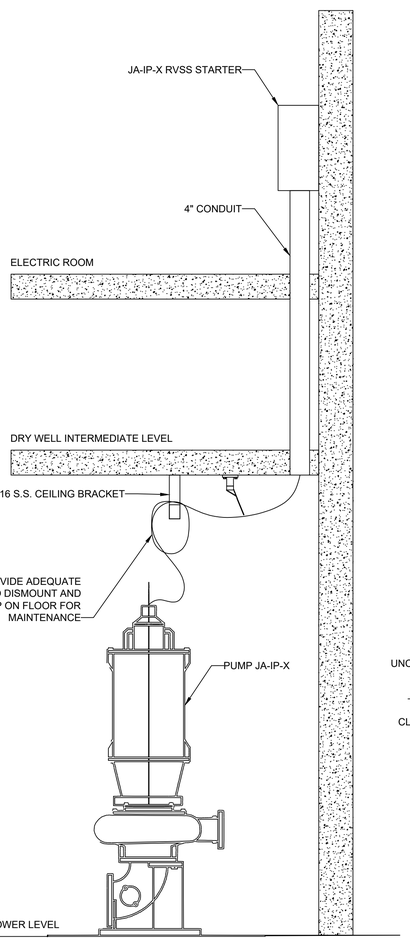

TYPICAL PUMP CORD DETAIL

NO SCALE

NOTES:
1. THIS DIAGRAM IS TYPICAL FOR THE FOLLOWING:
   - JA-IP-1: PUMP #1
   - JA-IP-2: PUMP #2
   - JA-IP-3: PUMP #3
   - JA-IP-4: PUMP #4

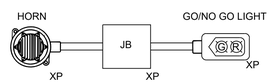

NOTES:
1. GO/NO GO LIGHT SHALL BE A FULLY ASSEMBLED EFS SERIES CONTROL STATION WITH PILOT LIGHTS. FROM CROUSE-HINDS OR APPROVED EQUAL.
2. HORN SHALL BE MODEL FEDERAL SIGNAL MODEL, 31X-024-1 OR APPROVED EQUAL.
3. GO/NO GO LIGHTS AND HORNS SHALL BE RATED FOR CLASS 1, DIV. 1 GROUP D AREAS.
4. PROVIDE A SIGN LABELED AS "HAZARDOUS GAS INDICATION GREEN-NOT DETECTED, RED-PRESENT" BELOW THE LIGHTS.

WET WELL WALL MOUNTED GO/NO GO ALARM DETAIL

NO SCALE

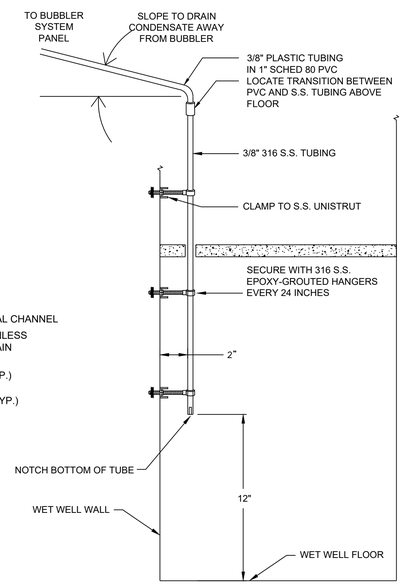

BUBBLER TUBE INSTALLATION DETAIL

NO SCALE

NOTES:
1. PROVIDE ALL STAINLESS STEEL HARDWARE.

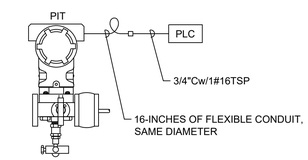

TYPICAL FOR	
PUMP STATION DISCHARGE HEADER PRESSURE	PIT TO JACKSON AVENUE STATION CONTROL PANEL (JA-SCP)

PRESSURE TRANSMITTER SCHEMATIC

NO SCALE

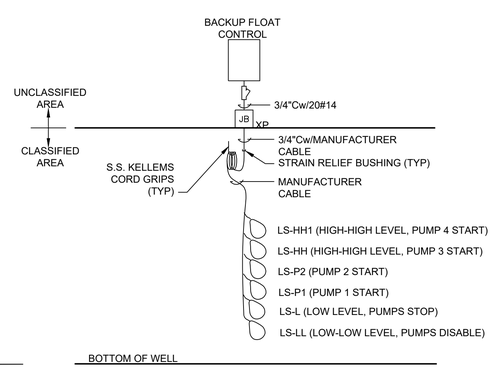

BACKUP FLOAT SCHEMATIC

NO SCALE

NOTES:
1. PROVIDE ALL STAINLESS STEEL HARDWARE.
2. PROVIDE SUFFICIENT FLOAT CORD LENGTH SUCH THAT FLOATS MAY BE SWITCHED BETWEEN THE 2 SIDES OF THE WET WELL.
3. FLOAT SHALL BE COUNTY STANDARD FLYGT, MODEL EMN-10 WITH 65' CORD.
4. FLOAT ELEVATION TO BE DETERMINED IN FIELD.
5. FLOATS TO BE PROVIDED IN THIS CONTRACT.

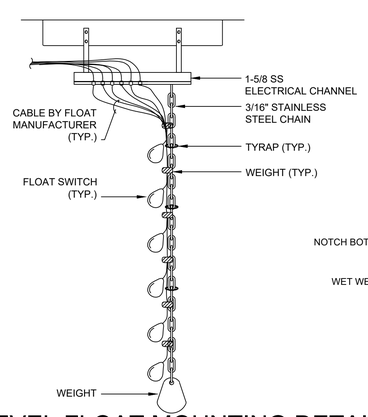

LEVEL FLOAT MOUNTING DETAIL

NO SCALE

IN CHARGE OF RB
CHECKED BY GRL/JGD
MADE BY BWL/GD

MODIFICATION IS A VIOLATION OF CHAPTER 16, TITLE VIII, ARTICLE 145 § 7209.2 NYS EDUCATION LAW, UNLESS ACTING UNDER THE DIRECTION OF A LICENSED PROFESSIONAL ENGINEER. IF A DOCUMENT BEARING THE SEAL OF AN ENGINEER IS ALTERED, THE ALTERING ENGINEER SHALL AFFIX TO THE DOCUMENT THEIR SEAL AND THE NOTATION "ALTERED BY" FOLLOWED BY THEIR SIGNATURE AND THE DATE OF SUCH ALTERATION, AND A SPECIFIC DESCRIPTION OF THE ALTERATION.

EDR a better environment
Environmental Design & Research,
Landscape Architecture, Engineering & Environmental Services, D.P.C.
217 Montgomery Street, Suite 1100
Syracuse, New York 13202
P. 315.471.0688

REVISION NUMBER	DATE	MADE BY	APP'D BY	REVISION

RECORD DRAWING CERTIFICATION

☐ AS BUILT – CHANGES AS NOTED
☐ AS BUILT – NO CHANGES

CONTRACTOR	PROJECT COORDINATOR
NAME	NAME
SIGNATURE	SIGNATURE
TITLE DATE	TITLE DATE

WESTCHESTER COUNTY, NEW YORK
DEPARTMENT OF PUBLIC WORKS AND TRANSPORTATION
DIVISION OF ENGINEERING

JACKSON AVENUE PUMPING STATION REHABILITATION
BRONX VALLEY SANITARY SEWER DISTRICT
TOWN OF GREENBURGH, NEW YORK
MISCELLANEOUS DETAILS I

CONTRACT NUMBER	SHEET NUMBER
22-510	E-013

SHEET NO. 45 OF 55
SCALE: AS SHOWN
DATE: 06/01/2023
DPW FILE NO. 202-02-E-70-0
REV. NO. 0

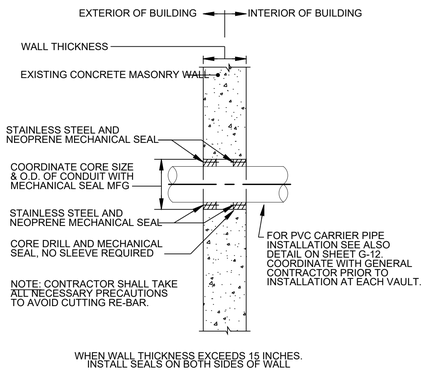

CONDUIT PENETRATION THRU CONCRETE WALL

NO SCALE

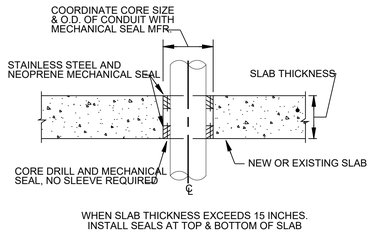

CONDUIT PENETRATION THRU CONCRETE SLAB

NO SCALE

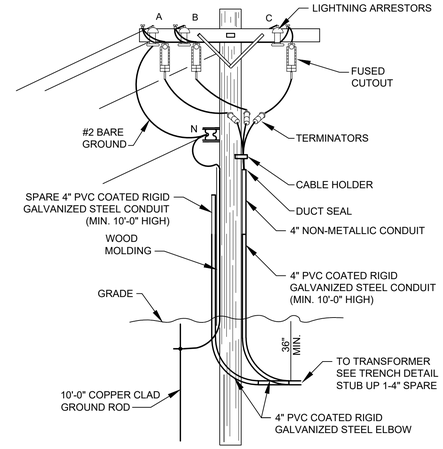

NOTE:
THIS DETAIL SHOWN FOR INFORMATION AND COORDINATION PURPOSES. EXISTING UTILITY POLE TO REMAIN. CONTRACTOR TO PROVIDE AND INSTALL 4" RIGID GALVANIZED ELBOW AND 10'-0" OF 4" RIGID GALVANIZED CONDUIT. 20'-0" OF 4" NON-METALLIC CONDUIT TO BE PROVIDED BY CONTRACTOR, INSTALLED BY UTILITY COMPANY. CONTRACTOR TO PROVIDE AND INSTALL ENOUGH #2/0 15KV CABLE TO REACH FROM THE TOP OF UTILITY POLE TO THE UTILITY TRANSFORMER PAD PLUS AN EXTRA 10'-0" AT THE UTILITY TRANSFORMER FOR ELBOW TERMINATIONS.

UTILITY POLE DETAIL

NO SCALE

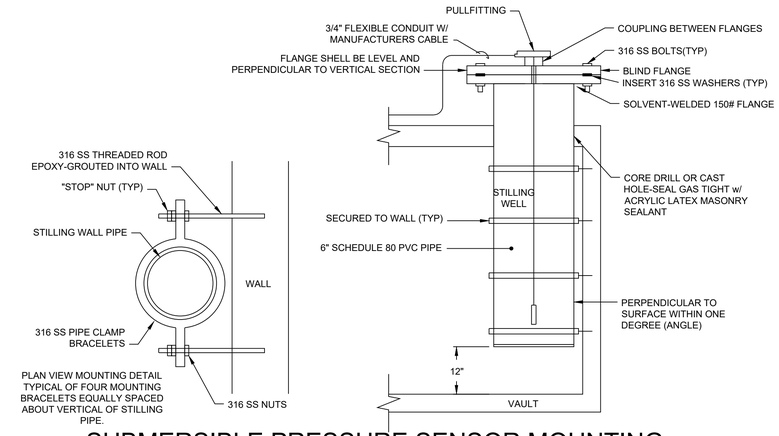

SUBMERSIBLE PRESSURE SENSOR MOUNTING IN STILLING WELL DETAILS

NO SCALE

NOTE
ALL STAIRWELL WALLS SHALL BE CONSIDERED FIRE RATED. ALL CONDUIT PENETRATIONS SHALL BE SEALED IN STRICT ACCORDANCE WITH THIS DETAIL AND ALL LOCAL FIRE CODES.

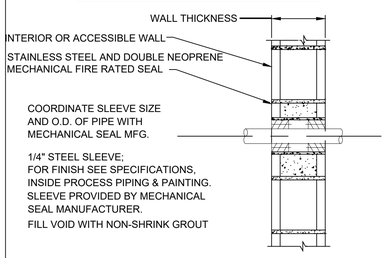

CONDUIT PENETRATION THROUGH FIRE RATED BLOCK WALL

NO SCALE

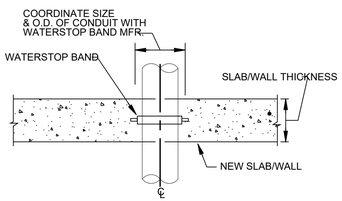

CONDUIT PENETRATION THRU NEW CONCRETE WALL/SLAB

NO SCALE

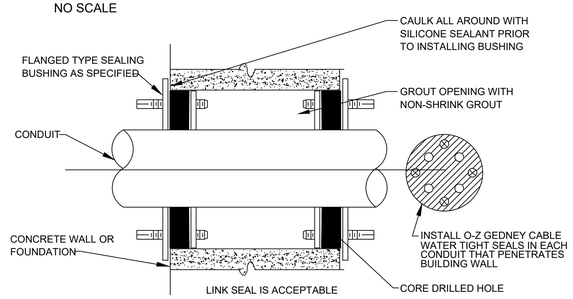

TYPICAL SLEEVE DETAIL FOR EXISTING WALL PENETRATION

NO SCALE

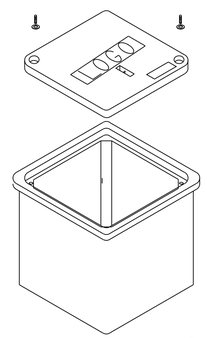

NOTES:
1. HANDHOLE COVERS SHALL BE GASKETED AND NOTED EITHER AS "ELECTRIC" OR "TELECOM" WITH BOLTED COVERS (REFER TO SITE PLAN).
2. HANDHOLES SHALL BE OF PRECAST POLYMER CONCRETE CONSTRUCTION.
3. HANDHOLE SHALL BE RATED FOR ANSI TIER 15 WHEEL LOADING.
4. ALL HANDHOLE SHALL BE OPEN BOTTOM FOR DRAINAGE.
5. PROVIDE 6" DEEP, 1" CRUSHED STONE BED FOR DRAINAGE.
6. HANDHOLE SHALL BE UL LISTED ELECTRICAL ENCLOSURES.
7. HANDHOLE SHALL NOT BE LOCATED IN ROAD NOR DRIVEWAYS.
8. HANDHOLE SHALL BE AS MANUFACTURED BY QUAZITE, TYPE PC.
9. HANDHOLE SHALL BE 18"x24"x24" MINIMUM, OR AS SHOWN ON DRAWINGS.

PULLBOX DETAIL

NO SCALE

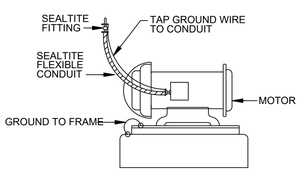

GROUNDING ELECTRIC MOTOR

NO SCALE

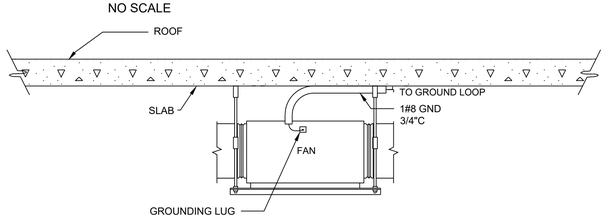

INLINE FAN HOUSING GROUNDING DETAIL

NO SCALE

NOTES:
1. THIS DETAIL IS TYPICAL FOR THE FOLLOWING:
- JA-SF-2, WET WELL SUPPLY FAN
- JA-EF-2, WET WELL EXHAUST FAN

IN CHARGE OF RB
CHECKED BY GRL/JGD
MADE BY BWL/GD

MODIFICATION IS A VIOLATION OF CHAPTER 16, TITLE VIII, ARTICLE 145 § 7209.2 NYS EDUCATION LAW, UNLESS ACTING UNDER THE DIRECTION OF A LICENSED PROFESSIONAL ENGINEER. IF A DOCUMENT BEARING THE SEAL OF AN ENGINEER IS ALTERED, THE ALTERING ENGINEER SHALL AFFIX TO THE DOCUMENT THEIR SEAL AND THE NOTATION "ALTERED BY" FOLLOWED BY THEIR SIGNATURE AND THE DATE OF SUCH ALTERATION, AND A SPECIFIC DESCRIPTION OF THE ALTERATION.

STATE OF NEW YORK · GARY A. LINDA · 065906 · LICENSED PROFESSIONAL ENGINEER
EDR a better environment
Environmental Design & Research,
Landscape Architecture, Engineering & Environmental Services, D.P.C.
217 Montgomery Street, Suite 1100
Syracuse, New York 13202
P. 315.471.0688

REVISION NUMBER	DATE	MADE BY	APP'D BY	REVISION

RECORD DRAWING CERTIFICATION

☐ AS BUILT – CHANGES AS NOTED
☐ AS BUILT – NO CHANGES

CONTRACTOR: NAME ____ SIGNATURE ____ TITLE ____ DATE ____
PROJECT COORDINATOR: NAME ____ SIGNATURE ____ TITLE ____ DATE ____

WESTCHESTER COUNTY, NEW YORK
DEPARTMENT OF PUBLIC WORKS AND TRANSPORTATION
DIVISION OF ENGINEERING

JACKSON AVENUE PUMPING STATION REHABILITATION
BRONX VALLEY SANITARY SEWER DISTRICT
TOWN OF GREENBURGH, NEW YORK
MISCELLANEOUS DETAILS II

CONTRACT NUMBER 22-510
SHEET NUMBER E-014
SHEET NO. 46 OF 55
SCALE: AS SHOWN
DATE: 06/01/2023
DPW FILE NO. 202-02-E-71-0
REV. NO. 0

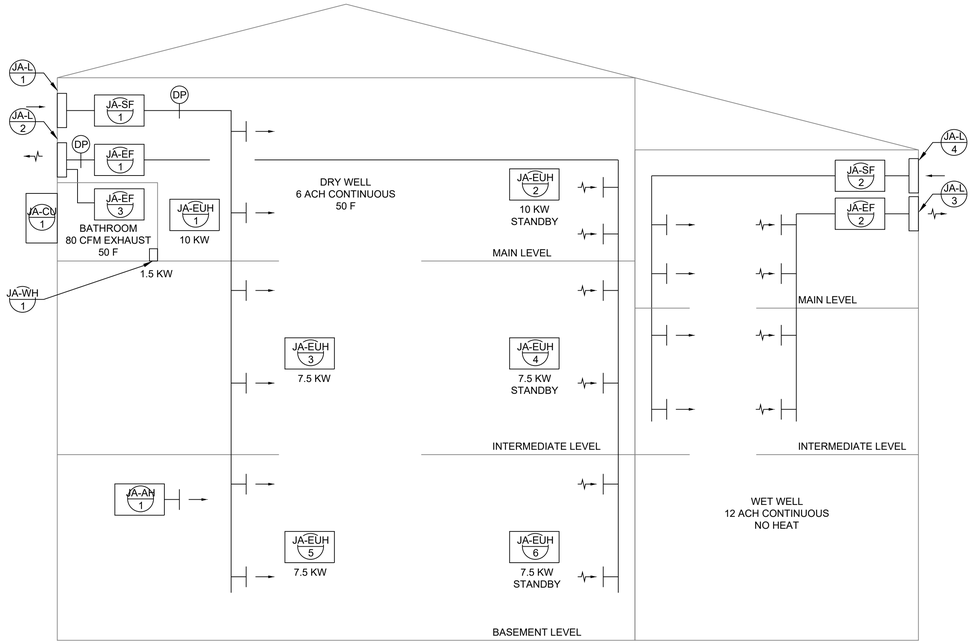

AIRFLOW DIAGRAM

NO SCALE

ELECTRIC HEATER SCHEDULE

UNIT NO.	TYPE	CONFIGURATION	CFM	CAPACITY		ELECTRICAL		MANUFACTURER AND MODEL NUMBER	REMARKS
				KW	BTUH	AMPS	V/PH/HZ		
JA-EUH 1, JA-EUH 2	UNIT HEATER	FRONT INLET FRONT DISCHARGE	350	10	34,000	12	460/3/60	QMARK MUH10-4	1, 2, 3, 4, 5
JA-EUH 3, JA-EUH 4, JA-EUH 5, JA-EUH 6	WALL HEATER	FRONT INLET FRONT DISCHARGE	350	7.5	25,600	9	460/3/60	QMARK MUH-07-4	1, 2, 3, 4, 6
JA-WH 1	WALL HEATER	FRONT INLET FRONT DISCHARGE	350	1.5	5,115	12.5	120/1/60	QMARK CWH3150F	1, 2, 4

NOTES:
1. PROVIDE UNIT WITH DISCONNECT.
2. CONTRACTOR IS RESPONSIBLE FOR COORDINATING FINISH WITH ARCHITECT AND MANUFACTURER PRIOR TO ORDERING AND INSTALLING.
3. PROVIDE UNIT WITH SUPPORT BRACKET
4. PROVIDE UNIT WITH INTEGRAL THERMOSTAT
5. JA-EUH-2 STANDBY
6. JA-EUH-4 AND JA-EUH-6 STANDBY

FAN SCHEDULE

UNIT NO.	SERVICE	CFM	SP ("WG)	MOTOR			DRIVE TYPE	TYPE	CONFIGURATION	WEIGHT (LBS)	MANUFACTURER AND MODEL NUMBER	REMARKS
				HP	BHP	V/PH/Hz						
JA-EF 1	DRY WELL EXHAUST	1,600	0.75	3/4	0.45	460/3/60	BELT	CENTRIFUGAL	INLINE	372	HARTZELL A04-9-121BC100AAFMG3	1, 2, 3, 6
JA-EF 2	WET WELL EXHAUST	1,200	0.75	3/4	0.3	460/3/60	BELT	CENTRIFUGAL	INLINE	185	HARTZELL A40-9-121FA100FGFXG3	1, 2, 4, 5, 7
JA-EF 3	BATHROOM EXHAUST	80	0.5	1/6	0.02	115/1/60	DIRECT	CENTRIFUGAL	INLINE	48	PENNBERRY SQX070	1, 2, 3, 6
JA-SF 1	DRY WELL SUPPLY	1,500	0.75	3/4	0.39	460/3/60	BELT	CENTRIFUGAL	INLINE	361	HARTZELL A04-9-121BC100AAFMG3	1, 2, 3, 6
JA-SF 2	WET WELL SUPPLY	1,100	0.75	3/4	0.26	460/3/60	BELT	CENTRIFUGAL	INLINE	185	HARTZELL A40-9-121FA100FGFXG3	1, 2, 4, 5, 7

NOTES:
1. DISCONNECT SWITCH PROVIDED BY ELECTRICAL CONTRACTOR
2. PROVIDE UNIT WITH VIBRATION ISOLATORS
3. UNIT SHALL BE SUITABLE FOR WET AREA
4. UNIT SHALL BE SUITABLE FOR CLASS 1 DIVISION 1 GROUP D AND SHALL HAVE EXPLOSION PROOF MOTOR
5. UNIT SHALL BE FIBERGLASS CONSTRUCTION WITH SINGLE VEIL COATING
6. UNIT SHALL BE ALUMINUM CONSTRUCTION
7. ELECTRICAL CONTRACTOR TO PROVIDE GROUNDING WIRE TO FAN HOUSING

AIR TERMINAL SCHEDULE

DESIGNATION	DIMENSIONS	MANUFACTURER AND MODEL NUMBER
JA-EG 1	12"X8"	TITUS 350RL-SS
JA-SR 1	12"X8"	TITUS 301RL-SS
JA-SG 2	42"X12"	TITUS 301RL-SS

IN CHARGE OF RB
CHECKED BY JSR
MADE BY HSM

LEGEND

SYMBOL	DESCRIPTION
	EXISTING WORK / BY OTHERS
	WORK TO BE PROVIDED
	WORK TO BE REMOVED
	LIMIT OF DEMOLITION
	POINT OF CONNECTION
	SUPPLY DUCT
	EXHAUST DUCT
	REGISTER / GRILLE
T	THERMOSTAT
	FLEX CONNECTION
DP	DIFFERENTIAL PRESSURE SWITCH
BHP	BRAKE HORSEPOWER
BTUH	BRITISH THERMAL UNIT PER HOUR
CFM	CUBIC FEET PER MINUTE
(E)	EXISTING
HP	HORSE POWER
Hz	HERTZ
KW	KILOWATT
LBS	POUNDS
PH	PHASE
RL	REFRIGERANT LIQUID
RS	REFRIGERANT SUCTION
SF	SQUARE FEET
SP	STATIC PRESSURE
TYP.	TYPICAL
V	VOLTAGE
" WG	INCHES WATER GAUGE
JA-AH #	DENOTES AIR HANDLER
JA-CU #	DENOTES CONDENSER
JA-EF #	DENOTES EXHAUST FAN
JA-EG #	DENOTES EXHAUST GRILLE
JA-EUH #	DENOTES ELECTRIC UNIT HEATER
JA-SF #	DENOTES SUPPLY FAN
JA-SR #	DENOTES SUPPLY REGISTER
JA-L #	DENOTES LOUVER
JA-WH #	DENOTES WALL HEATER

NOTE:
1. ALL WORK IS TO BE PROVIDED UNLESS OTHERWISE NOTED

HVAC NOTES

1. UPON COMPLETION OF ALL WORK, ALL EQUIPMENT AND DUCTWORK SHALL BE THOROUGHLY CLEANED AND LEFT IN FIRST CLASS CONDITION. REFER TO SPECIFICATIONS FOR ADDITIONAL INFORMATION.
2. CONTRACTOR SHALL BE RESPONSIBLE FOR THE PROTECTION OF ALL EQUIPMENT UNDER THIS SECTION UNTIL FINAL ACCEPTANCE BY THE ENGINEER.
3. ALL EQUIPMENT SHALL BE TESTED IN ACCORDANCE WITH ALL APPLICABLE CODES, MANUFACTURER SPECIFICATIONS, AND TO THE SATISFACTION OF THE ENGINEER.
4. CONTRACTOR SHALL PROVIDE ALL CONTROLS, AND CONTROL WIRING AS REQUIRED FOR COMPLETE CONTROL OF EQUIPMENT FOR A COMPLETE FUNCTIONING SYSTEM AS SPECIFIED.
5. INSTALL ALL REQUIRED APPURTENANCES PER CODE WHETHER SPECIFIED OR NOT FOR COMPLETE FUNCTIONING SYSTEMS.

GENERAL NOTES

1. AT A MINIMUM, ALL WORK SHALL COMPLY WITH AND BE INSTALLED IN ACCORDANCE WITH THE SUPPLEMENTAL UNIFORM AND FIRE PREVENTION BUILDING CODE, NYS BUILDING CODE, NYS MECHANICAL CODE, 2020 NYS ENERGY CODE, AND ALL CODES LOCAL OR OTHERWISE HAVING JURISDICTION OVER THE WORK. IF THE CONTRACT DOCUMENT SHOW DIFFERENT THAN THE CODE, THE MORE STRINGENT SHALL APPLY.
2. DUCTWORK IS DIAGRAMMATICALLY SHOWN. EXACT ROUTING OF DUCTWORK SHALL BE DETERMINED IN FIELD WITH THE APPROVAL OF THE ENGINEER.
3. THE WORDS PROVIDE OR INSTALL, SINGLY OR IN COMBINATION SHALL MEAN FURNISH AND INSTALL IN ACCORDANCE WITH THE PLANS AND SPECIFICATIONS AND IN ACCORDANCE WITH THE MANUFACTURER'S RECOMMENDATIONS.
4. ALL WORK SHOWN ON ALL DRAWINGS SHALL BE PROVIDED UNLESS OTHERWISE NOTED.
5. THE CONTRACTOR SHALL PROVIDE ALL CUTTING AND PATCHING TO MATCH EXISTING AS REQUIRED FOR THE INSTALLATION OF WORK.
6. THIS CONTRACTOR SHALL BE RESPONSIBLE FOR THE PROTECTION OF HIS WORK AND ALL NEWLY INSTALLED WORK, INCLUDING PROTECTION OF BUILDING OCCUPANTS AND OWNERS EQUIPMENT, PUBLIC, AND PERSONNEL. PROVIDE APPROPRIATE SIGNAGE, BARRIERS, AND SAFETY GUARD RAILS AS REQUIRED.
7. WHERE WELDING OR OPEN FLAME IS USED FOR CUTTING, SOLDERING, ETC., CONTRACTOR SHALL PROVIDE FIRE EXTINGUISHERS AND A FIRE WATCH IN PROXIMITY OF WORK AREA.
8. ALL WORK SHALL BE COORDINATED WITH ALL TRADES RELATED TO THE COMPLETION OF THIS PROJECT.
9. THE CONTRACTOR SHALL FILE PLANS WITH THE GOVERNING AUTHORITIES HAVING JURISDICTION AND SHALL SECURE ALL PERMITS AND PAY ALL FEES REQUIRED FOR THE INSTALLATION OF HIS WORK.
10. THE CONTRACTOR SHALL GUARANTEE ALL MATERIAL AND WORK INSTALLED TO BE FREE FROM DEFECTS IN MATERIAL AND WORKMANSHIP FOR A PERIOD OF ONE (1) YEAR, AFTER ACCEPTANCE OF THE INSTALLATION BY THE ENGINEER AND OWNER. THE CONTRACTOR SHALL SUBMIT IN WRITING TO OWNER STATING THE SAME. EQUIPMENT WARRANTEES OF A LONGER DURATION SHALL APPLY.
11. THE CONTRACTOR SHALL INDEMNIFY THE OWNER, HIS REPRESENTATIVES AND THE ENGINEER FROM ANY CLAIMS OR SUITS RESULTING IN NEGLIGENCE ON THE PART OF THE CONTRACTOR AND FOR FAILING TO EXECUTE HIS WORK IN ACCORDANCE WITH THE CONTRACT DOCUMENTS.
12. THE CONTRACTOR SHALL PROVIDE ALL RIGGING, HOISTING AND SCAFFOLDING AS REQUIRED FOR THE INSTALLATION OF HIS WORK.
13. ALL WORK SHALL BE PERFORMED BY LICENSED CONTRACTORS AND WORKMEN EXPERIENCED IN THE TRADE HAVING JURISDICTION. ALL WORK SHALL BE SUPERVISED AT ALL TIMES AND WORKMANSHIP SHALL BE FIRST CLASS IN ALL RESPECTS AND IN ACCORDANCE WITH BEST TRADE PRACTICES.
14. ANY DEVIATION OR CHANGE IN DESIGN SHALL NOT BE MADE WITHOUT WRITTEN APPROVAL OF THE ENGINEER AND SIGNED BY THE OWNER. ANY WORK INSTALLED WITHOUT PRIOR APPROVAL OF THE ENGINEER AND OWNER OR FOUND TO BE DEFECTIVE IN ANY WAY SHALL BE REPLACED BY THE CONTRACTOR AT HIS OWN EXPENSE.
15. ALL CONSTRUCTION WORK SHALL BE CONFINED TO THE AREA INDICATED ON PLANS AND SHALL NOT BLOCK MEANS OF EGRESS FOR OCCUPANTS OF THE BUILDING.
16. ALL WORK SHALL BE PERFORMED DURING NORMAL WORKING HOURS: 8AM TO 5PM MONDAY THROUGH FRIDAY EXCEPT LEGAL HOLIDAYS OR FOR EMERGENCY REPAIRS, UNLESS DIRECTED OTHERWISE BY THE OWNER. WORKING HOURS MUST BE COORDINATED WITH GENERAL CONTRACTOR. HOWEVER, THE CONTRACTOR MAY WORK EXTRA HOURS AS NEEDED TO COMPLETE THE CONTRACT SCOPE OF WORK AND MEET THE COMPLETION DATE AT NO ADDITIONAL COST TO OWNER, AS LONG AS OWNER HAS BEEN PROPERLY NOTIFIED AND HAS APPROVED SAME.
17. NO SYSTEM OR EQUIPMENT SHALL BE SHUT DOWN WITHOUT PERMISSION OF THE FACILITIES OPERATION MANAGER OR OWNERS DESIGNATED REPRESENTATIVE. ADEQUATE NOTICE SHALL BE GIVEN TO THE FACILITIES OPERATION MANAGER IN WRITING WHEN SYSTEM SHUTDOWN INVOLVES A TEMPORARY DISRUPTION TO BUILDING SERVICES
18. ANY DISRUPTION IN BUILDING SERVICES SHALL BE KEPT TO A MINIMUM AND SHALL NOT BE IMPLEMENTED WITHOUT RECEIVING PRIOR WRITTEN APPROVAL OF THE FACILITIES OPERATION MANAGER.
19. ALL WORK SHALL BE COORDINATED WITH THE FACILITIES OPERATIONS MANAGER AND COORDINATED WITH ALL TRADES RELATED TO THE COMPLETION OF THE PROJECT.
20. ROUGH PATCHING OF WALLS, FLOORS, ETC. SHALL BE BY TRADE WHO PERFORMED WORK UNLESS OTHERWISE NOTED AND SHALL MATCH EXISTING SURROUNDING AREA IN ALL RESPECTS. WORK AREA SHALL BE LEFT BROOM CLEAN AT THE END OF EACH DAY. ALL DISCARDED AND DEMOLISHED MATERIAL AND RUBBISH SHALL BE REMOVED FROM PREMISES DAILY IN A LEGAL AND APPROVED MANNER. FINAL PATCHING AND PAINTING SHALL BE PERFORMED BY GENERAL CONTRACTOR.
21. LIMIT THE SPREAD OF DUST WHEN CUTTING BY INSTALLING POLYETHYLENE BARRIERS OR TARPAULINS AND EXHAUST TO CONTAIN AIRBORNE MATERIALS.
22. THE CONTRACTOR SHALL SUBMIT DIGITAL COPIES OF SHOP DRAWINGS OF ALL EQUIPMENT, PIPING, AND MATERIALS TO THE ENGINEER FOR APPROVAL PRIOR TO FABRICATION AND INSTALLATION OF NEW WORK, WITHIN TWO WEEKS AFTER AWARD OF CONTRACT. SHOP DRAWINGS SHALL INDICATE ALL TECHNICAL DATA, STRUCTURAL MEMBERS, WALLS, FLOORS, DUCTWORK, ETC., WITH ELEVATIONS AT WHICH NEW WORK IS TO BE INSTALLED. ANY DEVIATION IN DESIGN SHALL NOT BE MADE WITHOUT WRITTEN APPROVAL OF THE ENGINEER AND OWNER. THE ENGINEER SHALL REVIEW AND TURN AROUND SHOP DWGS. WITHIN (7) DAYS OF RECEIPT OF SAME.
23. THE CONTRACTOR SHALL MAINTAIN ON THE JOB SITE A SET OF CONTRACT DRAWINGS.
24. THE CONTRACTOR SHALL MAINTAIN ON THE JOB SITE A SET OF SHOP DRAWINGS IN WHICH ANY DEVIATIONS FROM THE ORIGINAL DESIGN SHALL BE NOTED. UPON COMPLETION OF THE INSTALLATION OF NEW WORK THE CONTRACTOR SHALL TURN OVER TO THE OWNER AND ENGINEER (1) SET OF AS-BUILT REPRODUCIBLE DRAWINGS AND (1) SET OF PRINTS INCLUDING ALL APPROVED FIELD CHANGES AND DESIGN DEVIATIONS PRIOR TO RECEIPT OF FINAL PAYMENT BY OWNER.
25. ALL WORK SHOWN ON ALL DRAWINGS SHALL BE PROVIDED UNLESS OTHERWISE NOTED.
26. ALL PENETRATIONS THROUGH PARTITIONS, FLOORS, WALLS AND ROOF FOR ALL CONDUIT AND DUCTWORK SHALL BE SEALED AND FIRE SAFED OFF TO MAINTAIN FIRE INTEGRITY OF EXISTING STRUCTURE.
27. THE CONTRACTOR SHALL SUPERVISE AND DIRECT THE WORK, AS WELL AS BE SOLELY RESPONSIBLE FOR THE CONSTRUCTION MEANS METHODS, TECHNIQUES, SEQUENCES, AND PROCEDURES OF THE WORK.
28. THE CONTRACTOR SHALL BE RESPONSIBLE FOR TAKING ADEQUATE PRECAUTIONS AND SHALL PROVIDE REASONABLE PROTECTION TO PREVENT INJURY OR DAMAGE TO PERSONS, THE WORK, AND OTHER PROPERTY.
29. AREA HAZARD CLASSIFICATIONS ARE SHOWN ON E-001.
30. WORK, EQUIPMENT, AND STRUCTURES TO BE PROVIDED ARE SHOWN IN THIS TEXT FORMAT.
31. ALL DUCTWORK OPEN TO THE DRYWELL SHALL BE STAINLESS STEEL 316. ALL DUCTWORK OPEN TO THE WETWELL SHALL BE FIBERGLASS.

STATE OF NEW YORK · JERRY R. LYNCH · 085025 · LICENSED PROFESSIONAL ENGINEER

EDR
a better environment

Environmental Design & Research,
Landscape Architecture, Engineering & Environmental Services, D.P.C.
217 Montgomery Street, Suite 1100
Syracuse, New York 13202
P. 315.471.0688

REVISION NUMBER	DATE	MADE BY	APP'D BY	REVISION

RECORD DRAWING CERTIFICATION

☐ AS BUILT – CHANGES AS NOTED
☐ AS BUILT – NO CHANGES

CONTRACTOR
NAME
SIGNATURE
TITLE DATE

PROJECT COORDINATOR
NAME
SIGNATURE
TITLE DATE

WESTCHESTER COUNTY, NEW YORK
DEPARTMENT OF PUBLIC WORKS AND TRANSPORTATION
DIVISION OF ENGINEERING

JACKSON AVENUE PUMPING STATION REHABILITATION
BRONX VALLEY SANITARY SEWER DISTRICT
TOWN OF GREENBURGH, NEW YORK
GENERAL NOTES, SYMBOLS, LEGENDS, SCHEDULES, AIRFLOW DIAGRAM

CONTRACT NUMBER 22-510
SHEET NUMBER H-001
SHEET NO. 47 OF 55
SCALE: AS SHOWN
DATE: 06/01/2023
DPW FILE NO. 202-02-H-72-0
REV. NO. 0

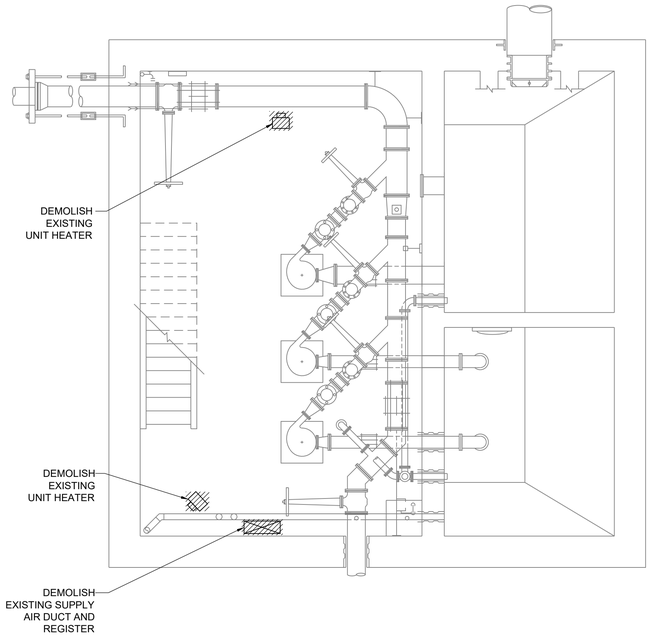

LOWER LEVEL PLAN

SCALE: 1/4" = 1'-0"

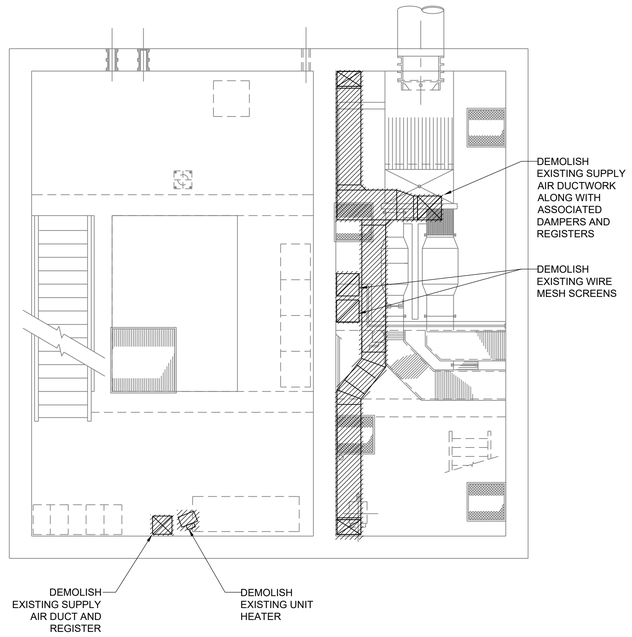

INTERMEDIATE LEVEL PLAN

SCALE: 1/4" = 1'-0"

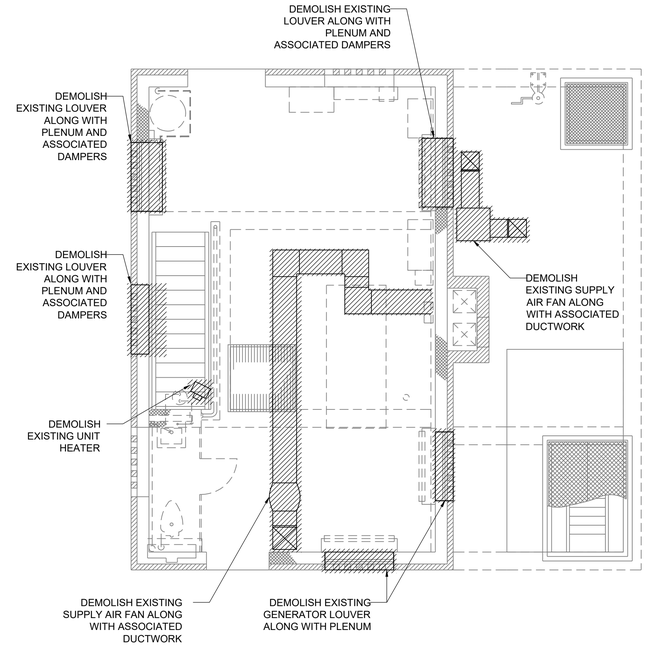

UPPER LEVEL PLAN

SCALE: 1/4" = 1'-0"

0 2'-0" 4'-0" 6'-0" 8'-0"

SCALE 1/4"=1'-0" AT ORIGINAL SIZE

MODIFICATION IS A VIOLATION OF CHAPTER 16, TITLE VIII, ARTICLE 145 § 7209.2 NYS EDUCATION LAW, UNLESS ACTING UNDER THE DIRECTION OF A LICENSED PROFESSIONAL ENGINEER. IF A DOCUMENT BEARING THE SEAL OF AN ENGINEER IS ALTERED, THE ALTERING ENGINEER SHALL AFFIX TO THE DOCUMENT THEIR SEAL AND THE NOTATION "ALTERED BY" FOLLOWED BY THEIR SIGNATURE AND THE DATE OF SUCH ALTERATION, AND A SPECIFIC DESCRIPTION OF THE ALTERATION.

IN CHARGE OF RB
CHECKED BY JSR
MADE BY HSM

STATE OF NEW YORK · GARY M. LYNCH · 59625 · LICENSED PROFESSIONAL ENGINEER

EDR a better environment

Environmental Design & Research,
Landscape Architecture, Engineering & Environmental Services, D.P.C.
217 Montgomery Street, Suite 1100
Syracuse, New York 13202
P. 315.471.0688

REVISION NUMBER	DATE	MADE BY	APP'D BY	REVISION

RECORD DRAWING CERTIFICATION

☐ AS BUILT – CHANGES AS NOTED
☐ AS BUILT – NO CHANGES

CONTRACTOR	PROJECT COORDINATOR
NAME	NAME
SIGNATURE	SIGNATURE
TITLE DATE	TITLE DATE

WESTCHESTER COUNTY, NEW YORK
DEPARTMENT OF PUBLIC WORKS AND TRANSPORTATION
DIVISION OF ENGINEERING

JACKSON AVENUE PUMPING STATION REHABILITATION
BRONX VALLEY SANITARY SEWER DISTRICT
TOWN OF GREENBURGH, NEW YORK

DEMOLITION PLAN

CONTRACT NUMBER	SHEET NUMBER
22–510	H–002

SHEET NO. 48 OF 55

SCALE: AS SHOWN
DATE: 06/01/2023

DPW FILE NO.	REV. NO.
202–02–H–73–0	0

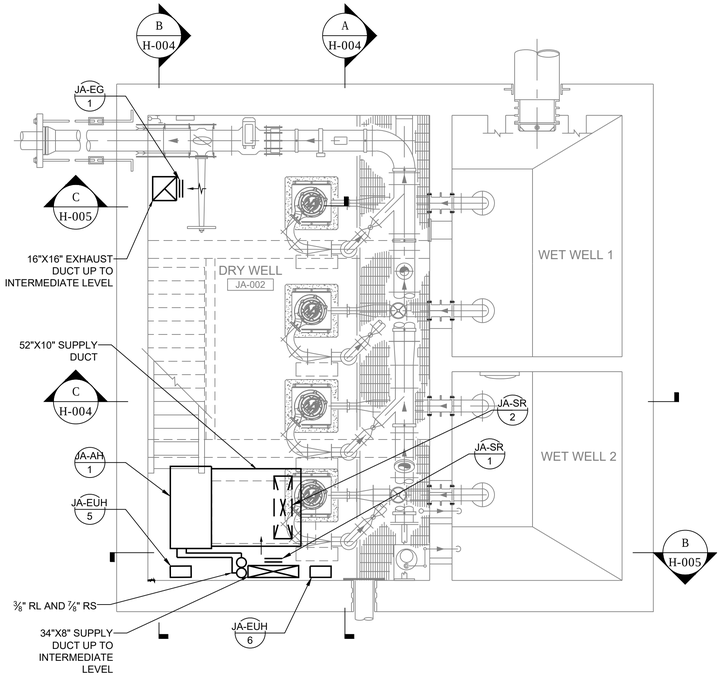

LOWER LEVEL PLAN

SCALE: 1/4" = 1'-0"

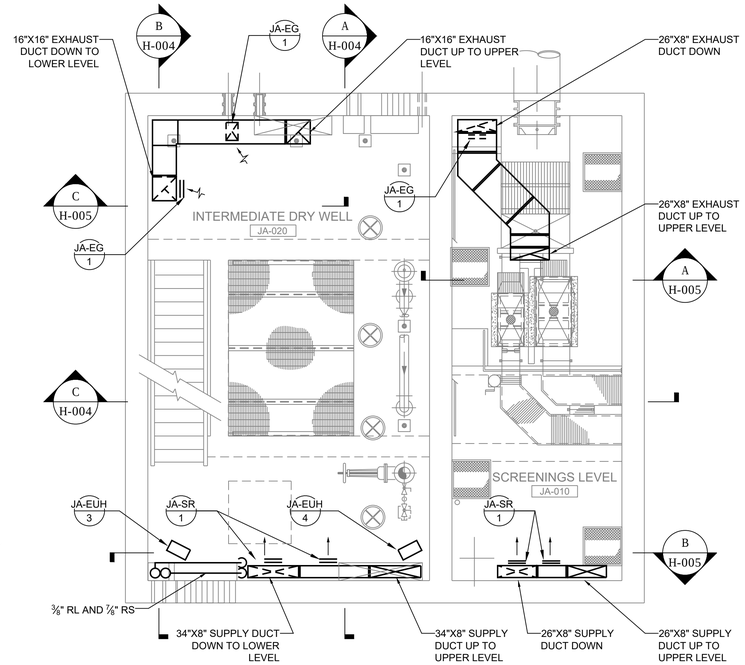

INTERMEDIATE LEVEL PLAN

SCALE: 1/4" = 1'-0"

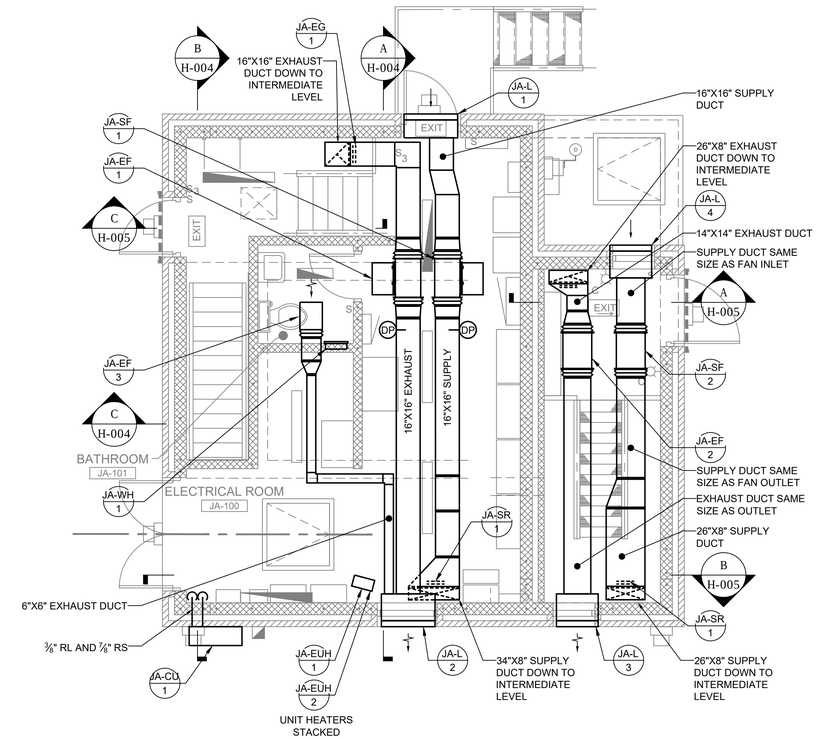

UPPER LEVEL PLAN

SCALE: 1/4" = 1'-0"

LOUVER SCHEDULE

UNIT NO.	DIMENSIONS (INCHES)			MINIMUM FREE AREA (SF)	PRESSURE DROP (" WG)	MANUFACTURER MODEL NUMBER	REMARKS
	WIDTH	DEPTH	HEIGHT				
JA-L 1	36	4	30	3	0.03	UNITED ENERTECH FL-D-4	1, 2, 3
JA-L 2	36	4	24	2.4	0.05	UNITED ENERTECH FL-D-4	1, 2, 3
JA-L 3	28	4	22	1.8	0.04	HARTZELL FFL	1, 2, 4
JA-L 4	28	4	26	2.2	0.02	HARTZELL FFL	1, 2, 4

NOTES:
1. PROVIDE UNIT WITH BIRDSCREEN
2. CONTRACTOR RESPONSIBLE FOR COORDINATING LOUVER FINISH WITH ARCHITECT AND MANUFACTURER PRIOR TO ORDERING
3. PROVIDE STAINLESS STEEL METAL PLENUM SAME SIZE AS LOUVER. REFER TO FLOOR PLANS FOR EXACT LENGTHS
4. PROVIDE FIBERGLASS PLENUM SAME SIZE AS LOUVER. REFER TO FLOOR PLANS FOR EXACT LENGTHS

0 2'-0" 4'-0" 6'-0" 8'-0"
SCALE 1/4"=1'-0" AT ORIGINAL SIZE

STATE OF NEW YORK · JERRY R. LYNCH · 55626 · LICENSED PROFESSIONAL ENGINEER
EDR a better environment
Environmental Design & Research,
Landscape Architecture, Engineering & Environmental Services, D.P.C.
217 Montgomery Street, Suite 1100
Syracuse, New York 13202
P. 315.471.0688

REVISION NUMBER	DATE	MADE BY	APP'D BY	REVISION

RECORD DRAWING CERTIFICATION

☐ AS BUILT – CHANGES AS NOTED
☐ AS BUILT – NO CHANGES

CONTRACTOR
NAME
SIGNATURE
TITLE DATE

PROJECT COORDINATOR
NAME
SIGNATURE
TITLE DATE

WESTCHESTER COUNTY, NEW YORK
DEPARTMENT OF PUBLIC WORKS AND TRANSPORTATION
DIVISION OF ENGINEERING

JACKSON AVENUE PUMPING STATION REHABILITATION
BRONX VALLEY SANITARY SEWER DISTRICT
TOWN OF GREENBURGH, NEW YORK

LOWER LEVEL, INTERMEDIATE LEVEL, AND UPPER LEVEL PLANS

CONTRACT NUMBER 22-510
SHEET NUMBER H-003
SHEET NO. 49 OF 55
SCALE: AS SHOWN
DATE: 06/01/2023
DPW FILE NO. 202-02-H-74-0
REV. NO. 0

IN CHARGE OF RB
CHECKED BY JSR
MADE BY JSR

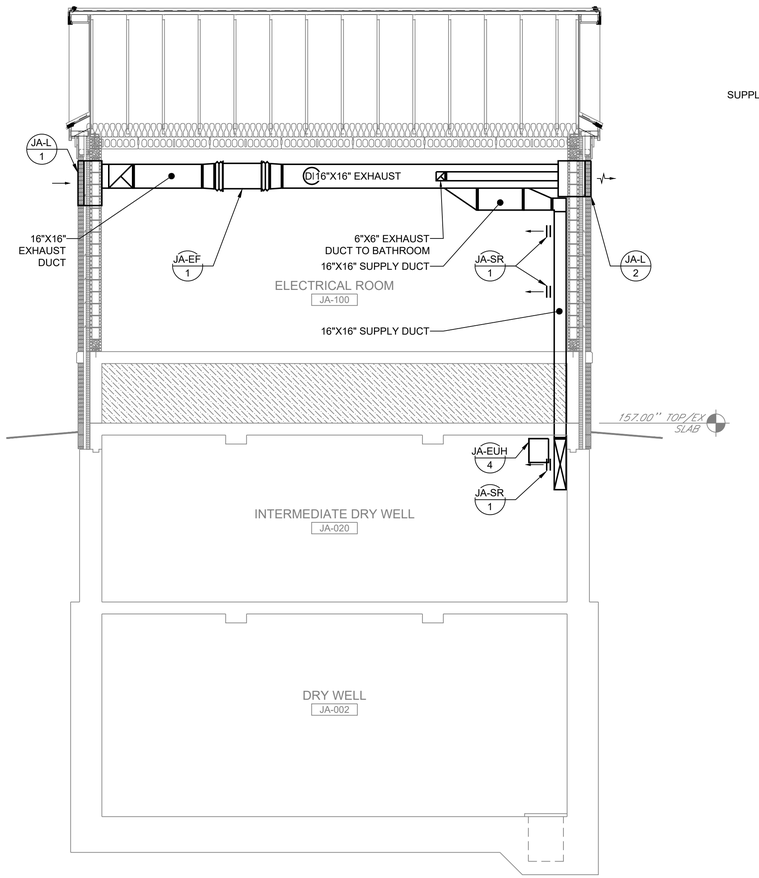

SECTION A

SCALE: 1/4" = 1'-0"

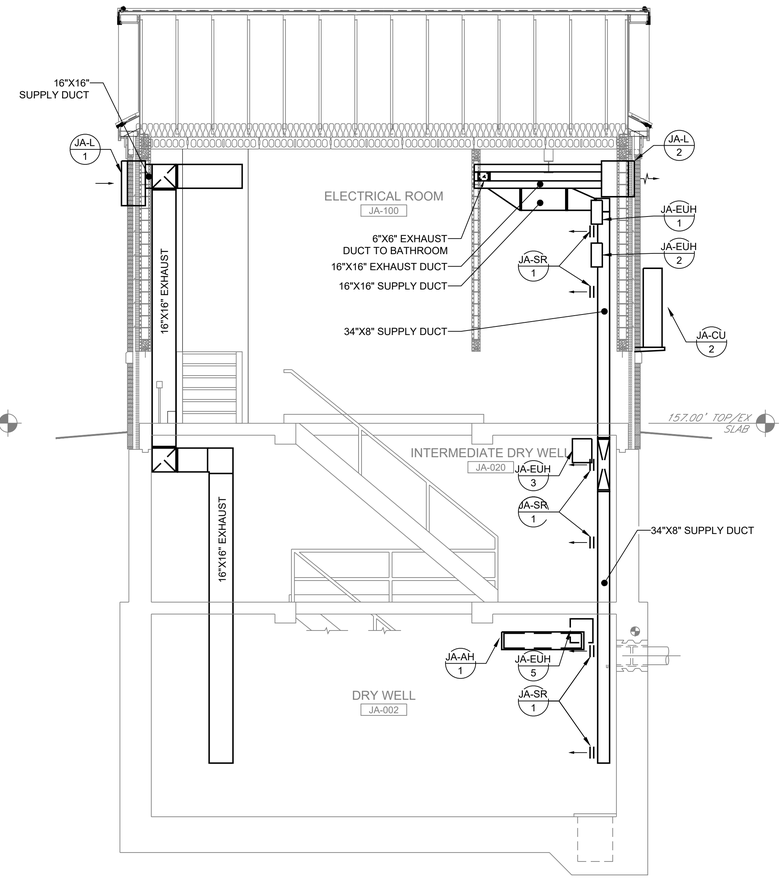

SECTION B

SCALE: 1/4" = 1'-0"

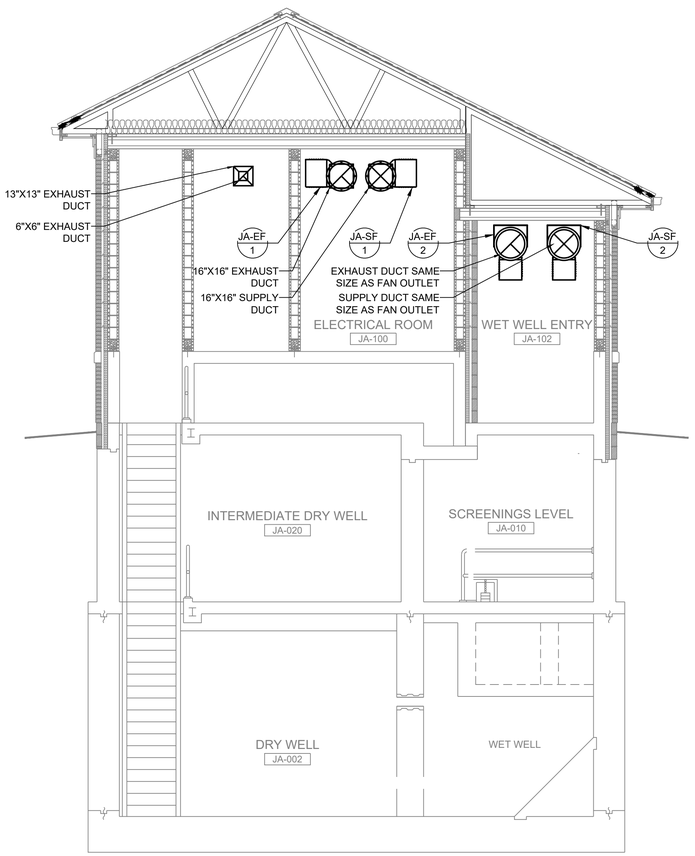

SECTION C

SCALE: 1/4" = 1'-0"

AIR HANDLER (DEHUMIDIFIER) SCHEDULE

UNIT NO.	LOCATION	AIRFLOW	PIPING			ELECTRICAL DATA			DIMENSIONS LxWxH	WEIGHT (LBS)	MFR. & MODEL NO.	REMARKS
			LIQUID	GAS	CONDENSATE	V/P/HZ	MCA	MOCP				
AH 1	DRY PIT	1,624	¼"	⅜"	¾"	208/1/60	3.6	15	55.1" x 11.8" x 27.6"	103.6	DIAKIN FXMQ54TBVJU	SPLIT SYSTEM

NOTES:
1. PROVIDE WITH INLINE CONDENSATE PUMP.
2. ROUTE CONDENSATE PIPING TO SUMP PIT.

CONDENSER SCHEDULE

UNIT NO.	LOCATION	COOLING					ELECTRICAL DATA			DIMENSIONS LxWxH	WEIGHT (LBS)	MFR. & MODEL NO.	REMARKS
		TOTAL CAP MBH	SENSIBLE CAP MBH	EFFICIENCY		REFRIGE RANT							
				SEER	EER	TYPE	V/P/Hz	MCA	MOCP				
CU 1	DRY PIT	48.2	45.3	-	-	R-410	208/1/60	29.1	35	35.4"x53.0"x12.6"	2249	DIAKIN RXTQ60TAVJUA	SPLIT SYSTEM

NOTES:
1. PROVIDE UNIT WITH MANUFACTURERS POWDER COATED WALL MOUNTED BRACKET.

IN CHARGE OF RB
CHECKED BY JSR
MADE BY HSM

0 2'-0" 4'-0" 6'-0" 8'-0"
SCALE 1/4"=1'-0" AT ORIGINAL SIZE

MODIFICATION IS A VIOLATION OF CHAPTER 16, TITLE VIII, ARTICLE 145 § 7209.2 NYS EDUCATION LAW, UNLESS ACTING UNDER THE DIRECTION OF A LICENSED PROFESSIONAL ENGINEER. IF A DOCUMENT BEARING THE SEAL OF AN ENGINEER IS ALTERED, THE ALTERING ENGINEER SHALL AFFIX TO THE DOCUMENT THEIR SEAL AND THE NOTATION "ALTERED BY" FOLLOWED BY THEIR SIGNATURE AND THE DATE OF SUCH ALTERATION, AND A SPECIFIC DESCRIPTION OF THE ALTERATION.

STATE OF NEW YORK · JERRY R. LYNCH · 55525 · LICENSED PROFESSIONAL ENGINEER
EDR a better environment
Environmental Design & Research,
Landscape Architecture, Engineering & Environmental Services, D.P.C.
217 Montgomery Street, Suite 1100
Syracuse, New York 13202
P. 315.471.0688

REVISION NUMBER	DATE	MADE BY	APP'D BY	REVISION

RECORD DRAWING CERTIFICATION

☐ AS BUILT – CHANGES AS NOTED
☐ AS BUILT – NO CHANGES

CONTRACTOR
NAME
SIGNATURE
TITLE DATE

PROJECT COORDINATOR
NAME
SIGNATURE
TITLE DATE

WESTCHESTER COUNTY, NEW YORK
DEPARTMENT OF PUBLIC WORKS AND TRANSPORTATION
DIVISION OF ENGINEERING

JACKSON AVENUE PUMPING STATION REHABILITATION
BRONX VALLEY SANITARY SEWER DISTRICT
TOWN OF GREENBURGH, NEW YORK

SECTIONS

CONTRACT NUMBER 22-510
SHEET NUMBER H-004
SHEET NO. 50 OF 55
SCALE: AS SHOWN
DATE: 06/01/2023
DPW FILE NO. 202-02-H-75-0
REV. NO. 0

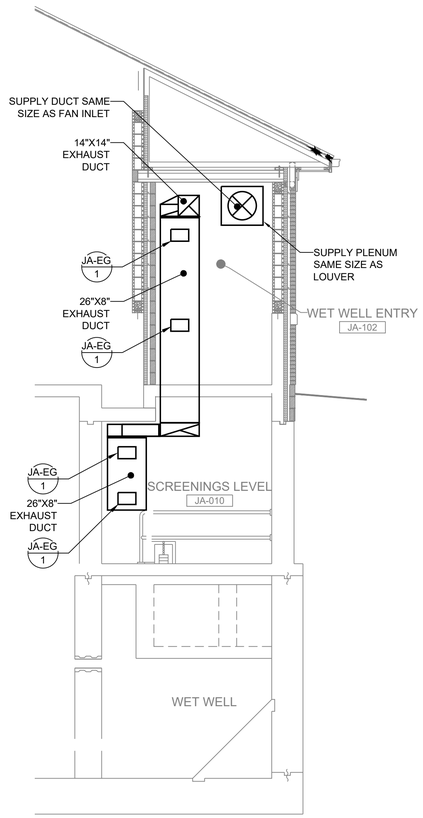

SECTION A

SCALE: 1/4" = 1'-0"

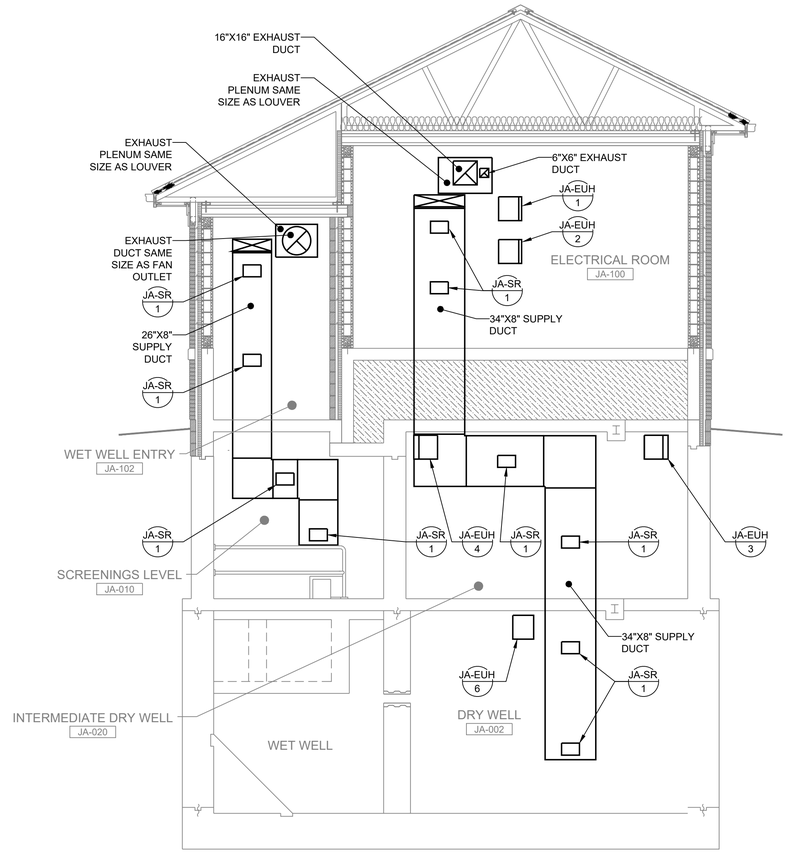

SECTION B

SCALE: 1/4" = 1'-0"

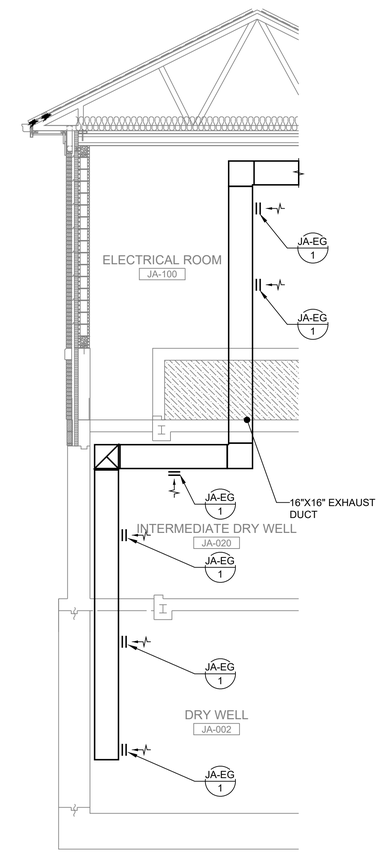

SECTION C

SCALE: 1/4" = 1'-0"

0 2'-0" 4'-0" 6'-0" 8'-0"

SCALE 1/4"=1'-0" AT ORIGINAL SIZE

MODIFICATION IS A VIOLATION OF CHAPTER 16, TITLE VIII, ARTICLE 145 § 7209.2 NYS EDUCATION LAW, UNLESS ACTING UNDER THE DIRECTION OF A LICENSED PROFESSIONAL ENGINEER. IF A DOCUMENT BEARING THE SEAL OF AN ENGINEER IS ALTERED, THE ALTERING ENGINEER SHALL AFFIX TO THE DOCUMENT THEIR SEAL AND THE NOTATION "ALTERED BY" FOLLOWED BY THEIR SIGNATURE AND THE DATE OF SUCH ALTERATION, AND A SPECIFIC DESCRIPTION OF THE ALTERATION.

EDR
a better environment
Environmental Design & Research,
Landscape Architecture, Engineering & Environmental Services, D.P.C.
217 Montgomery Street, Suite 1100
Syracuse, New York 13202
P. 315.471.0688

REVISION NUMBER	DATE	MADE BY	APP'D BY	REVISION

RECORD DRAWING CERTIFICATION

☐ AS BUILT – CHANGES AS NOTED
☐ AS BUILT – NO CHANGES

CONTRACTOR	PROJECT COORDINATOR
NAME	NAME
SIGNATURE	SIGNATURE
TITLE DATE	TITLE DATE

WESTCHESTER COUNTY, NEW YORK
DEPARTMENT OF PUBLIC WORKS AND TRANSPORTATION
DIVISION OF ENGINEERING

JACKSON AVENUE PUMPING STATION REHABILITATION
BRONX VALLEY SANITARY SEWER DISTRICT
TOWN OF GREENBURGH, NEW YORK

SECTIONS

CONTRACT NUMBER	SHEET NUMBER
22–510	H–005

SHEET NO. 51 OF 55

SCALE: AS SHOWN
DATE: 06/01/2023

DPW FILE NO.	REV. NO.
202–02–H–76–0	0

IN CHARGE OF RB
CHECKED BY JSR
MADE BY HSM

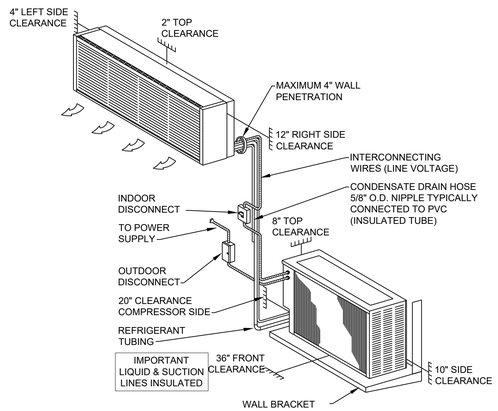

WALL MOUNTED - DUCTLESS SPLIT SYSTEM

NO SCALE

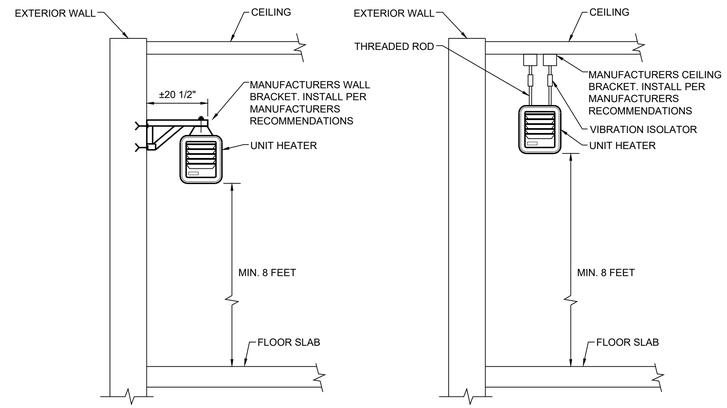

ELECTRIC UNIT HEATER SUPPORT DETAIL

NO SCALE

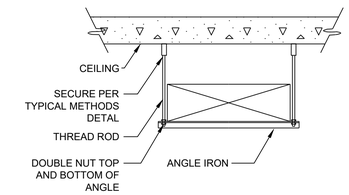

CONTRACTOR SHALL PROVIDE ADDITIONAL SUPPORTS AS NECESSARY

DUCT HANGER DETAIL

NO SCALE

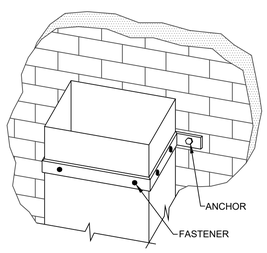

SUGGESTED SIZING

DUCT SIZE	BAND
18" x 12"	1-1/2" x 16 Ga.
24" x 20"	1" x 1/8"

ALLOWABLE LOAD

DUCT GAGE	ALLOWABLE LOAD PER FASTENER
28, 26	25 LBS
24, 22, 20	35 LBS
18, 16	50 LBS

NOTES:
WELD, BOLT OR NO. 8 SCREW (MIN.) ACCEPTABLE AS FASTENERS
MINIMUM OF 3 FASTENERS ON 24" WIDTH AND UP
ADD ALONG SIDE NEAREST ANCHORS

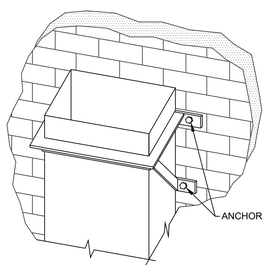

SUGGESTED SIZING

DUCT SIZE	BAND
30" x 12"	1" x 1" x 1/8"
36" x 18"	1" x 1" x 1/8"
42" x 24"	1-1/4" x 1-1/4" x 1/8"
48" x 30"	1-1/4" x 1-1/4" x 1/8"

DUCT SUPPORTS FROM WALL

NO SCALE

NOTES:
1. BRACKETS ARE SIZED FOR 12' OF DUCT, MAXIMUM.
2. LOCATE CUTS AGAINST WALL OR MAXIMUM OF 2" AWAY FROM WALL.
3. EACH WALL ANCHOR SHALL SATISFY THE FOLLOWING CRITERIA UNLESS OTHER ANALYSIS IS MADE:
   A. TENSILE LOAD= 3/8 x DUCT WEIGHT; SAFETY FACTOR OF 4.
   B. SHEAR LOAD= 1/2 x DUCT WEIGHT; SAFETY FACTOR OF 4.

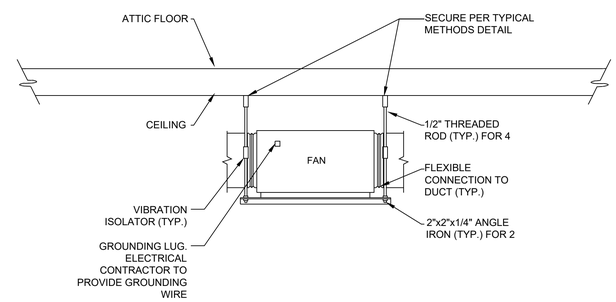

WET WELL INLINE FAN SUPPORT DETAIL (TYP.)

NO SCALE

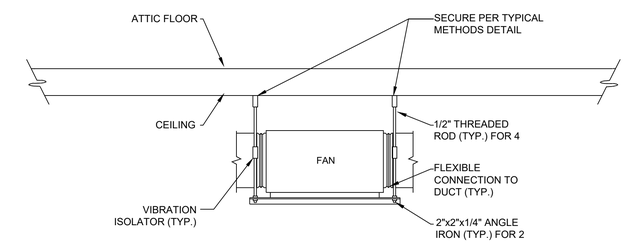

DRY WELL INLINE FAN SUPPORT DETAIL (TYP.)

NO SCALE

IN CHARGE OF RB
CHECKED BY JSR
MADE BY HSM

MODIFICATION IS A VIOLATION OF CHAPTER 16, TITLE VIII, ARTICLE 145 § 7209.2 NYS EDUCATION LAW, UNLESS ACTING UNDER THE DIRECTION OF A LICENSED PROFESSIONAL ENGINEER. IF A DOCUMENT BEARING THE SEAL OF AN ENGINEER IS ALTERED, THE ALTERING ENGINEER SHALL AFFIX TO THE DOCUMENT THEIR SEAL AND THE NOTATION "ALTERED BY" FOLLOWED BY THEIR SIGNATURE AND THE DATE OF SUCH ALTERATION, AND A SPECIFIC DESCRIPTION OF THE ALTERATION.

STATE OF NEW YORK · JOHN R. LYNCH · 55626 · LICENSED PROFESSIONAL ENGINEER

EDR
a better environment

Environmental Design & Research,
Landscape Architecture, Engineering & Environmental Services, D.P.C.
217 Montgomery Street, Suite 1100
Syracuse, New York 13202
P. 315.471.0688

REVISION NUMBER	DATE	MADE BY	APP'D BY	REVISION

RECORD DRAWING CERTIFICATION

☐ AS BUILT – CHANGES AS NOTED
☐ AS BUILT – NO CHANGES

CONTRACTOR	PROJECT COORDINATOR
NAME	NAME
SIGNATURE	SIGNATURE
TITLE DATE	TITLE DATE

WESTCHESTER COUNTY, NEW YORK
DEPARTMENT OF PUBLIC WORKS AND TRANSPORTATION
DIVISION OF ENGINEERING

JACKSON AVENUE PUMPING STATION REHABILITATION
BRONX VALLEY SANITARY SEWER DISTRICT
TOWN OF GREENBURGH, NEW YORK

HVAC DETAILS

CONTRACT NUMBER	SHEET NUMBER
22–510	H–006

SHEET NO. 52 OF 55
SCALE: AS SHOWN
DATE: 06/01/2023
DPW FILE NO. 202–02–H–77–0
REV. NO. 0

FIXTURE SCHEDULE

FIXTURE TAG	FIXTURE DESCRIPTION	MINIMUM CONNECTIONS (IN)				DESIGN BASIS		
		COLD	HOT	WASTE	VENT	FIXTURE	FAUCET/FLUSH VALVE	REMARKS
WC-A	WATER CLOSET - ADA FLOOR MOUNT - REAR OUTLET - FLUSH VALVE	1	-	3	2	AMERICAN STANDARD MADERA ADA FLOOR MOUNT TOILET	SLOAN G2 EXPOSED SENSOR 120V HARDWIRED WATER CLOSET FLUSHOMETER	COORDINATE FIXTURE LOCATION AND INSTALLATION WITH OWNER AND ALL OTHER TRADES. COORDINATE ELECTRICAL REQUIREMENT AND CONNECTION WITH ELECTRICAL CONTRACTOR.
LAV-A	LAVATORY WALL MOUNT	1/2	1/2	1-1/2	1-1/2	AMERICAN STANDARD AQUALYN WALL MOUNT	SLOAN OPTIMA ETF600 VANDAL RESISTANT 120V SENSOR OPERATED FAUCET. PROVIDE WITH ASSE 1070 MIXING VALVE.	COORDINATE FIXTURE LOCATION AND INSTALLATION WITH OWNER AND ALL OTHER TRADES. COORDINATE ELECTRICAL REQUIREMENT AND CONNECTION WITH ELECTRICAL CONTRACTOR.
FD-A	FLOOR DRAIN	-	-	-	-	WATTS	-	PROVIDE WITH TRAP BARRIER SEAL. COORDINATE FINAL LOCATION WITH OWNER AND ALL OTHER TRADES.
DPCO	DECK PLATE CLEAN-OUT	-	-	-	-	JAY R. SMITH #4020 4" OUTLET SIZE W/ ADJUSTABLE NICKEL BRONZE TOP	-	COORDINATE FINAL LOCATION WITH OWNER AND ALL OTHER TRADES.
HB-A	HOSE BIBB - INTERIOR (STAINLESS STEEL IN WET WELL)	1	-	-	-	HOSE BIBB WITH INTEGRAL VACUUM BREAKER/BACKFLOW PREVENTER	-	COORDINATE FINAL LOCATION WITH OWNER AND ALL OTHER TRADES. PROVIDE WITH SIGNAGE, ANSI MODEL ADE-4975.
HB-B	HOSE BIBB - EXTERIOR (NON-FREEZING)	1	-	-	-	HOSE BIBB WITH INTEGRAL VACUUM BREAKER/BACKFLOW PREVENTER	-	COORDINATE FINAL LOCATION WITH OWNER AND ALL OTHER TRADES. PROVIDE WITH SIGNAGE, ANSI MODEL ADE-4975.
HR-A	HOSE RACK	1	-	-	-	PVC OR STAINLESS STEEL HOSE RACK WITH 50' LENGTH, 1" HOSE AND ADJUSTABLE SPRAY NOZZLE	-	-

PLUMBING SYMBOLS

SYMBOL	DESCRIPTION
	COLD WATER SUPPLY
	HOT WATER SUPPLY
	HOT WATER RETURN
—SAN—	SANITARY WASTE LINE
—G—	NATURAL GAS PIPING
—V—	SANITARY VENT PIPING
	CAP OR PLUG
	CHECK VALVE
	BALANCING VALVE
	DECK PLATE CLEAN OUT
	FLOOR DRAIN/P-TRAP
	FLOW ARROW
	HOSE BIB
	MANUAL GAS COCK
	PIPE DROP
	PIPE RISE
	RELIEF VALVE
	WATER HAMMER ARRESTOR
	BALL TYPE VALVE
	UNION
	VENT THRU ROOF (VTR)
	Y STRAINER
	TRAP PRIMER
	PUMP
	POINT OF DISCONNECTION, FROM EXISTING
	POINT OF CONNECTION, NEW TO EXISTING

ABBREVIATIONS

@	AT
ABV	ABOVE
AFF	ABOVE FINISHED FLOOR
BFF	BELOW FINISHED FLOOR
CLG	CEILING
CW	DOMESTIC COLD WATER
DIA, Ø	DIAMETER
DN	DOWN
DPCO	DECK PLATE CLEANOUT
(E)	EXISTING
FD	FLOOR DRAIN
HB	HOSE BIBB
HR	HOSE RACK
HW	DOMESTIC HOT WATER
INV	INVERT
LAV	LAVATORY
MIN	MINIMUM
NTS	NOT TO SCALE
RPZ	REDUCED PRESSURE ZONE
SAN	SANITARY
SNK	SINK
TMV	TEMPERATURE MIXING VALVE
TYP	TYPICAL
V	VENT
VTR	VENT THRU ROOF
WC	WATER CLOSET
W/	WITH

GENERAL NOTES

1. THESE DRAWINGS ARE DIAGRAMMATIC IN NATURE AND INDICATE THE SIZE AND GENERAL ARRANGEMENT OF PIPING, EQUIPMENT, AND SPECIALTIES. EXACT LOCATIONS AND ROUTINGS SHALL BE DETERMINED IN THE FIELD BEFORE AND AS THE WORK PROGRESSES.
2. CONTRACTOR SHALL FIELD VERIFY ALL EXISTING CONDITIONS AND DIMENSIONS PRIOR TO COMMENCEMENT OF ANY WORK. ANY REQUIRED CHANGES TO WORK SHOWN ON DRAWINGS SHALL BE COORDINATED WITH ARCHITECT/ENGINEER AND OTHER TRADES PRIOR TO CONSTRUCTION.
3. DRAWINGS DO NOT INDICATE ALL OFFSETS, CHANGES IN ELEVATION, ETC. WHICH MAY BE REQUIRED BY ACTUAL FIELD CONDITIONS. THE CONTRACTOR SHALL PROVIDE FOR SUCH CHANGES IN PIPING OR EQUIPMENT LOCATIONS AS NECESSARY TO ACCOMMODATE FIELD CONDITIONS AND THE WORK OF OTHER CONTRACTS.
4. THE WORK INCLUDED IN THIS CONTRACT ENCOMPASSES BOTH THE DRAWINGS AND SPECIFICATIONS. WORK INCLUDED ON THE DRAWINGS ONLY, OR IN THE SPECIFICATIONS ONLY, SHALL BE INCORPORATED AS IF INCLUDED IN BOTH. SYSTEMS ARE INTENDED TO BE COMPLETE AND FULLY FUNCTIONING. THE CONTRACTOR SHALL PROVIDE SUCH COMPONENTS AS NECESSARY FOR A FULLY FUNCTIONING SYSTEM.
5. COORDINATE THE WORK OF THIS CONTRACT WITH THE WORK OF OTHER CONTRACTS. PHASE INSTALLATION OF EQUIPMENT AND PIPING TO ENSURE CONSTRUCTABILITY, AND THAT CONSTRUCTION PROCEEDS IN AN ORGANIZED, EFFICIENT, AND ORDERLY MANNER. PIPING TO BE SLOPED SHALL TAKE PRECEDENCE OVER PRESSURE PIPING, DUCTWORK, AND EQUIPMENT LOCATIONS.
6. PLUMBING CONTRACTOR SHALL SEAL ALL PIPING AND DUCT PENETRATIONS IN ACCORDANCE WITH THE NEW YORK STATE BUILDING CODE AND NFPA.
7. EXCEPT AS NOTED IN SPECIFICATIONS, ALL CUTTING AND PATCHING OF BUILDING COMPONENTS REQUIRED TO ACCOMMODATE THE WORK OF THIS CONTRACT SHALL BE THE RESPONSIBILITY OF THE PLUMBING CONTRACTOR. ALL PATCHING SHALL MATCH THE EXISTING COMPONENTS AND FINISHES. CUTTING AND PATCHING WORK SHALL BE PERFORMED BY PERSONNEL TRAINED AND REGULARLY EMPLOYED FOR SUCH SERVICES.
8. ALL HORIZONTAL DRAINAGE SHALL BE SLOPED AT A MINIMUM OF 1/4" PER FOOT FOR PIPING 2-1/2" OR LESS, AND 1/8" PER FOOT FOR 3" TO 6" PIPING.
9. INSTALL ALL PIPING, EQUIPMENT, AND SPECIALTIES TO ALLOW MAXIMUM CLEARANCE AND AVOID INTERFERENCE WITH THE OPERATION AND MAINTENANCE OF ALL EQUIPMENT, NEW OR EXISTING. DO NOT INSTALL ANYTHING ABOVE OR WITHIN 3 FT. IN FRONT OF ELECTRICAL GEAR.
10. PLUMBING CONTRACTOR SHALL PROVIDE NECESSARY SUPPORT FRAMING, STIFFENERS, BRACING, AND HANGERS WHETHER SHOWN OR NOT TO ENSURE A COMPLETE AND DURABLE SYSTEM. SUPPORT FRAMING CONNECTIONS SHALL BE WELDED UNLESS SPECIFICALLY SHOWN OTHERWISE. ACTUAL SUPPORTS MAY VARY FROM THOSE SHOWN IN DETAILS AS REQUIRED BY ACTUAL EQUIPMENT FURNISHED OR BY FIELD CONDITIONS.
11. ALL EQUIPMENT SHALL BE INSTALLED IN STRICT ACCORDANCE WITH THE MANUFACTURER'S INSTALLATION INSTRUCTION MANUAL OR MANUFACTURER'S REPRESENTATIVE'S WRITTEN INSTRUCTIONS.
12. PLUMBING CONTRACTOR SHALL PROVIDE BALL TYPE SHUT-OFF VALVES IN ALL PIPING BRANCH TAKE-OFFS FROM THE DOMESTIC WATER SUPPLY MAINS, WHETHER SHOWN OR NOT, FOR ISOLATION AND SERVICE TO SYSTEM.
13. WATER HAMMER ARRESTORS SHALL BE INSTALLED WHERE QUICK-CLOSING VALVES ARE UTILIZED IN ACCORDANCE WITH THE MANUFACTURER'S INSTRUCTIONS AND ASSE 1010.

HYDRO-PNEUMATIC TANK SCHEDULE

UNIT TAG	SERVICE	TYPE	TANK VOLUME (GAL)	DIAMETER (IN)	HEIGHT (IN)	FILL PRESSURE (PSI)	BASIS OF DESIGN MANUFACTURER	BASIS OF DESIGN MODEL NUMBER	REMARKS
HPT-1	BUILDING WATER	VERTICAL	86	23.4	59	-	A.O. SMITH	LPT SERIES	

ELECTRIC WATER HEATER SCHEDULE

UNIT TAG	VOLTS	PHASE	CAPACITY (KW)	SIZE GAL)	BASIS OF DESIGN MANUFACTURER	BASIS OF DESIGN MODEL NUMBER	REMARKS
EWH-1	120	1	1.44	3	AO SMITH	EPU-2-5	

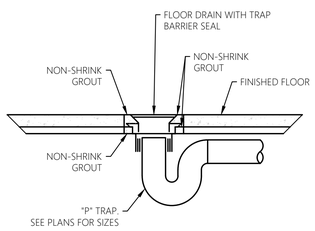

FLOOR DRAIN DETAIL

SCALE: NTS

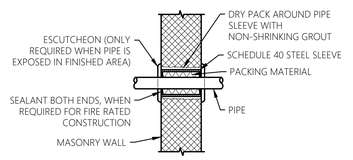

NOTE:

1. THIS DETAIL APPLIES TO BOTH INSULATED AND NON-INSULATED PIPE.
2. FOR FIRE RATED CONSTRUCTION PROVIDE APPROPRIATE APPROVED THROUGH-PENETRATION FIRESTOP ASSEMBLY TO MAINTAIN THE FIRE RATING OF THE WALL ASSEMBLY.
3. CONTRACTOR TO PROVIDE NEAT PENETRATION THROUGH EXTERIOR WALL. SLEEVE PENETRATION AND MORTAR BETWEEN WALL AND PIPE.

PIPE THRU WALL DETAIL

SCALE: NTS

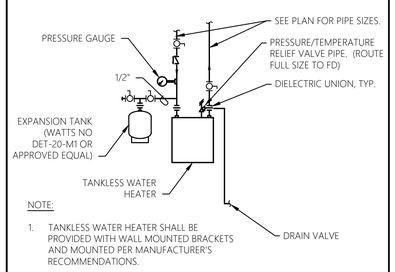

NOTE:

1. TANKLESS WATER HEATER SHALL BE PROVIDED WITH WALL MOUNTED BRACKETS AND MOUNTED PER MANUFACTURER'S RECOMMENDATIONS.

ELECTRIC WATER HEATER DETAIL

SCALE: NTS

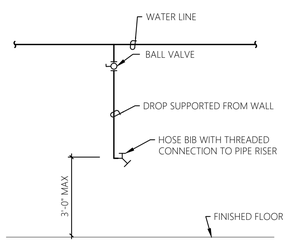

HOSE BIB PIPING DROP DETAIL

SCALE: NTS

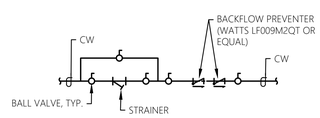

NOTES:

1. PROVIDE SUPPORT TO EQUIPMENT FROM WALL/FLOOR AS REQUIRED.
2. PROVIDE MIN. 18" CLEAR BETWEEN BOTTOM OF RELIEF VALVE AND FLOOR.
4. PROVIDE MIN. 12" CLEAR ABOVE BACKFLOW PREVENTER.
5. PROVIDE MIN. 30" CLEAR IN FRONT OF BACKFLOW PREVENTER.
6. PROVIDE MIN. 8" CLEAR BETWEEN BACKFLOW PREVENTER AND WALL BEHIND.
7. PROVIDE MIN. 1" AIR GAP ASSEMBLY AND DRAIN FOR BACKFLOW PREVENTER. IF NO FLOOR DRAIN IS PRESENT, DRAIN SHALL EXTEND THROUGH THE EXTERIOR BUILDING WALL AND TERMINATE A MIN. OF 12" ABOVE FINISHED GRADE.

WATER SERVICE ENTRANCE DETAIL

SCALE: NTS

GENERAL NOTES:

1. CONCRETE 4,000 PSI @ 28 DAYS.
2. PROVIDE AS 4" MIN. PAD UNLESS OTHERWISE NOTED.
3. DEFORMED BARS ASTM A-615, GRADE 60.
4. TOP SURFACE SHALL BE TROWEL FINISHED.
5. 3/4" CHAMFER ALONG ALL EXPOSED EDGES, INCLUDING OPENING.
6. REINFORCING SHALL BE AS FOLLOWS: #4 BARS @ 12" EACH WAY.

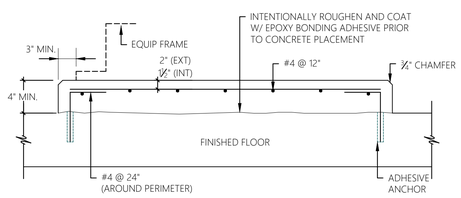

TYPICAL EQUIPMENT PAD DETAIL

SCALE: NTS

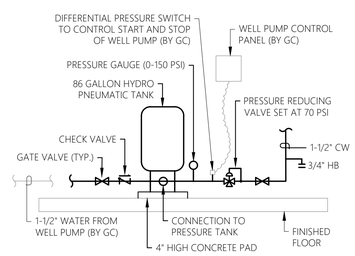

HYDRO PNEUMATIC TANK DETAIL

SCALE: NTS

JADE STONE ENGINEERING
mechanical, electrical, plumbing
444 VANDUZEE ST. WATERTOWN NY 13601
P: 315.836.4062 jstoneeng.com

REVISION NUMBER	DATE	MADE BY	APP'D BY	REVISION

RECORD DRAWING CERTIFICATION

☐ AS BUILT – CHANGES AS NOTED
☐ AS BUILT – NO CHANGES

CONTRACTOR	PROJECT COORDINATOR
NAME	NAME
SIGNATURE	SIGNATURE
TITLE DATE	TITLE DATE

WESTCHESTER COUNTY, NEW YORK
DEPARTMENT OF PUBLIC WORKS AND TRANSPORTATION
DIVISION OF ENGINEERING

JACKSON AVENUE PUMPING STATION REHABILITATION
BRONX VALLEY SANITARY SEWER DISTRICT
TOWN OF GREENBURGH, NEW YORK
LEGENDS, ABBREVIATIONS, GENERAL NOTES, SCHEDULES, AND DETAILS

CONTRACT NUMBER 22-510
SHEET NUMBER P-001
SHEET NO. 53 OF 55
SCALE: AS SHOWN
DATE: 06/01/2023
DPW FILE NO. 202-02-P-78-0
REV. NO. 0

IN CHARGE OF RJK
CHECKED BY RJK
MADE BY TJR

GENERAL SHEET NOTES:

1. REFER TO P001 FOR PLUMBING LEGEND, ABBREVIATIONS, AND GENERAL PROJECT NOTES.
2. UNLESS OTHERWISE NOTED, PLUMBING ITEMS SHOWN HEAVY DASHED (▬ ▬ ▬) SHALL BE DEMOLISHED AND PLUMBING ITEMS SHOWN LIGHT SOLID (——) SHALL BE EXISTING TO REMAIN.

SHEET KEY NOTES:

1. EXISTING ELECTRIC WATER HATER AND ASSOCIATED COMPONENTS TO BE REMOVED IN THEIR ENTIRETY. COORDINATE DISCONNECTION OF ELECTRICAL SERVICE WITH ELECTRICAL CONTRACTOR.

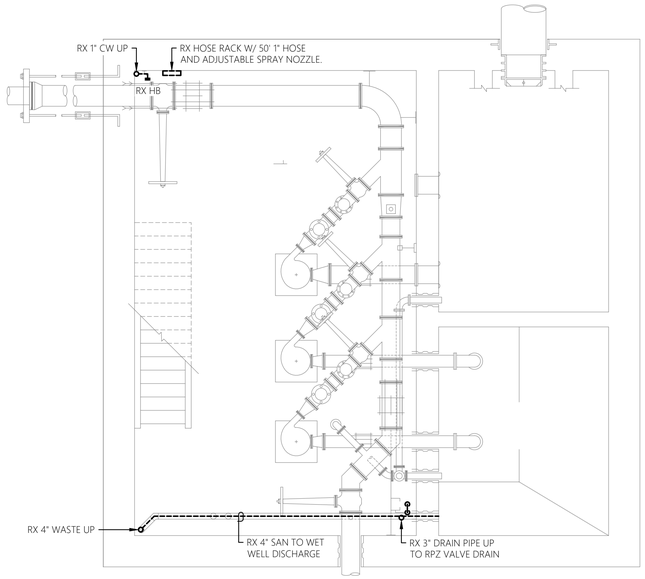

LOWER LEVEL PLAN

SCALE: 1/4" = 1'-0"

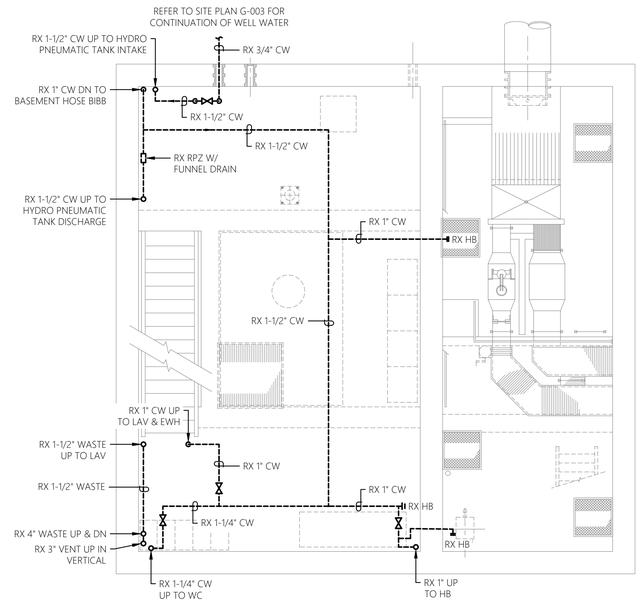

INTERMEDIATE LEVEL PLAN

SCALE: 1/4" = 1'-0"

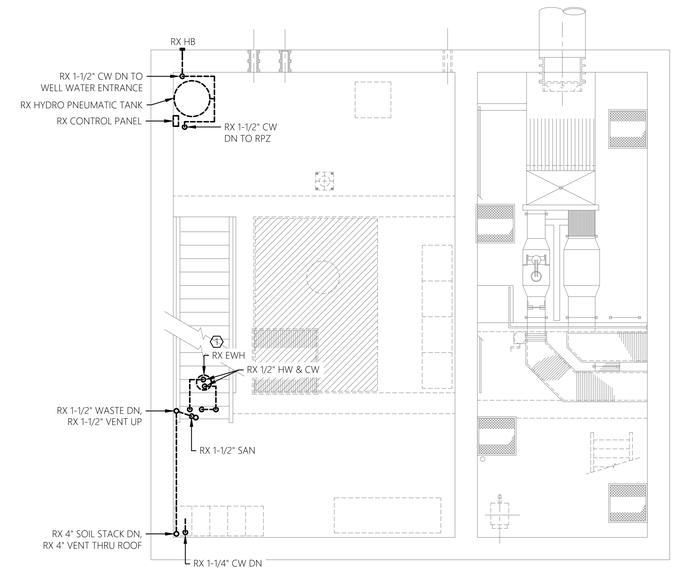

UPPER LEVEL PLAN

SCALE: 1/4" = 1'-0"

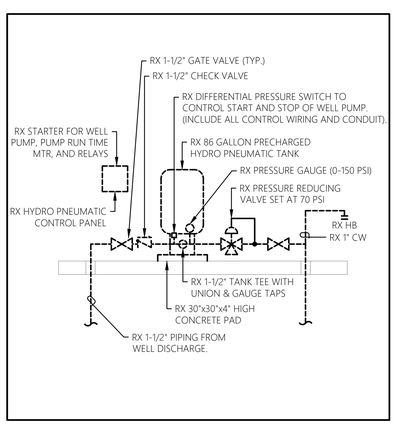

HYDRO PNEUMATIC TANK DETAIL

SCALE: NTS

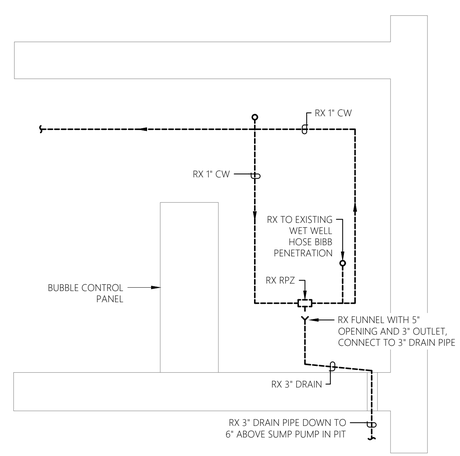

RPZ SECTION VIEW

SCALE: NTS

IN CHARGE OF RJK
CHECKED BY RJK
MADE BY TJR

MODIFICATION IS A VIOLATION OF CHAPTER 16, TITLE VIII, ARTICLE 145 § 7209.2 NYS EDUCATION LAW, UNLESS ACTING UNDER THE DIRECTION OF A LICENSED PROFESSIONAL ENGINEER. IF A DOCUMENT BEARING THE SEAL OF AN ENGINEER IS ALTERED, THE ALTERING ENGINEER SHALL AFFIX TO THE DOCUMENT THEIR SEAL AND THE NOTATION "ALTERED BY" FOLLOWED BY THEIR SIGNATURE AND THE DATE OF SUCH ALTERATION, AND A SPECIFIC DESCRIPTION OF THE ALTERATION.

STATE OF NEW YORK · RYAN J KEEFER · 093390 · LICENSED PROFESSIONAL ENGINEER

JADE STONE ENGINEERING
mechanical, electrical, plumbing
444 VANDUZEE ST. WATERTOWN NY 13601
P: 315.836.4062 jstoneeng.com

REVISION NUMBER	DATE	MADE BY	APP'D BY	REVISION

RECORD DRAWING CERTIFICATION

☐ AS BUILT – CHANGES AS NOTED
☐ AS BUILT – NO CHANGES

CONTRACTOR	PROJECT COORDINATOR
NAME	NAME
SIGNATURE	SIGNATURE
TITLE DATE	TITLE DATE

WESTCHESTER COUNTY, NEW YORK
DEPARTMENT OF PUBLIC WORKS AND TRANSPORTATION
DIVISION OF ENGINEERING

JACKSON AVENUE PUMPING STATION REHABILITATION
BRONX VALLEY SANITARY SEWER DISTRICT
TOWN OF GREENBURGH, NEW YORK
DEMOLITION PLANS

CONTRACT NUMBER 22–510
SHEET NUMBER P–002
SHEET NO. 54 OF 55
SCALE: AS SHOWN
DATE: 06/01/2023
DPW FILE NO. 202–02–P–79–0
REV. NO. 0

GENERAL SHEET NOTES:

1. REFER TO P001 FOR PLUMBING LEGEND, ABBREVIATIONS, AND GENERAL PROJECT NOTES.
2. UNLESS OTHERWISE NOTED, PLUMBING ITEMS SHOWN HEAVY SOLID (——) SHALL BE NEW AND PLUMBING ITEMS SHOWN LIGHT SOLID (——) SHALL BE EXISTING TO REMAIN.

SHEET KEY NOTES:

1. NEW ELECTRIC WATER HEATER TO BE INSTALLED AT LOCATION SHOWN PER MANUFACTURER RECOMMENDATIONS. PROVIDE WALL BRACKETS/SUPPORTS AS NECESSARY FOR SUCCESSFUL INSTALLATION ON WALL. MOUNT WATER HEATER ABOVE WALL HEATER SHOWN ON H-003. COORDINATE WITH HVAC CONTRACTOR. COORDINATE FINAL LOCATION WITH OWNER AND ALL OTHER TRADES. COORDINATE CONNECTION OF ELECTRICAL SERVICE WITH ELECTRICAL CONTRACTOR. PROVIDE ALL FITTINGS/ACCESSORIES AS REQUIRED FOR A COMPLETE AND OPERABLE SYSTEM.
2. NEW HYDRO PNEUMATIC TANK TO BE INSTALLED AT LOCATION SHOWN PER DETAIL ON P-001 AND PER MANUFACTURER RECOMMENDATIONS. PROVIDE 4" HIGH CONCRETE HOUSEKEEPING PAD. ANCHOR TANK TO PAD/FLOOR. COORDINATE FINAL LOCATION WITH OWNER AND ALL OTHER TRADES. PROVIDE ALL FITTINGS/ACCESSORIES AS REQUIRED FOR A COMPLETE AND OPERABLE SYSTEM.

SHEET KEY NOTES:

3. NEW REDUCED PRESSURE ZONE BACKFLOW PREVENTER (WATTS LF009M2QT OR EQUAL) TO BE INSTALLED AT LOCATION SHOWN PER DETAIL ON P-001 AND PER MANUFACTURER RECOMMENDATIONS. PROVIDE AIR GAP ASSEMBLY AND FUNNEL DRAIN BELOW BACKFLOW PREVENTER RELIEF VENT AND ROUTE DRAIN PIPING DOWN TO STRUCTURAL CONTAINMENT CURB DRAIN. COORDINATE FINAL LOCATION WITH OWNER AND ALL OTHER TRADES. PROVIDE ALL FITTINGS/ACCESSORIES AS REQUIRED FOR A COMPLETE AND OPERABLE SYSTEM.

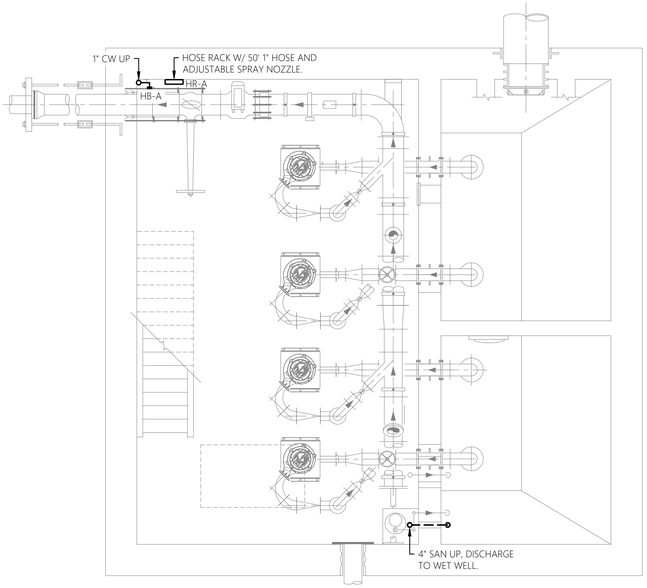

LOWER LEVEL PLAN

SCALE: 1/4" = 1'-0"

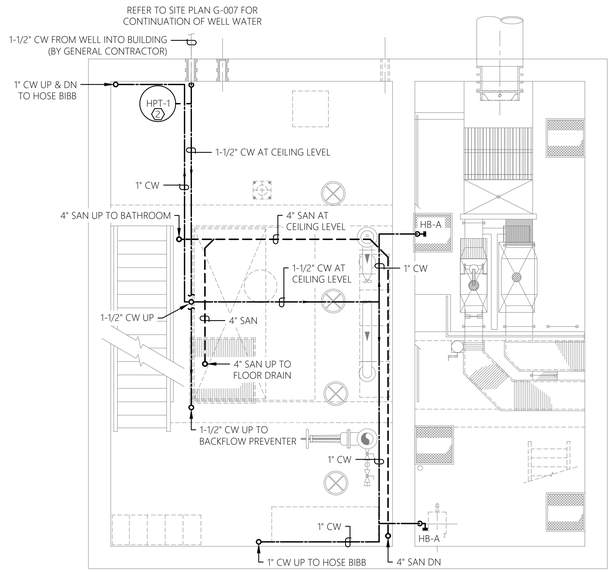

INTERMEDIATE LEVEL PLAN

SCALE: 1/4" = 1'-0"

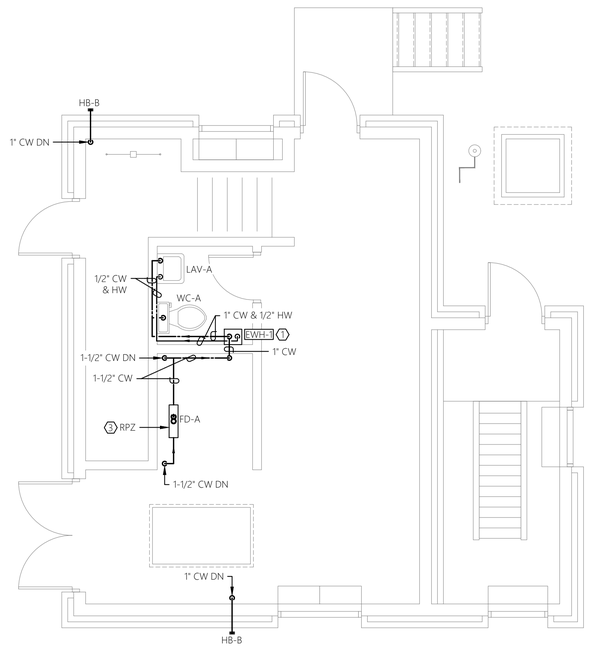

UPPER LEVEL PLAN

SCALE: 1/4" = 1'-0"

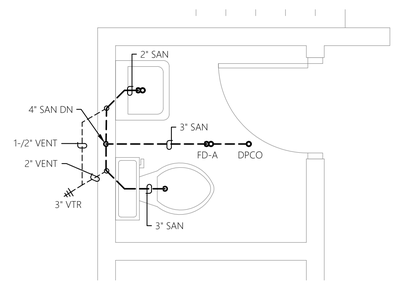

BATHROOM SANITARY PLUMBING PLAN

SCALE: 1/2" = 1'-0"

JADE STONE ENGINEERING
mechanical, electrical, plumbing
444 VANDUZEE ST. WATERTOWN NY 13601
P: 315.836.4062 jstoneeng.com

STATE OF NEW YORK · RYAN J KEEFER · 093390 · LICENSED PROFESSIONAL ENGINEER

REVISION NUMBER	DATE	MADE BY	APP'D BY	REVISION

RECORD DRAWING CERTIFICATION

☐ AS BUILT – CHANGES AS NOTED
☐ AS BUILT – NO CHANGES

CONTRACTOR	PROJECT COORDINATOR
NAME	NAME
SIGNATURE	SIGNATURE
TITLE DATE	TITLE DATE

WESTCHESTER COUNTY, NEW YORK
DEPARTMENT OF PUBLIC WORKS AND TRANSPORTATION
DIVISION OF ENGINEERING

JACKSON AVENUE PUMPING STATION REHABILITATION
BRONX VALLEY SANITARY SEWER DISTRICT
TOWN OF GREENBURGH, NEW YORK
LOWER, INTERMEDIATE AND UPPER PLAN

CONTRACT NUMBER 22–510 | SHEET NUMBER P–003
SHEET NO. 55 OF 55
SCALE: AS SHOWN
DATE: 06/01/2023
DPW FILE NO. 202–02–P–80–0 | REV. NO. 0

IN CHARGE OF RJK
CHECKED BY RJK
MADE BY TJR