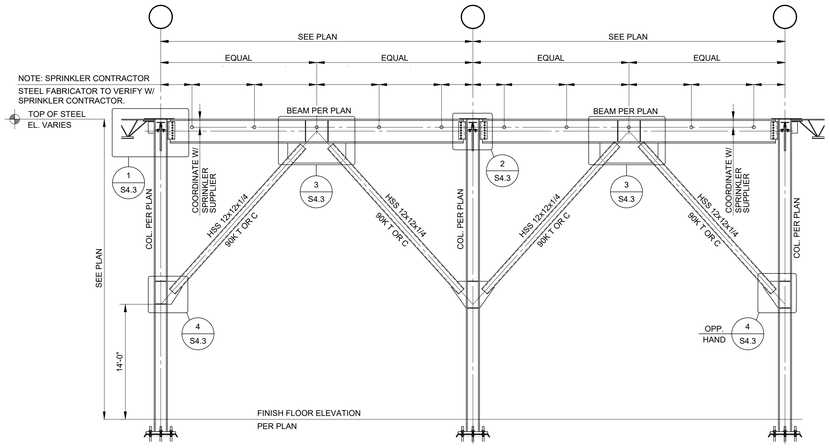

TYPICAL LATERAL BRACE ELEVATION

SCALE: NONE

DETAIL BOOK REF.
S3.13-N
8/24/2023

NOTES:

1. FORCES SHOWN ARE DESIGN SERVICE LOADS (0.6 W OR 0.7 E).
2. CONNECTIONS SHALL BE DESIGNED FOR FORCE INDICATED ON ELEVATION.
3. ALL BOLTED CONNECTIONS SHALL BE "SLIP-CRITICAL" CONNECTIONS.
4. EACH MEMBER'S CONNECTION SHALL BE SYMMETRIC ABOUT THE CENTER OF GRAVITY OF THAT MEMBER.

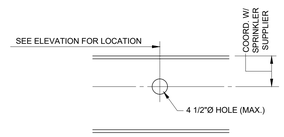

TYPICAL SPRINKLER HOLE AT LATERAL BRACES

SCALE: NONE

NOTE: SPRINKLER CONTRACTOR SHALL REVIEW AND APPROVE LAYOUT ON STEEL SHOP DRAWINGS.

DETAIL BOOK REF.
S3.12-N
1/27/2023

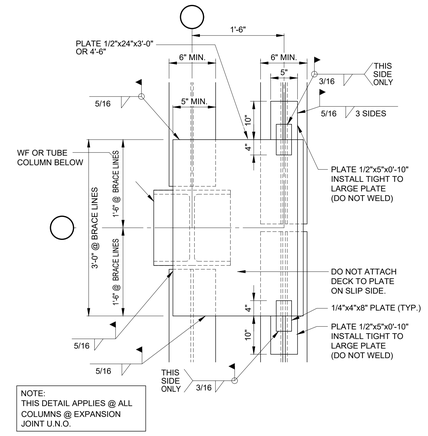

NOTE:
THIS DETAIL APPLIES @ ALL COLUMNS @ EXPANSION JOINT U.N.O.

DETAIL AT EXPANSION JOINT AT COLUMN CONNECTION - SHEAR PLATE

A / S4.1

SCALE: NO SCALE

DETAIL BOOK REF.
S2.22-N
8/24/2023

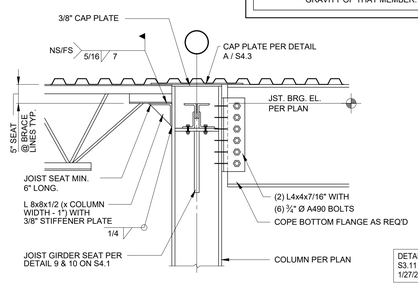

DETAIL BOOK REF.
S3.11
1/27/2023

BRACE BEAM TO WIDE FLANGE COLUMN CONNECTION - 1 SIDE

1 / S4.3

SCALE: NO SCALE

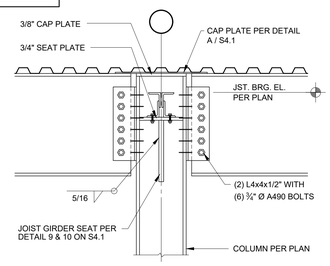

DETAIL BOOK REF.
S3.11
1/27/2023

BRACE BEAM TO WIDE FLANGE COLUMN CONNECTION

2 / S4.3

SCALE: NO SCALE

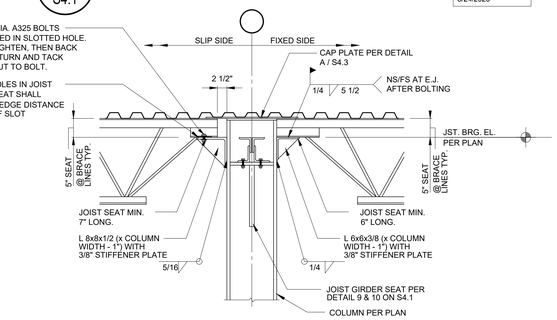

JOIST TO WIDE FLANGE COLUMN CONNECTION - 1 SIDE

5 / S4.3

SCALE: NO SCALE

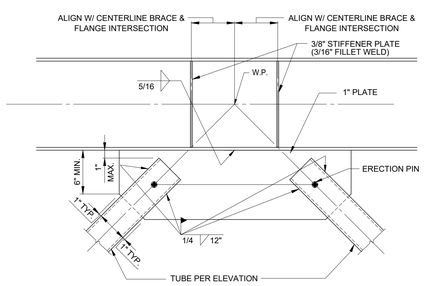

BRACE BEAM TOP CONNECTION

3 / S4.3

SCALE: NO SCALE

DETAIL BOOK REF.
S3.01
1/27/2023

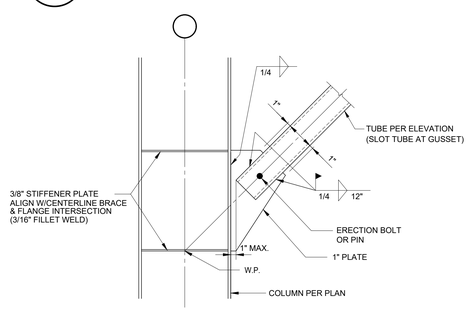

BRACE COLUMN CONNECTION

4 / S4.3

SCALE: NO SCALE

DETAIL BOOK REF.
S3.06
1/27/2023

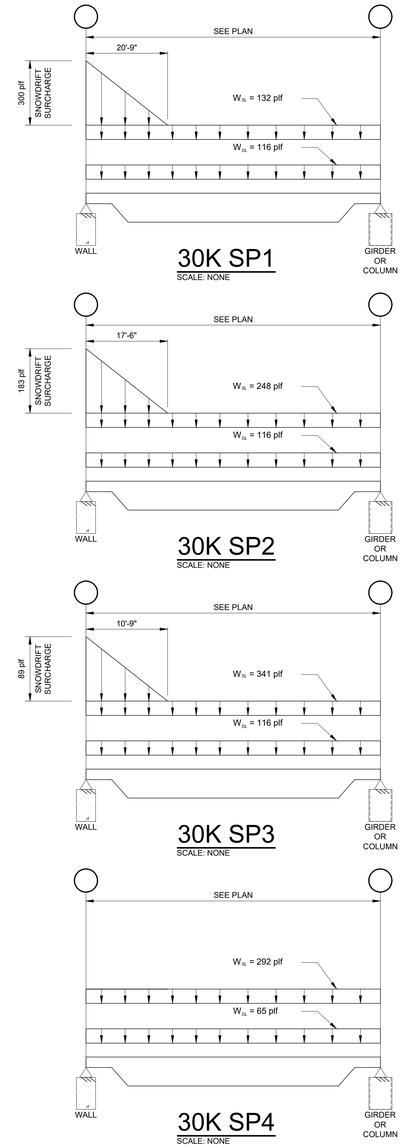

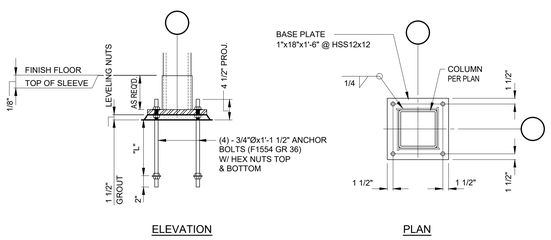

TYPICAL TUBE COLUMN BASE DETAIL W/SLEEVE

SCALE: NONE

NOTE:
1. E.O.R. TO VERIFY INFORMATION FOR EACH PROJECT.

DETAIL BOOK REF.
S1.24-N
8/24/2023

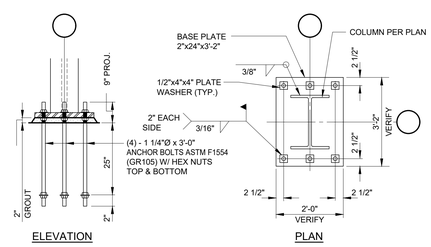

TYPICAL WIND BRACE COLUMN BASE DETAIL

SCALE: NONE

DETAIL BOOK REF.
S1.28-N
8/24/2023

DESIGNER / BUILDER
ARCO DESIGN/BUILD
44 SOUTH BROADWAY, SUITE 1003
WHITE PLAINS, NY 10601
P: 914.821.5535 F: 914.306.6010

ADB STRUCTURAL ENGINEERING

PROJECT TITLE
ROCKLAND LOGISTICS CENTER BLDG 1

25 OLD MILL RD.
SUFFERN, NY 10901

OWNER
BROOKFIELD PROPERTIES
1 MEADOWLANDS PLAZA, SUITE 802
EAST RUTHERFORD,NJ 07073

ARCHITECT
ADB / DESIGN SERVICES LLC
44 SOUTH BROADWAY, SUITE 1003
WHITE PLAINS, NY 10601

CIVIL ENGINEER
DYNAMIC ENGINEERING CONSULTANTS
1904 MAIN STREET
LAKE COMO, NJ 07719

STRUCTURAL ENGINEER
ADB STRUCTURAL ENGINEERING
325 S. ALABAMA ST , SUITE 200
INDIANAPOLIS, IN 46204

MECHANICAL ENGINEER
NATIONAL DESIGN BUILD SERVICES
11840 BORMAN DRIVE
MARYLAND HEIGHTS, MO 63146

ELECTRICAL ENGINEER
FXB ENGINEERING
5 CHRISTY DRIVE, SUITE 307
CHADDS FORD, PA 19317

PLUMBING ENGINEER
MCCARTHY ENGINEERING
2500 E HIGH STREET, SUITE 630
POTTSTOWN, PA 19464

FIRE PROTECTION ENGINEER
S.A. COMUNALE
2900 NEWPARK DRIVE
BARBERTON, OH 44203

SEAL

KEY PLAN

SUBMITTALS

NO.	DATE	DESCRIPTION
	11-29-23	75% PROGRESS SET
	12-22-23	90% PROGRESS SET
	01-26-24	95% PROGRESS SET
	02-09-24	PERMIT SET

PROJECT NO. AS397-22 | NY154 | SEI-085-23
DRAWN BY JWC

SHEET TITLE
STRUCTURAL DETAILS

SHEET NO.
S4.3

PRINTED ARCH E1 30" x 42"